wke Dec 12, 2023

PROJECT ID: 1060-53-70

WITH:

COUNTY: MILWAUKEE & WAUKESHA

ORDER OF SHEETS

Section No.	1	Title
Section No.	2	Typical Sections and Details
Section No.	3	Estimate of Quantities
Section No.	3	Miscellaneous Quantities
~~Section No.~~	~~4~~	~~Right of Way Plat~~
~~Section No.~~	~~5~~	~~Plan and Profile~~
Section No.	6	Standard Detail Drawings
Section No.	7	Sign Plates
Section No.	8	Structure Plans
~~Section No.~~	~~9~~	~~Computer Earthwork Data~~
~~Section No.~~	~~9~~	~~Cross Sections~~

TOTAL SHEETS = 120

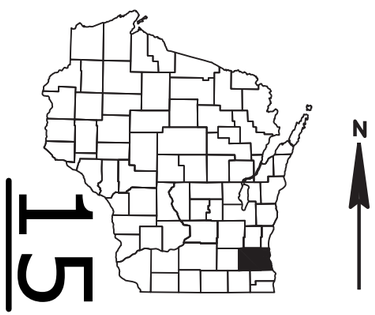

DESIGN DESIGNATION 1060-53-70

A.A.D.T.	=	N/A
A.A.D.T.	=	N/A
D.H.V.	=	N/A
D.D.	=	N/A
T.	=	N/A
DESIGN SPEED	=	N/A
ESALS	=	N/A

CONVENTIONAL SYMBOLS

PLAN

CORPORATE LIMITS
PROPERTY LINE
LOT LINE
LIMITED HIGHWAY EASEMENT
EXISTING RIGHT OF WAY
PROPOSED OR NEW R/W LINE
SLOPE INTERCEPT
REFERENCE LINE (300'EB')
EXISTING CULVERT
PROPOSED CULVERT (Box or Pipe)
COMBUSTIBLE FLUIDS (CAUTION)
MARSH AREA
WOODED OR SHRUB AREA

PROFILE

GRADE LINE
ORIGINAL GROUND
MARSH OR ROCK PROFILE (To be noted as such) (ROCK)
SPECIAL DITCH (LABEL)
GRADE ELEVATION (95.36)
CULVERT (Profile View)

UTILITIES

ELECTRIC — E
FIBER OPTIC — FO
GAS — G
SANITARY SEWER — SAN
STORM SEWER — SS
TELEPHONE — T
WATER — W
UTILITY PEDESTAL
POWER POLE
TELEPHONE POLE

STATE OF WISCONSIN
DEPARTMENT OF TRANSPORTATION

PLAN OF PROPOSED IMPROVEMENT

VARIOUS NOISE WALL LOCATIONS

LOCATIONS ON STN PER ANNUAL PLAN

OFF SYSTEM
MILWAUKEE & WAUKESHA COUNTIES

STATE PROJECT NUMBER
1060-53-70

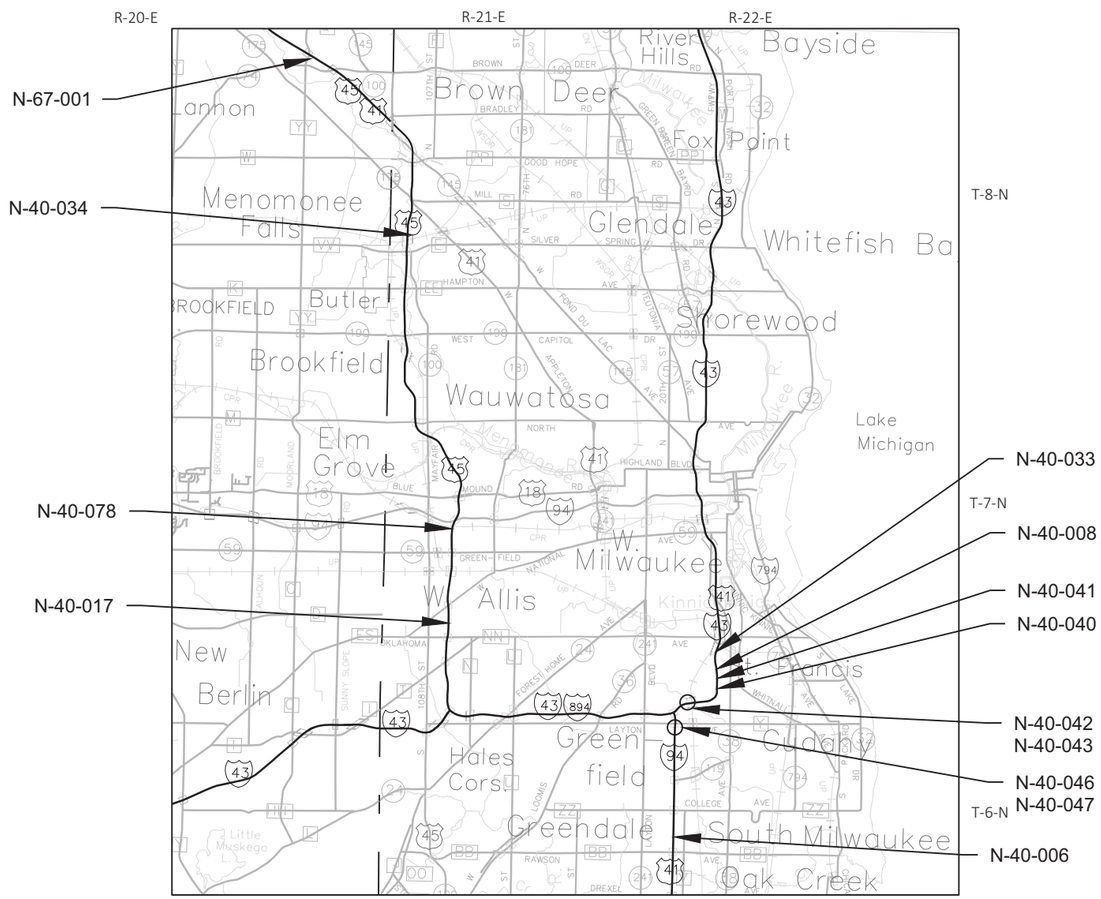

LAYOUT

SCALE 0 3.5 MI

TOTAL NET LENGTH OF CENTERLINE = 0.000 MILES

HORIZONTAL POSITIONS SHOWN ON THIS PLAN ARE WISCONSIN COORDINATE REFERENCE SYSTEM (WISCRS), VARIOUS COUNTIES, NAD83 (2011), IN U.S. SURVEY FEET. POSITIONS SHOWN ARE GRID COORDINATES, GRID BEARINGS, AND GRID DISTANCES. GRID DISTANCES ARE THE SAME AS GROUND DISTANCES.

ELEVATIONS ARE REFERENCED TO NAVD 88 (2012).

STATE PROJECT	FEDERAL PROJECT	
	PROJECT	CONTRACT
1060-53-70	WISC 2024063	1

DAAR ENGINEERING, INC.
www.daarcorp.com
Milwaukee, WI 53202
414-225-9817

WISCONSIN ANDREW J. SMIEJA E-31137 WAUKESHA, WI PROFESSIONAL ENGINEER

DATE: 10/4/2023 (Signature)

STATE OF WISCONSIN
DEPARTMENT OF TRANSPORTATION

PREPARED BY

Surveyor	DAAR ENGINEERING INC
Designer	DAAR ENGINEERING INC
Project Manager	AMANDA JOHANSEN, PE
Regional Examiner	SE REGION
Regional Supervisor	WAFA ELQAQ, PE

APPROVED FOR THE DEPARTMENT

DATE: 10/5/2023 Amanda Johansen (Signature)

E

GENERAL NOTES

NO TREES OR SHRUBS ARE TO BE REMOVED WITHOUT THE APPROVAL OF THE ENGINEER.

THERE ARE UTILITY FACILITIES WITHIN THE PROJECT AREA THAT ARE NOT SHOWN ON THE PLANS. THE CONTRACTOR SHALL COORDINATE THEIR CONSTRUCTION ACTIVITIES WITH A CALL TO DIGGER'S HOTLINE AND/OR A DIRECT CALL TO THE UTILITIES THAT HAVE FACILITIES IN THE AREA. NOT ALL UTILITIES ARE MEMBERS OF DIGGER'S HOTLINE.

THE COST OF GRADING, CONSTRUCTING, MAINTAINING, AND REMOVING TEMPORARY ACCESS IS INCIDENTAL TO THE CONTRACT.

DO NOT OPERATE ANY MOTORIZED EQUIPMENT WITHIN WETLANDS.

TRAFFIC CONTROL NOTES

TRAFFIC CONTROL DEVICES SHALL BE ADJUSTED TO FIT FIELD CONDITIONS AS DIRECTED BY THE ENGINEER.

THE EXACT NUMBER, LOCATION, AND SPACING OF ALL SIGNS AND DEVICES SHALL BE ADJUSTED TO FIT FIELD CONDITIONS.

ALL TRAFFIC CONTROL SIGNS ARE 48"X48" UNLESS OTHERWISE NOTED.

"WO" SIGNS ARE THE SAME AS "W" SIGNS EXCEPT THE BACKGROUND IS REFLECTIVE ORANGE.

ORDER OF SECTION 2 SHEETS

GENERAL NOTES
PROJECT OVERVIEW
CONSTRUCTION DETAILS
TRAFFIC CONTROL

2

STANDARD ABBREVIATIONS LIST

AP	ACCESS POINT
AC	ACRE
ADJ	ADJUST
AECPRC	APRON ENDWALLS FOR CULVERT PIPE REINFORCED CONCRETE
AH	AHEAD
AC	ASPHALT CEMENT
ASPH	ASPHALTIC
ACP	ASPHALTIC CONCRETE PAVEMENT
AVG	AVERAGE
ADT	AVERAGE DAILY TRAFFIC
AEW	APRON ENWALL
BK	BACK
BAD	BASE AGGREGATE DENSE
BM	BENCHMARK
CB	CATCH BASIN
C/L	CENTER LINE
C/L CONST	CENTER LINE CONSTRUCTION
Δ	CENTRAL ANGLE OR DELTA
CL	CLASS
CONC	CONCRETE
CONST	CONSTRUCTION
CMCP	CORRUGATED METAL CULVERT PIPE
CTH	COUNTY TRUNK HIGHWAY
CABC	CRUSHED AGGREGATE BASE COURSE
CFS	CUBIC FEET PER SECOND
CY	CUBIC YARD
CP	CULVERT PIPE
CPCS	CULVERT PIPE CORRUGATED STEEL
CPRC	CULVERT PIPE REINFORCED CONCRETE
CPRCHE	CULVERT PIPE REINFORCED CONCRETE HORIZONTAL ELLIPTICAL
C & G	CURB AND GUTTER
D	DEGREE OF CURVE
DHV	DESIGN HOUR VOLUME
DIA	DIAMETER
DD	DIRECTIONAL DISTRIBUTION
DWY	DRIVEWAY
E	EAST
X	EAST GRID COORDINATE
EB	EASTBOUND
EL	ELEVATION
ESALS	EQUIVALENT SINGLE AXLE LOADS
EXC	EXCAVATION
EBS	EXCAVATION BELOW SUBGRADE
EXIST	EXISTING
FPS	FEET PER SECOND
FERT	FERTILIZE
FE	FIELD ENTRANCE
FL	FLOW LINE
FT	FOOT
GN	GRID NORTH
HES	HIGH EARLY STRENGTH
HP HW	HIGH POINT
HW	HIGH WATER
HMA	HOT MIX ASPHALT
CWT	HUNDREDWEIGHT
HWD	HYDRANT
INL	INLET
ID	INSIDE DIAMETER
I	INTERSECTION ANGLE
INV	INVERT
IP	IRON PIPE OR PIN
JT	JOINT
LT	LEFT
LT	LENGTH OF CURVE
LF	LINEAR FOOT
LP	LOW POINT
LS	LUMP SUM
MH	MANHOLE
MAX	MAXIMUM
Mgal	MEGAGALLON
MPH	MILES PER HOUR
MIN	MINIMUM
MON	MONUMENT
NOM	NOMINAL
NC	NORMAL CROWN
N	NORTH
Y	NORTH GRID COORDINATE
NB	NORTHBOUND
NO	NUMBER
OPT	OPTIONAL
OD	OUTSIDE DIAMETER
PAVT	PAVEMENT
PLE	PERMANENT LIMITED EASEMENT
PACS	PIPE ARCH CORRUGATED STEEL
PT	POINT
PC	POINT OF CURVATURE
PI	POINT OF INTERSECTION
PT	POINT OF TANGENCY
PVC	POINT OF VERTICAL CURVE
PVI	POINT OF VERTICAL INTERSECTION
PVT	POINT OF VERTICAL TANGENCY
PVC	POLYVINYL CHLORIDE
PCC	PORTLAND CEMENT CONCRETE
LB	POUND
PSF	POUNDS PER SQUARE FOOT
PSI	POUNDS PER SQUARE INCH
PE	PRIVATE ENTRANCE
PGL	PROFILE GRADE LINE
PL	PROPERTY LINE
Q100	100-YEAR FLOW RATE
R	RADIUS
RR	RAILROAD
R	RANGE
R/L	R/L
REINF	REINFORCING OR REINFORCEMENT
REQD	REQUIRED
RT	RIGHT
R/W	RIGHT-OF-WAY
RD	ROAD
RDWY	ROADWAY
SEC	SECTION
SHLDR	SHOULDER
S	SOUTH
SB	SOUTHBOUND
SQ	SQUARE
SF	SQUARE FEET
SW	SIDEWALK
SY	SQUARE YARD
SDD	STANDARD DETAIL DRAWINGS
STH	STATE TRUNK HIGHWAYS
STA	STATION
SS	STORM SEWER
SSPRC	STORM SEWER PIPE REINFORCED CONCRETE
ST	STREET
STR	STRUCTURE OR STRUCTURAL
SEC	SUPERELEVATION
T	TANGENT
TEMP	TEMPORARY
TI	TEMPORARY INTEREST
TLE	TEMPORARY LIMITED EASEMENT
t	TON
T	TOWN
T/L	TRANSIT LINE
T	TRUCKS (PERCENT OF)
TYP	TYPICAL
USH	UNITED STATES HIGHWAY
VAR	VARIABLE
V	VELOCITY OF DESIGN SPEED
VERT	VERTICAL
VC	VERTICAL CURVE
VOL	VOLUME
WM	WATERMAIN
WV	WATER VALVE
W	WEST
WB	WESTBOUND
YD	YARD

2

UTILITY CONTACTS

AT&T LOCAL NETWORK - COMMUNICATION LINE

TIMOTHY LAPOINTE
1301 FANNIN STREET
HOUSTON, TX 77002
(281) 352-3631
tl0695@att.com

ATC MANAGEMENT, INC. - ELETRICITY-TRANSMISSION

CHRIS DAILEY
P.O. BOX 47
WAUKESHA, WI 53187
(262) 506-6884
cdailey@atcllc.com

CENTURYLINK COMMUNICATIONS, LLC - COMMUNICATION LINE

BRAHIM GADDOUR
3325 INTERTECH DRIVE, SUITE 600
BROOKFIELD, WI 53045
(414) 908-1027
brahim.gaddour@lumen.com

CITY OF MILWAUKEE - ELECTRIC

ENG-KIE LEE
841 N BROADWAY, 9TH FLOOR
(415) MILWAUKEE, WI 53202
(416) 286-2174
elee@milwaukee.gov

CITY OF MILWAUKEE - SEWER

ZAFAR YOUSUF
841 NORTH BROADWAY
MILWAUKEE, WI 53202
(414) 286-2467
zyousu@milwaukee.gov

CITY OF MILWAUKEE - WATER

JOSHUA IWEN
841 N BROADWAY, 4TH FLOOR
MILWAUKEE, WI 53202
(414) 286-3640
jiwen@milwaukee.gov

CITY OF WEST ALLIS - SEWER & WATER

ROB HUTTER
7525 W GREENFIELD AVE
WEST ALLIS, WI 53214
(414) 302-8373
robert.hutter@westalliswi.gov

LEVEL 3 COMMUNICATIONS LLC - COMMUNICATION LINE

BRAHIM GADDOUR
3325 INTERTECH DRIVE, SUITE 600
BROOKFIELD, WI 53045
(414) 908-1027
brahim.gaddour@lumen.com

MILWAUKEE METROPOLITAN SEWERAGE DISTRICT - SEWER

JAMES ROMANOWSKI
260 W SEEBOTH ST
MILWAUKEE, WI 53204
(414) 225-2241
jromanowski@mmsd.com

SPECTRUM COMMUNICATIONS - COMMUNICATION LINE

BEAU ABUYA
1320 N DR MARTIN LUTHER KING JR DR
MILWAUKEE, WI 53212
(414) 758-9241
beau.abuya@charter.com

TDS METROCOM LLC - COMMUNICATION LINE

MATTHEW SCHULTE
16924 WEST VICTOR RD
NEW BERLIN, WI 53151
(281) 754-3063
matt.schulte@tdstelecom.com

VILLAGE OF MENOMONEE FALLS - SEWER & WATER

TOM DIMOFF
W156 N8480 PILGRIM ROAD
MENOMONEE FALLS, WI 53051
(414) 229-0853
tdimoff@menomonee-falls.org

WE ENERGIES - ELECTRIC

JAMES NELSON
7815 NORTHWESTERN AVENUE
RACINE, WI 53406
(262) 884-6734
james.nelson@we-energies.com

WE ENERGIES - GAS

WESLEY NUNN
7815 NORTHWESTERN AVENUE
RACINE, WI 53406
(262) 552-3446
wesley.nunn@we-energies.com

OTHER FACILITIES

WEST SHORE PIPE LINE COMPANY - GAS/PETROLEUM

ARIC AUFDERMAUER
FIVE TEK PARK, 9999 HAMILTON BLVD
BREINIGSVILLE, PA 18031
(414) 391-8102
aaufdermauer@buckeye.com

WIN TECHNOLOGY, LLC - COMMUNICATION LINE

JIM BIRKENHEIER
SUITE 219
800 WISCONSIN AVE
EAU CLAIRE, WI 54703
(715) 838-4007
jim.birkenheier@wintechnology.com

CITY OF MILWAUKEE - STREET LIGHTING

ENG-KIE LEE
841 N BROADWAY, 9TH FLOOR
(415) MILWAUKEE, WI 53202
(416) 286-2174
elee@milwaukee.gov

CITY OF WEST ALLIS - STREET LIGHTING

ROB HUTTER
7525 W GREENFIELD AVE
WEST ALLIS, WI 53214
(414) 302-8373
robert.hutter@westalliswi.gov

WEST ALLIS WEST MILWAUKEE SCHOOL DISTRICT ET AL - COMMUNICATION LINE

GREG SELISSEN
413 S. MADISON STREET
GREEN BAY, WI 54301
(414) 301-7904
gselissen@mcewi.com

WISDOT - ATR PULL BOXES - ELECTRICITY

RUSSELL LEWIS
3625 PIERSTORFF STREET
MADISON, WI 53704
(414) 516-5754
russell.lewis@dot.wi.gov

WISDOT - COMMUNICATION LINE

JOHN MITTELSTADT
STE. 300
433 W. ST. PAUL AVE.
MILWAUKEE, WI 53203-3007
(608) 205-7859
john.mittelstadt@dot.wi.gov

WISDOT - STREET LIGHTING

ERIC PEREA
1471 SOUTH 85TH STREET
WEST ALLIS, WI 53214
(414) 750-0935
Eric.Perea@dot.wi.gov

WISDNR CONTACT

RYAN PAPPAS
1027 W. ST. PAUL AVENUE
MILWAUKEE, WI 53233
(414) 750-7495
ryan.pappas@wisconsin.gov

OTHER CONTACTS

DAAR ENGINEERING, INC

ANDY SMIEJA, PE
518 W CHERRY ST.
MILWAUKEE, WI 53212
(414) 935-4350
andy.smieja@daarcorp.com

WISDOT SE REGION

AMANDA JOHANSEN, PE; PROJECT MANAGER
141 NW. BARSTOW ST.
WAUKESHA, WI 53187
(262) 521-4465
amanda.johansen@dot.wi.gov

DIGGERS HOTLINE
Dial 811 or (800)242-8511
www.DiggersHotline.com

2

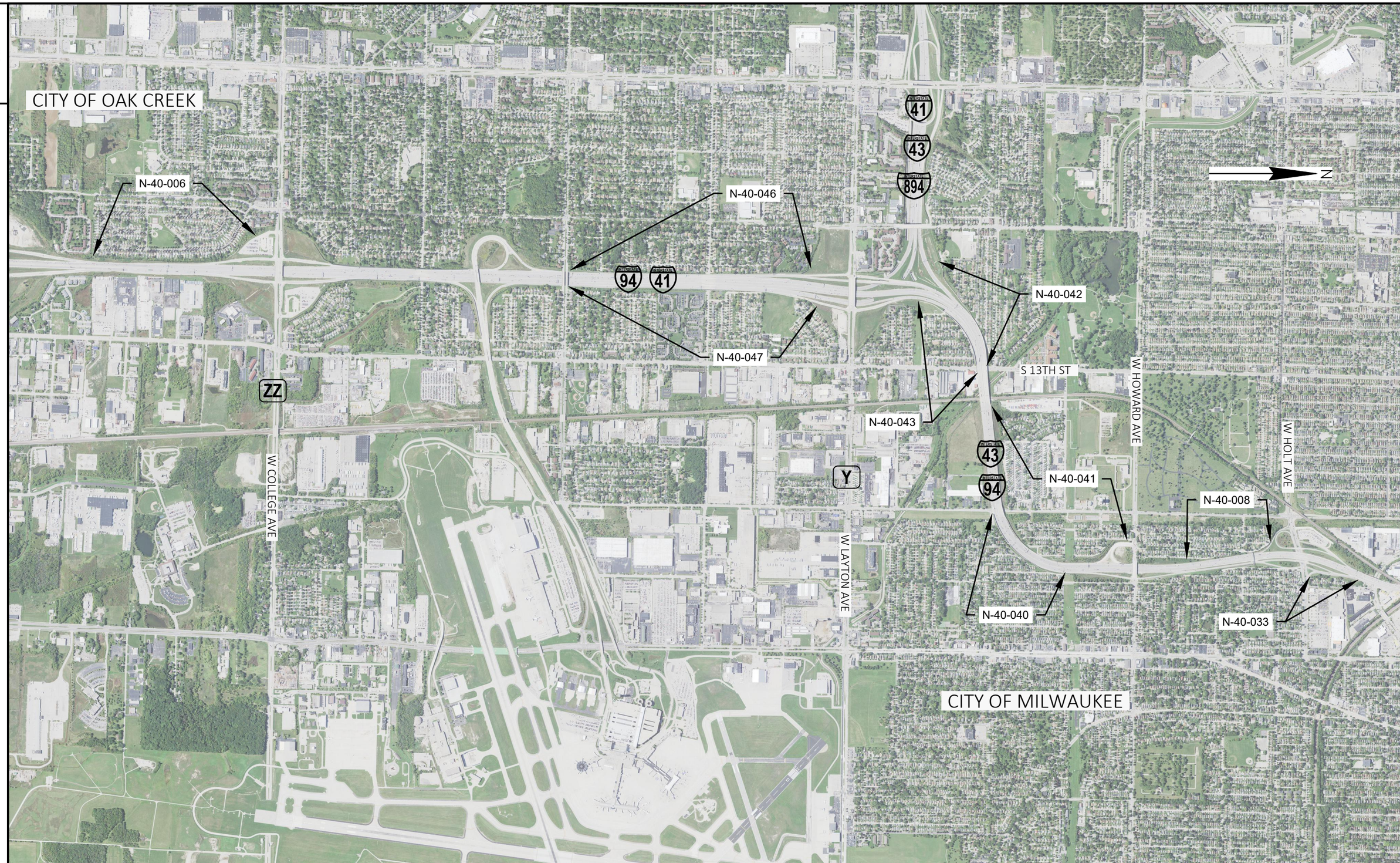

PROJECT NO: 1060-53-70	HWY: VARIOUS HIGHWAYS	COUNTY: SOUTHEAST REGIONWIDE	PROJECT OVERVIEW	SHEET 4	E

FILE NAME : C:\USERS\ETHAN.HEROUX\ONEDRIVE - DAAR CORPORATION\DOCUMENTS-SE-DESIGN\1060-53-00_VARIOUS NOISE WALLS\CADD\1060-53-00_VARIOUS NOISE WALLS\C3D\10605300\SHEETS\PLAN\20201-PO.DWG PLOT DATE : 7/18/2022 10:39 AM PLOT BY : ETHAN HEROUX PLOT NAME : PLOT SCALE : 1 IN:500 FT
LAYOUT NAME - 1

WISDOT/CADDS SHEET 42

PROJECT NO: 1060-53-70	HWY: VARIOUS HIGHWAYS	COUNTY: SOUTHEAST REGIONWIDE	PROJECT OVERVIEW	SHEET 5	E

FILE NAME : C:\USERS\ETHAN.HEROUX\ONEDRIVE - DAAR CORPORATION\DOCUMENTS-SE-DESIGN\1060-53-00_VARIOUS NOISE WALLS\CADD\1060-53-00_VARIOUS NOISE WALLS\C3D\10605300\SHEETS\PLAN\20201-PO.DWG PLOT DATE : 7/18/2022 10:39 AM PLOT BY : ETHAN HEROUX PLOT NAME : PLOT SCALE : 1 IN:500 FT
LAYOUT NAME - 2

WISDOT/CADDS SHEET 42

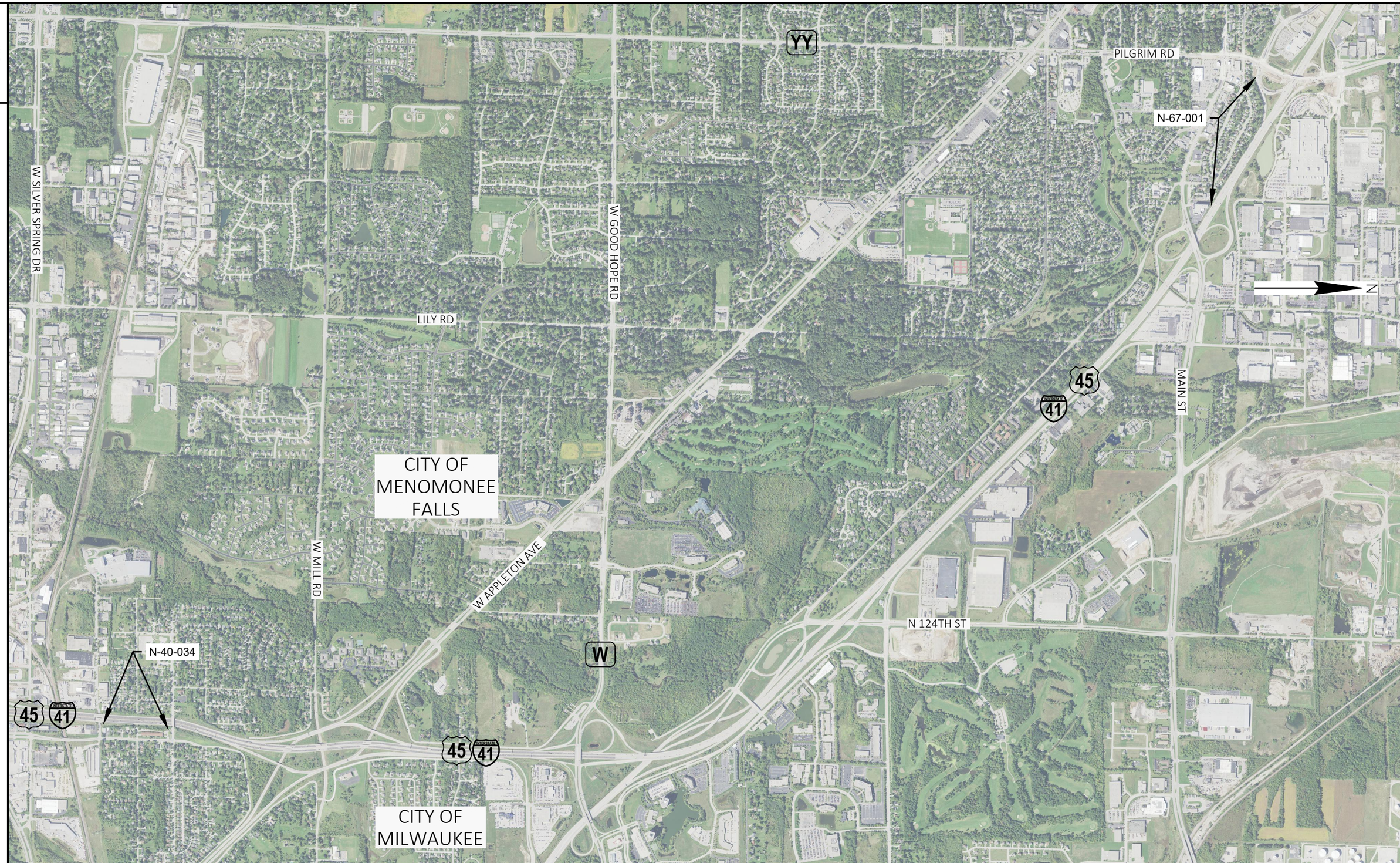

PROJECT NO: 1060-53-70	HWY: VARIOUS HIGHWAYS	COUNTY: SOUTHEAST REGIONWIDE	PROJECT OVERVIEW	SHEET 6	E

FILE NAME : C:\USERS\ETHAN.HEROUX\ONEDRIVE - DAAR CORPORATION\DOCUMENTS-SE-DESIGN\1060-53-00_VARIOUS NOISE WALLS\CADD\1060-53-00_VARIOUS NOISE WALLS\C3D\10605300\SHEETS\PLAN\0201-PO.DWG PLOT DATE : 7/18/2022 10:39 AM PLOT BY : ETHAN HEROUX PLOT NAME : PLOT SCALE : 1 IN:500 FT
LAYOUT NAME - 3

WISDOT/CADDS SHEET 42

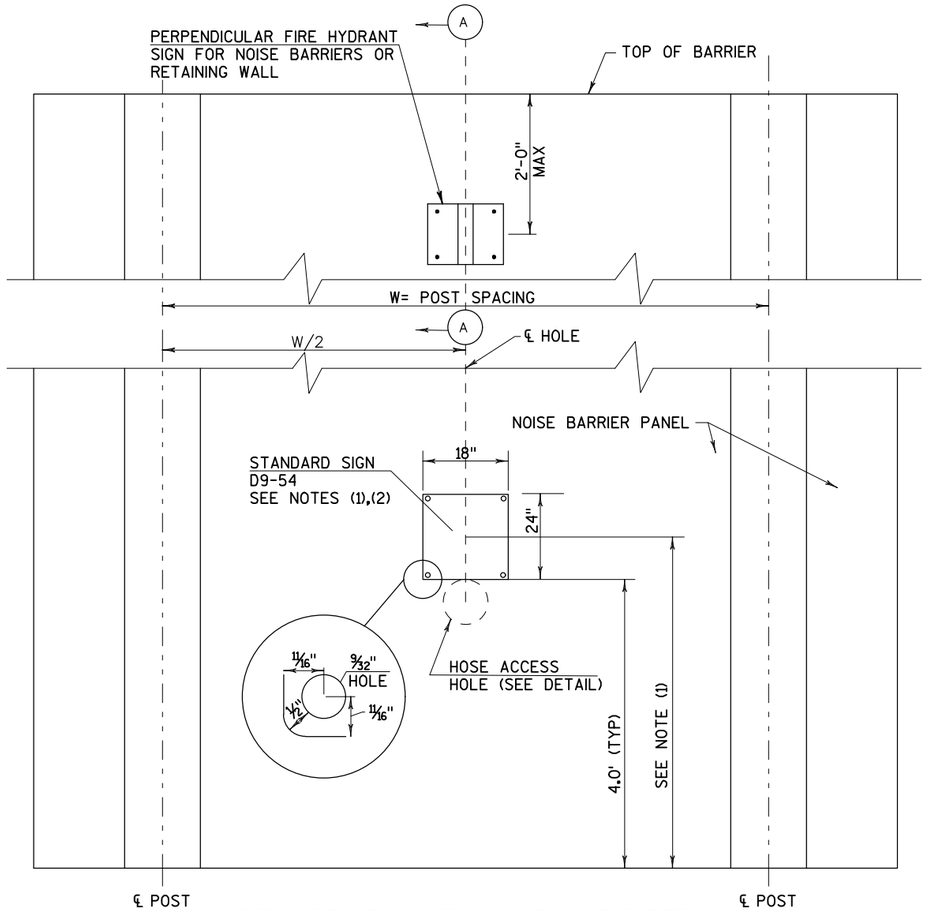

FIRE HYDRANT LOCATION/HOSE ACCESS DETAIL

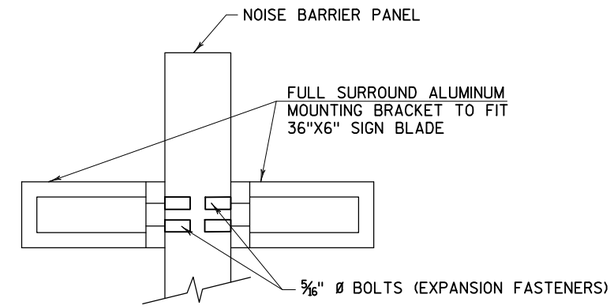

SECTION A–A

PERPENDICULAR FIRE HYDRANT SIGN
FOR NOISE BARRIER OR RETAINING WALL

NOTE:
MOUNTING BOLTS, BRACKETS, ARE INCIDENTAL TO SIGN

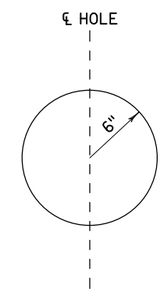

HOSE ACCESS HOLE DETAIL

NOTES:

1. STANDARD SIGNS D9-54 WILL BE FURNISHED BY THE CONTRACTOR. SEE PLAN.
2. TWO STANDARD SIGNS D9-54 TO BE FURNISHED PER STATION. ONE SIGN SHALL BE INSTALLED ON EACH SIDE OF THE BARRIER.
3. FIRE HYDRANT SIGN BLADE SHALL BE ATTACHED TO THE NOISE BARRIER PANEL OR RETAINING WALL NEAR THE TOP OF THE BARRIER. SEE DETAIL ABOVE.

NOTE:
EXPANSION FASTENERS FOR SIGN (D9-54) SIGN IS INCIDENTAL TO SIGN.

NOTE:
PLACE SIGNS MOVE TO OPENING WHERE SIGNING PLAN SHEETS SO INDICATE OTHERWISE, INSTALL PER THIS DETAIL.

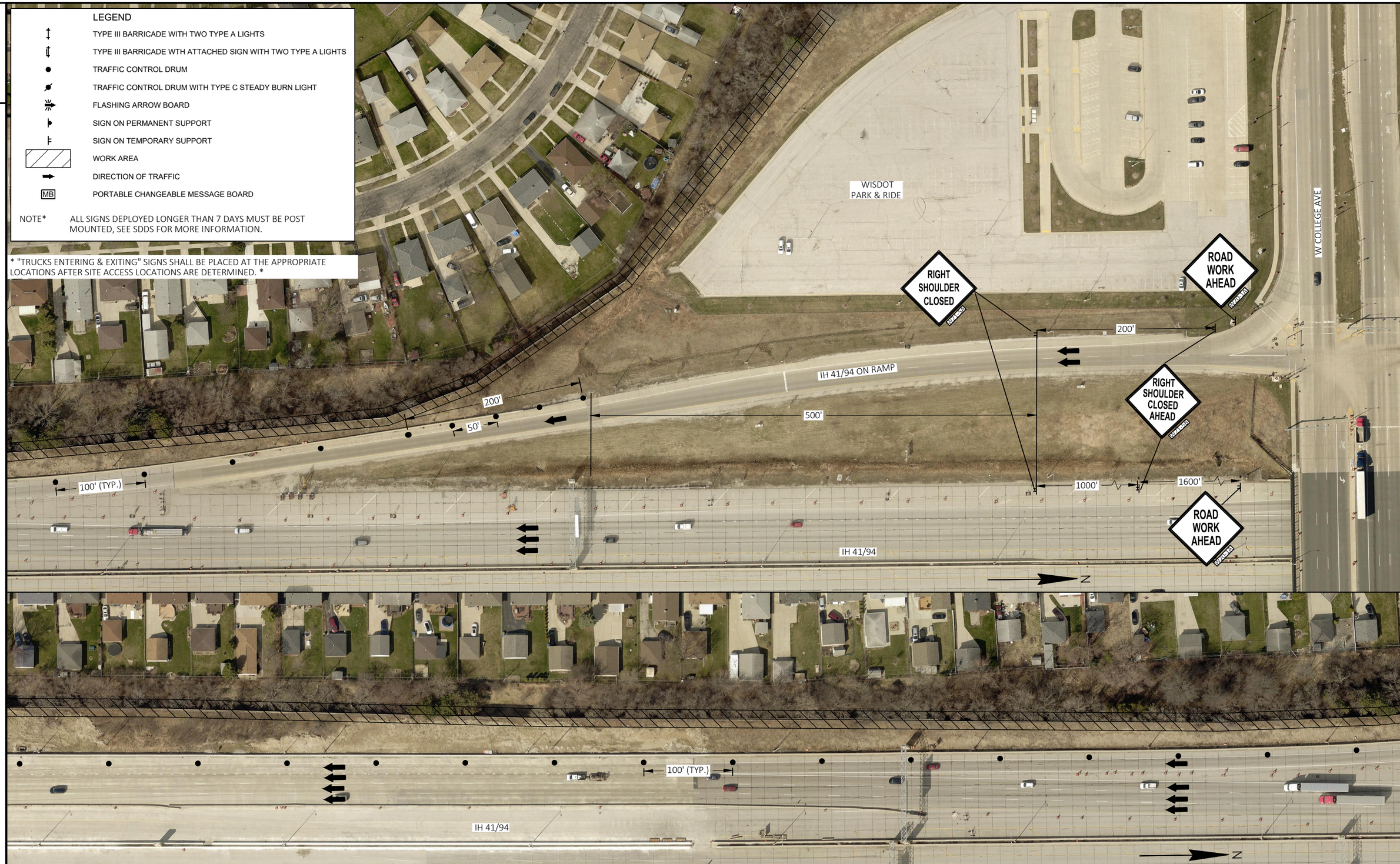

PROJECT NO: 1060-53-70	HWY: VARIOUS HIGHWAYS	COUNTY: SOUTHEAST REGIONWIDE	TRAFFIC CONTROL - NOISE WALL N-40-006	SHEET 8	E

FILE NAME : C:\USERS\ETHAN.HEROUX\ONEDRIVE - DAAR CORPORATION\DOCUMENTS-SE-DESIGN\1060-53-00_VARIOUS NOISE WALLS\CADD\1060-53-00_VARIOUS NOISE WALLS\C3D\10605300\SHEETPLAN\025100-TC_N-40-006.DWG PLOT DATE : 7/12/2023 3:20 PM PLOT BY : ETHAN HEROUX PLOT NAME : PLOT SCALE : 1 IN:100 FT
LAYOUT NAME - 01

WISDOT/CADDS SHEET 44

2

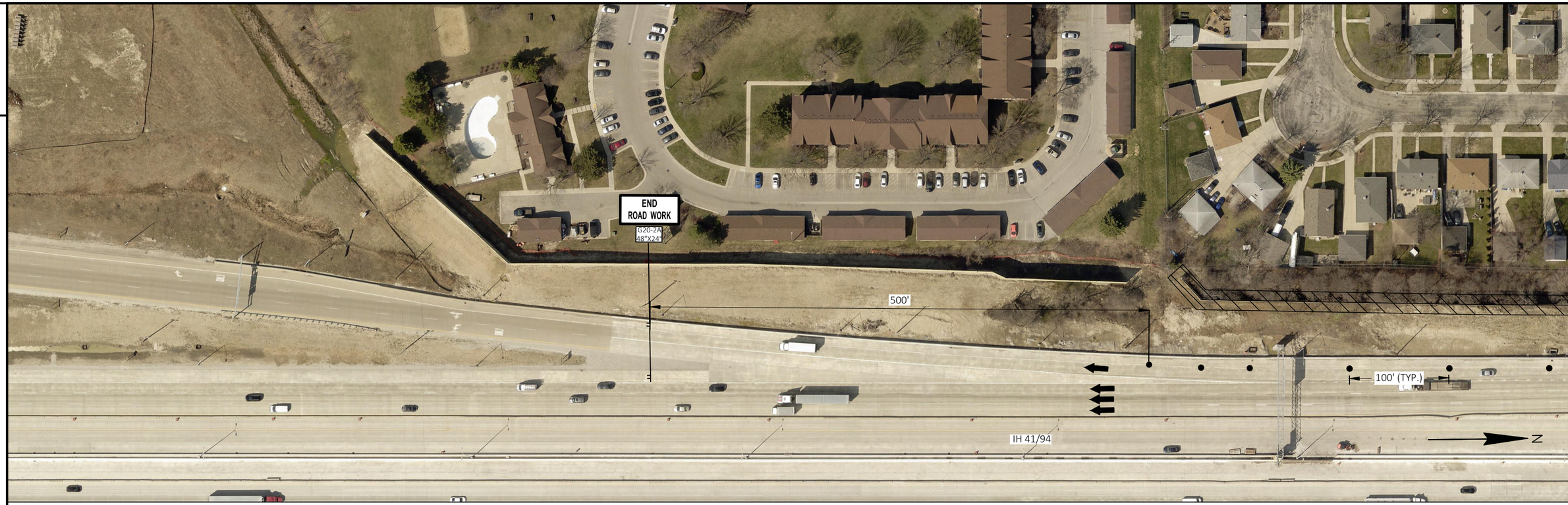

2

LEGEND

- TYPE III BARRICADE WITH TWO TYPE A LIGHTS
- TYPE III BARRICADE WTH ATTACHED SIGN WITH TWO TYPE A LIGHTS
- TRAFFIC CONTROL DRUM
- TRAFFIC CONTROL DRUM WITH TYPE C STEADY BURN LIGHT
- FLASHING ARROW BOARD
- SIGN ON PERMANENT SUPPORT
- SIGN ON TEMPORARY SUPPORT
- WORK AREA
- DIRECTION OF TRAFFIC
- MB PORTABLE CHANGEABLE MESSAGE BOARD

NOTE* ALL SIGNS DEPLOYED LONGER THAN 7 DAYS MUST BE POST MOUNTED, SEE SDDS FOR MORE INFORMATION.

2

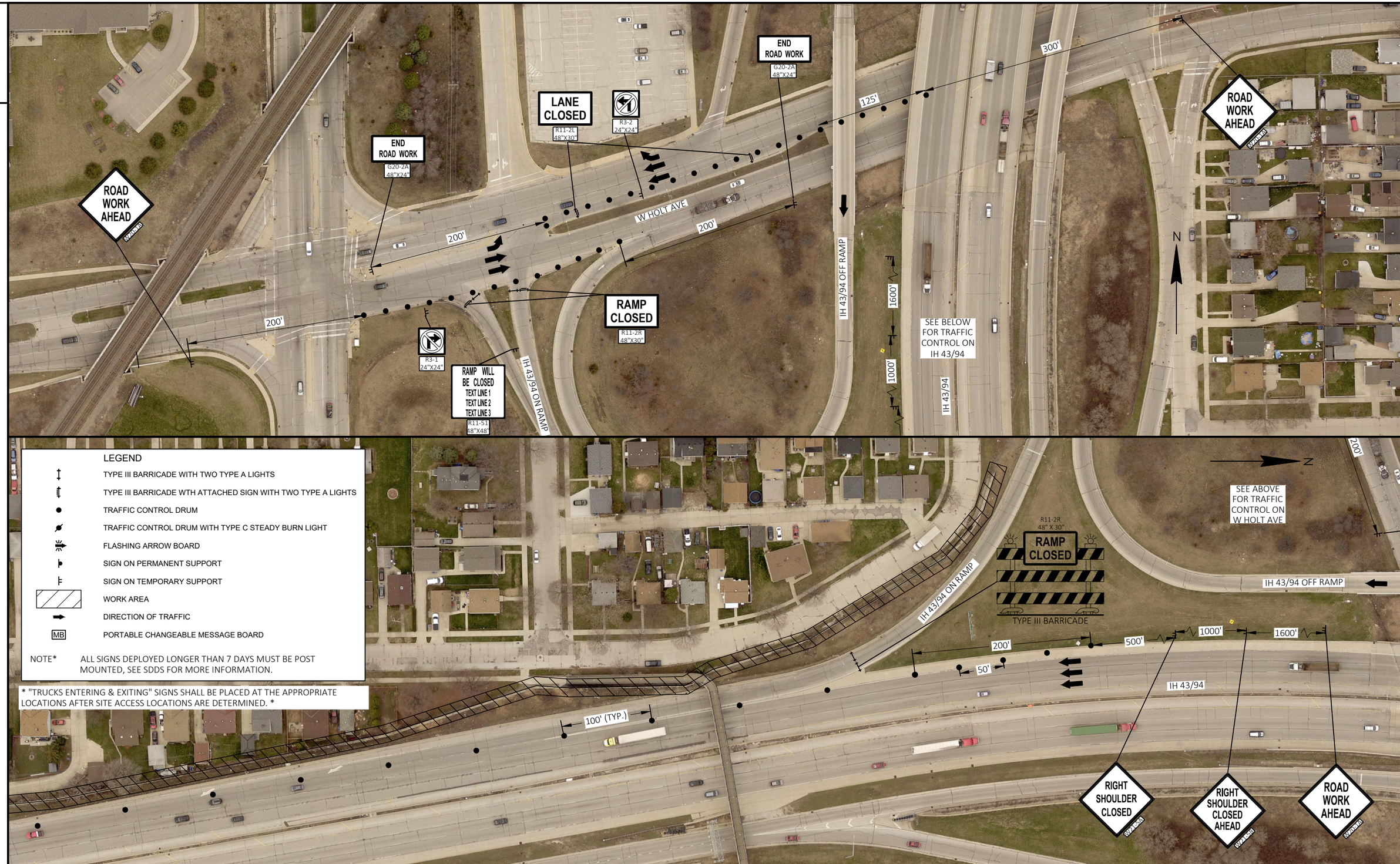

2

PROJECT NO: 1060-53-70	HWY: VARIOUS HIGHWAYS	COUNTY: SOUTHEAST REGIONWIDE	TRAFFIC CONTROL DETAILS - NOISE WALL N-40-008	SHEET 10	E

FILE NAME : C:\USERS\ETHAN.HEROUX\ONEDRIVE - DAAR CORPORATION\DOCUMENTS-SE-DESIGN\1060-53-00_VARIOUS NOISE WALLS\CADD\1060-53-00_VARIOUS NOISE WALLS\C3D\10605300\SHEETS\TCP\TCP-25100-TC-N-40-008.DWG
LAYOUT NAME - 01
PLOTTED ON : 7/24/2023 3:07 PM
PLOT BY : ETHAN HEROUX
PLOT NAME :
PLOT SCALE : 1 IN:100 FT

WISDOT/CADDS SHEET 44

2

2

LEGEND

- TYPE III BARRICADE WITH TWO TYPE A LIGHTS
- TYPE III BARRICADE WTH ATTACHED SIGN WITH TWO TYPE A LIGHTS
- TRAFFIC CONTROL DRUM
- TRAFFIC CONTROL DRUM WITH TYPE C STEADY BURN LIGHT
- FLASHING ARROW BOARD
- SIGN ON PERMANENT SUPPORT
- SIGN ON TEMPORARY SUPPORT
- WORK AREA
- DIRECTION OF TRAFFIC
- MB PORTABLE CHANGEABLE MESSAGE BOARD

NOTE* ALL SIGNS DEPLOYED LONGER THAN 7 DAYS MUST BE POST MOUNTED, SEE SDDS FOR MORE INFORMATION.

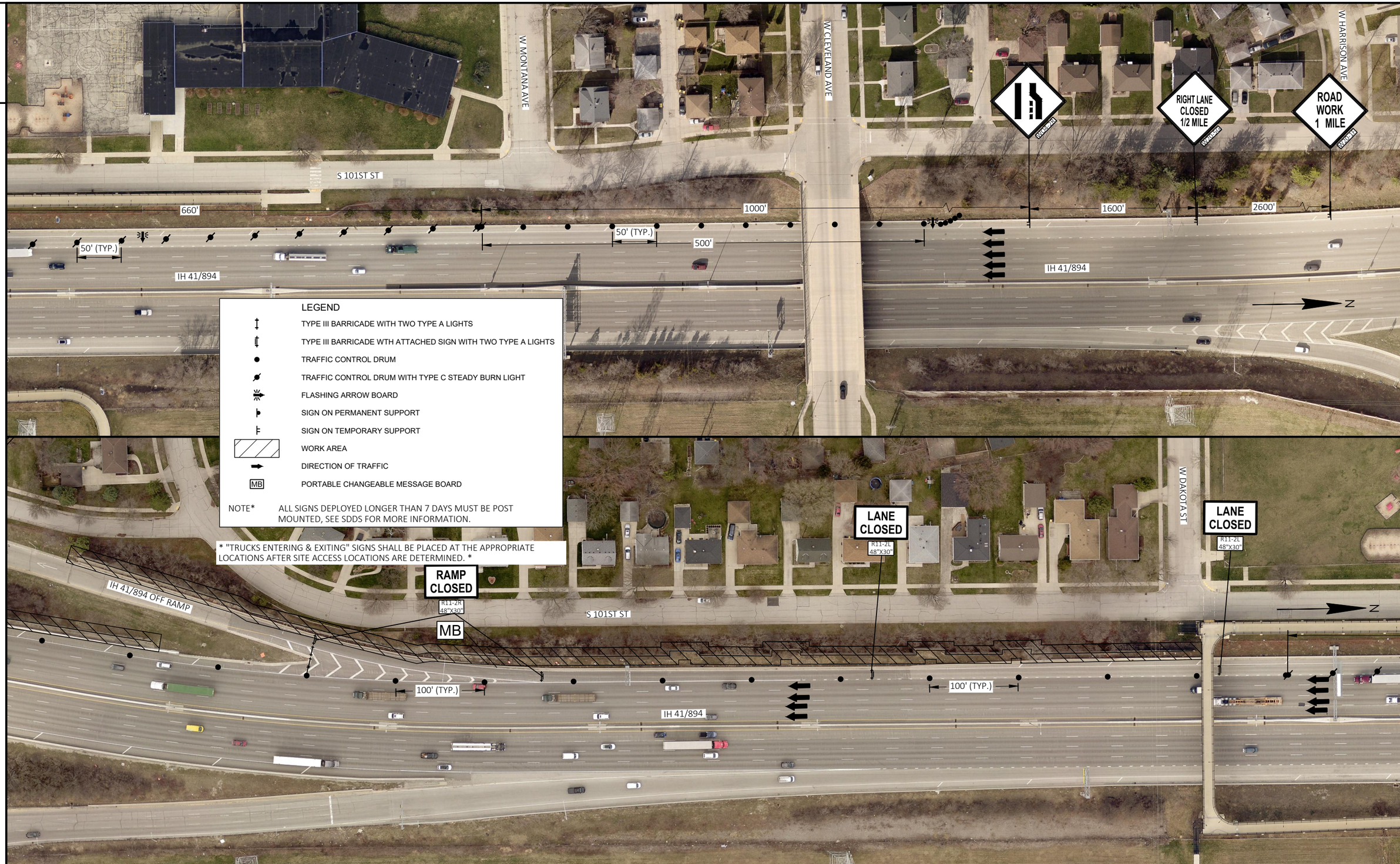

PROJECT NO: 1060-53-70	HWY: VARIOUS HIGHWAYS	COUNTY: SOUTHEAST REGIONWIDE	TRAFFIC CONTROL DETAILS - NOISE WALL N-40-017	SHEET 12	E

FILE NAME : C:\USERS\ETHAN.HEROUX\ONEDRIVE - DAAR CORPORATION\DOCUMENTS-SE-DESIGN\1060-53-00_VARIOUS NOISE WALLS\CADD\1060-53-00_VARIOUS NOISE WALLS\C3D\10605300\SHEETS\PLAN\025100-TC_N40017.DWG PLOT DATE : 7/18/2022 12:09 PM PLOT BY : ETHAN HEROUX PLOT NAME : PLOT SCALE : 1 IN:100 FT
LAYOUT NAME - 01

WISDOT/CADDS SHEET 44

2

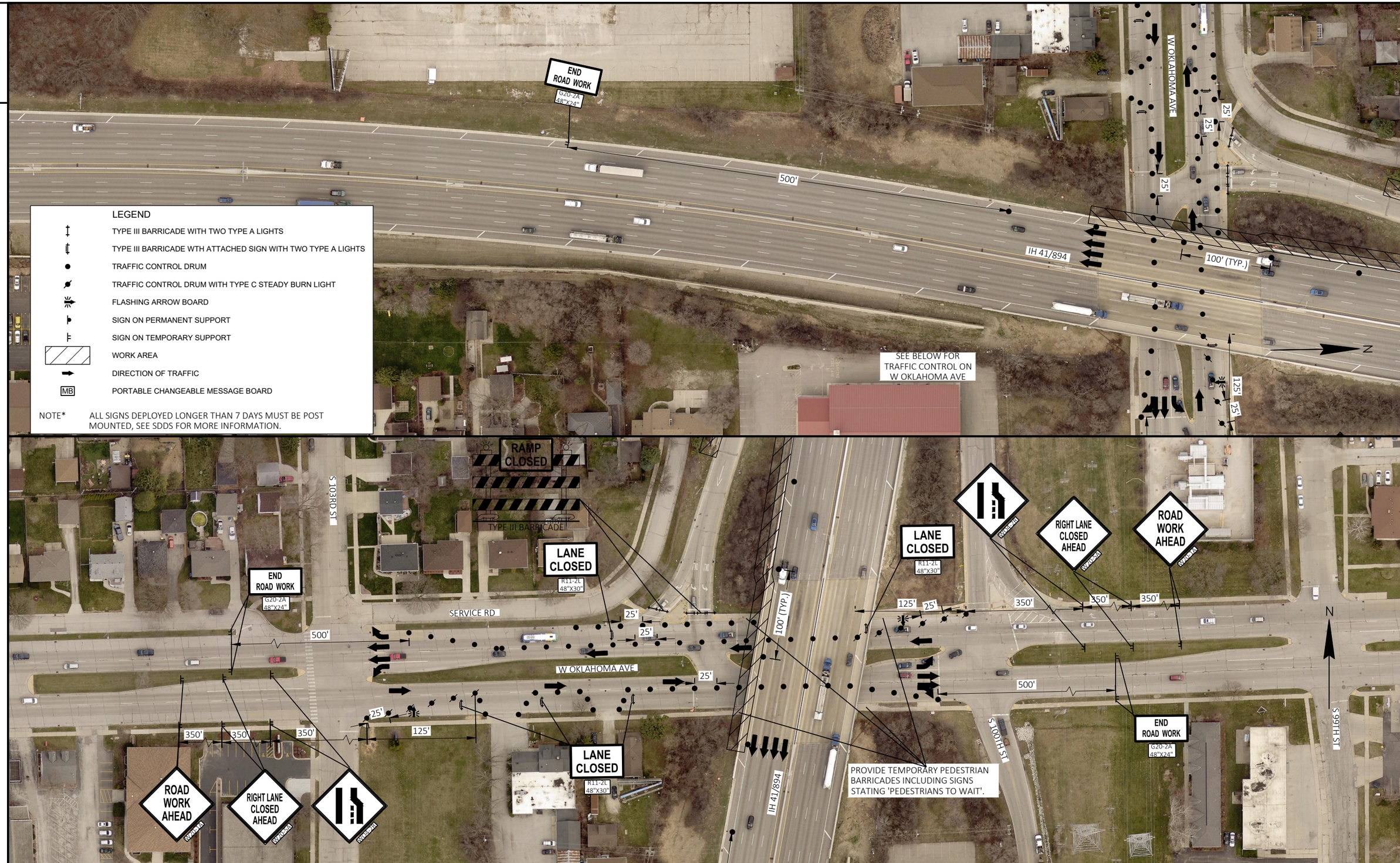

2

PROJECT NO: 1060-53-70	HWY: VARIOUS HIGHWAYS	COUNTY: SOUTHEAST REGIONWIDE	TRAFFIC CONTROL DETAILS - NOISE WALL N-40-017	SHEET 13	E

FILE NAME : C:\USERS\ETHAN.HEROUX\ONEDRIVE - DAAR CORPORATION\DOCUMENTS-SE-DESIGN\1060-53-00_VARIOUS NOISE WALLS\CADD\1060-53-00_VARIOUS NOISE WALLS\C3D\10605300\SHEETS\TCP\TCP25100-TC7.DWG 7/18/2017 12:09 PM
LAYOUT NAME - 02
PLOT BY : ETHAN HEROUX PLOT NAME : PLOT SCALE : 1 IN:100 FT
WISDOT/CADDS SHEET 44

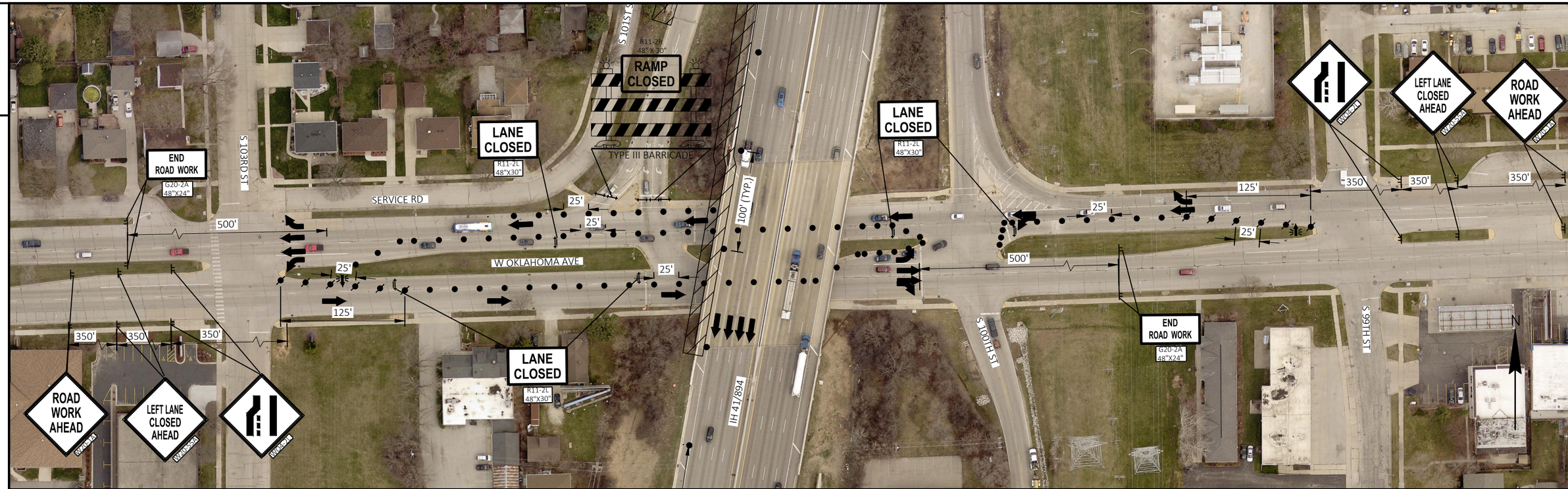

LEGEND

- TYPE III BARRICADE WITH TWO TYPE A LIGHTS
- TYPE III BARRICADE WTH ATTACHED SIGN WITH TWO TYPE A LIGHTS
- TRAFFIC CONTROL DRUM
- TRAFFIC CONTROL DRUM WITH TYPE C STEADY BURN LIGHT
- FLASHING ARROW BOARD
- SIGN ON PERMANENT SUPPORT
- SIGN ON TEMPORARY SUPPORT
- WORK AREA
- DIRECTION OF TRAFFIC
- MB PORTABLE CHANGEABLE MESSAGE BOARD

NOTE* ALL SIGNS DEPLOYED LONGER THAN 7 DAYS MUST BE POST MOUNTED, SEE SDDS FOR MORE INFORMATION.

* "TRUCKS ENTERING & EXITING" SIGNS SHALL BE PLACED AT THE APPROPRIATE LOCATIONS AFTER SITE ACCESS LOCATIONS ARE DETERMINED. *

PROJECT NO: 1060-53-70	HWY: VARIOUS HIGHWAYS	COUNTY: SOUTHEAST REGIONWIDE	TRAFFIC CONTROL DETAILS - NOISE WALL N-40-017 - LEFT LANE CLOSURE	SHEET 14	E

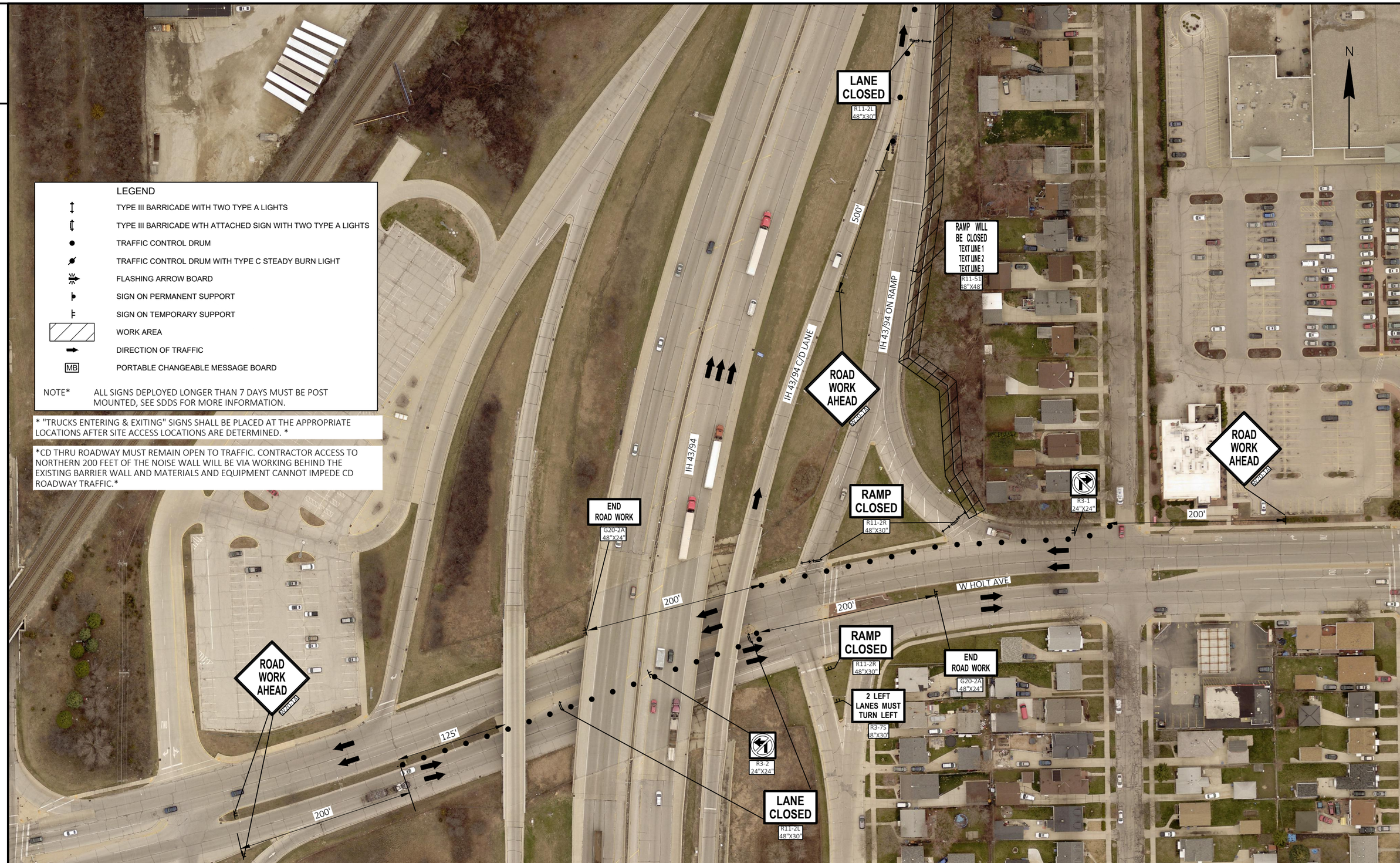

LEGEND

- TYPE III BARRICADE WITH TWO TYPE A LIGHTS
- TYPE III BARRICADE WTH ATTACHED SIGN WITH TWO TYPE A LIGHTS
- TRAFFIC CONTROL DRUM
- TRAFFIC CONTROL DRUM WITH TYPE C STEADY BURN LIGHT
- FLASHING ARROW BOARD
- SIGN ON PERMANENT SUPPORT
- SIGN ON TEMPORARY SUPPORT
- WORK AREA
- DIRECTION OF TRAFFIC
- MB PORTABLE CHANGEABLE MESSAGE BOARD

NOTE* ALL SIGNS DEPLOYED LONGER THAN 7 DAYS MUST BE POST MOUNTED, SEE SDDS FOR MORE INFORMATION.

* "TRUCKS ENTERING & EXITING" SIGNS SHALL BE PLACED AT THE APPROPRIATE LOCATIONS AFTER SITE ACCESS LOCATIONS ARE DETERMINED. *

CD THRU ROADWAY MUST REMAIN OPEN TO TRAFFIC. CONTRACTOR ACCESS TO NORTHERN 200 FEET OF THE NOISE WALL WILL BE VIA WORKING BEHIND THE EXISTING BARRIER WALL AND MATERIALS AND EQUIPMENT CANNOT IMPEDE CD ROADWAY TRAFFIC.

PROJECT NO: 1060-53-70	HWY: VARIOUS HIGHWAYS	COUNTY: SOUTHEAST REGIONWIDE	TRAFFIC CONTROL DETAILS - NOISE WALL N-40-033	SHEET 15	E

2

2

LEGEND

- TYPE III BARRICADE WITH TWO TYPE A LIGHTS
- TYPE III BARRICADE WTH ATTACHED SIGN WITH TWO TYPE A LIGHTS
- TRAFFIC CONTROL DRUM
- TRAFFIC CONTROL DRUM WITH TYPE C STEADY BURN LIGHT
- FLASHING ARROW BOARD
- SIGN ON PERMANENT SUPPORT
- SIGN ON TEMPORARY SUPPORT
- WORK AREA
- DIRECTION OF TRAFFIC
- MB PORTABLE CHANGEABLE MESSAGE BOARD

NOTE* ALL SIGNS DEPLOYED LONGER THAN 7 DAYS MUST BE POST MOUNTED, SEE SDDS FOR MORE INFORMATION.

N

CD THRU ROADWAY MUST REMAIN OPEN TO TRAFFIC. CONTRACTOR ACCESS TO NORTHERN 200 FEET OF THE NOISE WALL WILL BE VIA WORKING BEHIND THE EXISTING BARRIER WALL AND MATERIALS AND EQUIPMENT CANNOT IMPEDE CD ROADWAY TRAFFIC.

PROJECT NO: 1060-53-70	HWY: VARIOUS HIGHWAYS	COUNTY: SOUTHEAST REGIONWIDE	TRAFFIC CONTROL DETAILS - NOISE WALL N-40-033	SHEET 16	E

2

2

PROJECT NO: 1060-53-70	HWY: VARIOUS HIGHWAYS	COUNTY: SOUTHEAST REGIONWIDE	TRAFFIC CONTROL DETAILS - NOISE WALL N-40-034	SHEET 17	E

FILE NAME : C:\USERS\ETHAN.HEROUX\ONEDRIVE - DAAR CORPORATION\DOCUMENTS-SE-DESIGN\1060-53-00_VARIOUS NOISE WALLS\CADD\1060-53-00_VARIOUS NOISE WALLS\C3D\10605300\SHEETS\DAR-TC-25100-TC-18-02.DWG PLOT DATE : 7/8/2025 12:16 PM PLOT BY : ETHAN HEROUX PLOT NAME : PLOT SCALE : 1 IN:100 FT
LAYOUT NAME - 01

WISDOT/CADDS SHEET 44

2

2

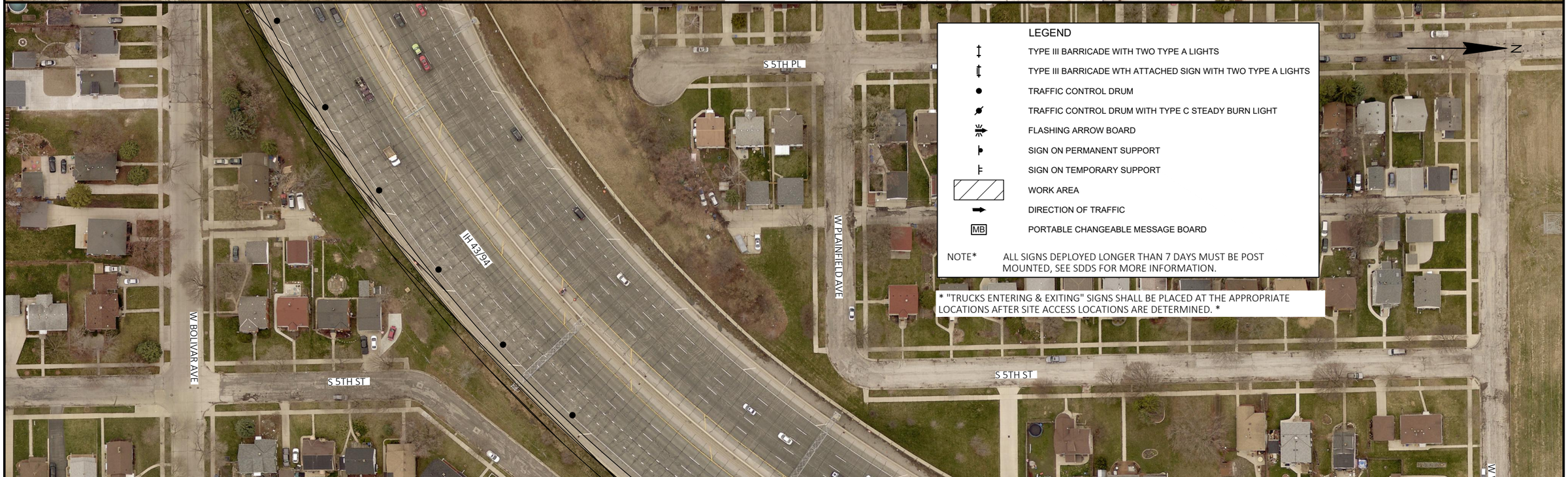

LEGEND

- TYPE III BARRICADE WITH TWO TYPE A LIGHTS
- TYPE III BARRICADE WTH ATTACHED SIGN WITH TWO TYPE A LIGHTS
- TRAFFIC CONTROL DRUM
- TRAFFIC CONTROL DRUM WITH TYPE C STEADY BURN LIGHT
- FLASHING ARROW BOARD
- SIGN ON PERMANENT SUPPORT
- SIGN ON TEMPORARY SUPPORT
- WORK AREA
- DIRECTION OF TRAFFIC
- MB PORTABLE CHANGEABLE MESSAGE BOARD

NOTE* ALL SIGNS DEPLOYED LONGER THAN 7 DAYS MUST BE POST MOUNTED, SEE SDDS FOR MORE INFORMATION.

* "TRUCKS ENTERING & EXITING" SIGNS SHALL BE PLACED AT THE APPROPRIATE LOCATIONS AFTER SITE ACCESS LOCATIONS ARE DETERMINED. *

PROJECT NO: 1060-53-70	HWY: VARIOUS HIGHWAYS	COUNTY: SOUTHEAST REGIONWIDE	TRAFFIC CONTROL DETAILS - NOISE WALL N-40-040	SHEET 18	E

FILE NAME : C:\USERS\ETHAN.HEROUX\ONEDRIVE - DAAR CORPORATION\DOCUMENTS-SE-DESIGN\1060-53-00_VARIOUS NOISE WALLS\CADD\1060-53-00_VARIOUS NOISE WALLS\C3D\10605300\SHEETS\10605300-TC-N-40-040.DWG PLOTTED ON A3 7/12/2023 3:08:27 PM
LAYOUT NAME - 01
PLOT BY : ETHAN HEROUX PLOT NAME : PLOT SCALE : 1 IN:100 FT
WISDOT/CADDS SHEET 44

2

2

LEGEND

- TYPE III BARRICADE WITH TWO TYPE A LIGHTS
- TYPE III BARRICADE WTH ATTACHED SIGN WITH TWO TYPE A LIGHTS
- TRAFFIC CONTROL DRUM
- TRAFFIC CONTROL DRUM WITH TYPE C STEADY BURN LIGHT
- FLASHING ARROW BOARD
- SIGN ON PERMANENT SUPPORT
- SIGN ON TEMPORARY SUPPORT
- WORK AREA
- DIRECTION OF TRAFFIC
- MB PORTABLE CHANGEABLE MESSAGE BOARD

NOTE* ALL SIGNS DEPLOYED LONGER THAN 7 DAYS MUST BE POST MOUNTED, SEE SDDS FOR MORE INFORMATION.

N

PROJECT NO: 1060-53-70	HWY: VARIOUS HIGHWAYS	COUNTY: SOUTHEAST REGIONWIDE	TRAFFIC CONTROL DETAILS - NOISE WALL N-40-040	SHEET 19	E

FILE NAME : C:\USERS\ETHAN.HEROUX\ONEDRIVE - DAAR CORPORATION\DOCUMENTS-SE-DESIGN\1060-53-00_VARIOUS NOISE WALLS\CADD\1060-53-00_VARIOUS NOISE WALLS\C3D\10605300\SHEETS\PLAN\025100-TC_N-40-040.DWG PLOT DATE : 7/12/2023 3:08 PM PLOT BY : ETHAN HEROUX PLOT NAME : PLOT SCALE : 1 IN:100 FT
LAYOUT NAME - 02

WISDOT/CADDS SHEET 44

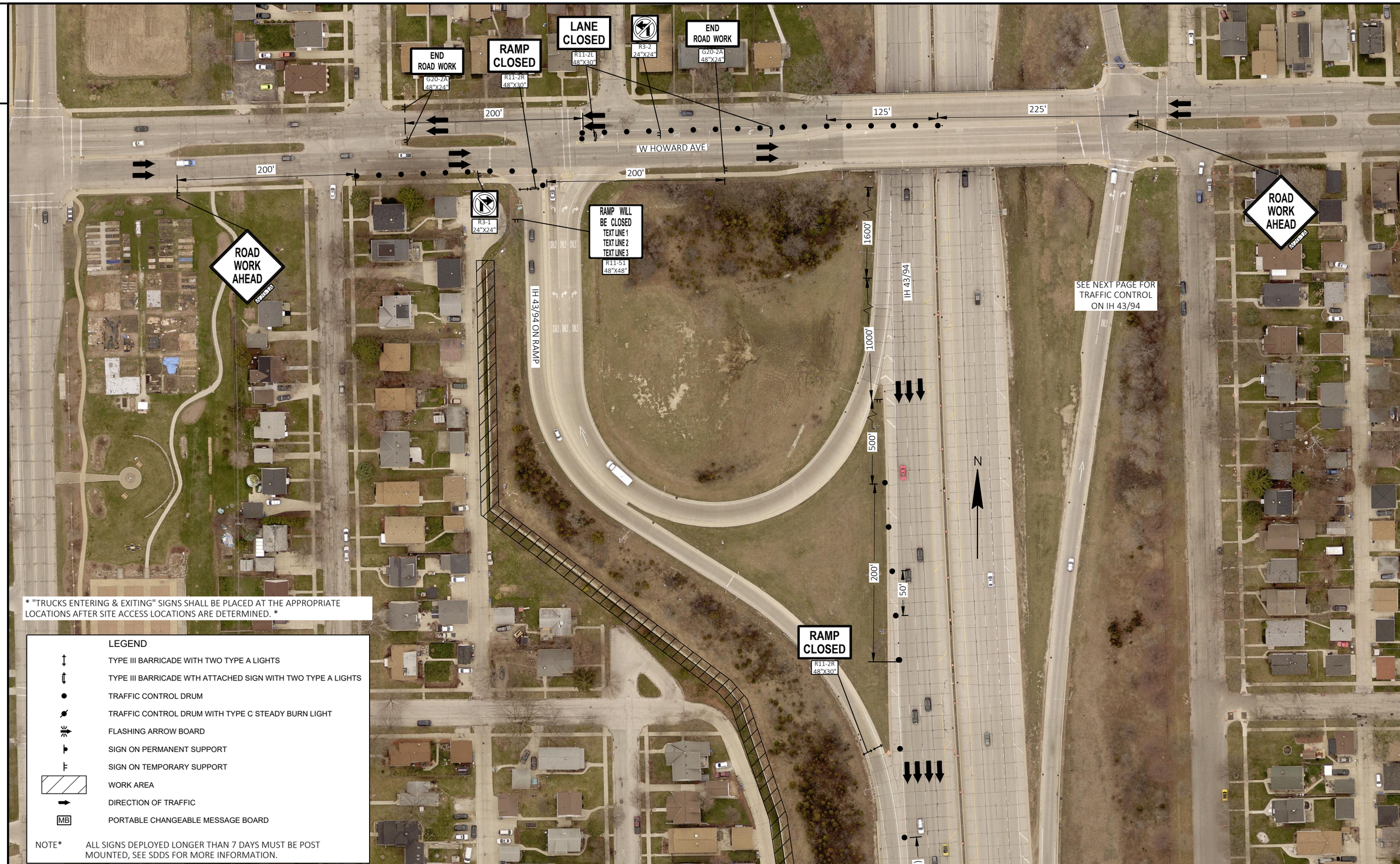

* "TRUCKS ENTERING & EXITING" SIGNS SHALL BE PLACED AT THE APPROPRIATE LOCATIONS AFTER SITE ACCESS LOCATIONS ARE DETERMINED. *

LEGEND

- TYPE III BARRICADE WITH TWO TYPE A LIGHTS
- TYPE III BARRICADE WTH ATTACHED SIGN WITH TWO TYPE A LIGHTS
- TRAFFIC CONTROL DRUM
- TRAFFIC CONTROL DRUM WITH TYPE C STEADY BURN LIGHT
- FLASHING ARROW BOARD
- SIGN ON PERMANENT SUPPORT
- SIGN ON TEMPORARY SUPPORT
- WORK AREA
- DIRECTION OF TRAFFIC
- MB PORTABLE CHANGEABLE MESSAGE BOARD

NOTE* ALL SIGNS DEPLOYED LONGER THAN 7 DAYS MUST BE POST MOUNTED, SEE SDDS FOR MORE INFORMATION.

PROJECT NO: 1060-53-70	HWY: VARIOUS HIGHWAYS	COUNTY: SOUTHEAST REGIONWIDE	TRAFFIC CONTROL DETAILS - NOISE WALL N-40-041	SHEET 20	E

FILE NAME : C:\USERS\ETHAN.HEROUX\ONEDRIVE - DAAR CORPORATION\DOCUMENTS-SE-DESIGN\1060-53-00_VARIOUS NOISE WALLS\CADD\1060-53-00_VARIOUS NOISE WALLS\C3D\10605300\SHEETPLAN\025100-TC_N40-041.DWG PLOT DATE : 7/18/2022 12:37 PM PLOT BY : ETHAN HEROUX PLOT NAME : PLOT SCALE : 1 IN:100 FT
LAYOUT NAME - 01

WISDOT/CADDS SHEET 44

PROJECT NO: 1060-53-70	HWY: VARIOUS HIGHWAYS	COUNTY: SOUTHEAST REGIONWIDE	TRAFFIC CONTROL DETAILS - NOISE WALL N-40-041	SHEET 21	E

FILE NAME : C:\USERS\ETHAN.HEROUX\ONEDRIVE - DAAR CORPORATION\DOCUMENTS-SE-DESIGN\1060-53-00_VARIOUS NOISE WALLS\CADD\1060-53-00_VARIOUS NOISE WALLS\C3D\10605300\SHEETS\DATA\25100-TC_N40-041_12.DWG PLOT DATE : 7/18/2022 12:37 PM PLOT BY : ETHAN HEROUX PLOT NAME : PLOT SCALE : 1 IN:100 FT
LAYOUT NAME - 02

WISDOT/CADDS SHEET 44

2

2

PROJECT NO: 1060-53-70	HWY: VARIOUS HIGHWAYS	COUNTY: SOUTHEAST REGIONWIDE	TRAFFIC CONTROL DETAILS - NOISE WALL N-40-041	SHEET 22	E

FILE NAME : C:\USERS\ETHAN.HEROUX\ONEDRIVE - DAAR CORPORATION\DOCUMENTS-SE-DESIGN\1060-53-00_VARIOUS NOISE WALLS\CADD\1060-53-00_VARIOUS NOISE WALLS\C3D\10605300\SHEETS\PLAN\125100-TC_N40-041_DAAR.DWG PLOT DATE : 7/18/2022 12:37 PM PLOT BY : ETHAN HEROUX PLOT NAME : PLOT SCALE : 1 IN:100 FT
LAYOUT NAME - 03

WISDOT/CADDS SHEET 44

2

* "TRUCKS ENTERING & EXITING" SIGNS SHALL BE PLACED AT THE APPROPRIATE LOCATIONS AFTER SITE ACCESS LOCATIONS ARE DETERMINED. *

LEGEND

- TYPE III BARRICADE WITH TWO TYPE A LIGHTS
- TYPE III BARRICADE WTH ATTACHED SIGN WITH TWO TYPE A LIGHTS
- TRAFFIC CONTROL DRUM
- TRAFFIC CONTROL DRUM WITH TYPE C STEADY BURN LIGHT
- FLASHING ARROW BOARD
- SIGN ON PERMANENT SUPPORT
- SIGN ON TEMPORARY SUPPORT
- WORK AREA
- DIRECTION OF TRAFFIC
- MB PORTABLE CHANGEABLE MESSAGE BOARD

NOTE* ALL SIGNS DEPLOYED LONGER THAN 7 DAYS MUST BE POST MOUNTED, SEE SDDS FOR MORE INFORMATION.

2

PROJECT NO: 1060-53-70	HWY: VARIOUS HIGHWAYS	COUNTY: SOUTHEAST REGIONWIDE	TRAFFIC CONTROL DETAILS - NOISE WALL N-40-042	SHEET 23	E

FILE NAME : C:\USERS\ETHAN.HEROUX\ONEDRIVE - DAAR CORPORATION\DOCUMENTS-SE-DESIGN\1060-53-00_VARIOUS NOISE WALLS\CADD\1060-53-00_VARIOUS NOISE WALLS\C3D\10605300\SHEETS\DATA\25100-TC_N40-042_1237.DWG PLOT DATE : 7/18/2022 12:37 PM PLOT BY : ETHAN HEROUX PLOT NAME : PLOT SCALE : 1 IN:100 FT
LAYOUT NAME - 04

WISDOT/CADDS SHEET 44

LEGEND

- TYPE III BARRICADE WITH TWO TYPE A LIGHTS
- TYPE III BARRICADE WTH ATTACHED SIGN WITH TWO TYPE A LIGHTS
- TRAFFIC CONTROL DRUM
- TRAFFIC CONTROL DRUM WITH TYPE C STEADY BURN LIGHT
- FLASHING ARROW BOARD
- SIGN ON PERMANENT SUPPORT
- SIGN ON TEMPORARY SUPPORT
- WORK AREA
- DIRECTION OF TRAFFIC
- MB PORTABLE CHANGEABLE MESSAGE BOARD

NOTE* ALL SIGNS DEPLOYED LONGER THAN 7 DAYS MUST BE POST MOUNTED, SEE SDDS FOR MORE INFORMATION.

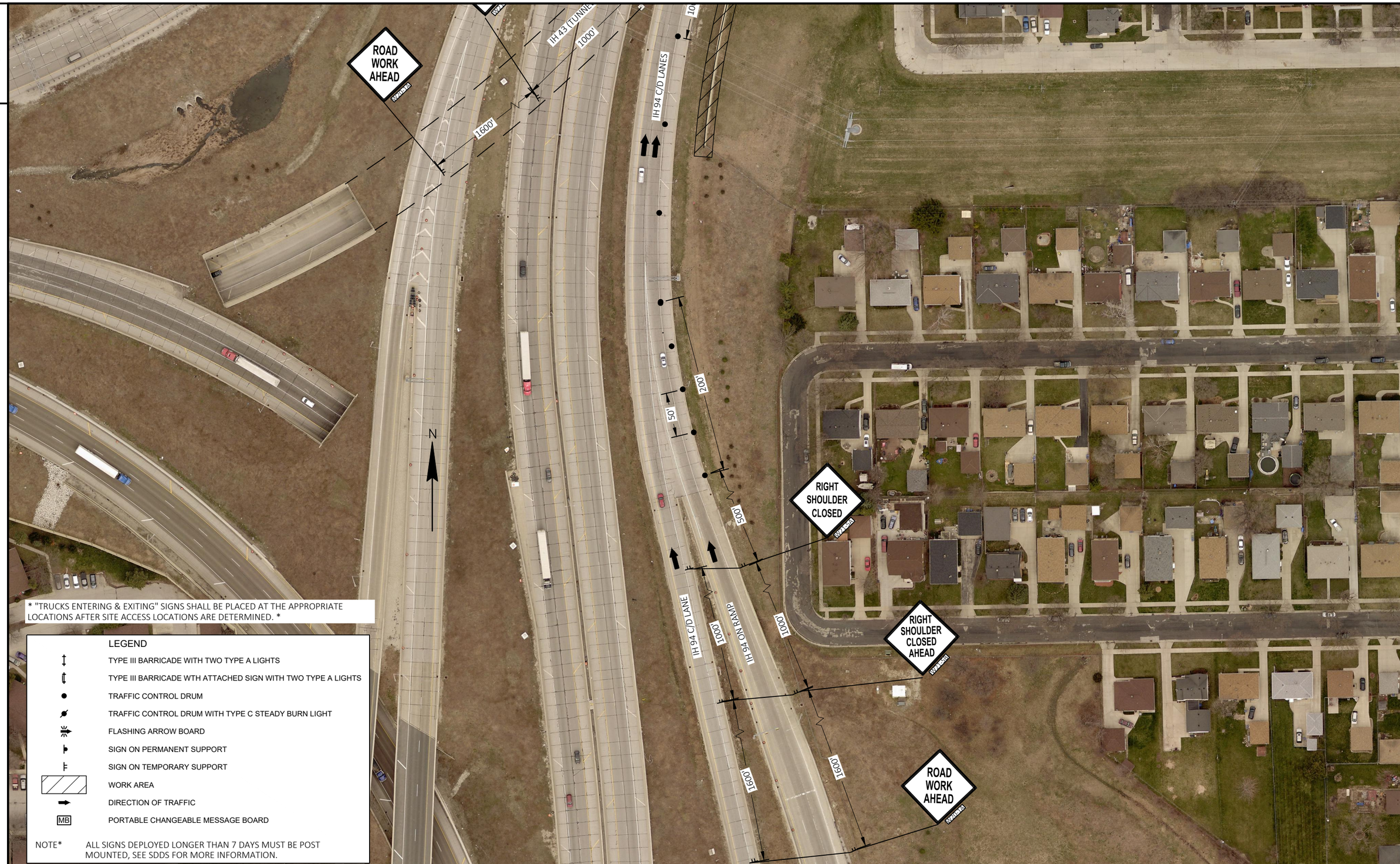

* "TRUCKS ENTERING & EXITING" SIGNS SHALL BE PLACED AT THE APPROPRIATE LOCATIONS AFTER SITE ACCESS LOCATIONS ARE DETERMINED. *

LEGEND

- TYPE III BARRICADE WITH TWO TYPE A LIGHTS
- TYPE III BARRICADE WTH ATTACHED SIGN WITH TWO TYPE A LIGHTS
- TRAFFIC CONTROL DRUM
- TRAFFIC CONTROL DRUM WITH TYPE C STEADY BURN LIGHT
- FLASHING ARROW BOARD
- SIGN ON PERMANENT SUPPORT
- SIGN ON TEMPORARY SUPPORT
- WORK AREA
- DIRECTION OF TRAFFIC
- MB PORTABLE CHANGEABLE MESSAGE BOARD

NOTE* ALL SIGNS DEPLOYED LONGER THAN 7 DAYS MUST BE POST MOUNTED, SEE SDDS FOR MORE INFORMATION.

PROJECT NO: 1060-53-70	HWY: VARIOUS HIGHWAYS	COUNTY: SOUTHEAST REGIONWIDE	TRAFFIC CONTROL DETAILS - NOISE WALL N-40-043	SHEET 25	E

FILE NAME : C:\USERS\ETHAN.HEROUX\ONEDRIVE - DAAR CORPORATION\DOCUMENTS-SE-DESIGN\1060-53-00_VARIOUS NOISE WALLS\CADD\1060-53-00_VARIOUS NOISE WALLS\C3D\10605300\SHEETS\PLAN\025100-TC_N-40-043.DWG PLOT DATE : 7/12/2023 2:56 PM PLOT BY : ETHAN HEROUX PLOT NAME : PLOT SCALE : 1 IN:100 FT
LAYOUT NAME - 01

WISDOT/CADDS SHEET 44

LEGEND

- TYPE III BARRICADE WITH TWO TYPE A LIGHTS
- TYPE III BARRICADE WTH ATTACHED SIGN WITH TWO TYPE A LIGHTS
- TRAFFIC CONTROL DRUM
- TRAFFIC CONTROL DRUM WITH TYPE C STEADY BURN LIGHT
- FLASHING ARROW BOARD
- SIGN ON PERMANENT SUPPORT
- SIGN ON TEMPORARY SUPPORT
- WORK AREA
- DIRECTION OF TRAFFIC
- MB PORTABLE CHANGEABLE MESSAGE BOARD

NOTE* ALL SIGNS DEPLOYED LONGER THAN 7 DAYS MUST BE POST MOUNTED, SEE SDDS FOR MORE INFORMATION.

PROJECT NO: 1060-53-70	HWY: VARIOUS HIGHWAYS	COUNTY: SOUTHEAST REGIONWIDE	TRAFFIC CONTROL DETAILS - NOISE WALL N-40-043	SHEET 26	E

2

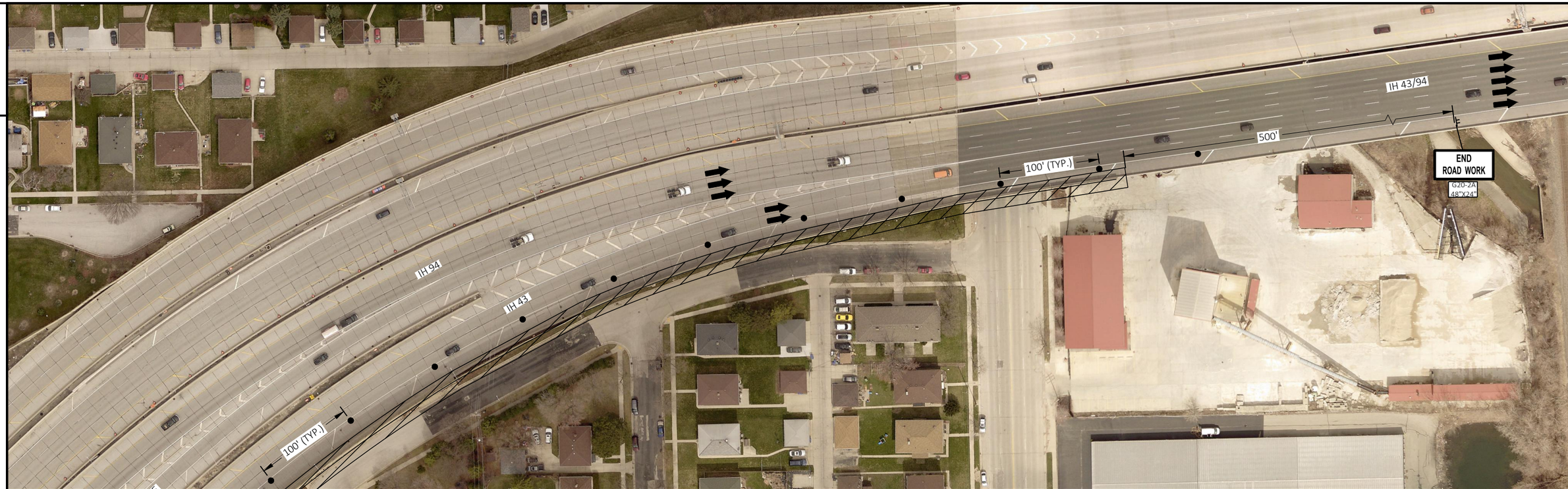

2

LEGEND

- TYPE III BARRICADE WITH TWO TYPE A LIGHTS
- TYPE III BARRICADE WTH ATTACHED SIGN WITH TWO TYPE A LIGHTS
- TRAFFIC CONTROL DRUM
- TRAFFIC CONTROL DRUM WITH TYPE C STEADY BURN LIGHT
- FLASHING ARROW BOARD
- SIGN ON PERMANENT SUPPORT
- SIGN ON TEMPORARY SUPPORT
- WORK AREA
- DIRECTION OF TRAFFIC
- MB PORTABLE CHANGEABLE MESSAGE BOARD

NOTE* ALL SIGNS DEPLOYED LONGER THAN 7 DAYS MUST BE POST MOUNTED, SEE SDDS FOR MORE INFORMATION.

N

PROJECT NO: 1060-53-70	HWY: VARIOUS HIGHWAYS	COUNTY: SOUTHEAST REGIONWIDE	TRAFFIC CONTROL DETAILS - NOISE WALL N-40-043	SHEET 27	E

FILE NAME : C:\USERS\ETHAN.HEROUX\ONEDRIVE - DAAR CORPORATION\DOCUMENTS-SE-DESIGN\1060-53-00_VARIOUS NOISE WALLS\CADD\1060-53-00_VARIOUS NOISE WALLS\C3D\10605300\SHEETS\PLAN\025100-TC_N-40-043.DWG PLOT DATE : 7/12/2023 2:55 PM PLOT BY : ETHAN HEROUX PLOT NAME : PLOT SCALE : 1 IN:100 FT
LAYOUT NAME - 03

WISDOT/CADDS SHEET 44

2

2

PROJECT NO: 1060-53-70	HWY: VARIOUS HIGHWAYS	COUNTY: SOUTHEAST REGIONWIDE	TRAFFIC CONTROL DETAILS - NOISE WALL N-40-046	SHEET 28	E

FILE NAME : C:\USERS\ETHAN.HEROUX\ONEDRIVE - DAAR CORPORATION\DOCUMENTS-SE-DESIGN\1060-53-00_VARIOUS NOISE WALLS\CADD\1060-53-00_VARIOUS NOISE WALLS\C3D\10605300\SHEETS\TCD\TCD-25100-TC7.DWG 1/8/2026 12:42 PM
LAYOUT NAME - 01
PLOT BY : ETHAN HEROUX PLOT NAME : PLOT SCALE : 1 IN:100 FT
WISDOT/CADDS SHEET 44

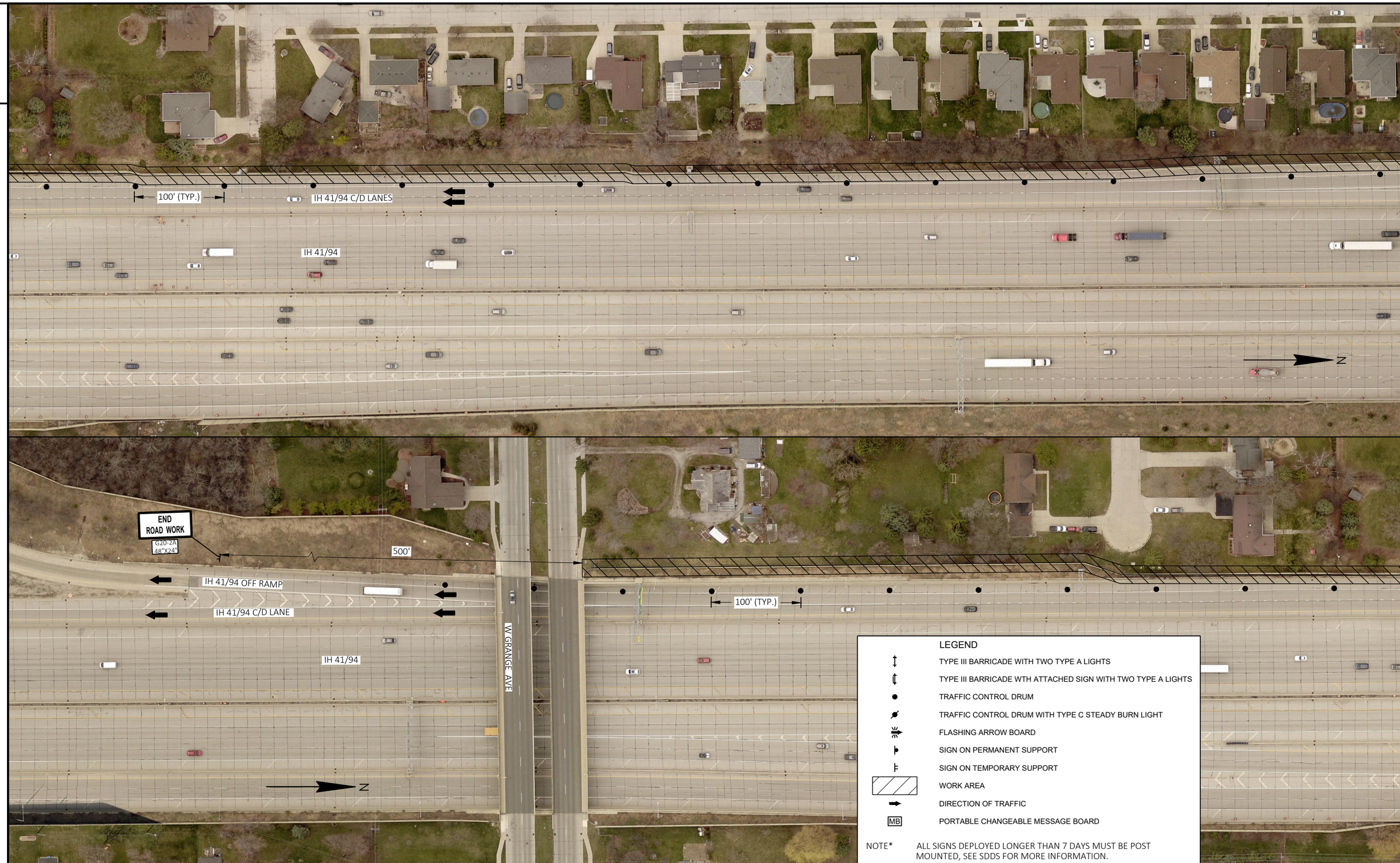

PROJECT NO: 1060-53-70	HWY: VARIOUS HIGHWAYS	COUNTY: SOUTHEAST REGIONWIDE	TRAFFIC CONTROL DETAILS - NOISE WALL N-40-046	SHEET 29	E

FILE NAME : C:\USERS\ETHAN.HEROUX\ONEDRIVE - DAAR CORPORATION\DOCUMENTS-SE-DESIGN\1060-53-00_VARIOUS NOISE WALLS\CADD\1060-53-00_VARIOUS NOISE WALLS\C3D\10605300\SHEETS\PLAN\025100-TC_N40-046.DWG PLOT DATE : 7/18/2025 12:52 PM PLOT BY : ETHAN HEROUX PLOT NAME : PLOT SCALE : 1 IN:100 FT
LAYOUT NAME - 02
WISDOT/CADDS SHEET 44

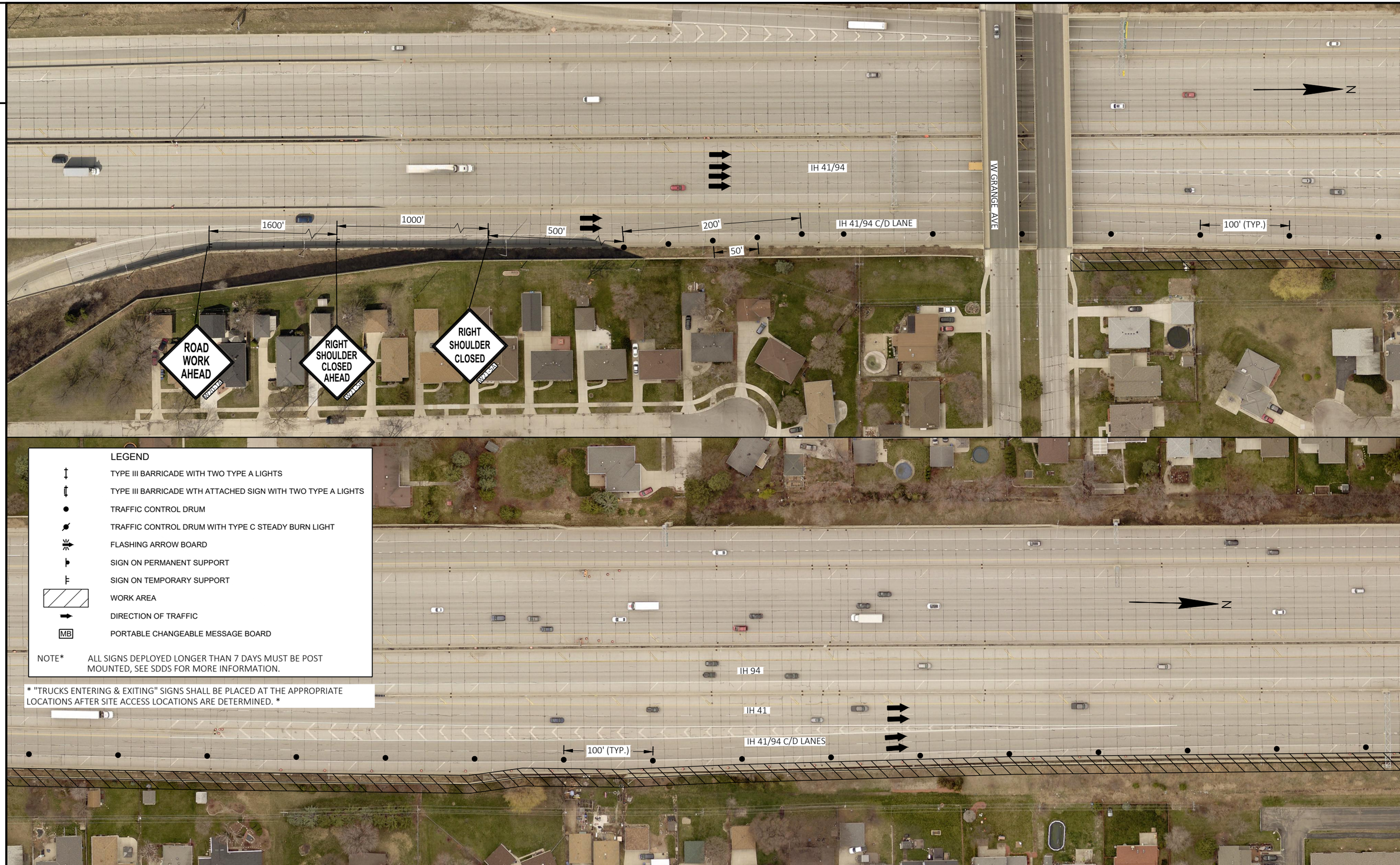

LEGEND

- TYPE III BARRICADE WITH TWO TYPE A LIGHTS
- TYPE III BARRICADE WTH ATTACHED SIGN WITH TWO TYPE A LIGHTS
- TRAFFIC CONTROL DRUM
- TRAFFIC CONTROL DRUM WITH TYPE C STEADY BURN LIGHT
- FLASHING ARROW BOARD
- SIGN ON PERMANENT SUPPORT
- SIGN ON TEMPORARY SUPPORT
- WORK AREA
- DIRECTION OF TRAFFIC
- MB PORTABLE CHANGEABLE MESSAGE BOARD

NOTE* ALL SIGNS DEPLOYED LONGER THAN 7 DAYS MUST BE POST MOUNTED, SEE SDDS FOR MORE INFORMATION.

* "TRUCKS ENTERING & EXITING" SIGNS SHALL BE PLACED AT THE APPROPRIATE LOCATIONS AFTER SITE ACCESS LOCATIONS ARE DETERMINED. *

PROJECT NO: 1060-53-70	HWY: VARIOUS HIGHWAYS	COUNTY: SOUTHEAST REGIONWIDE	TRAFFIC CONTROL DETAILS - NOISE WALL N-40-047	SHEET 30	E

FILE NAME : C:\USERS\ETHAN.HEROUX\ONEDRIVE - DAAR CORPORATION\DOCUMENTS-SE-DESIGN\1060-53-00_VARIOUS NOISE WALLS\CADD\1060-53-00_VARIOUS NOISE WALLS\C3D\10605300\SHEETS\DATA\25100-TC_N40-047.DWG PLOT DATE : 7/18/2022 12:53 PM PLOT BY : ETHAN HEROUX PLOT NAME : PLOT SCALE : 1 IN:100 FT
LAYOUT NAME - 01
WISDOT/CADDS SHEET 44

2

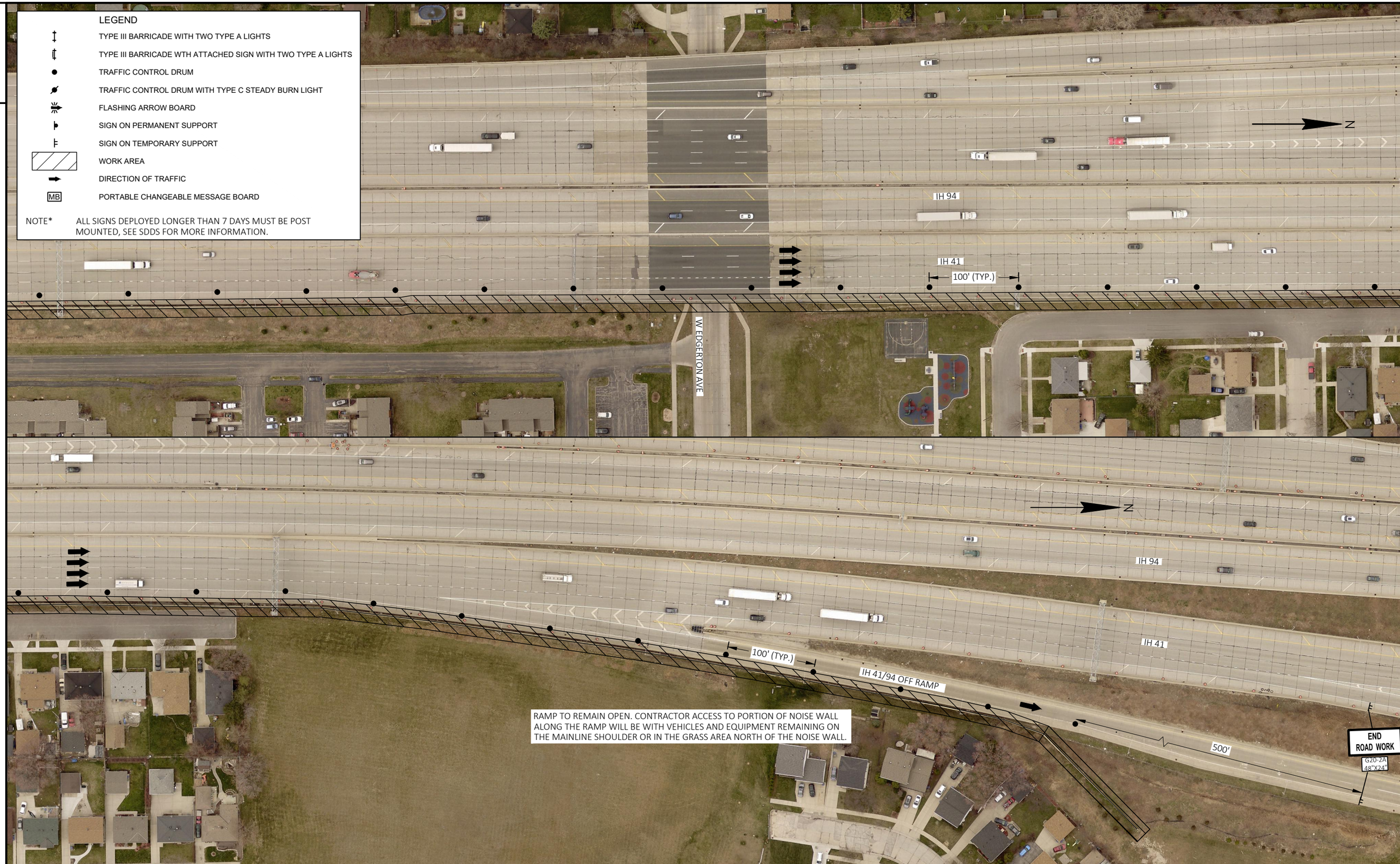

2

PROJECT NO: 1060-53-70	HWY: VARIOUS HIGHWAYS	COUNTY: SOUTHEAST REGIONWIDE	TRAFFIC CONTROL DETAILS - NOISE WALL N-40-047	SHEET 31	E

FILE NAME : C:\USERS\ETHAN.HEROUX\ONEDRIVE - DAAR CORPORATION\DOCUMENTS-SE-DESIGN\1060-53-00_VARIOUS NOISE WALLS\CADD\1060-53-00_VARIOUS NOISE WALLS\C3D\10605300\SHEETS\PLAN\025100-TC_N40-047.DWG PLOT DATE : 7/18/2022 12:53 PM PLOT BY : ETHAN HEROUX PLOT NAME : PLOT SCALE : 1 IN:100 FT
LAYOUT NAME - 02

WISDOT/CADDS SHEET 44

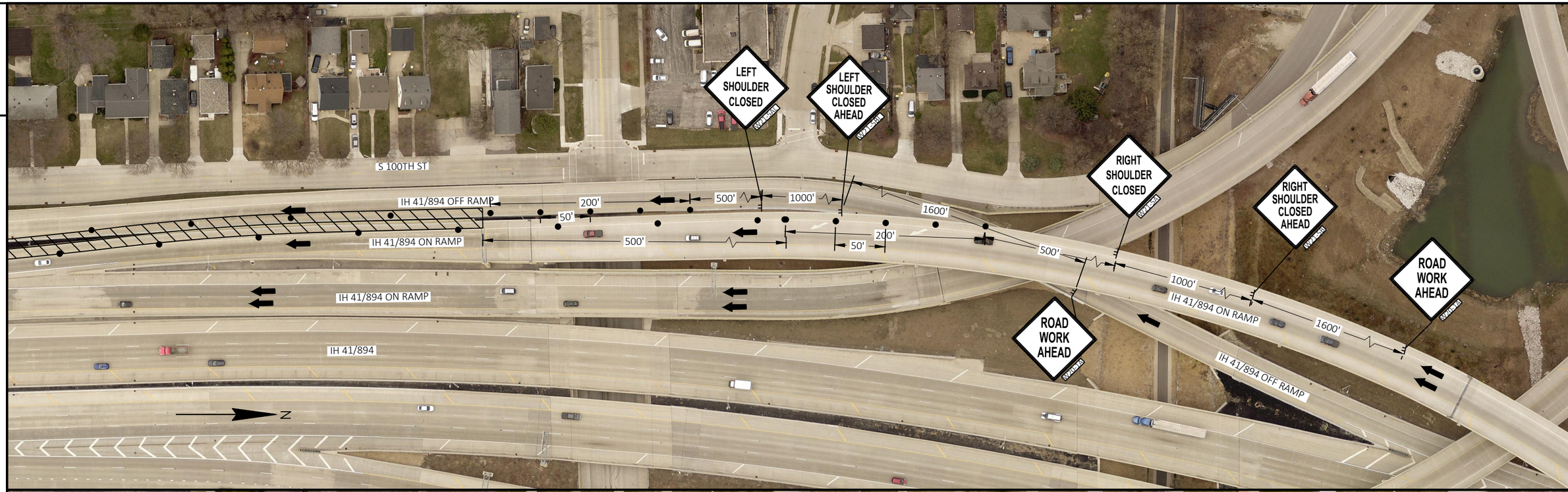

LEGEND

- TYPE III BARRICADE WITH TWO TYPE A LIGHTS
- TYPE III BARRICADE WTH ATTACHED SIGN WITH TWO TYPE A LIGHTS
- TRAFFIC CONTROL DRUM
- TRAFFIC CONTROL DRUM WITH TYPE C STEADY BURN LIGHT
- FLASHING ARROW BOARD
- SIGN ON PERMANENT SUPPORT
- SIGN ON TEMPORARY SUPPORT
- WORK AREA
- DIRECTION OF TRAFFIC
- MB PORTABLE CHANGEABLE MESSAGE BOARD

NOTE* ALL SIGNS DEPLOYED LONGER THAN 7 DAYS MUST BE POST MOUNTED, SEE SDDS FOR MORE INFORMATION.

* "TRUCKS ENTERING & EXITING" SIGNS SHALL BE PLACED AT THE APPROPRIATE LOCATIONS AFTER SITE ACCESS LOCATIONS ARE DETERMINED. *

** WHEN WORKING ON LESS ACCESSIBLE PANELS, A MAXIMUM OF TWO NIGHT CLOSURES ARE ALLOWED FOR EACH SYSTEM RAMP. SEE SDD 'TRAFFIC CONTROL, SYSTEM RAMP CLOSURE' FOR LAYOUT AND DETAILS TO FOLLOW. **

PROJECT NO: 1060-53-70	HWY: VARIOUS HIGHWAYS	COUNTY: SOUTHEAST REGIONWIDE	TRAFFIC CONTROL DETAILS - NOISE WALL N-40-078	SHEET 32	E

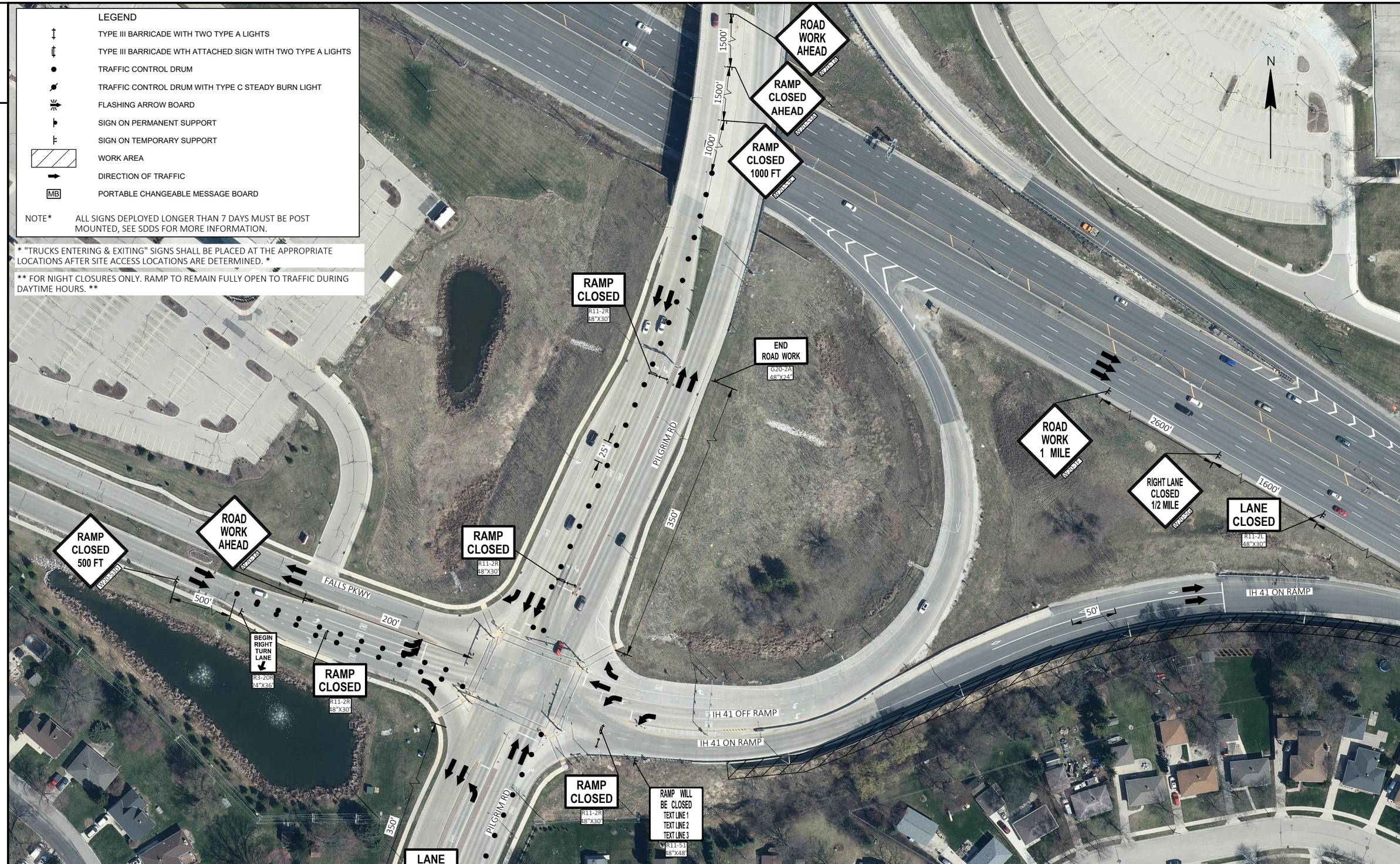

PROJECT NO: 1060-53-70	HWY: VARIOUS HIGHWAYS	COUNTY: SOUTHEAST REGIONWIDE	TRAFFIC CONTROL DETAILS - NOISE WALL N-67-001	SHEET 33	E

FILE NAME : C:\USERS\ETHAN.HEROUX\ONEDRIVE - DAAR CORPORATION\DOCUMENTS-SE-DESIGN\1060-53-00_VARIOUS NOISE WALLS\CADD\1060-53-00_VARIOUS NOISE WALLS\C3D\10605300\SHEETS\PLAN\025100-TC_N-67-001.DWG PLOT DATE : 7/13/2021 1:52 PM PLOT BY : ETHAN HEROUX PLOT NAME : PLOT SCALE : 1 IN:100 FT
LAYOUT NAME - 01
WISDOT/CADDS SHEET 44

2

PROJECT NO: 1060-53-70	HWY: VARIOUS HIGHWAYS	COUNTY: SOUTHEAST REGIONWIDE	TRAFFIC CONTROL DETAILS - NOISE WALL N-67-001	SHEET 34	E

FILE NAME : C:\USERS\ETHAN.HEROUX\ONEDRIVE - DAAR CORPORATION\DOCUMENTS-SE-DESIGN\1060-53-00_VARIOUS NOISE WALLS\CADD\1060-53-00_VARIOUS NOISE WALLS\C3D\10605300\SHEETS\PLAN\025100-TC_N-67-001.DWG PLOT DATE : 7/13/2021 1:52 PM PLOT BY : ETHAN HEROUX PLOT NAME : PLOT SCALE : 1 IN:100 FT
LAYOUT NAME - 02

WISDOT/CADDS SHEET 44

2

2

PROJECT NO: 1060-53-70	HWY: VARIOUS HIGHWAYS	COUNTY: SOUTHEAST REGIONWIDE	TRAFFIC CONTROL DETAILS - NOISE WALL N-67-001	SHEET 35	E

FILE NAME : C:\USERS\ETHAN.HEROUX\ONEDRIVE - DAAR CORPORATION\DOCUMENTS-SE-DESIGN\1060-53-00_VARIOUS NOISE WALLS\CADD\1060-53-00_VARIOUS NOISE WALLS\C3D\10605300\SHEETS\10605300-TC-N-67-001.DWG
LAYOUT NAME - 03
PLOT DATE : 7/16/2021 1:52 PM
PLOT BY : ETHAN HEROUX
PLOT NAME :
PLOT SCALE : 1 IN:100 FT

WISDOT/CADDS SHEET 44

PROJECT NO: 1060-53-70	HWY: VARIOUS HIGHWAYS	COUNTY: SOUTHEAST REGIONWIDE	TRAFFIC CONTROL DETAILS - NOISE WALL N-67-001	SHEET 36	E

FILE NAME : C:\USERS\ETHAN.HEROUX\ONEDRIVE - DAAR CORPORATION\DOCUMENTS-SE-DESIGN\1060-53-00_VARIOUS NOISE WALLS\CADD\1060-53-00_VARIOUS NOISE WALLS\C3D\10605300\SHEETS\PLAN\025100-TC_N-67-001.DWG PLOT DATE : 7/13/2021 1:52 PM PLOT BY : ETHAN HEROUX PLOT NAME : PLOT SCALE : 1 IN:100 FT
LAYOUT NAME - 04

WISDOT/CADDS SHEET 44

1060-53-70

Line	Item	Item Description	Unit	Total	Qty
0002	202.0105	Roadside Clearing	STA	11.000	11.000
0004	204.0170	Removing Fence	LF	75.000	75.000
0006	213.0100	Finishing Roadway (project) 01. 1060-53-70	EACH	1.000	1.000
0008	502.6500	Protective Coating Clear	GAL	65.000	65.000
0010	509.1500	Concrete Surface Repair	SF	333.000	333.000
0012	517.3001.S	Structure Overcoating Cleaning and Priming (structure) 01. N-40-006	EACH	1.000	1.000
0014	517.3001.S	Structure Overcoating Cleaning and Priming (structure) 02. N-40-017	EACH	1.000	1.000
0016	517.3001.S	Structure Overcoating Cleaning and Priming (structure) 03. N-40-033	EACH	1.000	1.000
0018	517.3001.S	Structure Overcoating Cleaning and Priming (structure) 04. N-40-034	EACH	1.000	1.000
0020	517.3001.S	Structure Overcoating Cleaning and Priming (structure) 05. N-40-040	EACH	1.000	1.000
0022	517.3001.S	Structure Overcoating Cleaning and Priming (structure) 06. N-40-041	EACH	1.000	1.000
0024	517.3001.S	Structure Overcoating Cleaning and Priming (structure) 07. N-40-042	EACH	1.000	1.000
0026	517.3001.S	Structure Overcoating Cleaning and Priming (structure) 08. N-40-043	EACH	1.000	1.000
0028	517.3001.S	Structure Overcoating Cleaning and Priming (structure) 09. N-40-046	EACH	1.000	1.000
0030	517.3001.S	Structure Overcoating Cleaning and Priming (structure) 10. N-40-047	EACH	1.000	1.000
0032	517.3001.S	Structure Overcoating Cleaning and Priming (structure) 11. N-67-001	EACH	1.000	1.000
0034	517.3001.S	Structure Overcoating Cleaning and Priming (structure) 12. N-40-078	EACH	1.000	1.000
0036	517.4001.S	Containment and Collection of Waste Materials (structure) 01. N-40-006	EACH	1.000	1.000
0038	517.4001.S	Containment and Collection of Waste Materials (structure) 02. N-40-017	EACH	1.000	1.000
0040	517.4001.S	Containment and Collection of Waste Materials (structure) 03. N-40-033	EACH	1.000	1.000
0042	517.4001.S	Containment and Collection of Waste Materials (structure) 04. N-40-034	EACH	1.000	1.000
0044	517.4001.S	Containment and Collection of Waste Materials (structure) 05. N-40-040	EACH	1.000	1.000
0046	517.4001.S	Containment and Collection of Waste Materials (structure) 06. N-40-041	EACH	1.000	1.000
0048	517.4001.S	Containment and Collection of Waste Materials (structure) 07. N-40-042	EACH	1.000	1.000
0050	517.4001.S	Containment and Collection of Waste Materials (structure) 08. N-40-043	EACH	1.000	1.000
0052	517.4001.S	Containment and Collection of Waste Materials (structure) 09. N-40-046	EACH	1.000	1.000
0054	517.4001.S	Containment and Collection of Waste Materials (structure) 10. N-40-047	EACH	1.000	1.000
0056	517.4001.S	Containment and Collection of Waste Materials (structure) 11. N-67-001	EACH	1.000	1.000
0058	517.4001.S	Containment and Collection of Waste Materials (structure) 12. N-40-078	EACH	1.000	1.000
0060	606.0100	Riprap Light	CY	140.000	140.000
0062	616.0204	Fence Chain Link 4-FT	LF	25.000	25.000
0064	616.0205	Fence Chain Link 5-FT	LF	25.000	25.000
0066	616.0206	Fence Chain Link 6-FT	LF	25.000	25.000
0068	616.0404	Fence Chain Link Salvaged 4-FT	LF	25.000	25.000
0070	616.0405	Fence Chain Link Salvaged 5-FT	LF	25.000	25.000
0072	616.0406	Fence Chain Link Salvaged 6-FT	LF	25.000	25.000
0074	619.1000	Mobilization	EACH	1.000	1.000
0076	628.1504	Silt Fence	LF	650.000	650.000
0078	628.1520	Silt Fence Maintenance	LF	650.000	650.000
0080	628.1905	Mobilizations Erosion Control	EACH	5.000	5.000
0082	628.1910	Mobilizations Emergency Erosion Control	EACH	2.000	2.000
0084	628.2004	Erosion Mat Class I Type B	SY	2,240.000	2,240.000
0086	628.7010	Inlet Protection Type B	EACH	39.000	39.000
0088	628.7504	Temporary Ditch Checks	LF	65.000	65.000
0090	628.7555	Culvert Pipe Checks	EACH	13.000	13.000
0092	629.0205	Fertilizer Type A	CWT	6.000	6.000
0094	630.0130	Seeding Mixture No. 30	LB	44.000	44.000
0096	630.0200	Seeding Temporary	LB	64.000	64.000
0098	630.0500	Seed Water	MGAL	53.000	53.000

1060-53-70

Line	Item	Item Description	Unit	Total	Qty
0100	634.0618	Posts Wood 4x6-Inch X 18-FT	EACH	5.000	5.000
0102	637.2210	Signs Type II Reflective H	SF	443.750	443.750
0104	638.2102	Moving Signs Type II	EACH	5.000	5.000
0106	638.2602	Removing Signs Type II	EACH	187.000	187.000
0108	638.3000	Removing Small Sign Supports	EACH	5.000	5.000
0110	643.0300	Traffic Control Drums	DAY	10,000.000	10,000.000
0112	643.0420	Traffic Control Barricades Type III	DAY	750.000	750.000
0114	643.0705	Traffic Control Warning Lights Type A	DAY	1,500.000	1,500.000
0116	643.0715	Traffic Control Warning Lights Type C	DAY	1,300.000	1,300.000
0118	643.0800	Traffic Control Arrow Boards	DAY	115.000	115.000
0120	643.0900	Traffic Control Signs	DAY	2,200.000	2,200.000
0122	643.1050	Traffic Control Signs PCMS	DAY	26.000	26.000
0124	643.4100	Traffic Control Interim Lane Closure	EACH	28.000	28.000
0126	643.5000	Traffic Control	EACH	1.000	1.000
0128	644.1810	Temporary Pedestrian Barricade	LF	32.000	32.000
0130	645.0130	Geotextile Type R	SY	520.000	520.000
0132	ASP.1T0A	On-the-Job Training Apprentice at $5.00/HR	HRS	300.000	300.000
0134	ASP.1T0G	On-the-Job Training Graduate at $5.00/HR	HRS	900.000	900.000
0136	SPV.0060	Special 01. Top Precast Sound Barrier Panel Support Repair	EACH	10.000	10.000
0138	SPV.0060	Special 02. Removing and Reinstalling Sound Panels	EACH	349.000	349.000
0140	SPV.0060	Special 03. Noise Barrier Support Post Replacement	EACH	4.000	4.000
0142	SPV.0060	Special 04. Traffic Control Close-Open Freeway Service Ramp	EACH	42.000	42.000
0144	SPV.0060	Special 05. Traffic Control Close-Open Freeway to Freeway System Ramp	EACH	4.000	4.000
0146	SPV.0060	Special 06. Traffic Control Local Road Lane Closure	EACH	38.000	38.000
0148	SPV.0060	Special 07. Bottom Precast Sound Barrier Panel Support Repair	EACH	31.000	31.000
0150	SPV.0165	Special 01. Replacement Noise Barrier Panels Double-Sided Sound Absorptive N-40-006	SF	104.000	104.000
0152	SPV.0165	Special 02. Replacement Noise Barrier Panels Double-Sided Sound Absorptive N-40-017	SF	135.000	135.000
0154	SPV.0165	Special 04. Replacement Noise Barrier Panels Double-Sided Sound Absorptive N-67-001	SF	45.000	45.000

3

REMOVAL ITEMS

CATEGORY	LOCATION	202.0105 ROADSIDE CLEARING STA
1000	**N-40-006**	2
1000	**N-40-008**	3
1000	**N-40-033**	2
1000	**N-40-034**	3
1000	**UNDISTRIBUTED**	1
	TOTALS	**11**

FENCING ITEMS

CATEGORY	LOCATION	204.0170 REMOVING FENCE LF	616.0204 FENCE CHAIN LINK 4-FT LF	616.0205 FENCE CHAIN LINK 5-FT LF	616.0206 FENCE CHAIN LINK 6-FT LF	616.0404 FENCE CHAIN LINK SALVAGED 4-FT LF	616.0405 FENCE CHAIN LINK SALVAGED 5-FT LF	616.0406 FENCE CHAIN LINK SALVAGED 6-FT LF
1000	**UNDISTRIBUTED**	75	25	25	25	25	25	25
	TOTALS	**75**	**25**	**25**	**25**	**25**	**25**	**25**

3

RESTORATION ITEMS

CATEGORY	LOCATION	628.2004 EROSION MAT CLASS I TYPE B SY	629.0205 FERTILIZER TYPE A CWT	630.0130 SEEDING MIXTURE NO. 30 LB	630.0200 SEEDING TEMPORARY LB	630.0500 SEED WATER MGAL
1000	**N-40-006**	230	1	5	7	6
1000	**N-40-008**	340	1	7	10	8
1000	**N-40-033**	120	1	3	4	3
1000	**N-40-034**	340	1	7	10	8
1000	**N-67-001**	1,000	1	18	27	23
1000	**UNDISTRIBUTED**	210	1	4	6	5
	TOTALS	**2,240**	**6**	**44**	**64**	**53**

3

EROSION CONTROL ITEMS

CATEGORY	LOCATION	628.1504 SILT FENCE LF	628.1520 SILT FENCE MAINTENANCE LF	628.7010 INLET PROTECTION TYPE B EACH	628.7504 TEMPORARY DITCH CHECKS LF	628.7555 CULVERT PIPE CHECKS EACH
1000	**UNDISTRIBUTED**	650	650	39	65	13
	TOTALS	**650**	**650**	**39**	**65**	**13**

3

EROSION CONTROL MOBILIZATION

CATEGORY	LOCATION	628.1905 MOBILIZATIONS EROSION CONTROL EACH	628.1910 MOBILIZATIONS EMERGENCY EROSION CONTROL EACH
1000	PROJECT	5	2
	TOTALS	**5**	**2**

MISCELLANEOUS ITEMS

CATEGORY	LOCATION	213.0100 FINISHING ROADWAY (1060-53-70) EACH	619.1000 MOBILIZATION EACH	643.5000 TRAFFIC CONTROL EACH
1000	**PROJECT**	1	1	1
	TOTAL	**1**	**1**	**1**

3

TRAFFIC CONTROL ITEMS

CATEGORY	LOCATION	DURATION (DAYS)	643.0300 TRAFFIC CONTROL DRUMS EACH**	643.0300 TRAFFIC CONTROL DRUMS DAY	643.0420 TRAFFIC CONTROL BARRICADES TYPE III EACH**	643.0420 TRAFFIC CONTROL BARRICADES TYPE III DAY	643.0705 TRAFFIC CONTROL WARNING LIGHTS TYPE A EACH**	643.0705 TRAFFIC CONTROL WARNING LIGHTS TYPE A DAY	643.0715 TRAFFIC CONTROL WARNING LIGHTS TYPE C EACH**	643.0715 TRAFFIC CONTROL WARNING LIGHTS TYPE C DAY	643.0800 TRAFFIC CONTROL ARROW BOARDS EACH**	643.0800 TRAFFIC CONTROL ARROW BOARDS DAY	643.0900 TRAFFIC CONTROL SIGNS EACH**	643.0900 TRAFFIC CONTROL SIGNS DAY	643.1050 TRAFFIC CONTROL SIGNS PCMS EACH**	643.1050 TRAFFIC CONTROL SIGNS PCMS DAY	643.4100 TRAFFIC CONTROL INTERIM LANE CLOSURE EACH	644.1810 TEMPORARY PEDESTRIAN BARRICADE LF	SPV.0060.04 TRAFFIC CONTROL CLOSE-OPEN FREEWAY SERVICE RAMP EACH	SPV.0060.05 TRAFFIC CONTROL CLOSE-OPEN FREEWAY TO FREEWAY SYSTEM RAMP EACH	SPV.0060.06 TRAFFIC CONTROL LOCAL ROAD LANE CLOSURE EACH
1000	**N-40-006**	8	31	248	0	0	0	0	0	0	0	0	8	64	0	0	0	0	0	0	0
1000	**N-40-008**	5	54	270	8	40	16	80	0	0	0	0	16	80	0	0	0	0	5	0	0
1000	**N-40-017**	26	198	2,718	22	322	44	644	38	536	6	84	54	726	1	6	16	32	16	0	26
1000	N-40-017 MAINLINE	16	48	768	12	192	24	384	14	224	2	32	8	128	1	6	16	0	16	0	0
1000	N-40-017 RT LANE CLOSURE	13	68	884	5	65	10	130	12	156	2	26	23	299	0	0	0	32	0	0	13
1000	N-40-017 LT LANE CLOSURE	13	82	1,066	5	65	10	130	12	156	2	26	23	299	0	0	0	0	0	0	13
1000	**N-40-033**	6	48	288	9	54	18	108	0	0	0	0	17	102	0	0	0	0	6	0	0
10000	**N-40-034**	8	21	168	0	0	0	0	0	0	0	0	6	48	0	0	0	0	0	0	0
1000	**N-40-040**	15	29	435	0	0	0	0	0	0	0	0	4	60	0	0	0	0	0	0	0
1000	**N-40-041**	9	104	936	6	54	12	108	0	0	0	0	16	144	0	0	0	0	3	0	0
1000	**N-40-042*** **	9	0	0	0	0	0	0	0	0	0	0	0	0	0	0	0	0	0	0	0
1000	**N-40-043**	10	32	320	0	0	0	0	0	0	0	0	10	100	0	0	0	0	0	0	0
1000	**N-40-046**	13	52	676	0	0	0	0	0	0	0	0	7	91	0	0	0	0	0	0	0
1000	**N-40-047**	10	54	540	0	0	0	0	0	0	0	0	5	50	0	0	0	0	0	0	0
1000	**N-40-078**	5	207	1,035	14	70	28	140	128	640	4	20	36	180	2	20	0	0	0	4	0
1000	**N-67-001**	12	114	1,368	11	132	22	264	0	0	0	0	23	276	0	0	12	0	12	0	12
1000	UNDISTRIBUTED			998		78		156		118		9		193		0	0	0	0	0	0
	TOTALS			**10,000**		**750**		**1,500**		**1,300**		**115**		**2,200**		**26**	**28**	**32**	**42**	**4**	**38**

3

TYPEII PERMANENT SIGNING 1060-53-70

SIGN NO.	SIGN CODE & SIZE	SIGN MESSAGE	SIGN SIZE W [IN.]	x x	H [IN.]	637.2210 SIGNS TYPE II REFLECTIVE H [SF]	638.2102 MOVING SIGNS TYPE II [EA]	638.2602 REMOVING SIGNS TYPE II (EA)	638.3000 REM SMALL SIGN SUP [EA]	634.0618 POSTS WOOD 4" X 6" X 18' [EA]	MOUNT ON SAME POST AS SIGN #	WALL POST #	LOCATION STATION #	REMARKS NOISE WALL LOCATION
1	D9-54A		18	X	18	2.250		1				16-17	12+20	MOUNT ON FENCE AT N-40-0006
2	D9-54A		18	X	18	2.250		1				16-17	12+20	MOUNT ON WALL RESIDENT SIDE N-40-0006
3	NONE	BLANK	36	X	6	1.500		1				16-17	12+20	ON WALL. SEE DETAIL. BLUE HI SHEETING
4	D9-54A		18	X	18	2.250		1				16-17	12+20	MOUNT ON WALL ROAD SIDE N-40-0006
5	NONE	BLANK	36	X	6	1.500		1				16-17	12+20	ON WALL . SEE DETAIL. BLUE SHEETING
6	D9-54A		18	X	18	2.250		1				44-45	16+40	MOUNT ON FENCE AT N-40-0006
7	D9-54A		18	X	18	2.250		1				44-45	16+40	MOUNT ON WALL RESIDENT SIDE N-40-0006
8	NONE	BLANK	36	X	6	1.500		1				44-45	16+40	ON WALL . SEE DETAIL. BLUE SHEETING
9	D9-54A		18	X	18	2.250		1				44-45	16+40	MOUNT ON WALL ROAD SIDE N-40-0006
10	NONE	BLANK	18	X	6	1.500		1				44-45	16+40	ON WALL. SEE DETAIL. BLUE HI SHEETING
11	D9-54	6740 S. 27TH ST	18	X	24	3.000						91-92	23+45	MOUNT ON WALL RESIDENT SIDE N-40-0006
12	NONE	BLANK	18	X	6	1.500		1				91-92	23+45	ON WALL. SEE DETAIL. BLUE HI SHEETING
13	D9-54	6740 S. 27TH ST	18	X	24	3.000		1				91-92	23+45	MOUNT ON WALL ROAD SIDE N-40-0006
14	NONE	BLANK	18	X	6	1.500		1				91-92	23+45	ON WALL. SEE DETAIL. BLUE HI SHEETING
15	D9-54	6508 S. 27TH ST	18	X	24	3.000		1				144-145	31+40	MOUNT ON FENCE AT N-40-0006
16	D9-54	6508 S. 27TH ST	18	X	24	3.000		1				144-145	31+40	MOUNT ON WALL RESIDENT SIDE N-40-0006
17	NONE	BLANK	18	X	6	1.500		1				144-145	31+40	ON WALL. SEE DETAIL. BLUE HI SHEETING
18	D9-54	6508 S. 27TH ST	18	X	24	3.000		1				144-145	31+40	MOUNT ON WALL ROAD SIDE N-40-0006
19	NONE	BLANK	18	X	6	1.500		1				144-145	31+40	ON WALL . SEE DETAIL. BLUE SHEETING
20	D9-54A		18	X	18	2.250		1				181-182	36+80	MOUNT ON FENCE AT N-40-0006
21	D9-54A		18	X	18	2.250		1				181-182	36+80	MOUNT ON WALL RESIDENT SIDE N-40-0006
22	NONE	BLANK	18	X	6	1.500		1				181-182	36+80	ON WALL. SEE DETAIL. BLUE HI SHEETING
23	D9-54A		18	X	18	2.250		1				181-182	36+80	MOUNT ON WALL ROAD SIDE N-40-0006
24	NONE	BLANK	18	X	6	1.500		1				181-182	36+80	ON WALL. SEE DETAIL. BLUE HI SHEETING
25	D9-54	3553 S. 5TH ST	18	X	24	3.000						38-39	11+50	MOUNT ON WALL RESIDENT SIDE N-40-0008
26	NONE	BLANK	18	X	6	1.500		1				38-39	11+50	ON WALL. SEE DETAIL. BLUE HI SHEETING
27	D9-54	3553 S. 5TH ST	18	X	24	3.000		1				38-39	11+50	MOUNT ON WALL ROAD SIDE N-40-0008
28	NONE	BLANK	18	X	6	1.500		1				38-39	11+50	ON WALL. SEE DETAIL. BLUE HI SHEETING
29	D9-54	S. 5TH ST & WARNIMONT	18	X	24	3.000						70-71	210+60	MOUNT ON WALL RESIDENT SIDE N-40-0008
30	NONE	BLANK	18	X	6	1.500		1				70-71	210+60	ON WALL. SEE DETAIL. BLUE HI SHEETING

SHEET: 1 OF 7

TYPEII PERMANENT SIGNING 1060-53-70

SIGN NO.	SIGN CODE & SIZE	SIGN MESSAGE	SIGN SIZE W [IN.]	x x	H [IN.]	637.2210 SIGNS TYPE II REFLECTIVE H [SF]	638.2102 MOVING SIGNS TYPE II [EA]	638.2602 REMOVING SIGNS TYPE II (EA)	638.3000 REM SMALL SIGN SUP [EA]	634.0618 POSTS WOOD 4" X 6" X 18' [EA]	MOUNT ON SAME POST AS SIGN #	WALL POST #	LOCATION STATION #	REMARKS NOISE WALL LOCATION
31	D9-54	S. 5TH ST & WARNIMONT	18	X	24	3.000		1				70-71	210+60	MOUNT ON WALL ROAD SIDE N-40-0008
32	NONE	BLANK	18	X	6	1.500		1				70-71	210+60	ON WALL. SEE DETAIL. BLUE HI SHEETING
33	D9-54	3646 S. 5TH ST	18	X	24	3.000		1				110-111	20&+05	MOUNT ON WALL RESIDENT SIDE N-40-0008
34	NONE	BLANK	18	X	6	1.500		1				110-111	208+05	ON WALL. SEE DETAIL. BLUE HI SHEETING
35	D9-54	3646 S. 5TH ST	18	X	24	3.000		1				110-111	208+05	MOUNT ON WALL ROAD SIDE N-40-0008
36	D9-54	3686 S. 5TH ST	18	X	24	3.000						148-149	203+70	MOUNT ON WALL RESIDENT SIDE. N-40-0008
37	NONE	BLANK	18	X	6	1.500		1				148-149	203+70	ON WALL. SEE DETAIL. BLUE HI SHEETING
38	D9-54	3686 S. 5TH ST	18	X	24	3.000		1				148-149	203+70	MOUNT ON WALL ROAD SIDE. N-40-0008
39	NONE	BLANK	18	X	6	1.500		1				148-149	203+70	ON WALL . SEE DETAIL. BLUE SHEETING
40	D9-54	13114 W MANITOBA ST	18	X	24	3.000		1				40-41	13+30	MOUNT ON WALL RESIDENT SIDE N-40-0017
41	NONE	BLANK	18	X	6	1.500		1				40-41	13+30	ON WALL. SEE DETAIL. BLUE HI SHEETING
42	D9-54	13114 W MANITOBA ST	18	X	24	3.000		1				40-41	13+30	MOUNT ON WALL ROAD SIDE N-40-0017
43	NONE	BLANK	18	X	6	1.500		1				40-41	13+30	ON WALL. SEE DETAIL. BLUE HI SHEETING
44	D9-54A		18	X	18	2.250		1				66-67	17+15	MOUNT ON WALL RESIDENT SIDE N-40-0017
45	NONE	BLANK	18	X	6	1.500		1				66-67	17+15	ON WALL. SEE DETAIL. BLUE HI SHEETING
46	D9-54A		18	X	18	2.250		1				66-67	17+15	MOUNT ON WALL ROAD SIDE. N-40-0017
47	NONE	BLANK	18	X	6	1.500		1				66-67	17+15	ON WALL. SEE DETAIL. BLUE HI SHEETING
48	D9-54	2933 S 101ST ST	18	X	24	3.000		1				93-94	20+87.5	MOUNT ON WALL RESIDENT SIDE. N-40-0017
49	NONE	BLANK	18	X	6	1.500		1				93-94	20+87.5	ON WALL. SEE DETAIL. BLUE HI SHEETING
50	D9-54	2933 S 101ST ST	18	X	24	3.000		1				93-94	20+87.5	MOUNT ON WALL ROAD SIDE. N-40-0017
51	NONE	BLANK	18	X	6	1.500		1				93-94	20+87.5	ON WALL. SEE DETAIL. BLUE HI SHEETING
52	D9-54	3317 S. 3RD ST	18	X	24	3.000		1				18-19	2+45	MOUNT ON FENCE AT N-40-0033
53	D9-54	3317 S 3RD ST	18	X	24	3.000		1				18-19	2+45	MOUNT ON WALL RESIDENT SIDE N-40-0033
54	NONE	BLANK	18	X	6	1.500		1				18-19	2+45	ON WALL. SEE DETAIL. BLUE HI SHEETING
55	D9-54	3317 S 3RD ST	18	X	24	3.000		1				18-19	2+45	MOUNT ON WALL ROAD SIDE. N-40-0033
56	NONE	BLANK	18	X	6	1.500		1				18-19	2+45	ON WALL . SEE DETAIL. BLUE SHEETING
57	D9-54	3273 S 3RD ST	18	X	24	3.000		1				43-44	5+90	MOUNT ON WALL RESIDENT SIDE. N-40-0033
58	NONE	BLANK	18	X	6	1.500		1				43-44	5+90	ON WALL. SEE DETAIL. BLUE HI SHEETING
59	D9-54	3273 S 3RD ST	18	X	24	3.000		1				43-44	5+90	MOUNT ON WALL ROAD SIDE. N-40-0033
60	NONE	BLANK	18	X	6	1.500		1				43-44	5+90	ON WALL. SEE DETAIL. BLUE HI SHEETING

SHEET: 2 OF 7

TYPEII PERMANENT SIGNING 1060-53-70

SIGN NO.	SIGN CODE & SIZE	SIGN MESSAGE	SIGN SIZE W [IN.]	x x	H [IN.]	637.2210 SIGNS TYPE II REFLECTIVE H [SF]	638.2102 MOVING SIGNS TYPE II [EA]	638.2602 REMOVING SIGNS TYPE II (EA)	638.3000 REM SMALL SIGN SUP [EA]	634.0618 POSTS WOOD 4" X 6" X 18' [EA]	MOUNT ON SAME POST AS SIGN #	WALL POST #	LOCATION STATION #	REMARKS NOISE WALL LOCATION
61	D9-54A		18	X	18	2.250						38-39	394C+00	MOUNT ON WALL . RESIDENT SIDE. N-40-0034
62	NONE	BLANK	18	X	6	1.500		1				38-39	394C+00	ON WALL. SEE DETAIL. BLUE HI SHEETING
63	D9-54A		18	X	18	2.250		1				38-39	394C+00	MOUNT ON WALL. ROAD SIDE. N-40-0034
64	NONE	BLANK	18	X	6	1.500		1				38-39	394C+00	ON WALL. SEE DETAIL. BLUE HI SHEETING
65	D9-54	5510 W. BOLLARD AVE	18	X	24	3.000		1				1-2	10+00	MOUNT ON WALL RESIDENT SIDE. N-40-0040
66	NONE	BLANK	18	X	6	1.500		1				1-2	10+00	ON WALL. SEE DETAIL. BLUE HI SHEETING
67	D9-54	5510 W. BOLLARD AVE	18	X	24	3.000		1				1-2	10+00	MOUNT ON WALL ROAD SIDE. N-40-0040
68	NONE	BLANK	18	X	6	1.500		1				1-2	10+00	ON WALL. SEE DETAIL. BLUE HI SHEETING
69	D9-54	4254 S. 5TH ST, MILWAUKEE	18	X	24	3.000		1				63-64	16+25	MOUNT ON WALL RESIDENT SIDE. N-40-0040
70	NONE	BLANK	18	X	6	1.500		1				63-64	16+25	ON WALL. SEE DETAIL. BLUE HI SHEETING
71	D9-54	4254 S. 5TH ST, MILWAUKEE	18	X	24	3.000		1				63-64	16+25	MOUNT ON WALL ROAD SIDE N-40-0040
72	NONE	BLANK	18	X	6	1.500		1				63-64	16+25	ON WALL. SEE DETAIL. BLUE HI SHEETING
73	D9-54	S 4TH ST AND W PLAINFIELD AVE	18	X	24	3.000		1				123-124	22+28	MOUNT ON WALL RESIDENT SIDE. N-40-0040
74	NONE	BLANK	18	X	6	1.500		1				123-124	22+28	ON WALL. SEE DETAIL. BLUE HI SHEETING
75	D9-54	S. 4TH ST AND W. PLAINFIELD AVE	18	X	24	3.000		1				123-124	22+28	MOUNT ON WALL ROAD SIDE . N-40-0040
76	NONE	BLANK	18	X	6	1.500		1				123-124	22+28	ON WALL . SEE DETAIL. BLUE SHEETING
77	D9-54	385 W. WATERFORD AVE	18	X	24	3.000		1				162-163	28+05	MOUNT ON WALL RESIDENT SIDE. N-40-0040
78	NONE	BLANK	18	X	6	1.500		1				162-163	28+05	ON WALL. SEE DETAIL. BLUE HI SHEETING
79	D9-54	385 W.WATERFORD AVE	18	X	24	3.000		1				162-163	28+05	MOUNT ON WALL ROAD SIDE N-40-0040
80	NONE	BLANK	18	X	6	1.500		1				162-163	28+05	ON WALL. SEE DETAIL. BLUE HI SHEETING
81	D9-54	S. 51ST ST AT W. OCONNER ST	18	X	24	3.000		1				NONE	NONE	MOUNT ON WALL RESIDENT SIDE N-40-0041
82	NONE	BLANK	18	X	6	1.500		1				NONE	NONE	ON WALL . SEE DETAIL. BLUE SHEETING
83	D9-54	S. 51ST ST AT W. OCONNER ST	18	X	24	3.000		1				NONE	NONE	MOUNT ON WALL ROAD SIDE. N-40-0041
84	NONE	BLANK	18	X	6	1.500		1				NONE	NONE	ON WALL. SEE DETAIL. BLUE HI SHEETING
85	D9-54	4201 S. 5TH PL	18	X	24	3.000		1				NONE	NONE	MOUNT ON WALL RESIDENT SIDE N-40-0041
86	NONE	BLANK	18	X	6	1.500		1				NONE	NONE	ON WALL. SEE DETAIL. BLUE HI SHEETING
87	D9-54	4201 S. 5TH PL	18	X	24	3.000		1				NONE	NONE	MOUNT ON WALL ROAD SIDE. N-40-0041
88	NONE	BLANK	18	X	6	1.500		1				NONE	NONE	ON WALL . SEE DETAIL. BLUE SHEETING
89	D9-54	4051 S. 5TH ST	18	X	24	3.000		1				139-140	16+52.5	MOUNT ON WALL RESIDENT SIDE. N-40-0041
90	NONE	BLANK	18	X	6	1.500		1				139-140	16+52.5	ON WALL. SEE DETAIL. BLUE HI SHEETING

SHEET: 3 OF 7

TYPEII PERMANENT SIGNING 1060-53-70

SIGN NO.	SIGN CODE & SIZE	SIGN MESSAGE	SIGN SIZE W [IN.]	x x	H [IN.]	637.2210 SIGNS TYPE II REFLECTIVE H [SF]	638.2102 MOVING SIGNS TYPE II [EA]	638.2602 REMOVING SIGNS TYPE II (EA)	638.3000 REM SMALL SIGN SUP [EA]	634.0618 POSTS WOOD 4" X 6" X 18' [EA]	MOUNT ON SAME POST AS SIGN #	WALL POST #	LOCATION STATION #	REMARKS NOISE WALL LOCATION
91	D9-54	4051 S. 5TH ST	18	X	24	3.000		1				139-140	16+52.5	MOUNT ON WALL ROAD SIDE. N-40-0041
92	NONE	BLANK	18	X	6	1.500		1				139-140	16+52.5	ON WALL. SEE DETAIL. BLUE HI SHEETING
93	D9-54	S. 5TH ST AND W. WATERFORD AVE	18	X	24	3.000		1				166-167	12+48	MOUNT ON WALL RESIDENT SIDE N-40-0041
94	NONE	BLANK	18	X	6	1.500		1				166-167	12+48	ON WALL. SEE DETAIL. BLUE HI SHEETING
95	D9-54	S. 5TH ST AND W. WATERFORD AVE	18	X	24	3.000		1				166-167	12+48	MOUNT ON WALL ROAD SIDE. N-40-0041
96	NONE	BLANK	18	X	6	1.500		1				166-167	12+48	ON WALL. SEE DETAIL. BLUE HI SHEETING
97	D9-54	4225 S. 6TH ST	18	X	24	3.000						218-219	27+85	MOUNT ON WALL RESIDENT SIDE. N-40-0041
98	NONE	BLANK	18	X	6	1.500		1				218-219	27+85	ON WALL. SEE DETAIL. BLUE HI SHEETING
99	D9-54	4225 S. 6TH ST	18	X	24	3.000		1				218-219	27+85	MOUNT ON WALL ROAD SIDE. N-40-0041
100	NONE	BLANK	18	X	6	1.500		1				218-219	27+85	ON WALL. SEE DETAIL. BLUE HI SHEETING
101	D9-54A		18	X	18	2.250						306-307	14+42.5	MOUNT ON WALL RESIDENT SIDE. N-40-0041
102	NONE	BLANK	18	X	6	1.500		1				306-307	14+42.5	ON WALL. SEE DETAIL. BLUE HI SHEETING
103	D9-54A		18	X	18	2.250		1				306-307	14+42.5	MOUNT ON WALL ROAD SIDE. N-40-0041
104	NONE	BLANK	18	X	6	1.500		1				306-307	14+42.5	ON WALL. SEE DETAIL. BLUE HI SHEETING
105	D9-54A		18	X	18	2.250						14-15	11+58	MOUNT ON WALL RESIDENT SIDE. N-40-0042
106	NONE	BLANK	18	X	6	1.500		1				14-15	11+58	ON WALL. SEE DETAIL. BLUE HI SHEETING
107	D9-54A		18	X	18	2.250		1				14-15	11+58	MOUNT ON WALL ROAD SIDE. N-40-0042
108	NONE	BLANK	18	X	6	1.500		1				14-15	11+58	ON WALL. SEE DETAIL. BLUE HI SHEETING
109	D9-54A		18	X	18	2.250						60-61	18+45	MOUNT ON WALL RESIDENT SIDE. N-40-0042
110	NONE	BLANK	18	X	6	1.500		1				60-61	18+45	ON WALL. SEE DETAIL. BLUE HI SHEETING
111	D9-54A		18	X	18	2.250		1				60-61	18+45	MOUNT ON WALL ROAD SIDE N-40-0042
112	NONE	BLANK	18	X	6	1.500		1				60-61	18+45	ON WALL. SEE DETAIL. BLUE HI SHEETING
113	D9-54A		18	X	18	2.250						104-105	24+35	MOUNT ON WALL RESIDENT SIDE. N-40-0042
114	NONE	BLANK	18	X	6	1.500		1				104-105	24+35	ON WALL. SEE DETAIL. BLUE HI SHEETING
115	D9-54A		18	X	18	2.250		1				104-105	24+35	MOUNT ON WALL ROAD SIDE. N-40-0042
116	NONE	BLANK	18	X	6	1.500		1				104-105	24+35	ON WALL. SEE DETAIL. BLUE HI SHEETING
117	D9-54A		18	X	18	2.250		1				145-146	13+85	MOUNT ON WALL RESIDENT SIDE. N-40-0043
118	NONE	BLANK	18	X	6	1.500		1				145-146	13+85	ON WALL. SEE DETAIL. BLUE HI SHEETING
119	D9-54A		18	X	18	2.250		1				145-146	13+85	MOUNT ON WALL ROAD SIDE. N-40-0043
120	NONE	BLANK	18	X	6	1.500		1				145-146	13+85	ON WALL. SEE DETAIL. BLUE HI SHEETING

TYPEII PERMANENT SIGNING 1060-53-70

SIGN NO.	SIGN CODE & SIZE	SIGN MESSAGE	SIGN SIZE W [IN.]	x x	H [IN.]	637.2210 SIGNS TYPE II REFLECTIVE H [SF]	638.2102 MOVING SIGNS TYPE II [EA]	638.2602 REMOVING SIGNS TYPE II (EA)	638.3000 REM SMALL SIGN SUP [EA]	634.0618 POSTS WOOD 4" X 6" X 18' [EA]	MOUNT ON SAME POST AS SIGN #	WALL POST #	LOCATION STATION #	REMARKS NOISE WALL LOCATION
121	D9-54A		18	X	18	2.250						41-42	16+65	MOUNT ON WALL RESIDENT SIDE N-40-0043
122	NONE	BLANK	18	X	6	1.500		1				41-42	16+65	ON WALL. SEE DETAIL. BLUE HI SHEETING
123	D9-54A		18	X	18	2.250						41-42	16+65	MOUNT ON WALL ROAD SIDE N-40-0043
124	NONE	BLANK	18	X	6	1.500		1				41-42	16+65	ON WALL. SEE DETAIL. BLUE HI SHEETING
125	D9-54A		18	X	18	2.250						86-87	20+55	MOUNT ON WALL RESIDENT SIDE. N-40-0043
126	NONE	BLANK	18	X	6	1.500		1				86-87	20+55	ON WALL. SEE DETAIL. BLUE HI SHEETING
127	D9-54A		18	X	18	2.250						86-87	20+55	MOUNT ON WALL ROAD SIDE N-40-0043
128	NONE	BLANK	18	X	6	1.500		1				86-87	20+55	ON WALL. SEE DETAIL. BLUE HI SHEETING
129	D9-54	1720 W . GRANGE AVE	18	X	24	3.000		1				1-2	10+00	MOUNT ON WALL RESIDENT SIDE. N-40-0046
130	NONE	BLANK	18	X	6	1.500		1				1-2	10+00	ON WALL. SEE DETAIL. BLUE HI SHEETING
131	D9-54	1720 W . GRANGE AVE	18	X	24	3.000		1				1-2	10+00	MOUNT ON WALL ROAD SIDE N-40-0046
132	NONE	BLANK	18	X	6	1.500		1				1-2	10+00	ON WALL . SEE DETAIL. BLUE SHEETING
133	D9-54	1700 W. MALLORY AVE	18	X	24	3.000		1				44-45	16+22.5	MOUNT ON WALL RESIDENT SIDE N-40-0046
134	NONE	BLANK	18	X	6	1.500		1				44-45	16+22.5	ON WALL. SEE DETAIL. BLUE HI SHEETING
135	D9-54	1700 W. MALLORY AVE	18	X	24	3.000		1				44-45	16+22.5	MOUNT ON WALL ROAD SIDE. N-40-0046
136	NONE	BLANK	18	X	6	1.500		1				44-45	16+22.5	ON WALL. SEE DETAIL. BLUE HI SHEETING
137	D9-54	1700 W. CLAYTON AVE, CREST AVE	18	X	24	3.000		1				77-78	21+02.5	MOUNT ON WALL RESIDENT SIDE N-40-0046
138	NONE	BLANK	18	X	6	1.500		1				77-78	21+02.5	ON WALL . SEE DETAIL. BLUE SHEETING
139	D9-54	1700 W. CLAYTON AVE, CREST AVE	18	X	24	3.000		1				77-78	21+02.5	MOUNT ON WALL ROAD SIDE N-40-0046
140	NONE	BLANK	18	X	6	1.500		1				77-78	21+02.5	ON WALL . SEE DETAIL. BLUE SHEETING
141	D9-54	1802 W. ABBOTT AVE	18	X	24	3.000		1				101-102	24+47.5	MOUNT ON WALL RESIDENT SIDE. N-40-0046
142	NONE	BLANK	18	X	6	1.500		1				101-102	24+47.5	ON WALL . SEE DETAIL. BLUE SHEETING
143	D9-54	1802 W. ABBOTT AVE	18	X	24	3.000		1				101-102	24+47.5	MOUNT ON WALL ROAD SIDE. N-40-0046
144	NONE	BLANK	18	X	6	1.500		1				101-102	24+47.5	ON WALL. SEE DETAIL. BLUE HI SHEETING
145	D9-54	5224 W. 18TH ST	18	X	24	3.000		1				NONE	NONE	MOUNT ON WALL RESIDENT SIDE N-40-0046
146	NONE	BLANK	18	X	6	1.500		1				NONE	NONE	ON WALL . SEE DETAIL. BLUE SHEETING
147	D9-54	5224 W. 18TH ST	18	X	24	3.000		1				NONE	NONE	MOUNT ON WALL ROAD SIDE N-40-0046
148	NONE	BLANK	18	X	6	1.500		1				NONE	NONE	ON WALL . SEE DETAIL. BLUE SHEETING
149	D9-54	S. 18TH ST AND EDGERTON AVE	18	X	24	3.000		1				138-139	28+82.5	MOUNT ON WALL RESIDENT SIDE N-40-0046
150	NONE	BLANK	18	X	6	1.500		1				138-139	28+82.5	ON WALL. SEE DETAIL. BLUE HI SHEETING

SHEET: 5 OF 7

TYPEII PERMANENT SIGNING 1060-53-70

SIGN NO.	SIGN CODE & SIZE	SIGN MESSAGE	SIGN SIZE W [IN.]	x x	H [IN.]	637.2210 SIGNS TYPE II REFLECTIVE H [SF]	638.2102 MOVING SIGNS TYPE II [EA]	638.2602 REMOVING SIGNS TYPE II (EA)	638.3000 REM SMALL SIGN SUP [EA]	634.0618 POSTS WOOD 4" X 6" X 18' [EA]	MOUNT ON SAME POST AS SIGN #	WALL POST #	LOCATION STATION #	REMARKS NOISE WALL LOCATION
151	D9-54	S. 18TH ST AND EDGERTON AVE	18	X	24	3.000		1				138-139	28+82.5	MOUNT ON WALL ROAD SIDE N-40-0046
152	NONE	BLANK	18	X	6	1.500		1				138-139	28+82.5	ON WALL. SEE DETAIL. BLUE HI SHEETING
153	D9-54	S. 18TH ST AND HOLMES CT	18	X	24	3.000		1				259-260	42+66.5	MOUNT ON WALL RESIDENT SIDE. N-40-0046
154	NONE	BLANK	18	X	6	1.500		1				259-260	42+66.5	ON WALL. SEE DETAIL. BLUE HI SHEETING
155	D9-54	S. 18TH ST AND HOLMES CT	18	X	24	3.000		1				259-260	42+66.5	MOUNT ON WALL ROAD SIDE. N-40-0046
156	NONE	BLANK	18	X	6	1.500		1				259-260	42+66.5	ON WALL. SEE DETAIL. BLUE HI SHEETING
157	D9-54	5224 W. 18TH ST	18	X	24	3.000		1				293-294	47+57.5	MOUNT ON WALL RESIDENT SIDE. N-40-0046
158	NONE	BLANK	18	X	6	1.500		1				293-294	47+57.5	ON WALL. SEE DETAIL. BLUE HI SHEETING
159	D9-54	5224 W. 18TH ST	18	X	24	3.000		1				293-294	47+57.5	MOUNT ON WALL. ROAD SIDE N-40-0046
160	NONE	BLANK	18	X	6	1.500		1				293-294	47+57.5	ON WALL. SEE DETAIL. BLUE HI SHEETING
161	D9-54	4920 S. 18TH ST	18	X	24	3.000		1				330-331	52+97.5	MOUNT ON WALL RESIDENT SIDE. N-40-0046
162	NONE	BLANK	18	X	6	1.500		1				330-331	52+97.5	ON WALL. SEE DETAIL. BLUE HI SHEETING
163	D9-54	4920 S. 18TH ST	18	X	24	3.000		1				330-331	52+97.5	MOUNT ON WALL. ROAD SIDE . N-40-0046
164	NONE	BLANK	18	X	6	1.500		1				330-331	52+97.5	ON WALL. SEE DETAIL. BLUE HI SHEETING
165	D9-54	1572 W. GRANGE AVE	18	X	24	3.000		1				1-2	10+00	MOUNT ON WALL. RESIDENT SIDE N-40-0047
166	NONE	BLANK	18	X	6	1.500		1				1-2	10+00	ON WALL. SEE DETAIL. BLUE HI SHEETING
167	D9-54	1572 W. GRANGE AVE	18	X	24	3.000		1				1-2	10+00	MOUNT ON WALL. ROAD SIDE. N-40-0047
168	NONE	BLANK	18	X	6	1.500		1				1-2	10+00	ON WALL. SEE DETAIL. BLUE HI SHEETING
169	D9-54	5401 S. 15TH PL	18	X	24	3.000		1				45-46	16+00	MOUNT ON WALL. RESIDENT SIDE. N-40-0047
170	NONE	BLANK	18	X	6	1.500		1				45-46	16+00	ON WALL. SEE DETAIL. BLUE HI SHEETING
171	D9-54	5401 S. 15TH PL	18	X	24	3.000		1				45-46	16+00	MOUNT ON WALL. ROAD SIDE N-40-0047
172	NONE	BLANK	18	X	6	1.500		1				45-46	16+00	ON WALL. SEE DETAIL. BLUE HI SHEETING
173	D9-54	S. 15TH PL AND W. UPSHAW AVE	18	X	24	3.000		1				90-91	22+82.5	MOUNT ON WALL. RESIDENT SIDE. N-40-0047
174	NONE	BLANK	18	X	6	1.500		1				90-91	22+82.5	ON WALL . SEE DETAIL. BLUE SHEETING
175	D9-54	S. 15TH PL AND W. UPSHAW AVE	18	X	24	3.000		1				90-91	22+82.5	MOUNT ON WALL. ROAD SIDE. N-40-0047
176	NONE	BLANK	18	X	6	1.500		1				90-91	22+82.5	ON WALL. SEE DETAIL. BLUE HI SHEETING
177	D9-54	5200 S. 16TH ST	18	X	24	3.000		1				134-135	29+50	MOUNT ON WALL. RESIDENT SIDE. N-40-0047
178	NONE	BLANK	18	X	6	1.500		1				134-135	29+50	ON WALL. SEE DETAIL. BLUE HI SHEETING
179	D9-54	5200 S. 16TH ST	18	X	24	3.000		1				134-135	29+50	MOUNT ON WALL RESIDENT SIDE. N-40-0047
180	NONE	BLANK	18	X	6	1.500		1				134-135	29+50	ON WALL. SEE DETAIL. BLUE HI SHEETING

SHEET: 6 OF 7

TYPEII PERMANENT SIGNING 1060-53-70

SIGN NO.	SIGN CODE & SIZE	SIGN MESSAGE	SIGN SIZE W [IN.]	x x	H [IN.]	637.2210 SIGNS TYPE II REFLECTIVE H [SF]	638.2102 MOVING SIGNS TYPE II [EA]	638.2602 REMOVING SIGNS TYPE II (EA)	638.3000 REM SMALL SIGN SUP [EA]	634.0618 POSTS WOOD 4" X 6" X 18' [EA]	MOUNT ON SAME POST AS SIGN #	WALL POST #	LOCATION STATION #	REMARKS NOISE WALL LOCATION
181	D9-54	S 16TH ST AND EDGERTON AVE	18	X	24	3.000		1				192-193	38+27.5	MOUNT ON WALL RESIDENT SIDE. N-40-0047
182	NONE	BLANK	18	X	6	1.500		1				192-193	38+27.5	ON WALL. SEE DETAIL. BLUE HI SHEETING
183	D9-54	S. 16TH ST AND EDGERTON AVE	18	X	24	3.000		1				192-193	38+27.5	MOUNT ON WALL. ROAD SIDE. N-40-0047
184	NONE	BLANK	18	X	6	1.500		1				192-193	38+27.5	ON WALL. SEE DETAIL. BLUE HI SHEETING
185	D9-54A		18	X	18	2.250		1				220-221	42+50	MOUNT ON WALL RESIDENT SIDE. N-40-0047
186	NONE	BLANK	18	X	6	1.500		1				220-221	42+50	ON WALL. SEE DETAIL. BLUE HI SHEETING
187	D9-54A		18	X	18	2.250		1				220-221	42+50	MOUNT ON WALL. ROAD SIDE. N-40-0047
188	NONE	BLANK	18	X	6	1.500		1				220-221	42+50	ON WALL . SEE DETAIL. BLUE SHEETING
189	D9-54	4942 S. 16TH ST	18	X	24	3.000		1				243-244	46+00	MOUNT ON WALL . RESIDENT SIDE. N-40-0047
190	NONE	BLANK	18	X	6	1.500		1				243-244	46+00	ON WALL. SEE DETAIL. BLUE HI SHEETING
191	D9-54	4942 S. 16TH ST	18	X	24	3.000		1				243-244	46+00	MOUNT ON WAL. ROAD SIDE. N-40-0047
192	NONE	BLANK	18	X	6	1.500		1				243-244	46+00	ON WALL. SEE DETAIL. BLUE HI SHEETING
193	D9-54	4843 S. 15TH ST	18	X	24	3.000		1				284-285	52+22.5	MOUNT ON WALL. RESIDENT SIDE. N-40-0047
194	NONE	BLANK	18	X	6	1.500		1				284-285	52+22.5	ON WALL. SEE DETAIL. BLUE HI SHEETING
195	D9-54	4843 S. 15TH ST	18	X	24	3.000		1				284-285	52+22.5	MOUNT ON WALL. ROAD SIDE. N-40-0047
196	NONE	BLANK	18	X	6	1.500		1				284-285	52+22.5	ON WALL. SEE DETAIL. BLUE HI SHEETING
UNDISTRIBUTED						20.000	5	5	5	5				
TOTALS						443.750	5	187	5	5	--			--

NOTE: MOUNTING ANCHORS AND BOLTS INCIDENTAL TO SIGNS. BLUE BLANKS ARE MOUNTED AT TOP OF WALL PER DETAIL.
MOUNT SIGNS ABOVE OPENING HOLE NOT OVER

SHEET: 7 OF 7

Standard Detail Drawing List

08E08-03	TYPICAL INSTALLATIONS OF EROSION BALES / TEMPORARY DITCH CHECKS
08E09-06	SILT FENCE
08E10-02	INLET PROTECTION TYPE A, B, C AND D
15B03-15A	FENCE CHAIN LINK
15B03-15B	FENCE CHAIN LINK
15C02-09B	BARRICADES AND SIGNS FOR VARIOUS CLOSURES
15C02-09D	ON RAMP LANE CLOSURE
15C02-09E	OFF RAMP LANE CLOSURE
15C11-10B	CHANNELIZING DEVICES DRUMS, CONES, BARRICADES AND VERTICAL PANELS
15D12-10A	TRAFFIC CONTROL, LANE CLOSURE
15D16-06	TRAFFIC CONTROL, EXIT RAMP CLOSURE
15D20-07A	TRAFFIC CONTROL, SINGLE LANE CLOSURE, DIVIDED NON-FREEWAY/EXPRESSWAY
15D20-07B	TRAFFIC CONTROL, SINGLE RIGHT LANE CLOSURE, UNDIVIDED NON-FREEWAY/EXPRESSWAY
15D20-07C	TRAFFIC CONTROL, SINGLE LEFT LANE CLOSURE, UNDIVIDED NON-FREEWAY/EXPRESSWAY
15D21-07A	TRAFFIC CONTROL, INTERSECTION WITHIN SINGLE LANE CLOSURE
15D21-07B	TRAFFIC CONTROL, INTERSECTION WITHIN SINGLE LANE CLOSURE
15D27-03	TRAFFIC CONTROL, SHOULDER CLOSURE ON DIVIDED ROADWAY, SPEEDS GREATER THAN 40 MPH
15D30-09A	TRAFFIC CONTROL, PEDESTRIAN ACCOMMODATION
15D30-09B	TRAFFIC CONTROL, PEDESTRIAN ACCOMMODATION
15D30-09C	TRAFFIC CONTROL, PEDESTRIAN ACCOMMODATION
15D49-02	TRAFFIC CONTROL, SYSTEM RAMP CLOSURE

6

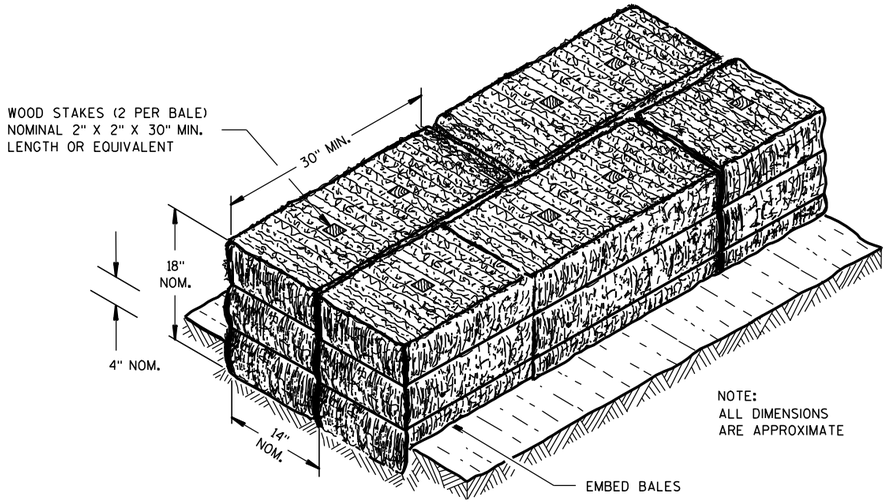

SECTION A-A

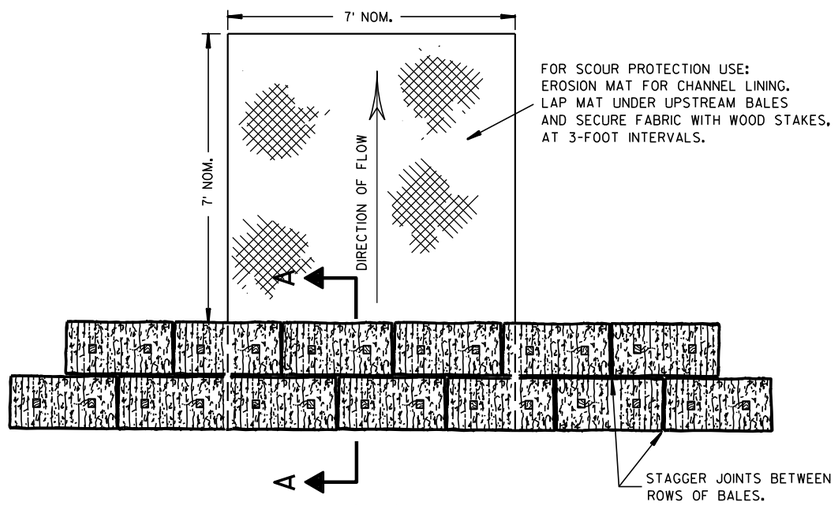

PLAN VIEW

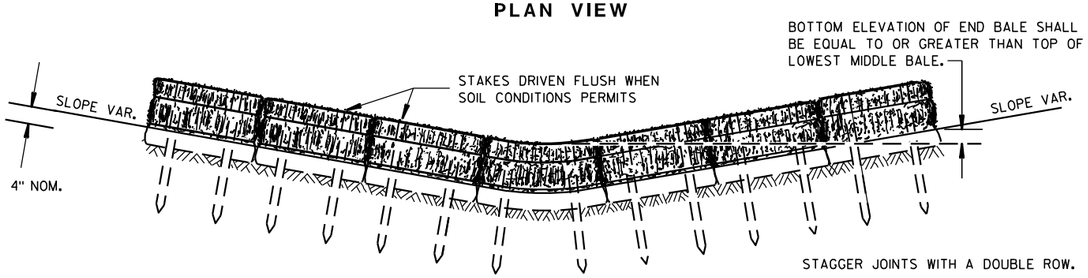

FRONT ELEVATION

TEMPORARY DITCH CHECK USING EROSION BALES ①

GENERAL NOTES

DETAILS OF CONSTRUCTION, MATERIALS AND WORKMANSHIP NOT SHOWN ON THIS DRAWING SHALL CONFORM TO THE PERTINENT REQUIREMENTS OF THE STANDARD SPECIFICATIONS AND THE APPLICABLE SPECIAL PROVISIONS.

① TEMPORARY DITCH CHECKS EITHER EROSION BALES OR MANUFACTURED SHALL BE PAID FOR UNDER THE BID ITEM OF TEMPORARY DITCH CHECK. THE DEPARTMENT WILL NOT PAY FOR TEMPORARY DITCH CHECKS CONSTRUCTED OF A SINGLE ROW OF EROSION BALES.

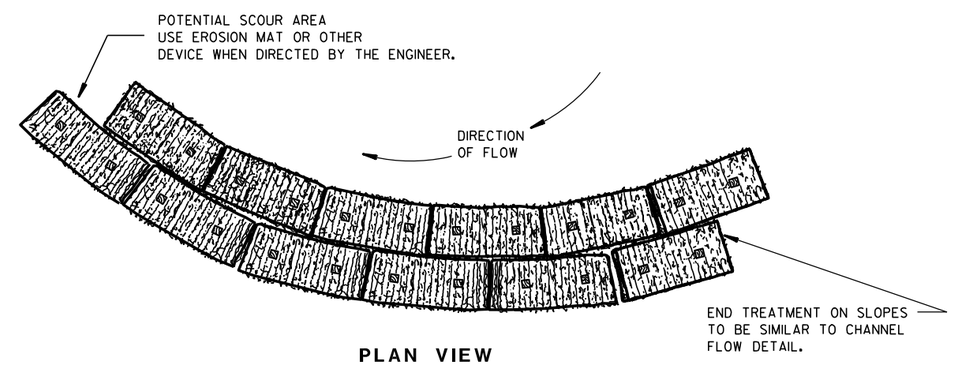

PLAN VIEW

WHEN ALTERING THE DIRECTION OF FLOW

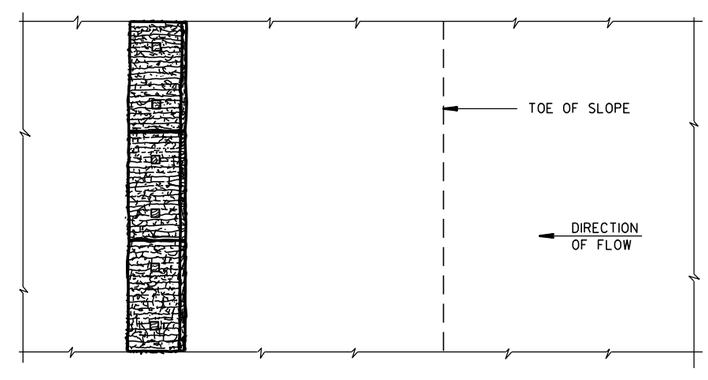

PLAN VIEW

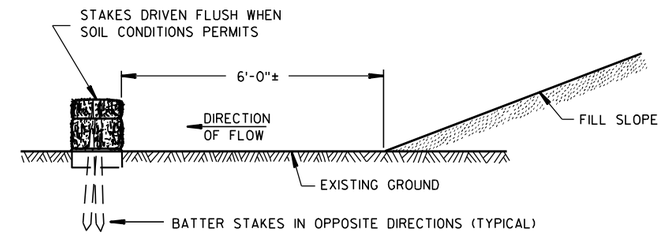

FRONT ELEVATION

WHEN EXISTING GROUND SLOPES AWAY FROM FILL SLOPE

EROSION BALES FOR SHEET FLOW

TYPICAL INSTALLATIONS OF EROSION BALES / TEMPORARY DITCH CHECKS

STATE OF WISCONSIN
DEPARTMENT OF TRANSPORTATION

APPROVED
6/04/02 /S/ Beth Cann...
DATE CHIEF ROADWAY DEVELOP... ...INEER
FHWA

6

S.D.D. 8 E 8-3

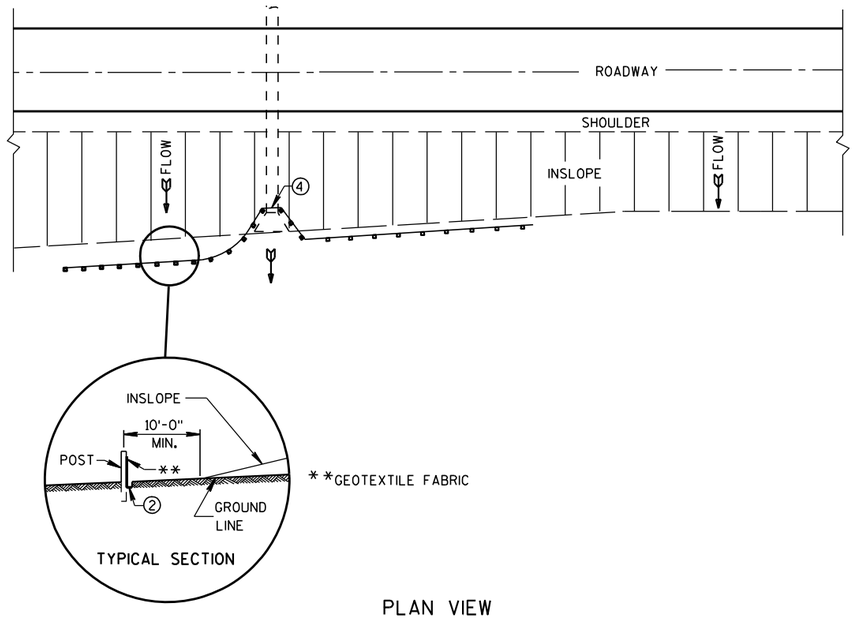

PLAN VIEW

TYPICAL APPLICATION OF SILT FENCE

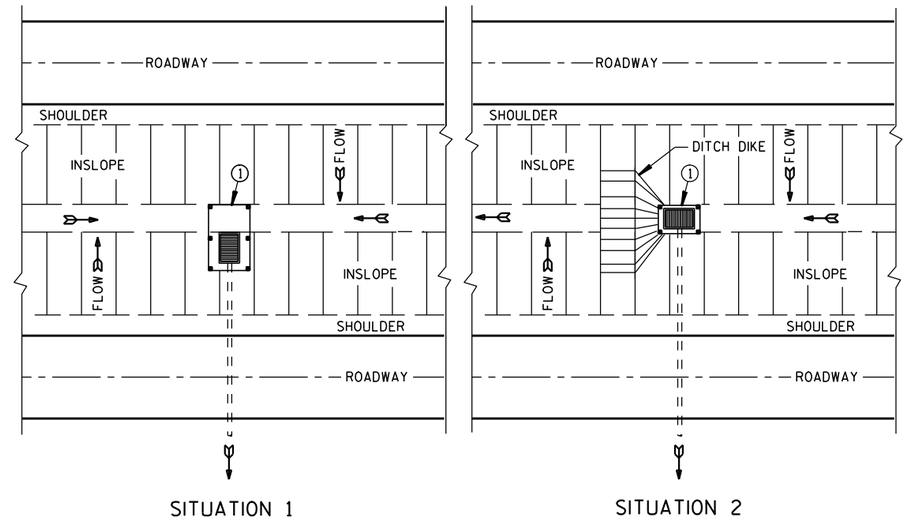

SITUATION 1

SITUATION 2

PLAN VIEW

SILT FENCE AT MEDIAN SURFACE DRAINS

GENERAL NOTES

DETAILS OF CONSTRUCTION NOT SHOWN ON THIS DRAWING SHALL CONFORM TO THE PERTINENT REQUIREMENTS OF THE STANDARD SPECIFICATIONS AND APPLICABLE SPECIAL PROVISIONS.

① HORIZONTAL BRACE REQUIRED WITH 2" X 4" WOODEN FRAME OR EQUIVALENT AT TOP OF POSTS.

② FOR MANUAL INSTALLATIONS THE TRENCH SHALL BE A MINIMUM OF 4" WIDE & 6" DEEP TO BURY AND ANCHOR THE GEOTEXTILE FABRIC. FOLD MATERIAL TO FIT TRENCH AND BACKFILL & COMPACT TRENCH WITH EXCAVATED SOIL.

③ WOOD POSTS SHALL BE A MINIMUM SIZE OF 1⅛" X 1⅛" OF OAK OR HICKORY.

④ SILT FENCE TO EXTEND ACROSS THE TOP OF THE PIPE.

⑤ CONSTRUCT SILT FENCE FROM A CONTINUOUS ROLL IF POSSIBLE BY CUTTING LENGTHS TO AVOID JOINTS. IF A JOINT IS NECESSARY USE ONE OF THE FOLLOWING TWO METHODS; A) OVERLAP THE END POSTS AND TWIST, OR ROTATE, AT LEAST 180 DEGREES, B) HOOK THE END OF EACH SILT FENCE LENGTH.

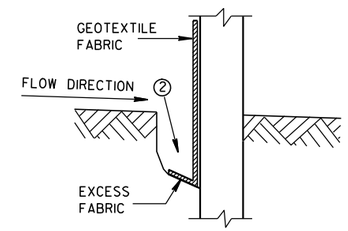

TRENCH DETAIL

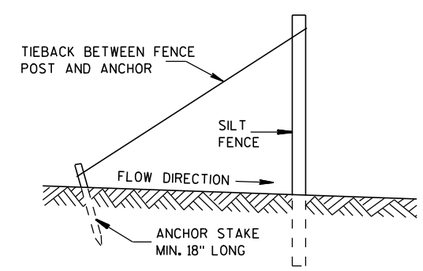

SILT FENCE TIE BACK

(WHEN REQUIRED BY THE ENGINEER)

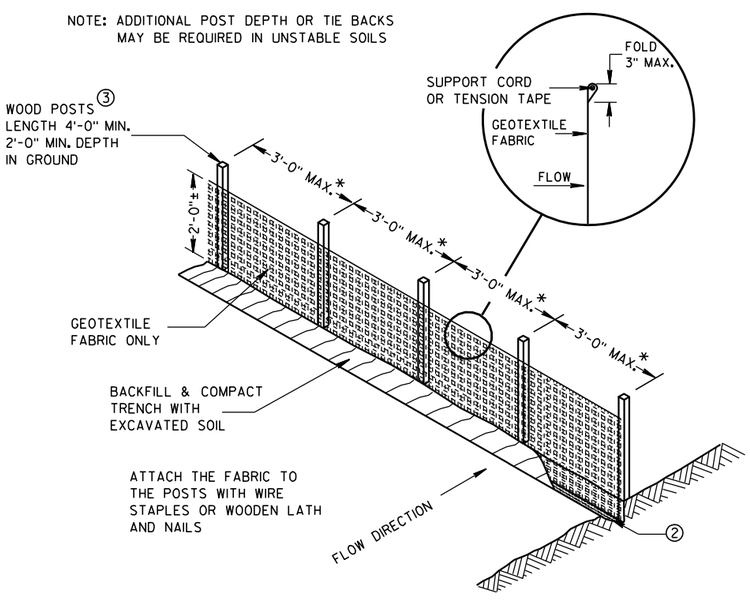

*NOTE: 8'-0" POST SPACING ALLOWED IF A WOVEN GEOTEXTILE FABRIC IS USED.

SILT FENCE

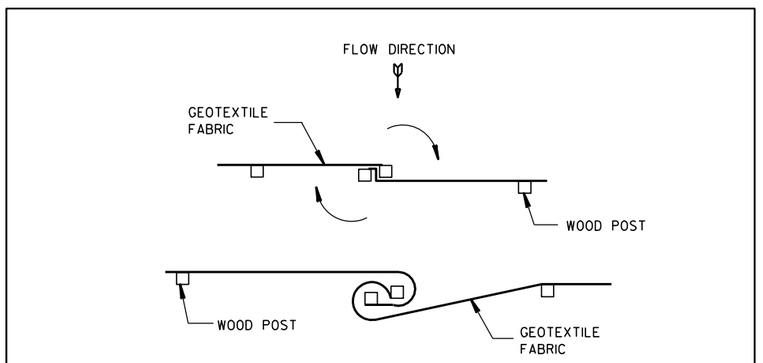

TWIST METHOD

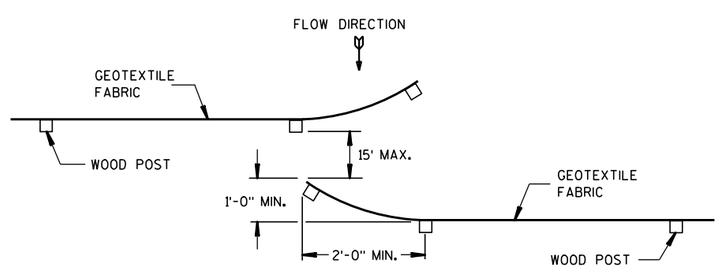

HOOK METHOD

JOINING TWO LENGTHS OF SILT FENCE ⑤

SILT FENCE

STATE OF WISCONSIN
DEPARTMENT OF TRANSPORTATION

APPROVED
4-29-05 /S/ Beth Cann...
DATE CHIEF ROADWAY DEVELOP... ...INEER
FHWA

6

6

S.D.D. 8 E 9-6

S.D.D. 8 E 9-6

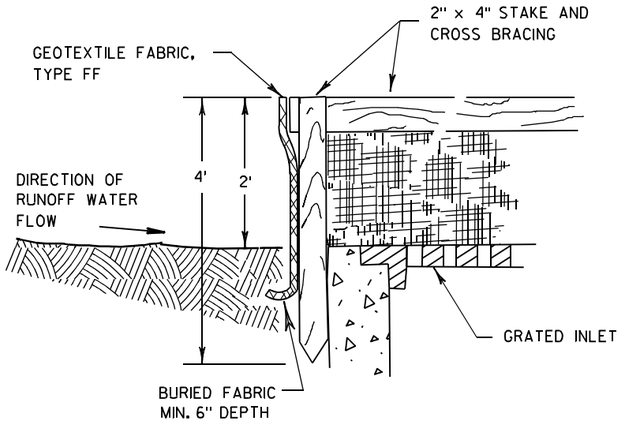

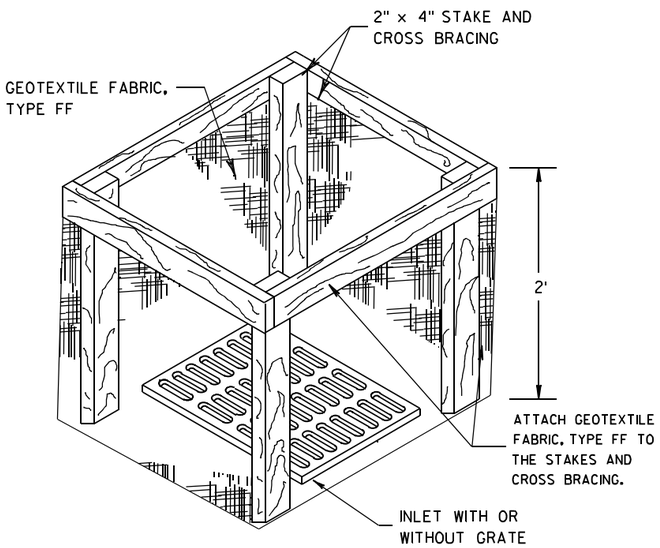

INLET PROTECTION, TYPE A

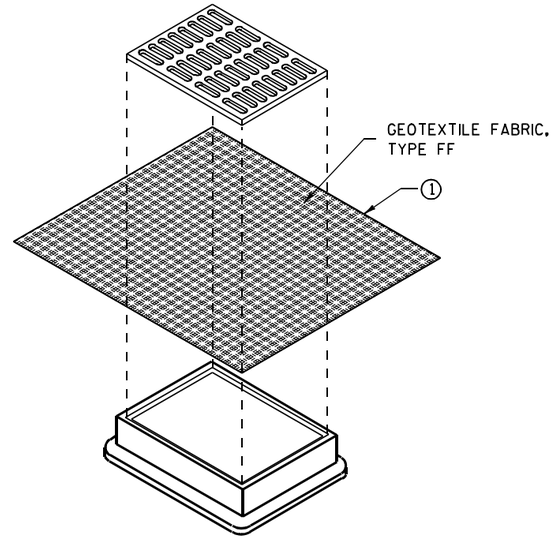

INLET PROTECTION, TYPE B (WITHOUT CURB BOX)

(CAN BE INSTALLED IN ANY INLET WITHOUT A CURB BOX)

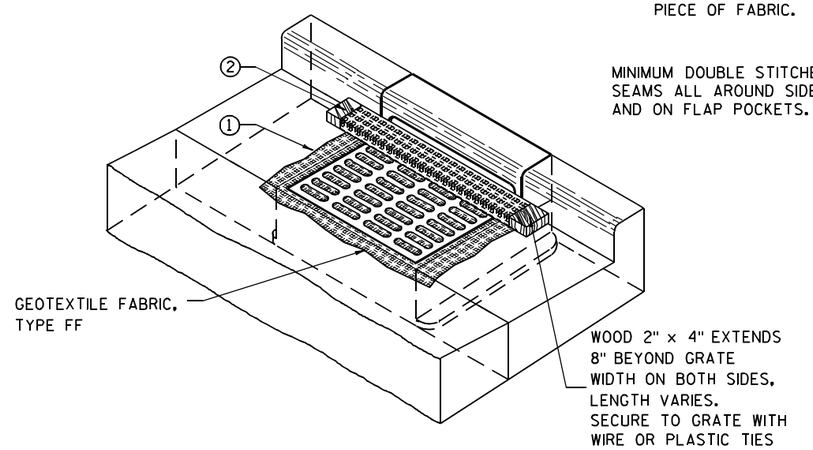

INLET PROTECTION, TYPE C (WITH CURB BOX)

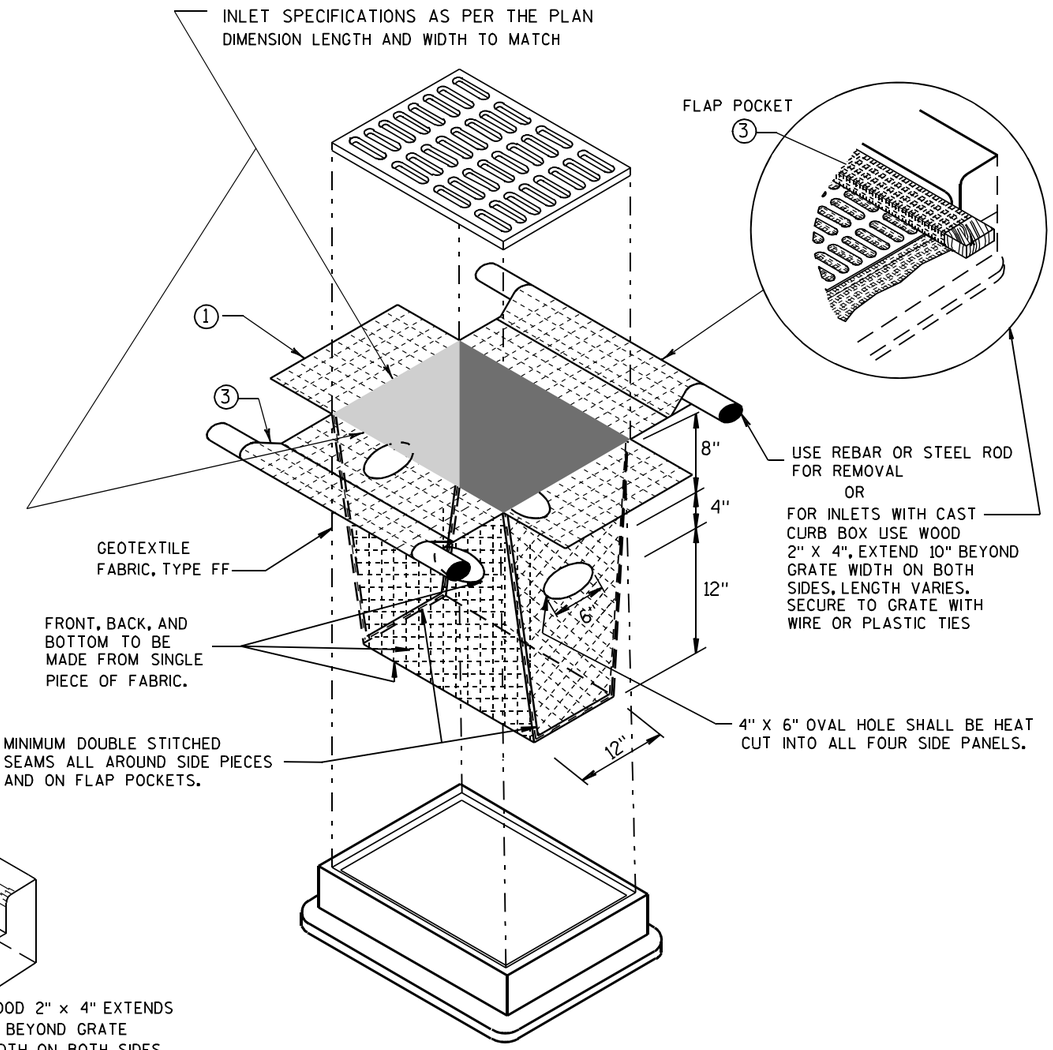

INLET PROTECTION, TYPE D

(CAN BE INSTALLED IN ANY INLET TYPE WITH OR WITHOUT A CURB BOX AS PER NOTE ②)

GENERAL NOTES

INLET PROTECTION DEVICES SHALL BE MAINTAINED OR REPLACED AT THE DIRECTION OF THE ENGINEER.

MANUFACTURED ALTERNATIVES APPROVED AND LISTED ON THE DEPARTMENT'S EROSION CONTROL PRODUCT ACCEPTABILITY LIST MAY BE SUBSTITUTED.

WHEN REMOVING OR MAINTAINING INLET PROTECTION, CARE SHALL BE TAKEN SO THAT THE SEDIMENT TRAPPED ON THE GEOTEXTILE FABRIC DOES NOT FALL INTO THE INLET. ANY MATERIAL FALLING INTO THE INLET SHALL BE REMOVED IMMEDIATELY.

① FINISHED SIZE, INCLUDING FLAP POCKETS WHERE REQUIRED, SHALL EXTEND A MINIMUM OF 10" AROUND THE PERIMETER TO FACILITATE MAINTENANCE OR REMOVAL.

② FOR INLET PROTECTION, TYPE C (WITH CURB BOX), AN ADDITIONAL 18" OF FABRIC IS WRAPPED AROUND THE WOOD AND SECURED WITH STAPLES. THE WOOD SHALL NOT BLOCK THE ENTIRE HEIGHT OF THE CURB BOX OPENING.

③ FLAP POCKETS SHALL BE LARGE ENOUGH TO ACCEPT WOOD 2X4.

INSTALLATION NOTES

TYPE B & C

TRIM EXCESS FABRIC IN THE FLOW LINE TO WITHIN 3" OF THE GRATE.

THE CONTRACTOR SHALL DEMONSTRATE A METHOD OF MAINTENANCE, USING A SEWN FLAP, HAND HOLDS OR OTHER METHOD TO PREVENT ACCUMULATED SEDIMENT FROM ENTERING THE INLET.

TYPE D

DO NOT INSTALL INLET PROTECTION TYPE D IN INLETS SHALLOWER THAN 30", MEASURED FROM THE BOTTOM OF THE INLET TO THE TOP OF THE GRATE.

TRIM EXCESS FABRIC IN THE FLOW LINE TO WITHIN 3" OF THE GRATE.

THE INSTALLED BAG SHALL HAVE A MINIMUM SIDE CLEARANCE, BETWEEN THE INLET WALLS AND THE BAG, MEASURED AT THE BOTTOM OF THE OVERFLOW HOLES, OF 3". WHERE NECESSARY THE CONTRACTOR SHALL CINCH THE BAG, USING PLASTIC ZIP TIES, TO ACHIEVE THE 3" CLEARANCE. THE TIES SHALL BE PLACED AT A MAXIMUM OF 4" FROM THE BOTTOM OF THE BAG.

INLET PROTECTION
TYPE A, B, C, AND D

STATE OF WISCONSIN
DEPARTMENT OF TRANSPORTATION

APPROVED
10/16/02 — DATE
/S/ Beth Cann[illegible] — CHIEF ROADWAY DEVELOPM[illegible] ENGINEER
FHWA

6

S.D.D. 8 E 10-2

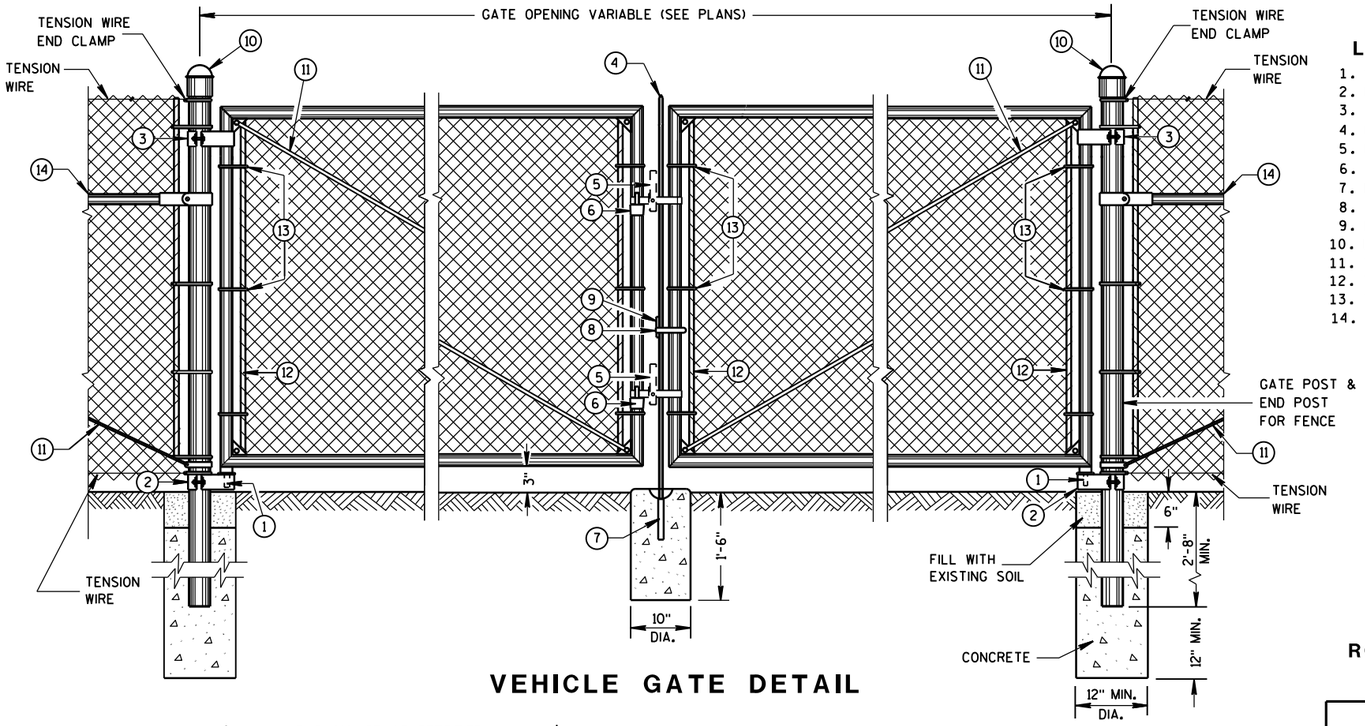

VEHICLE GATE DETAIL

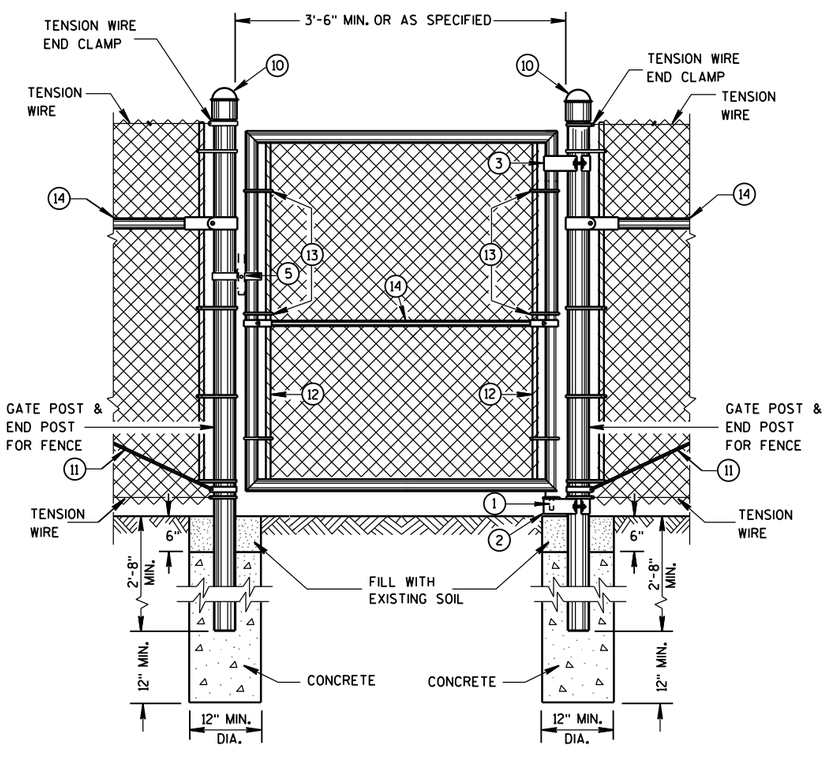

PEDESTRIAN GATE DETAIL

LEGEND

1. STRAIGHT PLUG
2. BOTTOM HINGE
3. TOP HINGE
4. PLUNGER ROD
5. FULCRUM LATCH
6. FORK CATCH *
7. PLUNGER ROD CATCH
8. LOCK KEEPER GUIDE
9. LOCK KEEPER
10. DOME TOPS
11. TRUSS RODS
12. TENSION BAR
13. TENSION BANDS
14. BRACE RAIL

*NOT REQUIRED ON SINGLE SWING PEDESTRIAN GATE

GENERAL NOTES

FENCE POSTS INSTALLED ON CONCRETE WALLS SHALL BE ANCHORED INTO EMBEDDED METAL SLEEVES OR CORED HOLE BY FILLING THE ANNULAR SPACE WITH PEA GRAVEL FOLLOWED BY AN EPOXY RESIN ADHESIVE. THE EPOXY RESIN ADHESIVE SHALL CONFORM TO THE REQUIREMENTS OF AASHTO M 235, CLASS A, B OR C.

USE FENCE FABRIC KNUCKLED AT BOTH SELVAGES.

FOR LEAF GATES GREATER THAN 8 FEET WIDE, INSTALL INTERIOR VERTICAL BRACE RAIL AT 8 FOOT INTERVALS.

FOR FABRIC HEIGHTS GREATER THAN 8 FEET, INSTALL INTERIOR HORIZONTAL BRACE RAILS TO LEAF GATE.

MAXIMUM SAG FOR OUTER GATE MEMBER SHALL NOT EXCEED THE GREATER OF 1% OF THE LEAF GATE WIDTH OR 2 INCHES.

USE TYPE 2, CLASS 3, MARCELLED/CRIMPED, TENSION WIRE PER ASTM A 817.

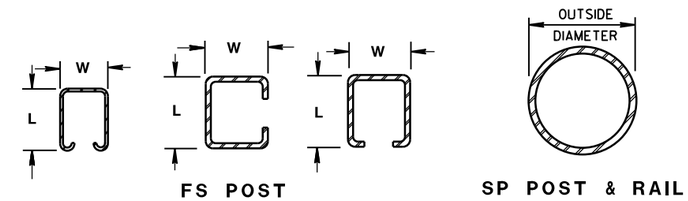

CROSS SECTIONS OF POSTS AND RAILS

ROLLED-FORMED STEEL FENCE POST (2.0 OZ./SQ. FT. COATING)

POST TYPE	LENGTH (L) INCH	WIDTH (W) INCH	WEIGHT LBS/FT
FS1	1.625	1.25	1.35
FS2†	1.875	1.625	1.850
FS2	1.875	1.625	2.400
FS3	2.250	1.700	2.780

ROUND STEEL FENCE POST (1.8 OZ./SQ. FT. COATING)

POST TYPE	OUTSIDE DIMENSION INCH	WALL THICKNESS INCH	WEIGHT LBS/FT
SP1	1.660	0.140	2.270
SP2	1.900	0.145	2.720
SP3	2.375	0.154	3.650
SP4	2.875	0.203	5.800
SP5	4.000	0.226	9.120
SP6	6.625	0.280	18.990
SP7	8.625	0.322	28.580

REQUIRED FENCE POST SIZES

USE	FABRIC HEIGHTS FEET	POST TYPE
TERMINAL POSTS **	LESS THAN OR EQUAL TO 6 FT.	SP3
	GREATER THAN OR EQUAL TO 6 FT.	SP4
LINE POSTS	LESS THAN OR EQUAL TO 6 FT.	SP2
	LESS THAN OR EQUAL TO 8 FT.	SP3
	GREATER THAN OR EQUAL TO 8 FT.	SP4
	LESS THAN OR EQUAL TO 8 FT.	FS2 OR FS2†
	GREATER THAN OR EQUAL TO 8 FT.	FS3

BRACE RAIL TYPES

USE		TYPE
BRACE RAIL		SP1 OR FS1

** INCLUDES END, CORNER, ANGLE, INTERSECTION AND INTERMEDIATE BRACED POSTS

REQUIRED POST SIZE FOR GATES

USE	LEAF WIDTHS FEET	POST TYPE
GATES	LESS THAN OR EQUAL TO 6 FT.	SP4
	LESS THAN OR EQUAL TO 13 FT.	SP5
	LESS THAN OR EQUAL TO 18 FT.	SP6
	LESS THAN OR EQUAL TO 23 FT.	SP7

FENCE CHAIN LINK

STATE OF WISCONSIN
DEPARTMENT OF TRANSPORTATION

6
S.D.D. 15 B 3-15a

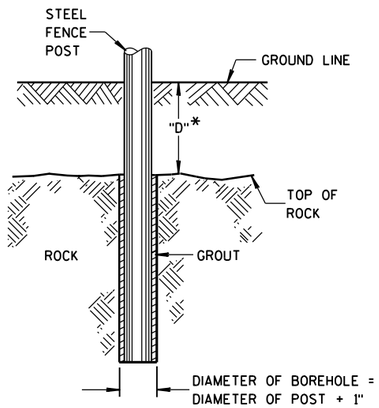

*IF "D" IS LESS THAN 2'-6", DRILL ROCK AND INSTALL GROUT

ROCK INSTALLATION OF LINE POST

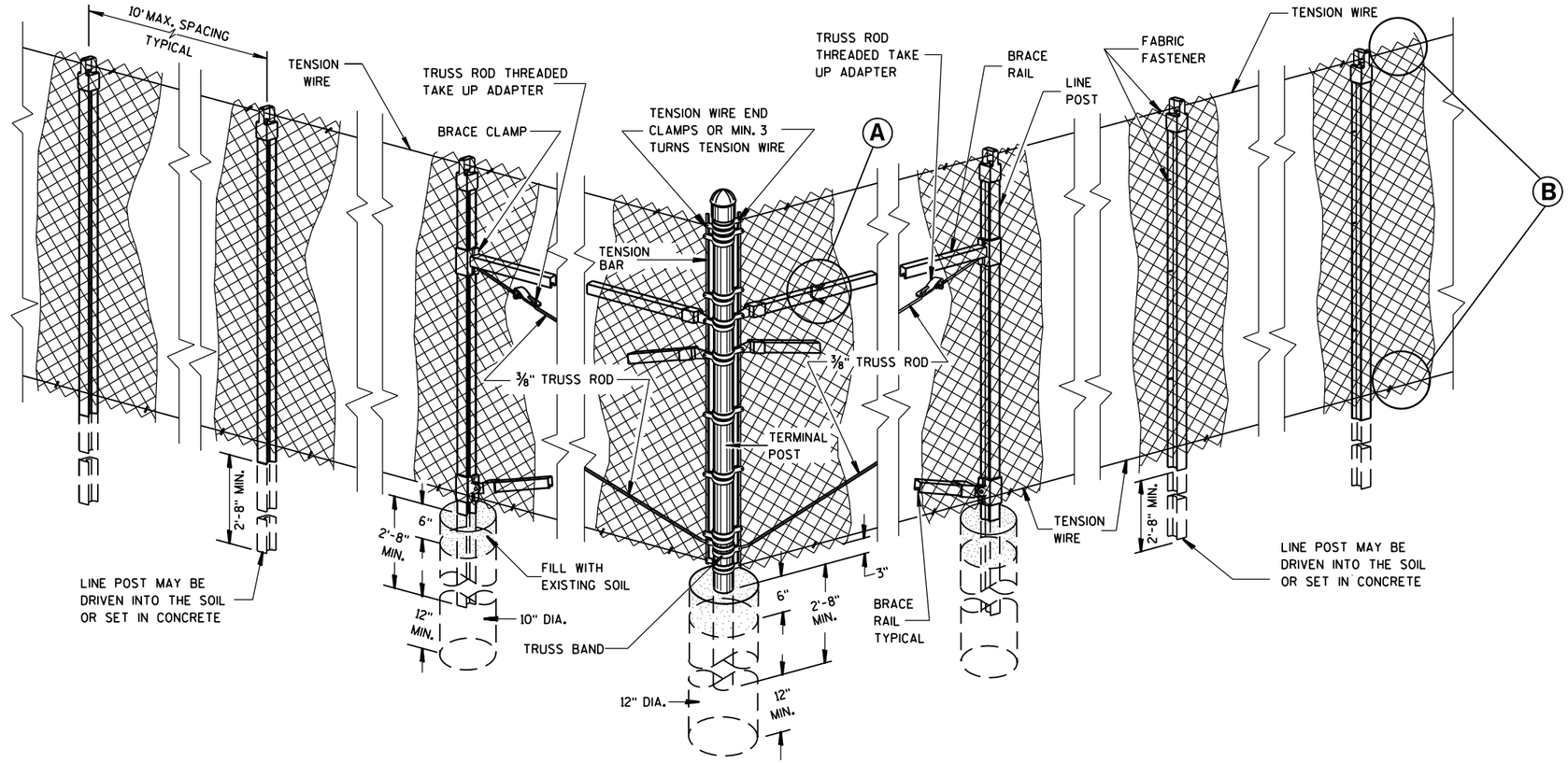

END, CORNER, ANGLE INTERSECTION & INTERMEDIATE BRACED POSTS

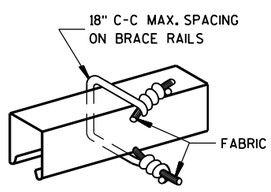

BRACE RAIL
FABRIC FASTENER
(A)

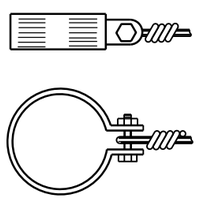

TENSION WIRE END CLAMP

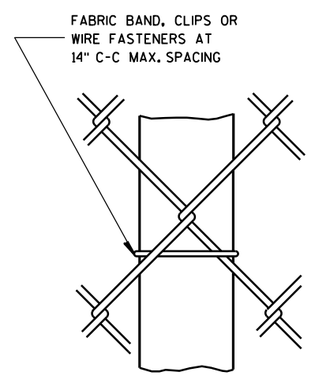

LINE POST
FABRIC FASTENER

AT TOP

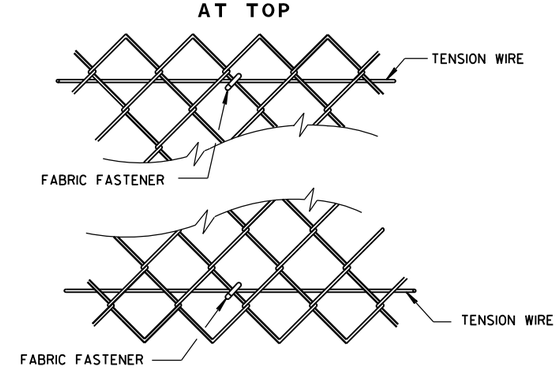

AT BOTTOM
SELVAGES
(B)

FENCE CHAIN LINK

STATE OF WISCONSIN
DEPARTMENT OF TRANSPORTATION

APPROVED
FEB. 2015 — DATE
/S/ Jerry H. Zogg — ROADWAY STANDARDS DEVELOPMENT ENGINEER
FHWA

6

6

S.D.D. 15 B 3-15b

S.D.D. 15 B 3-15b

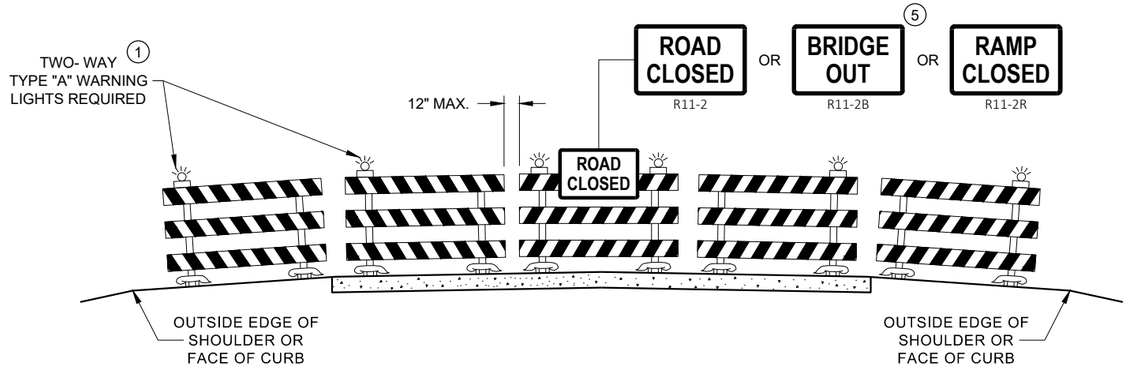

DETAIL D
ROAD CLOSURE BARRICADE DETAIL
APPROACH VIEW

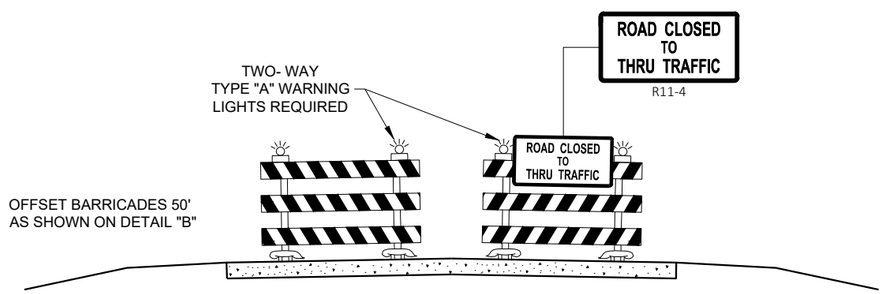

DETAIL E
LANE CLOSURE BARRICADE DETAIL
APPROACH VIEW

SEE SDD 15C2 - SHEET "a" FOR LEGEND

GENERAL NOTES

THE EXACT NUMBER, LOCATION, AND SPACING OF ALL SIGNS AND BARRICADES SHALL BE ADJUSTED TO FIT FIELD CONDITIONS AS APPROVED BY THE ENGINEER.

ANY SIGNS TEMPORARY OR EXISTING, WHICH CONFLICT WITH TRAFFIC CONTROL "IN USE", SHALL BE REMOVED OR COVERED AS NEEDED AND AS APPROVED BY THE ENGINEER.

THE SPACING BETWEEN TRAFFIC CONTROL SIGNS SHOULD BE ADJUSTED TO NOT CONFLICT WITH AND SHOULD PROVIDE A DESIRABLE MINIMUM OF 200 FEET CLEARANCE TO EXISTING SIGNS THAT WILL REMAIN IN PLACE.

BARRICADES THAT MUST BE MOVED FOR A WORK OPERATION SHALL BE IMMEDIATELY RE-ESTABLISHED UPON COMPLETION OF THE OPERATION, OR FOR CONTINUING OPERATIONS, AT THE END OF EACH WORKING DAY.

SIGNS THAT WILL BE IN PLACE LESS THAN 7 CONTINUOUS DAYS AND NIGHTS MAY BE MOUNTED ON PORTABLE SUPPORTS.

ALL TYPE III BARRICADES SHALL HAVE RAILS REFLECTORIZED ON BOTH FACES. STRIPES SHALL BE PROPERLY SLOPED DOWN TOWARD THE TRAFFIC SIDE OR AS SHOWN IN THE ROAD CLOSURE BARRICADE DETAIL "D" FOR FULL ROAD CLOSURES.

TYPE "A" LOW - INTENSITY FLASHING WARNING LIGHTS SHALL BE VISIBLE ON BOTH SIDES OF THE BARRICADE.

THE R11 - 2, R11 - 3, M4 - 9, R11 - 4, AND R10 - 61 SIGNS PLACED ON THE BARRICADES SHALL COVER NO MORE THAN THE TOP RAIL. THE SIGNS SHALL NOT COVER ANY PORTION OF THE MIDDLE RAIL OR BOTTOM RAILS.

"WO" AND "MO" SIGNS ARE THE SAME AS "W" AND "M" SIGNS EXCEPT THE BACKGROUND IS ORANGE.

ALL SIGNS SHALL BE 48" X 48" UNLESS OTHERWISE NOTED BELOW:
- R11 - 2 SHALL BE 48" X 30"
- R11 - 3 SHALL, R11 - 4 AND R10 - 61 SHALL BE 60 " X 30"
- M4 - 9 SHALL BE 30" X 24"
- M3 - X SHALL BE 24" X 12" (36" X 18" IF NEEDED TO MATCH EXISTING SIGNS)
- M4 - 8 SHALL BE 24" X 12" (36" X 18" IF NEEDED TO MATCH EXISTING SIGNS)
- M1 - 4, M1 - 5A AND M1 - 6 SHALL BE 24" X 24" (36" X 36" IF NEEDED TO MATCH EXISTING SIGNS)
- MO5 - 1 AND MO6 - 1 SHALL BE 21" X 21" (30" X 30" IF NEEDED TO MATCH EXISTING SIGNS)
- D1 - X SHALL BE AS SHOWN ON SPECIFIC PROJECT SIGNING DETAIL SHEETS.
- R1 - 1 SHALL BE 36" X 36"

1. TWO WARNING LIGHTS SHALL BE PROVIDED ON THE CENTER BARRICADE AND A MINIMUM OF ONE WARNING LIGHT SHALL BE PROVIDED ON EACH OF THE OTHER BARRICADES WITHIN THE ROADWAY LIMITS. SPACING OF THE WARNING LIGHTS SHALL BE UNIFORM TO THE EDGE OF ROADWAY AS SHOWN (APPROX. 8 FOOT LIGHT SPACING.
2. THESE SIGNS AND BARRICADES ARE NOT REQUIRED IF ROAD CLOSURE BEGINS AT AN INTERSECTION.
3. FOR ROAD CLOSURE WITHOUT LOCAL ACCESS TO PROJECT, SEE ROAD CLOSURE BARRICADE DETAIL "D".
4. FOR ROAD CLOSURE WITH LOCAL ACCESS TO PROJECT, SEE ROAD CLOSURE BARRICADE DETAIL "E".
5. FOR BRIDGE OR CULVERT REPLACEMENTS, SUBSTITUTE "BRIDGE OUT" INSTEAD OF "ROAD CLOSED" ON R11 - 2 AND R11 - 3 SIGNS.
6. INSTALL DETOUR AND COMMUNITY GUIDE SIGNS AND ARROWS ONLY IF SPECIFIED IN THE CONTRACT. IF THERE ARE EXISTING ROUTE MARKER ASSEMBLIES THAT WILL REMAIN IN PLACE, ADJUST THE LOCATION OF THE DETOUR ROUTE SIGNS TO CORRESPOND WITH THE EXISTING ASSEMBLIES. MODIFY EXISTING SIGNS WHERE POSSIBLE. SEE SPECIFIC PROJECT DETOUR SIGNING DETAIL SHEETS. IF DETOUR SIGNS ARE BEING INSTALLED BY OTHERS, PLACE THE CONTRACTED TRAFFIC CONTROL SIGNS TO ALLOW FOR PLACEMENT OF ALL WARNING, DETOUR AND GUIDE SIGNS AS SHOWN.
7. "EAST" CARDINAL DIRECTION MARKERS AND RIGHT TURN ARROWS ARE SHOWN. USE OTHER CARDINAL DIRECTIONS AND ARROWS AS APPROPRIATE.

BARRICADES AND SIGNS FOR VARIOUS CLOSURES

STATE OF WISCONSIN
DEPARTMENT OF TRANSPORTATION

APPROVED
May 2023 — DATE
/S/ Andrew Heidtke — WORK ZONE ENGINEE
FHWA

THIS DRAWING PROVIDES GENERAL GUIDANCE ON TYPICAL TO SIGN LAYOUT AND SPACING. SEE PROJECT TO SIGNING SHEETS FOR SPECIFIC DETAILS FOR EACH PROJECT.

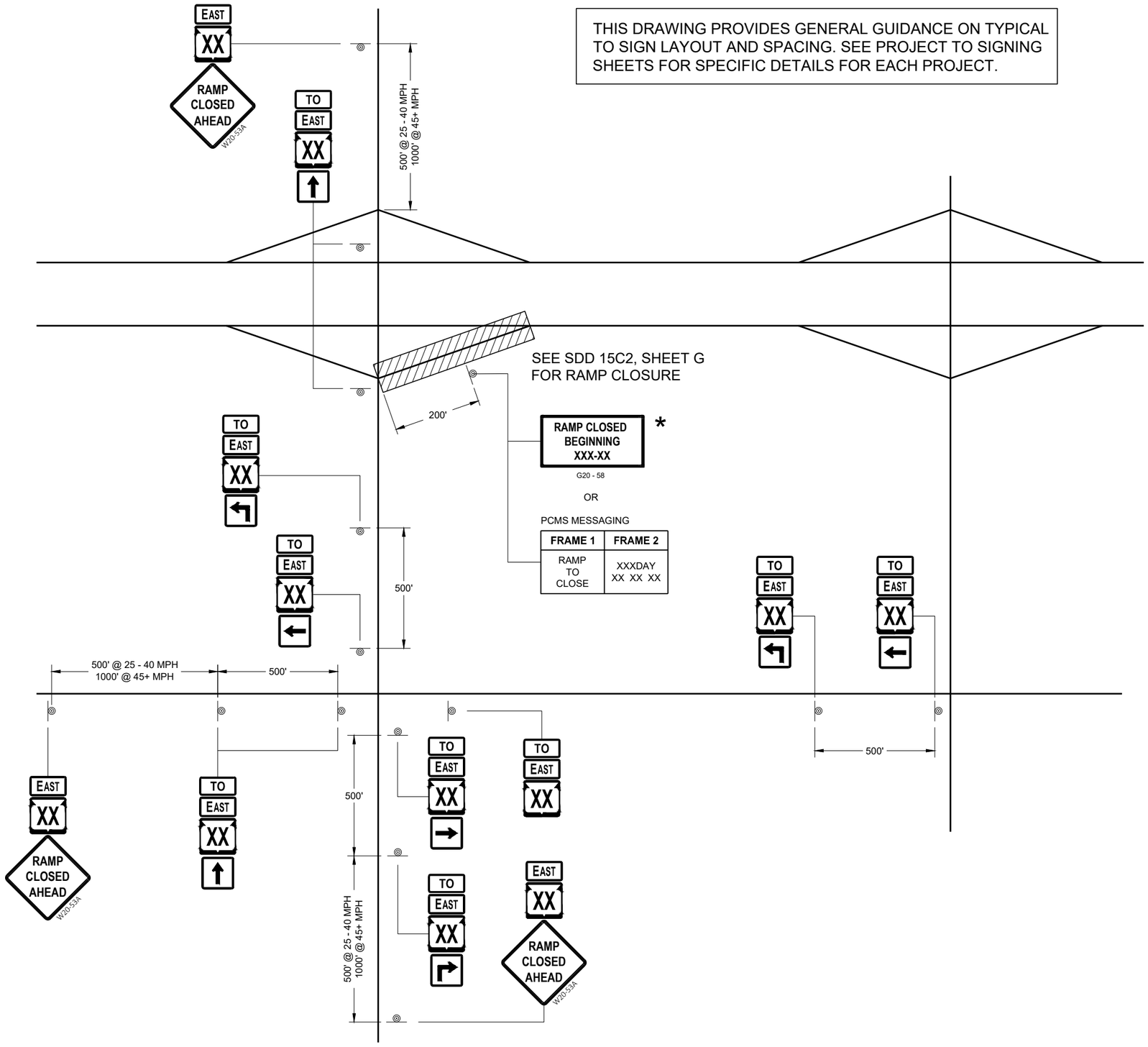

LEGEND

SIGN ON PERMANENT SUPPORT

TO / EAST — MO4 - 5, M3 - X

XX M1 - 6 OR XX M1 - 4 OR INTERSTATE XX M1 - 1

M05 - 1 OR M06 - 1 OR M06 - 1

GENERAL NOTES

THE EXACT NUMBER, LOCATION AND SPACING OF ALL SIGNS SHALL BE ADJUSTED TO FIT FIELD CONDITIONS AS APPROVED BY THE ENGINEER.

IF THERE ARE ANY ROUTE MARKER ASSEMBLIES THAT WILL REMAIN IN PLACE, ADJUST THE LOCATION OF THE TO ROUTE SIGNS TO CORRESPOND WITH THE EXISTING ASSEMBLIES. SEE SPECIFIC PROJECT TO SIGNING DETAIL SHEETS. MODIFY EXISTING SIGNS WHERE POSSIBLE.

THE SPACING BETWEEN TRAFFIC CONTROL AND TO SIGNS SHOULD BE ADJUSTED TO NOT CONFLICT WITH AND TO PROVIDE A DESIRABLE MINIMUM OF 200 FEET CLEARANCE TO EXISTING SIGNS THAT WILL REMAIN IN PLACE.

ANY SIGNS TEMPORARY OR EXISTING, WHICH CONFLICT WITH TRAFFIC CONTROL " IN USE" SHALL BE REMOVED OR COVERED AS NEEDED AND AS APPROVED BY THE ENGINEER.

SIGNS THAT SHALL BE IN PLACE LESS THAN 7 CONTINUOUS DAYS AND NIGHTS MAY BE MOUNTED ON PORTABLE SUPPORTS.

"MO" SIGNS ARE THE SAME AS "M" SIGNS EXCEPT THE BACKGROUND IS ORANGE.

SIGN SIZES SHALL BE AS FOLLOW:
- M3 - X SHALL BE 24" X 12". (36" X 18" IF NEEDED TO MATCH EXISTING SIGNS).
- MO4 - 5 SHALL BE 24" X 12". (36" X 18" IF NEEDED TO MATCH EXISTING SIGNS).
- M1 - 1, M1 - 4, AND M1 - 6 SHALL BE 24" X 24" (36" X 36" IF NEEDED TO MATCH EXISTING SIGNS).
- MO5 - 1, MO5 - 2, AND MO6 - 1, SHALL BE 21" X 21". (30" X 30" IF NEEDED TO MATCH EXISTING SIGNS).
- W20 - 53A SHALL BE 48" X 48"

* PLACE "RAMP CLOSED BEGINNING" SIGN 7 CALENDAR DAYS PRIOR TO CLOSURE OR AS DIRECTED BY THE ENGINEER. SEE WISCONSIN STANDARD SIGN PLATES FOR LAYOUT.

ON RAMP LANE CLOSURE

STATE OF WISCONSIN
DEPARTMENT OF TRANSPORTATION

APPROVED
May 2023 — DATE
/S/ Andrew Heidtke — WORK ZONE ENGINEER
FHWA

THIS DRAWING PROVIDES GENERAL GUIDANCE ON TYPICAL "TO" MO-4 SIGN LAYOUT AND SPACING. SEE PROJECT TO SIGNING SHEETS FOR SPECIFIC DETAILS FOR EACH PROJECT.

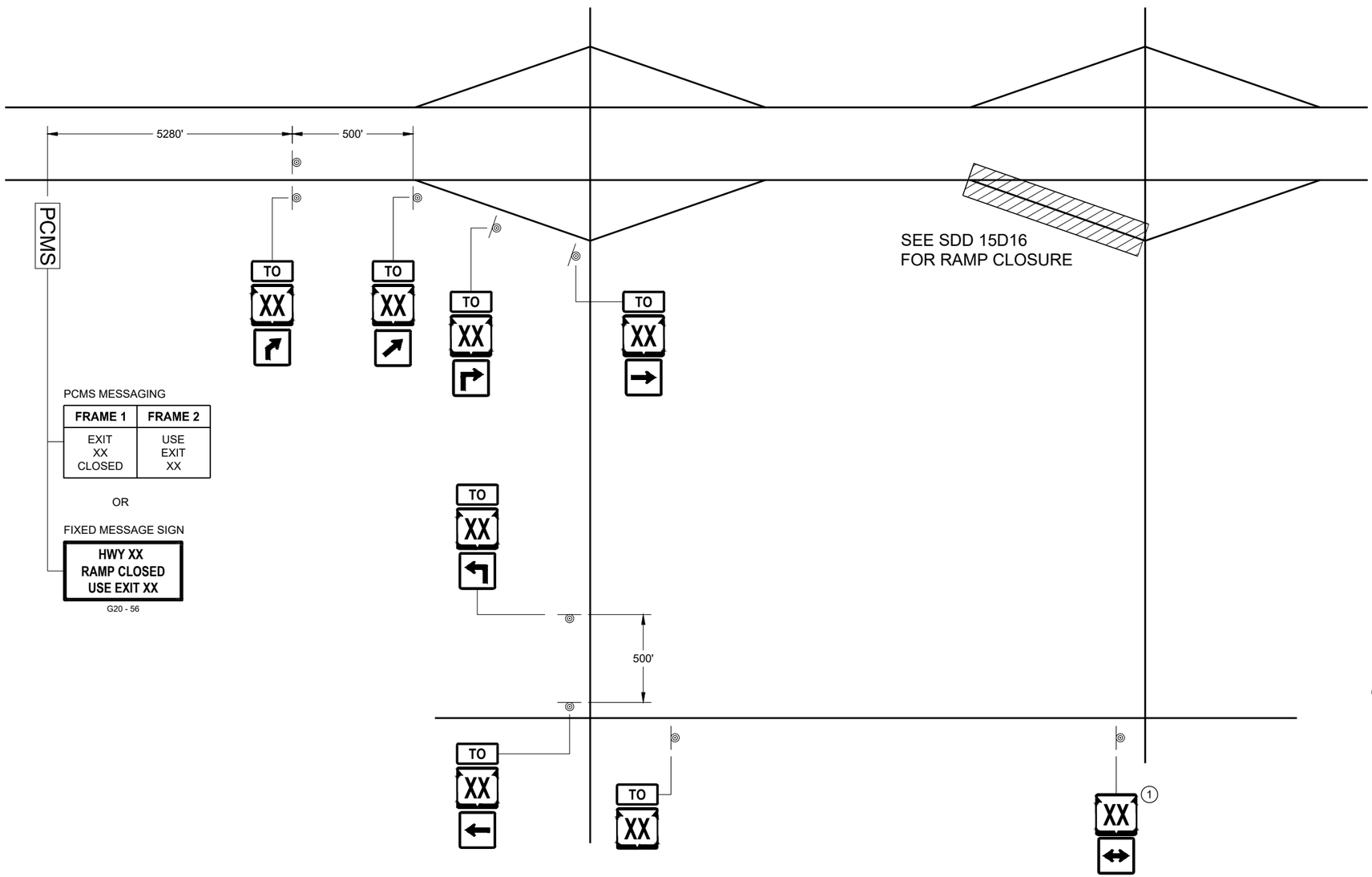

PCMS MESSAGING

FRAME 1	FRAME 2
EXIT XX CLOSED	USE EXIT XX

OR

FIXED MESSAGE SIGN

HWY XX
RAMP CLOSED
USE EXIT XX

G20 - 56

LEGEND

SIGN ON PERMANENT SUPPORT

PCMS PORTABLE CHANGEABLE MESSAGE SIGN

TO MO4 - 5

XX M1 - 4 OR XX M1 - 6 OR COUNTY X M1 - 5A

M05 - 1 OR M05 - 2 OR M06 - 1 OR M06 - 2 OR M06 - 4

GENERAL NOTES

SEE SDD 15D16 "TRAFFIC CONTROL, EXIT RAMP CLOSURE" DETAIL FOR TRAFFIC CONTROL AT EXIT RAMP CLOSURE.

THE EXACT NUMBER, LOCATION AND SPACING OF ALL SIGNS SHALL BE ADJUSTED TO FIT FIELD CONDITIONS AS APPROVED BY THE ENGINEER.

IF THERE ARE ANY ROUTE MARKER ASSEMBLIES THAT WILL REMAIN IN PLACE, ADJUST THE LOCATION OF THE "TO" MO-4 ROUTE SIGNS TO CORRESPOND WITH THE EXISTING ASSEMBLIES. SEE SPECIFIC PROJECT TO SIGNING DETAIL SHEETS. MODIFY EXISTING SIGNS WHERE POSSIBLE.

THE SPACING BETWEEN TRAFFIC CONTROL AND "TO" MO-4 SIGNS SHOULD BE ADJUSTED TO NOT CONFLICT WITH AND TO PROVIDE A DESIRABLE MINIMUM OF 200 FEET CLEARANCE TO EXISTING SIGNS THAT WILL REMAIN IN PLACE.

ANY SIGNS TEMPORARY OR EXISTING, WHICH CONFLICT WITH TRAFFIC CONTROL " IN USE" SHALL BE REMOVED OR COVERED AS NEEDED AND AS APPROVED BY THE ENGINEER.

SIGNS THAT SHALL BE IN PLACE LESS THAN 7 CONTINUOUS DAYS AND NIGHTS MAY BE MOUNTED ON PORTABLE SUPPORTS.

"MO" SIGNS ARE THE SAME AS "M" SIGNS EXCEPT THE BACKGROUND IS ORANGE.

SIGN SIZES SHALL BE AS FOLLOW:
- MO4 - 5 SHALL BE 24" X 12". (36" X 18" IF NEEDED TO MATCH EXISTING SIGNS).
- M1 - 4, M1 - 5A, AND M1 - 6 SHALL BE 24" X 24" (36" X 36" IF NEEDED TO MATCH EXISTING SIGNS).
- MO5 - 1, MO5 - 2, AND MO6 - 1, SHALL BE 21" X 21". (30" X 30" IF NEEDED TO MATCH EXISTING SIGNS).

(1) ONLY ADD IF THERE ARE NO EXISTING ROUTE MARKERS FOR THE INTERSECTING ROADWAY.

OFF RAMP LANE CLOSURE

STATE OF WISCONSIN
DEPARTMENT OF TRANSPORTATION

APPROVED
May 2023 — DATE
/S/ Andrew Heidtke — WORK ZONE ENGINEE
FHWA

GENERAL NOTES

1. REFLECTIVE SHEETING SHALL FOLLOW THE REQUIREMENTS IN THE APPROVED PRODUCTS LISTING FOR SIGN SHEETING.
2. LOCATION OF WARNING LIGHTS WHEN SHOWN ON THE PLAN.

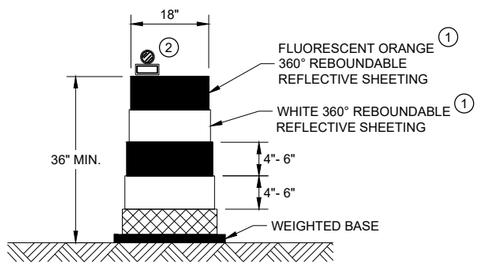

DRUM

BALLAST WIDTHS
RANGE FROM 24"-36"

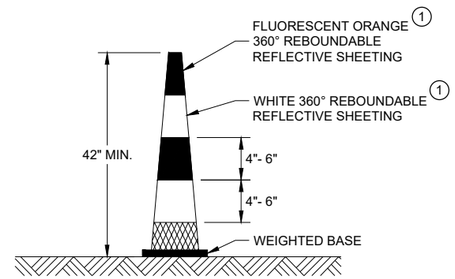

42" CONE

DO NOT USE IN TAPERS
½ SPACING OF DRUMS

BALLAST WIDTHS
RANGE FROM 14"-20"

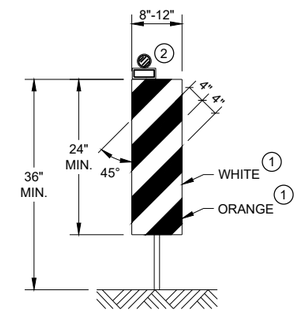

VERTICAL PANEL

THE STRIPES SHALL SLOPE DOWNWARD TO
THE TRAFFIC SIDE FOR CHANNELIZATION.

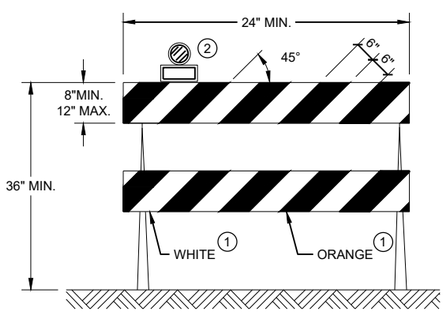

TYPE II BARRICADE

FOR RAILS LESS THAN 36" LONG, 4" WIDE STRIPES
MAY BE USED. ALL STRIPES SHALL SLOPE DOWNWARD
TO THE TRAFFIC SIDE FOR CHANNELIZATION.

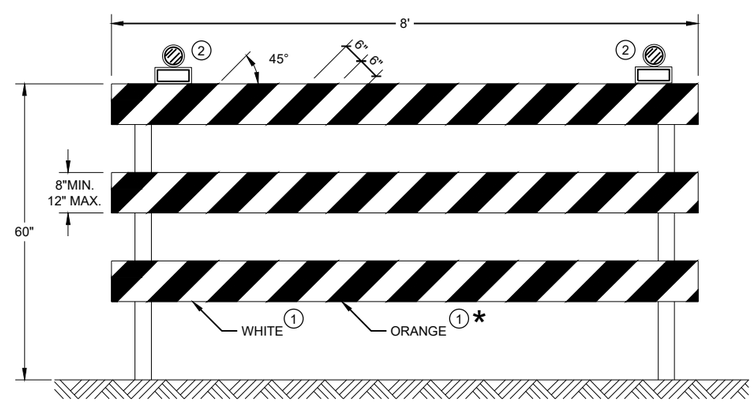

TYPE III BARRICADE

IF SIGN MOUNTED, DO NOT COVER MORE THAN 50% OF THE TOP
TWO RAILS OR 33% OF THE TOTAL AREA OF THE THREE RAILS.

* IF USED FOR A PERMANENT APPLICATION USE RED SHEETING.

CHANNELIZING DEVICES
DRUMS, CONES, BARRICADES
AND VERTICAL PANELS

STATE OF WISCONSIN
DEPARTMENT OF TRANSPORTATION

APPROVED
November 2022 /S/ Andrew Heidtke
DATE WORK ZONE ENGINEE
FHWA

6

6

SDD 15C11 - 10b

SDD 15C11 - 10b

GENERAL NOTES

THE EXACT NUMBER, LOCATION, AND SPACING OF ALL SIGNS AND DEVICES SHALL BE ADJUSTED TO FIT FIELD CONDITIONS AS APPROVED BY THE ENGINEER.

THE SPACING BETWEEN SIGNS SHOULD BE ADJUSTED TO NOT CONFLICT WITH AND TO PROVIDE A MINIMUM OF 200 FEET (500 FEET DESIRABLE) CLEARANCE TO EXISTING SIGNS.

THIS LANE CLOSURE IS TYPICAL FOR CLOSING RIGHT LANE - REVERSE FOR CLOSING LEFT LANE.

ALL SIGNS ARE 48" x 48" UNLESS OTHERWISE NOTED.

"WO" IS THE SAME AS "W" EXCEPT THE BACKGROUND IS ORANGE.

ANY SIGNS TEMPORARY OR EXISTING, WHICH CONFLICT WITH TRAFFIC CONTROL "IN USE" SHALL BE REMOVED OR COVERED AS NEEDED OR AS APPROVED BY THE ENGINEER.

FOR A LANE CLOSURE THAT IS IN PLACE LESS THAN 7 CONTINUOUS DAYS AND NIGHTS, THE ADVANCED WARNING SIGNS MAY BE MOUNTED ON PORTABLE SUPPORTS.

REMOVE PAVEMENT MARKINGS AND PLACE TEMPORARY PAVEMENT MARKING LINE IF LANE CLOSURE IS TO BE IN PLACE 4 OR MORE CONTINUOUS DAYS AND NIGHTS.

IF THE HORIZONTAL ALIGNMENT IS SUCH THAT A CURVE MAY REQUIRE ADDITIONAL DELINEATION, THE DEVICE SPACING MAY BE DECREASED TO 50 FEET.

WARNING LIGHTS ARE NOT REQUIRED IF THE LANE CLOSURE IS A DAYTIME ONLY OPERATION.

ADJUSTMENTS IN BUFFER SPACE NEED TO BE INCORPORATED WHEN THE LANE CLOSURE OCCURS NEAR AN INTERCHANGE EXIT OR ENTRANCE RAMP OR INTERSECTION. THE LANE CLOSURE MUST TAKE PLACE FAR ENOUGH IN ADVANCE OF AN EXIT OR ENTRANCE RAMP TO STILL ALLOW FOR ADEQUATE BUFFER SPACE. THE MINIMUM LENGTH OF THE BUFFER SPACE BEFORE AN EXIT RAMP SHOULD BE ONE HALF THE LENGTH OF THE TRANSITION AREA. THE ENTRANCE RAMP SHOULD BE FOLLOWED BY THE ORIGINAL BUFFER SPACE LENGTH OF 800 FEET DESIRABLE PRIOR TO ANOTHER TRAFFIC CONTROL CHANGE SUCH AS A CROSSOVER MANEUVER.

CONSIDER ROADWAY GEOMETRICS WHEN LOCATING SIGNS AND ARROW BOARD SO THE DRIVER HAS A CLEAR VIEW OF THE ARROW BOARD AND LANE CLOSURE DRUMS.

LEGEND

- SIGN ON PERMANENT SUPPORT
- TRAFFIC CONTROL DRUM
- TRAFFIC CONTROL DRUM WITH TYPE "C" STEADY BURN LIGHT
- TYPE III BARRICADE WITH ATTACHED SIGN
- TYPE "A" WARNING LIGHT (FLASHING)
- REMOVING PAVEMENT MARKINGS
- DIRECTION OF TRAFFIC
- WORK AREA
- FLASHING ARROW BOARD

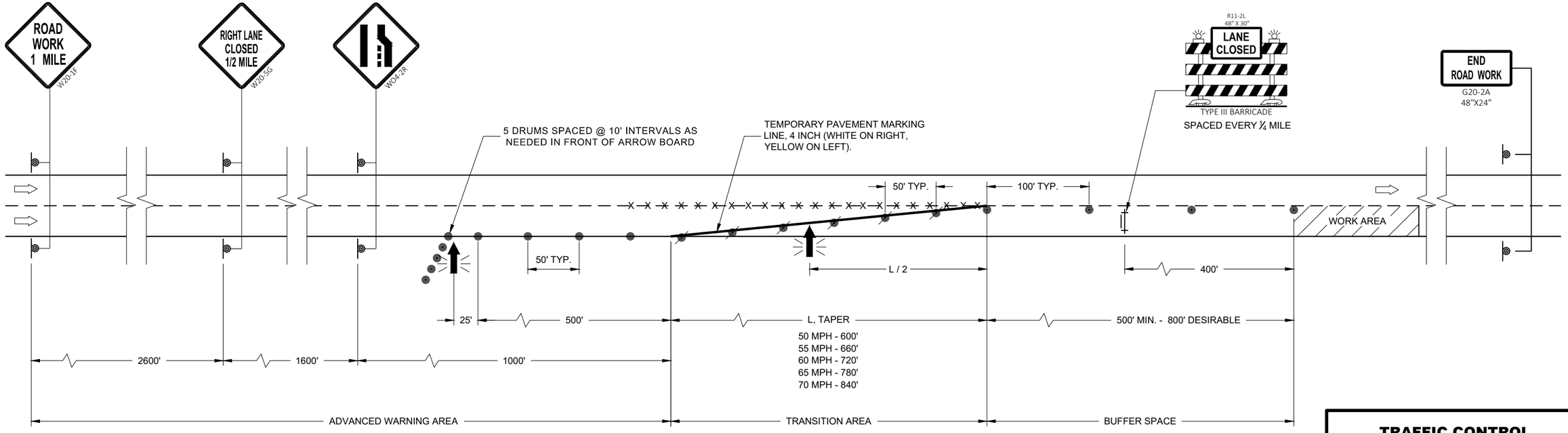

TRAFFIC CONTROL LANE CLOSURE

STATE OF WISCONSIN
DEPARTMENT OF TRANSPORTATION

APPROVED
February 2022 — DATE
/S/ Andrew Heidtke — WORK ZONE ENGINEE
FHWA

6

SDD 15D12 - 10a

LEGEND

- TYPE III BARRICADE
- TYPE III BARRICADE WITH ATTACHED SIGN
- TRAFFIC CONTROL DRUM
- SIGN ON PERMANENT SUPPORT
- TYPE "A" WARNING LIGHT (FLASHING)
- DIRECTION OF TRAFFIC

GENERAL NOTES

THIS RAMP CLOSURE DETAIL IS TYPICAL FOR CLOSING A RIGHT SIDE EXIT RAMP. FOR A LEFT SIDE EXIT RAMP, REVERSE THE TRAFFIC CONTROL.

THE EXACT NUMBER, LOCATION, AND SPACING OF ALL SIGNS AND DEVICES SHALL BE ADJUSTED TO FIT FIELD CONDITIONS AS APPROVED BY THE ENGINEER.

THE SPACING BETWEEN TRAFFIC CONTROL SIGNS SHOULD BE ADJUSTED TO NOT CONFLICT WITH AND SHOULD PROVIDE A MINIMUM OF 200 FEET (500 FEET DESIRABLE) CLEARANCE TO EXISTING SIGNS THAT WILL REMAIN IN PLACE.

ALL SIGNS ARE 48" X 48" UNLESS OTHERWISE NOTED.

SIGNS THAT WILL BE IN PLACE LESS THAN 7 CONTINUOUS DAYS AND NIGHTS MAY BE MOUNTED ON PORTABLE SUPPORTS.

ANY SIGNS, TEMPORARY OR EXISTING, WHICH CONFLICT WITH TRAFFIC CONTROL "IN USE" SHALL BE REMOVED OR COVERED AS NEEDED AND AS APPROVED BY THE ENGINEER.

PLACE TEMPORARY PAVEMENT MARKING LINE IF RAMP CLOSURE IS TO BE IN PLACE 4 OR MORE CONTINUOUS DAYS AND NIGHTS.

WORK AREAS WITH A DROP OFF ALONG THE EDGE OF AN OPEN TRAVEL LANE SHALL BE LEVELED WITH TEMPORARY FILL WHEN THE CONTRACTOR IS NOT WORKING ADJACENT TO THE TRAVEL LANE. DRUMS SHALL BE PLACED ENTIRELY OUTSIDE THE TRAVEL LANE, ALLOWING THE FULL UNOBSTRUCTED LANE WIDTH, WHEN WORK IS NOT IN PROGRESS.

WHERE MEDIAN BARRIER IS IN PLACE, SIGNS SHOWN ON LEFT SIDE OF ROADWAY MAY BE OMITTED FOR RIGHT SIDE RAMP CLOSURES OF LESS THAN 12 - HOUR DURATION.

1. W20 - 1A AND G20 - 2A SIGNS ARE NOT REQUIRED IF THE RAMP CLOSURE IS WITHIN A LARGER WORK ZONE WHERE THESE SIGNS ARE ALREADY PRESENT.
2. PLACE "RAMP CLOSED BEGINNING" SIGN OR PCMS 7 CALENDAR DAYS PRIOR TO CLOSURE OR AS DIRECTED BY THE ENGINEER. SEE WISCONSIN STANDARD SIGN PLATES FOR SIGN LAYOUT.

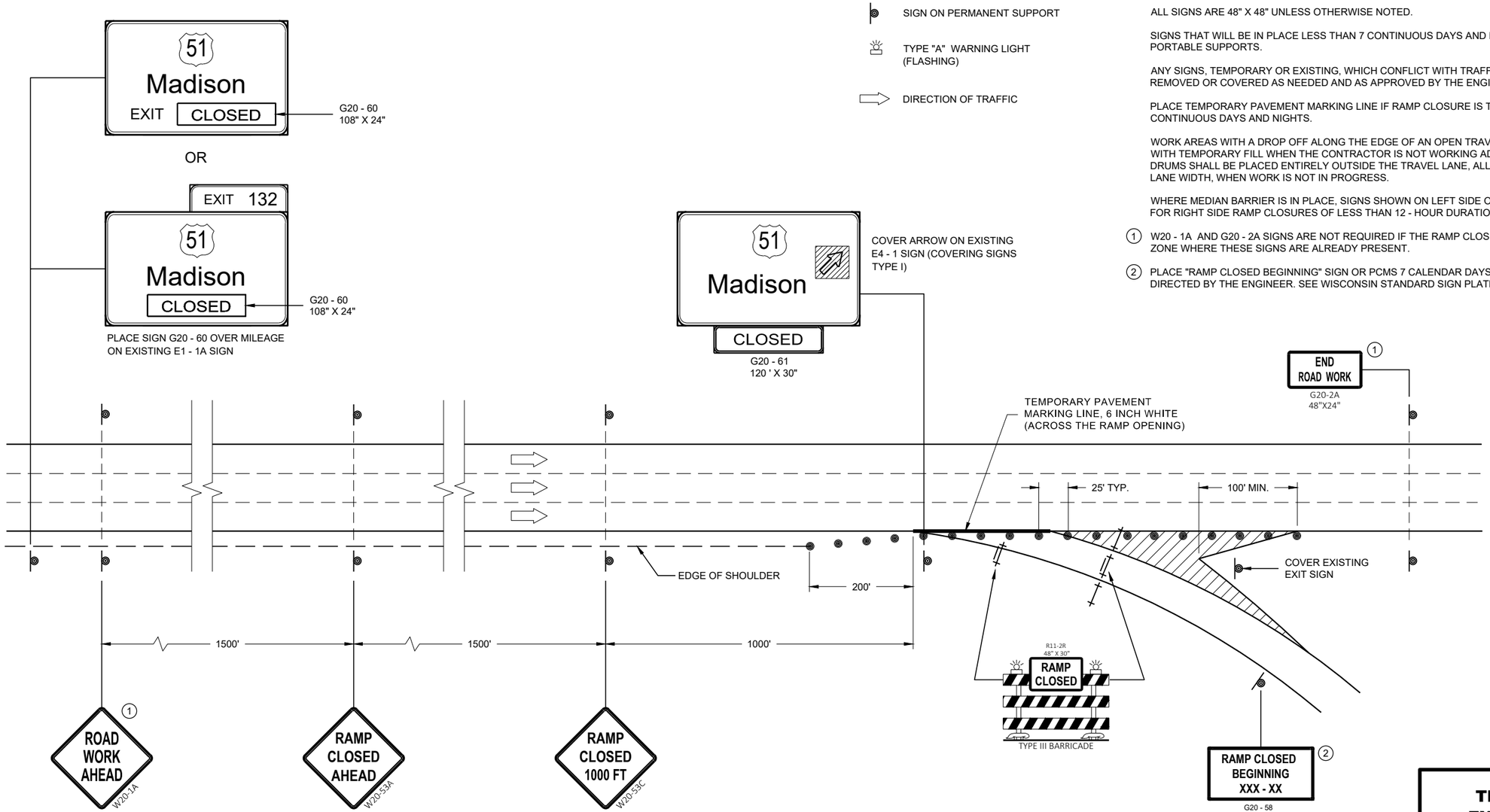

OR

PCMS MESSAGING

FRAME 1	FRAME 2
RAMP TO CLOSE	XXXDAY XX XX XX

TRAFFIC CONTROL, EXIT RAMP CLOSURE

STATE OF WISCONSIN
DEPARTMENT OF TRANSPORTATION

APPROVED
May 2023 — DATE
/S/ Andrew Heidtke — ROADWAY STANDARDS DEVE ENGINEER

FHWA

6
SDD 15D16-06

LEGEND

- SIGN ON PERMANENT SUPPORT
- TRAFFIC CONTROL DRUM
- TRAFFIC CONTROL DRUM WITH TYPE "C" STEADY BURN LIGHT
- TYPE III BARRICADE WITH ATTACHED SIGN
- TYPE "A" WARNING LIGHT (FLASHING)
- FLASHING ARROW BOARD
- DIRECTION OF TRAFFIC
- REMOVE PAVEMENT MARKING (SEE GENERAL NOTES)
- WORK AREA

GENERAL NOTES

FOR WORK ON ROADWAYS WITH SPEEDS GREATER THAN 45MPH, USE SDD 15D12.

THIS LANE CLOSURE DETAIL IS TYPICAL FOR CLOSING THE LEFT LANE. FOR A RIGHT LANE CLOSURE, REVERSE THE TRAFFIC CONTROL.

THIS DETAIL MAY BE USED FOR ROADWAYS WITH EITHER TWO OR THREE LANES IN EACH DIRECTION.

ALL SIGNS ARE 48"X48" UNLESS OTHERWISE NOTED. IF NECESSARY DUE TO SPACE CONSTRAINTS IN URBAN AREAS, 36"X 36" SIGNS MAY BE USED IF APPROVED BY REGIONAL TRAFFIC UNIT.

"WO" SIGN IS THE SAME AS "W" SIGN EXCEPT THE BACKGROUND IS ORANGE.

ANY SIGNS TEMPORARY OR EXISTING, WHICH CONFLICT WITH THE TRAFFIC CONTROL "IN USE" SHALL BE REMOVED OR COVERED AS NEEDED AND AS APPROVED BY THE ENGINEER. NO WARNING LIGHTS SHALL BE WORKING ON COVERED OR "DOWNED" SIGNS.

SIGNS THAT WILL BE IN PLACE LESS THAN 7 CONTINUOUS DAYS AND NIGHTS OR THAT WILL BE PLACED IN A CLOSED LANE MAY BE MOUNTED ON TEMPORARY SUPPORTS.

THE EXACT NUMBER, LOCATION, AND SPACING OF ALL SIGNS AND DEVICES SHALL BE ADJUSTED TO FIT FIELD CONDITIONS AS APPROVED BY THE ENGINEER.

THE SPACING BETWEEN TRAFFIC CONTROL SIGNS SHOULD BE ADJUSTED TO NOT CONFLICT WITH AND TO PROVIDE A MINIMUM OF 200 FEET (500' DESIRABLE) DISTANCE TO EXISTING SIGNS THAT WILL REMAIN IN PLACE

W20-1A, G20-1 AND G20-2A SIGNS ARE NOT REQUIRED IF THE LANE CLOSURE IS WITHIN A LARGER WORK ZONE WHERE THESE SIGNS ARE ALREADY PRESENT.

REMOVE PAVEMENT MARKINGS AND PLACE TEMPORARY PAVEMENT MARKING LINE IF LANE CLOSURE IS TO BE IN PLACE FOR 4 OR MORE CONTINUOUS DAYS AND NIGHTS.

CONSIDER GEOMETRICS WHEN LOCATING SIGNS AND ARROW BOARDS SO THE APPROACHING DRIVER HAS A CLEAR VIEW OF THE ARROW BOARDS AND LANE CLOSURE DRUMS FOR A MINIMUM 1500 FEET IN FRONT OF DRUMS.

BARRICADES IN A CLOSED LANE THAT MUST BE MOVED FOR A WORK OPERATION SHALL BE IMMEDIATELY REESTABLISHED UPON COMPLETION OF THE OPERATION, OR FOR CONTINUING OPERATIONS, AT THE END OF EACH WORKING DAY.

CHANNELIZING DEVICES PLACED ADJACENT TO WORK AREA SHALL BE PULLED BACK FROM THE TRAVEL LANE WHEN WORK IS NOT IN PROGRESS.

WARNING LIGHTS ARE NOT REQUIRED IF THE LANE CLOSURE IS A DAYTIME ONLY OPERATION.

(1) OMIT G20-1 SIGNS IF LENGTH OF WORK AREA IS 2 MILES OR LESS.

(2) WHERE THE SHOULDER OR TERRACE HAS INSUFFICIENT SPACE TO PLACE THE ARROW BOARD AS SHOWN, PLACE THE ARROW BOARD AT THE END OF THE TAPER.

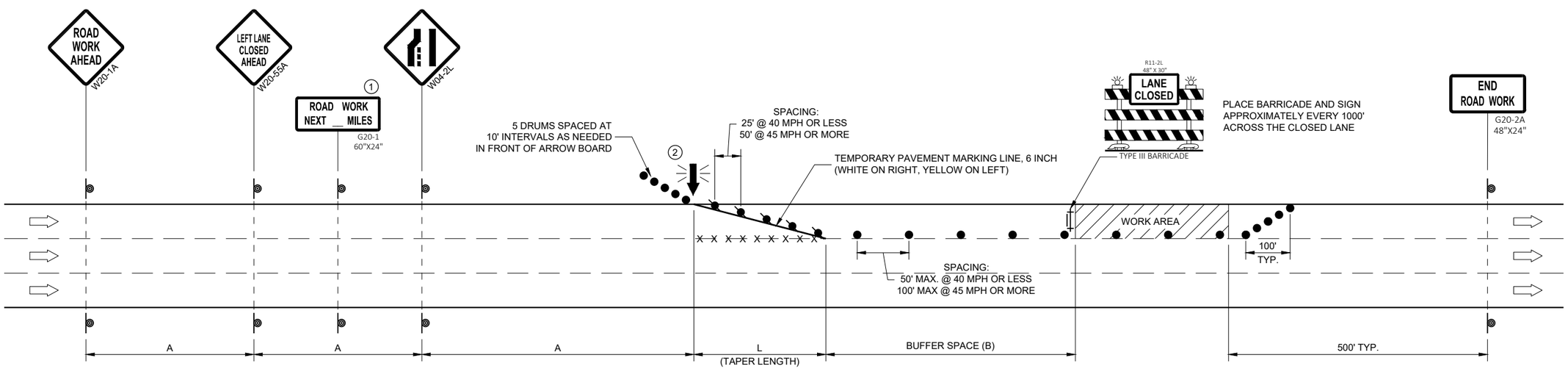

POSTED SPEED LIMIT PRIOR TO WORK STARTING (MPH)	ADVANCE WARNING SIGN SPACING (A) FEET	TAPER LENGTH (12 FT. LANE) (L) FEET	BUFFER SPACE (B) FEET
25	200'	125'	55'
30	200'	180'	85'
35	350'	245'	120'
40	350'	320'	170'
45	500'	540'	220'

TRAFFIC CONTROL, SINGLE LANE CLOSURE, DIVIDED NON-FREEWAY/EXPRESSWAY

STATE OF WISCONSIN
DEPARTMENT OF TRANSPORTATION

APPROVED
May 2023 — DATE
/S/ Andrew Heidtke — WORK ZONE ENGINEE
FHWA

6

SDD 15D20-07a

LEGEND

- SIGN ON PERMANENT SUPPORT
- TRAFFIC CONTROL DRUM
- TRAFFIC CONTROL DRUM WITH TYPE "C" STEADY BURN LIGHT
- TYPE III BARRICADE WITH ATTACHED SIGN
- TYPE "A" WARNING LIGHT (FLASHING)
- FLASHING ARROW BOARD
- DIRECTION OF TRAFFIC
- REMOVE PAVEMENT MARKING (SEE GENERAL NOTES)
- WORK AREA

GENERAL NOTES

THIS DETAIL MAY BE USED FOR ROADWAYS WITH EITHER TWO OR THREE LANES IN EACH DIRECTION.

ALL SIGNS ARE 48"X48" UNLESS OTHERWISE NOTED. IF NECESSARY DUE TO SPACE CONSTRAINTS IN URBAN AREAS, 36"X 36" SIGNS MAY BE USED IF APPROVED BY REGIONAL TRAFFIC UNIT.

"WO" SIGN IS THE SAME AS "W" SIGN EXCEPT THE BACKGROUND IS ORANGE.

ANY SIGNS TEMPORARY OR EXISTING, WHICH CONFLICT WITH THE TRAFFIC CONTROL "IN USE" SHALL BE REMOVED OR COVERED AS NEEDED AND AS APPROVED BY THE ENGINEER. NO WARNING LIGHTS SHALL BE WORKING ON COVERED OR "DOWNED" SIGNS.

SIGNS THAT WILL BE IN PLACE LESS THAN 7 CONTINUOUS DAYS AND NIGHTS OR THAT WILL BE PLACED IN A CLOSED LANE MAY BE MOUNTED ON TEMPORARY SUPPORTS.

THE EXACT NUMBER, LOCATION, AND SPACING OF ALL SIGNS AND DEVICES SHALL BE ADJUSTED TO FIT FIELD CONDITIONS AS APPROVED BY THE ENGINEER.

THE SPACING BETWEEN TRAFFIC CONTROL SIGNS SHOULD BE ADJUSTED TO NOT CONFLICT WITH AND TO PROVIDE A MINIMUM OF 200 FEET (500' DESIRABLE) DISTANCE TO EXISTING SIGNS THAT WILL REMAIN IN PLACE

W20-1A, G20-1 AND G20-2A SIGNS ARE NOT REQUIRED IF THE LANE CLOSURE IS WITHIN A LARGER WORK ZONE WHERE THESE SIGNS ARE ALREADY PRESENT.

REMOVE PAVEMENT MARKINGS AND PLACE TEMPORARY PAVEMENT MARKING LINE IF LANE CLOSURE IS TO BE IN PLACE FOR 4 OR MORE CONTINUOUS DAYS AND NIGHTS.

CONSIDER GEOMETRICS WHEN LOCATING SIGNS AND ARROW BOARDS SO THE APPROACHING DRIVER HAS A CLEAR VIEW OF THE ARROW BOARDS AND LANE CLOSURE DRUMS FOR A MINIMUM 1500 FEET IN FRONT OF DRUMS.

BARRICADES IN A CLOSED LANE THAT MUST BE MOVED FOR A WORK OPERATION SHALL BE IMMEDIATELY REESTABLISHED UPON COMPLETION OF THE OPERATION, OR FOR CONTINUING OPERATIONS, AT THE END OF EACH WORKING DAY.

CHANNELIZING DEVICES PLACED ADJACENT TO WORK AREA SHALL BE PULLED BACK FROM THE TRAVEL LANE WHEN WORK IS NOT IN PROGRESS.

WARNING LIGHTS ARE NOT REQUIRED IF THE LANE CLOSURE IS A DAYTIME ONLY OPERATION.

(1) OMIT G20-1 SIGNS IF LENGTH OF WORK AREA IS 2 MILES OR LESS.

POSTED SPEED LIMIT PRIOR TO WORK STARTING (MPH)	ADVANCE WARNING SIGN SPACING (A) FEET	TAPER LENGTH (12 FT. LANE) (L) FEET	BUFFER SPACE (B) FEET
25	200'	125'	55'
30	200'	180'	85'
35	350'	245'	120'
40	350'	320'	170'
45	500'	540'	220'
50	500'	600'	280'
55	500'	660'	335'

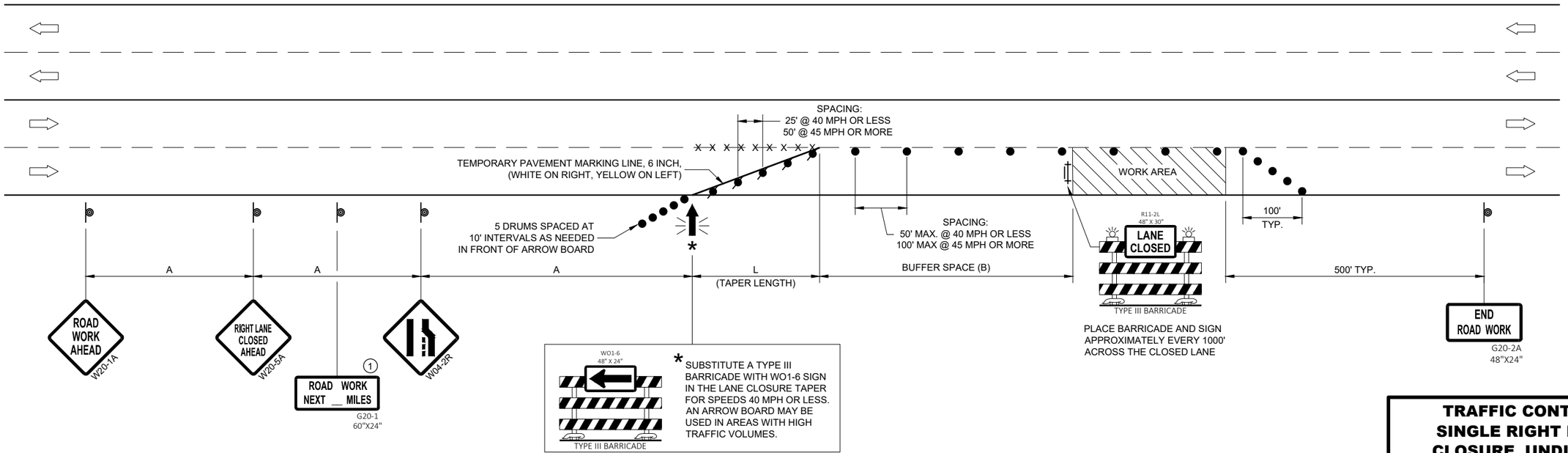

TRAFFIC CONTROL, SINGLE RIGHT LANE CLOSURE, UNDIVIDED NON-FREEWAY/EXPRESSWAY

STATE OF WISCONSIN
DEPARTMENT OF TRANSPORTATION

APPROVED
May 2023 — DATE
/S/ Andrew Heidtke — WORK ZONE ENGINEE
FHWA

6

SDD 15D20-07b

LEGEND

- SIGN ON PERMANENT SUPPORT
- TRAFFIC CONTROL DRUM
- TRAFFIC CONTROL DRUM WITH TYPE "C" STEADY BURN LIGHT
- TYPE III BARRICADE WITH ATTACHED SIGN
- TYPE "A" WARNING LIGHT (FLASHING)
- FLASHING ARROW BOARD
- DIRECTION OF TRAFFIC
- REMOVE PAVEMENT MARKING (SEE GENERAL NOTES)
- WORK AREA

GENERAL NOTES

THIS DETAIL MAY BE USED FOR ROADWAYS WITH EITHER TWO OR THREE LANES IN EACH DIRECTION.

ALL SIGNS ARE 48"X48" UNLESS OTHERWISE NOTED. IF NECESSARY DUE TO SPACE CONSTRAINTS IN URBAN AREAS, 36"X 36" SIGNS MAY BE USED IF APPROVED BY REGIONAL TRAFFIC UNIT.

"WO" SIGN IS THE SAME AS "W" SIGN EXCEPT THE BACKGROUND IS ORANGE.

ANY SIGNS TEMPORARY OR EXISTING, WHICH CONFLICT WITH THE TRAFFIC CONTROL "IN USE" SHALL BE REMOVED OR COVERED AS NEEDED AND AS APPROVED BY THE ENGINEER. NO WARNING LIGHTS SHALL BE WORKING ON COVERED OR "DOWNED" SIGNS.

SIGNS THAT WILL BE IN PLACE LESS THAN 7 CONTINUOUS DAYS AND NIGHTS OR THAT WILL BE PLACED IN A CLOSED LANE MAY BE MOUNTED ON TEMPORARY SUPPORTS.

THE EXACT NUMBER, LOCATION, AND SPACING OF ALL SIGNS AND DEVICES SHALL BE ADJUSTED TO FIT FIELD CONDITIONS AS APPROVED BY THE ENGINEER.

THE SPACING BETWEEN TRAFFIC CONTROL SIGNS SHOULD BE ADJUSTED TO NOT CONFLICT WITH AND TO PROVIDE A MINIMUM OF 200 FEET (500' DESIRABLE) DISTANCE TO EXISTING SIGNS THAT WILL REMAIN IN PLACE.

W20-1A, G20-1 AND G20-2A SIGNS ARE NOT REQUIRED IF THE LANE CLOSURE IS WITHIN A LARGER WORK ZONE WHERE THESE SIGNS ARE ALREADY PRESENT.

REMOVE PAVEMENT MARKINGS AND PLACE TEMPORARY PAVEMENT MARKING LINE IF LANE CLOSURE IS TO BE IN PLACE FOR 4 OR MORE CONTINUOUS DAYS AND NIGHTS.

CONSIDER GEOMETRICS WHEN LOCATING SIGNS AND ARROW BOARDS SO THE APPROACHING DRIVER HAS A CLEAR VIEW OF THE ARROW BOARDS AND LANE CLOSURE DRUMS FOR A MINIMUM 1500 FEET IN FRONT OF DRUMS.

DUE TO LACK OF SHOULDER/MEDIAN, ARROW BOARD IS PLACED AT THE THE END OF THE TAPER.

BARRICADES IN A CLOSED LANE THAT MUST BE MOVED FOR A WORK OPERATION SHALL BE IMMEDIATELY REESTABLISHED UPON COMPLETION OF THE OPERATION, OR FOR CONTINUING OPERATIONS, AT THE END OF EACH WORKING DAY.

CHANNELIZING DEVICES PLACED ADJACENT TO WORK AREA SHALL BE PULLED BACK FROM THE TRAVEL LANE WHEN WORK IS NOT IN PROGRESS.

WARNING LIGHTS ARE NOT REQUIRED IF THE LANE CLOSURE IS A DAYTIME ONLY OPERATION.

(1) OMIT G20-1 SIGNS IF LENGTH OF WORK AREA IS 2 MILES OR LESS.

(2) LANE MAY BE OPENED WHEN WORKERS ARE NOT PRESENT IN THE WORK AREA.

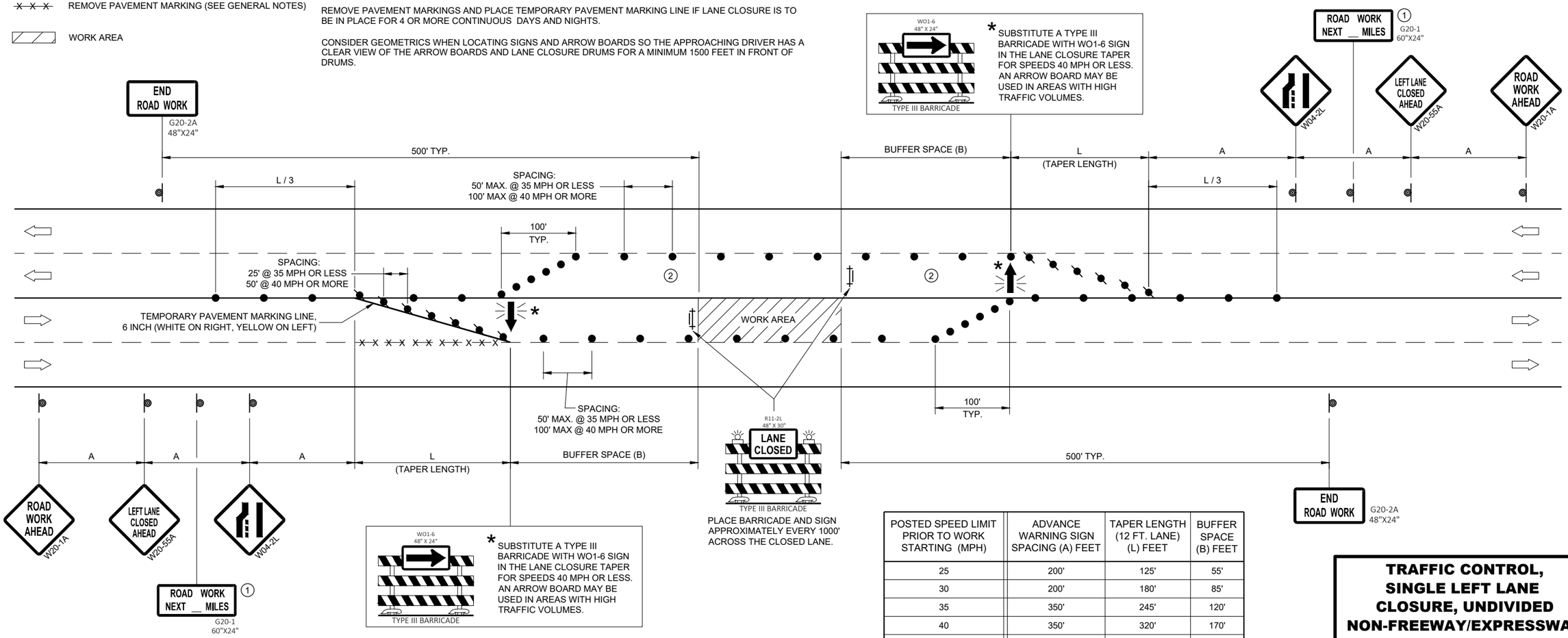

POSTED SPEED LIMIT PRIOR TO WORK STARTING (MPH)	ADVANCE WARNING SIGN SPACING (A) FEET	TAPER LENGTH (12 FT. LANE) (L) FEET	BUFFER SPACE (B) FEET
25	200'	125'	55'
30	200'	180'	85'
35	350'	245'	120'
40	350'	320'	170'
45	500'	540'	220'
50	500'	600'	280'
55	500'	660'	335'

TRAFFIC CONTROL, SINGLE LEFT LANE CLOSURE, UNDIVIDED NON-FREEWAY/EXPRESSWAY

STATE OF WISCONSIN
DEPARTMENT OF TRANSPORTATION

APPROVED
May 2023 — DATE
/S/ Andrew Heidtke — WORK ZONE ENGINEE
FHWA

6

SDD 15D20-07c

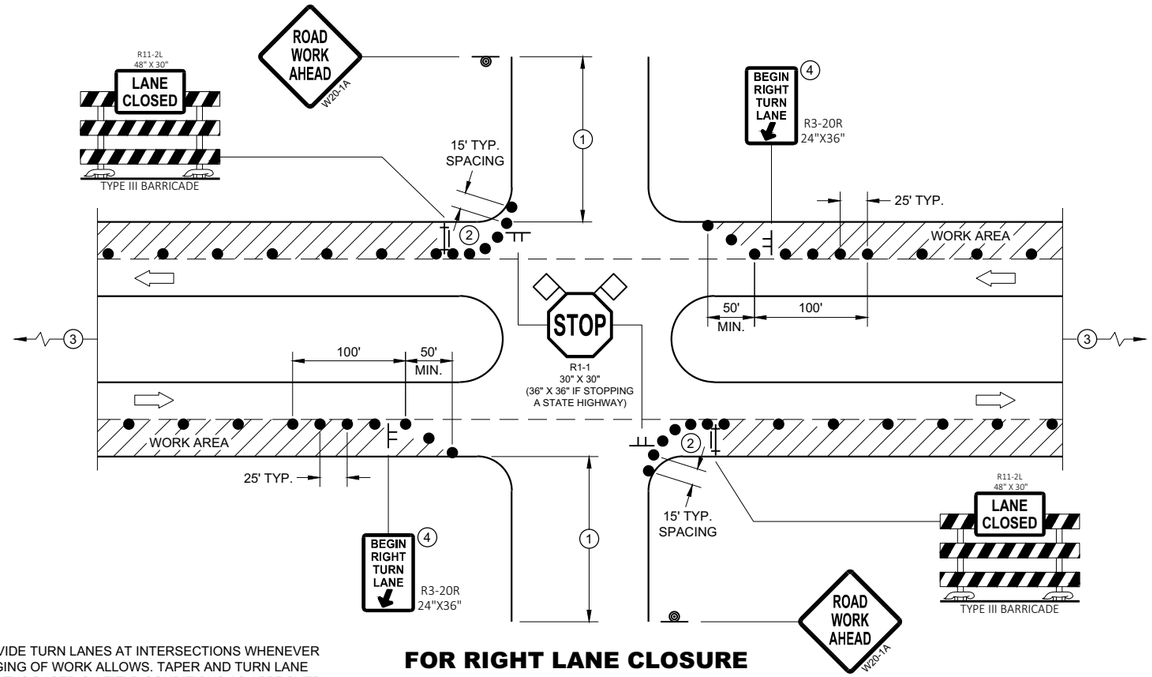

PROVIDE TURN LANES AT INTERSECTIONS WHENEVER STAGING OF WORK ALLOWS. TAPER AND TURN LANE LENGTHS BASED ON FIELD CONDITIONS AS APPROVED BY THE ENGINEER.

FOR RIGHT LANE CLOSURE AT INTERSECTION

GENERAL NOTES

ALL SIGNS ARE 48"X48" UNLESS OTHERWISE NOTED. IF NECESSARY DUE TO SPACE CONSTRAINTS IN URBAN AREAS, 36" X 36" MAY BE USED IF APPROVED BY THE DISTRICT TRAFFIC UNIT.

"WO" SIGN IS THE SAME AS "W" SIGN EXCEPT THE BACKGROUND IS ORANGE.

ANY SIGNS TEMPORARY OR EXISTING, WHICH CONFLICT WITH THE TRAFFIC CONTROL "IN USE" SHALL BE REMOVED OR COVERED AS NEEDED AND AS APPROVED BY THE ENGINEER. NO WARNING LIGHTS SHALL BE WORKING ON COVERED OR "DOWNED" SIGNS.

THE EXACT NUMBER, LOCATION, AND SPACING OF ALL SIGNS AND DEVICES SHALL BE ADJUSTED TO FIT FIELD CONDITIONS AS APPROVED BY THE ENGINEER.

THE SPACING BETWEEN TRAFFIC CONTROL SIGNS SHOULD BE ADJUSTED TO NOT CONFLICT WITH AND TO PROVIDE A MINIMUM OF 200 FEET (500' DESIRABLE) DISTANCE TO EXISTING SIGNS THAT WILL REMAIN IN PLACE

SIGN LAYOUTS SHALL BE IN ACCORDANCE WITH THE FHWA'S MANUAL OF STANDARD HIGHWAY SIGNS OR THE WISCONSIN STANDARD SIGN PLATES.

SIGNS THAT WILL REMAIN IN PLACE LESS THAN 7 CONTINUOUS DAYS AND NIGHTS OR THAT WILL BE PLACED IN A CLOSED LANE MAY BE MOUNTED ON PORTABLE SUPPORTS.

BARRICADES IN A CLOSED LANE THAT MUST BE MOVED FOR A WORK OPERATION SHALL BE IMMEDIATELY REESTABLISHED UPON COMPLETION OF THE OPERATION, OR FOR CONTINUING OPERATIONS, AT THE END OF EACH WORKING DAY.

CHANNELIZING DEVICES PLACED ADJACENT TO WORK AREA SHALL BE PULLED BACK FROM THE TRAVEL LANE WHEN WORK IS NOT IN PROGRESS.

1. 500' TYPICAL OR AT LAST INTERSECTION, WHICHEVER IS CLOSER.
   350' IF 35 - 40 MPH.
   200' IF 25 - 30 MPH.
2. ALSO USE BARRICADE AND 15 FOOT TYPICAL DRUM SPACING AT COMMERCIAL DRIVEWAYS
3. SEE SEPARATE LANE CLOSURE DETAIL FOR ADDITIONAL TRAFFIC CONTROL.
4. MINIMUM MOUNTING HEIGHT OF 5 FEET FROM EDGE OF PAVEMENT (AT EDGE LINE LOCATION) TO BOTTOM OF SIGN.

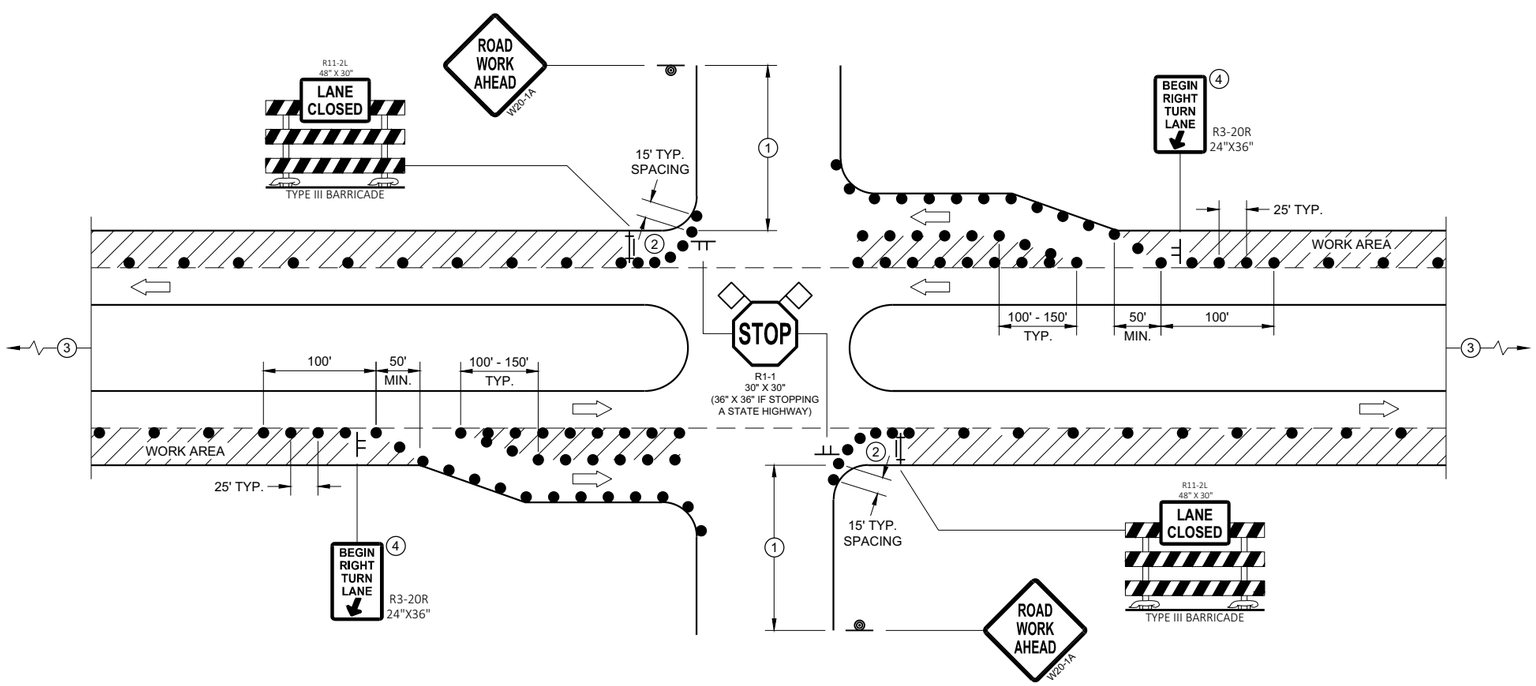

FOR RIGHT LANE CLOSURE AT INTERSECTION (WITH RIGHT TURN BAY OPEN)

LEGEND

- SIGN ON TEMPORARY SUPPORT
- SIGN ON PERMANENT SUPPORT
- TRAFFIC CONTROL DRUM
- TYPE III BARRICADE WITH ATTACHED SIGN
- DIRECTION OF TRAFFIC
- FLAGS, 16" X 16" MIN., ORANGE
- WORK AREA

TRAFFIC CONTROL, INTERSECTION WITHIN SINGLE RIGHT LANE CLOSURE

STATE OF WISCONSIN
DEPARTMENT OF TRANSPORTAT

6

SDD 15D21 - 07a

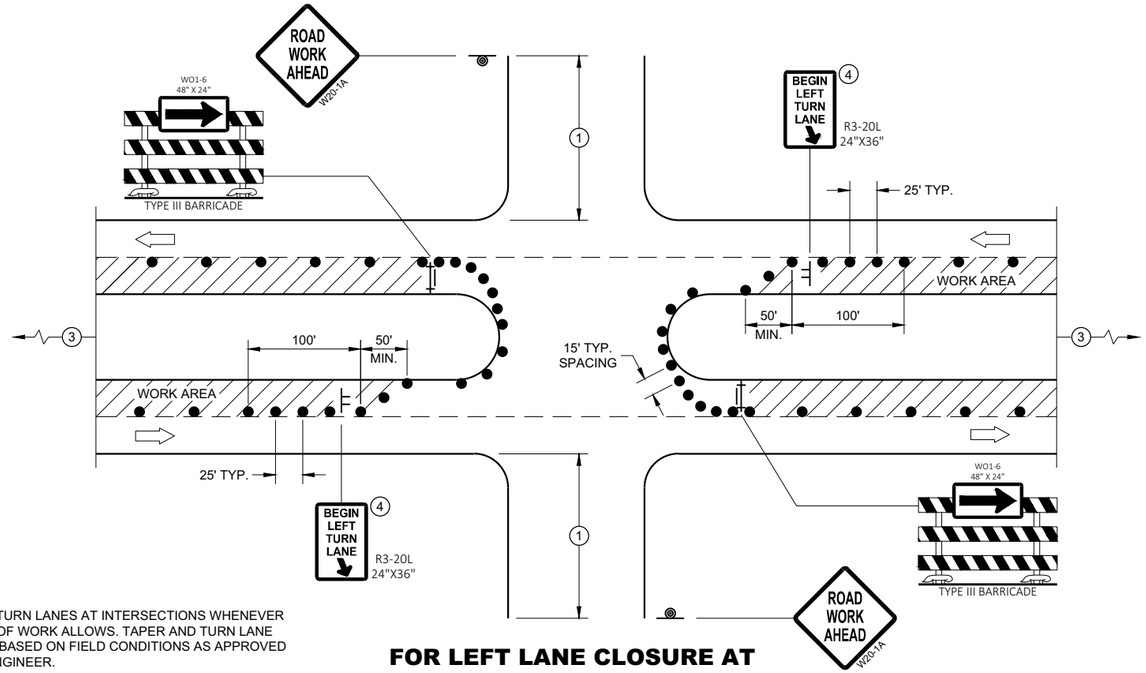

PROVIDE TURN LANES AT INTERSECTIONS WHENEVER STAGING OF WORK ALLOWS. TAPER AND TURN LANE LENGTHS BASED ON FIELD CONDITIONS AS APPROVED BY THE ENGINEER.

FOR LEFT LANE CLOSURE AT INTERSECTION OR MEDIAN OPENING

GENERAL NOTES

ALL SIGNS ARE 48"X48" UNLESS OTHERWISE NOTED. IF NECESSARY DUE TO SPACE CONSTRAINTS IN URBAN AREAS, 36" X 36" MAY BE USED IF APPROVED BY THE DISTRICT TRAFFIC UNIT.

"WO" SIGN IS THE SAME AS "W" SIGN EXCEPT THE BACKGROUND IS ORANGE.

ANY SIGNS TEMPORARY OR EXISTING, WHICH CONFLICT WITH THE TRAFFIC CONTROL "IN USE" SHALL BE REMOVED OR COVERED AS NEEDED AND AS APPROVED BY THE ENGINEER. NO WARNING LIGHTS SHALL BE WORKING ON COVERED OR "DOWNED" SIGNS.

THE EXACT NUMBER, LOCATION, AND SPACING OF ALL SIGNS AND DEVICES SHALL BE ADJUSTED TO FIT FIELD CONDITIONS AS APPROVED BY THE ENGINEER.

THE SPACING BETWEEN TRAFFIC CONTROL SIGNS SHOULD BE ADJUSTED TO NOT CONFLICT WITH AND TO PROVIDE A MINIMUM OF 200 FEET (500' DESIRABLE) DISTANCE TO EXISTING SIGNS THAT WILL REMAIN IN PLACE

SIGN LAYOUTS SHALL BE IN ACCORDANCE WITH THE FHWA'S MANUAL OF STANDARD HIGHWAY SIGNS OR THE WISCONSIN STANDARD SIGN PLATES.

SIGNS THAT WILL REMAIN IN PLACE LESS THAN 7 CONTINUOUS DAYS AND NIGHTS OR THAT WILL BE PLACED IN A CLOSED LANE MAY BE MOUNTED ON PORTABLE SUPPORTS.

BARRICADES IN A CLOSED LANE THAT MUST BE MOVED FOR A WORK OPERATION SHALL BE IMMEDIATELY REESTABLISHED UPON COMPLETION OF THE OPERATION, OR FOR CONTINUING OPERATIONS, AT THE END OF EACH WORKING DAY.

CHANNELIZING DEVICES PLACED ADJACENT TO WORK AREA SHALL BE PULLED BACK FROM THE TRAVEL LANE WHEN WORK IS NOT IN PROGRESS.

1. 500' TYPICAL OR AT LAST INTERSECTION, WHICHEVER IS CLOSER.
   350' IF 35 - 40 MPH.
   200' IF 25 - 30 MPH.
2. ALSO USE BARRICADE AND 15 FOOT TYPICAL DRUM SPACING AT COMMERCIAL DRIVEWAYS
3. SEE SEPARATE LANE CLOSURE DETAIL FOR ADDITIONAL TRAFFIC CONTROL.
4. MINIMUM MOUNTING HEIGHT OF 5 FEET FROM EDGE OF PAVEMENT (AT EDGE LINE LOCATION) TO BOTTOM OF SIGN.

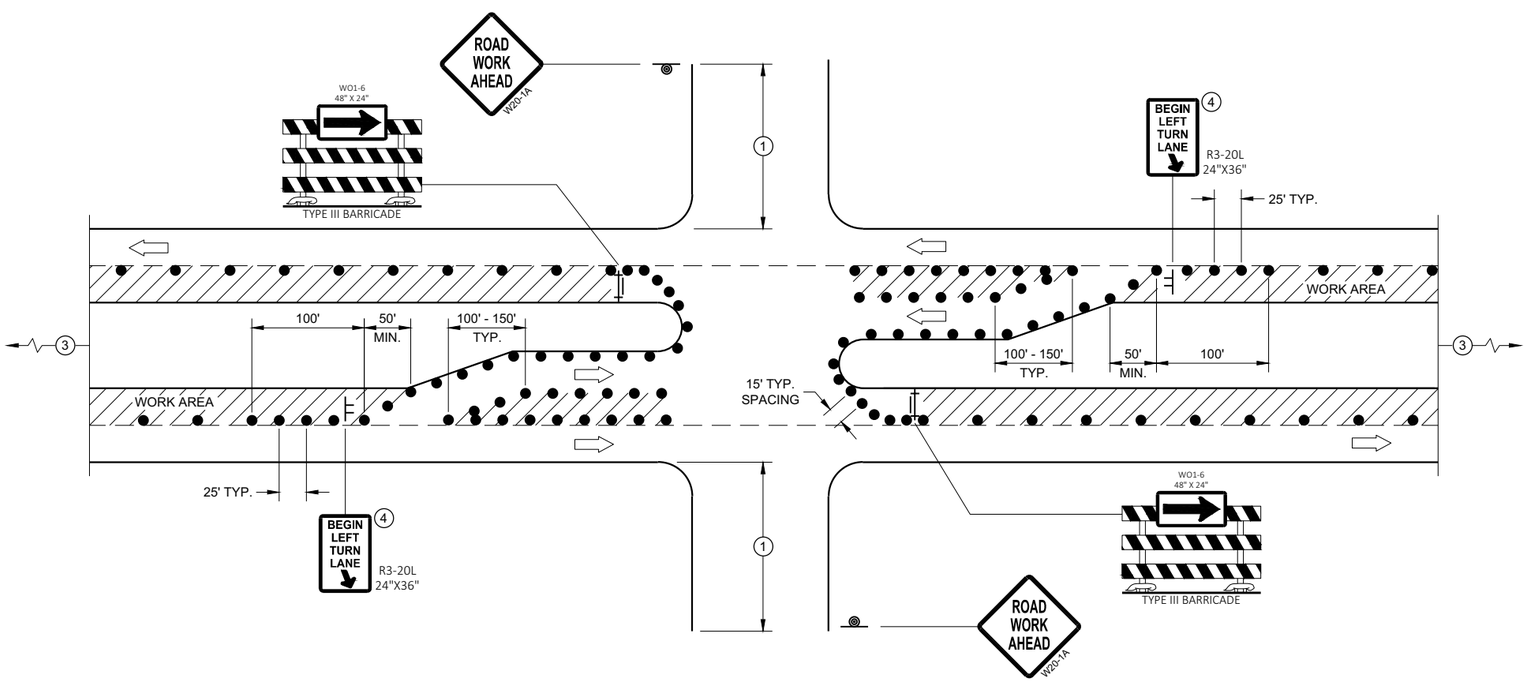

FOR LEFT LANE CLOSURE AT INTERSECTION OR MEDIAN OPENING (WITH LEFT TURN BAY OPEN)

LEGEND

- SIGN ON TEMPORARY SUPPORT
- SIGN ON PERMANENT SUPPORT
- TRAFFIC CONTROL DRUM
- TYPE III BARRICADE WITH ATTACHED SIGN
- DIRECTION OF TRAFFIC
- FLAGS, 16" X 16" MIN., ORANGE
- WORK AREA

TRAFFIC CONTROL, INTERSECTION WITHIN SINGLE LEFT LANE CLOSURE

STATE OF WISCONSIN
DEPARTMENT OF TRANSPORTATION

APPROVED
August 2020 — DATE
/S/ Andrew Heidtke — WORK ZONE ENGINEER
FHWA

LEGEND

- TRAFFIC CONTROL DRUM
- SIGN ON PERMANENT SUPPORT
- DIRECTION OF TRAFFIC
- FLASHING ARROW BOARD
- WORK AREA

GENERAL NOTES

THIS DETAIL IS TYPICAL FOR CLOSING THE RIGHT SHOULDER. FOR CLOSING THE LEFT SHOULDER, REVERSE THE TRAFFIC CONTROL.

THIS DETAIL MAY BE USED FOR DIVIDED ROADWAYS WITH ANY NUMBER OF TRAVEL LANES.

THE EXACT NUMBER, LOCATION AND SPACING OF ALL SIGNS AND DEVICES SHALL BE ADJUSTED TO FIT FIELD CONDITIONS AS APPROVED BY THE ENGINEER.

ALL SIGNS ARE 48" X 48" UNLESS OTHERWISE NOTED.

SIGN LAYOUTS SHALL BE IN ACCORDANCE WITH THE FHWA'S MANUAL OF STANDARD HIGHWAY SIGNS OR THE WISCONSIN STANDARD SIGN PLATES.

SIGNS THAT WILL BE IN PLACE LESS THAN 7 CONTINUOUS DAYS AND NIGHTS MAY BE MOUNTED ON PORTABLE SUPPORTS.

ANY SIGNS TEMPORARY OR EXISTING, WHICH CONFLICT WITH TRAFFIC CONTROL "IN USE" SHALL BE REMOVED OR COVERED AS NEEDED AND AS APPROVED BY THE ENGINEER.

CHANNELIZING DEVICES PLACED ADJACENT TO THE WORK AREA SHALL BE PULLED BACK FROM THE TRAVEL LANE WHEN WORK IS NOT IN PROGRESS.

WHEN A RAMP INTERSECTS THE FACILITY ON WHICH THE WORK IS BEING PERFORMED, ADDITIONAL TRAFFIC CONTROLS SHALL BE PROVIDED AS SPECIFIED IN THE PLANS AND/OR THE SPECIAL PROVISIONS OR AS APPROVED BY THE ENGINEER.

*FOR SHORT DURATION SHOULDER WORK OF LESS THAN ONE HOUR, THE W21-5a SIGN MAY BE OMITTED.

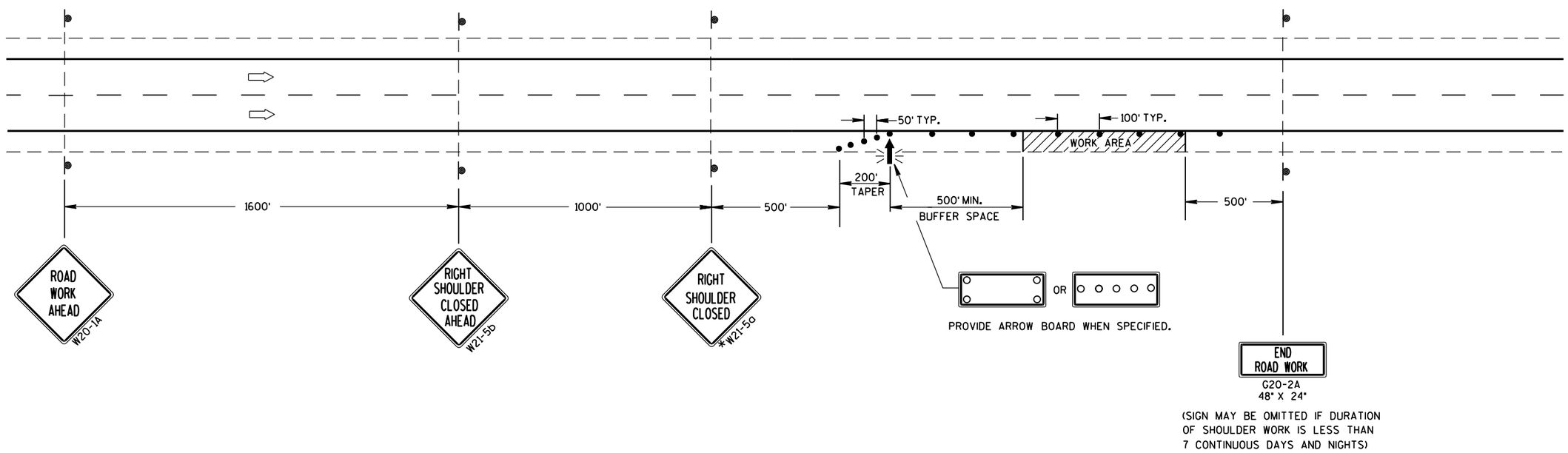

TRAFFIC CONTROL SHOULDER CLOSURE ON DIVIDED ROADWAY, SPEEDS GREATER THAN 40 MPH

STATE OF WISCONSIN
DEPARTMENT OF TRANSPORTATION

APPROVED

June 2016 — DATE

/S/ Peter Amakobe Atepe — STATEWIDE WORK ZONE TRAFFIC SAFETY ENGINEER

FHWA

GENERAL NOTES

BARRICADE DEVICE SELECTED FROM APPROVED PRODUCT LIST

1. REFLECTIVE SHEETING SHALL FOLLOW THE REQUIREMENTS IN THE APPROVED PRODUCTS LISTING FOR SIGN SHEETING.
2. SHEETING REQUIRED ON MORE THAN 50% OF BARRICADE WIDTH.
3. PLACE SHEETING ON BOTH SIDES OF THE BARRICADE.

* USE THIS DETAIL FOR SHEETING PLACEMENT REFERENCE.

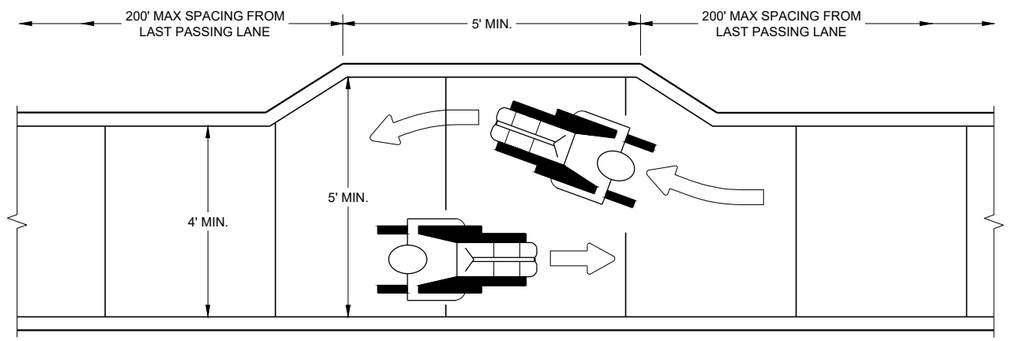

NARROW SIDEWALK PASSING DETAIL

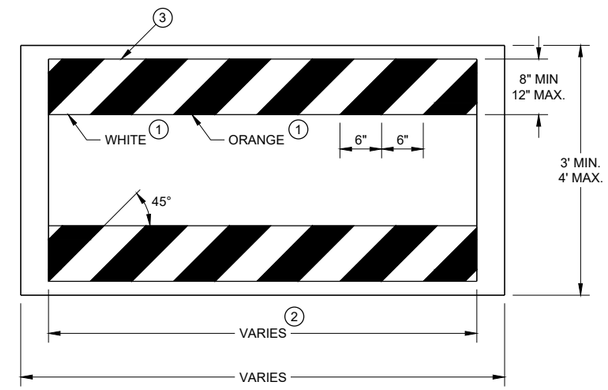

TEMPORARY PEDESTRIAN BARRICADE*

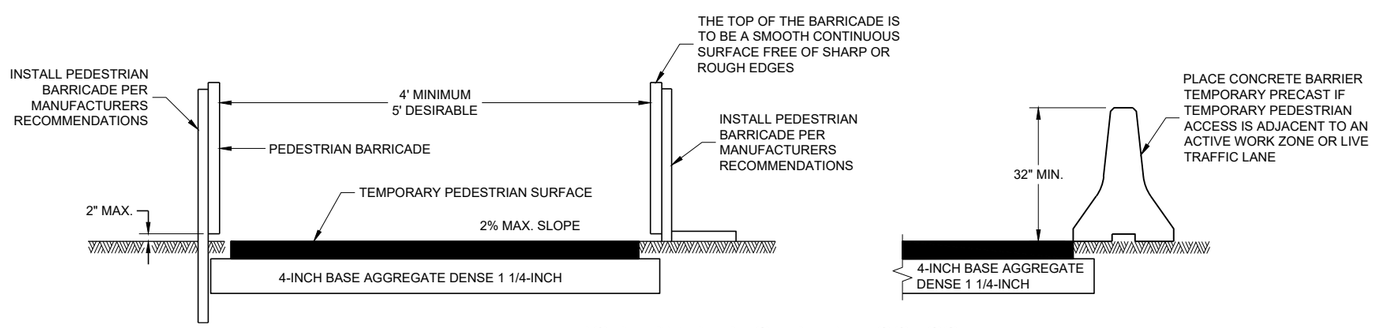

TEMPORARY PEDESTRIAN ACCESS

6

6

SDD 15D30 - 09a

SDD 15D30 - 09a

TRAFFIC CONTROL, PEDESTRIAN ACCOMMODATION

STATE OF WISCONSIN
DEPARTMENT OF TRANSPORTAT

GENERAL NOTES

CURB RAMPS SHALL BE 48" MIN. WIDTH WITH A FIRM, STABLE AND SLIP RESISTANT SURFACE.

CURB RAMPS AND LANDINGS SHALL HAVE A 1:50 (2%) MAX. CROSS-SLOPE.

CLEAR SPACE OF 48" X 48" SHALL BE PROVIDED ABOVE AND BELOW THE CURB RAMP.
LATERAL JOINTS OR GAPS BETWEEN SURFACES SHALL BE LESS THAN ½" WIDTH.

CHANGES BETWEEN SURFACE HEIGHTS SHALL NOT EXCEED ½". LATERAL EDGES MAY BE VERTICAL UP TO ¼" HIGH AND SHALL BE BEVELED AT 1:2 BETWEEN ¼" AND ½".

1. INSTALL CONTRASTING TEMPORARY DETECTABLE WARNING FIELD AT PEDESTRIAN STREET CROSSINGS, AS SHOWN IN THE PLANS.
2. PROTECTIVE EDGING WITH A 2" MIN. HEIGHT SHALL BE INSTALLED WHEN A CURB RAMP OR LANDING PLATFORM HAS A VERTICAL DROP OF 6" OR GREATER OR HAS A SIDE APRON SLOPE STEEPER THAN 1:3 (33%). PROTECTIVE EDGING SHOULD BE CONSIDERED WHEN CURB RAMPS OR LANDING PLATFORMS HAVE A VERTICAL DROP OF 3" OR MORE.
3. DETECTABLE EDGING WITH 6" MIN. HEIGHT AND CONTRASTING COLOR SHALL BE INSTALLED ON ALL CURB RAMP LANDINGS WHERE THE WALKWAY CHANGES DIRECTION (TURNS).
4. DO NOT RESTRICT WATER FLOW IN THE GUTTER SYSTEM.
5. ENSURE CURB RAMP IS OUT OF THE GUTTER PAN.
6. IF ONLY PART OF THE END PANEL OF TEMPORARY PEDESTRIAN BARRICADE PANEL IS NEEDED, EXTEND EXCESS PORTION OF TEMPORARY PEDESTRIAN BARRICADE PANEL HERE.

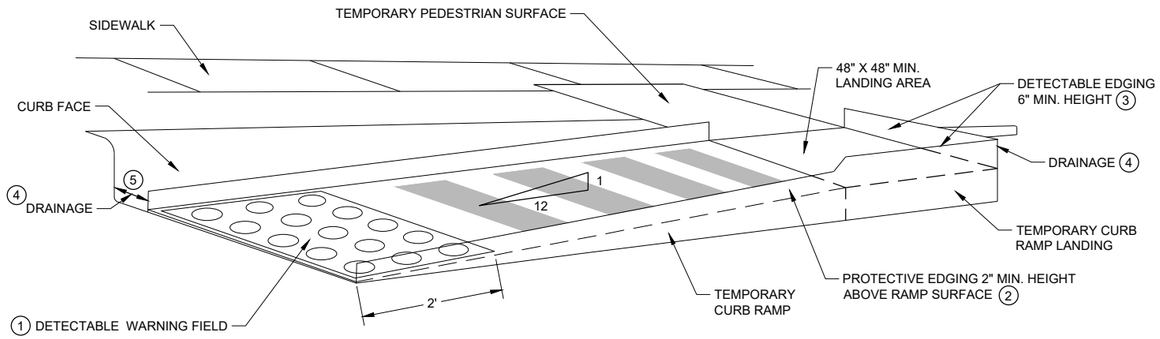

PERSPECTIVE VIEW

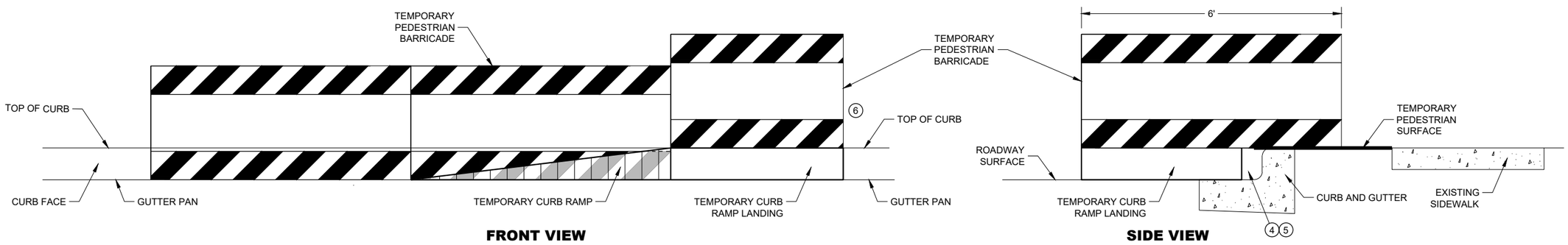

FRONT VIEW **SIDE VIEW**

TEMPORARY CURB RAMP PARALLEL TO CURB

TRAFFIC CONTROL, PEDESTRIAN ACCOMMODATION

STATE OF WISCONSIN
DEPARTMENT OF TRANSPORTAT

6

SDD 15D30 - 09b

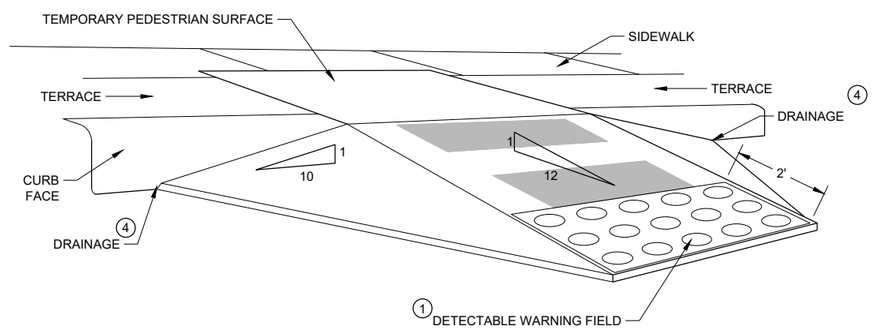

WITH SIDE APRON 5

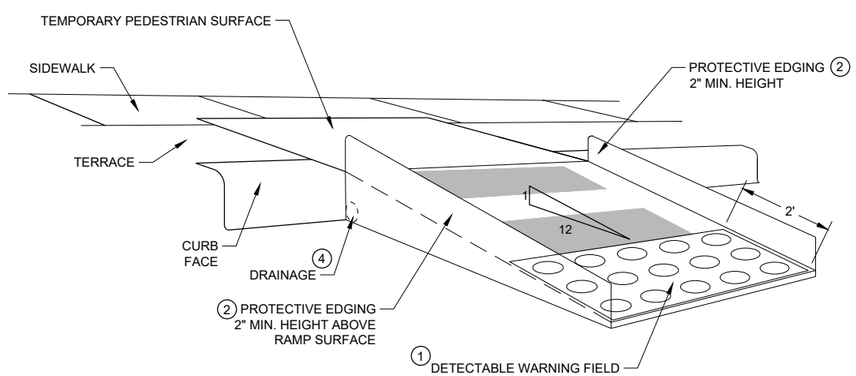

WITH PROTECTIVE EDGE

TEMPORARY CURB RAMP PERPENDICULAR TO CURB

GENERAL NOTES

CURB RAMPS SHALL BE 48" MINIMUM WIDTH WITH A FIRM, STABLE AND SLIP RESISTANT SURFACE.

ALTERNATE SIDEWALK WORK BETWEEN LEFT AND RIGHT SIDE OF ROADWAY TO MAINTAIN PEDESTRIAN ACCESS.

CURB RAMPS AND LANDINGS SHALL HAVE A 1:50 (2%) MAX. CROSS-SLOPE.

CLEAR SPACE OF 48" X 48" SHALL BE PROVIDED ABOVE AND BELOW THE CURB RAMP.

LATERAL JOINTS OR GAPS BETWEEN SURFACES SHALL BE LESS THAN ½" WIDTH.

CHANGES BETWEEN SURFACE HEIGHTS SHALL NOT EXCEED ½". LATERAL EDGES MAY BE VERTICAL UP TO ¼" HIGH AND SHALL BE BEVELED AT 1:2 BETWEEN ¼" AND ½".

1. INSTALL CONTRASTING TEMPORARY DETECTABLE WARNING FIELD AT PEDESTRIAN STREET CROSSINGS, AS SHOWN IN THE PLANS
2. PROTECTIVE EDGING WITH A 2" MIN. HEIGHT SHALL BE INSTALLED WHEN A CURB RAMP OR LANDING PLATFORM HAS A VERTICAL DROP OF 6" OR GREATER OR HAS A SIDE APRON SLOPE STEEPER THAN 1:3 (33%). PROTECTIVE EDGING SHOULD BE CONSIDERED WHEN CURB RAMPS OR LANDING PLATFORMS HAVE A VERTICAL DROP OF 3" OR MORE.
3. DETECTABLE EDGING WITH 6" MIN. HEIGHT AND CONTRASTING COLOR SHALL BE INSTALLED ON ALL CURB RAMP LANDINGS WHERE THE WALKWAY CHANGES DIRECTION (TURNS).
4. DO NOT RESTRICT WATER FLOW IN THE GUTTER SYSTEM.
5. CAN ONLY BE USED FOR RAMPS WITH 6" OR LESS OF VERTICAL CHANGE.

6

SDD 15D30 - 09c

TRAFFIC CONTROL, PEDESTRIAN ACCOMMODATION

STATE OF WISCONSIN
DEPARTMENT OF TRANSPORTAT

LEGEND

- SIGN ON PERMANENT SUPPORT
- SIGN ON TEMPORARY SUPPORT
- TRAFFIC CONTROL DRUM
- TRAFFIC CONTROL DRUM WITH TYPE "C" STEADY BURN LIGHT
- TYPE III BARRICADE
- TYPE III BARRICADE WITH ATTACHED SIGN
- TYPE "A" WARNING LIGHT (FLASHING)
- DIRECTION OF TRAFFIC
- FLASHING ARROW BOARD
- PCMS — PORTABLE CHANGEABLE MESSAGE BOARD

GENERAL NOTES

THE EXACT NUMBER, LOCATION, AND SPACING OF ALL SIGNS, INCLUDING PCMS AND DEVICES SHALL BE ADJUSTED TO FIT FIELD CONDITIONS AS APPROVED BY THE ENGINEER.

THE SPACING BETWEEN SIGNS SHOULD BE ADJUSTED TO NOT CONFLICT WITH AND TO PROVIDE A MINIMUM OF 200 FEET (500 FEET DESIRABLE) CLEARANCE TO EXISTING SIGNS.

THIS LANE CLOSURE IS TYPICAL FOR CLOSING RIGHT LANE - REVERSE FOR CLOSING LEFT LANE.

ALL SIGNS ARE 48" x 48" UNLESS OTHERWISE NOTED.

"WO" SIGNS ARE THE SAME AS "W" SIGNS EXCEPT THE BACKGROUND IS ORANGE.

ANY SIGNS TEMPORARY OR EXISTING, WHICH CONFLICT WITH TRAFFIC CONTROL "IN USE" SHALL BE REMOVED OR COVERED AS NEEDED OR AS APPROVED BY THE ENGINEER. NO WARNING LIGHTS SHALL BE WORKING ON "COVERED" OR "DOWNED SIGNS.

FOR A LANE CLOSURE THAT IS IN PLACE LESS THAN 7 CONTINUOUS DAYS AND NIGHTS, THE ADVANCED WARNING SIGNS MAY BE MOUNTED ON PORTABLE SUPPORTS.

REMOVE PAVEMENT MARKINGS IF LANE CLOSURE IS TO BE IN PLACE 4 OR MORE CONTINUOUS DAYS AND NIGHTS.

WARNING LIGHTS ARE NOT REQUIRED IF THE LANE CLOSURE IS A DAYTIME ONLY OPERATION.

CONSIDER ROADWAY GEOMETRICS WHEN LOCATING SIGNS AND ARROW BOARD SO THE DRIVER HAS A CLEAR VIEW OF THE ARROW BOARD AND LANE CLOSURE DRUMS.

WHEN A RAMP INTERSECTS THE FACILITY ON WHICH WORK IS BEING PERFORMED, ADDITIONAL TRAFFIC CONTROLS SHALL BE PROVIDED AS SPECIFIED IN THE PLANS AND/OR THE SPECIAL PROVISIONS OR AS DIRECTED BY THE ENGINEER.

REMOVE ALL ARROW BOARDS AND DEVICES BEYOND THE SHOULDER WHEN THE WORK IS NOT IN PROGRESS.

REFER TO SDD 15C2 FOR SETTING DETOUR SIGNAGE.

ADD FREEWAY SHIELD AND DIRECTION IF APPLICABLE. COVER EXISTING RAMP AND LANE SIGNS IF APPLICABLE.

(1) 5 DRUMS SPACED AT 10 FOOT INTERVALS.

(2) DURING THE PRE-WARNING PERIOD, PLACE THE PCMS AT THE SYSTEM RAMP THAT IS TO BE CLOSED. DURING CLOSURE PERIOD, PLACE PCMS OR FMS AT LAST AVAILABLE EXIT IN ADVANCE OF SYSTEM RAMP CLOSURE. IF DYNAMIC MESSAGE SIGNS (DMS) ARE AVAILABLE, COORDINATE POTENTIAL SIGN MESSAGES WITH THE TRAFFIC MANAGEMENT CENTER (TMC).

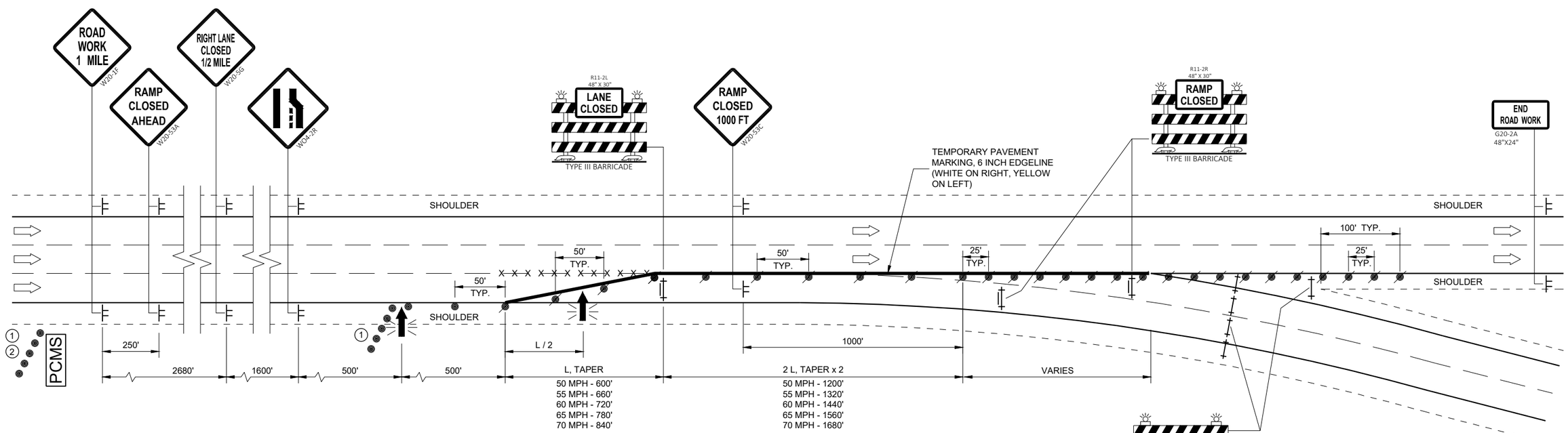

SEE SDD 15C2 (SHEET "b"), DETAIL "D" "BARRICADES AND SIGNS FOR MAINLINE CLOSURES" PLACE BARRICADES TO FULLY SEAL OFF ROAD

RAMP CLOSED BEGINNING XXX-XX

G20-58

PCMS MESSAGING

ONE WEEK IN ADVANCE OF CLOSURE:

FRAME 1	FRAME 2
RAMP TO CLOSE	XXXDAY XX XX XX

DURING CLOSURE:

FRAME 1	FRAME 2
HWY XX RAMP CLOSED	USE ALT ROUTE

TRAFFIC CONTROL, SYSTEM RAMP CLOSURE

STATE OF WISCONSIN
DEPARTMENT OF TRANSPORTATION

APPROVED
May 2023 — DATE
/S/ Andrew Heidtke — WORK ZONE ENGINEE
FHWA

6
SDD 15D49-02

URBAN AREA

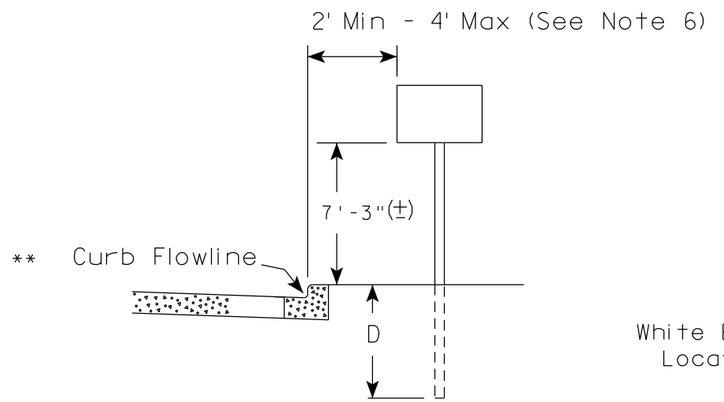

RURAL AREA (See Note 2)

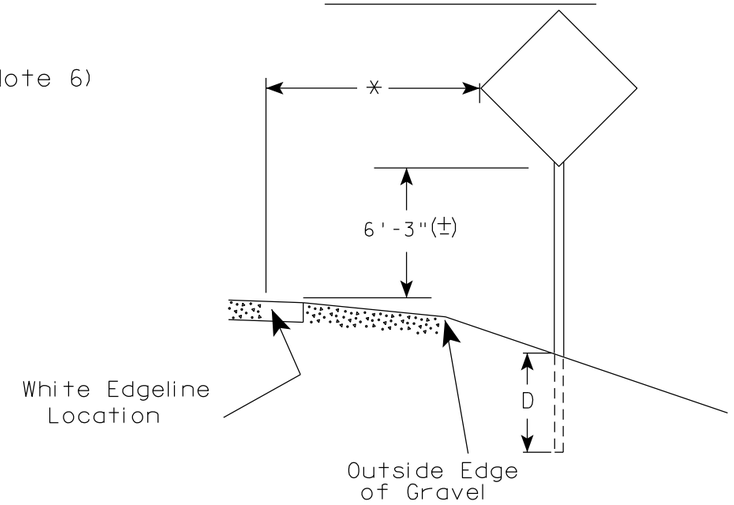

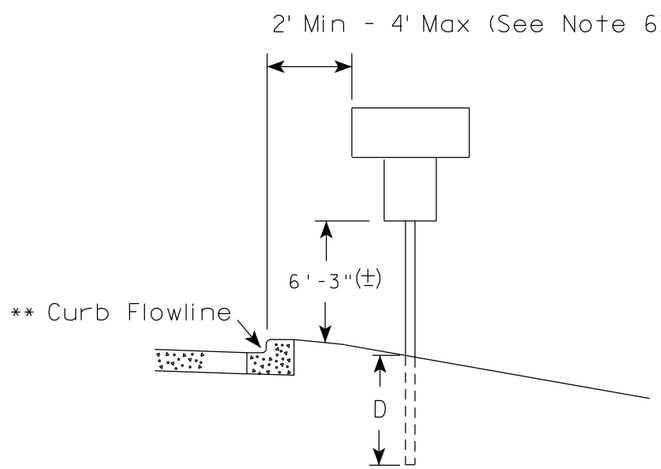

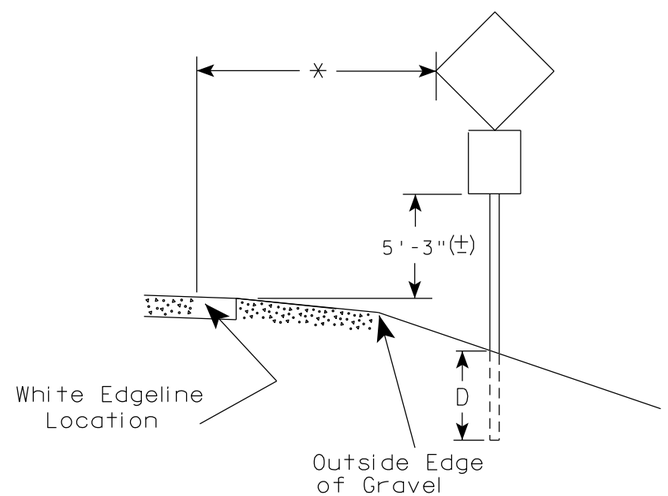

** The existence of curb and gutter does not in itself mandate the vertical clearance illustrated. That height is typically measured where there is sidewalk adjacent to the roadway or parking is permitted. In the absence of sidewalk vertical clearance is measured from the top of the curb. Offset of signs is measured from the flow line.

* 6 feet from edge of a paved shoulder or 12 feet from the edge of pavement (edge line location) or 2 feet from outside edge of gravel, whichever is greater unless directed by project engineer.

GENERAL NOTES

1. Signs wider than 4 feet or 20 sq.ft or larger, shall be mounted on multiple posts. Refer to plate A4-4.
2. If signs are mounted on or behind barrier wall, see A4-10 sign plate.
   The Double Arrow sign (W12-1D) shall be mounted at a height of 2'-3" (±). The Chevron sign (W1-8), Roundabout Chevron panel (R6-4B), Enhanced Reference Markers, Clearance Markers (W5-52), Mile Markers (D10 series), In Road Object Markers (W5-54) & End of Road Markers (W5-56) shall be mounted at a height of 4'-3" (±).
3. For expressways and freeways, mounting height is 7'- 3" (±) or 6'-3" (±) depending upon existence of a sub-sign.
4. Minimum mounting height for signs mounted on traffic signal poles is 5'- 3" (±).
5. Offset distance shall be consistent with existing signs or consistent throughout length of project.
6. The (±) tolerance for mounting height is 3 inches.
7. Folding signs shall be mounted at a height of 5'-3" (±) or as directd by the Engineer.

POST EMBEDMENT DEPTH

Area of Sign Installation (Sq.Ft.)	D (Min)
20 or Less	4'
Greater than 20	5'

TYPICAL INSTALLATION OF PERMANENT TYPE II SIGNS ON SINGLE POSTS

WISCONSIN DEPT OF TRANSPORTATION

APPROVED Matthew R Rauch for State Traffic Engineer

DATE 5/13/2020 PLATE NO. A4-3.22

7 7

PROJECT NO:	HWY:	COUNTY:		SHEET NO: 71	E

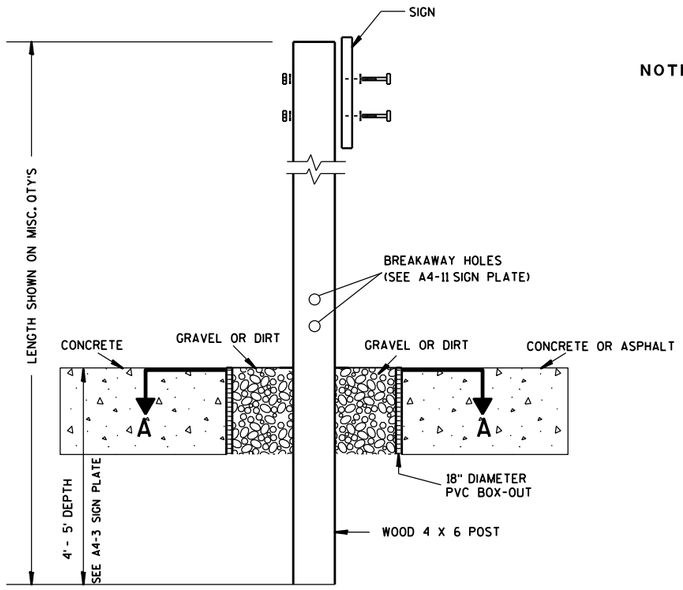

ELEVATION VIEW

DETAIL OF WOOD 4 X 6 SIGN POST IN BOX-OUT

NOTES:
1. ALL MATERIAL TO BE APPROVED BY ENGINEER PRIOR TO INSTALLATION
2. SEE SIGN PLATE A4-8 FOR SIGN HARDWARE REQUIREMENTS
3. 18 INCH X 18 INCH SQUARE BOX-OUTS MAY BE USED FOR INSTALLATIONS IN EXISTING CONCRETE OR ASPHALT LOCATIONS.

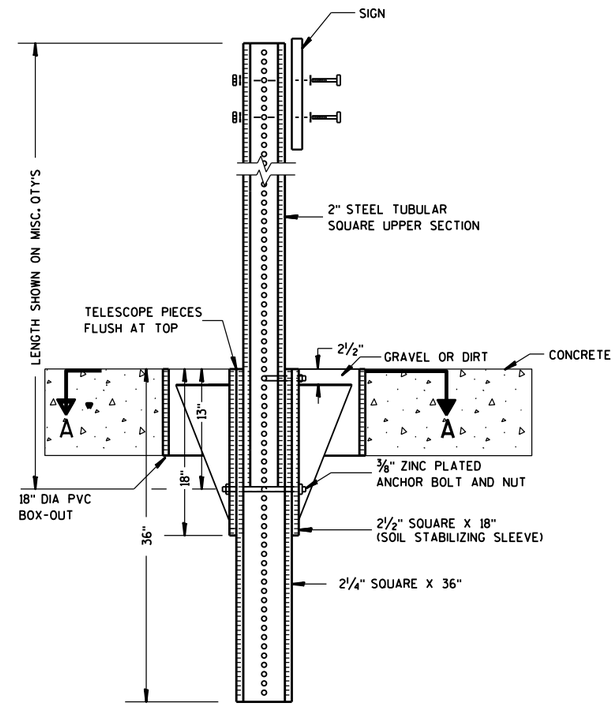

ELEVATION VIEW

DETAIL OF STEEL 2 X 2 SIGN POST IN BOX-OUT

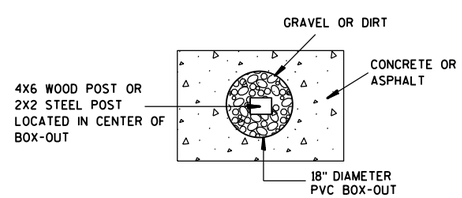

PLAN VIEW

FOR NEW CONCRETE/ASPHALT INSTALLATIONS

SIGN POST
BOX-OUTS
A4-3B

WISCONSIN DEPT OF TRANSPORTATION

APPROVED Matthew R Rauch
for State Traffic Engineer

DATE 1/27/14 PLATE NO. A4-3B.1

PROJECT NO:	HWY:	COUNTY:		SHEET NO:	E

URBAN AREA

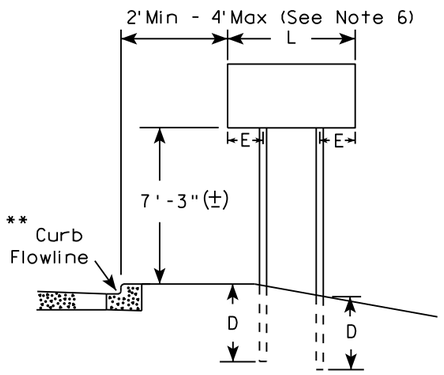

RURAL AREA (See Note 3)

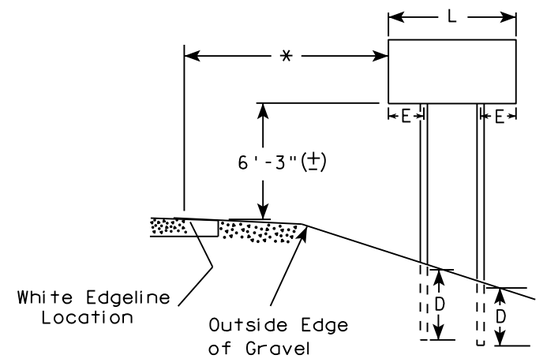

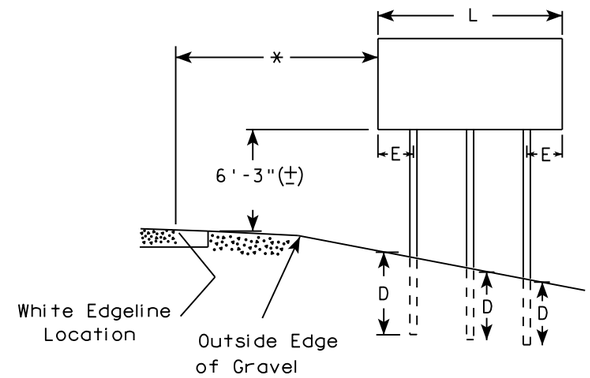

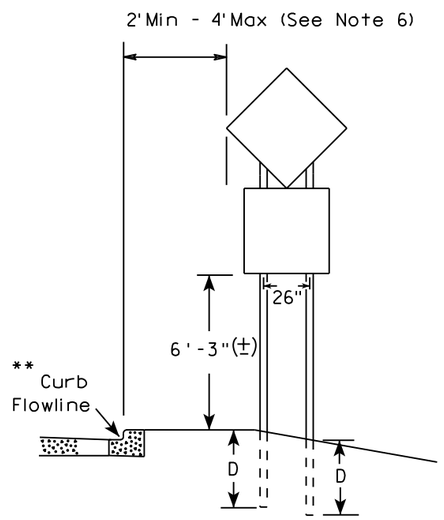

48" DIAMOND WARNING SIGN

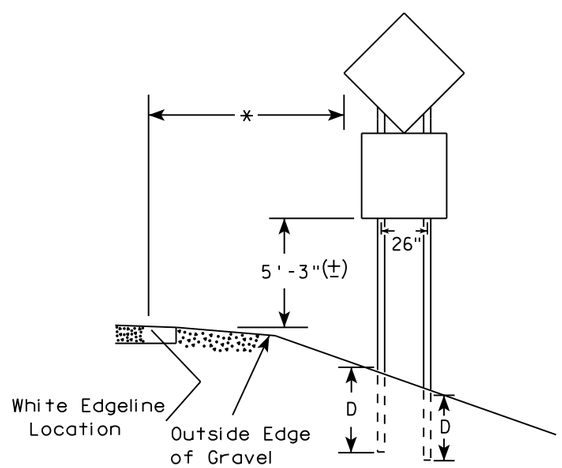

48" DIAMOND WARNING SIGN

SIGN SHAPE OTHER THAN DIAMOND (TWO POSTS REQUIRED)	
L	E
*** Greater than 48" Less than 60"	12"
60" to 108"	L/5

SIGN SHAPE OTHER THAN DIAMOND (THREE POSTS REQUIRED)	
L	E
Greater than 108" to 144"	12"

GENERAL NOTES

1. For 3 or 4 post installations, individual post spacing shall be greater than 3'-6".
2. See tables below for required number of posts.
3. For expressways and freeways, mounting height is 7'-3" (±) or 6'-3" (±) depending upon existence of sub-sign.
4. The (±) tolerance for mounting height is 3 inches.
5. J-Assemblies are considered to be one sign for mounting height.
6. Offset distance shall be consistent with existing signs or consistent throughout length of project.
7. Folding signs shall be mounted at a height of 5'-3" (±) or as directed by the engineer.
8. The Double Arrow sign (W12-1) shall be mounted at a height of 2'-3" (±). The Chevron sign (W1-8), Roundabout Chevron panel (R6-4B), Clearance Markers (W5-52), Mile Markers (D10 series), In Road Object Markers (W5-54) & End of Road Markers (W5-56) shall be mounted at a height of 4"-3" (±).

* 6 feet from edge of a paved shoulder or 12 feet from the edge of pavement (edge line location) or 2 feet from outside edge of gravel, whichever is greater unless directed by project engineer.

** The existence of curb and gutter does not in itself mandate the vertical clearance illustrated. That height is typically measured where there is sidewalk adjacent to the roadway or parking is permitted. In the absence of sidewalk vertical clearance is measured from the top of the curb. Offset of signs is measured from the flow line.

*** See A4-3 sign plate for signs 4' or less in width and less than 20 S.F. in area.

POST EMBEDMENT DEPTH

Area of Sign Installation (Sq. Ft.)	D (Min)
20 or Less	4'
Greater than 20	5'

TYPICAL INSTALLATION OF TYPE II SIGNS ON MULTIPLE POSTS

WISCONSIN DEPT OF TRANSPORTATION

APPROVED Matthew R Rauch
For State Traffic Engineer

DATE 8/21/17 PLATE NO. A4-4.15

7

7

PROJECT NO:	HWY:	COUNTY:		SHEET NO: 73	E

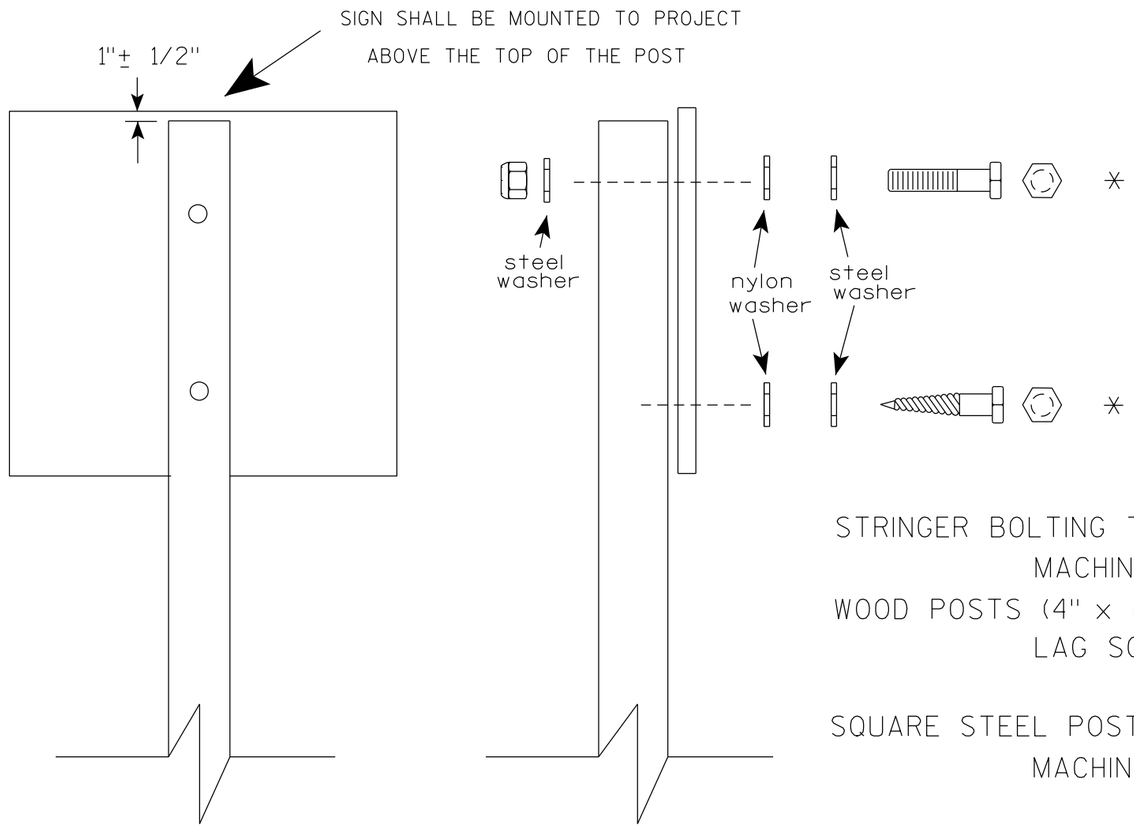

Nuts, bolts and lags used for mounting signs shall have hexagonal heads and shall be either :

a. Hot dip galvanized in accordance with ASTM Designation: A 153, Class D, or SC 3

b. Electro-galvanized in accordance with ASTM Designation : B 633, TYPE III, SC 3.

Threads on bolts and nuts shall be manufactured with sufficient allowance for the cadmium plate or galvanized coating to permit the nuts to run freely on the bolts.

STRINGER BOLTING TO ALUMINUM SIGNS (SEE SIGN PLATE A4-18)

MACHINE BOLTS - 5/16" X 1-3/4" Length w/ lock nuts

WOOD POSTS (4" x 6")

LAG SCREWS - 3/8" X 3" (NO STRINGERS ON BACK OF SIGN)
3/8" X 4" (STRINGERS ON BACK OF SIGN)

SQUARE STEEL POSTS (2" x 2")

MACHINE BOLTS - 3/8" X 3-1/4" Length w/ nuts (NO STRINGER ON BACK OF SIGN)
3/8" X 5" Length w/ nuts (STRINGERS ON BACK OF SIGN)

RIVETS - 9/32 " (6605-9-6) BULB-TITE, TRI-FOLD, ALUMINUM BODY/MANDREL
O.D. FLANGE .720-.765 INCH, GRIP RANGE .042-.375 INCH

WASHERS (ALL POSTS) -

1-1/4" O.D. X 3/8" I.D. X 1/16" STEEL
1-1/4" O.D. X 3/8" I.D. X .080 NYLON

* Two different fastening systems are shown for illustration purposes. On any individual sign, either one or the other system shall be used. Actual number of fasteners per sign varies with the sign area, but normally there are two. For a single post installation, all signs greater than 9 sq. ft. require the use of 3 fasteners.

ATTACHMENT OF SIGNS TO POSTS

WISCONSIN DEPT OF TRANSPORTATION

APPROVED Matthew R Rauch
for State Traffic Engineer

DATE 4/1/2020 PLATE NO. A4-8.9

TELESCOPIC TUBING ANCHORS
TWO PIECE SYSTEM

2 1/4" SQUARE
12 GAUGE
PERFORATED
GALVANIZED FINISH

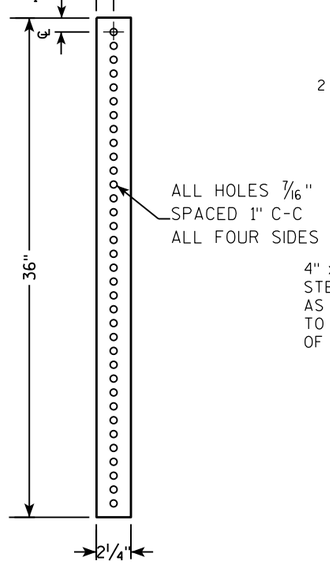

2 1/2" SQUARE
12 GAUGE
OMNI-DIRECTIONAL
PERFORATED
SOIL STABILIZING SLEEVE
GALVANIZED FINISH

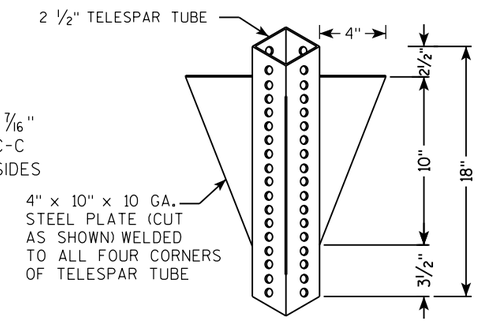

DETAIL OF TUBULAR STEEL SIGN POST
(IN POURED CONCRETE OR ASPHALT)

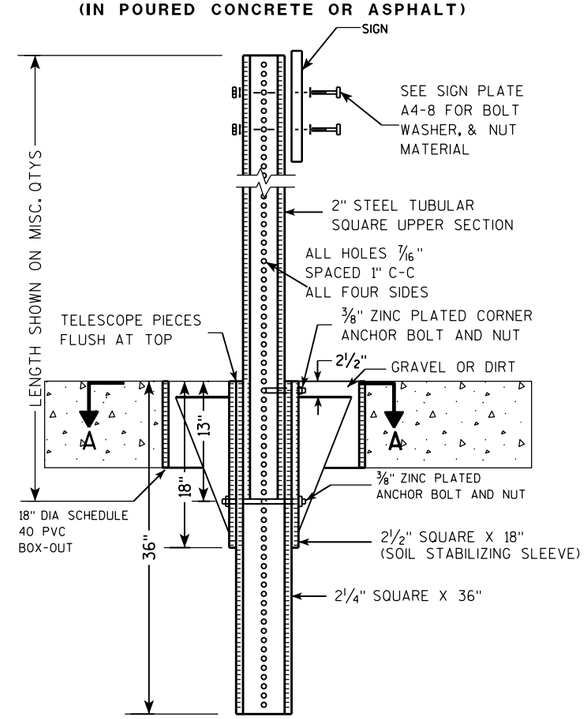

DETAIL OF TUBULAR STEEL SIGN POST
(IN LOCATIONS OTHER THAN POURED CONCRETE OR ASPHALT)

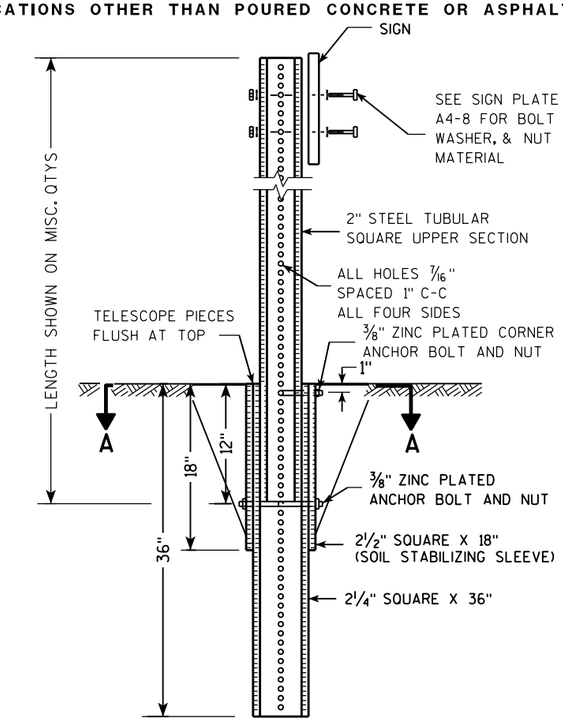

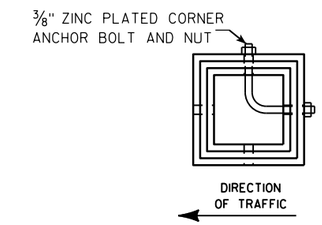

SECTION A-A

Area of Sign Installation (Sq. Ft.)	Number of Required Posts
9 or less	1
Greater than 9 less than or equal to 18	2
Greater than 18 less than or equal to 27	3

Signs wider than 3 feet or larger than 9 sq. ft shall be mounted on multiple posts (see above table).

TUBULAR STEEL
SIGN POST
A4-9

WISCONSIN DEPT OF TRANSPORTATION

APPROVED Matthew R Rauch
for State Traffic Engineer

DATE 2/05/15 PLATE 75 A4-9.9

PROJECT NO:	HWY:	COUNTY:		SHEET NO:	E

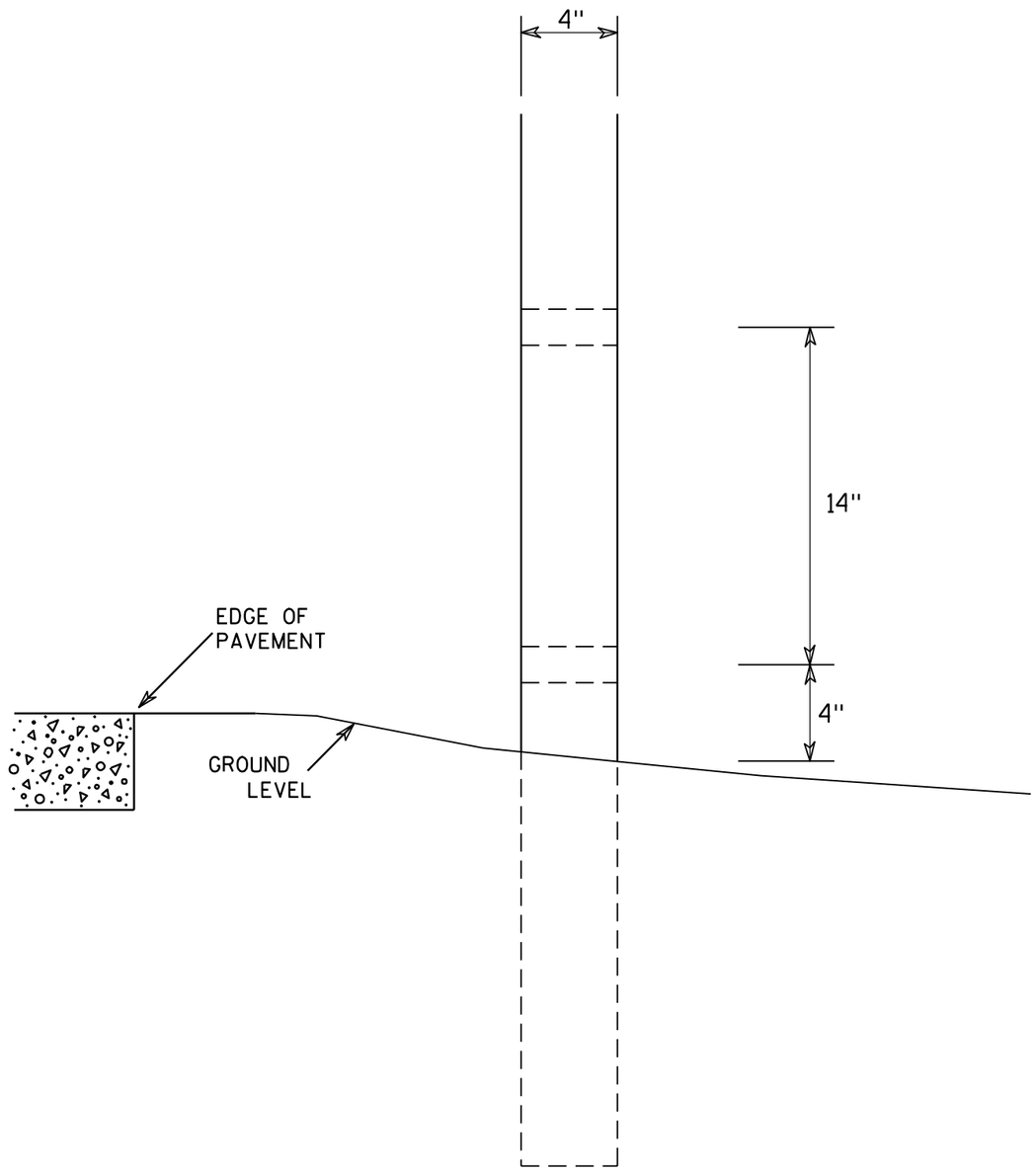

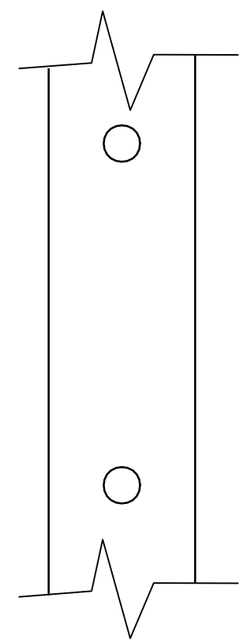

SIDE VIEW

GENERAL NOTES

1. All 4 x 6 Wood Posts shall be modified by having two 1½" diameter holes drilled perpendicular to the roadway centerline.

4 X 6 WOOD POST MODIFICATIONS

WISCONSIN DEPT OF TRANSPORTATION

APPROVED Chester J Spang for State Traffic Engineer

DATE 3/27/97 PLATE NO. A4-11.2

PROJECT NO:	HWY:	COUNTY:		SHEET NO: 76	E

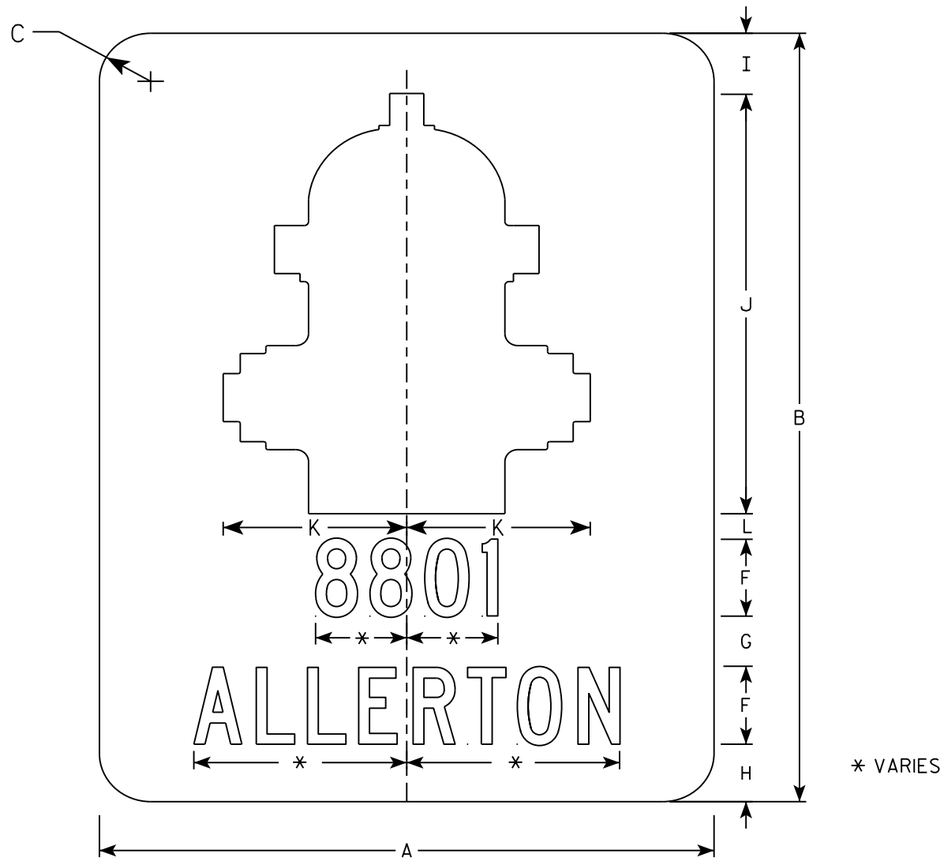

D9-54

NOTES

1. Sign is Type II - Type H Reflective
2. Color:
   Background - Green
   Message - White
3. Message Series - C except Series B if sign will exceed 24" width
4. Select appropriate message series and adjust spacing to achieve proper balance.

SIZE	A	B	C	D	E	F	G	H	I	J	K	L	M	N	O	P	Q	R	S	T	U	V	W	X	Y	Z	Area sq. ft.
1																											
2	24	30	1 1/2			3	2	2 1/4	2 3/8	16 3/8	7 1/8	1															5.0
3																											
4																											
5																											

STANDARD SIGN
D9-54

WISCONSIN DEPT OF TRANSPORTATION

APPROVED Matthew R Rauch
for State Traffic Engineer

DATE 5/16/18 PLATE NO. D9-54.4

PROJECT NO:

SHEET NO: 77 E

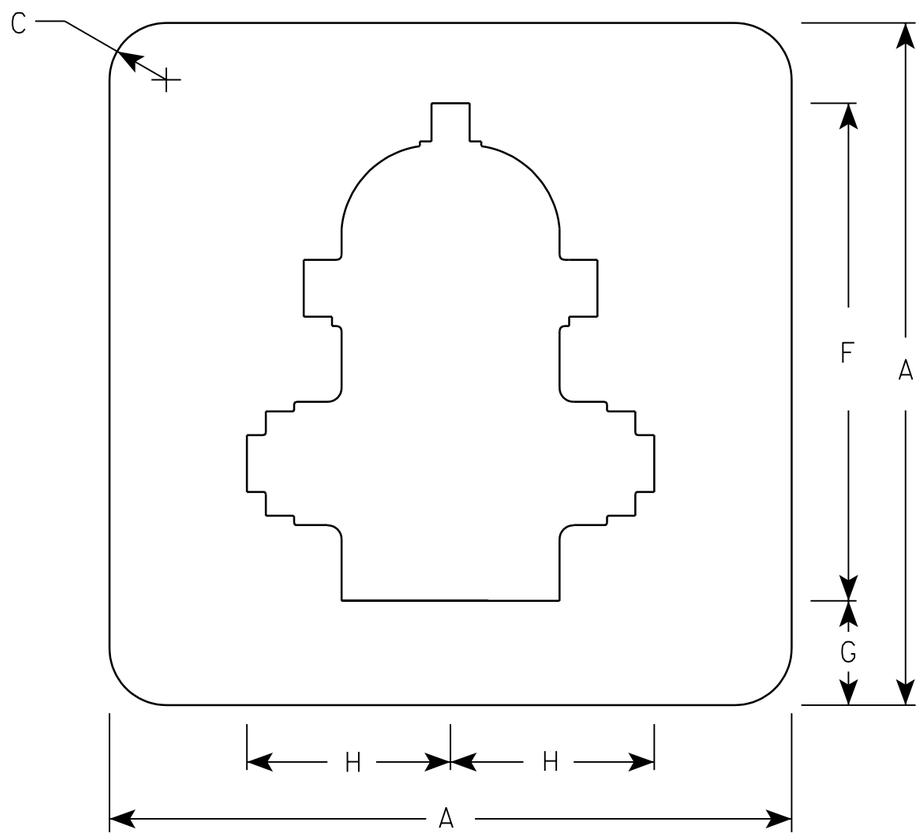

NOTES

1. Sign is Type II - Type H Reflective - reference WIS DOT Standard Specification for HIGHWAY and STRUCTURE CONSTRUCTION latest edition.
2. Color:
   Background - GREEN
   Message - WHITE (HYDRANT) TYPE H REFLECTIVE
3. Corners may be square or rounded when base material is plywood but borders shall be rounded as shown. When base material is metal, the corners and borders shall be rounded.

7

Metric equivalent for this sign is:

SIZE	
1	
2	450 mm X 450 mm
3	
4	
5	

SIZE	A	B	C	D	E	F	G	H	I	J	K	L	M	N	O	P	Q	R	S	T	U	V	W	X	Y	Z	Area sq. ft.	Area m2
1																												
2	18		1 1/2			13 1/2	2 3/4	5 3/8																			2.25	0.20
3																												
4																												
5																												

STANDARD SIGN
D9-54A

WISCONSIN DEPT OF TRANSPORTATION

APPROVED Matthew R Rauch
for State Traffic Engineer

DATE 5/01/03 PLATE NO. D9-54A.3

PROJECT NO:

SHEET NO: 78 E

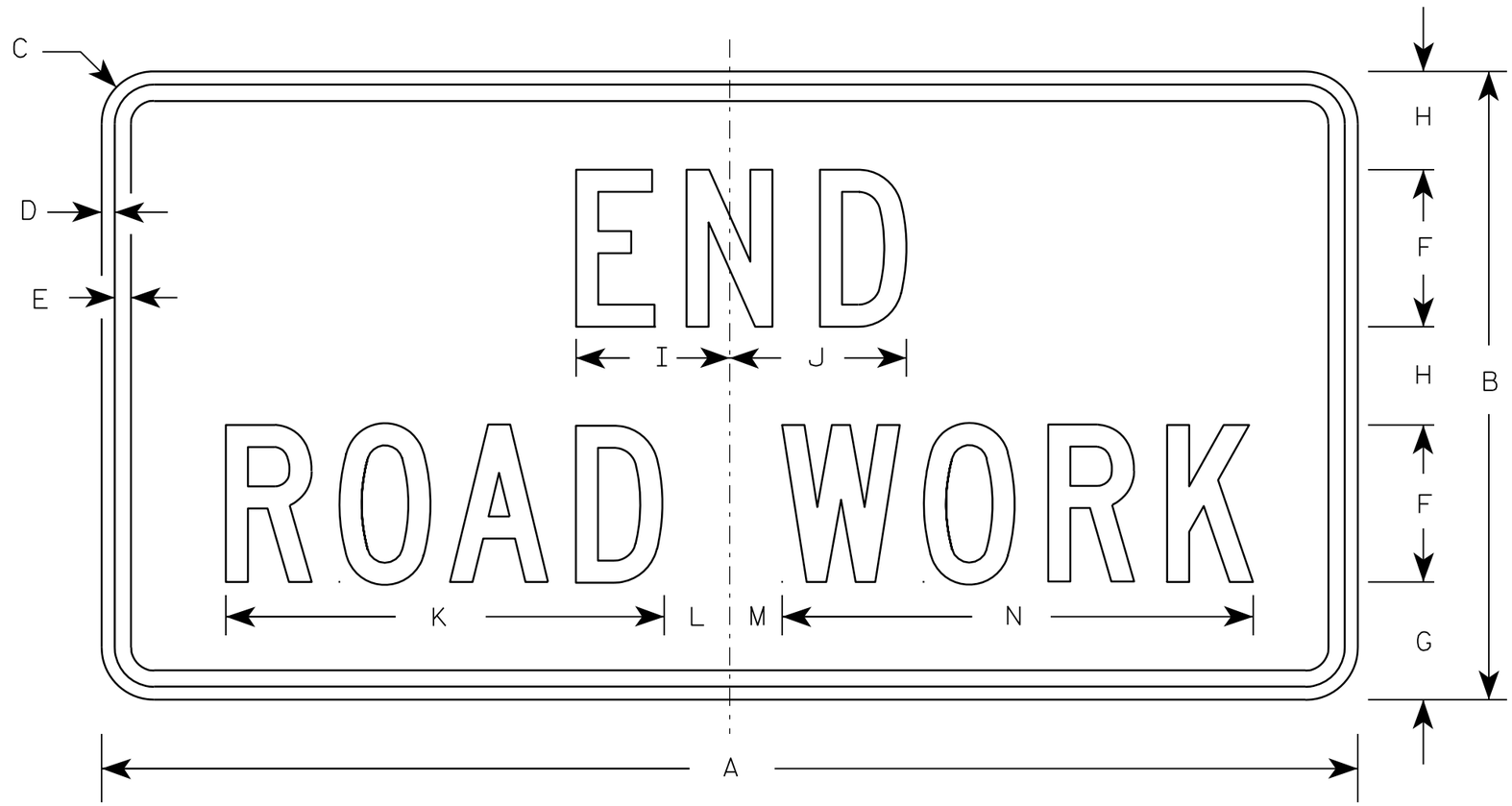

G20-2A

NOTES

1. Sign is Type II - Type F Reflective - reference WIS DOT Standard Specification for HIGHWAY and STRUCTURE CONSTRUCTION latest edition.
2. Color:
   Background - Orange
   Message - Black
3. Message Series - C
4. Corners may be square or rounded when base material is plywood but borders shall be rounded as shown. When base material is metal, the corners and borders shall be rounded.

Metric equivalent for this sign is:

SIZE	
1	900 mm X 450 mm
2	1200 mm X 600 mm
3	1200 mm X 600 mm
4	1200 mm X 600 mm
5	1200 mm X 600 mm

SIZE	A	B	C	D	E	F	G	H	I	J	K	L	M	N	O	P	Q	R	S	T	U	V	W	X	Y	Z	Area sq. ft.	Area m2
1	36	18	1 1/8	3/8	1/2	4	3 3/4	2 1/2	4 1/8	4 1/8	11 1/8	2	1	12 1/8													4.5	0.41
2	48	24	1 1/2	1/2	5/8	6	4 1/2	3 3/4	5 7/8	6 3/4	16 3/4	2 1/2	1 3/4	18 1/2													8.0	0.72
3	48	24	1 1/2	1/2	5/8	6	4 1/2	3 3/4	5 7/8	6 3/4	16 3/4	2 1/2	1 3/4	18 1/2													8.0	0.72
4	48	24	1 1/2	1/2	5/8	6	4 1/2	3 3/4	5 7/8	6 3/4	16 3/4	2 1/2	1 3/4	18 1/2													8.0	0.72
5	48	24	1 1/2	1/2	5/8	6	4 1/2	3 3/4	5 7/8	6 3/4	16 3/4	2 1/2	1 3/4	18 1/2													8.0	0.72

STANDARD SIGN

G20-2A

WISCONSIN DEPT OF TRANSPORTATION

APPROVED Matthew R Rauch
for State Traffic Engineer

DATE 9/30/09 PLATE NO. G20-2A.8

PROJECT NO:	HWY:	COUNTY:		SHEET NO: 79	E

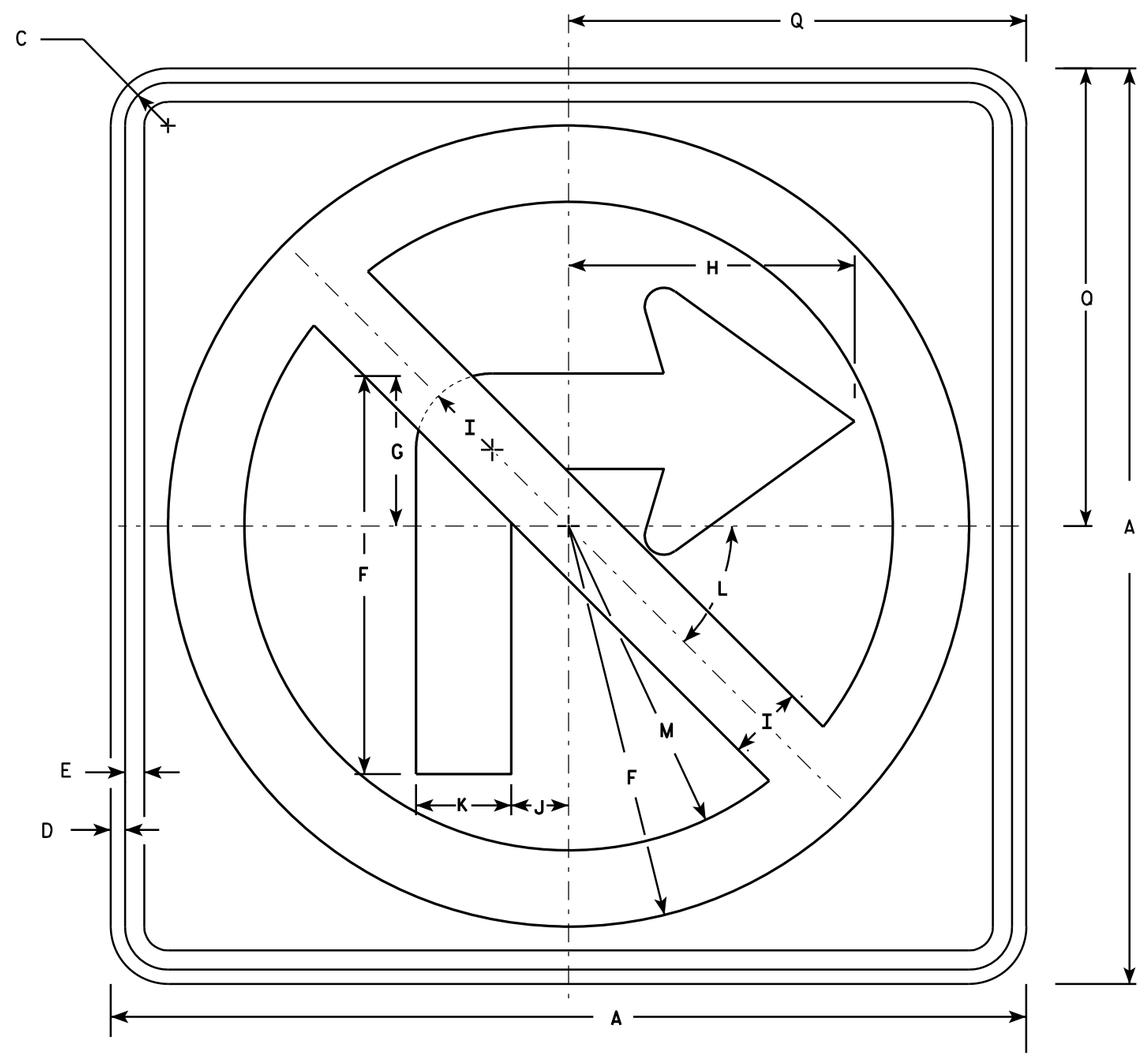

R3-1

NOTES

1. Sign is Type II - Type H Reflective - reference WIS DOT Standard Specification for HIGHWAY and STRUCTURE CONSTRUCTION latest edition.
2. Color:
   Background - White
   Message - See note 4
3. Corners may be square or rounded when base material is plywood but borders shall be rounded as shown. When base material is metal, the corners and borders shall be rounded.
4. Border & Arrow are non reflective black, the circle with diagonal bar is reflective red.

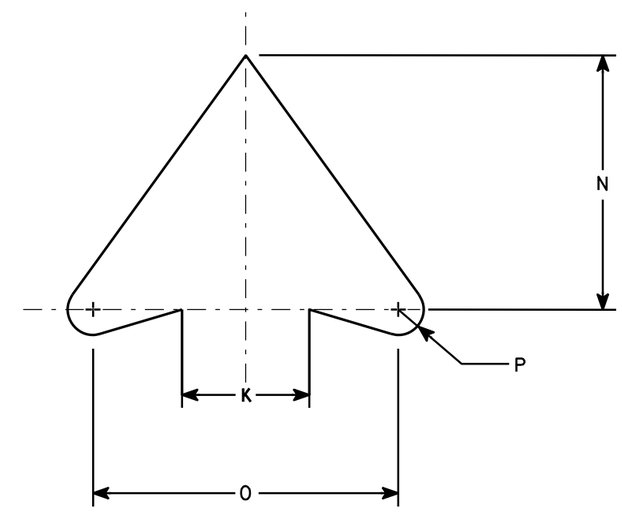

ARROW DETAIL

SIZE	A	B	C	D	E	F	G	H	I	J	K	L	M	N	O	P	Q	R	S	T	U	V	W	X	Y	Z	Area sq. ft.
1	24		1 1/8	3/8	1/2	10 1/2	4	7 1/2	2	1 1/2	2 1/2	45	8 1/2	5	6	1/2	12										4.0
2S	24		1 1/8	3/8	1/2	10 1/2	4	7 1/2	2	1 1/2	2 1/2	45°	8 1/2	5	6	1/2	12										4.0
2M	36		1 5/8	5/8	3/4	15 3/4	6	11 1/4	3	2 1/4	3 3/4	45	12 3/4	7 1/2	9	3/4	18										9.0
3	36		1 5/8	5/8	3/4	15 3/4	6	11 1/4	3	2 1/4	3 3/4	45	12 3/4	7 1/2	9	3/4	18										9.0
4	36		1 5/8	5/8	3/4	15 3/4	6	11 1/4	3	2 1/4	3 3/4	45°	12 3/4	7 1/2	9	3/4	18										9.0
5	48		2 1/4	3/4	1	21	8	15	4	3	5	45°	17	10	12	1	24										16.0

STANDARD SIGN
R3-1

WISCONSIN DEPT OF TRANSPORTATION

APPROVED Matthew R Rauch
for State Traffic Engineer

DATE 12/08/10 PLATE NO. R3-1.5

7

7

PROJECT NO:	HWY:	COUNTY:		SHEET NO: 80	E

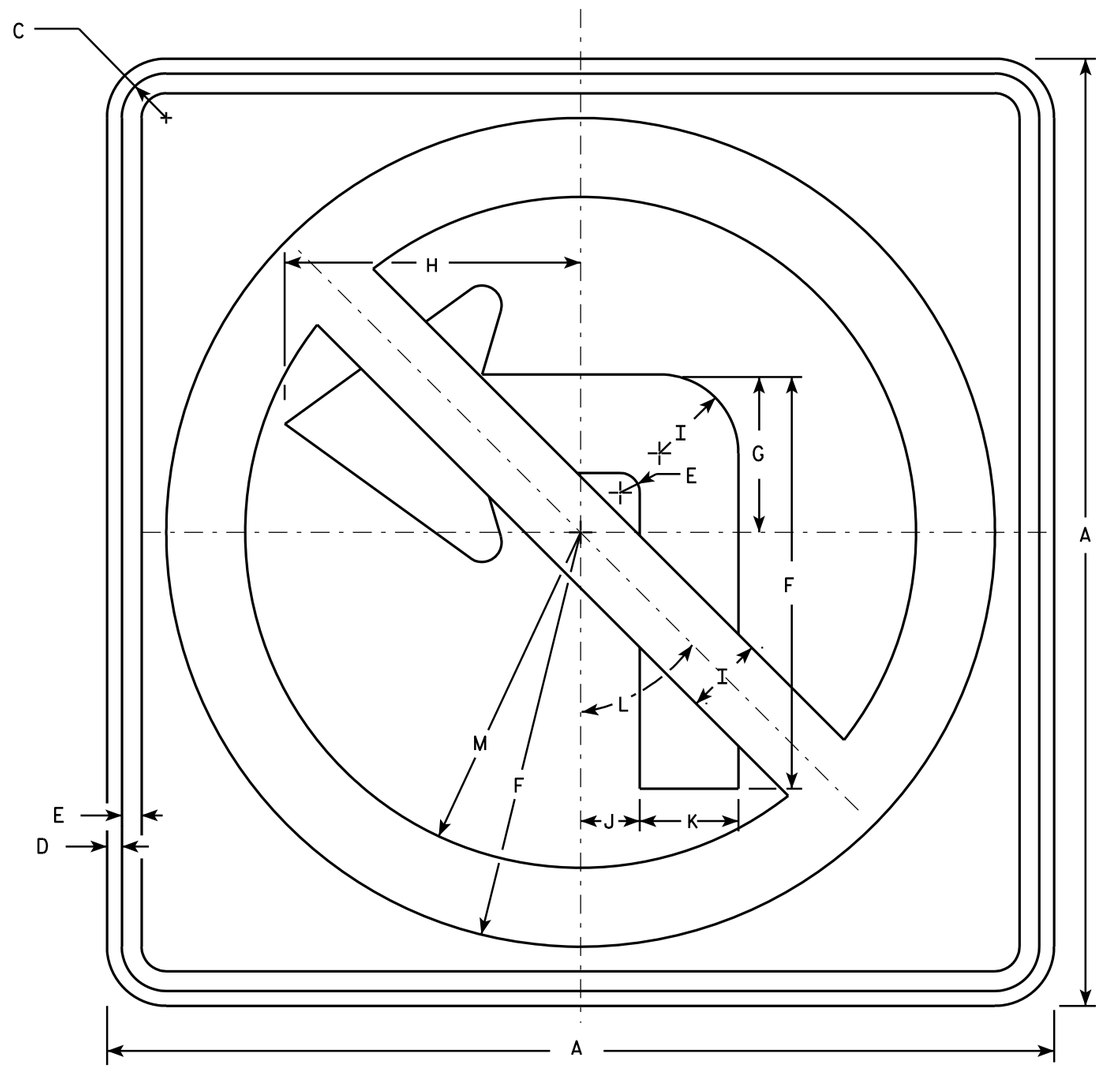

R3-2

NOTES

1. Sign is Type II - Type H Reflective - reference WIS DOT Standard Specification for HIGHWAY and STRUCTURE CONSTRUCTION latest edition.
2. Color:
   Background - White
   Message - See note 4
3. Corners may be square or rounded when base material is plywood but borders shall be rounded as shown. When base material is metal, the corners and borders shall be rounded.
4. Border & Arrow are non reflective black, the circle with diagonal bar is reflective red.

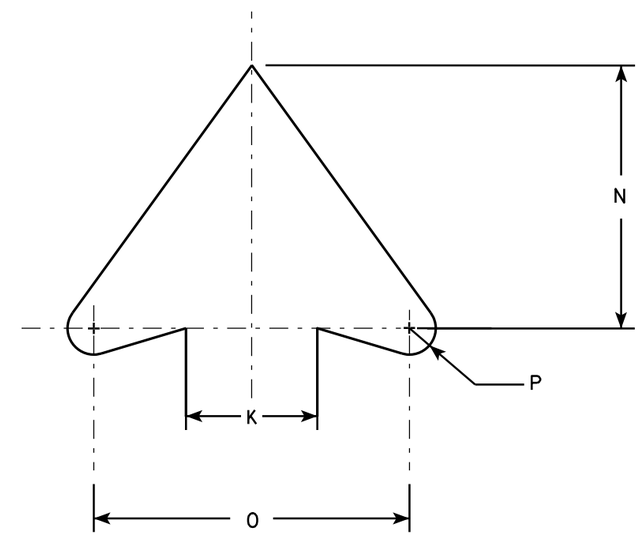

ARROW DETAIL

SIZE	A	B	C	D	E	F	G	H	I	J	K	L	M	N	O	P	Q	R	S	T	U	V	W	X	Y	Z	Area sq. ft.
1	24		1 1/8	3/8	1/2	10 1/2	4	7 1/2	2	1 1/2	2 1/2	45°	8 1/2	5	6	1/2											4.0
2S	24		1 1/8	3/8	1/2	10 1/2	4	7 1/2	2	1 1/2	2 1/2	45°	8 1/2	5	6	1/2											4.0
2M	36		1 5/8	5/8	3/4	15 3/4	6	11 1/4	3	2 1/4	3 3/4	45°	12 3/4	7 1/2	9	3/4											9.0
3	36		1 5/8	5/8	3/4	15 3/4	6	11 1/4	3	2 1/4	3 3/4	45°	12 3/4	7 1/2	9	3/4											9.0
4	36		1 5/8	5/8	3/4	15 3/4	6	11 1/4	3	2 1/4	3 3/4	45°	12 3/4	7 1/2	9	3/4											9.0
5	48		2 1/4	3/4	1	21	8	15	4	3	5	45°	17	10	12	1											16.0

STANDARD SIGN
R3-2

WISCONSIN DEPT OF TRANSPORTATION

APPROVED Matthew R Rauch
for State Traffic Engineer

DATE 12/08/10 PLATE NO. R3-2.10

PROJECT NO: | HWY: | COUNTY: | SHEET NO: 81 | E

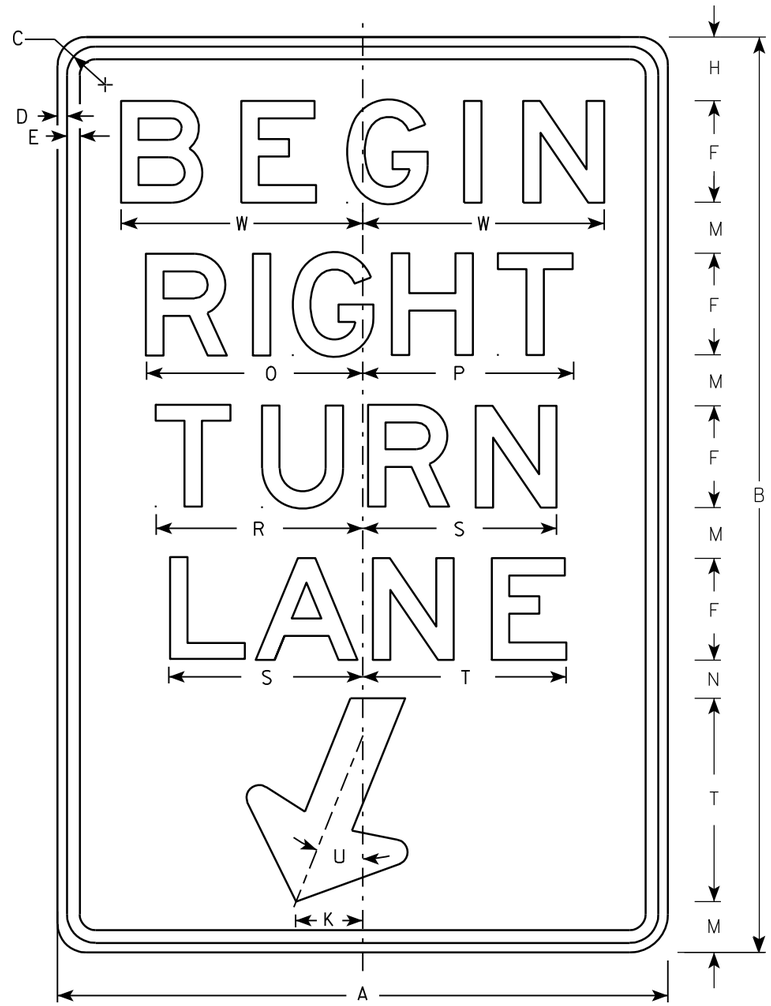

R3-20R

NOTES

1. Sign is Type II - Type H Reflective - reference WIS DOT Standard Specification for HIGHWAY and STRUCTURE CONSTRUCTION latest edition.
2. Color:
   Background - White
   Message - Black
3. Message Series - E
4. Corners may be square or rounded when base material is plywood but borders shall be rounded as shown. When base material is metal, the corners and borders shall be rounded.

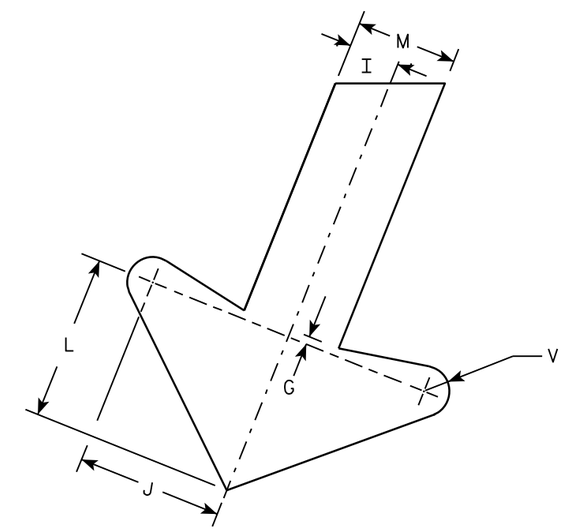

ARROW DETAIL

SIZE	A	B	C	D	E	F	G	H	I	J	K	L	M	N	O	P	Q	R	S	T	U	V	W	X	Y	Z	Area sq. ft.
1																											
2S	24	36	1 1/8	3/8	1/2	4	1/4	2 1/2	1	2 7/8	2 5/8	3 1/4	2	1 1/2	8 1/2	8 1/4		8 1/8	7 5/8	8	22°	1/2	9 1/2				6.0
2M	24	36	1 1/8	3/8	1/2	4	1/4	2 1/2	1	2 7/8	2 5/8	3 1/4	2	1 1/2	8 1/2	8 1/4		8 1/8	7 5/8	8	22°	1/2	9 1/2				6.0
3	36	54	1 3/4	1/2	5/8	6	3/8	3 3/4	1 1/2	4 1/4	4	4 7/8	3	2 1/4	12 3/4	12 1/2		12 1/4	11 1/2	12	22°	3/4	13 1/4				13.5
4																											
5																											

STANDARD SIGN
R3-20R

WISCONSIN DEPT OF TRANSPORTATION

APPROVED Matthew R Rauch
for State Traffic Engineer

DATE 10/18/10 PLATE NO. R3-20R.6

PROJECT NO:	HWY:	COUNTY:		SHEET NO: 82	E

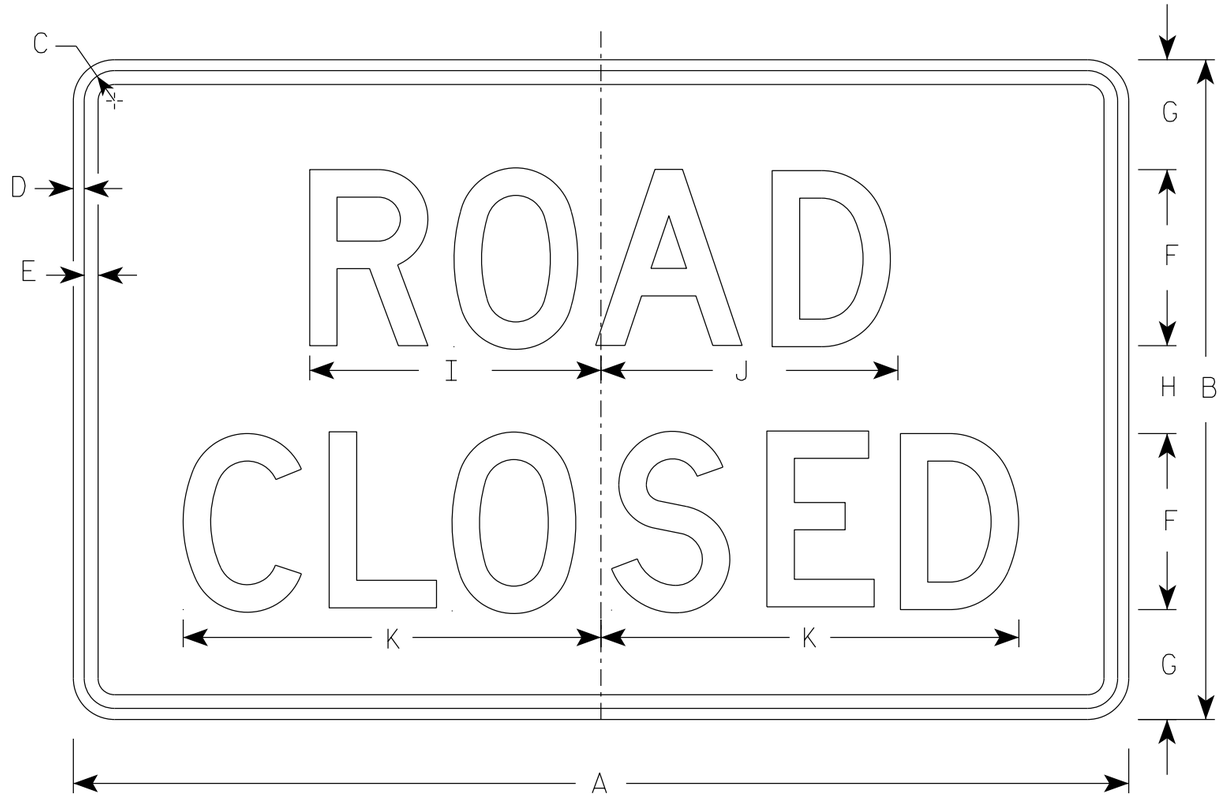

R11-2

NOTES

1. Sign is Type II - Type H Reflective
2. Color:
   Background - White
   Message - Black
3. Message Series - D
4. Corners may be square or rounded when base material is plywood but borders shall be rounded as shown. When base material is metal, the corners and borders shall be rounded.
5. Modify the message as required.

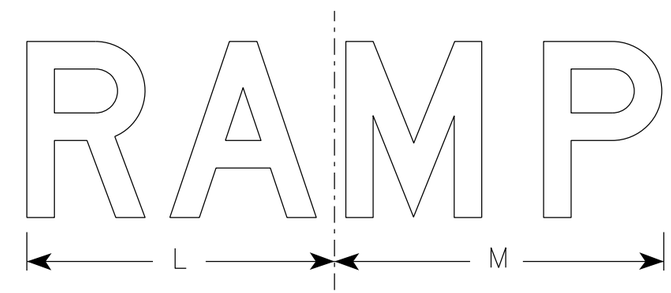

R11-2R

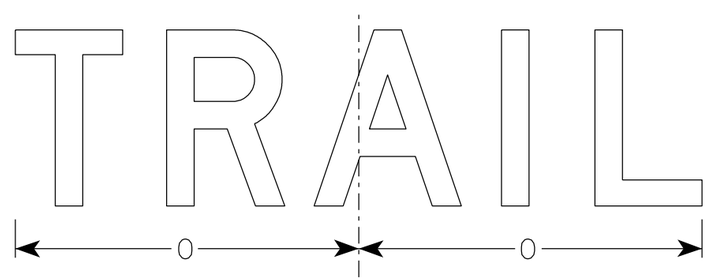

R11-2T

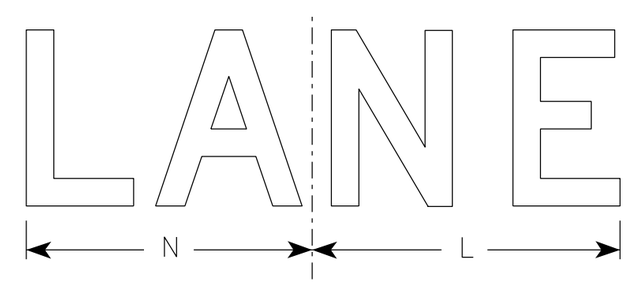

R11-2L

SIZE	A	B	C	D	E	F	G	H	I	J	K	L	M	N	O	P	Q	R	S	T	U	V	W	X	Y	Z	Area sq. ft.
1																											
2S	48	30	1 3/8	1/2	5/8	8	5	4	13 1/4	13 1/2	19	14	15	13	15 5/8												10.0
2M	48	30	1 3/8	1/2	5/8	8	5	4	13 1/4	13 1/2	19	14	15	13	15 5/8												10.0
3	48	30	1 3/8	1/2	5/8	8	5	4	13 1/4	13 1/2	19	14	15	13	15 5/8												10.0
4	48	30	1 3/8	1/2	5/8	8	5	4	13 1/4	13 1/2	19	14	15	13	15 5/8												10.0
5	48	30	1 3/8	1/2	5/8	8	5	4	13 1/4	13 1/2	19	14	15	13	15 5/8												10.0

STANDARD SIGN
R11-2

WISCONSIN DEPT OF TRANSPORTATION

APPROVED Matthew R Rauch
for State Traffic Engineer

DATE 3/29/2021 PLATE NO. R11-2.11

PROJECT NO: | HWY: | COUNTY: | SHEET NO: E

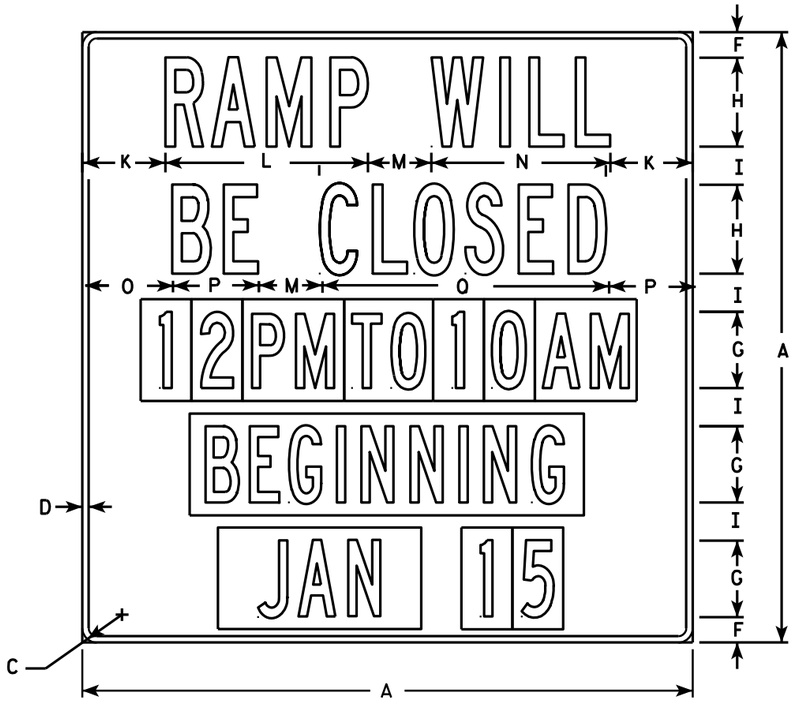

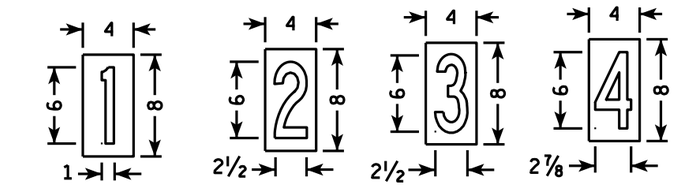

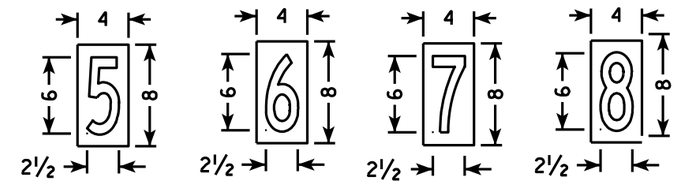

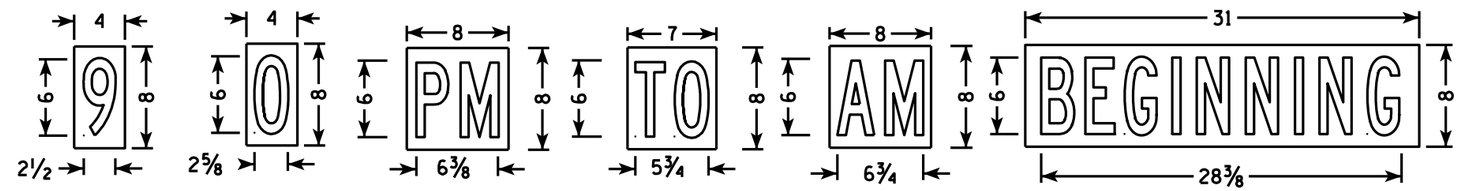

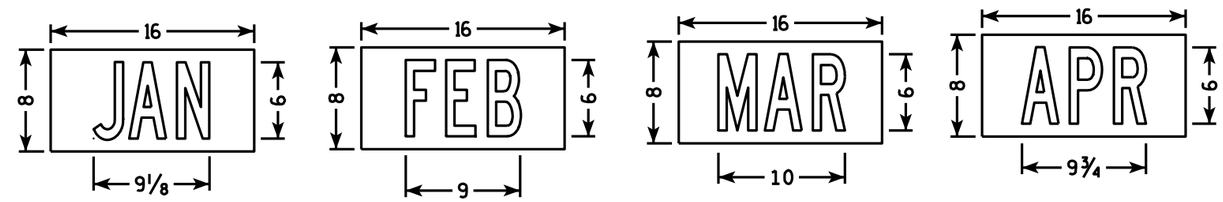

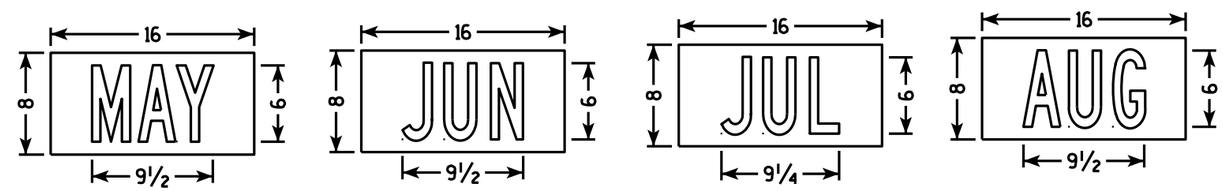

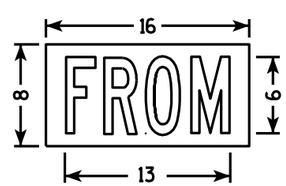

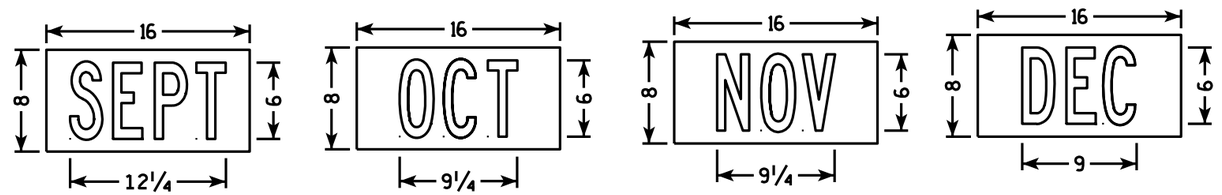

NOTES

1. Sign is Type II - Type H Reflective - reference WIS DOT Standard Specification for HIGHWAY and STRUCTURE CONSTRUCTION latest edition.
2. Color:
   Background - White
   Message - Black
3. Message Series - B
4. Message plaques consist of Type H Reflective sheeting with the appropriate non-reflective black message applied to .040 aluminum and screwed to the base sign.

SIZE	A	B	C	D	E	F	G	H	I	J	K	L	M	N	O	P	Q	R	S	T	U	V	W	X	Y	Z	Area sq. ft.
1																											
2S	48		2 ¼	½		2	6	7	3		6 ½	15 ⅞	5	14 ⅛	6 ⅞	6 ¾	22 ½										16.0
2M	48		2 ¼	½		2	6	7	3		6 ½	15 ⅞	5	14 ⅛	6 ⅞	6 ¾	22 ½										16.0
3																											
4																											
5																											

STANDARD SIGN
R11-51

WISCONSIN DEPT OF TRANSPORTATION

APPROVED Matthew R Rauch
for State Traffic Engineer

DATE 4/1/11 PLATE NO. R11-51.4

PROJECT NO: | HWY: | COUNTY: | SHEET NO: 84 | E

NOTES

1. Sign is Type II - Type F Reflective
2. Color:
   Background - Orange
   Message - Black
3. Message Series - C
4. Corners may be square or rounded when base material is plywood but borders shall be rounded as shown. When base material is metal, the corners and borders shall be rounded.

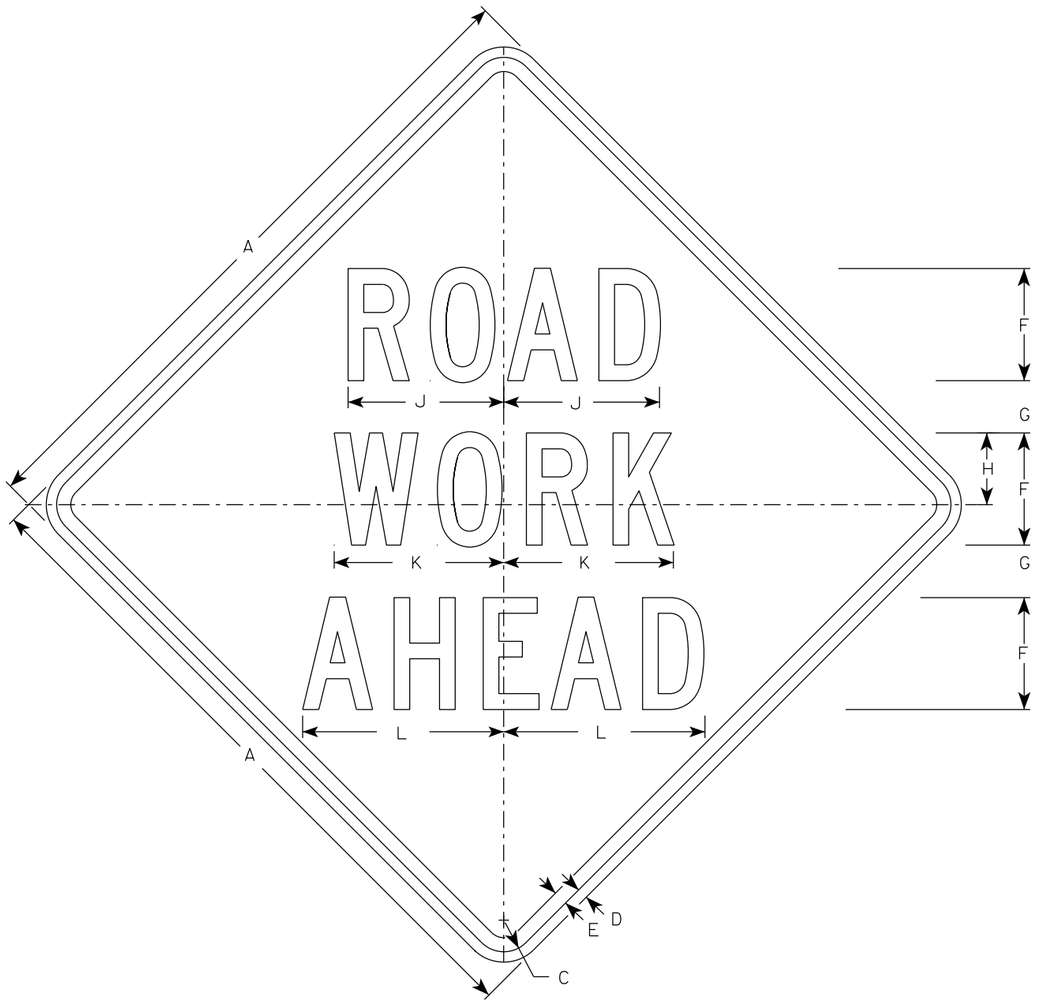

W20-1A

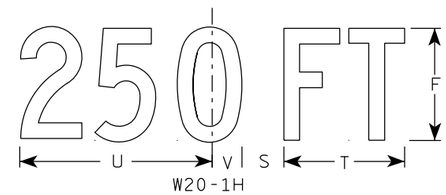

W20-1H

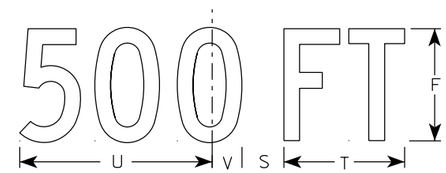

W20-1D

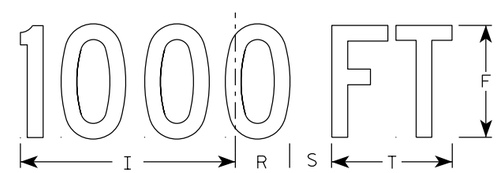

W20-1C

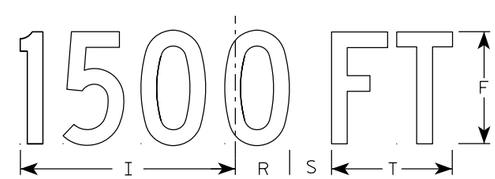

W20-1B

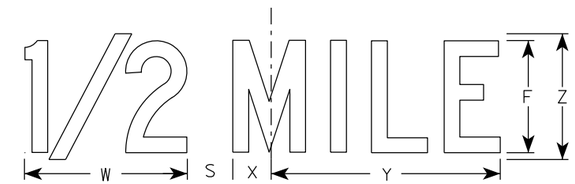

W20-1G

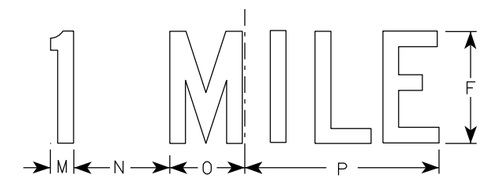

W20-1F

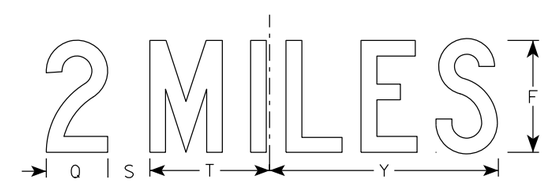

W20-1E

SIZE	A	B	C	D	E	F	G	H	I	J	K	L	M	N	O	P	Q	R	S	T	U	V	W	X	Y	Z	Area sq. ft.
1	36		1 5/8	5/8	3/4	5	2 5/8	3 1/4	10 1/8	7	7 5/8	8 7/8	1 1/8	4 1/2	3 1/2	9	3 1/4	2 1/2	2 1/4	5 5/8	9	1 3/8	8	1 3/4	10 3/4	6	9.0
2S	48		2 1/4	3/4	1	8	3 3/4	5 1/8	15 3/8	11 1/8	12 1/8	14 3/8	1 5/8	6 7/8	5 3/8	13 7/8	4 3/8	3 7/8	3	8 5/8	13 3/4	2 1/8	11 7/8	2 3/4	16 3/8	9	16.0
2M	48		2 1/4	3/4	1	8	3 3/4	5 1/8	15 3/8	11 1/8	12 1/8	14 3/8	1 5/8	6 7/8	5 3/8	13 7/8	4 3/8	3 7/8	3	8 5/8	13 3/4	2 1/8	11 7/8	2 3/4	16 3/8	9	16.0
3	48		2 1/4	3/4	1	8	3 3/4	5 1/8	15 3/8	11 1/8	12 1/8	14 3/8	1 5/8	6 7/8	5 3/8	13 7/8	4 3/8	3 7/8	3	8 5/8	13 3/4	2 1/8	11 7/8	2 3/4	16 3/8	9	16.0
4	48		2 1/4	3/4	1	8	3 3/4	5 1/8	15 3/8	11 1/8	12 1/8	14 3/8	1 5/8	6 7/8	5 3/8	13 7/8	4 3/8	3 7/8	3	8 5/8	13 3/4	2 1/8	11 7/8	2 3/4	16 3/8	9	16.0
5	48		2 1/4	3/4	1	8	3 3/4	5 1/8	15 3/8	11 1/8	12 1/8	14 3/8	1 5/8	6 7/8	5 3/8	13 7/8	4 3/8	3 7/8	3	8 5/8	13 3/4	2 1/8	11 7/8	2 3/4	16 3/8	9	16.0

STANDARD SIGN
W20-1A, B, C, D, E, F, G & H

WISCONSIN DEPT OF TRANSPORTATION

APPROVED Matthew R Rauch
For State Traffic Engineer
DATE 3/25/2020 PLATE NO. W20-1.11

PROJECT NO:

SHEET NO: 85 E

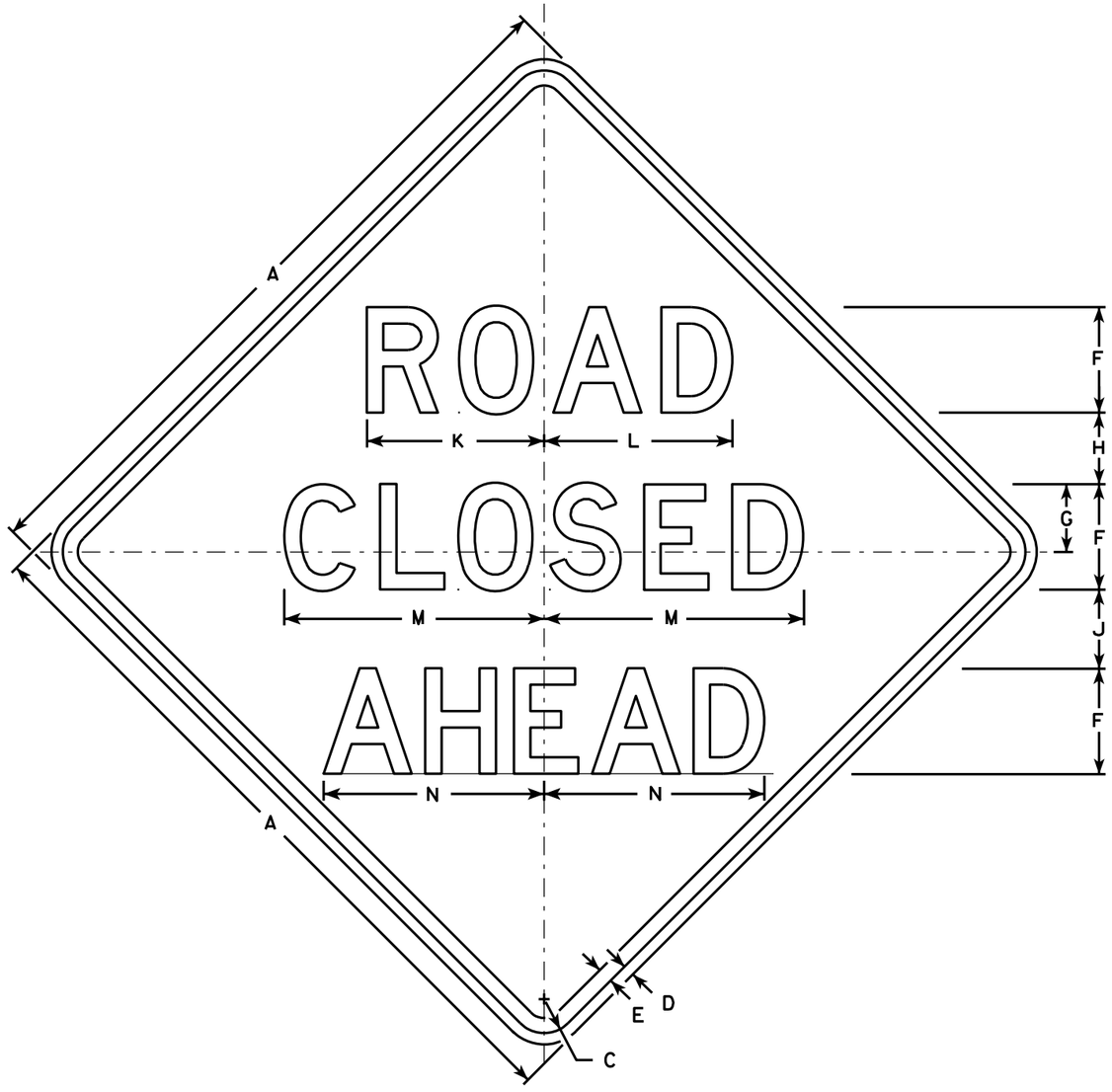

W20-3A

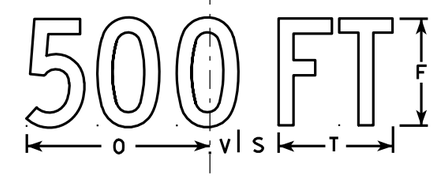

W20-3D

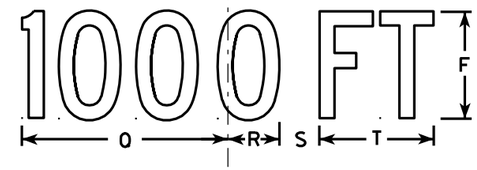

W20-3C

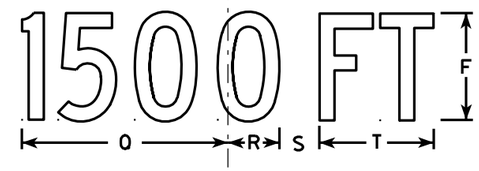

W20-3B

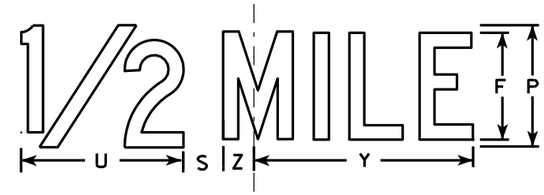

W20-3G

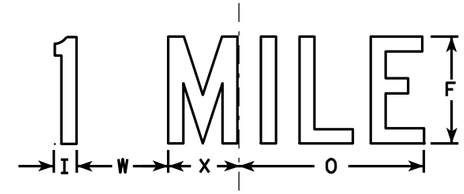

W20-3F

NOTES

1. Sign is Type II - Type F Reflective - reference WIS DOT Standard Specification for HIGHWAY and STRUCTURE CONSTRUCTION latest edition.
2. Color:
   Background - Orange
   Message - Black
3. Message Series - see note 5
4. Corners may be square or rounded when base material is plywood but borders shall be rounded as shown. When base material is metal, the corners and borders shall be rounded.
5. Lines 1 and 2 are Series D.
   Line 3 is Series D for AHEAD and Series C for all other distances.

SIZE	A	B	C	D	E	F	G	H	I	J	K	L	M	N	O	P	Q	R	S	T	U	V	W	X	Y	Z	Area sq. ft.
1	36		1 5/8	5/8	3/4	5	3 3/8	3 1/2	1 1/8	4	8 3/8	8 7/8	12 1/2	11	9	6	10 1/8	2 1/2	1 7/8	5 5/8	8	1 3/8	4 1/2	3 1/2	10 3/4	1 3/4	9.0
2S	48		2 1/4	3/4	1	7	4 1/2	4 3/4	1 1/2	5 1/4	11 3/4	12 1/2	17 1/4	14 5/8	12	8	13 1/2	3 3/8	2 5/8	7 1/2	10 5/8	1 7/8	6	4 5/8	14 3/8	2 3/8	16.0
2M	48		2 1/4	3/4	1	7	4 1/2	4 3/4	1 1/2	5 1/4	11 3/4	12 1/2	17 1/4	14 5/8	12	8	13 1/2	3 3/8	2 5/8	7 1/2	10 5/8	1 7/8	6	4 5/8	14 3/8	2 3/8	16.0
3	48		2 1/4	3/4	1	7	4 1/2	4 3/4	1 1/2	5 1/4	11 3/4	12 1/2	17 1/4	14 5/8	12	8	13 1/2	3 3/8	2 5/8	7 1/2	10 5/8	1 7/8	6	4 5/8	14 3/8	2 3/8	16.0
4	48		2 1/4	3/4	1	7	4 1/2	4 3/4	1 1/2	5 1/4	11 3/4	12 1/2	17 1/4	14 5/8	12	8	13 1/2	3 3/8	2 5/8	7 1/2	10 5/8	1 7/8	6	4 5/8	14 3/8	2 3/8	16.0
5	48		2 1/4	3/4	1	7	4 1/2	4 3/4	1 1/2	5 1/4	11 3/4	12 1/2	17 1/4	14 5/8	12	8	13 1/2	3 3/8	2 5/8	7 1/2	10 5/8	1 7/8	6	4 5/8	14 3/8	2 3/8	16.0

STANDARD SIGN
W20-3A, B, C, D, F & G

WISCONSIN DEPT OF TRANSPORTATION

APPROVED Matthew R Rauch
for State Traffic Engineer
DATE 3/18/11 PLATE NO. W20-3.7

PROJECT NO:	HWY:	COUNTY:		SHEET NO: 86	E

W20-56A

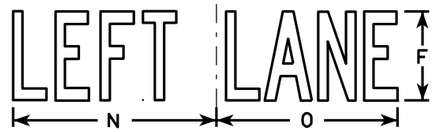

W20-55A

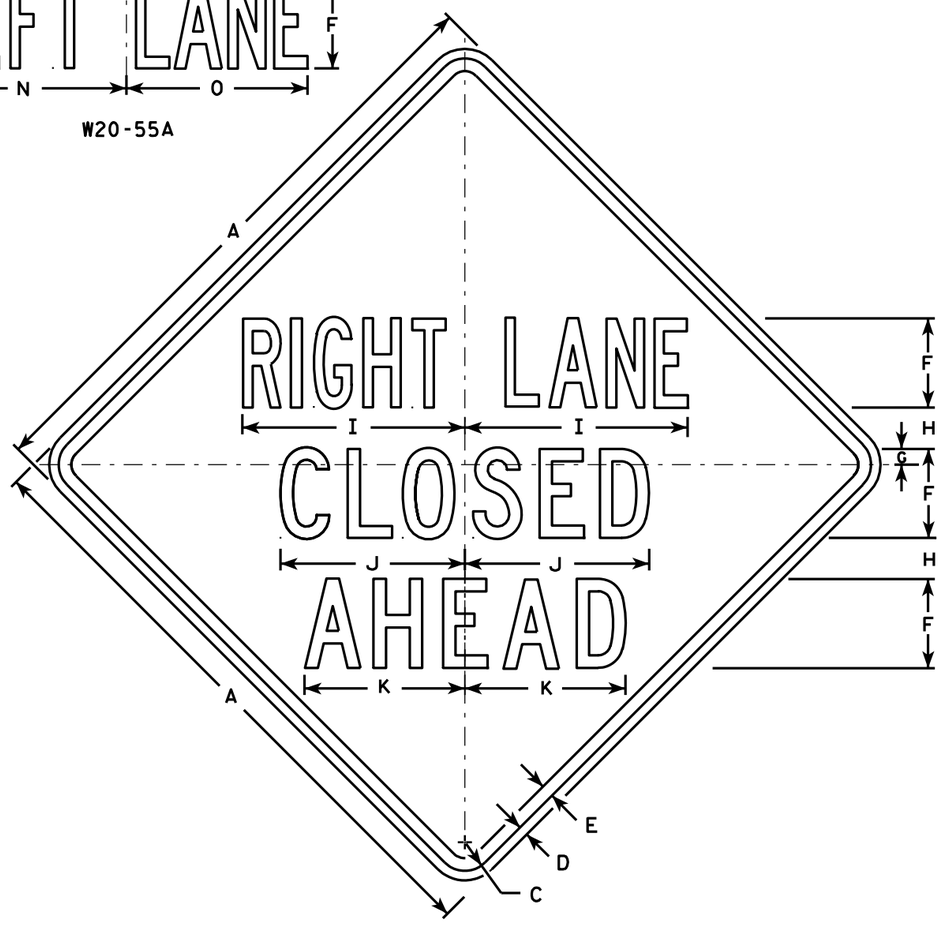

W20-5A

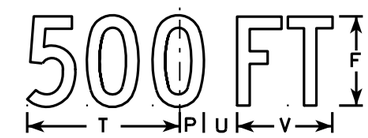

W20-5D

W20-5C

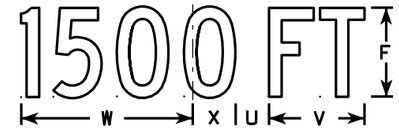

W20-5B

W20-5G

W20-5F

NOTES

1. Sign is Type II - Type F Reflective - reference WIS DOT Standard Specification for HIGHWAY and STRUCTURE CONSTRUCTION latest edition.
2. Color:
   Background - Orange
   Message - Black
3. Message Series - See Note 5
4. Corners may be square or rounded when base material is plywood but borders shall be rounded as shown. When base material is metal, the corners and borders shall be rounded.
5. " ------- LANE" is Series B.
   All other copy is Series C.

SIZE	A	B	C	D	E	F	G	H	I	J	K	L	M	N	O	P	Q	R	S	T	U	V	W	X	Y	Z	Area sq. ft.
1	36	6	1 5/8	5/8	3/4	5	7/8	2 1/2	13 1/8	10 3/4	9 1/2	14 1/4	13 5/8	12	12	1 3/8	1 1/8	4 1/2	3 1/2	9	1 7/8	5 5/8	10 1/8	2 1/2	1 3/4	8	9.0
2S	48	8	2 1/4	3/4	1	7	1 1/4	3 1/4	17 1/2	14 3/8	12 5/8	19	18 3/8	16	14 1/4	1 7/8	1 1/2	6	4 5/8	12	2 5/8	7 1/2	13 1/2	3 3/8	2 3/8	10 5/8	16.0
2M	48	8	2 1/4	3/4	1	7	1 1/4	3 1/4	17 1/2	14 3/8	12 5/8	19	18 3/8	16	14 1/4	1 7/8	1 1/2	6	4 5/8	12	2 5/8	7 1/2	13 1/2	3 3/8	2 3/8	10 5/8	16.0
3	48	8	2 1/4	3/4	1	7	1 1/4	3 1/4	17 1/2	14 3/8	12 5/8	19	18 3/8	16	14 1/4	1 7/8	1 1/2	6	4 5/8	12	2 5/8	7 1/2	13 1/2	3 3/8	2 3/8	10 5/8	16.0
4	48	8	2 1/4	3/4	1	7	1 1/4	3 1/4	17 1/2	14 3/8	12 5/8	19	18 3/8	16	14 1/4	1 7/8	1 1/2	6	4 5/8	12	2 5/8	7 1/2	13 1/2	3 3/8	2 3/8	10 5/8	16.0
5	48	8	2 1/4	3/4	1	7	1 1/4	3 1/4	17 1/2	14 3/8	12 5/8	19	18 3/8	16	14 1/4	1 7/8	1 1/2	6	4 5/8	12	2 5/8	7 1/2	13 1/2	3 3/8	2 3/8	10 5/8	16.0

STANDARD SIGN
W20-5A, B, C, D, F & G

WISCONSIN DEPT OF TRANSPORTATION

APPROVED Matthew R Rauch
for State Traffic Engineer

DATE 3/18/11 PLATE NO. W20-5.11

PROJECT NO:	HWY:	COUNTY:		SHEET NO: 87	E

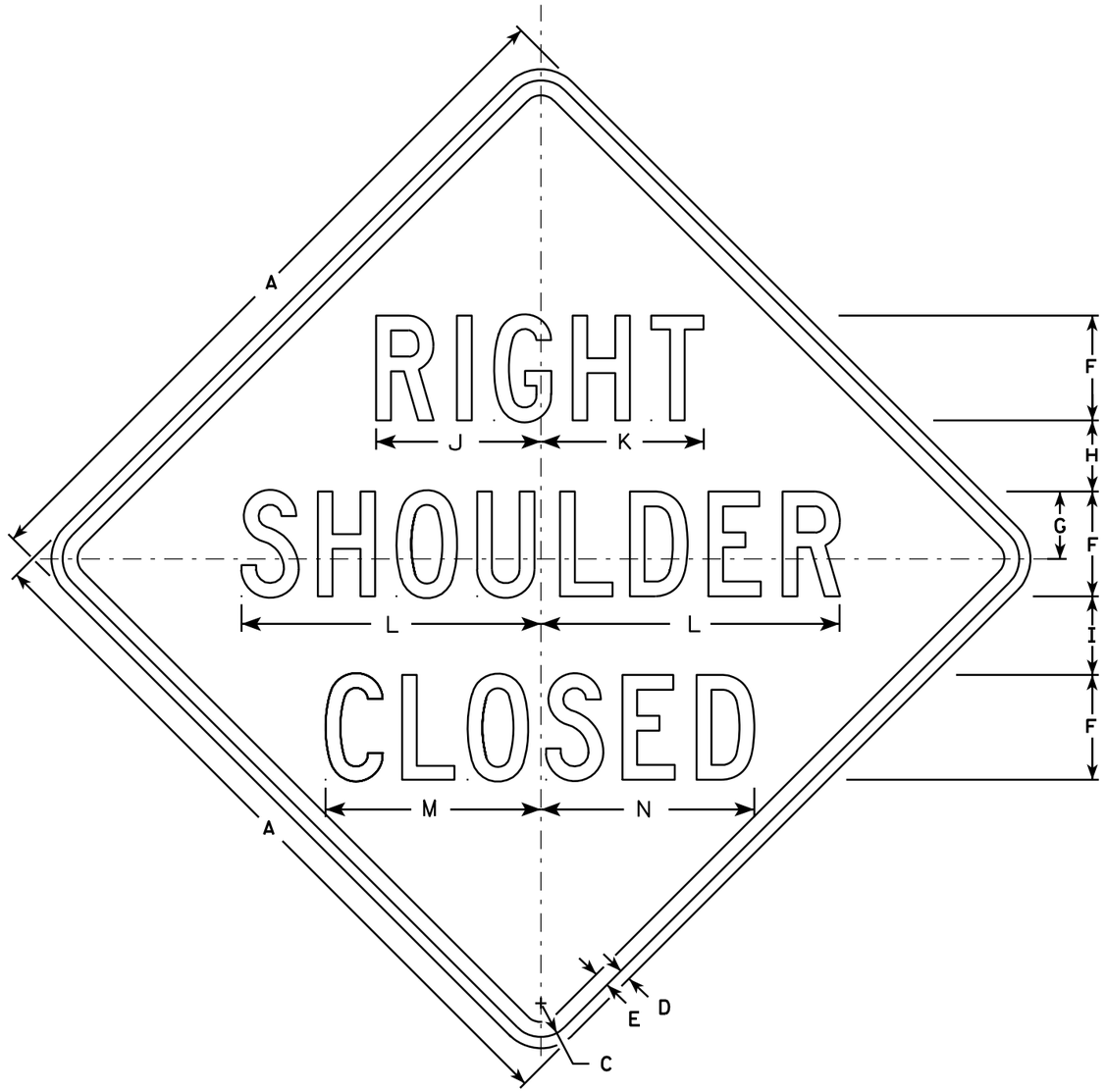

W21-5A

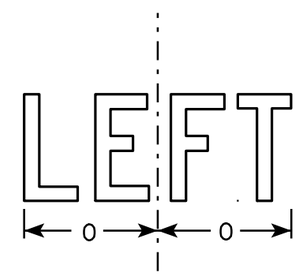

W21-5AL

NOTES

1. Sign is Type II - Type F Reflective - reference WIS DOT Standard Specification for HIGHWAY and STRUCTURE CONSTRUCTION latest edition.
2. Color:
   Background - Orange
   Message - Black
3. Message Series - D
4. Corners may be square or rounded when base material is plywood but borders shall be rounded as shown. When base material is metal, the corners and borders shall be rounded.

SIZE	A	B	C	D	E	F	G	H	I	J	K	L	M	N	O	P	Q	R	S	T	U	V	W	X	Y	Z	Area sq. ft.
1	36		1 5/8	5/8	3/4	5	3 3/8	3 1/2	4	7 7/8	7 3/4	14 1/4	10 1/4	10 1/8	6 1/4												9.0
2S	48		2 1/4	3/4	1	7	4 1/2	4 3/4	5 1/4	11	10 7/8	20	14 3/8	14 1/4	8 3/4												16.0
2M	48		2 1/4	3/4	1	7	4 1/2	4 3/4	5 1/4	11	10 7/8	20	14 3/8	14 1/4	8 3/4												16.0
3	48		2 1/4	3/4	1	7	4 1/2	4 3/4	5 1/4	11	10 7/8	20	14 3/8	14 1/4	8 3/4												16.0
4	48		2 1/4	3/4	1	7	4 1/2	4 3/4	5 1/4	11	10 7/8	20	14 3/8	14 1/4	8 3/4												16.0
5	48		2 1/4	3/4	1	7	4 1/2	4 3/4	5 1/4	11	10 7/8	20	14 3/8	14 1/4	8 3/4												16.0

STANDARD SIGN
W21-5A

WISCONSIN DEPT OF TRANSPORTATION

APPROVED Matthew R Rauch
for State Traffic Engineer

DATE 3/21/11 PLATE NO. W21-5A.3

PROJECT NO:	HWY:	COUNTY:		SHEET NO: 88	E

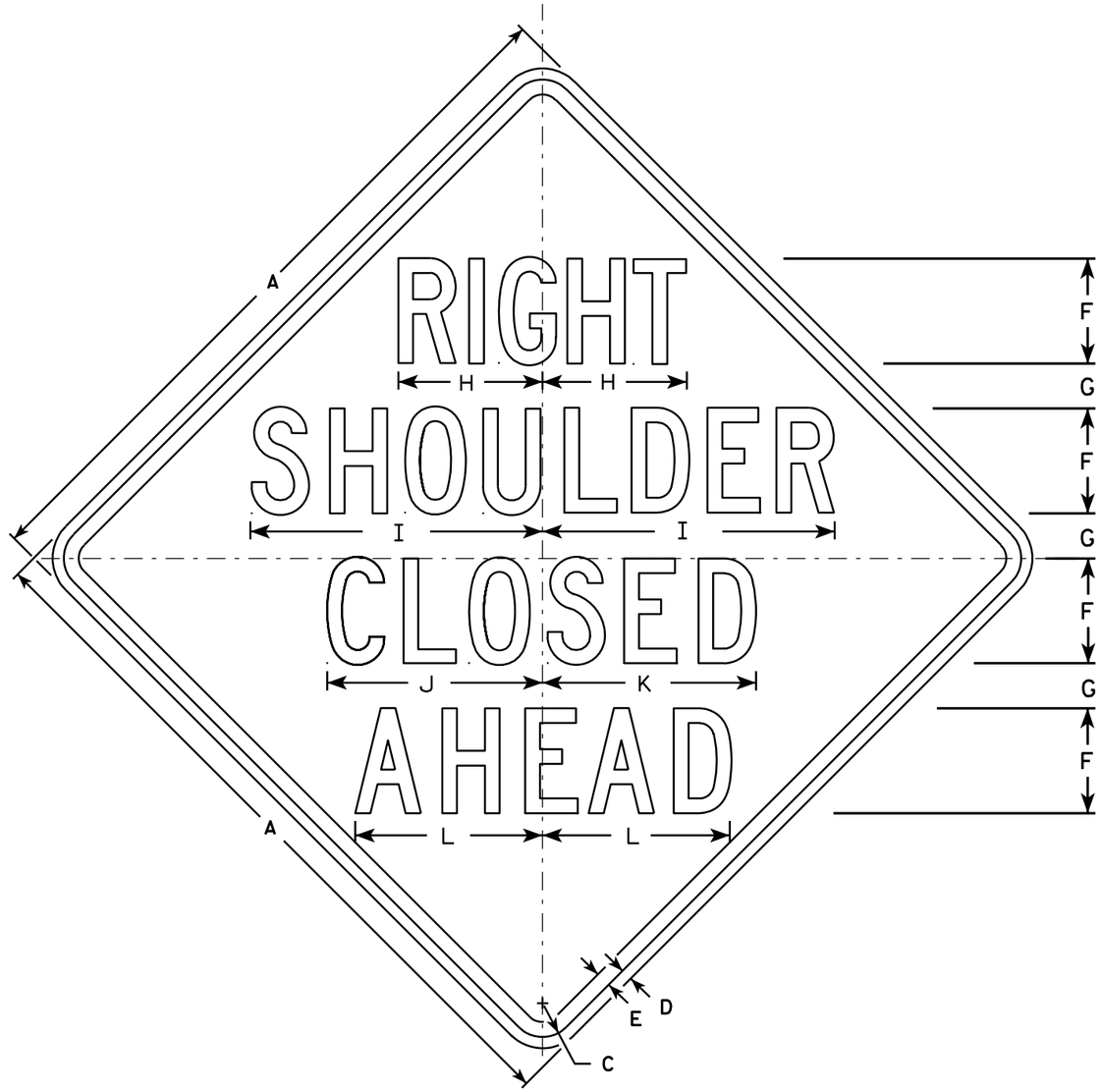

W21-5B

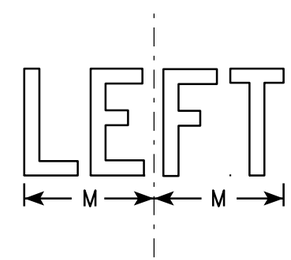

W21-5BL

NOTES

1. Sign is Type II - Type F Reflective - reference WIS DOT Standard Specification for HIGHWAY and STRUCTURE CONSTRUCTION latest edition.
2. Color:
   Background - Orange
   Message - Black
3. Message Series - C
4. Corners may be square or rounded when base material is plywood but borders shall be rounded as shown. When base material is metal, the corners and borders shall be rounded.

SIZE	A	B	C	D	E	F	G	H	I	J	K	L	M	N	O	P	Q	R	S	T	U	V	W	X	Y	Z	Area sq. ft.
1	36		1 5/8	5/8	3/4	5	2 1/4	7 3/8	14 1/4	10 1/4	10 1/8	8 7/8	6 1/4														9.0
2S	48		2 1/4	3/4	1	7	3	9 5/8	19 1/2	14 3/8	14 1/4	12 1/2	8 1/2														16.0
2M	48		2 1/4	3/4	1	7	3	9 5/8	19 1/2	14 3/8	14 1/4	12 1/2	8 1/2														16.0
3	48		2 1/4	3/4	1	7	3	9 5/8	19 1/2	14 3/8	14 1/4	12 1/2	8 1/2														16.0
4	48		2 1/4	3/4	1	7	3	9 5/8	19 1/2	14 3/8	14 1/4	12 1/2	8 1/2														16.0
5	48		2 1/4	3/4	1	7	3	9 5/8	19 1/2	14 3/8	14 1/4	12 1/2	8 1/2														16.0

STANDARD SIGN
W21-5B

WISCONSIN DEPT OF TRANSPORTATION

APPROVED Matthew R Rauch
for State Traffic Engineer

DATE 3/21/11 PLATE NO. W21-5B.3

PROJECT NO: | HWY: | COUNTY: | SHEET NO: 89 | E

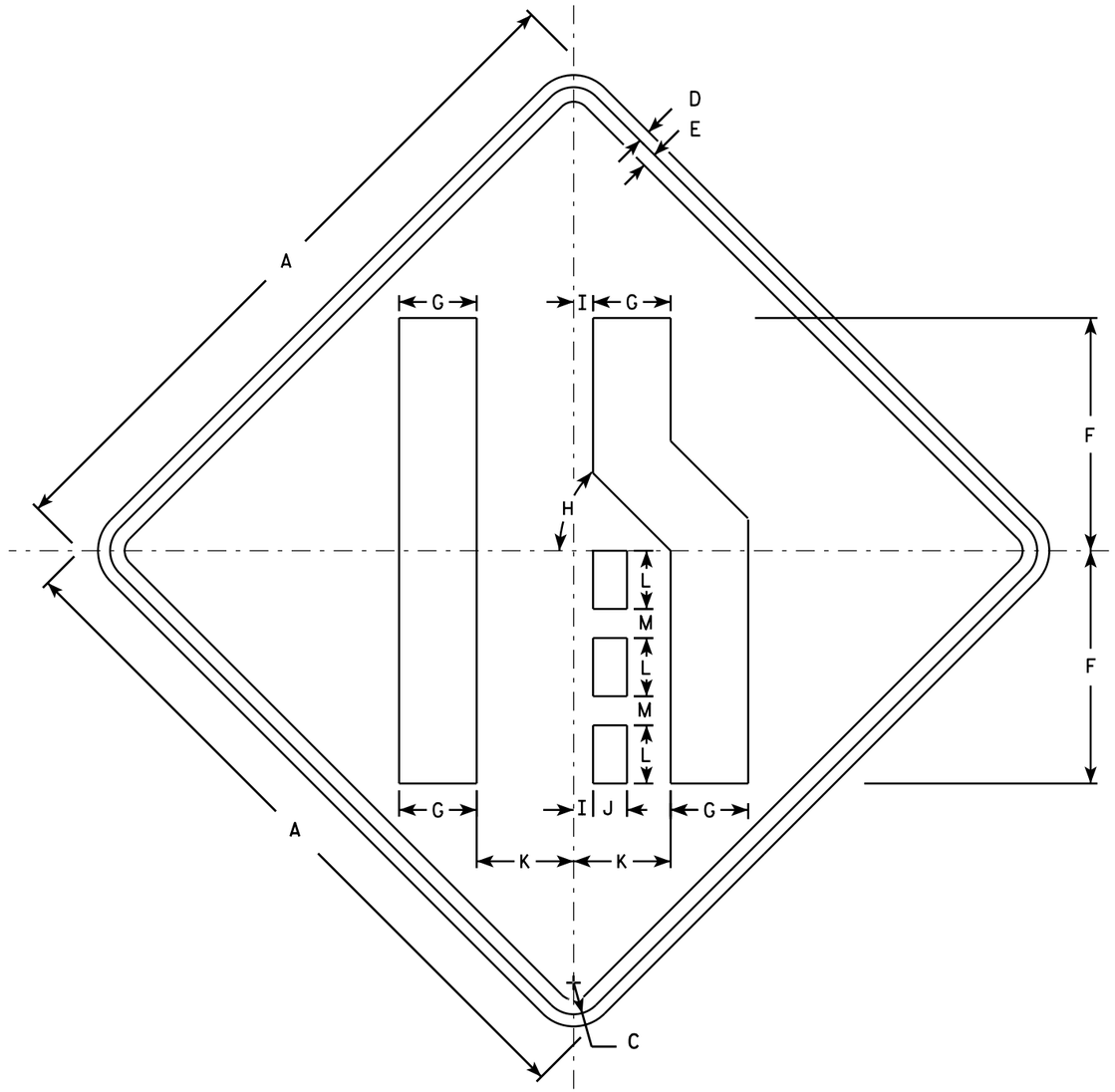

W04-2R

NOTES

1. Sign is Type II - Type F Reflective - reference WIS DOT Standard Specification for HIGHWAY and STRUCTURE CONSTRUCTION latest edition.
2. Color:
   Background - Orange
   Message - Black
3. Corners may be square or rounded when base material is plywood but borders shall be rounded as shown. When base material is metal, the corners and borders shall be rounded.
4. W04-2L is the same as W04-2R except the symbol is reversed along the vertical centerline.

SIZE	A	B	C	D	E	F	G	H	I	J	K	L	M	N	O	P	Q	R	S	T	U	V	W	X	Y	Z	Area sq. ft.
1	36		1 5/8	5/8	3/4	12	4	45°	1	1 3/4	5	3	1 1/2														9.0
2S	48		2 1/4	3/4	1	16	5 3/8	45°	1 1/4	2 3/8	6 3/4	4	2														16.0
2M	48		2 1/4	3/4	1	16	5 3/8	45°	1 1/4	2 3/8	6 3/4	4	2														16.0
3	48		2 1/4	3/4	1	16	5 3/8	45°	1 1/4	2 3/8	6 3/4	4	2														16.0
4	48		2 1/4	3/4	1	16	5 3/8	45°	1 1/4	2 3/8	6 3/4	4	2														16.0
5	48		2 1/4	3/4	1	16	5 3/8	45°	1 1/4	2 3/8	6 3/4	4	2														16.0

STANDARD SIGN
W04-2

WISCONSIN DEPT OF TRANSPORTATION

APPROVED Matthew R Rauch
for State Traffic Engineer

DATE 11/20/13 PLATE 90 W04-2.1

PROJECT NO:

SHEET NO: E

STATE PROJECT NUMBER

1060-53-70

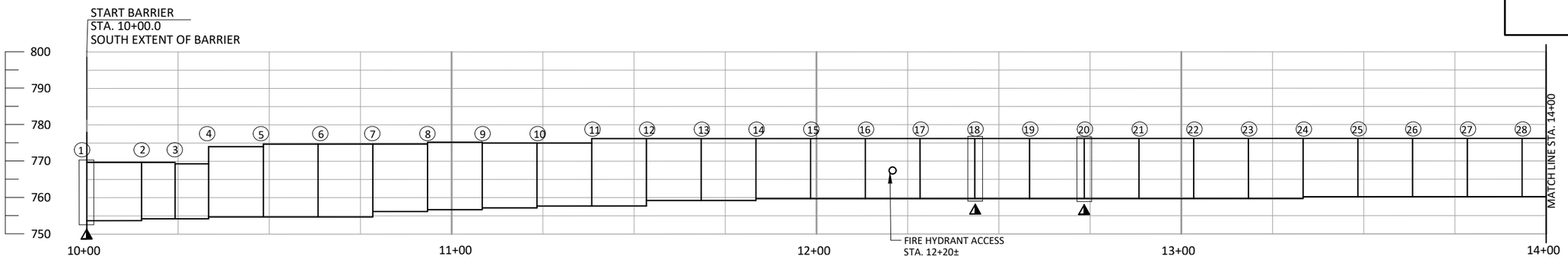

GROUND MOUNTED NOISE BARRIER

(LOOKING WEST - ROADWAY SIDE)

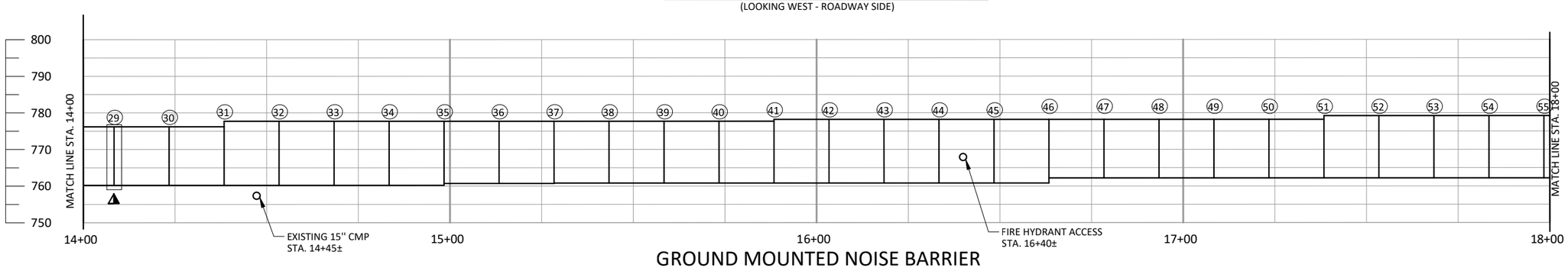

GROUND MOUNTED NOISE BARRIER

(LOOKING WEST - ROADWAY SIDE)

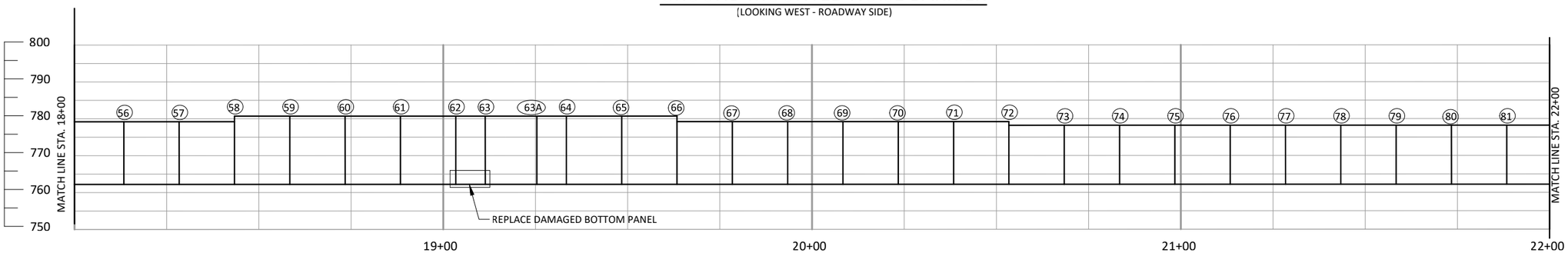

GROUND MOUNTED NOISE BARRIER

(LOOKING WEST - ROADWAY SIDE)

PANEL REPLACEMENT SEQUENCE

1. LOCATE DAMAGED SOUND PANEL

2. REMOVE AND SALVAGE EXISTING UNDAMAGED PANELS FROM THE STRUCTURAL SUPPORT POSTS BY LIFTING THEM OUT. COST TO REMOVE, STORE, AND REINSTALL THE SOUND PANELS IS INCLUDED IN THE BID ITEM "REMOVING AND REINSTALLING SOUND PANELS". ANY DAMAGE TO THE UNDAMAGED PANELS CAUSED BY THE CONTRACTOR DURING REMOVAL, STORAGE OR REINSTALLING THE PANELS SHALL BE REPAIRED BY THE CONTRACTOR AT NO ADDITIONAL COST TO THE DEPARTMENT.

3. REMOVE AND REPLACE IDENTIFIED DAMAGED PANEL UNDER BID ITEM 'REPLACEMENT NOISE BARRIER PANELS DOUBLE-SIDED SOUND ABSORPTIVE N-40-6".

4. REPLACE SALVAGED PANELS

TOTAL ESTIMATED QUANTITIES

ITEM NUMBER	BID ITEM	UNIT	TOTAL
517.3001.S.01	STRUCTURE OVERCOATING CLEANING AND PRIMING N-40-6	EA	1
517.4001.S.01	CONTAINMENT AND COLLECTION OF WASTE MATERIAL N-40-6	EA	1
SPV.0060.02	REMOVING AND REINSTALLING SOUND PANELS	EA	5
SPV.0165.01	REPLACEMENT NOISE BARRIER PANELS DOUBLE-SIDED SOUND ABSORPTIVE N-40-6	SF	104

GENERAL NOTES

DRAWINGS SHALL NOT BE SCALED.

DIMENSIONS SHOWN ARE BASED ON THE ORIGINAL STRUCTURE PLANS.

ORIGINAL CONSTRUCTION YEAR IS 2000.

CLEAN RUSTED AREAS OF STRUCTURAL SUPPORT POST (LOCATED ON PLAN AND AS DIRECTED BY FIELD ENGINEER) TO BARE METAL AS PER BID ITEM "STRUCTURE OVERCOAT CLEANING AND PRIMING N-40-6". APPLY PRIMER AND INTERMEDIATE COATS TO THE AREA.

OVERCOAT PAINT ALL OF THE STRUCTURAL SUPPORT POSTS AND BRACKETS. PAINT SHALL BE BROWN, SHERMAN WILLIAMS CHAPS B SW2180 OR APPROVED EQUAL.

LEGEND

▲ - REMOVE RUST AND RE-PAINT ON RAMP SIDE
◓ - REMOVE RUST AND RE-PAINT ON RESIDENTIAL SIDE
◯ - SUPPORT POST (NUMBERED SOUTH TO NORTH)

LIST OF DRAWINGS:

1. GENERAL PLAN & ELEVATION 1
2. GENERAL PLAN & ELEVATION 2
3. GENERAL PLAN & ELEVATION 3

WISCONSIN
THOMAS J. ROMENESKO
E-26318
MADISON
WI
PROFESSIONAL ENGINEER

DESIGN CONSULTANT
TOM ROMENESKO, PE
(608) 566-1370

BRIDGE OFFICE CONTACT
AARON BONK, PE
(608) 261-0261

NO.	DATE	REVISION	BY

DAAR ENGINEERING, INC.
www.daarcorp.com
Milwaukee, WI 53202
414-225-9817

STATE OF WISCONSIN
DEPARTMENT OF TRANSPORTATION

ACCEPTED SDR 08/09/22
CHIEF STRUCTURES DESIGN ENGINEER DATE

STRUCTURE N-40-6

NOISE BARRIER, 0.11 MILE S. JCT W. COLLEGE AVE.

COUNTY MILWAUKEE | ~~TOWN~~/CITY/~~VILLAGE~~ MILWAUKEE

DESIGN SPEC.
AASHTO LRFD BRIDGE DESIGN SPECIFICATIONS

DESIGNED BY MC	DESIGN CK'D. TR	DRAWN BY MC	PLANS CK'D. TR

GENERAL PLAN & ELEVATION 1

STATE PROJECT NUMBER
1060-53-70

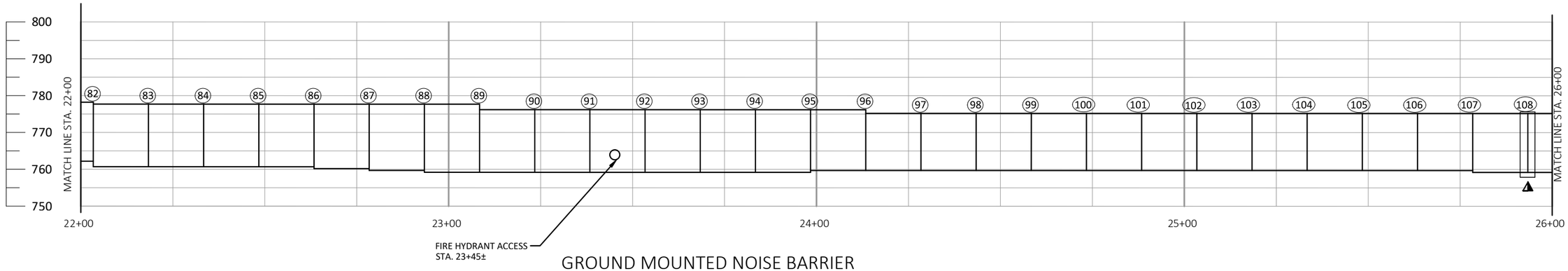

GROUND MOUNTED NOISE BARRIER

(LOOKING WEST - ROADWAY SIDE)

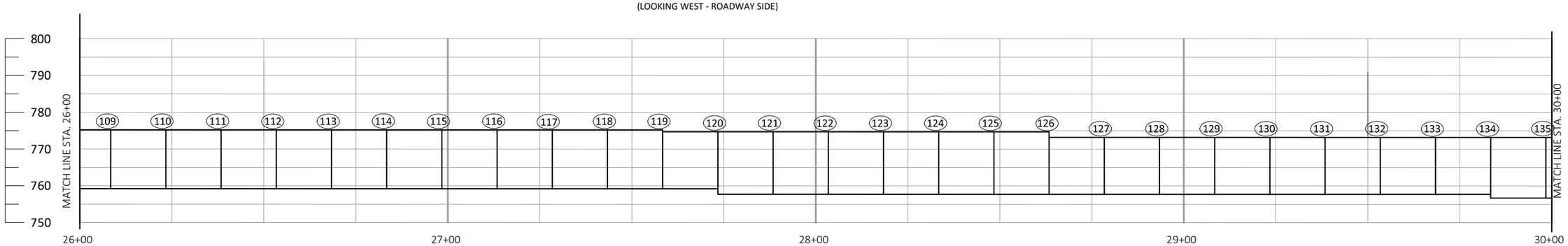

GROUND MOUNTED NOISE BARRIER

(LOOKING WEST - ROADWAY SIDE)

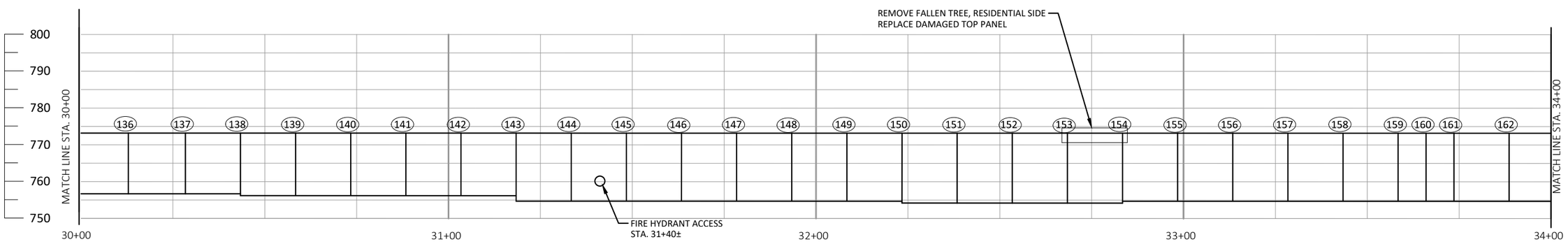

GROUND MOUNTED NOISE BARRIER

(LOOKING WEST - ROADWAY SIDE)

LEGEND

- ▲ - REMOVE RUST AND RE-PAINT ON RAMP SIDE
- ◓ - REMOVE RUST AND RE-PAINT ON RESIDENTIAL SIDE
- ◯ - SUPPORT POST (NUMBERED SOUTH TO NORTH)

NO.	DATE	REVISION	BY

STATE OF WISCONSIN
DEPARTMENT OF TRANSPORTATION

STRUCTURE N-40-6

DRAWN BY MC | PLANS CK'D. TR

GENERAL PLAN & ELEVATION 2

SHEET 2 OF 3

STATE PROJECT NUMBER

1060-53-70

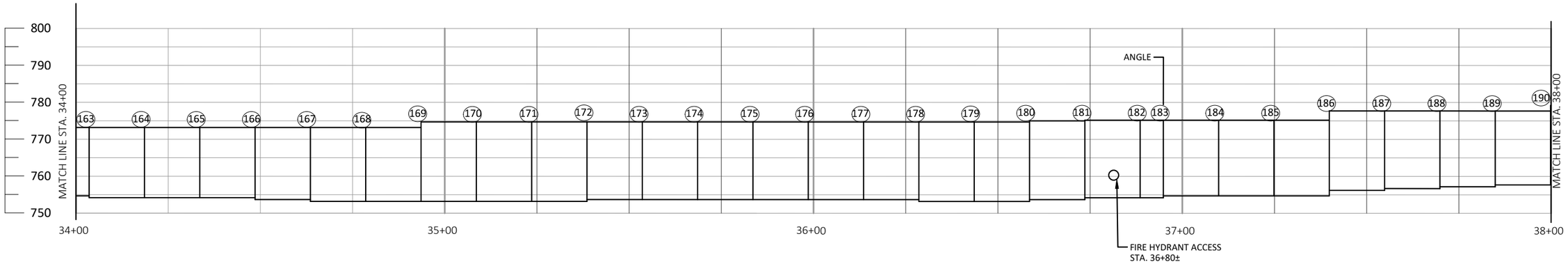

GROUND MOUNTED NOISE BARRIER

(LOOKING WEST - ROADWAY SIDE)

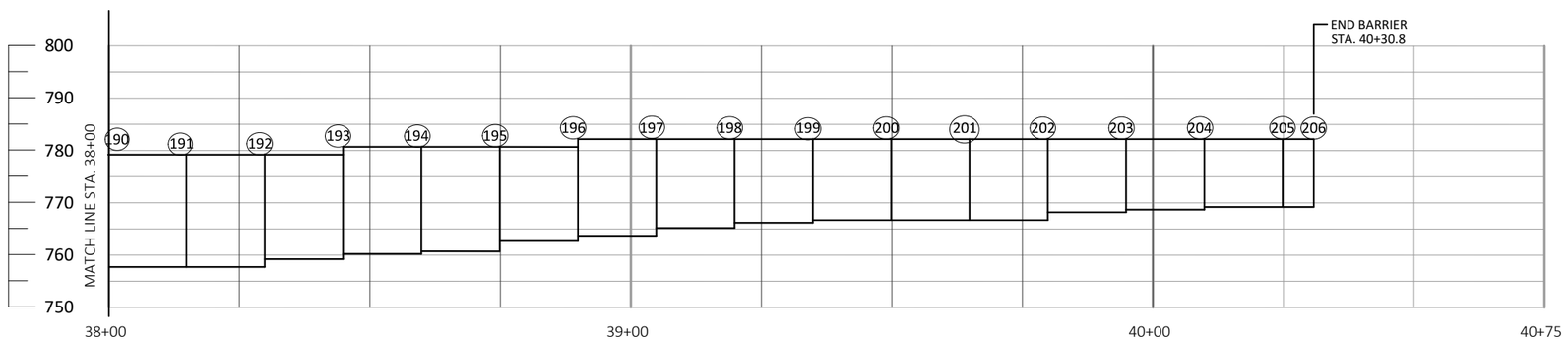

GROUND MOUNTED NOISE BARRIER

(LOOKING WEST - ROADWAY SIDE)

LEGEND

- REMOVE RUST AND RE-PAINT ON RAMP SIDE
- REMOVE RUST AND RE-PAINT ON RESIDENTIAL SIDE
- SUPPORT POST (NUMBERED SOUTH TO NORTH)

NO.	DATE	REVISION	BY

STATE OF WISCONSIN
DEPARTMENT OF TRANSPORTATION

STRUCTURE N-40-6

DRAWN BY MC | PLANS CK'D. TR

GENERAL PLAN & ELEVATION 3

SHEET 3 OF 3

STATE PROJECT NUMBER

1060-53-70

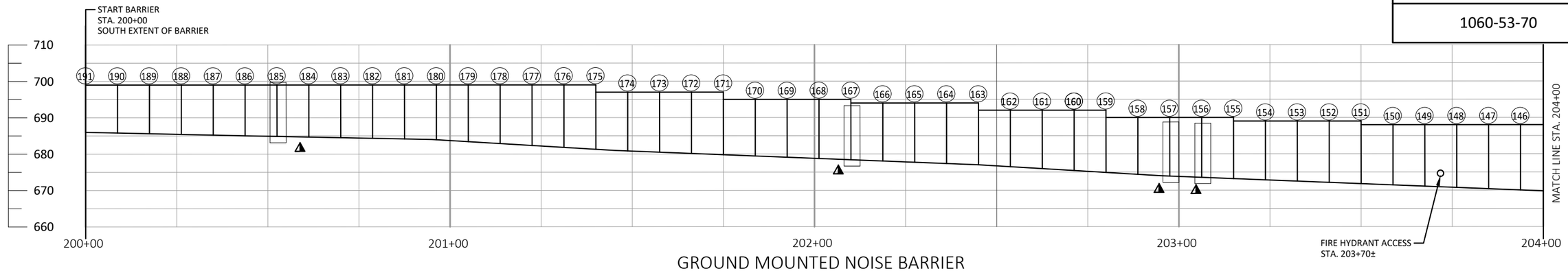

GROUND MOUNTED NOISE BARRIER

(LOOKING WEST - ROADWAY SIDE)

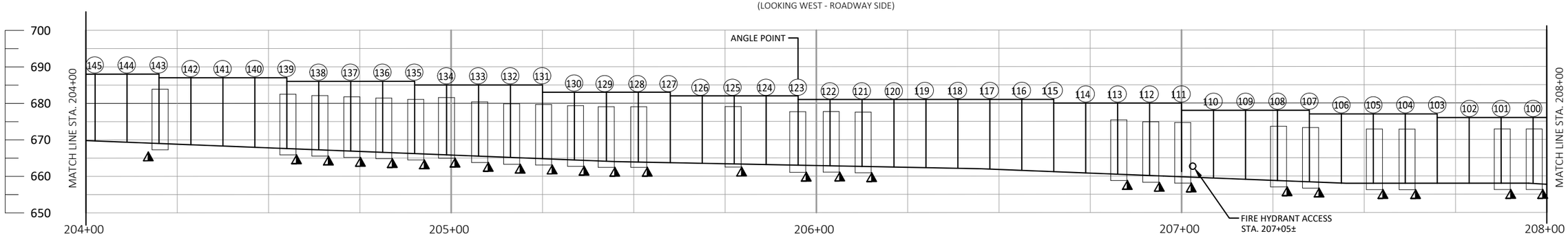

GROUND MOUNTED NOISE BARRIER

(LOOKING WEST - ROADWAY SIDE)

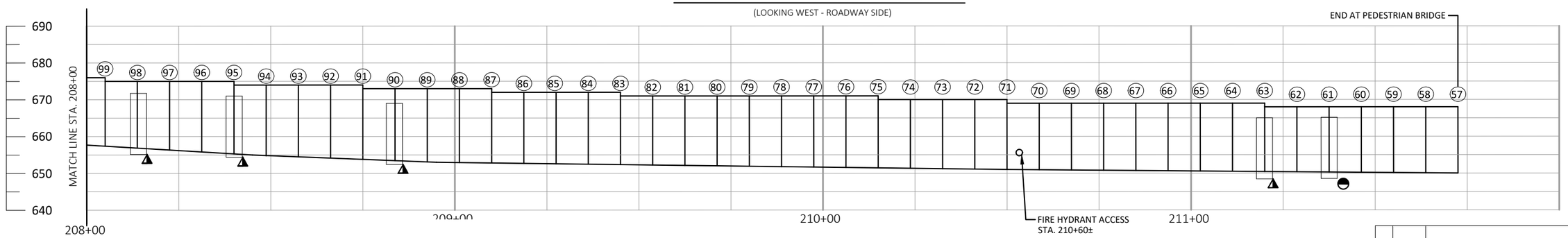

GROUND MOUNTED NOISE BARRIER

(LOOKING WEST - ROADWAY SIDE)

LIST OF DRAWINGS:

1. GENERAL PLAN & ELEVATION 1
2. GENERAL PLAN & ELEVATION 2

GENERAL NOTES

DRAWINGS SHALL NOT BE SCALED.

DIMENSIONS SHOWN ARE BASED ON THE ORIGINAL STRUCTURE PLANS.

ORIGINAL CONSTRUCTION YEAR IS 1988.

CONCRETE SURFACE REPAIR ON STRUCTURAL SUPPORT POSTS LOCATED ON PLAN AND AS DIRECTED BY FILED ENGINEER.

PROTECTIVE COATING CLEAR TO BE APPLIED TO ALL POSTS ROADSIDE FACES.

LEGEND

▲ - CONCRETE SURFACE REPAIR ON ROADSIDE

◓ - CONCRETE SURFACE REPAIR ON RESIDENTIAL SIDE

◯ - SUPPORT POST (NUMBERED NORTH TO SOUTH)

TOTAL ESTIMATED QUANTITIES

ITEM NUMBER	BID ITEM	UNIT	TOTAL
502.6500	PROTECTIVE COATING CLEAR	GAL	40
509.1500	CONCRETE SURFACE REPAIR	SF	150

WISCONSIN
THOMAS J. ROMENESKO
E-26318
MADISON
WI
PROFESSIONAL ENGINEER

DESIGN CONSULTANT
TOM ROMENESKO, PE
(608) 566-1370

BRIDGE OFFICE CONTACT
AARON BONK, PE
(608) 261-0261

NO.	DATE	REVISION	BY

DAAR ENGINEERING, INC.
www.daarcorp.com
Milwaukee, WI 53202
414-225-9817

STATE OF WISCONSIN
DEPARTMENT OF TRANSPORTATION

ACCEPTED SDR 08/09/22
CHIEF STRUCTURES DESIGN ENGINEER DATE

STRUCTURE N-40-8

NOISE WALL ON IH 43 SB ON RAMP, 0.09 MILE S. JCT W. MORGAN AVE.

COUNTY WAUKESHA | TOWN/~~CITY/VILLAGE~~ VERNON

DESIGN SPEC. AASHTO LRFD BRIDGE DESIGN SPECIFICATIONS

DESIGNED BY MC	DESIGN CK'D. TR	DRAWN BY MC	PLANS CK'D. TR

GENERAL PLAN & ELEVATION 1

SHEET 1 OF 2

STATE PROJECT NUMBER

1060-53-70

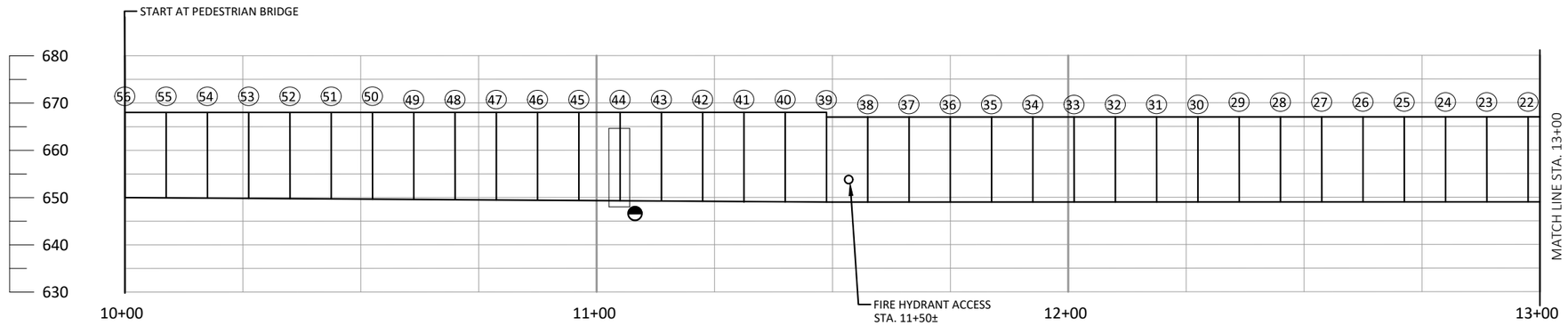

GROUND MOUNTED NOISE BARRIER

(LOOKING WEST- ROADWAY SIDE)
(ALONG ON RAMP AT 6TH ST)

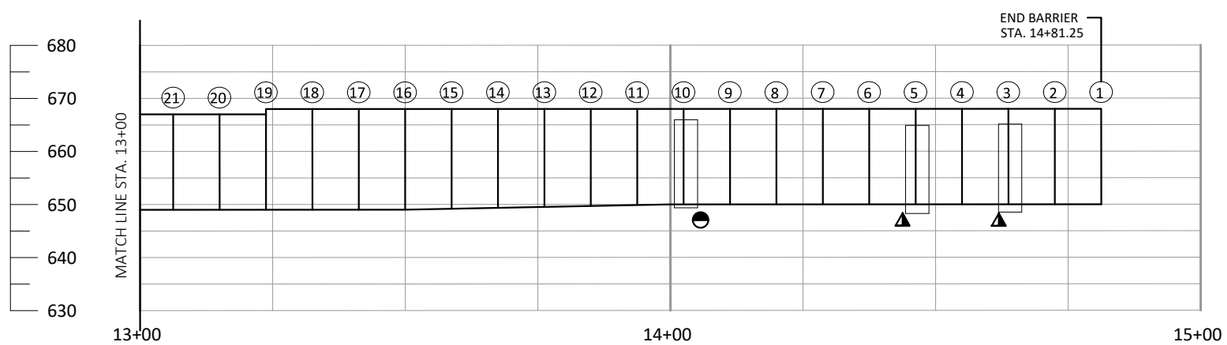

GROUND MOUNTED NOISE BARRIER

(LOOKING WEST- ROADWAY SIDE)
(ALONG ON RAMP AT 6TH ST)

LEGEND

- ▲ - ROADSIDE CONCRETE SURFACE REPAIR ON ROADSIDE
- ◓ - CONCRETE SURFACE REPAIR ON RESIDENTIAL SIDE
- ◯ - SUPPORT POST (NUMBERED NORTH TO SOUTH)

NO.	DATE	REVISION	BY

STATE OF WISCONSIN
DEPARTMENT OF TRANSPORTATION

STRUCTURE N-40-8

DRAWN BY MC | PLANS CK'D. TR

GENERAL PLAN & ELEVATION 2

SHEET 2 OF 2

STATE PROJECT NUMBER

1060-53-70

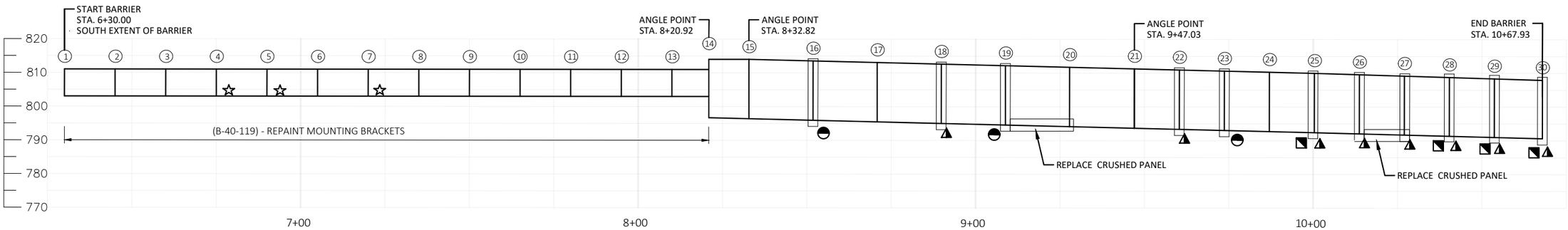

STRUCTURE/GROUND MOUNTED NOISE BARRIER

(LOOKING WEST - ROADWAY SIDE)
(BETWEEN IH41 SB & OFF RAMP)

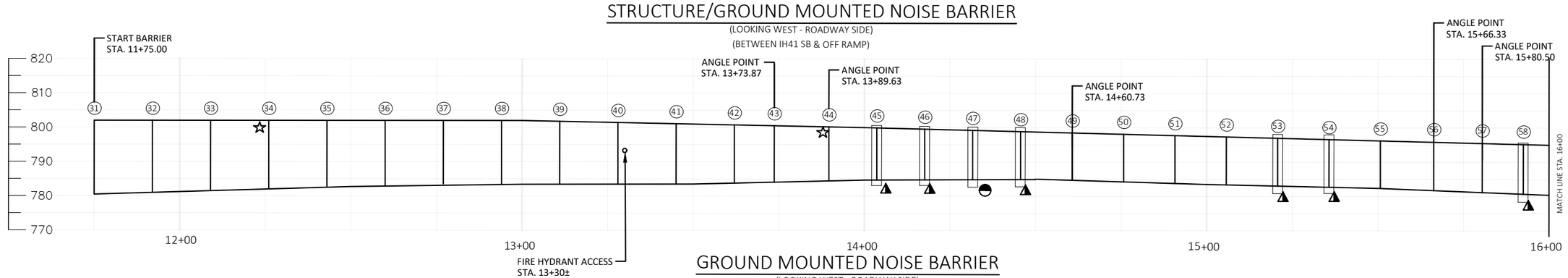

GROUND MOUNTED NOISE BARRIER

(LOOKING WEST - ROADWAY SIDE)
(ALONG IH41 SB)

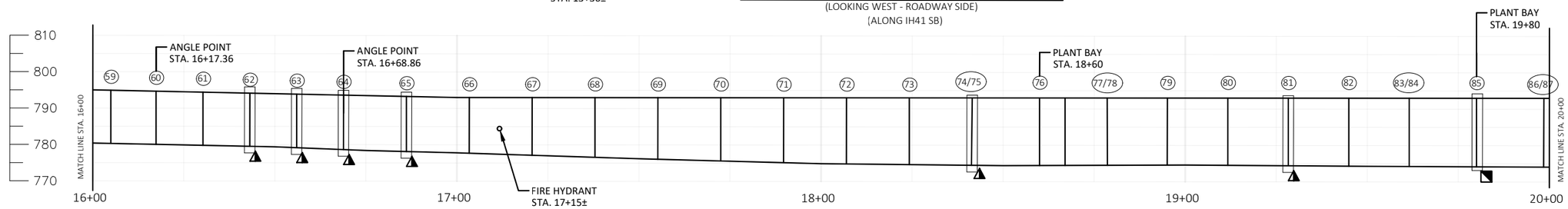

GROUND MOUNTED NOISE BARRIER

(LOOKING WEST - ROADWAY SIDE)

LEGEND

- ◯ - SUPPORT POST (NUMBERED SOUTH TO NORTH)
- ▲ - CONCRETE SURFACE REPAIR ON ROADSIDE.
- ◥ - CONCRETE SURFACE REPAIR ON RESIDENTIAL SIDE.
- ◓ - REPLACE POST
- ☆ - PANEL SUPPORT REPAIR

TOTAL ESTIMATED QUANTITIES

ITEM NUMBER	BID ITEM	UNIT	TOTAL
502.6500	PROTECTIVE COATING CLEAR	GAL	25
509.1500	CONCRETE SURFACE REPAIR	SF	175
517.3001.S.02	STRUCTURE OVERCOATING CLEANING AND PRIMING N-40-17	LS	1
517.4001.S.02	CONTAINMENT AND COLLECTION OF WASTE MATERIAL N-40-17	LS	1
SPV.0060.01	TOP PRECAST SOUND BARRIER PANEL SUPPORT REPAIR	EA	3
SPV.0060.02	REMOVING AND REINSTALLING SOUND PANELS	EA	113
SPV.0060.03	NOISE BARRIER SUPPORT POST REPLACEMENT	EA	4
SPV.0060.07	BOTTOM PRECAST SOUND BARRIER PANEL SUPPORT REPAIR	EA	3
SPV.0165.02	REPLACEMENT NOISE BARRIER PANELS DOUBLE-SIDED SOUND ABSORPTIVE N-40-17	SF	135

GENERAL NOTES

DRAWINGS SHALL NOT BE SCALED.

DIMENSIONS SHOWN ARE BASED ON THE ORIGINAL STRUCTURE PLANS.

ORIGINAL CONSTRUCTION YEAR IS 1994.

CLEAN RUSTED AREAS OF STRUCTURAL SUPPORT POST (LOCATED ON PLAN AND AS DIRECTED BY FIELD ENGINEER) TO BARE METAL AS PER BID ITEM "STRUCTURE OVERCOAT CLEANING AND PRIMING N-40-17". APPLY PRIMER AND INTERMEDIATE COATS TO THE AREA.

OVERCOAT PAINT THE STRUCTURAL SUPPORT POSTS AND BRACKETS LOCATED ON THE PLANS AND AS DIRECTED BY FIELD ENGINEER. PAINT SHALL BE BROWN, AMS STANDARD COLOR NO. 20170 OR APPROVED EQUAL.

PROTECTIVE COATING CLEAR TO BE APPLIED TO ALL CONCRETE POSTS 14-191.

PANELS ON STRUCTURE MOUNTED WALL SHALL BE REMOVED AND REPLACED TO FACILITATE PAINTING OF MOUNTING BRACKETS.

LIST OF DRAWINGS:

1. GENERAL PLAN & ELEVATION 1
2. GENERAL PLAN & ELEVATION 2

WISCONSIN
THOMAS J. ROMENESKO
E-26318
MADISON
WI
PROFESSIONAL ENGINEER
4/18/2022

DESIGN CONSULTANT
TOM ROMENESKO, PE
(608) 566-1370

BRIDGE OFFICE CONTACT
AARON BONK, PE
(608) 261-0261

NO.	DATE	REVISION	BY

DAAR ENGINEERING, INC.
www.daarcorp.com
Milwaukee, WI 53202
414-225-9817

STATE OF WISCONSIN
DEPARTMENT OF TRANSPORTATION

ACCEPTED SDR 08/09/22
CHIEF STRUCTURES DESIGN ENGINEER DATE

STRUCTURE N-40-17

NOISE WALL ON USH 45, 2.1 MILE E JCT STH 59

COUNTY MILWAUKEE | ~~TOWN~~/CITY/~~VILLAGE~~ WEST ALLIS

DESIGN SPEC.
AASHTO LRFD BRIDGE DESIGN SPECIFICATIONS

DESIGNED BY MC	DESIGN CK'D. TR	DRAWN BY MC	PLANS CK'D. TR

GENERAL PLAN & ELEVATION 1

STATE PROJECT NUMBER

1060-53-70

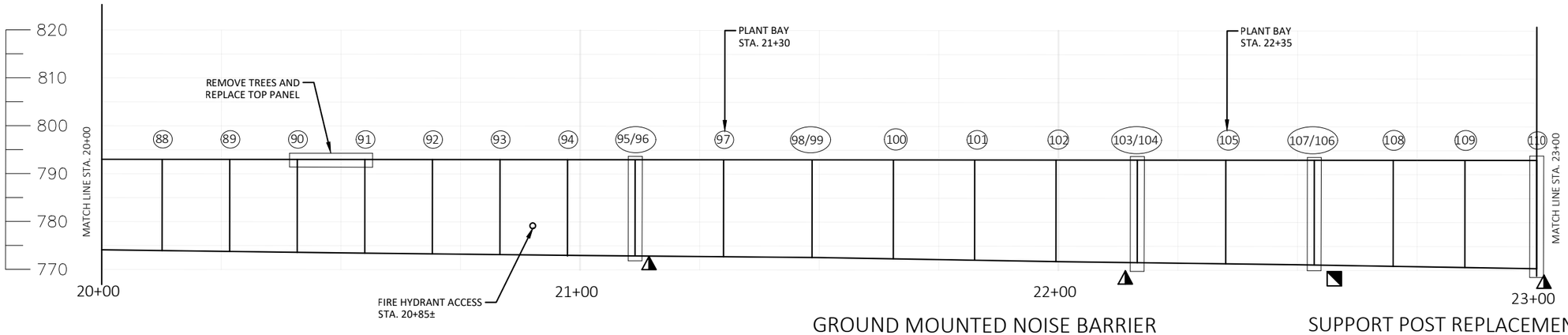

GROUND MOUNTED NOISE BARRIER

(LOOKING WEST - ROADWAY SIDE)

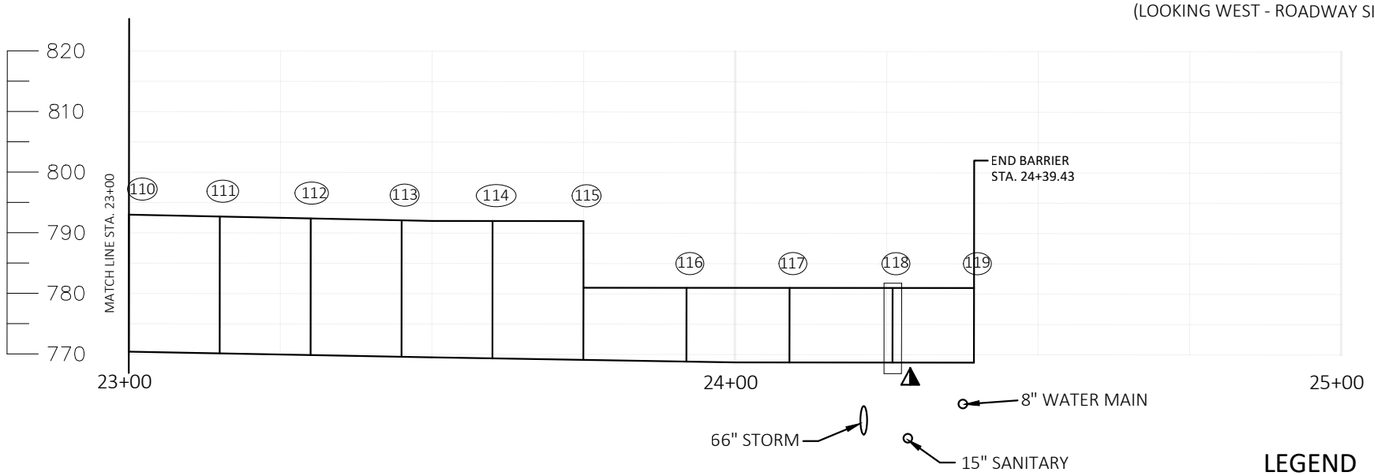

GROUND MOUNTED NOISE BARRIER

(LOOKING WEST - ROADWAY SIDE)

LEGEND

- ◯ - SUPPORT POST (NUMBERED SOUTH TO NORTH)
- ▲ - CONCRETE SURFACE REPAIR ON ROADSIDE
- ◥ -CONCRETE SURFACE REPAIR ON RESIDENTIAL SIDE
- ◓ - REPLACE POST
- ☆ - PANEL SUPPORT REPAIR

SUPPORT POST REPLACEMENT SEQUENCE

1. LOCATE SUPPORT POSTS THAT REQUIRE REPLACEMENT. SEE PLANS FOR LOCATION AND AS DIRECTED BY THE ENGINEER.

2. REMOVE AND SALVAGE EXISTING UNDAMAGED PANELS FROM THE STRUCTURAL SUPPORT POSTS BY LIFTING THEM OUT. COST TO REMOVE, STORE, AND REINSTALL THE SOUND PANELS IS INCLUDED IN THE BID ITEM "REMOVING AND REINSTALLING SOUND PANELS". ANY DAMAGE TO THE SOUND PANELS CAUSED BY THE CONTRACTOR DURING REMOVAL, STORAGE, OR REINSTALLING THE PANELS SHALL BE REPAIRED BY THE CONTRACTOR AT NO ADDITIONAL COST TO THE DEPARTMENT.

3. REMOVE THE EXISTING CONCRETE POST AND CONCRETE FOUNDATION. MINIMIZE DISTURBANCE TO SURROUNDING SOILS.

4. FILL HOLE WITH "BACKFILL CONTROLLED LOW STRENGTH" TO THE EXISTING GROUNDLINE.

5. DRILL FOUNDATION FOR NEW POST AT LOCATION OF OLD POST.

6. INSTALL NEW POST AND POUR FOUNDATION.

7. REINSTALL SALVAGED SOUND PANELS.

PANEL REPLACEMENT SEQUENCE

1. LOCATE DAMAGED SOUND PANEL

2. REMOVE AND SALVAGE EXISTING UNDAMAGED PANELS FROM THE STRUCTURAL SUPPORT POSTS BY LIFTING THEM OUT. COST TO REMOVE, STORE, AND REINSTALL THE SOUND PANELS IS INCLUDED IN THE BID ITEM "REMOVING AND REINSTALLING SOUND PANELS". ANY DAMAGE TO THE UNDAMAGED PANELS CAUSED BY THE CONTRACTOR DURING REMOVAL, STORAGE OR REINSTALLING THE PANELS SHALL BE REPAIRED BY THE CONTRACTOR AT NO ADDITIONAL COST TO THE DEPARTMENT.

3. REMOVE AND REPLACE IDENTIFIED DAMAGED PANEL UNDER BID ITEM "REPLACEMENT NOISE BARRIER PANELS DOUBLE-SIDED SOUND ABSORPTIVE N-40-17".

4. REPLACE SALVAGED PANELS

BOTTOM PANEL SUPPORT REPAIR SEQUENCE

1. LOCATE SOUND PANELS THAT HAVE SETTLED PAST THE EXISTING SUPPORT BRACKETS.

2. REMOVE AND SALVAGE EXISTING UNDAMAGED PANELS FROM THE STRUCTURAL SUPPORT POSTS BY LIFTING THEM OUT. COST TO REMOVE, STORE, AND REINSTALL THE SOUND PANELS IS INCLUDED IN THE BID ITEM "REMOVING AND REINSTALLING SOUND PANELS". ANY DAMAGE TO THE SOUND PANELS CAUSED BY THE CONTRACTOR DURING REMOVAL, STORAGE OR REINSTALLING THE PANELS SHALL BE REPAIRED BY THE CONTRACTOR AT NO ADDITIONAL COST TO THE DEPARTMENT

3. REPAIR SOUND BARRIER PANEL SUPPORT BRACKETS AS SHOWN IN DETAILS.

4. REINSTALL SALVAGED SOUND PANELS.

TOP PANEL SUPPORT REPAIR SEQUENCE

1. LOCATE SOUND PANEL THAT ARE LOOSE OR BOWED PAST THE EXISTING SUPPORT BRACKETS.

2. REMOVE AND SALVAGE EXISTING UNDAMAGED PANEL FROM THE STRUCTURAL SUPPORT POSTS BY LIFTING THEM OUT. COST TO REMOVE, STORE, AND REINSTALL THE SOUND PANELS IS INCLUDED IN THE BID ITEM "REMOVING AND REINSTALLING SOUND PANELS". ANY DAMAGE TO THE SOUND PANELS CAUSED BY THE CONTRACTOR DURING REMOVAL, STORAGE OR REINSTALLING THE PANELS SHALL BE REPAIRED BY THE CONTRACTOR AT NO ADDITIONAL COST TO THE DEPARTMENT

3. REPAIR SOUND BARRIER PANEL SUPPORT BRACKETS AS SHOWN IN DETAILS.

4. REINSTALL SALVAGED SOUND PANEL.

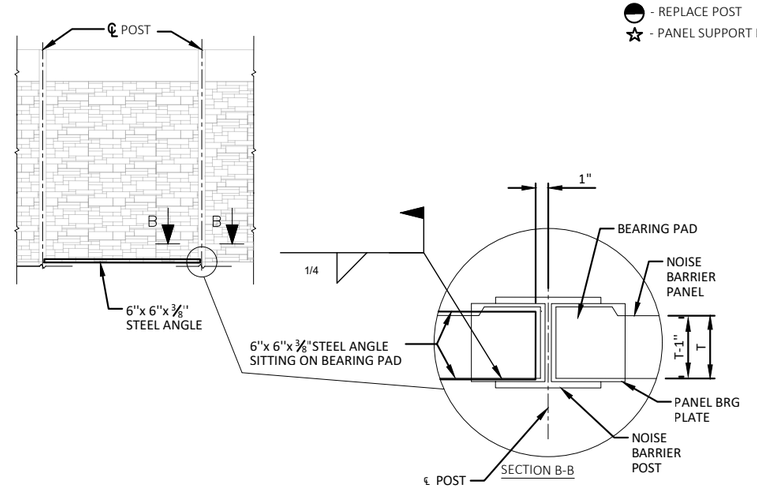

BOTTOM PANEL SUPPORT REPAIR DETAIL

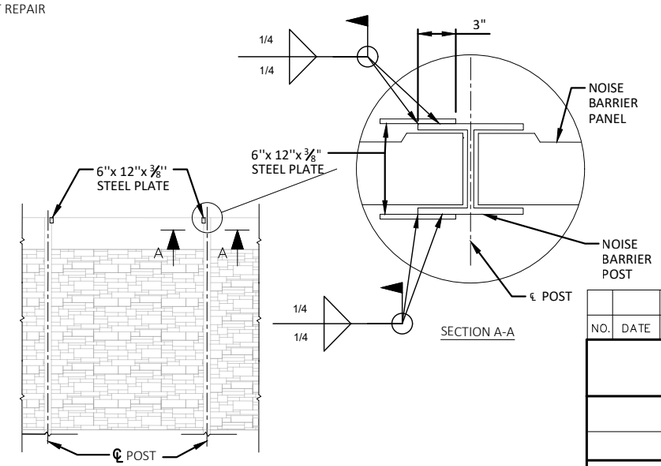

TOP PANEL SUPPORT REPAIR DETAIL

NO.	DATE	REVISION	BY

STATE OF WISCONSIN
DEPARTMENT OF TRANSPORTATION

STRUCTURE N-40-17

DRAWN BY MC | PLANS CK'D. TR

GENERAL PLAN & ELEVATION 2

SHEET 2 OF 2

97

STATE PROJECT NUMBER

1060-53-70

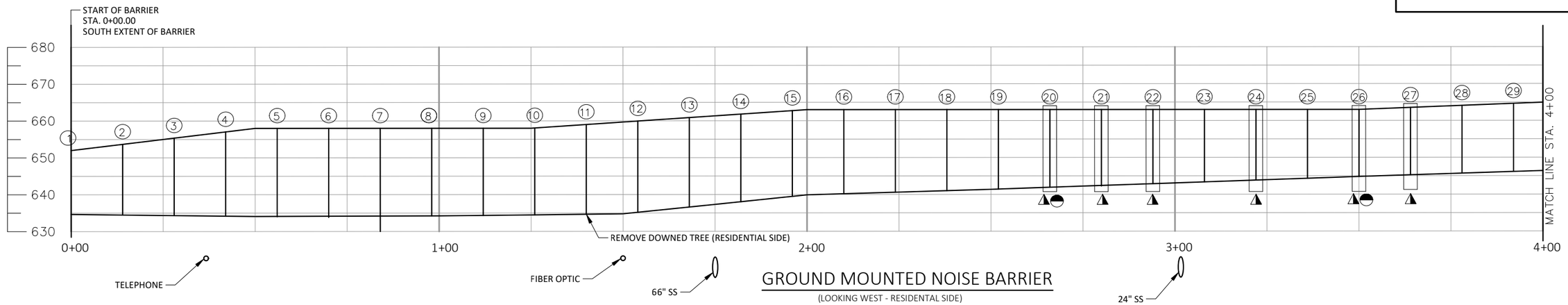

GROUND MOUNTED NOISE BARRIER

(LOOKING WEST - RESIDENTAL SIDE)

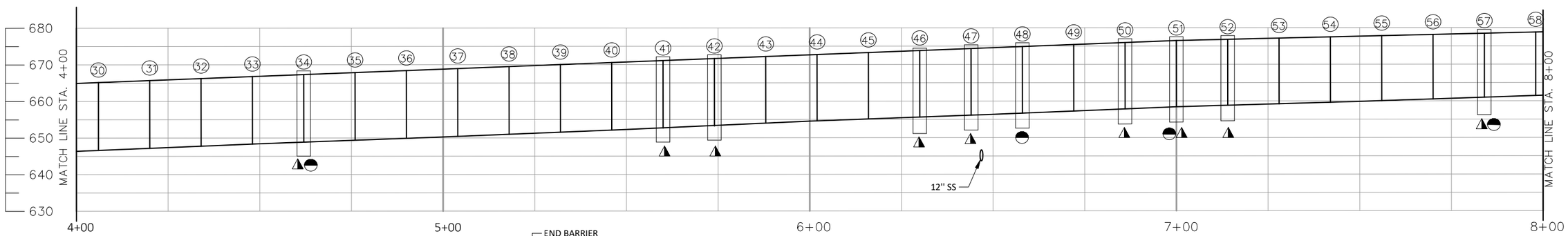

GROUND MOUNTED NOISE BARRIER

(LOOKING WEST - RESIDENTAL SIDE)

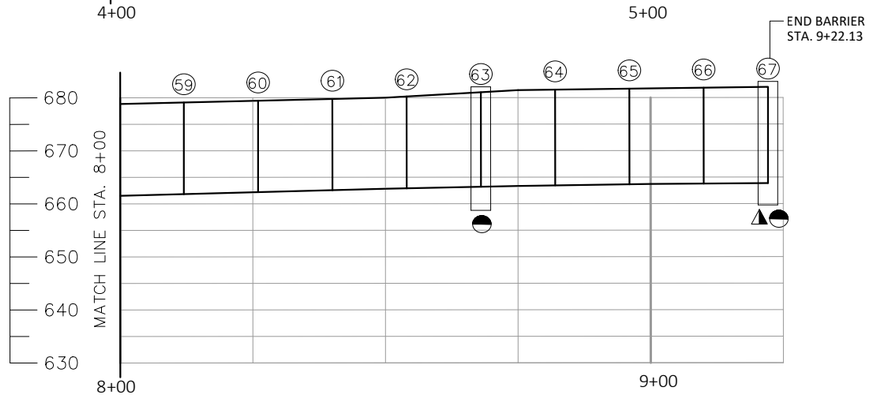

GROUND MOUNTED NOISE BARRIER

(LOOKING WEST - RESIDENTAL SIDE)

GENERAL NOTES

DRAWINGS SHALL NOT BE SCALED.

DIMENSIONS SHOWN ARE BASED ON THE ORIGINAL STRUCTURE PLANS.

ORIGINAL CONSTRUCTION YEAR IS 2001.

CLEAN RUSTED AREAS OF STRUCTURAL SUPPORT POST (LOCATED ON PLAN AND AS DIRECTED BY FIELD ENGINEER) TO BARE METAL AS PER BID ITEM "STRUCTURE OVERCOAT AND CLEANING AND PRIMBING N-40-33". APPLY PRIMER AND INTERMEDIATE COATS TO THE AREA.

OVERCOAT PAINT THE STRUCTURAL SUPPORT POSTS AND BRACKETS LOCATED ON THE PLANS AND AS DIRECTED BY FIELD ENGINEER. PAINT SHALL BE BROWN, AMS STANDARD COLOR NO. 20170 OR APPROVED EQUAL.

LEGEND

◭ - REMOVE RUST AND RE-PAINT ON RAMP SIDE

◒ - REMOVE RUST AND RE-PAINT ON RESIDENTIAL SIDE

LIST OF DRAWINGS:

1. GENERAL PLAN & ELEVATION

WISCONSIN
THOMAS J. ROMENESKO
E-26318
MADISON
WI
PROFESSIONAL ENGINEER

4/18/2022

	TOTAL ESTIMATED QUANTITIES		
ITEM NUMBER	BID ITEM	UNIT	TOTAL
517.3001.S.03	STRUCTURE OVERCOATING CLEANING AND PRIMING N-40-33	EA	1
517.4001.S.03	CONTAINMENT AND COLLECTION OF WASTE MATERIAL N-40-33	EA	1

NO.	DATE	REVISION	BY

DAAR ENGINEERING, INC.
www.daarcorp.com
Milwaukee, WI 53202
414-225-9817

STATE OF WISCONSIN
DEPARTMENT OF TRANSPORTATION

ACCEPTED SDR 08/09/22
CHIEF STRUCTURES DESIGN ENGINEER DATE

STRUCTURE N-40-33

NOISE WALL AT IH 43 NB ON RAMP JCT W. HOLT AVE

COUNTY MILWAUKEE | ~~TOWN~~/CITY/~~VILLAGE~~ MILWAUKEE

DESIGN SPEC.
AASHTO LRFD BRIDGE DESIGN SPECIFICATIONS

DESIGNED BY MC	DESIGN CK'D. TR	DRAWN BY MC	PLANS CK'D. TR

GENERAL PLAN & ELEVATION

SHEET 1 OF 1
98

DESIGN CONSULTANT
TOM ROMENESKO, PE
(608) 566-1370

BRIDGE OFFICE CONTACT
AARON BONK, PE
(608) 261-0261

8

8

STATE PROJECT NUMBER

1060-53-70

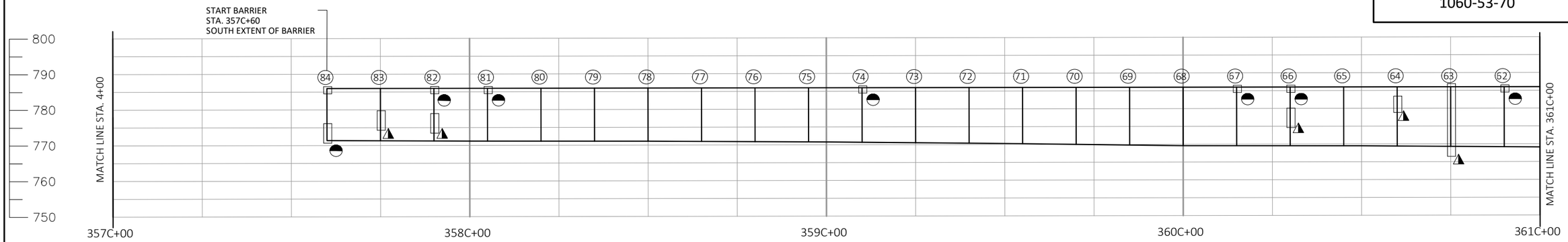

GROUND MOUNTED NOISE BARRIER

(LOOKING WEST - RESIDENTIAL SIDE)

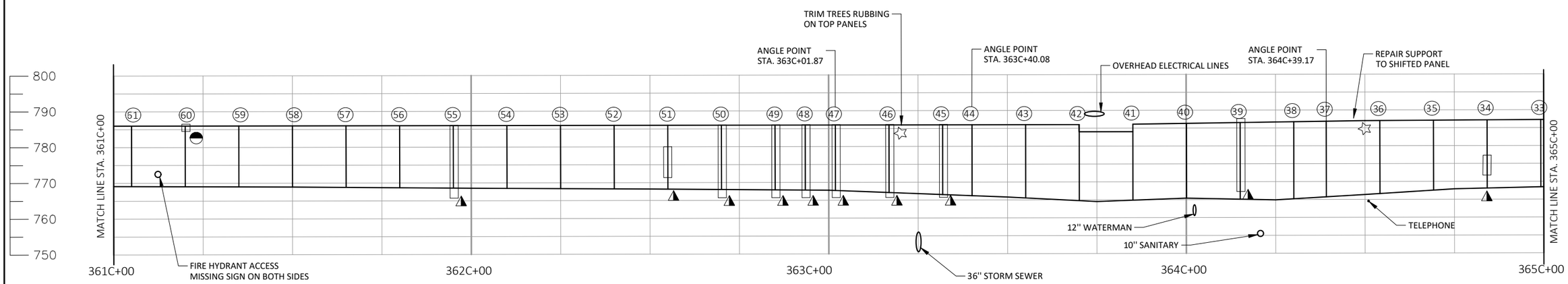

GROUND MOUNTED NOISE BARRIER

(LOOKING WEST - RESIDENTIAL SIDE)

LEGEND

- ☆ - PANEL SUPPORT REPAIR
- ◭ - REMOVE RUST AND RE-PAINT ON ROADWAY SIDE
- ◓ - REMOVE RUST AND RE-PAINT ON RESIDENTIAL SIDE
- ◯ - SUPPORT POST (NUMBERED NORTH TO SOUTH)

TOTAL ESTIMATED QUANTITIES

ITEM NUMBER	BID ITEM	UNIT	TOTAL
517.3001.S.04	STRUCTURE OVERCOATING CLEANING AND PRIMING N-40-34	EA	1
517.4001.S.04	CONTAINMENT AND COLLECTION OF WASTE MATERIAL N-40-34	EA	1
SPV.0060.01	TOP PRECAST SOUND BARRIER PANEL SUPPORT REPAIR	EA	2
SPV.0060.02	REMOVING AND REINSTALLING SOUND PANELS	EA	2

GENERAL NOTES

DRAWINGS SHALL NOT BE SCALED.

DIMENSIONS SHOWN ARE BASED ON THE ORIGINAL STRUCTURE PLANS.

ORIGINAL CONSTRUCTION YEAR IS 2001.

CLEAN RUSTED AREAS OF STRUCTURAL SUPPORT POST (LOCATED ON PLAN AND AS DIRECTED BY FIELD ENGINEER) TO BARE METAL PER BID ITEM "STRUCTURE OVERCOAT CLEANING AND PRIMING N-40-34". APPLY PRIMER AND INTERMEDIATE COATS TO THE AREA.

OVERCOAT PAINT THE STRUCTURAL SUPPORT POSTS AND BRACKETS LOCATED ON THE PLANS AND AS DIRECTED BY FIELD ENGINEER. PAINT SHALL BE BROWN, AMS STANDARD COLOR NO. 20170 OR APPROVED EQUAL..

LIST OF DRAWINGS:

1. GENERAL PLAN & ELEVATION 1
2. GENERAL PLAN & ELEVATION 2

WISCONSIN
THOMAS J. ROMENESKO
E-26318
MADISON
WI
PROFESSIONAL ENGINEER

NO.	DATE	REVISION	BY

DAAR ENGINEERING, INC.
www.daarcorp.com
Milwaukee, WI 53202
414-225-9817

STATE OF WISCONSIN
DEPARTMENT OF TRANSPORTATION

ACCEPTED SDR 08/09/22
CHIEF STRUCTURES DESIGN ENGINEER DATE

STRUCTURE N-40-34

NOISE WALL ON USH 45 0.4 MI N JCT W. SILVER SPRING DR.

COUNTY MILWAUKEE | ~~TOWN~~/CITY/~~VILLAGE~~ MILWAUKEE

DESIGN SPEC.
AASHTO LRFD BRIDGE DESIGN SPECIFICATIONS

DESIGNED BY MC	DESIGN CK'D. TR	DRAWN BY MC	PLANS CK'D. TR

DESIGN CONSULTANT
TOM ROMENESKO, PE
(608) 566-1370

BRIDGE OFFICE CONTACT
AARON BONK, PE
(608) 261-0261

GENERAL PLAN & ELEVATION 1

STATE PROJECT NUMBER

1060-53-70

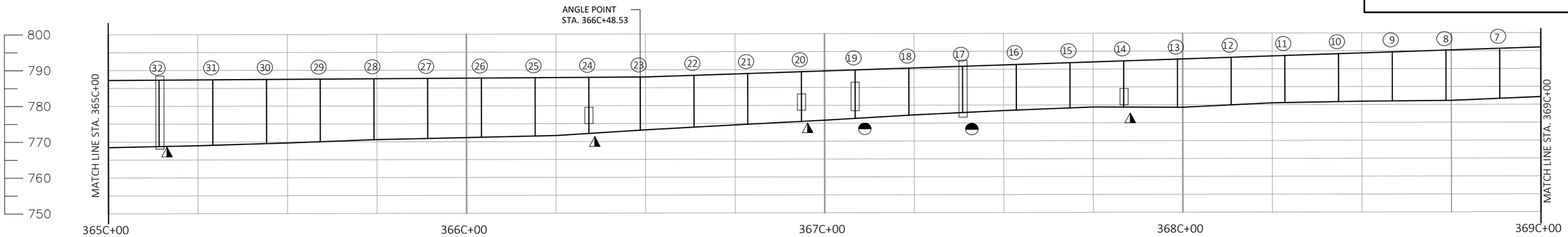

GROUND MOUNTED NOISE BARRIER

(LOOKING WEST - RESIDENTIAL SIDE)

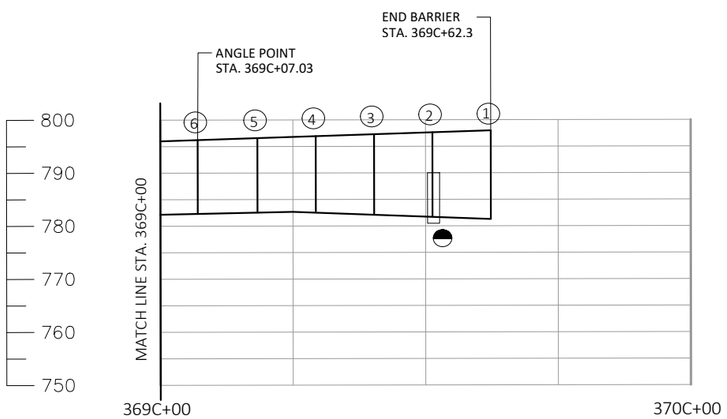

GROUND MOUNTED NOISE BARRIER

(LOOKING WEST - RESIDENTIAL SIDE)

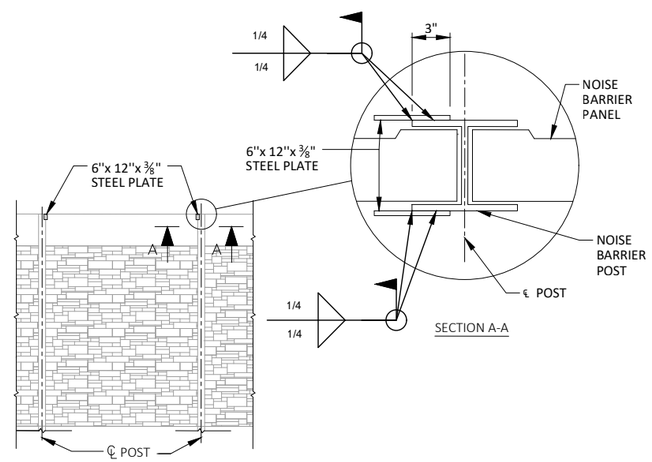

TOP PANEL SUPPORT REPAIR DETAIL

TOP PANEL SUPPORT REPAIR SEQUENCE

1. LOCATE SOUND PANEL THAT ARE LOOSE OR BOWED PAST THE EXISTING SUPPORT BRACKETS.

2. REMOVE AND SALVAGE EXISTING UNDAMAGED PANEL FROM THE STRUCTURAL SUPPORT POSTS BY LIFTING THEM OUT. COST TO REMOVE, STORE, AND REINSTALL THE SOUND PANELS IS INCLUDED IN THE BID ITEM "REMOVING AND REINSTALLING SOUND PANELS". ANY DAMAGE TO THE SOUND PANELS CAUSED BY THE CONTRACTOR DURING REMOVAL, STORAGE OR REINSTALLING THE PANELS SHALL BE REPAIRED BY THE CONTRACTOR AT NO ADDITIONAL COST TO THE DEPARTMENT

3. REPAIR SOUND BARRIER PANEL SUPPORT BRACKETS AS SHOWN IN DETAILS.

4. REINSTALL SALVAGED SOUND PANEL.

LEGEND

- REMOVE RUST AND RE-PAINT ON ROADWAY SIDE
- REMOVE RUST AND RE-PAINT ON RESIDENTIAL SIDE
- SUPPORT POST (NUMBERED NORTH TO SOUTH)

NO.	DATE	REVISION	BY

STATE OF WISCONSIN
DEPARTMENT OF TRANSPORTATION

STRUCTURE N-40-34

DRAWN BY MC | PLANS CK'D. TR

GENERAL PLAN & ELEVATION 2

SHEET 2 OF 2

100

STATE PROJECT NUMBER

1060-53-70

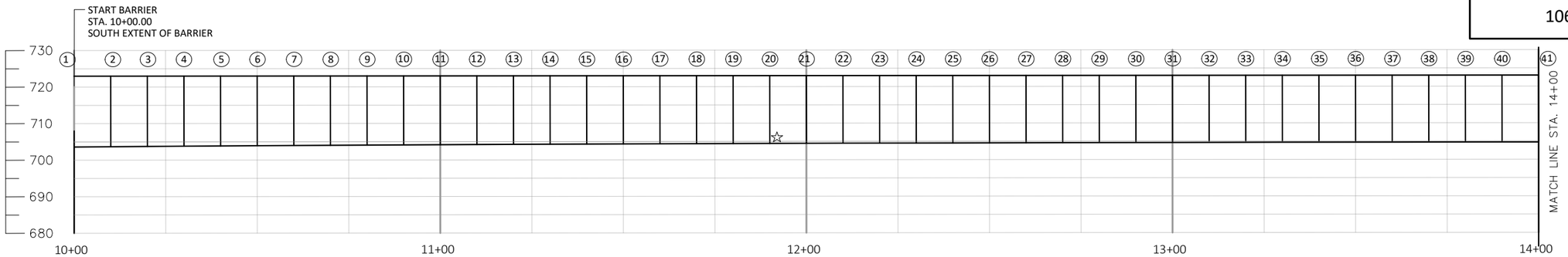

STRUCTURE MOUNTED NOISE BARRIER

(LOOKING WEST - RESIDENTIAL SIDE)

STRUCTURE MOUNTED NOISE BARRIER

(LOOKING WEST - RESIDENTIAL SIDE)

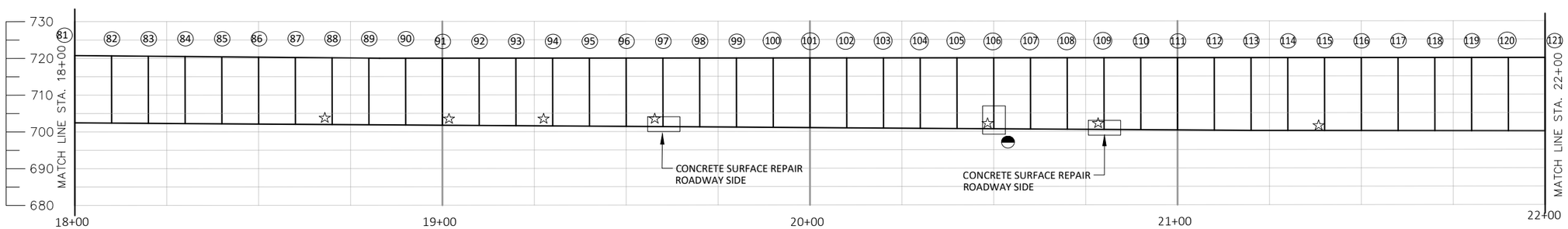

STRUCTURE MOUNTED NOISE BARRIER

(LOOKING WEST - RESIDENTIAL SIDE)

LEGEND

- REMOVE RUST AND RE-PAINT ON ROADWAY SIDE
- REMOVE RUST AND RE-PAINT ON RESIDENTIAL SIDE
- SUPPORT POST (NUMBERED SOUTH TO NORTH)
- PRECAST SOUND BARRIER PANEL SUPPORT REPAIR

TOTAL ESTIMATED QUANTITIES

ITEM NUMBER	BID ITEM	UNIT	TOTAL
509.1500	CONCRETE SURFACE REPAIR	SF	8
517.3001.S.05	STRUCTURE OVERCOATING CLEANING AND PRIMING N-40-40	EA	1
517.4001.S.05	CONTAINMENT AND COLLECTION OF WASTE MATERIAL N-40-40	EA	1
SPV.0060.02	REMOVING AND REINSTALLING SOUND PANELS	EA	61
SPV.0060.07	BOTTOM PRECAST SOUND BARRIER PANEL SUPPORT REPAIR	EA	10

- 60% OF RETAINING WALL MOUNTED SUPPORT POST STRAPS REQUIRE PAINTING
- 40% OF RETAINING WALL MOUNTED SHELF ANGLES REQUIRE PAINTING

GENERAL NOTES

DRAWINGS SHALL NOT BE SCALED.

DIMENSIONS SHOWN ARE BASED ON THE ORIGINAL STRUCTURE PLANS.

ORIGINAL CONSTRUCTION YEAR IS 2011.

CLEAN RUSTED AREAS OF STRUCTURAL SUPPORT POST (LOCATED ON PLAN AND AS DIRECTED BY FIELD ENGINEER) TO BARE METAL AS PER BID ITEM "STRUCTURE OVERCOAT CLEANING AND PRIMING N-40-40". APPLY PRIMER AND INTERMEDIATE COATS TO THE AREA.

OVERCOAT PAINT THE STRUCTURAL SUPPORT POSTS AND BRACKETS LOCATED ON THE PLANS AND AS DIRECTED BY FIELD ENGINEER. PAINT MATCH THE FEDERAL STANDARD COLOR NO. 20170 OR APPROVED EQUAL.

LIST OF DRAWINGS:

1. GENERAL PLAN & ELEVATION 1
2. GENERAL PLAN & ELEVATION 2

WISCONSIN
THOMAS J. ROMENESKO
E-26318
MADISON
WI
PROFESSIONAL ENGINEER

DESIGN CONSULTANT
TOM ROMENESKO, PE
(608) 566-1370

BRIDGE OFFICE CONTACT
AARON BONK, PE
(608) 261-0261

NO.	DATE	REVISION	BY

DAAR ENGINEERING, INC.
www.daarcorp.com
Milwaukee, WI 53202
414-225-9817

STATE OF WISCONSIN
DEPARTMENT OF TRANSPORTATION

ACCEPTED SDR 08/09/22
CHIEF STRUCTURES DESIGN ENGINEER DATE

STRUCTURE N-40-40

IH 43 SB, 2.3 MILES S JCT CTH Y

COUNTY MILWAUKEE | ~~TOWN~~/CITY/~~VILLAGE~~ MILWAUKEE

DESIGN SPEC.
AASHTO LRFD BRIDGE DESIGN SPECIFICATIONS

DESIGNED BY MC	DESIGN CK'D. TR	DRAWN BY MC	PLANS CK'D. TR

GENERAL PLAN & ELEVATION 1

SHEET 1 OF 2
101

STATE PROJECT NUMBER

1060-53-70

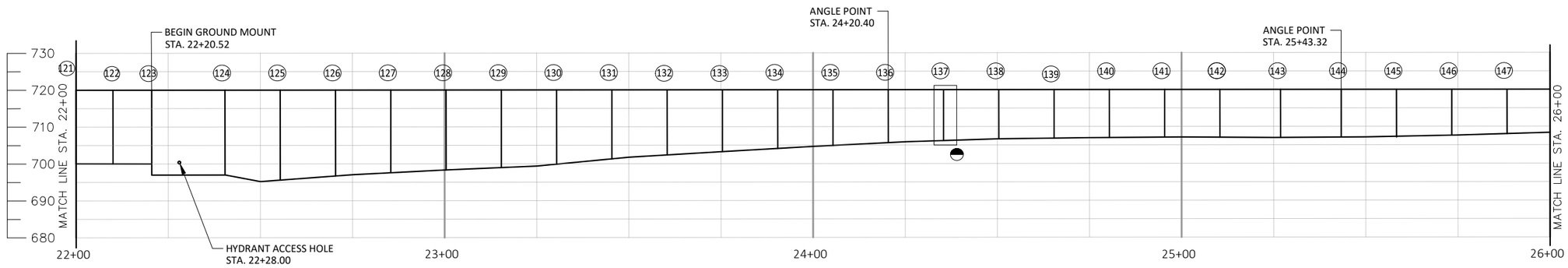

STRUCTURE/GROUND MOUNTED NOISE BARRIER

(LOOKING WEST - RESIDENTIAL SIDE)

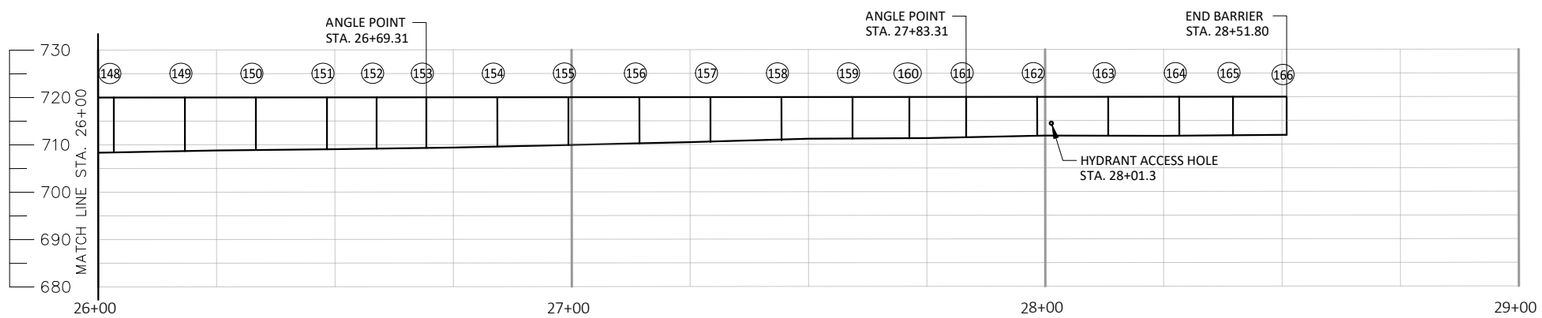

GROUND MOUNTED NOISE BARRIER

(LOOKING WEST - RESIDENTIAL SIDE)

LEGEND

- REMOVE RUST AND RE-PAINT ON ROADWAY SIDE
- REMOVE RUST AND RE-PAINT ON RESIDENTIAL SIDE
- SUPPORT POST (NUMBERED SOUTH TO NORTH)
- PRECAST SOUND BARRIER PANEL SUPPORT REPAIR

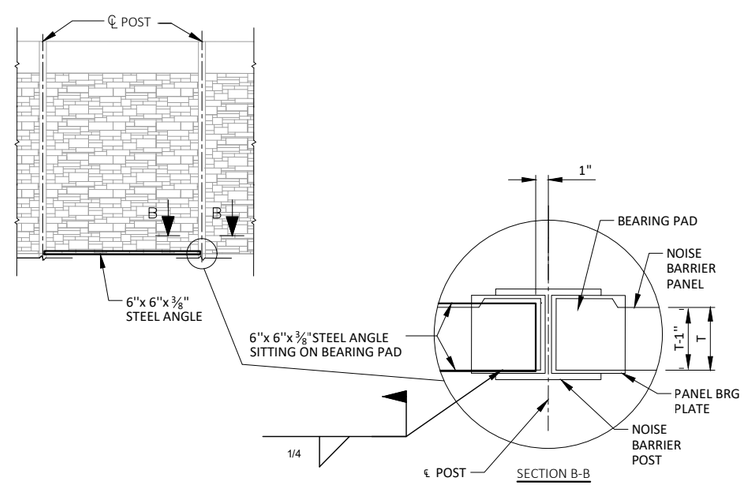

BOTTOM PANEL SUPPORT REPAIR DETAIL

BOTTOM PANEL SUPPORT REPAIR SEQUENCE

1. LOCATE SOUND PANELS THAT HAVE SETTLED PAST THE EXISTING SUPPORT BRACKETS.

2. REMOVE AND SALVAGE EXISTING UNDAMAGED PANELS FROM THE STRUCTURAL SUPPORT POSTS BY LIFTING THEM OUT. COST TO REMOVE, STORE, AND REINSTALL THE SOUND PANELS IS INCLUDED IN THE BID ITEM "REMOVING AND REINSTALLING SOUND PANELS". ANY DAMAGE TO THE SOUND PANELS CAUSED BY THE CONTRACTOR DURING REMOVAL, STORAGE OR REINSTALLING THE PANELS SHALL BE REPAIRED BY THE CONTRACTOR AT NO ADDITIONAL COST TO THE DEPARTMENT.

3. INSTALL SOUND BARRIER PANEL SUPPORT BRACKETS AS SHOWN IN DETAILS.

4. REINSTALL SALVAGED SOUND PANELS.

8

NO.	DATE	REVISION	BY

STATE OF WISCONSIN
DEPARTMENT OF TRANSPORTATION

STRUCTURE N-40-40

DRAWN BY MC | PLANS CK'D. TR

GENERAL PLAN & ELEVATION 2

SHEET 2 OF 2

STATE PROJECT NUMBER

1060-53-70

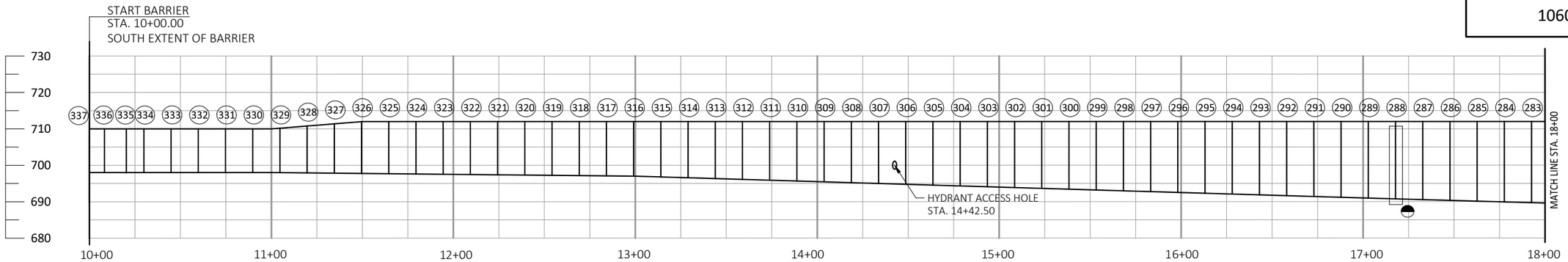

GROUND MOUNTED NOISE BARRIER

(LOOKING WEST - ROADWAY SIDE)

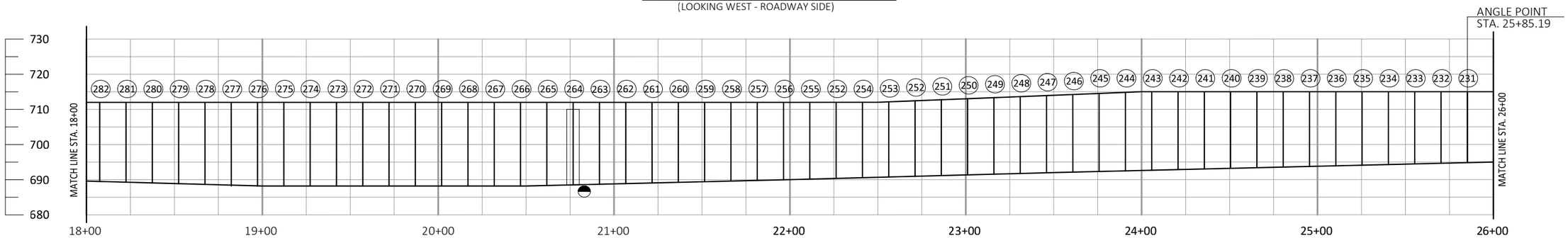

GROUND MOUNTED NOISE BARRIER

(LOOKING WEST - ROADWAY SIDE)

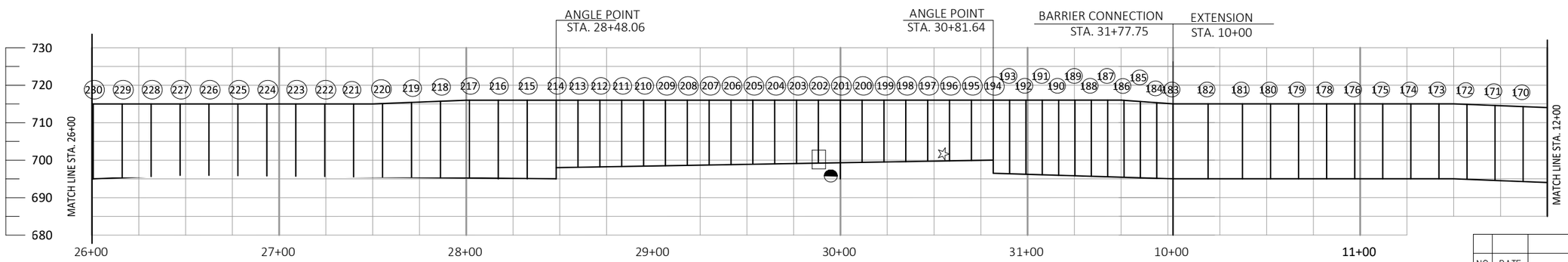

STRUCTURE/GROUND MOUNTED NOISE BARRIER

(LOOKING WEST - ROADWAY SIDE)

LEGEND

- ◭ - REMOVE RUST AND RE-PAINT ON ROADSIDE
- ◓ - REMOVE RUST AND RE-PAINT ON RESIDENTIAL SIDE
- ◯ - SUPPORT POST (NUMBERED SOUTH TO NORTH)
- ☆ - PRECAST SOUND BARRIER PANEL SUPPORT REPAIR

TOTAL ESTIMATED QUANTITIES

ITEM NUMBER	BID ITEM	UNIT	TOTAL
517.3001.S.06	STRUCTURE OVERCOATING CLEANING AND PRIMING (N-40-41)	EA	1
517.4001.S.06	CONTAINMENT AND COLLECTION OF WASTE MATERIAL (N-40-41)	EA	1
SPV.0060.02	REMOVING AND REINSTALLING SOUND PANELS	EA	6
SPV.0060.07	BOTTOM PRECAST SOUND BARRIER PANEL SUPPORT REPAIR	EA	1

GENERAL NOTES

DRAWINGS SHALL NOT BE SCALED.

DIMENSIONS SHOWN ARE BASED ON THE ORIGINAL STRUCTURE PLANS.

ORIGINAL CONSTRUCTION YEAR IS 2012.

CLEAN RUSTED AREAS OF STRUCTURAL SUPPORT POST (LOCATED ON PLAN AND AS DIRECTED BY FIELD ENGINEER) TO BARE METAL AS PER BID ITEM "STRUCTURE OVERCOAT CLEANING AND PRIMING N-40-41". APPLY PRIME AND INTERMEDIATE COATS TO THE AREA.

OVERCOAT PAINT THE STRUCTURAL SUPPORT POSTS AND BRACKETS LOCATED ON THE PLANS AND AS DIRECTED BY FIELD ENGINEER. PAINT SHALL BE BROWN, AMS STANDARD COLOR NO. 20170 OR APPROVED EQUAL.

LIST OF DRAWINGS:

1. GENERAL PLAN & ELEVATION 1
2. GENERAL PLAN & ELEVATION 2
3. GENERAL PLAN & ELEVATION 3

WISCONSIN PROFESSIONAL ENGINEER THOMAS J. ROMENESKO E-26318 MADISON WI

DESIGN CONSULTANT
TOM ROMENESKO, PE
(608) 566-1370

BRIDGE OFFICE CONTACT
AARON BONK, PE
(608) 261-0261

NO.	DATE	REVISION	BY

DAAR ENGINEERING, INC.
www.daarcorp.com
Milwaukee, WI 53202
414-225-9817

STATE OF WISCONSIN
DEPARTMENT OF TRANSPORTATION

ACCEPTED SDR 08/09/22
CHIEF STRUCTURES DESIGN ENGINEER DATE

STRUCTURE N-40-41

NOISE WALL ON IH 43/94, 130 FT S JCT HOWARD AVE.

COUNTY MILWAUKEE | ~~TOWN~~/CITY/~~VILLAGE~~ MILWAUKEE

DESIGN SPEC. AASHTO LRFD BRIDGE DESIGN SPECIFICATIONS

DESIGNED BY MC | DESIGN CK'D. TR | DRAWN BY MC | PLANS CK'D. TR

GENERAL PLAN & ELEVATION 1

SHEET 1 OF 3

103

STATE PROJECT NUMBER

1060-53-70

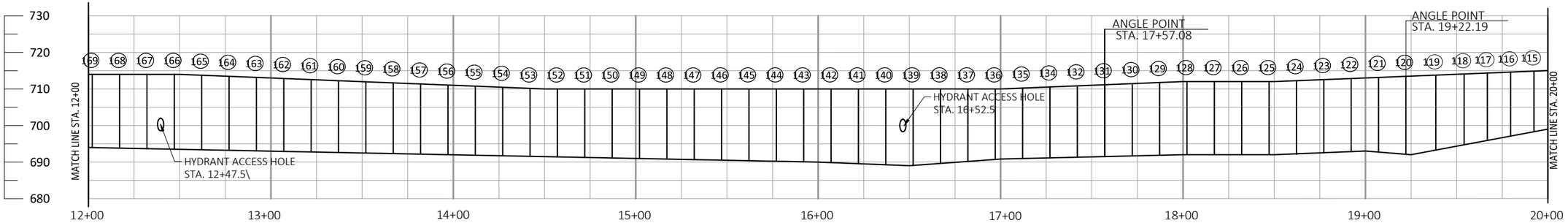

GROUND MOUNTED NOISE BARRIER

(LOOKING WEST - ROADWAY SIDE)

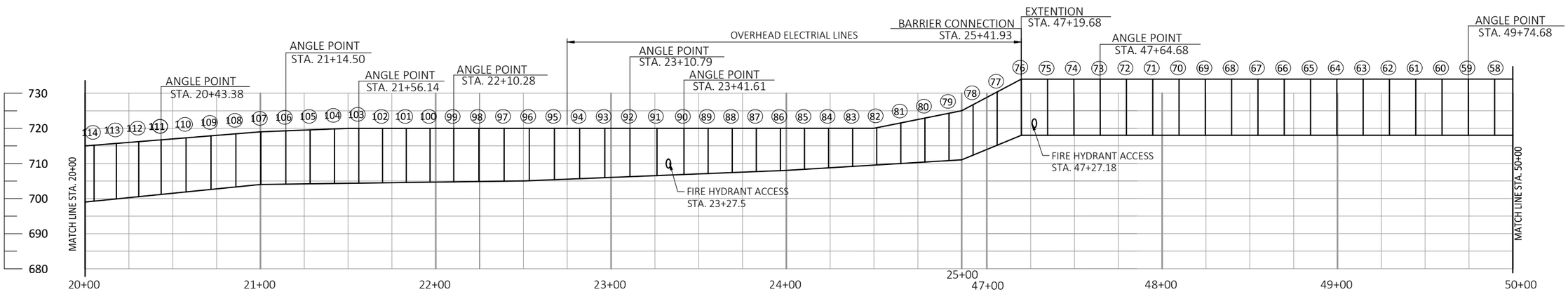

STRUCTURE MOUNTED NOISE BARRIER

(LOOKING WEST - ROADWAY SIDE)

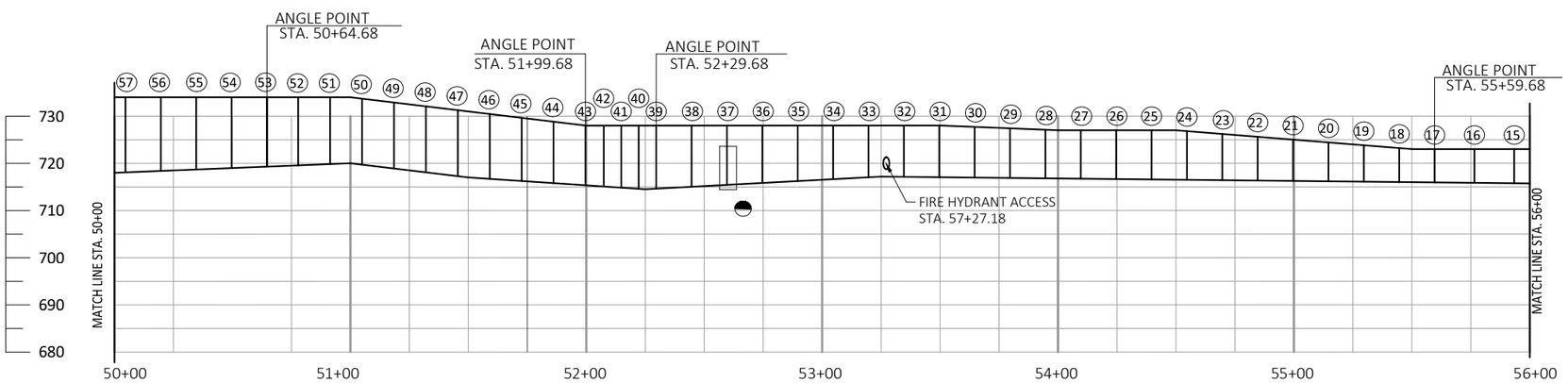

STRUCTURE MOUNTED NOISE BARRIER

(LOOKING WEST - ROADWAY SIDE)

LEGEND

- REMOVE RUST AND RE-PAINT ON ROADSIDE
- REMOVE RUST AND RE-PAINT ON RESIDENTIAL SIDE
- SUPPORT POST (NUMBERED SOUTH TO NORTH)
- PRECAST SOUND BARRIER PANEL SUPPORT REPAIR

NO.	DATE	REVISION	BY

STATE OF WISCONSIN
DEPARTMENT OF TRANSPORTATION

STRUCTURE N-40-41

DRAWN BY MC | PLANS CK'D. TR

GENERAL PLAN & ELEVATION 2

SHEET 2 OF 3

104

STATE PROJECT NUMBER

1060-53-70

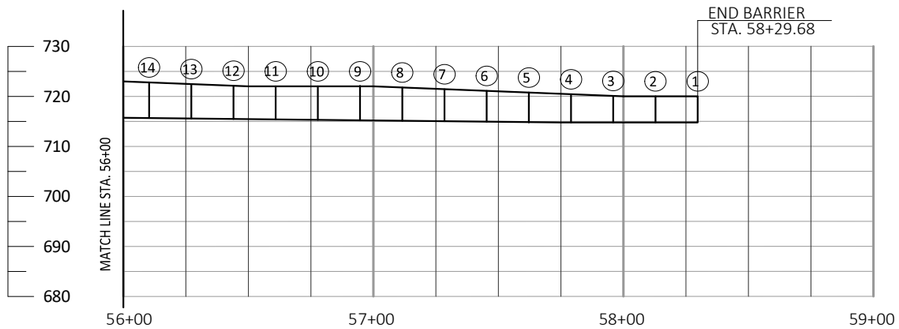

GROUND MOUNTED NOISE BARRIER

(LOOKING WEST - ROADWAY SIDE)

LEGEND

- REMOVE RUST AND RE-PAINT ON ROADSIDE
- REMOVE RUST AND RE-PAINT ON RESIDENTIAL SIDE
- SUPPORT POST (NUMBERED SOUTH TO NORTH)
- PRECAST SOUND BARRIER PANEL SUPPORT REPAIR

BOTTOM PANEL SUPPORT REPAIR SEQUENCE

1. LOCATE SOUND PANELS THAT HAVE SETTLED PAST THE EXISTING SUPPORT BRACKETS.

2. REMOVE AND SALVAGE EXISTING UNDAMAGED PANELS OUT FROM THE STRUCTURAL SUPPORT POSTS BY LIFTING THEM OUT. COST TO REMOVE, STORE, AND REINSTALL THE SOUND PANELS IS INCLUDED IN THE BID ITEM "REMOVING AND REINSTALLING SOUND PANELS". ANY DAMAGE TO THE SOUND PANELS CAUSED BY THE CONTRACTOR DURING REMOVAL, STORAGE OR REINSTALLING THE PANELS SHALL BE REPAIRED BY THE CONTRACTOR AT NO ADDITIONAL COST TO THE DEPARTMENT.

3. INSTALL SOUND BARRIER PANEL SUPPORT BRACKETS AS SHOWN IN DETAILS.

4. REINSTALL SALVAGED SOUND PANELS.

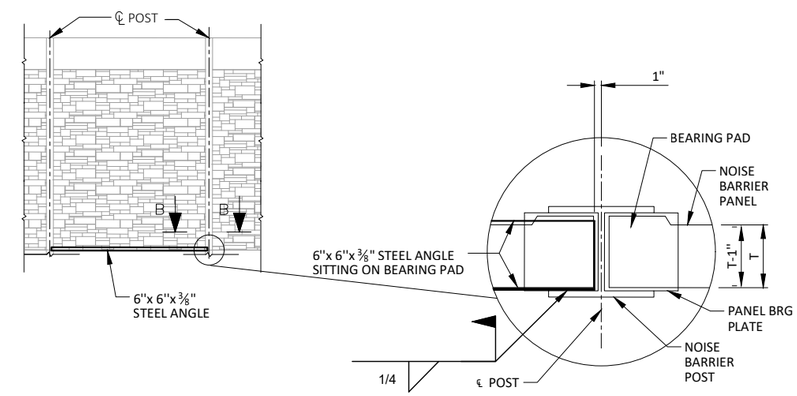

SECTION B-B

BOTTOM PANEL SUPPORT REPAIR DETAIL

8

8

NO.	DATE	REVISION	BY

STATE OF WISCONSIN
DEPARTMENT OF TRANSPORTATION

STRUCTURE N-40-41

DRAWN BY MC | PLANS CK'D. TR

GENERAL PLAN & ELEVATION 3

SHEET 3 OF 3

105

STATE PROJECT NUMBER

1060-53-70

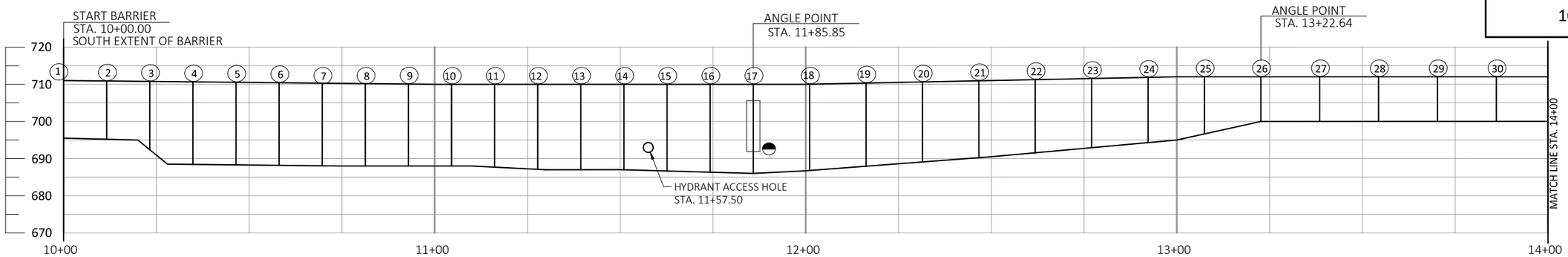

GROUND MOUNTED NOISE BARRIER

(LOOKING NORTH - ROADWAY SIDE)

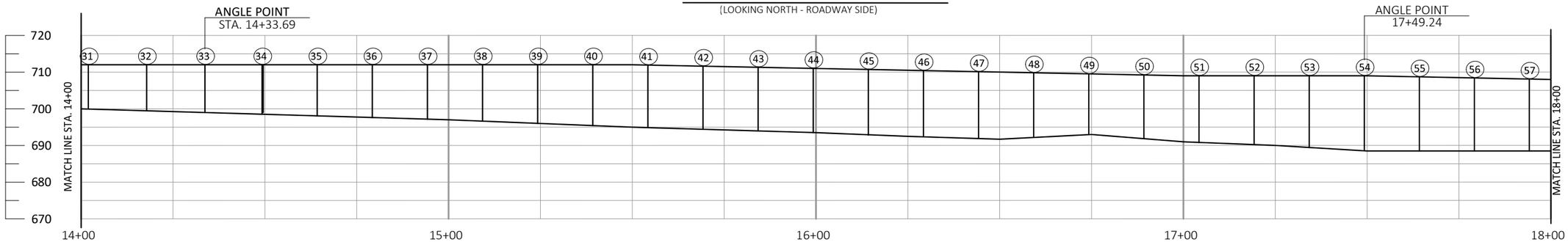

GROUND MOUNTED NOISE BARRIER

(LOOKING NORTH - ROADWAY SIDE)

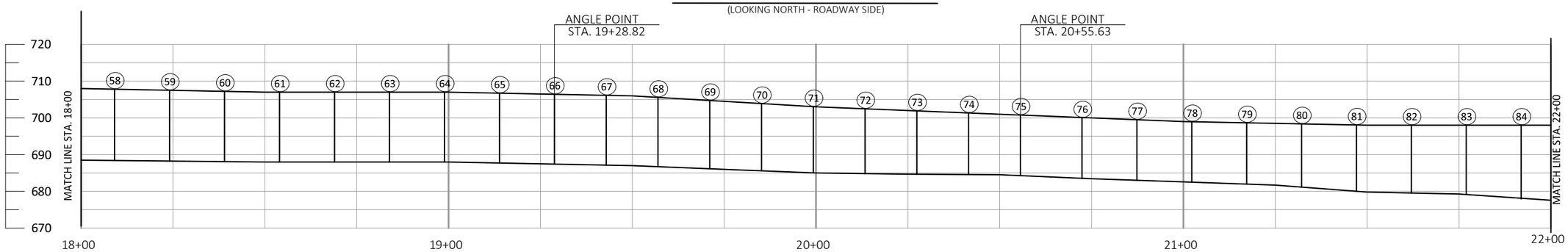

GROUND MOUNTED NOISE BARRIER

(LOOKING NORTH - RESIDENTAL SIDE)

LEGEND

- REMOVE RUST AND RE-PAINT ON ROADSIDE
- REMOVE RUST AND RE-PAINT ON RESIDENTIAL SIDE
- SUPPORT POST (NUMBERED SOUTH TO NORTH)
- PRECAST SOUND BARRIER PANEL SUPPORT REPAIR

TOTAL ESTIMATED QUANTITIES

ITEM NUMBER	BID ITEM	UNIT	TOTAL
517.3001.S.07	STRUCTURE OVERCOATING CLEANING AND PRIMING N-40-42	EA	1
517.4001.S.07	CONTAINMENT AND COLLECTION OF WASTE MATERIAL N-40-42	EA	1
SPV.0060.02	REMOVING AND REINSTALLING SOUND PANELS	EA	8
SPV.0060.07	BOTTOM PRECAST SOUND BARRIER PANEL SUPPORT REPAIR	EA	1

70% OF SUPPORT POST STRAPS SHOW RUST & PAINT SPALLING ON RESIDENTIAL SIDE (POST 92-181)

50% OF SUPPORT ANGLES SHOW RUST & PAINT SPALLING ON ROADWAY SIDE (POST 92-181)

GENERAL NOTES

DRAWINGS SHALL NOT BE SCALED.

DIMENSIONS SHOWN ARE BASED ON THE ORIGINAL STRUCTURE PLANS.

ORIGINAL CONSTRUCTION YEAR IS 2012.

CLEAN RUSTED AREAS OF STRUCTURAL SUPPORT POST (LOCATED ON PLAN AND AS DIRECTED BY FIELD ENGINEER) TO BARE METAL AS PER BID ITEM "STRUCTURAL OVERCOAT CLEANING AND PRIMING N-40-42". APPLY PRIMER AND INTERMEDIATE COATS TO THE AREA.

OVERCOAT PAINT THE STRUCTURAL SUPPORT POSTS AND BRACKETS LOCATED ON THE PLANS AND AS DIRECTED BY FIELD ENGINEER. PAINT SHALL BE BROWN, AMS STANDARD COLOR NO. 20170 OR APPROVED EQUAL.

LIST OF DRAWINGS:

1. GENERAL PLAN & ELEVATION 1
2. GENERAL PLAN & ELEVATION 2

WISCONSIN
THOMAS J. ROMENESKO
E-26318
MADISON
WI
PROFESSIONAL ENGINEER

DESIGN CONSULTANT
TOM ROMENESKO, PE
(608) 566-1370

BRIDGE OFFICE CONTACT
AARON BONK, PE
(608) 261-0261

NO.	DATE	REVISION	BY

DAAR ENGINEERING, INC.
www.daarcorp.com
Milwaukee, WI 53202
414-225-9817

STATE OF WISCONSIN
DEPARTMENT OF TRANSPORTATION

ACCEPTED SDR 08/09/22
CHIEF STRUCTURES DESIGN ENGINEER DATE

STRUCTURE N-40-42

NOISE WALL ON IH 43 SB, AT JCT WITH S. 13TH STREET

COUNTY MILWAUKEE | ~~TOWN~~/CITY/~~VILLAGE~~ MILWAUKEE

DESIGN SPEC.
AASHTO LRFD BRIDGE DESIGN SPECIFICATIONS

DESIGNED BY MC	DESIGN CK'D. TR	DRAWN BY MC	PLANS CK'D. TR

GENERAL PLAN & ELEVATION 1

STATE PROJECT NUMBER

1060-53-70

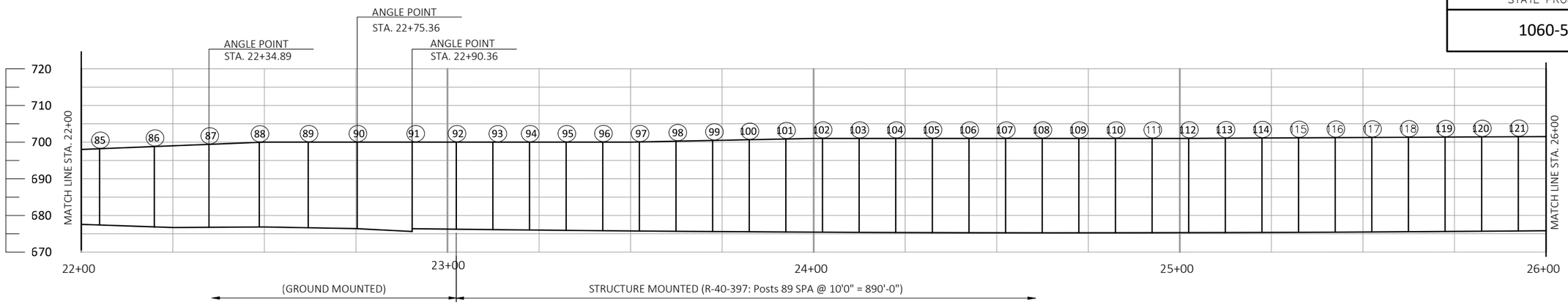

GROUND/STRUCTURE MOUNTED NOISE BARRIER

(LOOKING NORTH - ROADWAY SIDE)

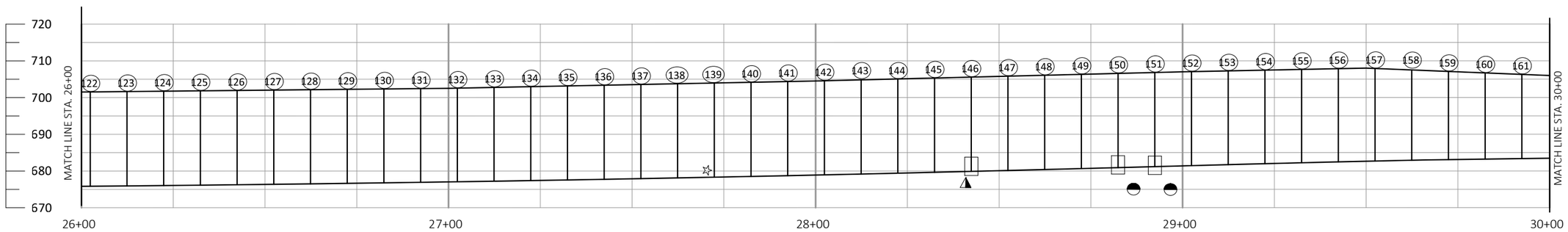

STRUCTURE MOUNTED NOISE BARRIER

(LOOKING NORTH - ROADWAY SIDE)

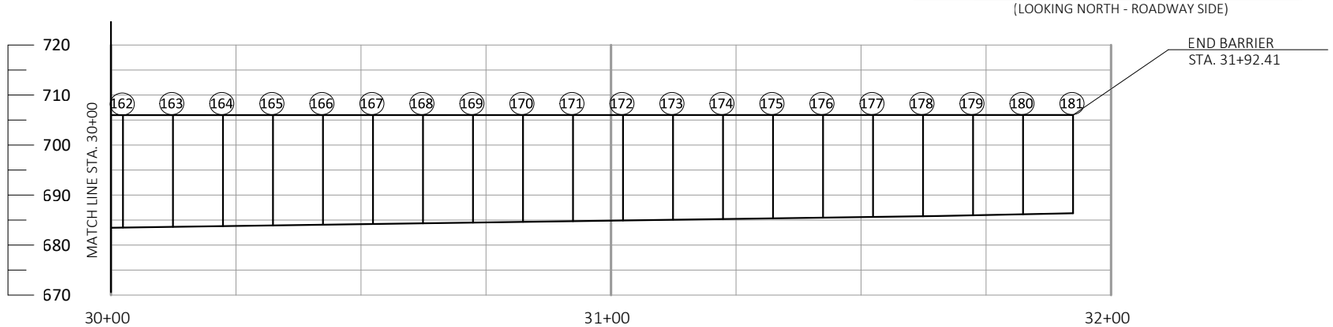

STRUCTURE MOUNTED NOISE BARRIER

(LOOKING WEST - ROADWAY SIDE)

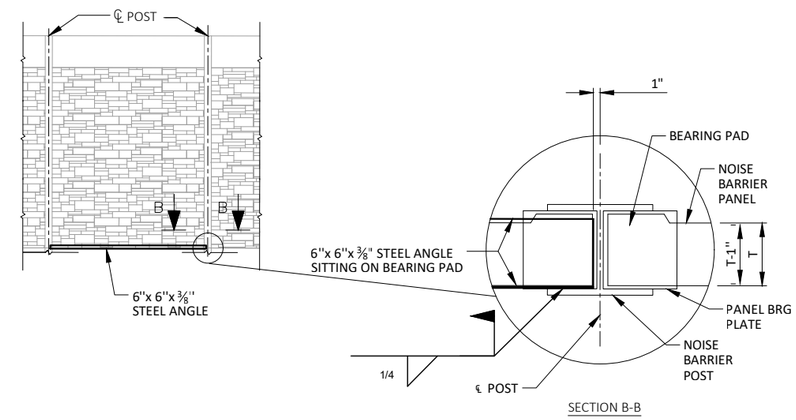

BOTTOM PANEL SUPPORT REPAIR DETAIL

BOTTOM PANEL SUPPORT REPAIR SEQUENCE

1. LOCATE SOUND PANELS THAT HAVE SETTLED PAST THE EXISTING SUPPORT BRACKETS.

2. REMOVE AND SALVAGE EXISTING UNDAMAGED PANELS FROM THE STRUCTURAL SUPPORT POSTS BY LIFTING THEM OUT. COST TO REMOVE, STORE, AND REINSTALL THE SOUND PANELS IS INCLUDED IN THE BID ITEM "REMOVING AND REINSTALLING SOUND PANELS". ANY DAMAGE TO THE SOUND PANELS CAUSED BY THE CONTRACTOR DURING REMOVAL, STORAGE OR REINSTALLING THE PANELS SHALL BE REPAIRED BY THE CONTRACTOR AT NO ADDITIONAL COST TO THE DEPARTMENT.

3. INSTALL SOUND BARRIER PANEL SUPPORT BRACKETS AS SHOWN IN DETAILS.

4. REINSTALL SALVAGED SOUND PANELS.

LEGEND

◭ - REMOVE RUST AND RE-PAINT ON ROADSIDE

◓ - REMOVE RUST AND RE-PAINT ON RESIDENTIAL SIDE

◯ - SUPPORT POST (NUMBERED SOUTH TO NORTH)

☆ - PRECAST SOUND BARRIER PANEL SUPPORT REPAIR

NO.	DATE	REVISION	BY

STATE OF WISCONSIN
DEPARTMENT OF TRANSPORTATION

STRUCTURE N-40-42

DRAWN BY MC | PLANS CK'D. TR

GENERAL PLAN & ELEVATION 2

SHEET 2 OF 2

STATE PROJECT NUMBER
1060-53-70

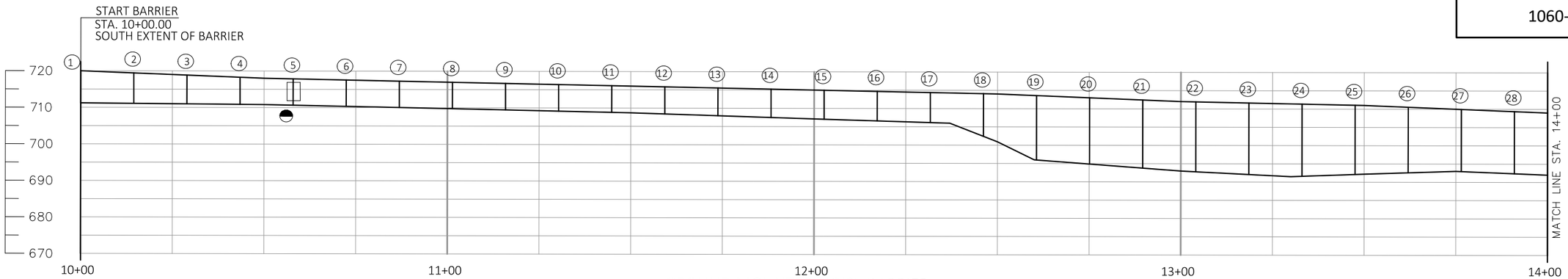

GROUND MOUNTED NOISE BARRIER
(LOOKING NORTH - RESIDENTAL SIDE)

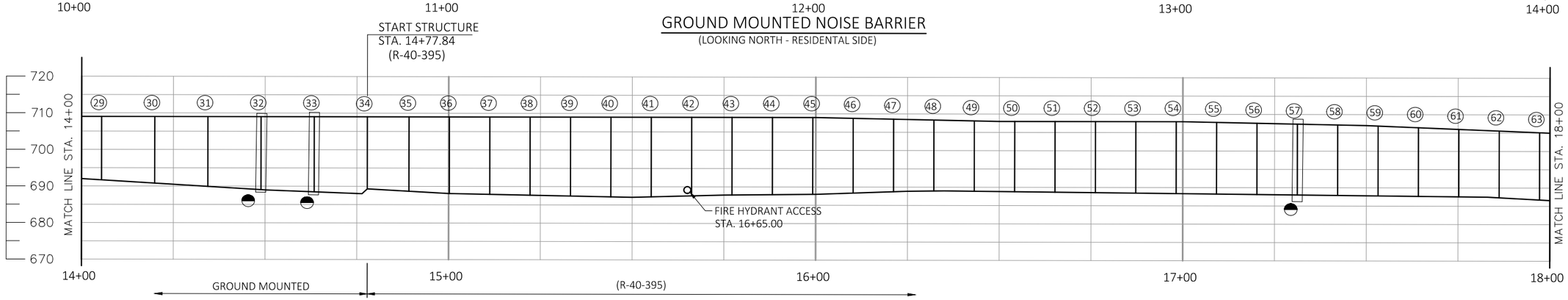

GROUND MOUNTED/STRUCTURE MOUNTED NOISE BARRIER
(LOOKING NORTH - RESIDENTAL SIDE)

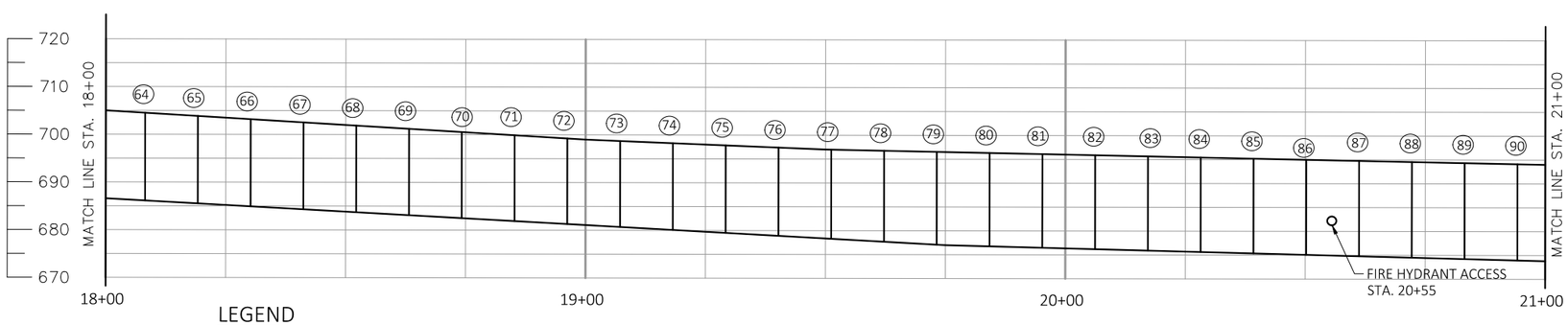

STRUCTURE MOUNTED NOISE BARRIER
(LOOKING NORTH - RESIDENTAL SIDE)

LEGEND

- ▲ - REMOVE RUST AND RE-PAINT ON ROADSIDE
- ◓ - REMOVE RUST AND RE-PAINT ON RESIDENTIAL SIDE
- ○ - SUPPORT POST (NUMBERED SOUTH TO NORTH)
- ☆ - PRECAST SOUND BARRIER PANEL SUPPORT REPAIR

LIST OF DRAWINGS:

1. GENERAL PLAN & ELEVATION 1
2. GENERAL PLAN & ELEVATION 2

TOTAL ESTIMATED QUANTITIES

ITEM NUMBER	BID ITEM	UNIT	TOTAL
517.3001.S.08	STRUCTURE OVERCOATING CLEANING AND PRIMING N-40-43	EA	1
517.4001.S.08	CONTAINMENT AND COLLECTION OF WASTE MATERIAL N-40-43	EA	1
SPV.0060.02	REMOVING AND REINSTALLING SOUND PANELS	EA	17
SPV.0060.07	BOTTOM PRECAST SOUND BARRIER PANEL SUPPORT REPAIR	EA	4

GENERAL NOTES

DRAWINGS SHALL NOT BE SCALED.

DIMENSIONS SHOWN ARE BASED ON THE ORIGINAL STRUCTURE PLANS.

ORIGINAL CONSTRUCTION YEAR IS 2012.

CLEAN RUSTED AREAS OF STRUCTURAL SUPPORT POST (LOCATED ON PLAN AND AS DIRECTED BY FIELD ENGINEER) TO BARE METAL AS PER BID ITEM "STRUCTURE OVERCOAT CLEANING AND PRIMING N-40-43". APPLY PRIMER AND INTERMEDIATE COATS TO THE AREA.

OVERCOAT PAINT THE STRUCTURAL SUPPORT POSTS AND BRACKETS LOCATED ON THE PLANS AND AS DIRECTED BY THE FIELD ENGINEER. PAINT SHALL BE BROWN, AMS STANDARD COLOR NO. 20170 OR APPROVED EQUAL.

WISCONSIN
THOMAS J. ROMENESKO
E-26318
MADISON
WI
PROFESSIONAL ENGINEER

DESIGN CONSULTANT
TOM ROMENESKO, PE
(608) 566-1370

BRIDGE OFFICE CONTACT
AARON BONK, PE
(608) 261-0261

NO.	DATE	REVISION	BY

DAAR ENGINEERING, INC.
www.daarcorp.com
Milwaukee, WI 53202
414-225-9817

STATE OF WISCONSIN
DEPARTMENT OF TRANSPORTATION

ACCEPTED SDR 08/09/22
CHIEF STRUCTURES DESIGN ENGINEER DATE

STRUCTURE N-40-43

NOISE WALL ON IH 43/94 NB, 1.1 MILE S JCT HOWARD AVE.

COUNTY MILWAUKEE | ~~TOWN~~/CITY/~~VILLAGE~~ MILWAUKEE

DESIGN SPEC.
AASHTO LRFD BRIDGE DESIGN SPECIFICATIONS

DESIGNED BY MC	DESIGN CK'D. TR	DRAWN BY MC	PLANS CK'D. TR

GENERAL PLAN & ELEVATION 1

STATE PROJECT NUMBER
1060-53-70

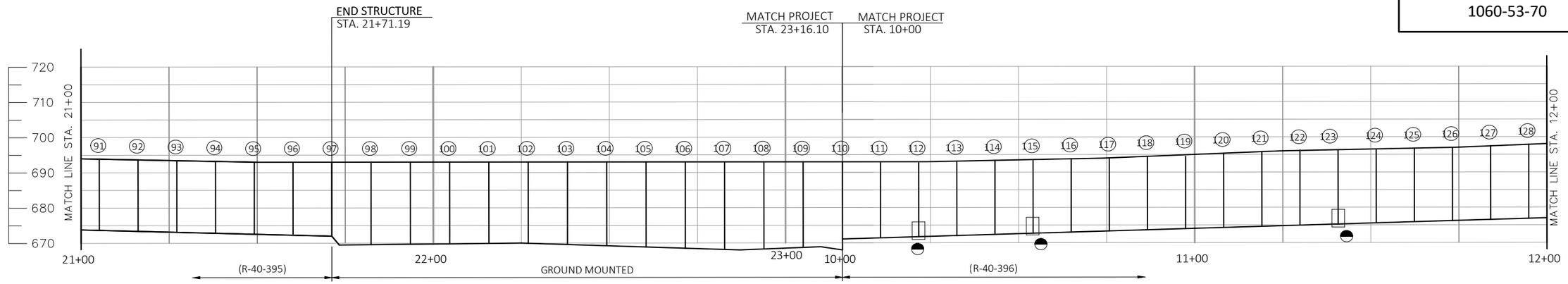

STRUCTURE MOUNTED NOISE BARRIER

(LOOKING WEST - ROADWAY SIDE)

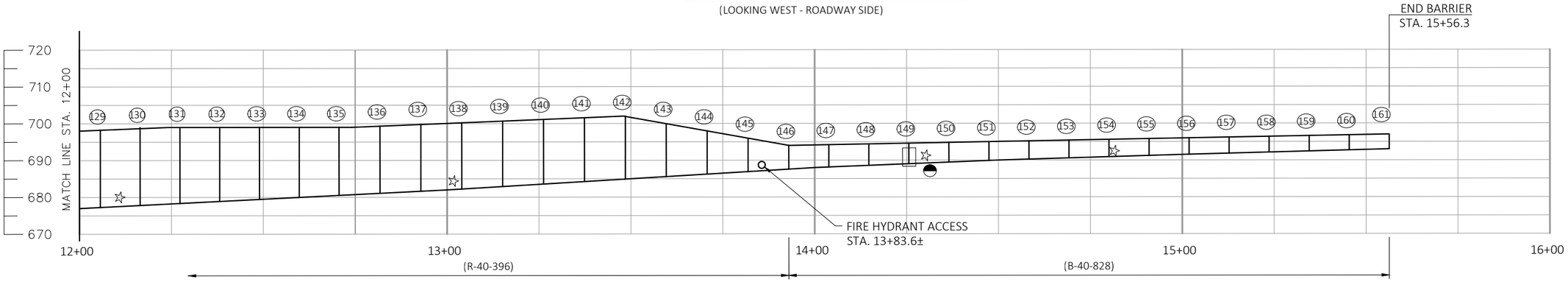

STRUCTURE MOUNTED NOISE BARRIER

(LOOKING WEST - ROADWAY SIDE)

LEGEND

- REMOVE RUST AND RE-PAINT ON ROADSIDE
- REMOVE RUST AND RE-PAINT ON RESIDENTIAL SIDE
- SUPPORT POST (NUMBERED SOUTH TO NORTH)
- PRECAST SOUND BARRIER PANEL SUPPORT REPAIR

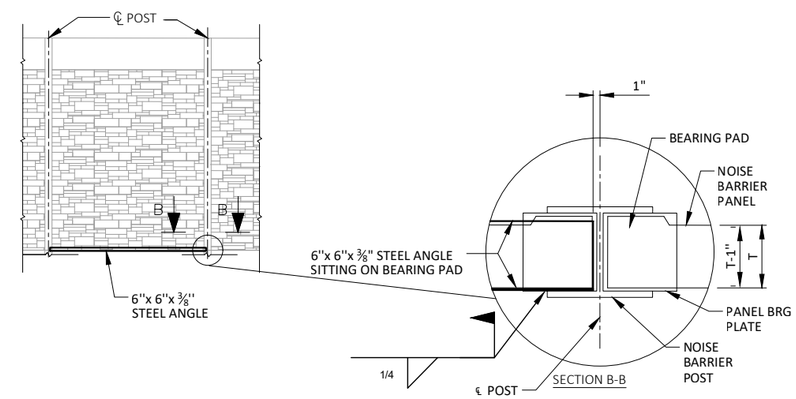

BOTTOM PANEL SUPPORT REPAIR DETAIL

BOTTOM PANEL SUPPORT REPAIR SEQUENCE

1. LOCATE SOUND PANELS THAT HAVE SETTLED PAST THE EXISTING SUPPORT BRACKETS.

2. REMOVE AND SALVAGE EXISTING UNDAMAGED PANELS FROM THE STRUCTURAL SUPPORT POSTS BY LIFTING THEM OUT. COST TO REMOVE, STORE, AND REINSTALL THE SOUND PANELS IS INCLUDED IN THE BID ITEM "REMOVING AND REINSTALLING SOUND PANELS". ANY DAMAGE TO THE SOUND PANELS CAUSED BY THE CONTRACTOR DURING REMOVAL, STORAGE OR REINSTALLING THE PANELS SHALL BE REPAIRED BY THE CONTRACTOR AT NO ADDITIONAL COST TO THE DEPARTMENT.

3. INSTALL SOUND BARRIER PANEL SUPPORT BRACKETS AS SHOWN IN DETAILS.

4. REINSTALL SALVAGED SOUND PANELS.

NO.	DATE	REVISION	BY

STATE OF WISCONSIN
DEPARTMENT OF TRANSPORTATION

STRUCTURE N-40-43

DRAWN BY	MC	PLANS CK'D.	TR

GENERAL PLAN & ELEVATION 2

SHEET 2 OF 2

STATE PROJECT NUMBER
1060-53-70

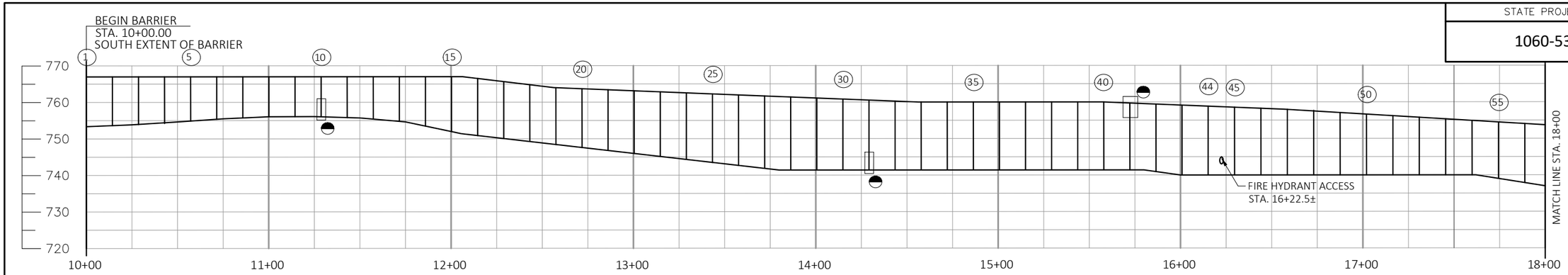

GROUND MOUNTED NOISE BARRIER
(LOOKING WEST - ROADWAY SIDE)

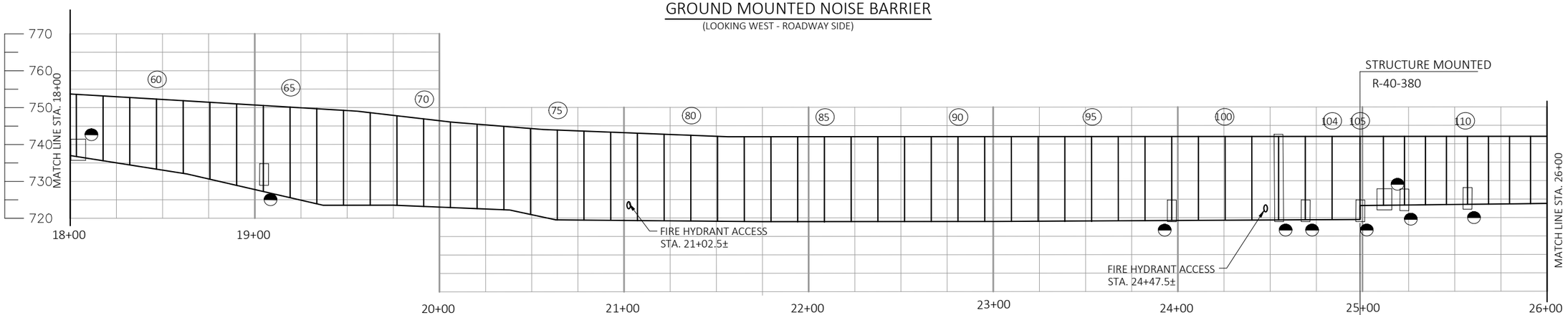

GROUND MOUNTED/STRUCTURE MOUNTED NOISE BARRIER
(LOOKING WEST - ROADWAY SIDE)

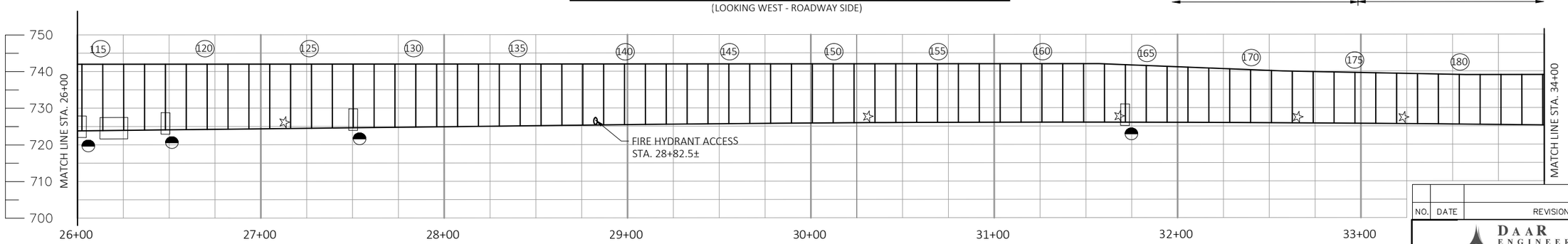

STRUCTURE MOUNTED NOISE BARRIER
(LOOKING WEST - ROADWAY SIDE)

LEGEND

- ◯ - SUPPORT POSTS (NUMBERED SOUTH TO NORTH)
- ◭ - REMOVE RUST AND RE-PAINT ON ROADWAY SIDE
- ◓ - REMOVE RUST AND RE-PAINT ON RESIDENTIAL SIDE
- ☆ - PANEL SUPPORT REPAIR

TOTAL ESTIMATED QUANTITIES

ITEM NUMBER	BID ITEM	UNIT	TOTAL
517.3001.S.09	STRUCTURE OVERCOATING CLEANING AND PRIMING N-40-46	EA	1
517.4001.S.09	CONTAINMENT AND COLLECTION OF WASTE MATERIAL N-40-46	EA	1
SPV.0060.02	REMOVING AND REINSTALLING SOUND PANELS	EA	49
SPV.0060.07	BOTTOM PRECAST SOUND BARRIER PANEL SUPPORT REPAIR	EA	9

GENERAL NOTES

DRAWINGS SHALL NOT BE SCALED.

DIMENSIONS SHOWN ARE BASED ON THE ORIGINAL STRUCTURE PLANS.

ORIGINAL CONSTRUCTION YEAR IS 2010.

CLEAN RUSTED AREAS OF STRUCTURAL SUPPORT POST (LOCATED ON PLAN AND AS DIRECTED BY FIELD ENGINEER) TO BARE METAL AS PER BID ITEM "STRUCTURE OVERCOAT CLEANING AND PRIMING N-40-46". APPLY PRIMER AND INTERMEDIATE COATS TO THE AREA.

OVERCOAT PAINT THE STRUCTURAL SUPPORT POSTS AND BRACKETS LOCATED ON THE PLANS AND AS DIRECTED BY FIELD ENGINEER. PAINT SHALL BE BROWN, AMS STANDARD COLOR NO. 20170 OR APPROVED EQUAL.

LIST OF DRAWINGS:

1. GENERAL PLAN & ELEVATION 1
2. GENERAL PLAN & ELEVATION 2

WISCONSIN
THOMAS J. ROMENESKO
E-26318
MADISON
WI
PROFESSIONAL ENGINEER

DESIGN CONSULTANT
TOM ROMENESKO, PE
(608) 566-1370

BRIDGE OFFICE CONTACT
AARON BONK, PE
(608) 261-0261

NO.	DATE	REVISION	BY

DAAR ENGINEERING, INC.
www.daarcorp.com
Milwaukee, WI 53202
414-225-9817

STATE OF WISCONSIN
DEPARTMENT OF TRANSPORTATION

ACCEPTED SDR 08/09/22
CHIEF STRUCTURES DESIGN ENGINEER DATE

STRUCTURE N-40-46

NOISE WALL ON IH 94/43, 0.15 MILE S JCT LAYTON AVE.

COUNTY WAUKESHA | TOWN/~~CITY~~/~~VILLAGE~~ VERNON

DESIGN SPEC. AASHTO LRFD BRIDGE DESIGN SPECIFICATIONS

DESIGNED BY MC	DESIGN CK'D. TR	DRAWN BY MC	PLANS CK'D. TR

GENERAL PLAN & ELEVATION 1

SHEET 1 OF 2
110

STATE PROJECT NUMBER

1060-53-70

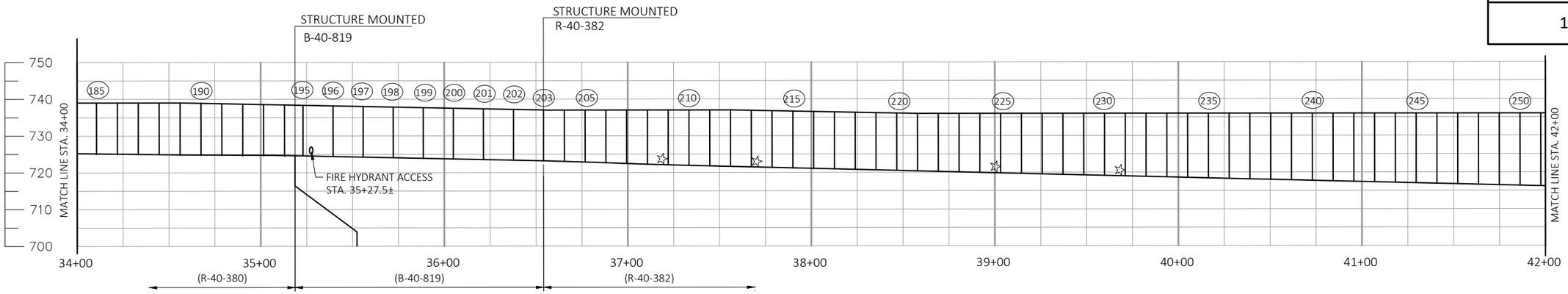

STRUCTURE MOUNTED NOISE BARRIER

(LOOKING WEST - ROADWAY SIDE)

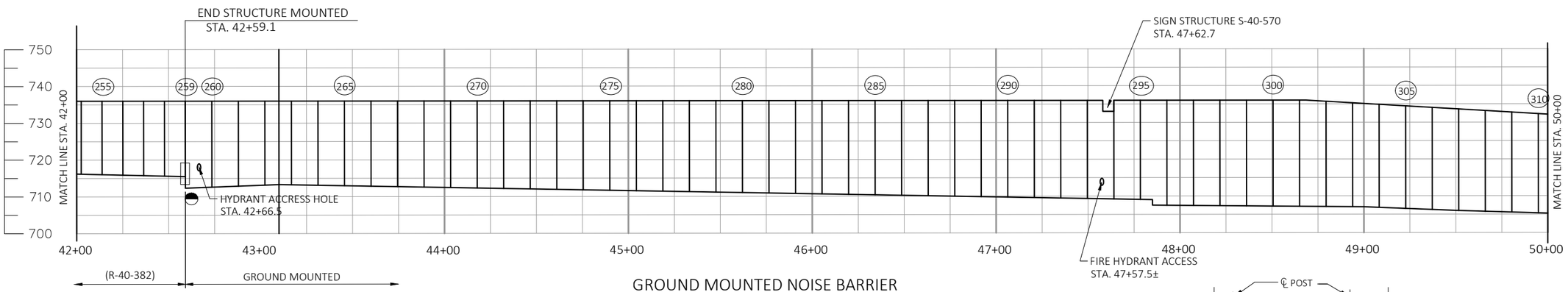

GROUND MOUNTED NOISE BARRIER

(LOOKING WEST - ROADWAY SIDE)

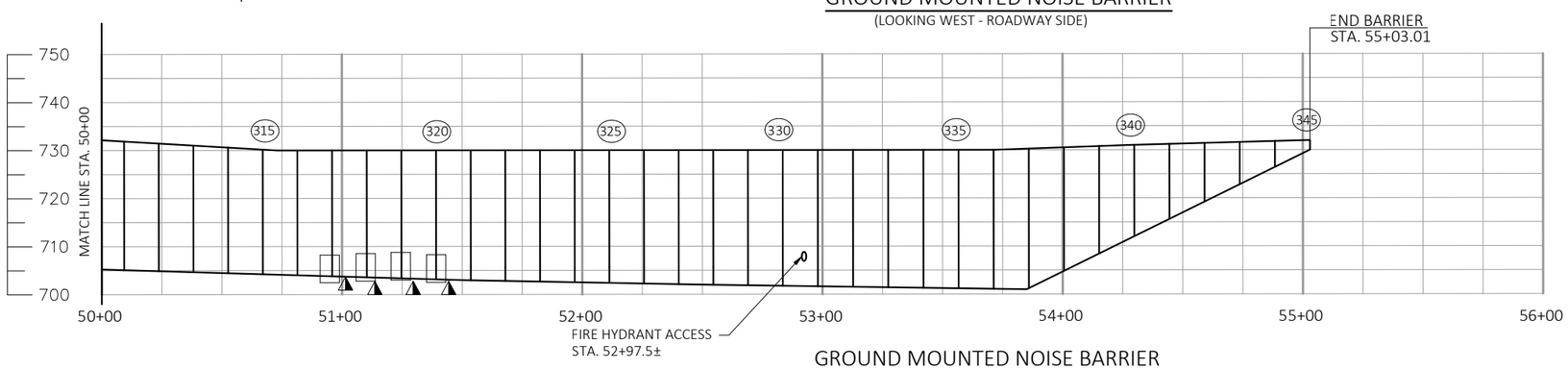

GROUND MOUNTED NOISE BARRIER

(LOOKING WEST - ROADWAY SIDE)

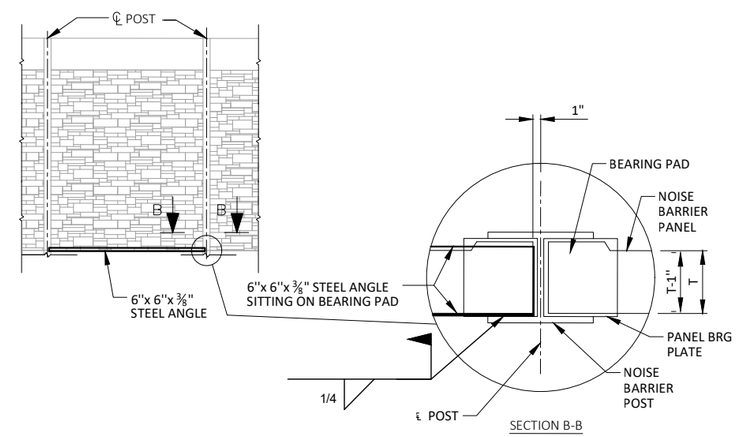

BOTTOM PANEL SUPPORT REPAIR DETAIL

BOTTOM PANEL SUPPORT REPAIR SEQUENCE

1. LOCATE SOUND PANELS THAT HAVE SETTLED PAST THE EXISTING SUPPORT BRACKETS.

2. REMOVE AND SALVAGE EXISTING UNDAMAGED PANELS OUT FROM THE STRUCTURAL SUPPORT POSTS BY LIFTING THEM OUT. COST TO REMOVE, STORE, AND REINSTALL THE SOUND PANELS IS INCLUDED IN THE BID ITEM "REMOVING AND REINSTALLING SOUND PANELS". ANY DAMAGE TO THE SOUND PANELS CAUSED BY THE CONTRACTOR DURING REMOVAL, STORAGE OR REINSTALLING THE PANELS SHALL BE REPAIRED BY THE CONTRACTOR AT NO ADDITIONAL COST TO THE DEPARTMENT.

3. INSTALL SOUND BARRIER PANEL SUPPORT BRACKETS AS SHOWN IN DETAILS.

4. REINSTALL SALVAGED SOUND PANELS.

LEGEND

- ◯ - SUPPORT POSTS (NUMBERED SOUTH TO NORTH)
- ◭ - REMOVE RUST AND RE-PAINT ON ROADWAY SIDE
- ◓ - REMOVE RUST AND RE-PAINT ON RESIDENTIAL SIDE
- ☆ - PANEL SUPPORT REPAIR

NO.	DATE	REVISION	BY

STATE OF WISCONSIN
DEPARTMENT OF TRANSPORTATION

STRUCTURE N-40-46

DRAWN BY MC | PLANS CK'D. TR

GENERAL PLAN & ELEVATION 2

SHEET 2 OF 2

STATE PROJECT NUMBER
1060-53-70

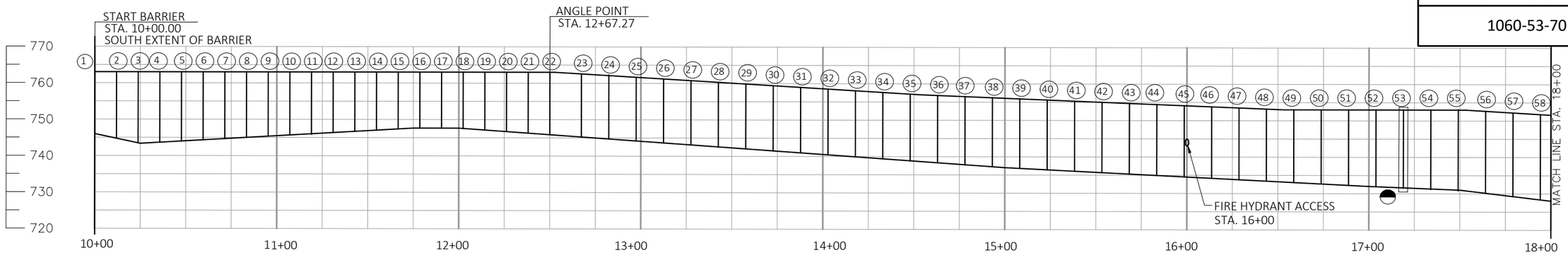

GROUND MOUNTED NOISE BARRIER

(LOOKING WEST - RESIDENTAL SIDE)

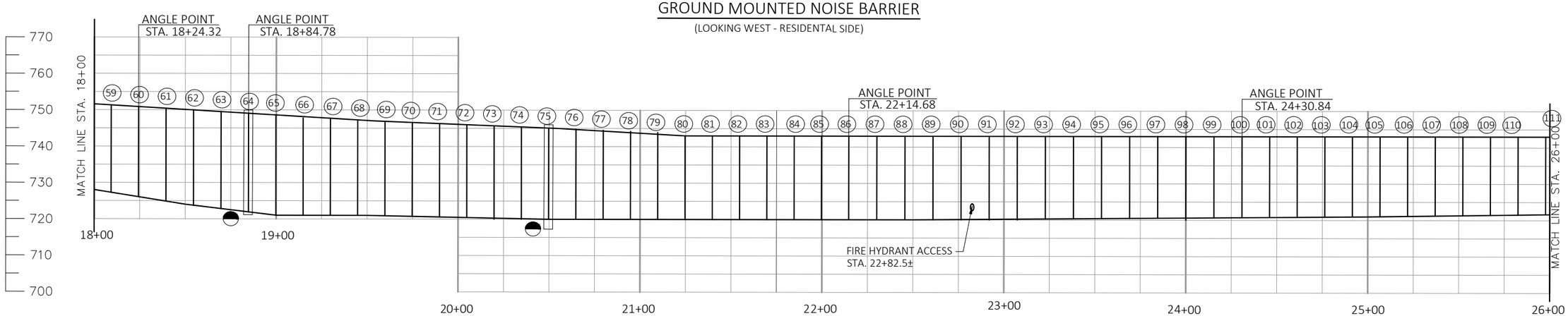

GROUND MOUNTED NOISE BARRIER

(LOOKING WEST - RESIDENTAL SIDE)

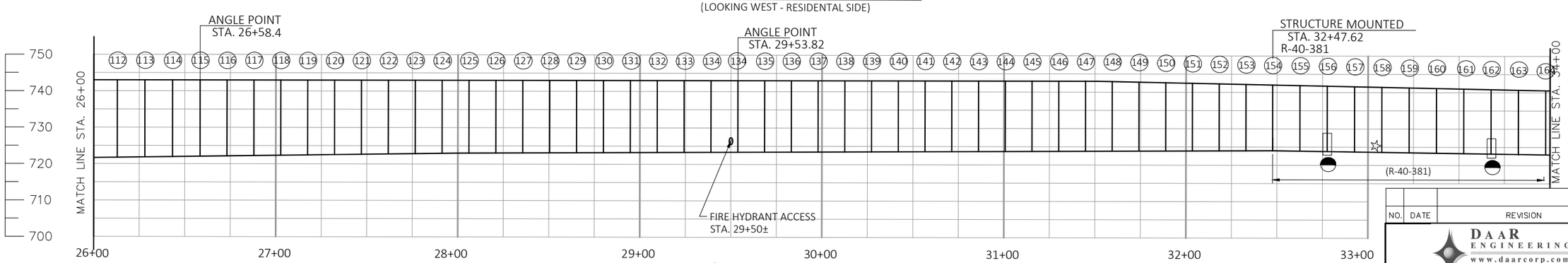

GROUND/STRUCTURE MOUNTED NOISE BARRIER

(LOOKING WEST - RESIDENTAL SIDE)

LEGEND

- ◯ - SUPPORT POSTS (NUMBERED SOUTH TO NORTH)
- ◭ - REMOVE RUST AND RE-PAINT ON ROADWAY SIDE
- ◓ - REMOVE RUST AND RE-PAINT ON RESIDENTIAL SIDE
- ☆ - PANEL SUPPORT REPAIR

TOTAL ESTIMATED QUANTITIES

ITEM NUMBER	BID ITEM	UNIT	TOTAL
517.3001.S.10	STRUCTURE OVERCOATING CLEANING AND PRIMING N-40-47	EA	1
517.4001.S.10	CONTAINMENT AND COLLECTION OF WASTE MATERIAL N-40-47	EA	1
SPV.0060.01	BOTTOM PRECAST SOUND BARRIER PANEL SUPPORT REPAIR	EA	4
SPV.0060.02	REMOVING AND REINSTALLING SOUND PANELS	EA	22
SPV.0060.07	TOP PRECAST SOUND BARRIER PANEL SUPPORT REPAIR	EA	2

GENERAL NOTES

DRAWINGS SHALL NOT BE SCALED.

DIMENSIONS SHOWN ARE BASED ON THE ORIGINAL STRUCTURE PLANS.

ORIGINAL CONSTRUCTION YEAR IS 2010.

CLEAN RUSTED AREAS OF STRUCTURAL SUPPORT POST (LOCATED ON PLAN AND AS DIRECTED BY FIELD ENGINEER) TO BARE METAL AS PER BIT ITEM "STRUCTURE OVERCOAT CLEANING AND PRIMING N-40-47". APPLY PRIMER AND INTERMEDIATE COATS TO THE AREA.

OVERCOAT PAINT THE STRUCTURAL SUPPORT POSTS AND BRACKETS LOCATED ON THE PLANS AND AS DIRECTED BY THE FIELD ENGINEER. PAINT SHALL BE BROWN, AMS STANDARD COLOR NO. 20170 OR APPROVED EQUAL.

LIST OF DRAWINGS:

1. GENERAL PLAN & ELEVATION 1
2. GENERAL PLAN & ELEVATION 2
3. PANEL SUPPORT REPAIR DETAILS

WISCONSIN
THOMAS J. ROMENESKO
E-26318
MADISON
WI
PROFESSIONAL ENGINEER

DESIGN CONSULTANT
TOM ROMENESKO, PE
(608) 566-1370

BRIDGE OFFICE CONTACT
AARON BONK, PE
(608) 261-0261

NO.	DATE	REVISION	BY

DAAR ENGINEERING, INC.
www.daarcorp.com
Milwaukee, WI 53202
414-225-9817

STATE OF WISCONSIN
DEPARTMENT OF TRANSPORTATION

ACCEPTED SDR 08/09/22
CHIEF STRUCTURES DESIGN ENGINEER DATE

STRUCTURE N-40-47

NOISE WALL ON IH 94/43, 0.12 MILE S. JCT LAYTON AVE.

COUNTY MILWAUKEE | ~~TOWN~~/CITY/~~VILLAGE~~ MILWAUKEE

DESIGN SPEC.
AASHTO LRFD BRIDGE DESIGN SPECIFICATIONS

DESIGNED BY MC	DESIGN CK'D. TR	DRAWN BY MC	PLANS CK'D. TR

GENERAL PLAN & ELEVATION 1

SHEET 1 OF 3
112

STATE PROJECT NUMBER

1060-53-70

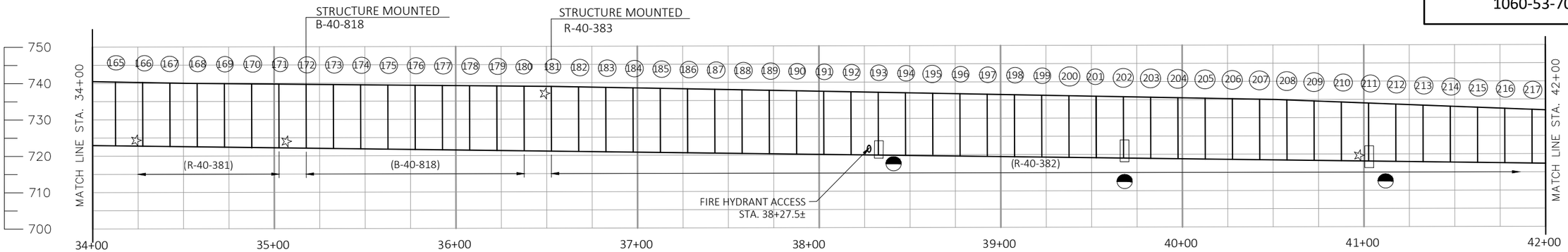

STRUCTURE MOUNTED NOISE BARRIER

(LOOKING WEST - ROADWAY SIDE)

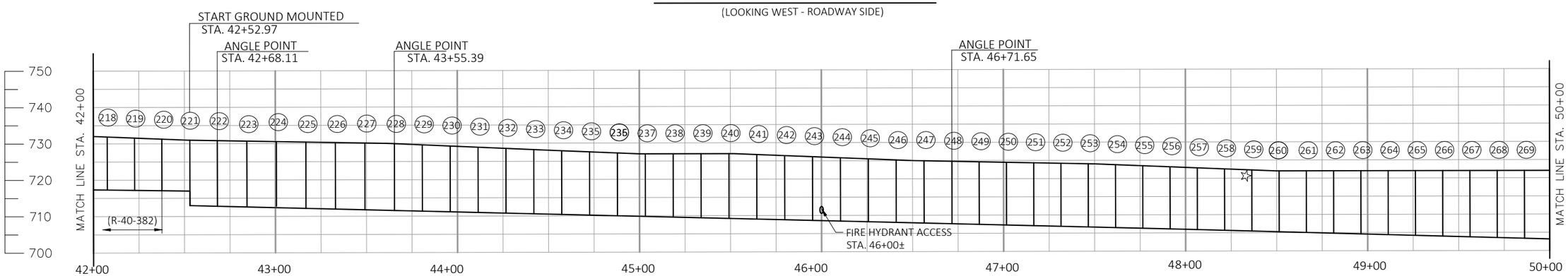

GROUND MOUNTED NOISE BARRIER

(LOOKING WEST - RESIDENTAL SIDE)

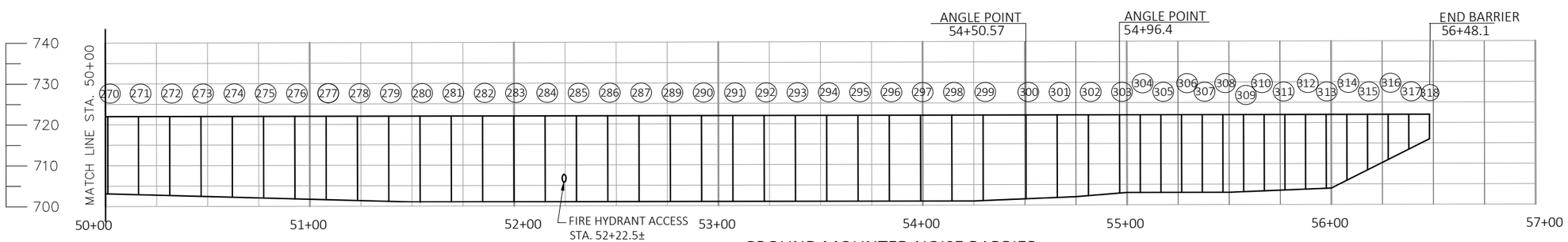

GROUND MOUNTED NOISE BARRIER

(LOOKING WEST - RESIDENTAL SIDE)

LEGEND

- SUPPORT POSTS (NUMBERED SOUTH TO NORTH)
- REMOVE RUST AND RE-PAINT ON ROADWAY SIDE
- REMOVE RUST AND RE-PAINT ON RESIDENTIAL SIDE
- PANEL SUPPORT REPAIR

NO.	DATE	REVISION	BY

STATE OF WISCONSIN
DEPARTMENT OF TRANSPORTATION

STRUCTURE N-40-47

DRAWN BY MC | PLANS CK'D. TR

GENERAL PLAN & ELEVATION 2

SHEET 2 OF 3

113

STATE PROJECT NUMBER

1060-53-70

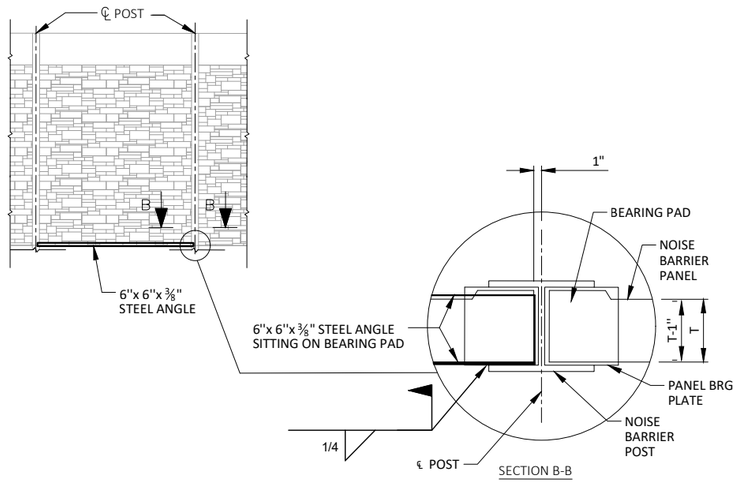

BOTTOM PANEL SUPPORT REPAIR DETAIL

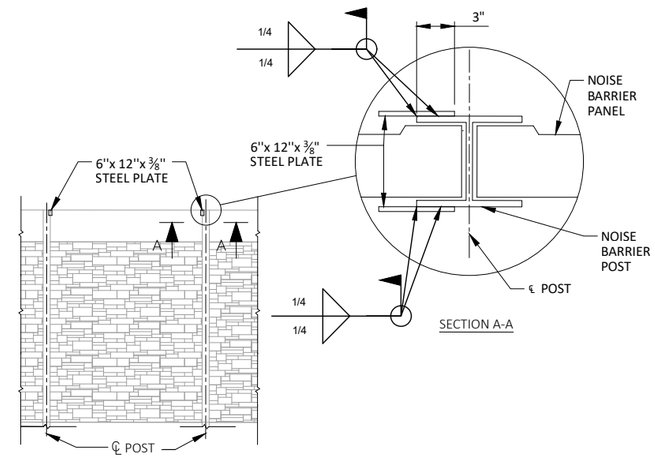

TOP PANEL SUPPORT REPAIR DETAIL

BOTTOM PANEL SUPPORT REPAIR SEQUENCE

1. LOCATE SOUND PANELS THAT HAVE SETTLED PAST THE EXISTING SUPPORT BRACKETS.

2. REMOVE AND SALVAGE EXISTING UNDAMAGED PANELS OUT FROM THE STRUCTURAL SUPPORT POSTS BY LIFTING THEM OUT. COST TO REMOVE, STORE, AND REINSTALL THE SOUND PANELS IS INCLUDED IN THE BID ITEM "REMOVING AND REINSTALLING SOUND PANELS". ANY DAMAGE TO THE SOUND PANELS CAUSED BY THE CONTRACTOR DURING REMOVAL, STORAGE OR REINSTALLING THE PANELS SHALL BE REPAIRED BY THE CONTRACTOR AT NO ADDITIONAL COST TO THE DEPARTMENT.

3. INSTALL SOUND BARRIER PANEL SUPPORT BRACKETS AS SHOWN IN DETAILS.

4. REINSTALL SALVAGED SOUND PANELS.

TOP PANEL SUPPORT REPAIR SEQUENCE

1. LOCATE SOUND PANEL THAT ARE LOOSE OR BOWED PAST THE EXISTING SUPPORT BRACKETS.

2. REMOVE AND SALVAGE EXISTING UNDAMAGED PANEL FROM THE STRUCTURAL SUPPORT POSTS BY LIFTING THEM OUT. COST TO REMOVE, STORE, AND REINSTALL THE SOUND PANELS IS INCLUDED IN THE BID ITEM "REMOVING AND REINSTALLING SOUND PANELS". ANY DAMAGE TO THE SOUND PANELS CAUSED BY THE CONTRACTOR DURING REMOVAL, STORAGE OR REINSTALLING THE PANELS SHALL BE REPAIRED BY THE CONTRACTOR AT NO ADDITIONAL COST TO THE DEPARTMENT

3. REPAIR SOUND BARRIER PANEL SUPPORT BRACKETS AS SHOWN IN DETAILS.

4. REINSTALL SALVAGED SOUND PANEL.

8

8

NO.	DATE	REVISION	BY

STATE OF WISCONSIN
DEPARTMENT OF TRANSPORTATION

STRUCTURE N-40-47

DRAWN BY MC | PLANS CK'D. TR

PANEL SUPPORT REPAIR DETAIL

SHEET 3 OF 3

STATE PROJECT NUMBER
1060-53-70

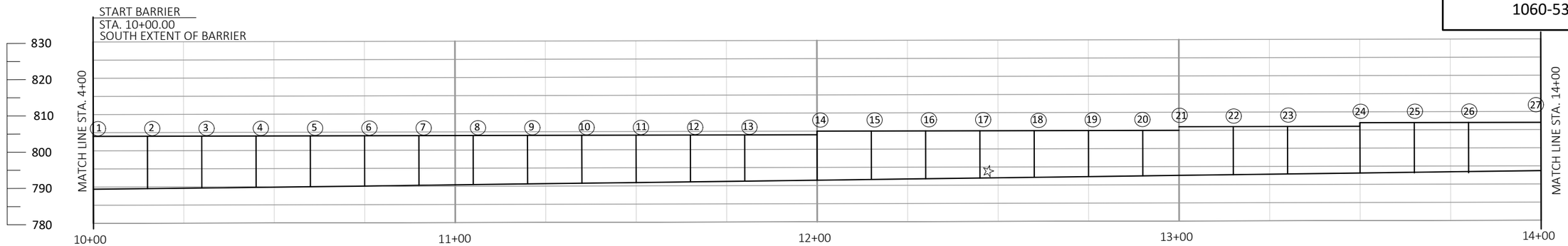

GROUND MOUNTED NOISE BARRIER

(LOOKING WEST - ROADWAY SIDE)

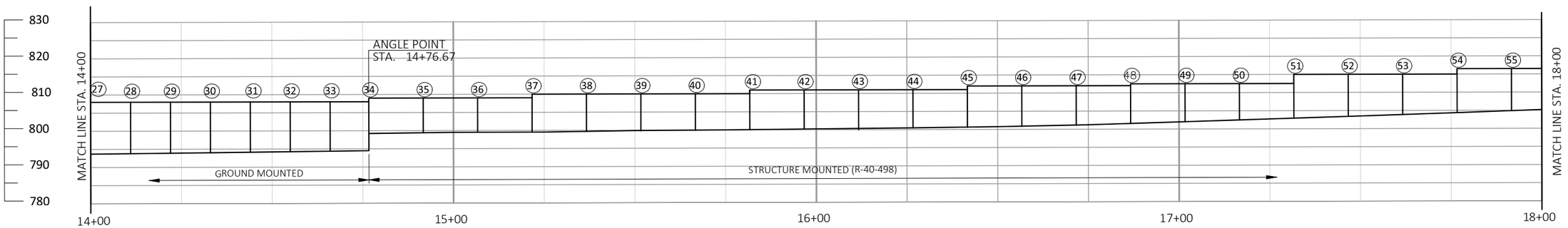

GROUND MOUNTED/STRUCTURE MOUNTED NOISE BARRIER

(LOOKING WEST - ROADWAY SIDE)

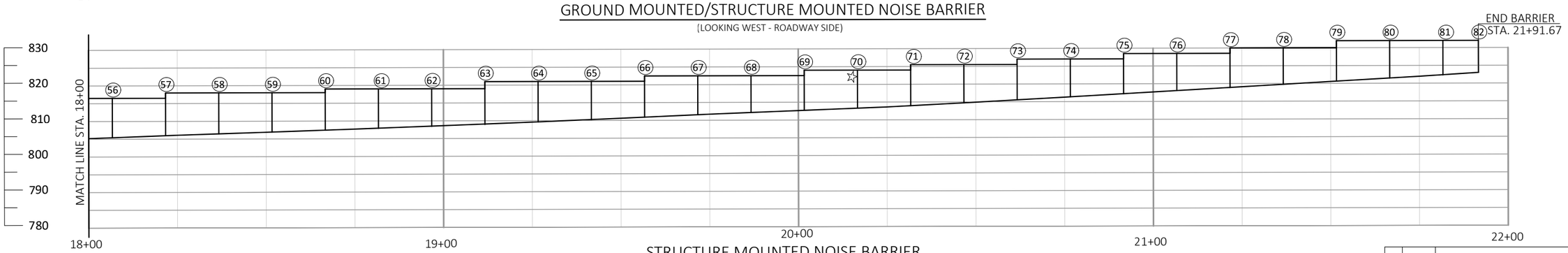

STRUCTURE MOUNTED NOISE BARRIER

(LOOKING WEST - ROADWAY SIDE)

LEGEND

◯ - SUPPORT POSTS (NUMBERED SOUTH TO NORTH)

☆ - PANEL SUPPORT REPAIR

GENERAL NOTES

DRAWINGS SHALL NOT BE SCALED.

DIMENSIONS SHOWN ARE BASED ON THE ORIGINAL STRUCTURE PLANS.

ORIGINAL CONSTRUCTION YEAR IS 2017.

LIST OF DRAWINGS:

1. GENERAL PLAN & ELEVATION
2. PANEL SUPPORT REPAIR DETAIL

WISCONSIN
THOMAS J. ROMENESKO
E-26318
MADISON
WI
PROFESSIONAL ENGINEER

TOTAL ESTIMATED QUANTITIES

ITEM NUMBER	BID ITEM	UNIT	TOTAL
517.3001.S.12	STRUCTURE OVERCOATING CLEANING AND PRIMING N-40-78	EA	1
517.4001.S.12	CONTAINMENT AND COLLECTION OF WASTE MATERIAL N-40-78	EA	1
SPV.0060.01	TOP PRECAST SOUND BARRIER PANEL SUPPORT REPAIR	EA	1
SPV.0060.02	REMOVING AND REINSTALLING SOUND PANELS	EA	6
SPV.0060.07	BOTTOM PRECAST SOUND BARRIER PANEL SUPPORT REPAIR	EA	1

DESIGN CONSULTANT
TOM ROMENESKO, PE
(608) 566-1370

BRIDGE OFFICE CONTACT
AARON BONK, PE
(608) 261-0261

NO.	DATE	REVISION	BY

DAAR ENGINEERING, INC.
www.daarcorp.com
Milwaukee, WI 53202
414-225-9817

STATE OF WISCONSIN
DEPARTMENT OF TRANSPORTATION

ACCEPTED SDR 08/09/22
CHIEF STRUCTURES DESIGN ENGINEER DATE

STRUCTURE N-40-78

NOISE WALL ON RAMP IH 94 WB TO IH 41 SB

COUNTY MILWAUKEE | CITY [redacted] WEST ALLIS

DESIGN SPEC.
AASHTO LRFD BRIDGE DESIGN SPECIFICATIONS

DESIGNED BY MC	DESIGN CK'D. TR	DRAWN BY MC	PLANS CK'D. TR

GENERAL PLAN & ELEVATION

STATE PROJECT NUMBER

1060-53-70

BOTTOM PANEL SUPPORT REPAIR SEQUENCE

1. LOCATE SOUND PANELS THAT HAVE SETTLED PAST THE EXISTING SUPPORT BRACKETS.

2. REMOVE AND SALVAGE EXISTING UNDAMAGED PANELS FROM THE STRUCTURAL SUPPORT POSTS BY LIFTING THEM OUT. COST TO REMOVE, STORE, AND REINSTALL THE SOUND PANELS IS INCLUDED IN THE BID ITEM "REMOVING AND REINSTALLING SOUND PANELS". ANY DAMAGE TO THE SOUND PANELS CAUSED BY THE CONTRACTOR DURING REMOVAL, STORAGE OR REINSTALLING THE PANELS SHALL BE REPAIRED BY THE CONTRACTOR AT NO ADDITIONAL COST TO THE DEPARTMENT

3. REPAIR SOUND BARRIER PANEL SUPPORT BRACKETS AS SHOWN IN DETAILS.

4. REINSTALL SALVAGED SOUND PANELS.

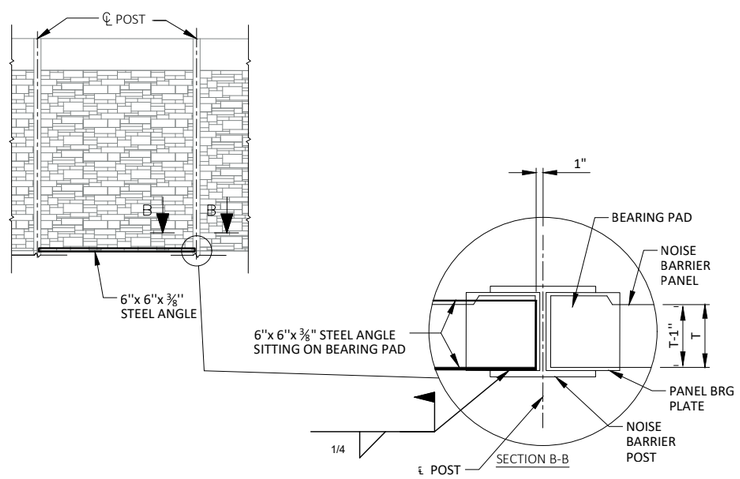

BOTTOM PANEL SUPPORT REPAIR DETAIL

TOP PANEL SUPPORT REPAIR SEQUENCE

1. LOCATE SOUND PANEL THAT ARE LOOSE OR BOWED PAST THE EXISTING SUPPORT BRACKETS.

2. REMOVE AND SALVAGE EXISTING UNDAMAGED PANEL FROM THE STRUCTURAL SUPPORT POSTS BY LIFTING THEM OUT. COST TO REMOVE, STORE, AND REINSTALL THE SOUND PANELS IS INCLUDED IN THE BID ITEM "REMOVING AND REINSTALLING SOUND PANELS". ANY DAMAGE TO THE SOUND PANELS CAUSED BY THE CONTRACTOR DURING REMOVAL, STORAGE OR REINSTALLING THE PANELS SHALL BE REPAIRED BY THE CONTRACTOR AT NO ADDITIONAL COST TO THE DEPARTMENT

3. REPAIR SOUND BARRIER PANEL SUPPORT BRACKETS AS SHOWN IN DETAILS.

4. REINSTALL SALVAGED SOUND PANEL.

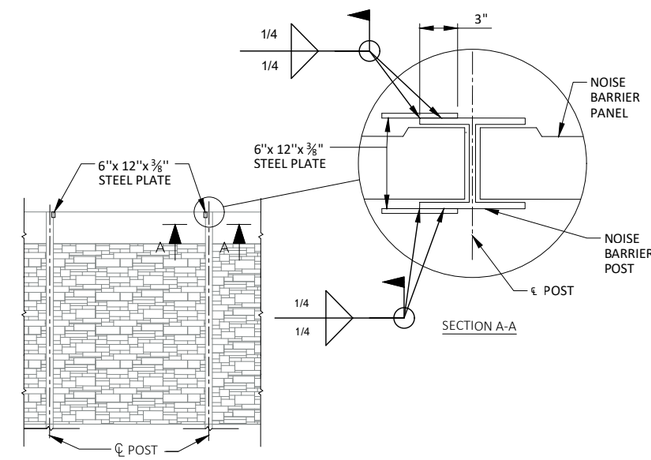

TOP PANEL SUPPORT REPAIR DETAIL

8

8

NO.	DATE	REVISION	BY

STATE OF WISCONSIN
DEPARTMENT OF TRANSPORTATION

STRUCTURE N-40-78

DRAWN BY MC | PLANS CK'D. TR

PANEL SUPPORT REPAIR DETAIL

SHEET 2 OF 2

STATE PROJECT NUMBER

1060-53-70

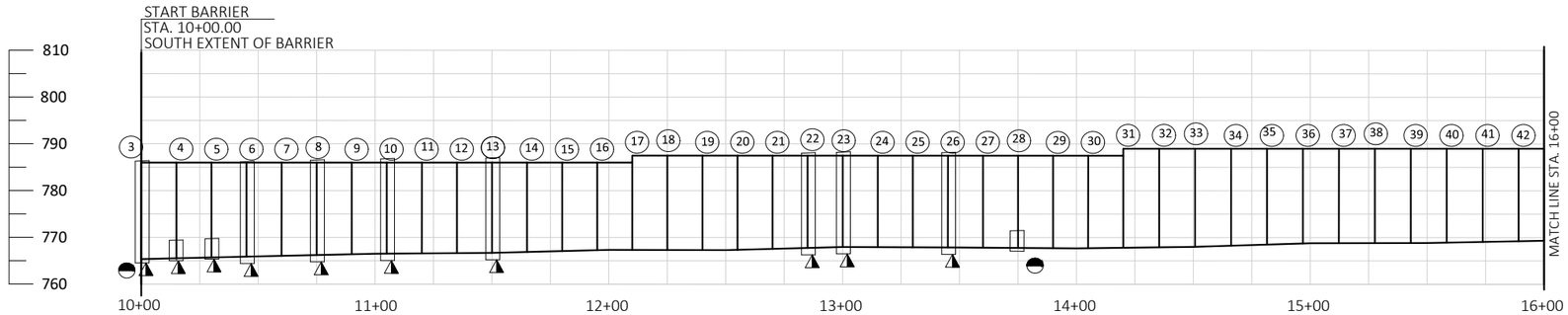

GROUND MOUNTED NOISE BARRIER

(LOOKING WEST - ROADWAY SIDE)

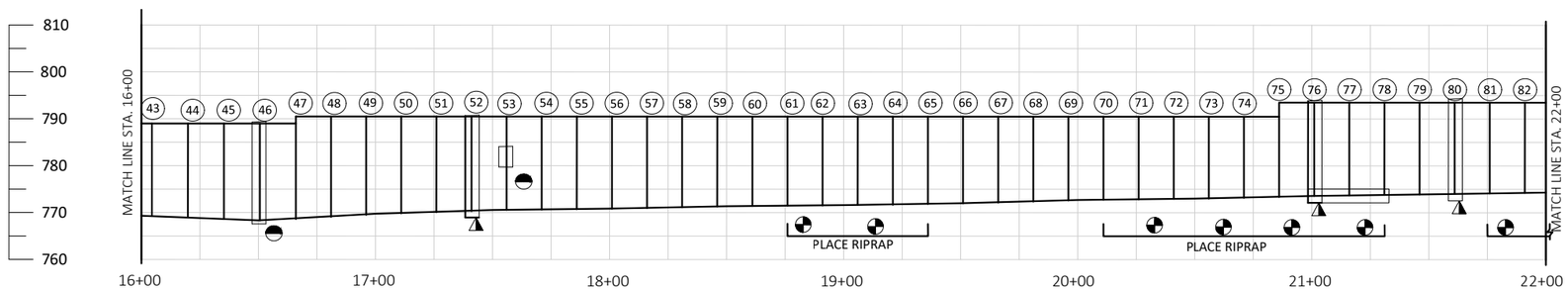

GROUND MOUNTED NOISE BARRIER

(LOOKING WEST - ROADWAY SIDE)

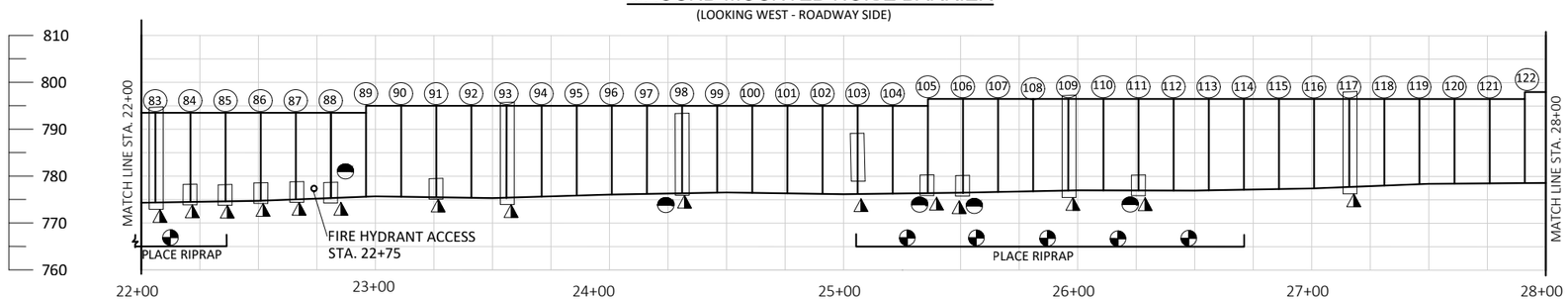

GROUND MOUNTED NOISE BARRIER

(LOOKING WEST - ROADWAY SIDE)

GENERAL NOTES

DRAWINGS SHALL NOT BE SCALED.

DIMENSIONS SHOWN ARE BASED ON THE ORIGINAL STRUCTURE PLANS.

ORIGINAL CONSTRUCTION YEAR IS 2003.

CLEAN RUSTED AREA OF STRUCTURAL SUPPORT POST (LOCATED ON PLAN AND AS DIRECTED BY FIELD ENGINEER) TO BARE METAL AS PER BID ITEM "STRUCTURE OVERCOAT CLEANING AND PRIMING N-67-01". APPLY PRIMER AND INTERMEDIATE COATS TO THE AREA.

OVERCOAT PAINT THE STRUCTURAL SUPPORT POSTS AND BRACKETS LOCATED ON THE PLANS AND AS DIRECTED BY THE FIELD ENGINEER. PAINT SHALL BE BROWN, AMS STANDARD COLOR NO. 20170 OR APPROVED EQUAL.

LEGEND

- SUPPORT POST (NUMBERED NORTH TO SOUTH)
- REMOVE RUST AND RE-PAINT ON ROADWAY SIDE
- REMOVE RUST AND RE-PAINT ON RESIDENTIAL SIDE
- REMOVE PANELS TO PLACE RIPRAP

LIST OF DRAWINGS:

1. GENERAL PLAN & ELEVATION 1
2. GENERAL PLAN & ELEVATION 2

WISCONSIN
THOMAS J. ROMENESKO
E-26318
MADISON
WI
PROFESSIONAL ENGINEER

TOTAL ESTIMATED QUANTITIES

ITEM NUMBER	BID ITEM	UNIT	TOTAL
517.3001.S.11	STRUCTURE OVERCOATING CLEANING AND PRIMING N-67-1	EA	1
517.4001.S.11	CONTAINMENT AND COLLECTION OF WASTE MATERIAL N-67-1	EA	1
606.0100	RIPRAP LIGHT	CY	140
645.0130	GEOTEXILE TYPE R	SY	520
SPV.0060.02	REMOVING AND REINSTALLING SOUND PANELS	EA	60
SPV.0165.04	REPLACEMENT NOISE BARRIER PANELS DOUBLE-SIDED SOUND ABSORPTIVE N-67-1	SF	45

DESIGN CONSULTANT

TOM ROMENESKO, PE
(608) 566-1370

BRIDGE OFFICE CONTACT

AARON BONK, PE
(608) 261-0261

NO.	DATE	REVISION	BY

DAAR ENGINEERING, INC.
www.daarcorp.com
Milwaukee, WI 53202
414-225-9817

STATE OF WISCONSIN
DEPARTMENT OF TRANSPORTATION

ACCEPTED SDR 06/27/23
CHIEF STRUCTURES DESIGN ENGINEER DATE

STRUCTURE N-67-1

NOISE WALL AT ON RAMP FROM PILGRIM RD. TO SB I-41

COUNTY WAUKESHA | ~~TOWN~~/CITY/~~VILLAGE~~ OCONOMOWOC

DESIGN SPEC. AASHTO LRFD BRIDGE DESIGN SPECIFICATIONS

DESIGNED BY MC	DESIGN CK'D. TR	DRAWN BY MC	PLANS CK'D. TR

GENERAL PLAN & ELEVATION 1

SHEET 1 OF 2

STATE PROJECT NUMBER

1060-53-70

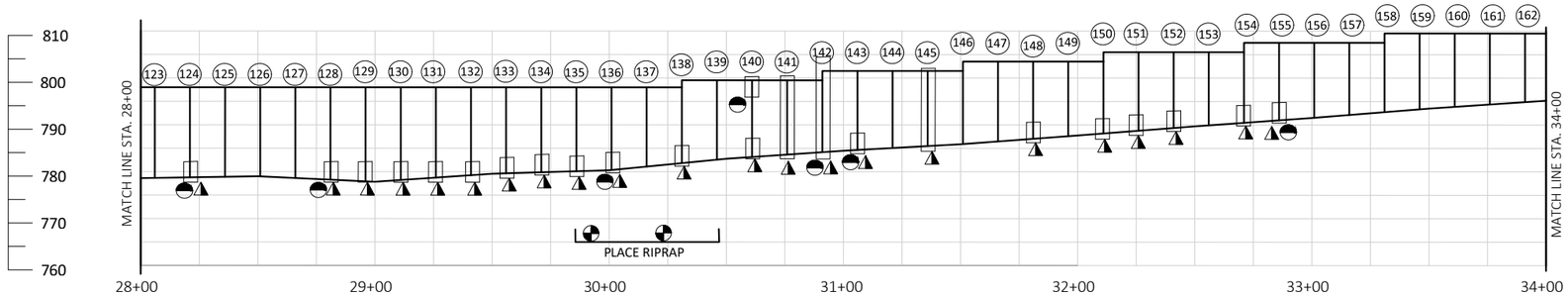

GROUND MOUNTED NOISE BARRIER

(LOOKING WEST - ROADWAY SIDE)

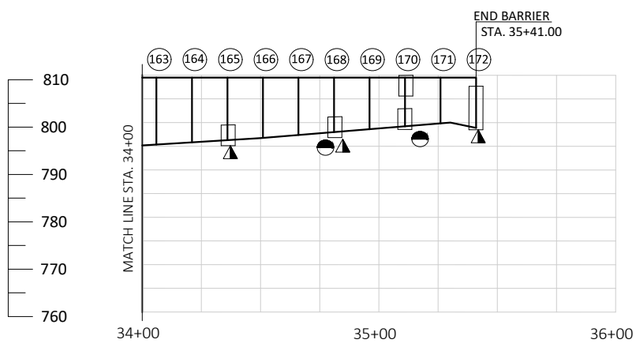

GROUND MOUNTED NOISE BARRIER

(LOOKING WEST - ROADWAY SIDE)

LEGEND

- SUPPORT POST (NUMBERED NORTH TO SOUTH)
- REMOVE RUST AND RE-PAINT ON ROADWAY SIDE
- REMOVE RUST AND RE-PAINT ON RESIDENTIAL SIDE
- REMOVE PANELS TO PLACE RIPRAP

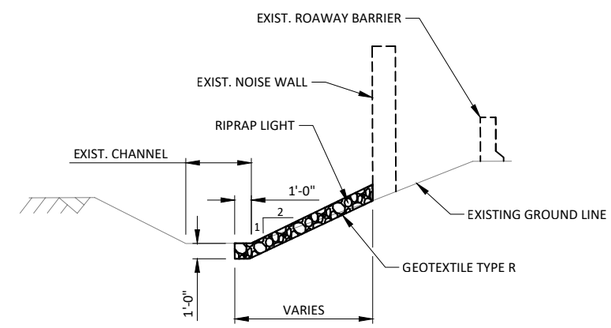

LIGHT RIPRAP DETAIL

RIPRAP PLACEMENT SEQUENCE

1) LOCATE ALL AREAS REQUIRING LIGHT RIPRAP PLACEMENT.
2) DETERMINE LOCATIONS THRU THE EXISTING NOISE WALL TO CREATE ACCESS FOR RIPRAP PLACEMENT FROM THE ROADWAY RAMP.
3) REMOVE AND SALVAGE EXISTING UNDAMAGED PANELS FROM THE STRUCTURAL SUPPORT POSTS BY LIFTING THEM OUT. DO NOT REMOVE THE LOWEST PANEL IN ANY BAY. THE COST TO REMOVE, STORE, AND REINSTALL THE SOUND PANELS IS INCLUDED IN THE BID ITEM 'REMOVING AND REINSTALLING SOUND PANELS'. ANY DAMAGE TO THE SOUND PANELS FROM THE CONTRACTOR'S OPERATIONS SHALL BE REPAIRED BY THE CONTRACTOR AT NO ADDITIONAL COST TO THE DEPARTMENT.
4) PLACE RIPRAP BY WORKING OVER THE BARRIER WALL AND BOTTOM PANEL.
5) REPLACE SALVAGED PANELS.

8

NO.	DATE	REVISION	BY

STATE OF WISCONSIN
DEPARTMENT OF TRANSPORTATION

STRUCTURE N-67-1

DRAWN BY MC | PLANS CK'D. TR

GENERAL PLAN & ELEVATION 2

SHEET 2 OF 2

Notes

Wisconsin Department of Transportation

Dedicated people creating transportation solutions through innovation and exceptional service.

http://www.dot.wisconsin.gov