GRE

NOVEMBER 2023

PROJECT ID: 6230-20-71

WITH:

COUNTY: OUTAGAMIE

ORDER OF SHEETS

Section No.	1	Title
Section No.	2	Typical Sections and Details
Section No.	3	Estimate of Quantities
Section No.	3	Miscellaneous Quantities
Section No.	4	Right of Way Plat
Section No.	5	Plan and Profile
Section No.	6	Standard Detail Drawings
Section No.	7	Sign Plates
~~Section No.~~	~~8~~	~~Structure Plans~~
Section No.	9	Computer Earthwork Data
Section No.	9	Cross Sections

TOTAL SHEETS = 298



PROJECT LOCATION

N

25

STATE OF WISCONSIN
DEPARTMENT OF TRANSPORTATION

PLAN OF PROPOSED IMPROVEMENT

SEYMOUR - GREEN BAY

FRENCH ROAD - SEMINARY ROAD

STH 54

OUTAGAMIE COUNTY

STATE PROJECT NUMBER
6230-20-71

STATE PROJECT	FEDERAL PROJECT	
	PROJECT	CONTRACT
6230-20-71	WISC2024017	1

BEGIN PROJECT
STA. 1133+00
Y = 649428.834
X = 841560.994

END PROJECT
STA. 1537+54
Y = 649813.576
X = 881979.730

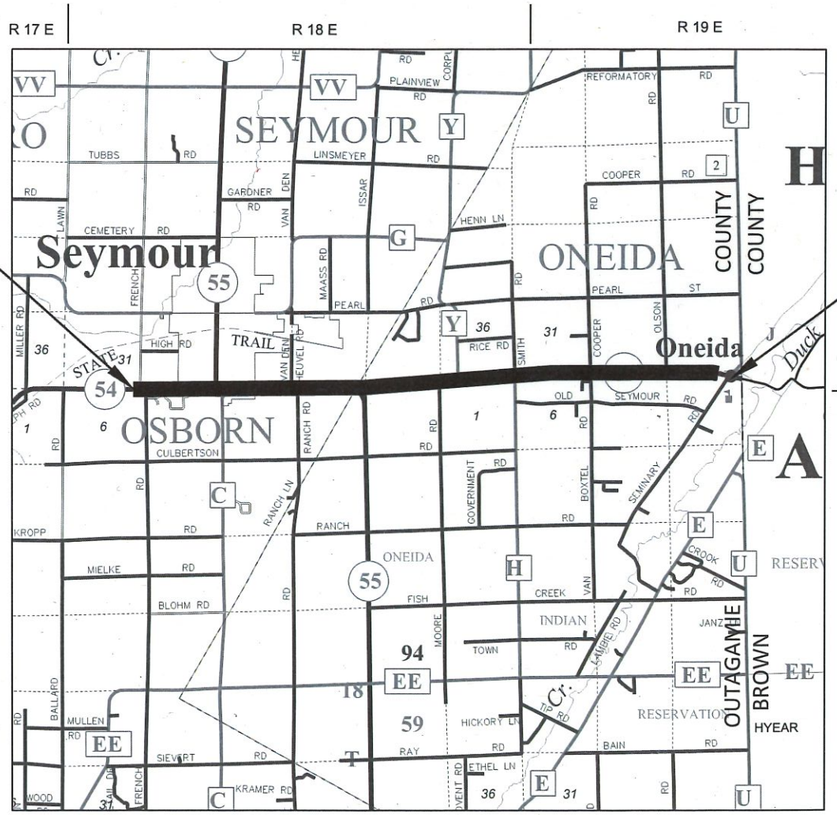

LAYOUT

SCALE 0 2 MI

TOTAL NET LENGTH OF CENTERLINE = 7.662 MI

DESIGN DESIGNATION

A.A.D.T.	2024	=	11,400
A.A.D.T.	2044	=	12,400
D.H.V.	(2044)	=	1,300
D.D.		=	60/40
T.		=	13.8
DESIGN SPEED		=	40
ESALS		=	6,100,000

CONVENTIONAL SYMBOLS

PLAN
- CORPORATE LIMITS
- PROPERTY LINE
- LOT LINE
- LIMITED HIGHWAY EASEMENT
- EXISTING RIGHT OF WAY
- PROPOSED OR NEW R/W LINE
- SLOPE INTERCEPT
- REFERENCE LINE (300'EB')
- EXISTING CULVERT
- PROPOSED CULVERT (Box or Pipe)
- COMBUSTIBLE FLUIDS (CAUTION)
- MARSH AREA
- WOODED OR SHRUB AREA

PROFILE
- GRADE LINE
- ORIGINAL GROUND
- MARSH OR ROCK PROFILE (To be noted as such) (ROCK)
- SPECIAL DITCH (LABEL)
- GRADE ELEVATION (95.36)
- CULVERT (Profile View)

UTILITIES
- ELECTRIC (E)
- FIBER OPTIC (FO)
- GAS (G)
- SANITARY SEWER (SAN)
- STORM SEWER (SS)
- TELEPHONE (T)
- WATER (W)
- UTILITY PEDESTAL
- POWER POLE
- TELEPHONE POLE

HORIZONTAL POSITIONS SHOWN ON THIS PLAN ARE WISCONSIN COORDINATE REFERENCE SYSTEM (WISCRS), OUTAGAMIE COUNTY, NAD83 (2011), IN U.S. SURVEY FEET. POSITIONS SHOWN ARE GRID COORDINATES, GRID BEARINGS, AND GRID DISTANCES. GRID DISTANCES ARE THE SAME AS GROUND DISTANCES.

ELEVATIONS ARE REFERENCED TO NAVD 88 (2012). GPS DERIVED ELEVATIONS ARE BASED ON GEOID 12.

ORIGINAL PLANS PREPARED BY

AYRES

WISCONSIN
PHILLIP J. VERVILLE III
E36336
GREEN BAY, WI
PROFESSIONAL ENGINEER

7/20/23
(Date)

STATE OF WISCONSIN
DEPARTMENT OF TRANSPORTATION

PREPARED BY

Surveyor	AYRES/NORTHEAST REGION
Designer	AYRES
Project Manager	JESSE HANSEN
Regional Supervisor	TAMMY RABE

APPROVED FOR THE DEPARTMENT
DATE: 7/27/23 (Signature)

E

FILE NAME : I:\45\450479 STH 54 SEYMOUR TO GB\C3D\SHEETSPLAN\010101 TI.DWG

PLOT DATE : 7/20/2023 9:45 PM

PLOT BY : VERVILLE, PHILLIP

PLOT NAME :

GENERAL NOTES

THE LOCATION OF EXISTING UTILITY FACILITIES AS SHOWN ON THE PLANS ARE APPROXIMATE. THERE MAY BE OTHER UTILITY FACILITIES WITHIN THE PROJECT AREA THAT ARE NOT SHOWN.

PROPERTY LINES AS SHOWN ARE APPROXIMATE.

NO TREES OR SHRUBS ARE TO BE REMOVED WITHOUT APPROVAL OF THE ENGINEER.

BEARINGS SHOWN ON THIS PLAN ARE TRUE BEARINGS TO THE NEAREST SECOND.

ALL TIES ON THIS PLAN ARE HORIZONTAL UNLESS DESCRIBED OTHERWISE.

EROSION CONTROL LOCATIONS AS SHOWN ON THE EROSION CONTROL PLAN ARE APPROXIMATE. THE EXACT LOCATIONS WILL BE DETERMINED BY THE ENGINEER IN THE FIELD.

DISTURBED AREAS WITHIN THE RIGHT OF WAY, EXCEPT THE AREAS WITHIN THE FINISHED SUBGRADE SHOULDER POINTS ARE TO BE SEEDED AND EROSION MAT AS DIRECTED BY THE ENGINEER.

SAW CUT LOCATIONS SHOWN ON THE PLAN ARE SUBJECT TO ADJUSTMENT BY THE ENGINEER IN THE FIELD. THE LINE OF SUCH SAW CUTS WILL BE NEATLY DELINEATED THROUGH THE ASPHALT WITHOUT ANY DAMAGE TO THE REMAINING PORTION OF THE EXISTING PAVEMENT.

THE REMOVAL OF ASPHALTIC DRIVEWAYS WILL BE PAID FOR AS EXCAVATION COMMON.

MAINTAIN DRIVING SURFACE TO ALL PROPERTY OWNERS WITH BASE AGGREGATE DENSE 1 1/4-INCH.

THE EXACT LOCATIONS OF ENTRANCES ARE TO BE DETERMINED IN THE FIELD BY THE ENGINEER. ALL DRIVEWAYS ARE TO BE REPLACED IN KIND UNLESS OTHERWISE DIRECTED BY THE ENGINEER OR AS SHOWN ON THE PLANS. BASE AGGREGATE DENSE 1 1/4-INCH WILL BE USED UNDER ALL DRIVEWAYS.

PLACE EROSION CONTROL DEVICES IN SEQUENCE WITH CONSTRUCTION OPERATIONS OR AS DETERMINED BY THE ENGINEER. EROSION CONTROL FEATURES ARE SHOWN AT APPROXIMATE LOCATIONS, WITH EXACT LOCATIONS TO BE DETERMINED BY THE ENGINEER.

STATIONING, DISTANCES, AND OFFSETS FOR SIGNS AND TRAFFIC CONTROL DEVICES SHOWN IN THE PLANS ARE APPROXIMATE. EXACT LOCATIONS ARE DETERMINED BY THE ENGINEER.

UTILITIES

COMMUNICATIONS

BRIGHTSPEED
SCOTT HEINZELMAN
144 N PEARL STREET
BERLIN, WI 54923
PHONE: (608)716-5964
SCOTT.HEINZELMAN@BRIGHTSPEED.COM

NET LEC LLC
RICK VINCENT
450 SECURITY BOULEVARD
P.O. BOX 17079
GREEN BAY, WI 54307
PHONE: (920)617-7616
RICK.VINCENT@NSIGHT.COM

NORTHTEAST TEL CO LLC
RICK VINCENT
450 SECURITY BOULEVARD
P.O. BOX 17079
GREEN BAY, WI 54307
PHONE: (920)617-7616
RICK.VINCENT@NSIGHT.COM

ONEIDA TRIBE OF INDIANS
JEFF KRUEGER
900 PACKERLAND DRIVE
GREEN BAY, WI 54303
PHONE: (920)496-7383
JKRUEGER@ONEIDANATION.ORG

SPECTRUM
VINCENT ALBIN
3520 EAST DESTINATION DRIVE
APPLETON, WI 54915
PHONE: (920)378-0444
VINCE.ALBIN@CHARTER.COM

ELECTRICITY

WE ENGERGIES
REIJO MURTO
800 S LYNNDALE DRIVE
APPLETON, WI 54914
PHONE: (920)380-3369
REIJO.MURTO@WE-ENERGIES.COM

WISCONSIN PUBLIC SERVICE CORPORATION
SCOTT ZELLNER
2850 S ASHLAND AVENUE
GREEN BAY, WI 54304
PHONE: (920) 617-5068
SCOTT.ZELLNER@WISCONSINPUBLICSERVICE.COM

ELECTRICITY - TRANSMISSION

ATC MANAGEMENT, INC.
CHRIS DAILEY
P.O. BOX 47
WAUKESHA, WI 53187
PHONE: (262)506-6884
CDAILEY@ATCLLC.COM

GAS/PETROLEUM

WISCONSIN PUBLIC SERVICE CORPORATION
ADAM LEY
2850 S. ASHLAND AVENUE
GREEN BAY, WI 54304
PHONE:(920)433-1079
ADAM.LEY@WISCONSINPUBLICSERVICE.COM

WE ENERGIES
CODY JACOBSON
800 S LYNNDALE DRIVE
APPLETON, WI 54914
PHONE: (920)380-3565
CODY.JACOBSON@WE-ENERGIES.COM

GAS/PETROLEUM - TRANSMISSION

ANR PIPELINE CO
MICHAEL REIF
NORTH 4956 OAKCREST DRIVE
BONDUEL, WI 54107
PHONE: (920)634-7497
MICHAEL_REIF@TCENERGY.COM

GUARDIAN PIPELINE
ADAM THEIS
128 M B LANE
CHILTON, WI 53014
PHONE: (262)374-2756
ADAM.THEIS@ONEOK.COM

WATER & SEWER

CITY OF SEYMOUR
JOHN SCHOEN
445 MUNICIPAL DRIVE
SEYMOUR, WI 54165
PHONE: (920)851-0121
JSCHOEN@CITYOFSEYMOURWI.ORG

ONEIDA TRIBE OF INDIANS
SCOTT COTTRELL
3783 W. MASON STREET
ONEIDA, WI 54155
PHONE: (920) 562-2911
SCOTTREL@ONEIDANATION.ORG

DIGGERS HOTLINE
Dial 811 or (800)242-8511
www.DiggersHotline.com

DEPARTMENT OF NATURAL RESOURCES

WDNR TELEPHONE 920-366-1544

2984 SHAWANO AVE.
GREEN BAY, WISCONSIN 54313
ATTENTION: MATT SCHAEVE
E-MAIL: matthew.schaeve@wisconsin.gov

NE REGION DESIGN PROJECT MANAGER

NE REGION DESIGN PROJECT MANAGER TELEPHONE 920-492-5630

944 VANDERPARREN WAY
GREEN BAY, WISCONSIN 543043
ATTENTION: JESSE HANSEN, PE
E-MAIL: jesse.hansen@dot.wi.gov

PROJECT DESIGNER

AYRES TELEPHONE 920-327-7822

3376 PACKERLAND DRIVE
ASHWAUBENON, WI 54115
ATTENTION: PHIL VERVILLE III, PE
E-MAIL: vervillep@ayresassociates.com

SURVEY

NE REGION COORDINATOR TELEPHONE 920-492-4166

944 VANDERPERREN WAY
GREEN BAY, WI 54304
ATTENTION: MICHAEL ANDRASCHKO
E-MAIL: michael.andraschko@dot.wi.gov

STANDARD ABBREVIATIONS

ADT	AVERAGE DAILY TRAFFIC	NC	NORMAL CROWN
AC	ASPHALT CEMENT	PT	POINT OF TANGENCY
AGG	AGGREGATE	PC	POINT OF CURVATURE
ASPH	ASPHALT	PI	POINT OF INTERSECTION
BM	BENCH MARK	PE	PRIVATE ENTRANCE
C/L	CENTERLINE	R	RADIUS
CONC	CONCRETE	REM	REMOVE
CMP	CORRUGATED METAL PIPE	R/L OR RL	REFERENCE LINE
CR.	CREEK	RCCP	REINFORCED CONCRETE CULVERT PIPE
D	DEGREE OF CURVE	RCPSS	REINFORCED CONCRETE PIPE STORM SEWER
DHV	DESIGN HOUR VOLUME	R.O.	RUNOUT
ESALS	EQUIVALENT SINGLE AXIS LOADS	R/W	RIGHT-OF-WAY
EXIST	EXISTING	STA	STATION
FE	FIELD ENTRANCE	SE	SUPER ELEVATION
HYD	HYDRANT	SS	STORM SEWER
IP	IRON PIPE OR PIN	T	TANGENT
L	LENGTH OF CURVE	TEL	TELEPHONE
LC	LONG CHORD OF CURVE	TLE	TEMPORARY LIMITED EASEMENT
LR	LENGTH OF RUNOFF	T	TRUCKS
MH	MANHOLE	VC	VERTICAL CURVE
		W	WELL

2

RUNOFF COEFFICIENT TABLE

	HYDROLOGIC SOIL GROUP											
	A			B			C			D		
	SLOPE RANGE (PERCENT)			SLOPE RANGE (PERCENT)			SLOPE RANGE (PERCENT)			SLOPE RANGE (PERCENT)		
LAND USE:	0-2	2-6	6 & OVER	0-2	2-6	6 & OVER	0-2	2-6	6 & OVER	0-2	2-6	6 & OVER
ROW CROPS	.08 .22	.16 .30	.22 .38	.12 .26	.20 .34	.27 .44	.15 .30	.24 .37	.33 .50	.19 .34	.28 .41	.38 .56
MEDIAN STRIP- TURF	.19 .24	.20 .26	.24 .30	.19 .25	.22 .28	.26 .33	.20 .26	.23 .30	.30 .37	.20 .27	.25 .32	.30 .40
SIDE SLOPE- TURF			.25 .32			.27 .34			.28 .36			.30 .38
PAVEMENT:												
ASPHALT	.70 - .95											
CONCRETE	.80 - .95											
BRICK	.70 - .80											
DRIVES, WALKS	.75 - .85											
ROOFS	.75 - .95											
GRAVEL ROADS, SHOULDERS	.40 - .60											

TOTAL AREA EXPECTED TO BE DISTURBED BY CONSTRUCTION ACTIVITIES = 3.4 ACRES
SOIL GROUP C

2



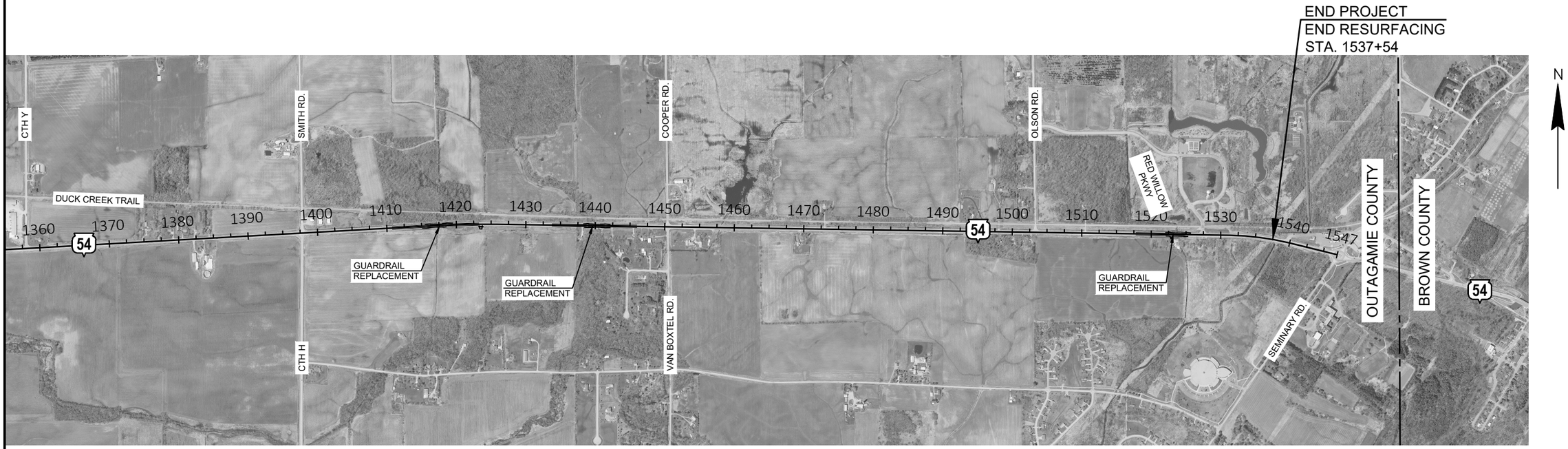

PROJECT NO: 6230-20-71	HWY: STH 54	COUNTY: OUTAGAMIE	PROJECT OVERVIEW	SHEET 4	E

2

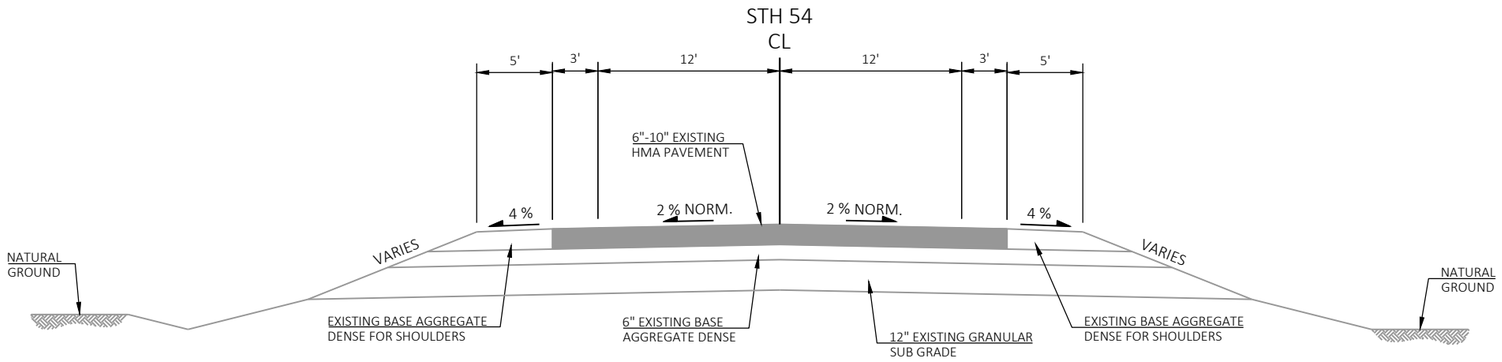

EXISTING TYPICAL SECTION FOR STH 54

STA 1133+00EB - STA 1182+72EB
STA 1220+94EB - STA 1537+54EB

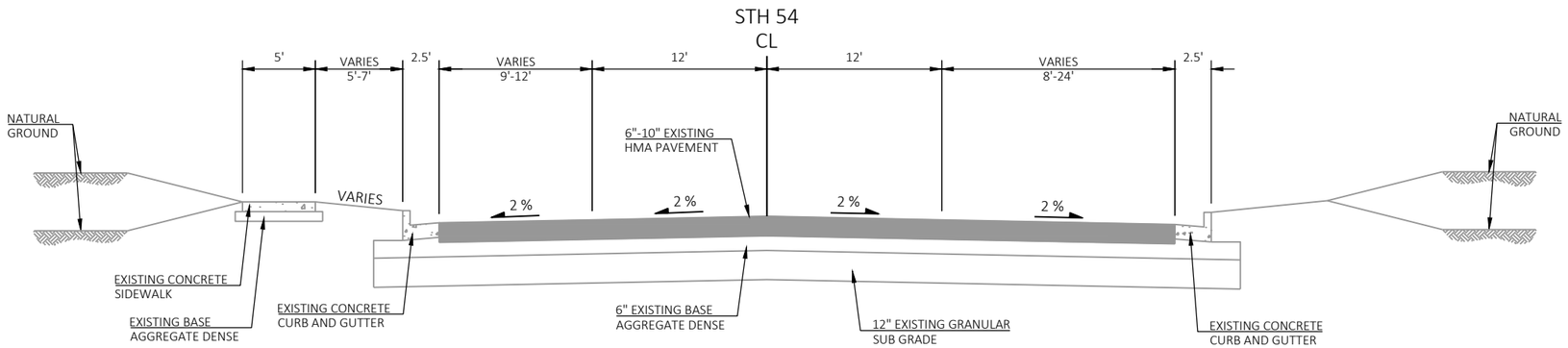

EXISTING TYPICAL SECTION FOR STH 54

STA 1182+72EB - STA 1203+99EB

PROJECT NO: 6230-20-71	HWY: STH 54	COUNTY: OUTAGAMIE	TYPICAL SECTIONS	SHEET 5	E

FILE NAME : I:\45\450479 STH 54 SEYMOUR TO GB\C3D\SHEETSPLAN\020301 TS.DWG
LAYOUT NAME - 020301 ts
PLOT DATE : 8/29/2023 12:16 PM PLOT BY : VERVILLE, PHILLIP PLOT NAME : PLOT SCALE : 1 IN:10 FT

2

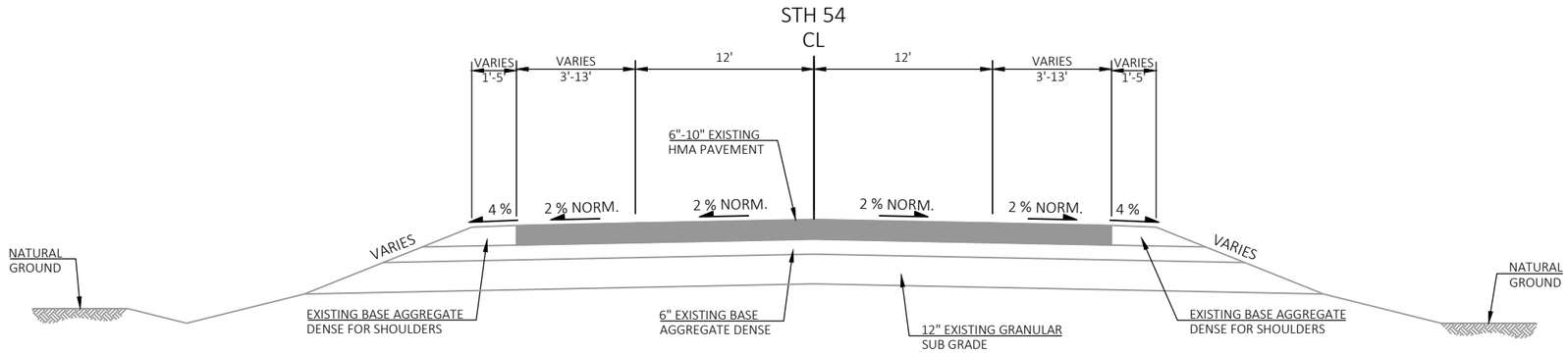

EXISTING TYPICAL SECTION FOR STH 54

STA 1203+99EB - STA 1220+94EB

PROJECT NO: 6230-20-71	HWY: STH 54	COUNTY: OUTAGAMIE	TYPICAL SECTIONS	SHEET 6	E

2

STH 55
CL

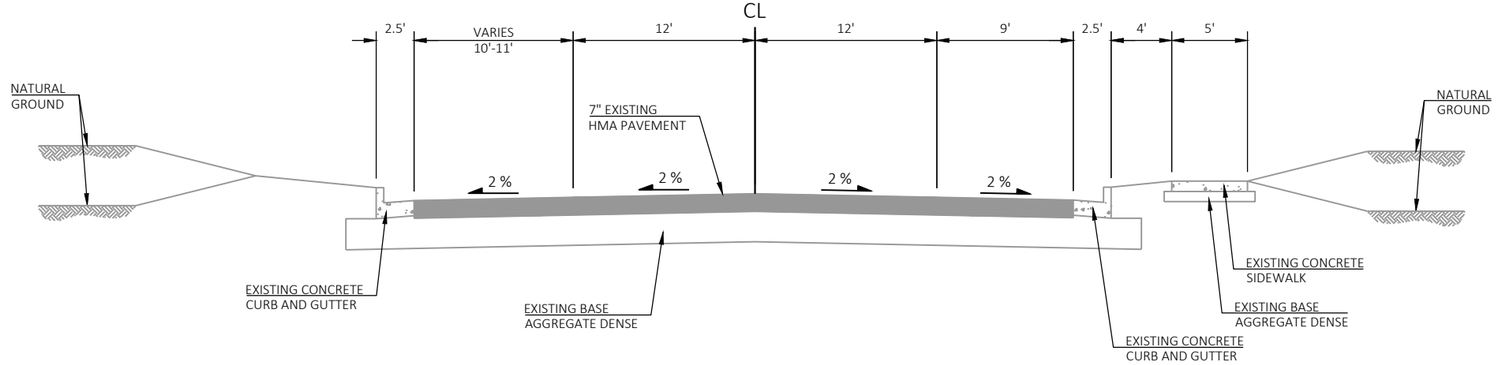

EXISTING TYPICAL SECTION FOR STH 55

STA 10+00NB - STA 11+75NB

CTH C/IVORY STREET
CL

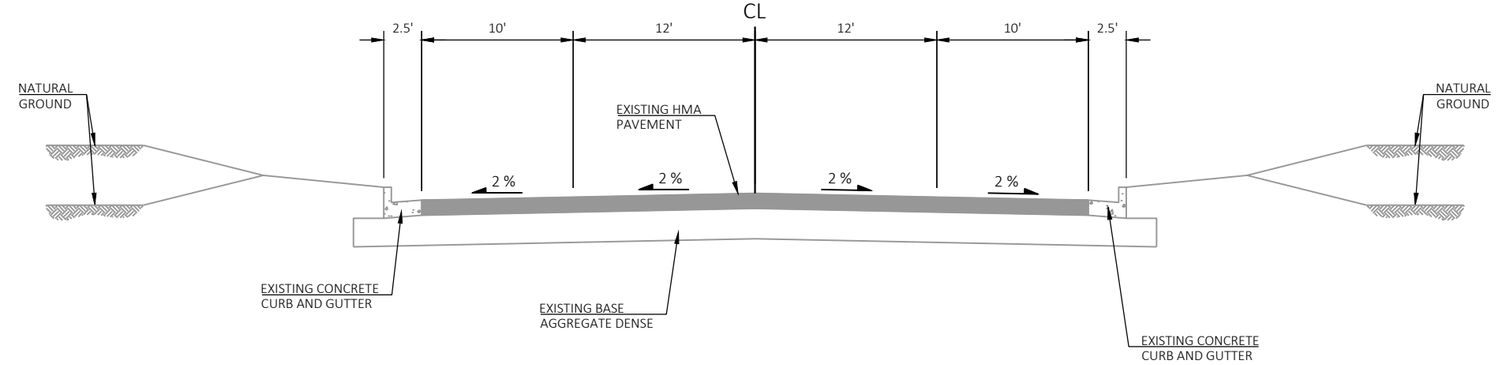

EXISTING TYPICAL SECTION FOR CTH C/IVORY STREET

STA 31+25IN - STA 32+29IN

IVORY STREET
CL

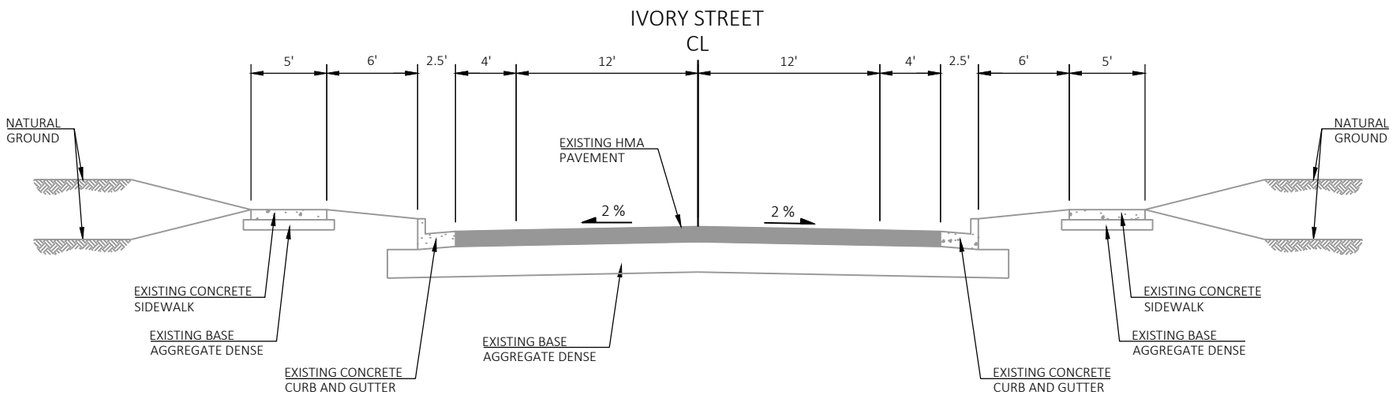

EXISTING TYPICAL SECTION FOR IVORY STREET

STA 33+29IN - STA 34+50IN

PROJECT NO: 6230-20-71	HWY: STH 54	COUNTY: OUTAGAMIE	TYPICAL SECTIONS	SHEET 7	E

2

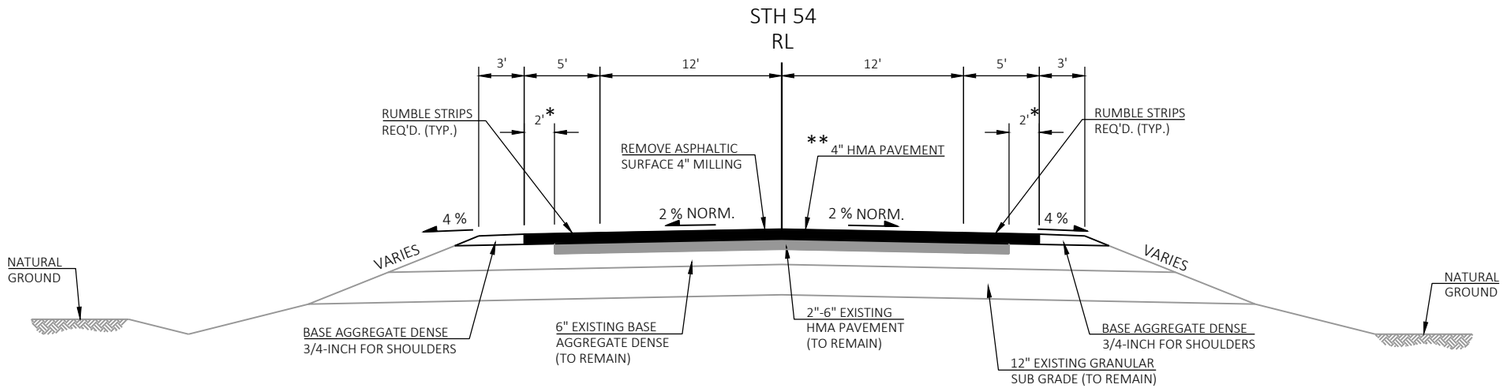

FINISHED TYPICAL SECTION FOR STH 54

STA 1133+00EB - STA 1182+72EB
STA 1220+94EB - STA 1537+54EB

NOTES:

THE 4" HMA PAVEMENT SHOWN FOR WIDENING THE PAVED SHOULDER SHALL BE PLACED FOLLOWING THE REMOVING ASPHALTIC SURFACE MILLING OPERATION AND PLACED INTEGRALLY WITH THE MAINLINE PAVEMENT.

THE LIMITS OF THE PREPARE FOUNDATION FOR ASPHALTIC PAVING BID ITEM EXTEND LATERALLY TO THE OUTSIDE OF THE EXISTING ASPHALT.

THE LIMITS OF THE PREPARE FOUNDATION FOR ASPHALTIC SHOULDER BID ITEM EXTEND LATERALLY BEYOND THE EDGE OF EXISTING ASPHALT.

* WHERE EXISTING PAVED SHOULDER EQUALS 3'. A 5' MINIMUM PAVED SHOULDER IS REQUIRED THROUGHOUT PROJECT LIMITS.

PAVEMENT LAYERS	
** 4" HMA PAVEMENT	1.75" (4 MT 58-28 S) UPPER LAYER 2.25" (3 MT 58-28 S) LOWER LAYER

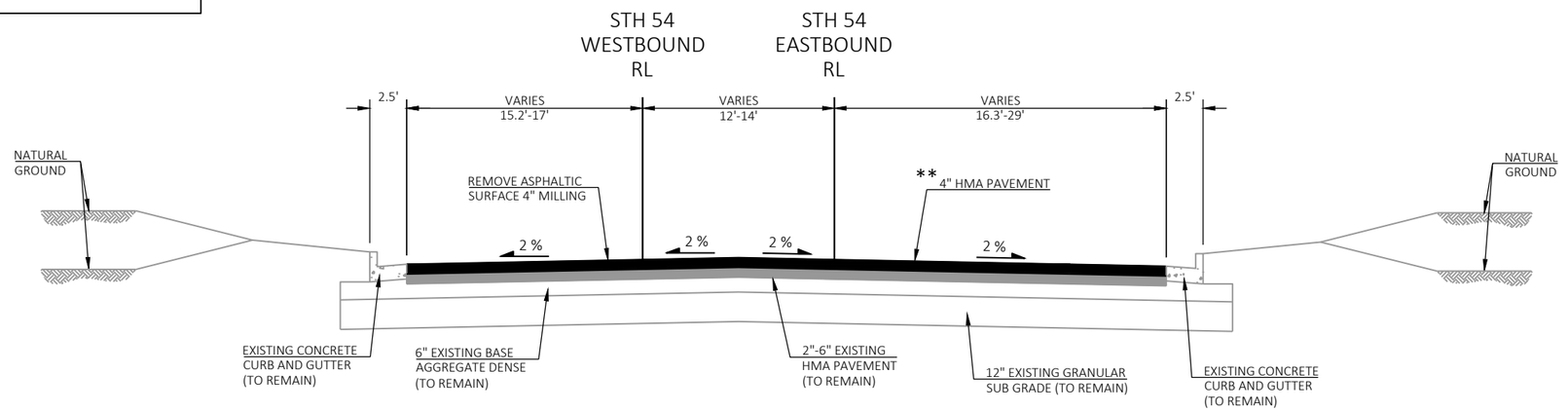

FINISHED TYPICAL SECTION FOR STH 54

STA 1182+72EB - STA 1186+75EB
STA 1195+15EB - STA 1203+99EB

PROJECT NO: 6230-20-71	HWY: STH 54	COUNTY: OUTAGAMIE	TYPICAL SECTIONS	SHEET 8	E

2

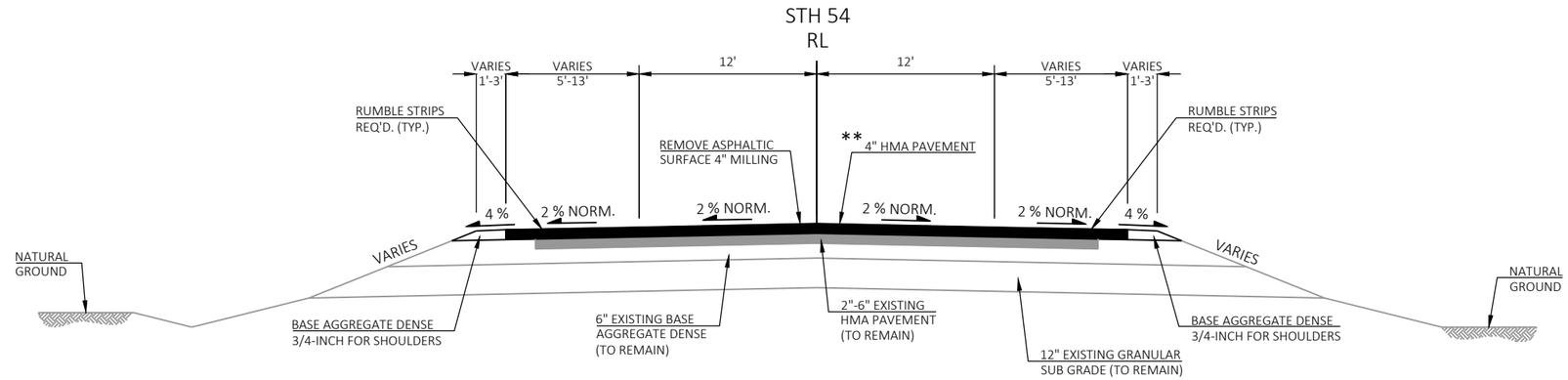

FINISHED TYPICAL SECTION FOR STH 54

STA 1203+99EB - STA 1220+94EB

NOTES:

THE 4" HMA PAVEMENT SHOWN FOR WIDENING THE PAVED SHOULDER SHALL BE PLACED FOLLOWING THE REMOVING ASPHALTIC SURFACE MILLING OPERATION AND PLACED INTEGRALLY WITH THE MAINLINE PAVEMENT.

THE LIMITS OF THE PREPARE FOUNDATION FOR ASPHALTIC PAVING BID ITEM EXTEND LATERALLY TO THE OUTSIDE OF THE EXISTING ASPHALT.

THE LIMITS OF THE PREPARE FOUNDATION FOR ASPHALTIC SHOULDER BID ITEM EXTEND LATERALLY BEYOND THE EDGE OF EXISTING ASPHALT.

PAVEMENT LAYERS	
** 4" HMA PAVEMENT	1.75" (4 MT 58-28 S) UPPER LAYER 2.25" (3 MT 58-28 S) LOWER LAYER

2

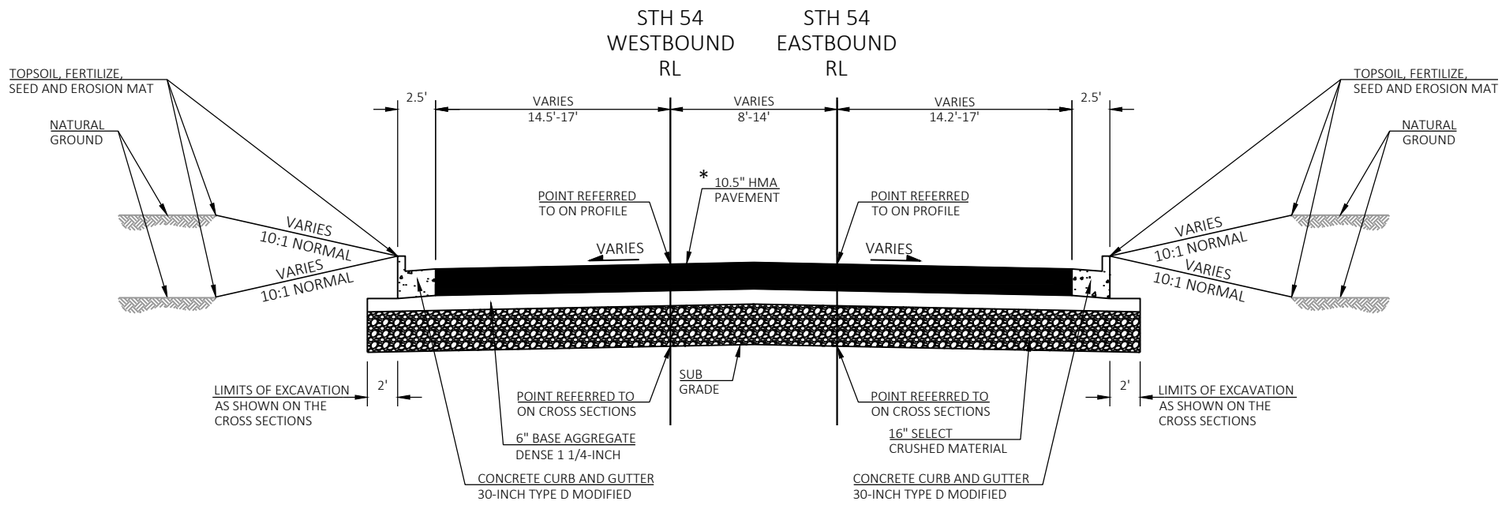

FINISHED TYPICAL SECTION FOR STH 54

STA 1186+75EB - STA 1188+18EB
STA 1194+23EB - STA 1195+15EB

PAVEMENT LAYERS	
* 10.5" HMA PAVEMENT	2.5" (4 HT 58-28 H) UPPER LAYER 4" (3 MT 58-28 S) LOWER LAYER 4" (3 MT 58-28 S) LOWER LAYER

2

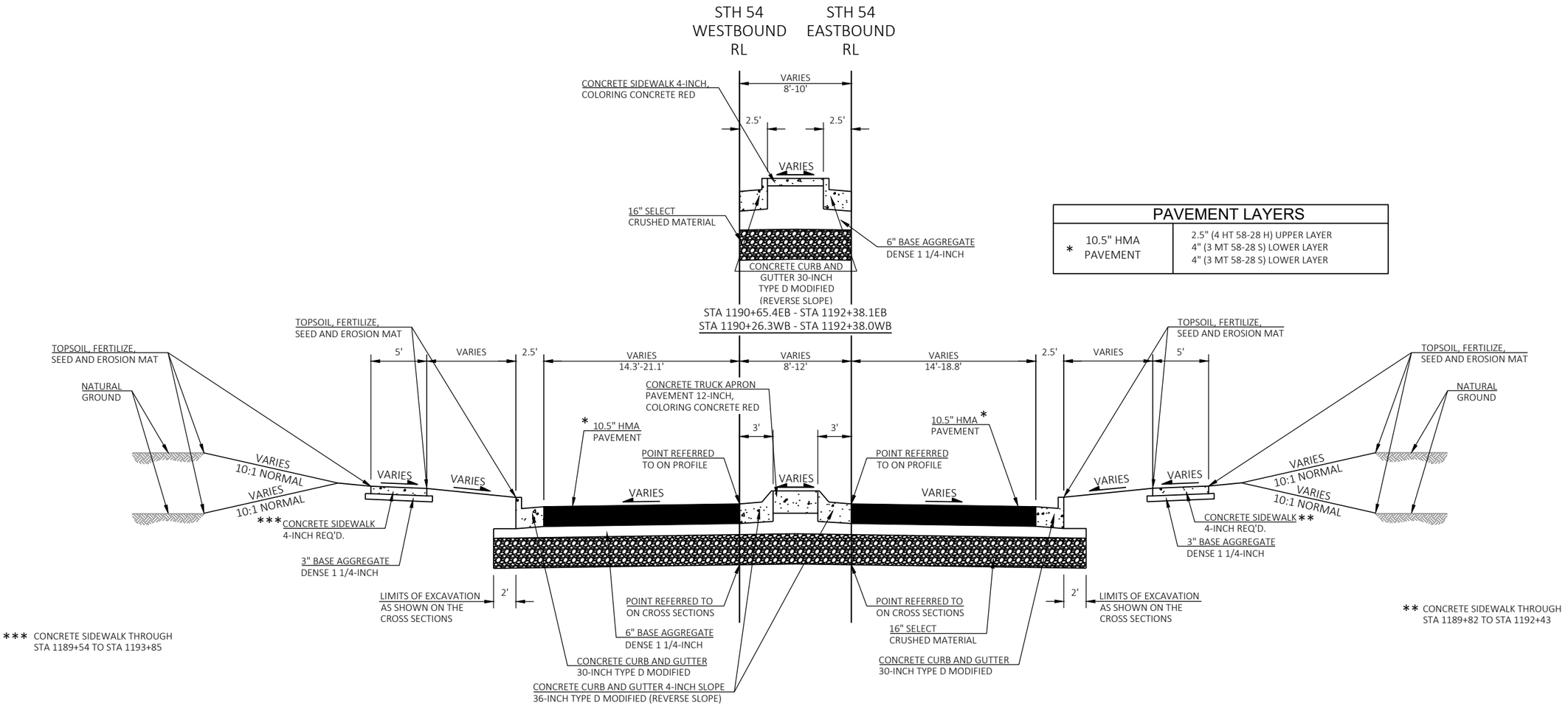

PAVEMENT LAYERS	
* 10.5" HMA PAVEMENT	2.5" (4 HT 58-28 H) UPPER LAYER 4" (3 MT 58-28 S) LOWER LAYER 4" (3 MT 58-28 S) LOWER LAYER

*** CONCRETE SIDEWALK THROUGH
STA 1189+54 TO STA 1193+85

** CONCRETE SIDEWALK THROUGH
STA 1189+82 TO STA 1192+43

FINISHED TYPICAL SECTION FOR STH 54

STA 1188+18EB - STA 1194+23EB

PROJECT NO: 6230-20-71	HWY: STH 54	COUNTY: OUTAGAMIE	TYPICAL SECTIONS	SHEET 11	E

2

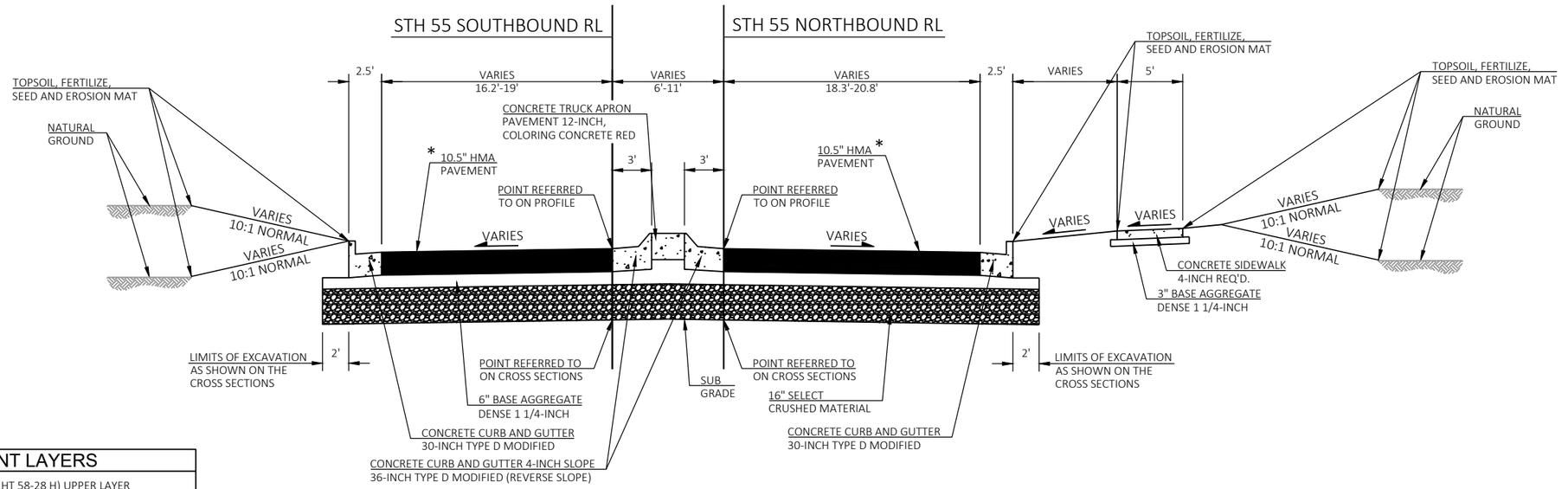

PAVEMENT LAYERS	
* 10.5" HMA PAVEMENT	2.5" (4 HT 58-28 H) UPPER LAYER 4" (3 MT 58-28 S) LOWER LAYER 4" (3 MT 58-28 S) LOWER LAYER

FINISHED TYPICAL SECTION FOR STH 55

STA 10+00NB - STA 10+28NB

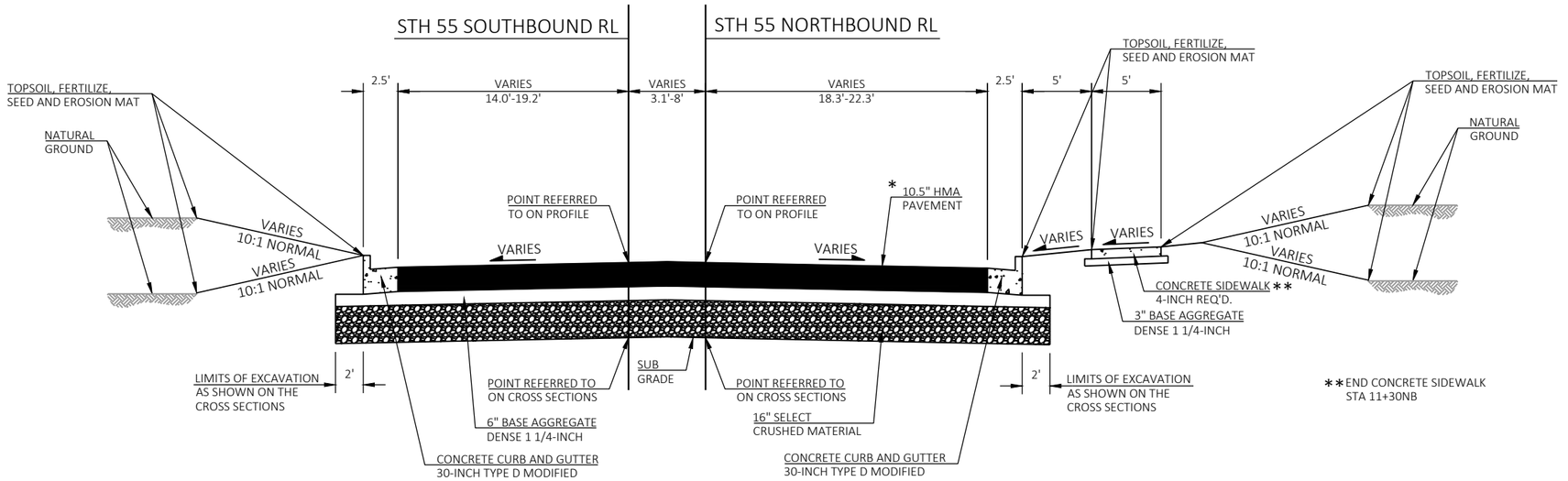

FINISHED TYPICAL SECTION FOR STH 55

STA 10+28NB - STA 11+75NB

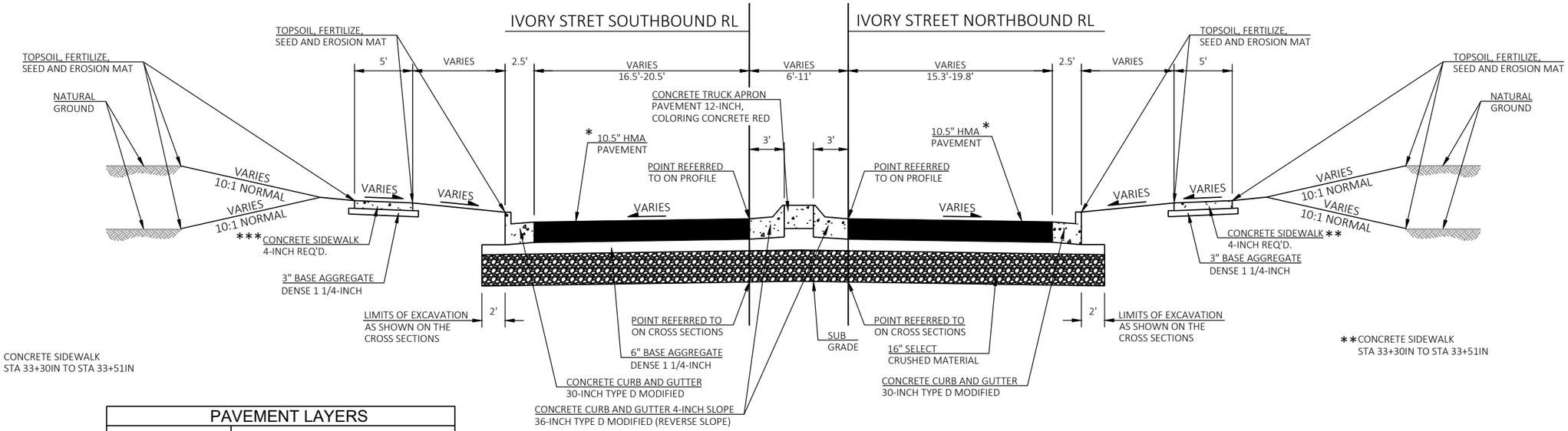

*** CONCRETE SIDEWALK
STA 33+30IN TO STA 33+51IN

** CONCRETE SIDEWALK
STA 33+30IN TO STA 33+51IN

PAVEMENT LAYERS	
* 10.5" HMA PAVEMENT	2.5" (4 HT 58-28 H) UPPER LAYER 4" (3 MT 58-28 S) LOWER LAYER 4" (3 MT 58-28 S) LOWER LAYER

FINISHED TYPICAL SECTION FOR IVORY STREET/CTH C

STA 32+03IN - STA 32+29IN
STA 33+30IN - STA 33+51IN

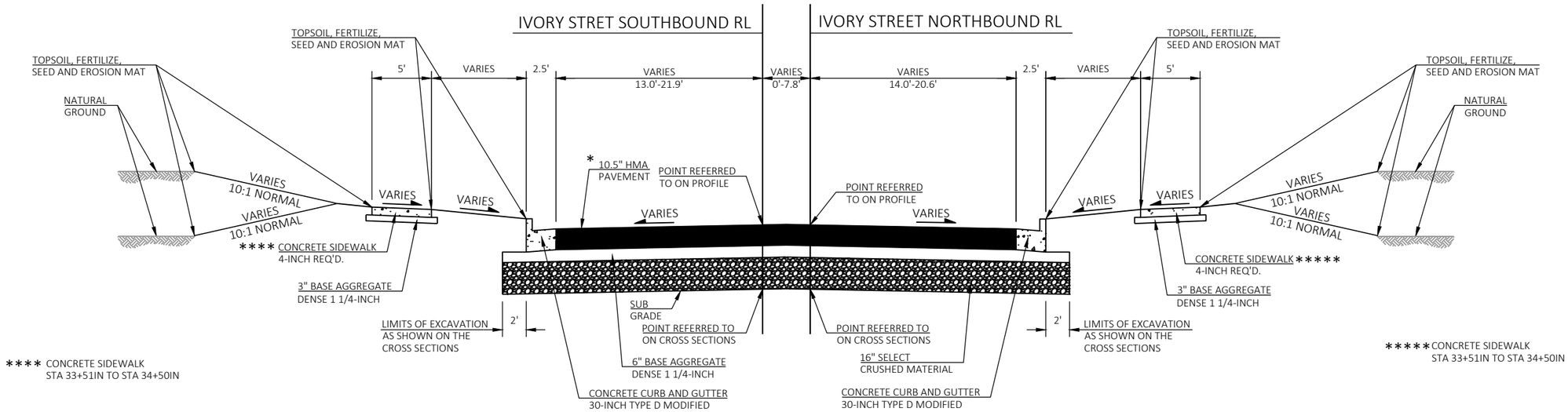

**** CONCRETE SIDEWALK
STA 33+51IN TO STA 34+50IN

***** CONCRETE SIDEWALK
STA 33+51IN TO STA 34+50IN

FINISHED TYPICAL SECTION FOR IVORY STREET/CTH C

STA 31+25IN - STA 32+03IN
STA 33+51IN - STA 34+50IN

PROJECT NO: 6230-20-71	HWY: STH 54	COUNTY: OUTAGAMIE	TYPICAL SECTIONS	SHEET 13	E

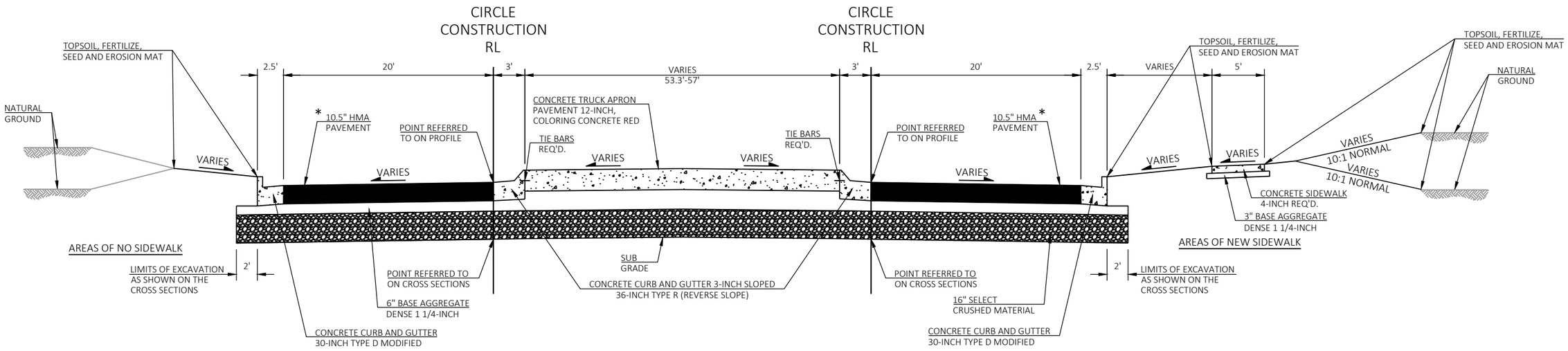

FINISHED TYPICAL SECTION FOR STH 54/STH 55 ROUNDABOUT

PAVEMENT LAYERS	
* 10.5" HMA PAVEMENT	2.5" (4 HT 58-28 H) UPPER LAYER 4" (3 MT 58-28 S) LOWER LAYER 4" (3 MT 58-28 S) LOWER LAYER

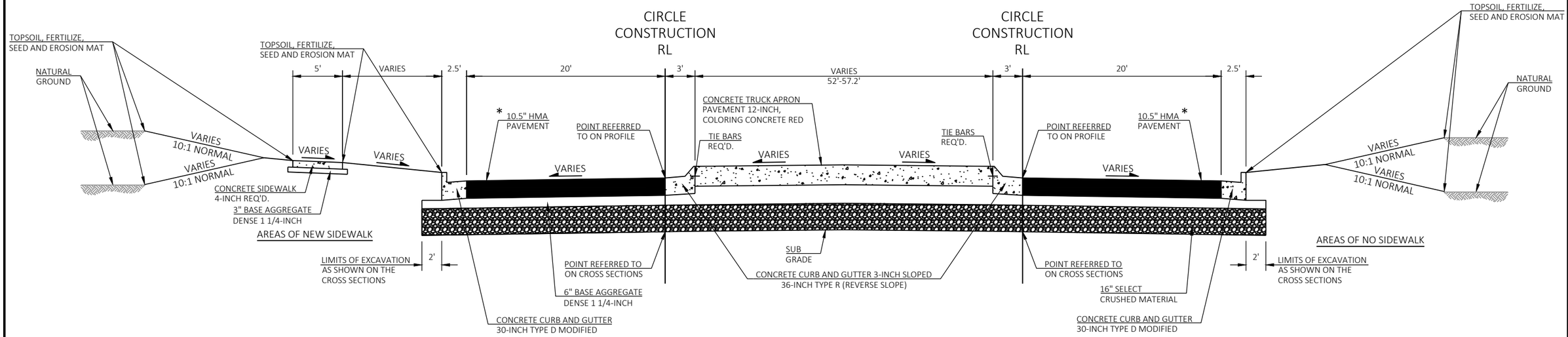

FINISHED TYPICAL SECTION FOR STH 54/IVORY STREET(CTH C) ROUNDABOUT

PROJECT NO: 6230-20-71	HWY: STH 54	COUNTY: OUTAGAMIE	TYPICAL SECTIONS	SHEET 14	E

FILE NAME : I:\45\450479 STH 54 SEYMOUR TO GB\C3D\SHEETSPLAN\020301 TS.DWG
LAYOUT NAME - 020310 ts
PLOT DATE : 8/29/2023 12:17 PM PLOT BY : VERVILLE, PHILLIP PLOT NAME : PLOT SCALE : 1 IN:10 FT
WISDOT/CADDS SHEET 42

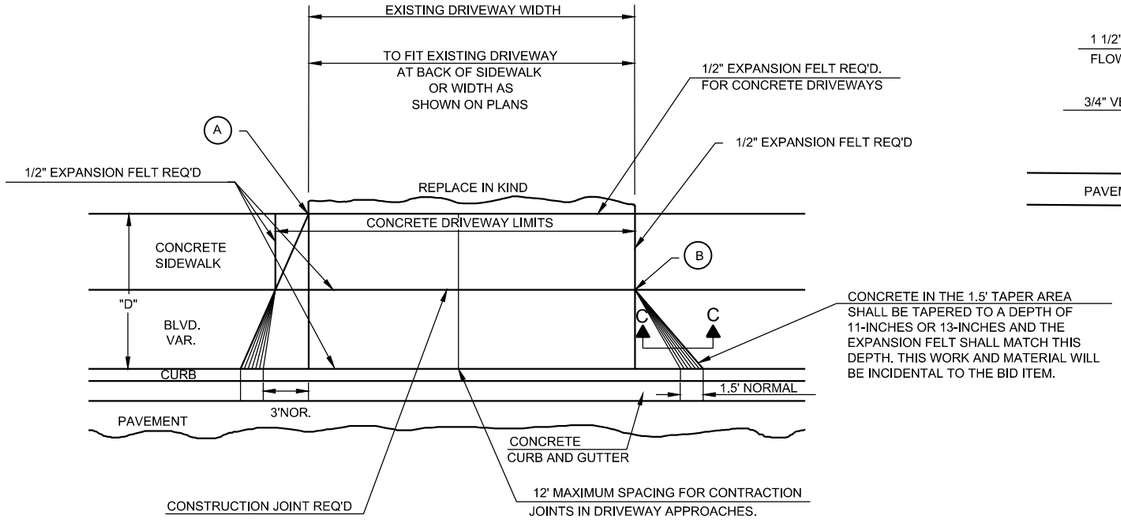

PLAN VIEW

(A) WHEN "D" IS 13' OR LESS, ALIGN TAPER WITH BACK OF SIDEWALK

(B) WHEN "D" IS GREATER THAN 13', ALIGN TAPER WITH FRONT OF SIDEWALK

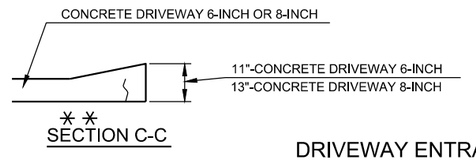

SECTION C-C

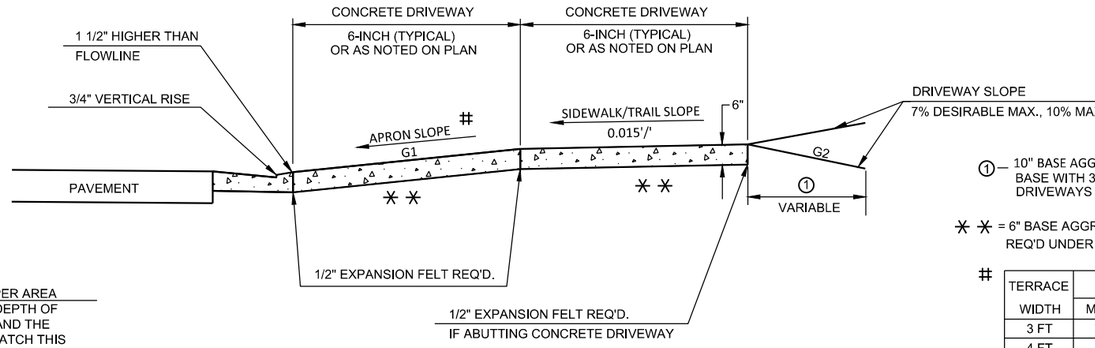

TYPICAL SIDEWALK SECTION

① — 10" BASE AGGREGATE DENSE 1 1/4-INCH BASE WITH 3" ASPHALTIC SURFACE DRIVEWAYS AND FIELD ENTRANCES

** = 6" BASE AGGREGATE DENSE 1 1/4-INCH REQ'D UNDER CONCRETE DRIVEWAY

\#

TERRACE WIDTH	APRON SLOPE (G1) MIN %	DESIRABLE %	MAX %
3 FT	7.0	8.5	9.0
4 FT	5.0	7.0	9.0
5 FT	4.0	7.0	9.0
6 FT	4.0	7.0	9.0
7 FT	3.5	7.0	9.0
8 FT	3.0	7.0	9.0

NOTE: ALGEBRAIC DIFFERENCE BETWEEN TANGENT GRADES G1 & G2 TO NOT EXCEED 15%

DEPRESS SIDEWALK PROFILE IF DRIVEWAY APRON EXCEEDS MAX SLOPE

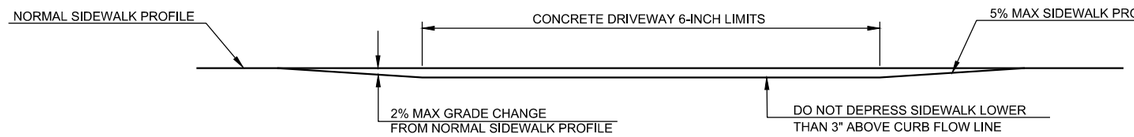

DEPRESSED SIDEWALK PROFILE DETAIL

DRIVEWAY ENTRANCE DETAIL WITH SIDEWALK, CURB AND GUTTER

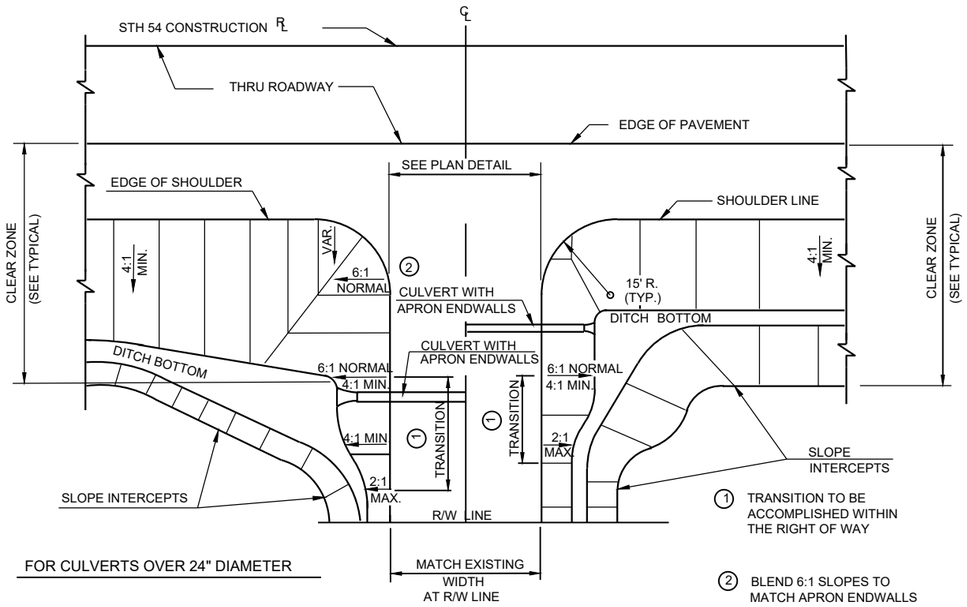

PLAN VIEW

ENTRANCE GRADING DETAIL

FOR CULVERTS 24" DIAMETER OR LESS

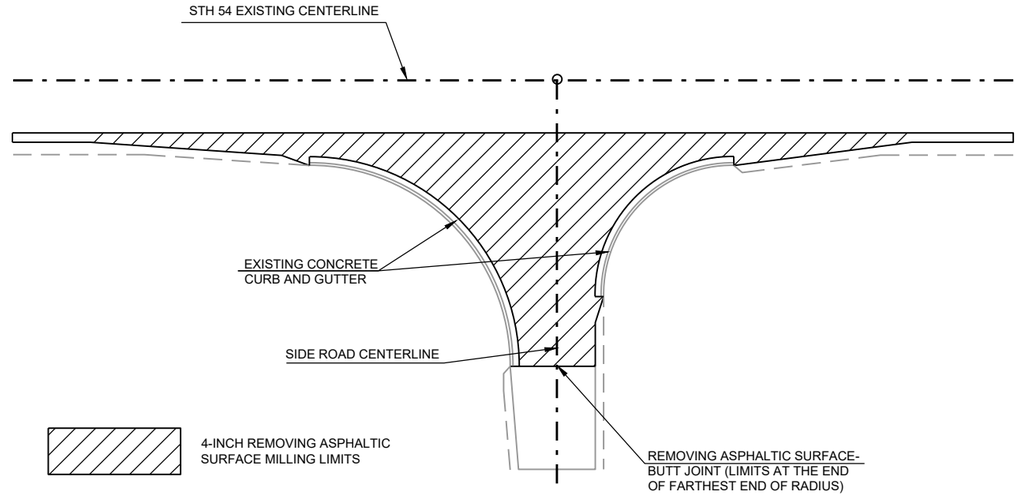

SIDE ROAD CONSTRUCTION LIMITS

INTERSECTION WITH CONCRETE CURB AND GUTTER

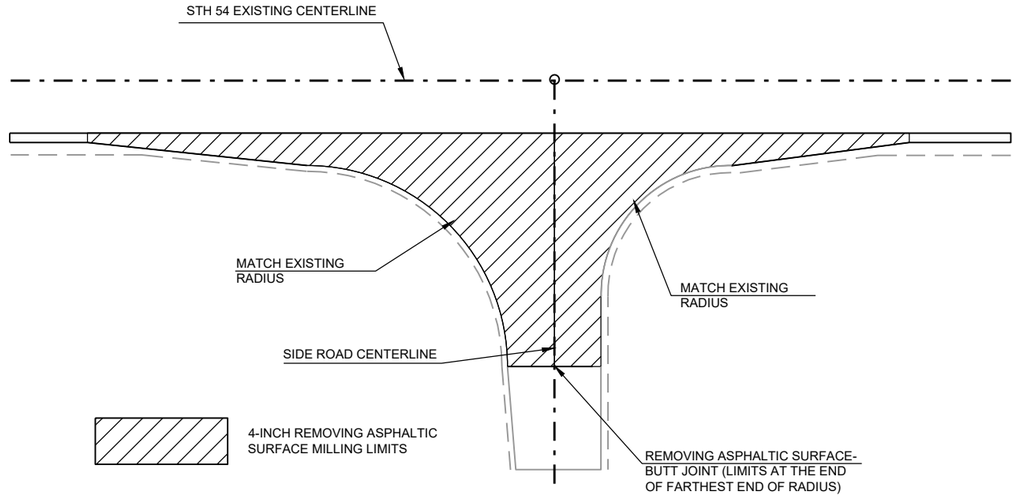

SIDE ROAD CONSTRUCTION LIMITS

INTERSECTION WITHOUT CONCRETE CURB AND GUTTER

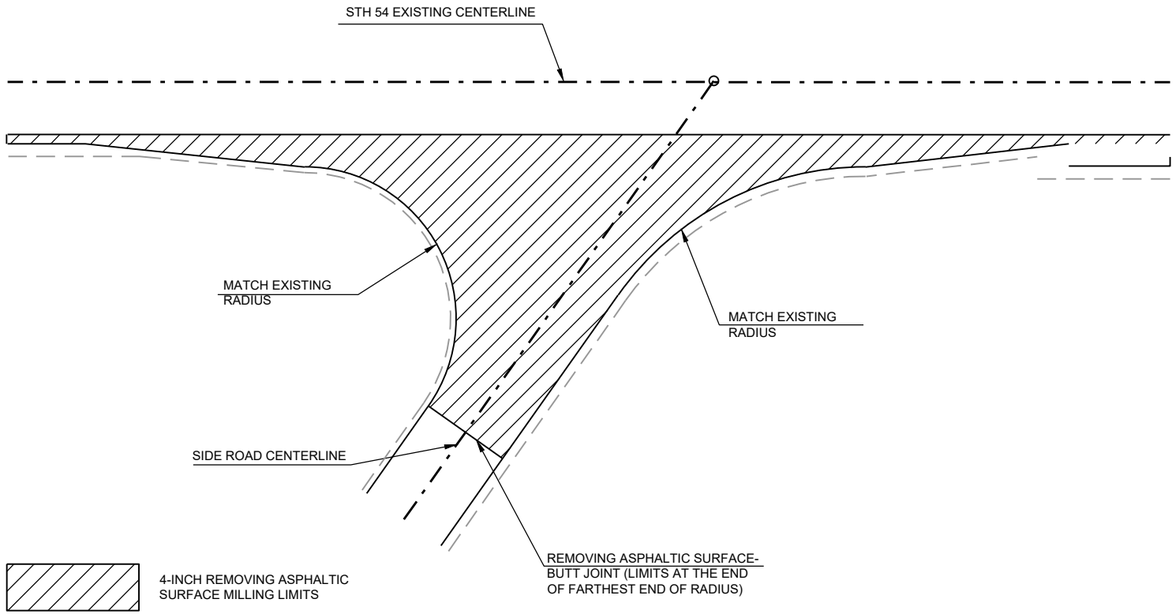

SIDE ROAD CONSTRUCTION LIMITS

SKEWED SIDE ROAD LOCATIONS

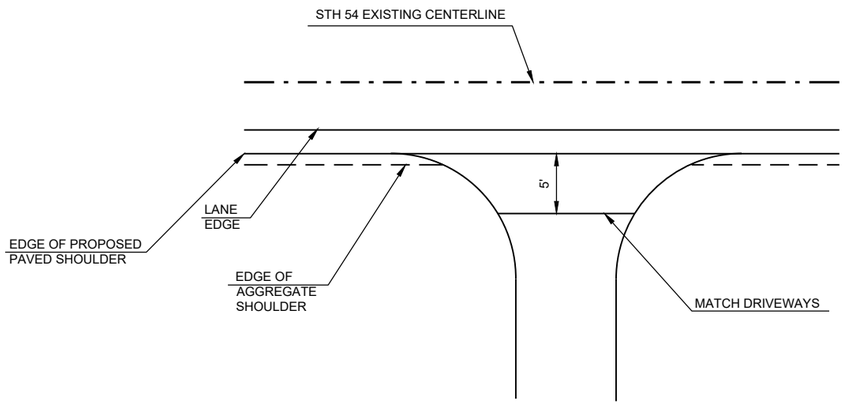

DETAIL FOR TYPICAL DRIVEWAY PAVING LIMITS

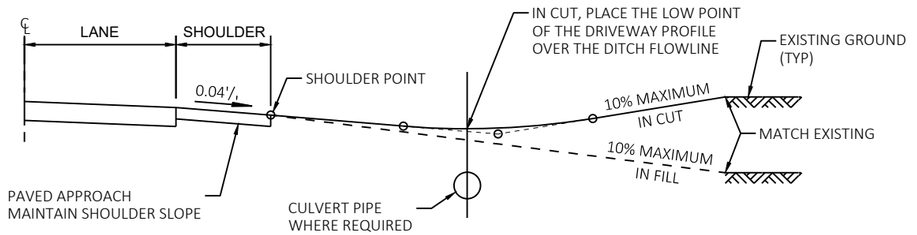

TYPICAL DRIVEWAY PROFILES

2

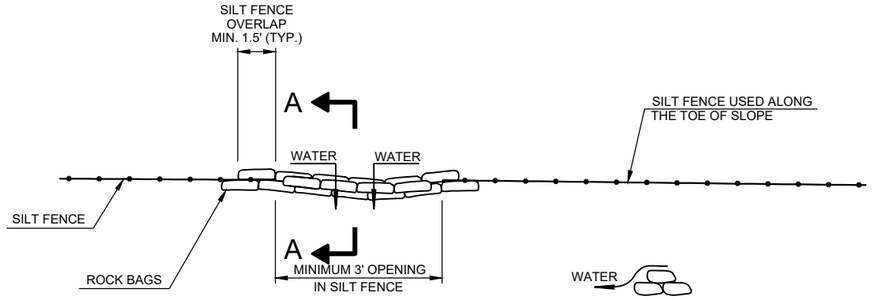

TOP VIEW

ROCK BAGS USED FOR SILT FENCE RELIEF DETAIL

PAID AS ROCK BAGS
(SEE MISCELLANEOUS QUANTITIES FOR LOCATIONS)

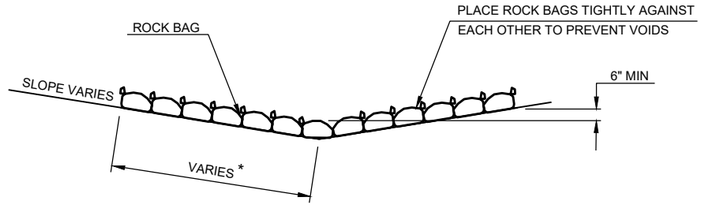

SIDE VIEW (SINGLE LAYER)

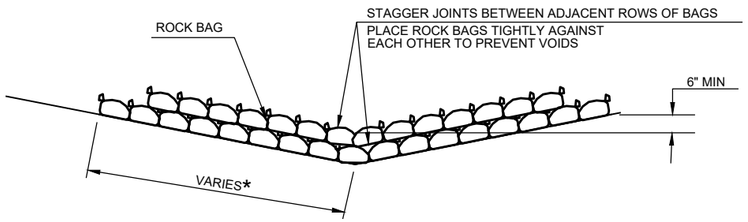

LENGTH AND NUMBER OF BAGS MAY VARY
* DEPENDING ON DESIRED DEPTH OF WATER POOL

SIDE VIEW (MULTIPLE LAYER)

ROCK BAGS DITCH CHECK

PAID AS ROCK BAGS
(SEE MISCELLANEOUS QUANTITIES FOR LOCATIONS)

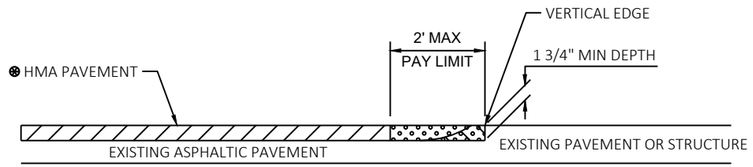

BUTT JOINT DETAIL FOR ASPHALTIC PAVEMENTS (NO PROFILE CHANGE)

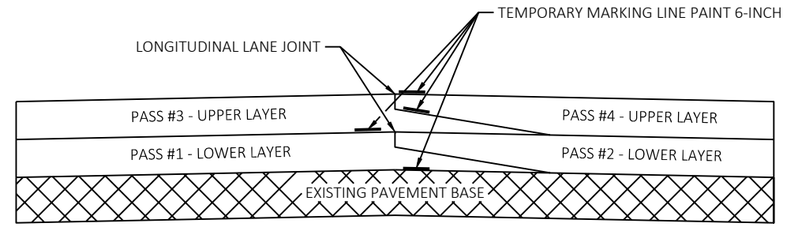

PAVEMENT MARKING DETAIL FOR TAPERED OVERLAPPING JOINTS IN HMA PAVEMENTS (RUMBLE STRIP AREA)

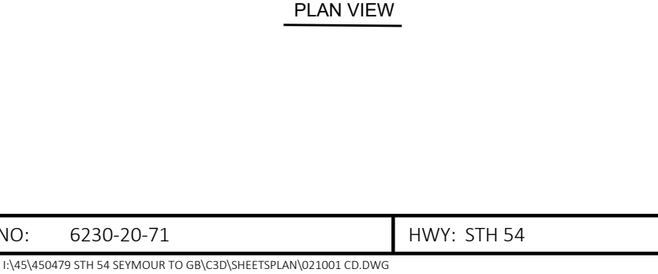

PLAN VIEW

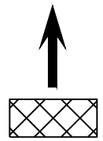

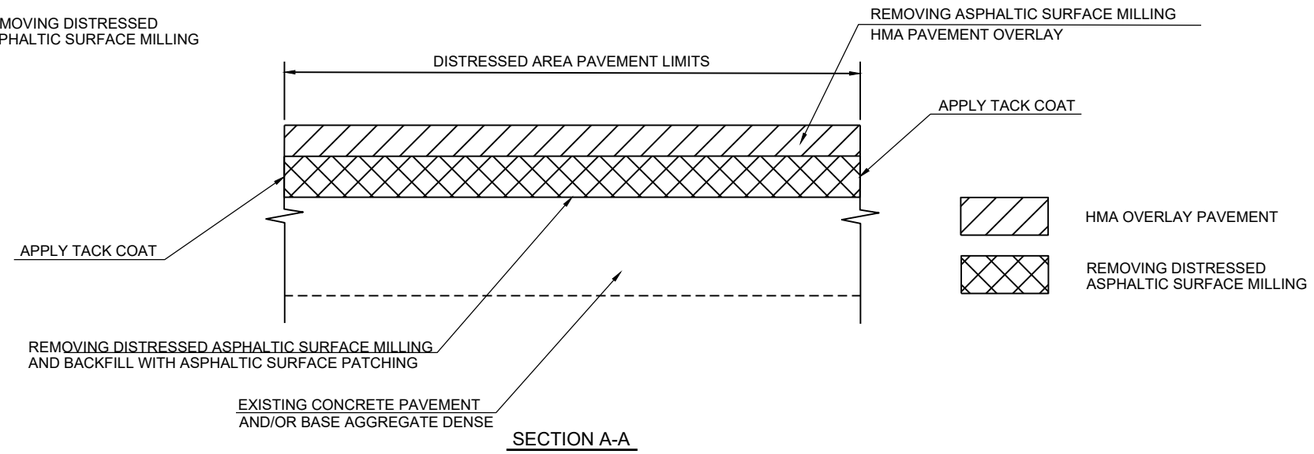

SECTION A-A

REMOVING DISTRESSED PAVEMENT MILLING

EXACT LOCATION AND LIMITS TO BE DETERMINED BY THE ENGINEER IN THE FIELD

2

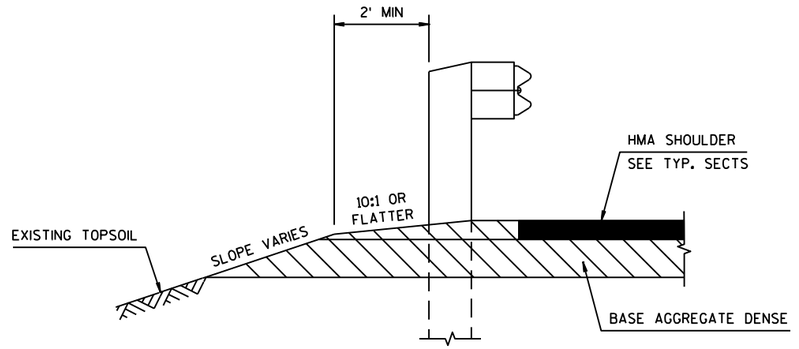

SECTION A-A

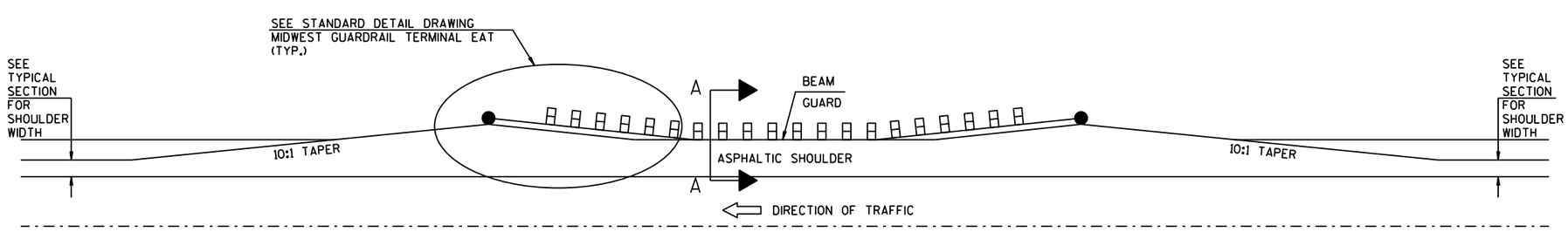

DETAIL FOR ASPHALTIC SHOULDER AT GUARDRAIL

2

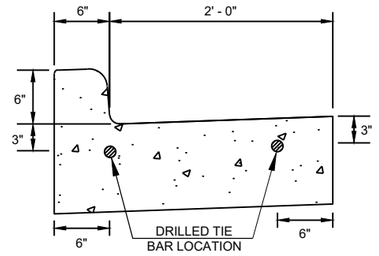

DRILLED TIE BAR LOCATION FOR MATCHING
INTO EXISTING CURB AND GUTTER

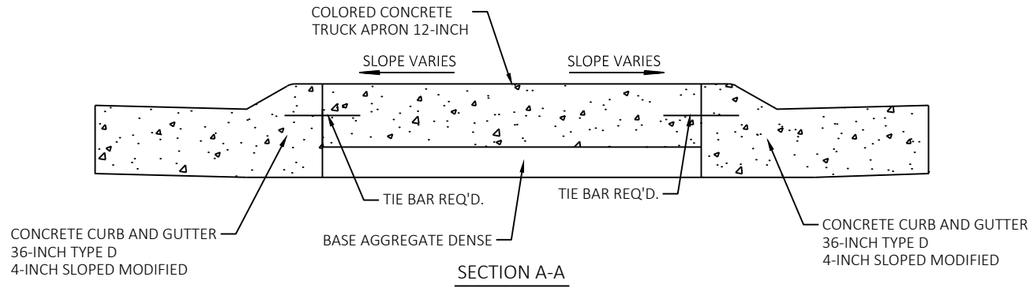

SECTION A-A

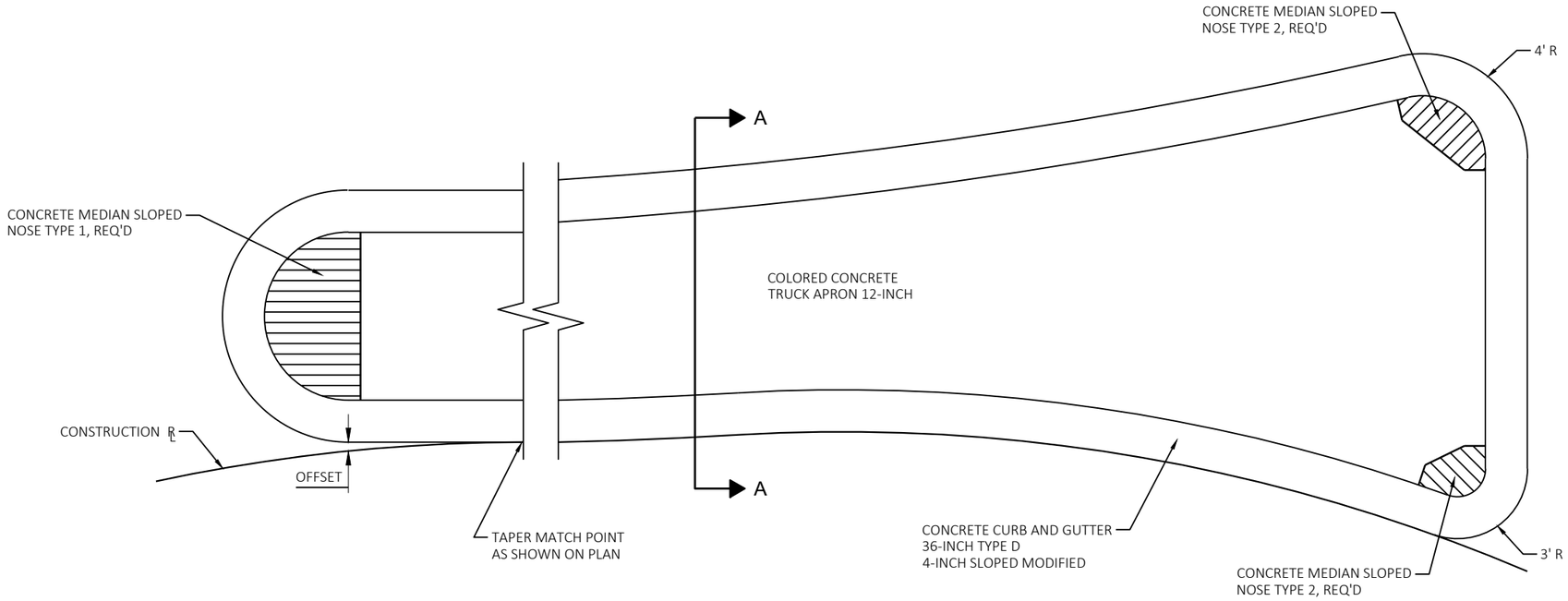

CONCRETE SPLITTER ISLAND DETAIL WITHOUT CROSSWALK

2

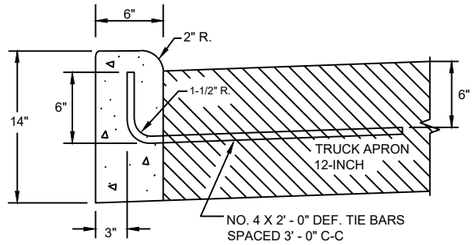

TYPE A MODIFIED CURB

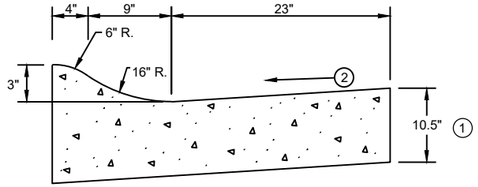

3-INCH SLOPE 36-INCH TYPE R CURB SPECIAL

GENERAL NOTES

DETAILS OF CONSTRUCTION AND WORKMANSHIP NOT SHOWN ON THIS DRAWING SHALL CONFORM TO THE PERTINENT REQUIREMENTS OF THE CONTRACT.

PAVEMENT TIES AND TIE BARS SHALL BE EPOXY COATED IN CONFORMANCE WITH SUBSECTION 505.2.6.2 OF THE STANDARD SPECIFICATIONS.

UNLESS OTHERWISE SHOWN ON THE TYPICAL CROSS SECTIONS, THE BASE AGGREGATE AND COMMON EXCAVATION LIMITS ARE 2' - 0" BEHIND THE BACK OF CURBS.

(1) THE BOTTOM OF CURB AND GUTTER MAY BE CONSTRUCTED EITHER LEVEL OR PARALLEL TO THE SLOPE OF THE SUBGRADE OR BASE AGGREGATE PROVIDED A 10.5" MINIMUM GUTTER THICKNESS IS MAINTAINED.

(2) USE 1% GUTTER CROSS SLOPE FOR ACCEPT CURB AND -1% FOR REVERSE SLOPE CURB

2

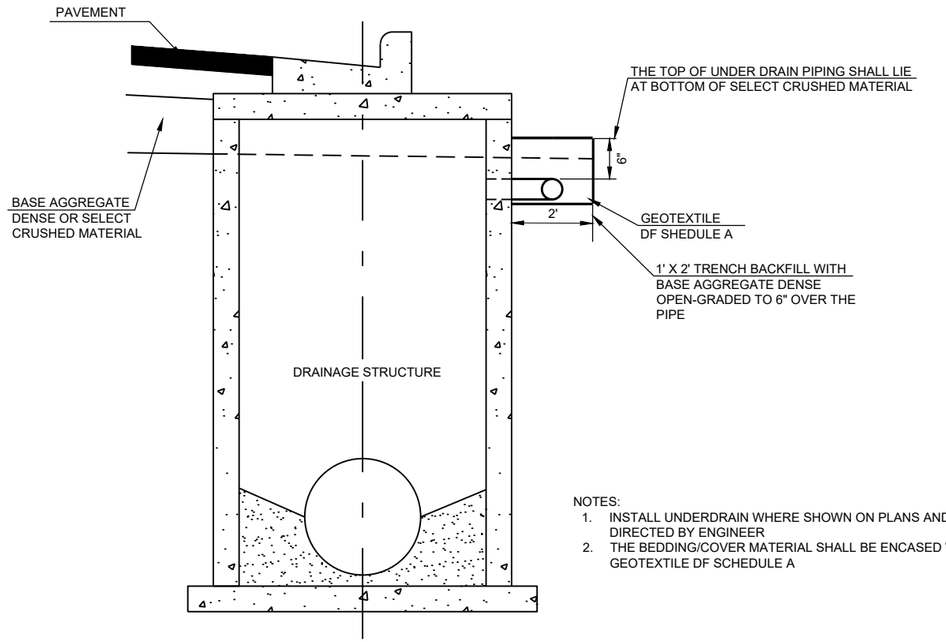

NOTES:
1. INSTALL UNDERDRAIN WHERE SHOWN ON PLANS AND/OR AS DIRECTED BY ENGINEER
2. THE BEDDING/COVER MATERIAL SHALL BE ENCASED WITH GEOTEXTILE DF SCHEDULE A

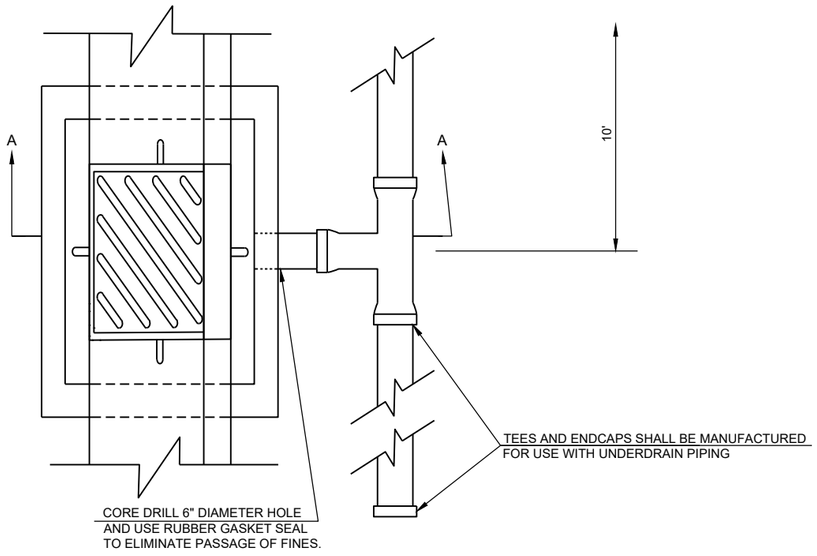

UNDERDRAIN DETAIL

(SEE MISCELLANEOUS QUANTITIES FOR LOCATIONS)

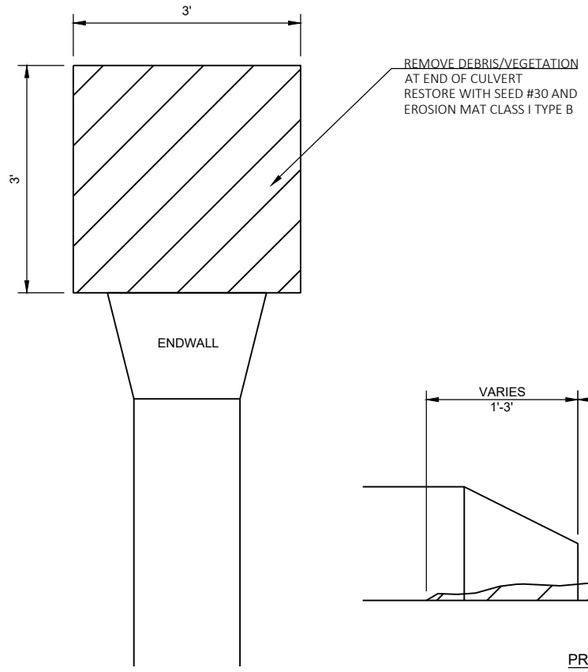

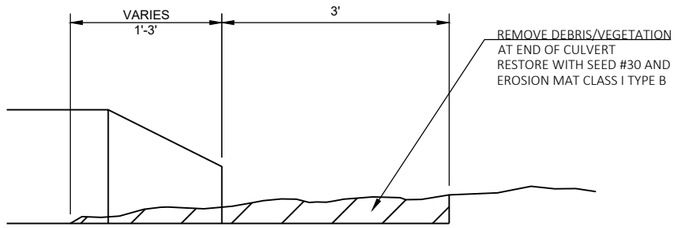

PROFILE

PLAN

CLEAN CULVERT END DETAIL

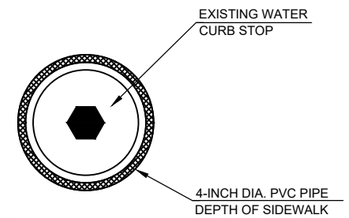

NOTE:
COST OF PVC PIPE IS INCIDENTAL TO ITEMS OF CONCRETE SIDEWALK

DETAIL FOR WATER CURB STOP IN SIDEWALK

2

N

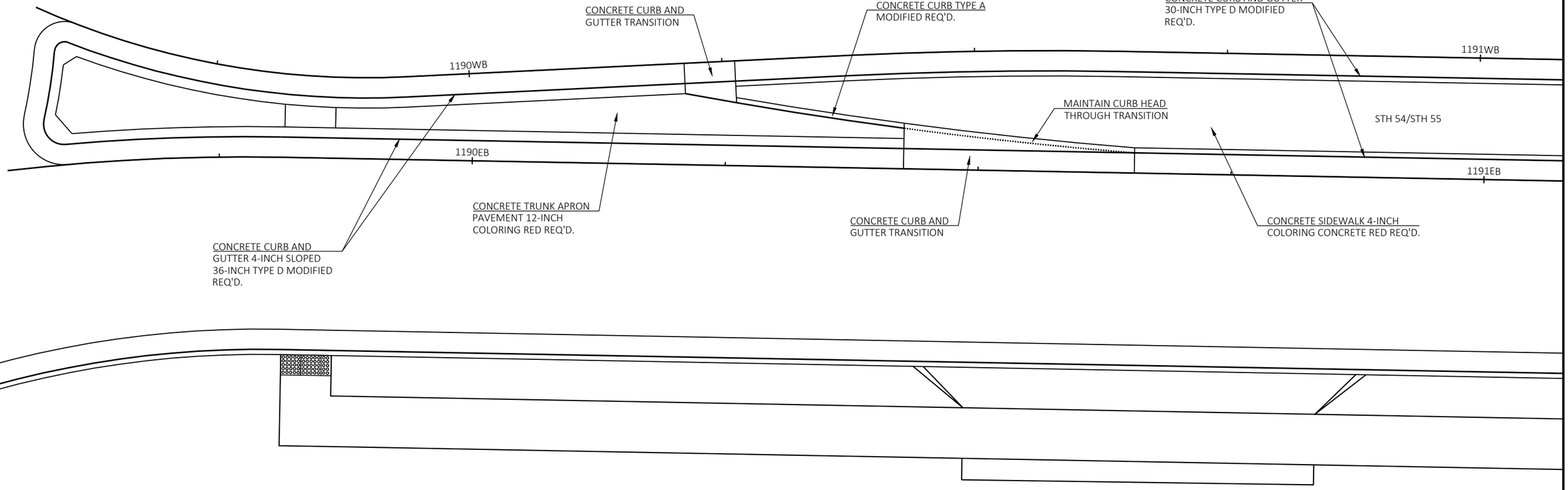

CONCRETE CURB AND GUTTER TRANSITION

NOTES:
-MAINTAIN CURB PAN THROUGHOUT TRANSITION
-TIE TRANSITION TO ADJACENT CURB TYPES IF POURED IN SEPARATE OPERATION

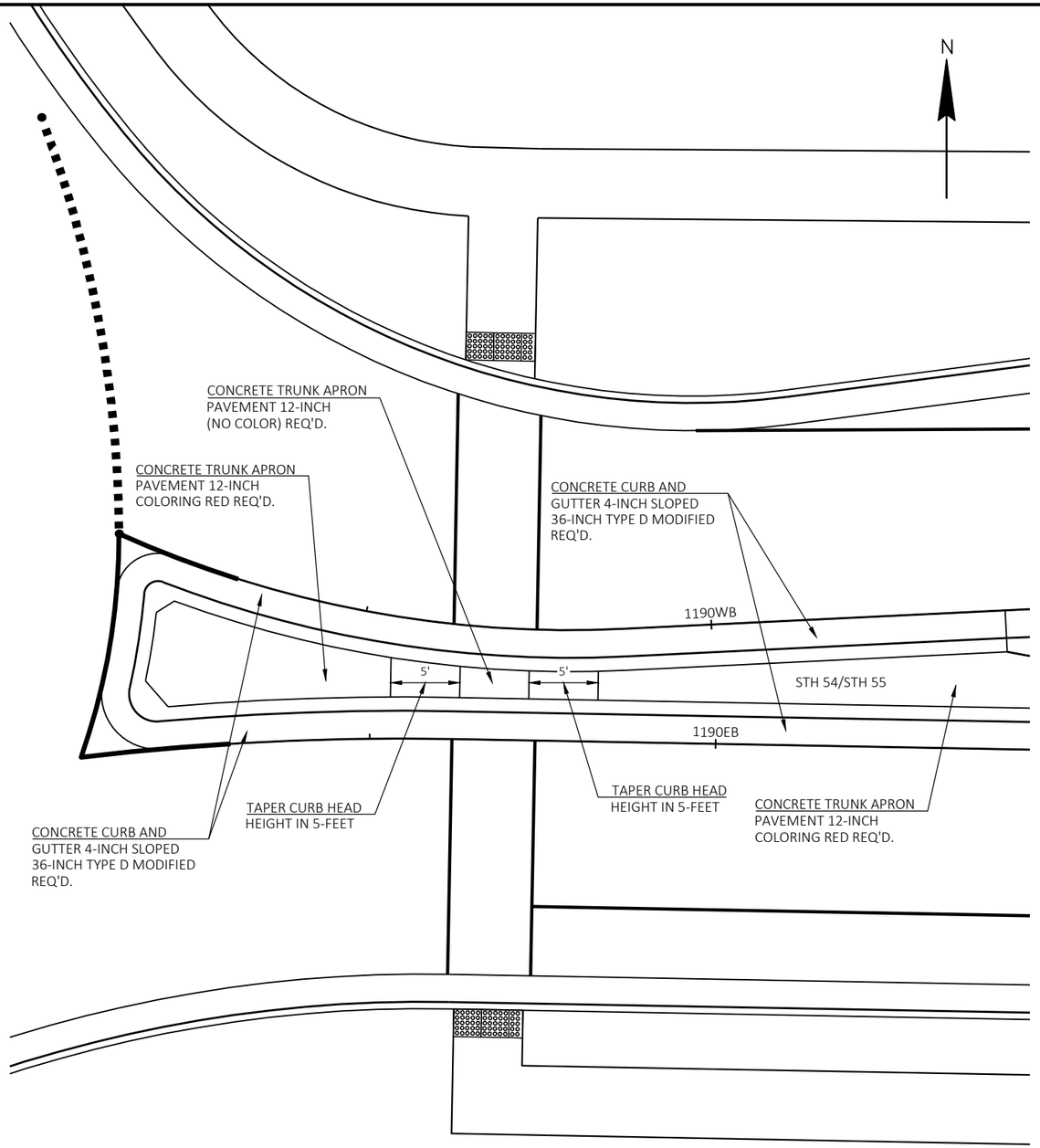

CROSS WALK AT STA 1189+89EB

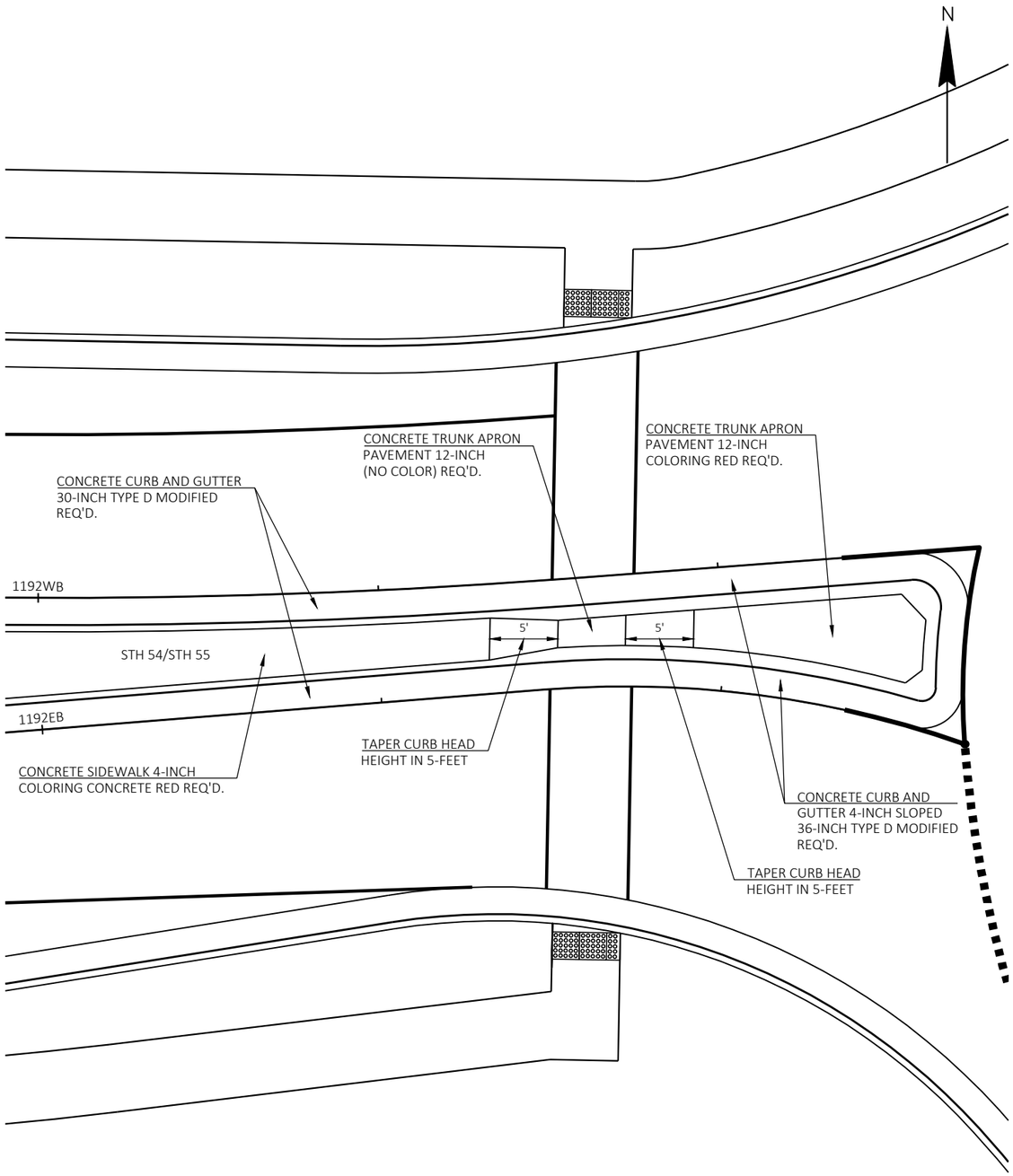

CROSS WALK AT STA 1192+41EB

2

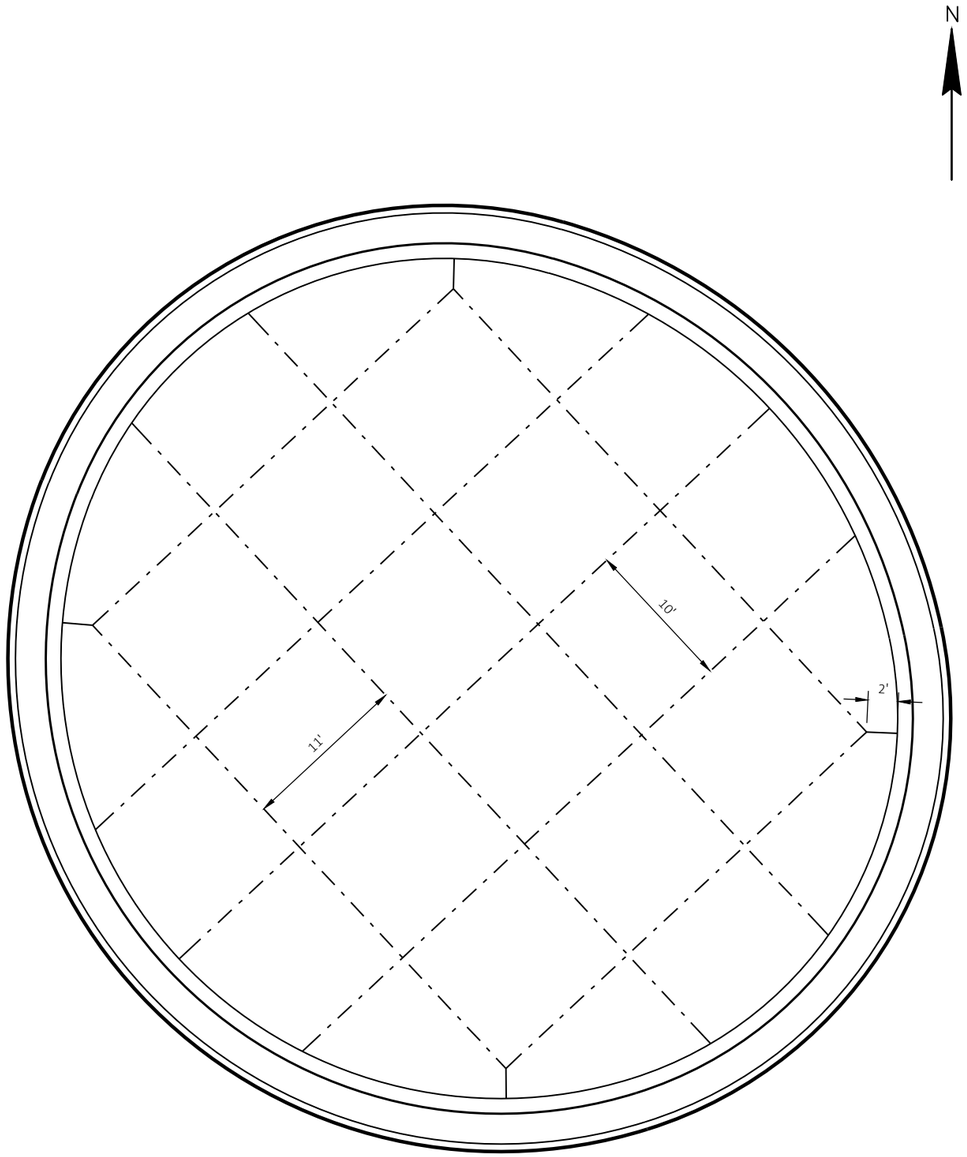

STH 54/STH 55 TRUCK APRON JOINTING

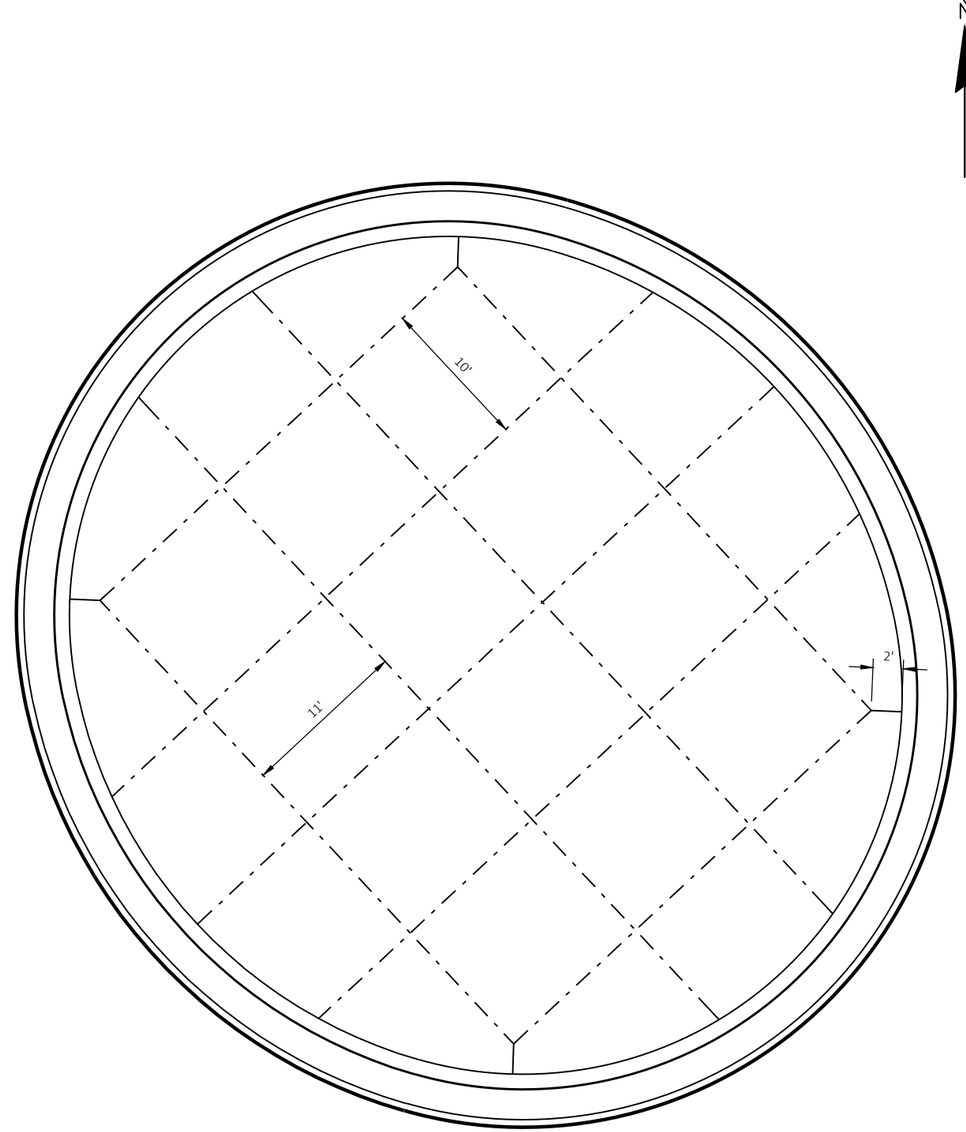

STH 54/IVORY ST TRUCK APRON JOINTING

2

PROJECT NO: 6230-20-71	HWY: STH 54	COUNTY: OUTAGAMIE	CONSTRUCTION DETAILS	SHEET 25	E

FILE NAME : I:\45\450479 STH 54 SEYMOUR TO GB\C3D\SHEETSPLAN\021002 CD.DWG
LAYOUT NAME - 021011 cd
PLOT DATE : 7/27/2023 2:59 PM PLOT BY : VERVILLE, PHILLIP PLOT NAME : PLOT SCALE : 1 IN:10 FT
WISDOT/CADDS SHEET 42

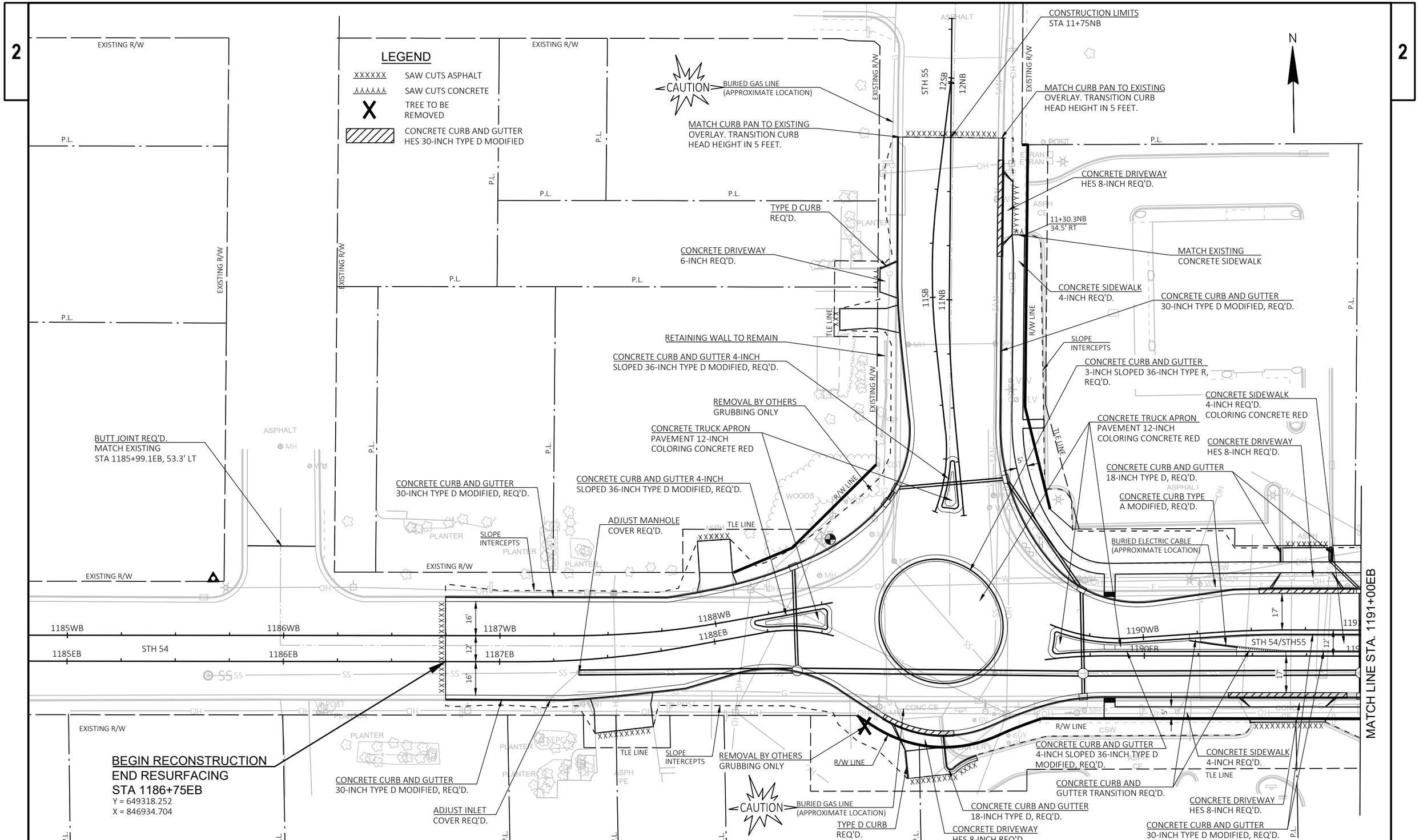

PROJECT NO: 6230-20-71	HWY: STH 54	COUNTY: OUTAGAMIE	PLAN DETAILS	SHEET 26	E

FILE NAME : I:\45\450479 STH 54 SEYMOUR TO GB\C3D\SHEETSPLAN\021201 PD.DWG
LAYOUT NAME - 021201 pd
PLOT DATE : 8/29/2023 12:23 PM PLOT BY : VERVILLE, PHILLIP PLOT NAME : PLOT SCALE : 1 IN:40 FT
WISDOT/CADDS SHEET 42

2

LEGEND

- XXXXXX SAW CUTS ASPHALT
- ΛΛΛΛΛΛ SAW CUTS CONCRETE
- X TREE TO BE REMOVED
- CONCRETE CURB AND GUTTER HES 30-INCH TYPE D MODIFIED

MATCH LINE STA. 1191+00EB

CONSTRUCTION LIMITS
STA 34+50IN

P.L.

MATCH EXISTING
CONCRETE SIDEWALK

MATCH EXISTING
CONCRETE SIDEWALK

34+40.7IN
30.0' LT

IVORY ST.

CONCRETE SIDEWALK
4-INCH REQ'D.

CONCRETE DRIVEWAY
HES 8-INCH REQ'D.

CONCRETE SIDEWALK
4-INCH REQ'D.

BURIED GAS LINE
(APPROXIMATE LOCATION)

CAUTION

CONCRETE CURB AND GUTTER
4-INCH SLOPED 36-INCH TYPE D
MODIFIED, REQ'D.

CONCRETE DRIVEWAY
8-INCH REQ'D.

REMOVE
MONITORING WELL

CONCRETE CURB AND GUTTER
30-INCH TYPE D MODIFIED,
REQ'D.

SLOPE
INTERCEPTS

EXISTING R/W

BM #1001

R/W LINE

TLE LINE

CONCRETE TRUCK APRON
PAVEMENT 12-INCH
COLORING CONCRETE RED

MATCH EXISTING
CONCRETE SIDEWALK

SLOPE
INTERCEPTS

CONCRETE CURB AND GUTTER
30-INCH TYPE D MODIFIED,
REQ'D.

REMOVE
MONITORING WELL

REMOVE
CONCRETE BASE

BURIED TELEPHONE LINE
(APPROXIMATE LOCATION)

ASPHALT

1191WB
1192WB
1192EB
1194WB
1194EB
1195WB
1195EB
1196WB
1196EB
1197WB
1197EB

STH 54/STH 55

17'
12'
17'
5'

R/W LINE

SLOPE
INTERCEPTS

CONCRETE SIDEWALK
4-INCH REQ'D.
COLORING CONCRETE RED

CONCRETE SIDEWALK
4-INCH REQ'D.

CONCRETE TRUCK APRON
PAVEMENT 12-INCH
COLORING CONCRETE RED

CAUTION

BURIED GAS LINE
(APPROXIMATE LOCATION)

CONCRETE CURB AND GUTTER
4-INCH SLOPED 36-INCH TYPE D
MODIFIED, REQ'D.

CONCRETE DRIVEWAY
HES 8-INCH REQ'D.

CONCRETE CURB AND GUTTER
30-INCH TYPE D MODIFIED,
REQ'D.

CONCRETE CURB AND GUTTER
4-INCH SLOPED 36-INCH TYPE D
MODIFIED, REQ'D.

CONCRETE CURB AND GUTTER
3-INCH SLOPED 36-INCH TYPE R,
REQ'D.

SLOPE
INTERCEPTS

BURIED TELEPHONE LINE
(APPROXIMATE LOCATION)

BURIED GAS LINE
(APPROXIMATE LOCATION)

CAUTION

CTH C/IVORY ST.

CONSTRUCTION LIMITS
STA 31+25IN

END RECONSTRUCTION
BEGIN RESURFACING
STA 1195+15EB
Y = 649307.073
X = 847771.354

N

PROJECT NO: 6230-20-71	HWY: STH 54	COUNTY: OUTAGAMIE	PLAN DETAILS	SHEET 27	E

FILE NAME : I:\45\450479 STH 54 SEYMOUR TO GB\C3D\SHEETSPLAN\021201 PD.DWG
LAYOUT NAME - 021202 pd

PLOT DATE : 8/29/2023 12:23 PM PLOT BY : VERVILLE, PHILLIP PLOT NAME : PLOT SCALE : 1 IN:40 FT

BENCH MARKS

NO.	STATION	DESCRIPTION	ELEV.
1008	1327+33EB	NAIL IN PPOL#74-3086 - 58' RT	787.74
300	1329+26EB	CHISELED BOX ON BOX CULVERT - 23' RT	786.56
1009	1329+73EB	NAIL IN PPOL#75-0100 - 65' LT	786.70

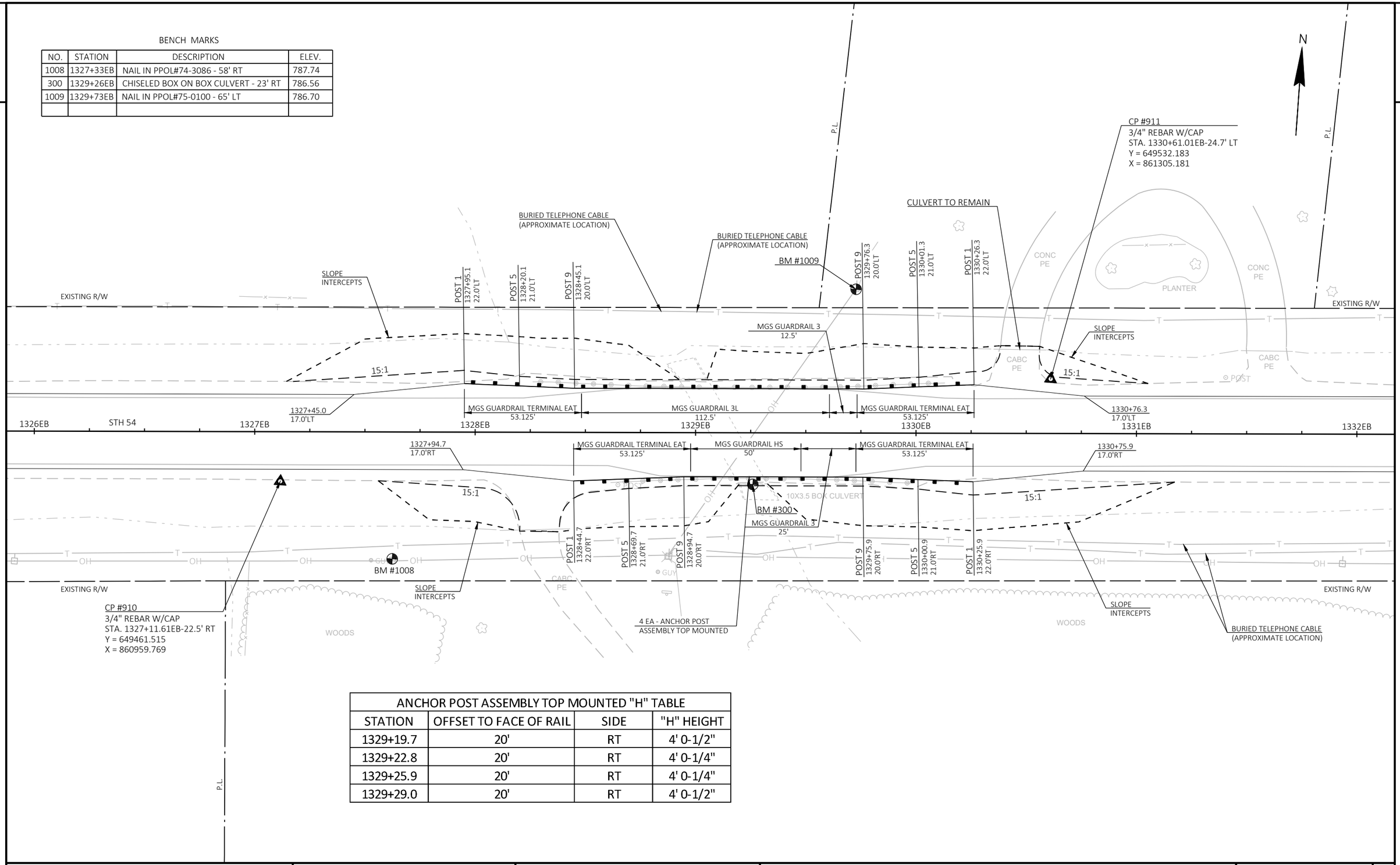

ANCHOR POST ASSEMBLY TOP MOUNTED "H" TABLE			
STATION	OFFSET TO FACE OF RAIL	SIDE	"H" HEIGHT
1329+19.7	20'	RT	4' 0-1/2"
1329+22.8	20'	RT	4' 0-1/4"
1329+25.9	20'	RT	4' 0-1/4"
1329+29.0	20'	RT	4' 0-1/2"

PROJECT NO: 6230-20-71	HWY: STH 54	COUNTY: OUTAGAMIE	PLAN DETAILS - GUARDRAIL	SHEET 28	E

FILE NAME : I:\45\450479 STH 54 SEYMOUR TO GB\C3D\SHEETSPLAN\021201 PD.DWG
LAYOUT NAME - 021203 pd
PLOT DATE : 7/26/2023 12:33 PM PLOT BY : GARNICA, BRANDON PLOT NAME : PLOT SCALE : 1 IN:40 FT
WISDOT/CADDS SHEET 42

2

2

N

EXISTING R/W

EXISTING R/W

BURIED TELEPHONE CABLE
(APPROXIMATE LOCATION)

REMOVAL BY OTHERS
GRUBBING ONLY

SLOPE
INTERCEPTS

WOODS

POST 1
1416+17.5
22.0'LT

POST 5
1416+42.5
21.0'LT

POST 9
1416+67.5
20.0'LT

POST 9
1418+11.3
20.0'LT

POST 5
1418+36.3
21.0'LT

POST 1
1418+61.3
22.0'LT

SLOPE
INTERCEPTS

15:1

15:1

1415+67.5
17.0'LT

MGS GUARDRAIL TERMINAL EAT
53.125'

MGS GUARDRAIL 3L
100'

MGS GUARDRAIL 3
37.5'

MGS GUARDRAIL TERMINAL EAT
53.125'

1419+11.3
17.0'LT

1414EB

STH 54

1415EB

1416EB

1417EB

1418EB

1419EB

1420EB

1415+23.7
17.0'RT

MGS GUARDRAIL TERMINAL EAT
53.125'

MGS GUARDRAIL 3
37.5'

MGS GUARDRAIL 3L
100'

MGS GUARDRAIL TERMINAL EAT
53.125'

1418+67.4
17.0'RT

15:1

5X4 BOX CULVERT

BM #301

15:1

15" RCCP
(REMOVE)

REMOVE FE
RELOCATE FE
STA 1423+51

CABC
FE

CP #912
3/4" REBAR W/CAP
STA. 1415+19.46EB-21.3' RT
Y = 649980.504
X = 869751.925

SLOPE
INTERCEPTS

POST 1
1415+73.7
22.0'RT

POST 5
1415+98.7
21.0'RT

POST 9
1416+23.7
20.0'RT

POST 9
1417+67.4
20.0'RT

POST 5
1417+92.4
21.0'RT

POST 1
1418+17.4
22.0'RT

SLOPE
INTERCEPTS

CP #913
3/4" REBAR W/CAP
STA. 1419+19.25EB-22.7' RT
Y = 650000.519
X = 870150.933

BURIED TELEPHONE CABLE
(APPROXIMATE LOCATION)

OH

EXISTING R/W

BM #1013

EXISTING R/W

BENCH MARKS

NO.	STATION	DESCRIPTION	ELEV.
301	1417+18EB	CHISELED BOX ON BOX CULVERT - 24' RT	754.61
1013	1418+97EB	NAIL IN PPOL#68-6331 - 130' RT	754.07

PROJECT NO: 6230-20-71	HWY: STH 54	COUNTY: OUTAGAMIE	PLAN DETAILS - GUARDRAIL	SHEET 29	E

FILE NAME : I:\45\450479 STH 54 SEYMOUR TO GB\C3D\SHEETSPLAN\021201 PD.DWG
LAYOUT NAME - 021204 pd

PLOT DATE : 7/26/2023 12:33 PM PLOT BY : GARNICA, BRANDON PLOT NAME : PLOT SCALE : 1 IN:40 FT

2

2

N

EXISTING R/W

EXISTING R/W

BURIED TELEPHONE CABLE
(APPROXIMATE LOCATION)

1421EB

STH 54

1422EB

1423EB

1424EB

1425EB

1426EB

1427EB

STA 1423+51
1-CP 18-INCH
2-APRON ENDWALLS FOR CP 18-INCH

35'

STA 1423+51
FIELD ENTRANCE
BASE AGGREGATE DENSE REQ'D.

BURIED TELEPHONE CABLE
(APPROXIMATE LOCATION)

EXISTING R/W

EXISTING R/W

P.L.

PROJECT NO: 6230-20-71	HWY: STH 54	COUNTY: OUTAGAMIE	PLAN DETAILS	SHEET 30	E

FILE NAME : I:\45\450479 STH 54 SEYMOUR TO GB\C3D\SHEETSPLAN\021202 PD.DWG
LAYOUT NAME - 021205 pd

PLOT DATE : 7/26/2023 12:34 PM PLOT BY : GARNICA, BRANDON PLOT NAME : PLOT SCALE : 1 IN:40 FT

2

P.L.

P.L.

P.L.

2

BENCH MARKS

NO.	STATION	DESCRIPTION	ELEV.
302	1440+47EB	CHISELED BOX ON BOX CULVERT - 28' RT	749.50
1014	1440+89EB	NAIL IN TREE NW HOUSE #W959 - 64' LT	751.40
1015	1442+60EB	NAIL IN PPOL #52-1847 - 101' RT	751.17

N

CP #915
3/4" REBAR W/CAP
STA. 1442+61.13EB-22.0' LT
Y = 650029.445
X = 872491.814

EXISTING R/W

BM #1014

WOODS

EXISTING R/W

SLOPE INTERCEPTS

SLOPE INTERCEPTS

POST 1 1438+96.8 22.0'LT

POST 5 1439+21.8 21.0'LT

POST 9 1439+46.8 20.0'LT

MGS GUARDRAIL 3 25.0'

POST 9 1440+90.5 20.0'LT

POST 5 1441+15.5 21.0'LT

POST 1 1441+40.5 22.0'LT

15:1

15:1

⊙ POST

⊙ POST

1438+46.8 17.0'LT

MGS GUARDRAIL TERMINAL EAT 53.125'

MGS GUARDRAIL 3L 112.5'

MGS GUARDRAIL TERMINAL EAT 53.125'

1441+90.5 17.0'LT

1437EB STH 54 1438EB 1439EB 1440EB 1441EB 1442EB 1443EB

1438+46.9 17.0'RT

MGS GUARDRAIL TERMINAL EAT 53.125'

MGS GUARDRAIL 3L 112.5'

MGS GUARDRAIL TERMINAL EAT 53.125'

1441+90.6 17.0'RT

CP #914
3/4" REBAR W/CAP
STA. 1437+23.71EB-22.3' RT
Y = 649993.195
X = 871953.790

15:1

15:1

POST 1 1438+96.9 22.0'RT

POST 5 1439+21.9 21.0'RT

POST 9 1439+46.9 20.0'RT

MGS GUARDRAIL 3 25.0'

BM #302

10X6 BOX CULVERT

POST 9 1440+90.6 20.0'RT

POST 5 1441+15.6 21.0'RT

POST 1 1441+40.6 22.0'RT

18" CMCP

18" CMCP

SLOPE INTERCEPTS

SLOPE INTERCEPTS

WOODS

CABC PE

CABC PE

BM #1015

EXISTING R/W

EXISTING R/W

BURIED TELEPHONE CABLE (APPROXIMATE LOCATION)

CAUTION

BURIED GAS LINE (APPROXIMATE LOCATION)

BURIED TELEPHONE CABLE (APPROXIMATE LOCATION)

P.L.

P.L.

P.L.

PROJECT NO: 6230-20-71	HWY: STH 54	COUNTY: OUTAGAMIE	PLAN DETAILS - GUARDRAIL	SHEET 31	E

FILE NAME : I:\45\450479 STH 54 SEYMOUR TO GB\C3D\SHEETSPLAN\021201 PD.DWG
LAYOUT NAME - 021206 pd
PLOT DATE : 7/26/2023 12:34 PM PLOT BY : GARNICA, BRANDON PLOT NAME : PLOT SCALE : 1 IN:40 FT
WISDOT/CADDS SHEET 42

2

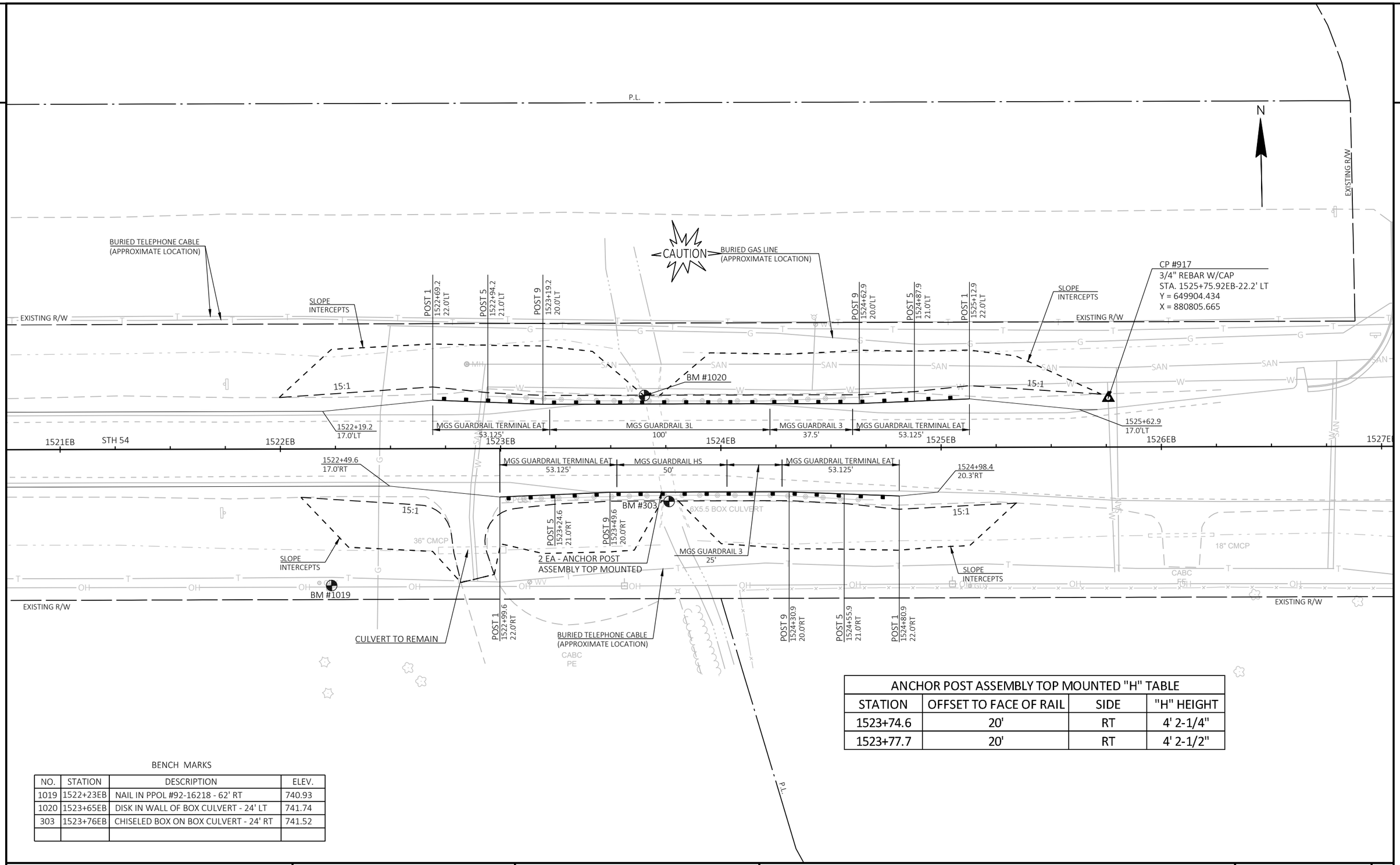

ANCHOR POST ASSEMBLY TOP MOUNTED "H" TABLE			
STATION	OFFSET TO FACE OF RAIL	SIDE	"H" HEIGHT
1523+74.6	20'	RT	4' 2-1/4"
1523+77.7	20'	RT	4' 2-1/2"

BENCH MARKS

NO.	STATION	DESCRIPTION	ELEV.
1019	1522+23EB	NAIL IN PPOL #92-16218 - 62' RT	740.93
1020	1523+65EB	DISK IN WALL OF BOX CULVERT - 24' LT	741.74
303	1523+76EB	CHISELED BOX ON BOX CULVERT - 24' RT	741.52

PROJECT NO: 6230-20-71	HWY: STH 54	COUNTY: OUTAGAMIE	PLAN DETAILS - GUARDRAIL	SHEET 32	E

FILE NAME : I:\45\450479 STH 54 SEYMOUR TO GB\C3D\SHEETSPLAN\021201 PD.DWG
LAYOUT NAME - 021207 pd
PLOT DATE : 7/26/2023 12:34 PM
PLOT BY : GARNICA, BRANDON
PLOT NAME :
PLOT SCALE : 1 IN:40 FT
WISDOT/CADDS SHEET 42

2

LEGEND

CONCRETE CURB AND GUTTER
REVERSE SLOPED 1% PAN

TRANSITION FROM REVERSE
SLOPED TO ACCEPTED SLOPE

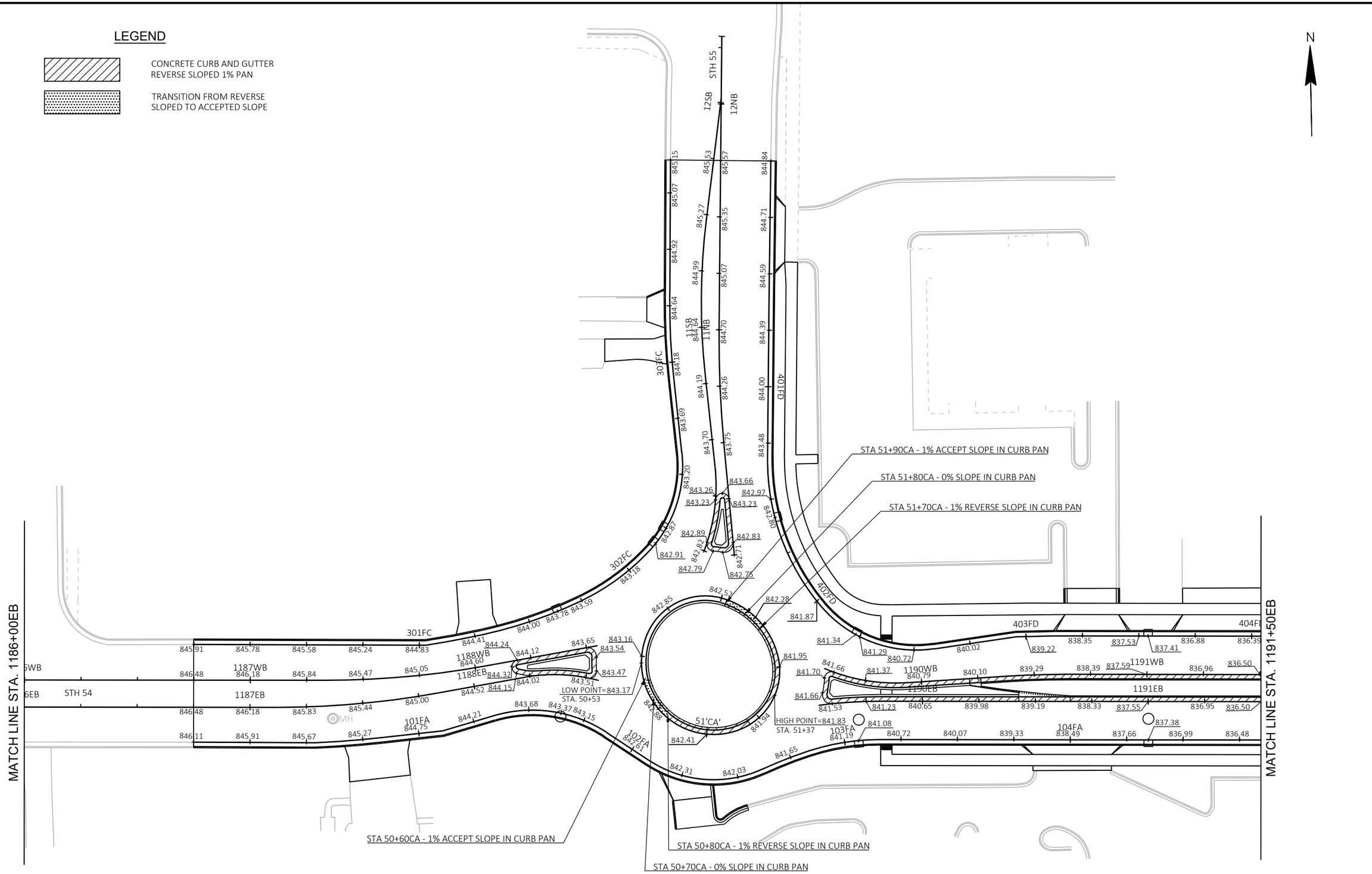

PROJECT NO: 6230-20-71	HWY: STH 54	COUNTY: OUTAGAMIE	PLAN GRADES	SHEET 33	E

LEGEND

CONCRETE CURB AND GUTTER
REVERSE SLOPED 1% PAN

TRANSITION FROM REVERSE
SLOPED TO ACCEPTED SLOPE

N

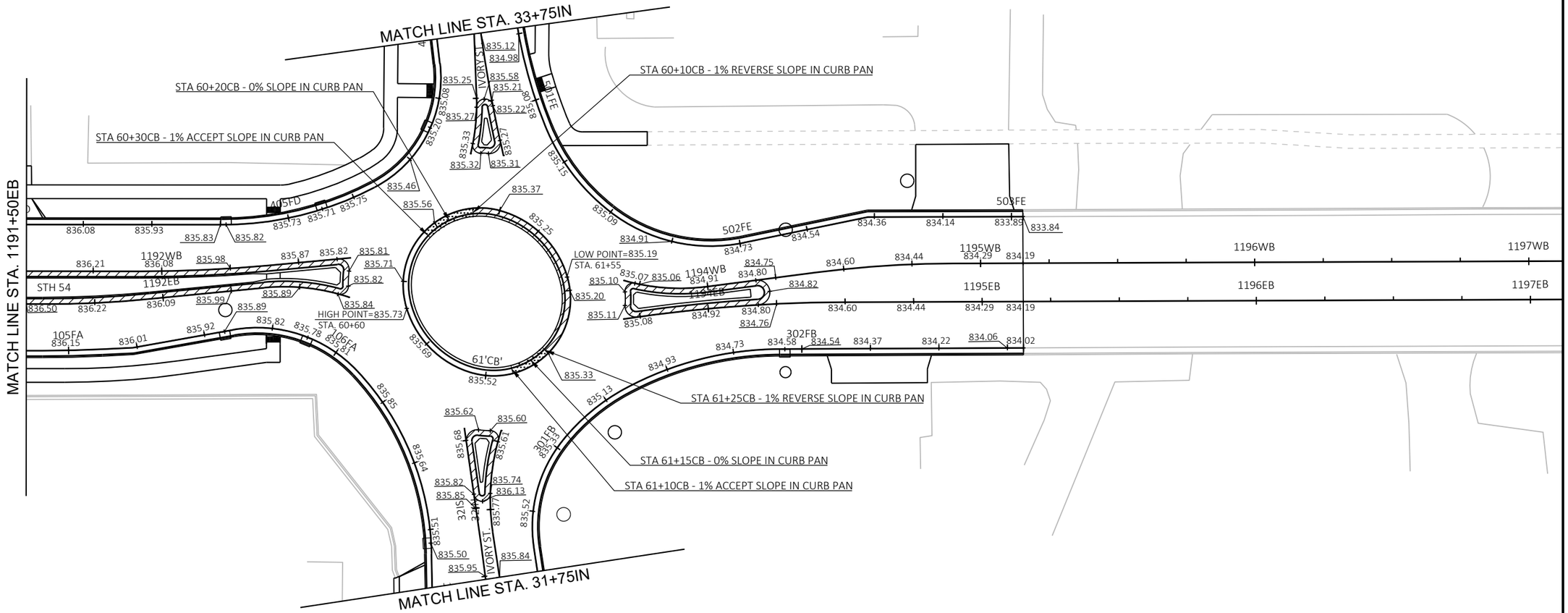

PROJECT NO: 6230-20-71	HWY: STH 54	COUNTY: OUTAGAMIE	PLAN GRADES	SHEET 34	E

FILE NAME : I:\45\450479 STH 54 SEYMOUR TO GB\C3D\SHEETSPLAN\021209 GR.DWG
LAYOUT NAME - 021209 gr
PLOT DATE : 8/29/2023 12:26 PM PLOT BY : VERVILLE, PHILLIP PLOT NAME : PLOT SCALE : 1 IN:40 FT

LEGEND

CONCRETE CURB AND GUTTER
REVERSE SLOPED 1% PAN

TRANSITION FROM REVERSE
SLOPED TO ACCEPTED SLOPE

N

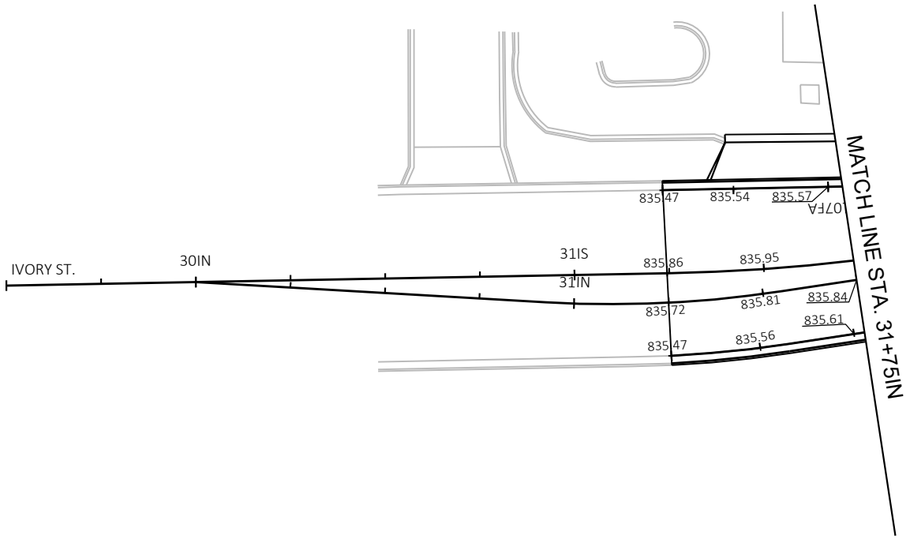

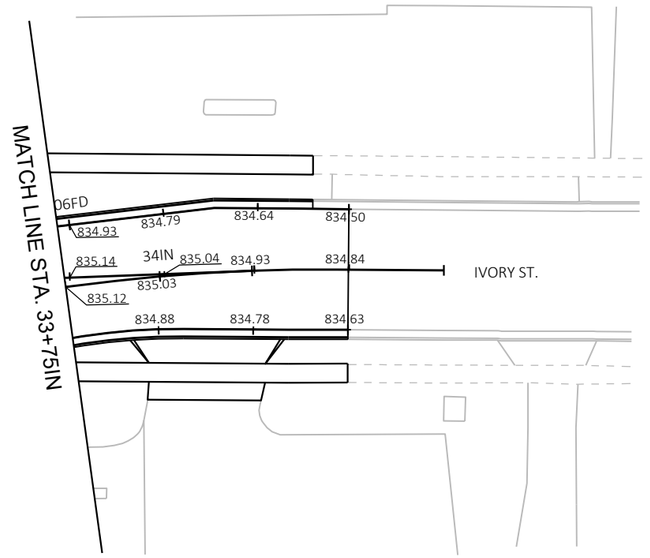

PROJECT NO: 6230-20-71	HWY: STH 54	COUNTY: OUTAGAMIE	PLAN GRADES	SHEET 35	E

EBND. STATION & OFFSET TABLE

POINT NUMBER	STATION	OFFSET	Y COORDS	X COORDS
1	1186+75.0EB	15.5' RT	649302.786	846934.419
3	1188+20.4EB	4.1' LT	649332.655	847078.640
5	1188+20.8EB	5.0' LT	649333.609	847078.939
6	1188+28.6EB	2.0' LT	649331.676	847087.337
7	1188+51.1EB	2.0' LT	649330.057	847110.271
8	1188+52.0EB	3.3' LT	649331.089	847111.488
9	1188+51.1EB	3.0' LT	649331.033	847110.490
13	1189+58.1EB	4.6' LT	649319.323	847215.379
14	1189+59.9EB	2.0' LT	649316.892	847217.504
15	1189+59.9EB	4.0' LT	649318.884	847217.331
21	1190+42.6EB	3.0' LT	649317.479	847300.371
22	1190+65.4EB	2.5' LT	649316.555	847323.175
38	1189+81.4EB	19.5' RT	649296.119	847238.790
39	1189+81.4EB	28.5' RT	649287.120	847238.620
40	1189+88.4EB	28.5' RT	649286.990	847245.621
47	1189+66.5EB	52.9' LT	649368.166	847221.392

WBND. STATION & OFFSET TABLE

POINT NUMBER	STATION	OFFSET	Y COORDS	X COORDS
2	1186+74.9WB	15.8' LT	649346.020	846935.215
4	1188+18.9WB	2.0' RT	649334.596	847078.777
10	1188+49.7WB	2.0' RT	649339.573	847109.190
11	1188+51.6WB	4.4' RT	649337.474	847111.509
12	1188+49.7WB	4.0' RT	649337.599	847109.513
16	1189+59.5WB	3.3' RT	649326.102	847216.421
17	1189+60.4WB	2.0' RT	649326.952	847217.777
18	1189+60.4WB	3.0' RT	649326.019	847217.417
19	1190+21.3WB	3.0' RT	649321.907	847278.783
20	1190+26.3WB	3.6' RT	649321.520	847283.807
48	1190+38.0WB	95.8' LT	649421.364	847290.863
49	1189+77.1WB	34.3' LT	649358.395	847239.995
50	1189+66.7WB	59.0' LT	649383.365	847241.241
51	1189+85.9WB	34.7' LT	649358.254	847244.993
52	1190+48.2WB	31.8' LT	649357.903	847304.829

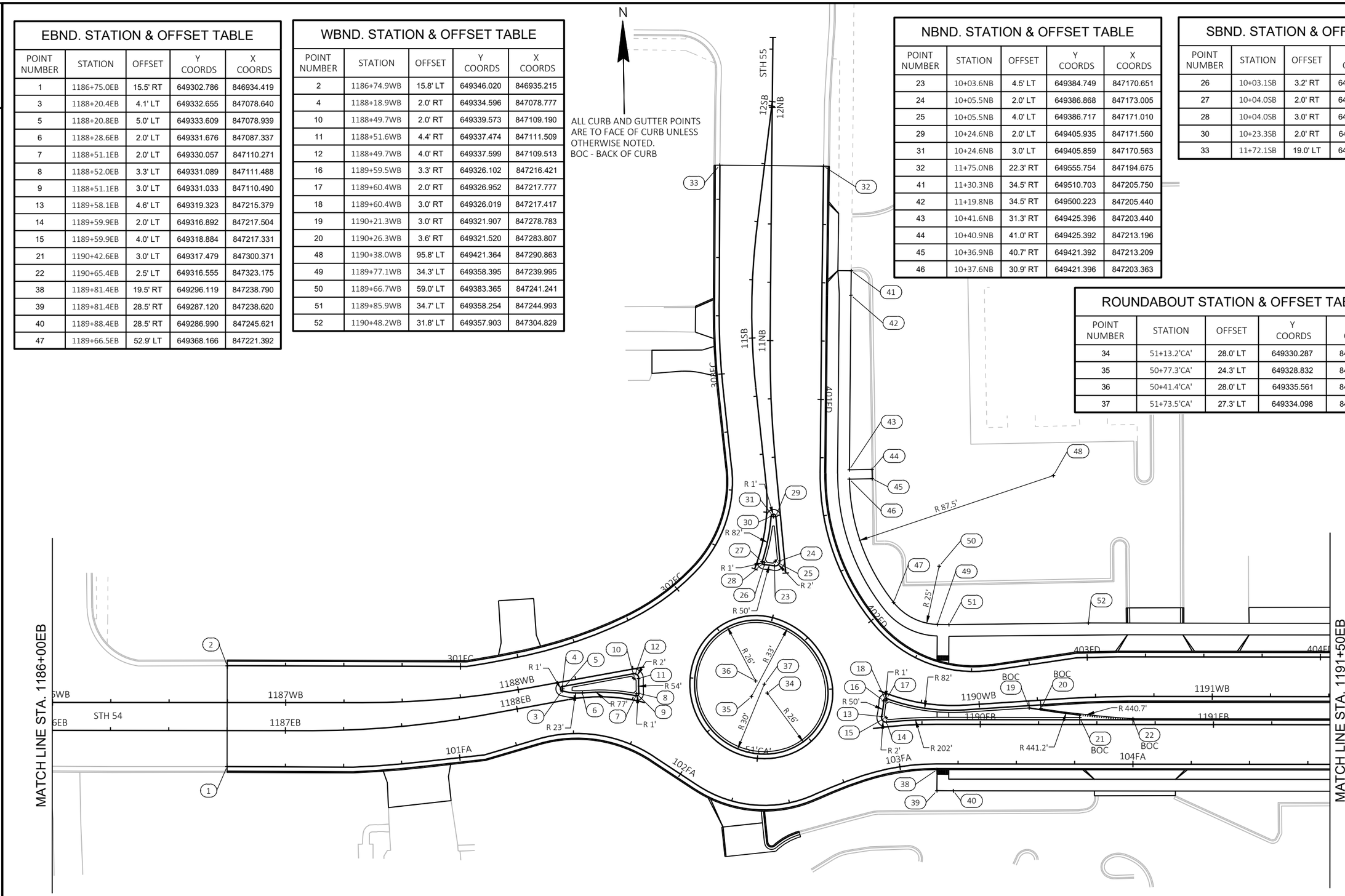

NBND. STATION & OFFSET TABLE

POINT NUMBER	STATION	OFFSET	Y COORDS	X COORDS
23	10+03.6NB	4.5' LT	649384.749	847170.651
24	10+05.5NB	2.0' LT	649386.868	847173.005
25	10+05.5NB	4.0' LT	649386.717	847171.010
29	10+24.6NB	2.0' LT	649405.935	847171.560
31	10+24.6NB	3.0' LT	649405.859	847170.563
32	11+75.0NB	22.3' RT	649555.754	847194.675
41	11+30.3NB	34.5' RT	649510.703	847205.750
42	11+19.8NB	34.5' RT	649500.223	847205.440
43	10+41.6NB	31.3' RT	649425.396	847203.440
44	10+40.9NB	41.0' RT	649425.392	847213.196
45	10+36.9NB	40.7' RT	649421.392	847213.209
46	10+37.6NB	30.9' RT	649421.396	847203.363

SBND. STATION & OFFSET TABLE

POINT NUMBER	STATION	OFFSET	Y COORDS	X COORDS
26	10+03.1SB	3.2' RT	649385.352	847166.248
27	10+04.0SB	2.0' RT	649386.675	847165.395
28	10+04.0SB	3.0' RT	649386.348	847166.340
30	10+23.3SB	2.0' RT	649405.951	847169.567
33	11+72.1SB	19.0' LT	649556.947	847150.189

ROUNDABOUT STATION & OFFSET TABLE

POINT NUMBER	STATION	OFFSET	Y COORDS	X COORDS
34	51+13.2'CA'	28.0' LT	649330.287	847166.596
35	50+77.3'CA'	24.3' LT	649328.832	847159.749
36	50+41.4'CA'	28.0' LT	649335.561	847161.678
37	51+73.5'CA'	27.3' LT	649334.098	847165.402

WBND. STATION & OFFSET TABLE

POINT NUMBER	STATION	OFFSET	Y COORDS	X COORDS
56	1192+64.1WB	2.0' RT	649324.949	847521.491
57	1192+66.1WB	4.4' RT	649322.710	847523.627
58	1192+64.1WB	4.0' RT	649322.955	847521.642
62	1193+72.4WB	3.3' RT	649313.210	847628.133
63	1193+73.3WB	2.0' RT	649314.220	847629.369
64	1193+73.3WB	3.0' RT	649313.248	847629.132
66	1194+17.7WB	2.0' RT	649314.530	847674.201
69	1195+15.5WB	19.0' LT	649340.046	847771.777
97	1192+46.1WB	28.8' LT	649354.257	847501.206
98	1192+49.6WB	28.8' LT	649354.596	847504.667
99	1192+47.5WB	43.7' LT	649369.254	847501.484
100	1192+33.1WB	135.8' LT	649460.136	847481.749
103	1192+63.1WB	66.4' LT	649393.067	847515.317

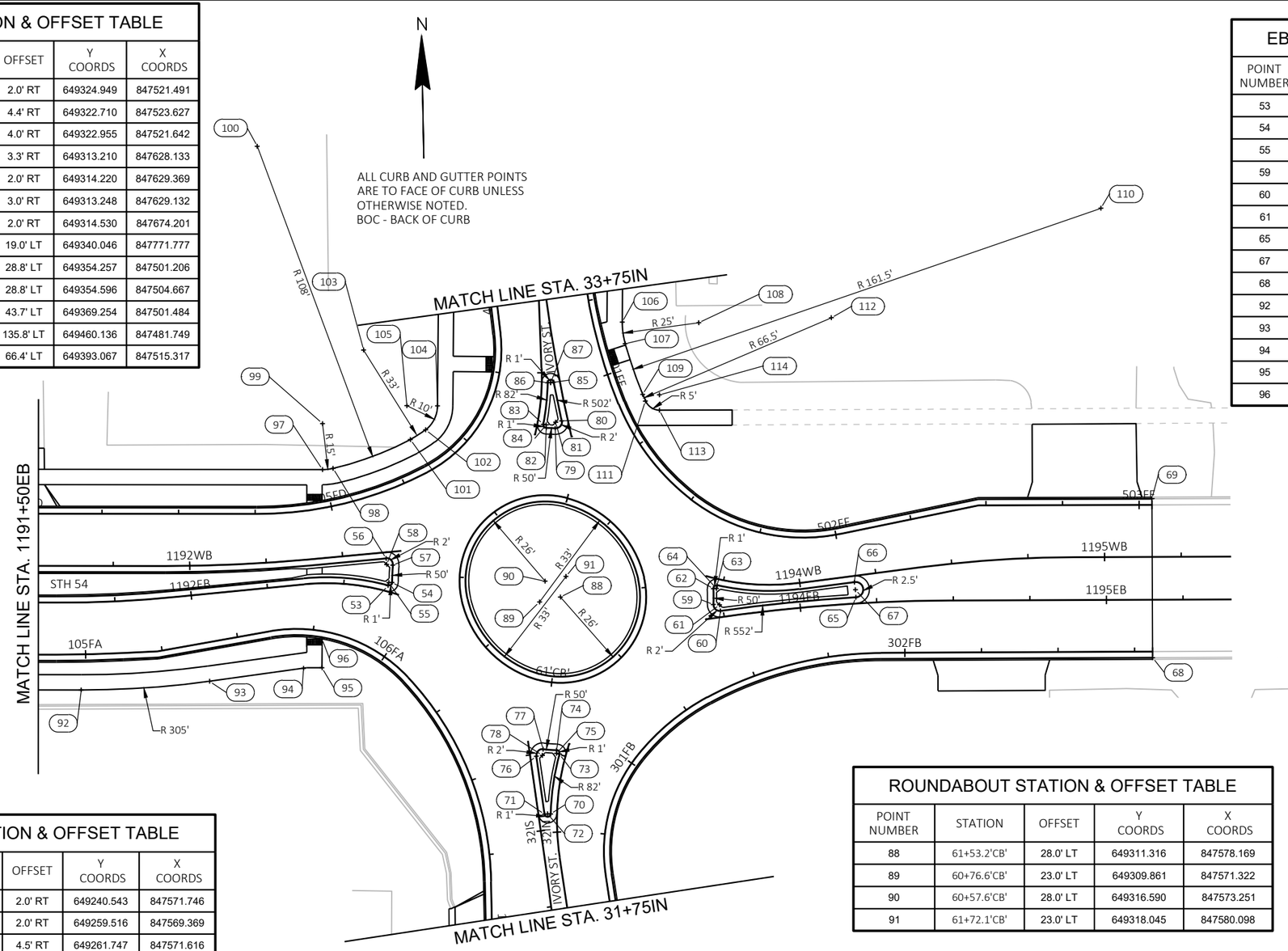

EBND. STATION & OFFSET TABLE

POINT NUMBER	STATION	OFFSET	Y COORDS	X COORDS
53	1192+64.2EB	2.0' LT	649316.081	847521.974
54	1192+65.1EB	3.3' LT	649317.033	847523.253
55	1192+64.2EB	3.0' LT	649317.042	847522.253
59	1193+72.1EB	4.4' LT	649308.015	847628.060
60	1193+74.0EB	2.0' LT	649305.898	847630.300
61	1193+74.0EB	4.0' LT	649307.883	847630.055
65	1194+18.3EB	2.0' LT	649309.548	847674.584
67	1194+18.3EB	4.5' LT	649312.045	847674.479
68	1195+15.0EB	18.9' RT	649288.147	847771.110
92	1191+63.5EB	28.6' RT	649283.730	847421.189
93	1192+03.3EB	28.5' RT	649285.846	847463.154
94	1192+34.2EB	27.2' RT	649289.529	847493.882
95	1192+42.1EB	27.5' RT	649289.609	847499.922
96	1192+42.4EB	18.1' RT	649298.998	847500.096

NBND. STATION & OFFSET TABLE

POINT NUMBER	STATION	OFFSET	Y COORDS	X COORDS
70	32+05.9IN	2.0' LT	649240.624	847573.737
72	32+05.9IN	3.0' LT	649240.667	847572.738
73	32+25.2IN	2.0' LT	649260.081	847576.960
74	32+26.1IN	3.2' LT	649261.361	847576.043
75	32+25.2IN	3.0' LT	649260.362	847576.000
79	33+33.3IN	4.6' LT	649366.415	847577.422
80	33+35.2IN	2.0' LT	649368.802	847579.550
81	33+35.2IN	4.0' LT	649368.409	847577.589
85	33+48.0IN	2.0' LT	649381.467	847577.174
87	33+48.0IN	3.0' LT	649381.295	847576.189
106	33+63.8IN	23.4' RT	649400.678	847599.893
107	33+56.3IN	23.2' RT	649393.630	847600.725
108	33+59.2IN	48.1' RT	649400.054	847624.885
109	33+38.1IN	25.7' RT	649376.980	847606.133
110	33+82.8IN	183.4' RT	649435.127	847756.802
111	33+35.7IN	26.1' RT	649374.791	847607.023
112	33+52.3IN	91.0' RT	649400.923	847668.174
113	33+31.6IN	29.9' RT	649371.756	847611.552
114	33+36.8IN	31.0' RT	649376.756	847611.621

SBND. STATION & OFFSET TABLE

POINT NUMBER	STATION	OFFSET	Y COORDS	X COORDS
71	32+05.2IS	2.0' RT	649240.543	847571.746
76	32+24.3IS	2.0' RT	649259.516	847569.369
77	32+26.2IS	4.5' RT	649261.747	847571.616
78	32+24.3IS	4.0' RT	649259.764	847571.354
82	33+32.5IS	3.2' RT	649366.575	847574.474
83	33+33.4IS	2.0' RT	649367.779	847573.519
84	33+33.4IS	3.0' RT	649367.575	847574.499
86	33+46.8IS	2.0' RT	649381.334	847575.186
101	33+27.1IS	40.5' LT	649363.557	847530.086
102	0+00.0IS	0.0'	649366.668	847535.117
104	33+32.5IS	33.0' LT	649374.406	847539.113
105	0+00.0IS	0.0'	649374.667	847529.117

ROUNDABOUT STATION & OFFSET TABLE

POINT NUMBER	STATION	OFFSET	Y COORDS	X COORDS
88	61+53.2'CB'	28.0' LT	649311.316	847578.169
89	60+76.6'CB'	23.0' LT	649309.861	847571.322
90	60+57.6'CB'	28.0' LT	649316.590	847573.251
91	61+72.1'CB'	23.0' LT	649318.045	847580.098

2

N

ALL CURB AND GUTTER POINTS
ARE TO FACE OF CURB UNLESS
OTHERWISE NOTED.
BOC - BACK OF CURB

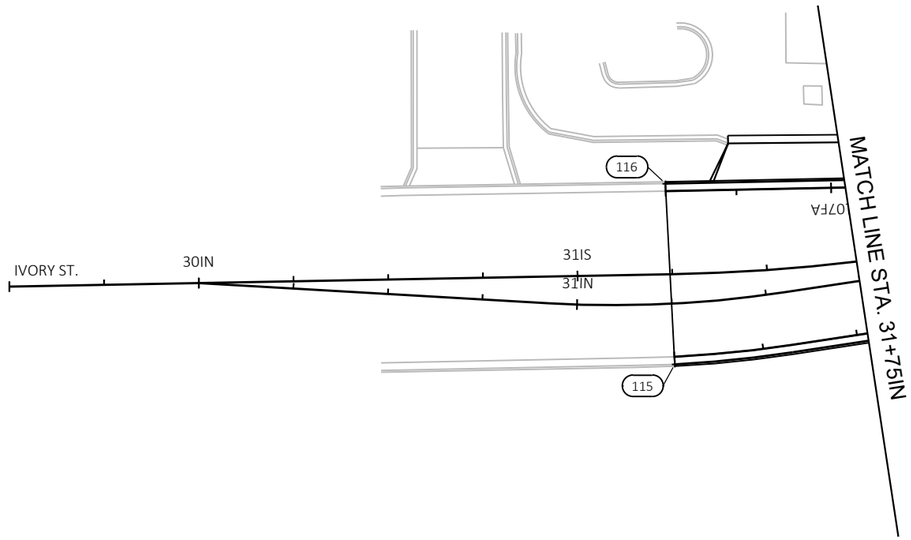

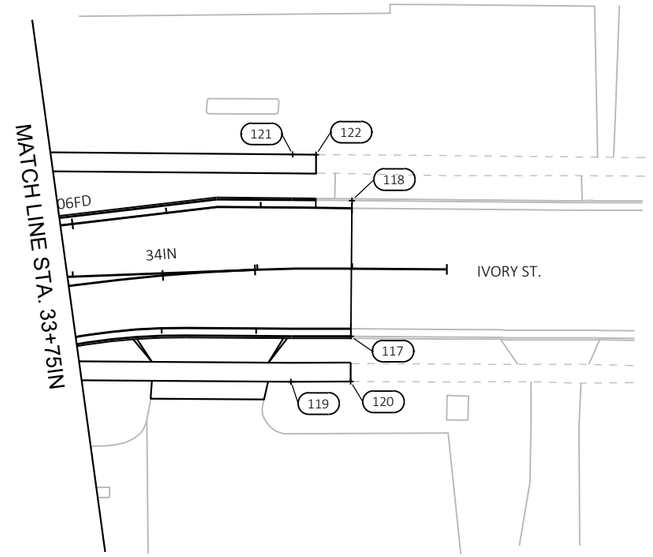

ISND. STATION & OFFSET TABLE				
POINT NUMBER	STATION	OFFSET	Y COORDS	X COORDS
116	31+23.6IS	23.9' LT	649159.045	847552.055

INND. STATION & OFFSET TABLE				
POINT NUMBER	STATION	OFFSET	Y COORDS	X COORDS
115	31+25.0IN	16.0' RT	649160.690	847599.775
117	34+49.8IN	17.9' RT	649482.766	847589.819
118	34+49.8IN	17.9' LT	649483.660	847554.013
119	34+33.3IN	29.8' RT	649466.724	847601.543
120	34+49.8IN	29.8' RT	649482.468	847601.732
121	34+34.8IN	30.1' LT	649468.228	847541.571
122	34+40.6IN	30.0' LT	649474.405	847541.711

LEGEND

X	CURB RAMP TYPE
XXX YYY.YY	POINT NUMBER & ELEVATION
	SLOPE INTERCEPTS
SW4	CONCRETE SIDEWALK 4-INCH
SW6	CONCRETE SIDEWALK 6-INCH
	SAW CUT CONCRETE

NOTES:
1. CONTRACTOR TO FIELD VERIFY ELEVATION, GRADES, SLOPES, LENGTHS AND MATCH POINTS PRIOR TO CURB RAMP AND SIDEWALK CONSTRUCTION
2. THE ENGINEER MAY ADJUST ELEVATIONS TO FIT FIELD CONDITIONS
3. DASHED LINES SHOWN FOR PROPOSED SIDEWALK ARE FOR INFORMATION ONLY AND DO NOT INDICATE JOINT LOCATIONS
4. GRADE CHANGE BETWEEN THE GUTTER FLANGE SLOPE AND CURB RAMP SLOPE SHALL NOT EXCEED 11%
5. SEE THE STANDARD DETAIL DRAWINGS FOR COMPLETE CURB RAMP REQUIREMENTS

54-55-SE-A

POINT NUMBER	STATION	OFFSET	ELEVATION	NORTHING	EASTING
A01	1189+81.4EB	17.0' RT	840.90	649298.618	847238.837
A02	1189+81.4EB	19.0' RT	840.82	649296.618	847238.800
A03	1189+81.4EB	23.5' RT	841.07	649292.119	847238.715
A04	1189+81.4EB	28.5' RT	841.14	649287.120	847238.620
A05	1189+86.4EB	28.5' RT	841.07	649287.027	847243.622
A06	1189+96.4EB	28.5' RT	841.23	649286.841	847253.620
A07	1189+96.4EB	23.5' RT	841.15	649291.840	847253.713
A08	1189+86.4EB	23.5' RT	840.99	649292.026	847243.715
A09	1189+86.4EB	19.0' RT	840.72	649296.525	847243.798
A10	1189+86.4EB	17.0' RT	840.80	649298.525	847243.835

54-55-NE-B

POINT NUMBER	STATION	OFFSET	ELEVATION	NORTHING	EASTING
B01	1189+86.1WB	15.6' LT	840.98	649339.176	847244.196
B02	1189+86.5WB	17.6' LT	840.90	649341.130	847244.626
B03	1189+86.0WB	29.7' LT	841.58	649353.256	847244.851
B04	1189+93.9WB	29.7' LT	841.42	649353.226	847249.851
B05	1189+98.9WB	29.4' LT	841.26	649353.197	847254.851
B06	1190+03.9WB	29.1' LT	841.10	649353.168	847259.851
B07	1190+04.1WB	34.1' LT	841.17	649358.167	847259.880
B08	1189+99.1WB	34.4' LT	841.33	649358.197	847254.881
B09	1189+94.1WB	34.7' LT	841.50	649358.226	847249.881
B10	1189+85.9WB	34.7' LT	841.66	649358.254	847244.993
B11	1189+77.1WB	34.3' LT	841.73	649358.395	847239.995
B12	1189+70.0WB	34.0' LT	841.93	649358.931	847235.953
B13	1189+62.7WB	34.1' LT	842.12	649360.149	847231.968
B14	1189+56.2WB	34.4' LT	842.32	649362.011	847228.241
B15	1189+56.2WB	29.5' LT	842.24	649357.740	847225.641
B16	1189+62.4WB	29.1' LT	842.05	649355.505	847230.114
B17	1189+70.3WB	29.0' LT	841.85	649354.044	847234.895
B18	1189+78.1WB	29.4' LT	841.66	649353.397	847239.853
B19	1189+79.9WB	18.5' LT	841.00	649342.481	847239.650
B20	1189+79.5WB	16.6' LT	841.08	649340.579	847239.033

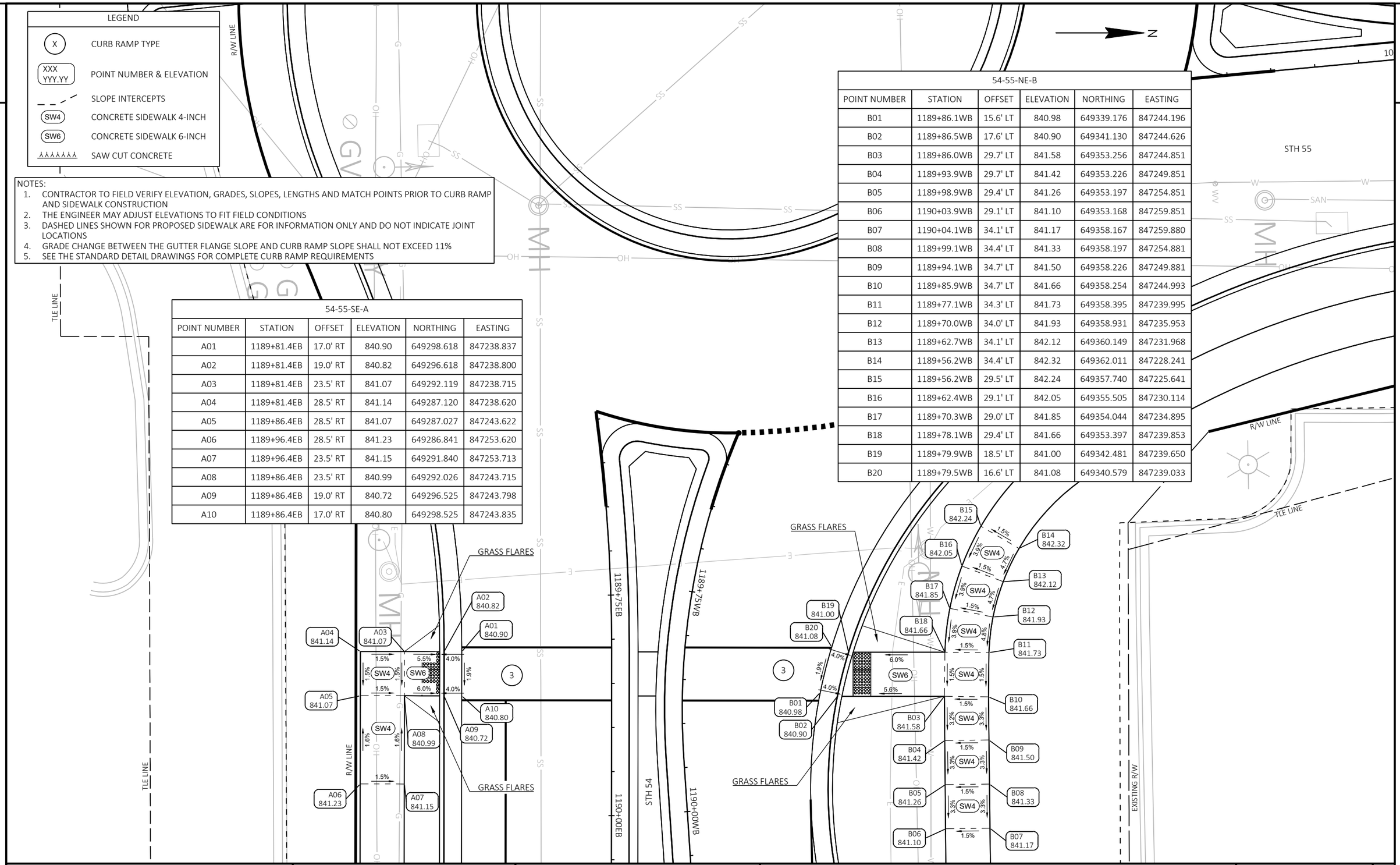

PROJECT NO: 6230-20-71	HWY: STH 54	COUNTY: OUTAGAMIE	CURB RAMPS	SHEET 39	E

LEGEND	
X	CURB RAMP TYPE
XXX YYY.YY	POINT NUMBER & ELEVATION
	SLOPE INTERCEPTS
SW4	CONCRETE SIDEWALK 4-INCH
SW6	CONCRETE SIDEWALK 6-INCH
	SAW CUT CONCRETE

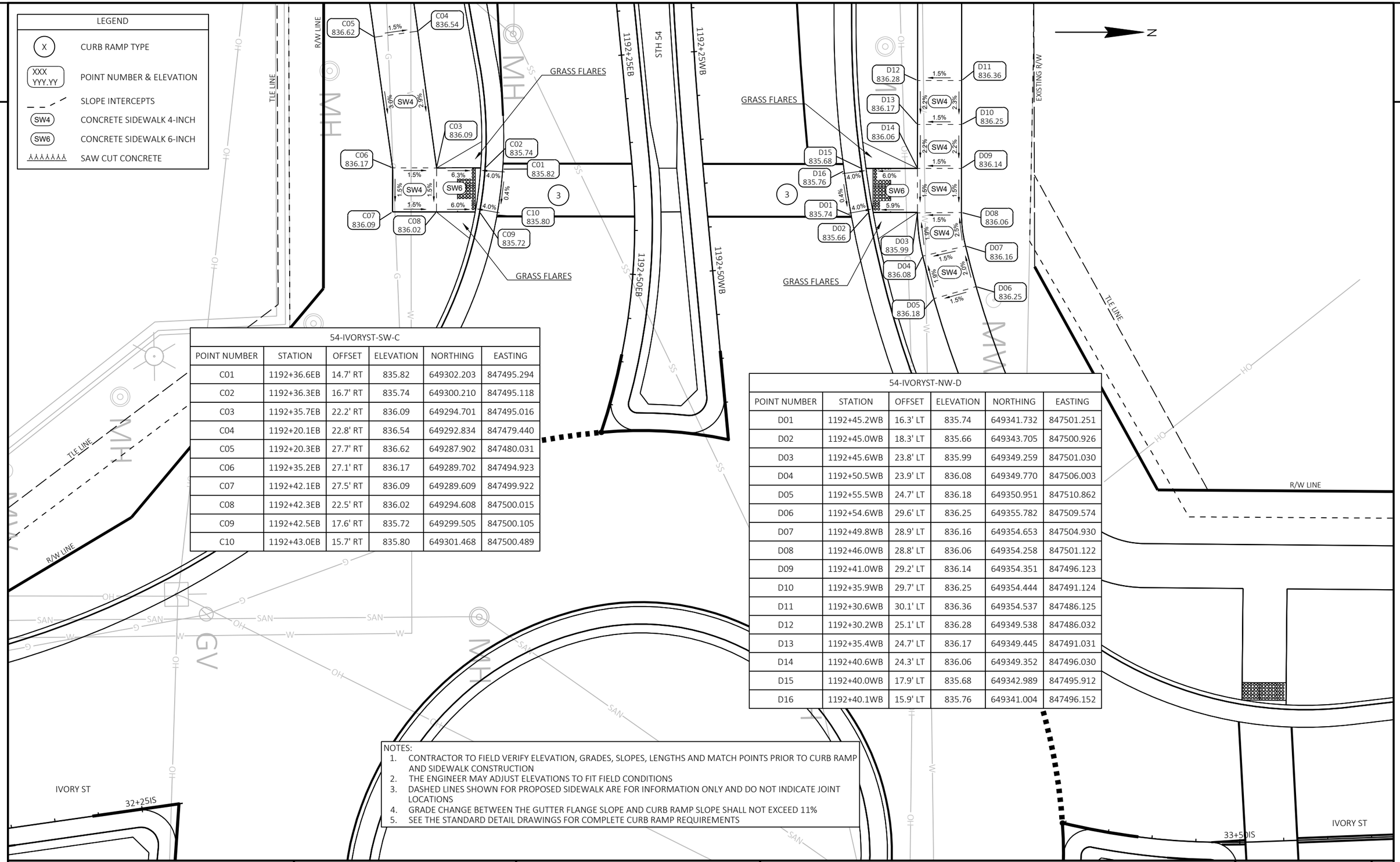

54-IVORYST-SW-C					
POINT NUMBER	STATION	OFFSET	ELEVATION	NORTHING	EASTING
C01	1192+36.6EB	14.7' RT	835.82	649302.203	847495.294
C02	1192+36.3EB	16.7' RT	835.74	649300.210	847495.118
C03	1192+35.7EB	22.2' RT	836.09	649294.701	847495.016
C04	1192+20.1EB	22.8' RT	836.54	649292.834	847479.440
C05	1192+20.3EB	27.7' RT	836.62	649287.902	847480.031
C06	1192+35.2EB	27.1' RT	836.17	649289.702	847494.923
C07	1192+42.1EB	27.5' RT	836.09	649289.609	847499.922
C08	1192+42.3EB	22.5' RT	836.02	649294.608	847500.015
C09	1192+42.5EB	17.6' RT	835.72	649299.505	847500.105
C10	1192+43.0EB	15.7' RT	835.80	649301.468	847500.489

54-IVORYST-NW-D					
POINT NUMBER	STATION	OFFSET	ELEVATION	NORTHING	EASTING
D01	1192+45.2WB	16.3' LT	835.74	649341.732	847501.251
D02	1192+45.0WB	18.3' LT	835.66	649343.705	847500.926
D03	1192+45.6WB	23.8' LT	835.99	649349.259	847501.030
D04	1192+50.5WB	23.9' LT	836.08	649349.770	847506.003
D05	1192+55.5WB	24.7' LT	836.18	649350.951	847510.862
D06	1192+54.6WB	29.6' LT	836.25	649355.782	847509.574
D07	1192+49.8WB	28.9' LT	836.16	649354.653	847504.930
D08	1192+46.0WB	28.8' LT	836.06	649354.258	847501.122
D09	1192+41.0WB	29.2' LT	836.14	649354.351	847496.123
D10	1192+35.9WB	29.7' LT	836.25	649354.444	847491.124
D11	1192+30.6WB	30.1' LT	836.36	649354.537	847486.125
D12	1192+30.2WB	25.1' LT	836.28	649349.538	847486.032
D13	1192+35.4WB	24.7' LT	836.17	649349.445	847491.031
D14	1192+40.6WB	24.3' LT	836.06	649349.352	847496.030
D15	1192+40.0WB	17.9' LT	835.68	649342.989	847495.912
D16	1192+40.1WB	15.9' LT	835.76	649341.004	847496.152

NOTES:
1. CONTRACTOR TO FIELD VERIFY ELEVATION, GRADES, SLOPES, LENGTHS AND MATCH POINTS PRIOR TO CURB RAMP AND SIDEWALK CONSTRUCTION
2. THE ENGINEER MAY ADJUST ELEVATIONS TO FIT FIELD CONDITIONS
3. DASHED LINES SHOWN FOR PROPOSED SIDEWALK ARE FOR INFORMATION ONLY AND DO NOT INDICATE JOINT LOCATIONS
4. GRADE CHANGE BETWEEN THE GUTTER FLANGE SLOPE AND CURB RAMP SLOPE SHALL NOT EXCEED 11%
5. SEE THE STANDARD DETAIL DRAWINGS FOR COMPLETE CURB RAMP REQUIREMENTS

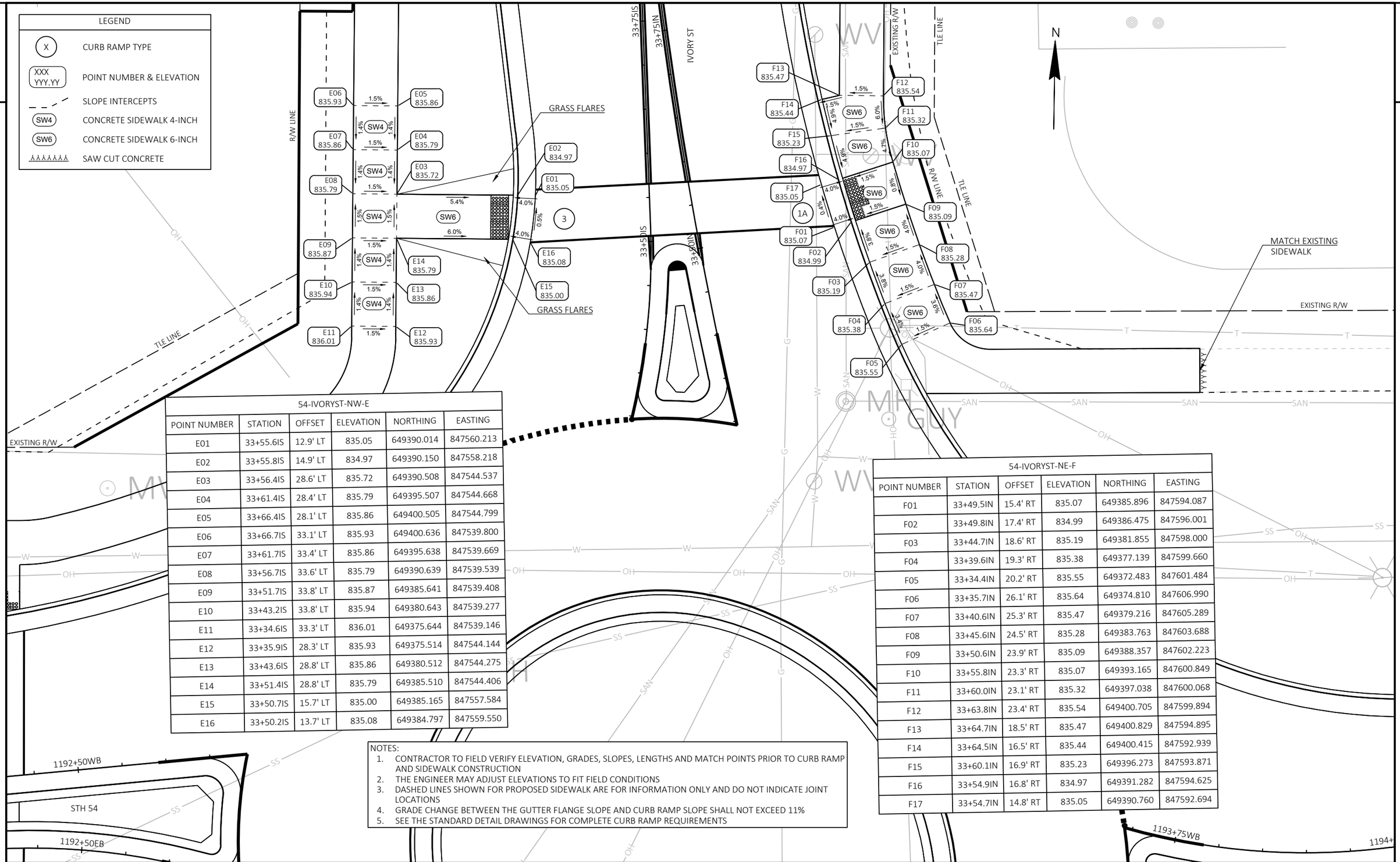

54-IVORYST-NW-E					
POINT NUMBER	STATION	OFFSET	ELEVATION	NORTHING	EASTING
E01	33+55.6IS	12.9' LT	835.05	649390.014	847560.213
E02	33+55.8IS	14.9' LT	834.97	649390.150	847558.218
E03	33+56.4IS	28.6' LT	835.72	649390.508	847544.537
E04	33+61.4IS	28.4' LT	835.79	649395.507	847544.668
E05	33+66.4IS	28.1' LT	835.86	649400.505	847544.799
E06	33+66.7IS	33.1' LT	835.93	649400.636	847539.800
E07	33+61.7IS	33.4' LT	835.86	649395.638	847539.669
E08	33+56.7IS	33.6' LT	835.79	649390.639	847539.539
E09	33+51.7IS	33.8' LT	835.87	649385.641	847539.408
E10	33+43.2IS	33.8' LT	835.94	649380.643	847539.277
E11	33+34.6IS	33.3' LT	836.01	649375.644	847539.146
E12	33+35.9IS	28.3' LT	835.93	649375.514	847544.144
E13	33+43.6IS	28.8' LT	835.86	649380.512	847544.275
E14	33+51.4IS	28.8' LT	835.79	649385.510	847544.406
E15	33+50.7IS	15.7' LT	835.00	649385.165	847557.584
E16	33+50.2IS	13.7' LT	835.08	649384.797	847559.550

54-IVORYST-NE-F					
POINT NUMBER	STATION	OFFSET	ELEVATION	NORTHING	EASTING
F01	33+49.5IN	15.4' RT	835.07	649385.896	847594.087
F02	33+49.8IN	17.4' RT	834.99	649386.475	847596.001
F03	33+44.7IN	18.6' RT	835.19	649381.855	847598.000
F04	33+39.6IN	19.3' RT	835.38	649377.139	847599.660
F05	33+34.4IN	20.2' RT	835.55	649372.483	847601.484
F06	33+35.7IN	26.1' RT	835.64	649374.810	847606.990
F07	33+40.6IN	25.3' RT	835.47	649379.216	847605.289
F08	33+45.6IN	24.5' RT	835.28	649383.763	847603.688
F09	33+50.6IN	23.9' RT	835.09	649388.357	847602.223
F10	33+55.8IN	23.3' RT	835.07	649393.165	847600.849
F11	33+60.0IN	23.1' RT	835.32	649397.038	847600.068
F12	33+63.8IN	23.4' RT	835.54	649400.705	847599.894
F13	33+64.7IN	18.5' RT	835.47	649400.829	847594.895
F14	33+64.5IN	16.5' RT	835.44	649400.415	847592.939
F15	33+60.1IN	16.9' RT	835.23	649396.273	847593.871
F16	33+54.9IN	16.8' RT	834.97	649391.282	847594.625
F17	33+54.7IN	14.8' RT	835.05	649390.760	847592.694

NOTES:
1. CONTRACTOR TO FIELD VERIFY ELEVATION, GRADES, SLOPES, LENGTHS AND MATCH POINTS PRIOR TO CURB RAMP AND SIDEWALK CONSTRUCTION
2. THE ENGINEER MAY ADJUST ELEVATIONS TO FIT FIELD CONDITIONS
3. DASHED LINES SHOWN FOR PROPOSED SIDEWALK ARE FOR INFORMATION ONLY AND DO NOT INDICATE JOINT LOCATIONS
4. GRADE CHANGE BETWEEN THE GUTTER FLANGE SLOPE AND CURB RAMP SLOPE SHALL NOT EXCEED 11%
5. SEE THE STANDARD DETAIL DRAWINGS FOR COMPLETE CURB RAMP REQUIREMENTS

LEGEND

EROSION MAT URBAN CLASS I, TYPE A

EROSION MAT CLASS I, TYPE B

SILT FENCE

SLOPE INTERCEPT

SURFACE WATER FLOW

INLET PROTECTION

ROCK BAGS

NOTE:
TYPE A INLET PROTECTION IS REQUIRED FOR ALL INLETS AFTER INSTALLATION AND BEFORE CURB PLACEMENT.
AFTER CURB PLACEMENT INSTALL TYPE B, C, OR D INLET PROTECTION.
(SEE MISCELLANEOUS QUANTITIES)

N

2

2

P.L.

EXISTING R/W

LINCOLN ST

STH 55

12SB

12NB

11SB

11NB

TLE LINE

R/W LINE

EXISTING R/W

TLE LINE

R/W LINE

TLE LINE

EXISTING R/W

EXISTING R/W

EXISTING R/W

1186WB

1187WB

1188WB

1188EB

1186EB

1187EB

STH 54

1190WB

1191WB

1190EB

1191EB

STH 54/STH 55

MATCH LINE STA. 1191+50 EB

OH

Ø GV

TLE LINE

R/W LINE

TLE LINE

PROJECT NO: 6230-20-71	HWY: STH 54	COUNTY: OUTAGAMIE	EROSION CONTROL	SHEET 42	E

FILE NAME : I:\45\450479 STH 54 SEYMOUR TO GB\C3D\SHEETSPLAN\022001 EC.DWG
LAYOUT NAME - 022001 ec

PLOT DATE : 7/26/2023 12:35 PM PLOT BY : GARNICA, BRANDON PLOT NAME : PLOT SCALE : 1 IN:40 FT

WISDOT/CADDS SHEET 42

LEGEND

- EROSION MAT URBAN CLASS I, TYPE A
- EROSION MAT CLASS I, TYPE B
- SILT FENCE
- SLOPE INTERCEPT
- SURFACE WATER FLOW
- INLET PROTECTION
- R — ROCK BAGS

NOTE:
TYPE A INLET PROTECTION IS REQUIRED FOR ALL INLETS AFTER INSTALLATION AND BEFORE CURB PLACEMENT.
AFTER CURB PLACEMENT INSTALL TYPE B, C, OR D INLET PROTECTION.
(SEE MISCELLANEOUS QUANTITIES)

N

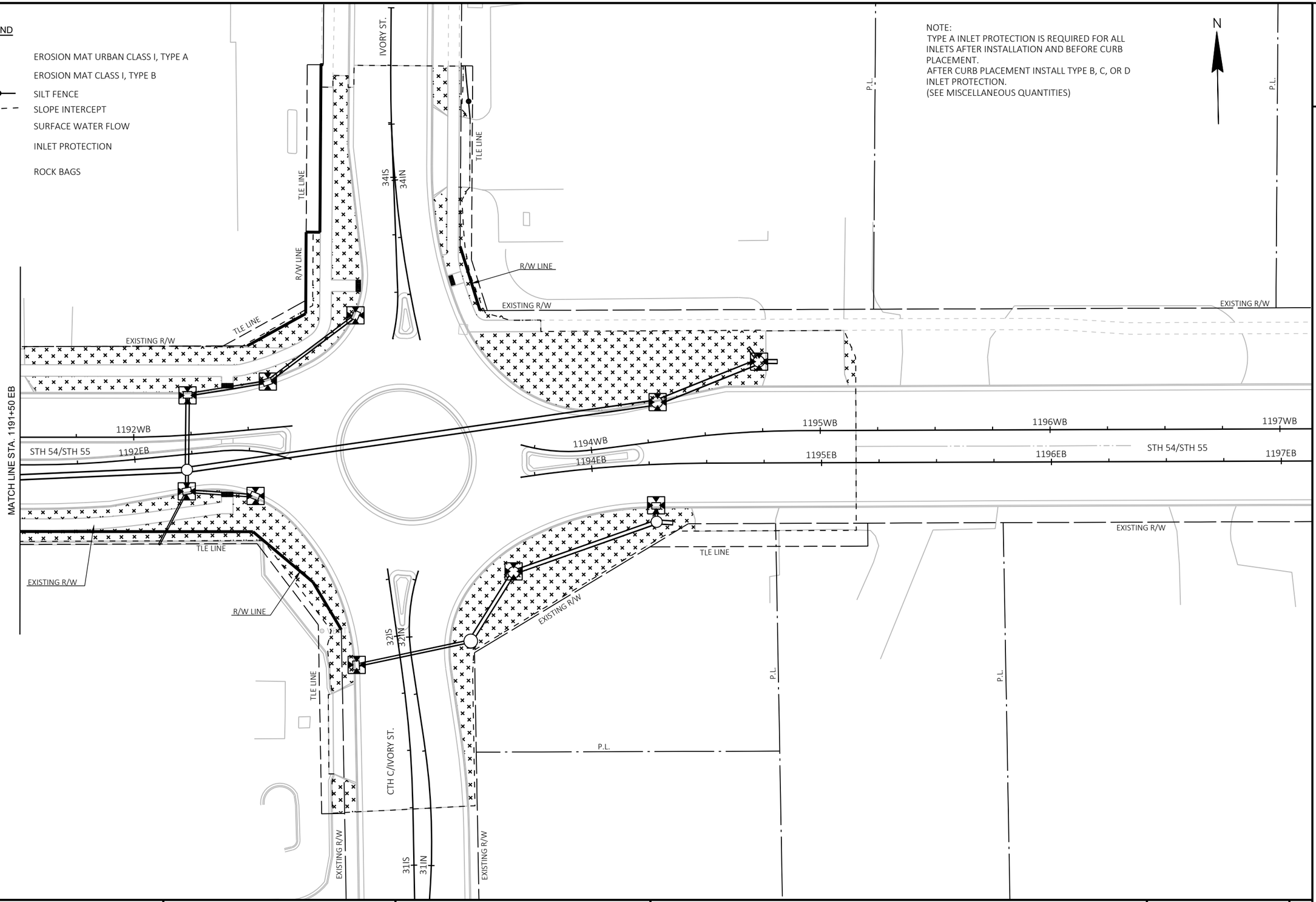

PROJECT NO: 6230-20-71	HWY: STH 54	COUNTY: OUTAGAMIE	EROSION CONTROL	SHEET 43	E

FILE NAME : I:\45\450479 STH 54 SEYMOUR TO GB\C3D\SHEETSPLAN\022001 EC.DWG
LAYOUT NAME - 022002 ec
PLOT DATE : 7/26/2023 12:35 PM PLOT BY : GARNICA, BRANDON PLOT NAME : PLOT SCALE : 1 IN:40 FT

2

LEGEND

- EROSION MAT URBAN CLASS I, TYPE A
- EROSION MAT CLASS I, TYPE B
- SILT FENCE
- SLOPE INTERCEPT
- SURFACE WATER FLOW
- INLET PROTECTION
- R — ROCK BAGS

N

P.L.

EXISTING R/W

PLANTER

18" RCCP

CABC

PE

POST

1326EB STH 54 1327EB 1328EB 1329EB 1330EB 1331EB 1332EB

WOODS

2

PROJECT NO: 6230-20-71	HWY: STH 54	COUNTY: OUTAGAMIE	EROSION CONTROL	SHEET 44	E

2

2

N

LEGEND

EROSION MAT URBAN CLASS I, TYPE A

EROSION MAT CLASS I, TYPE B

SILT FENCE

SLOPE INTERCEPT

SURFACE WATER FLOW

INLET PROTECTION

ROCK BAGS

EXISTING R/W

EXISTING R/W

WOODS

R

1414EB STH 54 1415EB 1416EB 1417EB 1418EB 1419EB 1420EB

EXISTING R/W

EXISTING R/W

PROJECT NO: 6230-20-71	HWY: STH 54	COUNTY: OUTAGAMIE	EROSION CONTROL	SHEET 45	E

FILE NAME : I:\45\450479 STH 54 SEYMOUR TO GB\C3D\SHEETSPLAN\022001 EC.DWG
LAYOUT NAME - 022004 ec

PLOT DATE : 7/26/2023 12:35 PM PLOT BY : GARNICA, BRANDON PLOT NAME : PLOT SCALE : 1 IN:40 FT

2

P.L.

P.L.

P.L.

LEGEND

EROSION MAT URBAN CLASS I, TYPE A

EROSION MAT CLASS I, TYPE B

SILT FENCE

SLOPE INTERCEPT

SURFACE WATER FLOW

INLET PROTECTION

ROCK BAGS

N

EXISTING R/W

WOODS

EXISTING R/W

R

R

R

R

℄ POST

℄ POST

1437EB

STH 54

1438EB

1439EB

1440EB

1441EB

1442EB

1443EB

18" CMCP

10X6 BOX CULVERT

18" CMCP

R

R

R

R

WOODS

CABC
PE

CABC
PE

EXISTING R/W

EXISTING R/W

P.L.

P.L.

P.L.

2

PROJECT NO: 6230-20-71	HWY: STH 54	COUNTY: OUTAGAMIE	EROSION CONTROL	SHEET 46	E

FILE NAME : I:\45\450479 STH 54 SEYMOUR TO GB\C3D\SHEETSPLAN\022001 EC.DWG
LAYOUT NAME - 022005 ec

PLOT DATE : 7/26/2023 12:35 PM PLOT BY : GARNICA, BRANDON PLOT NAME : PLOT SCALE : 1 IN:40 FT

2

2

N

P.L.

LEGEND

EROSION MAT URBAN CLASS I, TYPE A

EROSION MAT CLASS I, TYPE B

SILT FENCE

SLOPE INTERCEPT

SURFACE WATER FLOW

INLET PROTECTION

ROCK BAGS

EXISTING R/W

EXISTING R/W

EXISTING R/W

1521EB STH 54 1522EB 1523EB 1524EB 1525EB 1526EB 1527EB

18" CMCP

CABC
FE

EXISTING R/W

EXISTING R/W

CABC
PE

P.L.

PROJECT NO: 6230-20-71	HWY: STH 54	COUNTY: OUTAGAMIE	EROSION CONTROL	SHEET 47	E

FILE NAME : I:\45\450479 STH 54 SEYMOUR TO GB\C3D\SHEETSPLAN\022001 EC.DWG
LAYOUT NAME - 022006 ec

PLOT DATE : 7/26/2023 12:36 PM PLOT BY : GARNICA, BRANDON PLOT NAME : PLOT SCALE : 1 IN:40 FT

2

N

STH 55

TLE LINE

R/W LINE

EXISTING R/W

ASPHALT

CONCRETE

WOODS

PLANTER

TLE LINE

R/W LINE

EXISTING R/W

IVORY ST

341N

TLE LINE

R/W LINE

STA 1194+73 EB, 44.1' LT
INLETS 4-C
60

CONNECT TO
EXISTING 6-INCH (FV)
STORM SEWER PIPE

STA 1194+29 EB, 26.9' LT
INLETS 4-H
50

STA 1192+22 EB, 6.7' RT
MANHOLES 5-J-S
40

STH 54

1188EB

STH 54/55

1190EB

1191EB

1192EB

1194EB

STH 54/55

1195E

EXISTING R/W

TLE LINE

R/W LINE

EXISTING R/W

TLE LINE

R/W LINE

TLE LINE

CONNECT TO
EXISTING 18-INCH
STORM SEWER PIPE

STA 1188+40 EB, 18.5' RT
INLETS 5-H
10

CONNECT TO
EXISTING MANHOLE

STA 1189+71 EB, 8.0' RT
MANHOLES 5-J-S
20

STA 1191+00 EB, 7.7' RT
MANHOLES 5-J-S
30

CTH C
IVORY ST

32IN

EXISTING R/W

ASPHALT

10

843.77

101' - SSPRC CLASS IV 24-INCH @ 1.80%

840.32 (FV)

838.50

838.50

132' - SSPRC CLASS IV 24-INCH @ 1.80%

20

841.21

836.12

836.12

128' - SSPRC CLASS IV 24-INCH @ 3.15%

30

837.48

832.08

832.08

123' - SSPRC CLASS IV 24-INCH @ 1.42%

40

835.95

830.33

830.33

206' - SSPRC CLASS IV 24-INCH @ 0.30%

50

834.56

829.71

829.71

48' - SSPRC CLASS IV 24-INCH @ 0.30%

60

834.43

829.57

829.57

8' - SSPRC CLASS IV 18-INCH @ 1.18% (FV)

829.47 (FV)

PROJECT NO: 6230-20-71	HWY: STH 54	COUNTY: OUTAGAMIE	STORM SEWER	SHEET 48	E

FILE NAME : I:\45\450479 STH 54 SEYMOUR TO GB\C3D\SHEETSPLAN\022501 SS.DWG
LAYOUT NAME - 022501 ss

PLOT DATE : 7/26/2023 12:36 PM PLOT BY : GARNICA, BRANDON PLOT NAME : PLOT SCALE : 1 IN:50 FT

WISDOT/CADDS SHEET 41

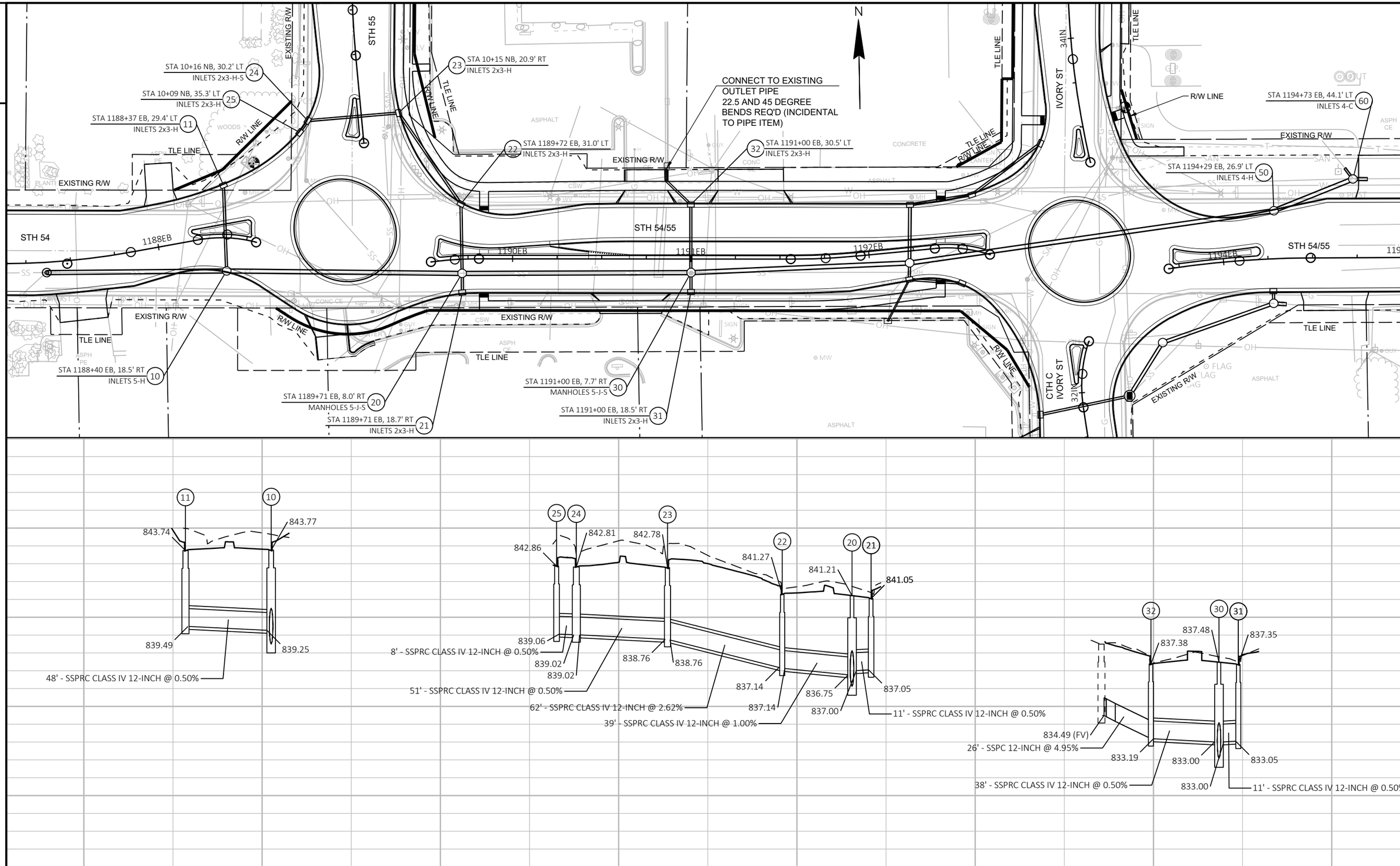

PROJECT NO: 6230-20-71	HWY: STH 54	COUNTY: OUTAGAMIE	STORM SEWER	SHEET 49	E

FILE NAME : I:\45\450479 STH 54 SEYMOUR TO GB\C3D\SHEETSPLAN\022501 SS.DWG
LAYOUT NAME - 022502 ss
PLOT DATE : 7/26/2023 12:36 PM
PLOT BY : GARNICA, BRANDON
PLOT NAME :
PLOT SCALE : 1 IN:50 FT
WISDOT/CADDS SHEET 41

2

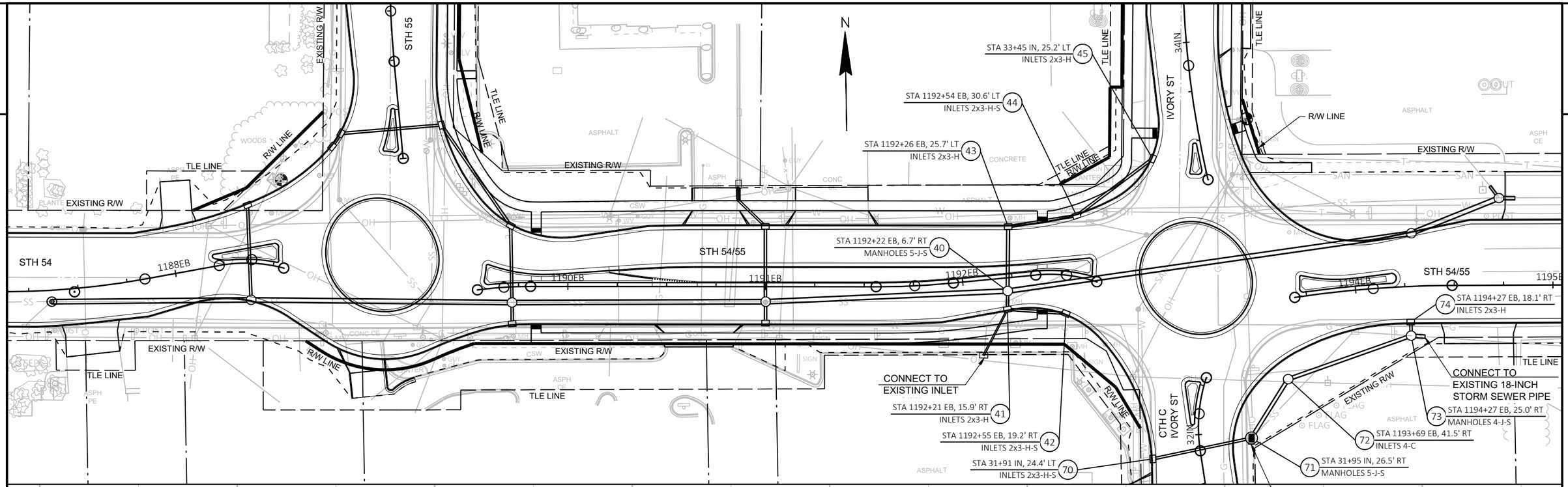

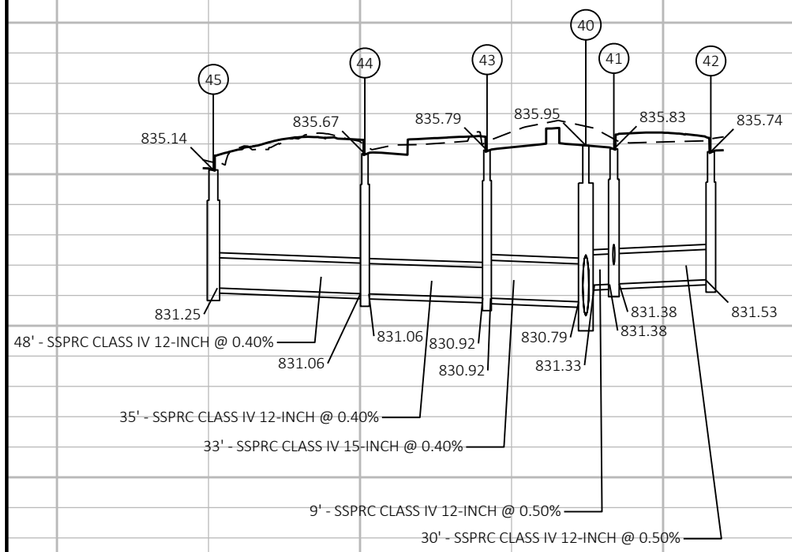

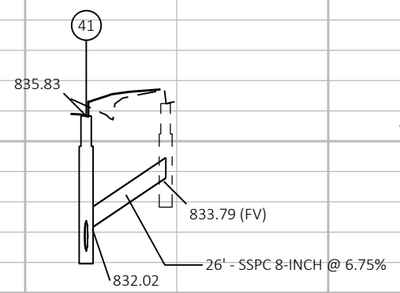

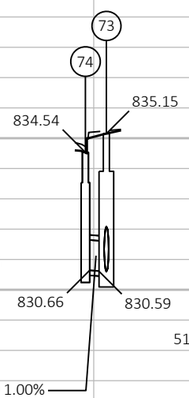

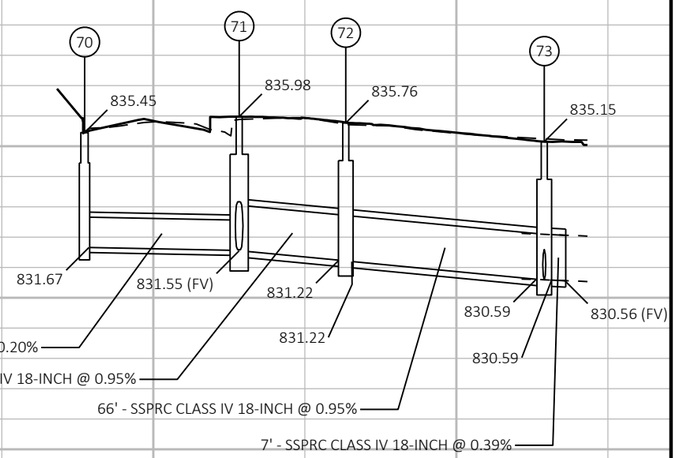

PROJECT NO: 6230-20-71	HWY: STH 54	COUNTY: OUTAGAMIE	STORM SEWER	SHEET 50	E

FILE NAME : I:\45\450479 STH 54 SEYMOUR TO GB\C3D\SHEETSPLAN\022501 SS.DWG
LAYOUT NAME - 022503 ss
PLOT DATE : 7/26/2023 12:36 PM
PLOT BY : GARNICA, BRANDON
PLOT NAME :
PLOT SCALE : 1 IN:50 FT
WISDOT/CADDS SHEET 41

2

N

SPEED LIMIT 35
R2-1
24" X 30"
11

WEST 54
J4-1
24" X 36"
12

WEST 54
J4-1
REMOVE
SPEED LIMIT 35
R2-1
REMOVE
13

YIELD
R1-2
36" X 31"
14

R6-5P
30" X 30"
15

NO PARKING ANY TIME
R7-1D
REMOVE
16

Green Bay
Kaukauna
Black Creek
D1-57SL
48" X 24"
17

55 54
J13-2
48" X 45"
18

W3-3
REMOVE
NO PARKING ON THIS SIDE
R7-53D
18" X 24"
19

20
W2-6
30" X 30"

21
15 M.P.H.
W13-1
18" X 18"

SPEED LIMIT 35
R2-1
REMOVE
22

S1-1
36" X 36"
23 26
AHEAD
WF16-9P
24" X 8"
24 27
FINES HIGHER
R2-6P
24" X 18"
25 28

NORTH 55
J3-1
REMOVE
36

STOP
R1-1F
REMOVE
37

YIELD
R1-2
36" X 31"
38

R6-5P
30" X 30"
39

NewLondon
Shawano
D1-57SL
48" X 24"
40

ONE WAY
R6-2R
24" X 30"
41

WEST NORTH
54 55
J2-2
48" X 57"
42

STH 55

IVORY ST

CTH C

1179+00 1180+00 1181+00 1182+00 1183+00 1184+00 1185+00 1186+00 1187+00 1188+00 1189+00 1190+00 1191+00 1192+00 1193+00 1194+00

1
W2-6
30" X 30"

33
15 M.P.H.
W13-1
18" X 18"

3
W3-3
REMOVE
NO PARKING ON THIS SIDE
R7-53D
18" X 24"

4
NORTH EAST
55 54
J2-2
48" X 57"

77
Green Bay
Shawano
D1-57SL
48" X 24"

6
YIELD
R1-2
36" X 31"

7
R6-5P
30" X 30"

8
NORTH 55
J3-1
REMOVE

77
STOP
R1-1F
REMOVE

10
54 55
J13-2
REMOVE

29
EAST SOUTH
54 55
J4-2
REMOVE

30
ONE WAY
R6-2R
24" X 30"

31
ONE WAY
R6-2R
24" X 30"

32
SPEED LIMIT 35
R2-1
REMOVE

33
COUNTY C
J13-1
24" X 45"

34
NO PARKING ANY TIME
R7-1D
REMOVE

35
COUNTY C
J13-1
REMOVE

SIGNING NOTES

WHEN AN EXISTING STOP SIGN AND SUPPORT IS TO BE REMOVED AND A NEW STOP SIGN AND SUPPORT ERECTED THE WORK SHALL BE DONE CONCURRENTLY. FOR OTHER SIGNS AND SUPPORTS THAT ARE TO BE REMOVED AND NEW SIGNS AND SUPPORTS ERECTED, THE REMOVAL OF THE EXISTING SIGN/SUPPORT AND ERECTION OF THE NEW SIGN/SUPPORT SHOULD BE DONE AS CONCURRENTLY AS POSSIBLE. IN NO CASE SHALL A NEW SIGN/SUPPORT BE DOWN FOR MORE THAN 24 HOURS AND THERE SHALL NOT BE MORE THAN ONE SIGN OF THE SAME LEGEND MISSING IN A ROW.

WOOD POSTS SIZES, FOR TYPE II SIGNING, ARE ESTIMATED LENGTHS AND THE ACTUAL LENGTH WILL BE DETERMINED IN THE FIELD.

MULTIPLE TYPE II SIGNS MOUNTED ON THE SAME POST ARE PAID AS ONE(1) SIGN REMOVAL
ALL YIELD SIGNS SHALL HAVE A MOUNTING HEIGHT OF 7' -3" TO THE BOTTOM OF THE YIELD SIGN.

SIGN-REMOVE EXISTING

SIGN-REMOVE AND REPLACE

SIGN-PLACE NEW

PROJECT NO: 6230-20-71	HWY:STH 54	COUNTY:OUTAGAMIE	PERMANENT SIGNING	SHEET	LE

FILE NAME :$$....designfile....$$ PLOT DATE : $$...plottingdate...$$ PLOT BY : $$...plotuser...$$ PLOT NAME : _____ PLOT SCALE : $$.....plotscale.....$$

2

N

IVORY ST

CTH C

ORCHARD DR

ORCHARD DR

W2-6
30" X 30"
56

15 M.P.H.
W13-1
18" X 18"
57

YIELD
R1-2
36" X 31"
54

STOP
R1-1
REMOVE
53

R6-5P
30" X 30"
55

54 55
J13-2
REMOVE
58

COUNTY C
J13-1
REMOVE
59

YIELD
R1-2
36" X 31"
60

R6-5P
30" X 30"
61

WEST NORTH
COUNTY C 54 55
J2-3
72" X 57"
62

W2-6
30" X 30"
63

15 M.P.H.
W13-1
18" X 18"
64

W3-3
REMOVE

NO PARKING ON THIS SIDE
R7-53D
18" X 24"
65

CENTER LANE
ONLY
R3-9B
24" X 36"
66

ONLY
R3-8A
36" X 30"
67

43
YIELD
R1-2
36" X 31"
44
R6-5P
30" X 30"

45
YIELD
R1-2
36" X 31"
46
R6-5P
30" X 30"

47
STOP
R1-1
REMOVE

51
NO PARKING ANY TIME
R7-1D
REMOVE

52
CENTER LANE
ONLY
R3-9B
24" X 36"

W3-1
REMOVE
48

W2-6
30" X 30"
49

15 M.P.H.
W13-1
18" X 18"
50

1191+00 1192+00 1193+00 1194+00 1195+00 1196+00 1197+00 1198+00 1199+00 1200+00 1201+00 1202+00 1203+00 1204+00 1205+00 1206+00

SIGNING NOTES

WHEN AN EXISTING STOP SIGN AND SUPPORT IS TO BE REMOVED AND A NEW STOP SIGN AND SUPPORT ERECTED THE WORK SHALL BE DONE CONCURRENTLY. FOR OTHER SIGNS AND SUPPORTS THAT ARE TO BE REMOVED AND NEW SIGNS AND SUPPORTS ERECTED, THE REMOVAL OF THE EXISTING SIGN/SUPPORT AND ERECTION OF THE NEW SIGN/SUPPORT SHOULD BE DONE AS CONCURRENTLY AS POSSIBLE. IN NO CASE SHALL A NEW SIGN/SUPPORT BE DOWN FOR MORE THAN 24 HOURS AND THERE SHALL NOT BE MORE THAN ONE SIGN OF THE SAME LEGEND MISSING IN A ROW.

WOOD POSTS SIZES, FOR TYPE II SIGNING, ARE ESTIMATED LENGTHS AND THE ACTUAL LENGTH WILL BE DETERMINED IN THE FIELD.

MULTIPLE TYPE II SIGNS MOUNTED ON THE SAME POST ARE PAID AS ONE(1) SIGN REMOVAL

ALL YIELD SIGNS SHALL HAVE A MOUNTING HEIGHT OF 7' -3" TO THE BOTTOM OF THE YIELD SIGN.

SIGN-REMOVE EXISTING

SIGN-REMOVE AND REPLACE

SIGN-PLACE NEW

PROJECT NO: 6230-20-71	HWY:STH 54	COUNTY:OUTAGAMIE	PERMANENT SIGNING	SHEET	E

FILE NAME :$$....designfile....$$ PLOT DATE : $$...plottingdate...$$ PLOT BY : $$...plotuser...$$ PLOT NAME : _____ PLOT SCALE : $$.....plotscale.....$$ WISDOT/CADD

NOTES:

WISCONSIN DOT NORTHEAST REGION ELECTRICAL UNIT SHALL APPROVE FINAL LOCATIONS FOR ALL CONCRETE BASES IN THE FIELD PRIOR TO CONSTRUCTION. CONTACT THEM 3 DAYS IN ADVANCE AT (920) 360-4749.

THE LOCATION OF EXISTING AND PROPOSED UTILITIES AS SHOWN ON THE PLANS ARE APPROXIMATE. IN ADDITION, THERE MAY BE OTHER UTILITIES WITHIN THE PROJECT AREA WHICH ARE NOT SHOWN. THE CONTRACTOR SHALL VERIFY THE LOCATIONS OF ALL UTILITIES PRIOR TO CONSTRUCTION.

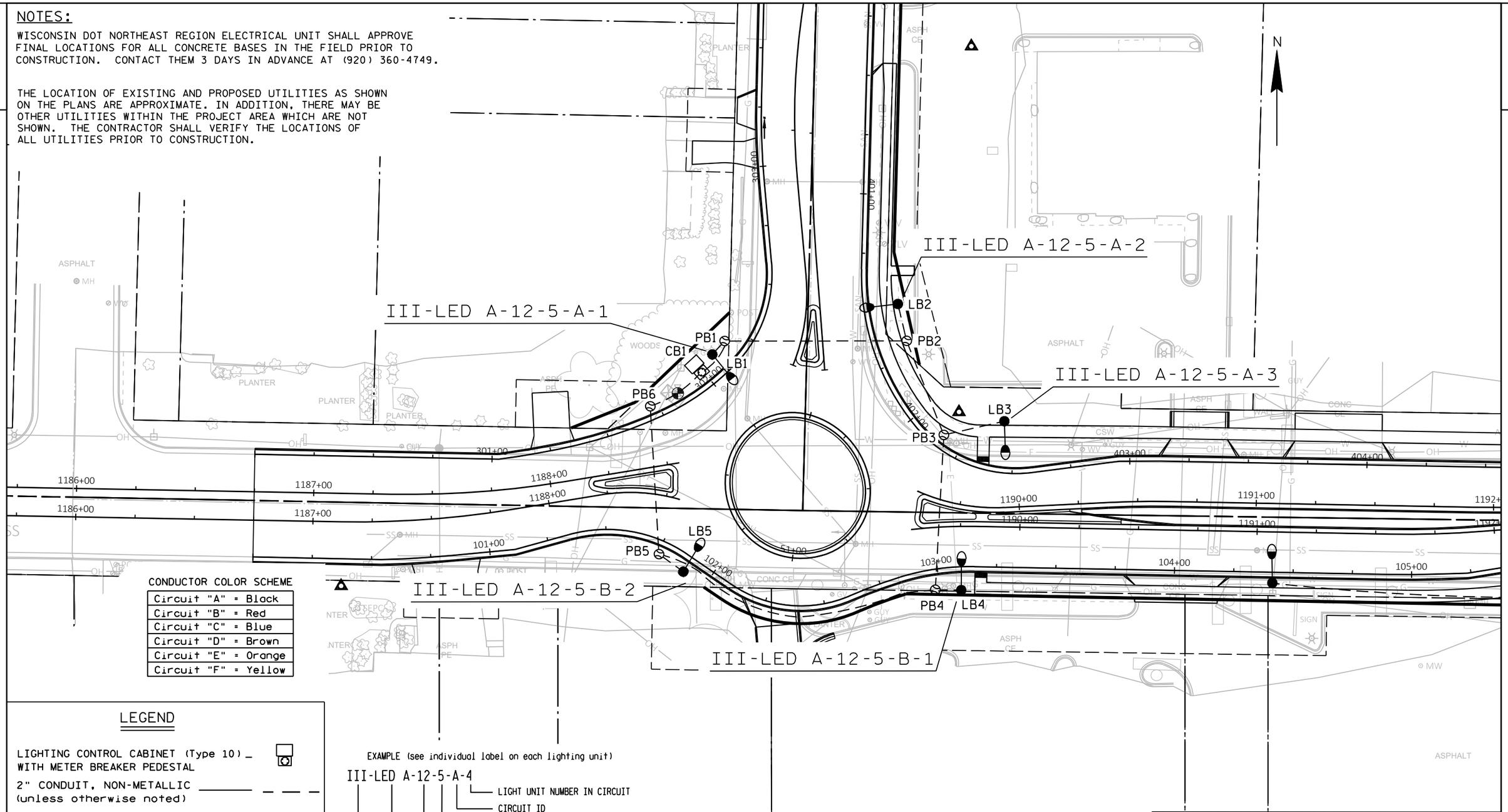

CONDUCTOR COLOR SCHEME

Circuit "A" = Black
Circuit "B" = Red
Circuit "C" = Blue
Circuit "D" = Brown
Circuit "E" = Orange
Circuit "F" = Yellow

LEGEND

- LIGHTING CONTROL CABINET (Type 10) WITH METER BREAKER PEDESTAL
- 2" CONDUIT, NON-METALLIC (unless otherwise noted)
- LIGHTING UNIT
- PULL BOX 24" X 42"
- UTILITY POLE
- ELECTRIC, UNDERGROUND — E —
- ELECTRIC, OVERHEAD — OH —

EXAMPLE (see individual label on each lighting unit)

III-LED A-12-5-A-4

- LIGHT UNIT NUMBER IN CIRCUIT
- CIRCUIT ID
- BASE TYPE
- MAST ARM LENGTH (in feet)
- LAMP WATTAGE
- DISTRIBUTION TYPE

240 VOLT SYSTEM
120/240 VOLT ELECTRIC SERVICE

STH 54 & S MAIN ST.
CITH OF SEYMOUR
OUTAGAMIE COUNTY

LIGHTING NO. 44-2053
DESIGNER: WISDOT NE REGION TRAFFIC UNIT
DATE: 3/21/2023 SHEET NO. 1 OF 1

PROJECT NO: 6230-20-71	HWY: STH 54	COUNTY: OUTAGAMIE	CONSTRUCTION DETAIL - ROUNDABOUT LIGHTING	SHEET 53	E

FILE NAME : F:\D3_TRAFFI\L44-2053 & 2059 (54 & 55, 54 & MAIN)\L44-XXXX.DWG
LAYOUT NAME - STH 54 & S MAIN ST.
PLOT DATE : 7/20/2023 1:46 PM PLOT BY : TALCOTT, MATTHEW J PLOT NAME : _____ PLOT SCALE : ########## WISDOT/CADDS SHEET 42

NOTES:

WISCONSIN DOT NORTHEAST REGION ELECTRICAL UNIT SHALL APPROVE FINAL LOCATIONS FOR ALL CONCRETE BASES IN THE FIELD PRIOR TO CONSTRUCTION. CONTACT THEM 3 DAYS IN ADVANCE AT (920) 360-4749.

THE LOCATION OF EXISTING AND PROPOSED UTILITIES AS SHOWN ON THE PLANS ARE APPROXIMATE. IN ADDITION, THERE MAY BE OTHER UTILITIES WITHIN THE PROJECT AREA WHICH ARE NOT SHOWN. THE CONTRACTOR SHALL VERIFY THE LOCATIONS OF ALL UTILITIES PRIOR TO CONSTRUCTION.

CONDUCTOR COLOR SCHEME

Circuit "A" = Black
Circuit "B" = Red
Circuit "C" = Blue
Circuit "D" = Brown
Circuit "E" = Orange
Circuit "F" = Yellow

N

III-LED A-12-5-B-2

III-LED A-12-5-B-1

III-LED A-12-5-A-3

III-LED A-12-5-A-4

III-LED A-12-5-A-2

III-LED A-12-5-C-1

III-LED A-12-5-C-2

III-LED A-12-5-A-1

LB1 LB2 LB3 LB4 LB5 LB6 LB7 LB8

PB1 PB2 PB3 PB4 PB5 PB6 PB7 PB8

CB1

LEGEND

- LIGHTING CONTROL CABINET (Type 10) WITH METER BREAKER PEDESTAL
- 2" CONDUIT, NON-METALLIC (unless otherwise noted)
- LIGHTING UNIT
- PULL BOX 24" X 42"
- UTILITY POLE
- ELECTRIC, UNDERGROUND — E —
- ELECTRIC, OVERHEAD — OH —

EXAMPLE (see individual label on each lighting unit)

III-LED A-12-5-A-4

- LIGHT UNIT NUMBER IN CIRCUIT
- CIRCUIT ID
- BASE TYPE
- MAST ARM LENGTH (in feet)
- LAMP WATTAGE
- DISTRIBUTION TYPE

240 VOLT SYSTEM

120/240 VOLT ELECTRIC SERVICE

54-Setup-RAB

54-Setup-Approach-RT

STH 54 & CTH C
CITH OF SEYMOUR
OUTAGAMIE COUNTY

LIGHTING NO. 44-2059

DESIGNER: WISDOT NE REGION TRAFFIC UNIT

DATE: 3/21/2023 SHEET NO. 1 OF 1

PROJECT NO: 6230-20-71	HWY: STH 54	COUNTY: OUTAGAMIE	CONSTRUCTION DETAIL - ROUNDABOUT LIGHTING	SHEET 54 E

FILE NAME : F:\D3_TRAFFI\L44-2053 & 2059 (54 & 55, 54 & MAIN)\L44-XXXX.DWG
LAYOUT NAME - STH 54 & CTH C

PLOT DATE : 5/22/2023 9:07 AM PLOT BY : TALCOTT, MATTHEW J PLOT NAME : _____ PLOT SCALE : ##########

WISDOT/CADDS SHEET 42

CONTROL CABINET BASE TYPE	DIMENSIONS	C.Y. CONCRETE (APPROX.)
TYPE 10 - POST MOUNT	AS SHOWN	0.75

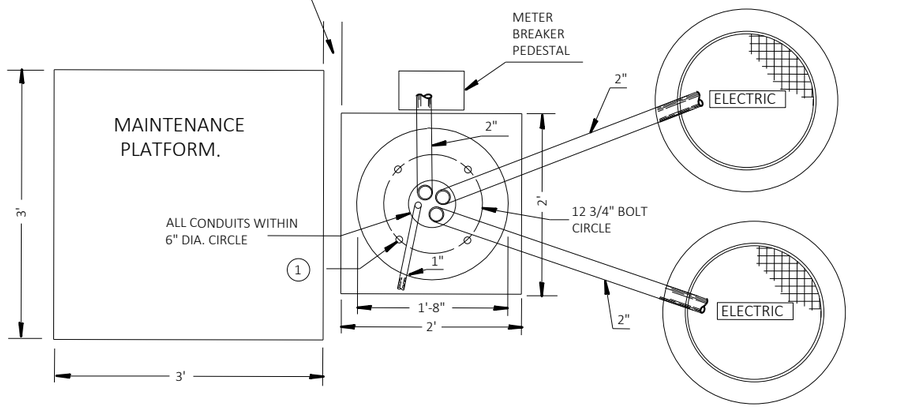

PLAN VIEW

NOTE:
VERIFY WITH UTILITY COMPANY TO DETERMINE WHICH SIDE TO PLACE METER BREAKER PEDESTAL

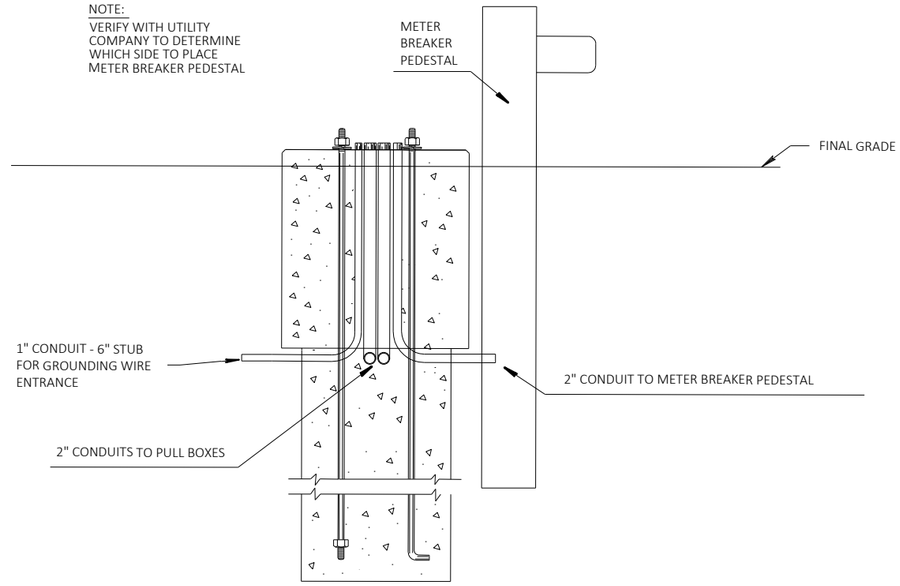

FRONT VIEW

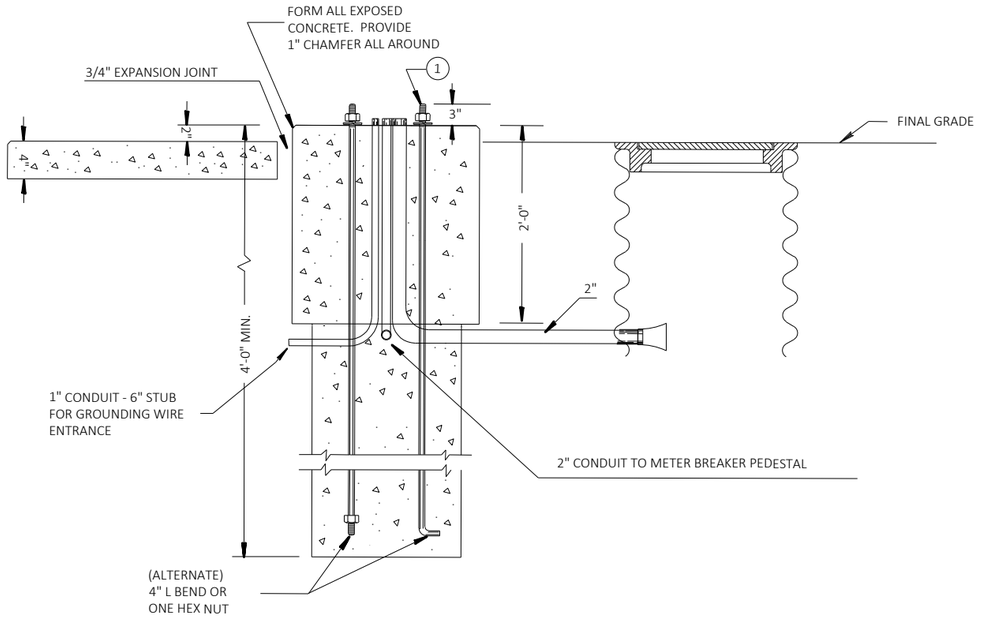

PROFILE VIEW

GENERAL NOTES

DETAILS OF CONSTRUCTION, MATERIALS AND WORKMANSHIP NOT SHOWN ON THIS DRAWING SHALL CONFORM TO THE PERTINENT REQUIREMENTS OF THE CONTRACT.

WHEN REQUIRED TO CONNECT NONMETALLIC CONDUIT TO METALLIC CONDUIT, ONLY ADAPTER FITTINGS, U.L. LISTED FOR ELECTRICAL USE, SHALL BE USED.

CONDUIT HEIGHT ABOVE THE CONCRETE BASE SHALL BE 1 INCH.

CONTROL CABINET BASE TOP SURFACES SHALL BE TROWEL FINISHED AND LEVEL.

WHEN A TYPE 10 CONTROL CABINET BASE IS USED TO POST MOUNT A CONTROL CABINET, A 36" SQUARE 4" THICK CONCRETE MAINTENANCE PLATFORM SHALL BE REQUIRED ON THE DOOR SIDE OF THE CABINET. THE TOP 1 INCH SHALL BE ABOVE FINISHED GRADE AND BE BROOM FINISHED AND LEVEL.

MAINTENANCE PLATFORMS ARE NOT REQUIRED WHEN THE SURROUNDING AREA IS PAVED.

ALL CONDUIT ENDS AT THE TOP OF THE CONCRETE BASE SHALL PLUGGED IMMEDIATELY AFTER PLACEMENT AND BEFORE CONCRETE IS POURED. CONDUITS IN WHICH WIRE OR CABLE IS NOT BEING INSTALLED SHALL REMAIN CAPPED OR PLUGGED.

BELL ENDS SHALL BE INSTALLED ON ALL PVC CONDUIT EXPOSED AT THE TOP OF THE CONCRETE BASE BEFORE INSTALLATION OF CABLE OR WIRE.

WHEN ANCHOR RODS USING THE ALTERNATE L BEND ARE FURNISHED FOR THE TYPE 10 BASE, THE 4" L BEND SHALL BE IN ADDITION TO THE SPECIFIED ANCHOR ROD BAR LENGTH.

THE "L" BEND SHALL NOT BE THREADED.

STRAIGHT ANCHOR RODS SHALL BE THREADED 12" IN LENGTH ON EACH END OF THE ROD.

FOUR (4) ANCHOR RODS, 1" DIA. X 3'-6"
ANCHOR RODS SHALL BE MANUFACTURED IN ACCORDANCE WITH SECTION 654.2.1 AND 641.2.2 OF THE STANDARD SPECIFICATIONS AND IN ACCORDANCE WITH A-449, OR ASTM.

PROJECT NO: 6230-20-71	HWY: STH 54	COUNTY: OUTAGAMIE	CONTROL CABINET BASE DETAIL, TYPE 10 NER	SHEET 55	E

2

LEGEND

- (A) MARKING LINE EPOXY 6-INCH (YELLOW)
- (B) MARKING LINE EPOXY 6-INCH (DOUBLE YELLOW)
- (C) MARKING LINE EPOXY 6-INCH (WHITE)
- (D) MARKING LINE EPOXY 6-INCH (YELLOW) 12.5' LINE 37.5' GAP
- (E) MARKING LINE EPOXY 10-INCH (WHITE)
- (F) MARKING ARROW EPOXY (WHITE)
- (G) MARKING CURB EPOXY (YELLOW)
- (H) MARKING DIAGONAL EPOXY 12-INCH (YELLOW)
- (I) MARKING DOTTED EXTENSION EPOXY 18-INCH (WHITE 2-FT SEGMENT, 2-FT GAP)
- (J) MARKING ISLAND NOSE EPOXY (YELLOW)
- (K) MARKING CROSSWALK EPOXY TRANSVERSE LINE 6-INCH (WHITE)

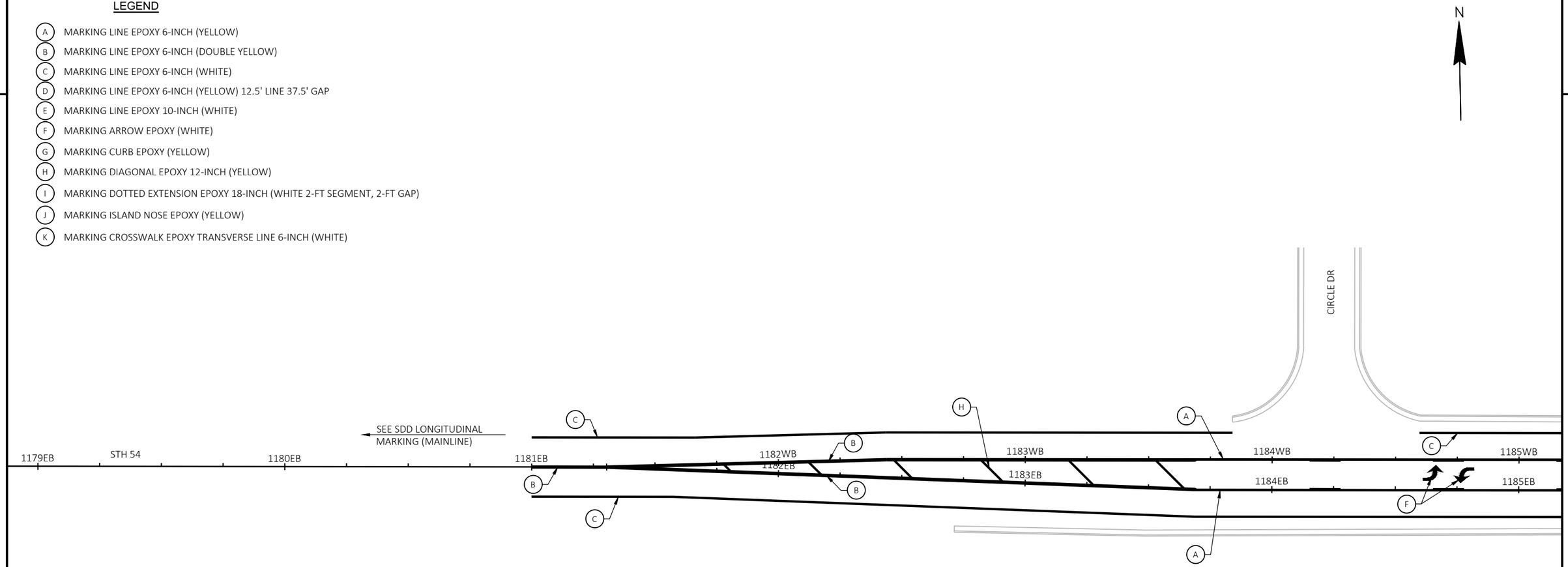

2

PROJECT NO: 6230-20-71	HWY: STH 54	COUNTY: OUTAGAMIE	PAVEMENT MARKING	SHEET 56	E

FILE NAME : I:\45\450479 STH 54 SEYMOUR TO GB\C3D\SHEETSPLAN\024501 PM.DWG
LAYOUT NAME - 024501 pm

PLOT DATE : 8/23/2023 10:05 PM PLOT BY : VERVILLE, PHILLIP PLOT NAME : PLOT SCALE : 1 IN:40 FT

WISDOT/CADDS SHEET 42

2

LEGEND

- (A) MARKING LINE EPOXY 6-INCH (YELLOW)
- (B) MARKING LINE EPOXY 6-INCH (DOUBLE YELLOW)
- (C) MARKING LINE EPOXY 6-INCH (WHITE)
- (D) MARKING LINE EPOXY 6-INCH (YELLOW) 12.5' LINE 37.5' GAP
- (E) MARKING LINE EPOXY 10-INCH (WHITE)
- (F) MARKING ARROW EPOXY (WHITE)
- (G) MARKING CURB EPOXY (YELLOW)
- (H) MARKING DIAGONAL EPOXY 12-INCH (YELLOW)
- (I) MARKING DOTTED EXTENSION EPOXY 18-INCH (WHITE 2-FT SEGMENT, 2-FT GAP)
- (J) MARKING ISLAND NOSE EPOXY (YELLOW)
- (K) MARKING CROSSWALK EPOXY TRANSVERSE LINE 6-INCH (WHITE)

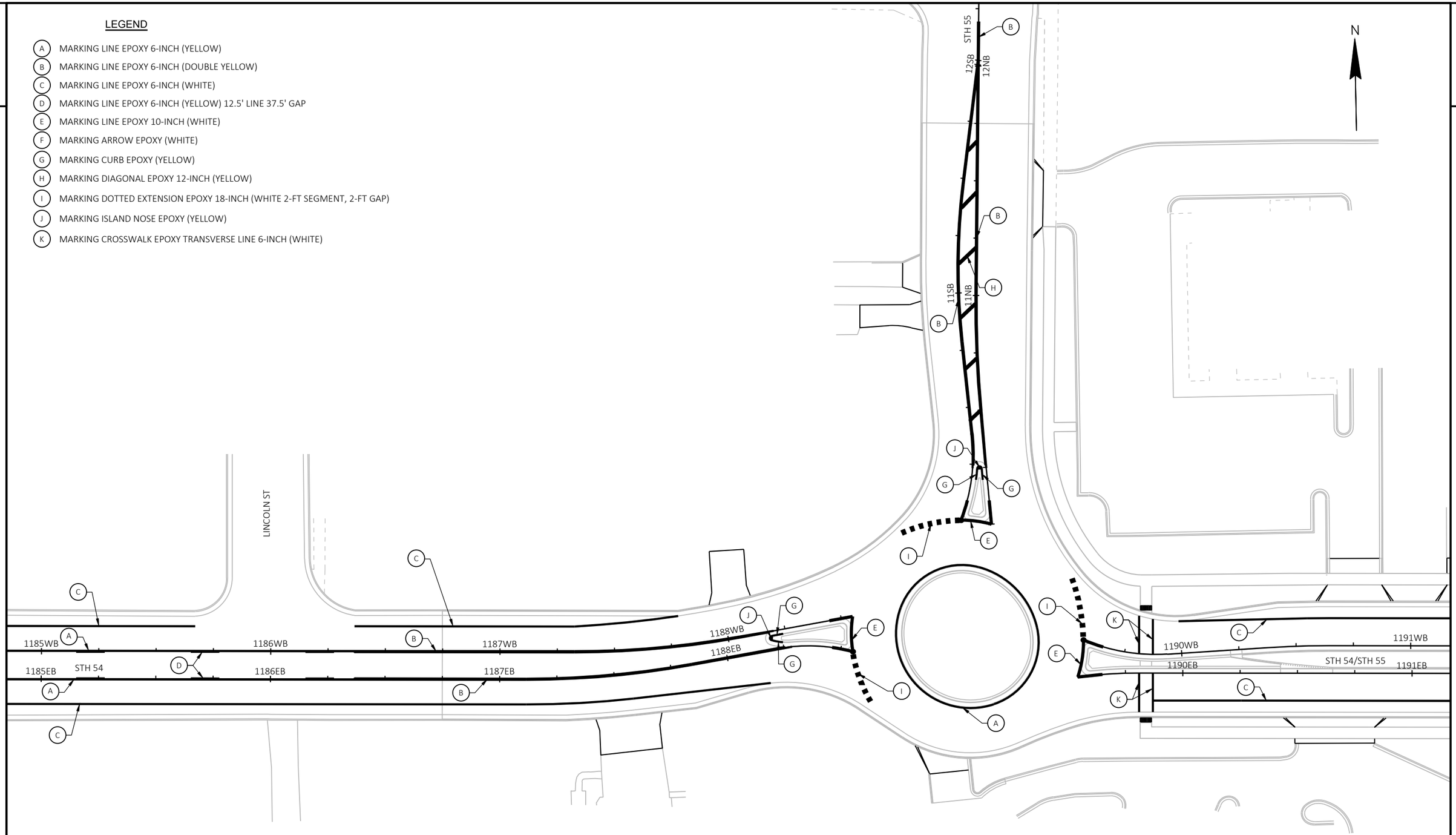

2

PROJECT NO: 6230-20-71	HWY: STH 54	COUNTY: OUTAGAMIE	PAVEMENT MARKING	SHEET 57	E

FILE NAME : I:\45\450479 STH 54 SEYMOUR TO GB\C3D\SHEETSPLAN\024501 PM.DWG
LAYOUT NAME - 024502 pm

PLOT DATE : 8/23/2023 10:05 PM PLOT BY : VERVILLE, PHILLIP PLOT NAME : PLOT SCALE : 1 IN:40 FT

WISDOT/CADDS SHEET 42

2

LEGEND

- (A) MARKING LINE EPOXY 6-INCH (YELLOW)
- (B) MARKING LINE EPOXY 6-INCH (DOUBLE YELLOW)
- (C) MARKING LINE EPOXY 6-INCH (WHITE)
- (D) MARKING LINE EPOXY 6-INCH (YELLOW) 12.5' LINE 37.5' GAP
- (E) MARKING LINE EPOXY 10-INCH (WHITE)
- (F) MARKING ARROW EPOXY (WHITE)
- (G) MARKING CURB EPOXY (YELLOW)
- (H) MARKING DIAGONAL EPOXY 12-INCH (YELLOW)
- (I) MARKING DOTTED EXTENSION EPOXY 18-INCH (WHITE 2-FT SEGMENT, 2-FT GAP)
- (J) MARKING ISLAND NOSE EPOXY (YELLOW)
- (K) MARKING CROSSWALK EPOXY TRANSVERSE LINE 6-INCH (WHITE)

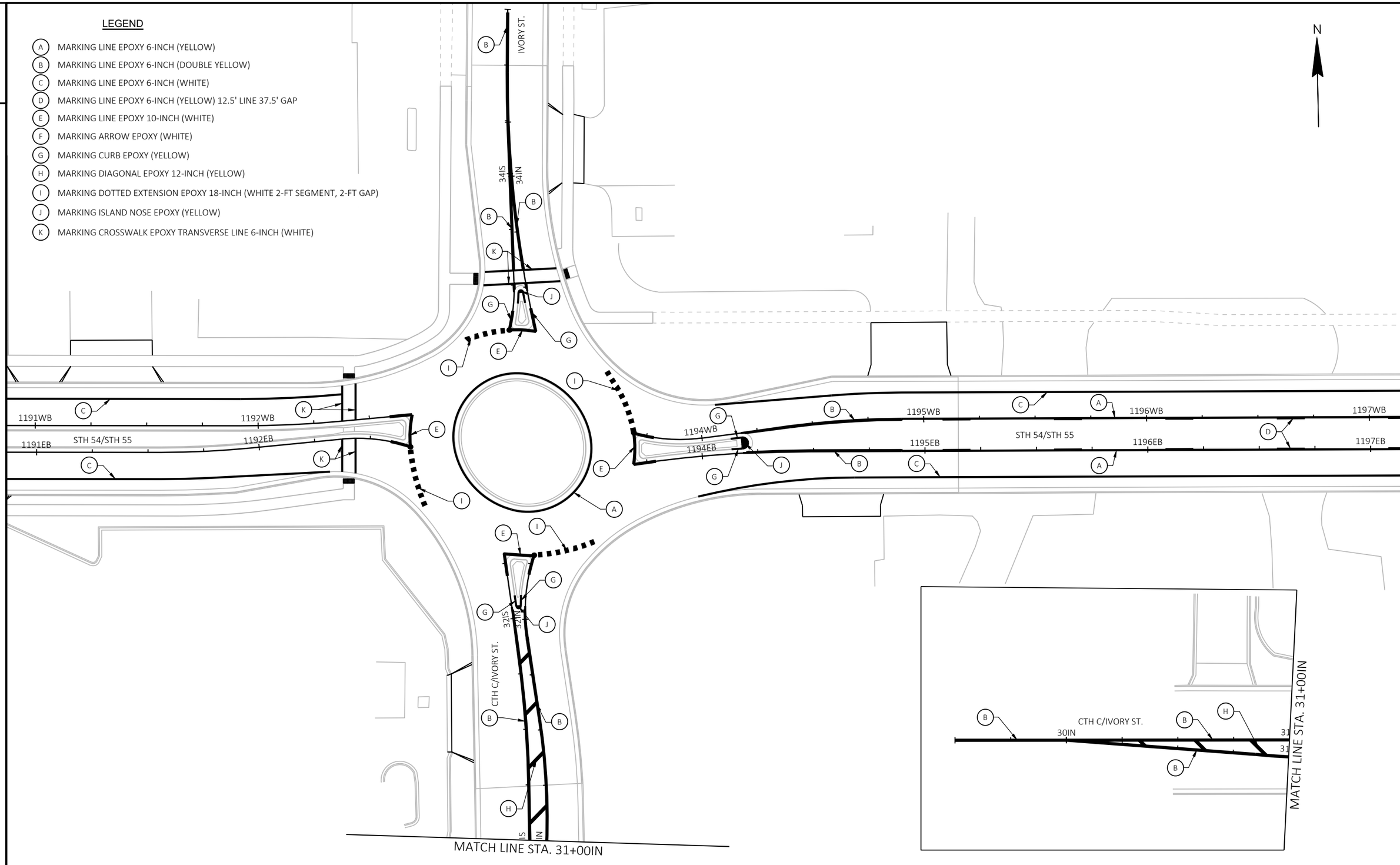

2

PROJECT NO: 6230-20-71	HWY: STH 54	COUNTY: OUTAGAMIE	PAVEMENT MARKING	SHEET 58	E

FILE NAME : I:\45\450479 STH 54 SEYMOUR TO GB\C3D\SHEETSPLAN\024501 PM.DWG
LAYOUT NAME - 024503 pm
PLOT DATE : 8/23/2023 10:05 PM
PLOT BY : VERVILLE, PHILLIP
PLOT NAME :
PLOT SCALE : 1 IN:40 FT
WISDOT/CADDS SHEET 42

2

2

LEGEND

- (A) MARKING LINE EPOXY 6-INCH (YELLOW)
- (B) MARKING LINE EPOXY 6-INCH (DOUBLE YELLOW)
- (C) MARKING LINE EPOXY 6-INCH (WHITE)
- (D) MARKING LINE EPOXY 6-INCH (YELLOW) 12.5' LINE 37.5' GAP
- (E) MARKING LINE EPOXY 10-INCH (WHITE)
- (F) MARKING ARROW EPOXY (WHITE)
- (G) MARKING CURB EPOXY (YELLOW)
- (H) MARKING DIAGONAL EPOXY 12-INCH (YELLOW)
- (I) MARKING DOTTED EXTENSION EPOXY 18-INCH (WHITE 2-FT SEGMENT, 2-FT GAP)
- (J) MARKING ISLAND NOSE EPOXY (YELLOW)
- (K) MARKING CROSSWALK EPOXY TRANSVERSE LINE 6-INCH (WHITE)

N

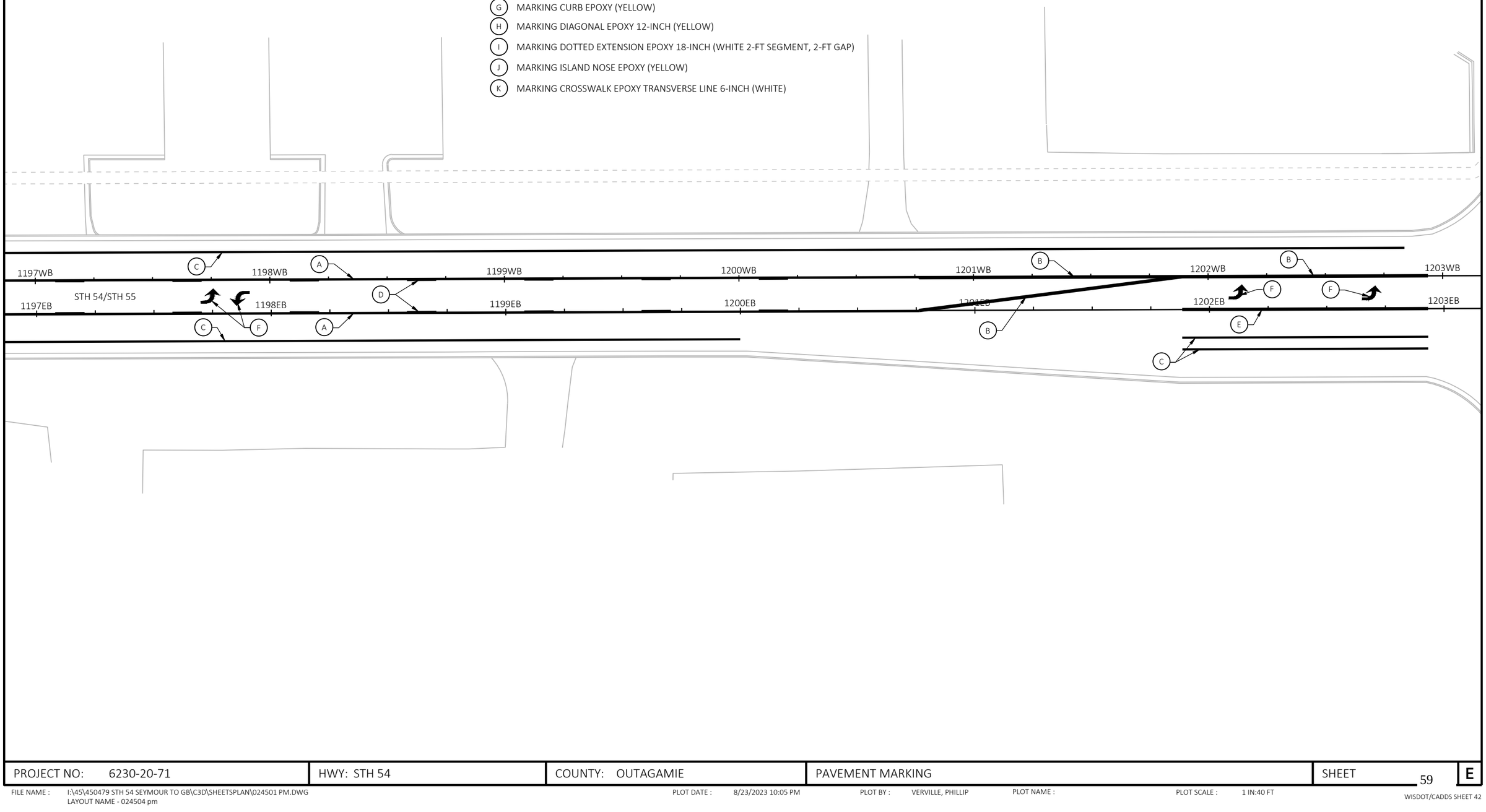

PROJECT NO: 6230-20-71	HWY: STH 54	COUNTY: OUTAGAMIE	PAVEMENT MARKING	SHEET 59	E

FILE NAME : I:\45\450479 STH 54 SEYMOUR TO GB\C3D\SHEETSPLAN\024501 PM.DWG
LAYOUT NAME - 024504 pm

PLOT DATE : 8/23/2023 10:05 PM PLOT BY : VERVILLE, PHILLIP PLOT NAME : PLOT SCALE : 1 IN:40 FT

WISDOT/CADDS SHEET 42

2

2

LEGEND

- (A) MARKING LINE EPOXY 6-INCH (YELLOW)
- (B) MARKING LINE EPOXY 6-INCH (DOUBLE YELLOW)
- (C) MARKING LINE EPOXY 6-INCH (WHITE)
- (D) MARKING LINE EPOXY 6-INCH (YELLOW) 12.5' LINE 37.5' GAP
- (E) MARKING LINE EPOXY 10-INCH (WHITE)
- (F) MARKING ARROW EPOXY (WHITE)
- (G) MARKING CURB EPOXY (YELLOW)
- (H) MARKING DIAGONAL EPOXY 12-INCH (YELLOW)
- (I) MARKING DOTTED EXTENSION EPOXY 18-INCH (WHITE 2-FT SEGMENT, 2-FT GAP)
- (J) MARKING ISLAND NOSE EPOXY (YELLOW)
- (K) MARKING CROSSWALK EPOXY TRANSVERSE LINE 6-INCH (WHITE)

N

ORCHARD DR

1203WB
STH 54/STH 55
1203EB
1204WB
1204EB
STH 54
1205WB
1205EB
1206WB
1206EB
1207WB
1207EB
1208EB
STH 54/STH 55
1209EB

ORCHARD DR

PROJECT NO: 6230-20-71	HWY: STH 54	COUNTY: OUTAGAMIE	PAVEMENT MARKING	SHEET 60	E

FILE NAME : I:\45\450479 STH 54 SEYMOUR TO GB\C3D\SHEETSPLAN\024501 PM.DWG
LAYOUT NAME - 024505 pm
PLOT DATE : 8/23/2023 10:05 PM PLOT BY : VERVILLE, PHILLIP PLOT NAME : PLOT SCALE : 1 IN:40 FT

2

LEGEND

- (A) MARKING LINE EPOXY 6-INCH (YELLOW)
- (B) MARKING LINE EPOXY 6-INCH (DOUBLE YELLOW)
- (C) MARKING LINE EPOXY 6-INCH (WHITE)
- (D) MARKING LINE EPOXY 6-INCH (YELLOW) 12.5' LINE 37.5' GAP
- (E) MARKING LINE EPOXY 10-INCH (WHITE)
- (F) MARKING ARROW EPOXY (WHITE)
- (G) MARKING CURB EPOXY (YELLOW)
- (H) MARKING DIAGONAL EPOXY 12-INCH (YELLOW)
- (I) MARKING DOTTED EXTENSION EPOXY 18-INCH (WHITE 2-FT SEGMENT, 2-FT GAP)
- (J) MARKING ISLAND NOSE EPOXY (YELLOW)
- (K) MARKING CROSSWALK EPOXY TRANSVERSE LINE 6-INCH (WHITE)

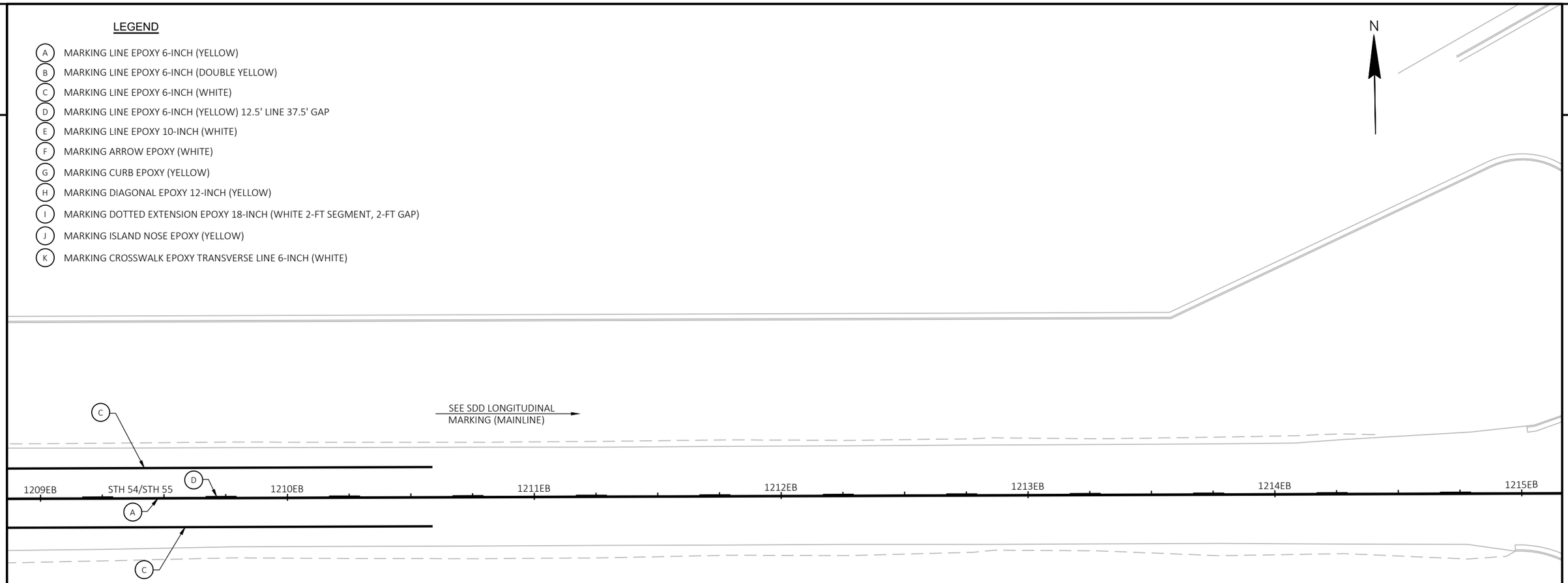

2

PROJECT NO: 6230-20-71	HWY: STH 54	COUNTY: OUTAGAMIE	PAVEMENT MARKING	SHEET 61	E

FILE NAME : I:\45\450479 STH 54 SEYMOUR TO GB\C3D\SHEETSPLAN\024501 PM.DWG
LAYOUT NAME - 024506 pm

PLOT DATE : 8/23/2023 10:05 PM PLOT BY : VERVILLE, PHILLIP PLOT NAME : PLOT SCALE : 1 IN:40 FT

2

STAGING PLAN OVERVIEW

STAGE 1A CONSTRUCTION

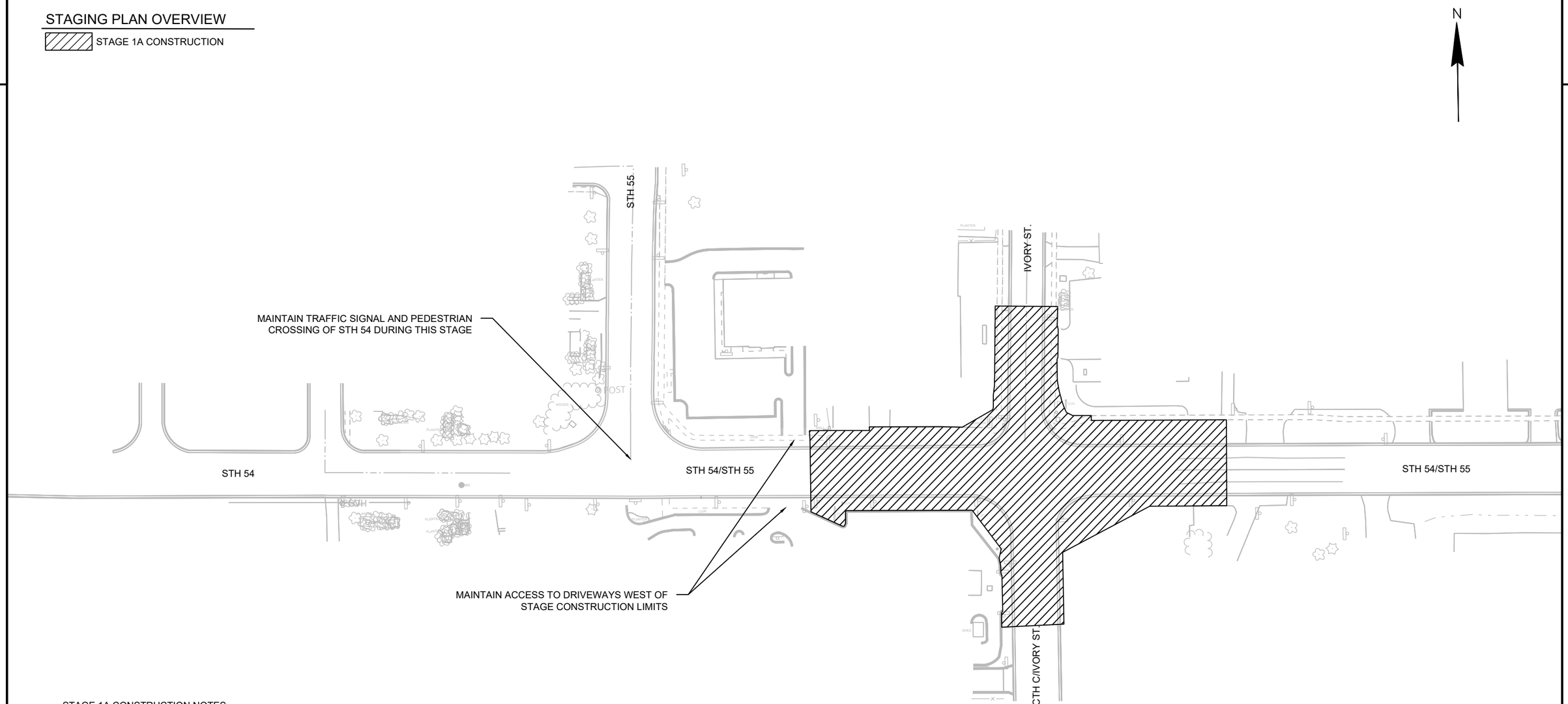

STAGE 1A CONSTRUCTION NOTES

1. CONSTRUCT CTH C/ IVORY STREET ROUNDABOUT DURING THIS STAGE.
2. CONSTRUCT STORM SEWER STRUCTURES FROM EAST THROUGH STA 1191+00.
3. OPTION TO CONSTRUCT PAVEMENT MILLING AND PAVING EAST OF IVORY STREET WITHIN THE ROAD CLOSED SECTION.
4. MAINTAIN FULL ACCESS FROM STH 55 NORTH TO BUSINESSES ON THE SOUTH SIDE OF STH 54 BETWEEN STH 55 NORTH AND CTH C.
5. SEE STANDARD DETAIL DRAWING "TRAFFIC CONTROL, PEDESTRIAN ACCOMMODATION" FOR ADDITIONAL GUIDANCE

2

STAGING PLAN OVERVIEW

STAGE 1B CONSTRUCTION

N

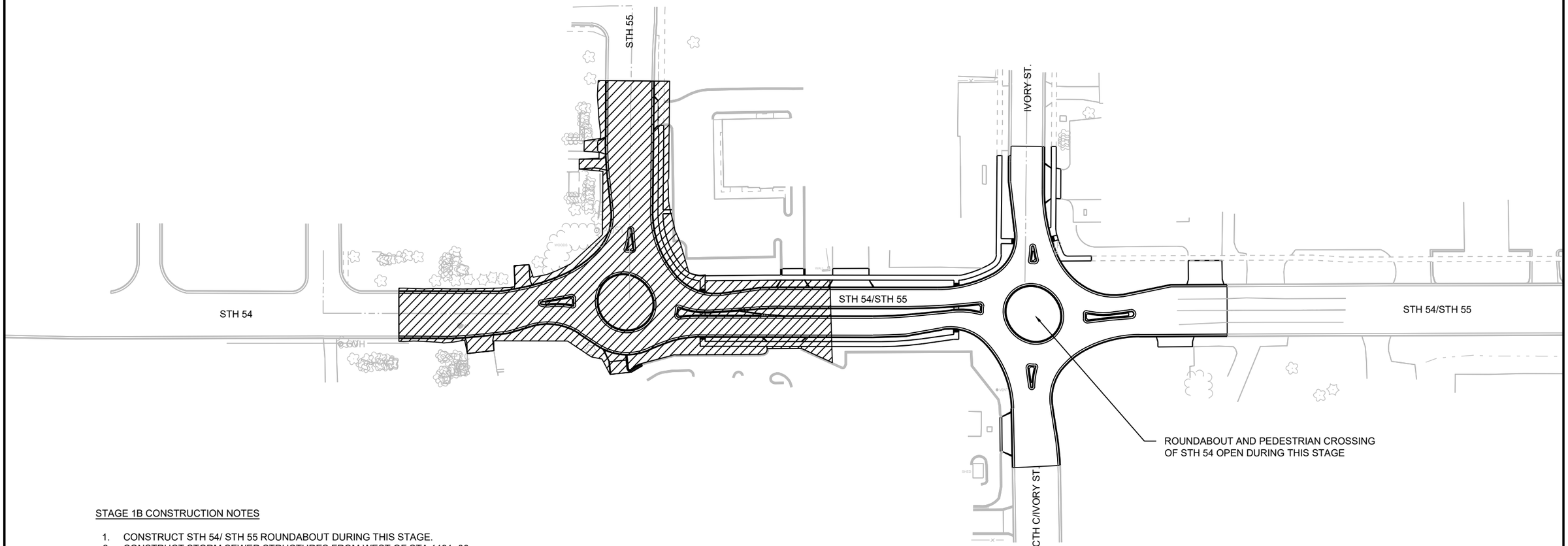

STAGE 1B CONSTRUCTION NOTES

1. CONSTRUCT STH 54/ STH 55 ROUNDABOUT DURING THIS STAGE.
2. CONSTRUCT STORM SEWER STRUCTURES FROM WEST OF STA 1191+00.
3. OPTION TO CONSTRUCT PAVEMENT MILLING AND PAVING WEST OF STH 55 NORTH DURING THIS STAGE.
4. MAINTAIN FULL ACCESS FROM CTH C AND IVORTY STREET TO BUSINESSES ON THE SOUTH SIDE OF STH 54 BETWEEN STH 55 NORTH AND CTH C.
5. SEE STANDARD DETAIL DRAWING "TRAFFIC CONTROL, PEDESTRIAN ACCOMMODATION" FOR ADDITIONAL GUIDANCE

PROJECT NO: 6230-20-71	HWY: STH 54	COUNTY: OUTAGAMIE	STAGE CONSTRUCTION - STAGE 1B	SHEET 63	E

FILE NAME : I:\45\450479 STH 54 SEYMOUR TO GB\C3D\SHEETSPLAN\026001 S1.DWG
LAYOUT NAME - 026002 s1
PLOT DATE : 7/26/2023 12:37 PM
PLOT BY : GARNICA, BRANDON
PLOT NAME :
PLOT SCALE : 1 IN:100 FT
WISDOT/CADDS SHEET 42



PROJECT NO: 6230-20-71	HWY: STH 54	COUNTY: OUTAGAMIE	TEMPORARY PEDESTRIAN ACCOMMODATION STAGE 1A	SHEET 64	E

FILE NAME : I:\45\450479 STH 54 SEYMOUR TO GB\C3D\SHEETSPLAN\027101 DT.DWG
LAYOUT NAME - PED
PLOT DATE : 7/26/2023 2:58 PM
PLOT BY : HOSPER, JAN
PLOT NAME :
PLOT SCALE : 1 IN: 150FT
WISDOT/CADDS SHEET 42

2

LEGEND

- WORK ZONE
- TEMPORARY PEDESTRIAN SURFACE ASPHALT, MINIMUM 4' WIDTH
- TEMPORARY DETECTABLE WARNING FIELD
- TEMPORARY PEDESTRIAN RAMP
- TEMPORARY PEDESTRIAN BARRICADE
- ACCESSIBLE PEDESTRIAN PATH
- TYPE II BARRICADE WITH ATTACHED SIGN
- TRAFFIC CONTROL DRUMS

A	B	C	E
DETOUR	DETOUR	SIDEWALK CLOSED AHEAD	SIDEWALK CLOSED
M4-9BL 30"X24"	M4-9BR 30"X24"	R9-9A 30"X18"	R9-9 24"X12"

N

STH 55

IVORY ST

SEE STANDARD DETAIL DRAWING "TRAFFIC CONTROL, PEDESTRIAN ACCOMMODATION" FOR ADDITIONAL GUIDANCE

A

B

C

E

E

A

C

E

E

STH 54

ACCESS TO SOUTH SIDE OF STH 54 BUSINESSES VIA EXISTING TRAFFIC SIGNAL

PROJECT NO: 6230-20-71	HWY: STH 54	COUNTY: OUTAGAMIE	TEMPORARY PEDESTRIAN ACCOMMODATION STAGE 1A DETAIL	SHEET 65	E

FILE NAME : I:\45\450479 STH 54 SEYMOUR TO GB\C3D\SHEETSPLAN\027101 DT.DWG
LAYOUT NAME - PED

PLOT DATE : 7/26/2023 2:55 PM PLOT BY : HOSPER, JAN PLOT NAME : PLOT SCALE : 1 IN: 40 FT

2

LINCOLN ST

POPE ST

STH 55

NOT A PUBLIC WALKWAY,
DO NOT SIGN

SEE STAGE
1B DETAIL

E HICKORY ST

IVORY ST

KINGS WAY

SCHMIDT AVE

STH 54

FULTON ST

LEGEND

WORK ZONE

ACCESSIBLE PEDESTRIAN PATH

TYPE II BARRICADE WITH ATTACHED SIGN

A

B

DETOUR

M4-9BL
30"X24"

DETOUR

M4-9BR
30"X24"

N

PROJECT NO: 6230-20-71	HWY: STH 54	COUNTY: OUTAGAMIE	TEMPORARY PEDESTRIAN ACCOMMODATION STAGE 1B	SHEET 66	E

FILE NAME : I:\45\450479 STH 54 SEYMOUR TO GB\C3D\SHEETSPLAN\027103 DT.DWG
LAYOUT NAME - PED

PLOT DATE : 7/26/2023 3:00 PM

PLOT BY : HOSPER, JAN

PLOT NAME :

PLOT SCALE : 1 IN: 150FT

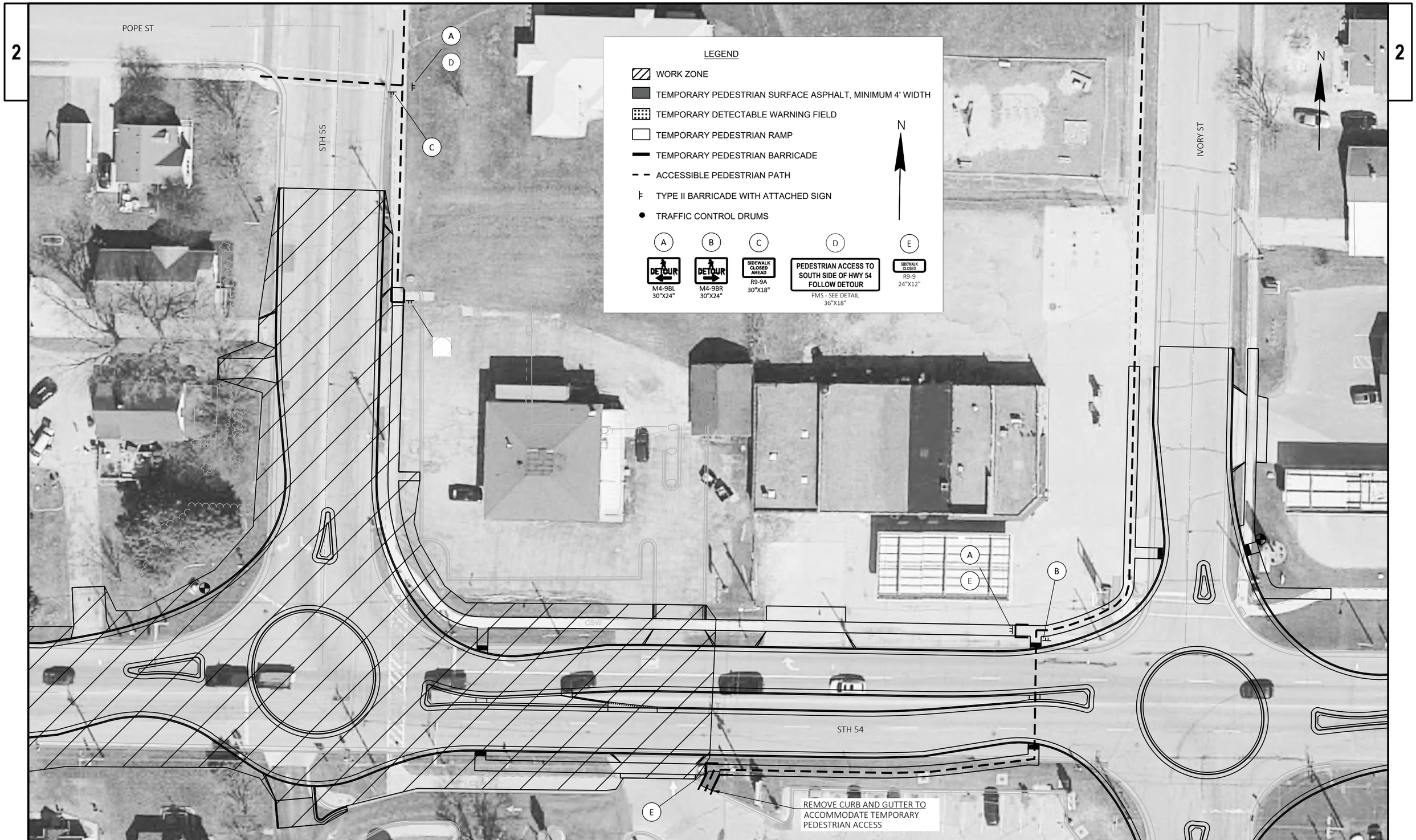

PROJECT NO: 6230-20-71	HWY: STH 54	COUNTY: OUTAGAMIE	TEMPORARY PEDESTRIAN ACCOMMODATION STAGE 1B DETAIL	SHEET 67	E

FILE NAME : I:\45\450479 STH 54 SEYMOUR TO GB\C3D\SHEETSPLAN\027103 DT.DWG
LAYOUT NAME - PED
PLOT DATE : 7/26/2023 2:53 PM
PLOT BY : HOSPER, JAN
PLOT NAME :
PLOT SCALE : 1 IN: 40 FT
WISDOT/CADDS SHEET 42

2

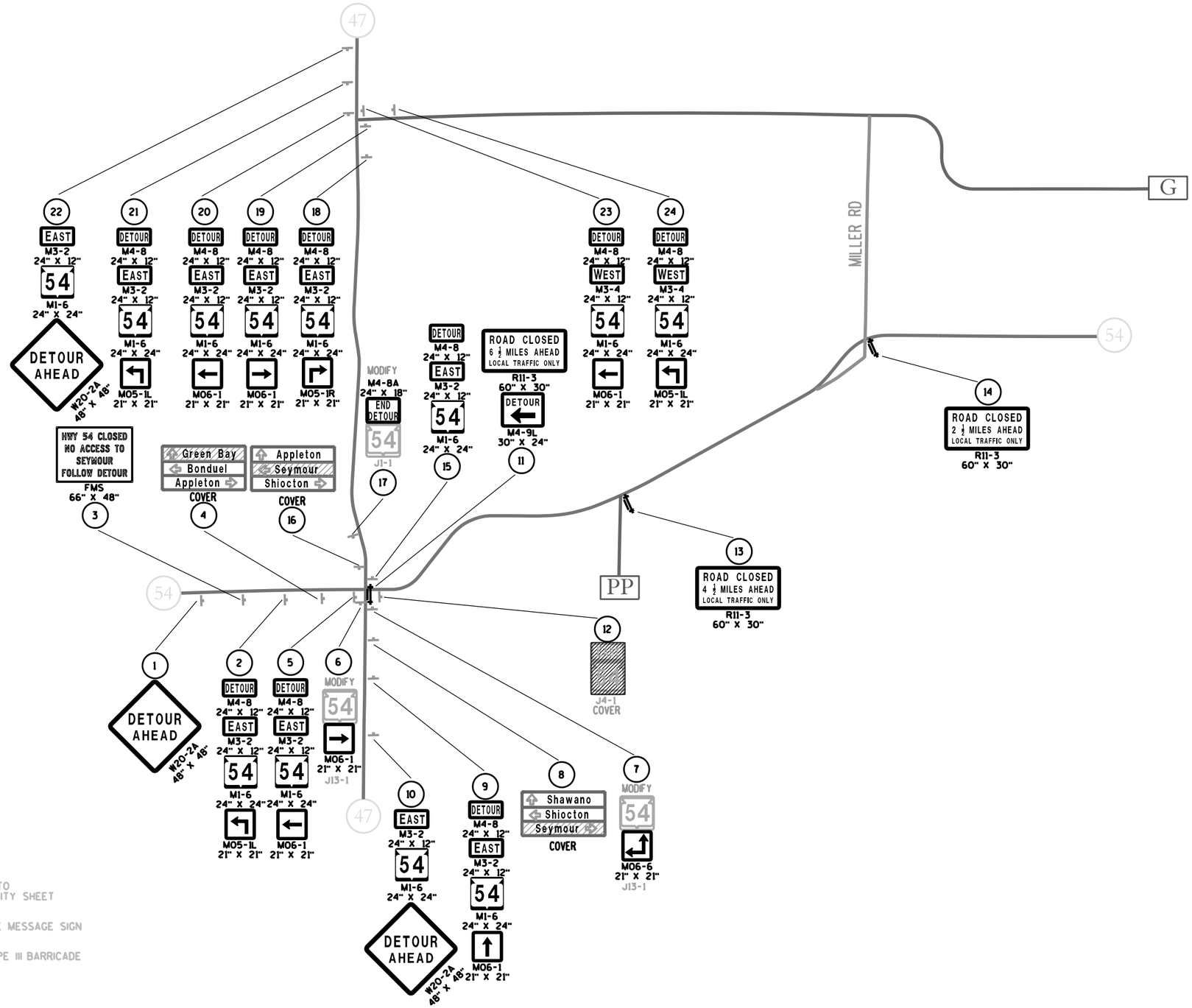

LEGEND

- (x) SIGN NUMBER. REFER TO MISCELLANEOUS QUANTITY SHEET
- PCMS ▶ (x) PORTABLE CHANGEABLE MESSAGE SIGN
- SIGN MOUNTED ON TYPE III BARRICADE
- POST MOUNTED SIGN

SHEET 1 OF 2

PLAN SHEET PRODUCED BY WisDOT-NE REGION

PROJECT NO:6230-20-71	HWY: STH 54	COUNTY: OUTAGAMIE	DETOUR SIGNING DETAIL	SHEET	E

FILE NAME : $$....designfile....$$ PLOT DATE : $$...plottingdate...$$ PLOT BY : $$...plotuser...$$ PLOT NAME : PLOT SCALE : $$.....plotscale.....$$ WISDOT/CADDS SHEET 42

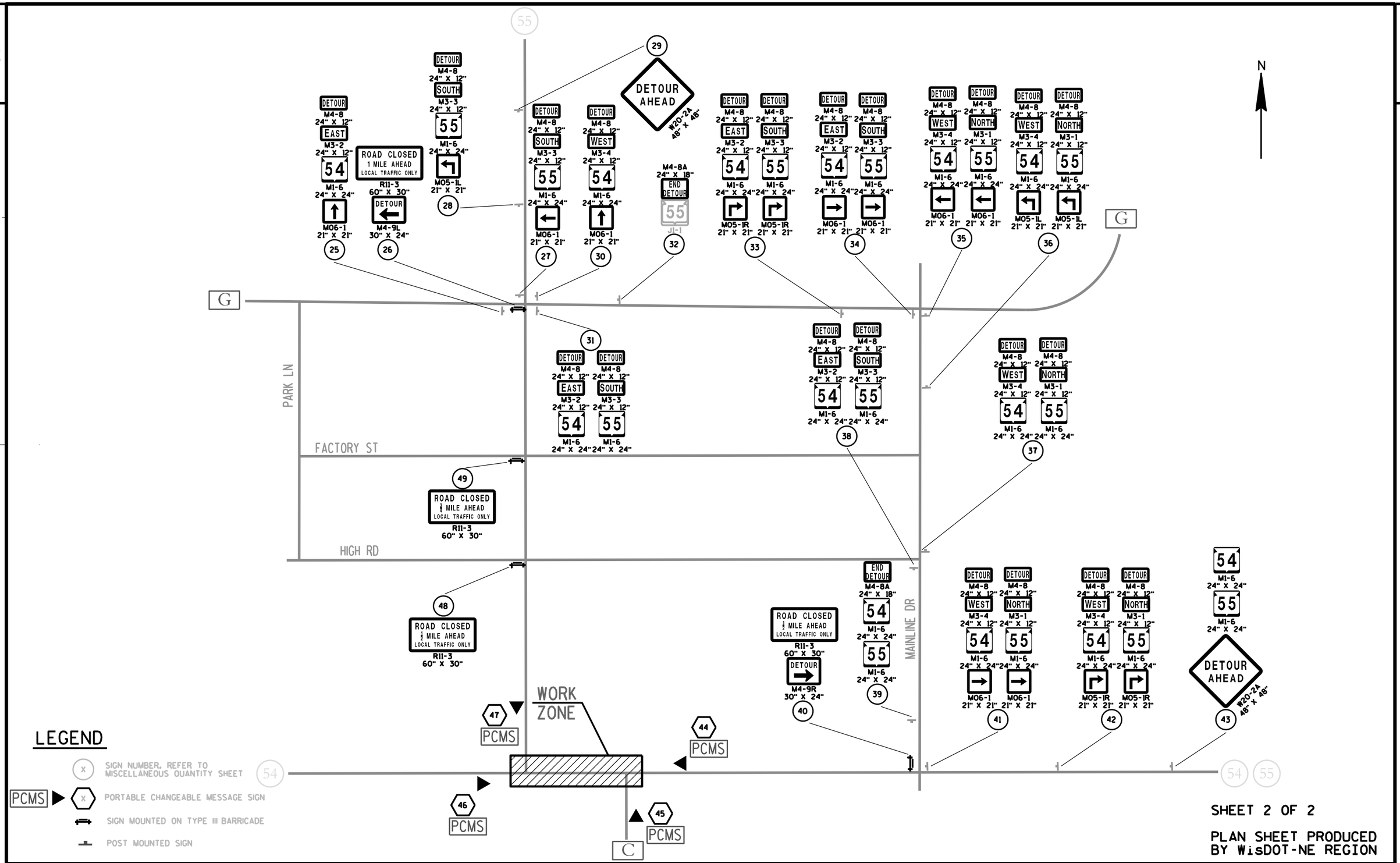

PROJECT NO: 6230-20-71	HWY: STH 54	COUNTY: OUTAGAMIE	DETOUR SIGNING DETAIL	SHEET	E

2

STH 54 CONSTRUCTION R/L

BENCH MARKS

NO.	STATION	DESCRIPTION	ELEV.
1005	1210+52EB	BURY BOLT ON HYD - 112' LT	808.84
1006	1220+90EB	NAIL IN PPOL#69-1790 - 57' RT	814.63
1008	1327+33EB	NAIL IN PPOL#74-3086 - 58' RT	787.74
300	1329+26EB	CHISELED BOX ON BOX CULVERT - 23' RT	786.56
1009	1329+73EB	NAIL IN PPOL#75-0100 - 65' LT	786.70

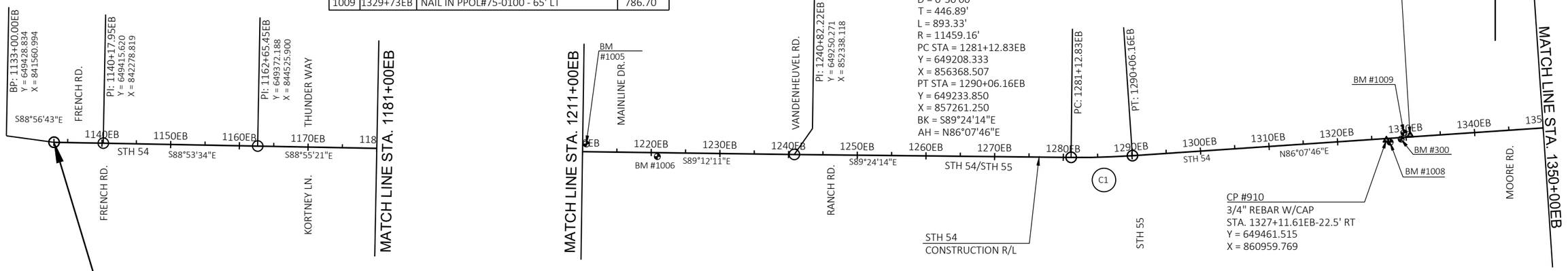

BENCH MARKS

NO.	STATION	DESCRIPTION	ELEV.
1019	1522+23EB	NAIL IN PPOL #92-16218 - 62' RT	740.93
1020	1523+65EB	DISK IN WALL OF BOX CULVERT - 24' LT	741.74
303	1523+76EB	CHISELED BOX ON BOX CULVERT - 24' RT	741.52	

BENCH MARKS

NO.	STATION	DESCRIPTION	ELEV.
1012	1413+00EB	NAIL IN PPOL#68-6329 - 1013' RT	755.24
301	1417+18EB	CHISELED BOX ON CULVERT - 24' RT	754.61
1013	1418+97EB	NAIL IN PPOL#68-6331 - 130' RT	754.07
302	1440+47EB	CHISELED BOX ON BOX CULVERT - 28' RT	749.50
1014	1440+89EB	NAIL IN TREE NW HOUSE #W959 - 64' LT	751.40

BENCH MARKS

NO.	STATION	DESCRIPTION	ELEV.
1015	1442+60EB	NAIL IN PPOL#52-1847 - 101' RT	751.17
1019	1220+90EB	NAIL IN PPOL #69-1790 - 57' RT	814.63
1020	1327+33EB	NAIL IN PPOL#74-3086 - 58' RT	787.74
303	1523+76EB	CHISELED BOX ON BOX CULVERT - 24' RT	741.52
1021	1527+93EB	CHISELED X ON BURY BOLD HYD - 60' LT	744.18

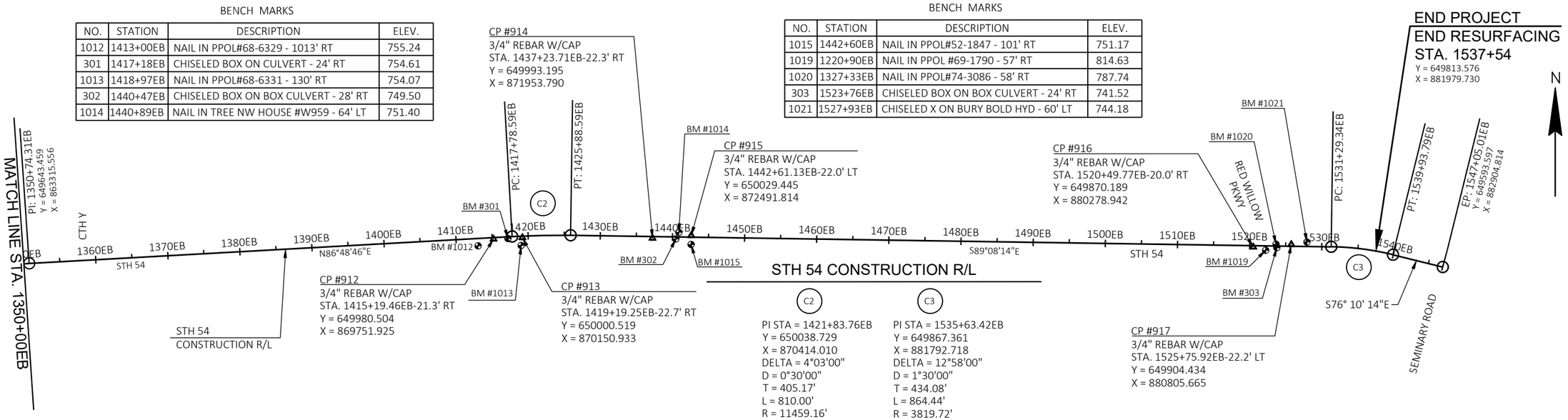

PROJECT NO: 6230-20-71	HWY: STH 54	COUNTY: OUTAGAMIE	ALIGNMENT DIAGRAM	SHEET 70	E

FILE NAME : I:\45\450479 STH 54 SEYMOUR TO GB\C3D\SHEETSPLAN\027201 AD.DWG
LAYOUT NAME - 027201 ad
PLOT DATE : 7/26/2023 12:38 PM
PLOT BY : GARNICA, BRANDON
PLOT NAME :
PLOT SCALE : 1:1500
WISDOT/CADDS SHEET 42

STH 54 WESTBOUND CONSTRUCTION R/L

C4

PI STA = 1187+69.20WB
Y = 649328.514
X = 847029.228
DELTA = 10°20'53"
D = 14°19'26"
T = 36.22'
L = 72.24'
R = 400.00'
PC STA = 1187+32.98WB
Y = 649329.181
X = 846993.014
PT STA = 1188+05.22WB
Y = 649334.363
X = 847064.973
BK = S88°56'43"E
AH = N80°42'23"E

C5

PI STA = 1189+75.29WB
Y = 649322.652
X = 847232.023
DELTA = 26°50'19"
D = 71°37'11"
T = 19.09'
L = 37.47'
R = 80.00'
PC STA = 1189+56.21WB
Y = 649330.438
X = 847214.596
PT STA = 1189+93.68WB
Y = 649323.573
X = 847251.088
BK = S65°55'35"E
AH = N87°14'06"E

C6

PI STA = 1190+50.91WB
Y = 649326.334
X = 847308.254
DELTA = 3°49'43"
D = 14°19'26"
T = 13.37'
L = 26.73'
R = 400.00'
PC STA = 1190+37.54WB
Y = 649325.689
X = 847294.900
PT STA = 1190+64.27WB
Y = 649326.086
X = 847321.621
BK = N87°14'06"E
AH = S88°56'11"E

C7

PI STA = 1192+15.50WB
Y = 649323.278
X = 847472.823
DELTA = 5°23'02"
D = 11°27'33"
T = 23.51'
L = 46.98'
R = 500.00'
PC STA = 1191+91.99WB
Y = 649323.715
X = 847449.318
PT STA = 1192+38.98WB
Y = 649325.049
X = 847496.264
BK = S88°56'11"E
AH = N85°40'47"E

C8

PI STA = 1193+84.55WB
Y = 649312.780
X = 847640.579
DELTA = 23°16'34"
D = 76°23'40"
T = 15.45'
L = 30.47'
R = 75.00'
PC STA = 1193+69.10WB
Y = 649317.268
X = 847625.798
PT STA = 1193+99.57WB
Y = 649314.498
X = 847655.930
BK = S73°06'33"E
AH = N83°36'54"E

C9

PI STA = 1194+64.95WB
Y = 649321.769
X = 847720.903
DELTA = 7°10'23"
D = 14°19'26"
T = 25.07'
L = 50.08'
R = 400.00'
PC STA = 1194+39.88WB
Y = 649318.980
X = 847695.987
PT STA = 1194+89.96WB
Y = 649321.424
X = 847745.972
BK = N83°36'54"E
AH = S89°12'44"E

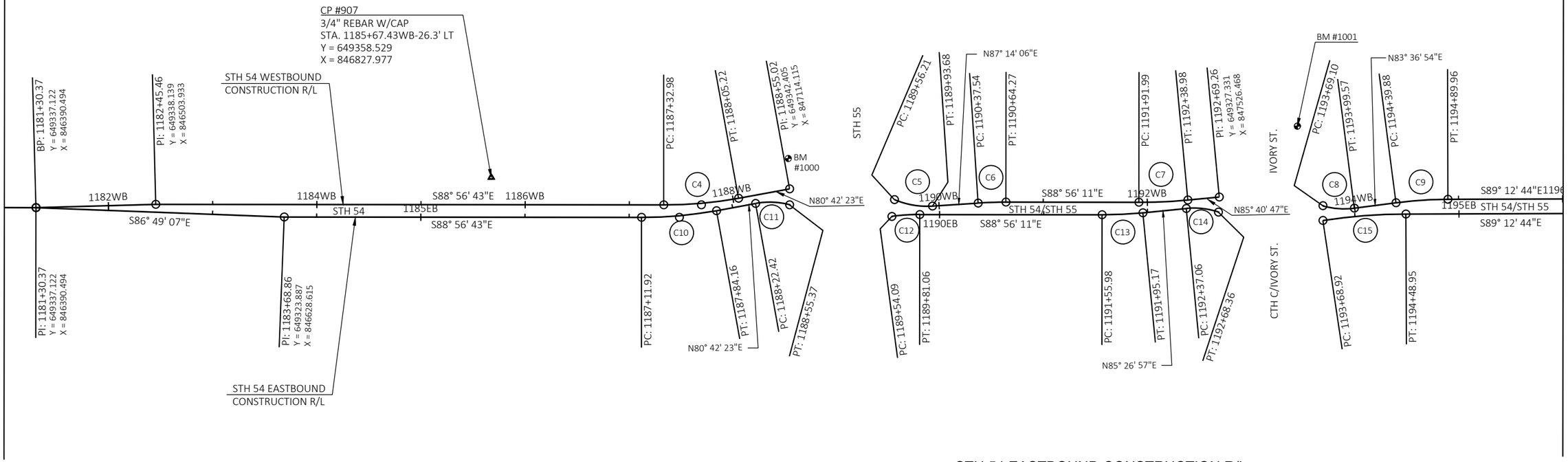

STH 54 EASTBOUND CONSTRUCTION R/L

C10

PI STA = 1187+48.14EB
Y = 649316.906
X = 847007.829
DELTA = 10°20'53"
D = 14°19'26"
T = 36.22'
L = 72.24'
R = 400.00'
PC STA = 1187+11.92EB
Y = 649317.573
X = 846971.615
PT STA = 1187+84.16EB
Y = 649322.755
X = 847043.574
BK = S88°56'43"E
AH = N80°42'23"E

C11

PI STA = 1188+39.17EB
Y = 649331.638
X = 847097.857
DELTA = 25°10'22"
D = 76°23'40"
T = 16.75'
L = 32.95'
R = 75.00'
PC STA = 1188+22.42EB
Y = 649328.934
X = 847081.331
PT STA = 1188+55.37EB
Y = 649327.056
X = 847113.964
BK = N80°42'23"E
AH = S74°07'15"E

C12

PI STA = 1189+67.60EB
Y = 649315.872
X = 847225.270
DELTA = 7°43'30"
D = 28°38'53"
T = 13.50'
L = 26.97'
R = 200.00'
PC STA = 1189+54.09EB
Y = 649314.306
X = 847211.858
PT STA = 1189+81.06EB
Y = 649315.622
X = 847238.771
BK = N83°20'19"E
AH = S88°56'11"E

C13

PI STA = 1191+75.59EB
Y = 649312.011
X = 847433.269
DELTA = 5°36'52"
D = 14°19'26"
T = 19.61'
L = 39.20'
R = 400.00'
PC STA = 1191+55.98EB
Y = 649312.375
X = 847413.659
PT STA = 1191+95.17EB
Y = 649313.567
X = 847452.821
BK = S88°56'11"E
AH = N85°26'57"E

C14

PI STA = 1192+52.94EB
Y = 649318.151
X = 847510.411
DELTA = 23°54'38"
D = 76°23'40"
T = 15.88'
L = 31.30'
R = 75.00'
PC STA = 1192+37.06EB
Y = 649316.891
X = 847494.581
PT STA = 1192+68.36EB
Y = 649312.886
X = 847525.394
BK = N85°26'57"E
AH = S70°38'25"E

C15

PI STA = 1194+09.00EB
Y = 649308.533
X = 847665.226
DELTA = 8°20'13"
D = 10°25'03"
T = 40.08'
L = 80.03'
R = 550.00'
PC STA = 1193+68.92EB
Y = 649303.267
X = 847625.489
PT STA = 1194+48.95EB
Y = 649307.982
X = 847705.307
BK = N82°27'04"E
AH = S89°12'44"E

BENCH MARKS

NO.	STATION	DESCRIPTION	ELEV.
1000	1188+47EB	DISK IN CONCRETE - 43' LT	845.91
1001	33+56IN	BURY BOLD ON HYDRANT - 25' RT	837.68

PROJECT NO: 6230-20-71	HWY: STH 54	COUNTY: OUTAGAMIE	ALIGNMENT DIAGRAM	SHEET 71	E

2

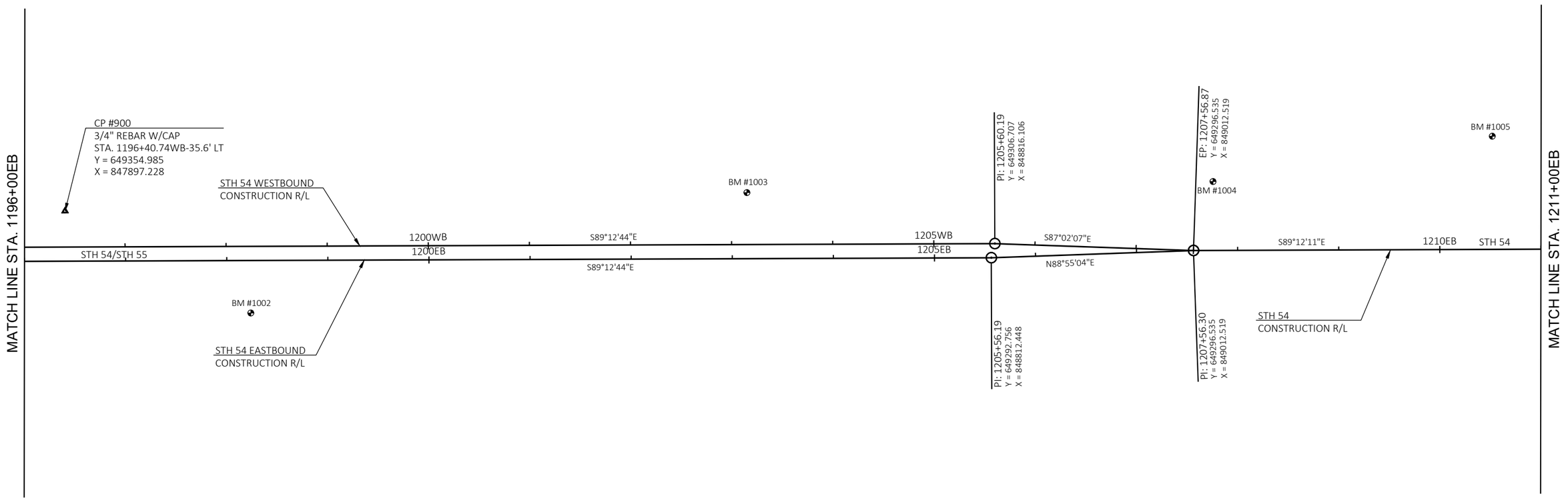

BENCH MARKS

NO.	STATION	DESCRIPTION	ELEV.
1002	1198+24EB	NAIL IN PPOL#16-08247 - 52' RT	829.50
1003	1203+15EB	NAIL LPOL NW STH54&ORCHARD - 65' LT	818.14
1004	1207+76EB	CHISELED X ON SW LPOL - 68' LT	810.38
1005	1210+52EB	BURY BOLT ON HYD - 112' LT	808.84

PROJECT NO: 6230-20-71	HWY: STH 54	COUNTY: OUTAGAMIE	ALIGNMENT DIAGRAM	SHEET 72	E

STH 55 NORTHBOUND CONSTRUCTION R/L

C16

PI STA = 10+74.92NB
Y = 649456.256
X = 847169.753
DELTA = 5°51'52"
D = 11°27'33"
T = 25.61'
L = 51.18'
R = 500.00'
PC STA = 10+49.31NB
Y = 649430.719
X = 847171.688
PT STA = 11+00.48NB
Y = 649481.858
X = 847170.437
BK = N04°19'59"W
AH = N01°31'53"E

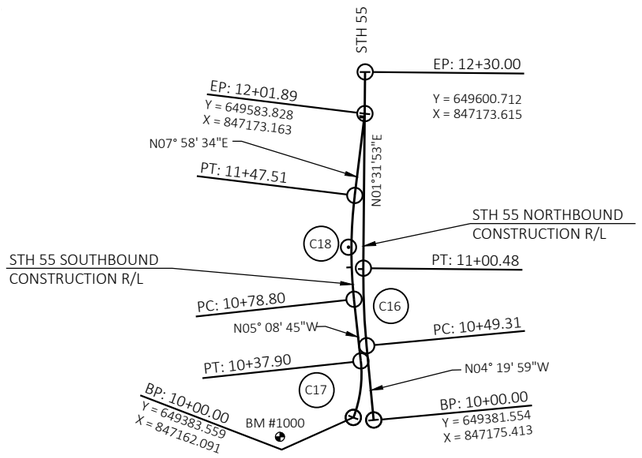

STH 55 SOUTHBOUND CONSTRUCTION R/L

C17

PI STA = 10+19.31SB
Y = 649401.466
X = 847169.325
DELTA = 27°08'37"
D = 71°37'11"
T = 19.31'
L = 37.90'
R = 80.00'
PC STA = 10+00.00SB
Y = 649383.559
X = 847162.091
PT STA = 10+37.90SB
Y = 649420.700
X = 847167.592
BK = N21°59'52"E
AH = N05°08'45"W

C18

PI STA = 11+13.30
Y = 649495.801
X = 847160.829
DELTA = 13°07'19"
D = 19°05'55"
T = 34.50'
L = 68.71'
R = 300.00'
PC STA = 10+78.80
Y = 649461.436
X = 847163.924
PT STA = 11+47.51
Y = 649529.971
X = 847165.617
BK = N05°08'45.3"W
AH = N07°58'33.8"E

BENCH MARKS

NO.	STATION	DESCRIPTION	ELEV.
1000	1188+47EB	DISK IN CONCRETE - 43' LT	845.91
1001	33+56IN	BURY BOLD ON HYDRANT - 25' RT	837.68
1002	1198+24EB	NAIL IN PPOL#16-08247 - 52' RT	829.50

N

IVORY STREET NORTHBOUND CONSTRUCTION R/L

C19

PI STA = 31+23.89IN
Y = 649158.965
X = 847585.423
DELTA = 11°57'33"
D = 19°05'55"
T = 31.42'
L = 62.62'
R = 300.00'
PC STA = 30+92.46IN
Y = 649127.630
X = 847583.059
PT STA = 31+55.08IN
Y = 649190.109
X = 847581.243
BK = N04°18'51"E
AH = N07°38'42"W

C20

PI STA = 32+10.79IN
Y = 649245.327
X = 847573.831
DELTA = 26°50'30"
D = 71°37'11"
T = 19.09'
L = 37.48'
R = 80.00'
PC STA = 31+91.71IN
Y = 649226.408
X = 847576.371
PT STA = 32+29.18IN
Y = 649263.355
X = 847580.108
BK = N07°38'42"W
AH = N19°11'48"E

C21

PI STA = 33+88.43IN
Y = 649421.281
X = 847570.399
DELTA = 13°26'21"
D = 11°27'33"
T = 58.91'
L = 117.28'
R = 500.00'
PC STA = 33+29.52IN
Y = 649363.659
X = 847582.656
PT STA = 34+46.80IN
Y = 649480.172
X = 847571.870
BK = N12°00'31"W
AH = N01°25'51"E

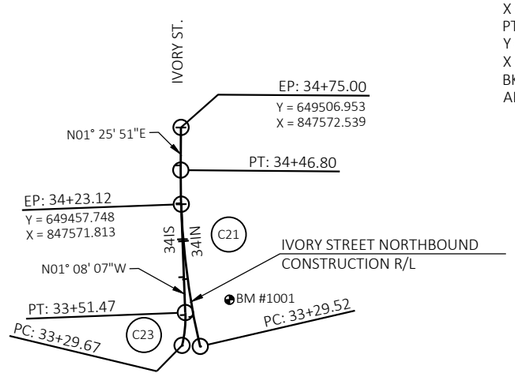

CP #900
3/4" REBAR W/CAP
STA. 1196+40.74WB-35.6' LT
Y = 649354.985
X = 847897.228

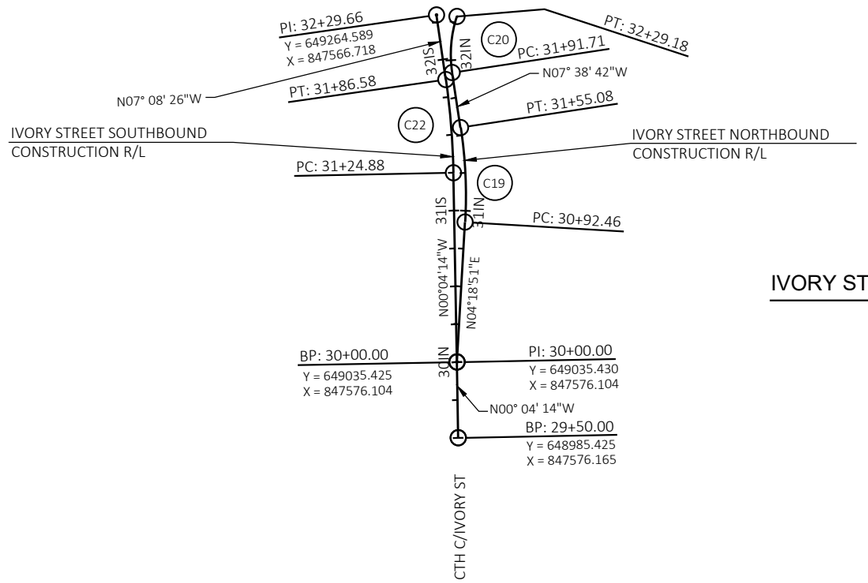

BM #1002

IVORY STREET SOUTHBOUND CONSTRUCTION R/L

C22

PI STA = 31+55.77IS
Y = 649191.199
X = 847575.912
DELTA = 7°04'12"
D = 11°27'33"
T = 30.89'
L = 61.70'
R = 500.00'
PC STA = 31+24.88IS
Y = 649160.311
X = 847575.950
PT STA = 31+86.58IS
Y = 649221.847
X = 847572.072
BK = N00°04'14"W
AH = N07°08'26"W

C23

PI STA = 33+40.64IS
Y = 649375.145
X = 847573.450
DELTA = 15°37'04"
D = 71°37'11"
T = 10.97'
L = 21.81'
R = 80.00'
PC STA = 33+29.67IS
Y = 649364.522
X = 847570.706
PT STA = 33+51.47IS
Y = 649386.114
X = 847573.232
BK = N14°28'58"E
AH = N01°08'07"W

STH 54 WESTBOUND EOP CONSTRUCTION R/L

C24

PI STA = 301+15.80FC
Y = 649345.663
X = 847050.876
DELTA = 3°42'20"
D = 14°19'26"
T = 12.94'
L = 25.87'
R = 400.00'
PC STA = 301+02.86FC
Y = 649343.943
X = 847038.051
PT STA = 301+28.73FC
Y = 649348.207
X = 847063.562
BK = N82°21'47"E
AH = N78°39'27"E

C25

PI STA = 301+51.83FC
Y = 649352.751
X = 847086.213
DELTA = 13°10'41"
D = 28°38'52"
T = 23.10'
L = 46.00'
R = 200.00'
PC STA = 301+28.73FC
Y = 649348.207
X = 847063.562
PT STA = 301+74.73FC
Y = 649362.339
X = 847107.232
BK = N78°39'27"E
AH = N65°28'46"E

C26

PI STA = 301+93.84FC
Y = 649370.269
X = 847124.618
DELTA = 21°38'14"
D = 57°17'45"
T = 19.11'
L = 37.76'
R = 100.00'
PC STA = 301+74.73FC
Y = 649362.339
X = 847107.232
PT STA = 302+12.49FC
Y = 649384.052
X = 847137.855
BK = N65°28'46"E
AH = N43°50'32"E

C27

PI STA = 302+37.55FC
Y = 649402.128
X = 847155.214
DELTA = 48°59'38"
D = 104°10'27"
T = 25.06'
L = 47.03'
R = 55.00'
PC STA = 302+12.49FC
Y = 649384.052
X = 847137.855
PT STA = 302+59.52FC
Y = 649427.088
X = 847152.964
BK = N43°50'32"E
AH = N05°09'06"W

C47

PI STA = 303+11.05FC
Y = 649478.408
X = 847148.337
DELTA = 6°40'59"
D = 18°14'49"
T = 18.33'
L = 36.63'
R = 314.00'
PC STA = 302+92.72FC
Y = 649460.149
X = 847149.983
PT STA = 303+29.34FC
Y = 649496.735
X = 847148.827
BK = N05°09'06"W
AH = N01°31'53"E

STH 54 WESTBOUND EOP CONSTRUCTION R/L

C28

PI STA = 401+68.94FD
Y = 649386.877
X = 847189.906
DELTA = 40°46'55"
D = 57°17'45"
T = 37.17'
L = 71.18'
R = 100.00'
PC STA = 401+31.77FD
Y = 649424.036
X = 847190.899
PT STA = 402+02.95FD
Y = 649358.092
X = 847213.425
BK = S01°31'53"W
AH = S39°15'02"E

C29

PI STA = 402+33.52FD
Y = 649334.416
X = 847232.769
DELTA = 58°08'18"
D = 104°10'27"
T = 30.57'
L = 55.81'
R = 55.00'
PC STA = 402+02.95FD
Y = 649358.092
X = 847213.425
PT STA = 402+58.76FD
Y = 649338.348
X = 847263.089
BK = S39°15'02"E
AH = N82°36'40"E

C30

PI STA = 405+05.06FD
Y = 649339.609
X = 847509.048
DELTA = 27°39'04"
D = 47°44'47"
T = 29.53'
L = 57.91'
R = 120.00'
PC STA = 404+75.53FD
Y = 649340.157
X = 847479.522
PT STA = 405+33.44FD
Y = 649352.826
X = 847535.457
BK = S88°56'11"E
AH = N63°24'45"E

C31

PI STA = 405+64.43FD
Y = 649366.696
X = 847563.169
DELTA = 69°06'23"
D = 127°19'26"
T = 30.99'
L = 54.28'
R = 45.00'
PC STA = 405+33.44FD
Y = 649352.826
X = 847535.457
PT STA = 405+87.71FD
Y = 649397.532
X = 847560.095
BK = N63°24'45"E
AH = N05°41'38"W

STH 54 WESTBOUND EOP CONSTRUCTION R/L

C32

PI STA = 500+77.32FE
Y = 649405.516
X = 847586.010
DELTA = 22°32'03"
D = 33°42'12"
T = 33.87'
L = 66.86'
R = 170.00'
PC STA = 500+43.45FE
Y = 649439.373
X = 847586.855
PT STA = 501+10.31FE
Y = 649373.920
X = 847598.203
BK = S01°25'52"W
AH = S21°06'10"E

C33

PI STA = 501+30.31FE
Y = 649355.265
X = 847605.403
DELTA = 29°51'23"
D = 76°23'40"
T = 20.00'
L = 39.08'
R = 75.00'
PC STA = 501+10.31FE
Y = 649373.920
X = 847598.203
PT STA = 501+49.40FE
Y = 649342.671
X = 847620.933
BK = S21°06'10"E
AH = S50°57'33"E

C34

PI STA = 501+77.21FE
Y = 649325.151
X = 847642.537
DELTA = 49°44'36"
D = 95°29'35"
T = 27.81'
L = 52.09'
R = 60.00'
PC STA = 501+49.40FE
Y = 649342.671
X = 847620.933
PT STA = 502+01.49FE
Y = 649330.316
X = 847669.868
BK = S50°57'33"E
AH = N79°17'51"E

STH 54 EASTBOUND EOP CONSTRUCTION R/L

C35

PI STA = 100+69.01FA
Y = 649301.953
X = 847003.413
DELTA = 4°07'16"
D = 13°46'23"
T = 14.97'
L = 29.92'
R = 416.00'
PC STA = 100+54.04FA
Y = 649301.613
X = 846988.449
PT STA = 100+83.96FA
Y = 649303.369
X = 847018.313
BK = N88°41'43"E
AH = N84°34'27"E

C36

PI STA = 101+62.11FA
Y = 649319.550
X = 847094.494
DELTA = 49°42'39"
D = 95°29'35"
T = 27.79'
L = 52.06'
R = 60.00'
PC STA = 101+34.32FA
Y = 649312.172
X = 847067.697
PT STA = 101+86.37FA
Y = 649303.880
X = 847117.450
BK = N74°36'27"E
AH = S55°40'55"E

C37

PI STA = 102+37.68FA
Y = 649274.954
X = 847159.825
DELTA = 57°51'34"
D = 110°11'03"
T = 28.74'
L = 52.51'
R = 52.00'
PC STA = 102+08.94FA
Y = 649291.158
X = 847136.087
PT STA = 102+61.45FA
Y = 649286.433
X = 847186.173
BK = S55°40'55"E
AH = N66°27'32"E

C38

PI STA = 102+72.65FA
Y = 649290.906
X = 847196.440
DELTA = 6°24'36"
D = 28°38'52"
T = 11.20'
L = 22.38'
R = 200.00'
PC STA = 102+61.45FA
Y = 649286.433
X = 847186.173
PT STA = 102+83.83FA
Y = 649294.205
X = 847207.143
BK = N66°27'32"E
AH = N72°52'08"E

C39

PI STA = 102+99.84FA
Y = 649298.922
X = 847222.445
DELTA = 18°11'42"
D = 57°17'45"
T = 16.01'
L = 31.76'
R = 100.00'
PC STA = 102+83.83FA
Y = 649294.205
X = 847207.143
PT STA = 103+15.58FA
Y = 649298.625
X = 847238.455
BK = N72°52'08"E
AH = S88°56'11"E

C40

PI STA = 105+01.39FA
Y = 649295.175
X = 847424.235
DELTA = 2°59'34"
D = 13°44'24"
T = 10.89'
L = 21.78'
R = 417.00'
PC STA = 104+90.50FA
Y = 649295.378
X = 847413.343
PT STA = 105+12.28FA
Y = 649295.542
X = 847435.122
BK = S88°56'11"E
AH = N88°04'15"E

C41

PI STA = 105+87.72FA
Y = 649306.030
X = 847509.750
DELTA = 56°49'48"
D = 114°35'30"
T = 27.05'
L = 49.59'
R = 50.00'
PC STA = 105+60.67FA
Y = 649301.773
X = 847483.035
PT STA = 106+10.26FA
Y = 649285.997
X = 847527.930
BK = N80°56'45"E
AH = S42°13'27"E

C42

PI STA = 106+48.80FA
Y = 649257.457
X = 847553.830
DELTA = 42°09'14"
D = 57°17'45"
T = 38.54'
L = 73.57'
R = 100.00'
PC STA = 106+10.26FA
Y = 649285.997
X = 847527.930
PT STA = 106+83.83FA
Y = 649218.917
X = 847553.878
BK = S42°13'27"E
AH = S00°04'14"E

STH 54 EASTBOUND EOP CONSTRUCTION R/L

C43

PI STA = 300+17.01
Y = 649176.162
X = 847597.240
DELTA = 5°40'13"
D = 18°14'49"
T = 15.55'
L = 31.08'
R = 314.00'
PC STA = 300+01.46
Y = 649160.621
X = 847597.776
PT STA = 300+32.53
Y = 649191.574
X = 847595.172
BK = N01°58'28.6"W
AH = N07°38'41.7"W

C44

PI STA = 300+83.83FB
Y = 649242.420
X = 847588.347
DELTA = 47°30'05"
D = 114°35'30"
T = 22.00'
L = 41.45'
R = 50.00'
PC STA = 300+61.83FB
Y = 649220.615
X = 847591.274
PT STA = 301+03.29FB
Y = 649259.310
X = 847602.447
BK = N07°38'42"W
AH = N39°51'24"E

C45

PI STA = 301+18.35FB
Y = 649270.870
X = 847612.098
DELTA = 22°42'24"
D = 76°23'40"
T = 15.06'
L = 29.72'
R = 75.00'
PC STA = 301+03.29FB
Y = 649259.310
X = 847602.447
PT STA = 301+33.01FB
Y = 649277.809
X = 847625.463
BK = N39°51'24"E
AH = N62°33'48"E

C46

PI STA = 301+63.18FB
Y = 649291.710
X = 847652.238
DELTA = 28°13'27"
D = 47°44'47"
T = 30.17'
L = 59.11'
R = 120.00'
PC STA = 301+33.01FB
Y = 649277.809
X = 847625.463
PT STA = 301+92.12FB
Y = 649291.295
X = 847682.404
BK = N62°33'47"E
AH = S89°12'45"E

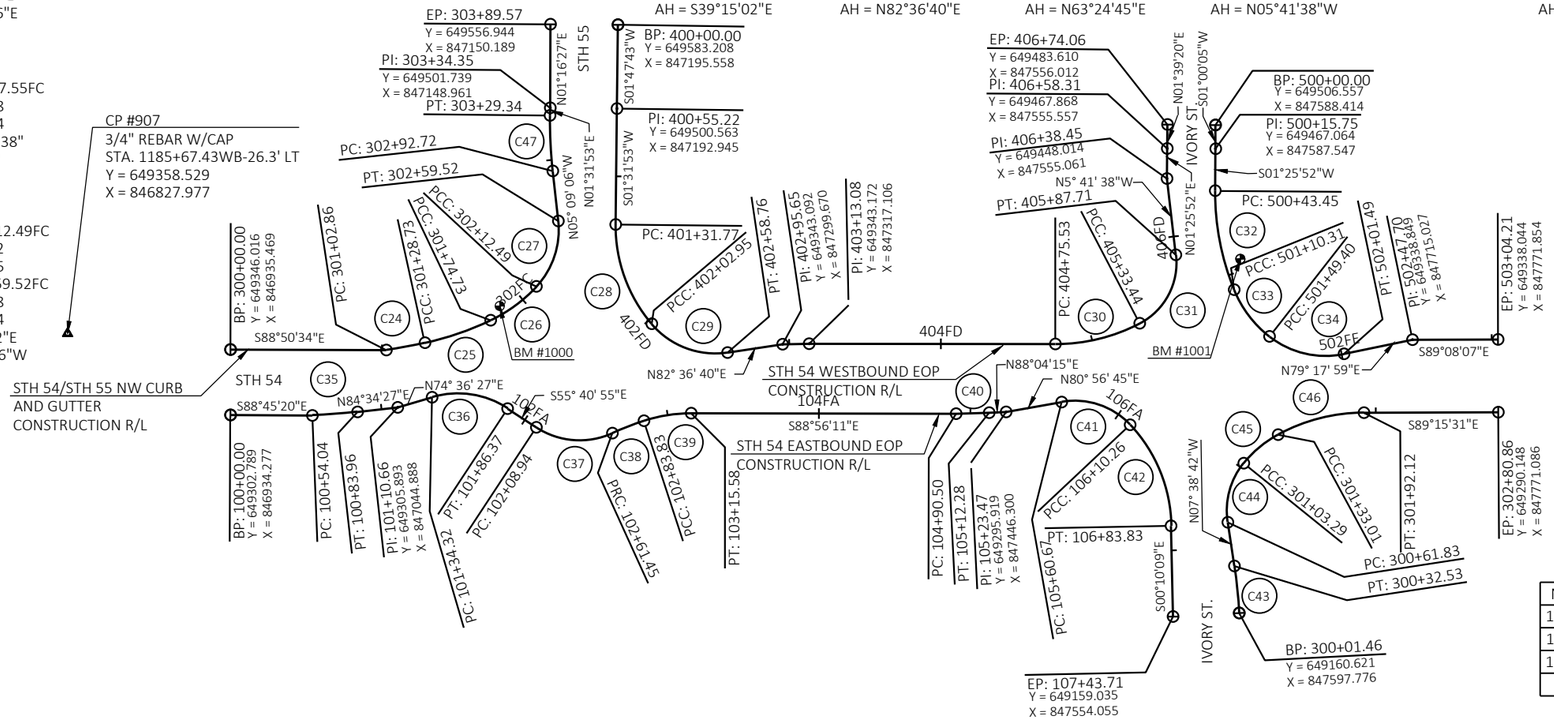

BENCH MARKS

NO.	STATION	DESCRIPTION	ELEV.
1000	1188+47EB	DISK IN CONCRETE - 43' LT	845.91
1001	33+56IN	BURY BOLD ON HYDRANT - 25' RT	837.68
1002	1198+24EB	NAIL IN PPOL#16-08247 - 52' RT	829.50

PROJECT NO: 6230-20-71	HWY: STH 54	COUNTY: OUTAGAMIE	ALIGNMENT DIAGRAM	SHEET 74	E

2

N

CENTER CIRCLE R/L 'CB'

C51	C52	C53	C54	C55	C56
PI STA = 60+15.83'CB'	PI STA = 60+44.66'CB'	PI STA = 60+78.69'CB'	PI STA = 61+11.37'CB'	PI STA = 61+40.20'CB'	PI STA = 61+74.23'CB'
Y = 649347.867	Y = 649326.264	Y = 649290.196	Y = 649280.035	Y = 649301.642	Y = 649337.709
X = 847565.735	X = 847542.570	X = 847550.235	X = 847585.680	X = 847608.850	X = 847601.185
DELTA = 58°58'37"	DELTA = 58°59'50"	DELTA = 62°00'20"	DELTA = 58°59'50"	DELTA = 58°59'50"	DELTA = 62°00'20"
D = 204°37'40"	D = 204°37'40"	D = 163°42'08"	D = 204°37'40"	D = 204°37'40"	D = 163°42'08"
T = 15.83'	T = 15.84'	T = 21.03'	T = 15.84'	T = 15.84'	T = 21.03'
L = 28.82'	L = 28.83'	L = 37.88'	L = 28.83'	L = 28.83'	L = 37.88'
R = 28.00'	R = 28.00'	R = 35.00'	R = 28.00'	R = 28.00'	R = 35.00'
PC STA = 60+00.00'CB'	PC STA = 60+28.82'CB'	PC STA = 60+57.65'CB'	PC STA = 60+95.53'CB'	PC STA = 61+24.36'CB'	PC STA = 61+53.19'CB'
Y = 649343.508	Y = 649337.068	Y = 649310.769	Y = 649284.400	Y = 649290.838	Y = 649317.136
X = 847580.958	X = 847554.155	X = 847545.862	X = 847570.452	X = 847597.265	X = 847605.557
PT STA = 60+28.82'CB'	PT STA = 60+57.65'CB'	PT STA = 60+95.53'CB'	PT STA = 61+24.36'CB'	PT STA = 61+53.19'CB'	PT STA = 61+91.07'CB'
Y = 649337.068	Y = 649310.769	Y = 649284.400	Y = 649290.838	Y = 649317.136	Y = 649343.506
X = 847554.155	X = 847545.862	X = 847570.452	X = 847597.265	X = 847605.557	X = 847580.967
BK = N74°01'25"W	BK = S46°59'58"W	BK = S11°59'52"E	BK = S74°00'12"E	BK = N46°59'58"E	BK = N11°59'52"W
AH = S46°59'58"W	AH = S11°59'52"E	AH = S74°00'12"E	AH = N46°59'58"E	AH = N11°59'52"W	AH = N74°00'12"W

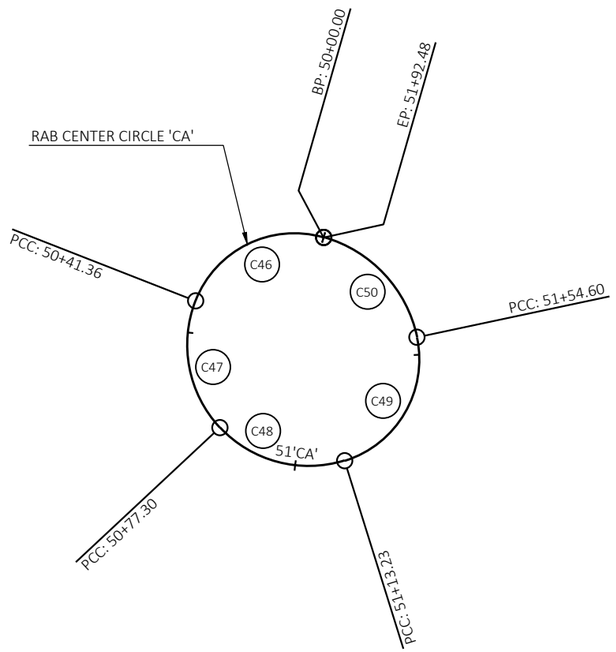

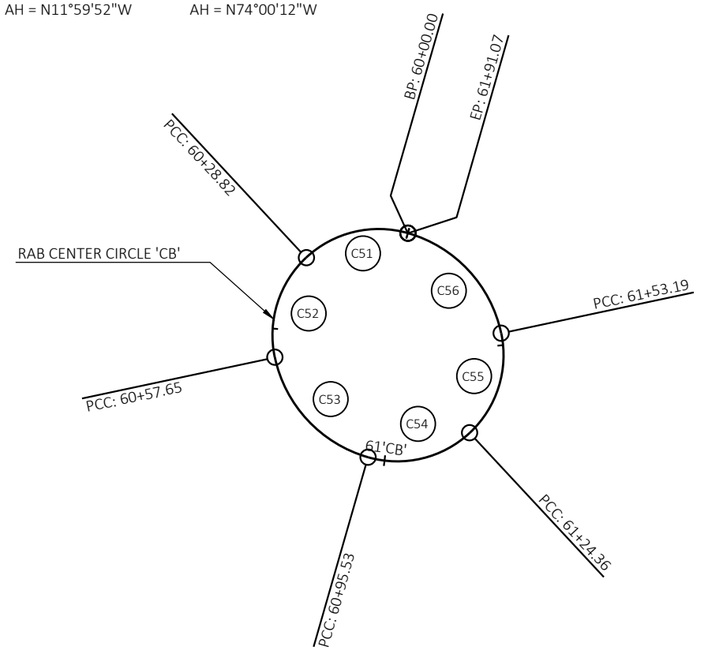

CENTER CIRCLE R/L 'CA'

C46	C47	C48	C49	C50
PI STA = 50+25.49'CA'	PI STA = 50+61.49'CA'	PI STA = 50+97.43'CA'	PI STA = 51+38.73'CA'	PI STA = 51+75.63'CA'
Y = 649369.497	Y = 649327.002	Y = 649297.558	Y = 649311.162	Y = 649356.681
X = 847144.876	X = 847128.273	X = 847155.728	X = 847199.286	X = 847189.613
DELTA = 84°38'09"	DELTA = 64°20'28"	DELTA = 64°21'18"	DELTA = 84°39'22"	DELTA = 62°00'20"
D = 204°37'40"	D = 179°02'58"	D = 179°05'02"	D = 204°37'40"	D = 163°42'08"
T = 25.49'	T = 20.13'	T = 20.13'	T = 25.50'	T = 21.03'
L = 41.36'	L = 35.93'	L = 35.94'	L = 41.37'	L = 37.88'
R = 28.00'	R = 32.00'	R = 31.99'	R = 28.00'	R = 35.00'
PC STA = 50+00.00'CA'	PC STA = 50+41.36'CA'	PC STA = 50+77.30'CA'	PC STA = 51+13.23'CA'	PC STA = 51+54.60'CA'
Y = 649362.480	Y = 649345.751	Y = 649312.281	Y = 649303.560	Y = 649336.108
X = 847169.385	X = 847135.598	X = 847142.001	X = 847174.942	X = 847193.985
PT STA = 50+41.36'CA'	PT STA = 50+77.30'CA'	PT STA = 51+13.23'CA'	PT STA = 51+54.60'CA'	PT STA = 51+92.48'CA'
Y = 649345.751	Y = 649312.281	Y = 649303.560	Y = 649336.108	Y = 649362.477
X = 847135.598	X = 847142.001	X = 847174.942	X = 847193.985	X = 847169.395
BK = N74°01'25"W	BK = S21°20'26"W	BK = S42°59'37"E	BK = N72°39'30"E	BK = N11°59'52"W
AH = S21°20'26"W	AH = S43°00'02"E	AH = N72°39'05"E	AH = N11°59'52"W	AH = N74°00'12"W

PROJECT NO: 6230-20-71	HWY: STH 54	COUNTY: OUTAGAMIE	ALIGNMENT DIAGRAM	SHEET 75	E

6230-20-71

Line	Item	Item Description	Unit	Total	Qty
0002	201.0205	Grubbing	STA	2.000	2.000
0004	201.0220	Grubbing	ID	24.000	24.000
0006	203.0100	Removing Small Pipe Culverts	EACH	4.000	4.000
0008	204.0100	Removing Concrete Pavement	SY	300.000	300.000
0010	204.0115	Removing Asphaltic Surface Butt Joints	SY	345.000	345.000
0012	204.0120	Removing Asphaltic Surface Milling	SY	153,000.000	153,000.000
0014	204.0130	Removing Curb	LF	23.000	23.000
0016	204.0150	Removing Curb & Gutter	LF	2,540.000	2,540.000
0018	204.0155	Removing Concrete Sidewalk	SY	450.000	450.000
0020	204.0165	Removing Guardrail	LF	1,430.000	1,430.000
0022	204.0195	Removing Concrete Bases	EACH	12.000	12.000
0024	204.0210	Removing Manholes	EACH	5.000	5.000
0026	204.0220	Removing Inlets	EACH	10.000	10.000
0028	204.0245	Removing Storm Sewer (size) 01. 6-Inch	LF	45.000	45.000
0030	204.0245	Removing Storm Sewer (size) 02. 8-Inch	LF	165.000	165.000
0032	204.0245	Removing Storm Sewer (size) 03. 10-Inch	LF	35.000	35.000
0034	204.0245	Removing Storm Sewer (size) 04. 12-Inch	LF	530.000	530.000
0036	204.0245	Removing Storm Sewer (size) 05. 15-Inch	LF	385.000	385.000
0038	204.0245	Removing Storm Sewer (size) 06. 18-Inch	LF	120.000	120.000
0040	204.9060.S	Removing (item description) 01. Apron Endwalls	EACH	14.000	14.000
0042	204.9060.S	Removing (item description) 02. Monitoring Wells	EACH	6.000	6.000
0044	204.9060.S	Removing (item description) 03. Removing Signs	EACH	1.000	1.000
0046	205.0100	Excavation Common	CY	9,700.000	9,700.000
0048	205.0501.S	Excavation, Hauling, and Disposal of Petroleum Contaminated Soil	TON	1,500.000	1,500.000
0050	208.0100	Borrow	CY	140.000	140.000
0052	211.0101	Prepare Foundation for Asphaltic Paving (project) 01. 6230-20-71	EACH	1.000	1.000
0054	211.0400	Prepare Foundation for Asphaltic Shoulders	STA	776.000	776.000
0056	213.0100	Finishing Roadway (project) 01. 6230-20-71	EACH	1.000	1.000
0058	305.0110	Base Aggregate Dense 3/4-Inch	TON	5,450.000	5,450.000
0060	305.0120	Base Aggregate Dense 1 1/4-Inch	TON	3,060.000	3,060.000
0062	310.0115	Base Aggregate Open-Graded	CY	33.000	33.000
0064	312.0110	Select Crushed Material	TON	6,480.000	6,480.000
0066	405.0100	Coloring Concrete WisDOT Red	CY	250.000	250.000
0068	415.2010	Concrete Truck Apron 12-inch	SY	615.000	615.000
0070	416.0610	Drilled Tie Bars	EACH	40.000	40.000
0072	455.0605	Tack Coat	GAL	21,160.000	21,160.000
0074	460.0105.S	HMA Percent Within Limits (PWL) Test Strip Volumetrics	EACH	2.000	2.000
0076	460.0110.S	HMA Percent Within Limits (PWL) Test Strip Density	EACH	2.000	2.000
0078	460.2005	Incentive Density PWL HMA Pavement	DOL	10,970.000	10,970.000
0080	460.2007	Incentive Density HMA Pavement Longitudinal Joints	DOL	16,570.000	16,570.000
0082	460.2010	Incentive Air Voids HMA Pavement	DOL	27,030.000	27,030.000
0084	460.6223	HMA Pavement 3 MT 58-28 S	TON	24,570.000	24,570.000
0086	460.6224	HMA Pavement 4 MT 58-28 S	TON	17,060.000	17,060.000
0088	460.7424	HMA Pavement 4 HT 58-28 H	TON	880.000	880.000
0090	465.0110	Asphaltic Surface Patching	TON	115.000	115.000
0092	465.0120	Asphaltic Surface Driveways and Field Entrances	TON	410.000	410.000
0094	465.0520	Asphaltic Rumble Strips, Shoulder	LF	45,100.000	45,100.000
0096	465.0560	Asphaltic Rumble Strips, Centerline	LF	30,405.000	30,405.000
0098	520.8000	Concrete Collars for Pipe	EACH	19.000	19.000

6230-20-71

Line	Item	Item Description	Unit	Total	Qty
0100	521.1018	Apron Endwalls for Culvert Pipe Steel 18-Inch	EACH	2.000	2.000
0102	521.3118	Culvert Pipe Corrugated Steel 18-Inch	LF	48.000	48.000
0104	522.1024	Apron Endwalls for Culvert Pipe Reinforced Concrete 24-Inch	EACH	4.000	4.000
0106	522.1030	Apron Endwalls for Culvert Pipe Reinforced Concrete 30-Inch	EACH	2.000	2.000
0108	522.1036	Apron Endwalls for Culvert Pipe Reinforced Concrete 36-Inch	EACH	2.000	2.000
0110	522.1042	Apron Endwalls for Culvert Pipe Reinforced Concrete 42-Inch	EACH	2.000	2.000
0112	522.1048	Apron Endwalls for Culvert Pipe Reinforced Concrete 48-Inch	EACH	4.000	4.000
0114	601.0110	Concrete Curb Type D	LF	24.000	24.000
0116	601.0407	Concrete Curb & Gutter 18-Inch Type D	LF	60.000	60.000
0118	601.0411	Concrete Curb & Gutter 30-Inch Type D	LF	50.000	50.000
0120	602.0405	Concrete Sidewalk 4-Inch	SF	5,560.000	5,560.000
0122	602.0415	Concrete Sidewalk 6-Inch	SF	430.000	430.000
0124	602.0515	Curb Ramp Detectable Warning Field Natural Patina	SF	60.000	60.000
0126	602.0810	Concrete Driveway 6-Inch	SY	65.000	65.000
0128	602.0820	Concrete Driveway 8-Inch	SY	80.000	80.000
0130	602.0870	Concrete Driveway HES 8-Inch	SY	160.000	160.000
0132	608.0005	Storm Sewer Rock Excavation	CY	400.000	400.000
0134	608.0412	Storm Sewer Pipe Reinforced Concrete Class IV 12-Inch	LF	448.000	448.000
0136	608.0415	Storm Sewer Pipe Reinforced Concrete Class IV 15-Inch	LF	33.000	33.000
0138	608.0418	Storm Sewer Pipe Reinforced Concrete Class IV 18-Inch	LF	116.000	116.000
0140	608.0424	Storm Sewer Pipe Reinforced Concrete Class IV 24-Inch	LF	738.000	738.000
0142	608.2319	Storm Sewer Pipe Reinforced Concrete Horizontal Elliptical Class HE-III 19x30-Inch	LF	5.000	5.000
0144	608.6008	Storm Sewer Pipe Composite 8-Inch	LF	26.000	26.000
0146	608.6012	Storm Sewer Pipe Composite 12-Inch	LF	26.000	26.000
0148	611.0535	Manhole Covers Type J-Special	EACH	5.000	5.000
0150	611.0612	Inlet Covers Type C	EACH	2.000	2.000
0152	611.0624	Inlet Covers Type H	EACH	13.000	13.000
0154	611.0639	Inlet Covers Type H-S	EACH	4.000	4.000
0156	611.2004	Manholes 4-FT Diameter	EACH	4.000	4.000
0158	611.2005	Manholes 5-FT Diameter	EACH	1.000	1.000
0160	611.3004	Inlets 4-FT Diameter	EACH	4.000	4.000
0162	611.3230	Inlets 2x3-FT	EACH	16.000	16.000
0164	611.8110	Adjusting Manhole Covers	EACH	1.000	1.000
0166	611.8115	Adjusting Inlet Covers	EACH	1.000	1.000
0168	612.0106	Pipe Underdrain 6-Inch	LF	330.000	330.000
0170	612.0902.S	Insulation Board Polystyrene (inch) 01. 2-Inch	SY	4.000	4.000
0172	614.2300	MGS Guardrail 3	LF	225.000	225.000
0174	614.2310	MGS Guardrail 3 HS	LF	100.000	100.000
0176	614.2340	MGS Guardrail 3 L	LF	637.500	637.500
0178	614.2610	MGS Guardrail Terminal EAT	EACH	16.000	16.000
0180	614.8010	Anchor Post Assembly Top Mount	EACH	6.000	6.000
0182	618.0100	Maintenance And Repair of Haul Roads (project) 01. 6230-20-71	EACH	1.000	1.000
0184	619.1000	Mobilization	EACH	1.000	1.000
0186	620.0300	Concrete Median Sloped Nose	SF	570.000	570.000
0188	621.0100	Landmark Reference Monuments	EACH	8.000	8.000
0190	624.0100	Water	MGAL	240.000	240.000
0192	625.0100	Topsoil	SY	10,000.000	10,000.000
0194	628.1504	Silt Fence	LF	4,150.000	4,150.000
0196	628.1520	Silt Fence Maintenance	LF	8,300.000	8,300.000

6230-20-71

Line	Item	Item Description	Unit	Total	Qty
0198	628.1905	Mobilizations Erosion Control	EACH	6.000	6.000
0200	628.1910	Mobilizations Emergency Erosion Control	EACH	5.000	5.000
0202	628.2004	Erosion Mat Class I Type B	SY	6,700.000	6,700.000
0204	628.2006	Erosion Mat Urban Class I Type A	SY	3,300.000	3,300.000
0206	628.7005	Inlet Protection Type A	EACH	25.000	25.000
0208	628.7010	Inlet Protection Type B	EACH	5.000	5.000
0210	628.7015	Inlet Protection Type C	EACH	35.000	35.000
0212	628.7020	Inlet Protection Type D	EACH	7.000	7.000
0214	628.7555	Culvert Pipe Checks	EACH	60.000	60.000
0216	628.7570	Rock Bags	EACH	845.000	845.000
0218	629.0210	Fertilizer Type B	CWT	8.000	8.000
0220	630.0130	Seeding Mixture No. 30	LB	120.000	120.000
0222	630.0140	Seeding Mixture No. 40	LB	60.000	60.000
0224	630.0500	Seed Water	MGAL	240.000	240.000
0226	633.5200	Markers Culvert End	EACH	14.000	14.000
0228	634.0614	Posts Wood 4x6-Inch X 14-FT	EACH	4.000	4.000
0230	634.0616	Posts Wood 4x6-Inch X 16-FT	EACH	5.000	5.000
0232	634.0618	Posts Wood 4x6-Inch X 18-FT	EACH	16.000	16.000
0234	637.2210	Signs Type II Reflective H	SF	206.910	206.910
0236	637.2230	Signs Type II Reflective F	SF	53.000	53.000
0238	638.2602	Removing Signs Type II	EACH	25.000	25.000
0240	638.3000	Removing Small Sign Supports	EACH	24.000	24.000
0242	642.5401	Field Office Type D	EACH	1.000	1.000
0244	643.0300	Traffic Control Drums	DAY	4,400.000	4,400.000
0246	643.0410	Traffic Control Barricades Type II	DAY	2,300.000	2,300.000
0248	643.0420	Traffic Control Barricades Type III	DAY	4,100.000	4,100.000
0250	643.0705	Traffic Control Warning Lights Type A	DAY	8,200.000	8,200.000
0252	643.0900	Traffic Control Signs	DAY	24,900.000	24,900.000
0254	643.0920	Traffic Control Covering Signs Type II	EACH	4.000	4.000
0256	643.1000	Traffic Control Signs Fixed Message	SF	26.500	26.500
0258	643.1050	Traffic Control Signs PCMS	DAY	42.000	42.000
0260	643.3165	Temporary Marking Line Paint 6-Inch	LF	326,440.000	326,440.000
0262	643.5000	Traffic Control	EACH	1.000	1.000
0264	644.1410	Temporary Pedestrian Surface Asphalt	SF	110.000	110.000
0266	644.1601	Temporary Pedestrian Curb Ramp	DAY	120.000	120.000
0268	644.1605	Temporary Pedestrian Detectable Warning Field	SF	16.000	16.000
0270	644.1810	Temporary Pedestrian Barricade	LF	192.000	192.000
0272	645.0111	Geotextile Type DF Schedule A	SY	255.000	255.000
0274	646.1020	Marking Line Epoxy 4-Inch	LF	50.000	50.000
0276	646.2020	Marking Line Epoxy 6-Inch	LF	5,485.000	5,485.000
0278	646.2040	Marking Line Grooved Wet Ref Epoxy 6-Inch	LF	87,590.000	87,590.000
0280	646.3020	Marking Line Epoxy 8-Inch	LF	25.000	25.000
0282	646.4020	Marking Line Epoxy 10-Inch	LF	2,725.000	2,725.000
0284	646.4720	Marking Line Same Day Epoxy 6-Inch	LF	19,400.000	19,400.000
0286	646.5020	Marking Arrow Epoxy	EACH	8.000	8.000
0288	646.6120	Marking Stop Line Epoxy 18-Inch	LF	62.000	62.000
0290	646.6320	Marking Dotted Extension Epoxy 18-Inch	LF	89.000	89.000
0292	646.7120	Marking Diagonal Epoxy 12-Inch	LF	170.000	170.000
0294	646.7420	Marking Crosswalk Epoxy Transverse Line 6-Inch	LF	200.000	200.000

6230-20-71

Line	Item	Item Description	Unit	Total	Qty
0296	646.8120	Marking Curb Epoxy	LF	50.000	50.000
0298	646.8220	Marking Island Nose Epoxy	EACH	5.000	5.000
0300	646.9010	Marking Removal Line Water Blasting 4-Inch	LF	310.000	310.000
0302	650.4000	Construction Staking Storm Sewer	EACH	25.000	25.000
0304	650.4500	Construction Staking Subgrade	LF	1,239.000	1,239.000
0306	650.5000	Construction Staking Base	LF	1,239.000	1,239.000
0308	650.5500	Construction Staking Curb Gutter and Curb & Gutter	LF	4,009.000	4,009.000
0310	650.8000	Construction Staking Resurfacing Reference	LF	39,614.000	39,614.000
0312	650.8501	Construction Staking Electrical Installations (project) 01. 6230-20-71	EACH	1.000	1.000
0314	650.9000	Construction Staking Curb Ramps	EACH	6.000	6.000
0316	650.9500	Construction Staking Sidewalk (project) 01. 6230-20-71	EACH	1.000	1.000
0318	650.9911	Construction Staking Supplemental Control (project) 01. 6230-20-71	EACH	1.000	1.000
0320	650.9920	Construction Staking Slope Stakes	LF	2,889.000	2,889.000
0322	652.0225	Conduit Rigid Nonmetallic Schedule 40 2-Inch	LF	1,205.000	1,205.000
0324	653.0164	Pull Boxes Non-Conductive 24x42-Inch	EACH	14.000	14.000
0326	653.0905	Removing Pull Boxes	EACH	9.000	9.000
0328	654.0105	Concrete Bases Type 5	EACH	13.000	13.000
0330	654.0220	Concrete Control Cabinet Bases Type 10	EACH	2.000	2.000
0332	655.0610	Electrical Wire Lighting 12 AWG	LF	1,950.000	1,950.000
0334	655.0615	Electrical Wire Lighting 10 AWG	LF	5,918.000	5,918.000
0336	656.0201	Electrical Service Meter Breaker Pedestal (location) 01. STH 54 & STH 55	EACH	1.000	1.000
0338	656.0201	Electrical Service Meter Breaker Pedestal (location) 02. STH 54 & CTH C	EACH	1.000	1.000
0340	657.0255	Transformer Bases Breakaway 11 1/2-Inch Bolt Circle	EACH	13.000	13.000
0342	657.0322	Poles Type 5-Aluminum	EACH	13.000	13.000
0344	657.0710	Luminaire Arms Truss Type 4 1/2-Inch Clamp 12-FT	EACH	13.000	13.000
0346	659.1115	Luminaires Utility LED A	EACH	13.000	13.000
0348	659.5000.S	Lamp, Ballast, LED, Switch Disposal by Contractor	EACH	29.000	29.000
0350	690.0150	Sawing Asphalt	LF	1,000.000	1,000.000
0352	690.0250	Sawing Concrete	LF	290.000	290.000
0354	715.0720	Incentive Compressive Strength Concrete Pavement	DOL	500.000	500.000
0356	740.0440	Incentive IRI Ride	DOL	60,060.000	60,060.000
0358	999.2000.S	Installing and Maintaining Bird Deterrent System (station) 01. Station 1329+13	EACH	1.000	1.000
0360	999.2000.S	Installing and Maintaining Bird Deterrent System (station) 02. Station 1523+73	EACH	1.000	1.000
0362	ASP.1T0A	On-the-Job Training Apprentice at $5.00/HR	HRS	2,400.000	2,400.000
0364	ASP.1T0G	On-the-Job Training Graduate at $5.00/HR	HRS	3,040.000	3,040.000
0366	SPV.0060	Special 01. Adjusting Sanitary Manhole Covers	EACH	4.000	4.000
0368	SPV.0060	Special 02. Adjusting Water Valves	EACH	7.000	7.000
0370	SPV.0060	Special 03. Removing Traffic Signals STH 54 & STH 55	EACH	1.000	1.000
0372	SPV.0060	Special 04. Cleaning Culvert End	EACH	2.000	2.000
0374	SPV.0060	Special 05. Inlets 5-Ft Diameter	EACH	1.000	1.000
0376	SPV.0090	Special 01. Concrete Curb Type A Modified	LF	20.000	20.000
0378	SPV.0090	Special 02. Concrete Curb & Gutter 30-Inch Type D Modified	LF	2,380.000	2,380.000
0380	SPV.0090	Special 03. Concrete Curb & Gutter 4-Inch Sloped 36-Inch Type D Modified	LF	705.000	705.000
0382	SPV.0090	Special 04. Concrete Curb & Gutter 3-Inch Sloped 36-Inch Type R	LF	385.000	385.000
0384	SPV.0090	Special 05. Concrete Curb & Gutter HES 30-Inch Type D Modified	LF	385.000	385.000
0386	SPV.0090	Special 06. Storm Sewer Pipe Composite 6-Inch	LF	10.000	10.000
0388	SPV.0165	Special 01. Concrete Curb & Gutter Transition	SF	100.000	100.000
0390	SPV.0180	Special 01. Removing Distressed Asphaltic Surface Milling	SY	500.000	500.000

GRUBBING

CATEGORY	STATION	TO	STATION	LOCATION		201.0205 GRUBBING STA	201.0220 GRUBBING ID	REMARKS
0010	1188+66			STH 54 (WB)	LT	-	12	4 TREES 3" ID
0010	1188+75			STH 54 (EB)	RT	-	12	1 TREE 12" ID
0010	1416+00	-	1417+00	STH 54 (EB)	LT	2	-	
				TOTALS 0010		2	24	

REMOVING CULVERT PIPE AND APRON ENDWALLS

CATEGORY	STATION	LOCATION		203.0100 REMOVING SMALL PIPE CULVERTS EACH	204.9060.S.01 REMOVING APRON ENDWALLS EACH	REMARKS
0010	1179+73	STH 54 (EB)	LT & RT	-	2	REMOVE RUBBLE HEADWALL
0010	1179+73	STH 54 (EB)	LT & RT	1	-	SAWCUT AND REMOVE 3 FEET CONCRETE PIPE AT EACH END
0010	1315+46	STH 54 (EB)	LT & RT	-	2	REMOVE RUBBLE HEADWALL
0010	1315+46	STH 54 (EB)	LT & RT	1	-	SAWCUT AND REMOVE 3 FEET CONCRETE PIPE AT EACH END
0010	1340+39	STH 54 (EB)	LT & RT	-	2	REPLACE NORTH AND SOUTH ENDWALLS
0010	1362+17	STH 54 (EB)	LT & RT	-	2	REMOVE RUBBLE HEADWALL
0010	1362+17	STH 54 (EB)	LT & RT	1	-	SAWCUT AND REMOVE 3 FEET CONCRETE PIPE AT EACH END
0010	1368+26	STH 54 (EB)	LT & RT	-	2	REPLACE NORTH AND SOUTH ENDWALLS
0010	1470+75	STH 54 (EB)	RT	1	-	15" RCCP
0010	1447+78	STH 54 (EB)	LT & RT	-	2	REPLACE NORTH AND SOUTH ENDWALLS
0010	1457+95	STH 54 (EB)	LT & RT	-	2	REPLACE NORTH AND SOUTH ENDWALLS
		TOTALS 0010		4	14	

CURB AND SIDEWALK REMOVALS

CATEGORY	STATION	TO	STATION	LOCATION		204.0130 REMOVING CURB LF	204.0150 REMOVING CURB & GUTTER LF	204.0155 REMOVING CONCRETE SIDEWALK SY	REMARKS
0010	1189+15	-	1189+27	STH 54 (EB)	RT	13	105	82	ENTRANCE
0010	1190+60	-	1190+90	STH 54 (EB)	LT	-	13	-	
0010	11+14	-	11+19	STH 55 (NB)	LT	10	-	-	ENTRANCE
0010	1186+75	-	1193+15	STH 54 (EB)	RT	-	736	-	
0010	1186+75	-	1188+50	STH 54 (EB)	LT	-	401	279	
0010	1193+50	-	1195+15	STH 54 (EB)	RT	-	290	89	
0010	1189+05	-	1192+60	STH 54 (EB)	LT	-	682	-	
0010	1193+15	-	1193+15	STH 54 (EB)	LT	-	313	-	
				TOTALS 0010		23	2,540	450	

REMOVALS

CATEGORY	STATION	TO	STATION	LOCATION		204.0100 REMOVING CONCRETE PAVEMENT SY	204.0115 REMOVING ASPHALTIC SURFACE BUTT JOINTS SY	204.0120 REMOVING ASPHALTIC SURFACE MILLING SY	204.0165 REMOVING GUARDRAIL LF	SPV.0180.01 REMOVING DISTRESSED ASPHALTIC SURFACE MILLING SY	REMARKS
0010	1133+00	-	1181+30	STH 54 (EB)	LT & RT	-	7	16,135	-	-	MAINLINE MILLING
0010	1181+30	-	1186+75	STH 54 (EB)	LT & RT	-	-	1,845	-	-	MAINLINE MILLING
0010	1188+90	-	1189+30	STH 54 (EB)	RT	18	-	-	-	-	ENTRANCE
0010	1190+45	-	1190+90	STH 54 (EB)	RT	45	-	-	-	-	ENTRANCE
0010	1191+10	-	1191+50	STH 54 (EB)	LT	80	-	-	-	-	ENTRANCE
0010	1192+50		1192+80	STH 54 (EB)	LT	36	-	-	-	-	OLD GAS STATION FRONTAGE
0010	1195+15	-	1204+00	STH 54 (EB)	LT & RT	-	-	2,950	-	-	MAINLINE MILLING
0010	1204+00		1216+23	STH 54 (EB)	LT & RT	-	-	5,890	-	-	MAINLINE MILLING
0010	1216+23	-	1537+54	STH 54 (EB)	LT & RT	-	7	107,571	-	-	MAINLINE MILLING
0010	1327+45	-	1330+76	STH 54 (EB)	LT	-	-	116	188	-	GUARDRAIL REPLACEMENT
0010	1327+95	-	1330+76	STH 54 (EB)	RT	-	-	100	138	-	GUARDRAIL REPLACEMENT
0010	1415+68	-	1419+11	STH 54 (EB)	LT	-	-	131	238	-	GUARDRAIL REPLACEMENT
0010	1415+24	-	1418+67	STH 54 (EB)	RT	-	-	115	150	-	GUARDRAIL REPLACEMENT
0010	1438+47	-	1441+91	STH 54 (EB)	LT	-	-	121	188	-	GUARDRAIL REPLACEMENT
0010	1438+47	-	1441+91	STH 54 (EB)	RT	-	-	121	188	-	GUARDRAIL REPLACEMENT
0010	1522+19	-	1525+63	STH 54 (EB)	LT	-	-	199	176	-	GUARDRAIL REPLACEMENT
0010	1522+50	-	1524+98	STH 54 (EB)	RT	-	-	142	164	-	GUARDRAIL REPLACEMENT
0010	11+00	-	11+15	STH 55 (NB)	LT	12	-	-	-	-	ENTRANCE
0010	11+25	-	11+60	STH 55 (NB)	RT	13	-	-	-	-	ENTRANCE
0010	31+45	-	31+85	IVORY ST (NB)	LT	46	-	-	-	-	ENTRANCE
0010	33+40	-	33+75	IVORY ST (NB)	LT	21	-	-	-	-	ENTRANCE
0010	33+90	-	34+30	IVORY ST (NB)	RT	25	-	-	-	-	ENTRANCE
0010	34+45	-	34+50	IVORY ST (NB)	LT	4	-	-	-	-	ENTRANCE
0010				PROJECT		-	123	2,000	-	-	DRIVEWAYS
0010	1133+00	-	1537+54	STH 54 (EB)	LT	-	8	1,038	-	-	FRENCH ROAD
0010	1133+00	-	1537+54	STH 54 (EB)	RT	-	8	1,061	-	-	FRENCH ROAD
0010	1133+00	-	1537+54	STH 54 (EB)	RT	-	6	839	-	-	KORTNEY LANE
0010	1133+00	-	1537+54	STH 54 (EB)	LT	-	12	1,051	-	-	THUNDER WAY
0010	1133+00	-	1537+54	STH 54 (EB)	LT		17	-			CIRCLE DRIVE
0010	1133+00	-	1537+54	STH 54 (EB)	LT	-	7	109	-	-	LINCOLN STREET
0010	1133+00	-	1537+54	STH 54 (EB)	RT	-	8	635	-	-	ORCHARD ROAD
0010	1133+00	-	1537+54	STH 54 (EB)	LT	-	8	205	-	-	ORCHARD ROAD
0010	1133+00	-	1537+54	STH 54 (EB)	RT	-	8	261	-	-	MAINLINE DRIVE
0010	1133+00	-	1537+54	STH 54 (EB)	LT	-	11	241	-	-	MAINLINE DRIVE
0010	1133+00	-	1537+54	STH 54 (EB)	LT	-	7	717	-	-	VANDENHEUVEL ROAD
0010	1133+00	-	1537+54	STH 54 (EB)	RT	-	7	727	-	-	RANCH ROAD
0010	1133+00	-	1537+54	STH 54 (EB)	RT	-	7	1,004	-	-	STH 55
0010	1133+00	-	1537+54	STH 54 (EB)	LT & RT	-	34	976	-	-	STH 55
0010	1133+00	-	1537+54	STH 54 (EB)	RT	-	7	672	-	-	MOORE ROAD
0010	1133+00	-	1537+54	STH 54 (EB)	LT & RT	-	7	1,374	-	-	CTH Y
0010	1133+00	-	1537+54	STH 54 (EB)	RT	-	8	739	-	-	CTH H
0010	1133+00	-	1537+54	STH 54 (EB)	LT	-	7	748	-	-	SMITH ROAD
0010	1133+00	-	1537+54	STH 54 (EB)	RT	-	7	856	-	-	VANBOXTEL ROAD
0010	1133+00	-	1537+54	STH 54 (EB)	LT	-	7	810	-	-	COOPER ROAD
0010	1133+00	-	1537+54	STH 54 (EB)	LT	-	7	679	-	-	OLSON ROAD
0010	1133+00	-	1537+54	STH 54 (EB)	LT & RT	-	10	822	-	-	RED WILLOW PARKWAY
0010				PROJECT		-	-	-	-	500	UNDISTRIBUTED
				TOTALS 0010		300	345	153,000	1,430	500	

NOTE: SIDEROAD AREAS INCLUDE ADJACENT TURN LANES AND BY-PASS LANE AREAS

EXCAVATION, HAULING, AND DISPOSAL OF PETROLEUM CONTAMINATED SOIL

CATEGORY	STATION	TO	STATION	LOCATION		205.0501.S EXCAVATION, HAULING, AND DISPOSAL OF PETROLEUM CONTAMINATED SOIL TON
0010	1191+50	-	1194+75	STH 54 (EB)	LT & RT	1,500
				TOTAL 0010		1,500

REMOVING SIGNAL AND SIGNS

CATEGORY	STATION	LOCATION		204.0195 REMOVING CONCRETE BASES EACH	204.9060.S.03 REMOVING SIGNS EACH	653.0905 REMOVING PULL BOXES EACH	659.5000.S LAMP, BALLAST, LED SWITCH DISPOSAL BY CONTRACTOR	SPV.0060.03 REMOVING TRAFFIC SIGNAL, STH 54 & STH 55 EACH	REMARKS
0010		STH 54 & STH 55 INTERSECTION		9	-	9	29	1	
0010	1192+60	STH 54 (EB)	LT	2	1	-	-	-	SHELL SIGN & BASES
0010	1192+68	STH 54 (EB)	RT	1	-	-	-	-	OLD MC DONALDS SIGN BASE
		TOTALS 0010		12	1	9	29	1	

REMOVING MONITORING WELLS

CATEGORY	STATION	LOCATION		204.9060.S.02 REMOVING MONITORING WELLS EACH
0010	1191+88	STH 54 (EB)	RT	1
0010	1192+06	STH 54 (EB)	RT	1
0010	1192+24	STH 54 (EB)	RT	1
0010	1192+50	STH 54 (EB)	LT	1
0010	1192+66	STH 54 (EB)	RT	1
0010	1193+64	STH 54 (EB)	LT	1
		TOTAL 0010		6

PREPARE FOUNDATION FOR ASPHALTIC SHOULDERS

CATEGORY	STATION	TO	STATION	LOCATION		211.0400 PREPARE FOUNDATION FOR ASPHALTIC SHOULDERS STA
0010	1133+00	-	1181+30	STH 54 (EB)	LT & RT	98
0010	1181+30	-	1183+84	STH 54 (EB)	LT	6
0010	1181+30	-	1182+72	STH 54 (EB)	RT	4
0010	1204+00	-	1537+54	STH 54 (EB)	LT & RT	668
				TOTAL 0010		776

REMOVING STORM SEWER

CATEGORY	LOCATION	204.0210 REMOVING MANHOLES EACH	204.0220 REMOVING INLETS EACH	204.0245.01 REMOVING STORM SEWER (6-INCH) LF	204.0245.02 REMOVING STORM SEWER (8-INCH) LF	204.0245.03 REMOVING STORM SEWER (10-INCH) LF	204.0245.04 REMOVING STORM SEWER (12-INCH) LF	204.0245.05 REMOVING STORM SEWER (15-INCH) LF	204.0245.06 REMOVING STORM SEWER (18-INCH) LF
0010	**STAGE 1A**	2	6	8	75	35	250	385	120
0010	**STAGE 1B**	3	4	37	90	-	280	-	-
	TOTALS 0010	5	10	45	165	35	530	385	120

3

EARTHWORK SUMMARY

Division	From/To Station	Location	Excavation Common (1) (item #205.0100)		Unexpanded Fill	Expanded Fill	Mass Ordinate +/-	Waste	Borrow (item #208.0100)
			Cut	EBS (2)	(3)	Factor 1.30	(4)		
1	1186+75 - 1195+15	STH 54	3,795	95	28	36	3,862	3,862	0
	10+00 - 11+75	STH 55	1,076		6	8	1,070	1,070	0
	31+25 - 34+50	IVORY STREET	1,040		7	8	1,033	1,033	0
	50+00 - 51+92	STH 55 RAB	1,457		0	0	1,457	1,457	0
	60+00 - 61+91	IVORY STREET RAB	1,039		0	0	1,039	1,039	0
2	1327+14 - 1331+17	STH 54 GUARDRAIL	235		158	205	30	30	0
3	1450+15 - 1419+52	STH 54 GUARDRAIL	391	0	241	313	78	78	0
4	1438+27 - 1440+20	STH 54 GUARDRAIL	300	0	291	378	-78	0	78
5	1522+00 - 1525+73	STH 54 GUARDRAIL	273		257	335	-61	0	61
		Totals	9,605	95	987	1,283	8,429	8,569	140
		Total Common Excavation	9,700						

1) Common Excavation is the sum of the Cut and EBS Excavation columns. Item number 205.0100.
2) EBS Excavation to be backfilled with Select Crushed Material.
3) Fill areas to be backfilled with cut material from the roadway.
4) Mass Ordinate = Cut + EBS - Expanded Fill. The Mass Ordinate + or - Qty calculated for the Division. Plus quantity indicates an excess of material within the Division. Minus indicates a shortage of material within the Division.

3

BASE AGGREGATE DENSE

CATEGORY	STATION	TO	STATION	LOCATION		305.0110 BASE AGGREGATE DENSE 3/4-INCH TON	305.0120 BASE AGGREGATE DENSE 1 1/4-INCH TON	312.0110 SELECT CRUSHED MATERIAL TON	624.0100 WATER MGAL	REMARKS
0010	1133+00	-	1181+30	STH 54 (EB)	LT & RT	450	-	-	7	MAINLINE SHOULDERING
0010	1181+30	-	1183+84	STH 54 (EB)	LT	30	-	-	1	MAINLINE SHOULDERING
0010	1181+30	-	1182+72	STH 54 (EB)	RT	20	-	-	1	MAINLINE SHOULDERING
0010	1186+75	-	1188+55	STH 54 (EB)	LT & RT	-	365	785	17	
0010	1189+54	-	1192+69	STH 54 (EB)	LT & RT	-	650	1445	31	
0010	1193+69	-	1195+15	STH 54 (EB)	LT & RT	-	315	675	15	
0010	1204+00	-	1537+54	STH 54 (EB)	LT & RT	3,050	-	-	46	MAINLINE SHOULDERING
0010	1327+45	-	1330+76	STH 54 (EB)	LT	48	-	-	1	GUARDRAIL REPLACEMENT
0010	1327+95	-	1330+76	STH 54 (EB)	RT	46	-	-	1	GUARDRAIL REPLACEMENT
0010	1415+68	-	1419+11	STH 54 (EB)	LT	48	-	-	1	GUARDRAIL REPLACEMENT
0010	1415+24	-	1418+67	STH 54 (EB)	RT	42	-	-	1	GUARDRAIL REPLACEMENT
0010	1423+25	-	1423+75	STH 54 (EB)	RT	37	110	-	3	NEW ENTRANCE
0010	1438+47	-	1441+91	STH 54 (EB)	LT	48	-	-	1	GUARDRAIL REPLACEMENT
0010	1438+47	-	1441+91	STH 54 (EB)	RT	46	-	-	1	GUARDRAIL REPLACEMENT
0010	1438+47	-	1441+91	STH 54 (EB)	LT	50	-	-	1	GUARDRAIL REPLACEMENT
0010	1438+47	-	1441+91	STH 54 (EB)	RT	52	-	-	1	GUARDRAIL REPLACEMENT
0010	10+00	-	11+75	STH 55 (NB)	LT & RT	-	355	775	17	
0010	31+25	-	32+29	IVORY ST (NB)	LT & RT	-	210	445	10	
0010	33+30	-	34+50	IVORY ST (NB)	LT & RT	-	200	420	10	
0010	50+00	-	51+92	RAB STH 55	LT & RT	-	420	905	20	
0010	60+00	-	61+91	RAB IVORY ST	LT & RT	-	435	935	21	
0010				PROJECT		1,483	-	-	22	ENTRANCE MATCH INS FOR RESURFACING
0010				PROJECT		-	-	-	11	UNDISTRIBUTED - DUST CONTROL
0010				PROJECT		-	-	95	-	UNDISTRIBUTED
				TOTALS 0010		5,450	3,060	6,480	240	

PIPE UNDERDRAIN

CATEGORY	STRUCTURE	STATION	OFFSET	LOCATION	310.0115 BASE AGGREGATE OPEN-GRADED CY	612.0106 PIPE UNDERDRAIN 6-INCH LF	645.0111 GEOTEXTILE TYPE DF SCHEDULE A SY	REMARKS
0010	10	1188+39.51	18.52' RT	STH 54 (EB)	2	20	15	
0010	11	1188+36.59	29.44' LT	STH 54 (EB)	2	20	15	
0010	21	1189+70.84	18.70' RT	STH 54 (EB)	2	20	15	
0010	22	1189+72.31	30.99' LT	STH 54 (EB)	2	20	15	
0010	23	1189+26.69	80.99' LT	STH 54 (EB)	2	20	15	
0010	24	1188+76.55	71.02' LT	STH 54 (EB)	3	30	30	STRUCTURE 24/25 COMBINED
0010	25	1188+72.84	63.95' LT	STH 54 (EB)				
0010	31	1191+00.05	18.50' RT	STH 54 (EB)	2	20	15	
0010	32	1190+99.91	30.50' LT	STH 54 (EB)	2	20	15	GO OUT SIDES OF STRUCTURE
0010	41	1192+21.21	15.91' RT	STH 54 (EB)	2	20	15	
0010	42	1192+55.17	19.22' RT	STH 54 (EB)	2	20	15	
0010	43	1192+25.58	25.74' LT	STH 54 (EB)	2	20	15	
0010	44	1192+53.93	30.63' LT	STH 54 (EB)	2	20	15	
0010	45	1192+91.72	64.47' LT	STH 54 (EB)	2	20	15	
0010	50	1194+29.33	26.85' LT	STH 54 (EB)	2	20	15	
0010	70	1193+03.76	87.17' RT	STH 54 (EB)	2	20	15	
0010	74	1194+27.23	18.08' RT	STH 54 (EB)	2	20	15	GO OUT SIDES OF STRUCTURE
				TOTALS 0010	33	330	255	

3

HMA PAVEMENT

CATEGORY	STATION	TO	STATION	LOCATION		455.0605 TACK COAT GAL	460.6223 HMA PAVEMENT 3 MT 58-28 S TON	460.6224 HMA PAVEMENT 4 MT 58-28 S TON	460.7424 HMA PAVEMENT 4 HT 58-28 H TON	465.0110 ASPHALTIC SURFACE PATCHING TON	465.0120 ASPHALTIC SURFACE DRIVEWAYS AND FIELD ENTRANCES TON	REMARKS
0010	1133+00	-	1181+30	STH 54 (EB)	LT & RT	2,190	2,370	1,840	-	-	-	MAINLINE PAVING
0010	1181+30	-	1186+75	STH 54 (EB)	LT & RT	310	330	260	-	-	-	MAINLINE PAVING
0010	1186+75	-	1188+55	STH 54 (EB)	LT & RT	150	360	-	120	-	-	
0010	1189+54	-	1192+68	STH 54 (EB)	RT	110	270	-	90	-	-	
0010	1189+56	-	1192+69	STH 54 (WB)	LT	110	270	-	90	-	-	
0010	1193+69	-	1195+15	STH 54 (EB)	LT & RT	130	310	-	100	-	-	
0010	1195+15	-	1204+00	STH 54 (EB)	LT & RT	570	620	480	-	-	-	MAINLINE PAVING
0010	1204+00		1207+57	STH 54 (EB)	LT & RT	230	250	190	-	-	-	MAINLINE PAVING
0010	1207+57		1216+23	STH 54 (EB)	LT & RT	250	530	410	-	-	-	MAINLINE PAVING
0010	1216+23	-	1537+54	STH 54 (EB)	LT & RT	14,598	15,826	12,348	-	-	-	MAINLINE PAVING
0010	1327+45	-	1330+76	STH 54 (EB)	LT	14	16	12	-	-	-	GUARDRAIL WIDENING
0010	1327+95	-	1330+76	STH 54 (EB)	RT	13	13	10	-	-	-	GUARDRAIL WIDENING
0010	1415+68	-	1419+11	STH 54 (EB)	LT	16	17	14	-	-	-	GUARDRAIL WIDENING
0010	1415+24	-	1418+67	STH 54 (EB)	RT	15	15	12	-	-	-	GUARDRAIL WIDENING
0010	1438+47	-	1441+91	STH 54 (EB)	LT	15	16	13	-	-	-	GUARDRAIL WIDENING
0010	1438+47	-	1441+91	STH 54 (EB)	RT	15	16	13	-	-	-	GUARDRAIL WIDENING
0010	1522+19	-	1525+63	STH 54 (EB)	LT	25	26	21	-	-	-	GUARDRAIL WIDENING
0010	1522+50	-	1524+98	STH 54 (EB)	RT	17	19	15	-	-	-	GUARDRAIL WIDENING
0010	10+00	-	11+75	STH 55 (NB)	LT & RT	150	370	-	120	-	-	
0010	31+25	-	32+29	IVORY ST (NB)	LT & RT	80	210	-	70	-	-	
0010	33+30	-	34+50	IVORY ST (NB)	LT & RT	80	190	-	60	-	-	
0010	50+00	-	51+92	RDBT-54-55	CA	130	340	-	110	-	-	
0010	60+00	-	61+91	RDBT-54-IVORY ST	CB	140	360	-	120	-	-	
					PAGE SUBTOTAL	19,358	22,744	15,638	880	0	0	

HMA PAVEMENT CONTINUED

CATEGORY	STATION	TO	STATION	LOCATION		455.0605 TACK COAT GAL	460.6223 HMA PAVEMENT 3 MT 58-28 S TON	460.6224 HMA PAVEMENT 4 MT 58-28 S TON	460.7424 HMA PAVEMENT 4 HT 58-28 H TON	465.0110 ASPHALTIC SURFACE PATCHING TON	465.0120 ASPHALTIC SURFACE DRIVEWAYS AND FIELD ENTRANCES TON	REMARKS
0010	1133+00	-	1537+54	STH 54 (EB)	LT	110	110	86	-	-	-	FRENCH ROAD
0010	1133+00	-	1537+54	STH 54 (EB)	RT	110	112	87	-	-	-	FRENCH ROAD
0010	1133+00	-	1537+54	STH 54 (EB)	RT	90	88	69	-	-	-	KORTNEY LANE
0010	1133+00	-	1537+54	STH 54 (EB)	LT	108	116	90	-	-	-	THUNDER WAY
0010	1133+00	-	1537+54	STH 54 (EB)	LT	20	15	11	-	-	-	LINCOLN WAY
0010	1133+00	-	1537+54	STH 54 (EB)	RT	66	71	56	-	-	-	ORCHARD ROAD
0010	1133+00	-	1537+54	STH 54 (EB)	LT	20	22	17	-	-	-	ORCHARD ROAD
0010	1133+00	-	1537+54	STH 54 (EB)	RT	32	34	27	-	-	-	MAINLINE DRIVE
0010	1133+00	-	1537+54	STH 54 (EB)	LT	29	32	25	-	-	-	MAINLINE DRIVE
0010	1133+00	-	1537+54	STH 54 (EB)	LT	74	80	62	-	-	-	VANDENHEUVEL ROAD
0010	1133+00	-	1537+54	STH 54 (EB)	RT	76	82	64	-	-	-	RANCH ROAD
0010	1133+00	-	1537+54	STH 54 (EB)	RT	100	108	84	-	-	-	STH 55
0010	1133+00	-	1537+54	STH 54 (EB)	LT & RT	100	106	82	-	-	-	STH 55
0010	1133+00	-	1537+54	STH 54 (EB)	RT	75	81	63	-	-	-	MOORE ROAD
0010	1133+00	-	1537+54	STH 54 (EB)	LT & RT	170	177	138	-	-	-	CTH Y
0010	1133+00	-	1537+54	STH 54 (EB)	RT	77	83	65	-	-	-	CTH H
0010	1133+00	-	1537+54	STH 54 (EB)	LT	78	84	65	-	-	-	SMITH ROAD
0010	1133+00	-	1537+54	STH 54 (EB)	RT	86	92	72	-	-	-	VANBOXTEL ROAD
0010	1133+00	-	1537+54	STH 54 (EB)	LT	81	88	68	-	-	-	COOPER ROAD
0010	1133+00	-	1537+54	STH 54 (EB)	LT	70	76	59	-	-	-	OLSON ROAD
0010	1133+00	-	1537+54	STH 54 (EB)	LT & RT	160	169	132	-	-	-	RED WILLOW PARKWAY
0010	1187+40	-	1187+70	STH 54 (EB)	RT	6	-	-	-	-	16	ENTRANCE
0010	1187+95	-	1188+20	STH 54 (EB)	LT	5	-	-	-	-	14	ENTRANCE
0010	1188+90	-	1189+30	STH 54 (EB)	RT	4	-	-	-	-	10	ENTRANCE
0010	1190+60	-	1190+90	STH 54 (EB)	LT	2	-	-	-	-	6	ENTRANCE
0010	1194+75	-	1195+15	STH 55 (NB)	LT	4	-	-	-	-	11	ENTRANCE
0010	33+90	-	34+30	IVORY ST (NB)	RT	3	-	-	-	-	6	ENTRANCE
0010				PROJECT		10	-	-	-	-	347	DRIVEWAYS RESURFACE AREAS
0010				PROJECT		36	-	-	-	115	-	UNDISTRIBUTED
					PAGE SUBTOTAL	1,802	1,826	1,422	0	115	410	
					TOTALS 0010	21,160	24,570	17,060	880	115	410	

PWL MIXTURE USE TABLE

STATION	TO	STATION	LOCATION		DESCIPTION	MIXTURE USE:	UNDERLYING SURFACE:	BID ITEM	TONS	THICKNESS	QMP TO BE USED FOR: MIXTURE ACCEPTANCE	QMP TO BE USED FOR: DENSITY ACCEPTANCE
1133+00	-	1181+30	STH 54 (EB)	LT & RT	LANES	LOWER LAYER	MILLED EXISTING HMA SURFACE	3 MT 58-28 S	1,667	2.25	PWL INCENTIVE AIR VOIDS HMA PAVEMENT 460.2010	INCENTIVE DENSITY PWL HMA PAVEMENT 460.2005
					LANES	UPPER LAYER	3 MT 58-28 S	4 MT 58-28 S	1,297	1.75		
					SHOULDERS	LOWER LAYER	MILLED EXISTING HMA SURFACE	3 MT 58-28 S	396	2.25		ACCEPTANCE TESTING BY THE DEPARTMENT; NOT ELEGIBLE FOR INCENTIVE OR DISINCENTIVE
					SHOULDERS	UPPER LAYER	3 MT 58-28 S	4 MT 58-28 S	238	1.75		
1181+30	-	1186+75	STH 54 (EB)	LT & RT	LANES	LOWER LAYER	MILLED EXISTING HMA SURFACE	3 MT 58-28 S	71	2.25	PWL INCENTIVE AIR VOIDS HMA PAVEMENT 460.2010	INCENTIVE DENSITY PWL HMA PAVEMENT 460.2005
					LANES	UPPER LAYER	3 MT 58-28 S	4 MT 58-28 S	55	1.75		
					SHOULDERS	LOWER LAYER	MILLED EXISTING HMA SURFACE	3 MT 58-28 S	146	2.25		ACCEPTANCE TESTING BY THE DEPARTMENT; NOT ELEGIBLE FOR INCENTIVE OR DISINCENTIVE
					SHOULDERS	UPPER LAYER	3 MT 58-28 S	4 MT 58-28 S	90	1.75		
1186+75	-	1188+55	STH 54 (EB)	LT & RT	RDBT TAPER	LOWER LAYER	BASE AGGREGATE DENSE	3 MT 58-28 S	180	4.00	ACCEPTANCE TESTING BY THE DEPARTMENT; NOT ELEGIBLE FOR INCENTIVE OR DISINCENTIVE	ACCEPTANCE TESTING BY THE DEPARTMENT; NOT ELEGIBLE FOR INCENTIVE OR DISINCENTIVE
					RDBT TAPER	MIDDLE LAYER	3 MT 58-28 S	3 MT 58-28 S	180	4.00		
					RDBT TAPER	UPPER LAYER	3 MT 58-28 S	4 HT 58-28 H	120	2.50		
1189+54	-	1192+68	STH 54 (EB)	RT	RDBT TAPER	LOWER LAYER	BASE AGGREGATE DENSE	3 MT 58-28 S	135	4.00	ACCEPTANCE TESTING BY THE DEPARTMENT; NOT ELEGIBLE FOR INCENTIVE OR DISINCENTIVE	ACCEPTANCE TESTING BY THE DEPARTMENT; NOT ELEGIBLE FOR INCENTIVE OR DISINCENTIVE
					RDBT TAPER	MIDDLE LAYER	3 MT 58-28 S	3 MT 58-28 S	135	4.00		
					RDBT TAPER	UPPER LAYER	3 MT 58-28 S	4 HT 58-28 H	90	2.50		
1189+56	-	1192+69	STH 54 (EB)	LT	RDBT TAPER	LOWER LAYER	BASE AGGREGATE DENSE	3 MT 58-28 S	135	4.00	ACCEPTANCE TESTING BY THE DEPARTMENT; NOT ELEGIBLE FOR INCENTIVE OR DISINCENTIVE	ACCEPTANCE TESTING BY THE DEPARTMENT; NOT ELEGIBLE FOR INCENTIVE OR DISINCENTIVE
					RDBT TAPER	MIDDLE LAYER	3 MT 58-28 S	3 MT 58-28 S	135	4.00		
					RDBT TAPER	UPPER LAYER	3 MT 58-28 S	4 HT 58-28 H	90	2.50		
1193+69	-	1195+15	STH 54 (EB)	LT & RT	RDBT TAPER	LOWER LAYER	BASE AGGREGATE DENSE	3 MT 58-28 S	155	4.00	ACCEPTANCE TESTING BY THE DEPARTMENT; NOT ELEGIBLE FOR INCENTIVE OR DISINCENTIVE	ACCEPTANCE TESTING BY THE DEPARTMENT; NOT ELEGIBLE FOR INCENTIVE OR DISINCENTIVE
					RDBT TAPER	MIDDLE LAYER	3 MT 58-28 S	3 MT 58-28 S	155	4.00		
					RDBT TAPER	UPPER LAYER	3 MT 58-28 S	4 HT 58-28 H	100	2.50		
1195+15	-	1204+00	STH 54 (EB)	LT & RT	LANES	LOWER LAYER	MILLED EXISTING HMA SURFACE	3 MT 58-28 S	115	2.25	PWL INCENTIVE AIR VOIDS HMA PAVEMENT 460.2010	INCENTIVE DENSITY PWL HMA PAVEMENT 460.2005
					LANES	UPPER LAYER	3 MT 58-28 S	4 MT 58-28 S	90	1.75		
					SHOULDERS	LOWER LAYER	MILLED EXISTING HMA SURFACE	3 MT 58-28 S	285	2.25		ACCEPTANCE TESTING BY THE DEPARTMENT; NOT ELEGIBLE FOR INCENTIVE OR DISINCENTIVE
					SHOULDERS	UPPER LAYER	3 MT 58-28 S	4 MT 58-28 S	171	1.75		
1204+00	-	1207+57	STH 54 (EB)	LT & RT	LANES	LOWER LAYER	MILLED EXISTING HMA SURFACE	3 MT 58-28 S	47	2.25	PWL INCENTIVE AIR VOIDS HMA PAVEMENT 460.2010	INCENTIVE DENSITY PWL HMA PAVEMENT 460.2005
					LANES	UPPER LAYER	3 MT 58-28 S	4 MT 58-28 S	36	1.75		
					SHOULDERS	LOWER LAYER	MILLED EXISTING HMA SURFACE	3 MT 58-28 S	115	2.25		ACCEPTANCE TESTING BY THE DEPARTMENT; NOT ELEGIBLE FOR INCENTIVE OR DIINCENTIVE
					SHOULDERS	UPPER LAYER	3 MT 58-28 S	4 MT 58-28 S	68	1.75		
1207+57	-	1216+23	STH 54 (EB)	LT & RT	LANES	LOWER LAYER	MILLED EXISTING HMA SURFACE	3 MT 58-28 S	113	2.25	PWL INCENTIVE AIR VOIDS HMA PAVEMENT 460.2010	INCENTIVE DENSITY PWL HMA PAVEMENT 460.2005
					LANES	UPPER LAYER	3 MT 58-28 S	4 MT 58-28 S	88	1.75		
					SHOULDERS	LOWER LAYER	MILLED EXISTING HMA SURFACE	3 MT 58-28 S	235	2.25		ACCEPTANCE TESTING BY THE DEPARTMENT; NOT ELEGIBLE FOR INCENTIVE OR DISINCENTIVE
					SHOULDERS	UPPER LAYER	3 MT 58-28 S	4 MT 58-28 S	141	1.75		
1216+23	-	1537+54	STH 54 (EB)	LT & RT	LANES	LOWER LAYER	MILLED EXISTING HMA SURFACE	3 MT 58-28 S	4,157	2.25	PWL INCENTIVE AIR VOIDS HMA PAVEMENT 460.2010	INCENTIVE DENSITY PWL HMA PAVEMENT 460.2005
					LANES	UPPER LAYER	3 MT 58-28 S	4 MT 58-28 S	3,234	1.75		
					SHOULDERS	LOWER LAYER	MILLED EXISTING HMA SURFACE	3 MT 58-28 S	6,564	2.25		ACCEPTANCE TESTING BY THE DEPARTMENT; NOT ELEGIBLE FOR INCENTIVE OR DISINCENTIVE
					SHOULDERS	UPPER LAYER	3 MT 58-28 S	4 MT 58-28 S	3,988	1.75		

PWL MIXTURE USE TABLE CONTINUED

STATION	TO	STATION	LOCATION		DESCIPTION	MIXTURE USE:	UNDERLYING SURFACE:	BID ITEM	TONS	THICKNESS	QMP TO BE USED FOR: MIXTURE ACCEPTANCE	QMP TO BE USED FOR: DENSITY ACCEPTANCE
1327+45	-	1330+76	STH 54 (EB)	LT	SHOULDERS	LOWER LAYER	MILLED EXISTING HMA SURFACE	3 MT 58-28 S	16	2.25	PWL INCENTIVE AIR VOIDS HMA PAVEMENT 460.2010	ACCEPTANCE TESTING BY THE DEPARTMENT; NOT ELEGIBLE FOR INCENTIVE OR DISINCENTIVE
					SHOULDERS	UPPER LAYER	3 MT 58-28 S	4 MT 58-28 S	12	1.75		
1327+95	-	1330+76	STH 54 (EB)	RT	SHOULDERS	LOWER LAYER	MILLED EXISTING HMA SURFACE	3 MT 58-28 S	13	2.25	PWL INCENTIVE AIR VOIDS HMA PAVEMENT 460.2010	ACCEPTANCE TESTING BY THE DEPARTMENT; NOT ELEGIBLE FOR INCENTIVE OR DISINCENTIVE
					SHOULDERS	UPPER LAYER	3 MT 58-28 S	4 MT 58-28 S	10	1.75		
1415+68	-	1419+11	STH 54 (EB)	LT	SHOULDERS	LOWER LAYER	MILLED EXISTING HMA SURFACE	3 MT 58-28 S	17	2.25	PWL INCENTIVE AIR VOIDS HMA PAVEMENT 460.2010	ACCEPTANCE TESTING BY THE DEPARTMENT; NOT ELEGIBLE FOR INCENTIVE OR DISINCENTIVE
					SHOULDERS	UPPER LAYER	3 MT 58-28 S	4 MT 58-28 S	14	1.75		
1415+24	-	1418+67	STH 54 (EB)	RT	SHOULDERS	LOWER LAYER	MILLED EXISTING HMA SURFACE	3 MT 58-28 S	15	2.25	PWL INCENTIVE AIR VOIDS HMA PAVEMENT 460.2010	ACCEPTANCE TESTING BY THE DEPARTMENT; NOT ELEGIBLE FOR INCENTIVE OR DISINCENTIVE
					SHOULDERS	UPPER LAYER	3 MT 58-28 S	4 MT 58-28 S	12	1.75		
1438+47	-	1441+91	STH 54 (EB)	LT	SHOULDERS	LOWER LAYER	MILLED EXISTING HMA SURFACE	3 MT 58-28 S	16	2.25	PWL INCENTIVE AIR VOIDS HMA PAVEMENT 460.2010	ACCEPTANCE TESTING BY THE DEPARTMENT; NOT ELEGIBLE FOR INCENTIVE OR DISINCENTIVE
					SHOULDERS	UPPER LAYER	3 MT 58-28 S	4 MT 58-28 S	13	1.75		
1438+47	-	1441+91	STH 54 (EB)	RT	SHOULDERS	LOWER LAYER	MILLED EXISTING HMA SURFACE	3 MT 58-28 S	16	2.25	PWL INCENTIVE AIR VOIDS HMA PAVEMENT 460.2010	ACCEPTANCE TESTING BY THE DEPARTMENT; NOT ELEGIBLE FOR INCENTIVE OR DISINCENTIVE
					SHOULDERS	UPPER LAYER	3 MT 58-28 S	4 MT 58-28 S	13	1.75		
1522+19	-	1525+63	STH 54 (EB)	LT	SHOULDERS	LOWER LAYER	MILLED EXISTING HMA SURFACE	3 MT 58-28 S	26	2.25	PWL INCENTIVE AIR VOIDS HMA PAVEMENT 460.2010	ACCEPTANCE TESTING BY THE DEPARTMENT; NOT ELEGIBLE FOR INCENTIVE OR DISINCENTIVE
					SHOULDERS	UPPER LAYER	3 MT 58-28 S	4 MT 58-28 S	21	1.75		
1522+50	-	1524+98	STH 54 (EB)	RT	SHOULDERS	LOWER LAYER	MILLED EXISTING HMA SURFACE	3 MT 58-28 S	19	2.25	PWL INCENTIVE AIR VOIDS HMA PAVEMENT 460.2010	ACCEPTANCE TESTING BY THE DEPARTMENT; NOT ELEGIBLE FOR INCENTIVE OR DISINCENTIVE
					SHOULDERS	UPPER LAYER	3 MT 58-28 S	4 MT 58-28 S	15	1.75		
10+00	-	11+75	STH 55 (NB)	LT & RT	RDBT TAPER	LOWER LAYER	BASE AGGREGATE DENSE	3 MT 58-28 S	185	4.00	ACCEPTANCE TESTING BY THE DEPARTMENT; NOT ELEGIBLE FOR INCENTIVE OR DISINCENTIVE	ACCEPTANCE TESTING BY THE DEPARTMENT; NOT ELEGIBLE FOR INCENTIVE OR DISINCENTIVE
					RDBT TAPER	MIDDLE LAYER	3 MT 58-28 S	3 MT 58-28 S	185	4.00		
					RDBT TAPER	UPPER LAYER	3 MT 58-28 S	4 HT 58-28 H	120	2.50		
31+25	-	32+29	IVORY ST (NB)	LT & RT	RDBT TAPER	LOWER LAYER	BASE AGGREGATE DENSE	3 MT 58-28 S	105	4.00	ACCEPTANCE TESTING BY THE DEPARTMENT; NOT ELEGIBLE FOR INCENTIVE OR DISINCENTIVE	ACCEPTANCE TESTING BY THE DEPARTMENT; NOT ELEGIBLE FOR INCENTIVE OR DISINCENTIVE
					RDBT TAPER	MIDDLE LAYER	3 MT 58-28 S	3 MT 58-28 S	105	4.00		
					RDBT TAPER	UPPER LAYER	3 MT 58-28 S	4 HT 58-28 H	70	2.50		
33+30	-	34+50	IVORY ST (NB)	LT & RT	RDBT TAPER	LOWER LAYER	BASE AGGREGATE DENSE	3 MT 58-28 S	95	4.00	ACCEPTANCE TESTING BY THE DEPARTMENT; NOT ELEGIBLE FOR INCENTIVE OR DISINCENTIVE	ACCEPTANCE TESTING BY THE DEPARTMENT; NOT ELEGIBLE FOR INCENTIVE OR DISINCENTIVE
					RDBT TAPER	MIDDLE LAYER	3 MT 58-28 S	3 MT 58-28 S	95	4.00		
					RDBT TAPER	UPPER LAYER	3 MT 58-28 S	4 HT 58-28 H	60	2.50		
50+00	-	51+92	RDBT-54-55	CA	RDBT LANE	LOWER LAYER	BASE AGGREGATE DENSE	3 MT 58-28 S	170	4.00	ACCEPTANCE TESTING BY THE DEPARTMENT; NOT ELEGIBLE FOR INCENTIVE OR DISINCENTIVE	ACCEPTANCE TESTING BY THE DEPARTMENT; NOT ELEGIBLE FOR INCENTIVE OR DISINCENTIVE
					RDBT LANE	MIDDLE LAYER	3 MT 58-28 S	3 MT 58-28 S	170	4.00		
					RDBT LANE	UPPER LAYER	3 MT 58-28 S	4 HT 58-28 H	110	2.50		
60+00	-	61+91	RDBT-54-IVORYST	CB	RDBT LANE	LOWER LAYER	BASE AGGREGATE DENSE	3 MT 58-28 S	180	4.00	ACCEPTANCE TESTING BY THE DEPARTMENT; NOT ELEGIBLE FOR INCENTIVE OR DISINCENTIVE	ACCEPTANCE TESTING BY THE DEPARTMENT; NOT ELEGIBLE FOR INCENTIVE OR DISINCENTIVE
					RDBT LANE	MIDDLE LAYER	3 MT 58-28 S	3 MT 58-28 S	180	4.00		
					RDBT LANE	UPPER LAYER	3 MT 58-28 S	4 HT 58-28 H	120	2.50		

PWL MIXTURE USE TABLE CONTINUED

STATION	TO	STATION	LOCATION		DESCIPTION	MIXTURE USE:	UNDERLYING SURFACE:	BID ITEM	TONS	THICKNESS	QMP TO BE USED FOR: MIXTURE ACCEPTANCE	QMP TO BE USED FOR: DENSITY ACCEPTANCE
		FRENCH ROAD		LT	SIDE ROAD	LOWER LAYER	MILLED EXISTING HMA SURFACE	3 MT 58-28 S	110	2.25	PWL INCENTIVE AIR VOIDS HMA PAVEMENT 460.2010	ACCEPTANCE TESTING BY THE DEPARTMENT; NOT ELEGIBLE FOR INCENTIVE OR DISINCENTIVE
					SIDE ROAD	UPPER LAYER	3 MT 58-28 S	4 MT 58-28 S	86	1.75		
		FRENCH ROAD		RT	SIDE ROAD	LOWER LAYER	MILLED EXISTING HMA SURFACE	3 MT 58-28 S	112	2.25	PWL INCENTIVE AIR VOIDS HMA PAVEMENT 460.2010	ACCEPTANCE TESTING BY THE DEPARTMENT; NOT ELEGIBLE FOR INCENTIVE OR DISINCENTIVE
					SIDE ROAD	UPPER LAYER	3 MT 58-28 S	4 MT 58-28 S	87	1.75		
		KOURTNEY LANE		RT	SIDE ROAD	LOWER LAYER	MILLED EXISTING HMA SURFACE	3 MT 58-28 S	88	2.25	PWL INCENTIVE AIR VOIDS HMA PAVEMENT 460.2010	ACCEPTANCE TESTING BY THE DEPARTMENT; NOT ELEGIBLE FOR INCENTIVE OR DISINCENTIVE
					SIDE ROAD	UPPER LAYER	3 MT 58-28 S	4 MT 58-28 S	69	1.75		
		THUNDER WAY		LT	SIDE ROAD	LOWER LAYER	MILLED EXISTING HMA SURFACE	3 MT 58-28 S	116	2.25	PWL INCENTIVE AIR VOIDS HMA PAVEMENT 460.2010	ACCEPTANCE TESTING BY THE DEPARTMENT; NOT ELEGIBLE FOR INCENTIVE OR DISINCENTIVE
					SIDE ROAD	UPPER LAYER	3 MT 58-28 S	4 MT 58-28 S	90	1.75		
		ORCHARD ROAD		RT	SIDE ROAD	LOWER LAYER	MILLED EXISTING HMA SURFACE	3 MT 58-28 S	71	2.25	PWL INCENTIVE AIR VOIDS HMA PAVEMENT 460.2010	ACCEPTANCE TESTING BY THE DEPARTMENT; NOT ELEGIBLE FOR INCENTIVE OR DISINCENTIVE
					SIDE ROAD	UPPER LAYER	3 MT 58-28 S	4 MT 58-28 S	56	1.75		
		ORCHARD ROAD		LT	SIDE ROAD	LOWER LAYER	MILLED EXISTING HMA SURFACE	3 MT 58-28 S	22	2.25	PWL INCENTIVE AIR VOIDS HMA PAVEMENT 460.2010	ACCEPTANCE TESTING BY THE DEPARTMENT; NOT ELEGIBLE FOR INCENTIVE OR DISINCENTIVE
					SIDE ROAD	UPPER LAYER	3 MT 58-28 S	4 MT 58-28 S	17	1.75		
		MAINLINE DRIVE		RT	SIDE ROAD	LOWER LAYER	MILLED EXISTING HMA SURFACE	3 MT 58-28 S	34	2.25	PWL INCENTIVE AIR VOIDS HMA PAVEMENT 460.2010	ACCEPTANCE TESTING BY THE DEPARTMENT; NOT ELEGIBLE FOR INCENTIVE OR DISINCENTIVE
					SIDE ROAD	UPPER LAYER	3 MT 58-28 S	4 MT 58-28 S	27	1.75		
		MAINLINE DRIVE		LT	SIDE ROAD	LOWER LAYER	MILLED EXISTING HMA SURFACE	3 MT 58-28 S	32	2.25	PWL INCENTIVE AIR VOIDS HMA PAVEMENT 460.2010	ACCEPTANCE TESTING BY THE DEPARTMENT; NOT ELEGIBLE FOR INCENTIVE OR DISINCENTIVE
					SIDE ROAD	UPPER LAYER	3 MT 58-28 S	4 MT 58-28 S	27	1.75		
		VANDENHEUVEL ROAD		LT	SIDE ROAD	LOWER LAYER	MILLED EXISTING HMA SURFACE	3 MT 58-28 S	80	2.25	PWL INCENTIVE AIR VOIDS HMA PAVEMENT 460.2010	ACCEPTANCE TESTING BY THE DEPARTMENT; NOT ELEGIBLE FOR INCENTIVE OR DISINCENTIVE
					SIDE ROAD	UPPER LAYER	3 MT 58-28 S	4 MT 58-28 S	62	1.75		
		RANCH ROAD		RT	SIDE ROAD	LOWER LAYER	MILLED EXISTING HMA SURFACE	3 MT 58-28 S	82	2.25	PWL INCENTIVE AIR VOIDS HMA PAVEMENT 460.2010	ACCEPTANCE TESTING BY THE DEPARTMENT; NOT ELEGIBLE FOR INCENTIVE OR DISINCENTIVE
					SIDE ROAD	UPPER LAYER	3 MT 58-28 S	4 MT 58-28 S	64	1.75		
		STH 55		RT	SIDE ROAD	LOWER LAYER	MILLED EXISTING HMA SURFACE	3 MT 58-28 S	108	2.25	PWL INCENTIVE AIR VOIDS HMA PAVEMENT 460.2010	ACCEPTANCE TESTING BY THE DEPARTMENT; NOT ELEGIBLE FOR INCENTIVE OR DISINCENTIVE
					SIDE ROAD	UPPER LAYER	3 MT 58-28 S	4 MT 58-28 S	84	1.75		
		STH 55		LT & RT	SIDE ROAD	LOWER LAYER	MILLED EXISTING HMA SURFACE	3 MT 58-28 S	106	2.25	PWL INCENTIVE AIR VOIDS HMA PAVEMENT 460.2010	ACCEPTANCE TESTING BY THE DEPARTMENT; NOT ELEGIBLE FOR INCENTIVE OR DISINCENTIVE
					SIDE ROAD	UPPER LAYER	3 MT 58-28 S	4 MT 58-28 S	82	1.75		
		MOORE ROAD		RT	SIDE ROAD	LOWER LAYER	MILLED EXISTING HMA SURFACE	3 MT 58-28 S	81	2.25	PWL INCENTIVE AIR VOIDS HMA PAVEMENT 460.2010	ACCEPTANCE TESTING BY THE DEPARTMENT; NOT ELEGIBLE FOR INCENTIVE OR DISINCENTIVE
					SIDE ROAD	UPPER LAYER	3 MT 58-28 S	4 MT 58-28 S	69	1.75		
		CTH Y		LT & RT	SIDE ROAD	LOWER LAYER	MILLED EXISTING HMA SURFACE	3 MT 58-28 S	177	2.25	PWL INCENTIVE AIR VOIDS HMA PAVEMENT 460.2010	ACCEPTANCE TESTING BY THE DEPARTMENT; NOT ELEGIBLE FOR INCENTIVE OR DISINCENTIVE
					SIDE ROAD	UPPER LAYER	3 MT 58-28 S	4 MT 58-28 S	138	1.75		
		CTH H		RT	SIDE ROAD	LOWER LAYER	MILLED EXISTING HMA SURFACE	3 MT 58-28 S	83	2.25	PWL INCENTIVE AIR VOIDS HMA PAVEMENT 460.2010	ACCEPTANCE TESTING BY THE DEPARTMENT; NOT ELEGIBLE FOR INCENTIVE OR DISINCENTIVE
					SIDE ROAD	UPPER LAYER	3 MT 58-28 S	4 MT 58-28 S	65	1.75		
		SMITH ROAD		LT	SIDE ROAD	LOWER LAYER	MILLED EXISTING HMA SURFACE	3 MT 58-28 S	84	2.25	PWL INCENTIVE AIR VOIDS HMA PAVEMENT 460.2010	ACCEPTANCE TESTING BY THE DEPARTMENT; NOT ELEGIBLE FOR INCENTIVE OR DISINCENTIVE
					SIDE ROAD	UPPER LAYER	3 MT 58-28 S	4 MT 58-28 S	65	1.75		
		VANBOXTEL ROAD		RT	SIDE ROAD	LOWER LAYER	MILLED EXISTING HMA SURFACE	3 MT 58-28 S	92	2.25	PWL INCENTIVE AIR VOIDS HMA PAVEMENT 460.2010	ACCEPTANCE TESTING BY THE DEPARTMENT; NOT ELEGIBLE FOR INCENTIVE OR DISINCENTIVE
					SIDE ROAD	UPPER LAYER	3 MT 58-28 S	4 MT 58-28 S	72	1.75		
		COOPER ROAD		LT	SIDE ROAD	LOWER LAYER	MILLED EXISTING HMA SURFACE	3 MT 58-28 S	88	2.25	PWL INCENTIVE AIR VOIDS HMA PAVEMENT 460.2010	ACCEPTANCE TESTING BY THE DEPARTMENT; NOT ELEGIBLE FOR INCENTIVE OR DISINCENTIVE
					SIDE ROAD	UPPER LAYER	3 MT 58-28 S	4 MT 58-28 S	68	1.75		
		OLSON ROAD		LT	SIDE ROAD	LOWER LAYER	MILLED EXISTING HMA SURFACE	3 MT 58-28 S	76	2.25	PWL INCENTIVE AIR VOIDS HMA PAVEMENT 460.2010	ACCEPTANCE TESTING BY THE DEPARTMENT; NOT ELEGIBLE FOR INCENTIVE OR DISINCENTIVE
					SIDE ROAD	UPPER LAYER	3 MT 58-28 S	4 MT 58-28 S	59	1.75		
		RED WILLOW PARKWAY		LT & RT	SIDE ROAD	LOWER LAYER	MILLED EXISTING HMA SURFACE	3 MT 58-28 S	169	2.25	PWL INCENTIVE AIR VOIDS HMA PAVEMENT 460.2010	ACCEPTANCE TESTING BY THE DEPARTMENT; NOT ELEGIBLE FOR INCENTIVE OR DISINCENTIVE
					SIDE ROAD	UPPER LAYER	3 MT 58-28 S	4 MT 58-28 S	132	1.75		

3

ASPHALTIC RUMBLE STRIPS

CATEGORY	STATION	TO	STATION	LOCATION	465.0520 ASPHALTIC RUMBLE STRIPS, SHOULDER LF	465.0560 ASPHALTIC RUMBLE STRIPS, CENTERLINE LF
0010	1133+00	-	1148+75	STH 54 (EB) LT	480	775
0010	1133+00	-	1148+75	STH 54 (EB) RT	340	
0010	1148+75	-	1161+50	STH 54 (EB) LT	940	1,275
0010	1148+75	-	1161+50	STH 54 (EB) RT	960	
0010	1222+00	-	1232+00	STH 54 (EB) LT	720	1,000
0010	1222+00	-	1232+00	STH 54 (EB) RT	800	
0010	1232+00	-	1252+50	STH 54 (EB) LT	1,240	1,250
0010	1232+00	-	1252+50	STH 54 (EB) RT	1,070	
0010	1252+50	-	1271+75	STH 54 (EB) LT	1,450	1,925
0010	1252+50	-	1271+75	STH 54 (EB) RT	1,540	
0010	1271+75	-	1301+00	STH 54 (EB) LT	2,260	2,525
0010	1271+75	-	1301+00	STH 54 (EB) RT	1,580	
0010	1301+00	-	1346+25	STH 54 (EB) LT	3,560	4,525
0010	1301+00	-	1346+25	STH 54 (EB) RT	2,740	
0010	1346+25	-	1361+25	STH 54 (EB) LT	680	1,100
0010	1346+25	-	1361+25	STH 54 (EB) RT	1,010	
0010	1361+25	-	1519+00	STH 54 (EB) LT	10,520	14,575
0010	1361+25	-	1519+00	STH 54 (EB) RT	10,870	
0010	1519+00	-	1537+54	STH 54 (EB) LT	1,030	1,455
0010	1519+00	-	1537+54	STH 54 (EB) RT	1,310	
				TOTALS 0010	45,100	30,405

CULVERT PIPE AND APRON ENDWALLS

CATEGORY	STATION	LOCATION		522.1024 APRON ENDWALLS FOR CULVERT PIPE REINFORCED CONCRETE 24-INCH EACH	522.1030 APRON ENDWALLS FOR CULVERT PIPE REINFORCED CONCRETE 30-INCH EACH	522.1036 APRON ENDWALLS FOR CULVERT PIPE REINFORCED CONCRETE 36-INCH EACH	522.1042 APRON ENDWALLS FOR CULVERT PIPE REINFORCED CONCRETE 42-INCH EACH	522.1048 APRON ENDWALLS FOR CULVERT PIPE REINFORCED CONCRETE 48-INCH EACH	* 520.8000 CONCRETE COLLARS FOR PIPE EACH	521.1018 APRON ENDWALLS FOR CULVERT PIPE STEEL 18-INCH EACH	521.3118 CULVERT PIPE CORRUGATED STEEL 18-INCH LF	633.5200 MARKERS CULVERT END EACH	STEEL THICKNESS INCHES	REMARKS
0010	1179+73	STH 54 (EB)	LT & RT	2	-	-	-	-	2	-	-	2	-	REPLACE NORTH AND SOUTH ENDWALLS
0010	1248+19	STH 54 (EB)	LT	-	-	-	-	-	-	-	-	1	-	MARKER POST REQUIRED
0010	1264+65	STH 54 (EB)	RT	-	-	-	-	-	-	-	-	1	-	MARKER POST REQUIRED
0010	1309+12	STH 54 (EB)	RT	-	-	-	-	-	-	-	-	1	-	MARKER POST REQUIRED
0010	1315+46	STH 54 (EB)	LT & RT	-	-	2	-	-	2	-	-	1	-	REPLACE NORTH AND SOUTH ENDWALLS
0010	1340+39	STH 54 (EB)	LT & RT	-	-	-	2	-	2	-	-	2	-	REPLACE NORTH AND SOUTH ENDWALLS
0010	1362+17	STH 54 (EB)	LT & RT	2	-	-	-	-	2	-	-	2	-	REPLACE NORTH AND SOUTH ENDWALLS
0010	1368+26	STH 54 (EB)	LT & RT	-	2	-	-	-	2	-	-	2	-	REPLACE NORTH AND SOUTH ENDWALLS
0010	1423+51	STH 54 (EB)	RT	-	-	-	-	-	-	2	48	-	0.064	NEW ENTRANCE
0010	1447+78	STH 54 (EB)	LT & RT	-	-	-	-	2	2	-	-	2	-	REPLACE NORTH AND SOUTH ENDWALLS
0010	1457+95	STH 54 (EB)	LT & RT	-	-	-	-	2	2	-	-	2	-	REPLACE NORTH AND SOUTH ENDWALLS
		TOTALS 0010		4	2	2	2	4	14	2	48	16		

*QUANTITY SHOWN ELSEWHERE

NOTE: NEW JOINT TIES REQUIRED BETWEEN EXISTING PIPE AND NEW ENDWALL

3

CONCRETE SURFACES

CATEGORY	STATION	TO	STATION	LOCATION		405.0100 COLORING CONCRETE WISDOT RED CY	415.2010 CONCRETE TRUCK APRON 12-INCH SY	602.0405 CONCRETE SIDEWALK 4-INCH SF	602.0415 CONCRETE SIDEWALK 6-INCH SF	602.0515 CURB RAMP DETECTABLE WARNING FIELD NATURAL PATINA SF	602.0810 CONCRETE DRIVEWAY 6-INCH SY	602.0820 CONCRETE DRIVEWAY 8-INCH SY	608.0870 CONCRETE DRIVEWAY HES 8-INCH SY	REMARKS
0010	1188+18	-	1188+55	STH 54 (EB)	LT	5	14	-	-	-	-	-	-	
0010	1188+90	-	1189+30	STH 54 (EB)	RT	-	-	-	-	-	-	-	17	ENTRANCE
0010	1189+17	-	1192+81	STH 54 (EB)	LT	-	-	2715	150	20	-	-	-	SIDEWALK
0010	1189+54	-	1189+80	STH 54 (EB)	LT	4	12	-	-	-	-	-	-	
0010	1189+80	-	1189+88	STH 54 (EB)	LT	-	2	-	-	-	-	-	-	
0010	1189+81	-	1192+42	STH 54 (EB)	RT	-	-	1135	45	30	-	-	-	SIDEWALK
0010	1189+88	-	1190+42	STH 54 (EB)	LT	6	18	-	-	-	-	-	-	
0010	1190+42	-	1192+36	STH 54 (EB)	LT	44	-	1,180	-	-	-	-	-	
0010	1190+45	-	1190+90	STH 54 (EB)	RT	-	-	-	-	-	-	-	45	ENTRANCE
0010	1190+60	-	1190+90	STH 54 (EB)	LT	-	-	-	-	-	-	-	35	ENTRANCE
0010	1191+10	-	1191+50	STH 54 (EB)	LT	-	-	-	-	-	-	80	-	ENTRANCE
0010	1192+36	-	1192+45	STH 54 (EB)	LT	-	2	-	-	-	-	-	-	
0010	1192+45	-	1192+68	STH 54 (EB)	LT	4	10	-	-	-	-	-	-	
0010	1193+23	-	1193+85	STH 54 (EB)	LT	-	-	530	235	10	-	-	-	SIDEWALK
0010	1193+69	-	1194+23	STH 54 (EB)	LT & RT	5	15	-	-	-	-	-	-	
0010	10+00	-	10+28	STH 55 (NB)	LT & RT	2	6	-	-	-	-	-	-	
0010	11+00	-	11+15	STH 55 (NB)	LT	-	-	-	-	-	15	-	-	ENTRANCE
0010	11+25	-	11+60	STH 55 (NB)	RT	-	-	-	-	-	-	-	15	ENTRANCE
0010	32+02	-	32+29	IVORY ST (NB)	LT & RT	2	5	-	-	-	-	-	-	
0010	33+30	-	33+51	IVORY ST (NB)	LT & RT	1	3	-	-	-	-	-	-	
0010	31+45	-	31+85	IVORY ST (NB)	LT	-	-	-	-	-	50	-	-	ENTRANCE
0010	33+90	-	34+30	IVORY ST (NB)	RT	-	-	-	-	-	-	-	43	ENTRANCE
0010	34+45	-	34+50	IVORY ST (NB)	LT	-	-	-	-	-	-	-	5	ENTRANCE
0010	50+00	-	51+92	RDBT-54-55	CA	89	266	-	-	-	-	-	-	
0010	60+00	-	61+91	RDBT-54-IVORY ST	CB	88	262	-	-	-	-	-	-	
				TOTALS 0010		250	615	5,560	430	60	65	80	160	

CONCRETE CURB & GUTTER

CATEGORY	STATION	TO	STATION	LOCATION		416.0610 DRILLED TIE BARS EACH	601.0110 CONCRETE CURB TYPE D LF	601.0407 CONCRETE CURB & GUTTER 18-INCH TYPE D LF	601.0411 CONCRETE CURB & GUTTER 30-INCH TYPE D LF	620.0300 CONCRETE MEDIAN SLOPED NOSE SF	SPV.0090.01 CONCRETE CURB TYPE A MODIFIED LF	SPV.0090.02 CONCRETE CURB & GUTTER 30-INCH TYPE D MODIFIED LF	SPV.0090.03 CONCRETE CURB & GUTTER 4-INCH SLOPED 36-INCH TYPE D MODIFIED LF	SPV.0090.04 CONCRETE CURB & GUTTER 3-INCH SLOPED 36-INCH TYPE R MODIFIED LF	SPV.0090.05 CONCRETE CURB & GUTTER HES 30-INCH TYPE D SPECIAL LF	SPV.0165.01 CONCRETE CURB & GUTTER TRANSITION SF	REMARKS
0010	1186+75		1192+97	STH 54 (EB)	RT	2	-	-	-	-	-	543	-	-	-	-	
0010	1186+75		1188+80	STH 54 (EB)	LT	2	-	-	-	-	-	186	-	-	-	-	
0010	1188+18	-	1188+55	STH 54 (EB)	LT & RT	-	-	-	-	100	-	-	90	-	-	-	
0010	1188+90	-	1189+30	STH 54 (EB)	RT	-	12	30	-	-	-	-	-	-	50	-	ENTRANCE
0010	1189+28		1192+93	STH 54 (EB)	LT	-	-	-	-	-	-	398	-	-	-	-	
0010	1189+54	-	1190+42	STH 54 (EB)	LT	-	-	-	-	50	-	-	164	-	-	-	
0010	1189+56	-	1190+21	STH 54 (WB)	RT	-	-	-	-	-	-	-	72	-	-	-	
0010	1190+21	-	1190+26	STH 54 (WB)	RT	-	-	-	-	-	-	-	-	-	-	20	
0010	1190+26	-	1190+42	STH 54 (EB)	LT	-	-	-	-	-	20	-	-	-	-	-	
0010	1190+26	-	1192+38	STH 54 (WB)	RT	-	-	-	-	-	-	211	-	-	-	-	
0010	1190+42	-	1190+65	STH 54 (EB)	LT	-	-	-	-	-	-	-	-	-	-	80	
0010	1190+45	-	1190+90	STH 54 (EB)	RT	-	-	-	-	-	-	-	-	-	55	-	ENTRANCE
0010	1190+60	-	1190+90	STH 54 (EB)	LT & RT	-	-	30	-	-	-	-	-	-	40	-	ENTRANCE
0010	1190+65	-	1192+38	STH 54 (EB)	LT	-	-	-	-	-	-	171	-	-	-	-	
0010	1192+38	-	1192+68	STH 54 (EB)	LT	-	-	-	-	50	-	-	37	-	-	-	
0010	1192+38	-	1192+69	STH 54 (WB)	RT	-	-	-	-	-	-	-	37	-	-	-	
0010	1193+35	-	1195+15	STH 54 (EB)	LT	2	-	-	-	-	-	143	-	-	-	-	
0010	1193+45	-	1195+15	STH 54 (EB)	RT	2	-	-	-	-	-	142	-	-	-	-	
0010	1193+69	-	1194+23	STH 54 (EB)	LT & RT	-	-	-	-	100	-	-	122	-	-	-	
0010	1194+45	-	1194+80	STH 54 (EB)	RT	-	-	-	-	-	-	-	-	-	45	-	ENTRANCE
0010	1194+75	-	1195+15	STH 54 (EB)	LT	-	-	-	-	-	-	-	-	-	50	-	ENTRANCE
0010	URBAN RESURFACE AREAS			STH 54 (EB)	LT & RT	20	-	-	50	-	-	-	-	-	-	-	10-FOOT SECTION REPLACEMENT
0010	10+00	-	10+28	STH 55 (NB)	LT & RT	-	-	-	-	90	-	-	65	-	-	-	
0010	10+10	-	11+75	STH 55 (NB)	LT & RT	4	-	-	-	-	-	234	-	-	-	-	
0010	11+15	-	11+20	STH 55 (NB)	LT	-	12	-	-	-	-	-	-	-	-	-	ENTRANCE
0010	11+25	-	11+60	STH 55 (NB)	RT	-	-	-	-	-	-	-	-	-	45	-	ENTRANCE
0010	31+45	-	31+85	IVORY ST (NB)	LT	-	-	-	-	-	-	-	-	-	50	-	ENTRANCE
0010	32+02	-	32+29	IVORY ST (NB)	LT & RT	-	-	-	-	90	-	-	66	-	-	-	
0010	31+25	-	32+18	IVORY ST (NB)	LT & RT	4	-	-	-	-	-	189		-	-	-	
0010	33+30	-	33+51	IVORY ST (NB)	LT & RT	-	-	-	-	90	-	-	52	-	-	-	
0010	33+40	-	34+50	IVORY ST (NB)	LT & RT	4	-	-	-	-	-	163		-	-	-	
0010	33+90	-	34+30	IVORY ST (NB)	RT	-	-	-	-	-	-	-	-	-	50	-	ENTRANCE
0010	50+00	-	51+92	RDBT-54-55	CA	-	-	-	-	-	-	-	-	193	-	-	
0010	60+00	-	61+91	RDBT-54-IVORY ST	CB	-	-	-	-	-	-	-	-	192	-	-	
				TOTALS 0010		40	24	60	50	570	20	2,380	705	385	385	100	

STORM SEWER PIPES

CATEGORY	FROM		TO	LOCATION	* 520.8000 CONCRETE COLLARS FOR PIPE EACH	608.0005 STORM SEWER ROCK EXCAVATION CY	608.0412 STORM SEWER PIPE REINFORCED CONCRETE CLASS IV 12-INCH LF	608.0415 STORM SEWER PIPE REINFORCED CONCRETE CLASS IV 15-INCH LF	608.0418 STORM SEWER PIPE REINFORCED CONCRETE CLASS IV 18-INCH LF	608.0424 STORM SEWER PIPE REINFORCED CONCRETE CLASS IV 24-INCH LF	608.2319 STORM SEWER PIPE REINFORCED CONCRETE HORIZONTAL ELLIPTICAL CLASS HE-III 19X30-INCH LF	SPV.0090.06 STORM SEWER PIPE COMPOSITE 6-INCH	608.6008 STORM SEWER PIPE COMPOSITE 8-INCH LF	608.6012 STORM SEWER PIPE COMPOSITE 12-INCH LF
0010	EXISTING MH	-	10	STH 54 (EB)	-	70	-	-	-	101	-	-	-	-
0010	EXISTING INLET	-	41	STH 54 (EB)	-	-	-	-	-	-	-	-	26	-
0010	EXISTING INLET	-	32	STH 54 (EB)	1	30	-	-	-	-	-	-	-	26
0010	10	-	11	STH 54 (EB)	-	40	48	-	-	-	-	-	-	-
0010	10	-	20	STH 54 (EB)	-	70	-	-	-	132	-	-	-	-
0010	20	-	30	STH 54 (EB)	-	-	-	-	-	128	-	-	-	-
0010	20	-	22	STH 54 (EB)	-	40	39	-	-	-	-	-	-	-
0010	21	-	20	STH 54 (EB)	-	20	11	-	-	-	-	-	-	-
0010	22	-	23	STH 54 (EB)	-	70	62	-	-	-	-	-	-	-
0010	23	-	24	STH 54 (EB)	-	50	51	-	-	-	-	-	-	-
0010	24	-	25	STH 54 (EB)	-	10	8	-	-	-	-	-	-	-
0010	30	-	32	STH 54 (EB)	-	-	38	-	-	-	-	-	-	-
0010	30	-	40	STH 54 (EB)	-	-	-	-	-	123	-	-	-	-
0010	31	-	30	STH 54 (EB)	-	-	11	-	-	-	-	-	-	-
0010	40	-	43	STH 54 (EB)	-	-	-	33	-	-	-	-	-	-
0010	40	-	50	STH 54 (EB)	-	-	-	-	-	206	-	-	-	-
0010	41	-	42	STH 54 (EB)	-	-	30	-	-	-	-	-	-	-
0010	41	-	40	STH 54 (EB)	-	-	9	-	-	-	-	-	-	-
0010	43	-	44	STH 54 (EB)	-	-	35	-	-	-	-	-	-	-
0010	45	-	44	STH 54 (EB)	-	-	48	-	-	-	-	-	-	-
0010	50	-	60	STH 54 (EB)	-	-	-	-	-	48	-	-	-	-
0010	60	-	EXISTING PIPE	STH 54 (EB)	1	-	-	-	-	-	-	10	-	-
0010	60	-	EXISTING PIPE	STH 54 (EB)	1	-	-	-	8	-	-	-	-	-
0010	70	-	71	STH 54 (EB)	-	-	51	-	-	-	-	-	-	-
0010	71	-	EXISTING PIPE	STH 54 (EB)	1	-	-	-	-	-	5	-	-	-
0010	72	-	71	STH 54 (EB)	-	-	-	-	35	-	-	-	-	-
0010	72	-	73	STH 54 (EB)	-	-	-	-	66	-	-	-	-	-
0010	73	-	EXISTING PIPE	STH 54 (EB)	1	-	-	-	7	-	-	-	-	-
0010	74	-	73	STH 54 (EB)	-	-	7	-	-	-	-	-	-	-
			TOTALS 0010		5	400	448	33	116	738	5	10	26	26

*QUANTITY SHOWN ELSEWHERE

3

STORM SEWER STRUCTURES

CATEGORY	STRUCTURE	STATION	** OFFSET	LOCATION	611.0535 MANHOLE COVERS TYPE J-SPECIAL EACH	611.0612 INLET COVERS TYPE C EACH	611.0624 INLET COVERS TYPE H EACH	611.0639 INLET COVERS TYPE H-S EACH	611.2004 MANHOLES 4-FT DIAMETER EACH	611.2005 MANHOLES 5-FT DIAMETER EACH	611.3004 INLETS 4-FT DIAMETER EACH	SPV.0060.05 INLETS 5-FT DIAMETER EACH	611.3230 INLETS 2X3-FT EACH	611.8110 ADJUSTING MANHOLE COVERS EACH	611.8115 ADJUSTING INLET COVERS EACH
0010	EXIST	1188+22.90	17.80' RT	STH 54 (EB)	-	-	-	-	-	-	-	-	-	-	1
0010	EXIST	1188+36.30	5.70' RT	STH 54 (EB)	-	-	-	-	-	-	-	-	-	1	-
0010	10	1188+39.51	18.52' RT	STH 54 (EB)	-	-	1	-	-	-	-	1	-	-	-
0010	11	1188+36.59	29.44' LT	STH 54 (EB)	-	-	1	-	-	-	-	-	1	-	-
0010	20	1189+71.28	8.00' RT	STH 54 (EB)	1	-	-	-	1	-	-	-	-	-	-
0010	21	1189+70.84	18.70' RT	STH 54 (EB)	-	-	1	-	-	-	-	-	1	-	-
0010	22	1189+72.31	30.99' LT	STH 54 (EB)	-	-	1	-	-	-	-	-	1	-	-
0010	23	1189+26.69	80.99' LT	STH 54 (EB)	-	-	1		-	-	-	-	1	-	-
0010	24	1188+76.55	71.02' LT	STH 54 (EB)	-	-	-	1	-	-	-	-	1	-	-
0010	25	1188+72.84	63.95' LT	STH 54 (EB)	-	-	1	-	-	-	-	-	1	-	-
0010	30	1191+00.02	7.67' RT	STH 54 (EB)	1	-	-	-	1	-	-	-	-	-	-
0010	31	1191+00.05	18.50' RT	STH 54 (EB)	-	-	1	-	-	-	-	-	1	-	-
0010	32	1190+99.91	30.50' LT	STH 54 (EB)	-	-	1	-	-	-	-	-	1	-	-
0010	40	1192+22.15	6.70' RT	STH 54 (EB)	1	-	-	-	1	-	-	-	-	-	-
0010	41	1192+21.21	15.89' RT	STH 54 (EB)	-	-	1	-	-	-	-	-	1	-	-
0010	42	1192+55.17	19.22' RT	STH 54 (EB)	-	-	-	1	-	-	-	-	1	-	-
0010	43	1192+25.58	25.74' LT	STH 54 (EB)	-	-	1	-	-	-	-	-	1	-	-
0010	44	1192+53.93	30.63' LT	STH 54 (EB)	-	-	-	1	-	-	-	-	1	-	-
0010	45	1192+91.72	64.47' LT	STH 54 (EB)	-	-	1	-	-	-	-	-	1	-	-
0010	50	1194+29.33	26.85' LT	STH 54 (EB)	-	-	1	-	-	-	1	-	1	-	-
0010	60	1194+72.80	44.15' LT	STH 54 (EB)	-	1	-	-	-	-	1	-	-	-	-
0010	70	1193+03.76	87.17' RT	STH 54 (EB)	-	-	-	1	-	-	-	-	1	-	-
0010	71	1193+52.65	72.75' RT	STH 54 (EB)	1	-	-	-	-	1	-	-	-	-	-
0010	72	1193+68.90	41.50' RT	STH 54 (EB)	-	1	-	-	-	-	1	-	-	-	-
0010	73	1194+27.12	25.01' RT	STH 54 (EB)	1	-	-	-	1	-	-	-	-	-	-
0010	74	1194+27.23	18.08' RT	STH 54 (EB)	-	-	1	-	-	-	-	-	1	-	-
		TOTALS 0010			5	2	13	4	4	1	3	1	16	1	1

** STATIONS AND OFFSETS ARE TO CENTER OF STRUCTURE

3

INSULATION BOARD POLYSTYRENE

CATEGORY	STATION	LOCATION		612.0902.S.01 INSULATION BOARD POLYSTYRENE (2-INCH) SY	REMARKS
0020	10+15	STH 54 (NB)	RT	4	BETWEEN STORM SEWER AND WATERMAIN
		TOTAL 0020		4	

GUARDRAIL

CATEGORY	STATION	TO	STATION	LOCATION		614.2300 MGS GUARDRAIL 3 LF	614.2310 MGS GUARDRAIL 3 HS LF	614.2340 MGS GUARDRAIL 3 L LF	614.2610 MGS GUARDRAIL TERMINAL EAT EACH	614.8010 ANCHOR POST ASSEMBLY TOP MOUNT EACH
0010	1327+45	-	1330+76	STH 54 (EB)	LT	12.5	-	112.5	2	-
0010	1327+95	-	1330+76	STH 54 (EB)	RT	25	50	-	2	4
0010	1415+68	-	1419+11	STH 54 (EB)	LT	37.5	-	100	2	-
0010	1415+24	-	1418+67	STH 54 (EB)	RT	37.5	-	100	2	-
0010	1438+47	-	1441+91	STH 54 (EB)	LT	25.0	-	112.5	2	-
0010	1438+47	-	1441+91	STH 54 (EB)	RT	25.0	-	112.5	2	-
0010	1522+19	-	1525+63	STH 54 (EB)	LT	37.5	-	100	2	-
0010	1522+50	-	1524+98	STH 54 (EB)	RT	25	50	-	2	2
				TOTALS 0010		225	100	637.5	16	6

LANDMARK REFERENCE MONUMENTS

CATEGORY	STATION	TO	STATION	LOCATION	621.0100 LANDMARK REFERENCE MONUMENTS EACH	REMARKS
0010	1181+25	-	1190+00	STH 54 (EB)	4	SECTION CORNER
0010	1192+50	-	1193+75	STH 54 (EB)	4	CLOSING CORNER
				TOTAL 0010	8	

3

LANDSCAPING ITEMS

CATEGORY	STATION	TO	STATION	LOCATION		625.0100 TOPSOIL SY	628.1504 SILT FENCE LF	628.1520 SILT FENCE MAINTENANCE LF	628.2004 EROSION MAT CLASS I TYPE B SY	628.2006 EROSION MAT URBAN CLASS I TYPE A SY	628.7555 CULVERT PIPE CHECKS EACH	628.7570 ROCK BAGS EACH	629.0210 FERTILIZER TYPE B CWT	630.0130 SEEDING MIXTURE NO. 30 LB	630.0140 SEEDING MIXTURE NO. 40 LB	630.0500 SEED WATER MGAL	SPV.0060.04 CLEANING CULVERT END EACH	REMARKS
0010	1179+73			STH 54 (EB)	RT	23	40	80	23	-	3	30	0.1	0.4	-	1	-	REPLACE NORTH AND SOUTH ENDWALLS
0010	1186+75	-	1192+68	STH 54 (EB)	RT	748	-	-	-	748	-	-	0.5	-	13.5	17	-	INCLUDES WEST SIDE IVORY ST
0010	1186+75	-	1188+50	STH 54 (EB)	LT	224	-	-	-	224	-	-	0.2	-	4.1	6	-	INCLUDES WEST SIDE STH 55
0010	1189+54	-	1192+60	STH 54 (EB)	LT	812	25	50	-	812	-	-	0.6	-	14.7	19	-	INCLUDES EAST SIDE STH 55 & WEST SIDE IVORY ST
0010	1193+69	-	1195+15	STH 54 (EB)	RT	417	-	-	-	417	-	-	0.3	-	7.5	10	-	EAST SIDE IVORY ST
0010	1193+69	-	1195+15	STH 54 (EB)	LT	447	-	-	-	447	-	-	0.3	-	8.2	11	-	EAST SIDE IVORY
0010	1315+46			STH 54 (EB)	LT	12	20	40	12	-	7	45	0.1	0.2	-	1	-	REPLACE NORTH ENDWALL
0010	1327+45	-	1330+76	STH 54 (EB)	LT	514	392	784	514	-	-	45	0.4	9.3	-	12	-	GUARDRAIL REPLACEMENT
0010	1327+95	-	1330+76	STH 54 (EB)	RT	482	372	744	482	-	-	45	0.4	8.7	-	11	-	GUARDRAIL REPLACEMENT
0010	1340+39			STH 54 (EB)	LT & RT	23	-	-	23	-	7	30	0.1	0.4	-	1	-	REPLACE NORTH AND SOUTH ENDWALLS
0010	1362+17			STH 54 (EB)	LT & RT	23	40	80	23	-	3	30	0.1	0.4	-	1	2	CULVERT ENDS
0010	1368+26			STH 54 (EB)	LT & RT	23	40	80	23	-	6	30	0.1	0.4	-	1	-	REPLACE NORTH AND SOUTH ENDWALLS
0010	1415+68	-	1419+11	STH 54 (EB)	LT	820	373	746	821	-	-	60	0.6	14.8	-	19	-	GUARDRAIL REPLACEMENT
0010	1415+24	-	1418+67	STH 54 (EB)	RT	645	357	714	645	-	-	60	0.5	11.6	-	15	-	GUARDRAIL REPLACEMENT
0010	1417+80			STH 54 (EB)	RT	80	-	-	80	-	-	-	0.1	1.5	-	2	-	ENTRANCE REMOVAL
0010	1423+51			STH 54 (EB)	RT	47	-	-	47	-	2	-	0.1	0.9	-	2	-	NEW ENTRANCE
0010	1447+78			STH 54 (EB)	LT & RT	23	40	80	23	-	10	30	0.1	0.4	-	1	-	REPLACE NORTH AND SOUTH ENDWALLS
0010	1457+95			STH 54 (EB)	LT & RT	23	40	80	23	-	10	30	0.1	0.4	-	1	-	REPLACE NORTH AND SOUTH ENDWALLS
0010	1438+47	-	1441+91	STH 54 (EB)	LT	679	413	826	679	-	-	60	0.5	12.3	-	16	-	GUARDRAIL REPLACEMENT
0010	1438+47	-	1441+91	STH 54 (EB)	RT	663	404	808	663	-	-	60	0.5	12.0	-	15	-	GUARDRAIL REPLACEMENT
0010	1522+19	-	1525+63	STH 54 (EB)	LT	663	412	824	663	-	-	60	0.5	12.0	-	15	-	GUARDRAIL REPLACEMENT
0010	1522+50	-	1524+98	STH 54 (EB)	RT	609	362	724	609	-	-	60	0.4	11.0	-	14	-	GUARDRAIL REPLACEMENT
				PROJECT		2000	820	1640	1347	652	12	170	1.4	23	12	49	-	UNDISTRIBUTED
				TOTALS 0010		10,000	4,150	8,300	6,700	3,300	60	845	8	120	60	240	2	

INLET PROTECTION

CATEGORY	STRUCTURE	STATION	OFFSET	LOCATION	628.7005 INLET PROTECTION TYPE A EACH	628.7010 INLET PROTECTION TYPE B EACH	628.7015 INLET PROTECTION TYPE C EACH	628.7020 INLET PROTECTION TYPE D EACH
0010	EXIST	1187+23.00	18.00' RT	STH 54 (EB)	-	-	1	-
0010	10	1188+39.51	18.52' RT	STH 54 (EB)	1	-	1	-
0010	11	1188+36.59	29.44' LT	STH 54 (EB)	1	-	1	-
0010	21	1189+70.84	18.70' RT	STH 54 (EB)	1	-	1	-
0010	22	1189+72.31	30.99' LT	STH 54 (EB)	1	-	1	-
0010	23	1189+26.69	80.99' LT	STH 54 (EB)	1	-	1	-
0010	24	1188+76.55	71.02' LT	STH 54 (EB)	1	-	-	1
0010	25	1188+72.84	63.95' LT	STH 54 (EB)	1	-	1	-
0010	31	1191+00.05	18.50' RT	STH 54 (EB)	1	-	1	-
0010	32	1190+99.91	30.50' LT	STH 54 (EB)	1	-	1	-
0010	41	1192+21.21	15.91' RT	STH 54 (EB)	1	-	1	-
0010	42	1192+55.17	19.22' RT	STH 54 (EB)	1	-	1	-
0010	43	1192+25.58	25.74' LT	STH 54 (EB)	1	-	1	-
0010	44	1192+53.93	30.63' LT	STH 54 (EB)	1	-	1	-
0010	45	1192+91.72	64.47' LT	STH 54 (EB)	1	-	1	-
0010	50	1194+29.33	26.85' LT	STH 54 (EB)	1	-	-	1
0010	60	1194+72.80	44.15' LT	STH 54 (EB)	1	-	-	1
0010	70	1193+03.76	87.17' RT	STH 54 (EB)	1	-	1	-
0010	72	1193+68.90	41.50' RT	STH 54 (EB)	1	1	-	-
0010	74	1194+27.23	18.08' RT	STH 54 (EB)	1	-	1	-
0010	EXIST	1196+23.00	19.00' RT	STH 54 (EB)	-	-	1	-
0010	EXIST	1197+42.00	33.00' LT	STH 54 (EB)	-	-	1	-
0010	EXIST	1198+70.00	17.50' RT	STH 54 (EB)	-	-	1	-
0010	EXIST	1202+75.00	33.50' LT	STH 54 (EB)	-	-	1	-
0010	EXIST	1202+75.00	30.50' RT	STH 54 (EB)	-	-	1	-
0010	EXIST	30+40.00	26.00' LT	IVORY ST (NB)	-	1	-	-
0010	EXIST	30+50.00	21.00' RT	IVORY ST (NB)	-	-	1	-
0010	EXIST	36+20.00	16.00' RT	IVORY ST (NB)	-	1	-	-
		1ST INLET OUTSIDE RECONSTRUCT					6	2
		UNDISTRIBUTED			6	2	7	2
				TOTALS 0010	25	5	35	7

MOBILIZATIONS EROSION CONTROL

CATEGORY	LOCATION	628.1905 MOBILIZATIONS EROSION CONTROL EACH	628.1910 MOBILIZATIONS EMERGENCY EROSION CONTROL EACH
0010	PROJECT	6	5
	TOTALS 0010	6	5

MAINLINE RURAL RESURFACE MARKING

CATEGORY	STATION	TO	STATION	LOCATION		* 643.3165 TEMPORARY MARKING LINE PAINT 6-INCH (WHITE) LF	643.3165 TEMPORARY MARKING LINE PAINT 6-INCH (YELLOW) LF	646.2040 MARKING LINE GROOVED WET REF EPOXY 6-INCH LF	* 646.4020 MARKING LINE EPOXY 10-INCH LF	REMARKS
0010	1133+00	-	1148+75	STH 54 (EB)	LT & RT	-	7,880	1,970	-	CENTERLINE:SOILD-DASHED
0010	1133+00	-	1148+75	STH 54 (EB)	LT & RT	9,450	-	3,150	-	EDGELINES
0010	1148+75	-	1161+50	STH 54 (EB)	LT & RT	-	1,280	320	-	CENTERLINE:DASHED
0010	1148+75	-	1161+50	STH 54 (EB)	LT & RT	7,650	-	2,550	-	EDGELINES
0010	1222+00	-	1232+00	STH 54 (EB)	LT & RT	-	1,000	250	-	CENTERLINE:DASHED
0010	1222+00	-	1232+00	STH 54 (EB)	LT & RT	6,000	-	2,000		EDGELINES
0010	1232+00	-	1252+50	STH 54 (EB)	LT & RT	-	10,250	2,570	-	CENTERLINE:SOILD-DASHED
0010	1232+00	-	1252+50	STH 54 (EB)	LT & RT	12,300	-	4,100	200	EDGELINES
0010	1252+50	-	1271+75	STH 54 (EB)	LT & RT	-	1,930	490	-	CENTERLINE:DASHED
0010	1252+50	-	1271+75	STH 54 (EB)	LT & RT	11,550	-	3,850	-	EDGELINES
0010	1271+75	-	1291+00	STH 54 (EB)	LT & RT	-	9,630	2,410	-	CENTERLINE:SOLID-DASHED
0010	1271+75	-	1291+00	STH 54 (EB)	LT & RT	11,550	-	3,850	-	EDGELINES
0010	1291+00	-	1294+00	STH 54 (EB)	LT & RT	-	2,400	600	-	CENTERLINE:SOLID-SOLID
0010	1291+00	-	1294+00	STH 54 (EB)	LT & RT	1,800	-	600	-	EDGELINES
0010	1294+00	-	1301+00	STH 54 (EB)	LT & RT	-	3,500	880	-	CENTERLINE:SOLID-DASHED
0010	1294+00	-	1301+00	STH 54 (EB)	LT & RT	4,200	-	1,400	90	EDGELINES
0010	1301+00	-	1346+25	STH 54 (EB)	LT & RT	-	4,530	1,140	-	CENTERLINE:DASHED
0010	1301+00	-	1346+25	STH 54 (EB)	LT & RT	27,150	-	9,050	115	EDGELINES
0010	1346+25	-	1361+25	STH 54 (EB)	LT & RT	-	7,500	1,880	-	CENTERLINE:SOILD-DASHED
0010	1346+25	-	1361+25	STH 54 (EB)	LT & RT	9,000	-	3,000	115	EDGELINES
0010	1361+25	-	1519+00	STH 54 (EB)	LT & RT	-	15,780	3,950	-	CENTERLINE:DASHED
0010	1361+25	-	1519+00	STH 54 (EB)	LT & RT	94,650	-	31,550	595	EDGELINES
0010	1519+00	-	1537+54	STH 54 (EB)	LT & RT	-	9,270	2,320	-	CENTERLINE:SOILD-DASHED
0010	1519+00	-	1537+54	STH 54 (EB)	LT & RT	11,130	-	3,710	110	EDGELINES
					TOTALS 0010	281,380	87,590	1,225		

*QUANTITY SHOWN ELSEWHERE

NOTE: TEMPORARY MARKINGS ARE REQUIRED ON ROADWAYS OPEN TO TRAFFIC
PROVIDE FULL REPLACEMENT OF EXISTING MARKINGS WITH TEMPORARY MARKINGS
TEMPORARY EDGELINES ARE REQUIRED ON ALL LAYERS
ON FINAL SURFACE TEMPORARY MARKINGS ARE REQUIRED WHERE SAME DAY MARKINGS ARE NOT BEING INSTALLED.

SIDEROAD AND URBAN MARKING

CATEGORY	STATION	TO	STATION	LOCATION		* 643.3165 TEMPORARY MARKING LINE PAINT 6-INCH (WHITE) LF	643.3165 TEMPORARY MARKING LINE PAINT 6-INCH (YELLOW) LF	646.2020 MARKING LINE EPOXY 6-INCH (WHITE) LF	646.2020 MARKING LINE EPOXY 6-INCH (YELLOW) LF	* 646.4020 MARKING LINE EPOXY 10- (WHITE) LF	646.4720 MARKING LINE SAME DAY EPOXY 6-INCH (WHITE) LF	646.4720 MARKING LINE SAME DAY EPOXY 6-INCH (YELLOW) LF	646.1020 MARKING LINE EPOXY 4-INCH (YELLOW) LF	646.3020 MARKING LINE EPOXY 8-INCH (WHITE) LF	646.5020 MARKING ARROW EPOXY (WHITE) EACH	646.6120 MARKING STOP LINE EPOXY 18-INCH (WHITE) LF	646.6320 MARKING DOTTED EXTENSION EPOXY 18-INCH (WHITE) LF	646.7120 MARKING DIAGONAL EPOXY 12-INCH (YELLOW) LF	646.7420 MARKING CROSSWALK EPOXY TRANSVERSE LINE 6-INCH (WHITE) LF	646.8120 MARKING CURB EPOXY (YELLOW) LF	646.8220 MARKING ISLAND NOSE EPOXY (WHITE) EACH	646.9010 MARKING REMOVAL LINE WATER BLASTING 4-INCH LF	REMARKS
0010	1161+50	-	1181+30	STH 54 (EB)	LT & RT	7920	7430	-	-	355	3960	2480	-	-	-	-	-	-	-	-	-	-	
0010	1181+30	-	1186+75	STH 54 (EB)	LT & RT	2180	2050	-	-	-	950	1710	-	-	2	-	-	63	-	-	-	-	
0010	1186+75	-	1188+55	STH 54 (EB)	LT & RT	-	-	250	420	35	-	-	-	-	-	-	14	-	-	10	1	-	
0010	1188+55	-	1193+69	STH 54 (EB)	LT & RT	-	-	490	590	70	-	-	-	-	-	-	16	-	132	-	-	-	
0010	1193+69	-	1194+23	STH 54 (EB)	LT & RT	-	-	230	330	35	-	-	-	-	-	-	16	-	-	10	1	-	
0010	1194+23	-	1195+15	STH 54 (EB)	LT & RT	-	-	230	250	-	-	-	-	-	-	-	-	-	-	-	-	-	
0010	1195+15	-	1207+56	STH 54 (EB)	LT & RT	4970	9310	-	-	215	2490	3110	-	-	6	-	-	-	-	-	-	-	
0010	1207+56	-	1222+00	STH 54 (EB)	LT & RT	5780	5420	-	-	335	2890	1810	-	-	-	-	-	-	-	-	-	-	
0010		-		STH 54 (EB)	LT	-	-	125	-	-	-	-	-	-	-	-	-	-	-	-	-	-	FRENCH ROAD
0010		-		STH 54 (EB)	RT	-	-	125	-	-	-	-	-	-	-	-	-	-	-	-	-	-	FRENCH ROAD
0010		-		STH 54 (EB)	RT	-	-	-	-	-	-	-	-	-	-	-	-	-	-	-	-	-	KORTNEY LANE
0010		-		STH 54 (EB)	LT	-	-	-	-	-	-	-	30	15	-	32	-	-	-	-	-	-	THUNDER WAY
0010		-		STH 54 (EB)	LT	-	-	-	-	-	-	-	20	10	-	30	-	-	-	-	-	-	MAINLINE DRIVE
0010		-		STH 54 (EB)	LT	-	-	-	-	-	-	-	-	-	-	-	-	-	-	-	-	-	VANDENHEUVEL ROAD
0010		-		STH 54 (EB)	RT	-	-	-	-	-	-	-	-	-	-	-	-	-	-	-	-	-	RANCH ROAD
0010		-		STH 54 (EB)	RT	-	-	-	-	350	-	-	-	-	-	-	-	-	-	-	-	-	STH 55
0010		-		STH 54 (EB)	LT & RT	-	-	62.5	-	-	-	-	-	-	-	-	-	-	-	-	-	-	STH 55
0010		-		STH 54 (EB)	RT	-	-	-	-	-	-	-	-	-	-	-	-	-	-	-	-	-	MOORE ROAD
0010		-		STH 54 (EB)	LT & RT	-	-	62.5	60	-	-	-	-	-	-	-	-	-	-	-	-	-	CTH Y
0010		-		STH 54 (EB)	RT	-	-	-	70	-	-	-	-	-	-	-	-	-	-	-	-	-	CTH H
0010		-		STH 54 (EB)	LT	-	-	-	-	-	-	-	-	-	-	-	-	-	-	-	-	-	SMITH ROAD
0010		-		STH 54 (EB)	LT & RT	-	-	-	-	-	-	-	-	-	-	-	-	-	-	-	-	-	RED WILLOW PARKWAY
0010	10+00	-	12+05	STH 55 (NB)	LT & RT	-	-	-	710	35	-	-	-	-	-	-	15	48	-	10	1	60	
0010	30+00	-	32+29	IVORY ST (NB)	LT & RT	-	-	-	810	35	-	-	-	-	-	-	16	8	-	10	1	250	
0010	33+30	-	34+50	IVORY ST (NB)	LT & RT	-	-	-	270	35	-	-	-	-	-	-	12	51	68	10	1	-	
0010	50+00	-	51+92	RDBT-54-55	CA	-	-	-	200	-	-	-	-	-	-	-	-	-	-	-	-	-	
0010	60+00	-	61+91	RDBT-54-IVORY ST	CB	-	-	-	200	-	-	-	-	-	-	-	-	-	-	-	-	-	
				TOTALS 0010		45,060		5,485		1,500	19,400		50	25	8	62	89	170	200	50	5	310	

*QUANTITY SHOWN ELSEWHERE

NOTE: TEMPORARY MARKINGS ARE REQUIRED ON ROADWAYS OPEN TO TRAFFIC
PROVIDE FULL REPLACEMENT OF EXISTING MARKINGS WITH TEMPORARY MARKINGS
TEMPORARY EDGELINES ARE REQUIRED ON ALL LAYERS
ON FINAL SURFACE TEMPORARY MARKINGS ARE REQUIRED WHERE SAME DAY MARKINGS ARE NOT BEING INSTALLED.

ERECTION & REMOVAL OF PERMANENT SIGNING, TYPE II

SIGN NO.	LOCATION	SIGN CODE	W X H	637.2210 SIGNS TYPE II REFLECTIVE TYPE H S.F.	637.2230 SIGNS TYPE II REFLECTIVE TYPE F S.F.	634.0614 POSTS WOOD 4x6x14 EACH	634.0616 POSTS WOOD 4x6x16 EACH	634.0618 POSTS WOOD 4x6x18 EACH	638.2602 REMOVING SIGNS TYPE II EACH	638.3000 REMOVING SMALL SIGN SUPPORTS EACH	REMARKS
1	STH 54, W. OF STH 55	W2-6	30" X 30"	---	6.25	---	---	1	---	---	
2	"	W13-1	18" X 18"	---	2.25	---	---	---	---	---	MOUNT BELOW SIGN 1
3	"	W3-3	---	---	---	---	---	---	1	1	INCLUDEDS R7-53D
4	"	J2-2	48" X 57"	19.00	---	---	1	---	---	---	SEE SIGN PLAN
5	"	D1-2	---	---	---	---	---	---	1	1	
6	"	R1-2	36" X 31"	3.88	---	---	---	1	---	---	
7	"	R6-5P	30" X 30"	6.25	---	---	---	---	---	---	MOUNT BELOW SIGN 6
8	"	J3-1	---	---	---	---	---	---	1	1	
9	"	R1-1F	---	---	---	---	---	---	1	---	
10	"	J13-2	---	---	---	---	---	---	1	1	
11	"	R2-1	24" X 30"	5.00	---	1	---	---	---	---	35 MPH
12	"	J4-1	24" X 36"	6.00	---	---	1	---	---	---	SEE SIGN PLAN
13	"	J4-1	---	---	---	---	---	---	1	1	INCLUDES R2-1
14	STH 55, N. OF STH 54	R1-2	36" X 31"	3.88	---	---	---	1	---	---	
15	"	R6-5P	30" X 30"	6.25	---	---	---	---	---	---	MOUNT BELOW SIGN 14
16	"	R7-1D	---	---	---	---	---	---	1	1	
16A	"	R1-1F	---	---	---	---	---	---	1	1	
17	"	D1-3	---	---	---	---	---	---	1	1	
18	"	J13-2	48" X 45"	15.00	---	---	---	1	---	---	SEE SIGN PLAN
19	"	W3-3	---	---	---	---	---	---	1	1	
20	"	W2-6	30" X 30"	---	6.25	---	---	1	---	---	
21	"	W13-1	18" X 18"	---	2.25	---	---	---	---	---	MOUNT BELOW SIGN 20
22	"	R2-1	---	---	---	---	---	---	1	1	
23	"	S1-1	36" X 36"	---	6.75	---	---	---	---	---	MOUNT TO UTILITY POLE
24	"	S16-9P	30" X 18"	---	3.75	---	---	---	---	---	MOUNT BELOW SIGN 23
25	"	R2-6P	24" X 18"	3.00	---	---	---	---	---	---	MOUNT BELOW SIGN 24
26	"	S1-1	---	---	---	---	---	---	1	1	
27	"	S16-9P	---	---	---	---	---	---	---	---	INCLUDED WITH SIGN 26 REMOVAL
28	"	R2-6P	---	---	---	---	---	---	---	---	INCLUDED WITH SIGN 26 REMOVAL
29	STH 54, E. OF STH 55	J4-2	---	---	---	---	---	---	1	1	
30	"	R6-2R	24" X 30"	5.00	---	1	---	---	---	---	
31	"	R6-2R	24" X 30"	5.00	---	---	---	---	---	---	MOUNT TO BACK OF SIGN 30
32	"	R2-1	---	---	---	---	---	---	---	---	
33	"	J13-1	24" X 45"	7.50	---	---	---	1	---	---	SEE SIGN PLAN
34	"	R7-1D	---	---	---	---	---	---	1	1	
35	"	J13-1	---	---	---	---	---	---	1	1	
	PAGE SUBTOTALS			85.76	27.50	2	2	6	15	14	

ALL ITEMS CATEGORY 0010 UNLESS SPECIFIED

QUANTIES PRODUCED BY WISDOT-NE REGION

ERECTION & REMOVAL OF PERMANENT SIGNING, TYPE II

SIGN NO.	LOCATION	SIGN CODE	W X H	637.2210 SIGNS TYPE II REFLECTIVE TYPE H S.F.	637.2230 SIGNS TYPE II REFLECTIVE TYPE F S.F.	634.0614 POSTS WOOD 4x6x14 EACH	634.0616 POSTS WOOD 4x6x16 EACH	634.0618 POSTS WOOD 4x6x18 EACH	638.2602 REMOVING SIGNS TYPE II EACH	638.3000 REMOVING SMALL SIGN SUPPORTS EACH	REMARKS
36	STH 54, E. OF STH 55	J13-1	---	---	---	---	---	---	1	1	
37	"	R1-1F	---	---	---	---	---	---	---	---	
38	"	R1-2	36" X 31"	3.88	---	---	---	1	---	---	
39	"	R6-5P	30" X 30"	6.25	---	---	---	---	---	---	MOUNT BELOW SIGN 38
40	"	D1-2	---	---	---	---	---	---	1	1	
41	"	R6-2R	24" X 30"	5.00	---	1	---	---	---	---	
42	"	J2-2	48" X 57"	19.00	---	---	1	---	1	1	SEE SIGN PLAN
43	"	R1-2	36" X 31"	3.88	---	---	---	1	---	---	
44	"	R6-5P	30" X 30"	6.25	---	---	---	---	---	---	MOUNT BELOW SIGN 43
45	CTH C, S. OF STH 54	R1-2	36" X 31"	3.88	---	---	---	1	---	---	
46	"	R6-5P	30" X 30"	6.25	---	---	---	---	---	---	MOUNT BELOW SIGN 45
47	"	R1-1	---	---	---	---	---	---	1	1	
48	"	W3-1	---	---	---	---	---	---	1	1	
49	"	W2-6	30" X 30"	---	6.25	---	---	1	---	---	
50	"	W13-1	18" X 18"	---	2.25	---	---	---	---	---	MOUNT BELOW SIGN 49
51	STH 54, E. OF CTH C	R7-1D	---	---	---	---	---	---	1	1	
52	"	R3-9B	24" X 36"	6.00	---	---	1	---	---	---	
53	IVORY ST, N. OF STH 54	R1-1	---	---	---	---	---	---	1	1	
54	"	R1-2	36" X 31"	3.88	---	---	---	1	---	---	
55	"	R6-5P	30" X 30"	6.25	---	---	---	---	---	---	MOUNT BELOW SIGN 54
56	"	W2-6	30" X 30"	---	6.25	---	---	1	---	---	
57	"	W13-1	18" X 18"	---	2.25	---	---	---	---	---	MOUNT BELOW SIGN 56
58	"	J13-2	---	---	---	---	---	---	1	1	
59	"	J13-1	---	---	---	---	---	---	1	1	
60	"	R1-2	36" X 31"	3.88	---	---	---	1	---	---	
61	"	R6-5P	30" X 30"	6.25	---	---	---	---	---	---	MOUNT BELOW SIGN 60
62	"	J2-3	72" X 54"	27.00	---	---	---	2	---	---	SEE SIGN PLAN
63	"	W2-6	30" X 30"	---	6.25	---	---	1	---	---	
64	"	W13-1	18" X 18"	---	2.25	---	---	---	---	---	MOUNT BELOW SIGN 63
65	"	W3-3	---	---	---	---	---	---	1	1	INDLUCES R7-53D REMOVAL
66	"	R3-9B	24" X 36"	6.00	---	---	1	---	---	---	
67	"	R3-8A	36" X 30"	7.50	---	1	---	---	---	---	
	PAGE SUBTOTALS			121.15	25.50	2	3	10	10	10	
	PROJECT TOTALS			**206.91**	**53.00**	**4**	**5**	**16**	**25**	**24**	

ALL ITEMS CATEGORY 0010 UNLESS SPECIFIED

QUANTIES PRODUCED BY WISDOT-NE REGION

TRAFFIC CONTROL DETOUR SIGN SUMMARY

SIGN NO.	LOCATION	SIGN CODE	SIZE WXH	NUMBER IN SERVICE	APPROX. SERVICE PERIOD 124 DAYS	* 643.0900 TRAFFIC CONTROL SIGNS DAYS	* 643.0420 TRAFFIC CONTROL BARRICADES TYPE III DAYS	* 643.0705 TRAFFIC CONTROL WARNING LIGHTS TYPE A DAYS	* 643.1000 TRAFFIC CONTROL SIGNS FIXED MESSAGE SF	* 643.1050 TRAFFIC CONTROL SIGNS PCMS DAYS	NO OF CYCLES	643.0920 TRAFFIC CONTROL COVERING SIGNS TYPE II EACH	REMARKS
1	STH 54, W. OF STH 47, PLACE 1500' W. OF STH 47 INTERSECTION	W 20-2A	48"X48"	1	124	124							
2	STH 54, W. OF STH 47, PLACE 750' W. OF STH 47 INTERSECTION	FMS	66"X48"	1					22.0				SEE SIGN DETAIL SHEET
3	STH 54, W. OF STH 47, PLACE 500' W. OF STH 47 INTERSECTION	M 4-8	24"X12"	1	124	124							
	"	M 3-2	24"X12"	1	124	124							
	"	M 1-6	24"X24"	1	124	124							54
	"	MO 5-1L	21"X21"	1	124	124							
4	STH 54, W. OF STH 47, COVER EXISTING D1-3 SIGN AS SHOWN										1	1	COVER "AHEAD GREEN BAY"
5	STH 54, W. OF STH 47, PLACE 100' W. OF STH 47 INTERSECTION	M 4-8	24"X12"	1	124	124							
	"	M 3-2	24"X12"	1	124	124							
	"	M 1-6	24"X24"	1	124	124							
	"	MO 6-1	21"X21"	1	124	124							LEFT
6	STH 47, AT STH 54, MODIFY EXISTING J13-1 SIGN AS SHOWN	MO 6-1	21"X21"	1	124	124							RIGHT
7	STH 47, AT STH 54, MODIFY EXISTING J13-1 SIGN AS SHOWN	MO 6-6	21"X21"	1	124	124							AHEAD-LEFT
8	STH 47, S. OF STH 54, COVER EXISTING D1-3 SIGN AS SHOWN										1	1	COVER "SEYMOUR RIGHT"
9	STH 47, S. OF STH 54, PLACE 750' S. OF STH 54 INTERSECTION	M 4-8	24"X12"	1	124	124							
	"	M 3-2	24"X12"	1	124	124							
	"	M 1-6	24"X24"	1	124	124							54
	"	MO 6-1	21"X21"	1	124	124							AHEAD
10	STH 47, S. OF STH 54, PLACE 1500' S. OF STH 54 INTERSECTION	M 3-2	24"X12"	1	124	124							
	"	M 1-6	24"X24"	1	124	124							54
	"	W 20-2A	48"X48"	1	124	124							
11	STH 54, AT STH 47, PLACE ON RIGHT SHOULDER IN SE QUADRANT OF INTERSECTION	R 11-3	60"X30"	1	124	124	124	248					6 1/2 MILES AHEAD
	"	M 4-9L	30"X24"	1	124	124							
12	STH 54, E. OF STH 47, COVER EXISTING J4-1 SIGN AS SHOWN										1	1	COVER ENTIRE SIGN
13	STH 54, AT CTH PP, PLACE ON RIGHT SHOULDER IN SE QUADRANT OF INTERSECTION	R 11-3	60"X30"	1	124	124	124	248					4 1/2 MILES AHEAD
14	STH 54, AT CTH PP, PLACE ON RIGHT SHOULDER IN SE QUADRANT OF INTERSECTION	R 11-3	60"X30"	1	124	124	124	248					2 1/2 MILES AHEAD
15	STH 47, N. OF STH 54, PLACE 150' N. OF STH 54 INTERSECTION	M 4-8	24"X12"	1	124	124							
	"	M 3-2	24"X12"	1	124	124							
	"	M 1-6	24"X24"	1	124	124							54
16	STH 47, N. OF STH 54, COVER EXISTING D1-3 SIGN AS SHOWN										1	1	COVER "LEFT SEYMOUR"
17	STH 47, N. OF STH 54, MODIFY EXISTING J1-1 SIGN AS SHOWN	M 4-8A	24"X18"	1	124	124							
18	STH 47, S. OF CTH G, PLACE 500' S. OF CTH G INTERSECTION	M 4-8	24"X12"	1	124	124							
	"	M 3-2	24"X12"	1	124	124							
	"	M 1-6	24"X24"	1	124	124							54
	"	MO 5-1R	21"X21"	1	124	124							
19	STH 47, AT CTH G, PLACE RIGHT OF EXISTING J13-1 SIGN	M 4-8	24"X12"	1	124	124							
	"	M 3-2	24"X12"	1	124	124							
	"	M 1-6	24"X24"	1	124	124							54
	"	MO 6-1	21"X21"	1	124	124							RIGHT
20	STH 47, AT CTH G, PLACE RIGHT OF EXISTING J13-1 SIGN	M 4-8	24"X12"	1	124	124							
	"	M 3-2	24"X12"	1	124	124							
	"	M 1-6	24"X24"	1	124	124							54
	"	MO 6-1	21"X21"	1	124	124							LEFT
21	STH 47, N. OF CTH G, PLACE 500' N. OF CTH G INTERSECTION	M 4-8	24"X12"	1	124	124							
	"	M 3-2	24"X12"	1	124	124							
	"	M 1-6	24"X24"	1	124	124							54
	"	MO 5-1L	21"X21"	1	124	124							
	PAGE SUBTOTALS			43		5,208	372	744	22.0	0		4	

* ADDITIONAL QUANTITY SHOWN ELSEWHERE

ALL ITEMS CATEGORY 0010 UNLESS SPECIFIED

QUANTIES PRODUCED BY WISDOT-NE REGION

TRAFFIC CONTROL DETOUR SIGN SUMMARY

SIGN NO.	LOCATION	SIGN CODE	SIZE WXH	NUMBER IN SERVICE	APPROX. SERVICE PERIOD 124 DAYS	* 643.0900 TRAFFIC CONTROL SIGNS DAYS	* 643.0420 TRAFFIC CONTROL BARRICADES TYPE III DAYS	* 643.0705 TRAFFIC CONTROL WARNING LIGHTS TYPE DAYS	* 643.1000 TRAFFIC CONTROL SIGNS FIXED MESSAGE SF	* 643.1050 TRAFFIC CONTROL SIGNS PCMS DAYS	NO OF CYCLES	643.0920 TRAFFIC CONTROL COVERING SIGNS TYPE II EACH	REMARKS
22	STH 47, N. OF CTH G, PLACE 1500' N. OF CTH G INTERSECTION	M 3-2	24"X12"	1	124	124							
	"	M 1-6	24"X24"	1	124	124							54
	"	W 20-2A	48"X48"	1	124	124							
23	CTH G, AT STH 47, PLACE RIGHT OF EXISTING J13-1 SIGN	M 4-8	24"X12"	1	124	124							
	"	M 3-4	24"X12"	1	124	124							
	"	M 1-6	24"X24"	1	124	124							54
	"	MO 6-1	21"X21"	1	124	124							LEFT
24	CTH G, AT STH 47, PLACE 500' E. OF STH 47 INTERSECTION	M 4-8	24"X12"	1	124	124							
	"	M 3-4	24"X12"	1	124	124							
	"	M 1-6	24"X24"	1	124	124							54
	"	MO 5-1L	21"X21"	1	124	124							
25	CTH G, W. OF STH 55, PLACE 500' W. OF STH 55 INTERSECTION	M 4-8	24"X12"	1	124	124							
	"	M 3-2	24"X12"	1	124	124							
	"	M 1-6	24"X24"	1	124	124							54
	"	MO 6-1	21"X21"	1	124	124							AHEAD
26	STH 55, AT CTH G, PLACE ON RIGHT SHOULDER IN SW QUADRANT OF INTERSECTION	R 11-3	60"X30"	1	124	124	124	248					1 MILE AHEAD
	"	M 4-9L	30"X24"	1	124	124							
27	STH 55, AT CTH G, PLACE 100' N. OF CTH G INTERSECTION	M 4-8	24"X12"	1	124	124							
	"	M 3-3	24"X12"	1	124	124							
	"	M 1-6	24"X24"	1	124	124							55
	"	MO 6-1	21"X21"	1	124	124							LEFT
28	STH 55, N. OF CTH G, PLACE 600' N. OF CTH G INTERSECTION	M 4-8	24"X12"	1	124	124							
	"	M 3-3	24"X12"	1	124	124							
	"	M 1-6	24"X24"	1	124	124							55
	"	MO 5-1L	21"X21"	1	124	124							
29	STH 55, N. OF CTH G, PLACE 1500' N. OF CTH G INTERSECTION	W 20-2A	48"X48"	1	124	124							
30	CTH G, E. OF STH 55, PLACE 100' E. OF STH 55 INTERSECTION	M 4-8	24"X12"	1	124	124							
	"	M 3-4	24"X12"	1	124	124							
	"	M 1-6	24"X24"	1	124	124							54
	"	MO 6-1	21"X21"	1	124	124							AHEAD
31	CTH G, E. OF STH 55, PLACE 150' E. OF STH 55 INTERSECTION	M 4-8	24"X12"	1	124	124							
	"	M 3-2	24"X12"	1	124	124							
	"	M 1-6	24"X24"	1	124	124							54
	"	M 4-8	24"X12"	1	124	124							
	"	M 3-3	24"X12"	1	124	124							
	"	M 1-6	24"X24"	1	124	124							55
32	CTH G, E. OF STH 55, MODIFY EXISTING J1-1 SIGN AS SHOWN	M 4-8A	24"X18"	1	124	124							
33	CTH G, W. OF MAINLINE DR, PLACE 500' W. OF MAINLINE DR	M 4-8	24"X12"	1	124	124							
	"	M 3-2	24"X12"	1	124	124							
	"	M 1-6	24"X24"	1	124	124							54
	"	MO 5-1R	21"X21"	1	124	124							
	"	M 4-8	24"X12"	1	124	124							
	"	M 3-3	24"X12"	1	124	124							
	"	M 1-6	24"X24"	1	124	124							55
	"	MO 5-1R	21"X21"	1	124	124							
	PAGE SUBTOTALS			45		5,580	124	248	0	0		0	

* ADDITIONAL QUANTITY SHOWN ELSEWHERE

ALL ITEMS CATEGORY 0010 UNLESS SPECIFIED

QUANTIES PRODUCED BY WISDOT-NE REGION

TRAFFIC CONTROL DETOUR SIGN SUMMARY

SIGN NO.	LOCATION	SIGN CODE	SIZE WXH	NUMBER IN SERVICE	APPROX. SERVICE PERIOD 124 DAYS	* 643.0900 TRAFFIC CONTROL SIGNS DAYS	* 643.0420 TRAFFIC CONTROL BARRICADES TYPE III DAYS	* 643.0705 TRAFFIC CONTROL WARNING LIGHTS TYPE DAYS	* 643.1000 TRAFFIC CONTROL SIGNS FIXED MESSAGE SF	* 643.1050 TRAFFIC CONTROL SIGNS PCMS DAYS	NO OF CYCLES	643.0920 TRAFFIC CONTROL COVERING SIGNS TYPE II EACH	REMARKS
34	CTH G, AT MAINLINE DR, PLACE AT MAINLINE DR INTERSECTION	M 4-8	24"X12"	1	124	124							
	"	M 3-2	24"X12"	1	124	124							
	"	M 1-6	24"X24"	1	124	124							54
	"	MO 6-1	21"X21"	1	124	124							RIGHT
	"	M 4-8	24"X12"	1	124	124							
	"	M 3-3	24"X12"	1	124	124							
	"	M 1-6	24"X24"	1	124	124							55
	"	MO 6-1	21"X21"	1	124	124							RIGHT
35	MAINLINE DR, AT CTH G, PLACE RIGHT OF EXISTING R1-1 SIGN AT CTH G INTERSECTION	M 4-8	24"X12"	1	124	124							
	"	M 3-4	24"X12"	1	124	124							
	"	M 1-6	24"X24"	1	124	124							54
	"	MO 6-1	21"X21"	1	124	124							LEFT
	"	M 4-8	24"X12"	1	124	124							
	"	M 3-1	24"X12"	1	124	124							
	"	M 1-6	24"X24"	1	124	124							55
	"	MO 6-1	21"X21"	1	124	124							LEFT
36	MAINLINE DR, S. OF CTH G, PLACE 500' S. OF CTH G INTERSECTION	M 4-8	24"X12"	1	124	124							
	"	M 3-4	24"X12"	1	124	124							
	"	M 1-6	24"X24"	1	124	124							54
	"	MO 5-1L	21"X21"	1	124	124							
	"	M 4-8	24"X12"	1	124	124							
	"	M 3-1	24"X12"	1	124	124							
	"	M 1-6	24"X24"	1	124	124							55
	"	MO 5-1L	21"X21"	1	124	124							
37	MAINLINE DR, N. OF HIGH RD, PLACE 150' N. OF HIGH RD	M 4-8	24"X12"	1	124	124							
	"	M 3-4	24"X12"	1	124	124							
	"	M 1-6	24"X24"	1	124	124							54
	"	M 4-8	24"X12"	1	124	124							
	"	M 3-1	24"X12"	1	124	124							
	"	M 1-6	24"X24"	1	124	124							55
38	MAINLINE DR, S. OF HIGH RD, PLACE 150' S. OF HIGH RD	M 4-8	24"X12"	1	124	124							
	"	M 3-2	24"X12"	1	124	124							
	"	M 1-6	24"X24"	1	124	124							54
	"	M 4-8	24"X12"	1	124	124							
	"	M 3-3	24"X12"	1	124	124							
	"	M 1-6	24"X24"	1	124	124							55
39	MAINLINE DR, N. OF STH 54/55, PLACE 750' N. OF STH 54/55 INTERSECTION	M 4-8A	24"X18"	1	124	124							
	"	M 1-6	24"X24"	1	124	124							54
	"	M 1-6	24"X24"	1	124	124							55
40	STH 54/55, AT MAINLINE DR, PLACE ON RIGHT SHOULDER IN NW QUADRANT OF INTERSECTION	R 11-3	60"X30"	1	124	124	124	248					1/2 MILE AHEAD
	"	M 4-9R	30"X24"	1	124	124							
	PAGE SUBTOTALS			41		5,084	124	248	0	0		0	

* ADDITIONAL QUANTITY SHOWN ELSEWHERE

ALL ITEMS CATEGORY 0010 UNLESS SPECIFIED

QUANTIES PRODUCED BY WISDOT-NE REGION

3

TRAFFIC CONTROL DETOUR SIGN SUMMARY

SIGN NO.	LOCATION				124 DAYS	* 643.0900 TRAFFIC CONTROL SIGNS DAYS	* 643.0420 TRAFFIC CONTROL BARRICADES TYPE III DAYS	* 643.0705 TRAFFIC CONTROL WARNING LIGHTS TYPE DAYS	* 643.1000 TRAFFIC CONTROL SIGNS FIXED MESSAGE SF	* 643.1050 TRAFFIC CONTROL SIGNS PCMS DAYS		643.0920 TRAFFIC CONTROL COVERING SIGNS TYPE II EACH	REMARKS
41	STH 54/55, AT MAINLINE DR, PLACE AT MAINLINE DR INTERSECTION	M 4-8	24"X12"	1	124	124							
	"	M 3-4	24"X12"	1	124	124							
	"	M 1-6	24"X24"	1	124	124							54
	"	MO 6-1	21"X21"	1	124	124							RIGHT
	"	M 4-8	24"X12"	1	124	124							
	"	M 3-1	24"X12"	1	124	124							
	"	M 1-6	24"X24"	1	124	124							55
	"	MO 6-1	21"X21"	1	124	124							RIGHT
42	STH 54/55, E. OF MAINLINE DR, PLACE 500' E. OF MAINLINE DR INTERSECTION	M 4-8	24"X12"	1	124	124							
	"	M 3-4	24"X12"	1	124	124							
	"	M 1-6	24"X24"	1	124	124							54
	"	MO 5-1R	21"X21"	1	124	124							
	"	M 4-8	24"X12"	1	124	124							
	"	M 3-1	24"X12"	1	124	124							
	"	M 1-6	24"X24"	1	124	124							55
	"	MO 5-1R	21"X21"	1	124	124							
43	STH 54/55, E. OF MAINLINE DR, PLACE 1500' E. OF MAINLINE DR INTERSECTION	M 1-6	24"X24"	1	124	124							54
	"	M 1-6	24"X24"	1	124	124							55
	"	W 20-2A	48"X48"	1	124	124							
44	STH 54/55, E. OF CTH C, PLACE ON RIGHT SHOULDER, FIELD DETERMINE LOCATION	PCMS		1						7			IN ADVANCE OF CLOSURE
45	CTH C, S. OF STH 54/55, PLACE ON RIGHT SHOULDER, FIELD DETERMINE LOCATION	PCMS		1						7			IN ADVANCE OF CLOSURE
46	STH 54/55, W. OF STH 55, PLACE ON RIGHT SHOULDER, FIELD DETERMINE LOCATION	PCMS		1						7			IN ADVANCE OF CLOSURE
47	STH 55, N. OF STH 54, PLACE ON RIGHT SHOULDER, FIELD DETERMINE LOCATION	PCMS		1						7			IN ADVANCE OF CLOSURE
48	STH 55, AT HIGH RD, PLACE ON RIGHT SHOULDER IN SW QUADRANT OF INTERSECTION	R 11-3	60"X30"	1	124	124	124	248					1/2 MILE AHEAD
49	STH 55, AT FACTORY ST, PLACE ON RIGHT SHOULDER IN SW QUADRANT OF INTERSECTION	R 11-3	60"X30"	1	124	124	124	248					3/4 MILE AHEAD
	PAGE SUBTOTALS			25		2,604	248	496	0	28		0	
	SUBTOTALS 0010					**18,476**	**868**	**1,736**	**22.0**	**28**		**4**	

* ADDITIONAL QUANTITY SHOWN ELSEWHERE

ALL ITEMS CATEGORY 0010 UNLESS SPECIFIED

QUANTIES PRODUCED BY WISDOT-NE REGION

TRAFFIC CONTROL

CATEGORY	STAGE/LOCATION	APPROXIMATE SERVICE PERIOD DAYS	643.0300 TRAFFIC CONTROL DRUMS NO. IN SERVICE	DAY	643.0410 TRAFFIC CONTROL BARRICADES TYPE II NO. IN SERVICE	DAY	* 643.0420 TRAFFIC CONTROL BARRICADES TYPE III NO. IN SERVICE	DAY	* 643.0705 TRAFFIC CONTROL WARNING LIGHTS TYPE A NO. IN SERVICE	DAY	* 643.0900 TRAFFIC CONTROL SIGNS NO. IN SERVICE	DAY	* 643.1000 TRAFFIC CONTROL SIGNS FIXED MESSAGE SF	* 643.1050 TRAFFIC CONTROL SIGNS PCMS NO. IN SERVICE	DAY	644.1410 TEMPORARY PEDESTRIAN SURFACE ASPHALT SF	644.1601 TEMPORARY PEDESTRIAN CURB RAMP DAY	644.1605 TEMPORARY PEDESTRIAN DETECTABLE WARNING FIELD SF	644.1810 TEMPORARY PEDESTRIAN BARRICADE LF	REMARKS
	STAGE 1A																			
0010	STA 1190+85EB	62	-	-	-	-	5	310	10	620	1	62	-	-	-	-	-	-	-	SEE SDD 15C02-b BARRICADES AND SIGN FOR VARIOUS CLOSURES
0010	STA 1195+15EB	62	-	-	-	-	5	310	10	620	1	62	-	-	-	-	-	-	-	SEE SDD 15C02-b BARRICADES AND SIGN FOR VARIOUS CLOSURES
0010	STA 1202+00EB	62	-	-	-	-	2	124	4	248	1	62	-	-	-	-	-	-	-	SEE SDD 15C03 BARRICADES AND SIGNS FOR SIDEROAD CLOSURES
0010	STA 1215+00EB	62	-	-	-	-	2	124	4	248	1	62	-	-	-	-	-	-	-	SEE SDD 15C03 BARRICADES AND SIGNS FOR SIDEROAD CLOSURES
0010	STA 31+25IN	62	-	-	-	-	5	310	10	620	1	62	-	-	-	-	-	-	-	SEE SDD 15C02-b BARRICADES AND SIGN FOR VARIOUS CLOSURES
0010	STA 34+50IN	62	-	-	-	-	5	310	10	620	1	62	-	-	-	-	-	-	-	SEE SDD 15C02-b BARRICADES AND SIGN FOR VARIOUS CLOSURES
0010	IVORY ST/CULBERTSON RD	62	-	-	-	-	2	124	4	248	1	62	-	-	-	-	-	-	-	SEE SDD 15C03 BARRICADES AND SIGNS FOR SIDEROAD CLOSURES
0010	IVORY ST/STONERIDGE LN	62	-	-	-	-	2	124	4	248	1	62	-	-	-	-	-	-	-	SEE SDD 15C03 BARRICADES AND SIGNS FOR SIDEROAD CLOSURES
0010	STH 54/IVORY ST QUADRANTS	62	20	1,240	-	-	6	372	12	744	-	-	-	-	-	-	-	-	-	DRIVEWAYS
0010	SIDEWALK CLOSURE / TEMPORARY PED ACCOMMODATI(	62	-	-	24	1,488	-	-	-	-	27	1,674	4.5	-	-	70	120	16	120	SEE "TEMPORARY PEDESTRIAN ACCOMMODATION STAGE 1A DETAIL"
	STAGE 1B																			
0010	STA 1186+75EB	62	-	-	-	-	5	310	10	620	1	62	-	-	-	-	-	-	-	SEE SDD 15C02-b BARRICADES AND SIGN FOR VARIOUS CLOSURES
0010	STA 1190+85EB	62	-	-	-	-	5	310	10	620	1	62	-	-	-	-	-	-	-	SEE SDD 15C02-b BARRICADES AND SIGN FOR VARIOUS CLOSURES
0010	STA 11+75NB	62	-	-	-	-	5	310	10	620	1	62	-	-	-	-	-	-	-	SEE SDD 15C02-b BARRICADES AND SIGN FOR VARIOUS CLOSURES
0010	STH 54/STH 55 QUADRANTS	62	20	1,240	-	-	-	-	-	-	-	-	-	-	-	-	-	-	-	DRIVEWAYS
0010	SIDEWALK CLOSURE / TEMPORARY PED ACCOMMODATI(	62	-	-	11	682	-	-	-	-	13	806	***	-	-	40	-	-	72	SEE "TEMPORARY PEDESTRIAN ACCOMMODATION STAGE 1B DETAIL"
	PROJECT LIMITS																			
0010	STA 1133+00EB - STA 1537+54EB	7	-	-	-	-	-	-	-	-	-	-	-	2	14	-	-	-	-	PCMS AT STH 54 PROJECT LIMITS
0010	STA 1133+00EB - STA 1537+54EB	75	-	-	-	-	-	-	-	-	6	450	-	-	-	-	-	-	-	SEE SDD 15C12-a TRAFFIC CONTROL FOR LANE CLOSURE W/ FLAGGING
0010	STA 1133+00EB - STA 1537+54EB	75	-	-	-	-	-	-	-	-	10	750	-	-	-	-	-	-	-	SEE SDD 15C04 ADVANCED WARNING SIGNS (BOP, EOP)
0010	FRENCH RD (NORTH)	30	-	-	-	-	-	-	-	-	1	30	-	-	-	-	-	-	-	SEE SDD 15C04 ADVANCED WARNING SIGNS (SIDE ROAD)
0010	FRENCH RD (SOUTH)	30	-	-	-	-	-	-	-	-	1	30	-	-	-	-	-	-	-	SEE SDD 15C04 ADVANCED WARNING SIGNS (SIDE ROAD)
0010	KORTNEY LN	30	-	-	-	-	-	-	-	-	1	30	-	-	-	-	-	-	-	SEE SDD 15C04 ADVANCED WARNING SIGNS (SIDE ROAD)
0010	LINCOLN ST	30	-	-	-	-	-	-	-	-	1	30	-	-	-	-	-	-	-	SEE SDD 15C04 ADVANCED WARNING SIGNS (SIDE ROAD)
0010	ORCHARD DR (NORTH/SOUTH)	30	-	-	-	-	-	-	-	-	2	60	-	-	-	-	-	-	-	SEE SDD 15C04 ADVANCED WARNING SIGNS (SIDE ROAD)
0010	MAINLINE DR (NORTH/SOUTH)	30	-	-	-	-	-	-	-	-	1	30	-	-	-	-	-	-	-	SEE SDD 15C04 ADVANCED WARNING SIGNS (SIDE ROAD)
0010	VANDENHEUVEL RD	30	-	-	-	-	-	-	-	-	1	30	-	-	-	-	-	-	-	SEE SDD 15C04 ADVANCED WARNING SIGNS (SIDE ROAD)
0010	RANCH RD	30	-	-	-	-	-	-	-	-	1	30	-	-	-	-	-	-	-	SEE SDD 15C04 ADVANCED WARNING SIGNS (SIDE ROAD)
0010	STH 55	45	-	-	-	-	-	-	-	-	4	180	-	-	-	-	-	-	-	SEE SDD 15C04 ADVANCED WARNING SIGNS (SIDE ROAD)
0010	MOORE RD	45	-	-	-	-	-	-	-	-	1	45	-	-	-	-	-	-	-	SEE SDD 15C04 ADVANCED WARNING SIGNS (SIDE ROAD)
0010	CTH Y	45	-	-	-	-	-	-	-	-	1	45	-	-	-	-	-	-	-	SEE SDD 15C04 ADVANCED WARNING SIGNS (SIDE ROAD)
0010	SMITH RD	45	-	-	-	-	-	-	-	-	1	45	-	-	-	-	-	-	-	SEE SDD 15C04 ADVANCED WARNING SIGNS (SIDE ROAD)
0010	CTH H	45	-	-	-	-	-	-	-	-	1	45	-	-	-	-	-	-	-	SEE SDD 15C04 ADVANCED WARNING SIGNS (SIDE ROAD)
0010	COOPER RD	45	-	-	-	-	-	-	-	-	1	45	-	-	-	-	-	-	-	SEE SDD 15C04 ADVANCED WARNING SIGNS (SIDE ROAD)
0010	VAN BOXTEL RD	45	-	-	-	-	-	-	-	-	1	45	-	-	-	-	-	-	-	SEE SDD 15C04 ADVANCED WARNING SIGNS (SIDE ROAD)
0010	OLSON RD	45	-	-	-	-	-	-	-	-	1	45	-	-	-	-	-	-	-	SEE SDD 15C04 ADVANCED WARNING SIGNS (SIDE ROAD)
0010	RED WILLOW PKWY	45	-	-	-	-	-	-	-	-	1	45	-	-	-	-	-	-	-	SEE SDD 15C04 ADVANCED WARNING SIGNS (SIDE ROAD)
0010	STA 1133+00EB - STA 1537+54EB	75	15	1,125	-	-	-	-	-	-	10	750	-	-	-	-	-	-	-	SPOT LOCATION DRUMS AND BUMP SIGNS
0010	STA 1327+00EB - STA 1331+25EB	5	20	100	-	-	-	-	-	-	-	-	-	-	-	-	-	-	-	GUARDRAIL REPLACEMENT
0010	STA 1415+00EB - STA 1419+25EB	5	20	100	-	-	-	-	-	-	-	-	-	-	-	-	-	-	-	GUARDRAIL REPLACEMENT
0010	STA 1438+23EB - STA 1442+25EB	5	20	100	-	-	-	-	-	-	-	-	-	-	-	-	-	-	-	GUARDRAIL REPLACEMENT
0010	STA 1522+00EB - STA 1525+75EB	5	20	100	-	-	-	-	-	-	-	-	-	-	-	-	-	-	-	GUARDRAIL REPLACEMENT
0010	UNDISTRIBUTED ALL STAGES	-	-	395	-	130	-	194	-	388	-	502	-	-	-	-	-	-	-	UNDISTRIBUTED
	TOTAL 0010			4,400		2,300		3,232		6,464		6,424	4.5		14	110	120	16	192	

* ADDITIONAL QUANTITY SHOWN ELSEWHERE

***REUSE SIGN IN STAGE 1A FOR STAGE 1B.

3

CONSTRUCTION STAKING

CATEGORY	STATION	TO	STATION	LOCATION		650.4000 CONSTRUCTION STAKING STORM SEWER EACH	650.4500 CONSTRUCTION STAKING SUBGRADE LF	650.5000 CONSTRUCTION STAKING BASE LF	650.5500 CONSTRUCTION STAKING CURB GUTTER AND CURB & GUTTER LF	650.8000 CONSTRUCTION STAKING RESURFACING REFERENCE LF	650.8501.01 CONSTRUCTION STAKING ELECTRICAL INSTALLATIONS (6230-20-71) EACH	650.9000 CONSTRUCTION STAKING CURB RAMPS EACH	650.9500.01 CONSTRUCTION STAKING SIDEWALK (6230-20-71) EACH	650.9911.01 CONSTRUCTION STAKING SUPPLEMENTAL CONTROL (6230-20-71) EACH	650.9920 CONSTRUCTION STAKING SLOPE STAKES LF	REMARKS
0010	1133+00	-	1186+75	STH 54 (EB)	LT & RT	-	-	-	-	5375	-	-	-	-	-	
0010	1186+75	-	1195+15	STH 54 (EB)	LT & RT	25	840	840	3959	-	-	6	-	-	840	
0010	1195+15	-	1537+54	STH 54 (EB)	LT & RT	-	-	-	50	34239	-	-	-	-	-	
0010	1327+00	-	1331+25	STH 54 (EB)	LT & RT	-	-	-	-	-	-	-	-	-	425	GUARDRAIL
0010	1415+00	-	1419+50	STH 54 (EB)	LT & RT	-	-	-	-	-	-	-	-	-	450	GUARDRAIL
0010	1438+25	-	1442+25	STH 54 (EB)	LT & RT	-	-	-	-	-	-	-	-	-	400	GUARDRAIL
0010	1522+00	-	1525+75	STH 54 (EB)	LT & RT	-	-	-	-	-	-	-	-	-	375	GUARDRAIL
0010	10+00	-	11+75	STH 55 (NB)	LT & RT	-	175	175	-	-	-	-	-	-	175	
0010	31+25	-	32+29	IVORY ST (NB)	LT & RT	-	104	104	-	-	-	-	-	-	104	
0010	33+30	-	34+50	IVORY ST (NB)	LT & RT	-	120	120	-	-	-	-	-	-	120	
0010				PROJECT		-	-	-	-	-	1	-	1	1	-	
				TOTALS 0010		25	1,239	1,239	4,009	39,614	1	6	1	1	2,889	

SAWING

CATEGORY	STATION	LOCATION		690.0150 SAWING ASPHALT LF	690.0250 SAWING CONCRETE LF	REMARKS
0010	1186+75	STH 54 (EB)	LT & RT	44	5	LIMITS
0010	1187+53	STH 54 (EB)	RT	27	-	ENTRANCE
0010	1188+05	STH 54 (EB)	LT	15	-	ENTRANCE
0010	1189+20	STH 54 (EB)	RT	36	4	ENTRANCE
0010	1190+67	STH 54 (EB)	RT	35	-	ENTRANCE
0010	1190+75	STH 54 (EB)	LT	23	4	ENTRANCE
0010	1191+35	STH 54 (EB)	LT	-	38	ENTRANCE
0010	1192+30	STH 54 (EB)	LT	95	61	ENTRANCE
0010	1193+85	STH 54 (EB)	LT	-	5	SIDEWALK
0010	1194+25	STH 54 (EB)	RT	150	-	PARKING LOT
0010	1195+15	STH 54 (EB)	LT & RT	49	5	LIMITS
0010		URBAN RESURFACE AREA	LT & RT	250	23	PAVEMENT & CURB
0010	10+75	STH 55 (NB)	LT	10	-	ENTRANCE
0010	11+10	STH 55 (NB)	LT & RT	-	12	ENTRANCE
0010	11+30	STH 55 (NB)	RT	-	6	SIDEWALK
0010	11+42	STH 55 (NB)	RT	-	25	ENTRANCE
0010	11+75	STH 55 (NB)	LT & RT	45	5	LIMITS
0010	31+25	IVORY ST (NB)	LT & RT	44	5	LIMITS
0010	31+60	IVORY ST (NB)	LT	38	-	ENTRANCE
0010	31+80	IVORY ST (NB)	RT	76	-	PARKING LOT
0010	34+05	IVORY ST (NB)	LT	-	82	PARKING LOT
0010	34+10	IVORY ST (NB)	RT	30	-	ENTRANCE
0010	34+50	IVORY ST (NB)	LT & RT	33	10	LIMITS
		TOTALS 0010		1,000	290	

BIRD DETERRENT SYSTEM

CATEGORY	STATION	LOCATION	999.2000.S.01 INSTALLING AND MAINTAINING BIRD DETERRENT SYSTEM (STATION) (01. STATION 1329+13) EACH	999.2000.S.01 INSTALLING AND MAINTAINING BIRD DETERRENT SYSTEM (STATION) (02. STATION 1523+73) EACH
0010	1329+13	STH 54	1	-
0010	1523+73	STH 54	-	1
		TOTAL 0010	1	1

ADJUSTING SANITARY MANHOLE COVERS

CATEGORY	STATION	LOCATION		SPV.0060.01 ADJUSTING SANITARY MANHOLE COVERS EACH
0020	1080+00	STH 54 (EB)	LT	1
0020	1080+00	STH 54 (EB)	RT	1
0020	1192+90	STH 54 (EB)	RT	1
0020	33+93	IVORY ST (NB)	RT	1
		TOTAL 0020		4

ADJUSTING WATER VALVES

CATEGORY	STATION	LOCATION		SPV.0060.02 ADJUSTING WATER VALVE BOXES EACH
0020	1190+20	STH 54 (EB)	RT	1
0020	1190+25	STH 54 (EB)	LT	1
0020	1193+30	STH 54 (EB)	LT	1
0020	1193+40	STH 54 (EB)	LT	1
0020	1194+35	STH 54 (EB)	LT	1
0020	33+60	IVORY ST (NB)	RT	1
0020	33+70	IVORY ST (NB)	RT	1
		TOTAL 0020		7

3

Conduit Rigid Nonmetallic Schedule 40

LOCATION		652.0225 *
STH 54 & Main		2-Inch
FROM	TO	LF
CB1	PB1	15
PB1	LB1	10
PB1	PB2	75
PB2	LB2	15
PB2	PB3	40
PB3	LB3	25
PB3	PB4	65
PB4	LB4	10
PB4	PB5	125
PB5	LB5	20
PB5	PB6	60
PB6	CB1	25
	TOTAL	485

Pull Boxes, Non-Conductive

	653.0164 *
	24x42-Inch
LOCATION	EACH
STH 54 & Main	6

Electric Service

	656.0201
	Meter Breaker Pedestal
LOCATION	EACH
STH 54 & Main (.01)	1

*QUANTITY SHOWN ELSEWHERE

Concrete Bases

LOCATION					654.0220 *
STH 54 & Main				654.0105 *	Control
				Type 5	Cabinet
					NER Type 10
				EACH	EACH
		Station	Offset		
	CB1	1188+56.56WB	-41.66		1
	LB1	1188+63.51WB	-46.99	1	
	LB2	10+25.27NB	32.80	1	
	LB3	1189+95.24WB	-36.26	1	
	LB4	1189+79.97WB	35.72	1	
	LB5	1188+62.54WB	45.34	1	
TOTAL				5	1

Electrical Wire Lighting

			10AWG	12AWG	
LOCATION					655.0610 *
STH 54 & Main			655.0615 *	655.0610 *	Equipment
			Ungrounded	Ungrounded	Grounding
(240 VOLT SYSTEM)			Conductor	Conductor	Conductor
			(see Circuit Color)	(Black)/(Red)	(Green)
Circuit	FROM	TO	LF	LF	LF
A	CB1	LB1	126		
(Black)	LB1	Luminaires		100	50
	LB1	LB2	292		
	LB2	Luminaires		100	50
	LB2	LB3	252		
	LB3	Luminaires		100	50
B	CB1	LB5	316		
(Red)	LB5	Luminaires		100	50
	LB5	LB4	402		
	LB4	Luminaires		100	50
		SUB-TOTALS	1,388	500	250
		TOTAL	1,388	750	

Lighting Summary

	657.0255 *	657.0322 *	657.0710 *	659.1115 *
	Transformer Bases	Poles	Luminaire Arms	Luminaires
	Breakaway	Type 5	Truss Type	Utility
	11 1/2-Inch	(Aluminum)	4 1/2-Inch Clamp	LED-A
	Bolt Circle		12-FT	
LOCATION	EACH	EACH	EACH	EACH
STH 54 & Main	5	5	5	5

Electrical Wire Lighting 10AWG

LOCATION		655.0615 *
STH 54 & Main		Equipment
		Grounding
(240 VOLT SYSTEM)		Conductor
		(Green)
FROM	TO	LF
CB1	LB1	63
LB1	LB2	146
LB2	LB3	126
LB3	LB4	146
LB4	LB5	201
LB5	CB1	158
	TOTAL	840

3

ALL ITEMS CATEGORY 0010 UNLESS SPECIFIED

QUANTIES PRODUCED BY WISDOT-NE REGION

Conduit Rigid Nonmetallic Schedule 40

LOCATION		652.0225 *
L44-2059 (54 & C)		2-Inch
FROM	TO	LF
CB1	PB1	20
PB1	PB2	70
PB2	LB2	10
PB2	PB3	40
PB3	LB3	35
LB3	LB8	115
PB3	PB4	65
PB4	LB4	15
PB4	PB5	45
PB5	LB5	15
PB5	PB6	55
PB6	LB6	40
PB6	PB7	85
PB7	LB7	15
PB7	PB8	70
PB8	LB1	10
PB8	CB1	15
	TOTAL	720

Pull Boxes, Non-Conductive

	653.0164 *
	24x42-Inch
LOCATION	EACH
L44-2059 (54 & C)	8

Electrical Wire Lighting 10AWG

LOCATION		655.0615 *
L44-2059 (54 & C)		Equipment
		Grounding
(240 VOLT SYSTEM)		Conductor
		(Green)
FROM	TO	LF
CB1	LB2	153
LB2	LB3	131
LB3	LB8	131
LB3	LB4	161
LB4	LB5	121
LB5	LB6	156
LB6	LB7	181
LB7	LB1	141
LB1	CB1	63
	TOTAL	1,238

Electrical Wire Lighting

			10AWG	12AWG	
LOCATION					655.0610 *
L44-2059 (54 & C)			655.0615 *	655.0610 *	Equipment
			Ungrounded	Ungrounded	Grounding
(240 VOLT SYSTEM)			Conductor	Conductor	Conductor
			(see Circuit Color)	(Black)/(Red)	(Green)
Circuit	FROM	TO	LF	LF	LF
A	CB1	LB1	126		
(Black)	LB1	Luminaires		100	50
	CB1	LB2	306		
	LB2	Luminaires		100	50
	LB2	LB3	262		
	LB3	Luminaires		100	50
	LB3	LB8	262		
	LB8	Luminaires		100	50
B	CB1	LB4	586		
(Red)	LB4	Luminaires		100	50
	LB4	LB5	242		
	LB5	Luminaires		100	50
C	CB1	LB7	306		
(Blue)	LB7	Luminaires		100	50
	LB7	LB6	362		
	LB6	Luminaires		100	50
		SUB-TOTALS	2,452	800	400
		TOTAL	2,452	1,200	

Electric Service

	656.0201
	Meter Breaker Pedestal
LOCATION	EACH
L44-2059 (54 & C) (.02)	1

Concrete Bases

LOCATION					654.0220 *
L44-2059 (54 & C)				654.0105 *	Control
				Type 5	Cabinet
					NER Type 10
				EACH	EACH
		Station	Offset		
	CB1	1193+83.32WB	62.23		1
	LB1	1193+76.94WB	48.35	1	
	LB2	1192+91.12WB	73.17	1	
	LB3	1192+18.62WB	38.46	1	
	LB4	1192+51.74WB	-31.01	1	
	LB5	1192+73.04WB	-74.61	1	
	LB6	1193+46.43WB	-56.20	1	
	LB7	1193+95.33WB	-26.16	1	
	LB8	1191+07.31WB	33.48	1	
TOTAL				8	1

Lighting Summary

	657.0255 *	657.0322 *	657.0710 *	659.1115 *
	Transformer Bases	Poles	Luminaire Arms	Luminaires
	Breakaway	Type 5	Truss Type	Utility
	11 1/2-Inch	(Aluminum)	4 1/2-Inch Clamp	LED-A
	Bolt Circle		12-FT	
LOCATION	EACH	EACH	EACH	EACH
L44-2059 (54 & C)	8	8	8	8

*QUANTITY SHOWN ELSEWHERE

ALL ITEMS CATEGORY 0010 UNLESS SPECIFIED

QUANTIES PRODUCED BY WISDOT-NE REGION

TRANSPORTATION PROJECT PLAT NO: 6230-20-21-4.01

THAT PART OF LOT 5, BLOCK 3, CLARKE'S ADDITION, AND THAT PART OF LOT 8, BLOCK G, OF ASSESSOR'S PLAT, LOCATED IN THE SOUTHEAST 1/4 OF THE SOUTHEAST 1/4 OF SECTION 32, AND THAT PART OF LOTS 11 AND 12, BLOCK H, OF ASSESSOR'S PLAT, AND THAT PART OF LOT 1, VOLUME 34 OF CERTIFIED SURVEY MAPS, PAGE 5916, MAP NO. 5916, DOC. NO. 1816396, LOCATED IN PART OF THE SOUTHWEST 1/4 OF THE SOUTHWEST 1/4 OF SECTION 33, ALL IN TOWNSHIP 24 NORTH, RANGE 18 EAST, AND THAT PART OF LOTS 1, 2 AND 3, VOLUME 21 OF CERTIFIED SURVEY MAPS, PAGE 3914, MAP NO. 3914, DOC. NO. 1386665, LOCATED IN AND INCLUDING PART OF THE FRACTIONAL NORTHEAST 1/4 OF THE NORTHEAST 1/4 OF SECTION 5, AND THAT PART OF THE FRACTIONAL NORTHWEST 1/4 OF THE NORTHWEST 1/4 OF SECTION 4, ALL IN TOWNSHIP 23 NORTH, RANGE 18 EAST, CITY OF SEYMOUR, OUTAGAMIE COUNTY, WISCONSIN.

RELOCATION ORDER STH 54 SEYMOUR-GREEN BAY, FRENCH ROAD - SEMINARY ROAD - OUTAGAMIE COUNTY

TO PROPERLY ESTABLISH, LAY OUT, WIDEN, ENLARGE, EXTEND, CONSTRUCT, RECONSTRUCT, IMPROVE, OR MAINTAIN A PORTION OF THE HIGHWAY DESIGNATED ABOVE, THE STATE OF WISCONSIN DEPARTMENT OF TRANSPORTATION DEEMS IT NECESSARY TO RELOCATE OR CHANGE SAID HIGHWAY AND ACQUIRE CERTAIN LANDS AND INTERESTS OR RIGHTS IN LANDS FOR THE ABOVE PROJECT.

TO EFFECT THIS CHANGE, PURSUANT TO AUTHORITY GRANTED UNDER SECTION 84.02 (3), 84.09, AND 84.30, WISCONSIN STATUTES, THE DEPARTMENT OF TRANSPORTATION HEREBY ORDERS THAT:

1. THAT PORTION OF SAID HIGHWAY AS SHOWN ON THIS PLAT IS LAID OUT AND ESTABLISHED TO THE LINES AND WIDTHS AS SO SHOWN FOR THE ABOVE PROJECT.
2. THE LANDS OR INTERESTS OR RIGHTS IN LANDS AS SHOWN ON THIS PLAT ARE REQUIRED BY THE DEPARTMENT FOR THE ABOVE PROJECT AND SHALL BE ACQUIRED IN THE NAME OF THE STATE OF WISCONSIN, PURSUANT TO THE PROVISIONS OF SECTION 84.09 (1) OR (2), WISCONSIN STATUTES.

STATION & OFFSET TABLE			STATION & OFFSET TABLE		
POINT	STATION	OFFSET	POINT	STATION	OFFSET
T150	1187+91.23EB	34.05'LT	T165	1193+48.62EB	71.12'LT
T151	1187+94.82EB	53.73'LT	T166	1195+19.99EB	36.31'RT
T152	1188+41.43EB	47.00'LT	T167	1194+23.55EB	35.74'RT
T153	1188+49.89EB	139.36'LT	T168	1192+93.91EB	152.67'RT
T154	1188+42.91EB	136.73'LT	T169	1192+86.01EB	70.85'RT
T155	1188+42.01EB	171.63'LT	T170	1192+63.66EB	39.36'RT
T156	1188+48.03EB	173.88'LT	T171	1191+30.00EB	34.71'RT
T157	1189+28.70EB	236.66'LT	T172	1191+30.00EB	51.71'RT
T158	1189+41.05EB	117.28'LT	T173	1189+51.34EB	51.35'RT
T159	1189+72.34EB	58.81'LT	T174	1189+52.45EB	61.29'RT
T160	1192+40.81EB	45.54'LT	T175	1188+55.37EB	72.56'RT
T161	1192+60.25EB	68.37'LT	T176	1188+54.23EB	38.24'RT
T162	1192+53.82EB	169.67'LT	T177	1187+74.31EB	29.94'RT
T163	1193+33.98EB	176.67'LT	T178	1187+72.47EB	44.81'RT
T164	1193+40.06EB	92.58'LT	T179	1187+36.52EB	40.55'RT

R/W CURVE TABLE				
CURVE	LENGTH	RADIUS	LONG CHORD	LONG CHORD BEARING
C1	21.94'	192.50'	21.93'	S69°43'25"W
C2	60.09'	59.50'	57.56'	N84°36'42"W

STATION & OFFSET TABLE			STATION & OFFSET TABLE		
POINT	STATION	OFFSET	POINT	STATION	OFFSET
100	1187+39.23 EB	7.36'LT	121	1195+20.02 EB	66.69'LT
101	1187+41.74 EB	40.28'LT	122	1195+20.00 EB	6.69'LT
102	1188+14.29 EB	29.84'LT	123	1195+20.00 EB	0.00'
103	1188+36.13 EB	38.11'LT	124	1195+19.99 EB	26.31'RT
104	1188+66.40 EB	80.89'LT	125	1194+41.58 EB	26.24'RT
105	1188+46.00 EB	226.92'LT	126	1193+54.73 EB	77.62'RT
106	1189+19.50 EB	235.59'LT	127	1193+61.34 EB	146.16'RT
107	1189+31.80 EB	115.03'LT	128	1193+03.86 EB	151.71'RT
109	1189+62.68 EB	68.81'LT	129	1192+96.19 EB	72.24'RT
110	1189+70.00 EB	58.95'LT	130	1192+82.18 EB	52.46'RT
111	1190+41.76 EB	58.89'LT	131	1192+57.94 EB	34.72'RT
112	1190+41.70 EB	50.89'LT	132	1189+54.09 EB	27.30'RT
113	1192+47.31 EB	45.54'LT	133	1189+36.08 EB	37.39'RT
114	1192+60.89 EB	62.77'LT	134	1188+78.55 EB	39.43'RT
115	1192+57.61 EB	97.58'LT	135	1188+70.55 EB	35.37'RT
116	1192+60.17 EB	98.70'LT	136	1187+37.12 EB	25.56'RT
117	1192+55.64 EB	170.46'LT	137	1187+38.73 EB	0.00'RT
118	1193+29.00 EB	176.32'LT	138	1189+16.74 EB	235.27'LT
119	1193+34.65 EB	98.04'LT	139	1192+55.94 EB	170.60'LT
120	1193+45.49 EB	70.87'LT			

SCHEDULE OF LANDS AND INTERESTS REQUIRED

PARCEL NO.	OWNER(S)	INTEREST REQUIRED	R/W (SQUARE FEET)			
			NEW	EXISTING	TOTAL	TLE
1	JANE WEBSTER AND DAKOTA WEBSTER	FEE, TLE	1339	-------	1339	1351
2	JACKIE D. AND MARY KAY MARTIN	TLE	-------	-------	-------	242
3	GUNNER, LLC	FEE, TLE	636	-------	636	1686
4	DERBERT ROBERT AND MARGARET M. COONEN REVOCABLE TRUST OF 1997	FEE, TLE	494	-------	494	612
6	EVEREST PETROLEUM CORP.	FEE, TLE	124	-------	124	486
7	RANDALL S. AND TINA L. RIEGERT	TLE	-------	-------	-------	400
8	JEROME H. VANDERZANDEN	TLE	-------	-------	-------	464
9	THE BAUMAN REAL ESTATE LIMITED PARTNERSHIP	FEE, TLE	839	-------	839	3181
11	BAYLAKE BANK	FEE, TLE	798	-----	798	4053
12	JESSE J. WISSBROEKER	FEE, TLE	231	2971	3202	1530
13	DAYNE J. WAHL AND BARBARA J. HESS	TLE	-------	-------	-------	375
14	RONALD AND JOAN HAWS	TLE	-------	-------	-------	225

Document #: 2248460
Date: 09-23-2021 Time: 12:48 PM
Pages: 2 Fee: $25.00
County: OUTAGAMIE COUNTY State: WI

SARAH R VAN CAMP, REGISTER OF DEEDS
This document has been electronically recorded
Return to:
WisDOT - NE Region - Green Bay - PO# 39500-00000

RESERVED FOR REGISTER OF DEEDS
PROJECT NUMBER 6230-20-21-4.01
SHEET 1 OF 2

OWNER'S NAMES ARE SHOWN FOR REFERENCE PURPOSES ONLY AND ARE SUBJECT TO CHANGE PRIOR TO THE TRANSFER OF LAND INTERESTS TO THE DEPARTMENT.
PURPOSE OF ALL THE TLES IS FOR GRADING, UNLESS NOTED.

NOTES:
POSITIONS SHOWN ON THIS PLAT ARE WISCONSIN COORDINATE REFERENCE SYSTEM COORDINATES (WISCRS), OUTAGAMIE COUNTY, NAD83(2011), IN U.S. SURVEY FEET. VALUES ARE GRID COORDINATES, GRID BEARINGS, AND GRID DISTANCES. GRID DISTANCES MAY BE USED AS GROUND DISTANCES.

ALL NEW RIGHT-OF-WAY MONUMENTS WILL BE TYPE 2 (TYPICALLY ¾" X 24" IRON REBARS), UNLESS OTHERWISE NOTED, AND WILL BE PLACED PRIOR TO THE COMPLETION OF THE PROJECT.

ALL EXISTING IRON PINS ARE 1" I.D. IRON PIPES UNLESS OTHERWISE NOTED.

FOR THE LATEST ACCESS/DRIVEWAY INFORMATION, CONTACT THE PLANNING UNIT OF THE WISCONSIN DEPARTMENT OF TRANSPORTATION OFFICE IN GREEN BAY.

EXISTING HIGHWAY RIGHT-OF-WAY SHOWN HEREIN IS BASED ON THE FOLLOWING POINTS OF REFERENCE:
STH 54/55: ASSESSOR'S PLAT, 21-CSM-3914, 34-CSM-5916.
STH 55/S MAIN STREET: ASSESSOR'S PLAT.
IVORY STREET: 34-CSM-5916.
CTH C: 21-CSM-3914.

FOR ADDITIONAL INFORMATION REFER TO THE TITLE SHEET, RECORDED AS SHEET 2 OF 2.

R-18-E
T-24-N
T-23-N
SHEET LOCATION

FOUND MAG NAIL
Y = 649,322.264
X = 847,166.169

FOUND MAG NAIL
Y = 649,285.066
X = 849,815.427

FOUND MAG NAIL
Y = 649,363.573
X = 844,930.620
CLOSING CORNER
ON TOWNSHIP LINE

FOUND MAG NAIL
WITH DISK
Y = 646,997.950
X = 847,571.856

FOUND MAG NAIL
CLOSING CORNER
Y = 649,316.664
X = 847,570.900

FOUND MAG NAIL
WITH DISK
Y = 651,968.439
X = 847,235.397

UTILITY INTERESTS REQUIRED		
UTILITY NO.	OWNER(S)	INTEREST REQUIRED
50	CENTURYLINK	RELEASE OF RIGHTS
51	WE ENERGIES - ELECTRIC	RELEASE OF RIGHTS
52	WE ENERGIES - GAS	RELEASE OF RIGHTS
53	NET-LEC	RELEASE OF RIGHTS

50 CENTURYLINK
NO EASEMENT OF RECORD
- PARCEL 7
DOC. NO. 1385887
- PARCEL 6

51 WE ENERGIES - ELECTRIC
NO EASEMENT OF RECORD
-PARCEL 1
DOC. NO. 2153895
- PARCEL 6

52 WE ENERGIES - GAS
NO EASEMENT OF RECORD
- PARCEL 11
DOC. NO. 885634
- PARCEL 12

53 NET-LEC
DOC. NO. 2079969
- PARCEL 11

LOT 1
VOL. 21, CSM,
PAGE 3914
MAP NO. 3914,
DOC. NO. 1386665

LOT 2
VOL. 21, CSM,
PAGE 3914
MAP NO. 3914,
DOC. NO. 1386665

LOT 3
VOL. 21, CSM,
PAGE 3914
MAP NO. 3914,
DOC. NO. 1386665

LOT 1
VOL. 34, CSM, PAGE 5916
MAP NO. 5916,
DOC. NO. 1816396

I, JACOB S. JENSEN, PROFESSIONAL LAND SURVEYOR, HEREBY CERTIFY THAT IN FULL COMPLIANCE WITH THE PROVISIONS OF SECTION 84.095 OF THE WISCONSIN STATUTES AND UNDER THE DIRECTION OF THE WISCONSIN DEPARTMENT OF TRANSPORTATION, I HAVE SURVEYED AND MAPPED THIS TRANSPORTATION PROJECT PLAT 6230-20-21-4.01 AND THAT SUCH PLAT CORRECTLY REPRESENTS ALL EXTERIOR BOUNDARIES OF THE SURVEYED LAND.

JACOB S. JENSEN — SEPTEMBER 22, 2021 DATE
REGISTRATION NUMBER: S-2961

THIS PLAT AND RELOCATION ORDER ARE APPROVED FOR THE WISCONSIN DEPARTMENT OF TRANSPORTATION, NORTHEAST REGION.

CURT VAN EREM — SEPTEMBER [illegible] DATE

AYRES

PI STA = 1187+48.14EB
Y = 649316.906
X = 847007.829
DELTA = 10°20'53"LT
D = 14°19'26"
T = 36.22'
L = 72.24'
R = 400.00'
PC STA = 1187+11.92EB
Y = 649317.573
X = 846971.615
PT STA = 1187+84.16EB
Y = 649322.755
X = 847043.574
DB = S88°56'43"E
DA = N80°42'23"E

PI STA = 1188+39.17EB
Y = 649331.638
X = 847097.857
DELTA = 25°10'22"RT
D = 76°23'40"
T = 16.75'
L = 32.95'
R = 75.00'
PC STA = 1188+22.42EB
Y = 649328.934
X = 847081.331
PT/PI STA = 1188+55.37EB
Y = 649327.056
X = 847113.964
DB = S80°42'23"W
DA = S74°07'15"E

PI STA = 1189+67.60EB
Y = 649315.872
X = 847225.270
DELTA = 7°43'30"RT
D = 28°38'53"
T = 13.50'
L = 26.97'
R = 200.00'
PC/PI STA = 1189+54.09EB
Y = 649314.306
X = 847211.858
PT STA = 1189+81.06EB
Y = 649315.622
X = 847238.771
DB = S83°20'25"W
DA = S88°56'11"E

PI STA = 1191+75.59EB
Y = 649312.011
X = 847433.269
DELTA = 5°36'52"LT
D = 14°19'26"
T = 19.61'
L = 39.20'
R = 400.00'
PC STA = 1191+55.98EB
Y = 649312.375
X = 847413.659
PT STA = 1191+95.17EB
Y = 649313.567
X = 847452.821
DB = N88°56'11"W
DA = N85°26'57"E

PI STA = 1192+52.94EB
Y = 649318.151
X = 847510.411
DELTA = 23°54'38"RT
D = 76°23'40"
T = 15.88'
L = 31.30'
R = 75.00'
PC STA = 1192+37.06EB
Y = 649316.891
X = 847494.581
PT/PI STA = 1192+68.36EB
Y = 649312.886
X = 847525.394
DB = S85°26'57"W
DA = S70°38'19"E

PI STA = 1194+09.00EB
Y = 649308.533
X = 847665.226
DELTA = 8°20'13"RT
D = 10°25'03"
T = 40.08'
L = 80.03'
R = 550.00'
PI/PC STA = 1193+68.92EB
Y = 649303.267
X = 847625.489
PT STA = 1194+48.95EB
Y = 649307.982
X = 847705.307
DB = S82°27'04"W
DA = S89°12'44"E

SCALE, FEET: 0 30 60

LEGEND

XXXXXX SAW CUTS ASPHALT

SAW CUTS CONCRETE

X TREE TO BE REMOVED

CP #907
3/4" REBAR W/CAP
STA. 1185+67.43WB-26.3' LT
Y = 649358.529
X = 846827.977

BUTT JOINT REQ'D.
MATCH EXISTING
STA 1185+99.1EB, 53.3' LT

BEGIN CONSTRUCTION
END RESURFACING
STA 1186+75EB
Y = 649318.252
X = 846934.704

SLOPE INTERCEPTS

BM #1000

BURIED ELECTRIC CABLE
(APPROXIMATE LOCATION)

CAUTION
BURIED GAS LINE
(APPROXIMATE LOCATION)

BENCH MARKS

NO.	STATION	DESCRIPTION	ELEV.
1000	1188+47EB	DISK IN CONCRETE - 43' LT	845.91

STA 1186+74.70
EL 846.48

VPC STA 1186+79.70
VPC EL 846.42

VPI STA 1187+39.70
VPI EL 845.74

VPT STA 1187+99.70
VPT EL 844.53

STA 1188+55.37
EL 843.40

VPC STA 1189+57.50
VPC EL 841.57

VPI STA 1190+10.00
VPI EL 840.62

VPT STA 1190+62.50
VPT EL 838.76

STA 1189+54.09
EL 841.63

VPC STA 1190+70.00
VPC EL 838.50

EXISTING PROFILE

FINISHED GRADE

1.14%

-2.02%

1.81%

3.54%

VCL = 120.00
K = 137.48

VCL = 105.00
K = 60.60

VCL = 120.00
K = 38.22

PROJECT NO: 6230-20-71	HWY: STH 54	COUNTY: OUTAGAMIE	PLAN AND PROFILE: STH 54 EASTBOUND	SHEET 109	E

FILE NAME : I:\45\450479 STH 54 SEYMOUR TO GB\C3D\SHEETSPLAN\050101 PP.DWG
LAYOUT NAME - 050101 pp

PLOT DATE : 7/27/2023 3:55 PM PLOT BY : VERVILLE, PHILLIP PLOT NAME : PLOT SCALE : 1 IN:40 FT

WISDOT/CADDS SHEET 44

BENCH MARKS

NO.	STATION	DESCRIPTION	ELEV.
1001	33+56IN	BURY BOLT ON HYD. NE QUAD - 25' RT	837.68

BM #1001

LEGEND

XXXXXX SAW CUTS ASPHALT

ΛΛΛΛΛΛ SAW CUTS CONCRETE

X TREE TO BE REMOVED

N

EXISTING CONCRETE SIDEWALK (TO REMAIN)

CP #900
3/4" REBAR W/CAP
STA. 1196+40.74WB-35.6' LT
Y = 649354.985
X = 847897.228

BURIED TELEPHONE LINE (APPROXIMATE LOCATION)

BURIED GAS LINE (APPROXIMATE LOCATION)

CAUTION

END RECONSTRUCTION
BEGIN RESURFACING
STA 1195+15EB
Y = 649307.073
X = 847771.354

SLOPE INTERCEPTS

EXISTING R/W

R/W LINE

TLE LINE

CTH C IVORY ST.

STH 54/STH 55

1191EB 1192EB 1194EB 1195EB 1196EB 1197EB

PC: 1191+55.98
PT: 1191+95.17
PC: 1192+37.06
PT: 1192+68.36
PC: 1193+68.92
PT: 1194+48.95

VCL = 120.00
K = 38.22

VPI STA 1191+30.00
VPI EL 836.37

VPT STA 1191+90.00
VPT EL 836.13

STA 1192+68.36
EL 835.82

STA 1193+68.92
EL 835.12

STA 1195+15.00
EL 834.19

EXISTING PROFILE

FINISHED GRADE

-0.40%

-0.63%

842 840 838 836 834 832 830 828

837.94 837.55 837.54 836.95 837.27 836.50 837.02 836.22 836.86 836.09 836.71 835.99 836.57 835.89 836.34 835.77 836.17 835.60 835.91 835.42 835.65 835.25 835.35 835.08 835.28 834.92 835.20 834.76 834.92 834.60 834.59 834.44 834.33 834.29 834.09 833.69 833.43 833.08 832.71 832.34 831.99 831.49

1191+00 1191+50 1192+00 1192+50 1193+00 1193+50 1194+00 1194+50 1195+00 1195+50 1196+00 1196+50 1197+00

PROJECT NO: 6230-20-71	HWY: STH 54	COUNTY: OUTAGAMIE	PLAN AND PROFILE: STH 54 EASTBOUND	SHEET 110	E

FILE NAME : I:\45\450479 STH 54 SEYMOUR TO GB\C3D\SHEETSPLAN\050101 PP.DWG
LAYOUT NAME - 050102 pp

PLOT DATE : 7/26/2023 12:40 PM PLOT BY : GARNICA, BRANDON PLOT NAME : PLOT SCALE : 1 IN:40 FT

WISDOT/CADDS SHEET 44

LEGEND

XXXXXX SAW CUTS ASPHALT

SAW CUTS CONCRETE

TREE TO BE REMOVED

CP #907
3/4" REBAR W/CAP
STA. 1185+67.43WB-26.3' LT
Y = 649358.529
X = 846827.977

BUTT JOINT REQ'D.
MATCH EXISTING
STA 1185+99.1EB, 53.3' LT

BEGIN CONSTRUCTION
END RESURFACING
STA 1186+75WB
Y = 649330.248
X = 846935.046

ADJUST MANHOLE COVER REQ'D.

CAUTION — BURIED GAS LINE (APPROXIMATE LOCATION)

BENCH MARKS

NO.	STATION	DESCRIPTION	ELEV.
1000	1188+47EB	DISK IN CONCRETE - 43' LT	845.91

STH 54

STH 54/STH55

STH 55

1185WB 1186WB 1187WB 1188WB 1190WB 1191WB

PC: 1187+32.98WB
PT: 1188+05.22WB
PI: 1188+55.02WB
PC: 1189+56.21WB
PT: 1189+93.68WB
PC: 1190+37.54WB
PT: 1190+64.27WB

EXISTING R/W · TLE LINE · R/W LINE · SLOPE INTERCEPTS · PLANTER · ASPHALT · CONC GE · CSW · ASPH PE · MH · OH · SS · G · GUY · POST · W · F

5 5

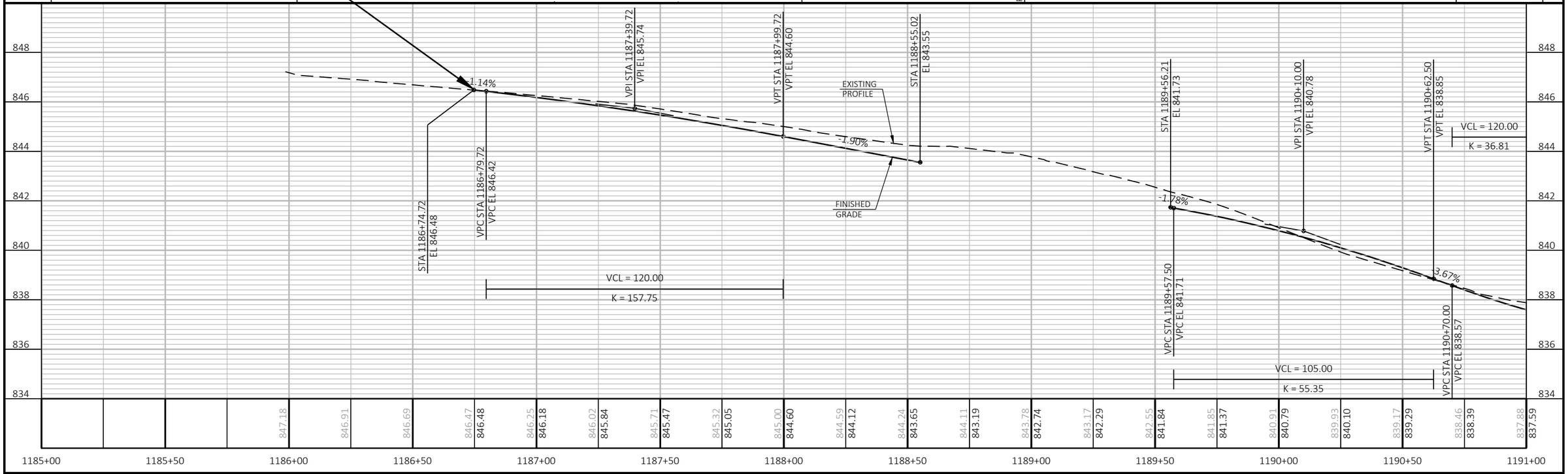

PROJECT NO: 6230-20-71	HWY: STH 54	COUNTY: OUTAGAMIE	PLAN AND PROFILE: STH 54 WESTBOUND	SHEET 111	E

FILE NAME : I:\45\450479 STH 54 SEYMOUR TO GB\C3D\SHEETSPLAN\050102 PP.DWG
LAYOUT NAME - 050103 pp
PLOT DATE : 7/27/2023 3:56 PM PLOT BY : VERVILLE, PHILLIP PLOT NAME : PLOT SCALE : 1 IN:40 FT
WISDOT/CADDS SHEET 44

BENCH MARKS

NO.	STATION	DESCRIPTION	ELEV.
1001	33+56IN	BURY BOLT ON HYD. NE QUAD - 25' RT	837.68

LEGEND

XXXXXX SAW CUTS ASPHALT

ΛΛΛΛΛΛ SAW CUTS CONCRETE

X TREE TO BE REMOVED

N

BM #1001

R/W LINE

TLE LINE

EXISTING R/W

SLOPE INTERCEPTS

IVORY ST.

CTH C IVORY ST.

PC: 1191+91.99WB

PI: 1192+69.26WB

PT: 1192+38.98WB

PC: 1193+69.10WB

PT: 1193+99.57WB

PC: 1194+39.88WB

PT: 1194+89.96WB

1191WB

1192WB

1194WB

1195WB

1196WB

1197WB

STH 54/STH 55

ASPHALT

CONCRETE

BURIED TELEPHONE LINE (APPROXIMATE LOCATION)

EXISTING CONCRETE SIDEWALK (TO REMAIN)

CP #900
3/4" REBAR W/CAP
STA. 1196+40.74WB-35.6' LT
Y = 649354.985
X = 847897.228

BURIED GAS LINE (APPROXIMATE LOCATION)

CAUTION

END RECONSTRUCTION
BEGIN RESURFACING
STA 1195+15WB
Y = 649321.079
X = 847771.014

VCL = 120.00

K = 36.81

EXISTING PROFILE

FINISHED GRADE

STA 1192+69.26
EL 835.79

STA 1193+69.10
EL 835.10

STA 1195+15.55
EL 834.19

VPI STA 1191+30.00
VPI EL 836.37

VPT STA 1191+90.00
VPT EL 836.12

0.41%

0.62%

842 840 838 836 834 832 830 828

837.88 837.52 837.29 837.04 836.85 836.64 836.40 836.21 836.14 835.97 835.79 835.62 835.45 835.31 834.96 834.63 834.36 834.08 833.68 833.45 833.08 832.71 832.34 831.99 831.50

1191+00 1191+50 1192+00 1192+50 1193+00 1193+50 1194+00 1194+50 1195+00 1195+50 1196+00 1196+50 1197+00

PROJECT NO: 6230-20-71	HWY: STH 54	COUNTY: OUTAGAMIE	PLAN AND PROFILE: STH 54 WESTBOUND	SHEET 112	E

FILE NAME : I:\45\450479 STH 54 SEYMOUR TO GB\C3D\SHEETSPLAN\050102 PP.DWG
LAYOUT NAME - 050104 pp

PLOT DATE : 7/26/2023 12:41 PM PLOT BY : GARNICA, BRANDON PLOT NAME : PLOT SCALE : 1 IN:40 FT

WISDOT/CADDS SHEET 44

LEGEND

XXXXXX SAW CUTS ASPHALT

ΔΔΔΔΔΔ SAW CUTS CONCRETE

X TREE TO BE REMOVED

N

BM #1000

ASPH PE TLE LINE

XXXXXXXXXXXX

R/W LINE

SLOPE INTERCEPT

EXISTING R/W

STH 54

BURIED GAS LINE (APPROXIMATE LOCATION)

CAUTION

STH 55

EP: 51+92.48'CA'

BP: 50+00.00'CA'

PCC: 50+41.36'CA'

PCC: 51+54.60'CA'

51'CA'

PCC: 50+77.30'CA'

PCC: 51+33.23'CA'

CONC CE

POST

STH 54/STH 55

5

5

846
845
844
843
842
841
840
839

STA 50+00.00
EL 842.52

VPC STA 50+45.00
VPC EL 843.12

VPI STA 50+55.00
VPI EL 843.25

VPT STA 50+65.00
VPT EL 843.06

EXISTING PROFILE

FINISHED GRADE

1.33%

-1.88%

1.33%

VCL = 20.00

K = 6.23

VCL = 20.00

K = 6.23

STA 51+92.48
EL 842.52

VPC STA 51+25.00
VPC EL 841.94

VPI STA 51+35.00
VPI EL 841.75

VPT STA 51+45.00
VPT EL 841.88

| | | |

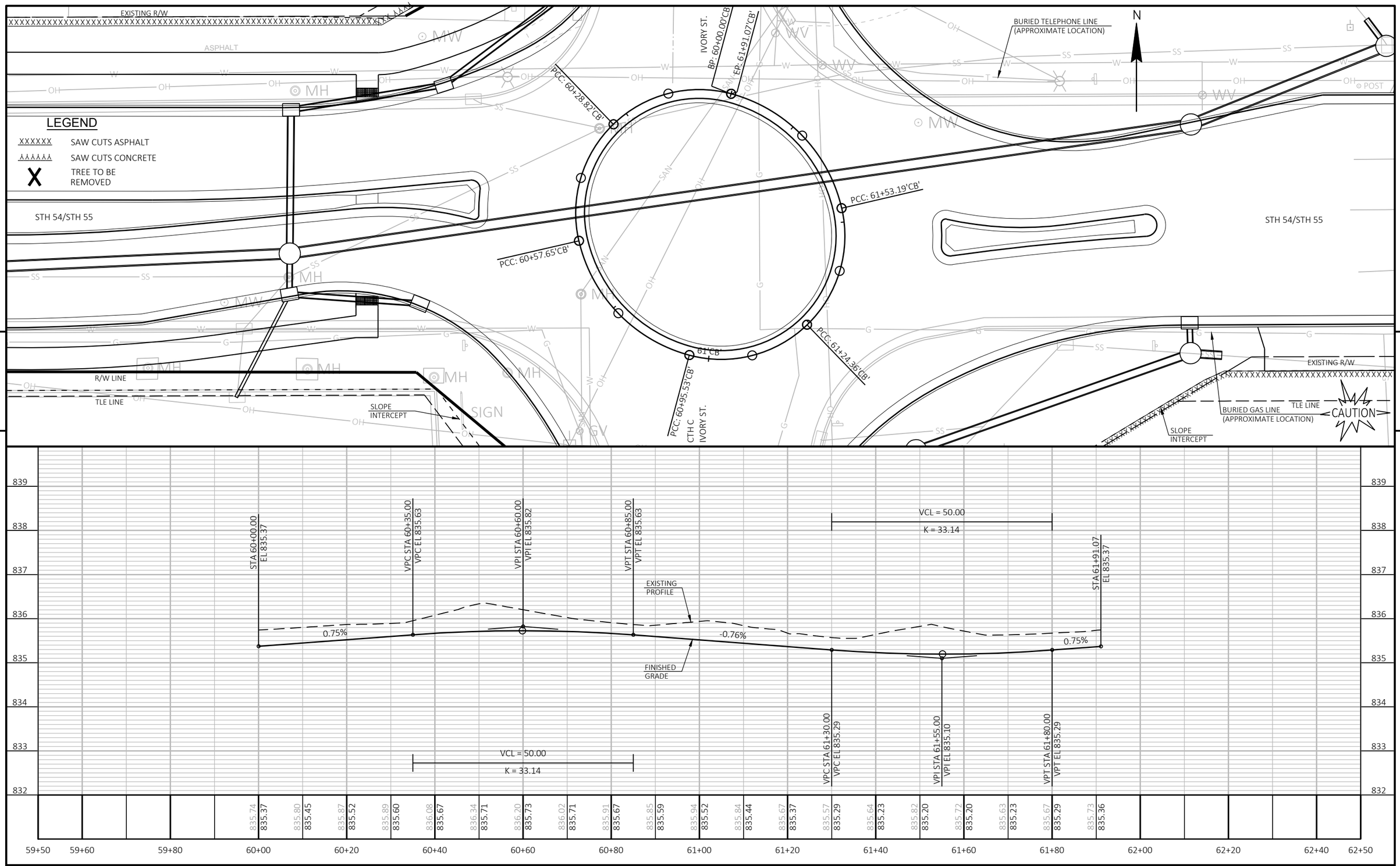

PROJECT NO: 6230-20-71	HWY: STH 54	COUNTY: OUTAGAMIE	PLAN AND PROFILE: STH 54/CTH C ROUNDABOUT CENTER CIRCLE	SHEET 114 E

FILE NAME : I:\45\450479 STH 54 SEYMOUR TO GB\C3D\SHEETSPLAN\050103 PP.DWG
LAYOUT NAME - 050106 pp

PLOT DATE : 7/26/2023 12:41 PM PLOT BY : GARNICA, BRANDON PLOT NAME : PLOT SCALE : 1 IN:20 FT

WISDOT/CADDS SHEET 44

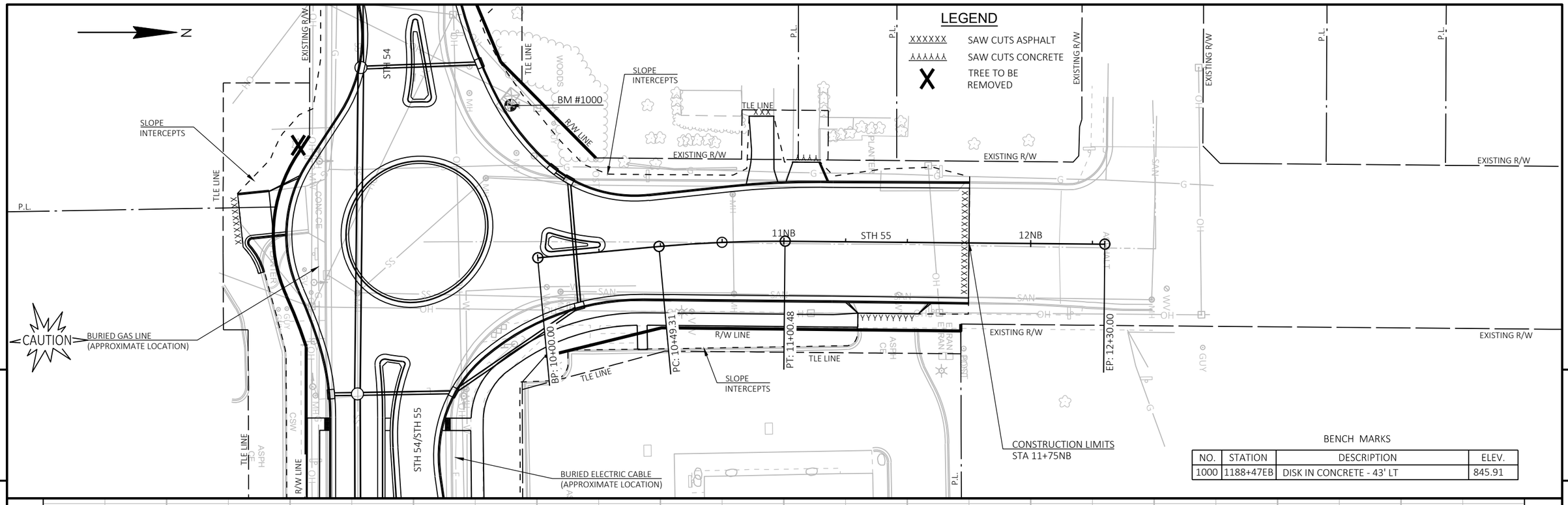

BENCH MARKS

NO.	STATION	DESCRIPTION	ELEV.
1000	1188+47EB	DISK IN CONCRETE - 43' LT	845.91

PROJECT NO: 6230-20-71	HWY: STH 54	COUNTY: OUTAGAMIE	PLAN AND PROFILE: STH 55 NB	SHEET 115	E

FILE NAME : I:\45\450479 STH 54 SEYMOUR TO GB\C3D\SHEETSPLAN\050104 PP.DWG
LAYOUT NAME - 050107 pp

PLOT DATE : 7/27/2023 3:57 PM PLOT BY : VERVILLE, PHILLIP PLOT NAME : PLOT SCALE : 1 IN:40 FT

WISDOT/CADDS SHEET 44

LEGEND

XXXXXX SAW CUTS ASPHALT

ΔΔΔΔΔΔ SAW CUTS CONCRETE

X TREE TO BE REMOVED

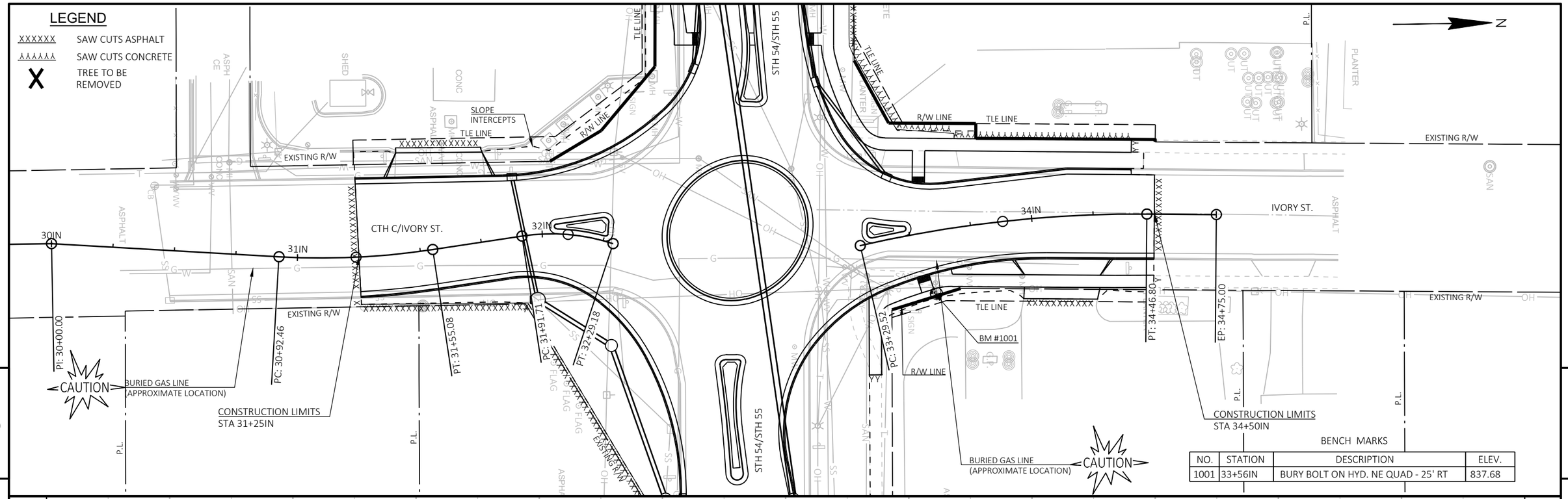

BENCH MARKS

NO.	STATION	DESCRIPTION	ELEV.
1001	33+56IN	BURY BOLT ON HYD. NE QUAD - 25' RT	837.68

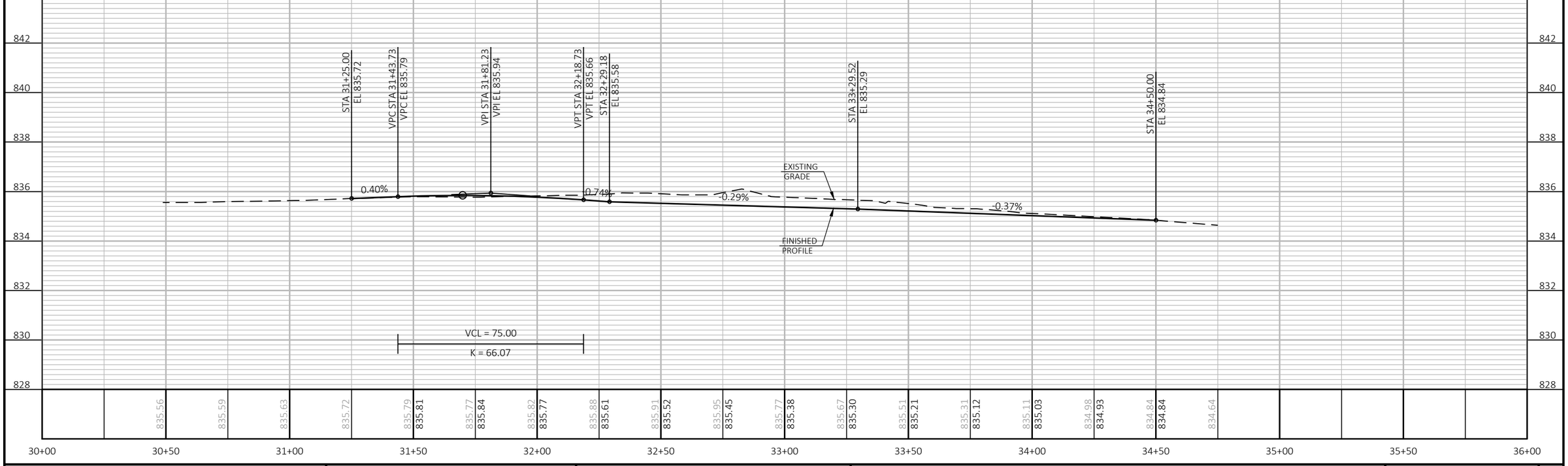

PROJECT NO: 6230-20-71	HWY: STH 54	COUNTY: OUTAGAMIE	PLAN AND PROFILE: CTH C/IVORY ST NB	SHEET 116 E

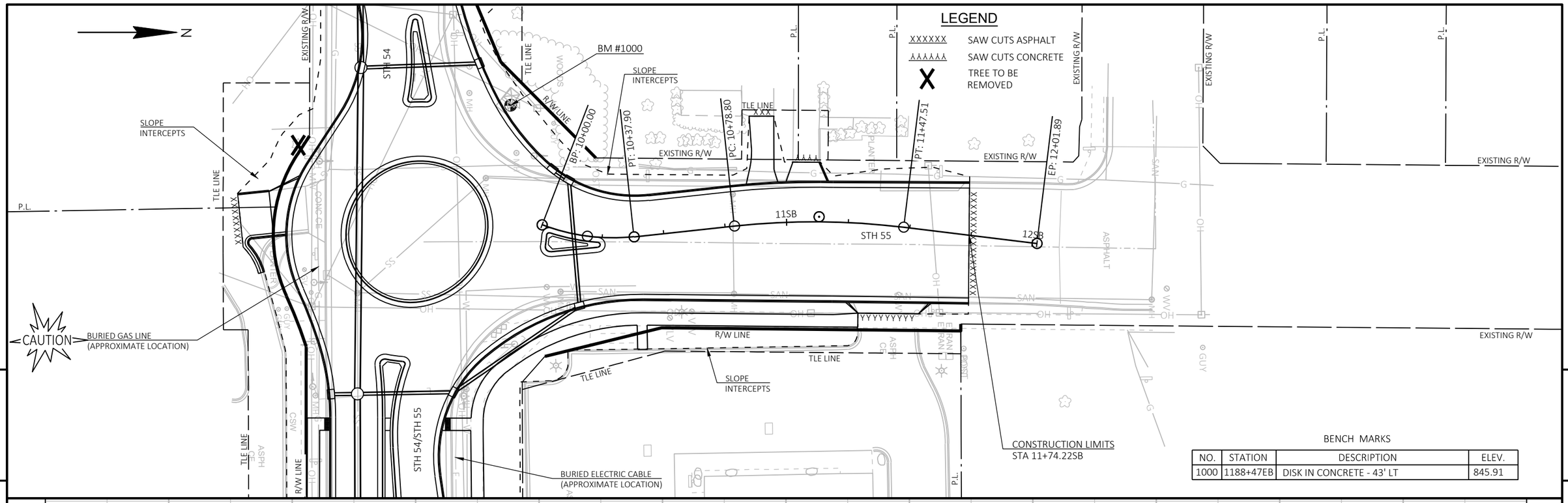

PROJECT NO: 6230-20-71	HWY: STH 54	COUNTY: OUTAGAMIE	PLAN AND PROFILE: STH 55 SB	SHEET 117	E

FILE NAME : I:\45\450479 STH 54 SEYMOUR TO GB\C3D\SHEETSPLAN\050105 PP.DWG
LAYOUT NAME - 050109 pp
PLOT DATE : 7/27/2023 3:57 PM PLOT BY : VERVILLE, PHILLIP PLOT NAME : PLOT SCALE : 1 IN:40 FT

LEGEND

XXXXXX SAW CUTS ASPHALT

ΔΔΔΔΔΔ SAW CUTS CONCRETE

X TREE TO BE REMOVED

BP: 30+00.00

EXISTING R/W

PC: 31+24.88

SLOPE INTERCEPTS

PT: 31+86.58

PI: 32+29.66

TLE LINE

R/W LINE

31IS

CTH C/IVORY ST.

32IS

STH 54/STH 55

PC: 33+29.67

PT: 33+51.47

EP: 34+23.12

34IS

IVORY ST.

ASPHALT

CONCRETE

PLANTER

SHED

SIGN

FLAG

BM #1001

CAUTION

BURIED GAS LINE
(APPROXIMATE LOCATION)

CONSTRUCTION LIMITS
STA 31+24.95IN

CONSTRUCTION LIMITS
STA 34+23.12IS

P.L.

N

5

5

BENCH MARKS

NO.	STATION	DESCRIPTION	ELEV.
1001	33+56IN	BURY BOLT ON HYD. NE QUAD - 25' RT	837.68

STA 31+24.95
EL 835.86

VPC STA 31+35.97
VPC EL 835.91

VPI STA 31+73.47
VPI EL 836.06

VPT STA 32+10.97
VPT EL 835.78

STA 32+29.66
EL 835.64

STA 33+29.67
EL 835.34

STA 34+23.12
EL 834.94

0.40%

-0.74%

-0.30%

-0.43%

EXISTING GRADE

FINISHED PROFILE

VCL = 75.00

K = 65.83

842 840 838 836 834 832 830 828

835.62 835.67 835.77 835.86 835.86 835.82 835.95 835.75 835.95 835.79 835.85 835.87 835.68 835.87 835.58 836.14 835.51 835.86 835.43 835.80 835.36 835.53 835.25 835.31 835.14 835.11 835.04

30+00 30+50 31+00 31+50 32+00 32+50 33+00 33+50 34+00 34+50 35+00 35+50 36+00

PROJECT NO: 6230-20-71	HWY: STH 54	COUNTY: OUTAGAMIE	PLAN AND PROFILE: CTH C/IVORY ST SB	SHEET 118	E

FILE NAME : I:\45\450479 STH 54 SEYMOUR TO GB\C3D\SHEETSPLAN\050105 PP.DWG
LAYOUT NAME - 050110 pp

PLOT DATE : 7/26/2023 12:41 PM PLOT BY : GARNICA, BRANDON PLOT NAME : PLOT SCALE : 1 IN:40 FT

WISDOT/CADDS SHEET 44



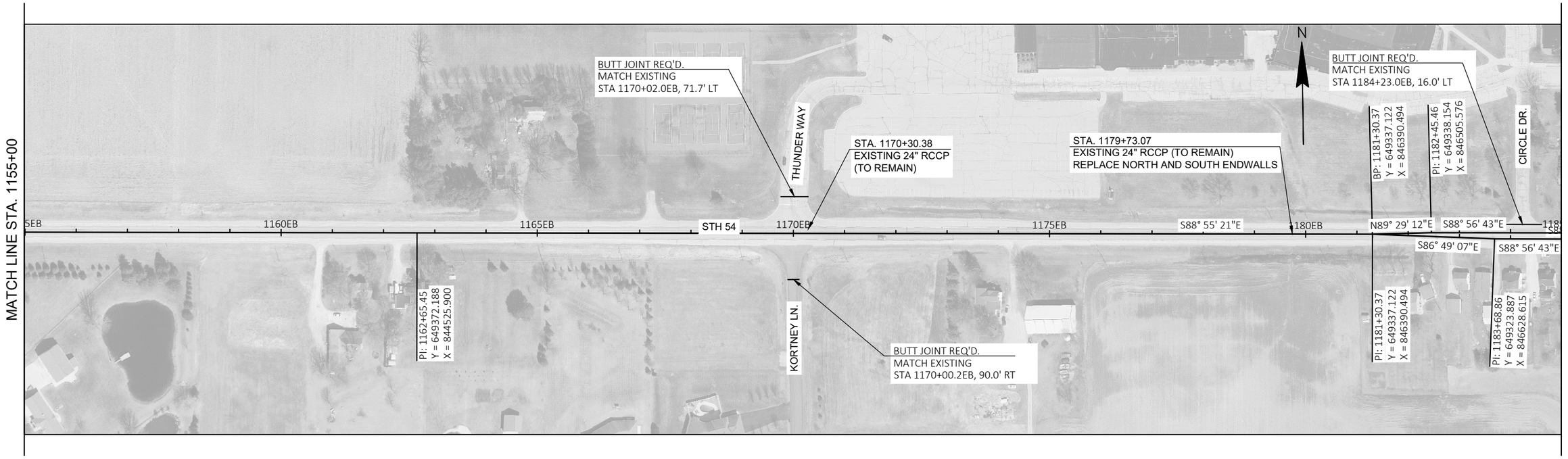

PROJECT NO: 6230-20-71	HWY: STH 54	COUNTY: OUTAGAMIE	PLAN AND PROFILE: PLAN	SHEET 119	E

FILE NAME : I:\45\450479 STH 54 SEYMOUR TO GB\C3D\SHEETSPLAN\050201 PN.DWG
LAYOUT NAME - 050201 pn
PLOT DATE : 7/26/2023 2:34 PM
PLOT BY : HOSPER, JAN
PLOT NAME :
PLOT SCALE : ##########
WISDOT/CADDS SHEET 44

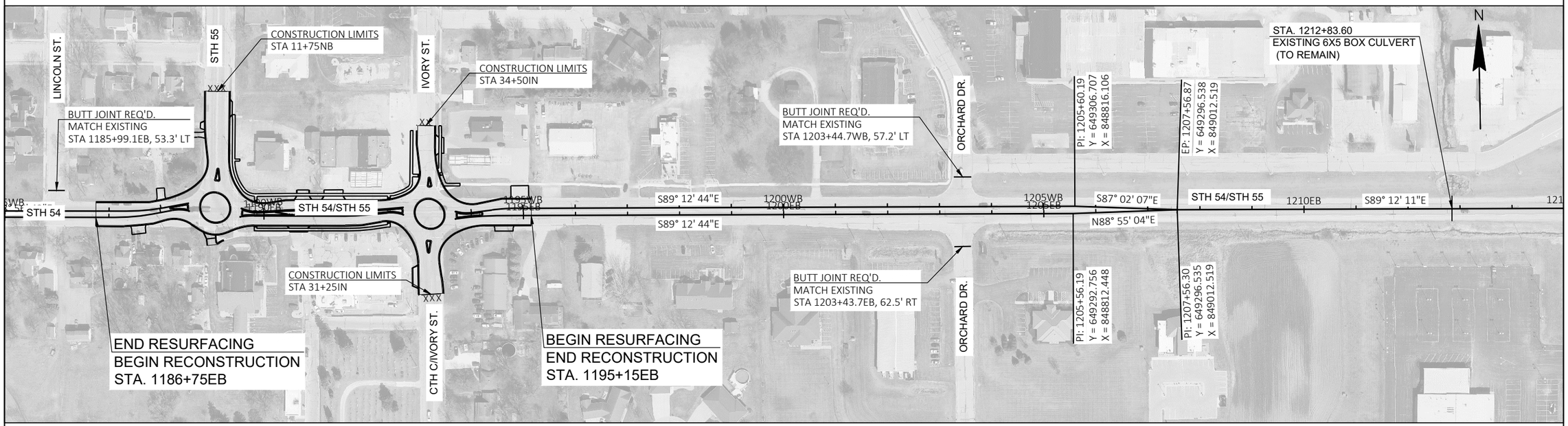



PROJECT NO: 6230-20-71	HWY: STH 54	COUNTY: OUTAGAMIE	PLAN AND PROFILE: PLAN	SHEET 120	E

FILE NAME : I:\45\450479 STH 54 SEYMOUR TO GB\C3D\SHEETSPLAN\050201 PN.DWG
LAYOUT NAME - 050202 pn
PLOT DATE : 7/26/2023 2:34 PM PLOT BY : HOSPER, JAN PLOT NAME : PLOT SCALE : ##########

WISDOT/CADDS SHEET 44

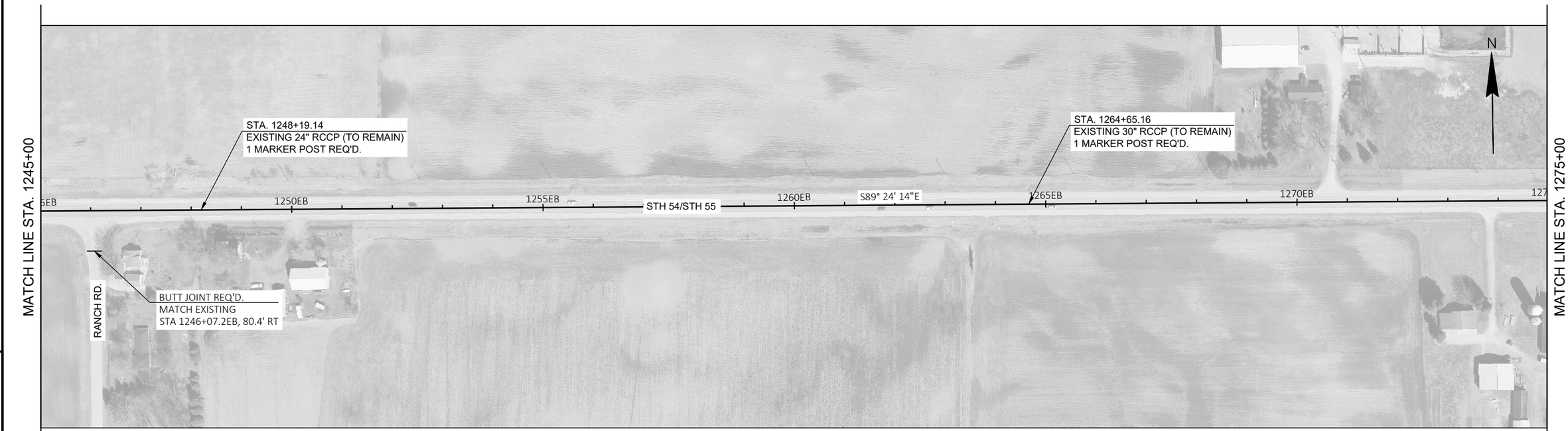

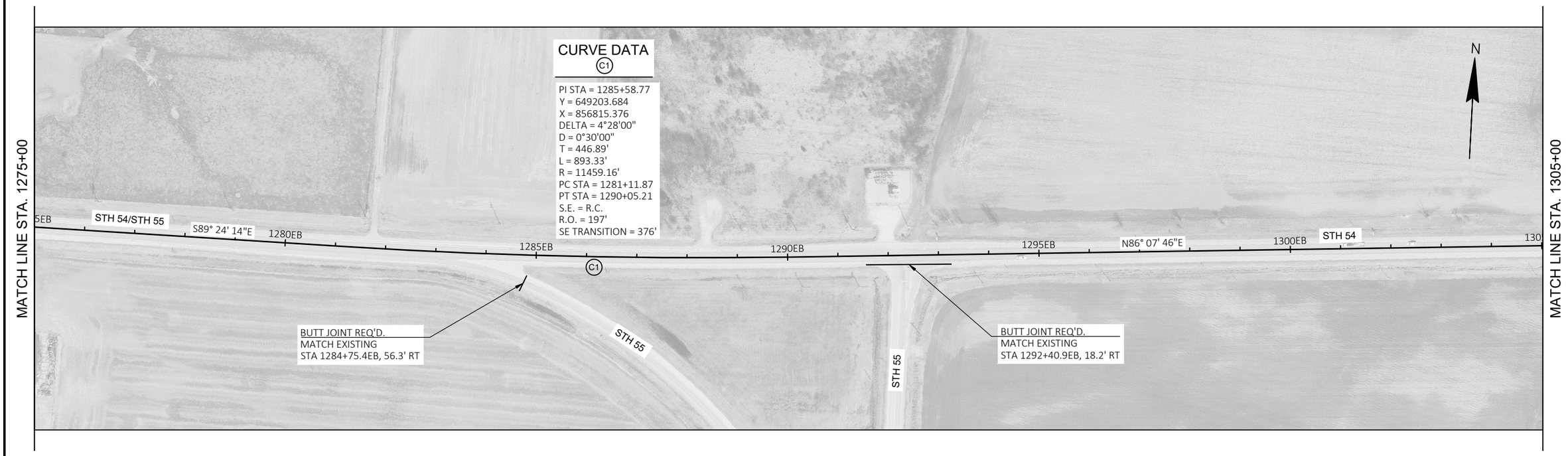

PROJECT NO: 6230-20-71	HWY: STH 54	COUNTY: OUTAGAMIE	PLAN AND PROFILE: PLAN	SHEET 121	E

FILE NAME : I:\45\450479 STH 54 SEYMOUR TO GB\C3D\SHEETSPLAN\050201 PN.DWG
LAYOUT NAME - 050203 pn
PLOT DATE : 7/26/2023 2:34 PM PLOT BY : HOSPER, JAN PLOT NAME : PLOT SCALE : ##########

WISDOT/CADDS SHEET 44





PROJECT NO: 6230-20-71	HWY: STH 54	COUNTY: OUTAGAMIE	PLAN AND PROFILE: PLAN	SHEET 122	E

FILE NAME : I:\45\450479 STH 54 SEYMOUR TO GB\C3D\SHEETSPLAN\050201 PN.DWG
LAYOUT NAME - 050204 pn
PLOT DATE : 9/21/2023 10:38 AM PLOT BY : VERVILLE, PHILLIP PLOT NAME : PLOT SCALE : ##########

WISDOT/CADDS SHEET 44



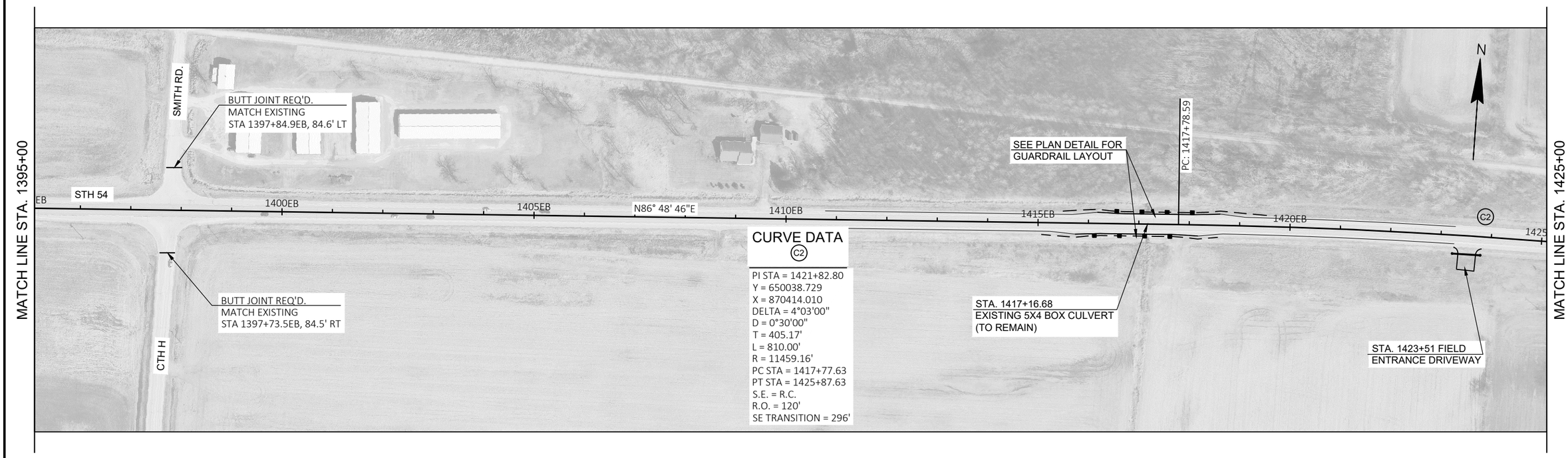

PROJECT NO: 6230-20-71	HWY: STH 54	COUNTY: OUTAGAMIE	PLAN AND PROFILE: PLAN	SHEET 123	E

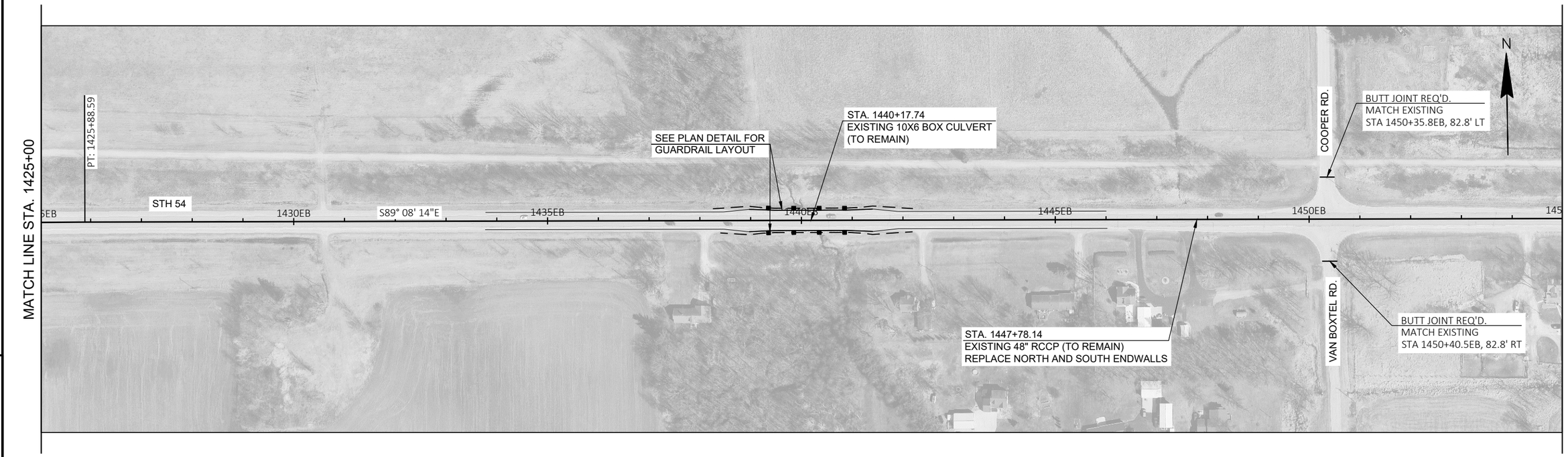

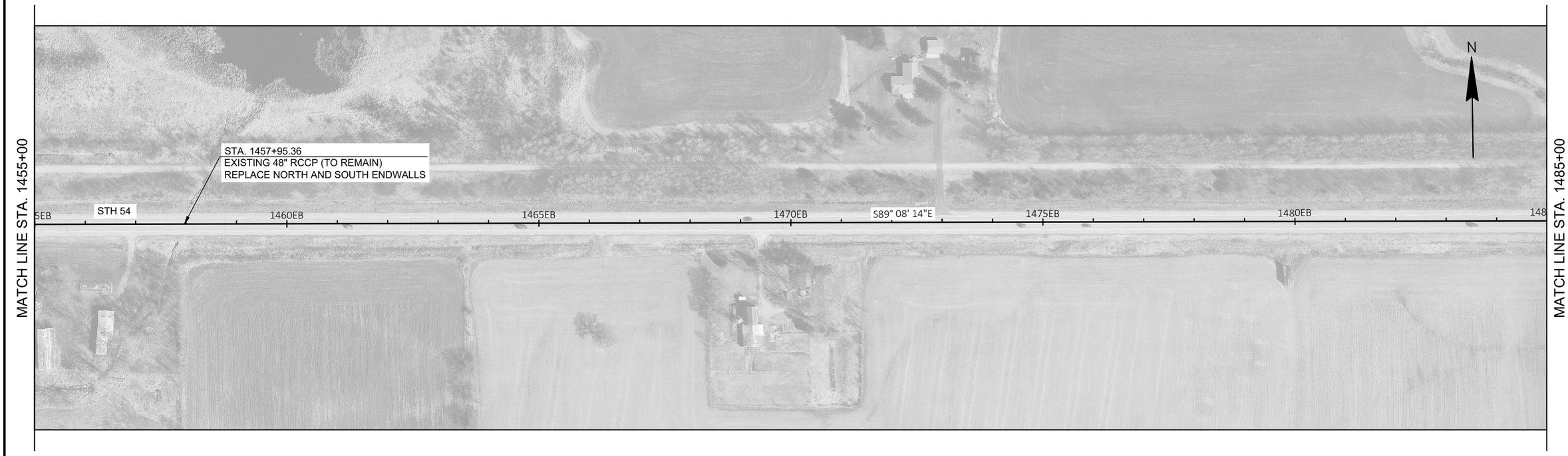

PROJECT NO: 6230-20-71	HWY: STH 54	COUNTY: OUTAGAMIE	PLAN AND PROFILE: PLAN	SHEET 124	E

FILE NAME : I:\45\450479 STH 54 SEYMOUR TO GB\C3D\SHEETSPLAN\050201 PN.DWG
LAYOUT NAME - 050206 pn

PLOT DATE : 7/26/2023 2:34 PM PLOT BY : HOSPER, JAN PLOT NAME : PLOT SCALE : ##########

WISDOT/CADDS SHEET 44

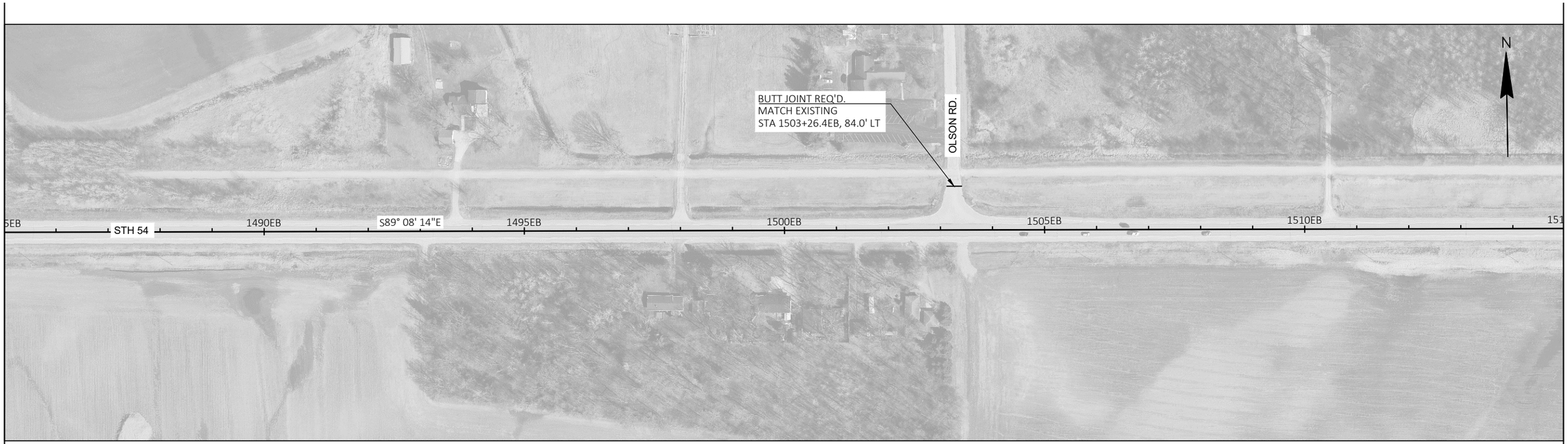

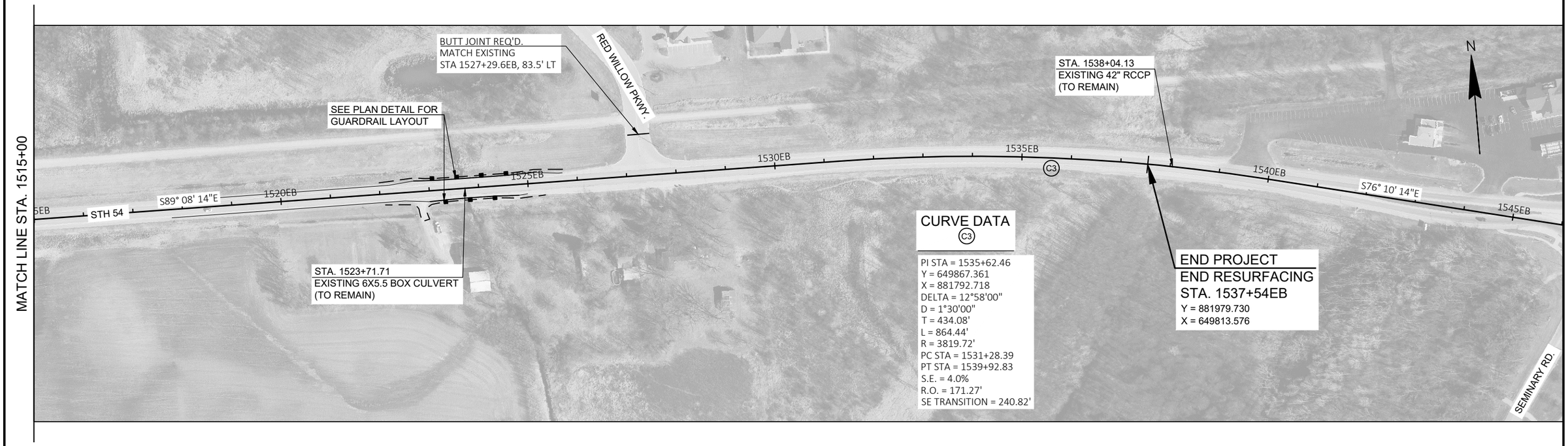

PROJECT NO: 6230-20-71	HWY: STH 54	COUNTY: OUTAGAMIE	PLAN AND PROFILE: PLAN	SHEET 125	E

FILE NAME : I:\45\450479 STH 54 SEYMOUR TO GB\C3D\SHEETSPLAN\050201 PN.DWG
LAYOUT NAME - 050207 pn

PLOT DATE : 7/26/2023 2:34 PM PLOT BY : HOSPER, JAN PLOT NAME : PLOT SCALE : ##########

WISDOT/CADDS SHEET 44

Standard Detail Drawing List

08A05-19A	INLET COVERS TYPE A, H, A-S, H-S & Z
08A05-19B	INLET COVERS TYPE B, B-A, C, MS, MS-A, & WM
08A05-19D	INLET COVER TYPE BW, MANHOLE COVERS, TYPE K, J, J-S, L & M
08B09-03	MANHOLES 3-FT, 4-FT, 5-FT, 6-FT, 7-FT, 8-FT, 9-FT, 10-FT DIAMETER
08C06-02	INLETS 3-FT AND 4-FT DIAMETER
08C07-02	INLETS 2X2-FT, 2X2.5-FT, 2X3-FT AND 2.5X3-FT
08D01-23A	CONCRETE CURB & GUTTER
08D01-23B	CONCRETE CURB, TIES AND CURB AND GUTTER APPLICATIONS
08D05-20A	CURB RAMPS TYPES 1 AND 1-A
08D05-20B	CURB RAMPS TYPES 2 AND 3
08D05-20C	CURB RAMPS TYPES 4A AND 4A1
08D05-20D	CURB RAMPS TYPE 4B AND 4B1
08D05-20E	CURB RAMPS TYPES 5, 6, 7A, 7B & 8
08D05-20F	CURB RAMPS RADIAL DETECTABLE WARNING FIELD APPLICATIONS
08D05-20G	CURB RAMPS RECTANGULAR AND RADIAL DETECTABLE WARNING PLATES
08D22-01	DRIVEWAYS WITHOUT CURB & GUTTER RESURFACING PROJECTS RURAL
08E09-06	SILT FENCE
08E10-02	INLET PROTECTION TYPE A, B, C AND D
08E15-01	CULVERT PIPE CHECK
08F01-11	APRON ENDWALLS FOR CULVERT PIPE
08F04-08	JOINT TIES FOR CONCRETE PIPE AND CONCRETE COLLAR DETAIL
09B02-10	CONDUIT
09B16-02	PULL BOX NON-CONDUCTIVE
09C02-09	CONCRETE BASES, TYPES 1, 2, 5, & 6
09C03-04	TRANSFORMER/PEDESTAL BASES
09D01-05	CABINET SERVICE INSTALLATION (METER BREAKER PEDESTAL)
09E01-15D	POLE MOUNTINGS FOR LIGHTING UNITS, TYPE 5 (30 FEET)
09E03-06	NON-FREEWAY LIGHTING UNIT POLE WIRING
11B02-02	CONCRETE MEDIAN NOSE
13A10-03A	SHOULDER RUMBLE STRIPS - ASPHALT
13A10-03G	SHOULDER AND EDGE LINE RUMBLE STRIPS - CROSSINGS, INTERSECTIONS, BRIDGES, DRIVEWAYS
13A10-03H	SHOULDER AND EDGE LINE RUMBLE STRIPS - RAILROAD, PASSING, CLIMBING AND BYPASS LANES
13A11-04A	CENTERLINE RUMBLE STRIPS - ASPHALT
13A11-04D	CENTERLINE RUMBLE STRIPS - INTERSECTIONS, DRIVEWAYS, BRIDGES, RAILROADS
13C01-19	CONCRETE PAVEMENT LONGITUDINAL JOINTS AND TIES
13C19-03	HMA LONGITUDINAL JOINTS
14B42-07A	MIDWEST GUARDRAIL SYSTEM (MGS) GUARDRAIL
14B42-07B	MIDWEST GUARDRAIL SYSTEM (MGS) GUARDRAIL
14B42-07C	MIDWEST GUARDRAIL SYSTEM (MGS) GUARDRAIL
14B42-07D	MIDWEST GUARDRAIL SYSTEM (MGS) GUARDRAIL
14B43-04A	MIDWEST GUARDRAIL SYSTEM LONG SPAN MGS (L)
14B43-04B	MIDWEST GUARDRAIL SYSTEM LONG SPAN MGS (L)
14B43-04C	MIDWEST GUARDRAIL SYSTEM LONG SPAN MGS (L)
14B44-04A	MIDWEST GUARDRAIL SYSTEM ENERGY ABSORBING TERMINAL (MGS)
14B44-04B	MIDWEST GUARDRAIL SYSTEM ENERGY ABSORBING TERMINAL (MGS)
14B44-04C	MIDWEST GUARDRAIL SYSTEM ENERGY ABSORBING TERMINAL (MGS)
14B51-03A	ANCHOR POST ASSEMBLY TOP-MOUNTED
14B51-03B	ANCHOR POST ASSEMBLY TOP-MOUNTED
14B51-03C	ANCHOR POST ASSEMBLY TOP-MOUNTED
15A03-02A	FLEXIBLE MARKER POST FOR CULVERT END
15A03-02B	FLEXIBLE MARKER POST FOR CULVERT END
15C02-09A	BARRICADES AND SIGNS FOR MAINLINE CLOSURES
15C02-09B	BARRICADES AND SIGNS FOR VARIOUS CLOSURES
15C02-09C	DETOUR SIGNING FOR MAINLINE CLOSURES
15C04-05	TRAFFIC CONTROL, ADVANCE WARNING SIGNS 45 M.P.H. OR GREATER TWO-WAY UNDIVIDED ROAD OPEN TO TRAFFIC
15C05-05	TRAFFIC CONTROL, ADVANCE WARNING SIGNS 40 M.P.H. OR LESS
15C07-15C	PAVEMENT MARKING ARROWS
15C08-23A	PERMANENT LONGITUDINAL PAVEMENT MARKINGS
15C08-23B	TEMPORARY LONGITUDINAL PAVEMENT MARKING
15C08-23C	PAVEMENT MARKING (TURN LANES)
15C08-23D	PAVEMENT MARKING (TURN LANES)
15C11-10B	CHANNELIZING DEVICES DRUMS, CONES, BARRICADES AND VERTICAL PANELS
15C12-09A	TRAFFIC CONTROL FOR LANE CLOSURE WITH FLAGGING OPERATION
15C12-09B	TRAFFIC CONTROL, LANE CLOSURE WITH AUTOMATED FLAGGER ASSISTANCE DEVICE
15C18-08B	MEDIAN ISLAND MARKING MEDIAN ISLAND NOSE
15C19-08A	MOVING PAVEMENT MARKING OPERATION TWO-LANE TWO-WAY ROADWAY
15C33-04	STOP LINE AND CROSSWALK PAVEMENT MARKING

6

Standard Detail Drawing List

15C35-06A	PAVEMENT MARKING (INTERSECTIONS)
15D28-04	TRAFFIC CONTROL, WORK ON SHOULDER OR PARKING LANE, UNDIVIDED ROADWAY
15D29-06	TRAFFIC CONTROL, VEHICLE ENTRANCE/EXIT OR HAUL ROAD
15D30-09A	TRAFFIC CONTROL, PEDESTRIAN ACCOMMODATION
15D30-09B	TRAFFIC CONTROL, PEDESTRIAN ACCOMMODATION
15D30-09C	TRAFFIC CONTROL, PEDESTRIAN ACCOMMODATION
15D30-09L	TRAFFIC CONTROL, PEDESTRIAN ACCOMMODATION
15D39-02	TRAFFIC CONTROL, DROP-OFF SIGNING
15D44-02	TRAFFIC CONTROL, SIGNING ON ROADWAYS WITH MILLED SURFACES
15D51-01	TRAFFIC CONTROL, MOBILE OPERATIONS ON AN UNDIVIDED ROADWAY
16A01-07	LANDMARK REFERENCE MONUMENTS AND COVERS

6

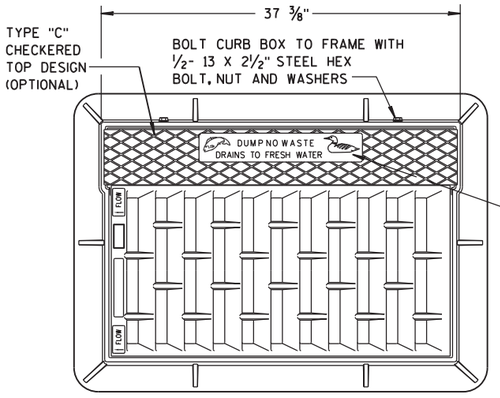

NOTE:
GRATE IS REVERSIBLE.

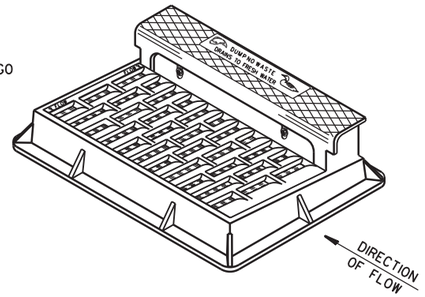

NOTE: CURB BOX HEIGHT ADJUSTABLE 6" TO 9"

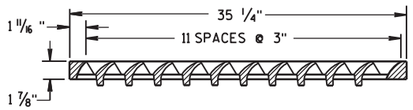

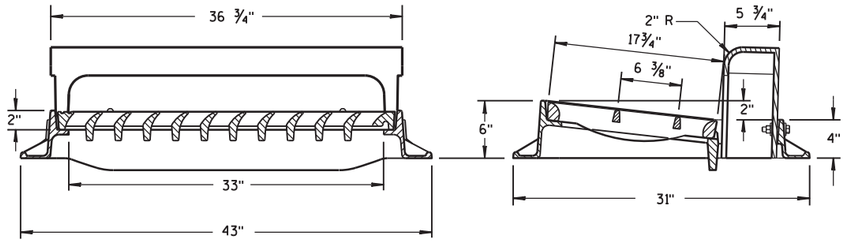

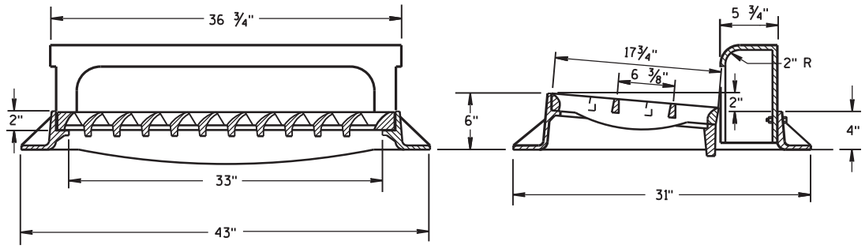

TYPE "H"

NOTE: EITHER CASTING IS ACCEPTABLE

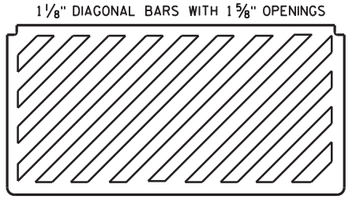

SPECIAL GRATE FOR TYPE "H" COVER

(MEASURES 35 1/4" X 17 3/4" X 2")

(NOTED AS TYPE H-S ON DRAINAGE TABLE)

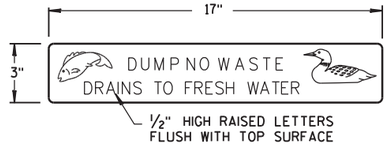

LOGO DETAIL

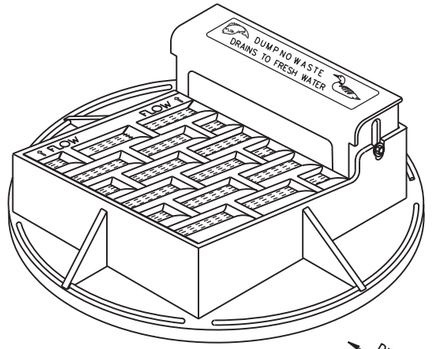

NOTE: CURB BOX ADJUSTABLE 4" TO 9"

NOTE:
GRATE IS REVERSIBLE.

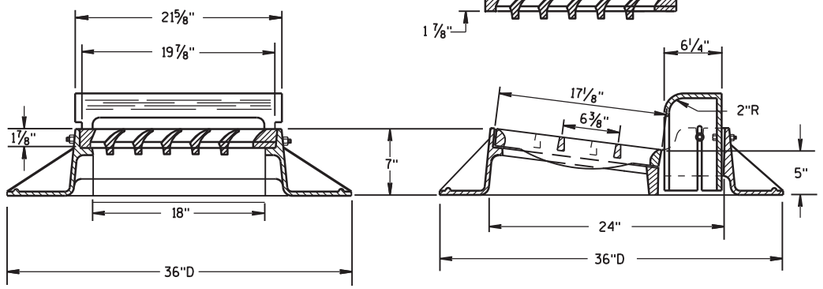

TYPE "A"

GENERAL NOTES

DETAILS OF CONSTRUCTION, MATERIALS AND WORKMANSHIP NOT SHOWN ON THIS DRAWING SHALL CONFORM TO THE PERTINENT REQUIREMENTS OF THE STANDARD SPECIFICATIONS AND THE APPLICABLE SPECIAL PROVISIONS.

DETAIL DRAWINGS FOR PROPOSED ALTERNATE DESIGNS FOR CATCH BASIN, MANHOLE AND INLET COVERS SHALL BE SUBMITTED TO THE ENGINEER FOR APPROVAL PROVIDING THAT SUCH ALTERNATE DESIGNS MAKE PROVISION FOR EQUIVALENT CAPACITY AND STRENGTH.

ROUND FRAMES AND COVERS SHALL HAVE CONTINUOUSLY MACHINED BEARING SURFACES TO PREVENT ROCKING AND RATTLING.

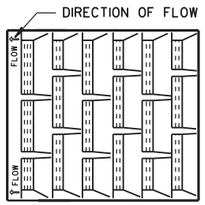

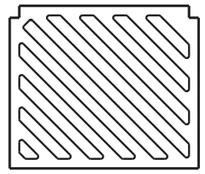

SPECIAL GRATE FOR TYPE "A" COVER

(MEASURES 19 3/4" X 17" X 1 7/8")

(NOTED AS TYPE A-S ON DRAINAGE TABLE)

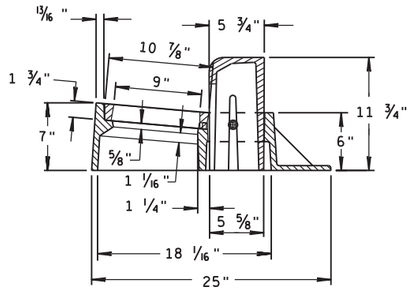

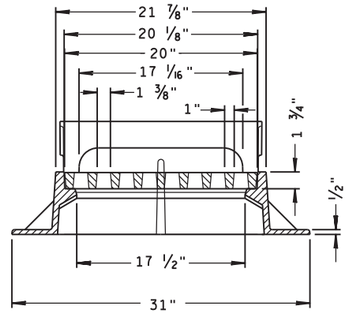

TYPE "Z"

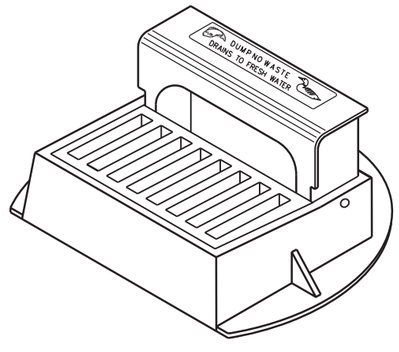

INLET COVERS TYPE A, H, A-S, H-S & Z

STATE OF WISCONSIN
DEPARTMENT OF TRANSPORTATION

APPROVED
11-27-13 — DATE
/S/ Jerry H. Zogg — ROADWAY STANDARDS ENGINEER
FHWA

6

S.D.D. 8 A 5-19a

6

S.D.D. 8 A 5-19a

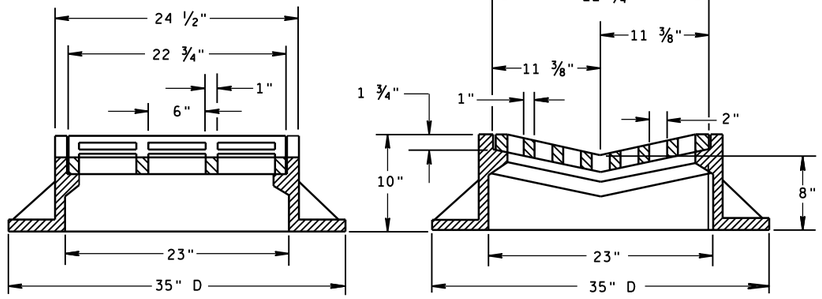

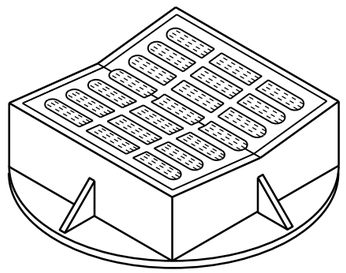

TYPE "B"

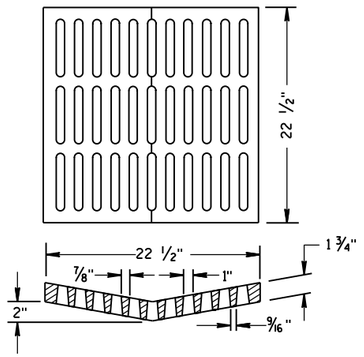

ALTERNATIVE GRATE FOR TYPE "B" COVER

USE WHERE PEDESTRIAN OR BICYCLE TRAFFIC IS POSSIBLE.
NOTED AS TYPE B-A ON THE DRAINAGE TABLE

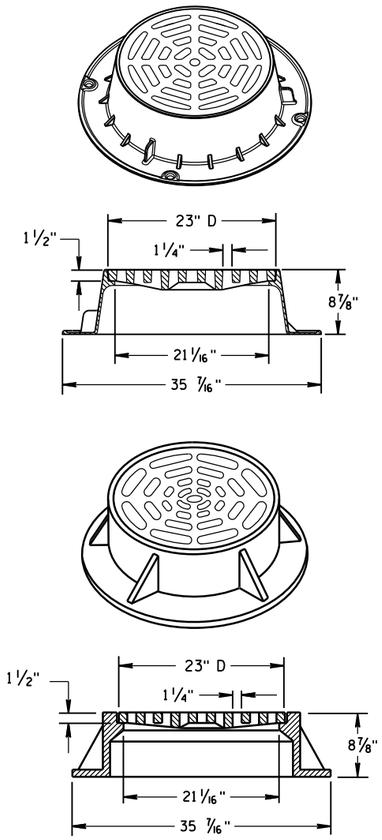

TYPE "C"

NOTE: EITHER CASTING IS ACCEPTABLE

GENERAL NOTES

DETAILS OF CONSTRUCTION, MATERIALS AND WORKMANSHIP NOT SHOWN ON THIS DRAWING SHALL CONFORM TO THE PERTINENT REQUIREMENTS OF THE STANDARD SPECIFICATIONS AND THE APPLICABLE SPECIAL PROVISIONS.

DETAIL DRAWINGS FOR PROPOSED ALTERNATE DESIGNS FOR CATCH BASIN, MANHOLE AND INLET COVERS SHALL BE SUBMITTED TO THE ENGINEER FOR APPROVAL PROVIDING THAT SUCH ALTERNATE DESIGNS MAKE PROVISION FOR EQUIVALENT CAPACITY AND STRENGTH.

ROUND FRAMES AND COVERS SHALL HAVE CONTINUOUSLY MACHINED BEARING SURFACES TO PREVENT ROCKING AND RATTLING.

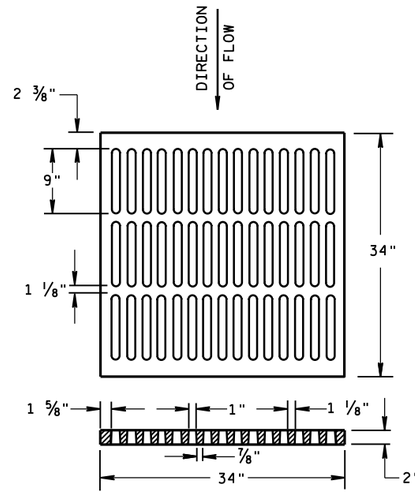

ALTERNATIVE TYPE "MS"

USE WHERE PEDESTRIAN OR BICYCLE TRAFFIC IS PERMITTED
NOTED AS TYPE MS-A ON THE DRAINAGE TABLE

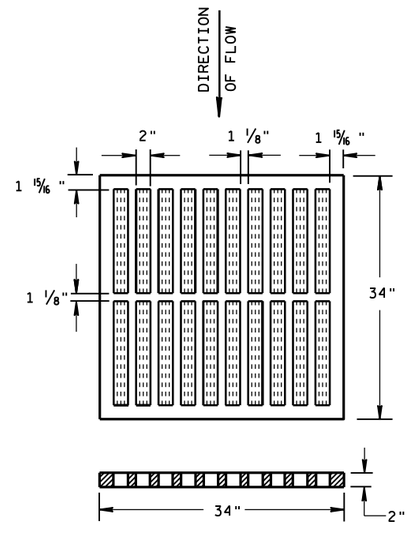

TYPE "MS"

USE ON FREEWAYS AND EXPRESSWAYS
NOTED AS TYPE MS ON DRAINAGE TABLE

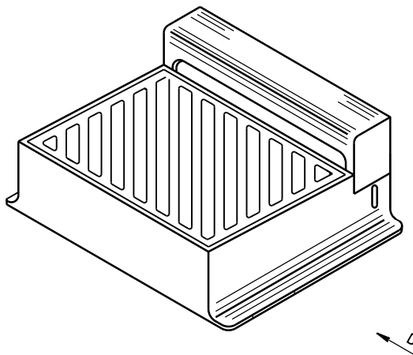

DIRECTION OF FLOW

DIAGONAL SLOTS, SHALL BE ORIENTED TO THE DIRECTION OF FLOW AS ILLUSTRATED. GRATES ARE MANUFACTURED TO BE REVERSIBLE.

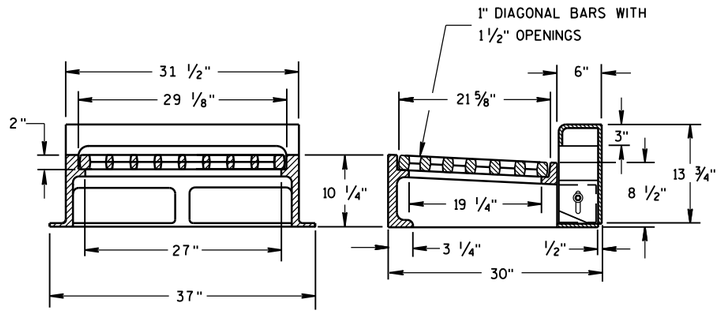

NOTE: CURB BOX HEIGHT ADJUSTABLE 6" TO 9"

TYPE "WM"

INLET COVERS
TYPE B, B-A, C,
MS, MS-A, & WM

STATE OF WISCONSIN
DEPARTMENT OF TRANSPORTATION

APPROVED
11/27/2013
DATE
/S/ Jerry H. Zogg
ROADWAY STANDARDS DEVELOPMENT ENGINEER
FHWA

6

S.D.D. 8 A 5-19b

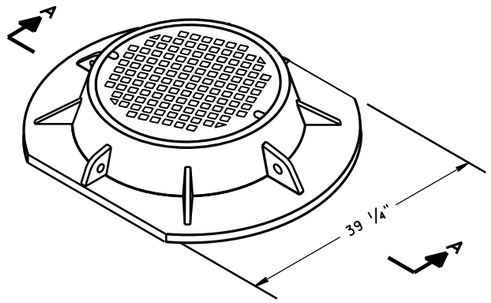

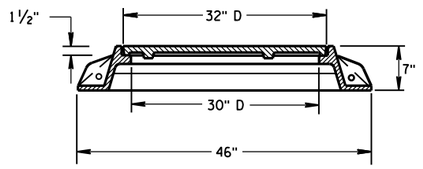

SECTION A-A
TYPE "K"

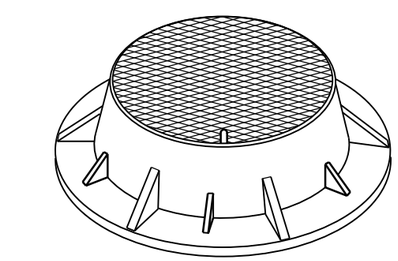

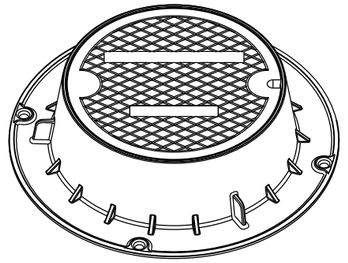

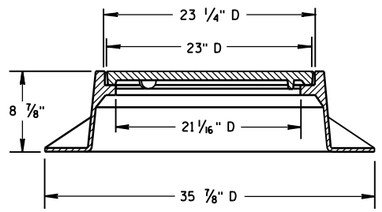

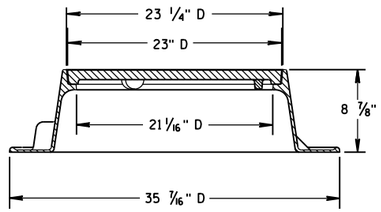

TYPE "J"
NOTE: EITHER CASTING IS ACCEPTABLE

GENERAL NOTES

DETAILS OF CONSTRUCTION, MATERIALS AND WORKMANSHIP NOT SHOWN ON THIS DRAWING SHALL CONFORM TO THE PERTINENT REQUIREMENTS OF THE STANDARD SPECIFICATIONS AND THE APPLICABLE SPECIAL PROVISIONS.

DETAIL DRAWINGS FOR PROPOSED ALTERNATE DESIGNS FOR MANHOLE COVERS SHALL BE SUBMITTED TO THE ENGINEER FOR APPROVAL PROVIDING THAT SUCH ALTERNATE DESIGNS MAKE PROVISION FOR EQUIVALENT CAPACITY AND STRENGTH.

ROUND FRAMES AND COVERS SHALL HAVE CONTINUOUSLY MACHINED BEARING SURFACES TO PREVENT ROCKING AND RATTLING.

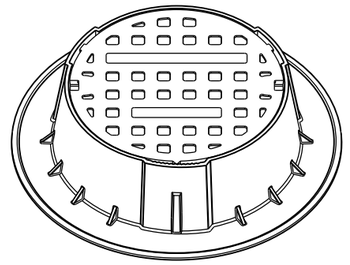

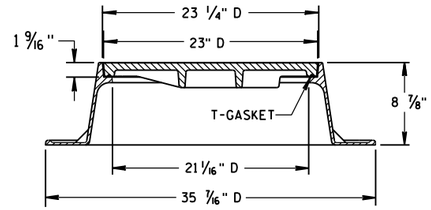

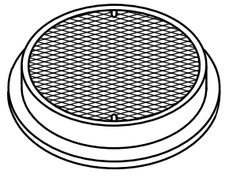

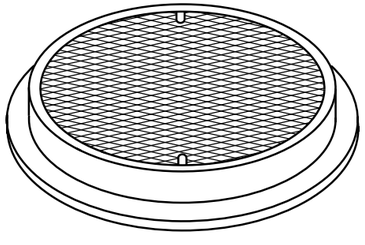

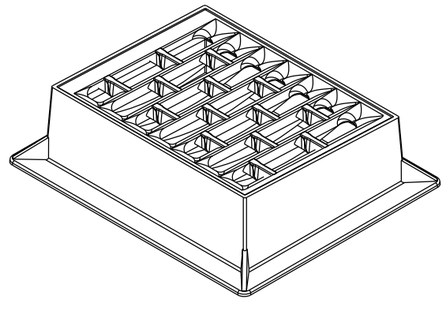

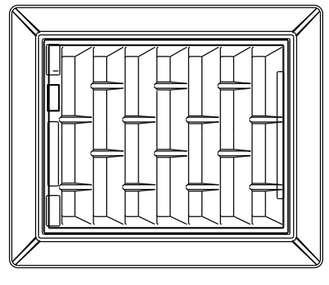

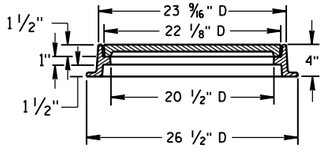

TYPE "L"

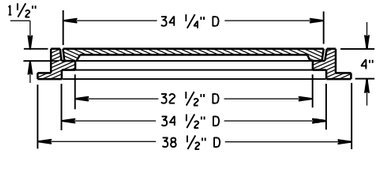

TYPE "M"

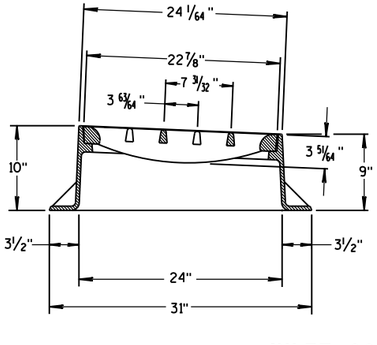

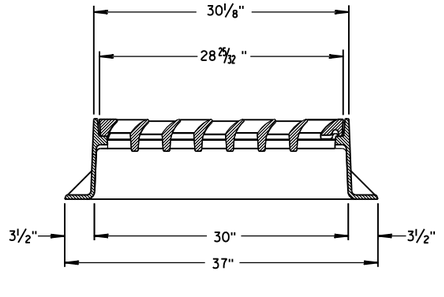

INLET COVER TYPE "BW"

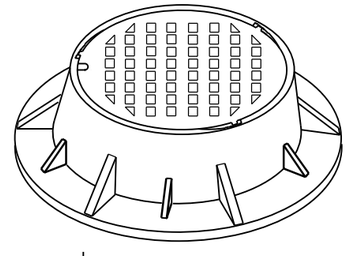

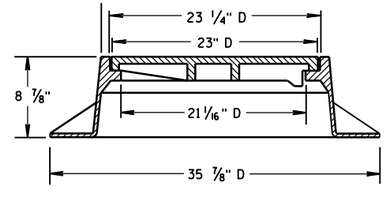

TYPE "J" SPECIAL
TYPE "B" NON-ROCKING SELF-SEAL LID
(NOTED AS TYPE J-S ON THE DRAINAGE TABLE)
NOTE: EITHER CASTING IS ACCEPTABLE

INLET COVER TYPE BW
MANHOLE COVERS, TYPE K, J, J-S, L & M

STATE OF WISCONSIN
DEPARTMENT OF TRANSPORTATION

APPROVED
11/27/2013
DATE
FHWA

/S/ Jerry H. Zogg
ROADWAY STANDARDS DEVELOPMENT ENGINEER

6

S.D.D. 8 A 5-19d

6

S.D.D. 8 A 5-19d

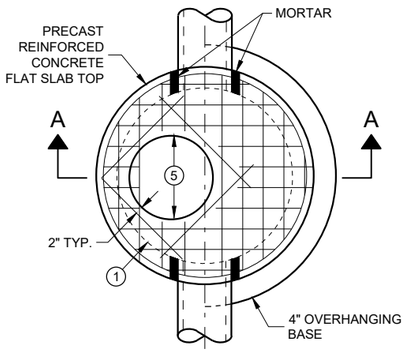

PLAN VIEW
CIRCULAR OPENING

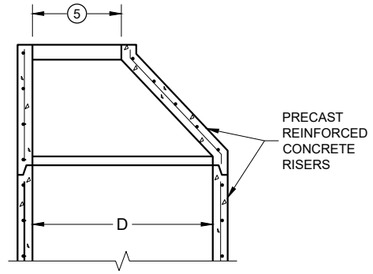

OPTIONAL PRECAST REINFORCED CONCRETE ECCENTRIC TOP

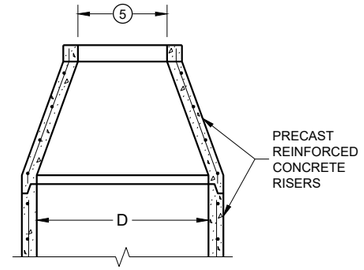

OPTIONAL PRECAST REINFORCED CONCRETE CONCENTRIC TOP

MANHOLE COVER OPENING MATRIX

OPENING SIZE (FT.) \ MANHOLE COVER TYPE	C	ALL J'S	K	L	M
2 DIA.	X	X		X	
3 DIA.			X		X

PIPE MATRIX

MANHOLE SIZE (DIA.)	MAXIMUM INSIDE PIPE DIAMETER FOR TWO PIPES		MINIMUM WALL THICKNESS (IN)	MINIMUM PRECAST FLAT SLAB TOP AND BASE THICKNESS
	180° SEPARATION (IN)	90° SEPARATION (IN)		
3-FT	15	12	4	6
4-FT	24	18	4	6
5-FT	36	24	5	8
6-FT	42	36	6	8
7-FT	48	36/42*	7	8
8-FT	60	42	8	8
9-FT	66	54	9	10
10-FT	72	60	10	10

*A 36" PIPE AND A 42" PIPE CAN BE PLACED WITHIN 90 DEGREES. SEE MINIMUM HORIZONTAL PIPE SEPARATION DETAIL.

GENERAL NOTES

DETAILS OF CONSTRUCTION, MATERIALS AND WORKMANSHIP NOT SHOWN ON THIS DRAWING SHALL CONFORM TO THE PERTINENT REQUIREMENTS OF THE STANDARD SPECIFICATIONS AND THE APPLICABLE SPECIAL PROVISIONS.

UNLESS OTHERWISE AUTHORIZED IN WRITING BY THE ENGINEER, THE CONTRACTOR SHALL NOT ORDER AND DELIVER PRECAST MANHOLE UNITS REQUIRED FOR THE PROJECT UNTIL A LIST OF SIZES IS FURNISHED BY THE ENGINEER.

DETAILED DRAWINGS FOR PROPOSED ALTERNATE DESIGNS FOR UNDERGROUND DRAINAGE STRUCTURES SHALL BE SUBMITTED TO THE ENGINEER FOR APPROVAL PROVIDING THAT SUCH ALTERNATE DESIGNS MAKE PROVISION FOR EQUIVALENT CAPACITY AND STRENGTH.

ALL DRAINAGE STRUCTURES ARE DESIGNATED ON THE PLANS AS "MANHOLES 3X3-L", "CATCH BASINS 4-B", "INLETS 2X3-H", ETC. THE FIRST NUMBERS DESIGNATE THE SIZE OF THE STRUCTURE, AND THE FOLLOWING LETTER DESIGNATES THE TYPE OF COVER TO BE USED TO COMPRISE THE COMPLETE UNIT.

BASES SHALL BE PLACED ON A BED OF MATERIAL AT LEAST 6 INCHES IN DEPTH, WHICH MEETS THE REQUIREMENTS OF FOUNDATION BACKFILL. THIS BEDDING SHALL BE COMPACTED AND PROVIDE UNIFORM SUPPORT FOR THE ENTIRE AREA OF THE BASE.

PRECAST REINFORCED CONCRETE CONE TOPS (ECCENTRIC OR CONCENTRIC) OR PRECAST REINFORCED CONCRETE FLAT SLAB TOPS MAY BE USED ON CONCRETE BLOCK STRUCTURES.

ECCENTRIC CONE TOPS MAY BE USED ON ALL STRUCTURES. CONCENTRIC CONE TOPS SHALL BE USED ONLY ON STRUCTURES 5 FEET OR LESS IN DEPTH UNLESS OTHERWISE DIRECTED BY THE ENGINEER.

STEPS MEETING AASHTO M199 AND THE FOLLOWING REQUIREMENTS SHALL BE INSTALLED IN ALL STRUCTURES OVER 5 FEET IN DEPTH: 16 INCH C-C MAXIMUM SPACING; PROJECT A MINIMUM CLEAR DISTANCE OF 4 INCHES FROM THE WALL AT THE POINT OF EMBEDMENT; MINIMUM LENGTH OF 10 INCHES; MINIMUM WALL EMBEDMENT OF 3 INCHES. FERROUS METAL STEPS NOT PAINTED OR TREATED TO RESIST CORROSION SHALL HAVE A MINIMUM CROSS SECTIONAL DIMENSION OF 1 INCH.

STEPS OF APPROVED POLYPROPYLENE PLASTIC COATED REINFORCEMENT BAR ARE ACCEPTABLE. REINFORCING BAR MUST BE A MINIMUM OF ½ INCH AND MEET THE REQUIREMENTS OF ASTM A615.

CERTIFICATION SHALL BE PROVIDED THAT INSTALLED STEPS WHEN TESTED IN ACCORDANCE WITH SECTION 10 OF AASHTO T280 CAN WITHSTAND A VERTICAL LOAD OF 800 LBS. AND A HORIZONTAL LOAD OF 400 LBS.

ALL BAR STEEL REINFORCEMENT SHALL BE EMBEDDED 2 INCHES CLEAR UNLESS OTHERWISE SHOWN OR NOTED.

ALL PRECAST MANHOLE UNITS SHALL CONFORM TO THE PERTINENT REQUIREMENTS OF AASHTO DESIGNATION M199.

PRECAST REINFORCED RISERS SHALL HAVE A TONGUE AND GROOVE JOINT WITH TONGUE UP OR DOWN.

CONCRETE BLOCK WILL NOT BE PERMITTED FOR STRUCTURES GREATER THAN 4 FEET IN DIAMETER.

4" OVERHANGING BASES ARE REQUIRED FOR ALL CONCRETE BLOCK INSTALLATIONS. 4" OVERHANG IS REQUIRED WHEN SEPARATE PRECAST BASE IS PROVIDED. OVERHANG IS NOT REQUIRED ON PRECAST STRUCTURES WITH AN INTEGRAL OR MONOLITHIC BASE.

FOR ADDITIONAL CONFIGURATIONS, MAINTAIN A MINIMUM OF 12 INCHES AS MEASURED FROM THE INSIDE OF THE STRUCTURE WALL BETWEEN THE OUTSIDE PIPE WALLS OF ADJACENT PIPES. SEE DETAIL "D".

(1) FOR PRECAST MANHOLES PROVIDE REINFORCING STEEL IN ACCORDANCE TO AASHTO M199.

(2) SEE PIPE MATRIX TABLE FOR MINIMUM WALL THICKNESS FOR PRECAST MANHOLES

(3) SEE PIPE MATRIX TABLE FOR MINIMUM THICKNESS OF PRECAST FLAT SLAB TOPS AND BASES.

(4) JOINTS TO BE SEALED WITH A BUTYL RUBBER SEAL PER SEALANT MANUFACTURERS RECOMMENDATIONS CONFORMING TO ASTM C 990 (TYP.).

(5) SEE MANHOLE COVER OPENING MATRIX.

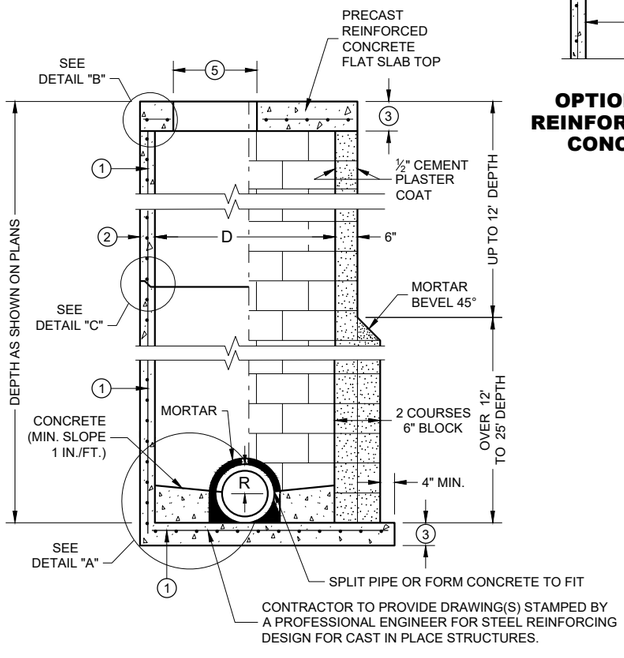

SECTION A - A

PRECAST REINFORCED CONCRETE WITH MONOLITHIC BASE

CONCRETE BLOCK WITH CAST IN PLACE OR PRECAST REINFORCED CONCRETE BASE (1)

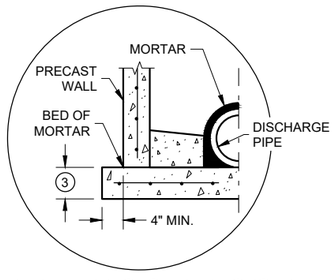

SEPARATE PRECAST REINFORCED CONCRETE BASE OPTION

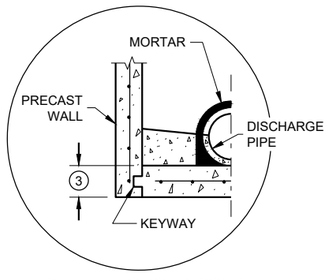

PRECAST REINFORCED CONCRETE WITH INTEGRAL BASE OPTION

DETAIL "A"

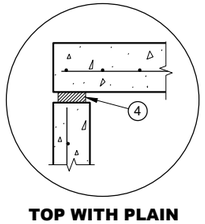

TOP WITH PLAIN END JOINT

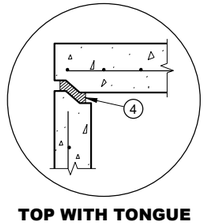

TOP WITH TONGUE AND GROOVE JOINT

DETAIL "B"

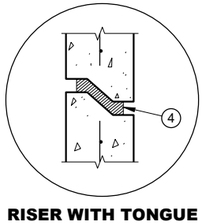

RISER WITH TONGUE AND GROOVE JOINT

DETAIL "C"

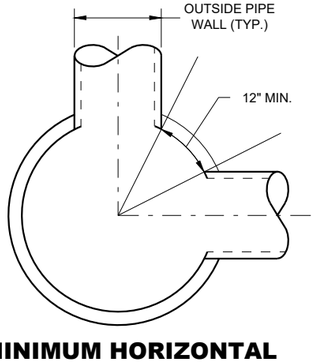

MINIMUM HORIZONTAL PIPE SEPARATION

MANHOLES, 3-FT, 4-FT 5-FT, 6-FT, 7-FT, 8-FT, 9-FT AND 10-FT DIAMETER

STATE OF WISCONSIN
DEPARTMENT OF TRANSPORTATION

APPROVED
November 2021 — DATE
/S/ Rodney Taylor — ROADWAY STANDARDS DEVE ENGINEER

FHWA

MANHOLES 3-FT, 4-FT, 5-FT, 6-FT, 7-FT, 8-FT, 9-FT AND 10-FT DIAMETER

6

SDD 08B09 - 03

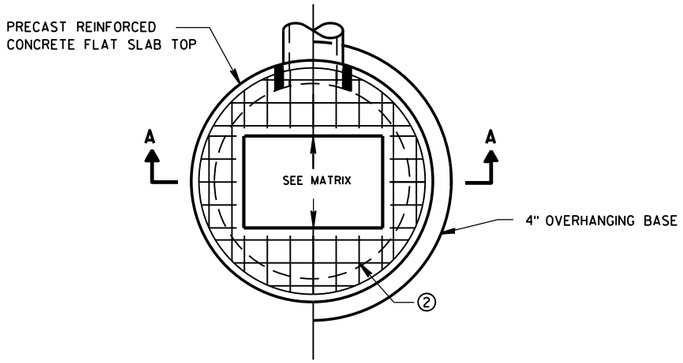

PLAN VIEW RECTANGULAR OPENING

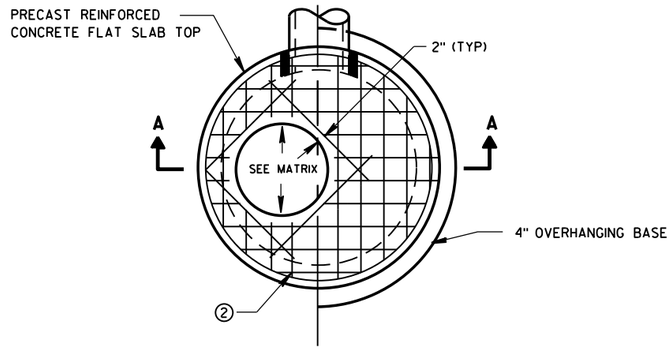

PLAN VIEW CIRCULAR OPENING

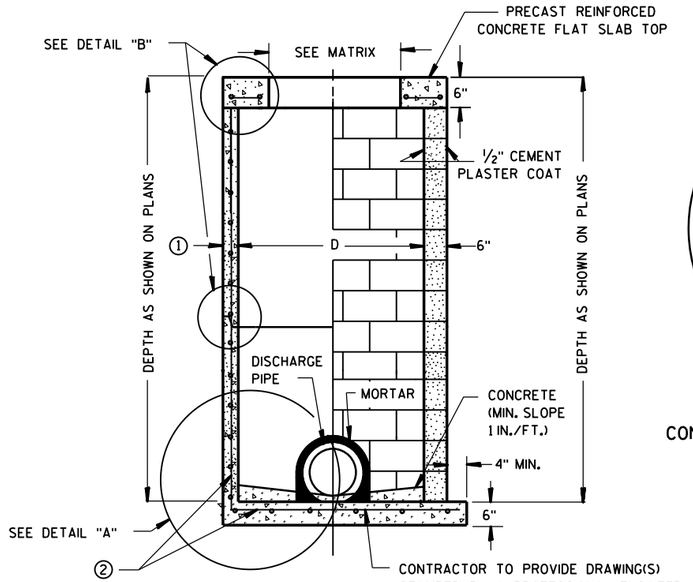

SECTION A-A

PRECAST REINFORCED CONCRETE WITH MONOLITHIC BASE

CONCRETE BLOCK WITH CAST-IN-PLACE OR PRECAST REINFORCED CONCRETE BASE ②

CIRCULAR INLETS W/ FLAT TOP

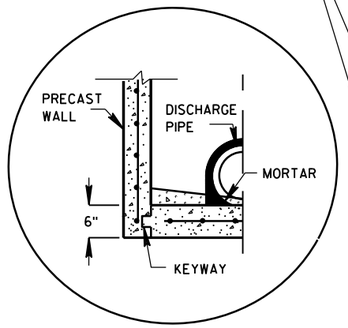

PRECAST REINFORCED CONCRETE WITH INTEGRAL BASE OPTION

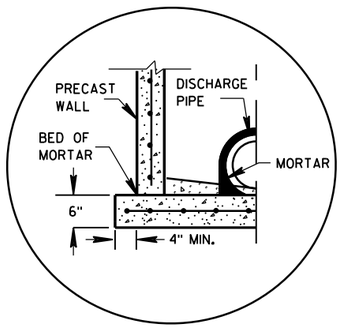

SEPARATE PRECAST REINFORCED CONCRETE BASE OPTION

DETAIL "A"

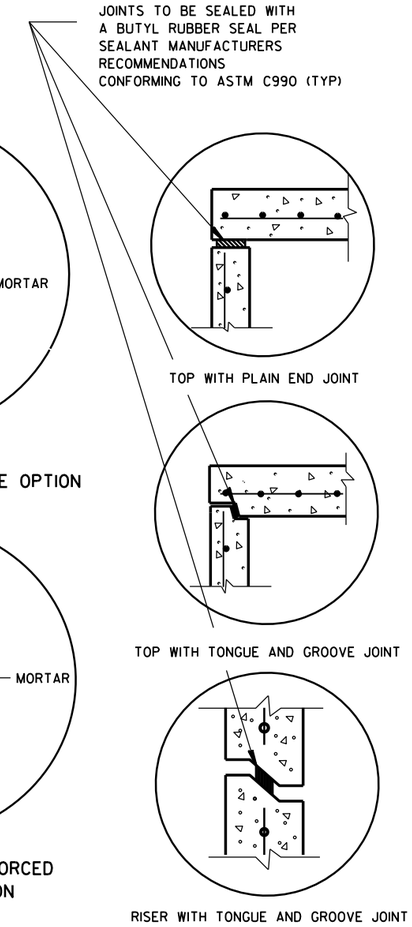

DETAIL "B"

GENERAL NOTES

DETAILS OF CONSTRUCTION, MATERIALS AND WORKMANSHIP NOT SHOWN ON THIS DRAWING SHALL CONFORM TO THE PERTINENT REQUIREMENTS OF THE STANDARD SPECIFICATIONS AND THE APPLICABLE SPECIAL PROVISIONS.

UNLESS OTHERWISE AUTHORIZED IN WRITING BY THE ENGINEER, THE CONTRACTOR SHALL NOT ORDER AND DELIVER PRECAST INLET UNITS REQUIRED FOR THE PROJECT UNTIL A LIST OF SIZES IS FURNISHED BY THE ENGINEER.

DETAILED DRAWINGS FOR PROPOSED ALTERNATE DESIGNS FOR UNDERGROUND DRAINAGE STRUCTURES SHALL BE SUBMITTED TO THE ENGINEER FOR APPROVAL PROVIDING THAT SUCH ALTERNATE DESIGNS MAKE PROVISION FOR EQUIVALENT CAPACITY AND STRENGTH.

ALL DRAINAGE STRUCTURES ARE DESIGNATED ON THE PLANS AS "MANHOLES 3X3-L", "CATCH BASINS 4-B", "INLETS 2X3-H", ETC. THE FIRST NUMBERS DESIGNATE THE SIZE OF THE STRUCTURE, AND THE FOLLOWING LETTER DESIGNATES THE TYPE OF COVER TO BE USED TO COMPRISE THE COMPLETE UNIT.

BASES SHALL BE PLACED ON A BED OF MATERIAL AT LEAST 6 INCHES IN DEPTH, WHICH MEETS THE REQUIREMENTS OF FOUNDATION BACKFILL. THIS BEDDING SHALL BE COMPACTED AND PROVIDE UNIFORM SUPPORT FOR THE ENTIRE AREA OF THE BASE.

ALL BAR STEEL REINFORCEMENT SHALL BE EMBEDDED 2 INCHES CLEAR UNLESS OTHERWISE SHOWN OR NOTED.

ALL PRECAST INLET UNITS SHALL CONFORM TO THE PERTINENT REQUIREMENTS OF AASHTO DESIGNATION M199.

PRECAST REINFORCED RISERS SHALL HAVE A TONGUE AND GROOVE JOINT WITH TONGUE UP OR DOWN.

4" OVERHANGING BASES ARE REQUIRED FOR ALL CONCRETE BLOCK INSTALLATIONS. 4" OVERHANG IS REQUIRED WHEN SEPARATE PRECAST BASE IS PROVIDED. OVERHANG IS NOT REQUIRED ON PRECAST STRUCTURES WITH AN INTEGRAL OR MONOLITHIC BASE.

FOR ADDITIONAL CONFIGURATIONS, MAINTAIN A MINIMUM OF 12 INCHES AS MEASURED FROM THE INSIDE OF THE STRUCTURE WALL BETWEEN THE OUTSIDE PIPE WALLS OF ADJACENT PIPES. SEE DETAIL "C".

① MINIMUM WALL THICKNESS SHALL BE 4-IN FOR 3-FT DIAMETER AND 5-IN FOR 4-FT DIAMETER PRECAST INLETS.

② FOR PRECAST CATCH BASINS PROVIDE REINFORCING STEEL IN ACCORDANCE TO AASHTO M199.

INLET COVER OPENING MATRIX

	INLET COVER TYPE	ALL A'S	ALL B'S	BW	C	F	ALL H'S	S	T	V	WM	Z
INLET SIZE	OPENING SIZE (FT)											
3-FT	2 DIA.				X							X
	2X2	X	X					X		X		
4-FT	2 DIA.				X							X
	2X2	X	X					X		X		
	2X2.5			X				X	X	X	X	
	2X3						X					
	2.5X3					X						

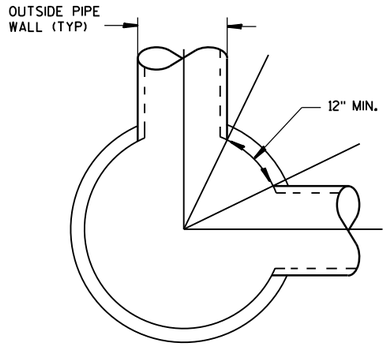

DETAIL "C"

PIPE MATRIX

INLET SIZE	MAXIMUM INSIDE PIPE DIAMETER FOR TWO PIPES	
	180° SEPARATION (IN)	90° SEPARATION (IN)
3-FT	15	12
4-FT	24	18

INLETS 3-FT AND 4-FT DIAMETER

STATE OF WISCONSIN
DEPARTMENT OF TRANSPORTATION

APPROVED
Sept.. 2016 — DATE
/S/ Rodney Taylor — ROADWAY STANDARDS | UNIT SUPERVI ENT
FHWA

INLETS 3-FT AND 4-FT DIAMETER

6

S.D.D. 8 C 6-2

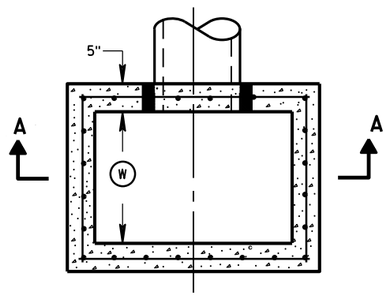

PLAN VIEW

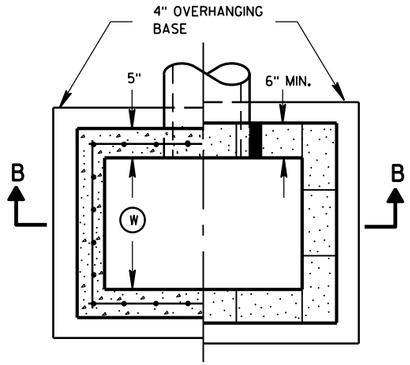

PLAN VIEW

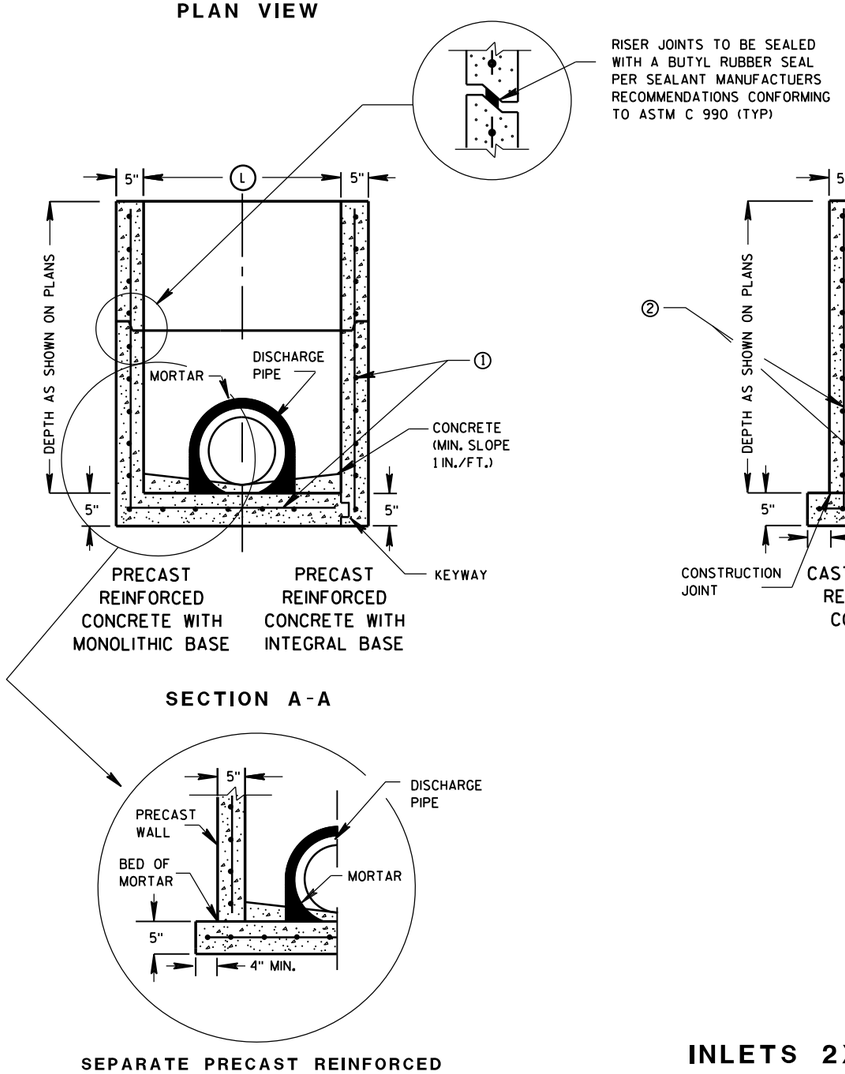

SECTION A-A

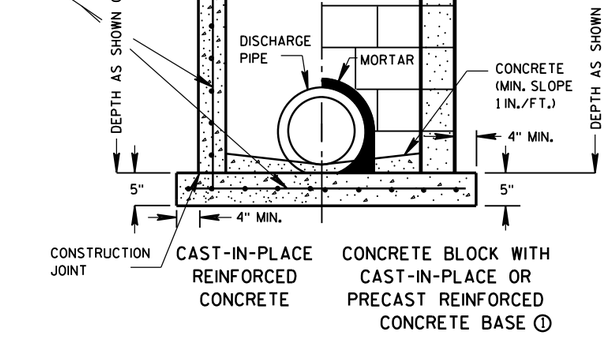

SECTION B-B

SEPARATE PRECAST REINFORCED CONCRETE BASE OPTION

GENERAL NOTES

DETAILS OF CONSTRUCTION, MATERIALS AND WORKMANSHIP NOT SHOWN ON THIS DRAWING SHALL CONFORM TO THE PERTINENT REQUIREMENTS OF THE STANDARD SPECIFICATIONS AND THE APPLICABLE SPECIAL PROVISIONS.

UNLESS OTHERWISE AUTHORIZED IN WRITING BY THE ENGINEER, THE CONTRACTOR SHALL NOT ORDER AND DELIVER PRECAST INLET UNITS REQUIRED FOR THE PROJECT UNTIL A LIST OF SIZES IS FURNISHED BY THE ENGINEER.

DETAILED DRAWINGS FOR PROPOSED ALTERNATE DESIGNS FOR UNDERGROUND DRAINAGE STRUCTURES SHALL BE SUBMITTED TO THE ENGINEER FOR APPROVAL PROVIDING THAT SUCH ALTERNATE DESIGNS MAKE PROVISION FOR EQUIVALENT CAPACITY AND STRENGTH.

ALL PRECAST INLET UNITS SHALL CONFORM TO THE PERTINENT REQUIREMENTS OF ASTM C 913.

ALL DRAINAGE STRUCTURES ARE DESIGNATED ON THE PLANS AS "MANHOLES 3X3-L", "CATCH BASINS 4-B", "INLETS 2X3-H", ETC. THE FIRST NUMBERS DESIGNATES THE SIZE OF THE STRUCTURE, AND THE FOLLOWING LETTER DESIGNATES THE TYPE OF COVER TO BE USED TO COMPRISE THE COMPLETE UNIT.

BASES SHALL BE PLACED ON A BED OF MATERIAL AT LEAST 6 INCHES IN DEPTH, WHICH MEETS THE REQUIREMENTS OF FOUNDATION BACKFILL. THIS BEDDING SHALL BE COMPACTED AND PROVIDE UNIFORM SUPPORT FOR THE ENTIRE AREA OF THE BASE.

ALL BAR STEEL REINFORCEMENT SHALL BE EMBEDDED 2 INCHES CLEAR UNLESS OTHERWISE SHOWN OR NOTED.

PRECAST REINFORCED RISERS SHALL HAVE A TONGUE AND GROOVE JOINT WITH TONGUE UP OR DOWN.

4" OVERHANGING BASES ARE REQUIRED FOR CAST-IN-PLACE REINFORCED CONCRETE AND CONCRETE BLOCK INSTALLATIONS.
4" OVERHANG IS REQUIRED WHEN SEPARATE PRECAST BASE IS PROVIDED.
OVERHANG IS NOT REQUIRED ON PRECAST STRUCTURES WITH AN INTEGRAL OR MONOLITHIC BASE.

MAXIMUM INSIDE PIPE DIAMETER DETERMINED BY 3 INCH CLEARANCE ON EACH SIDE OF THE OUTSIDE WALL OF THE PIPE. SEE DETAIL "A". ASSUMES PIPE ENTERS PERPENDICULAR TO THE STRUCTURE.

① FOR PRECAST INLETS PROVIDE REINFORCING STEEL IN ACCORDANCE TO ASTM C 913.

② CONTRACTOR TO PROVIDE DRAWING(S) STAMPED BY A PROFESSIONAL ENGINEER FOR STEEL REINFORCING DESIGN FOR CAST-IN-PLACE STRUCTURES.

INLET COVER MATRIX

INLET SIZE		INLET COVER TYPE	ALL A'S	ALL B'S	BW	F	ALL H'S	S	T	V	WM
	WIDTH (W) (FT)	LENGTH (L) (FT)									
2X2-FT	2	2	X	X				X		X	
2X2.5-FT	2	2.5			X			X	X	X	X
2X3-FT	2	3					X				
2.5X3-FT	2.5	3				X					

PIPE MATRIX

INLET SIZE	MAXIMUM INSIDE PIPE DIAMETER	
	WIDTH (IN)	LENGTH (IN)
2X2-FT	12	12
2X2.5-FT	12	18
2X3-FT	12	24
2.5X3-FT	18	24

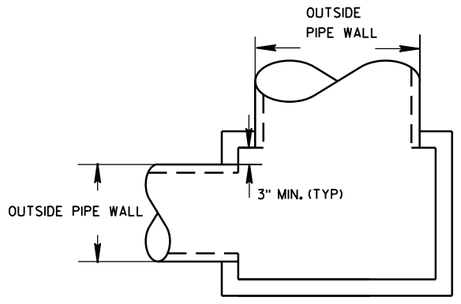

DETAIL "A"

INLETS 2X2-FT, 2X2.5-FT, 2X3-FT AND 2.5X3-FT

STATE OF WISCONSIN
DEPARTMENT OF TRANSPORTATION

APPROVED
Sept., 2016
DATE
/S/ Rodney Taylor
ROADWAY STANDARDS D IT
UNIT SUPERVIS
FHWA

INLETS 2X2-FT, 2X2.5-FT, 2X3-FT AND 2.5X3-FT

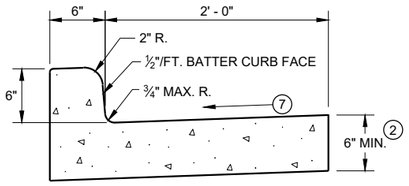

TYPES A (1) & D

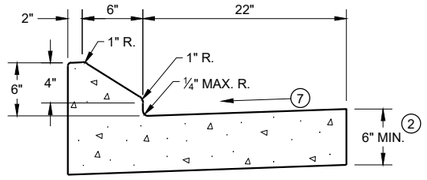

6" SLOPED CURB TYPES G (1) & J

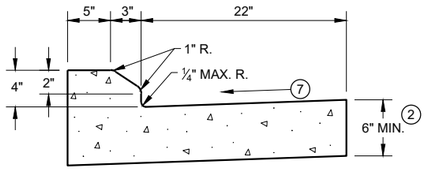

4" SLOPED CURB TYPES G (1) & J

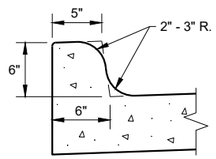

TYPES K (1) & L
(OPTIONAL CURB SHAPE)

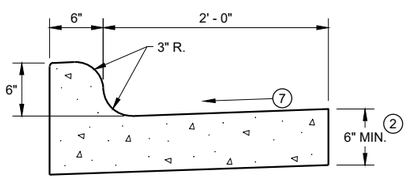

TYPES K (1) & L

CONCRETE CURB AND GUTTER 30"

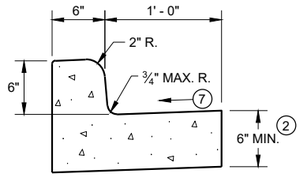

TYPES A (1) & D

CONCRETE CURB AND GUTTER 18"

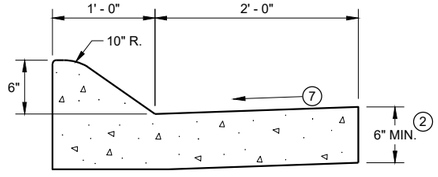

6" SLOPED CURB TYPES A (1) & D

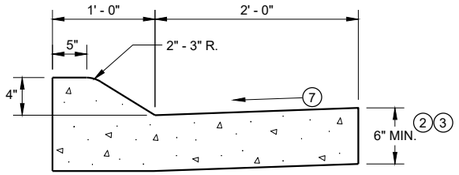

4" SLOPED CURB TYPES A (1) & D

CONCRETE CURB AND GUTTER 36"

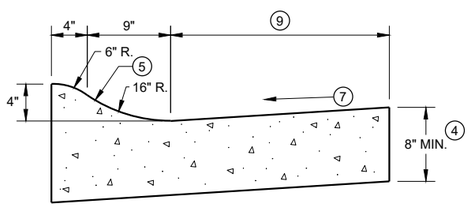

4" SLOPED CURB TYPES R (1) & T

TBT & TBTT	X
30"	22"
36"	28"

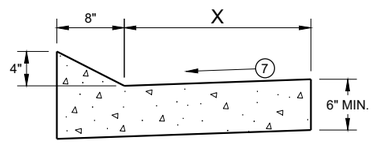

TYPES TBT & TBTT (1)

CONCRETE CURB AND GUTTER

PAVEMENT THICKNESS AND MAXIMUM CONCRETE PANEL WIDTH TABLE

PAVEMENT THICKNESS	MAXIMUM PANEL WIDTH
LESS THAN 10"	12'
10" & ABOVE	15'

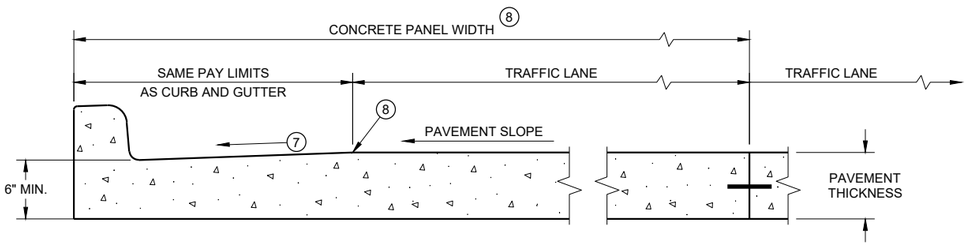

PARTIAL SECTION OF PAVEMENT * WITH INTEGRAL CURB AND GUTTER

* BIKE LANE IS NOT SHOWN

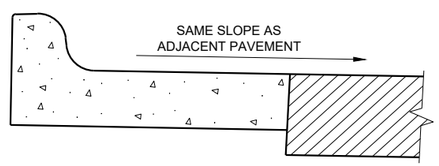

REVERSE SLOPE GUTTER (6)
(TYPICAL FOR ALL CURB & GUTTER TYPES)

GENERAL NOTES

DETAILS OF CONSTRUCTION AND WORKMANSHIP NOT SHOWN ON THIS DRAWING SHALL CONFORM TO THE PERTINENT REQUIREMENTS OF THE CONTRACT.

PAVEMENT TIES AND TIE BARS SHALL BE EPOXY COATED IN CONFORMANCE WITH SUBSECTION 505.2.6.2 OF THE STANDARD SPECIFICATIONS.

INTEGRAL CURB AND GUTTER SHALL CONFORM TO THE DETAILS SHOWN FOR CONCRETE CURB AND GUTTER INCLUDING THE TRANSVERSE GUTTER SLOPE.

UNLESS OTHERWISE SHOWN ON THE TYPICAL CROSS SECTIONS, THE BASE AGGREGATE AND COMMON EXCAVATION LIMITS ARE 2' - 0" BEHIND THE BACK OF CURBS.

(1) TIE BARS ARE REQUIRED FOR CURB AND GUTTERS TYPES A, G, K, R, AND TBTT.

(2) THE BOTTOM OF CURB AND GUTTER MAY BE CONSTRUCTED EITHER LEVEL OR PARALLEL TO THE SLOPE OF THE SUBGRADE OR BASE AGGREGATE PROVIDED A 6" MINIMUM GUTTER THICKNESS IS MAINTAINED.

(3) USE 8" MINIMUM GUTTER THICKNESS WHEN USED WITH AN ADJACENT CONCRETE TRUCK APRON PLACED BEHIND BACK OF CURB.

(4) THE BOTTOM OF CURB AND GUTTER MAY BE CONSTRUCTED EITHER LEVEL OR PARALLEL TO THE SLOPE OF THE SUBGRADE OR BASE AGGREGATE PROVIDED A 8" MINIMUM GUTTER THICKNESS IS MAINTAINED.

(5) UNLESS OTHERWISE NOTED, FOR STAKING PURPOSES THE FACE OF CURB IS 6" FROM THE BACK OF CURB.

(6) WHEN REVERSE SLOPE GUTTER IS REQUIRED, THE LOCATION(S) WILL BE SHOWN ELSEWHERE IN THE PLAN.

(7) USE 4% GUTTER CROSS SLOPE UNLESS OTHERWISE NOTED IN THE PLANS.

(8) INCLUDE LONGITUDINAL JOINT AND TIE BARS ALONG LANE EDGE WHEN CONCRETE PANEL WIDTH EXCEEDS THE MAXIMUM WIDTH PER TABLE BELOW. LONGITUDINAL JOINT(S) ARE NOT ALLOWED WITHIN TRAFFIC LANES AND BIKE LANES. LONGITUDINAL JOINT MAY BE SAWED.

(9) CONCRETE CURB AND GUTTER 4-INCH SLOPED 30-INCH TYPE "R" AND "T" = 17 INCHES
CONCRETE CURB AND GUTTER 4-INCH SLOPED 36-INCH TYPE "R" AND "T" = 23 INCHES

CONCRETE CURB AND GUTTER

STATE OF WISCONSIN
DEPARTMENT OF TRANSPORTATION

6
SDD 08D01 - 23a

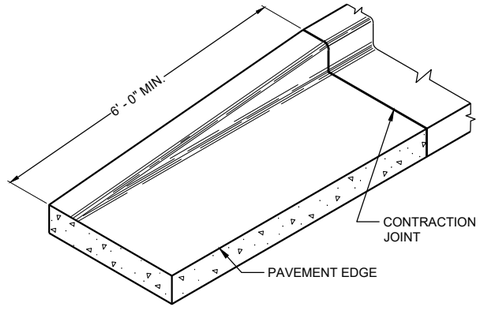

END SECTIONCURB AND GUTTER

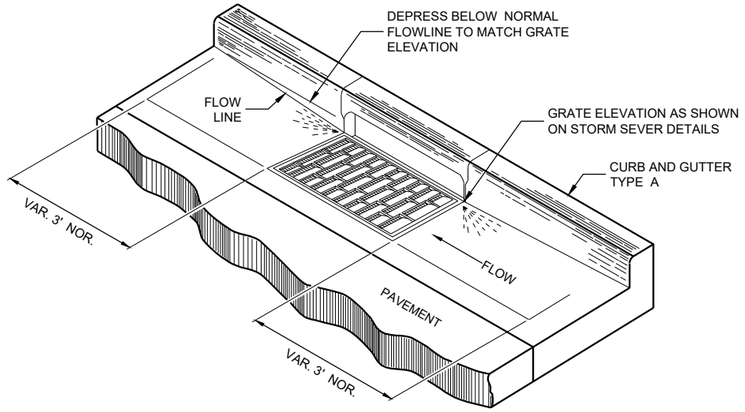

DETAIL OF CURB AND GUTTER AT INLETS

(TYPICAL H INLET COVER SHOWN)

GENERAL NOTES

DETAILS OF CONSTRUCTION AND WORKMANSHIP NOT SHOWN ON THIS DRAWING SHALL CONFORM TO THE PERTINENT REQUIREMENTS OF THE CONTRACT.

PAVEMENT TIES AND TIE BARS SHALL BE EPOXY COATED IN CONFORMANCE WITH SUBSECTION 505.2.6.2 OF THE STANDARD SPECIFICATIONS.

UNLESS OTHERWISE SHOWN ON THE TYPICAL CROSS SECTIONS, THE BASE AGGREGATE AND COMMON EXCAVATION LIMITS ARE 2' - 0" BEHIND THE BACK OF CURBS.

(1) TIE BARS ARE REQUIRED FOR CURB AND GUTTERS TYPES A, G, K, R, AND TBTT.

(2) THE BOTTOM OF CURB AND GUTTER MAY BE CONSTRUCTED EITHER LEVEL OR PARALLEL TO THE SLOPE OF THE SUBGRADE OR BASE AGGREGATE PROVIDED A 6" MINIMUM GUTTER THICKNESS IS MAINTAINED.

(10) REFER TO SDD 08D18 AND 08D19 FOR ADDITIONAL DRIVEWAY ENTRANCE CURB DETAILS.

(11) PLACE 1" THICK EXPANSION JOINT MATERIAL BETWEEN VERTICAL FACE CURB TYPES EXTENDING FROM THE TOP OF CURB TO 1 INCH BELOW THE ADJOINING CONCRETE SURFACE. RIGID CONCRETE STRUCTURES INCLUDE RAISED CONCRETE MEDIANS, CONCRETE SAFETY ISLANDS, SPLITTER ISLANDS, OR LOCATIONS IDENTIFIED ON THE PLANS.

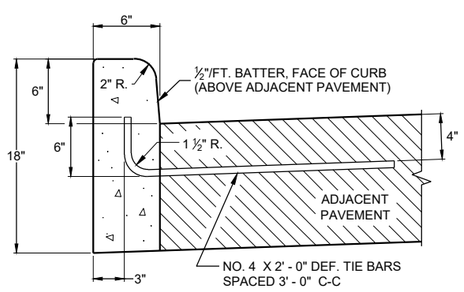

TYPES A (1) & D

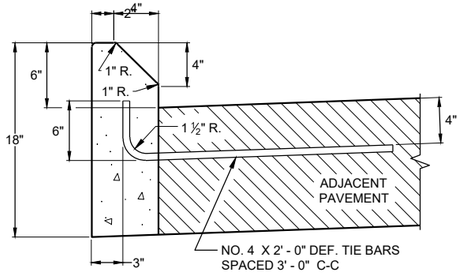

TYPES G (1) & J

CONCRETE CURB

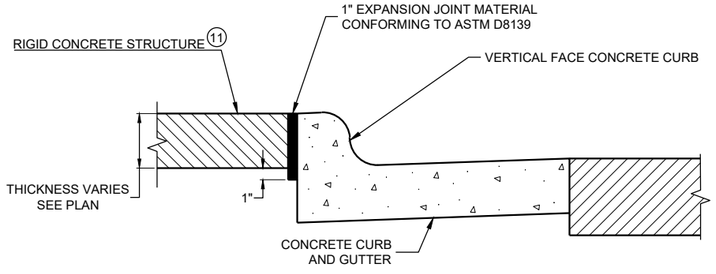

EXPANSION JOINT DETAIL FOR VERTICAL CURB ABUTTING A RIGID STRUCTURE (11)

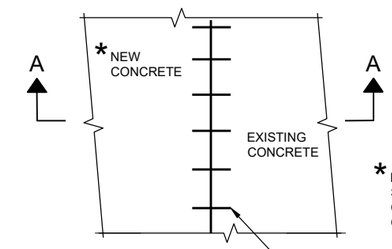

PLAN VIEW

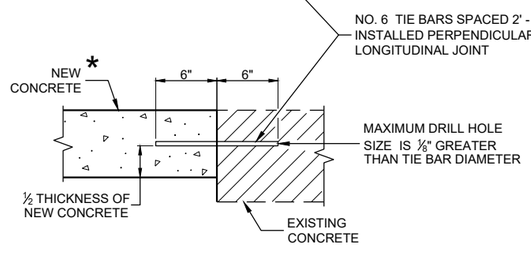

SECTION A - A

TIE BARS DRILLED INTO EXISTING PAVEMENT

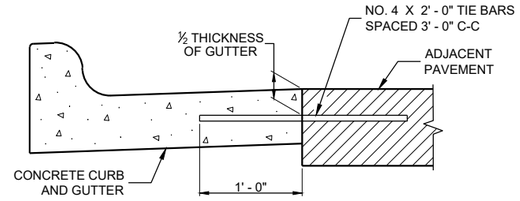

TYPICAL TIE BAR LOCATION (1)

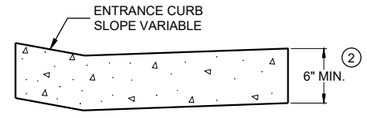

DRIVEWAY ENTRANCE CURB (10)

(WHEN DIRECTED BY THE ENGINEER)

CONCRETE CURB, TIES AND CURB AND GUTTER APPLICATIONS

STATE OF WISCONSIN
DEPARTMENT OF TRANSPORTATION

APPROVED
May 2023 — DATE
/S/ Rodnery Taylor — ROADWAY STANDARDS DEVE ENGINEER

FHWA

6

SDD08D01 - 23b

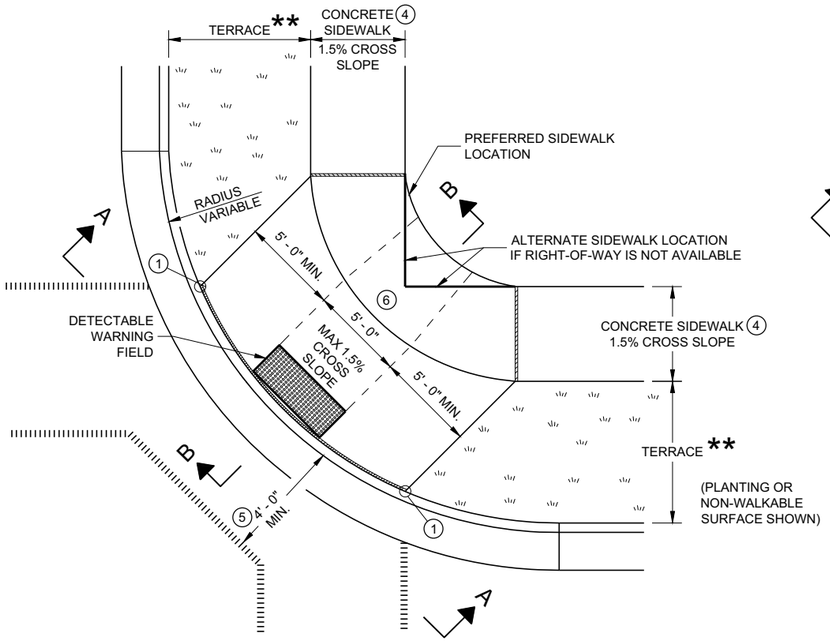

PLAN VIEW

CURB RAMP TYPE 1

(CENTER OF CORNER RADIUS)

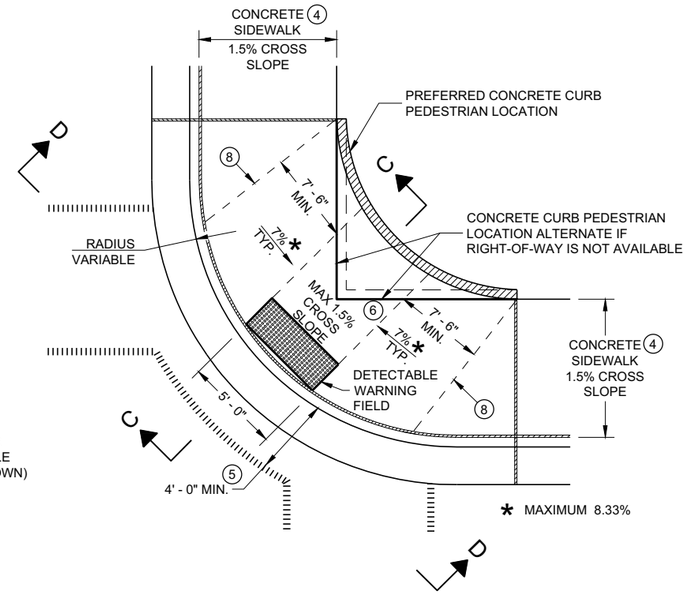

PLAN VIEW

CURB RAMP TYPE 1 - A

(NO TERRACE)

GENERAL NOTES

AVOID PLACING DRAINAGE STRUCTURES, JUNCTION BOXES OR OTHER OBSTRUCTIONS IN FRONT OF RAMP ACCESS AREAS.

DETAILS OF CONSTRUCTION, MATERIALS AND WORKMANSHIP NOT SHOWN ON THIS DRAWING SHALL CONFORM TO THE PERTINENT REQUIREMENTS OF THE STANDARD SPECIFICATIONS AND THE APPLICABLE SPECIAL PROVISIONS.

WHEN NECESSARY, THE SIDEWALK ELEVATION MAY BE LOWERED TO MEET THE HIGH POINT ON THE RAMP.

TYPE 1 CURB RAMPS SHALL HAVE A NORMAL SIDEWALK APRON AND CURB ON BOTH SIDES OF RAMP.

DETECTABLE WARNING FILED SHALL BE MEASURED AND PAID BY THE SQUARE FOOT AS "CURB RAMP DETECTABLE WARNING FIELD". THE CONCRETE PEDESTRIAN CURB, IF NEEDED, SHALL BE MEASURED AND PAID BY THE LINEAR FOOT AS "CONCRETE CURB PEDESTRIAN". CONCRETE SIDEWALK IN THE CURB RAMP AREA SHALL BE MEASURED AND PAID BY THE SQUARE FOOT AS CONCRETE SIDEWALK, INCLUDING THE AREA UNDER THE DETECTABLE WARNING FIELD.

SELECT CURB RAMP DETECTABLE WARNING FIELD MATERIALS AND DEVICES FROM THE DEPARTMENT'S APPROVED MATERIALS LIST. THE COLOR OF THE DETECTABLE WARNING FIELD IS SPECIFIED ELSEWHERE AND IS INCIDENTAL TO THE BID ITEM OF "CURB RAMP DETECTABLE WARNING FIELD"

DETECTABLE WARNING FIELDS THAT ARE INSTALLED AS A GROUP OR SIDE BY SIDE, SHALL BE FROM THE SAME MANUFACTURER.

SURFACE TEXTURE OF THE RAMP SHALL BE OBTAINED BY COARSE BROOMING TRANSVERSE TO THE SLOPE OF THE RAMP.

(1) THIS POINT IS AN EXTENSION OF OUTSIDE EDGE OF APPROACHING SIDEWALK WHERE IT MEETS THE BACK OF CONCRETE CURB. POINT LOCATION MAY BE ADJUSTED TO ALIGN WITH BEGINNING OF FULL-HEIGHT CURB IF THIS DISTANCE IS SHORT.

(2) GRADE CHANGE BETWEEN GUTTER FLAG SLOPE AND THE CURB RAMP SLOPE SHALL NOT EXCEED 11%. MAXIMUM GUTTER FLAG SLOPE IS 4%. PROVIDE LONGITUDINAL DRAINAGE AROUND CURB AND AWAY FROM CURB RAMP. NO VERTICAL LIPS OR DISCONTINUITIES GREATER THAN ¼ - INCH ARE ALLOWED. SLOPE OF CURB HEAD OPENING SHALL MATCH THE RAMP SLOPE, MINIMALLY 1.5% AND NOT TO EXCEED 7%. WHEN ADJACENT TO 1.5% LANDING, CONSTRUCT CURB HEAD OPENING AT 1.5% IN THE DIRECTION OF PEDESTRIAN TRAVEL.

(3) MAXIMUM 8.33% CURB RAMP SLOPE IS ALLOWABLE WITH FLATTENED GUTTER FLAG SLOPE AND NOT TO EXCEED 11% GRADE CHANGE.

(4) ±0.5% CONSTRUCTION TOLERANCE IN SIDEWALK CROSS SLOPE. THE SIDEWALK CROSS SLOPE SHALL NOT EXCEED 2% WITHOUT PRIOR APPROVAL FROM THE ENGINEER.

(5) PROVIDE A LEVEL LANDING IN THE STREET AND GUTTER AREA (2% MAXIMUM SLOPE IN ANY DIRECTION). WHEN THE GUTTER SLOPE EXCEEDS 2%, CONSTRUCT THE LEVEL LANDING IN THE STREET AREA.

(6) PROVIDE A LEVEL LANDING (MAXIMUM 2% SLOPE) IN ANY DIRECTION OF PEDESTRIAN TRAVEL. STANDARD LEVEL LANDING SIZE IS 5 FEET BY 5 FEET.

(8) PROVIDE GRADE BREAK PERPENDICULAR TO DIRECTION OF WHEELCHAIR TRAVEL.

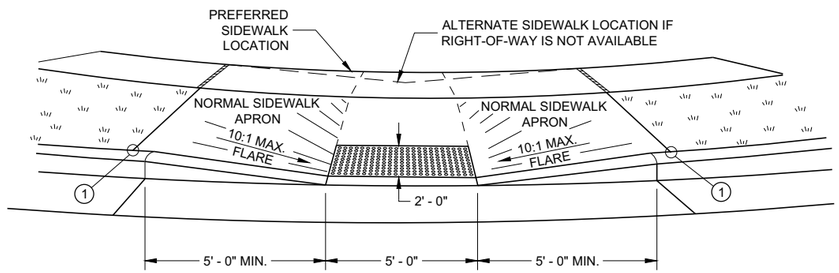

VIEW A - A FOR TYPE 1

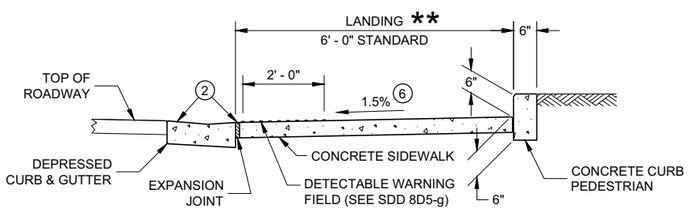

SECTION C - C FOR TYPE 1 - A

LEGEND

- ½" EXPANSION JOINT SIDEWALK
- CONTRACTION JOINT FIELD LOCATED
- PAVEMENT MARKING CROSSWALK (WHITE)

** WIDTH SHOWN ELSEWHERE IN THE PLANS

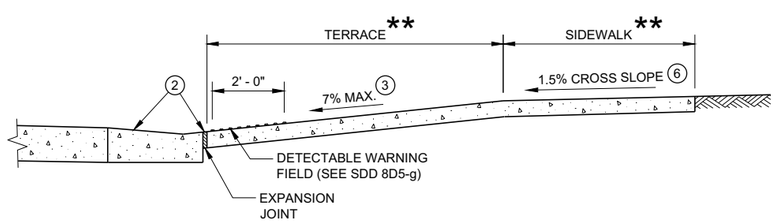

SECTION B - B FOR TYPE 1

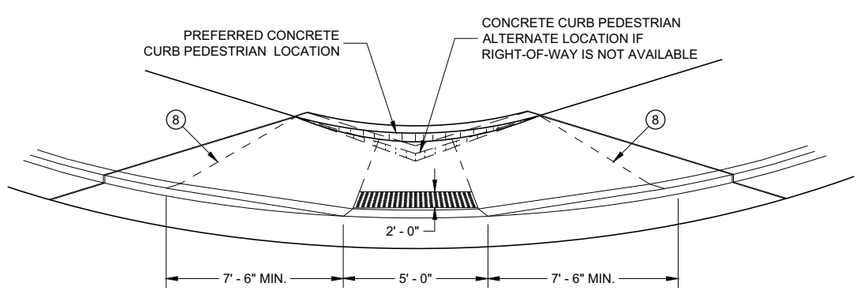

VIEW D - D FOR TYPE 1 - A

CURB RAMPS
TYPE 1 AND 1-A

STATE OF WISCONSIN
DEPARTMENT OF TRANSPORTATION

6

SDD 08D05 - 20a

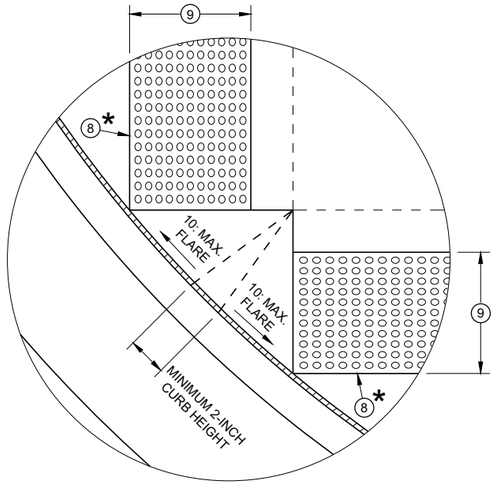

DETAIL A

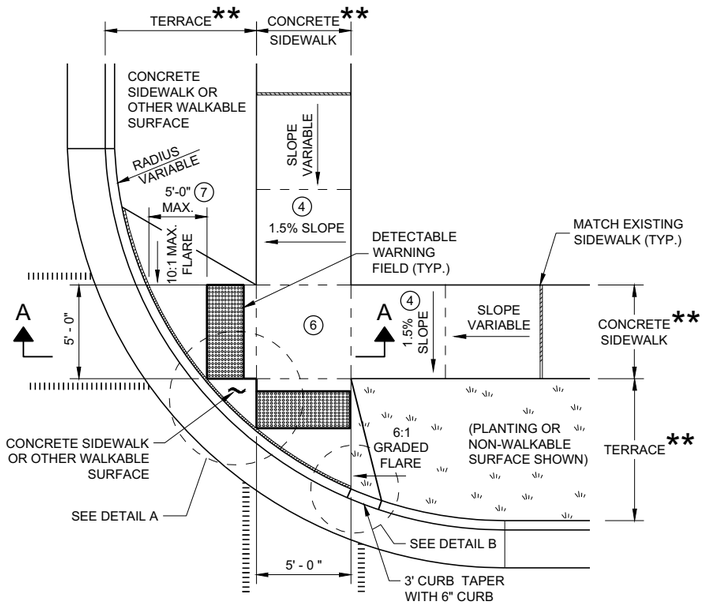

PLAN VIEW
CURB RAMP TYPE 2
(CENTER OF CORNER RADIUS)

GENERAL NOTES

AVOID PLACING DRAINAGE STRUCTURES, JUNCTION BOXES OR OTHER OBSTRUCTIONS IN FRONT OF RAMP ACCESS AREAS.

DETAILS OF CONSTRUCTION, MATERIALS AND WORKMANSHIP NOT SHOWN ON THIS DRAWING SHALL CONFORM TO THE PERTINENT REQUIREMENTS OF THE STANDARD SPECIFICATIONS AND THE APPLICABLE SPECIAL PROVISIONS.

DETECTABLE WARNING FIELDS THAT ARE INSTALLED AS A GROUP OR SIDE BY SIDE SHALL BE FROM THE SAME MANUFACTURER.

(2) GRADE CHANGE BETWEEN GUTTER FLAG SLOPE AND THE CURB RAMP SLOPE SHALL NOT EXCEED 11%. MAXIMUM GUTTER FLAG SLOPE IS 4%. PROVIDE LONGITUDINAL DRAINAGE AROUND CURB AND AWAY FROM CURB RAMP. NO VERTICAL LIPS OR DISCONTINUITIES GREATER THAN ¼ - INCH ARE ALLOWED. SLOPE OF CURB HEAD OPENING SHALL MATCH THE RAMP SLOPE, MINIMALLY 1.5% AND NOT TO EXCEED 7%. WHEN ADJACENT TO 1.5% LANDING, CONSTRUCT CURB HEAD OPENING AT 1.5% IN THE DIRECTION OF PEDESTRIAN TRAVEL.

(3) AN 8.33% CURB RAMP SLOPE IS ALLOWABLE WITH FLATTENED GUTTER FLAG SLOPE (2.67% OR LESS) AND NOT TO EXCEED 11% GRADE CHANGE.

(4) ±0.5% CONSTRUCTION TOLERANCE IN SIDEWALK CROSS SLOPE. THE SIDEWALK CROSS SLOPE SHALL NOT EXCEED 2% WITHOUT PRIOR APPROVAL FROM THE ENGINEER.

(6) PROVIDE A LEVEL LANDING (MAXIMUM 2% SLOPE) IN ANY DIRECTION OF PEDESTRIAN TRAVEL. STANDARD LEVEL LANDING SIZE IS 5 FEET X 5 FEET.

(7) WHEN GRADE BREAK DISTANCE EXCEEDS 5 FEET, USE RADIAL DETECTABLE WARNING FIELD PER SDD 8D5-f.

(8) PROVIDE GRADE BREAK PERPENDICULAR TO DIRECTION OF WHEELCHAIR TRAVEL.

(9) WHEN DISTANCE IS LESS THAN 6' - 0", IT MAY BE DIFFICULT TO ACHIEVE A 7% SLOPE OR FLATTER ALONG THE RAMP. REDUCE CURB HEIGHT IN TRIANGLE AREA TO ACHIEVE 7% SLOPE OR FLATTER ON RAMP. CONSTRUCT 2-INCH MINIMUM CURB HEIGHT BETWEEN 10:1 FLARES.

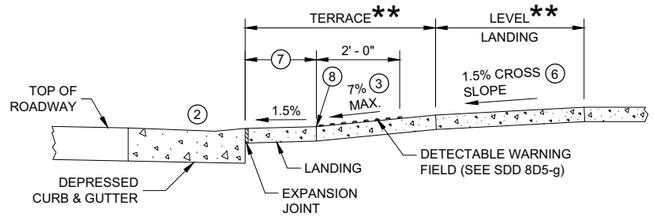

SECTION A - A FOR TYPE 2

* MAXIMUM 2.0% SLOPE IN ALL DIRECTIONS IN FRONT OF GRADE BREAK

** WIDTH SHOWN ELSEWHERE IN THE PLANS

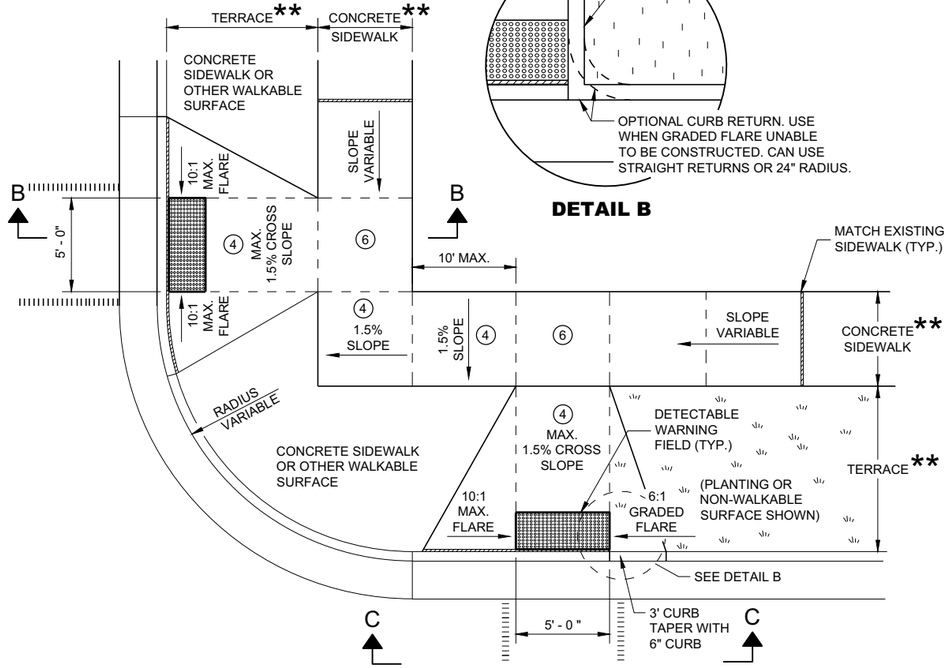

DETAIL B

PLAN VIEW
CURB RAMP TYPE 3
(OUTSIDE OF CROSSWALK AREA)

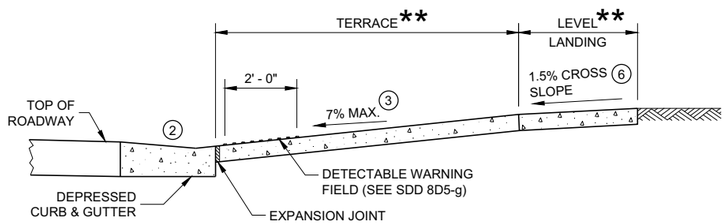

SECTION B - B FOR TYPE 3

LEGEND

- ½" EXPANSION JOINT SIDEWALK
- CONTRACTION JOINT SIDEWALK
- PAVEMENT MARKING CROSSWALK (WHITE)

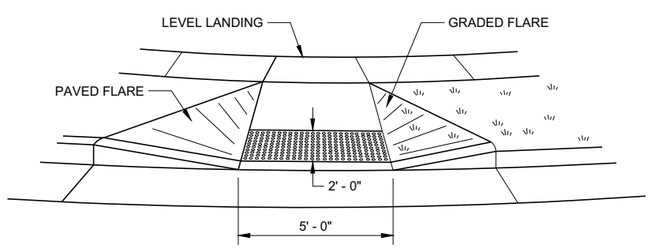

VIEW C - C FOR TYPE 3

CURB RAMPS TYPE 2 AND 3

STATE OF WISCONSIN
DEPARTMENT OF TRANSPORTATION

6

SDD 08D05 - 20b

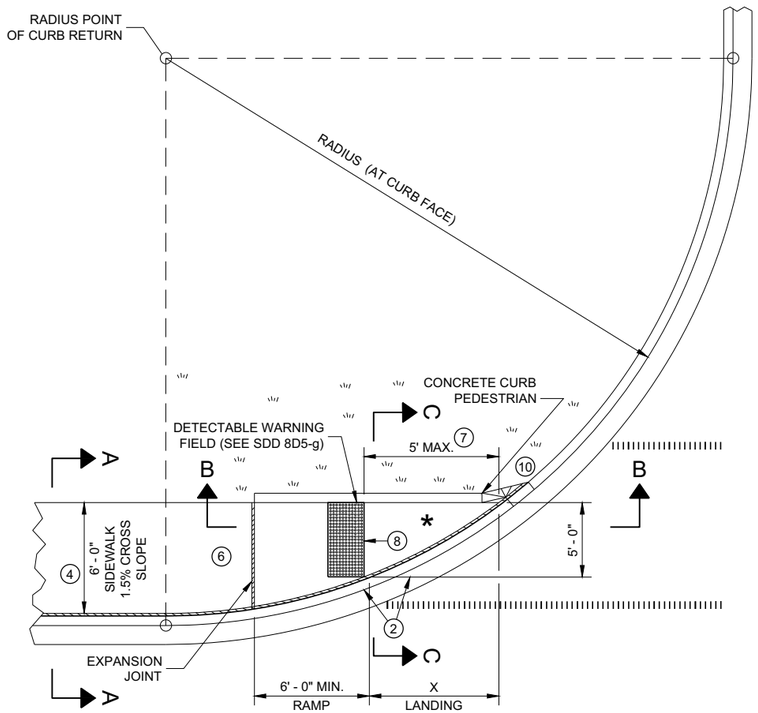

PLAN VIEW

CURB RAMP TYPE 4A

RADIUS (AT CURB FACE)	X
10 FEET	4' - 7"
15 FEET	6' - 5½"

INTERMEDIATE RADII CAN BE INTERPOLATED

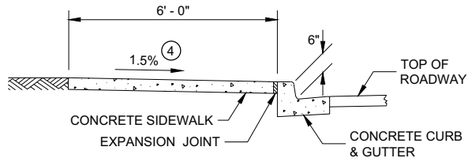

SECTION A - A FOR TYPE 4A

GENERAL NOTES

AVOID PLACING DRAINAGE STRUCTURES, JUNCTION BOXES OR OTHER OBSTRUCTIONS IN FRONT OF RAMP ACCESS AREAS.

DETAILS OF CONSTRUCTION, MATERIALS AND WORKMANSHIP NOT SHOWN ON THIS DRAWING SHALL CONFORM TO THE PERTINENT REQUIREMENTS OF THE STANDARD SPECIFICATIONS AND THE APPLICABLE SPECIAL PROVISIONS.

DETECTABLE WARNING FIELDS THAT ARE INSTALLED AS A GROUP OR SIDE BY SIDE, SHALL BE FROM THE SAME MANUFACTURER.

(2) GRADE CHANGE BETWEEN GUTTER FLAG SLOPE AND THE CURB RAMP SLOPE SHALL NOT EXCEED 11%. MAXIMUM GUTTER FLAG SLOPE IS 4%. PROVIDE LONGITUDINAL DRAINAGE AROUND CURB AND AWAY FROM CURB RAMP. NO VERTICAL LIPS OR DISCONTINUITIES GREATER THAN ¼ - INCH ARE ALLOWED. SLOPE OF CURB HEAD OPENING SHALL MATCH THE RAMP SLOPE, MINIMALLY 1.5% AND NOT TO EXCEED 7%. WHEN ADJACENT TO 1.5% LANDING, CONSTRUCT CURB HEAD OPENING AT 1.5% IN THE DIRECTION OF PEDESTRIAN TRAVEL.

(3) AN 8.33% CURB RAMP SLOPE IS ALLOWABLE WITH FLATTENED GUTTER FLAG SLOPE AND NOT TO EXCEED 11% GRADE CHANGE.

(4) ±0.5% CONSTRUCTION TOLERANCE IN SIDEWALK CROSS SLOPE. THE SIDEWALK CROSS SLOPE SHALL NOT EXCEED 2% WITHOUT PRIOR APPROVAL FROM THE ENGINEER.

(6) PROVIDE A LEVEL LANDING (MAXIMUM 2% SLOPE) IN ANY DIRECTION OF PEDESTRIAN TRAVEL. STANDARD LEVEL LANDING SIZE IS 5 FEET BY 5 FEET.

(7) WHEN THIS GRADE BREAK DISTANCE EXCEEDS 5 FEET, USE RADIAL DETECTABLE WARNING FIELD PER SDD 8D5-f.

(8) PROVIDE GRADE BREAK PERPENDICULAR TO DIRECTION OF WHEELCHAIR TRAVEL.

(10) INSTALL TRANSITION NOSE (INCIDENTAL TO OTHER PAY ITEMS). DO NOT MARK TRANSITION NOSE.

LEGEND

½" EXPANSION JOINT SIDEWALK

CONTRACTION JOINT SIDEWALK

PAVEMENT MARKING CROSSWALK (WHITE)

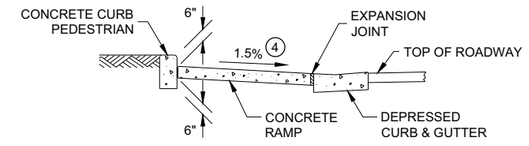

SECTION C - C FOR TYPE 4A

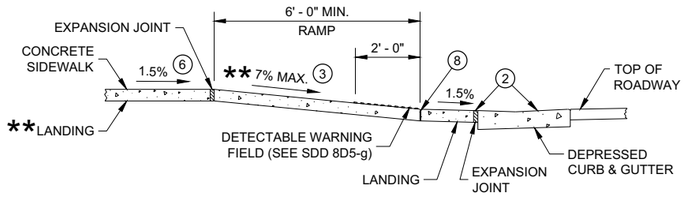

SECTION B - B FOR TYPE 4A AND TYPE 4A1

** IF RAMP SLOPE IS LESS THAN 5.0%, THEN NO ADJACENT UPHILL LANDING IS REQUIRED

* MAXIMUM 2.0% SLOPE IN ALL DIRECTIONS IF FRONT OF GRADE BREAK

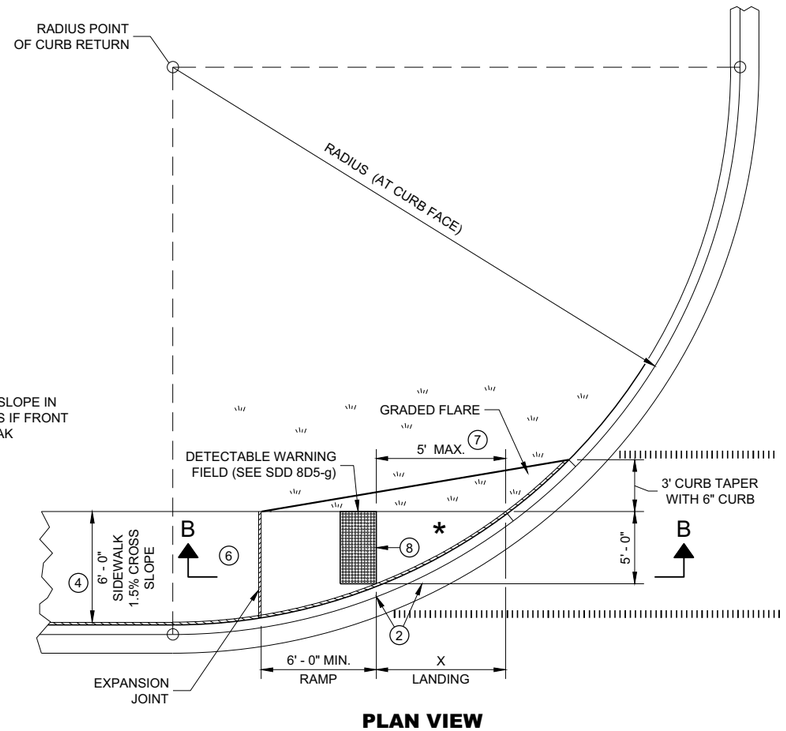

PLAN VIEW

CURB RAMP TYPE 4A1

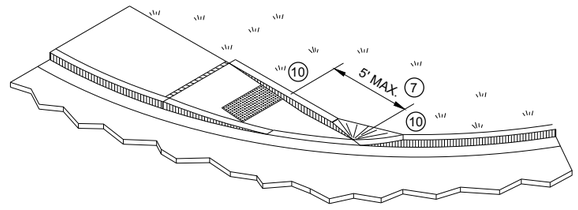

ISOMETRIC VIEW FOR TYPE 4A

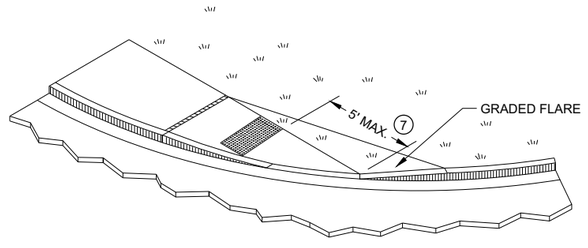

ISOMETRIC VIEW FOR TYPE 4A1

CURB RAMPS
TYPE 4A AND 4A1

STATE OF WISCONSIN
DEPARTMENT OF TRANSPORTATION

6

SDD 08D05 - 20c

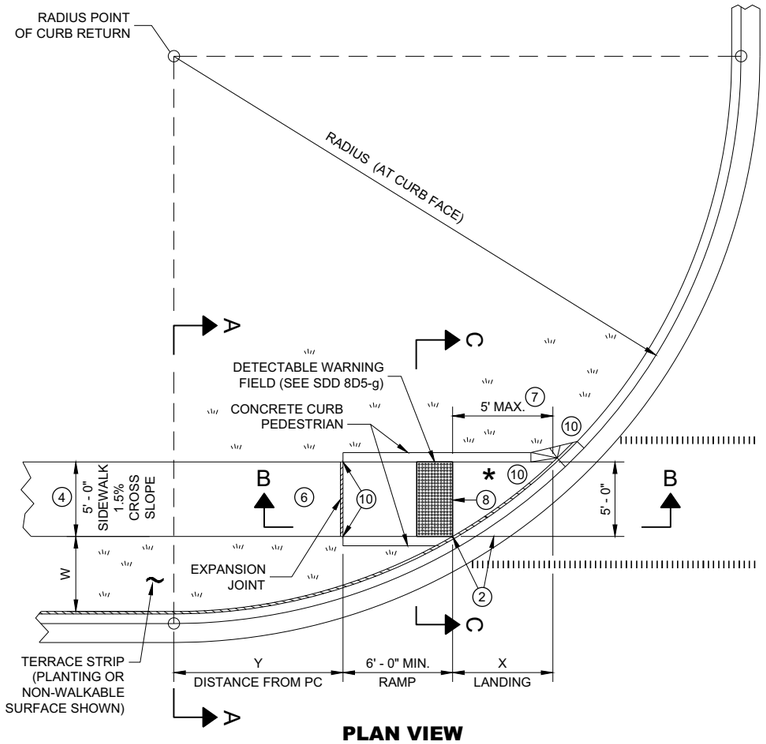

PLAN VIEW

CURB RAMP TYPE 4B

RADIUS (AT CURB FACE)	W = 3' - 0"		W = 4' - 0"		W = 5' - 0"		W = 6' - 0"		W = 7' - 0"		W = 8' - 0"		W = 9' - 0"		W = 10' - 0"	
	X	Y	X	Y	X	Y	X	Y	X	Y	X	Y	X	Y	X	Y
10 FEET	2' - 10 ¼"	0' - 5"	2' - 1"	1' - 4 ½"	1' - 5"	2' - 1"	0' - 10"	2' - 7 ½"	0' - 3 ¼"	3' - 0 ¼"						
15 FEET	4' - 6 ¾"	2' - 1 ¾"	3' - 9"	3' - 5 ¾"	3' - 1 ¼"	4' - 6"	2' - 6 ¾"	5' - 4 ½"	2' - 1"	6' - 1"	1' - 8"	6' - 8 ½"	1' - 3 ¼"	7' - 2 ½"	0' - 10 ¾"	7' - 7 ¼"
20 FEET	5' - 9 ¾"	3' - 6 ½"	4' - 11 ½"	5' - 1 ¾"	4' - 3 ¼"	6' - 5 ½"	3' - 8 ¾"	7' - 7"	3' - 3"	8' - 6 ½"	2' - 10"	9' - 4 ½"	2' - 5 ½"	10' - 1 ¼"	2' - 1 ¼"	10' - 9"
30 FEET			6' - 9 ¼"	7' - 11 ¼"	6' - 0 ¼"	9' - 8"	5' - 5"	11' - 1 ¾"	4' - 10 ¾"	12' - 5 ¾"	4' - 5 ½"	13' - 7 ¾"	4' - 0 ¾"	14' - 8 ½"	3' - 8 ½"	15' - 8 ¼"
40 FEET									6' - 1 ¾"	15' - 8 ½"	5' - 8"	17' - 2"	5' - 3"	18' - 5 ¾"	4' - 10 ¾"	19' - 8 ¼"
50 FEET															5' - 10 ¼"	23' - 2"

INTERMEDIATE RADII CAN BE INTERPOLATED
DIMENSION "Y" IS CALCULATED BASED ON 6'-0" RAMP LENGTH
DIMENSION "X" IS CALCULATED BASED ON 5'-0" SIDEWALK WIDTH

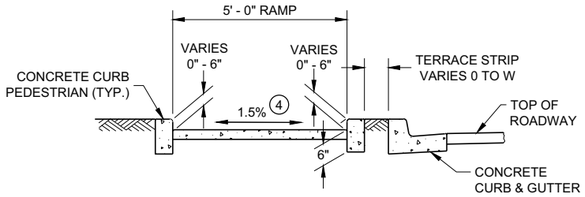

SECTION C - C FOR TYPE 4B

LEGEND

- ½" EXPANSION JOINT SIDEWALK
- CONTRACTION JOINT SIDEWALK
- PAVEMENT MARKING CROSSWALK (WHITE)

GENERAL NOTES

AVOID PLACING DRAINAGE STRUCTURES, JUNCTION BOXES OR OTHER OBSTRUCTIONS IN FRONT OF RAMP ACCESS AREAS.

DETAILS OF CONSTRUCTION, MATERIALS AND WORKMANSHIP NOT SHOWN ON THIS DRAWING SHALL CONFORM TO THE PERTINENT REQUIREMENTS OF THE STANDARD SPECIFICATIONS AND THE APPLICABLE SPECIAL PROVISIONS.

DETECTABLE WARNING FIELDS THAT ARE INSTALLED AS A GROUP OR SIDE BY SIDE, SHALL BE FROM THE SAME MANUFACTURER.

(2) GRADE CHANGE BETWEEN GUTTER FLAG SLOPE AND THE CURB RAMP SLOPE SHALL NOT EXCEED 11%. MAXIMUM GUTTER FLAG SLOPE IS 4%. PROVIDE LONGITUDINAL DRAINAGE AROUND CURB AND AWAY FROM CURB RAMP. NO VERTICAL LIPS OR DISCONTINUITIES GREATER THAN ¼ - INCH ARE ALLOWED. SLOPE OF CURB HEAD OPENING SHALL MATCH THE RAMP SLOPE, MINIMALLY 1.5% AND NOT TO EXCEED 7%. WHEN ADJACENT TO 1.5% LANDING, CONSTRUCT CURB HEAD OPENING AT 1.5% IN THE DIRECTION OF PEDESTRIAN TRAVEL.

(3) AN 8.33% CURB RAMP SLOPE IS ALLOWABLE WITH FLATTENED GUTTER FLAG SLOPE AND NOT TO EXCEED 11% GRADE CHANGE.

(4) ±0.5% CONSTRUCTION TOLERANCE IN SIDEWALK CROSS SLOPE. THE SIDEWALK CROSS SLOPE SHALL NOT EXCEED 2% WITHOUT PRIOR APPROVAL FROM THE ENGINEER.

(6) PROVIDE A LEVEL LANDING (MAXIMUM 2% SLOPE) IN ANY DIRECTION OF PEDESTRIAN TRAVEL. STANDARD LEVEL LANDING SIZE IS 5 FEET BY 5 FEET.

(7) WHEN THIS GRADE BREAK DISTANCE EXCEEDS 5 FEET, USE RADIAL DETECTABLE WARNING FIELD PER SDD 8D5-f.

(8) PROVIDE GRADE BREAK PERPENDICULAR TO DIRECTION OF WHEELCHAIR TRAVEL.

(10) INSTALL TRANSITION NOSE (INCIDENTAL TO OTHER PAY ITEMS). DO NOT MARK TRANSITION NOSE.

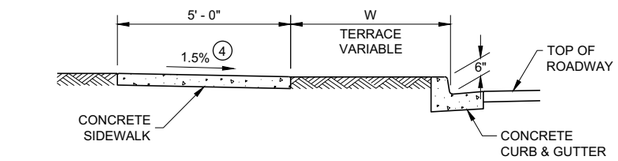

SECTION A - A FOR TYPE 4B

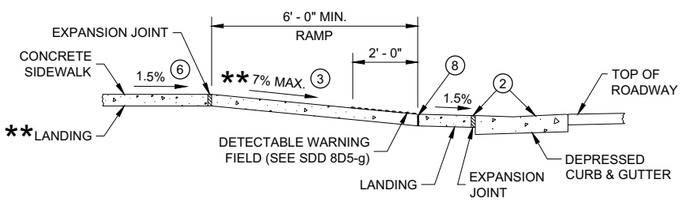

** IF RAMP SLOPE IS LESS THAN 5.0%, THEN NO ADJACENT UPHILL LANDING IS REQUIRED

SECTION B - B FOR TYPE 4B AND TYPE 4B1

* MAXIMUM 2.0% SLOPE IN ALL DIRECTIONS IF FRONT OF GRADE BREAK

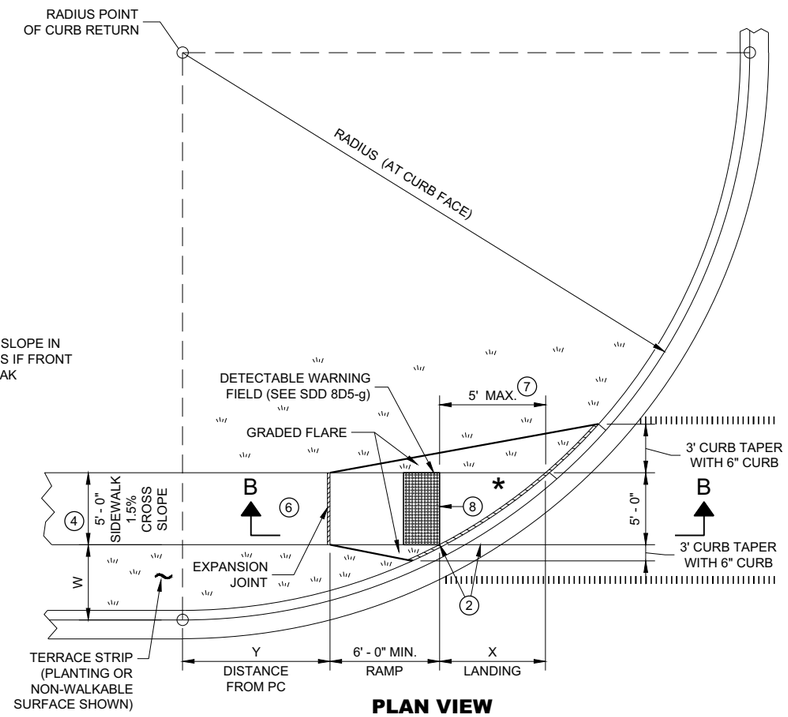

PLAN VIEW

CURB RAMP TYPE 4B1

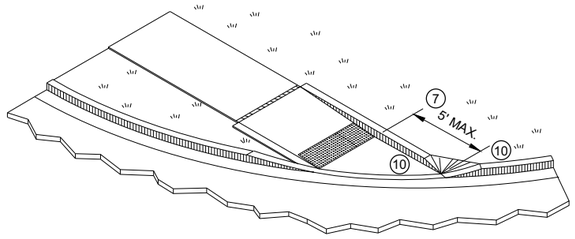

ISOMETRIC VIEW FOR TYPE 4B

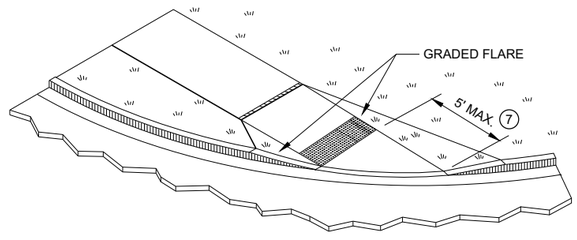

ISOMETRIC VIEW FOR TYPE 4B1

CURB RAMPS TYPE 4B AND 4B1

STATE OF WISCONSIN
DEPARTMENT OF TRANSPORTATION

6

SDD 08D05 - 20d

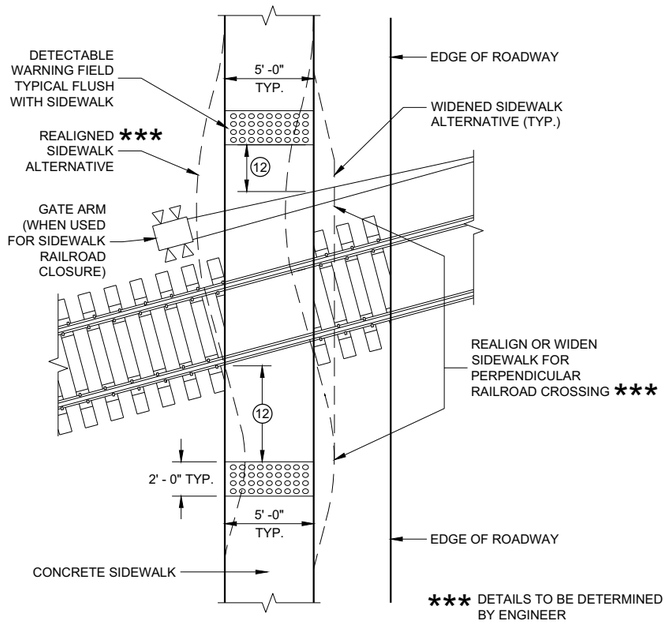

CURB RAMP TYPE 8

DETECTABLE WARNINGS AT RAILROAD CROSSING

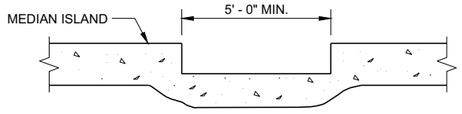

SECTION A - A FOR TYPE 5

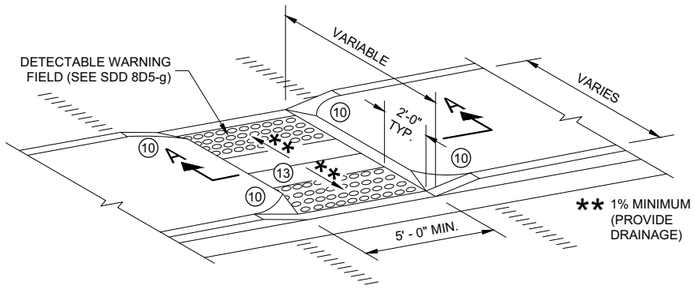

CURB RAMP TYPE 5

MEDIAN ISLAND NON-ELEVATED PEDESTRIAN CROSSING

GENERAL NOTES

AVOID PLACING DRAINAGE STRUCTURES, JUNCTION BOXES OR OTHER OBSTRUCTIONS IN FRONT OF RAMP ACCESS AREAS.

DETAILS OF CONSTRUCTION, MATERIALS AND WORKMANSHIP NOT SHOWN ON THIS DRAWING SHALL CONFORM TO THE PERTINENT REQUIREMENTS OF THE STANDARD SPECIFICATIONS AND THE APPLICABLE SPECIAL PROVISIONS.

SIDEWALK CROSS SLOPE SHALL NOT EXCEED 2%.

DETECTABLE WARNING FIELDS THAT ARE INSTALLED AS A GROUP OR SIDE BY SIDE, SHALL BE FROM THE SAME MANUFACTURER.

(2) GRADE CHANGE BETWEEN GUTTER FLAG SLOPE AND THE CURB RAMP SLOPE SHALL NOT EXCEED 11%. MAXIMUM GUTTER FLAG SLOPE IS 4%. PROVIDE LONGITUDINAL DRAINAGE AROUND CURB AND AWAY FROM CURB RAMP. NO VERTICAL LIPS OR DISCONTINUITIES GREATER THAN ¼ - INCH ARE ALLOWED. SLOPE OF CURB HEAD OPENING SHALL MATCH THE RAMP SLOPE, MINIMALLY 1.5% AND NOT TO EXCEED 7%. WHEN ADJACENT TO 1.5% LANDING, CONSTRUCT CURB HEAD OPENING AT 1.5% IN THE DIRECTION OF PEDESTRIAN TRAVEL.

(3) AN 8.33% CURB RAMP SLOPE IS ALLOWABLE WITH FLATTENED GUTTER FLAG SLOPE AND NOT TO EXCEED 11% GRADE CHANGE.

(4) ±0.5% CONSTRUCTION TOLERANCE IN SIDEWALK CROSS SLOPE. THE SIDEWALK CROSS SLOPE SHALL NOT EXCEED 2% WITHOUT PRIOR APPROVAL FROM THE ENGINEER.

(6) PROVIDE A LEVEL LANDING (MAXIMUM 2% SLOPE) IN ANY DIRECTION OF PEDESTRIAN TRAVEL. STANDARD LEVEL LANDING SIZE IS 5 FEET BY 5 FEET.

(10) INSTALL TRANSITION NOSE (INCIDENTAL TO OTHER PAY ITEMS). DO NOT MARK TRANSITION NOSE.

(11) SLOPE SIDEWALK TOWARD LANDING AS SHOWN WHERE THERE IS NO TERRACE OR WHERE THE TERRACE WIDTH IS LESS THAN 6 FEET WIDE.

(12) THE EDGE OF THE DETECTABLE WARNING FIELD NEAREST TO A RAILROAD CROSSING SHALL BE 1.5 FEET ±0.1' FROM THE FACE OF THE GATE ARM IF THE GATE ARM EXTENDS ACROSS THE SIDEWALK. WHERE THERE IS NO PEDESTRIAN GATE, THE EDGE OF THE DETECTABLE WARNING FIELD NEAREST TO THE RAILROAD CROSSING SHALL BE 15 FEET FROM THE NEAREST RAIL.

(13) DO NOT INSTALL DETECTABLE WARNING FIELDS AT THE EDGES OF STEET-LEVEL PEDESTRIAN REFUGE ISLANDS IF A MINIMUM 2 FOOT CONCRETE SURFACE WITHOUT DETECTABLE WARNINGS (MEASURED IN THE DIRECTION OF PEDESTRIAN TRAVEL) CANNOT BE ACHIEVED.

LEGEND

- ½" EXPANSION JOINT SIDEWALK
- CONTRACTION JOINT FIELD LOCATED
- PAVEMENT MARKING CROSSWALK (WHITE)

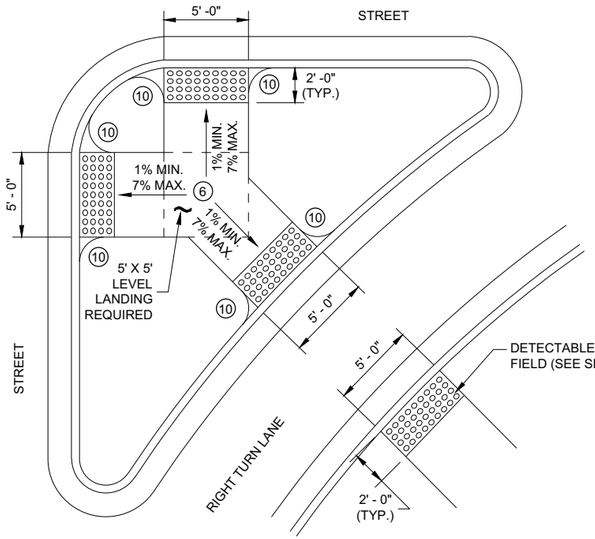

CURB RAMP TYPE 6

DETECTABLE WARNING AT ISLANDS

REFER TO GENERAL NOTES (2) AND (3) FOR ALL ISLAND CURB RAMPS

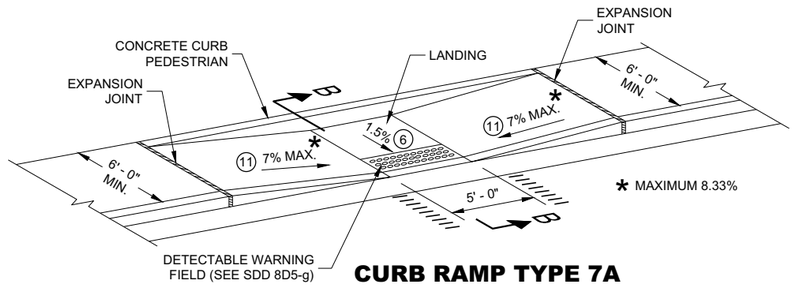

CURB RAMP TYPE 7A

MID BLOCK CROSSING

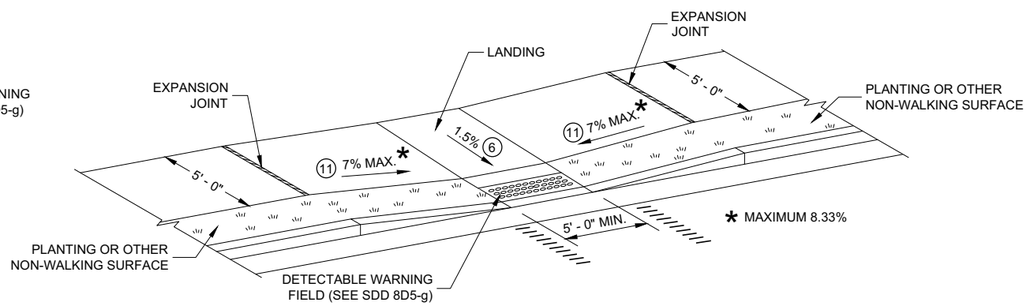

CURB RAMP TYPE 7B

MID BLOCK CROSSING

NOTE: THESE PARALLEL AND PARALLEL/PERPENDICULAR CURB RAMPS MAY BE USED AT INTERSECTIONS AND MID BLOCK LOCATIONS.

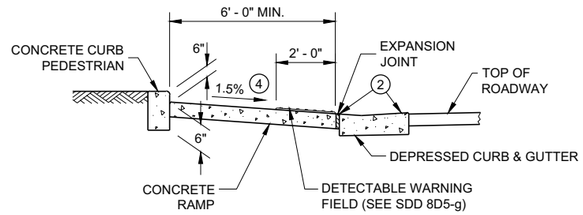

SECTION B - B FOR TYPE 7A

CURB RAMPS TYPE 5, 6, 7A, 7B & 8

STATE OF WISCONSIN
DEPARTMENT OF TRANSPORTATION

6

SDD 08D05 - 20e

RADIAL DETECTABLE WARNING FIELD PLACEMENT WHEN 5 FOOT GRADE BREAK DISTANCE PER SDD 8D5-c IS EXCEEDED

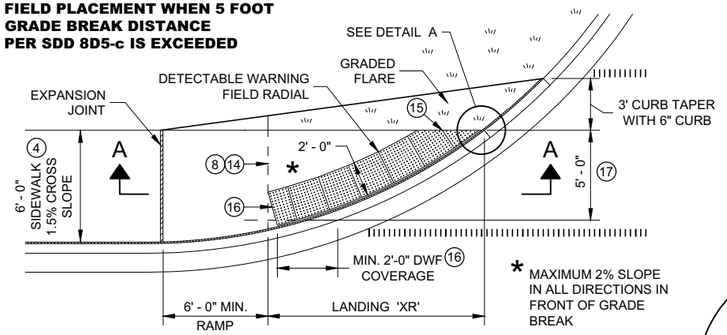

PLAN VIEW

CURB RAMP TYPE 4A1

(GRADE BREAK DISTANCE GREATER THAN 5 FEET)

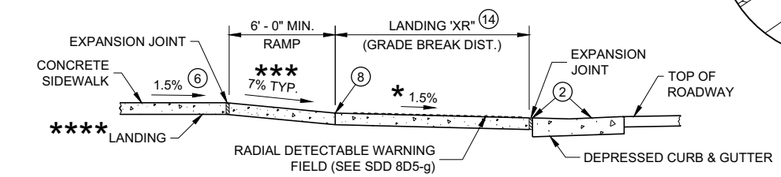

**** IF RAMP SLOPE IS LESS THAN 5.0%, THEN NO ADJACENT UPHILL LANDING IS REQUIRED

*** MAXIMUM 8.33%

SECTION A - A FOR TYPE 4A1

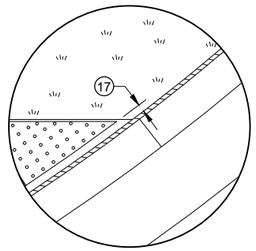

DETAIL A

LEGEND

- ½" EXPANSION JOINT SIDEWALK
- CONTRACTION JOINT SIDEWALK
- PAVEMENT MARKING CROSSWALK (WHITE)

GENERAL NOTES

AVOID PLACING DRAINAGE STRUCTURES, JUNCTION BOXES OR OTHER OBSTRUCTIONS IN FRONT OF RAMP ACCESS AREAS.

DETAILS OF CONSTRUCTION, MATERIALS AND WORKMANSHIP NOT SHOWN ON THIS DRAWING SHALL CONFORM TO THE PERTINENT REQUIREMENTS OF THE STANDARD SPECIFICATIONS AND THE APPLICABLE SPECIAL PROVISIONS.

DETECTABLE WARNING FIELDS THAT ARE INSTALLED AS A GROUP OR SIDE BY SIDE, SHALL BE FROM THE SAME MANUFACTURER.

APPLY RADIAL DETECTABLE WARNING PLACEMENT SIMILARLY FOR TYPE 4A AND 4A1 CURB RAMPS AND SIMILARLY FOR TYPE 4B AND 4B1 CURB RAMPS. TYPE 4A AND 4B CURB RAMPS ARE NOT SHOWN.

REFER TO SDD 8D5-g FOR ADDITIONAL RADIAL PLATE REQUIREMENTS.

FIELD CUTS AT INTERMEDIATE JOINTS WITHIN THE RADIAL DETECTABLE WARNING FILED ARE PROHIBITED.

DETERMINE FINAL RADIAL WARNING FIELD CONFIGURATION AD ITS INDIVIDUAL PLATE LOCATIONS. PERFORM PRE-LAYOUT PRIOR TO PLACEMENT IN PLASTIC CONCRETE. FOLLOW MANUFACTURER'S PRODUCT LIST AND INSTALLATION RECOMMENDATIONS.

(2) GRADE CHANGE BETWEEN GUTTER FLAG SLOPE AND THE CURB RAMP SLOPE SHALL NOT EXCEED 11%. MAXIMUM GUTTER FLAG SLOPE IS 4%. PROVIDE LONGITUDINAL DRAINAGE AROUND CURB AND AWAY FROM CURB RAMP. NO VERTICAL LIPS OR DISCONTINUITIES GREATER THAN ¼ - INCH ARE ALLOWED. SLOPE OF CURB HEAD OPENING SHALL MATCH THE RAMP SLOPE, MINIMALLY 1.5% AND NOT TO EXCEED 7%. WHEN ADJACENT TO 1.5% LANDING, CONSTRUCT CURB HEAD OPENING AT 1.5% IN THE DIRECTION OF PEDESTRIAN TRAVEL.

(3) AN 8.33% CURB RAMP SLOPE IS ALLOWABLE WITH FLATTENED GUTTER FLAG SLOPE AND NOT TO EXCEED 11% GRADE CHANGE.

(4) ±0.5% CONSTRUCTION TOLERANCE IN SIDEWALK CROSS SLOPE. THE SIDEWALK CROSS SLOPE SHALL NOT EXCEED 2% WITHOUT PRIOR APPROVAL FROM THE ENGINEER.

(6) PROVIDE A LEVEL LANDING (MAXIMUM 2% SLOPE) IN ANY DIRECTION OF PEDESTRIAN TRAVEL. STANDARD LANDING SIZE IS 5 FEET BY 5 FEET.

(8) PROVIDE GRADE BREAK PERPENDICULAR TO DIRECTION OF WHEELCHAIR TRAVEL.

(14) CONSULT ENGINEER IF GRADE BREAK LOCATION (END OF LANDING DIMENSION "XR") REQUIRES FIELD ADJUSTMENT WHEN ESTABLISHING FINAL RADIAL DETECTABLE WARNING FIELD LOCATION.

(15) FIELD SAW CUTS ALONG RADIAL DETECTABLE WARNING PLATES WILL BE NECESSARY TO MATCH EACH CURB RAMP EDGE. AVOID CUTTING THROUGH DOMES WHENEVER POSSIBLE. MAKE FIELD CUTS TRUE TO LINE AND WITHIN ⅛" DEVIATION. SMOOTH EDGES OF FIELD CUT PLATES.

(16) USE 1' X 2" RECTANGULAR END PLATE AT END OF TYPE 4A1 RAMP AND PROVIDE MINIMUM 2' - 0" DETECTABLE WARNING FIELD COVERAGE (IN DIRECTION OF PEDESTRIAN TRAVEL) ALONG THE ENTIRE CURB RAMP WIDTH.

(17) A MAXIMUM 3 INCH CONCRETE BORDER WITH IS ALLOWABLE IN FROM OF RADIAL DETECTABLE WARNING FIELD FOR CONSTRUCTABILITY PURPOSES. CONCRETE BORDER WIDTH MAY VARY UP TO 1 INCH.

RADIAL DETECTABLE WARNING FIELD PLACEMENT WHEN 5 FOOT GRADE BREAK DISTANCE PER SDD 8D5-d IS EXCEEDED

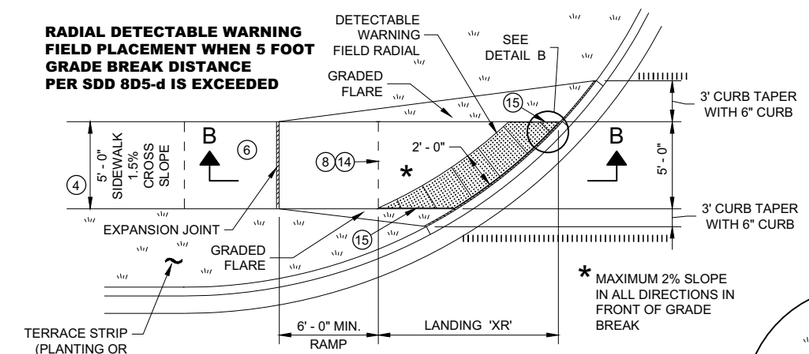

PLAN VIEW

CURB RAMP TYPE 4B1

(GRADE BREAK DISTANCE GREATER THAN 5 FEET)

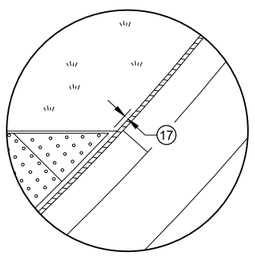

DETAIL B

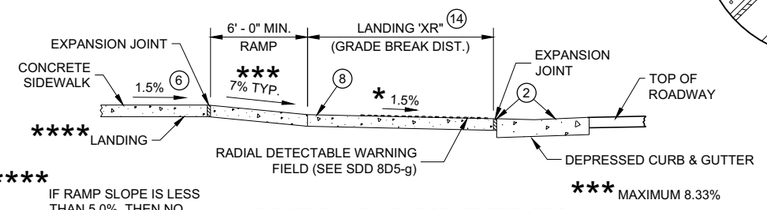

**** IF RAMP SLOPE IS LESS THAN 5.0%, THEN NO ADJACENT UPHILL LANDING IS REQUIRED

*** MAXIMUM 8.33%

SECTION B - B FOR TYPE 4B1

RADIAL DETECTABLE WARNING FIELD PLACEMENT WHEN 5 FOOT GRADE BREAK DISTANCE PER SDD 8D5-b IS EXCEEDED

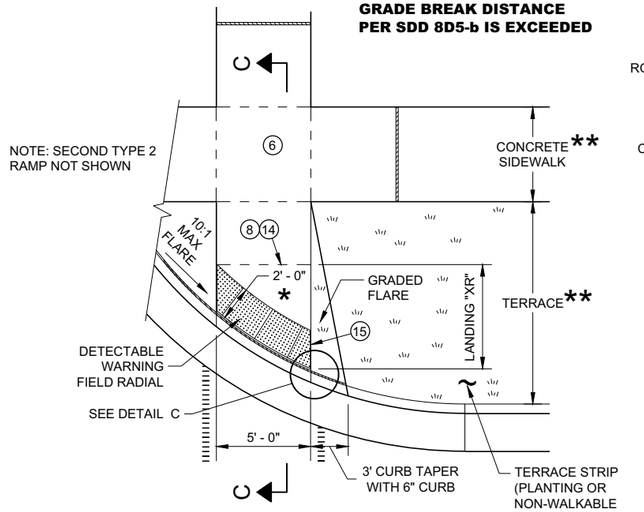

PLAN VIEW

CURB RAMP TYPE 2

(GRADE BREAK DISTANCE GREATER THAN 5 FEET)

(ON LINE WITH SIDEWALK)

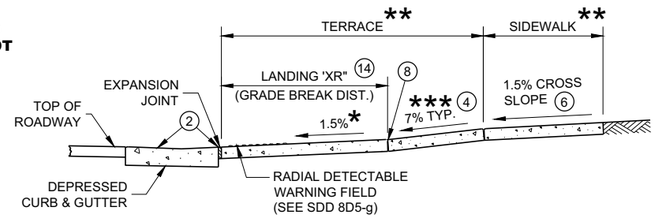

SECTION C - C FOR TYPE 2

* MAXIMUM 2% SLOPE IN ALL DIRECTIONS IN FRONT OF GRADE BREAK

** WIDTH SHOWN ELSEWHERE IN THE PLANS

*** MAXIMUM 8.33%

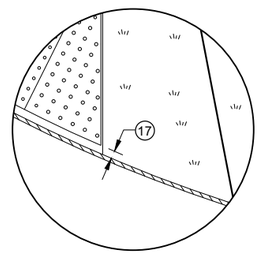

DETAIL C

CURB RAMPS
RADIAL DETECTABLE WARNING FIELD APPLICATIONS

STATE OF WISCONSIN
DEPARTMENT OF TRANSPORTATION

6

SDD 08D05 - 20f

	MIN.	MAX.
A	1.6"	2.4"
B	0.65"	1.5"
C	*	*
D	0.9"	1.4"

* THE C DIMENSION IS 50% TO 65% OF THE D DIMENSION.

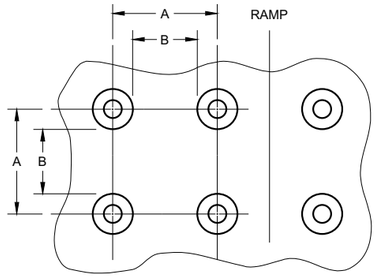

PLAN VIEW

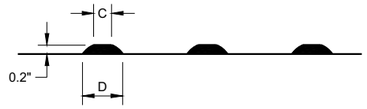

ELEVATION VIEW

TRUNCATED DOMES
DETECTABLE WARNING PATTERN DETAIL

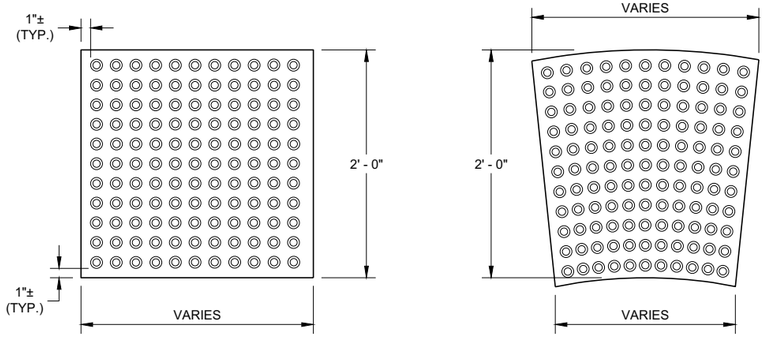

RECTANGULAR PLATES

RADIAL PLATES

PLAN VIEW
DETECTABLE WARNING FIELDS (TYPICAL)

GENERAL NOTES

DETECTABLE WARNING FIELDS THAT ARE INSTALLED AT A CURB RAMP SHALL BE FROM THE SAME MANUFACTURER.

PLACE ALL DETECTABLE WARNING FIELD SYSTEMS IN ACCORDANCE TO THE MANUFACTURER'S RECOMMENDATION.

FIELD CUTS AT INTERMEDIATE JOINTS WITHIN THE RADIAL DETECTABLE WARNING FILED ARE PROHIBITED.

DETERMINE FINAL RADIAL WARNING FIELD CONFIGURATION AND ITS INDIVIDUAL PLATE LOCATIONS. PERFORM PRE-LAYOUT PRIOR TO PLACEMENT IN PLASTIC CONCRETE. FOLLOW MANUFACTURER'S PRODUCT LIST AND INSTALLATION RECOMMENDATIONS.

FOR RADIAL DETECTABLE WARNING FIELD APPLICATIONS WHERE STANDARD RADIAL PLATES ARE NOT AVAILABLE AT AN INTERSECTION CURB RADIUS, A COMBINATION OF SQUARE OR RECTANGULAR PLATES AND RADIAL PLATES MAY BE USED TO FORM RADIAL CONFIGURATION. RADIAL WEDGE PLATES IN COMBINATION WITH SQUARE PLATES ARE ALSO ACCEPTABLE. FOLLOW MANUFACTURER'S RECOMMENDATIONS.

REFER TO CONTRACT AND STANDARD SPECIFICATIONS FOR FIELD CUTTING REQUIREMENTS.

DO NOT EMBED IN CONCRETE ANY FIELD-CUT PLATES WITH CUT EDGES SHORTER THAN 6 INCHES. CONSULT WITH MANUFACTURER FOR RE-DRILLING AND ANCHORING REQUIREMENTS OF FIELD-CUT PLATES.

(15) FIELD SAW CUTS ALONG RADIAL DETECTABLE WARNING PLATES WILL BE NECESSARY TO MATCH EACH CURB RAMP EDGE. AVOID CUTTING THROUGH DOMES WHENEVER POSSIBLE. MAKE FIELD CUTS TRUE TO LINE AND WITHIN ⅛" DEVIATION. SMOOTH EDGES OF FIELD CUT PLATES.

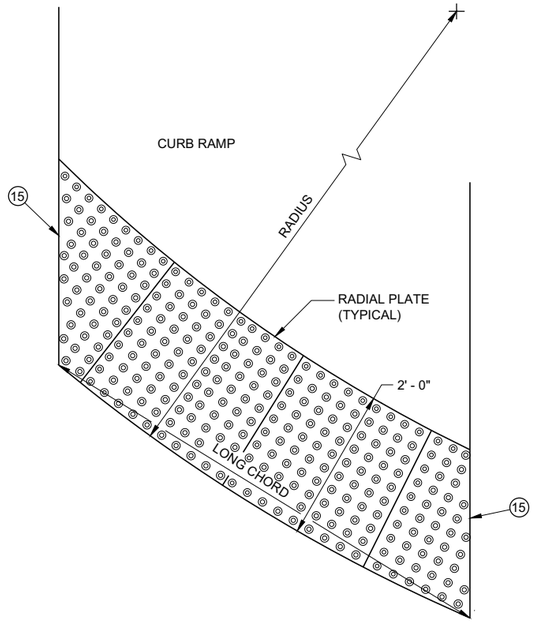

PLAN VIEW
RADIAL DETECTABLE WARNING FIELD ATTRIBUTES

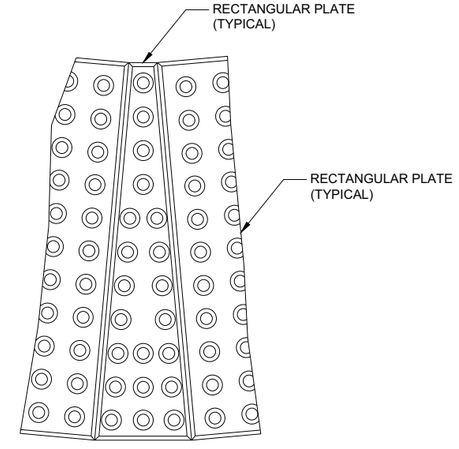

PLAN VIEW
RADIAL WEDGE PLATE CONNECTION DETAIL

CURB RAMPS
RECTANGULAR AND RADIAL
DETECTABLE WARNING PLATES

STATE OF WISCONSIN
DEPARTMENT OF TRANSPORTATION

APPROVED
May 2019
DATE
/S/ Rodney Taylor
ROADWAY STANDARDS DEVE UNIT SUPERVISOR

FHWA

6

SDD 08D05 - 20g

6

SDD 08D05 - 20g

GENERAL NOTES

(1) DESIGN WILL DETERMINE FINAL DRIVEWAY ASPHALTIC THICKNESS BASED ON TYPE OF USAGE AND LOADINGS.

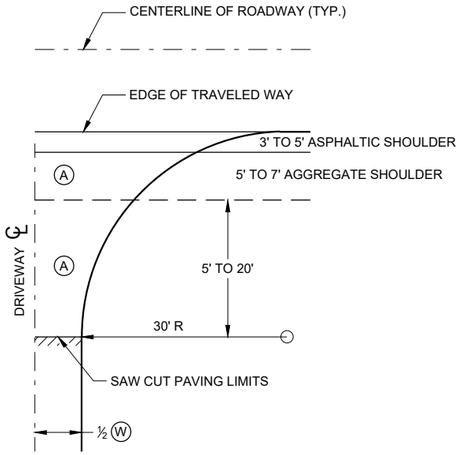

PLAN VIEW

HALF SECTION

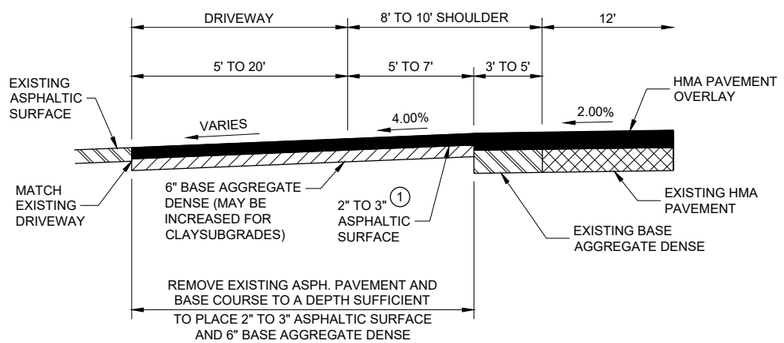

PROFILE VIEW

RURAL ENTRANCE
WITH ASPHALTIC SURFACE
RESURFACING PROJECTS

(A) : PAID FOR AS ASPHALTIC SURFACE DRIVEWAYS AND FIELD ENTRANCES. (TON)

(B) : PAID FOR AS BASE AGGREGATE DENSE 1 ¼" (TON)

(W) : DRIVEWAY WIDTH 16' MIN. - 24' MAX.

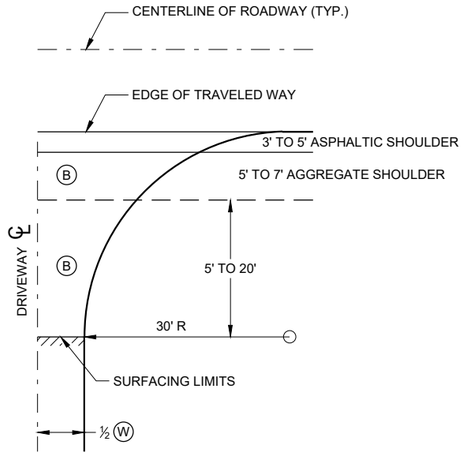

PLAN VIEW

HALF SECTION

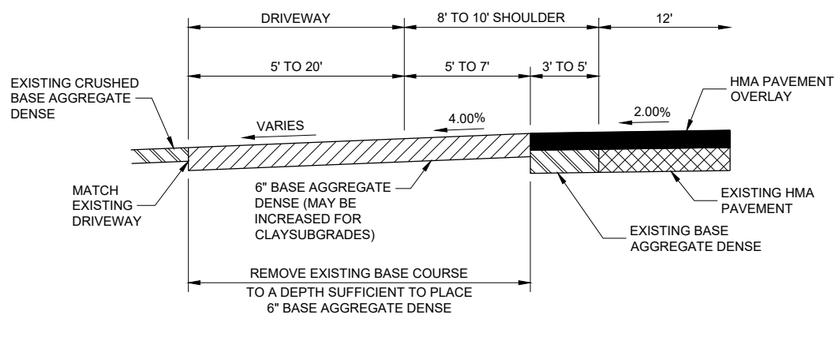

PROFILE VIEW

RURAL ENTRANCE
WITH AGGREGATE SURFACE
6" BASE AGGREGATE DENSE
RESURFACING PROJECTS

DRIVEWAYS WITHOUT CURB AND GUTTER RESURFACING PROJECTS RURAL

STATE OF WISCONSIN
DEPARTMENT OF TRANSPORTATION

APPROVED
December 2016 — DATE
/S/ Rodney Taylor — ROADWAY STANDARDS DEVE ENGINEER
FHWA

6

SDD 08D22 - 01

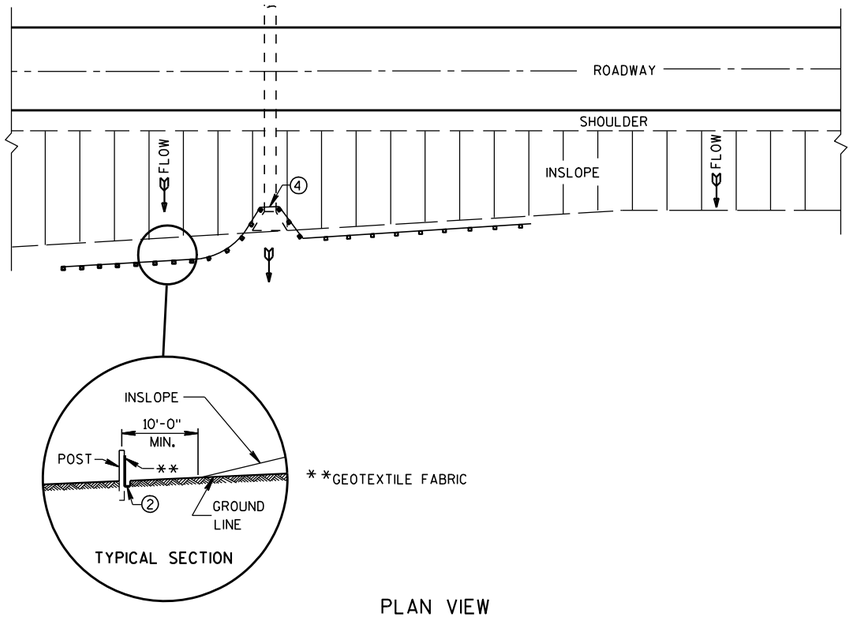

PLAN VIEW

TYPICAL APPLICATION OF SILT FENCE

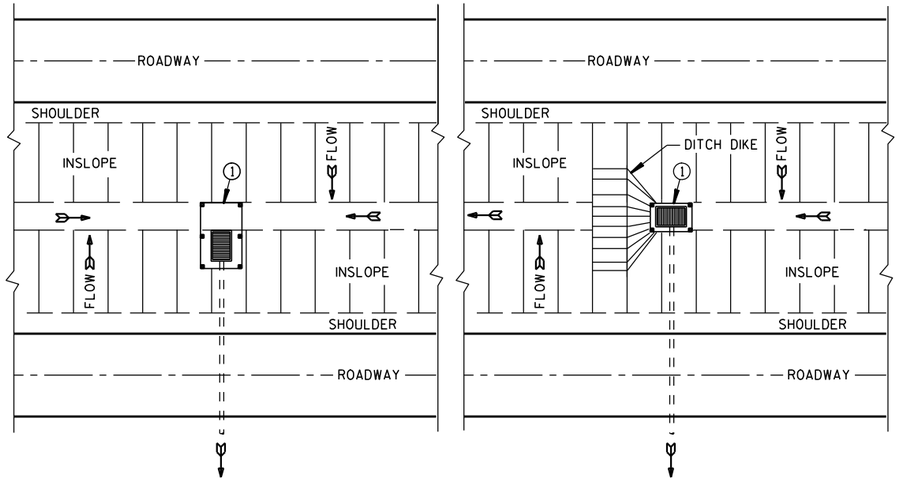

PLAN VIEW

SILT FENCE AT MEDIAN SURFACE DRAINS

GENERAL NOTES

DETAILS OF CONSTRUCTION NOT SHOWN ON THIS DRAWING SHALL CONFORM TO THE PERTINENT REQUIREMENTS OF THE STANDARD SPECIFICATIONS AND APPLICABLE SPECIAL PROVISIONS.

① HORIZONTAL BRACE REQUIRED WITH 2" X 4" WOODEN FRAME OR EQUIVALENT AT TOP OF POSTS.

② FOR MANUAL INSTALLATIONS THE TRENCH SHALL BE A MINIMUM OF 4" WIDE & 6" DEEP TO BURY AND ANCHOR THE GEOTEXTILE FABRIC. FOLD MATERIAL TO FIT TRENCH AND BACKFILL & COMPACT TRENCH WITH EXCAVATED SOIL.

③ WOOD POSTS SHALL BE A MINIMUM SIZE OF 1⅛" X 1⅛" OF OAK OR HICKORY.

④ SILT FENCE TO EXTEND ACROSS THE TOP OF THE PIPE.

⑤ CONSTRUCT SILT FENCE FROM A CONTINUOUS ROLL IF POSSIBLE BY CUTTING LENGTHS TO AVOID JOINTS. IF A JOINT IS NECESSARY USE ONE OF THE FOLLOWING TWO METHODS; A) OVERLAP THE END POSTS AND TWIST, OR ROTATE, AT LEAST 180 DEGREES, B) HOOK THE END OF EACH SILT FENCE LENGTH.

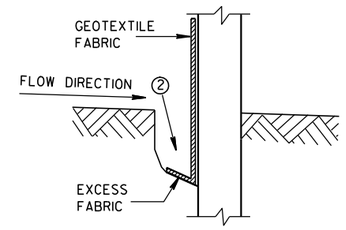

TRENCH DETAIL

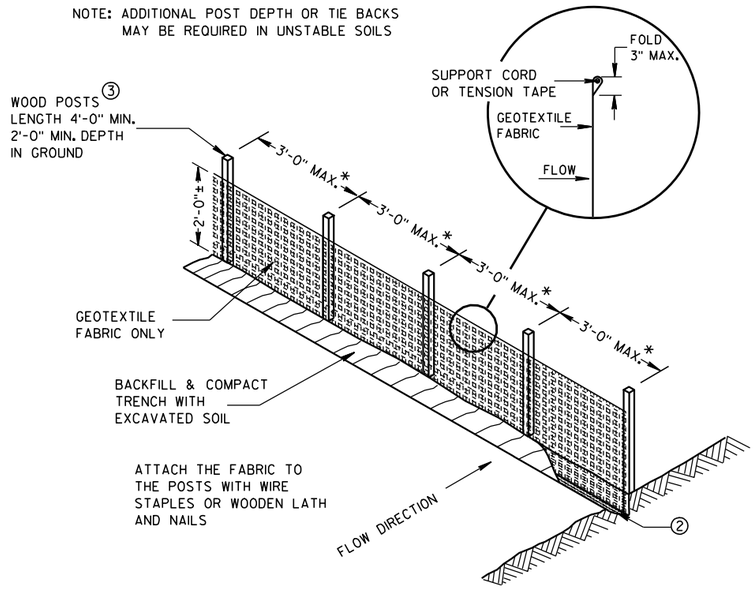

SILT FENCE

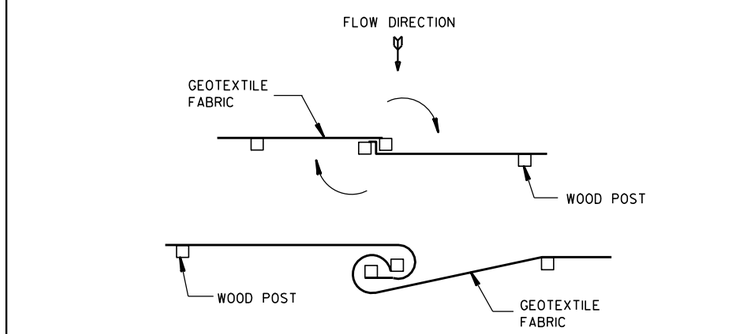

TWIST METHOD

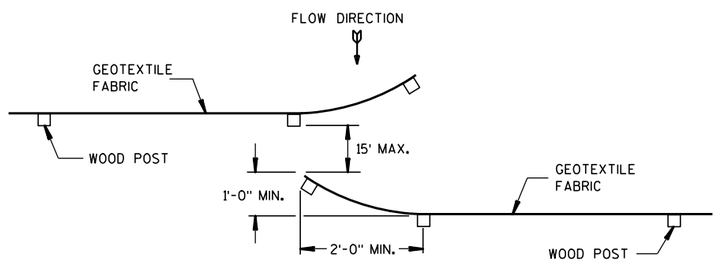

HOOK METHOD

JOINING TWO LENGTHS OF SILT FENCE ⑤

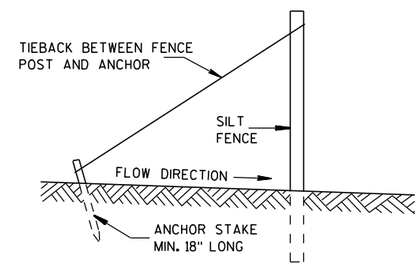

SILT FENCE TIE BACK

(WHEN REQUIRED BY THE ENGINEER)

SILT FENCE

STATE OF WISCONSIN
DEPARTMENT OF TRANSPORTATION

APPROVED
4-29-05 DATE
/S/ Beth Cannestra
CHIEF ROADWAY DEVELOPMENT ENGINEER
FHWA

6

S.D.D. 8 E 9-6

6

S.D.D. 8 E 9-6

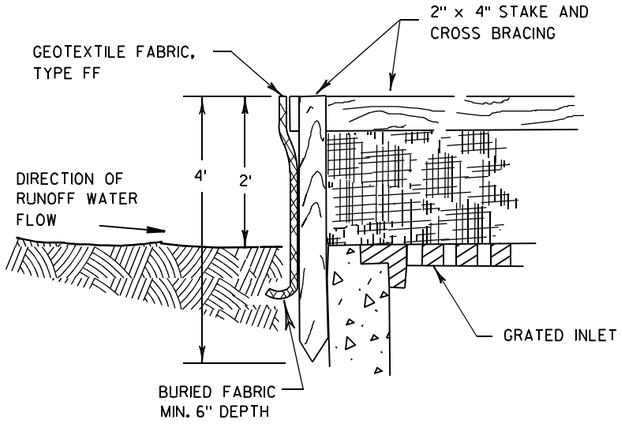

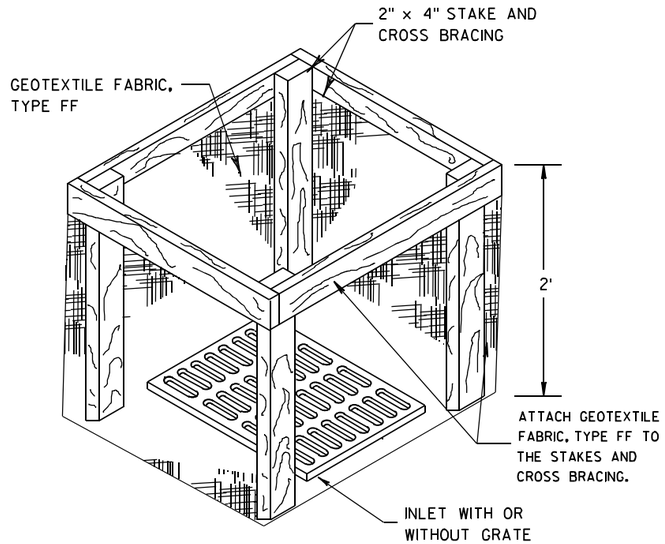

INLET PROTECTION, TYPE A

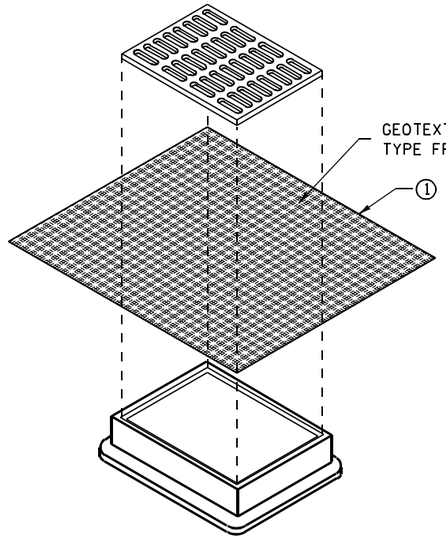

INLET PROTECTION, TYPE B
(WITHOUT CURB BOX)

(CAN BE INSTALLED IN ANY INLET WITHOUT A CURB BOX)

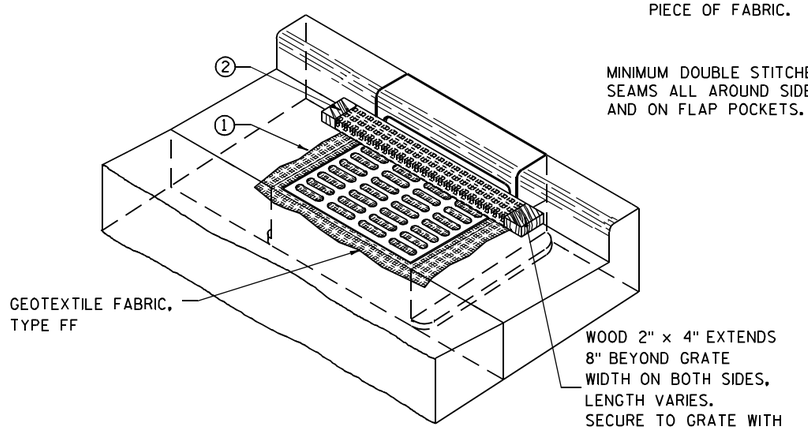

INLET PROTECTION, TYPE C (WITH CURB BOX)

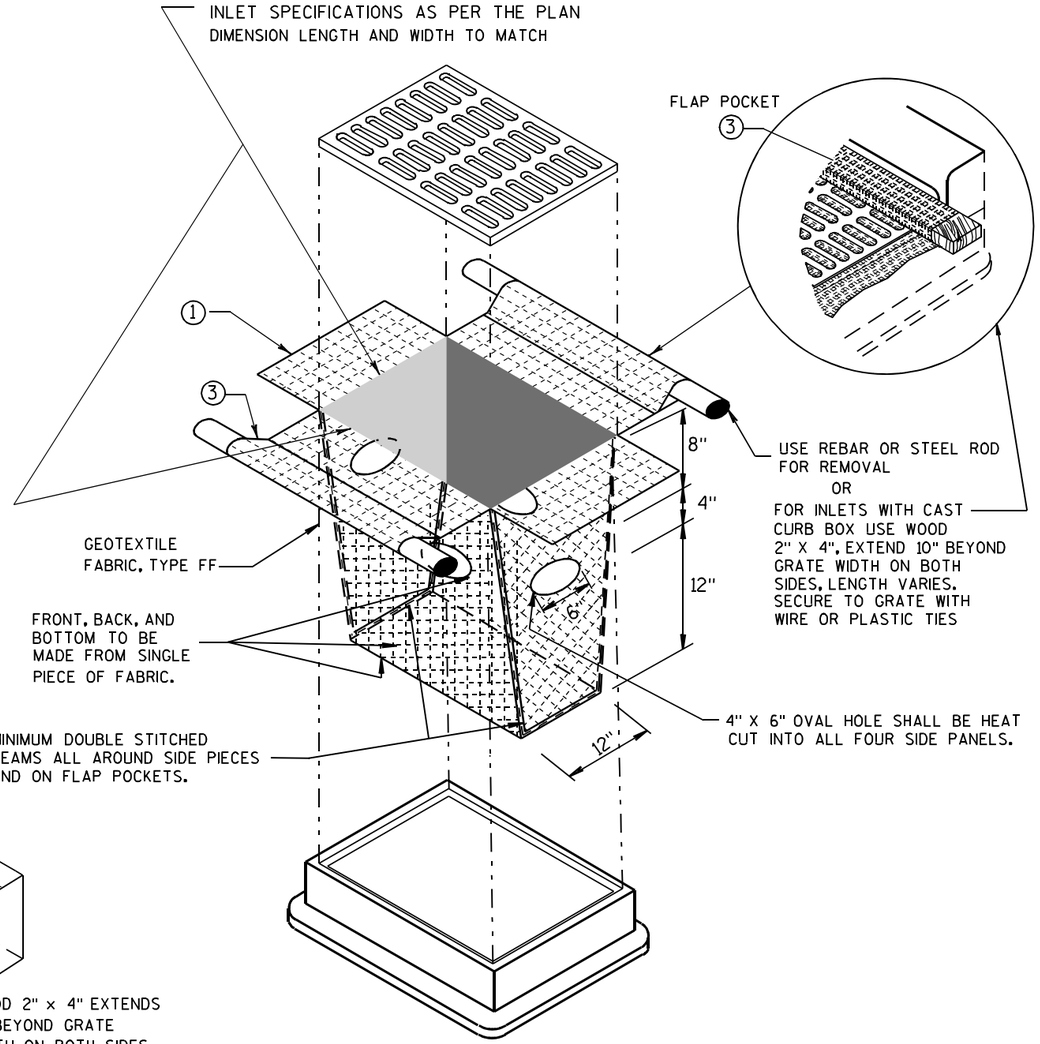

INLET PROTECTION, TYPE D

(CAN BE INSTALLED IN ANY INLET TYPE WITH
OR WITHOUT A CURB BOX AS PER NOTE ②)

GENERAL NOTES

INLET PROTECTION DEVICES SHALL BE MAINTAINED OR REPLACED AT THE DIRECTION OF THE ENGINEER.

MANUFACTURED ALTERNATIVES APPROVED AND LISTED ON THE DEPARTMENT'S EROSION CONTROL PRODUCT ACCEPTABILITY LIST MAY BE SUBSTITUTED.

WHEN REMOVING OR MAINTAINING INLET PROTECTION, CARE SHALL BE TAKEN SO THAT THE SEDIMENT TRAPPED ON THE GEOTEXTILE FABRIC DOES NOT FALL INTO THE INLET. ANY MATERIAL FALLING INTO THE INLET SHALL BE REMOVED IMMEDIATELY.

① FINISHED SIZE, INCLUDING FLAP POCKETS WHERE REQUIRED, SHALL EXTEND A MINIMUM OF 10" AROUND THE PERIMETER TO FACILITATE MAINTENANCE OR REMOVAL.

② FOR INLET PROTECTION, TYPE C (WITH CURB BOX), AN ADDITIONAL 18" OF FABRIC IS WRAPPED AROUND THE WOOD AND SECURED WITH STAPLES. THE WOOD SHALL NOT BLOCK THE ENTIRE HEIGHT OF THE CURB BOX OPENING.

③ FLAP POCKETS SHALL BE LARGE ENOUGH TO ACCEPT WOOD 2X4.

INSTALLATION NOTES

TYPE B & C

TRIM EXCESS FABRIC IN THE FLOW LINE TO WITHIN 3" OF THE GRATE.

THE CONTRACTOR SHALL DEMONSTRATE A METHOD OF MAINTENANCE, USING A SEWN FLAP, HAND HOLDS OR OTHER METHOD TO PREVENT ACCUMULATED SEDIMENT FROM ENTERING THE INLET.

TYPE D

DO NOT INSTALL INLET PROTECTION TYPE D IN INLETS SHALLOWER THAN 30", MEASURED FROM THE BOTTOM OF THE INLET TO THE TOP OF THE GRATE.

TRIM EXCESS FABRIC IN THE FLOW LINE TO WITHIN 3" OF THE GRATE.

THE INSTALLED BAG SHALL HAVE A MINIMUM SIDE CLEARANCE, BETWEEN THE INLET WALLS AND THE BAG, MEASURED AT THE BOTTOM OF THE OVERFLOW HOLES, OF 3". WHERE NECESSARY THE CONTRACTOR SHALL CINCH THE BAG, USING PLASTIC ZIP TIES, TO ACHIEVE THE 3" CLEARANCE. THE TIES SHALL BE PLACED AT A MAXIMUM OF 4" FROM THE BOTTOM OF THE BAG.

INLET PROTECTION
TYPE A, B, C, AND D

STATE OF WISCONSIN
DEPARTMENT OF TRANSPORTATION

APPROVED
10/16/02
DATE
/S/ Beth Cannestra
CHIEF ROADWAY DEVELOPMENT ENGINEER
FHWA

6

S.D.D. 8 E 10-2

6

S.D.D. 8 E 10-2

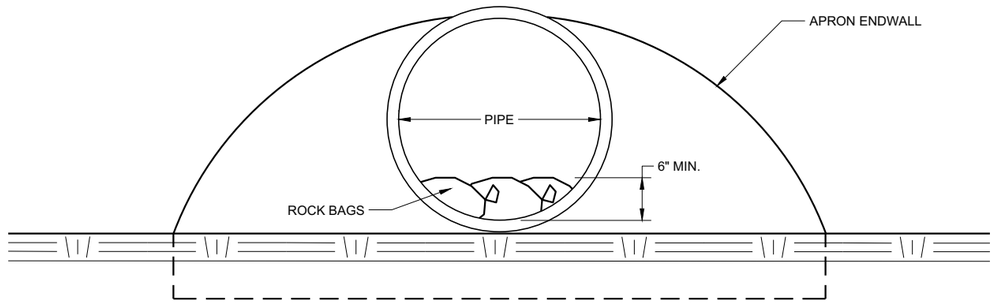

END VIEW

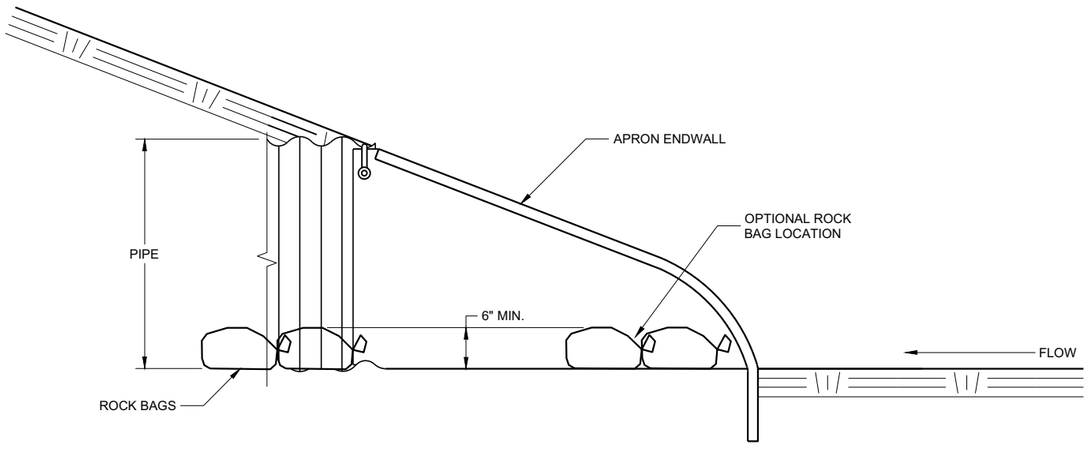

SIDE VIEW

CULVERT PIPE CHECK

(INSTALL ON INLET END ONLY)

CULVERT PIPE CHECK

STATE OF WISCONSIN
DEPARTMENT OF TRANSPORTATION

APPROVED
May 2019
DATE

/S/ Daniel Schave
EROSION CONTROL ENGI

FHWA

6

SDD 08E15 - 01

6

SDD 08E15 - 01

METAL APRON ENDWALLS

PIPE DIA. (IN.)	MIN. THICK. (Inches) STEEL	MIN. THICK. (Inches) ALUM.	DIMENSIONS (Inches) A (±1")	B (MAX.)	H (±1")	L (±1 1/2")	L1 ①	L2 ①	W (±2")	APPROX. SLOPE	BODY
12	.064	.060	6	6	6	21	12	17 1/2	24	2 1/2 to 1	1 Pc.
15	.064	.060	7	8	6	26	14	21 3/4	30	2 1/2 to 1	1 Pc.
18	.064	.060	8	10	6	31	15	28 1/4	36	2 1/2 to 1	1 Pc.
21	.064	.060	9	12	6	36	18	29 5/8	42	2 1/2 to 1	1 Pc.
24	.064	.075	10	13	6	41	18	37 1/4	48	2 1/2 to 1	1 Pc.
30	.079	.075	12	16	8	51	18	52 1/4	60	2 1/2 to 1	1 Pc.
36	.079	.105	14	19	9	60	24	59 3/4	72	2 1/2 to 1	2 Pc.
42	.109	.105	16	22	11	69	24	75 5/8	84	2 1/2 to 1	2 Pc.
48	.109	.105	18	27	12	78	24	81	90	2 1/4 to 1	3 Pc.
54	.109	.105	18	30	12	84	30	85 1/2	102	2 1/4 to 1	3 Pc.
60	.109×	.105×	18	33	12	87	—	—	114	2 to 1	3 Pc.
66	.109×	.105×	18	36	12	87	—	—	120	2 to 1	3 Pc.
72	.109×	.105×	18	39	12	87	—	—	126	2 to 1	3 Pc.
78	.109×	.105×	18	42	12	87	—	—	132	1 1/2 to 1	3 Pc.
84	.109×	.105×	18	45	12	87	—	—	138	1 1/2 to 1	3 Pc.
90	.109×	.105×	18	37	12	87	—	—	144	1 1/2 to 1	3 Pc.
96	.109×	.105×	18	35	12	87	—	—	150	1 1/2 to 1	3 Pc.

× EXCEPT CENTER PANEL SEE GENERAL NOTES

REINFORCED CONCRETE APRON ENDWALLS

PIPE DIA. (IN.)	DIMENSIONS (Inches) T	A	B	C	D	E	G	APPROX. SLOPE
12	2	4	24	48 7/8	72 1/8	24	2	3 to 1
15	2 1/4	6	27	46	73	30	2 1/4	3 to 1
18	2 1/2	9	27	46	73	36	2 1/2	3 to 1
21	2 3/4	9	36	37 1/2	73 1/2	42	2 3/4	3 to 1
24	3	9 1/2	43 1/2	30	73 1/2	48	3	3 to 1
27	3 1/4	10 1/2	49 1/2	24	73 1/2	54	3 1/4	3 to 1
30	3 1/2	12	54	19 3/4	73 1/2	60	3 1/2	3 to 1
36	4	15	63	34 3/4	97 3/4	72	4	3 to 1
42	4 1/2	21	63	35	98	78	4 1/2	3 to 1
48	5	24	72	26	98	84	5	3 to 1
54	5 1/2	27	65	* 33 1/4 - ** 35	* 98 1/4 - ** 100	90	5 1/2	2 2/5 to 1
60	6	* 30 - ** 35	60	39	99	96	5	2 to 1
66	6 1/2	* 24 - ** 30	* 72 - ** 78	* 21 - ** 27	99	102	5 1/2	2 to 1
72	7	* 24 - ** 36	78	21	99	108	6	2 to 1
78	7 1/2	* 24 - ** 36	78	21	99	114	6 1/2	2 to 1
84	8	36	90 1/2	21	111 1/2	120	6 1/2	1 1/2 to 1
90	8 1/2	41	87 1/2	24	111 1/2	132	6 1/2	1 1/2 to 1

*MINIMUM
**MAXIMUM

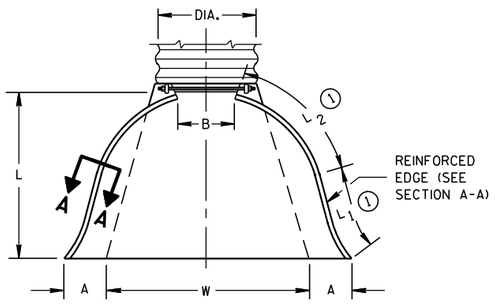

PLAN VIEW

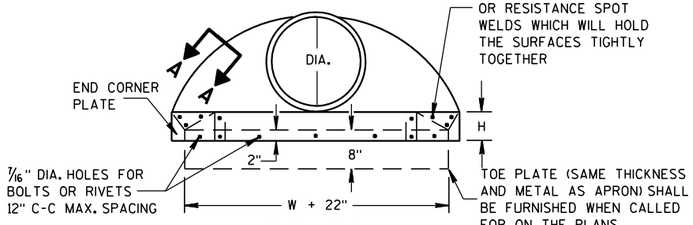

END VIEW

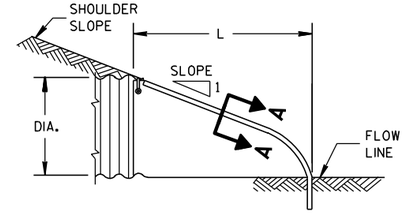

SIDE ELEVATION

METAL ENDWALLS

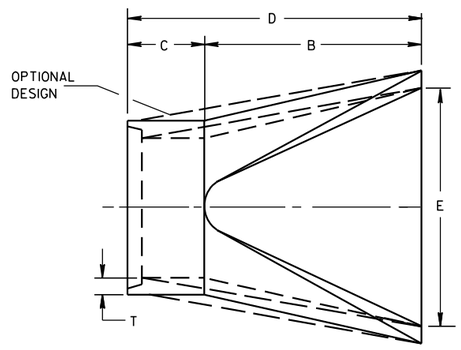

PLAN

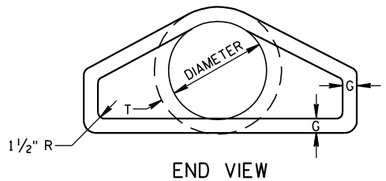

END VIEW

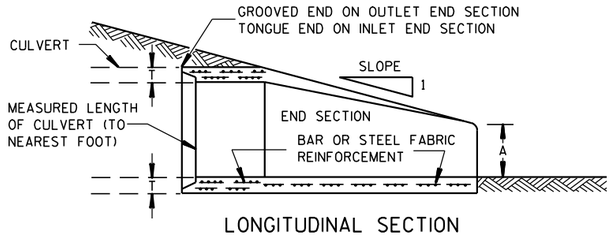

LONGITUDINAL SECTION

CONCRETE ENDWALLS

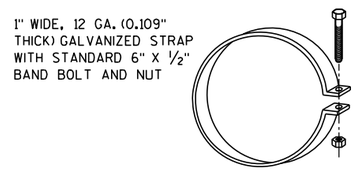

ALTERNATE FOR TYPE 1 CONNECTION

END SECTION CONNECTOR STRAP

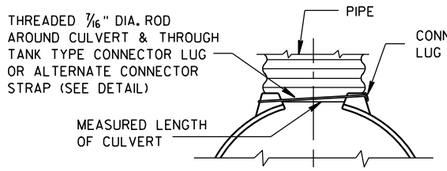

TYPE 1
FOR 12" THRU 24" CORR. PIPE

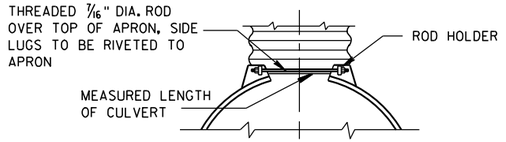

TYPE 2
FOR 30" THRU 96" CORR. PIPE

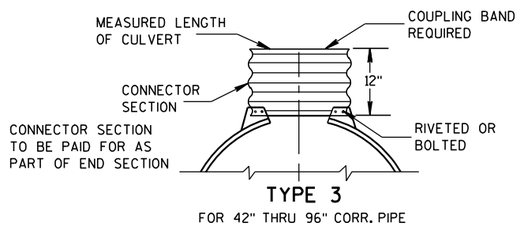

TYPE 3
FOR 42" THRU 96" CORR. PIPE

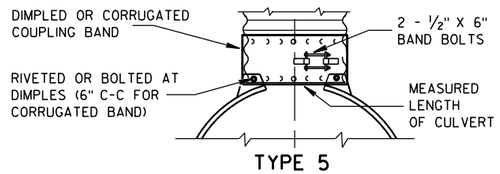

TYPE 5
ALTERNATE FOR:
ALL SIZES CORRUGATED CIRCULAR PIPE

NOTE: DIMPLED BAND FITS OVER OUTSIDE OF ENDWALL. AND CORRUGATED BAND FITS INSIDE ENDWALL. DIMPLED BAND MAY BE USED WITH HELICALLY CORRUGATED PIPE.

FOR CIRCUMFERENTIALLY CORRUGATED PIPE USE ENDWALL CONNECTION DETAILS 1, 2, 3 OR 5 AS APPLICABLE.

FOR HELICALLY CORRUGATED PIPE USE ENDWALL CONNECTION DETAILS 1, 2 OR 5.

FOR HELICALLY CORRUGATED PIPES WITH TWO CIRCUMFERENTIAL CORRUGATIONS AT EACH END USE ENDWALL CONNECTION DETAILS 1, 2 OR 3.

CONNECTION DETAILS

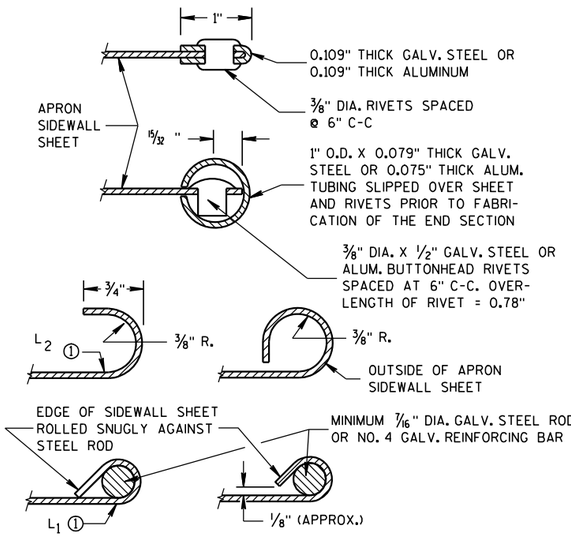

SECTION A-A

GENERAL NOTES

DETAILS OF CONSTRUCTION, MATERIALS AND WORKMANSHIP NOT SHOWN ON THIS DRAWING SHALL CONFORM TO THE PERTINENT REQUIREMENTS OF THE STANDARD SPECIFICATIONS AND THE APPLICABLE SPECIAL PROVISIONS.

CONCRETE CULVERT ENDWALLS MAY NOT BE USED WITH GALVANIZED STEEL OR ALUMINUM CULVERT PIPE OR VISE VERSA. GALVANIZED STEEL OR ALUMINUM ENDWALLS SHALL NORMALLY BE INSTALLED ON CULVERT PIPE OF THE SAME METAL.

ALL THREE PIECE STEEL APRON ENDWALLS FOR 60" DIAMETER PIPE AND LARGER SHALL HAVE 0.109" SIDES AND 0.138" CENTER PANELS. ALL THREE PIECE ALUMINUM APRON ENDWALLS FOR 60" DIAMETER PIPE AND LARGER SHALL HAVE 0.105" SIDES AND 0.134" CENTER PANELS. THE WIDTH OF CENTER PANELS SHALL BE GREATER THAN 20 PERCENT OF THE PIPE PERIMETER.

LAP SEAMS SHALL BE TIGHTLY JOINED BY GALVANIZED RIVETS OR BOLTS FOR STEEL UNITS AND ALUMINUM RIVETS AND BOLTS FOR ALUMINUM UNITS. FOR THE 60" THROUGH 96" DIAMETER APRON ENDWALL SIZES, THE REINFORCED EDGES AND CENTER PANEL SEAMS SHALL BE FURTHER REINFORCED WITH GALVANIZED STEEL OR ALUMINUM STIFFENER ANGLES. THE ANGLES SHALL BE ATTACHED BY GALVANIZED NUTS AND BOLTS FOR STEEL UNITS AND ALUMINUM NUTS AND BOLTS FOR ALUMINUM UNITS.

WHERE TWO OR MORE PIPES WITH APRON ENDWALLS ARE LAID ADJACENT TO EACH OTHER, THEY SHALL BE SEPARATED BY A DISTANCE SUFFICIENT TO PROVIDE A MINIMUM CLEARANCE OF 6 INCHES BETWEEN APRON ENDWALLS.

① FOR PIPE SIZES UP TO 60" DIAMETER, A 180° ROLLED EDGE MAY BE USED INSTEAD OF STEEL ROD REINFORCEMENT. SEE SECTION A-A.

APRON ENDWALLS FOR CULVERT PIPE

STATE OF WISCONSIN
DEPARTMENT OF TRANSPORTATION

APPROVED
11/30/94 DATE
/S/ Rory L. Rhinesmith
CHIEF ROADWAY DEVELOPMENT ENGINEER
FHWA

6
S.D.D. 8 F 1-11

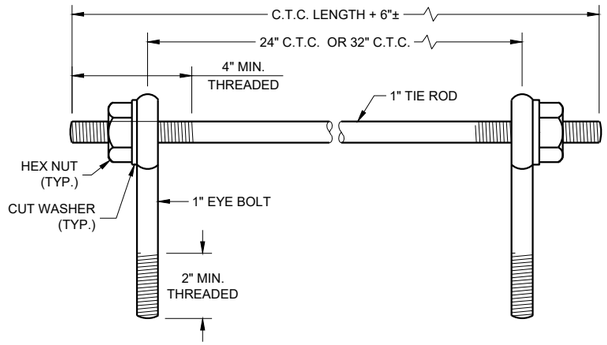

EYE BOLTS AND TIE ROD

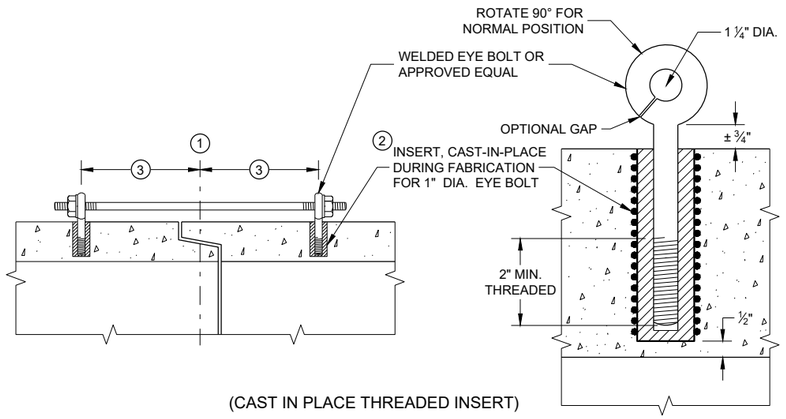

(CAST IN PLACE THREADED INSERT)

LONGITUDINAL SECTIONS

EYE BOLT AND TIE ROD ASSEMBLY (ALTERNATE NO. 1)

GENERAL NOTES

DETAILS OF CONSTRUCTION, MATERIALS, AND WORKMANSHIP NOT SHOWN ON THIS DRAWING SHALL CONFORM TO THE PERTINENT REQUIREMENTS OF THE STANDARD SPECIFICATIONS AND APPLICABLE SPECIAL PROVISIONS.

CONCRETE CULVERT AND STORM SEWER PIPE SHALL BE TIED TOGETHER IN THE MANNER ILLUSTRATED BY THIS DETAIL AT LOCATIONS DESIGNATED IN THE STANDARD SPECIFICATIONS AND THE PLAN. THE CONTRACTOR MAY USE EITHER ALTERNATE 1, 2 OR 3 FOR DRAINAGE STRUCTURES. ONLY ALTERNATE 1 AND 3 MAY BE USED FOR CATTLE PASSES, UNLESS OTHERWISE STATED IN THE CONTRACT. THE MATERIALS, FABRICATION AND WORK NECESSARY TO TIE THE PIPE BY THIS DETAIL WILL BE CONSIDERED INCIDENTAL TO THE PIPE AND APRON ENDWALLS IF REQUIRED.

DETAILED DRAWINGS FOR PROPOSED ALTERNATE DESIGNS FOR JOINT TIES SHALL BE SUBMITTED TO THE ENGINEER FOR APPROVAL.

JOINT TIES TO BE HOT-DIP GALVANIZED PER ASTM A 153.

(1) CENTER LINE OF TONGUE AND GROOVE OR BELL AND SPIGOT JOINTS.

(2) THE INSIDE OF THE THREADED INSERTS SHALL BE CLEAN TO ALLOW THE INSERTION OF THREADED EYE BOLTS.

(3) HOLES SHALL BE CAST-IN-PLACE OR DRILLED PER THE APPLICABLE DETAIL, AND EQUAL DISTANCE FROM THE CENTERLINE OF THE JOINT.

(4) BOLT PROJECTION INSIDE OF PIPE SHALL NOT EXCEED 2 INCHES.

(5) OPENING TO BE ROD DIAMETER PLUS 1 INCH.

(6) LENGTH ADEQUATE TO EXTEND TO WITHIN ½ INCH OF THE INNER SURFACE OF THE PIPE.

(7) EYE BOLT LENGTH DETERMINED BY WALL THICKNESS, BELL THICKNESS AND BOLT PROJECTION INSIDE PIPE.

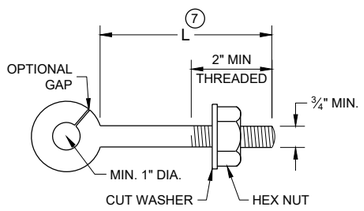

EYE BOLT (7)

NOTE: TWO EYE BOLTS MAY BE USED WITH A 30" OR 38" LONG THREADED ROD IN LIEU OF THE 90° BENT TIE ROD.

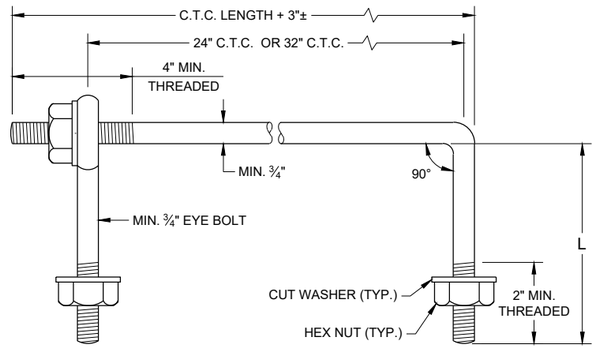

EYE BOLT AND TIE ROD

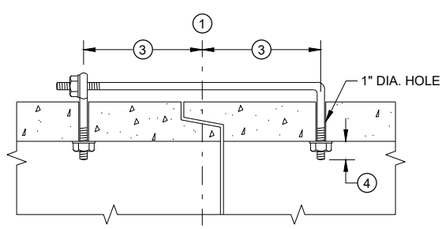

(TONGUE AND GROOVE PIPE)

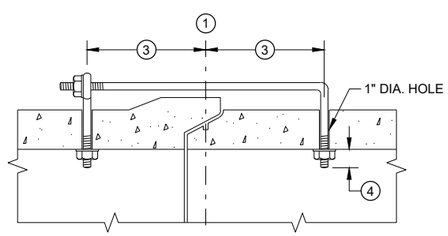

(MODIFIED BELL PIPE)

LONGITUDINAL SECTION

(JOINT TIES FOR 18" TO 66" DIA. CONCRETE PIPE)

EYE BOLT AND TIE ROD ASSEMBLY (ALTERNATE NO. 2)

ADJUSTABLE TIE ROD TABLE

PIPE DIAMETER	TIE ROD DIAMETER	D	L_1	N
12 - 60	⅝	⅝	5	½
66 - 84	¾	¾	5	½
90 - 144	1	1	7	1 7/16

DIMENSIONS SHOWN ARE IN INCHES

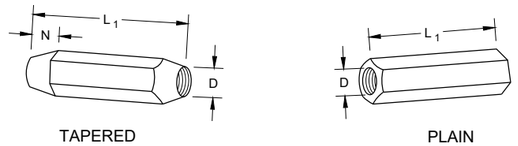

RIGHT AND LEFT THREADS

SLEEVE NUTS

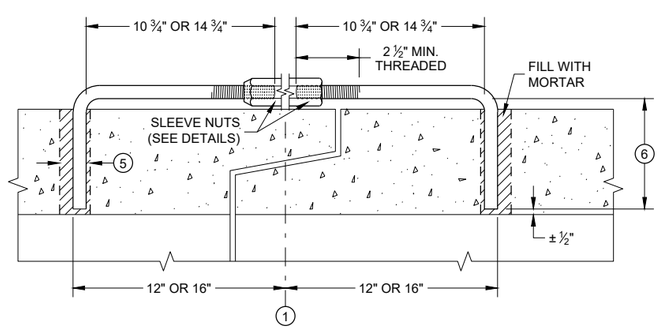

LONGITUDINAL SECTION

ADJUSTABLE TIE ROD (ALTERNATE NO. 3)

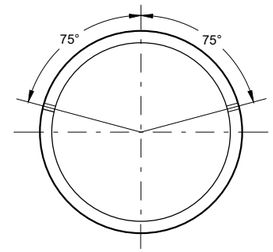

PLACEMENT OF (2) CAST-IN-PLACE INSERTS OR HOLES DURING FABRICATION FOR PIPE SECTIONS REQUIRING TIE RODS

TRANSVERSE SECTION

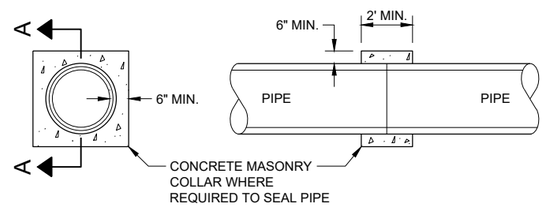

SECTION A - A

CONCRETE COLLAR DETAIL

JOINT TIES FOR CONCRETE PIPE AND CONCRETE COLLAR DETAIL

STATE OF WISCONSIN
DEPARTMENT OF TRANSPORTATION

APPROVED
November 2021 — DATE
/S/ Rodney Taylor — ROADWAY STANDARDS DEVE ENGINEER

FHWA

SDD 08F04 - 08

SDD 08F04 - 08

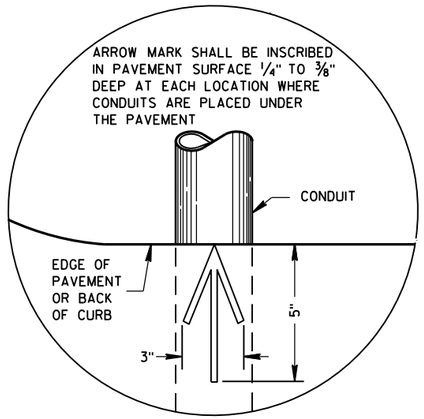

PLAN VIEW

ARROW MARK

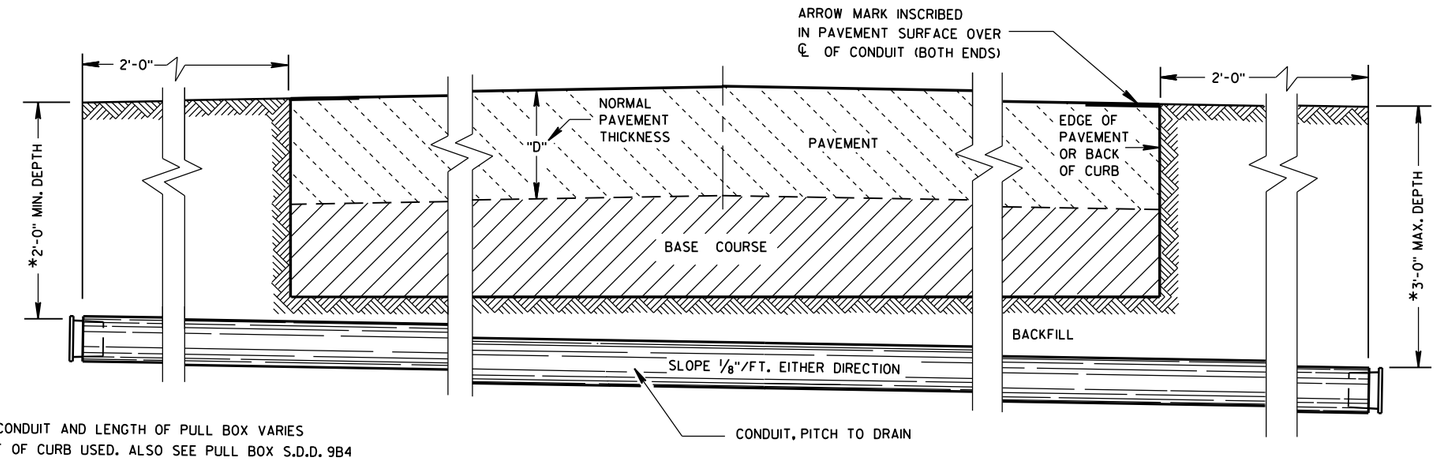

*DEPTH OF CONDUIT AND LENGTH OF PULL BOX VARIES WITH HEIGHT OF CURB USED. ALSO SEE PULL BOX S.D.D. 9B4

SIDE ELEVATION

DETAIL FOR CONDUIT UNDER PAVED HIGHWAYS

GENERAL NOTES

DETAILS OF CONSTRUCTION, MATERIALS AND WORKMANSHIP NOT SHOWN ON THIS DRAWING SHALL CONFORM TO THE PERTINENT REQUIREMENTS OF THE CONTRACT.

METALLIC (STANDARD SPECIFICATION 652.2.2) OR NONMETALLIC (STANDARD SPECIFICATION 652.2.3) CONDUIT SHALL BE FURNISHED AND PLACED AS SHOWN.

DEPTH OF CONDUIT INSTALLED BELOW THE TRAVELED WAY SHALL BE 24 INCHES MINIMUM AND 36 INCHES MAXIMUM.

DEPTH OF CONDUIT INSTALLED THAT IS NOT BELOW THE TRAVELED WAY SHALL BE 18 INCHES MINIMUM AND 36 INCHES MAXIMUM.

ANY EXCEPTION TO THE MAXIMUM DEPTH SHALL BE ONLY WITH THE WRITTEN APPROVAL OF THE ENGINEER.

THE TRENCH SHALL NOT BE BACKFILLED PRIOR TO INSPECTION OF THE CONDUIT.

ALL METALLIC CONDUIT RACEWAY ENDS SHALL BE REAMED AND THREADED.

ALL METALLIC CONDUIT IN WHICH WIRE OR CABLE IS TO BE INSTALLED SHALL BE BUSHED WITH APPROVED THREADED BUSHINGS BEFORE INSTALLATION OF THE WIRE OR CABLE.

ALL METALLIC CONDUITS IN WHICH WIRE OR CABLE IS NOT TO BE INSTALLED SHALL BE CAPPED WITH THREADED PROTECTIVE CAPS, AS APPROVED BY THE ENGINEER.

ALL NONMETALLIC CONDUIT SHALL BE CAPPED OR PLUGGED IMMEDIATELY AFTER INSTALLATION AND SHALL REMAIN CAPPED OR PLUGGED UNTIL WIRE/CABLES ARE INSTALLED.

NONMETALLIC CONDUITS IN WHICH WIRE OR CABLE IS NOT BEING INSTALLED SHALL REMAIN CAPPED OR PLUGGED.

BENDING OF PVC ELECTRICAL CONDUIT SHALL BE ACCOMPLISHED BY USING A BLANKET OR EMERSION TYPE TANK DESIGNED FOR THE PURPOSE OF BENDING PVC ELECTRICAL CONDUIT.

ALL CUT ENDS SHALL BE TRIMMED INSIDE AND OUTSIDE TO REMOVE ALL ROUGH EDGES ON NONMETALLIC CONDUIT. (SEE NEC 347.5)

WHEN REQUIRED TO CONNECT NONMETALLIC CONDUIT TO METALLIC CONDUIT, ONLY U.L. LISTED ADAPTER FITTINGS SHALL BE USED.

PRIOR TO CONDUIT ACCEPTANCE, CONDUIT CAPS OR PLUGS SHALL BE REMOVED, AND THE CAPS, PLUGS AND CONDUIT ENDS SHALL BE THOROUGHLY CLEANED AND THEN THE CAPS OR PLUGS REINSTALLED TO ENSURE THAT THE CAPS OR PLUGS CAN BE EASILY REMOVED IN THE FUTURE.

ALL CONDUIT BEING FURNISHED AND INSTALLED SHALL HAVE THE U.L. LABEL FIRMLY ATTACHED.

CONDUIT RUNS SHALL BE THE SAME SIZE OF CONDUIT FROM ONE END TO THE OTHER (FROM PULL BOX TO PULL BOX-OR-JUNCTION BOX TO JUNCTION BOX-OR-BASE TO BASE, ETC.).

TRACER WIRE SHALL BE INSTALLED AS STATED IN THE STANDARD SPECIFICATION, ITEM 652.3.1.1.

ALL CONDUIT RUNS SHALL BE STRAIGHT (WITHOUT BENDS) FROM PULL BOX TO PULL BOX, PULL BOX TO BASE AND BASE TO BASE AS SHOWN ON THE PLANS.

CONDUIT

STATE OF WISCONSIN
DEPARTMENT OF TRANSPORTATION

APPROVED
March, 2017 — DATE
/S/ Ahmet Demirbilek — STATE ELECTRICAL
FHWA

6

S.D.D. 9 B 2-10

TABLE OF NOMINAL DIMENSIONS AND WEIGHTS

DIMENSION IN INCHES		NON- CONDUCTIVE PULL BOX	
BOX DIAMETER ** (INSIDE)	A	24	24
BOX OVERALL OUTSIDE DIAMETER	B	27	27
BOX LENGTH	C	36	42
FRAME OPENING	D	22 ½	22 ½
WEIGHT IN POUNDS *			
COVER		50	50
BOX ONLY		75	85

* THE ACTUAL WEIGHT OF THE COVER OR BOX ONLY MAY VARY NOT TO EXCEED 100 LBS INDIVIDUALLY.

** DIAMETER VARIES FROM TOP TO BOTTOM WITH THE DIAMETER LARGER AT THE BOTTOM TO PREVENT FROST HEAVE.

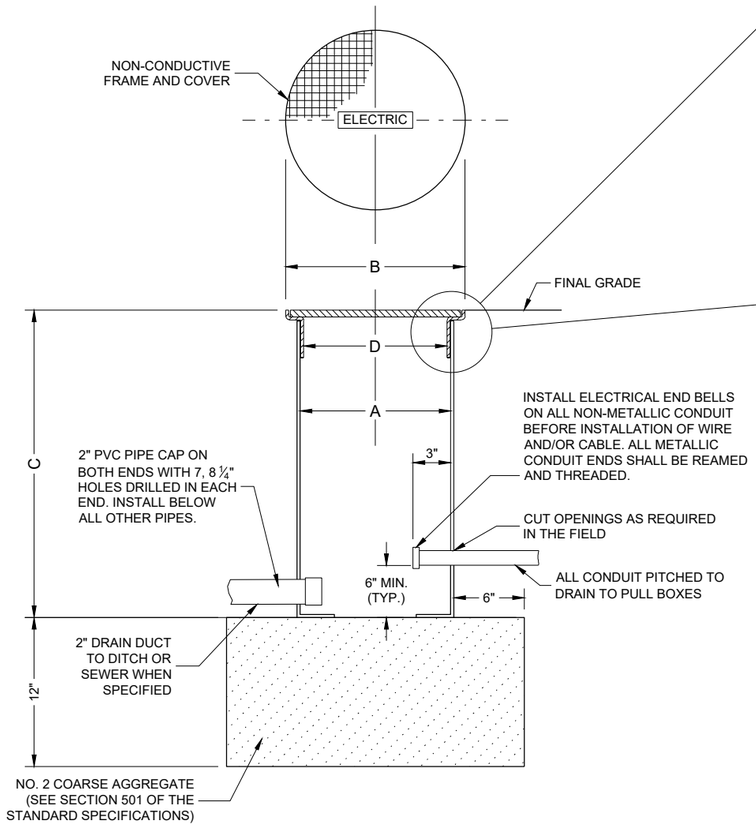

NON-CONDUCTIVE PULL BOX

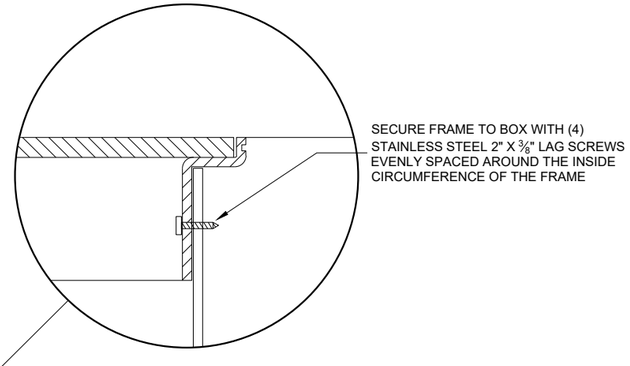

INSTALLED IN SOD OR CRUSHED AGGREGATE

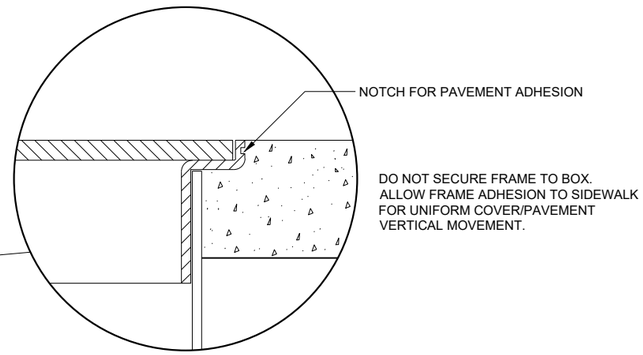

INSTALLED IN SIDEWALK

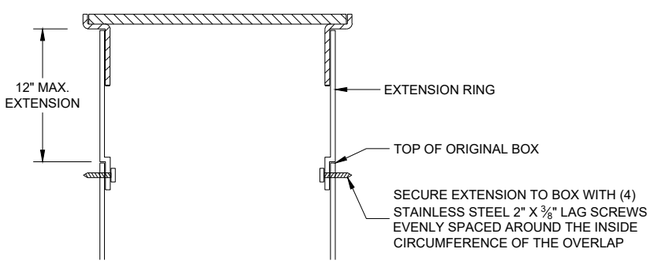

BOX EXTENSION

GENERAL NOTES

DETAILS OF CONSTRUCTION, MATERIALS AND WORKMANSHIP NOT SHOWN ON THIS DRAWING SHALL CONFORM TO THE PERTINENT REQUIREMENTS OF THE CONTRACT.

ALL BOXES, FRAMES AND COVERS SHALL BE SUITABLE FOR TIER 15 LOADING AS SPECIFIED IN ANSI/SCTE 77.

PROVIDE AN OPENING FOR TOOL ASSISTED COVER REMOVAL NOT LARGE ENOUGH TO PERMIT PASSAGE OF A SPHERE MORE THAN ½" DIAMETER

ENSURE COVER SURFACE IS SKID RESISTANT WITH A COEFFICIENT OF FRICTION OF AT LEAST 0.5 AND VERTICAL SURFACE DICONTINUITIES LESS THAN ¼".

COVER SHALL BE MAGNETICALLY LOCATABLE.

BOXES AND EXTENSIONS ARE TRIMMABLE FOR CUSTOM LENGTHS. TRIMMED PIECES SHALL MAINTAIN A UNIFORM LENGTH.

ENTRANCE HOLES INTO PULL BOXES SHALL BE CUT WITH A CIRCULAR HOLE SAW OR HYDRAULIC CONDUIT PUNCH. HOLE SIZE SHALL BE THE OUTSIDE DIAMETER OF THE CONDUIT THAT IS TO FIT IN THE OPENING PLUS NO MORE THAN ¼".

THE CONTRACTOR SHALL NOT INSTALL WIRE IN ANY PULL BOX UNTIL ITS INSTALLATION HAS BEEN INSPECTED AND ACCEPTED BY THE ENGINEER.

ALL METALLIC CONDUIT IN WHICH WIRE AND/OR CABLE IS TO BE INSTALLED, SHALL BE BUSHED BEFORE INSTALLATION OF THE WIRE AND/OR CABLE.

ENTIRE BOX MUST BE CONSTRUCTED OF NON-CONDUCTIVE MATERIALS WITH THE EXCEPTION OF STAINLESS STEEL FASTENERS AND MAGNETIC LOCATABLE DEVICE.

WHEN A PULL BOX IS INSTALLED IN CRUSHED AGGREGATE SHOULDERS, PLACE IT 2-3 INCHES BELOW GRADE AND COVER IT WITH 2-3 INCHES OF CRUSHED AGGREGATE.

LABEL ON COVER SHALL READ "ELECTRIC" FOR SIGNAL AND LIGHTING SYSTEMS, "WISDOT ITS" FOR COMMUNICATIONS AND ITS EQUIPMENT SYSTEMS.

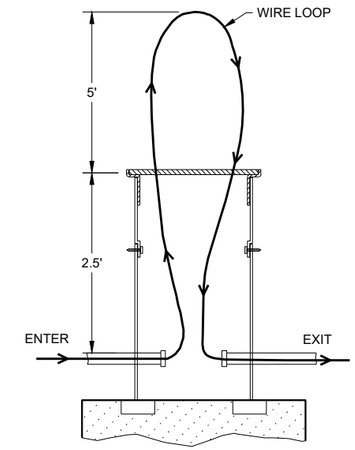

MEASUREMENT DETAIL FOR WIRE/CABLE IN THE PULL BOX

6

SDD 09B16 - 02

PULL BOXES NON-CONDUCTIVE

STATE OF WISCONSIN
DEPARTMENT OF TRANSPORTATION

APPROVED
May 2022
DATE

/S/ Ahmet Demirbilek
STATE ELECTRICAL ENGI

FHWA

FORM DEPTH SHALL BE NO MORE THAN 6" BELOW GRADE ON THE LOWER SIDE OF BASE

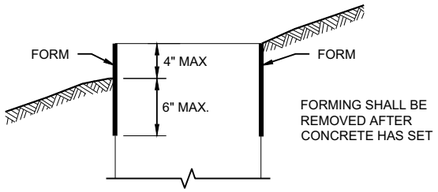

FORMING DETAIL

QUANTITY REQUIREMENTS	CONCRETE BASE TYPE		
	1	2	5 & 6
APPROX. CUBIC YARDS OF CONCRETE	0.40	0.57	0.40
LBS. OF HOOP BAR STEEL	NONE	23	16
LBS. OF VERTICAL BAR STEEL	NONE	60	18

GENERAL NOTES

DETAILS OF CONSTRUCTION, MATERIALS AND WORKMANSHIP NOT SHOWN ON THIS DRAWINGSHALL CONFORM TO THE PERTINENT REQUIREMENTS OF THE CONTRACT.

BASES SHALL BE EXCAVATED BY USE OF A CIRCULAR AUGER.

TOP SURFACES OF CONCRETE BASES SHALL BE TROWEL FINISHED SMOOTH AND LEVEL.

CONDUIT SIZES AND LOCATIONS SHALL BE SHOWN ON THE PLANS

THE FINAL OR TERMINATING CONCRETE BASE IN A CONDUIT RUN SHALL HAVE A 6" EXIT STUB INSTALLED FOR FUTURE CABLING USE. THE EXIT STUB SHALL BE SIZED AS USED THROUGHOUT THE CONDUIT RUN AS SHOWN A THE ENTRANCE OF THE BASE.

ENDS OF CONDUIT INSTALLED BELOW GRADE FRO FUTURE USE SHALL BE CAPPED IF METALLIC OR PLUGGED IF NON-METALLIC.

MINIMUM BENDING RADIUS OF CONDUIT IS EQUAL TO 6X THE DIAMETER.

CONDUIT HEIGHT ABOVE CONCRETE BASES SHALL BE 1 INCH. ALL METALLIC CONDUIT ENDS SHALL BE REAMED AND THREADED.

ALL CONDUIT ENDS AT THE TOP OF CONCRETE BASES SHALL BE CAPPED IF METALLIC OR PLUGGED IF NON-METALLIC IMMEDIATELY AFTER PLACEMENT AND BEFORE CONCRETE IS POURED. CONDUITS IN WHICH WIRE OR CABLE IS NOT INSTALLED SHALL REMAIN CAPPED OR PLUGGED.

BELL ENDS SHALL BE INSTALLED ON ALL PVC CONDUIT EXPOSED AT THE TOP OF CONCRETE BASES BEFORE INSTALLATION.

WHEN REQUIRED TO CONNECT NON-METALLIC CONDUIT TO METALLIC CONDUIT, ONLY ADAPTER FITTINGS, U.L. LISTED FOR ELECTRICAL USE, SHALL BE USED.

IF A BASE REQUIRES A DEEP FORM BECAUSE OF LOOSE DIRT OR FILL, THE FORM SHALL BE REMOVED BEFORE BACKFILLING AROUND THE BASE. BACKFILL SHALL BE TAMPED TIGHT AGAINST THE BARE CONCRETE BASE IN LAYERS OF 1 FOOT OR LESS.

A NO. 4 AWG STRANDED COPPER EQUIPMENT GROUNDING CONDUCTOR SHALL BE EXOTHERMICALLY WELDED TO THE EQUIPMENT GROUNDING ELECTRODE (GROUND ROD) FOR TYPE 2, TYPE 5 AND TYPE 6 BASES.

THE EQUIPMENT GROUNDING CONDUCTOR SHALL BE FURNISHED AND INSTALLED TO ENTER ALL BASE TYPES THROUGH A 1 INCH CONDUIT INSTALLED FOR GROUNDING PURPOSES, LEAVING A 4 FOOT COIL OF WIRE ABOVE THE CONCRETE BASE. THE EQUIPMENT GROUNDING CONDUCTOR SHALL BE NEATLY COILED AND THE COILS TIED TOGETHER.

ANCHOR RODS SHALL BE THREADED 12" IN LENGTH ON EACH END OF THE ROD. ANCHOR RODS SHALL BE MANUFACTURED IN ACCORDANCE WITH SECTION 654.2.1 OF THE STANDARD SPECIFICATIONS.

WASHERS AND LOCK WASHERS ARE REQUIRED ON ALL ANCHOR RODS.

WHEN ANCHOR RODS USING THE ALTERNATE "L" BEND ARE FURNISHED, THE 4 INCH"L" BEND SHALL BE IN ADDITION TO THE SPECIFIED ANCHOR ROD BAR LENGTH. THE "L" BEND SHALL NOT BE THREADED.

ANCHOR RODS SHALL BE INSTALLED WITH MISALIGNMENTS OF LESS THAN 1:40 FROM VERTICAL.

WELDING OF THE ANCHOR RODS TO THE CAGE IS UNACCEPTABLE. TIE WIRES SHALL BE USED.

BAR STEEL REINFORCEMENT SHALL BE COATED WITH POWDERED EPOXY RESIN IN ACCORDANCE WITH SECTION 505 OF THE STANDARD SPECIFICATIONS (LATEST EDITION).

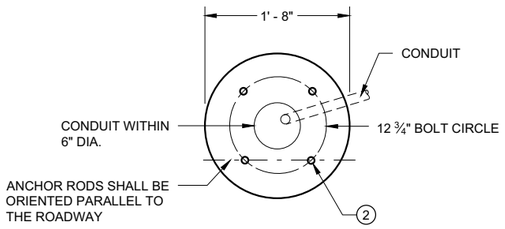

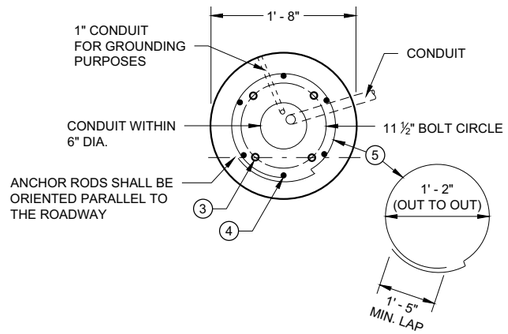

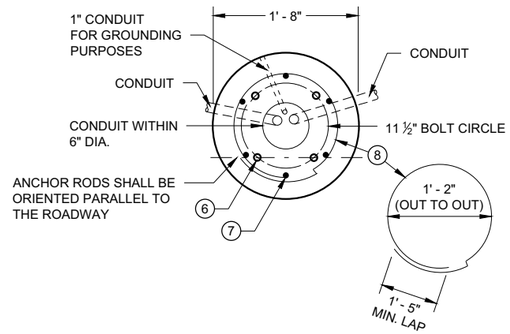

1 THE MINIMUM DEPTH OF CONDUIT EXITING THE CONCRETE BASE AND INSTALLED BELOW THE TRAVELED WAY SHALL BE 24 INCHES. THE MINIMUM DEPTH OF CONDUIT EXITING THE CONCRETE BASE THAT IS NOT INSTALLED BELOW THE TRAVELED WAY SHALL BE 18 INCHES. THE MAXIMUM DEPTH OF ALL CONDUIT SHALL BE 36 INCHES EXCEPT WITH WRITTEN APPROVAL OF THE ENGINEER.

2 (4) 1" DIA. X 3' - 6" ANCHOR RODS.

3 (4) 1" DIA. X 5' - 0" ANCHOR RODS.

4 (6) NO. 6 X 6' - 8" BAR STEEL REINFORCEMENT.

5 (7) NO. 4 X 5' - 1" BAR STEEL REINFORCEMENT @ 1' - 0" C - C.

6 (4) 1" DIA. X 3' - 6" ANCHOR RODS.

7 (6) NO. 4 X 4' - 8" BAR STEEL REINFORCEMENT.

8 (5) NO. 4 X 5' - 1" BAR STELL REINFORCEMENT @ 1' - 0" C -C.

9 EXOTHERMIC CONNECTION TO EUIPMENT GROUNDING CONDUCTOR

10 ⅝" DIA. X 8' -0" COPPERCLAD EQUIPMENT GROUNDING ELECTRODE REQUIRED

11 ANY ANCHOR ROD PROJECTION SHORTER THAN 2 ¾" OR LONGER THAN 3 ¼" SHALL REQUIRE THE BASE TO BE REMOVED AND REPLACED AT THE CONTRACTORS EXPENSE.

12 FOR NON - BREAKAWAY INSTALLATIONS, 4 ½" ± ANCHOR ROD PROJECTION WITH THE USE OF LEVELING NUTS. RODENT SCREEN REQUIRED.

HALF SECTION IN UNPAVED AREA
(TYPICAL FOR TYPES 1, 2, 5 & 6)

HALF SECTION IN PAVEMENT
(TYPICAL FOR TYPES 1, 2, 5 & 6)

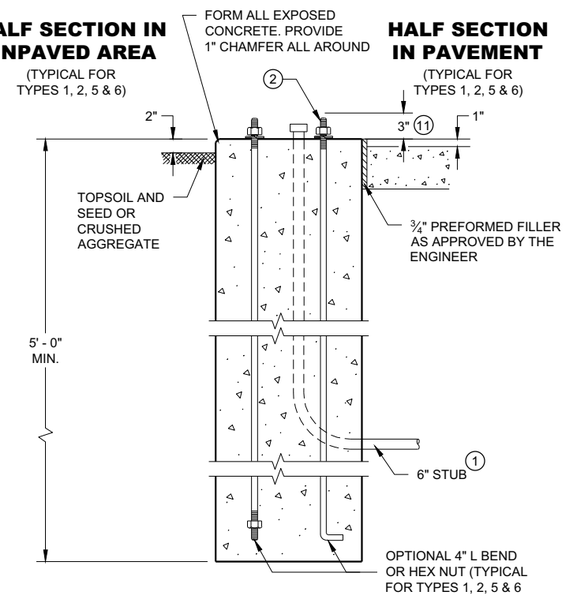

TYPE 1

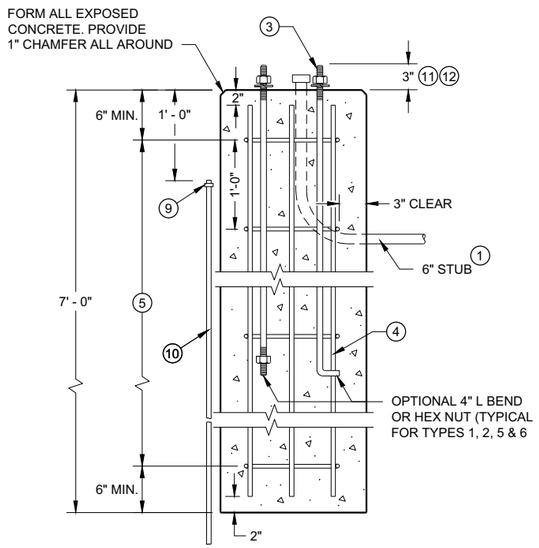

TYPE 2

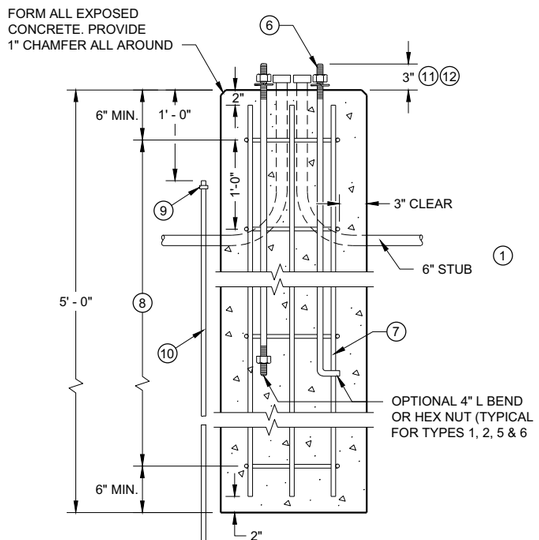

TYPE 5 & 6

CONCRETE BASES

CONCRETE BASES
TYPES 1, 2, 5, & 6

STATE OF WISCONSIN
DEPARTMENT OF TRANSPORTATION

APPROVED
May 2019
DATE
/S/ Ahmet Demirbilek
STATE ELECTRICAL ENGI

FHWA

GENERAL NOTES

DETAILS OF CONSTRUCTION, MATERIALS AND WORKMANSHIP NOT SHOWN ON THIS DRAWING SHALL CONFORM TO THE PERTINENT REQUIREMENTS OF THE CONTRACT.

FOUR (4) BOLTS SHALL BE FURNISHED WITH EACH TRANSFORMER BASE. BOLTS SHALL BE 1" DIAMETER, 4" IN LENGTH, WITH WASHERS, LOCK WASHERS AND NUTS. BOLTS, NUTS AND WASHERS SHALL BE MANUFACTURED IN ACCORDANCE WITH SECTION 531.2.2 OF THE STANDARD SPECIFICATIONS.

LEVELING SHIMS, IF NEEDED, SHALL BE DESIGNED FOR THE PURPOSE AND USED UNDER CAST BASES WHEN PLUMBING POLES OR STANDARDS DURING INSTALLATION. THE USE OF WASHERS IN LIEU OF PROPER LEVELING SHIMS IS NOT ACCEPTABLE.

SHIM LENGTH SHALL BE LONG ENOUGH TO COMPLETELY COVER THE AREA UNDER THE LENGTH AND WIDTH OF THE BASE MOUNTING FLANGE.

DOUBLE NUTTING IS NOT ACCEPTABLE FOR LEVELING OR MOUNTING PURPOSES.

A NEMA APPROVED, U.L. LISTED, COPPER WITH BRASS OR STAINLESS STEEL SET SCREW, DIRECT BURY RATED, MECHANICAL CONNECTOR (LUG), SIZED TO ACCEPT AWG. #10 TO #4 COPPER STRANDED WIRE SHALL BE FURNISHED AND INSTALLED IN THE PEDESTAL AND TRANSFORMER BASES.

THE MECHANICAL CONNECTOR SHALL BE INSTALLED USING A 1/4" - 20 (TPI) STAINLESS STEEL HEX HEAD BOLT OF SUFFICIENT LENGTH TO FIRMLY ATTACH THE LUG TO THE BASE.

SHOULD THE MANNER OF ATTACHMENT OF THE LUG REQUIRE WASHERS, HEX NUTS, LOCK WASHER - THEY SHALL BE STAINLESS STEEL AS IS THE BOLT. THE MANNER OF ATTACHMENT SHALL NOT BLOCK ACCESSIBILITY TO WIRE PLACEMENT IN THE CONNECTOR.

PEDESTAL BASE COLLAR THREADING SHALL BE TAPERED AND IN ACCORDANCE WITH NATIONAL PIPE THREADING DIMENSIONS.

BASE COLLAR THREADING SHALL EXTEND INTO THE BASE COLLAR WITH SUFFICIENT DEPTH TO ACCEPT THE INSTALLATION OF TRAFFIC SIGNAL STANDARDS TO A DEPTH OF 1 1/2", THEN TIGHTENING TO A POINT OF BEING IMMOVABLE.

THE ACCESS DOOR SHALL BE OF THE SAME MATERIAL AS THE BASE.

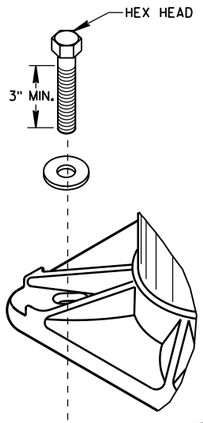

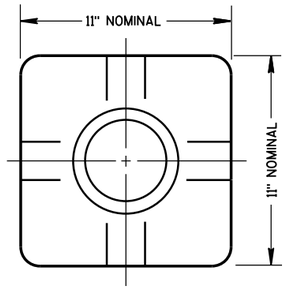

TOP VIEW
(PEDESTAL BASE)

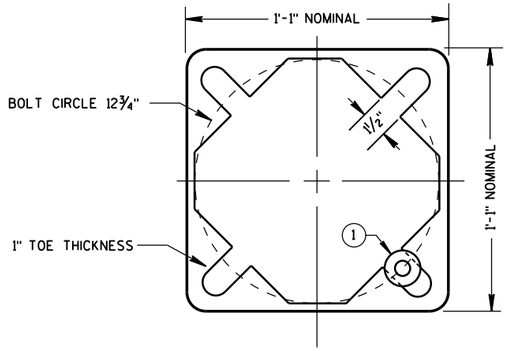

BOTTOM VIEW
(PEDESTAL BASE)

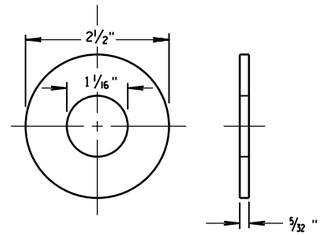

ZINC COATED STEEL WASHER
TO BE PROVIDED BY THE CONTRACTOR

PEDESTAL BASE WASHER (1)

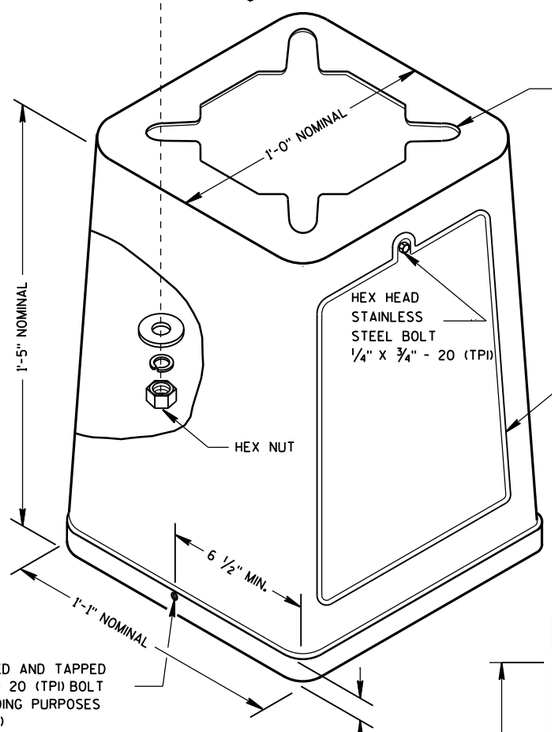

ISOMETRIC VIEW

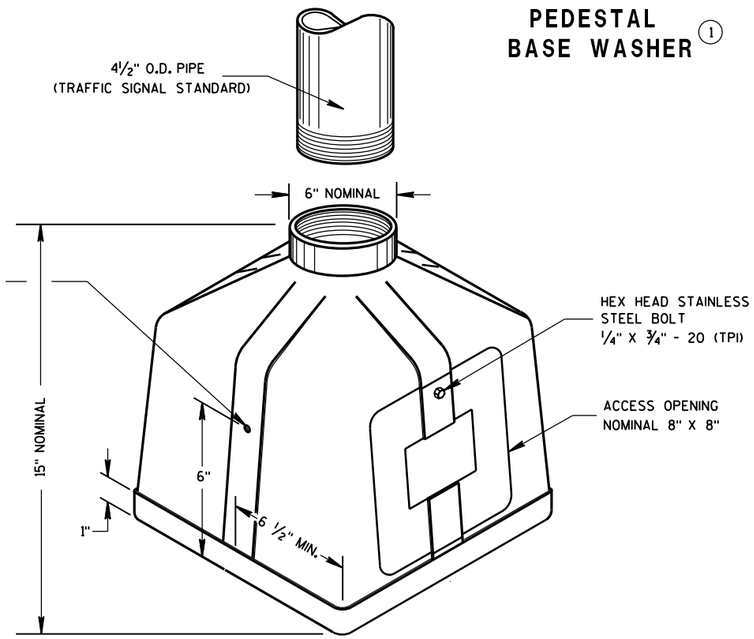

ISOMETRIC VIEW

PEDESTAL BASE

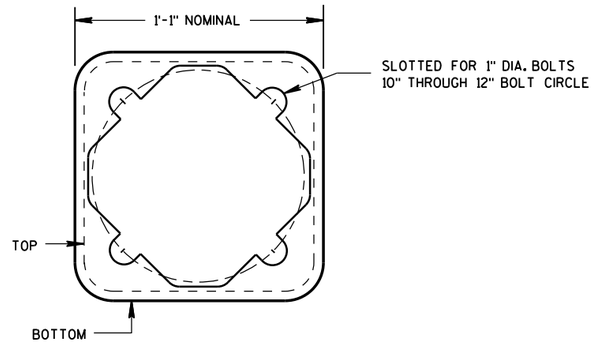

BOTTOM VIEW
(TRANSFORMER BASE)

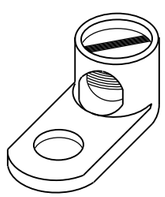

TYPICAL MECHANICAL CONNECTOR LUG

TO BE FURNISHED WITH EACH BASE

TRANSFORMER BASE

INTENDED FOR USE WITH TYPE 2, 3, 4, 5 & 6 POLES

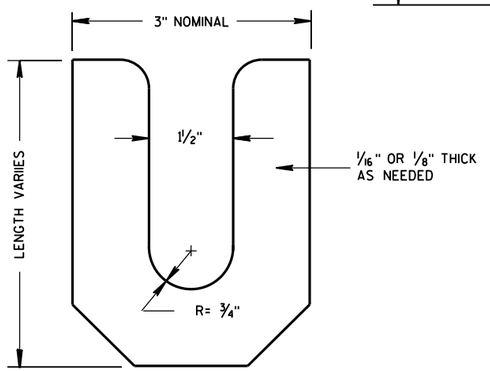

LEVELING SHIM

TRANSFORMER/PEDESTAL BASES

STATE OF WISCONSIN
DEPARTMENT OF TRANSPORTATION

APPROVED
Sept. 2014 — DATE
/S/ Ahmet Demirbilek — STATE ELECTRICAL
FHWA

6

S.D.D. 9 C 3-4

6

S.D.D. 9 C 3-4

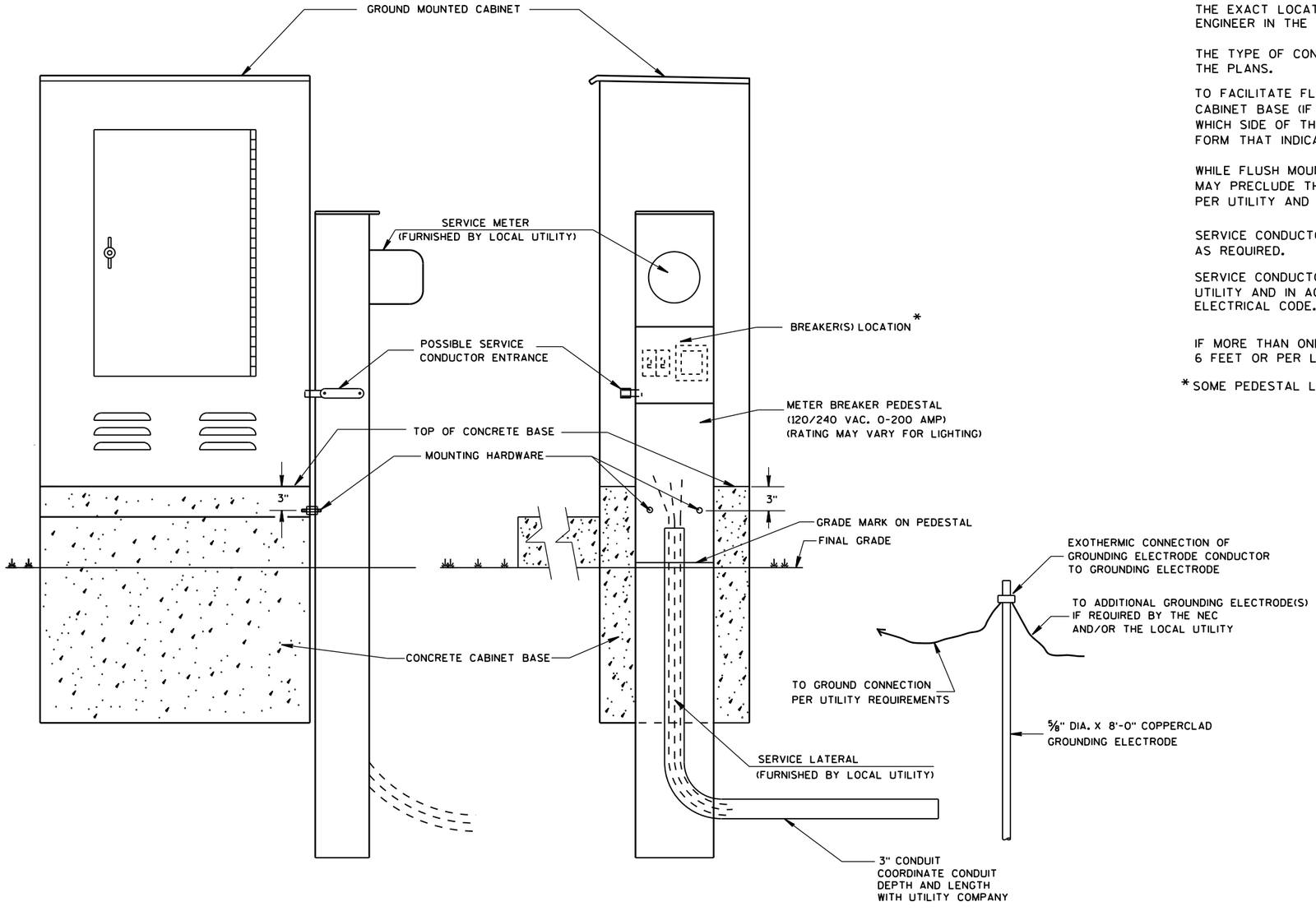

TYPICAL CABINET SERVICE INSTALLATION

GENERAL NOTES

DETAILS OF CONSTRUCTION, MATERIALS AND WORKMANSHIP NOT SHOWN ON THIS DRAWING SHALL CONFORM TO THE PERTINENT REQUIREMENTS OF THE CONTRACT.

THE EXACT LOCATION OF THE METER BREAKER PEDESTAL SHALL BE DETERMINED BY THE ENGINEER IN THE FIELD.

THE TYPE OF CONCRETE CABINET BASE TO BE INSTALLED SHALL BE AS CALLED FOR IN THE PLANS.

TO FACILITATE FLUSH MOUNTING OF THE METER BREAKER PEDESTAL AGAINST THE SIDE OF THE CABINET BASE (IF FLUSH MOUNTING POSSIBLE. CONFER WITH THE LOCAL UTILITY TO DETERMINE WHICH SIDE OF THE CONCRETE BASE THE ELECTRICAL SERVICE LATERAL WILL APPROACH. THEN FORM THAT INDICATED SIDE FOR FULL SIDE DEPTH.

WHILE FLUSH MOUNTING IS THE MOST DESIRABLE MOUNTING CONFIGURATION UTILITY REQUIREMENTS MAY PRECLUDE THIS OPTION. CONTRACTOR MUST PROVIDE UTILITY APPROVED PEDESTAL AND INSTALL PER UTILITY AND MANUFACTURERS REQUIREMENTS.

SERVICE CONDUCTOR ENTRANCES SHALL BE RIGID METALLIC CONDUIT, NIPPLES AND/OR CONDULETS AS REQUIRED.

SERVICE CONDUCTOR ENTRANCES SHALL BE SIZED AND LOCATED AS REQUIRED BY THE LOCAL UTILITY AND IN ACCORDANCE WITH APPROPRIATE ARTICLES OF THE LATEST ACCEPTED NATIONAL ELECTRICAL CODE.

IF MORE THAN ONE GROUNDING ELECTRODE IS REQUIRED, THE DISTANCE APART SHALL BE 6 FEET OR PER LOCAL UTILITY REGULATIONS.

* SOME PEDESTAL LIGHTING PLANS SHOW MAIN LUGS ONLY.

6

S.D.D. 9 D 1-5

6

S.D.D. 9 D 1-5

CABINET SERVICE INSTALLATION (METER BREAKER PEDESTAL)

STATE OF WISCONSIN
DEPARTMENT OF TRANSPORTATION

APPROVED
Sept. 2014
DATE

/S/ Ahmet Demirbilek
STATE ELECTRICAL

FHWA

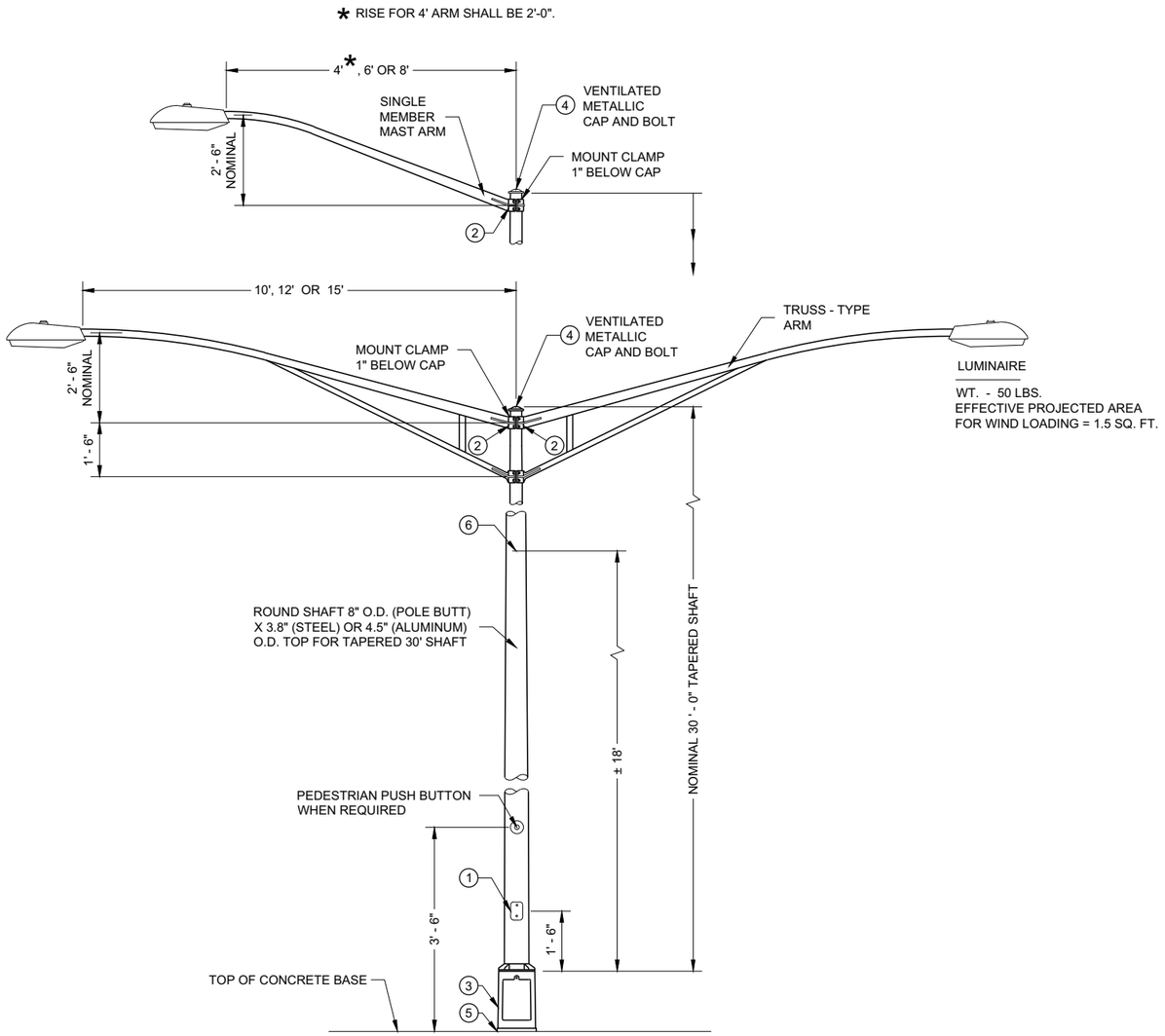

TYPE 5 POLE MOUNTING CONFIGURATION
(MAXIMUM LOAD)
LIGHTING ONLY

GENERAL NOTES

DETAILS OF CONSTRUCTION, MATERIALS AND WORKMANSHIP NOT SHOWN ON THIS DRAWING SHALL CONFORM TO THE PERTINENT REQUIREMENTS OF THE CONTRACT.

SECTION 657, POLES, OF THE STANDARD SPECIFICATIONS SHALL APPLY TO THIS DRAWING.

ALL TYPE 5 POLE MOUNTINGS SHALL BE DESIGNED TO INCLUDE TWIN 15' ARMS WITH LUMINAIRES.

POLES SHALL BE GALVANIZED STEEL OR ALUMINUM, AS CALLED FOR IN THE CONTRACT.

TYPE 5 ALUMINUM POLES SHALL BE CONSTRUCTED OF 6063 - T6 ALUMINUM ALLOY. SLEEVING INSIDE THE POLE IS NOT ACCEPTABLE.

TYPE 5 ALUMINUM POLES SHALL HAVE A MINIMUM WALL THICKNESS OF 0.1888".

TYPE 5 STEEL POLES SHALL HAVE A MINIMUM WALL THICKNESS OF U.S. STANDARD 11 GAGE (0.1196").

THE SLIPFITTER END OF THE LUMINAIRE MAST ARM SHALL BE A NOMINAL 2 ⅜ INCHES IN OUTSIDE DIAMETER. THE STRAIGHT PORTION OF THE SLIPFITTER END OF THE LUMINAIRE MAST ARM SHALL BE A NOMINAL 12 INCHES IN LENGTH.

WHEN TRANSFORMER BASES ARE USED, WIRE CONNECTIONS SHALL BE MADE IN THE TRANSFORMER BASE.

(1) 4" X 6" REINFORCED HANDHOLE AND COVER ASSEMBLY WITH TWO (2) ¼" X ¾" - 20 TPI , STAINLESS STEEL, HEX HEAD BOLTS.

(2) GROMMETS. 1" CHASE NIPPLES OR 1" CLOSE CONDUIT NIPPLES WITH BUSHINGS SHALL BE PROVIDED FOR 1 ⅜" HOLE IN POLE SHAFT FOR WIRING.

(3) CAST ALUMINUM TRANSFORMER BASE, WHEN REQUIRED.

(4) FURNISH AND INSTALL VENTILATED, CAST METALLIC (ALUMINUM ALLOY) CAPS. FASTEN CAPS WITH ONE (1) ¼" X ¾" - 20 TPI STAINLESS STEEL, HEX HEAD BOLT.

(5) SHIMMING, IF NEEDED, SHALL BE LOCATED BETWEEN THE CONCRETE FOUNDATION AND POLE.

(6) INTERNAL DUMBBELL - TYPE VIBRATION DAMPER.

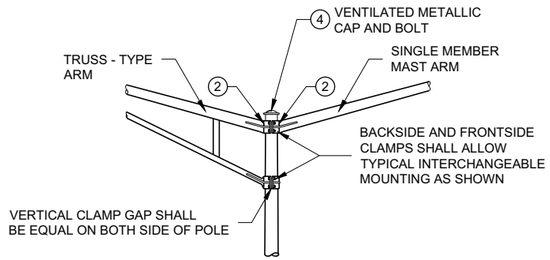

INTERCHANGEABLE MOUNTING DETAIL

POLE MOUNTINGS FOR LIGHTING UNITS, TYPE 5 (30 FEET)

6
SDD 09E01 - 15d

GENERAL NOTES

DETAILS OF CONSTRUCTION, MATERIALS AND WORKMANSHIP NOT SHOWN ON THIS DRAWING SHALL CONFORM TO THE PERTINENT REQUIREMENTS OF THE CONTRACT.

THE EQUIPMENT GROUND CONNECTOR SHALL BE TAPED WITH 3 WRAPS (MINIMUM) OF APPROVED RUBBER TAPE AND 3 WRAPS (MINIMUM) OF APPROVED VINYL TAPE TO COVER SHARP WIRE ENDS AFTER THE CONNECTION IS COMPLETED.

WHEN TRANSFORMER BASES ARE USED, ALL WIRING CONNECTIONS SHALL OCCUR WITHIN THE TRANSFORMER BASES.

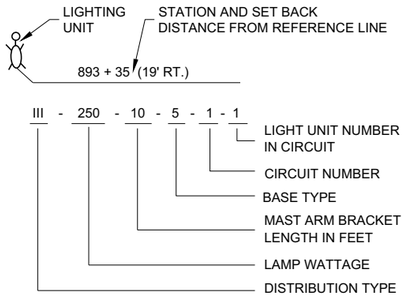

LIGHTING UNIT CODE
(TYPICAL)

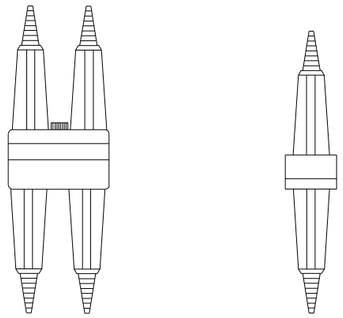

DETAIL "A"
BREAKAWAY DOUBLE POLE WITH WATERPROOF INSULATING BOOT

DETAIL "B"
BREAKAWAY SINGLE POLE WITH WATERPROOF INSULATING BOOT

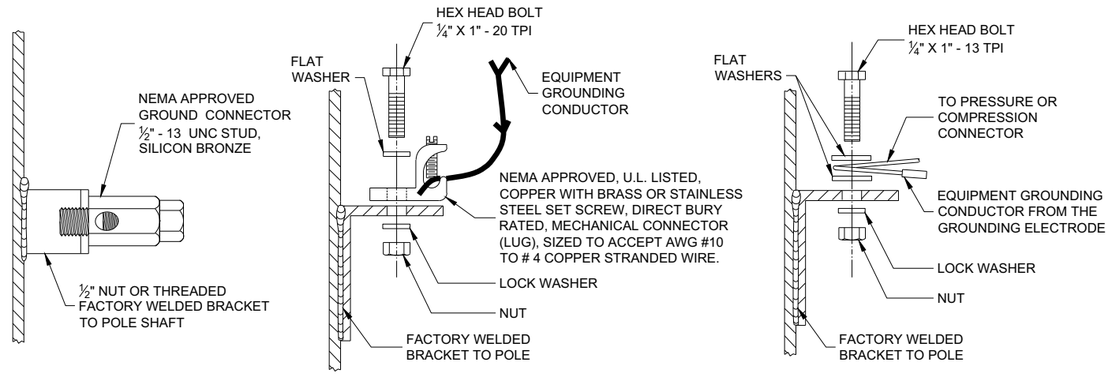

TYPICAL GROUNDING CONNECTIONS
NUT, BOLT AND WASHERS SHALL BE STAINLESS STEEL

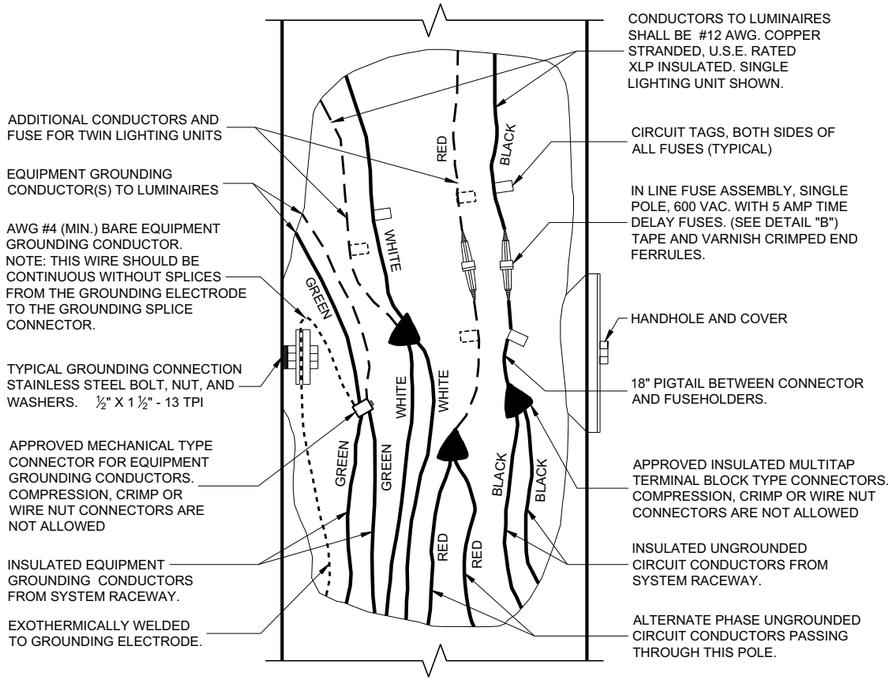

3 WIRE - 120, 240 OR 480 VAC (UNGROUNDED CONDUCTORS) WITH GROUNDING CONDUCTOR AND EQUIPMENT GROUNDING CONDUCTOR

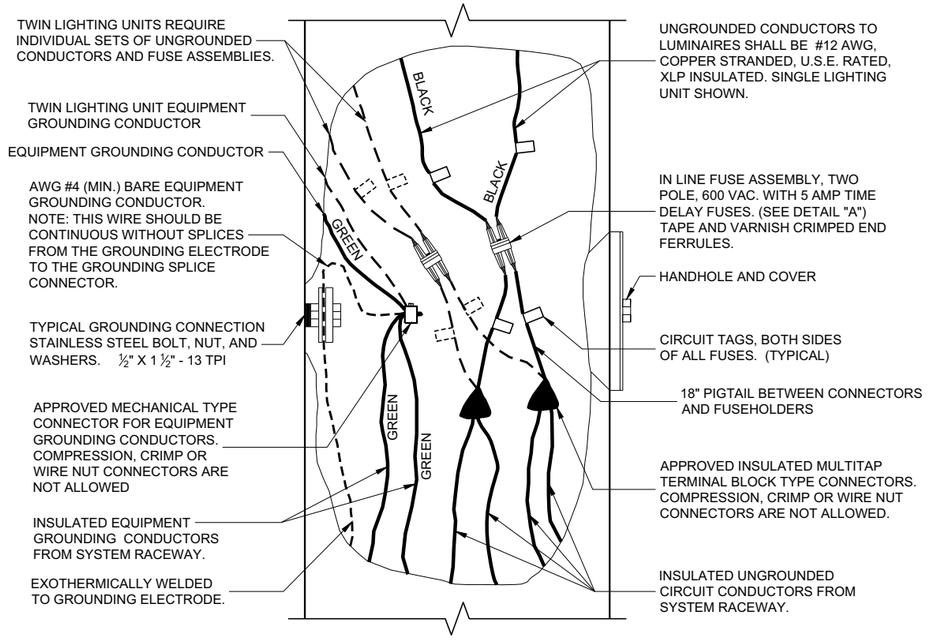

2 WIRE - 240 OR 480 VAC (UNGROUNDED CONDUCTORS) WITH EQUIPMENT GROUNDING CONDUCTOR

NON - FREEWAY LIGHTING UNIT POLE WIRING

STATE OF WISCONSIN
DEPARTMENT OF TRANSPORTATION

APPROVED
November 2018
DATE
/S/ Ahmet Demirbilek
STATE ELECTRICAL ENGI

FHWA

6
SDD 09E03 - 06

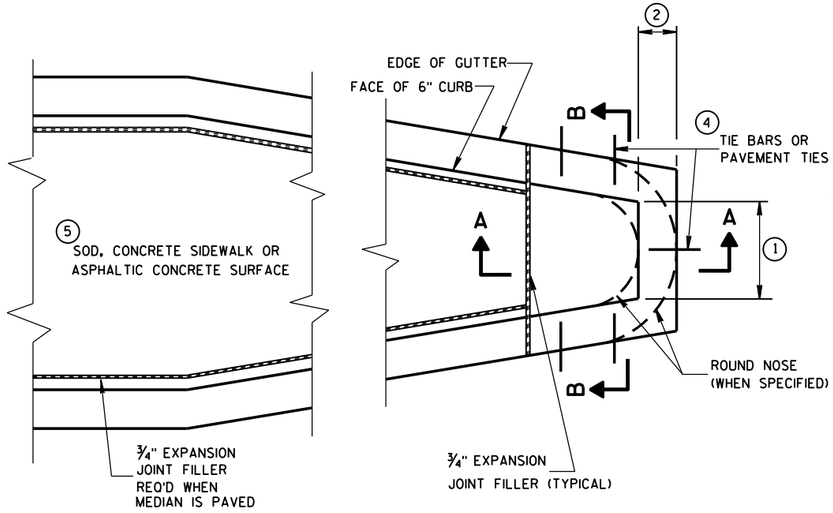

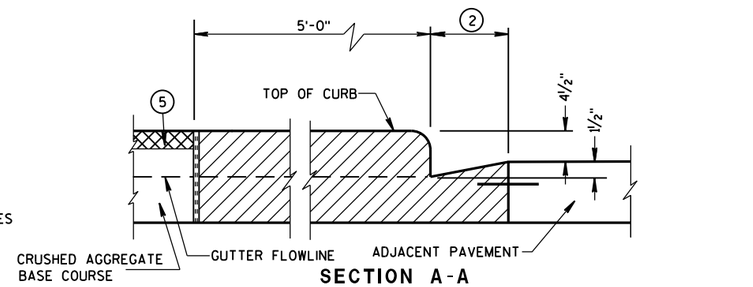

SECTION A-A

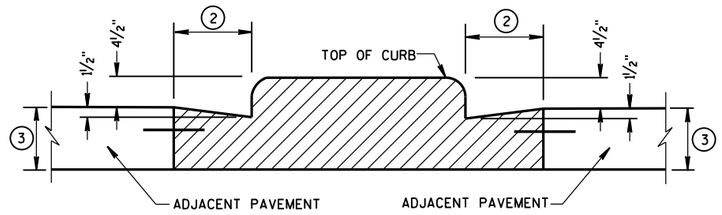

SECTION B-B

CONCRETE MEDIAN BLUNT NOSE DETAIL

GENERAL NOTES

DETAILS OF CONSTRUCTION, MATERIALS AND WORKMANSHIP NOT SHOWN ON THIS DRAWING SHALL CONFORM TO THE PERTINENT REQUIREMENTS OF THE STANDARD SPECIFICATIONS AND THE APPLICABLE SPECIAL PROVISIONS.

(1) SEE PLAN FOR MEDIAN NOSE WIDTH AND RADIUS (FOR ROUND NOSE ALTERNATE).

(2) WIDTH OF GUTTER TO MATCH EXISTING ADJACENT GUTTER OR AS SPECIFIED ELSEWHERE IN THE PLAN.

(3) DEPTH EQUAL TO ADJACENT PAVEMENT. ADJACENT PAVEMENT STRUCTURE DETAILS ARE SHOWN ON THE PLAN. TYPICAL OPTIONS ARE:

(1) NEW OR EXISTING CONCRETE PAVEMENT.

(2) ASPHALTIC CONCRETE PAVEMENT OVER NEW OR EXISTING CONCRETE BASE COURSE.

(3) ASPHALTIC CONCRETE PAVEMENT OVER CRUSHED AGGREGATE BASE COURSE.

(4) TIE BARS OR PAVEMENT TIES REQUIRED IN NEW CONCRETE PAVEMENT OR CONCRETE BASE COURSE. TIE BARS SHALL BE NO. 4 X 2'-0" SPACED AT 2'-0" C-C.

PAVEMENT TIES REQUIRED IN EXISTING CONCRETE BASE COURSE. PAVEMENT TIES SHALL BE NO. 6 X 1'-0" SPACED AT 3'-0" C-C INSTALLED ON A HORIZONTAL SKEW OF 6:1. THE DIRECTION OF SKEW SHALL ALTERNATE AFTER EVERY ONE OR TWO BARS.

(5) SURFACE TYPE AND DETAILS ARE SHOWN ELSEWHERE IN THE PLAN.

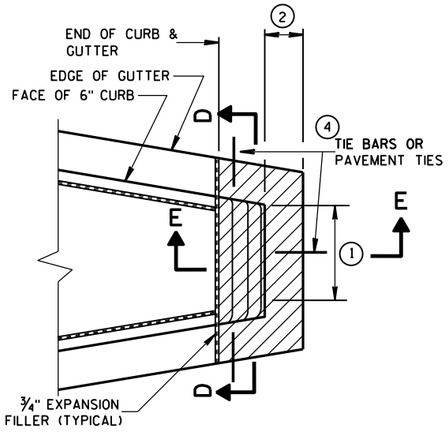

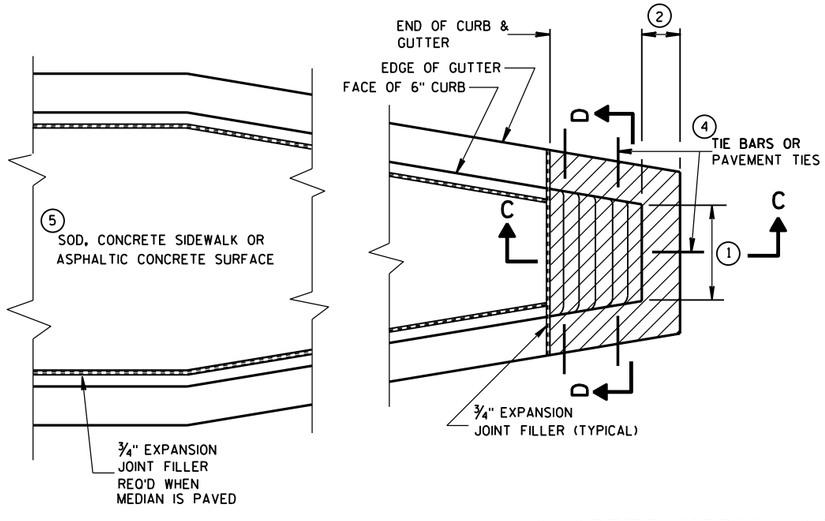

CONCRETE MEDIAN SLOPED NOSE TYPE 1

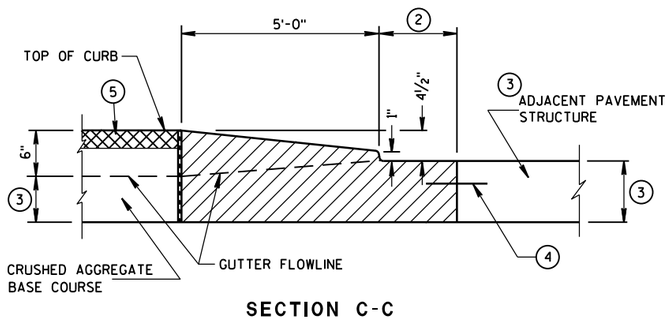

SECTION C-C

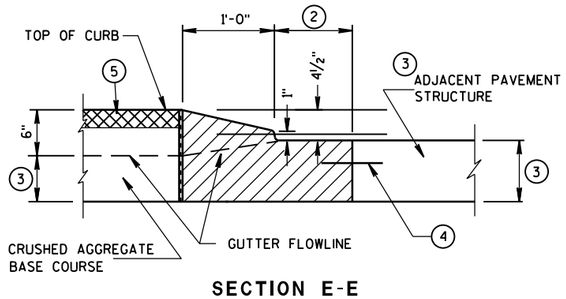

SECTION E-E

CONCRETE MEDIAN SLOPED NOSE TYPE 2

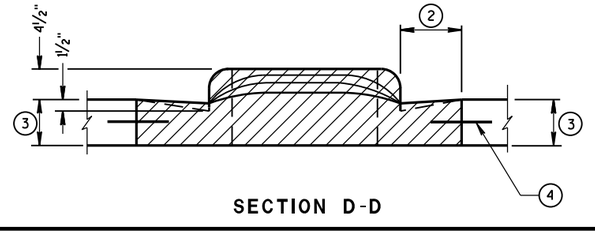

SECTION D-D

CONCRETE MEDIAN NOSE

STATE OF WISCONSIN
DEPARTMENT OF TRANSPORTATION

APPROVED

6/8/2006
DATE

/S/ Jerry H. Zogg
ROADWAY STANDARDS D ENGINEER

FHWA

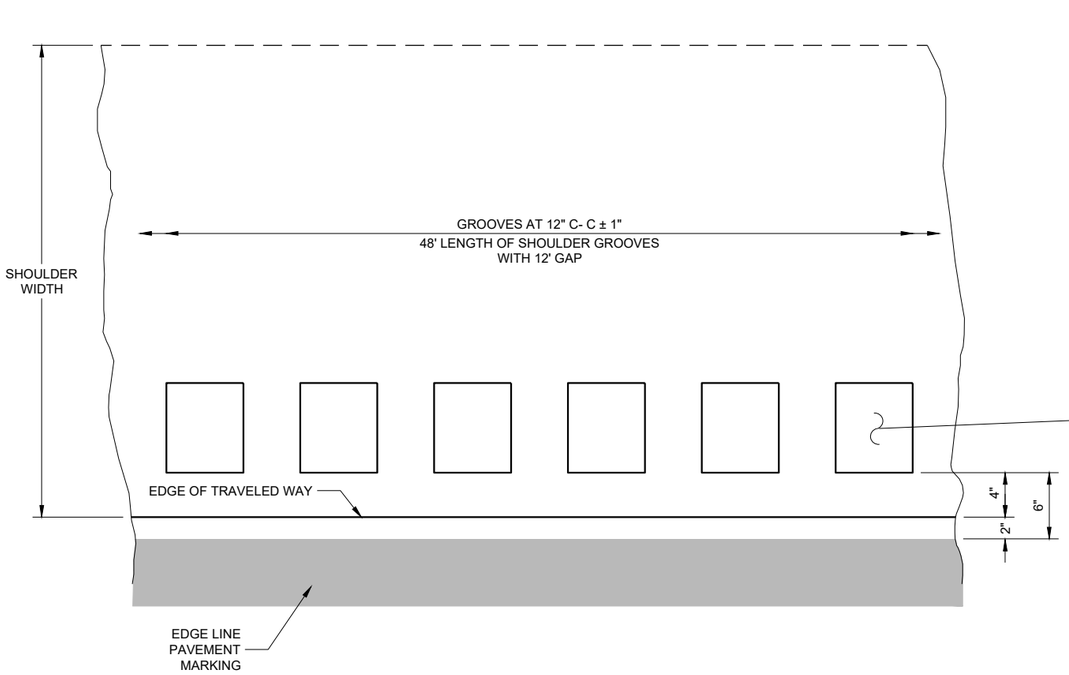

PLAN DETAIL VIEW
SHOULDER WITH GROOVES

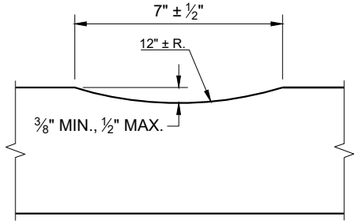

SECTION A - A

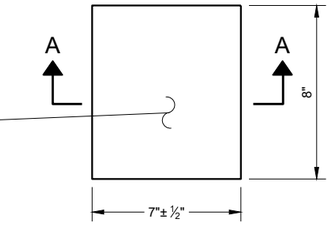

PLAN VIEW
(SINGLE GROOVE)

GENERAL NOTES

DO NOT MILL SHOULDER GROOVES THROUGH INTERSECTIONS, MARKED CROSSWALKS, NON-MOTORIZED PATH CROSSINGS, ETC. REFER TO SDD 13A10 SHEETS "g" AND "h".

SHOULDER GROOVES MAY BE OMITTED IN AREAS WITH HIGH CONCENTRATIONS OF DRIVEWAYS WHEN DIRECTED BY THE ENGINEER.

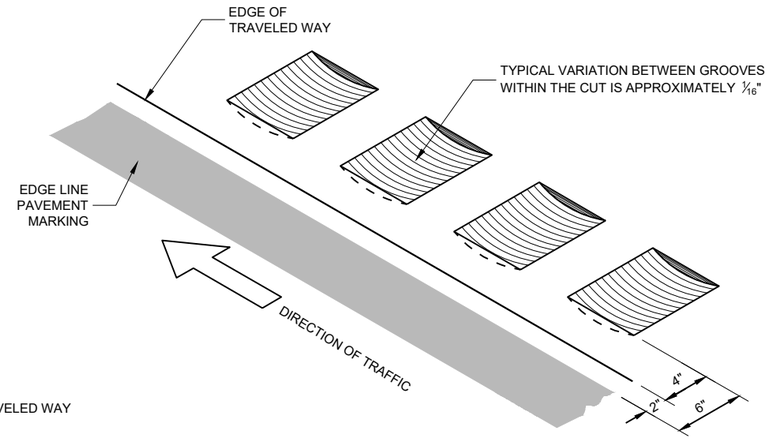

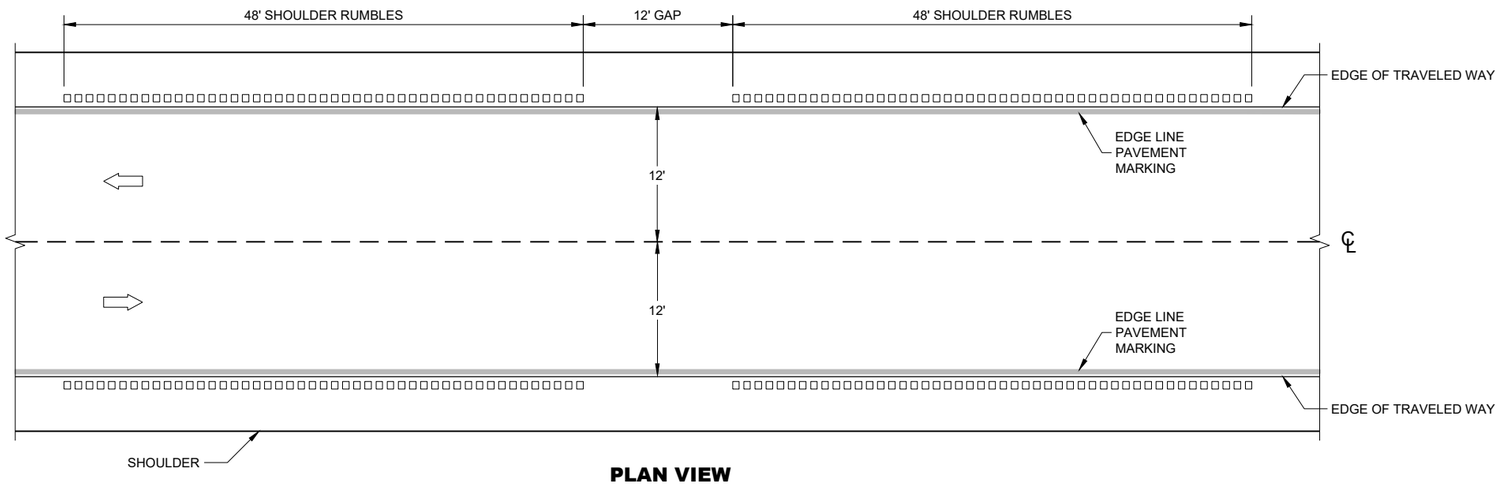

PLAN VIEW

SHOULDER RUMBLE STRIPS - ASPHALT

SHOULDER RUMBLE STRIPS ASPHALT

STATE OF WISCONSIN
DEPARTMENT OF TRANSPORTA

6

SDD 13A10 - 03a

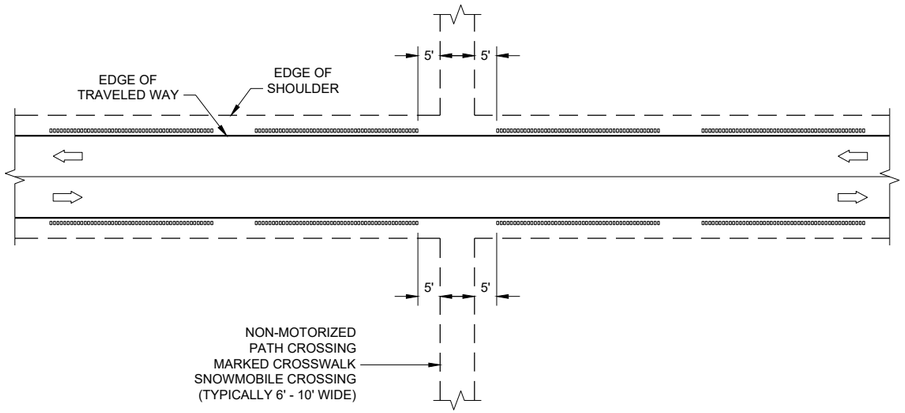

GROOVES AT MISCELLANEOUS CROSSINGS

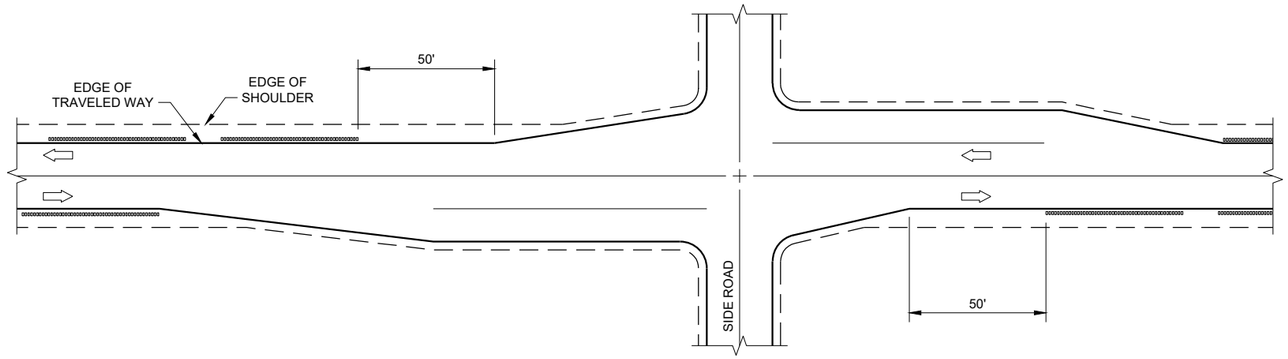

GROOVES AT RIGHT TURN LANE

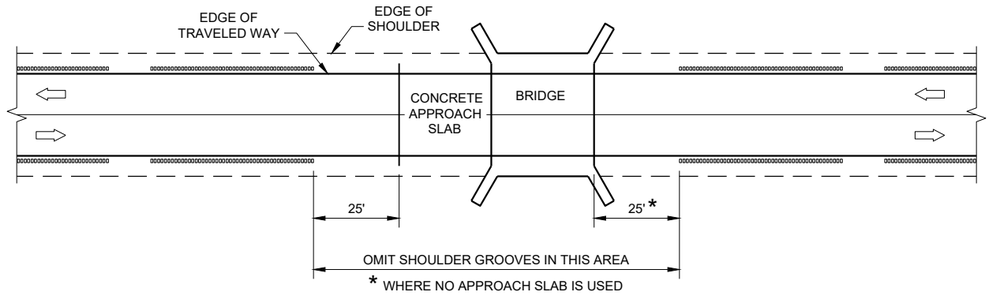

GROOVES AT BRIDGES

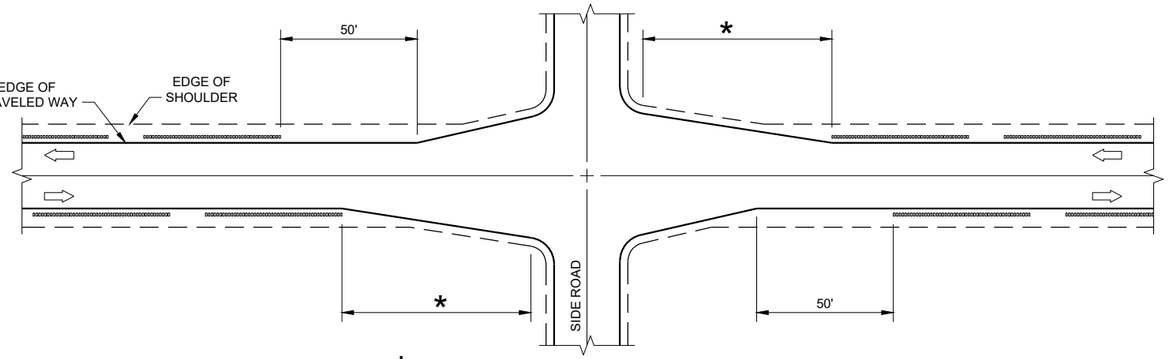

GROOVES AT INTERSECTIONS WITH APPROACH TAPER

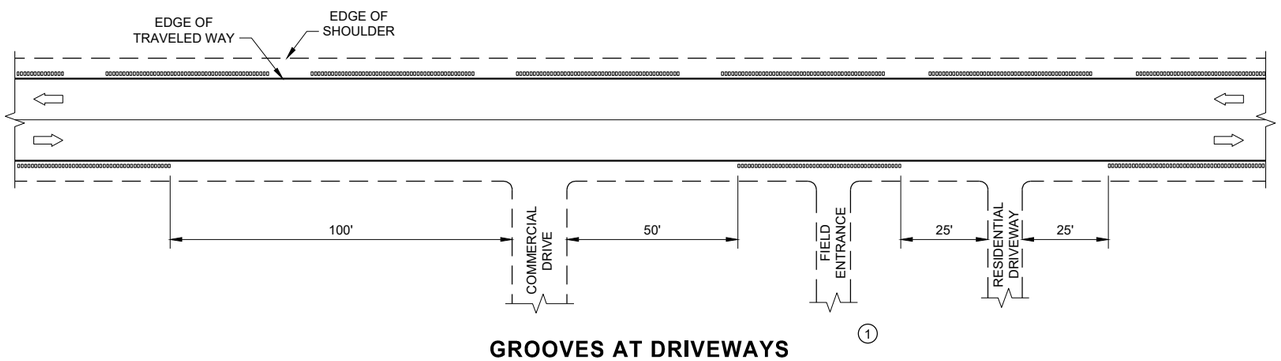

GROOVES AT DRIVEWAYS ①

GENERAL NOTES

① SHOULDER GROOVES MAY BE OMITTED IN AREAS WITH HIGH CONCENTRATIONS OF DRIVEWAYS. WHEN DIRECTED BY THE ENGINEER.

SHOULDER AND EDGE LINE RUMBLE STRIPS CROSSINGS, INTERSECTIONS, BRIDGES, DRIVEWAYS

STATE OF WISCONSIN
DEPARTMENT OF TRANSPORTA

6

SDD 13A10 - 03g

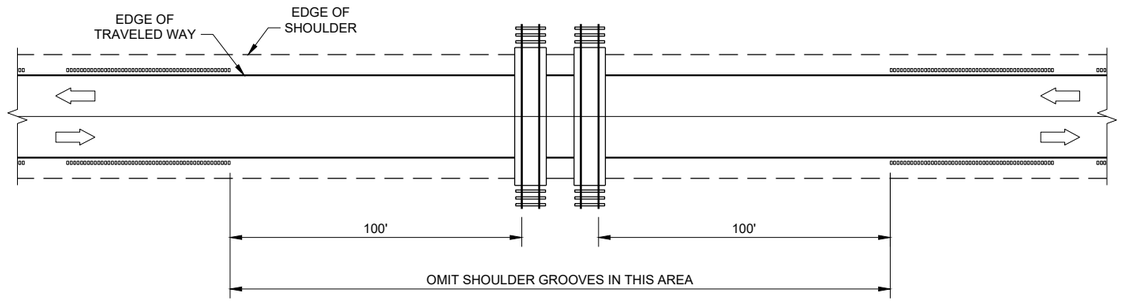

GROOVES AT RAILROADS

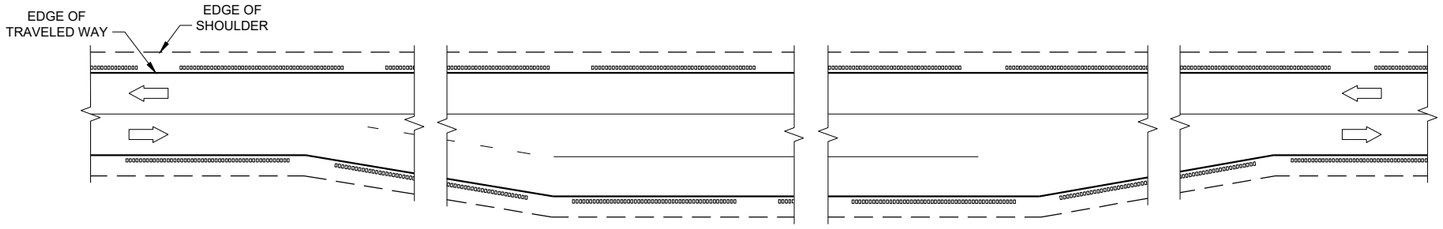

GROOVES AT PASSING AND CLIMBING LANES

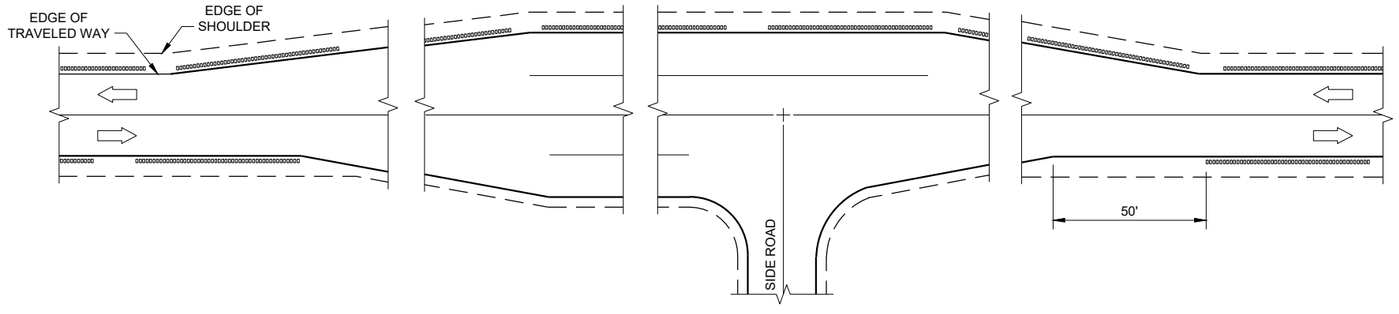

GROOVES AT BYPASS LANES

6

SDD 13A10 - 03h

SHOULDER AND EDGE LINE RUMBLE STRIPS - RAILROAD, PASSING, CLIMBING AND BYPASS LANES

STATE OF WISCONSIN
DEPARTMENT OF TRANSPORTATION

APPROVED

May 2023
DATE

/S/ John Jenkins
ROADWAY STANDARDS DEVE ENGINEER

FHWA

6

SDD 13A10 - 03h

GENERAL NOTES

DO NOT MILL SHOULDER GROOVES THROUGH INTERSECTIONS, MARKED CROSSWALKS, NON-MOTORIZED PATH CROSSINGS, ETC. REFER TO SDD 13A11 SHEETS "d" AND "e".

CENTERLINE GROOVES MAY BE OMITTED IN AREAS WITH HIGH CONCENTRATIONS OF DRIVEWAYS WHEN DIRECTED BY THE ENGINEER.

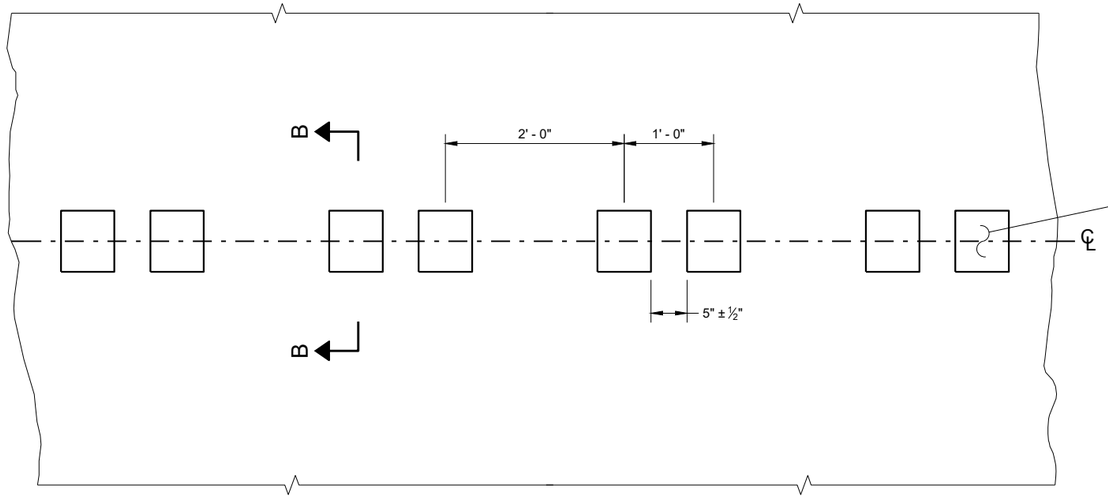

PLAN DETAIL VIEW

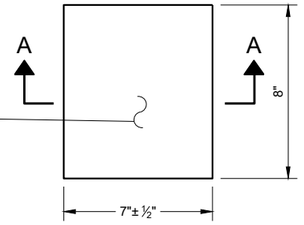

PLAN VIEW
(SINGLE GROOVE)

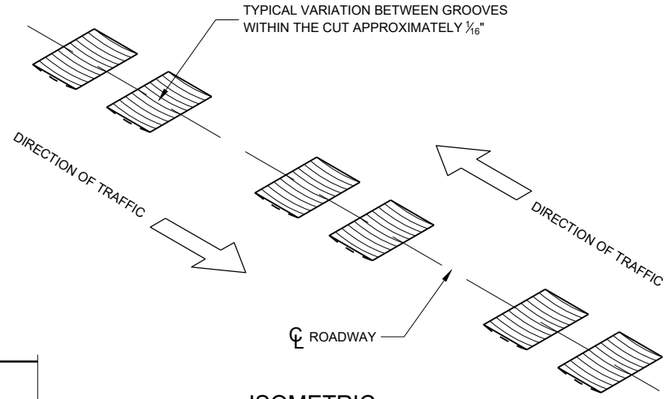

ISOMETRIC

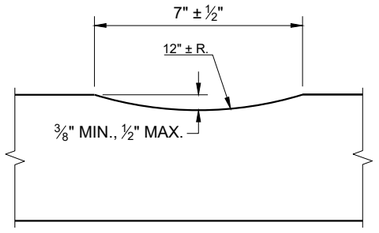

SECTION A - A

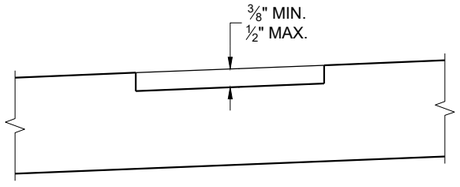

SECTION B - B
SUPERELEVATED ROADWAY

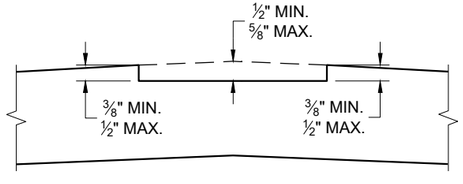

SECTION B - B
CROWNED ROADWAY

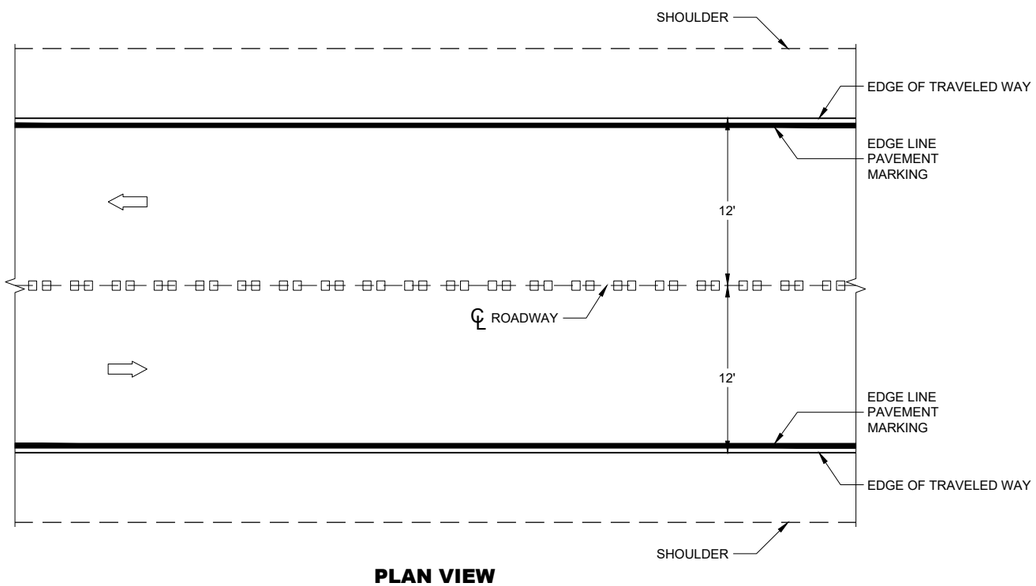

PLAN VIEW

CENTERLINE RUMBLE STRIPS - ASPHALT

CENTERLINE RUMBLE STRIPS - ASPHALT	
STATE OF WISCONSIN DEPARTMENT OF TRANSPORTA	160

6

SDD 13A11 - 04a

6

SDD13A11 - 04a

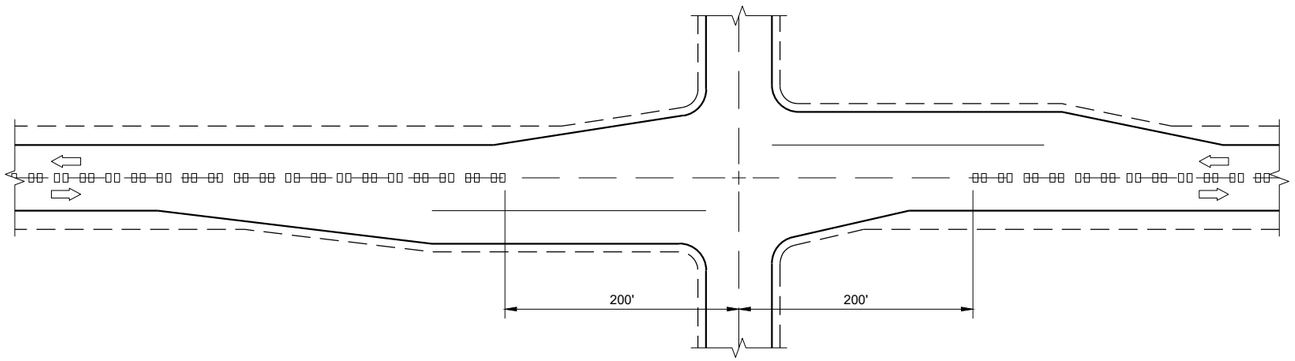

CENTERLINE GROOVES AT INTERSECTIONS

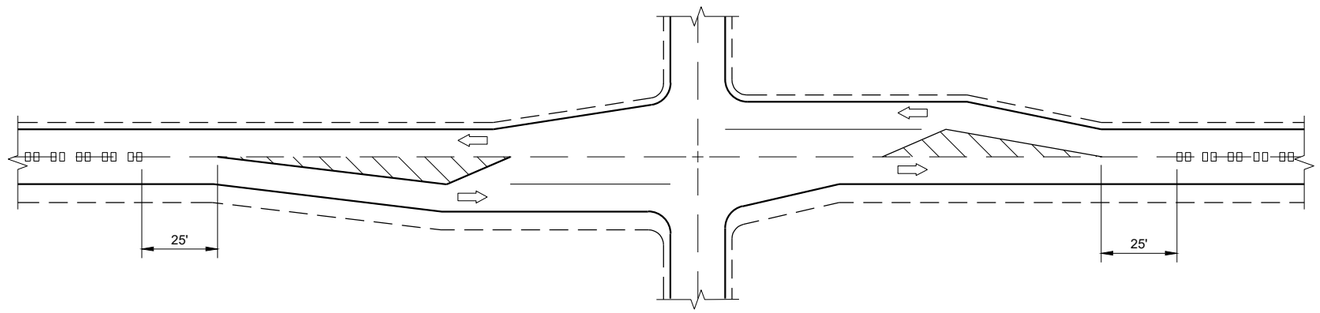

CENTERLINE GROOVES AT INTERSECTIONS (WITH LEFT TURN LANES)

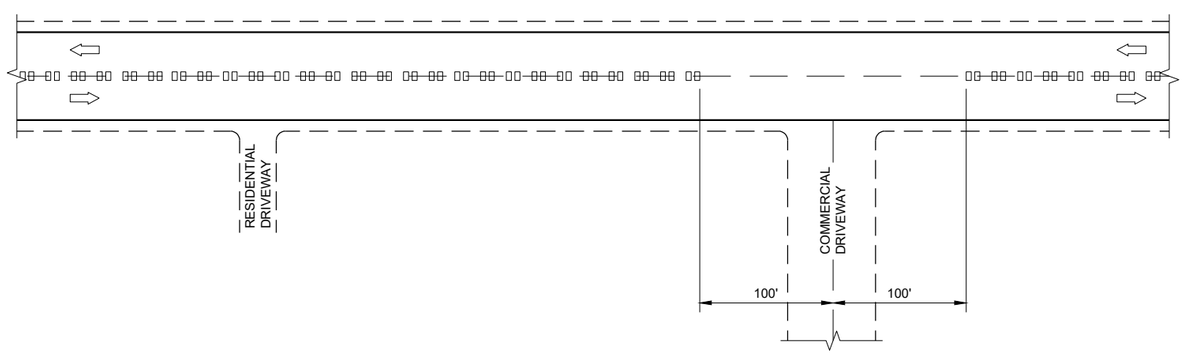

CENTERLINE GROOVES AT DRIVEWAYS (1)

GENERAL NOTES

(1) CENTERLINE GROOVES MAY BE OMITTED IN AREAS WITH HIGH CONCENTRATIONS OF DRIVEWAYS WHEN DIRECTED BY THE ENGINEER.

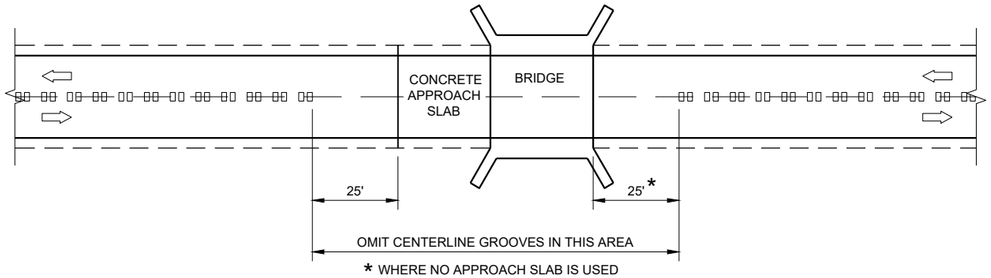

CENTERLINE GROOVES AT BRIDGES

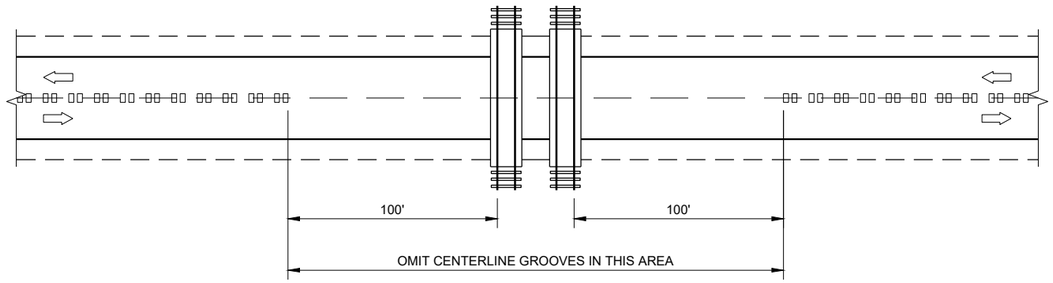

CENTERLINE GROOVES AT RAILROADS

CENTER LINE RUMBLE STRIPS - INTERSECTIONS, DRIVEWAYS, BRIDGES, RAIL ROADS

STATE OF WISCONSIN
DEPARTMENT OF TRANSPORTATION

APPROVED
May 2023 — DATE
/S/ John Jenkins — ROADWAY STANDARDS DEVE ENGINEER

FHWA

6

SDD 13A11 - 04d
SDD 13A11 - 04d

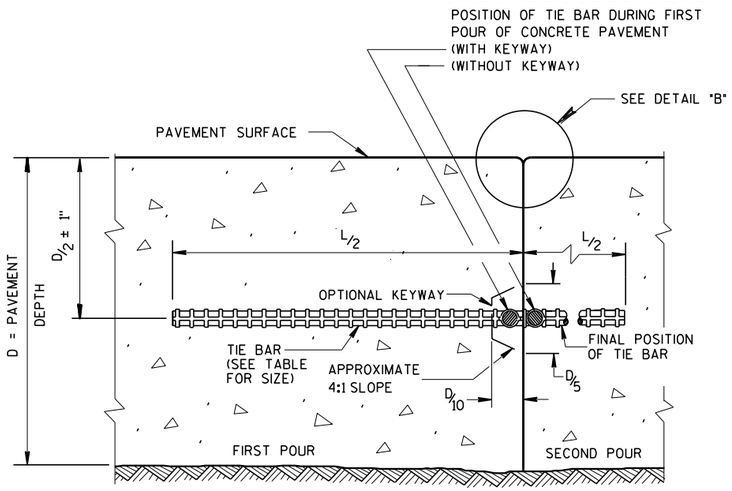

CONSTRUCTION JOINT

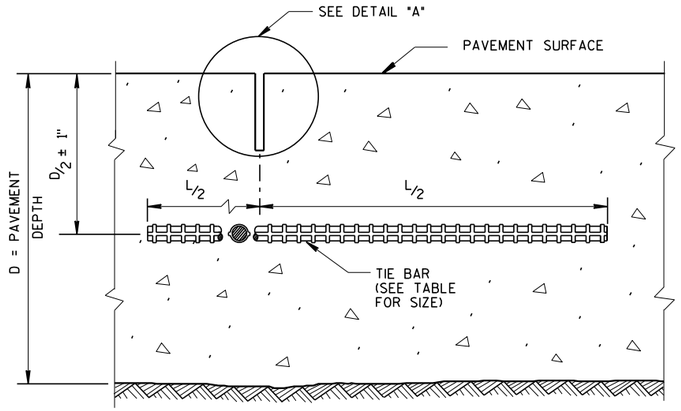

SAWED JOINT

GENERAL NOTES

CREATE A LONGITUDINAL JOINT FOR PAVEMENT WIDTHS GREATER THAN 15 FEET.

CORRELATE LONGITUDINAL JOINTS WITH LANE LINES WHEN POSSIBLE.

(1) ANCHOR TIE BARS INTO DRILLED HOLES WITH AN EPOXY.

(2) PAVEMENT THAT WAS IN PLACE PRIOR TO THE CONTRACT.

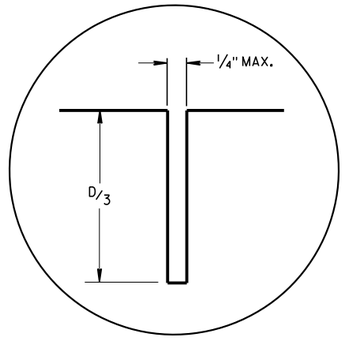

DETAIL "A"

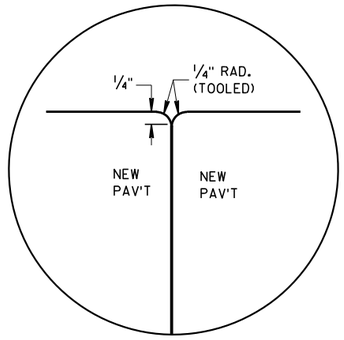

DETAIL "B"

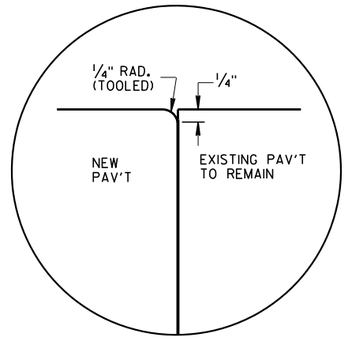

DETAIL "C"

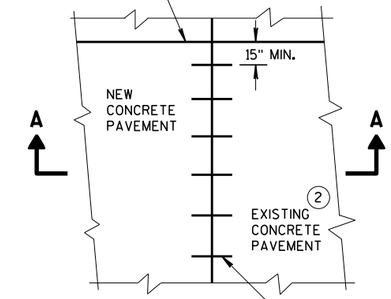

PLAN VIEW

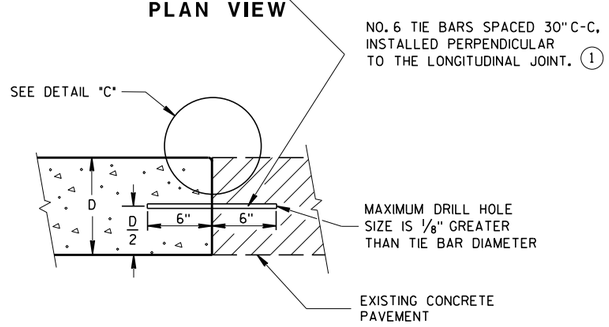

SECTION A-A
LONGITUDINAL CONSTRUCTION JOINT TIE BARS ANCHORED INTO EXISTING PAVEMENT

TIE BAR TABLE

PAVEMENT DEPTH (D)	TIE BAR SIZE	TIE BAR LENGTH (L)	MAX. TIE BAR SPACING
< 10 1/2"	NO. 4	30"	36"
≥ 10 1/2"	NO. 5	36"	36"
	NO. 4 *	30"	24" **

* SUBSTITUTE BENT BARS AT LONGITUDINAL JOINTS WHEN EQUIPMENT LIMITATIONS DURING CONSTRUCTION WARRANT (e.g. AUXILIARY LANES OR TURN LANES)

** CONFORM TO 15" MINUMUM SPACING FROM TRANSVERSE JOINTS; SPACING BETWEEN TIE BARS WILL BE 30" AT TRANSVERSE JOINTS.

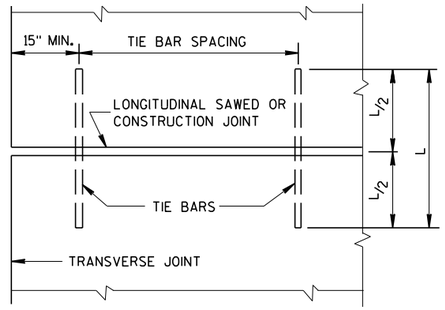

PLAN VIEW
SHOWING LOCATION OF TIE BARS

CONCRETE PAVEMENT LONGITUDINAL JOINTS AND TIES

STATE OF WISCONSIN
DEPARTMENT OF TRANSPORTATION

APPROVED
March 2018 — DATE
/S/ Peter Kemp PE — PAVEMENT SUPE
FHWA

6

S.D.D. 13 C 1-19

6

S.D.D. 13 C 1-19

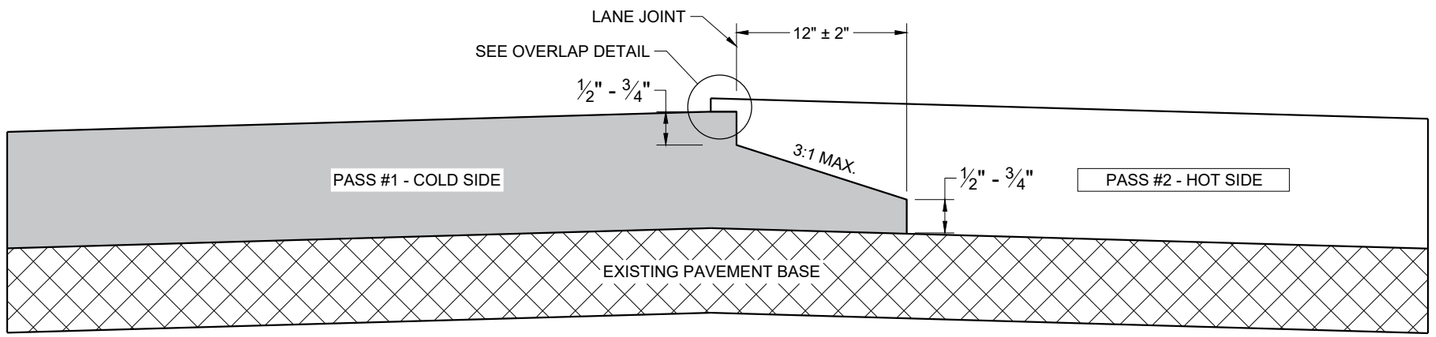

TYPICAL PAVEMENT CROSS SECTION
NOTCHED WEDGE JOINT

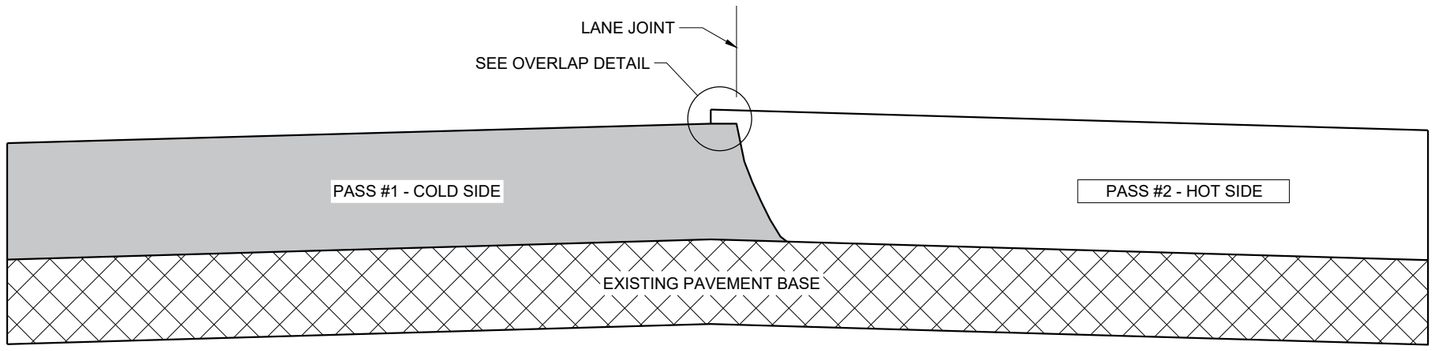

TYPICAL PAVEMENT CROSS SECTION
VERTICAL JOINT

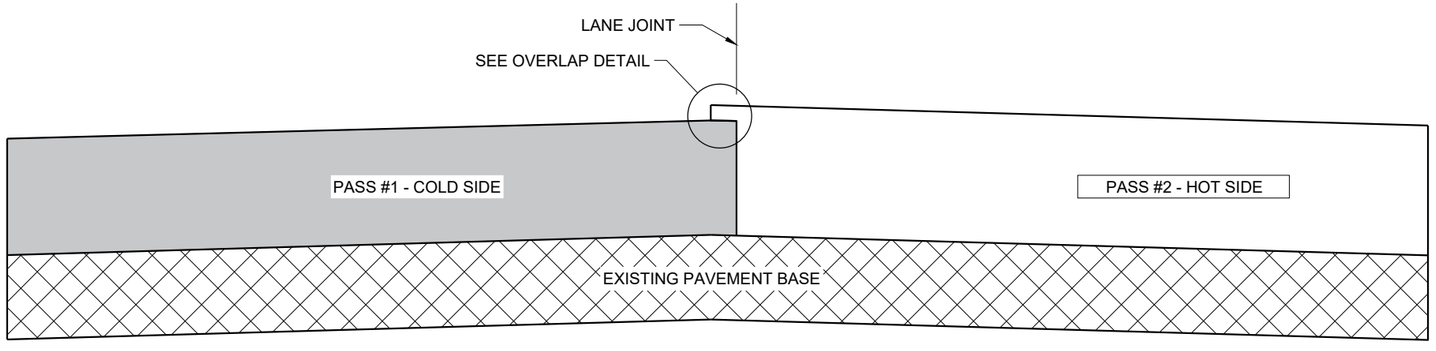

TYPICAL PAVEMENT CROSS SECTION
VERTICAL JOINT (MILLED)

GENERAL NOTES

IN ADDITION TO THE DETAILS PROVIDED IN THIS DRAWING, CONFORM TO STANDARD SPECIFICATION 450.3.2.8 FOR WHEN A NOTCHED WEDGE JOINT IS REQUIRED AND FOR GENERAL JOINT CONSTRUCTION REQUIREMENTS.

FOR ALL LONGITUDINAL JOINTS, ENSURE THE PAVER SCREED OVERLAPS THE PREVIOUSLY PLACED PAVEMENT BY 1" ± 0.5" AND THE HOT SIDE OF THE JOINT REMAINS HIGHER THAN THE COLD SIDE BY APPROXIMATELY 0.1" AFTER FINAL COMPACTION. (IT WILL BE FLUSH WHEN PAVING IN ECHELON.)

ONLY REMOVE THE LONGITUDINAL NOTCHED WEDGE JOINT FOR SMA PAVEMENT OR AS DIRECTED BY THE ENGINEER TO ADDRESS SPECIFIC LENGTHS OF JOINT DAMAGED BY TRAFFIC.

WHEN MILLING BACK OR REMOVING ANY LONGITUDINAL JOINT, LIMIT THE MATERIAL REMOVED TO 2" FROM THE TOP NOTCH OR FROM THE VERTICAL JOINT EDGE ON THE COLD SIDE OF THE JOINT.

USE LONGITUDINAL MILLED JOINT AS PLANS SHOW OR THE AS THE ENGINEER DIRECTS.

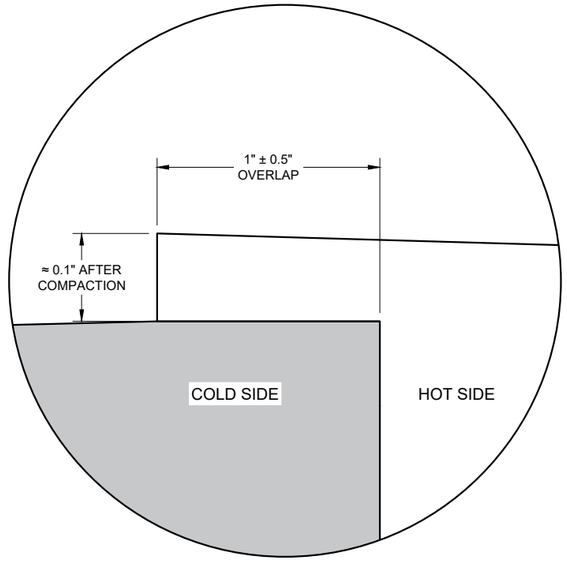

OVERLAP DETAIL (TYPICAL)

6

6

SDD 13C19 - 03

SDD 13C19 - 03

HMA LONGITUDINAL JOINTS

STATE OF WISCONSIN
DEPARTMENT OF TRANSPORTATION

APPROVED
November 2020
DATE

/S/ Steven Hefel
HMA PAVEMENT ENGIN

FHWA

(1) WOOD OR STEEL POSTS (w6X9 OR w6X8.5) MAY BE USED. DO NOT INTERMIX WOOD AND STEEL POSTS. INSTALL STEEL POSTS WITH HOLES ON APPROACHING TRAFFIC SIDE.

(2) USE WOOD OR APPROVED PLASTIC BLOCKOUTS. WOOD BLOCKOUTS MAY BE CONSTRUCTED OUT OF TWO OR MORE WOOD BLOCKOUTS. SEE ALTERNATE WOOD BLOCKOUT DETAIL. DIMENSIONS OF APPROVED PLASTIC BLOCKOUTS MAY VARY.

(3) IF ROCK IS ENCOUNTERED DURING EXCAVATION, PROVIDE A HOLE 12 INCHES IN DIAMETER EXTENDING 20 INCHES DEEP INTO THE ROCK. PLACE APPROXIMATELY 2 1/2" INCHES OF GRANULAR MATERIAL IN THE BOTTOM OF THE HOLE. CUT THE POSTS THE TO LENGTH AMD INSTALL. BACKFILL WITH EXCAVATED MATERIAL AND COMPACT. BACKFILL IS TO BE FREE OF LARGE ROCKS.

(4) WHEN THE DISTANCE FROM BACK OF POST TO SHOULDER HINGE POINT IS LESS THAN 2 FEET INSTALL LONGER POST AT HALF POST SPACING (K).

(5) FOR NEW MGS INSTALLATION TOP OF W-BEAM RAIL TOLERANCE IS ±1". FOR EXISTING MGS INSTALLATION TOP OF W-BEAM IS BETWEEN 27 ¾" TO 32".

(6) WHEN USING STEEL POST AND WOOD BLOCKOUTS INSTALL FOUR 16D GALVANIZED NAILS. INSTALL NAILS AT THE BACK CORNERS OF THE BLOCK AND BEND THE NAILS OVER THE FLANGE OF THE STEEL POST.

(7) TOTAL POST LENGTH FOR TYPE K IS 7' - 0".
TOTAL POST LENGTH FOR OTHER MGS TYPES IS 6' - 0".

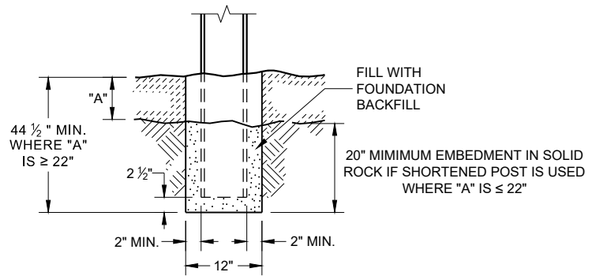

END VIEW
SETTING STEEL OR WOOD POST IN ROCK (3)

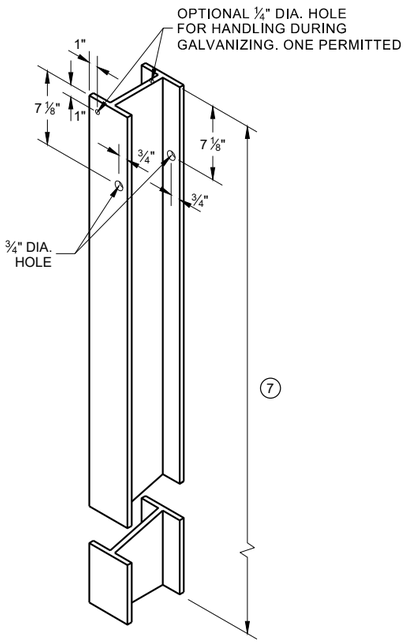

STEEL POST & HOLE PUNCHING DETAIL (W 6 X 9) (1)

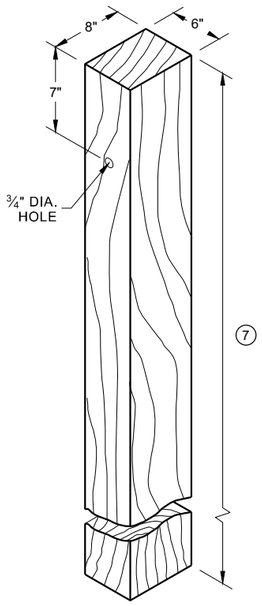

WOOD POST (6" X 8") NOMINAL (1)

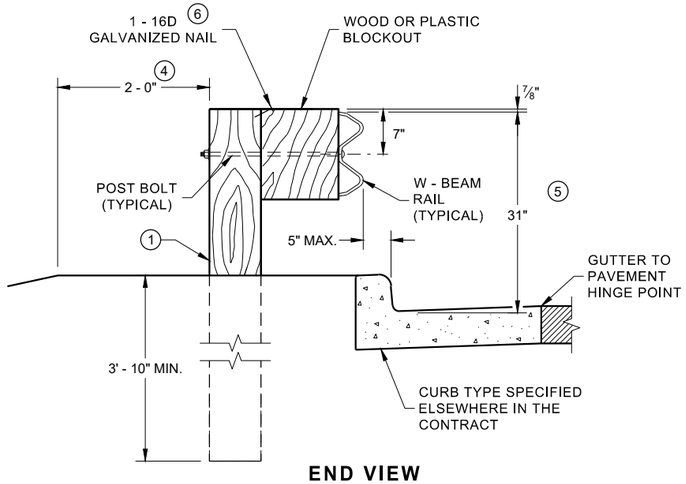

END VIEW
LOCATED ALONG A CURBED ROADWAY

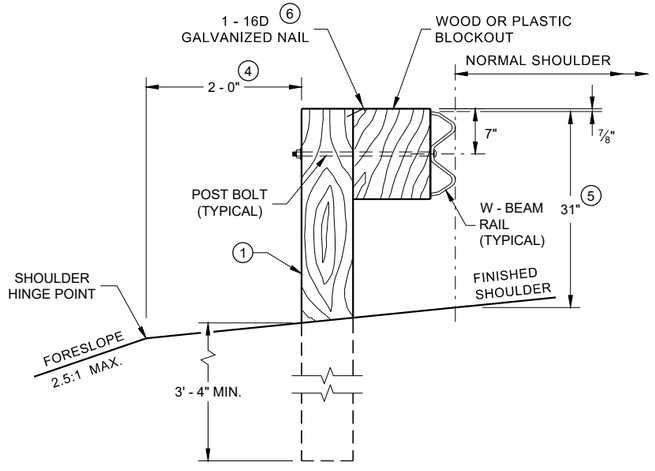

END VIEW
LOCATED ALONG A ROADWAY SHOULDER STANDARD INSTALLATION

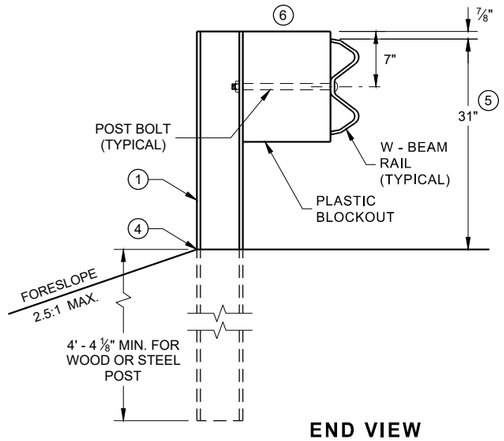

END VIEW
MGS LONGER POST AT HALFPOST SPACING W BEAM (K)

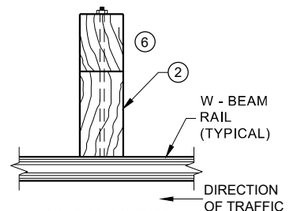

PLAN VIEW
WOOD POST, BLOCKOUT & BEAM

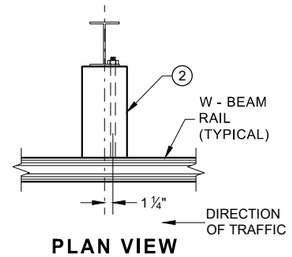

PLAN VIEW
STEEL POST, PLASTIC BLOCKOUT & BEAM

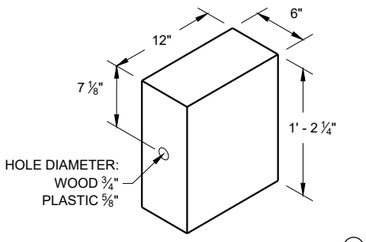

WOOD OR PLASTIC BLOCKOUT (2)

MIDWEST GUARDRAIL SYSTEM (MGS) GUARDRAIL

STATE OF WISCONSIN
DEPARTMENT OF TRANSPORTATION

SDD 14B42 - 07a

SDD 14B42 - 07a

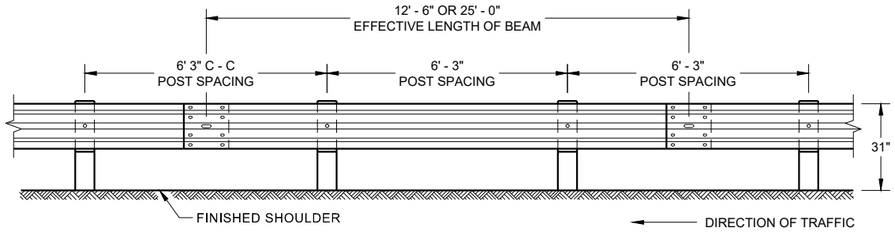

FRONT VIEW
POST SPACING STANDARD INSTALLATION

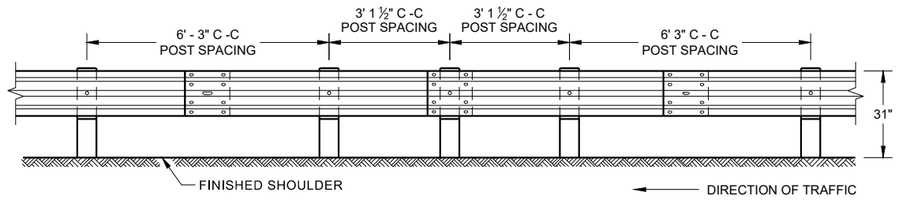

FRONT VIEW
HALF POST SPACING (HS) AND
HALF POST SPACING WITH LONGER POSTS (K)

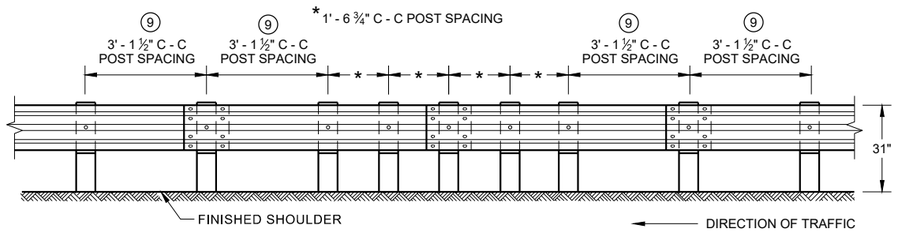

FRONT VIEW
QUARTER POST SPACING (QS)

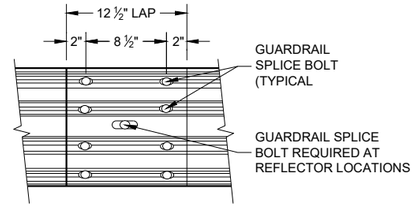

FRONT VIEW
MID-SPAN BEAM SPLICE

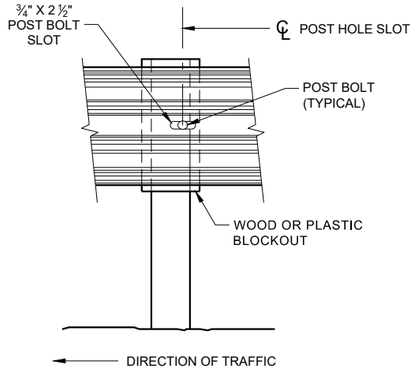

FRONT VIEW AT STEEL POST

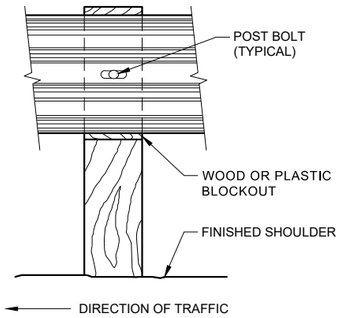

FRONT VIEW AT WOOD POST

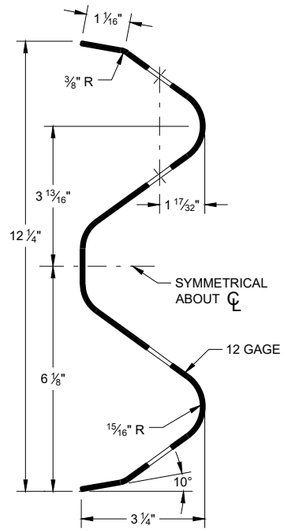

SECTION THRU W-BEAM RAIL

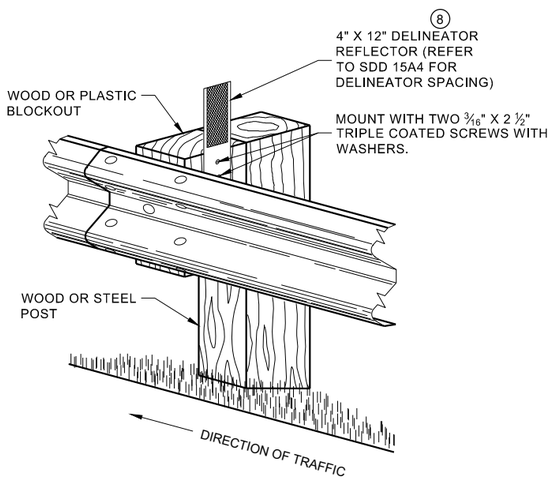

ONE SIDED REFLECTOR DETAIL
AND TYPICAL INSTALLATION

GENERAL NOTES

⑧ DO NOT INSTALL REFLECTORS ON THE FIRST 50 FEET OF THE APPROACH END OF THE ENERGY ABSORBING TERMINAL.

⑨ 25 FEET OF HALF POST SPACING IS REQUIRED ON APPROACH AND DEPARTURE ENDS OF QUARTER POST SPACING.

POST BOLTS ARE A ⅝" DIAMETER ASTM A307 GUARDRAIL BOLT. A POST BOLT REQUIRES ⅝" DIAMETER A563A DOUBLE RECESSED (DR) HEAVY HEX NUT AND ⅝" DIAMETER F844 FLAT WASHER. POST BOLTS MAY BE LONGER IF MULTIPLE BLOCKOUTS ARE BEING USED.

GUARD RAIL SPLICE BOLTS ARE A ⅝" DIAMETER ASTM A307 GUARDRAIL HEAD BOLT. A GUARDRAIL SPLICE BOLT REQUIRES ⅝" DIAMETER A563A DOUBLE RECESSED (DR) HEAVY HEX NUT.

MIDWEST GUARDRAIL SYSTEM
(MGS) GUARDRAIL

STATE OF WISCONSIN
DEPARTMENT OF TRANSPORTATION

6

SDD 14B42 - 07b

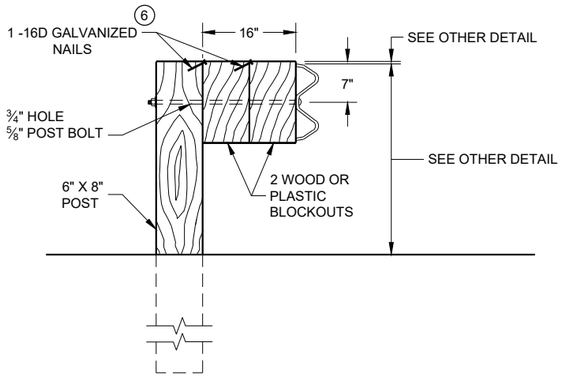

DETAIL FOR 16" BLOCKOUT DEPTH

IT IS ACCEPTABLE TO USE BLOCKOUTS UP TO 16" DEEP TO INCREASE THE POST OFFSET TO AVOID UNDERGROUND OBSTACLES. THERE IS NO LIMIT TO THE NUMBER OF POSTS THAT CAN HAVE ADDITIONAL BLOCKOUTS UP TO 16" DEEP.

NOTE:

1. ALL FILLETS SHALL HAVE A MINIMUM RADIUS OF 3⁄16".
2. IF THE BOLT EXTENDS MORE THAN ¼" FROM THE NUT THE BOLT SHOULD BE TRIMMED BACK.

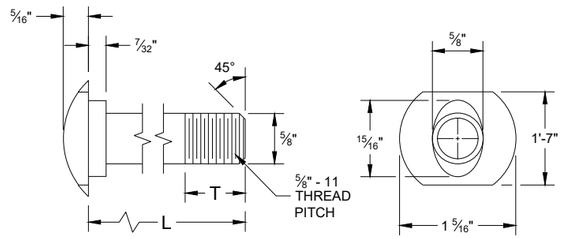

POST BOLT TABLE

L	T (MIN.)
1 ¼"	1 ⅛"
2"	1 ¾"
10"	4"
14"	4 1⁄16"
18"	4"
21"	4 1⁄16"
25"	4"

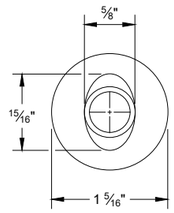

ALTERNATE BOLT HEAD

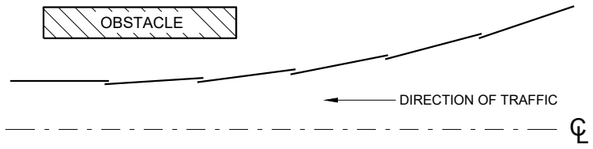

PLAN VIEW
BEAM LAPPING DETAIL

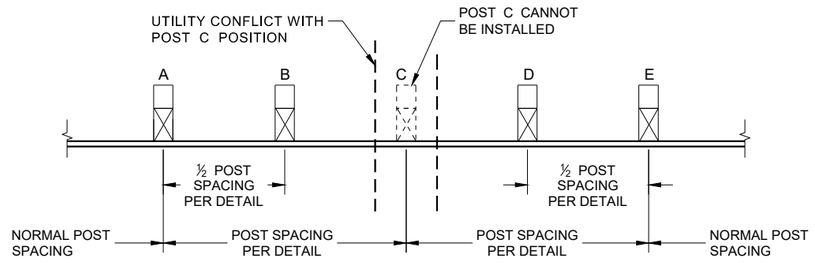

POST DRIVING FOR CONTINUOUS UNDERGROUND OBSTRUCTION

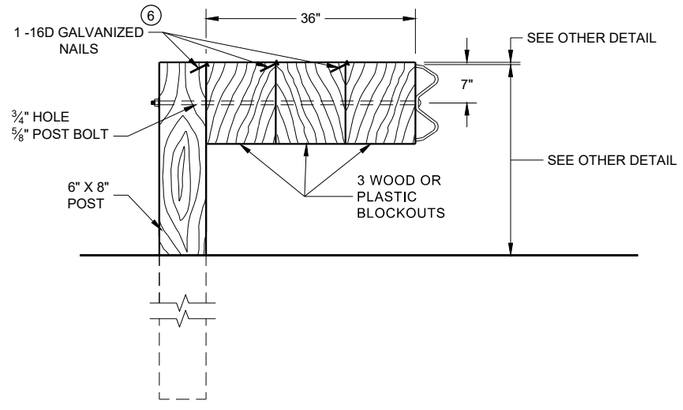

DETAIL FOR 36" BLOCKOUT DEPTH

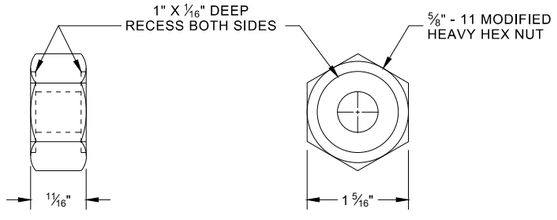

POST BOLT, SPLICE BOLT AND RECESS NUT

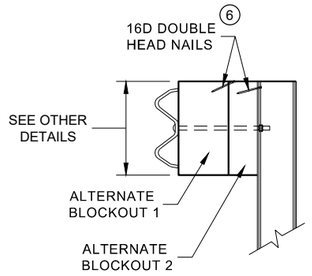

SIDE VIEW

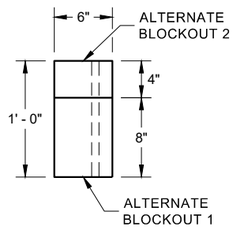

PLAN VIEW

ALTERNATE WOOD BLOCKOUT DETAIL

NOTES: UNDER SPECIAL CIRCUMSTANCES, SUCH AS AVOIDING OBSTACLES THAT ARE NOT RELOCATED, IT IS ACCEPTABLE TO INSTALL ADDITIONAL BLOCKOUTS TO OBTAIN UP TO 36" DEPTH FOR ONE OR TWO POSTS IN A SECTION OF GUARDRAIL.

DO NOT USE 16" OR 36" BLOCKOUTS IF IT CAUSES THE POST TO BE DRIVEN BEYOND SHOULDER HINGE POINT OR CAUSES A FIXED OBJECT TO BE WITHIN THE DEFLECTION DISTANCE OF THE BARRIER.

(6) WHEN USING STEEL POST AD WOOD BLOCKOUTS, INSTALL FOUR 16D GALVANIZED NAILS. INSTALL NAILS AT THE BACK CORNERS OF THE BLOCK AND BEND THE NAILS OVER THE FLANGE OF THE STEEL POST.

MIDWEST GUARDRAIL SYSTEM (MGS) GUARDRAIL

STATE OF WISCONSIN
DEPARTMENT OF TRANSPORTA

6

SDD 14B42 - 07c

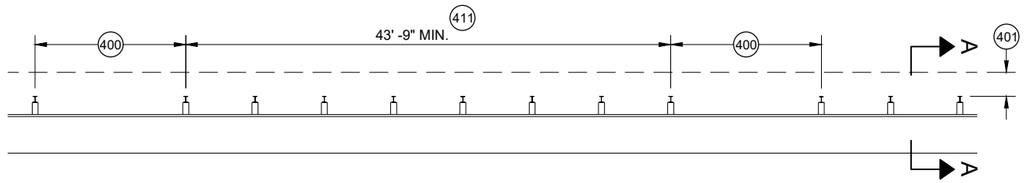

MISSING POST IN MGS GUARDRAIL

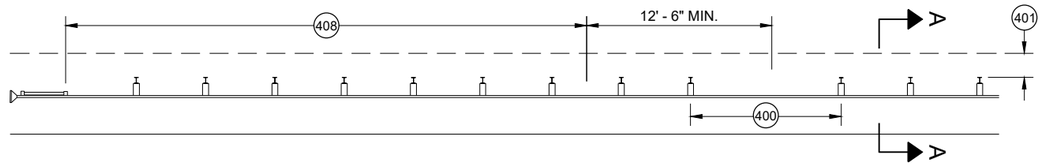

MISSING POST IN MGS GUARDRAIL NEAR EAT

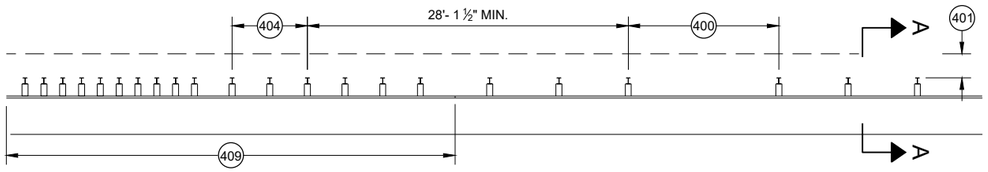

MISSING POST IN MGS GUARDRAIL NEAR AN APPROACH TRANSITION

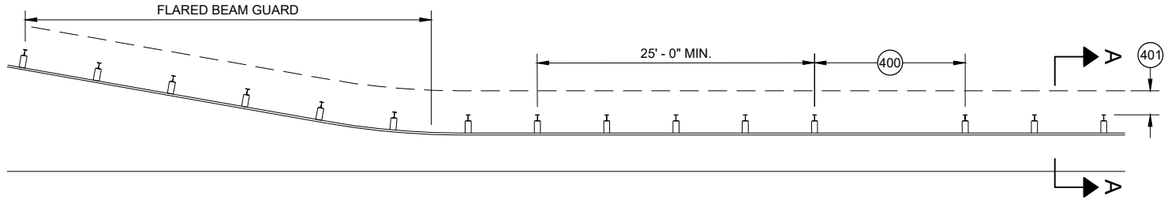

MISSING POST IN MGS GUARDRAIL NEAR FLARED BEAM GUARD

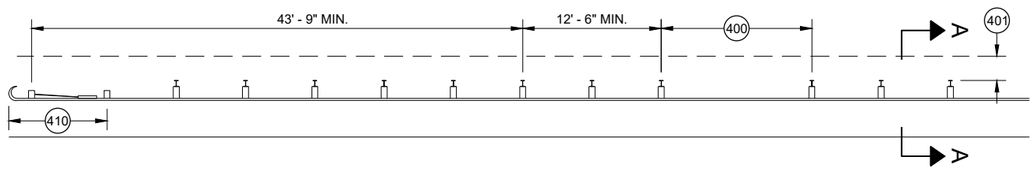

MISSING POST IN MGS GUARDRAIL NEAR A TYPE 2 END TERMINAL

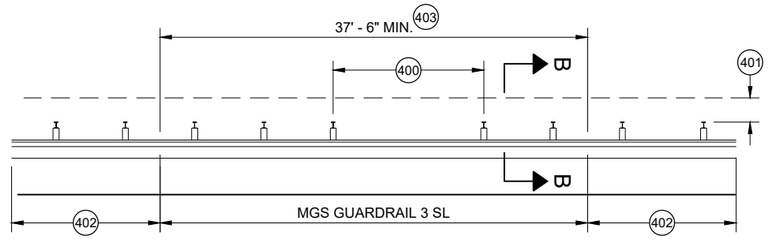

MISSING POST IN SHORT SPAN MGS GUARDRAIL NEAR CURB (SL) 407

(400) MAX SPAN 12' - 6"
(401) 2' MIN.
(402) MGS GUARDRAIL 3
(403) NESTING BEAM GUARD
(404) ASYMMETRIC TRANSITION
(405) SOIL WELL DRAINED AND COMPACTED
(406) SEE OTHER DRAWINGS IN THIS SDD
(407) SEE OTHER DRAWINGS FOR MIN. SPACING BETWEEN SPANS
(408) SEE SDD 14B44
(409) SEE SDD 14B45
(410) SEE SDD 14B47
(411) MINIMUM DISTANCE BETWEEN MISSING POST SPANS.

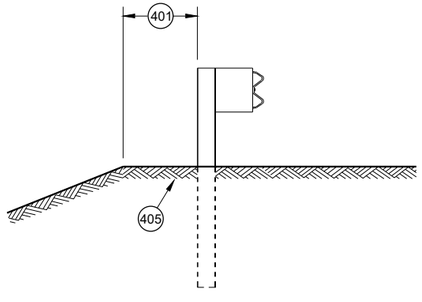

SECTION A - A 406

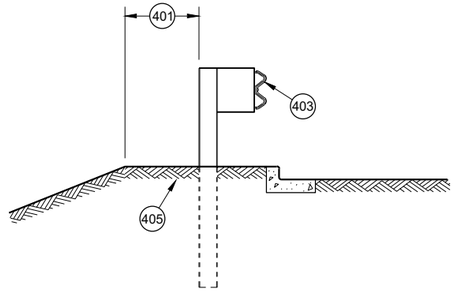

SECTION B - B 406

MIDWEST GUARDRAIL SYSTEM (MGS) GUARDRAIL

STATE OF WISCONSIN
DEPARTMENT OF TRANSPORTATION

APPROVED
May 2021
DATE
/S/ Rodney Taylor
ROADWAY STANDARDS DEVE
UNIT SUPERVISOR

FHWA

6

SDD 14B42 - 07d

GENERAL NOTES

POSTS 1 THROUGH 3 ARE CRT POSTS.
ALL OTHER POSTS SHALL BE WOOD OR STEEL.

SEE SDD 14 B 42 FOR MORE DETAILS.

(A) FLARE FOR MGS EAT SHOWN. IF INSTALLING MGS NO FLARE NEEDED.

(B) VALUES SHOWN ON DRAWING REPRESENT THE MAXIMUM LENGTH. SHORTER DIMENSIONS ARE POSSIBLE. SEE OTHER SECTION OF PLAN FOR MORE INFORMATION.

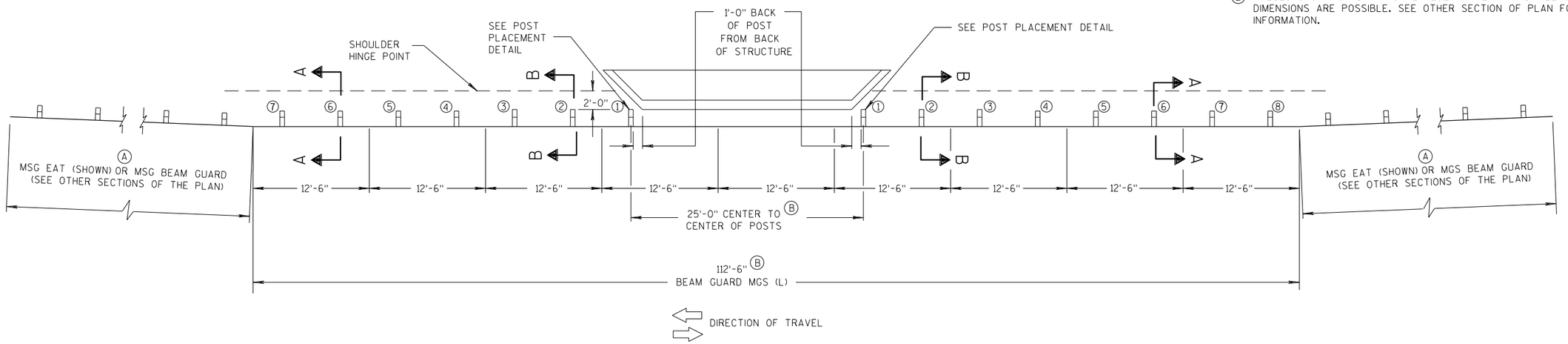

PLAN VIEW

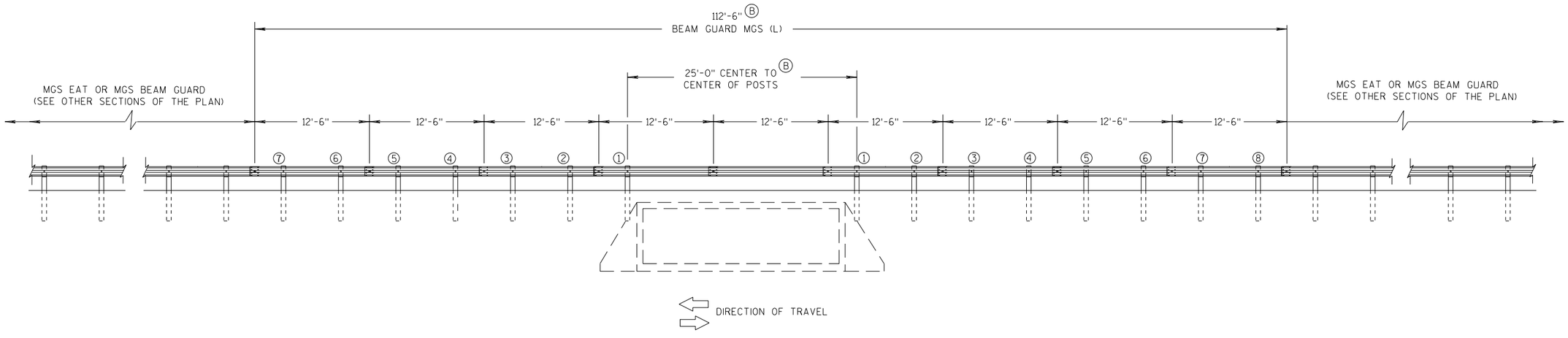

ELEVATION VIEW

MIDWEST GUARDRAIL SYSTEM LONG SPAN MGS (L) TWO-WAY TRAFFIC

MIDWEST GUARDRAIL SYSTEM LONG SPAN MGS (L)

STATE OF WISCONSIN
DEPARTMENT OF TRANSPORTATION

6

S.D.D. 14 B 43-4a

GENERAL NOTES

POSTS 1 THROUGH 3 ARE CRT POSTS.
ALL OTHER POSTS SHALL BE WOOD OR STEEL.

SEE SDD 14 B 42 FOR MORE DETAILS.

(A) FLARE FOR MGS EAT SHOWN. IF INSTALLING MGS NO FLARE NEEDED.

(B) VALUES SHOWN ON DRAWING REPRESENT THE MAXIMUM LENGTH. SHORTER DIMENSIONS ARE POSSIBLE. SEE OTHER SECTION OF PLAN FOR MORE INFORMATION.

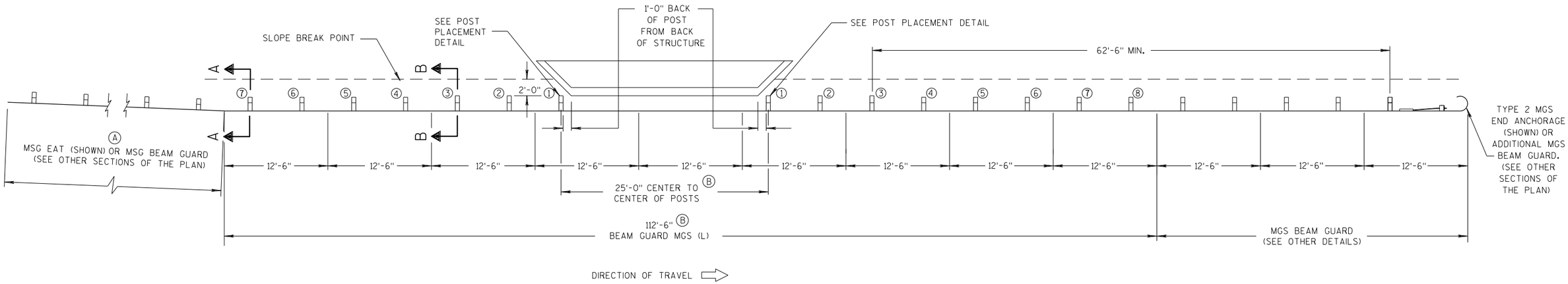

PLAN VIEW

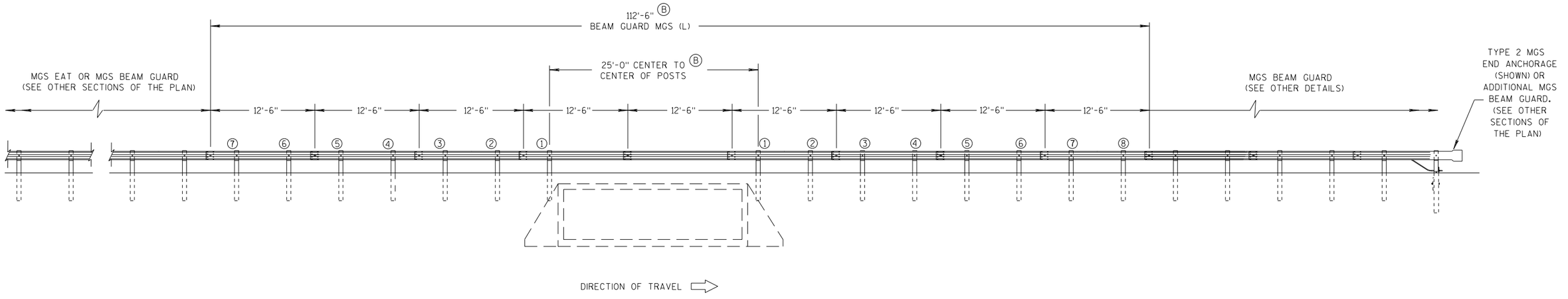

ELEVATION VIEW

MIDWEST GUARDRAIL SYSTEM LONG SPAN MGS (L) ONE-WAY TRAFFIC

MIDWEST GUARDRAIL SYSTEM LONG SPAN MGS (L)

STATE OF WISCONSIN
DEPARTMENT OF TRANSPORTATION

6

S.D.D. 14 B 43-4b

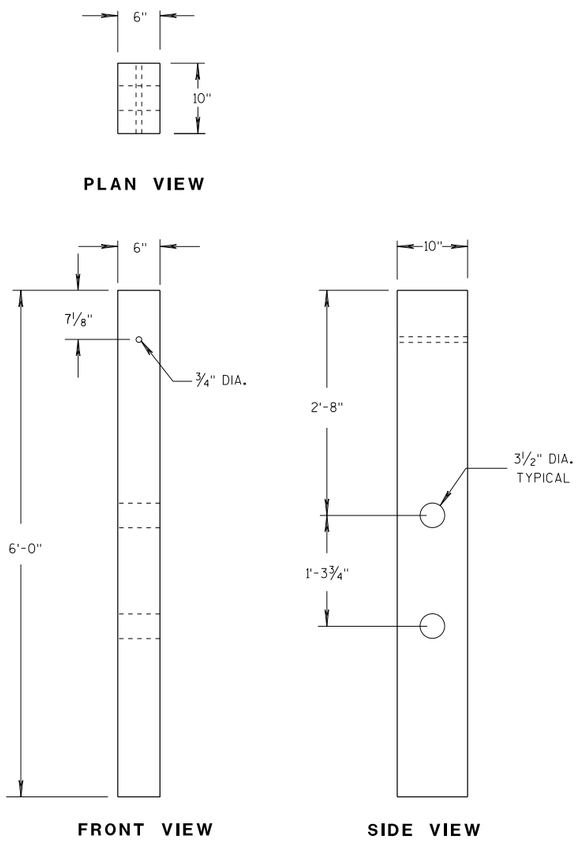

CRT WOOD POST

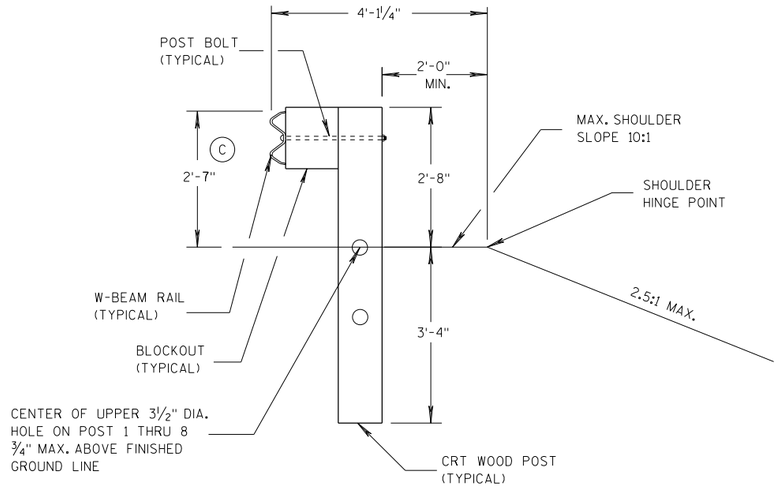

SECTION B-B

POSTS NO. 1-3

SEE OTHER DETAILS

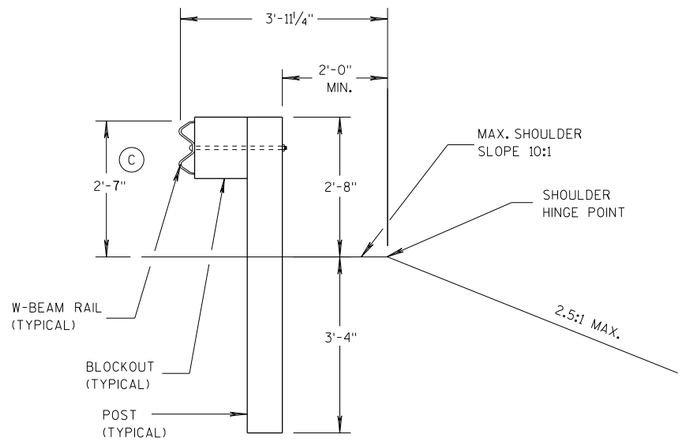

SECTION A-A

POSTS NO. 4-8

SEE OTHER DETAILS

GENERAL NOTES

(C) TOLERANCE FOR TOP OF W-BEAM RAIL IS ± 1".

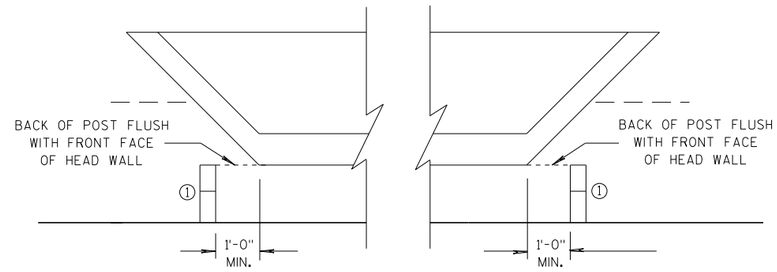

POST PLACEMENT DETAIL

MIDWEST GUARDRAIL SYSTEM
LONG SPAN MGS (L)

STATE OF WISCONSIN
DEPARTMENT OF TRANSPORTATION

APPROVED
07/2018
DATE
FHWA

/S/ Rodney Taylor
ROADWAY STANDARDS DEVELOPMENT ENGINEER

6
S.D.D. 14 B 43-4c

GENERAL NOTES

(A) THE SLOPE IN THE AREA BOUNDED BY THE GRADELINE, THE HINGE POINT LINE (HPL) AND THE CLEAR ZONE LIMITS (CZL) SHALL BE 4:1 OR FLATTER.

(B) AFTER FINAL ASSEMBLY, RECHECK CABLE TO BE SURE IT IS TAUT AND HAS NOT RELAXED

(C) DIFFERENT MANUFACTURERS REQUIRE DIFFERENT PERFORATED W - BEAM RAIL END PANELS. SEE MANUFACTURER'S INFORMATION.

(D) ATTACH ALUMINUM SHEET TO E.A.T. HEAD USING 4 STAINLESS STEEL SELF - TAPPING SCREWS. ONE SCREW PER CORNER.

(E) HARDWARE MAY VARY BETWEEN MANUFACTURER. SEE MANUFACTURER'S DRAWING FOR INFORMATION.

DIMENSIONS MAY VARY, MANUFACTURER'S INFORMATION.

SEE SDD 14B42 FOR MORE INFORMATION.

* DO NOT ATTACH BLOCKOUTS TO POST 1 AND 2.

DO NOT INSTALL REFLECTORS ON THE FIRST 50 FEET OF THE APPROACH END OF THE ENERGY ABSORBING TERMINAL.

SEE MANUFACTURER'S DRAWING FOR SPLICE LOCATION, HARDWARE DIMENSIONS AND INSTALLATION INSTRUCTIONS.

THE CENTER OF THE UPPER 3 ½" DIAMETER HOLE ON POST NUMBER 3 THROUGH POST 9 IS TO BE FLUSH WITH THE GROUND LINE UP TO A MAXIMUM OF 2" ABOVE GROUND LINE. WOOD BLOCKS ON POSTS NUMBERED 3 THROUGH 9 MAY BE ADJUSTED UP TO 3" ABOVE THE TOP OF POST.

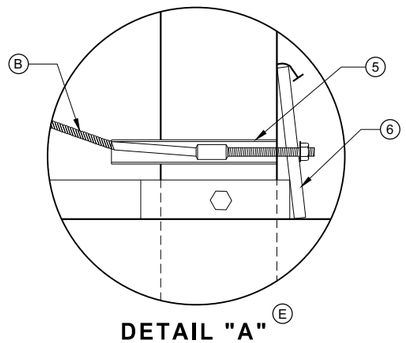

DETAIL "A" (E)

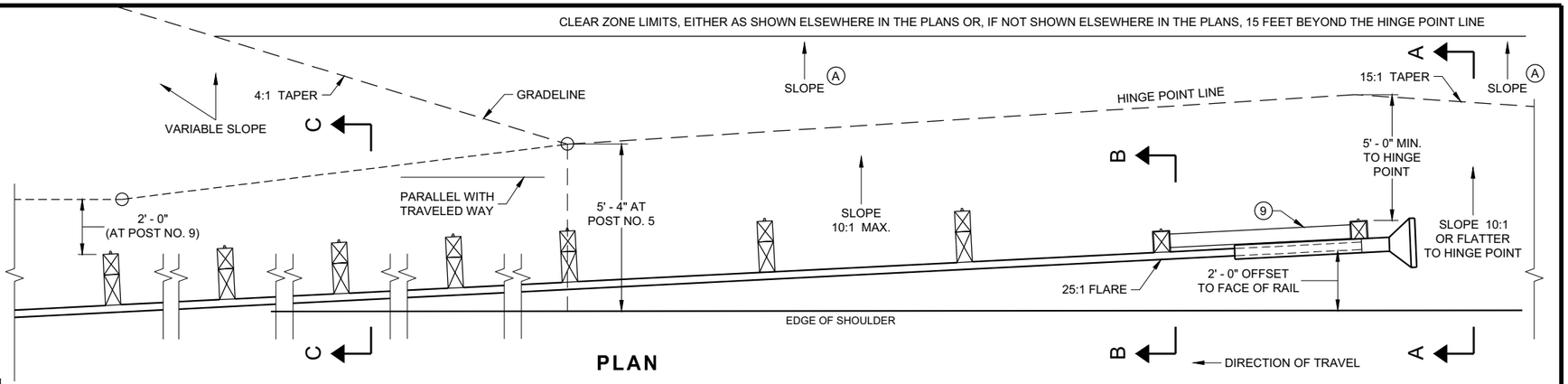

PLAN

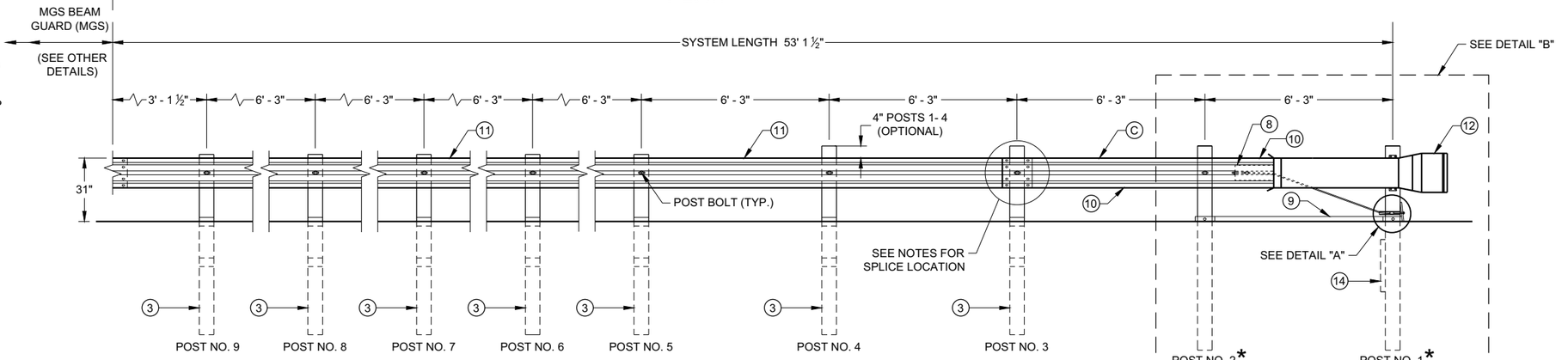

ELEVATION

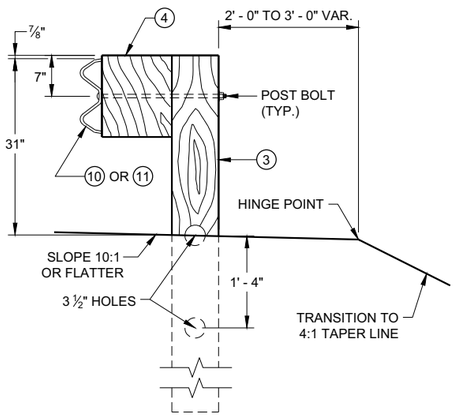

SECTION C - C
TYPICAL AT POST NOS. 3 - 9

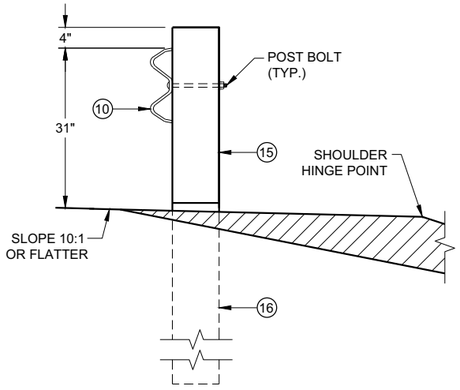

SECTION B - B
TYPICAL AT POST NO. 2*

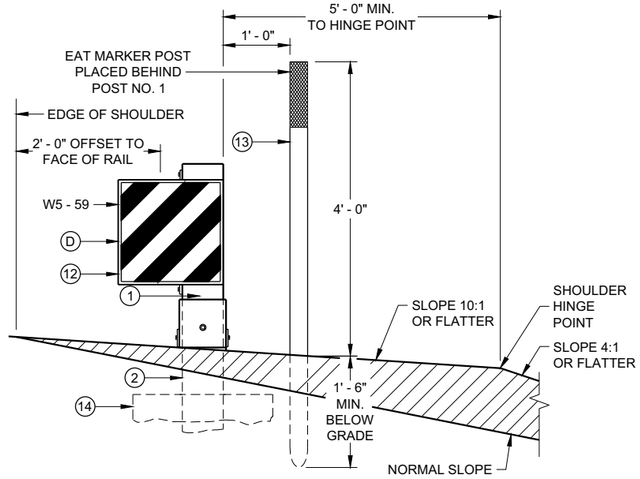

SECTION A - A
TYPICAL AT POST NO. 1*

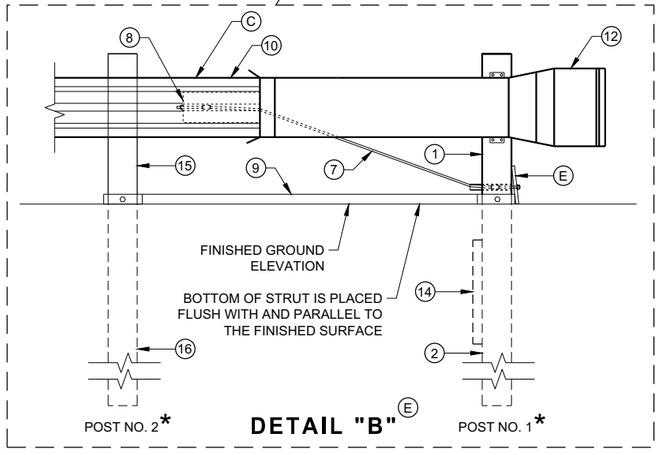

DETAIL "B" (E)

MIDWEST GUARDRAIL SYSTEM
ENERGY ABSORBING TERMINAL (MGS)

STATE OF WISCONSIN
DEPARTMENT OF TRANSPORTATION

SDD 14B44 - 04a

SDD 14B44 - 04a

6

6

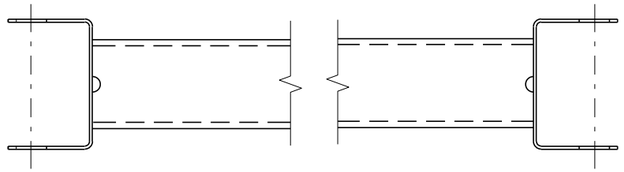

GENERIC GROUND STRUT ⑨ Ⓔ

BILL OF MATERIALS

PART NO.	DESCRIPTION MATERIALS PROVIDED BY MGS EAT MANUFACTURER. SEE MANUGACTURER'S DETAILS FOR MORE INFORMATION.
①	UPPER POST NO. 1 6" X 6" TUBE
②	LOWER POST NO. 1
③	WOOD CRT
④	WOOD BLOCKOUT
⑤	PIPE SLEEVE
⑥	BEARING PLATE
⑦	BCT CABLE ASSEMBLY
⑧	ANCHOR CABLE BOX
⑨	GROUND STRUT
⑩	PERFORATED W-BEAM RAIL END PANEL, 12'-6" LONG.
⑪	STANDARD W-BEAM RAIL. MULTIPLE SECTIONS REQUIRED. SECTIONS VARY IN LENGTH.
⑫	IMPACT HEAD
⑬	EAT MARKER POST - YELLOW (SEE APPROVED PRODUCTS LIST)
⑭	SOIL PLATE
⑮	UPPER POST NO. 2
⑯	LOWER POST NO. 2

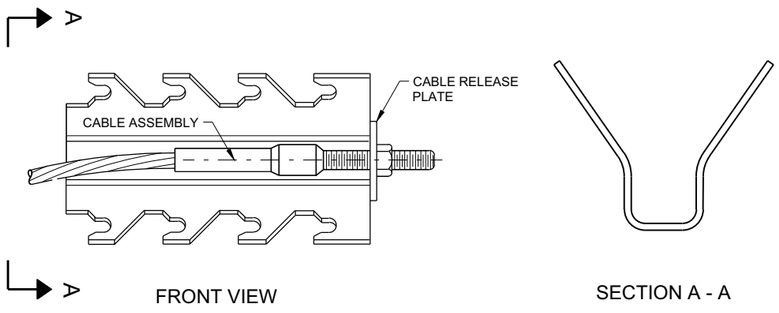

GENERIC ANCHOR CABLE BOX ⑨ Ⓔ

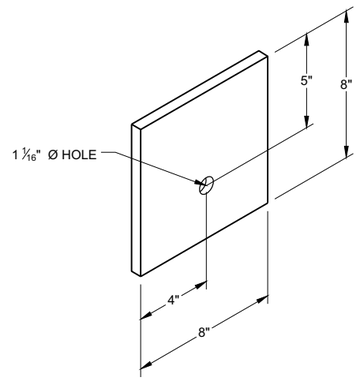

BEARING PLATE ⑥ Ⓔ

6

6

SDD 14B44 - 04b

SDD 14B44 - 04b

MIDWEST GUARDRAIL SYSTEM
ENERGY ABSORBING TERMINAL
(MGS)

STATE OF WISCONSIN
DEPARTMENT OF TRANSPORTATION

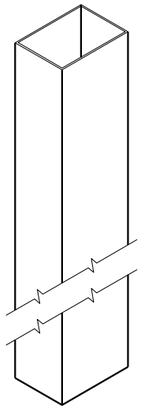

UPPER POST NO. 1 (1) (E)

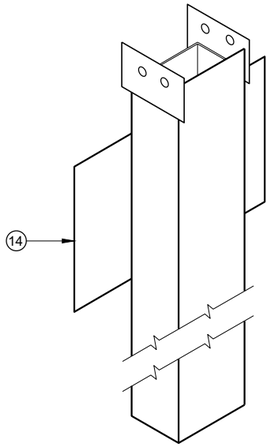

LOWER POST NO. 1 (2) (E)

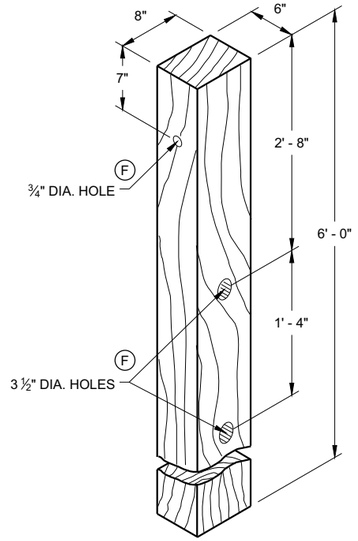

WOOD CRT POST (3) (E)
POSTS NUMBER 3-9

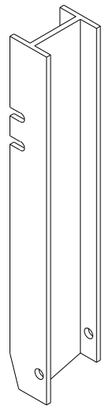

UPPER POST NO. 2 (15) (E)

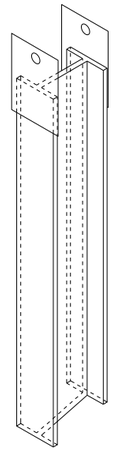

LOWER POST NO. 2 (16) (E)

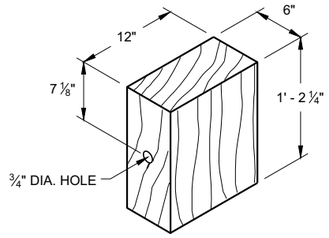

WOOD BLOCKOUT (4)
REQ'D. AT ALL POSTS EXCEPT POST NO'S 1 & 2

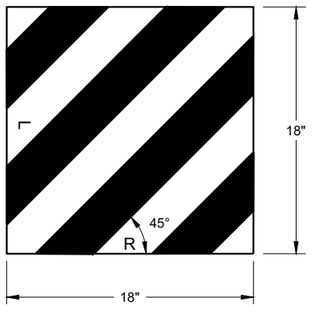

W5 - 59

REFLECTIVE SHEETING DETAIL (E)

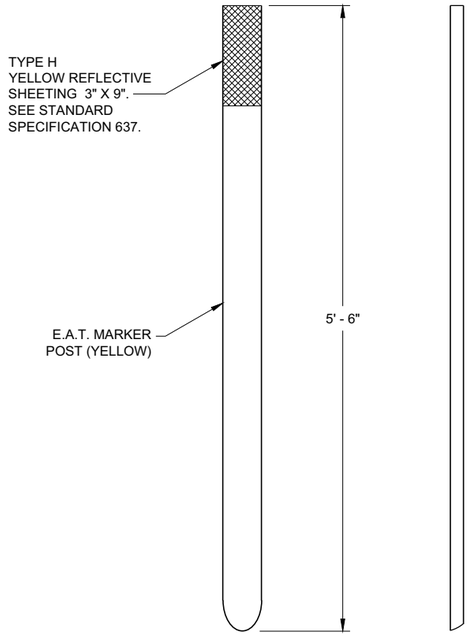

FRONT VIEW SIDE VIEW

E.A.T. MARKER POST (13)

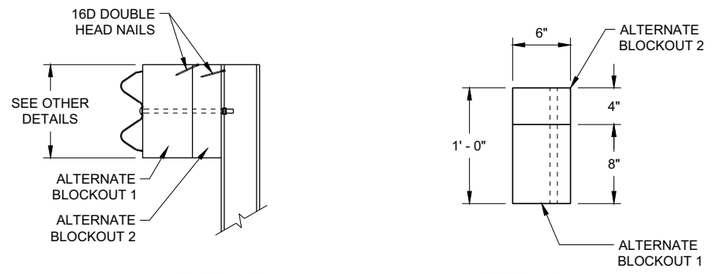

SIDE VIEW TOP VIEW

ALTERNATE WOOD BLOCKOUT DETAIL

MIDWEST GUARDRAIL SYSTEM ENERGY ABSORBING TERMINAL (MGS)

STATE OF WISCONSIN
DEPARTMENT OF TRANSPORTATION

APPROVED
7/2018
DATE
/S/ Rodney Taylor
ROADWAY STANDARDS DEVE
UNIT SUPERVISOR

FHWA

6

SDD 14B44 - 04c

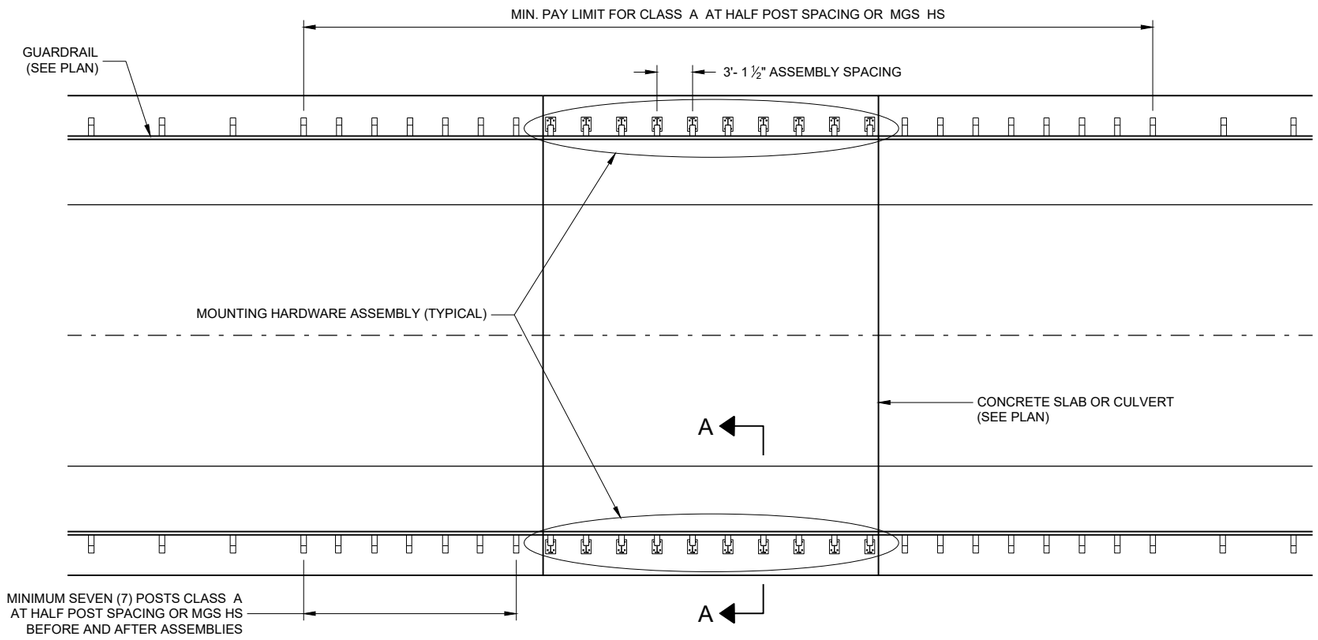

PLAN VIEW

GENERAL NOTES

HOLES DRILLED INTO CONCRETE SLAB OR CULVERT ARE 1 ⅛" DIAMETER.

POST BASE PLATE (AND BOTTOM PLATES IF USED) SHALL BE FLAT WITH ALL SURFACES SMOOTH, AND FREE FROM WARP AND ALL EDGES SMOOTH, STRAIGHT AND VERTICAL. ALL PLATE CUTS SHALL BE MACHINE OR MACHINE FLAME CUTS. CUT BOTTOM OF POST SO THAT POST WILL BE VERTICAL WHEN POST ASSEMBLY IS PLACED ON TOP OF CONCRETE. HEX BOLTS AND THREADED RODS ARE TO BE PLACED PERPENDICULAR TO THE BASE PLATE.

"H" DIMENSION WILL VARY. SEE PLAN FOR "H" DIMENSION. CONTRACTOR HAS OPTION OF INSTALLING POSTS THAT ARE TALLER THAN "H" DIMENSION AND CUT POSTS TO PROPER "H" DIMENSION IN THE FIELD. IF ELECTING TO FIELD CUT POSTS, DRILL HOLES AT APPROPRIATE LOCATIONS AND APPLY GALVANIZATION.

GALVANIZE STEEL COMPONENTS AFTER FABRICATION PER SECTION 614 OF THE WISCONSIN DEPARTMENT OF TRANSPORTATION STANDARD SPECIFICATIONS.

INSTALL 1 NUT AND 1 WASHER WHERE APPLICABLE. PROVIDE SUFFICIENT LENGTH OF BOLT OR THREADED ROD TO ALLOW FOR ¼" TO ½" OF THREAD TO BEYOND THE NUT.

1. FILL BOLT SLOT OPENINGS IN POST SHIMS AND PLATE A2 WITH NON-STAINING GRAY NON-BITUMINOUS JOINT SEALER. CAULK AROUND PERIMETER OF A2 WITH NON-STAINING GRAY NON-BITUMINOUS JOINT SEALER.
2. BOND STRENGTH OF ADHESIVE IS 1,305 PSI OR GREATER WITH A MINIMUM EMBEDMENT DEPTH OF 8-INCHES. IF MINIMUM EMBEDMENT CANNOT BE ACHIEVED, BOLT THROUGH STRUCTURE.
3. USE GAS-METAL ARC WELDING (GMAW) PROCESS WITH ER70S-3 WELDING WIRE AND ARGON-OXYGEN OR CO_2 COVER GAS.
4. OTHER COMPONENT OF BARRIER SYSTEM NOT SHOWN. SEE SDD 14B15 OR SDD 14B42 FOR MORE DETAILS.
5. HOLES TO MOUNT BEAM GUARD AND BLOCK NOT SHOWN ON DRAWINGS. SEE SDD 14B15 OR SDD 14B42 FOR MORE DETAILS.
6. ADD AND ADJUST SHIM PLATES AS NECESSARY TO INSTALL POST PLUMB. SEE (A10) FOR DETAIL.

Concrete Strength (f'c) PSI	"T" Inch	Min. "K" Inch
3,500	11 ≤	9
4,000	10 ≤	8

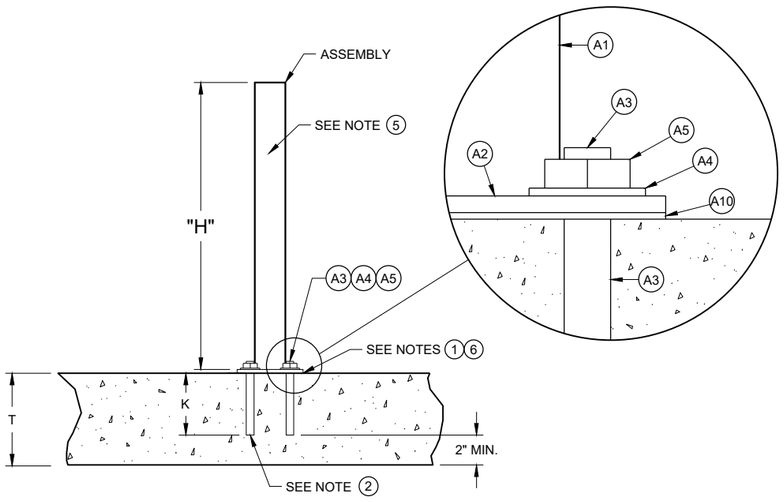

ADHESIVE ANCHOR DETAIL

SEE NOTE 4

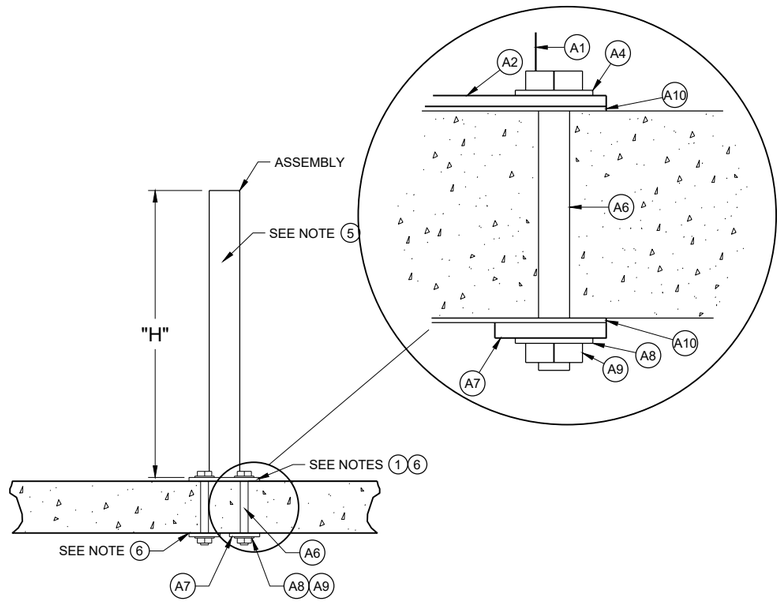

BOLT THROUGH DETAIL

SEE NOTE 4

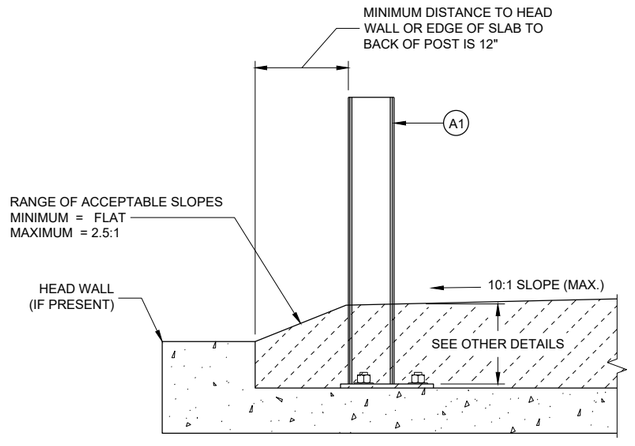

SECTION A - A

SEE NOTE 4

ANCHOR POST ASSEMBLY TOP MOUNTED

STATE OF WISCONSIN
DEPARTMENT OF TRANSPORTATION

6

SDD 14B51 - 03a

6

SDD 14B51 - 03a

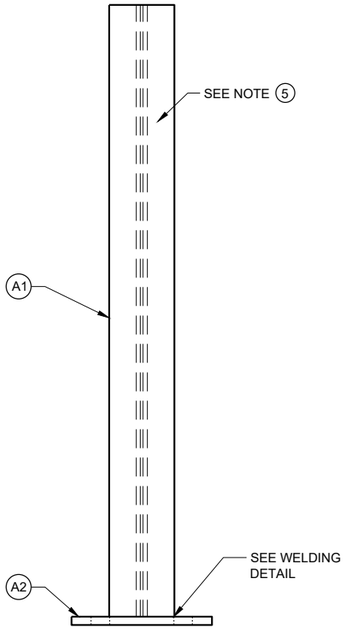

PROFILE VIEW
POST ASSEMBLY

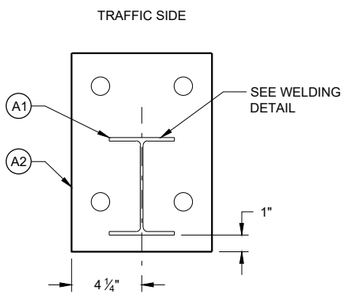

PLAN VIEW
POST ASSEMBLY

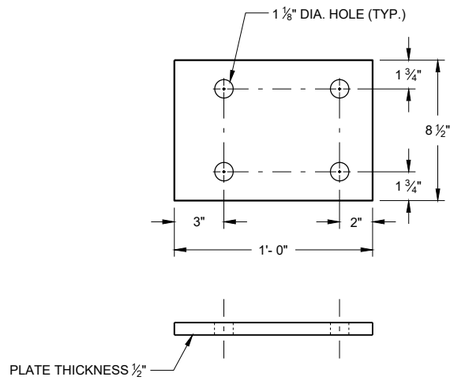

(A2) **STEEL BASE PLATE**

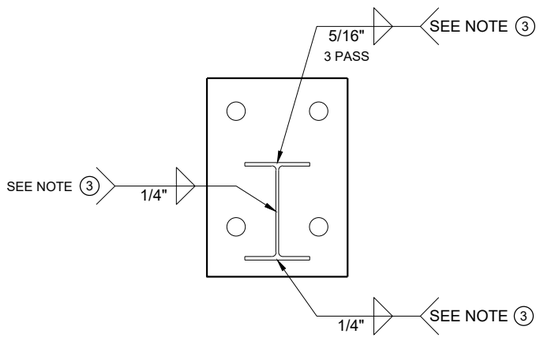

POST ASSEMBLY
WELDING DETAIL

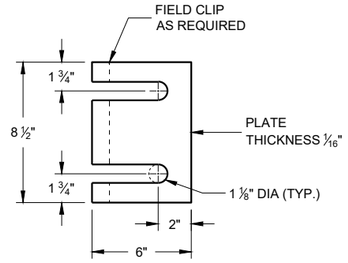

(A10) **SHIM PLATE**

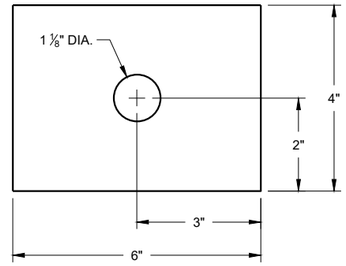

(A7) **PLATE WASHER**

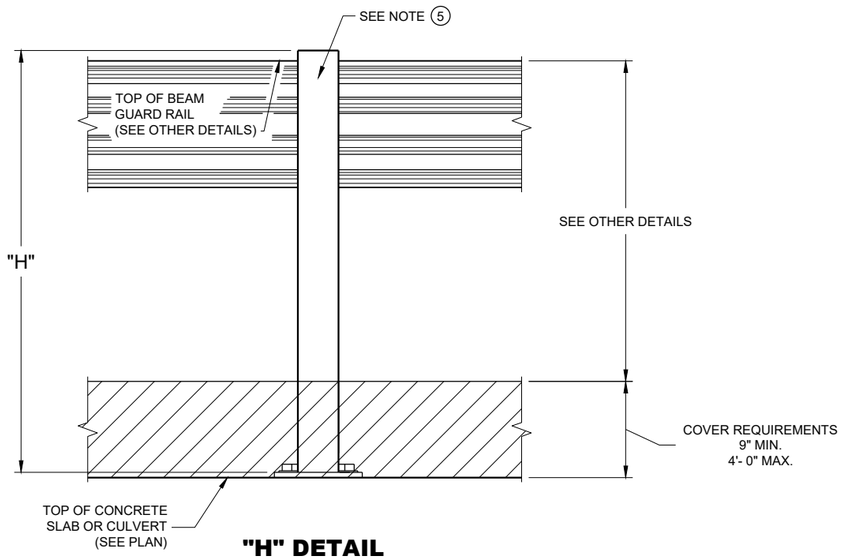

"H" DETAIL

SEE NOTE (4)

6

SDD 14B51 - 03b

ANCHOR POST ASSEMBLY
TOP MOUNTED

STATE OF WISCONSIN
DEPARTMENT OF TRANSPORTA

6

SDD 14B51 - 03b

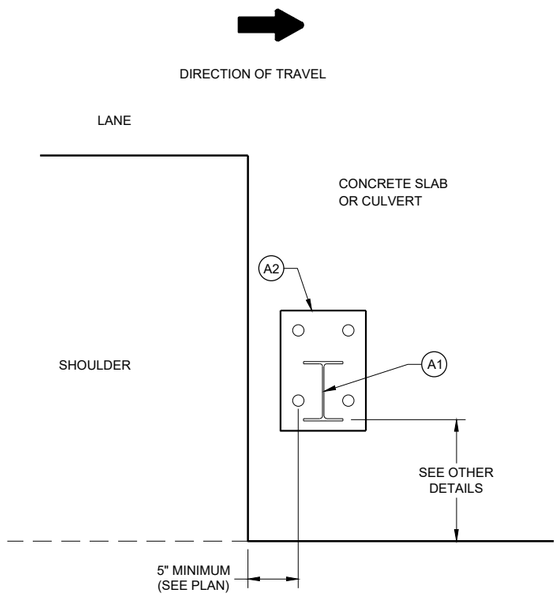

EDGE PLACEMENT

SEE NOTE (4)

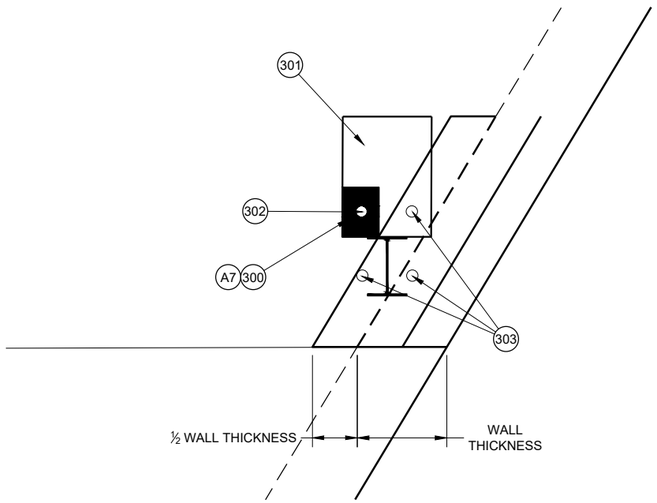

TOP MOUNT OPTION NEAR EDGE OF SLAB

BILL OF MATERIALS LIST

ITEM	DESCRIPTION	MATERIAL SPECIFICATIONS	NOTES
A1	W6x9 or W6x8.5	ASTM A992 50 KSI MIN., ASTM A709 GRADE 50, OR ASTM A36	SEE SDD 14B15 OR 14B42 LENGTH WILL VARY
A2	STEEL BASE PLATE	ASTM A992 50 KSI MIN., ASTM A529 GRADE 50, ASTM A572 GRADE 50, OR ASTM A36	
A3	1" DIA. THREADED ROD	SAE J429 GRADE 2, OR ASTM F1554 GRADE 55	LENGTH WILL VARY
A4	1" DIA. FLAT WASHER	ASTM F844	
A5	1" HEX NUT	ASTM A563A	
A6	1" DIA. HEX BOLT	ASTM A307	LENGTH WILL VARY
A7	PLATE WASHER	ASTM A992 50 KSI MIN., ASTM A529 GRADE 50, ASTM A572 GRADE 50, OR ASTM A36	¼" THICKNESS
A8	1" DIA. FLAT WASHER	ASTM F844	
A9	1" DIA. HEX NUT	ASTM A563A	
A10	SHIM PLATE	SEE (A2)	4 MAX PER POST

NOTES

300. Plate washer installed on underside of slab or culvert

301. Top plate assembly on top of slab or culvert

302. Bolt through option allowed

303. Adhesive Anchors

ANCHOR POST ASSEMBLY TOP MOUNTED

STATE OF WISCONSIN
DEPARTMENT OF TRANSPORTATION

APPROVED

May 2023
DATE

/S/ Rodney Taylor
ROADWAY STANDARDS DEVE ENGINEER

FHWA

6

SDD 14B51 - 03c

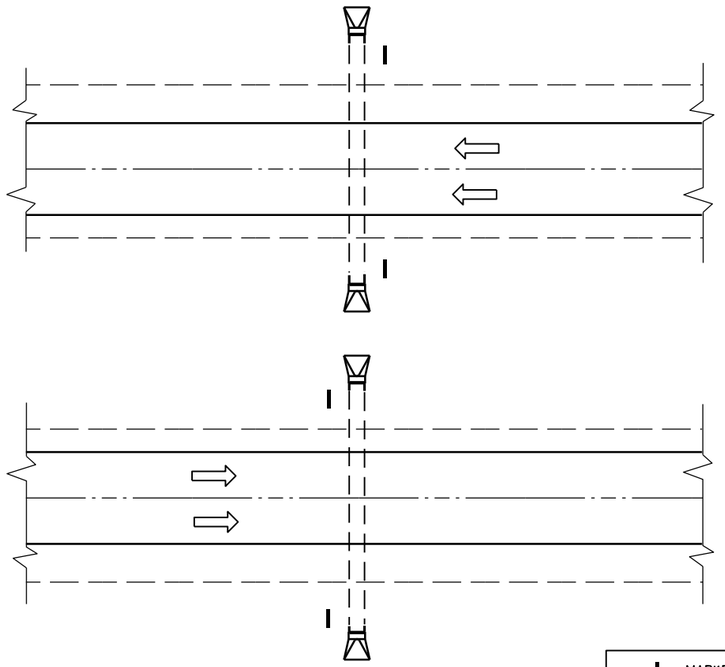

PLAN VIEW

DIVIDED HIGHWAY

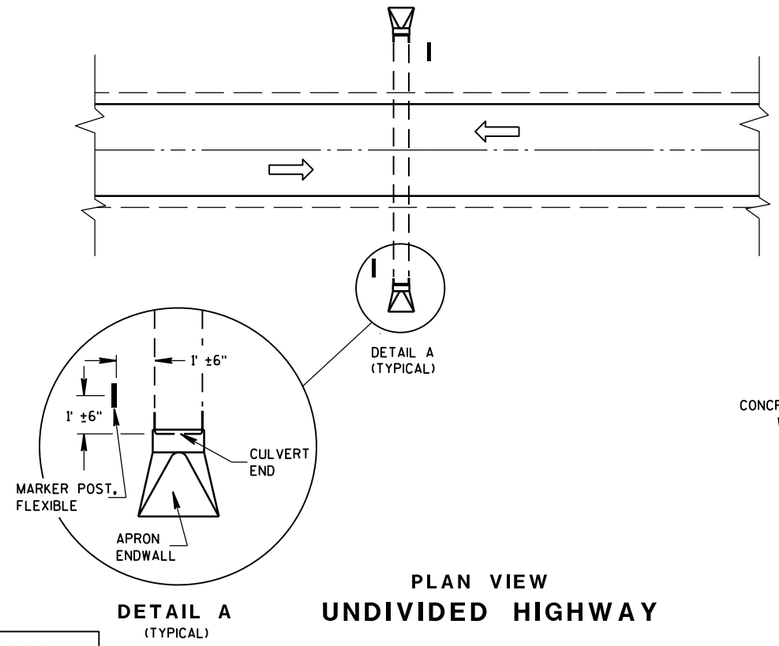

DETAIL A
(TYPICAL)

PLAN VIEW

UNDIVIDED HIGHWAY

MARKER POST, FLEXIBLE

DIRECTION OF TRAFFIC FLOW

GENERAL NOTES

DETAILS OF CONSTRUCTION, MATERIALS AND WORKMANSHIP NOT SHOWN ON THIS DRAWING SHALL CONFORM TO THE PERTINENT REQUIREMENTS OF THE STANDARD SPECIFICATIONS AND THE APPLICABLE SPECIAL PROVISIONS.

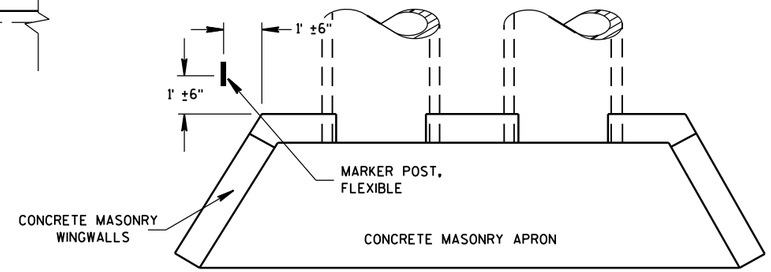

PLAN VIEW

CONCRETE MASONRY ENDWALLS FOR CULVERT PIPE AND PIPE ARCH

FLEXIBLE MARKER POST LOCATION

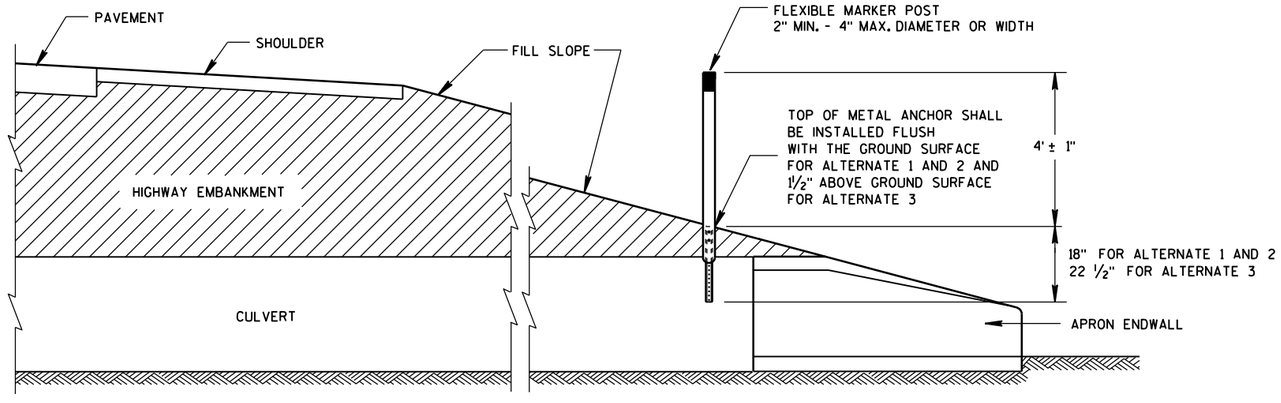

CROSS SECTION

FLEXIBLE MARKER POST

FLEXIBLE MARKER POST FOR CULVERT END

STATE OF WISCONSIN
DEPARTMENT OF TRANSPOI

6

S.D.D. 15 A 3-2a

6

S.D.D. 15 A 3-2a

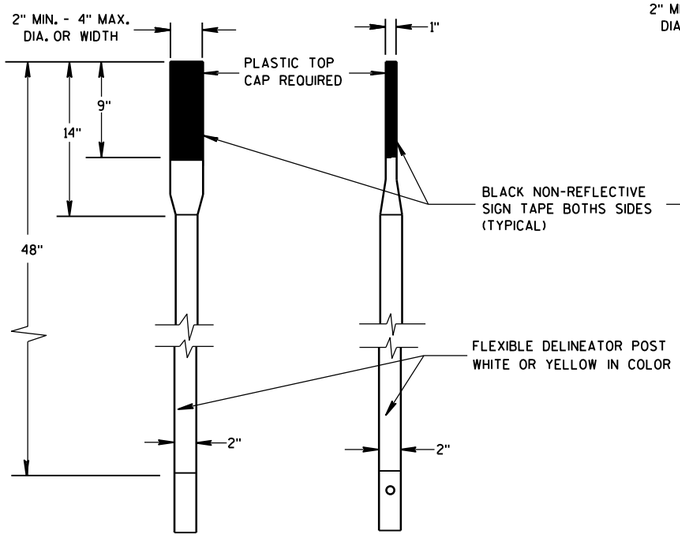

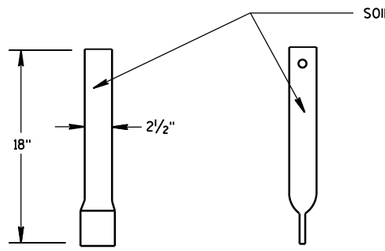

FRONT VIEW SIDE VIEW

ALTERNATE 1

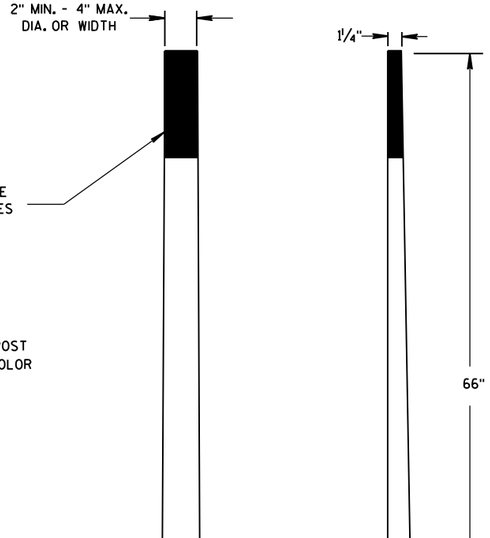

FRONT VIEW SIDE VIEW

ALTERNATE 2

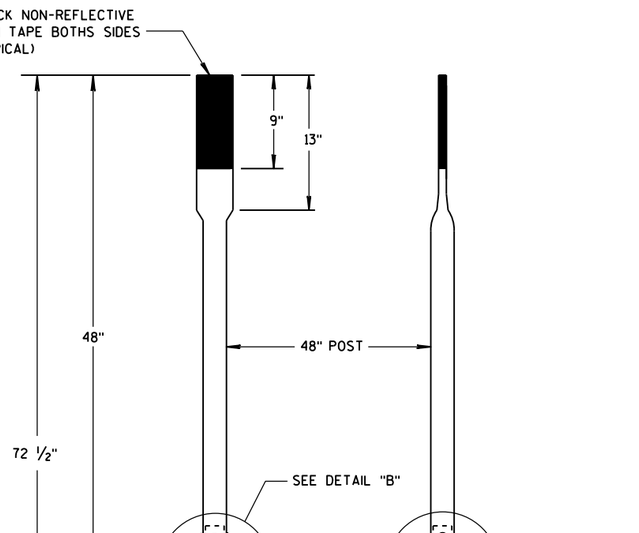

FRONT VIEW SIDE VIEW

ALTERNATE 3

FLEXIBLE MARKER POSTS

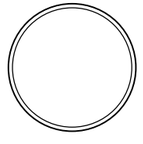

SECTION A-A

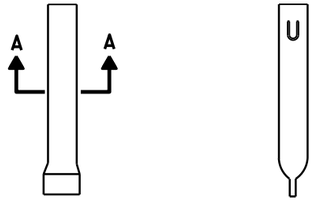

FRONT VIEW SIDE VIEW

ALTERNATE 1

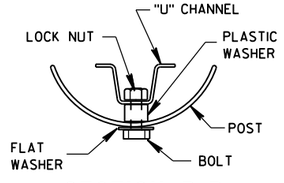

SECTION B-B

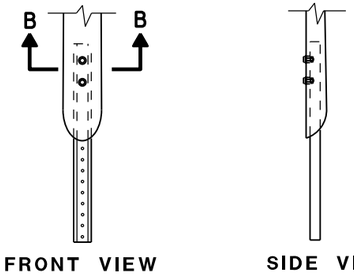

FRONT VIEW SIDE VIEW

ALTERNATE 2

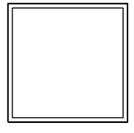

SECTION C-C

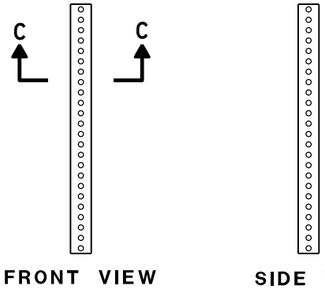

FRONT VIEW SIDE VIEW

ALTERNATE 3

FLEXIBLE MARKER POST ANCHORS

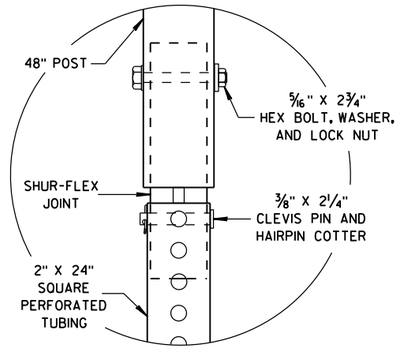

DETAIL B

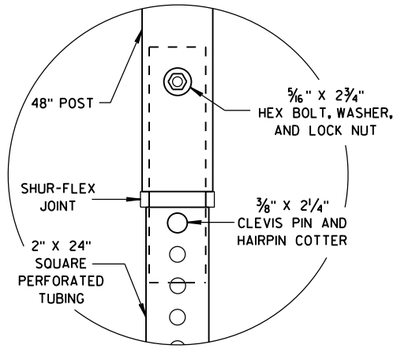

DETAIL C

FLEXIBLE MARKER POST
FOR CULVERT END

STATE OF WISCONSIN
DEPARTMENT OF TRANSPORTATION

APPROVED
10/1/2012 — DATE
/S/ Travis Feltes — STATE TRAFFIC ENGINEER
FHWA

6

S.D.D. 15 A 3-2b

6

S.D.D. 15 A 3-2b

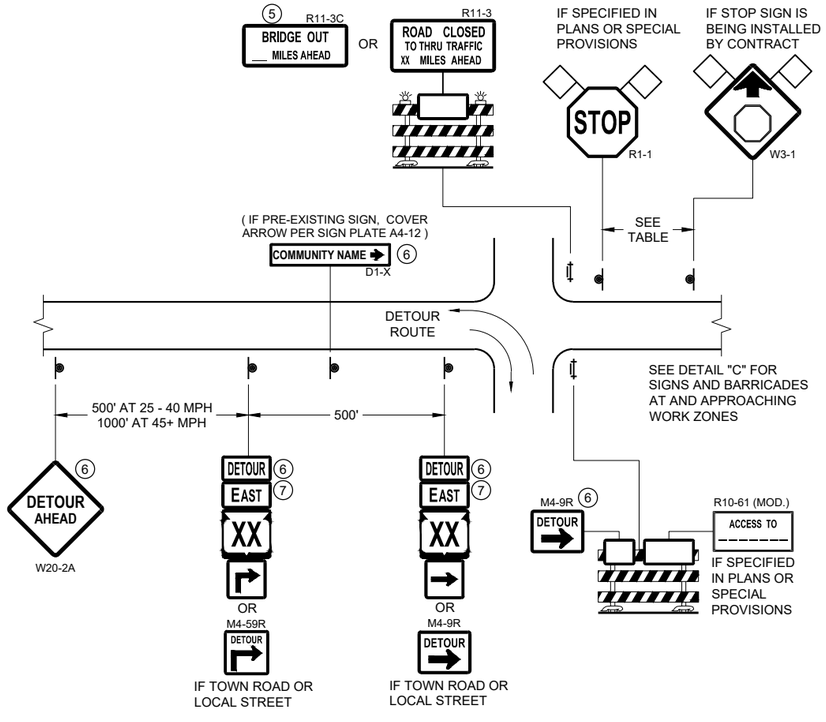

DETAIL A
MAINLINE CLOSURE WITH POSTED DETOUR

WORK ZONE GREATER THAN OR EQUAL TO ½ MILE FROM DETOUR ROUTE (1000 FEET IF URBAN)

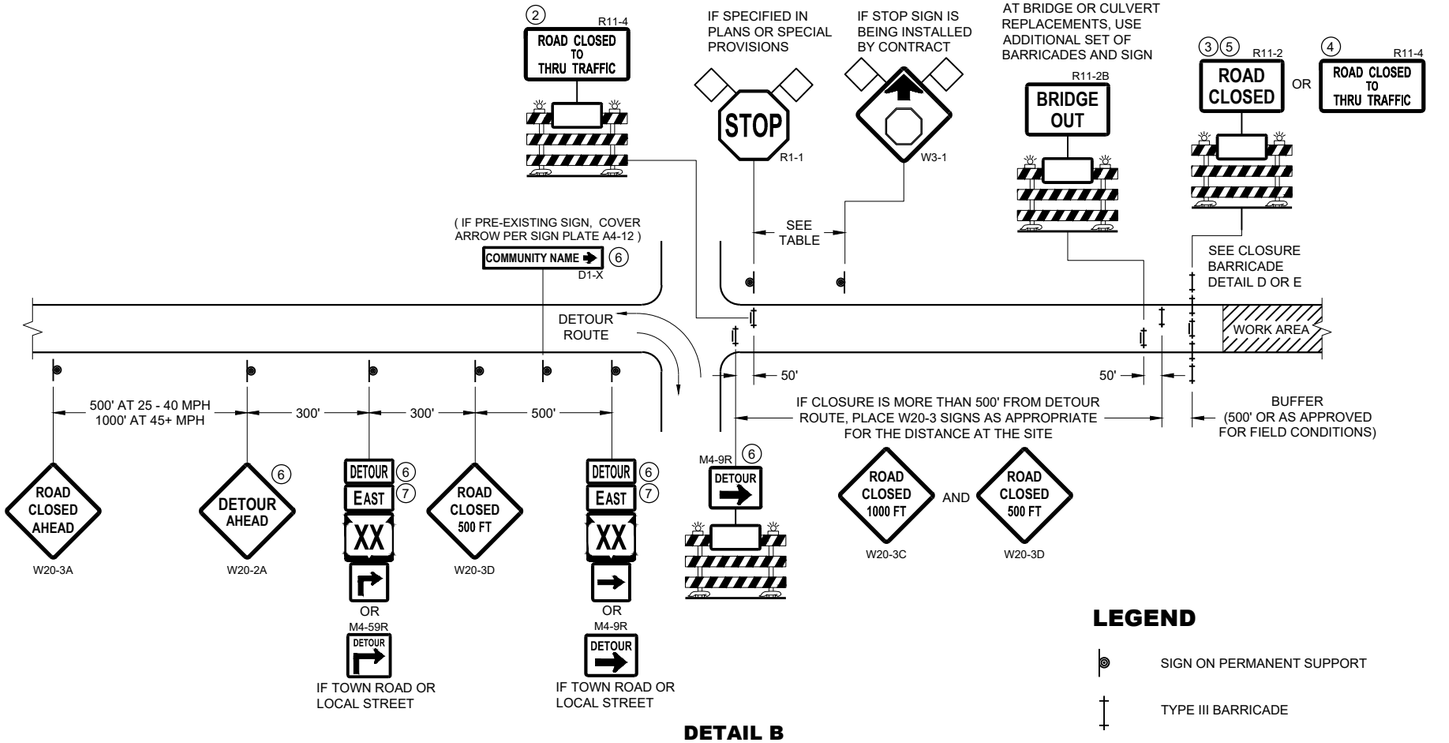

DETAIL B
MAINLINE CLOSURE WITH POSTED DETOUR

WORK ZONE LESS THAN ½ MILE FROM DETOUR ROUTE (1000 FEET IF URBAN)

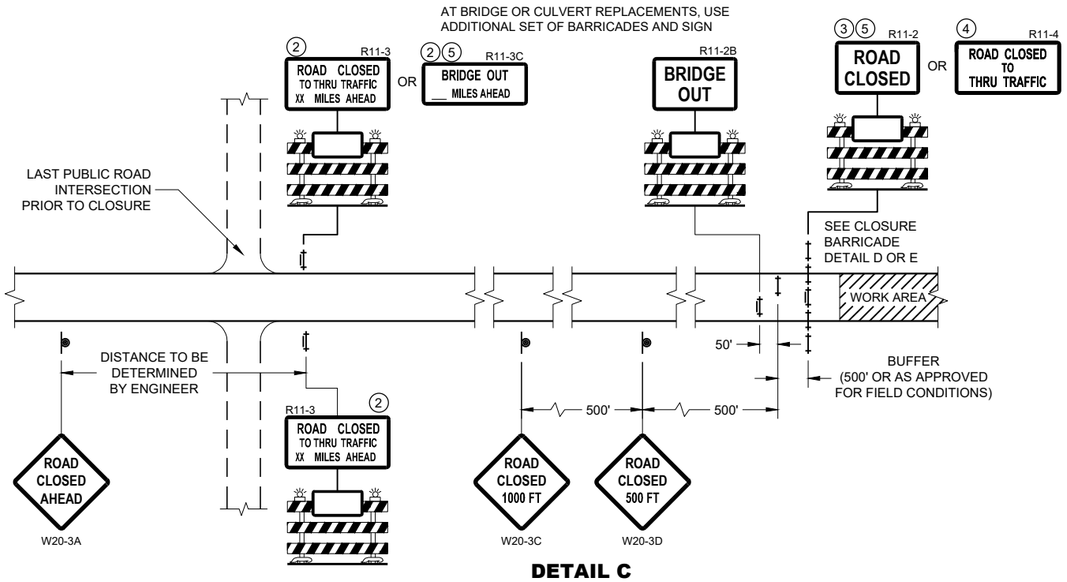

DETAIL C
MAINLINE CLOSURE, NO POSTED DETOUR

SPEED LIMIT (MPH)	"STOP AHEAD" ADVANCE WARNING DISTANCE (FT)
25	200
30	200
35	350
40	350
45	500
50	550
55	750

SEE SDD 15C2-SHEET "b"
FOR GENERAL NOTES
AND FOOTNOTES ① THROUGH ⑦

LEGEND

- SIGN ON PERMANENT SUPPORT
- TYPE III BARRICADE
- TYPE III BARRICADE WITH ATTACHED SIGN
- TYPE "A" WARNING LIGHT (FLASHING)
- WORK AREA
- FLAGS, 16" X 16" MIN. (ORANGE)
- DETOUR — M4 - 8
- EAST — M3 - X
- XX — M1 - 4 OR XX — M1 - 6 OR COUNTY X — M1 - 5A
- M05 - 1 OR M06 - 1

BARRICADES AND SIGNS FOR MAINLINE CLOSURES

STATE OF WISCONSIN
DEPARTMENT OF TRANSPORTATION

APPROVED
May 2023
DATE
/S/ Andrew Heidtke
WORK ZONE ENGINEER

FHWA

6

SDD 15C02 - 09a

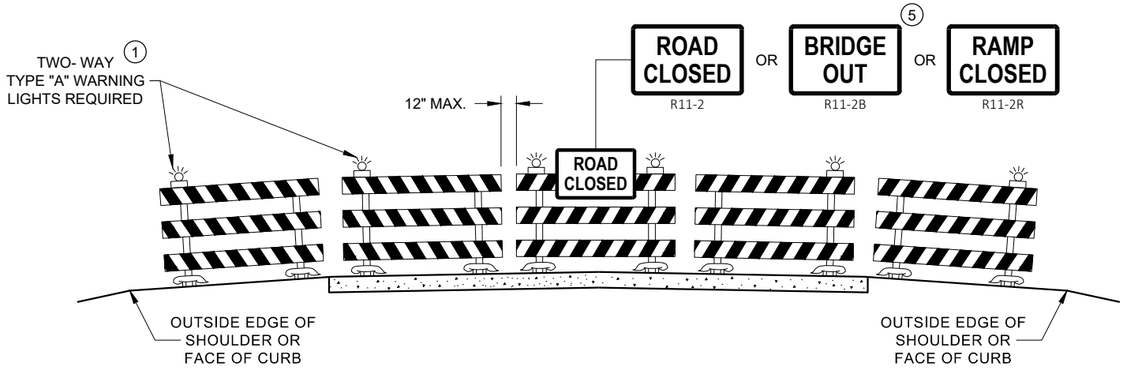

DETAIL D
ROAD CLOSURE BARRICADE DETAIL
APPROACH VIEW

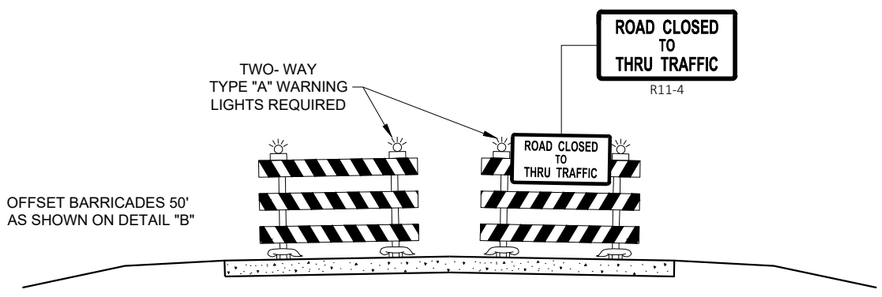

DETAIL E
LANE CLOSURE BARRICADE DETAIL
APPROACH VIEW

SEE SDD 15C2 - SHEET "a" FOR LEGEND

GENERAL NOTES

THE EXACT NUMBER, LOCATION, AND SPACING OF ALL SIGNS AND BARRICADES SHALL BE ADJUSTED TO FIT FIELD CONDITIONS AS APPROVED BY THE ENGINEER.

ANY SIGNS TEMPORARY OR EXISTING, WHICH CONFLICT WITH TRAFFIC CONTROL "IN USE", SHALL BE REMOVED OR COVERED AS NEEDED AND AS APPROVED BY THE ENGINEER.

THE SPACING BETWEEN TRAFFIC CONTROL SIGNS SHOULD BE ADJUSTED TO NOT CONFLICT WITH AND SHOULD PROVIDE A DESIRABLE MINIMUM OF 200 FEET CLEARANCE TO EXISTING SIGNS THAT WILL REMAIN IN PLACE.

BARRICADES THAT MUST BE MOVED FOR A WORK OPERATION SHALL BE IMMEDIATELY RE-ESTABLISHED UPON COMPLETION OF THE OPERATION, OR FOR CONTINUING OPERATIONS, AT THE END OF EACH WORKING DAY.

SIGNS THAT WILL BE IN PLACE LESS THAN 7 CONTINUOUS DAYS AND NIGHTS MAY BE MOUNTED ON PORTABLE SUPPORTS.

ALL TYPE III BARRICADES SHALL HAVE RAILS REFLECTORIZED ON BOTH FACES. STRIPES SHALL BE PROPERLY SLOPED DOWN TOWARD THE TRAFFIC SIDE OR AS SHOWN IN THE ROAD CLOSURE BARRICADE DETAIL "D" FOR FULL ROAD CLOSURES.

TYPE "A" LOW - INTENSITY FLASHING WARNING LIGHTS SHALL BE VISIBLE ON BOTH SIDES OF THE BARRICADE.

THE R11 - 2, R11 - 3, M4 - 9, R11 - 4, AND R10 - 61 SIGNS PLACED ON THE BARRICADES SHALL COVER NO MORE THAN THE TOP RAIL. THE SIGNS SHALL NOT COVER ANY PORTION OF THE MIDDLE RAIL OR BOTTOM RAILS.

"WO" AND "MO" SIGNS ARE THE SAME AS "W" AND "M" SIGNS EXCEPT THE BACKGROUND IS ORANGE.

ALL SIGNS SHALL BE 48" X 48" UNLESS OTHERWISE NOTED BELOW:
- R11 - 2 SHALL BE 48" X 30"
- R11 - 3 SHALL, R11 - 4 AND R10 - 61 SHALL BE 60 " X 30"
- M4 - 9 SHALL BE 30" X 24"
- M3 - X SHALL BE 24" X 12" (36" X 18" IF NEEDED TO MATCH EXISTING SIGNS)
- M4 - 8 SHALL BE 24" X 12" (36" X 18" IF NEEDED TO MATCH EXISTING SIGNS)
- M1 - 4, M1 - 5A AND M1 - 6 SHALL BE 24" X 24" (36" X 36" IF NEEDED TO MATCH EXISTING SIGNS)
- MO5 - 1 AND MO6 - 1 SHALL BE 21" X 21" (30" X 30" IF NEEDED TO MATCH EXISTING SIGNS)
- D1 - X SHALL BE AS SHOWN ON SPECIFIC PROJECT SIGNING DETAIL SHEETS.
- R1 - 1 SHALL BE 36" X 36"

(1) TWO WARNING LIGHTS SHALL BE PROVIDED ON THE CENTER BARRICADE AND A MINIMUM OF ONE WARNING LIGHT SHALL BE PROVIDED ON EACH OF THE OTHER BARRICADES WITHIN THE ROADWAY LIMITS. SPACING OF THE WARNING LIGHTS SHALL BE UNIFORM TO THE EDGE OF ROADWAY AS SHOWN (APPROX. 8 FOOT LIGHT SPACING.

(2) THESE SIGNS AND BARRICADES ARE NOT REQUIRED IF ROAD CLOSURE BEGINS AT AN INTERSECTION.

(3) FOR ROAD CLOSURE WITHOUT LOCAL ACCESS TO PROJECT, SEE ROAD CLOSURE BARRICADE DETAIL "D".

(4) FOR ROAD CLOSURE WITH LOCAL ACCESS TO PROJECT, SEE ROAD CLOSURE BARRICADE DETAIL "E".

(5) FOR BRIDGE OR CULVERT REPLACEMENTS, SUBSTITUTE "BRIDGE OUT" INSTEAD OF "ROAD CLOSED" ON R11 - 2 AND R11 - 3 SIGNS.

(6) INSTALL DETOUR AND COMMUNITY GUIDE SIGNS AND ARROWS ONLY IF SPECIFIED IN THE CONTRACT. IF THERE ARE EXISTING ROUTE MARKER ASSEMBLIES THAT WILL REMAIN IN PLACE, ADJUST THE LOCATION OF THE DETOUR ROUTE SIGNS TO CORRESPOND WITH THE EXISTING ASSEMBLIES. MODIFY EXISTING SIGNS WHERE POSSIBLE. SEE SPECIFIC PROJECT DETOUR SIGNING DETAIL SHEETS. IF DETOUR SIGNS ARE BEING INSTALLED BY OTHERS, PLACE THE CONTRACTED TRAFFIC CONTROL SIGNS TO ALLOW FOR PLACEMENT OF ALL WARNING, DETOUR AND GUIDE SIGNS AS SHOWN.

(7) "EAST" CARDINAL DIRECTION MARKERS AND RIGHT TURN ARROWS ARE SHOWN. USE OTHER CARDINAL DIRECTIONS AND ARROWS AS APPROPRIATE.

BARRICADES AND SIGNS FOR VARIOUS CLOSURES

STATE OF WISCONSIN
DEPARTMENT OF TRANSPORTATION

APPROVED
May 2023
DATE
/S/ Andrew Heidtke
WORK ZONE ENGINEE
FHWA

6

SDD 15C02 - 09b

6

SDD 15C02 - 09b

THIS DRAWING PROVIDES GENERAL GUIDANCE ON TYPICAL DETOUR SIGN LAYOUT AND SPACING. SEE PROJECT DETOUR SIGNING SHEETS FOR SPECIFIC DETAILS FOR EACH PROJECT.

LEGEND

- SIGN ON PERMANENT SUPPORT
- WORK AREA
- DETOUR — M4 - 8
- EAST — M3 - X
- XX — M1 - 4 OR XX — M1 - 6 OR COUNTY X — M1 - 5A
- M05 - 1 OR M06 - 1 OR M06 - 1

GENERAL NOTES

THE EXACT NUMBER, LOCATION AND SPACING OF ALL SIGNS SHALL BE ADJUSTED TO FIT FIELD CONDITIONS AS APPROVED BY THE ENGINEER.

IF THERE ARE EXISTING ROUTE MARKER ASSEMBLIES THAT WILL REMAIN IN PLACE, ADJUST THE LOCATION OF THE DETOUR ROUTE SIGNS TO CORRESPOND WITH THE EXISTING ASSEMBLIES. SEE SPECIFIC PROJECT DETOUR SIGNING DETAIL SHEETS. MODIFY EXISTING SIGNS WHERE POSSIBLE.

THE SPACING BETWEEN TRAFFIC CONTROL AND DETOUR SIGNS SHOULD BE ADJUSTED TO NOT CONFLICT WITH AND TO PROVIDE A DESIRABLE MINIMUM OF 200 FEET CLEARANCE TO EXISTING SIGNS THAT WILL REMAIN IN PLACE.

ANY SIGNS TEMPORARY OR EXISTING, WHICH CONFLICT WITH TRAFFIC CONTROL "IN USE" SHALL BE REMOVED OR COVERED AS NEEDED AND AS APPROVED BY THE ENGINEER.

SIGNS THAT WILL BE IN PLACE LESS THAN 7 CONTINUOUS DAYS AND NIGHTS MAY BE MOUNTED ON PORTABLE SUPPORTS.

"MO" SIGNS ARE THE SAME AS "M" SIGNS EXCEPT THE BACKGROUND IS ORANGE.

SIGN SIZES SHALL BE AS FOLLOWS:

- M3-X SHALL BE 24" X 12" (36" X 18" IF NEEDED TO MATCH EXISTING SIGNS)
- M4-8 SHALL BE 24" X 12" (36" X 18" IF NEEDED TO MATCH EXISTING SIGNS)
- M1-4, M1-5A AND M1-6 SHALL BE 24" X 24" (36" X 36" IF NEEDED TO MATCH EXISTING SIGNS)
- M05-1 AND M06-1 SHALL BE 21" X 21" (30" X 30" IF NEEDED TO MATCH EXISTING SIGNS)
- M4-9 AND M4-59 SHALL BE 30" X 24"
- M4-8a SHALL BE 24" X 18"
- G20-51 SHALL BE 60" X 24"
- W20-2A SHALL BE 48" X 48"
- D1-X SHALL BE AS SHOWN ON SPECIFIC PROJECT SIGNING DETAIL SHEETS.

* OPTIONAL SIGNS. SEE SPECIFIC PROJECT DETOUR SIGNING DETAIL SHEETS.

** FOR A TOWN ROAD OR LOCAL STREET DETOURED ONTO A STATE TRUNK HIGHWAY, PLACE A ROAD NAME PLAQUE ABOVE THE M4-9 SIGN AS SPECIFIED IN THE CONTRACT

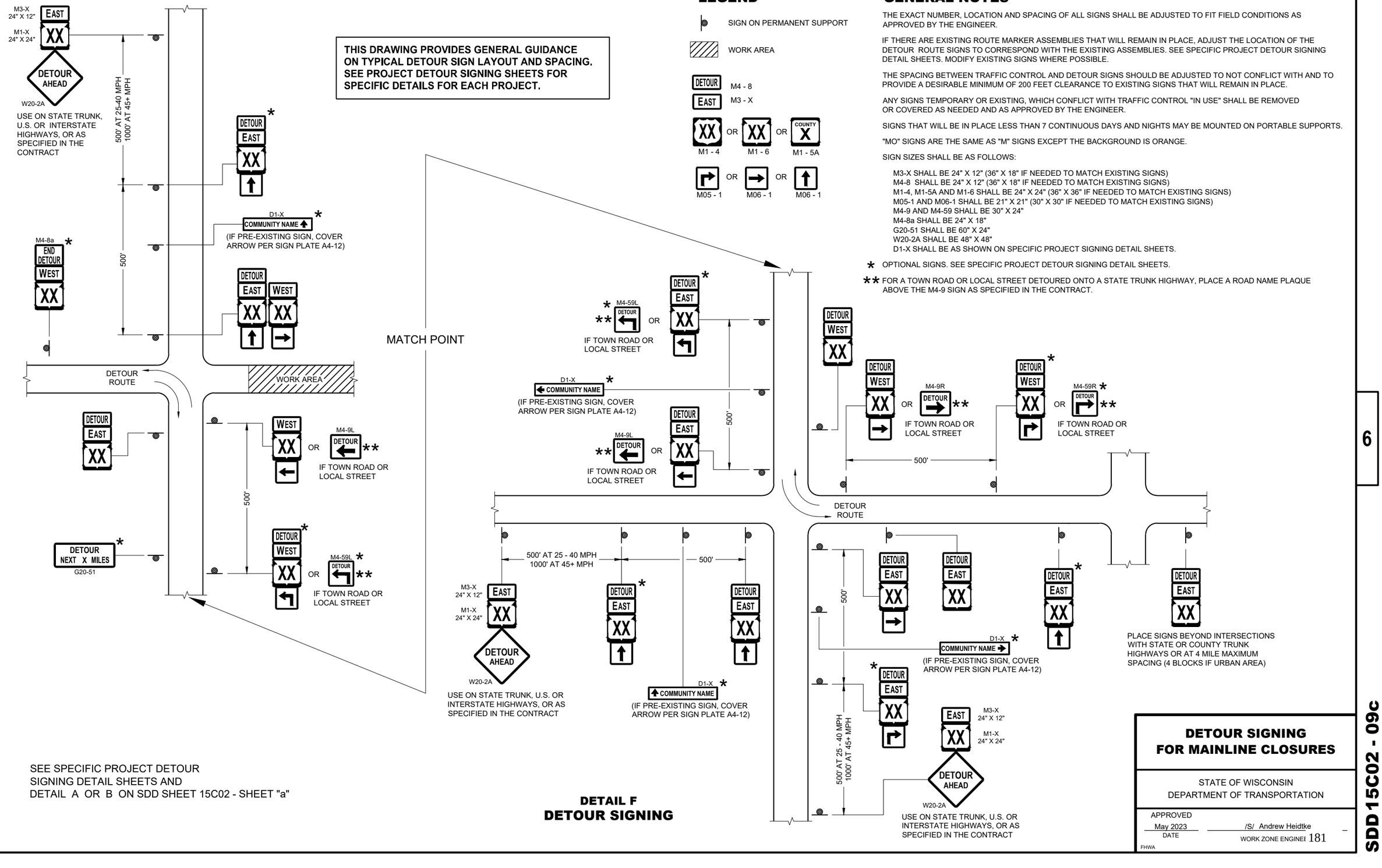

SEE SPECIFIC PROJECT DETOUR SIGNING DETAIL SHEETS AND DETAIL A OR B ON SDD SHEET 15C02 - SHEET "a"

DETAIL F
DETOUR SIGNING

DETOUR SIGNING FOR MAINLINE CLOSURES

STATE OF WISCONSIN
DEPARTMENT OF TRANSPORTATION

APPROVED
May 2023
DATE

/S/ Andrew Heidtke
WORK ZONE ENGINEER

FHWA

6

SDD 15C02 - 09c

GENERAL NOTES

THE EXACT NUMBER, LOCATION, AND SPACING OF ALL SIGNS AND DEVICES SHALL BE ADJUSTED TO FIT FIELD CONDITIONS.

THE SPACING BETWEEN TRAFFIC CONTROL SIGNS SHOULD BE ADJUSTED TO NOT CONFLICT WITH AND SHOULD PROVIDE A MINIMUM OF 200 FEET (500 FEET DESIRABLE) CLEARANCE TO EXISTING SIGNS THAT WILL REMAIN IN PLACE.

ALL SIGNS ARE 48" X 48" UNLESS OTHERWISE NOTED.

SIGNS THAT WILL BE IN PLACE LESS THAN SEVEN CONTINUOUS DAYS AND NIGHTS MAY BE MOUNTED ON PORTABLE SUPPORTS.

IF A "STOP" SIGN MUST BE REMOVED FOR A WORK OPERATION, A TEMPORARY "STOP" SIGN SHALL BE PLACED PRIOR TO THE SIGN REMOVAL, OR A FLAGGER SHALL BE PROVIDED UNTIL THE SIGN IS REESTABLISHED.

* OMIT G20-1 SIGNS IF LENGTH OF WORK AREA IS 2 MILES OR LESS

** PLACE AN ADDITIONAL W20-1A "ROAD WORK AHEAD" SIGN IF WORK AREA WITHIN THE PROJECT IS SEPARATED BY MORE THAN 2 MILES FROM PREVIOUS WORK AREA.

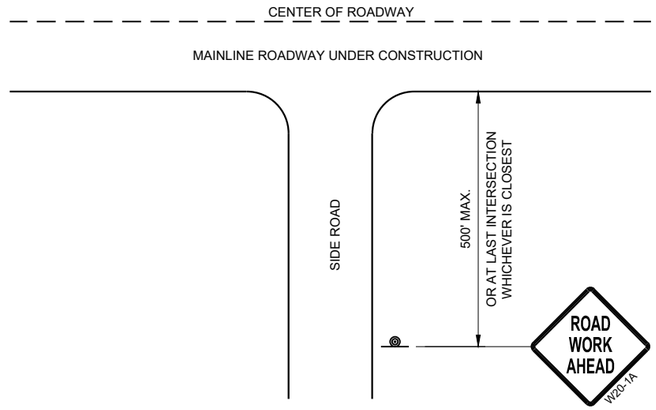

TYPICAL SIDE ROAD APPROACH WARNING SIGN DETAIL

LEGEND

SIGN ON PERMANENT SUPPORT

DIRECTION OF TRAFFIC

WORK AREA

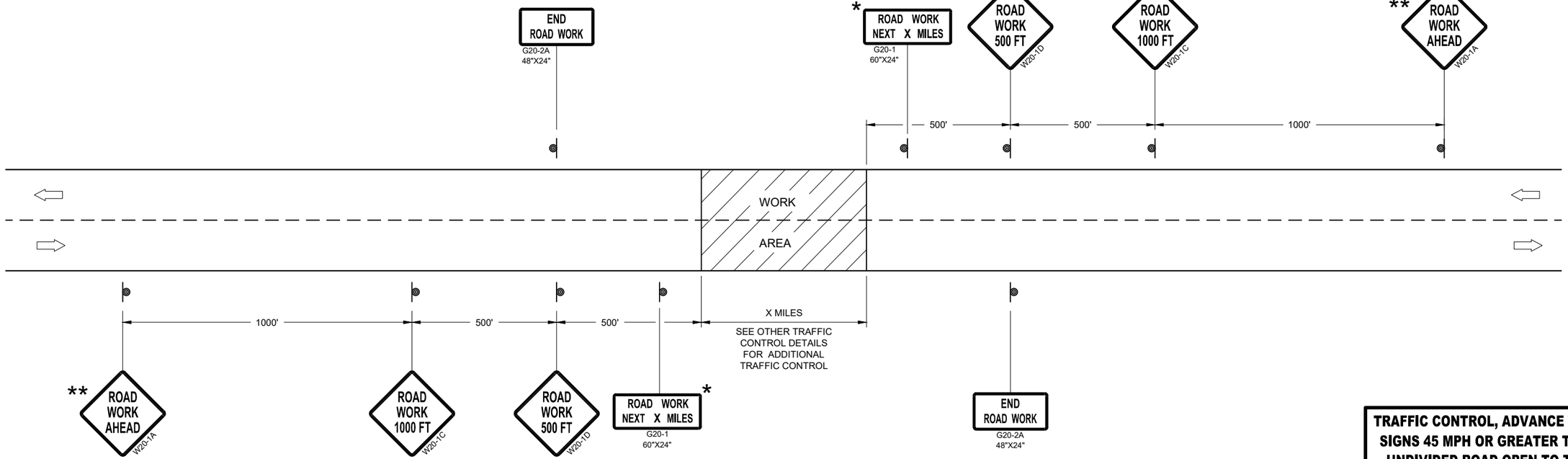

TRAFFIC CONTROL, ADVANCE WARNING SIGNS 45MPH OR GREATER

TRAFFIC CONTROL, ADVANCE WARNING SIGNS 45 MPH OR GREATER TWO-WAY UNDIVIDED ROAD OPEN TO TRAFFIC

STATE OF WISCONSIN
DEPARTMENT OF TRANSPORTATION

APPROVED
July 2018
DATE

/S/ Andrew Heidtke
WORK ZONE ENGINEE

FHWA

6

SDD 15C04 - 05

GENERAL NOTES

THE EXACT NUMBER, LOCATION, AND SPACING OF ALL SIGNS AND DEVICES SHALL BE ADJUSTED TO FIT FIELD CONDITIONS.

THE SPACING BETWEEN TRAFFIC CONTROL SIGNS SHOULD BE ADJUSTED TO NOT CONFLICT WITH AND SHOULD PROVIDE A MINIMUM OF 200 FEET (500 FEET DESIRABLE) CLEARANCE TO EXISTING SIGNS THAT WILL REMAIN IN PLACE.

ALL SIGNS ARE 48" X 48" UNLESS OTHERWISE NOTED. IF NECESSARY DUE TO SPACE CONSTRAINTS, 36"X36" SIGNS MAY BE USED INSTEAD OF 48" X 48" SIGNS.

SIGNS THAT WILL BE IN PLACE LESS THAN SEVEN CONTINUOUS DAYS AND NIGHTS MAY BE MOUNTED ON PORTABLE SUPPORTS.

IF A "STOP" SIGN MUST BE REMOVED FOR A WORK OPERATION, A TEMPORARY "STOP" SIGN SHALL BE PLACED PRIOR TO THE SIGN REMOVAL, OR A FLAGGER SHALL BE PROVIDED UNTIL THE SIGN IS REESTABLISHED.

* THE THIRD W20-1 SIGN IS REQUIRED ONLY IF THERE IS AN INTERSECTION BETWEEN THE "ROAD WORK 500 FEET" SIGN AND THE WORK ZONE. ADJUST THE PLACEMENT OF THIS SIGN BASED ON INTERSECTION LOCATION AND OTHER FIELD CONDITIONS.

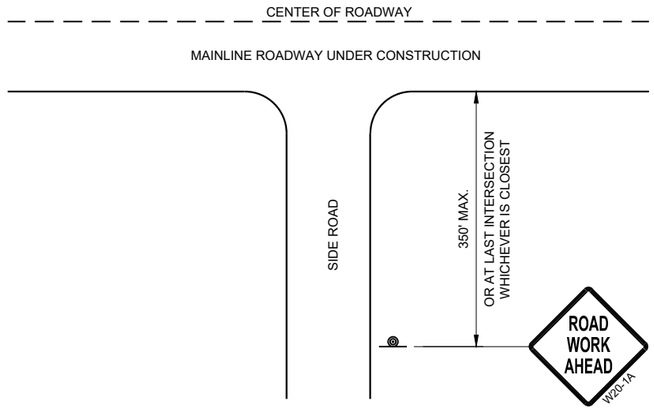

TYPICAL SIDE ROAD APPROACH WARNING SIGN DETAIL

LEGEND

- SIGN ON PERMANENT SUPPORT
- DIRECTION OF TRAFFIC
- WORK AREA

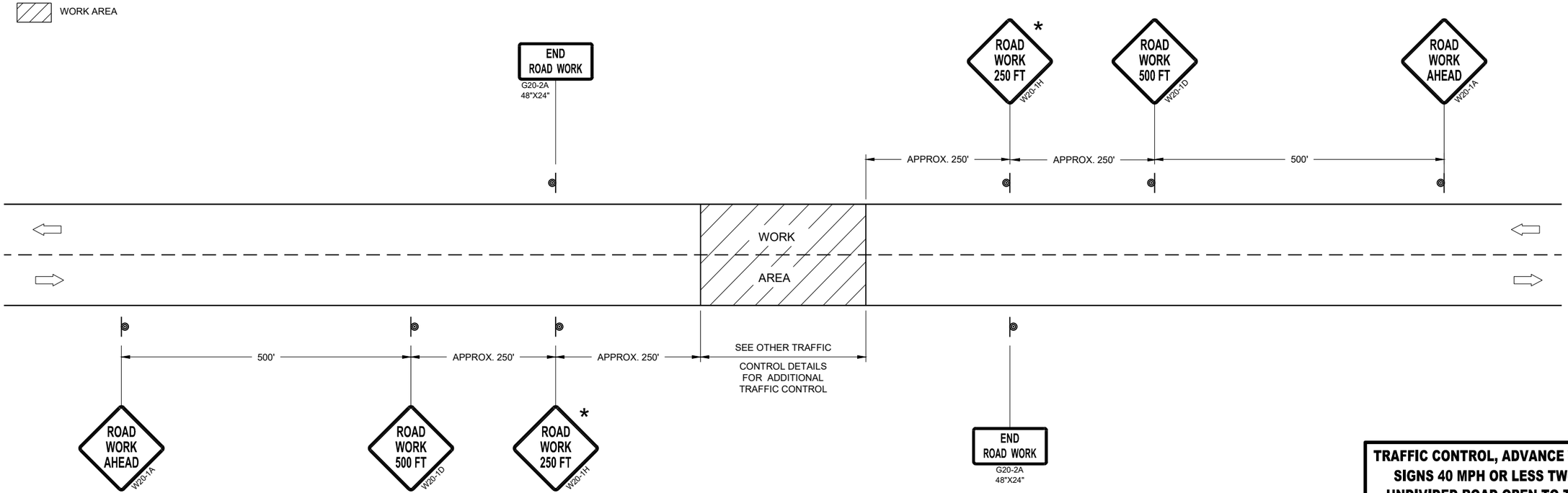

TRAFFIC CONTROL, ADVANCE WARNING SIGNS 40MPH OR LESS

TRAFFIC CONTROL, ADVANCE WARNING SIGNS 40 MPH OR LESS TWO-WAY UNDIVIDED ROAD OPEN TO TRAFFIC

STATE OF WISCONSIN
DEPARTMENT OF TRANSPORTATION

APPROVED
July 2018
DATE

/S/ Andrew Heidtke
WORK ZONE ENGINEE

FHWA

6

SDD 15C05 - 05

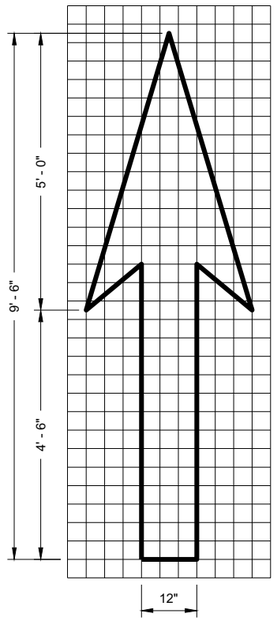

TYPE 1

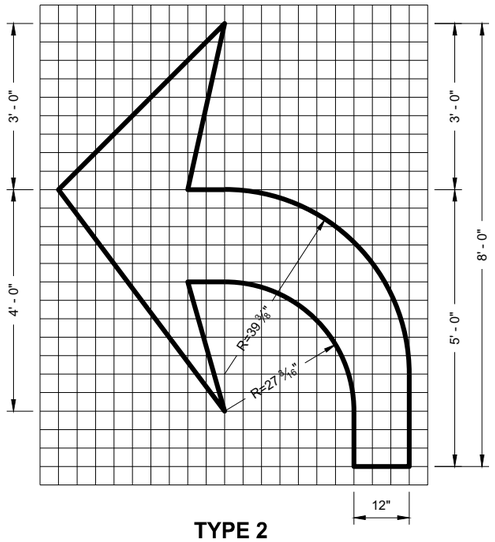

TYPE 2

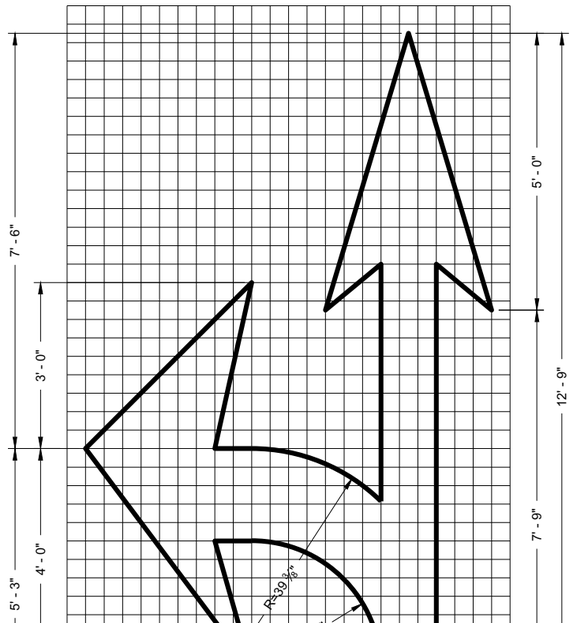

TYPE 3

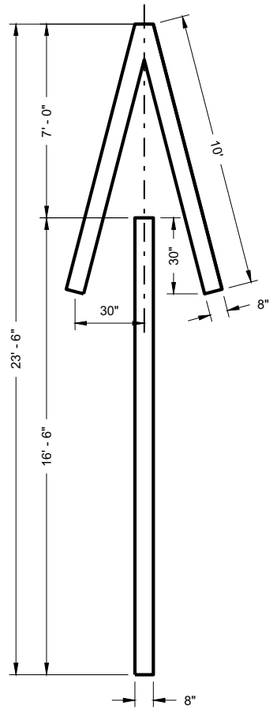

TYPE 4

GENERAL NOTES

DETAILS OF INSTALLATION, MATERIALS AND WORKMANSHIP NOT SHOWN ON THIS DRAWING SHALL CONFORM TO THE PERTINENT REQUIREMENTS OF THE STANDARD SPECIFICATIONS AND APPLICABLE SPECIAL PROVISIONS.

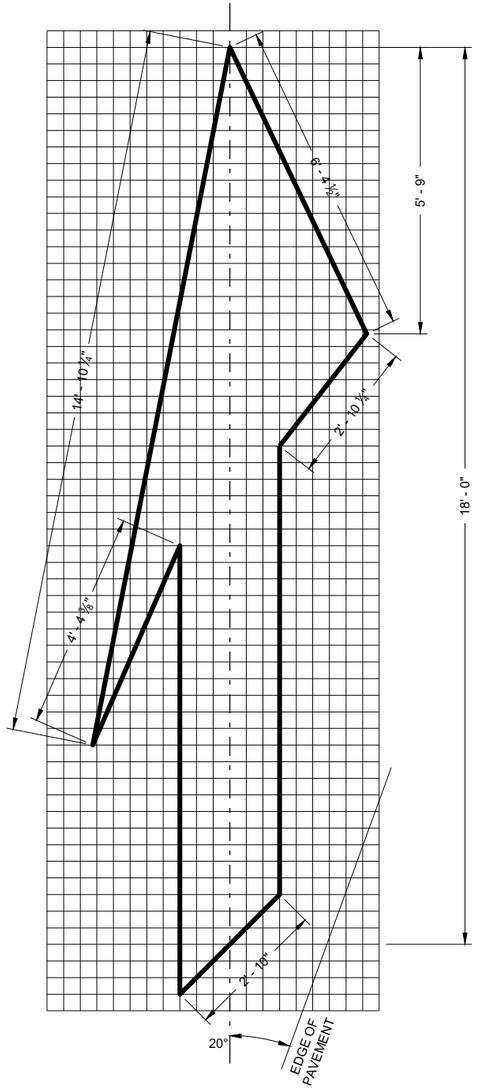

TYPE 5 LANE DROP ARROW

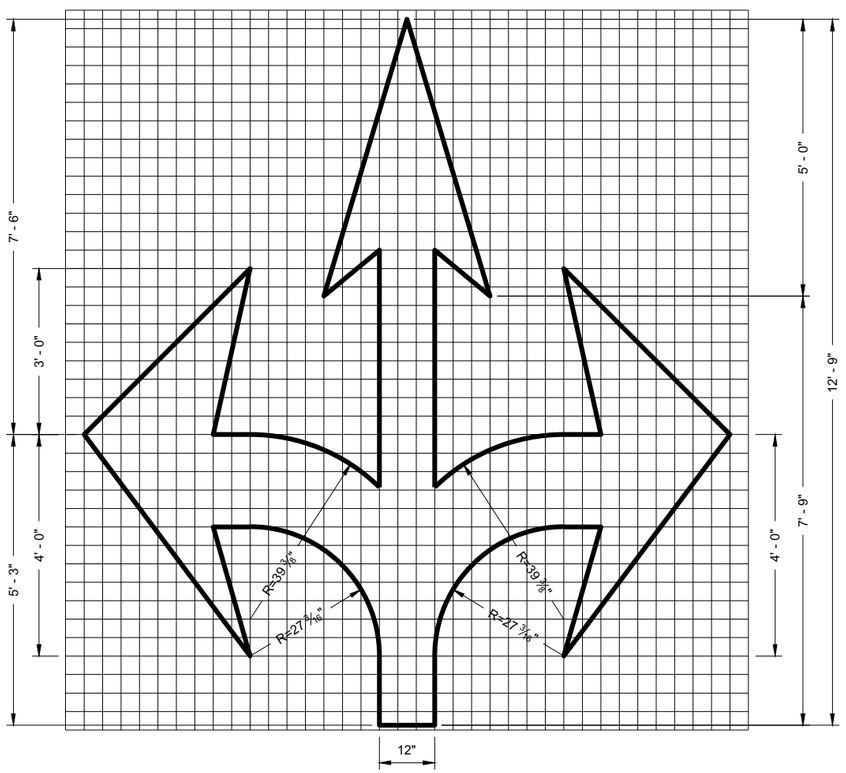

TYPE 6

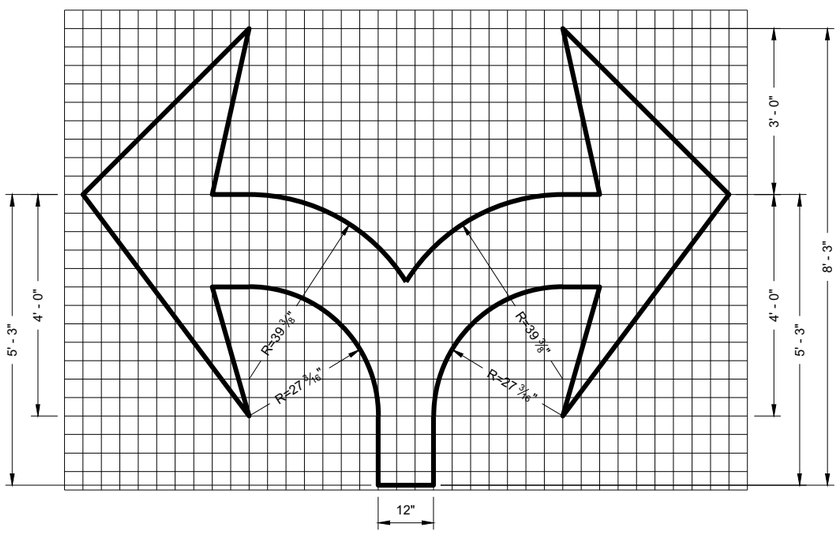

TYPE 7

PAVEMENT MARKING ARROWS

STATE OF WISCONSIN
DEPARTMENT OF TRANSPORTATION

APPROVED
November 2019 — DATE
/S/ Matthew Rauch — STATE SIGNING AND MAF ENGINEER

FHWA

6

SDD 15C07 - 15c

6

SDD 15C07 - 15c

* CONFIRM MARKING LINE WIDTH WITH THE MISCELLANEOUS QUANTITIES

GENERAL NOTES

DETAILS OF CONSTRUCTION NOT SHOWN ON THIS DRAWING SHALL CONFORM TO STANDARD SPECIFICATIONS AND SPECIAL PROVISIONS.

(1) LOCATE THE NO PASSING ZONE W14-3 SIGN WITHIN 50 FEET OF THE "T" MARKING

(2) MEASURE FROM EDGE OF MARKING TO JOINT LINE. THIS DOES NOT INCLUDE SPACE NEEDED FOR GROOVING OPERATIONS.

LEGEND

"T" MARKING

SIGN ON PERMANENT SUPPORT

DIRECTION OF TRAFFIC

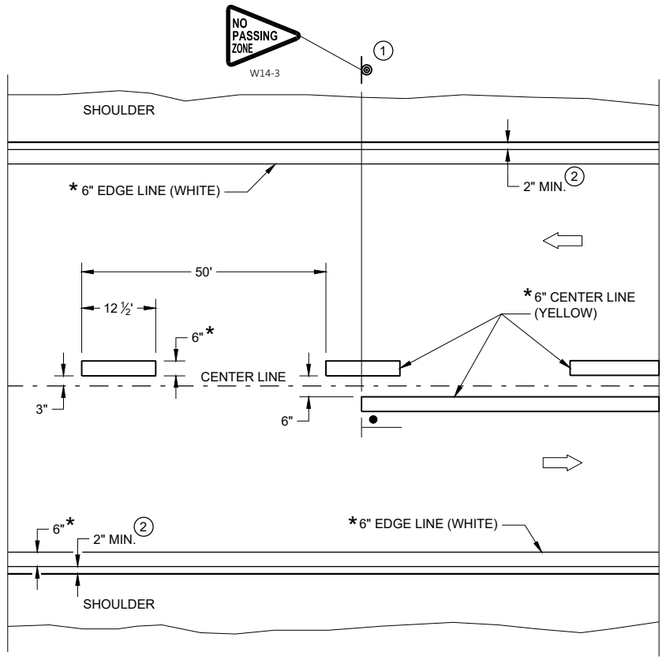

TWO WAY TRAFFIC

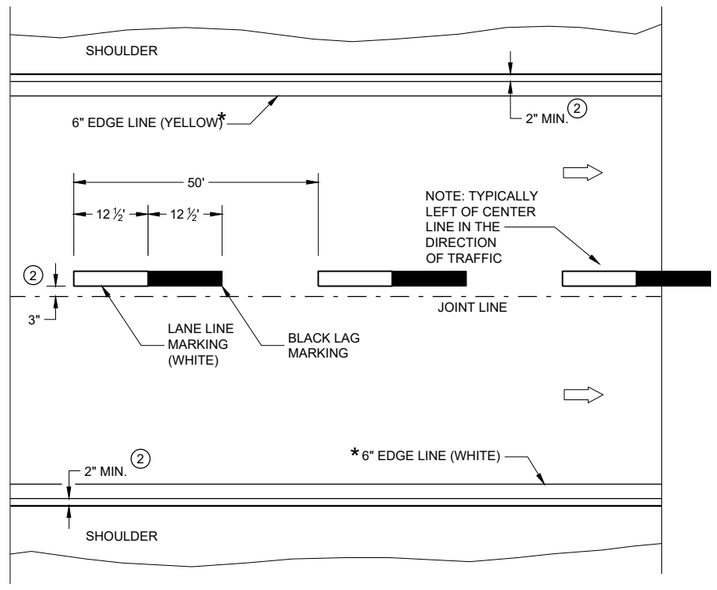

ONE WAY TRAFFIC

PERMANENT PAVEMENT MARKING

PERMANENT LONGITUDINAL PAVEMENT MARKINGS

STATE OF WISCONSIN
DEPARTMENT OF TRANSPORTATION

APPROVED

May 2023
DATE

/S/ Jeannie Silver
STATEWIDE SIGNING AND M
ENGINEER

FHWA

6

SDD 15C08-23a

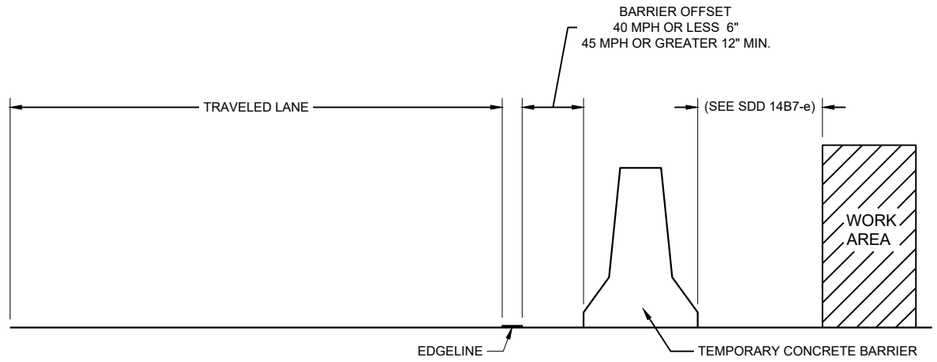

TEMPORARY BARRIER OFFSET FROM EDGELINE

GENERAL NOTES

DETAILS OF CONSTRUCTION NOT SHOWN ON THIS DRAWING SHALL CONFORM TO STANDARD SPECIFICATIONS AND SPECIAL PROVISIONS.

LEGEND

⇨ DIRECTION OF TRAFFIC

* CONFIRM MARKING LINE WIDTH WITH THE MISCELLANEOUS QUANTITIES

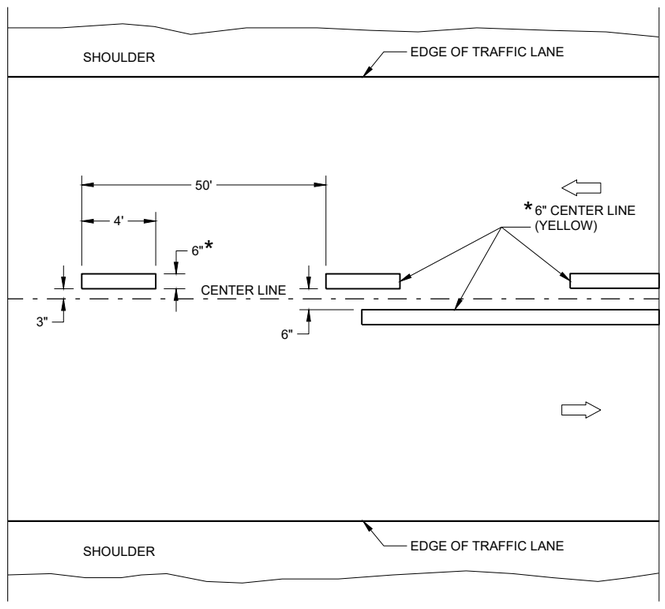

TWO WAY TRAFFIC

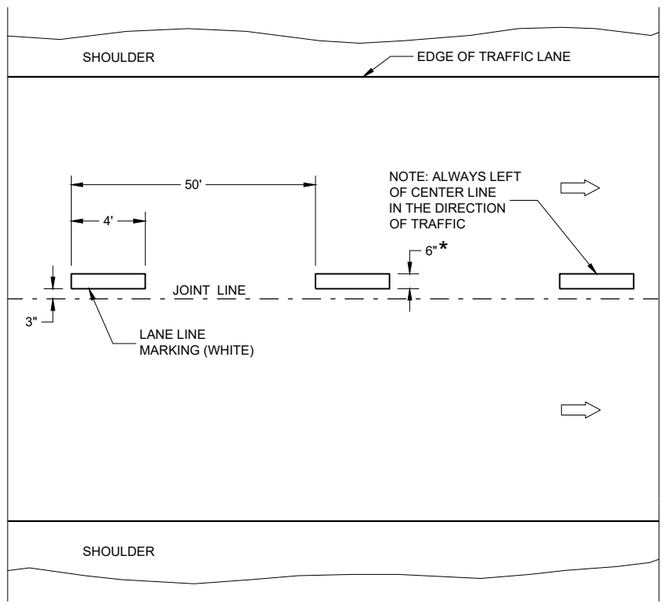

ONE WAY TRAFFIC

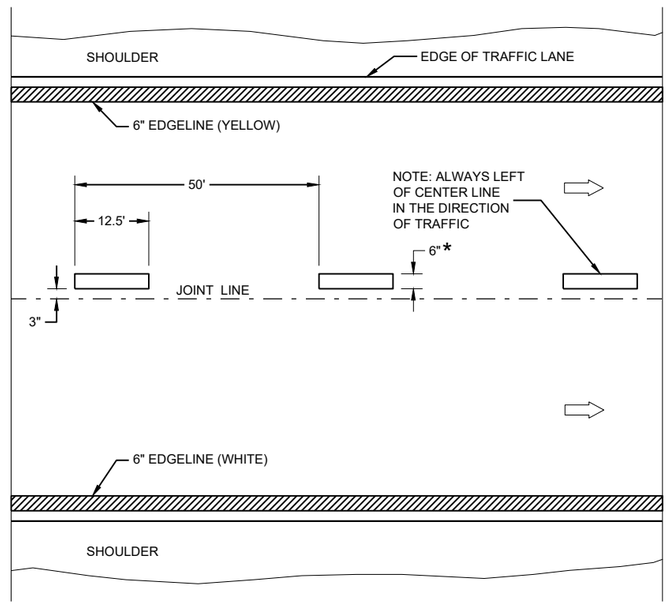

FREEWAYS AND EXPRESSWAYS

TEMPORARY PAVEMENT MARKING

TEMPORARY LONGITUDINAL PAVEMENT MARKING

STATE OF WISCONSIN
DEPARTMENT OF TRANSPORTATION

APPROVED
May 2023 — DATE
/S/ Jeannie Silver — STATEWIDE SIGNING AND M ENGINEER

FHWA

6

SDD 15C08-23b

6

SDD 15C08-23b

GENERAL NOTES

1. A SET OF ARROWS IS REQUIRED EVERY 400 FEET OR NEAR INTERSECTIONS OR DRIVEWAYS WITH TURNING TRAFFIC.
2. 10" WHITE
3. TURN BAY LENGTH OF LESS THAN 48' DOES NOT REQUIRE PAVEMENT ARROWS OR TEXT.

⇨ DIRECTION OF TRAFFIC

* CONFIRM MARKING LINE WIDTH WITH THE MISCELLANEOUS QUANTITIES

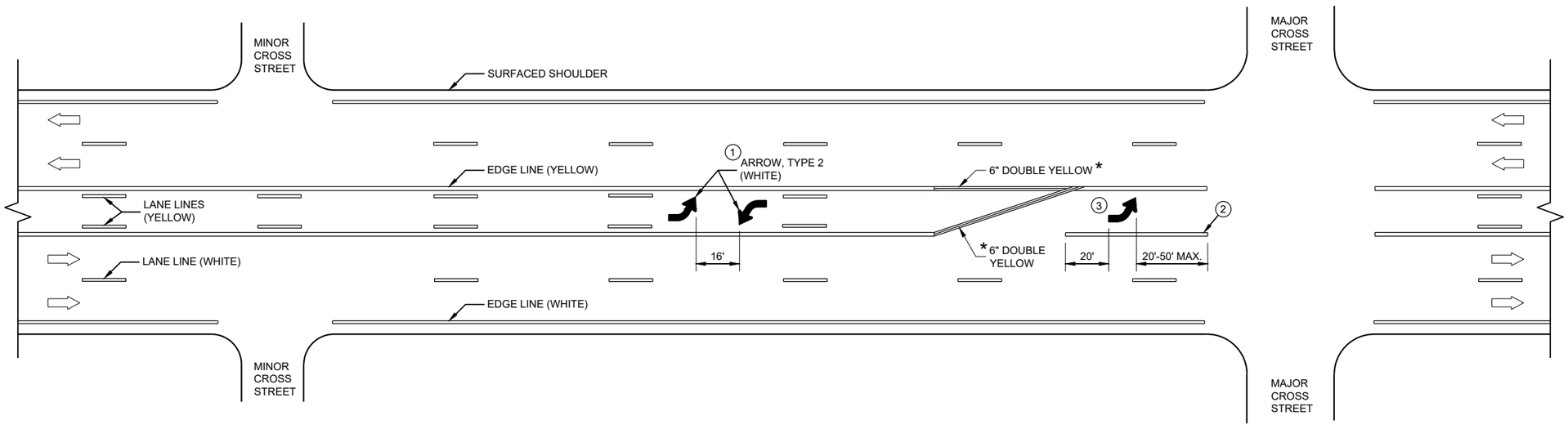

TWO WAY LEFT TURN LANE

PAVEMENT MARKING (TURN LANES)

STATE OF WISCONSIN
DEPARTMENT OF TRANSPORTA· 187

SDD 15C08-23c

6

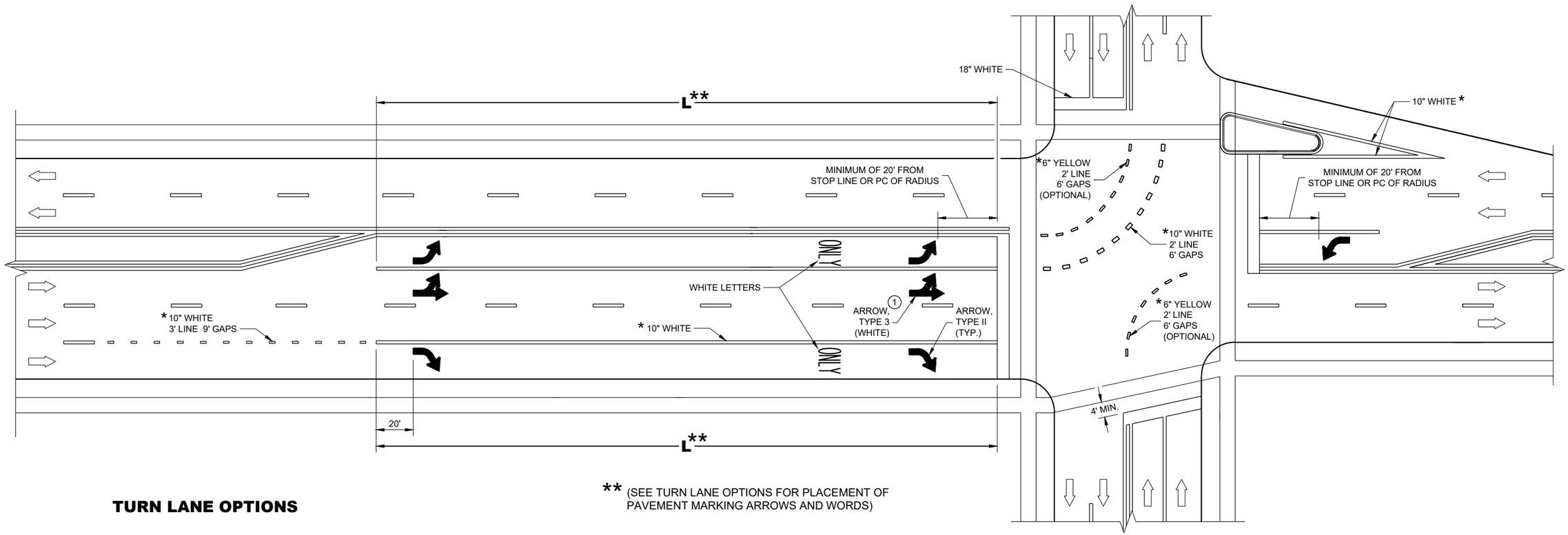

** (SEE TURN LANE OPTIONS FOR PLACEMENT OF PAVEMENT MARKING ARROWS AND WORDS)

TURN LANE OPTIONS

LENGTH OF TURN BAY (**L**) OF 0 - 47' DOES NOT REQUIRE PAVEMENT MARKING ARROWS OR WORDS

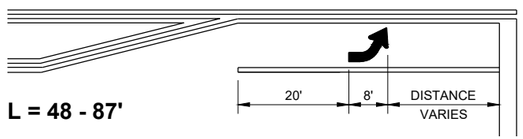

L = 48 - 87'

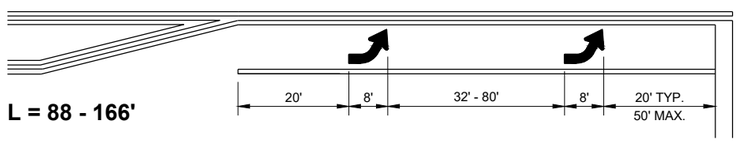

L = 88 - 166'

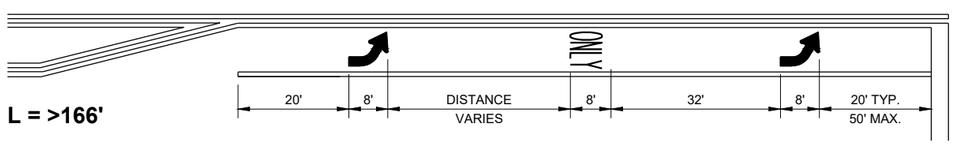

L = >166'

GENERAL NOTES

1. QUANTITY AND LOCATION OF TYPE 3 ARROWS ARE THE SAME AS THE TYPE II ARROWS IN THE ADJACENT TURN LANE. FOR TURN LANES WITH A PHYSICAL SEPARATION IN THE SAME DIRECTION OF TRAVEL, THE ARROWS AND "ONLY" MARKING MAY BE ELIMINATED.

DIRECTION OF TRAFFIC

L = LENGTH OF TURN BAY

* CONFIRM MARKING LINE WIDTH WITH THE MISCELLANEOUS QUANTITIES

PAVEMENT MARKING (TURN LANES)

STATE OF WISCONSIN
DEPARTMENT OF TRANSPORTATION

6

SDD 15C08-23d

SDD 15C08-23d

GENERAL NOTES

1. REFLECTIVE SHEETING SHALL FOLLOW THE REQUIREMENTS IN THE APPROVED PRODUCTS LISTING FOR SIGN SHEETING.
2. LOCATION OF WARNING LIGHTS WHEN SHOWN ON THE PLAN.

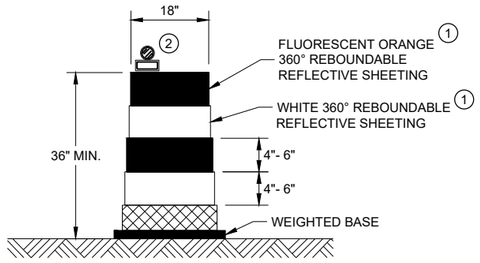

DRUM

BALLAST WIDTHS
RANGE FROM 24"-36"

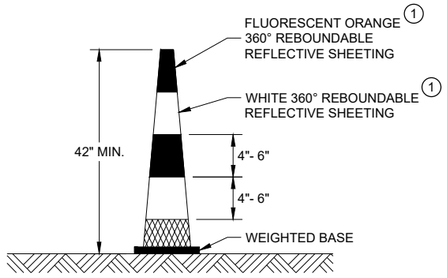

42" CONE

DO NOT USE IN TAPERS
½ SPACING OF DRUMS

BALLAST WIDTHS
RANGE FROM 14"-20"

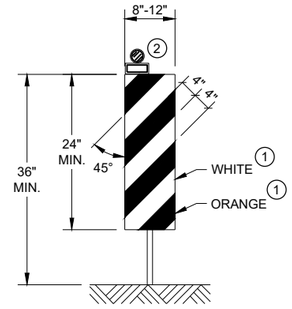

VERTICAL PANEL

THE STRIPES SHALL SLOPE DOWNWARD TO
THE TRAFFIC SIDE FOR CHANNELIZATION.

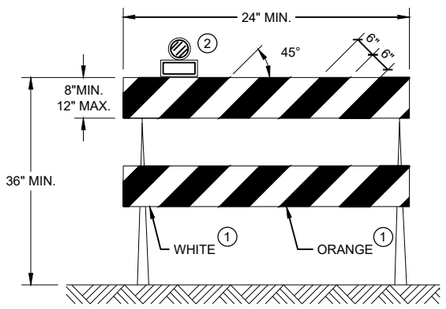

TYPE II BARRICADE

FOR RAILS LESS THAN 36" LONG, 4" WIDE STRIPES
MAY BE USED. ALL STRIPES SHALL SLOPE DOWNWARD
TO THE TRAFFIC SIDE FOR CHANNELIZATION.

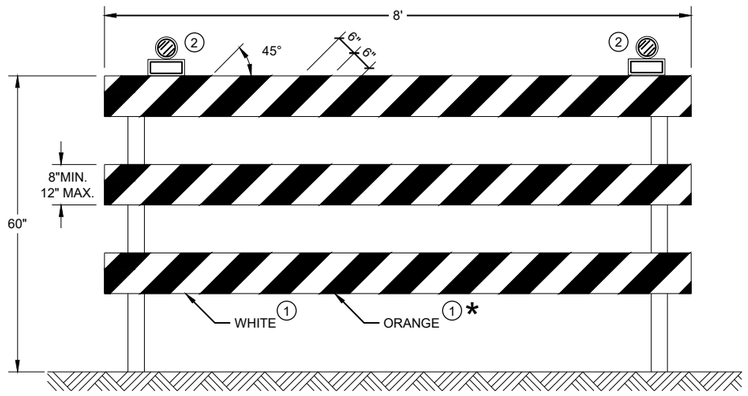

TYPE III BARRICADE

IF SIGN MOUNTED, DO NOT COVER MORE THAN 50% OF THE TOP
TWO RAILS OR 33% OF THE TOTAL AREA OF THE THREE RAILS.

* IF USED FOR A PERMANENT APPLICATION USE RED SHEETING.

CHANNELIZING DEVICES DRUMS, CONES, BARRICADES AND VERTICAL PANELS

STATE OF WISCONSIN
DEPARTMENT OF TRANSPORTATION

APPROVED
November 2022
DATE

/S/ Andrew Heidtke
WORK ZONE ENGINEE

FHWA

6

SDD 15C11 - 10b

6

SDD 15C11 - 10b

LEGEND

SIGN ON PORTABLE OR PERMANENT SUPPORT

TEMPORARY PORTABLE RUMBLE STRIP ARRAY

DIRECTION OF TRAFFIC

WORK AREA

FLAGGER, EQUIPPED WITH STOP/SLOW PADDLE FASTENED ON SUPPORT STAFF

GENERAL NOTES

DETAILS OF TRAFFIC CONTROL DEVICES AND INSTALLATION NOT SHOWN ON THIS DRAWING SHALL CONFORM TO THE PERTINENT REQUIREMENTS OF THE STANDARD SPECIFICATIONS, THE SPECIAL PROVISIONS, AND THE MANUAL ON UNIFORM TRAFFIC CONTROL DEVICES.

ALL SIGNS ARE 48" X 48" UNLESS OTHERWISE NOTED.

"WO" SIGNS ARE THE SAME AS "W" SIGNS EXCEPT THE BACKGROUND IS ORANGE.

THE EXACT NUMBER, LOCATION AND SPACING OF ALL SIGNS, DEVICES, AND LOCATION OF ALL FLAGGERS SHALL BE ADJUSTED TO FIT FIELD CONDITIONS AS APPROVED BY THE ENGINEER.

THE FIRST ADVANCE WARNING SIGN SHOULD TYPICALLY BE LOCATED IN ADVANCE OF THE ANTICIPATED TRAFFIC BACKUP OR QUEUE.

WHEN A SIDE ROAD OR RAMP INTERSECTS THE FACILITY ON WHICH THE WORK IS BEING PERFORMED, ADDITIONAL TRAFFIC CONTROLS SHALL BE PROVIDED AS SPECIFIED IN THE PLANS AND/OR THE SPECIAL PROVISIONS OR AS APPROVED BY THE ENGINEER.

FLAGGING

FLAGGERS SHALL BE IN SIGHT OF EACH OTHER OR IN DIRECT COMMUNICATION AT ALL TIMES. THEY SHALL BE EQUIPPED WITH STOP/SLOW PADDLES FASTENED ON SUPPORT STAFFS. WHEN THE FLAGGING OPERATION IS NOT IN EFFECT REMOVE TEMPORARY PORTABLE RUMBLE STRIPS PRIOR TO COVERING OR REMOVING ALL ADVANCE SIGNING.

(1) FOR MOVING WORK OPERATIONS, POST ADDITIONAL W20-7A FLAGGER SIGNS AT APPROXIMATELY 3,500' INTERVALS IN THE MOVING WORK OPERATION OR AS APPROVED BY THE ENGINEER.

(2) SIGN NOT REQUIRED IF FLAGGING OPERATION OCCURS WITHIN A SIGNED ROAD WORK ZONE AREA.

WHEN THE DISTANCE BETWEEN FLAGGERS EXCEEDS 2 MILES, A PILOT CAR IS REQUIRED. WHEN CURVES REDUCE SIGHT DISTANCE BELOW 400', A PILOT CAR IS REQUIRED.

TEMPORARY PORTABLE RUMBLE STRIPS

UTILIZE TEMPORARY PORTABLE RUMBLE STRIPS ON ALL FLAGGING OPERATIONS.

(3) EACH TEMPORARY PORTABLE RUMBLE STRIP ARRAY CONSISTS OF THREE RUMBLE STRIPS PLACED TRANSVERSE ACROSS THE LANE AT THE LOCATIONS SHOWN. WITHIN EACH ARRAY, SPACING BETWEEN RUMBLE STRIPS SHALL BE 15 FEET ON CENTER

ONLY USE TEMPORARY PORTABLE RUMBLE STRIPS FROM THE APPROVED PRODUCTS LIST.

INSTALL TEMPORARY RUMBLE STRIPS PER MANUFACTURER'S RECOMMENDATIONS.

PLACE ADVANCE SIGNING PRIOR TO INSTALLING TEMPORARY RUMBLE STRIPS.

DO NOT INSTALL TEMPORARY PORTABLE RUMBLE STRIPS ON GRAVEL, MILLED SURFACES, OR ASPHALT THAT HAS BEEN PAVED LESS THAN 12 HOURS.

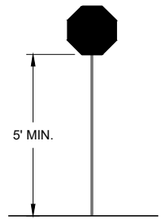

STOP/SLOW PADDLE ON SUPPORT STAFF

SIGN AND TEMPORARY RUMBLE STRIP ARRAY SPACING TABLE

SPEED LIMIT	SPACING "A"
25-30 MPH	200'
35-40 MPH	350'
45-55 MPH	500'



WO3-4

USE OF WO3-4 SIGN IS OPTIONAL. WHEN USED, THIS SIGN SHALL BE LOCATED BETWEEN THE W20-7A AND W20-4A SIGNS, USING SPACING "A".

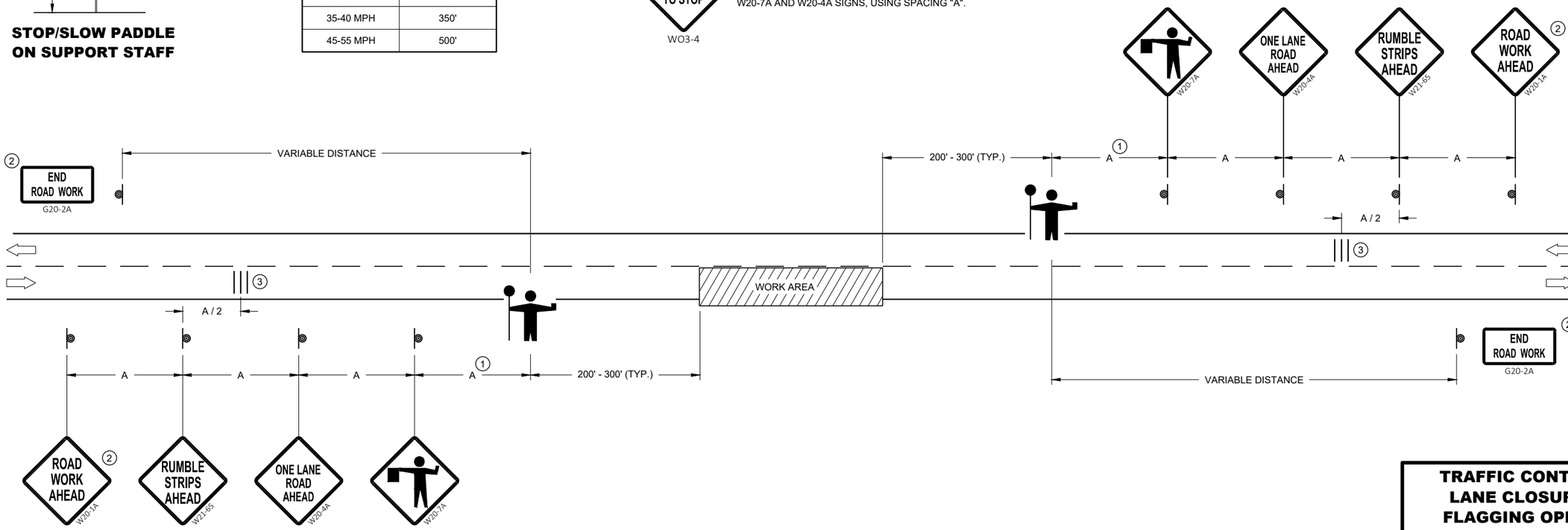

TRAFFIC CONTROL FOR LANE CLOSURE WITH FLAGGING OPERATION

STATE OF WISCONSIN
DEPARTMENT OF TRANSPORTATION

APPROVED
May 2022
DATE

/S/ Andrew Heidtke
WORK ZONE ENGINEE

FHWA

6

SDD 15C12 - 09a

6

SDD 15C12 - 09a

GENERAL NOTES

SIGN ON PERMANENT SUPPORT

TRAFFIC CONTROL CONE 42-INCH

TRAFFIC CONTROL DRUM

TEMPORARY PORTABLE RUMBLE STRIP ARRAY

DIRECTION OF TRAFFIC

WORK AREA

AFAD — AUTOMATED FLAGGER ASSISTANCE DEVICE (AFAD)

GENERAL NOTES

DETAILS OF TRAFFIC CONTROL DEVICES AND INSTALLATION NOT SHOWN ON THIS DRAWING SHALL CONFORM TO THE PERTINENT REQUIREMENTS OF THE STANDARD SPECIFICATIONS, THE SPECIAL PROVISIONS, AND THE MANUAL ON UNIFORM TRAFFIC CONTROL DEVICES.

ALL SIGNS ARE 48" X 48" UNLESS OTHERWISE NOTED.

"WO" SIGNS ARE THE SAME AS "W" SIGNS EXCEPT THE BACKGROUND IS ORANGE.

THE EXACT NUMBER, LOCATION AND SPACING OF ALL SIGNS, DEVICES, AND LOCATION OF ALL FLAGGERS SHALL BE ADJUSTED TO FIT FIELD CONDITIONS AS APPROVED BY THE ENGINEER.

THE FIRST ADVANCE WARNING SIGN SHOULD TYPICALLY BE LOCATED IN ADVANCE OF THE ANTICIPATED TRAFFIC BACKUP OR QUEUE.

WHEN A SIDE ROAD OR RAMP INTERSECTS THE FACILITY ON WHICH THE WORK IS BEING PERFORMED, ADDITIONAL TRAFFIC CONTROLS SHALL BE PROVIDED AS SPECIFIED IN THE PLANS AND/OR THE SPECIAL PROVISIONS OR AS APPROVED BY THE ENGINEER.

FLAGGING

IF THE AUTOMATED FLAGGER ASSISTANCE DEVICE (AFAD) STOPS WORKING, FLAGGERS SHALL BE IN SIGHT OF EACH OTHER OR IN DIRECT COMMUNICATION AT ALL TIMES. THEY SHALL BE EQUIPPED WITH STOP/SLOW PADDLES FASTENED ON SUPPORT STAFFS. WHEN THE FLAGGING OPERATION IS NOT IN EFFECT REMOVE TEMPORARY PORTABLE RUMBLE STRIPS PRIOR TO COVERING OR REMOVING ALL ADVANCE SIGNING.

WHEN THE DISTANCE BETWEEN FLAGGERS EXCEEDS 2 MILES, A PILOT CAR IS REQUIRED. WHEN CURVES REDUCE SIGHT DISTANCE BELOW 400', A PILOT CAR IS REQUIRED.

(1) SIGN NOT REQUIRED IF FLAGGING OPERATION OCCURS WITHIN A SIGNED ROAD WORK ZONE AREA.

(2) IF FLAGGERS ARE PHYSICALLY NEEDED TO FLAG, REPLACE WO3-4 SIGNS WITH W20-7A SIGNS.

TEMPORARY PORTABLE RUMBLE STRIPS

UTILIZE TEMPORARY PORTABLE RUMBLE STRIPS ON ALL FLAGGING OPERATIONS.

ONLY USE TEMPORARY PORTABLE RUMBLE STRIPS FROM THE APPROVED PRODUCTS LIST.

PLACE ADVANCE SIGNING PRIOR TO INSTALLING TEMPORARY RUMBLE STRIPS.

DO NOT INSTALL TEMPORARY PORTABLE RUMBLE STRIPS ON GRAVEL, MILLED SURFACES, OR ASPHALT THAT HAS BEEN PAVED LESS THAN 12 HOURS.

(3) EACH TEMPORARY PORTABLE RUMBLE STRIP ARRAY CONSISTS OF THREE RUMBLE STRIPS PLACED TRANSVERSELY AT THE LOCATIONS SHOWN. WITHIN EACH ARRAY, SPACING BETWEEN RUMBLE STRIPS SHALL BE 15 FEET ON CENTER.

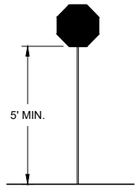

STOP/SLOW PADDLE ON SUPPORT STAFF

SIGN AND TEMPORARY RUMBLE STRIP ARRAY SPACING TABLE

SPEED LIMIT	SPACING "A"
25-30 MPH	200'
35-40 MPH	350'
45-55 MPH	500'

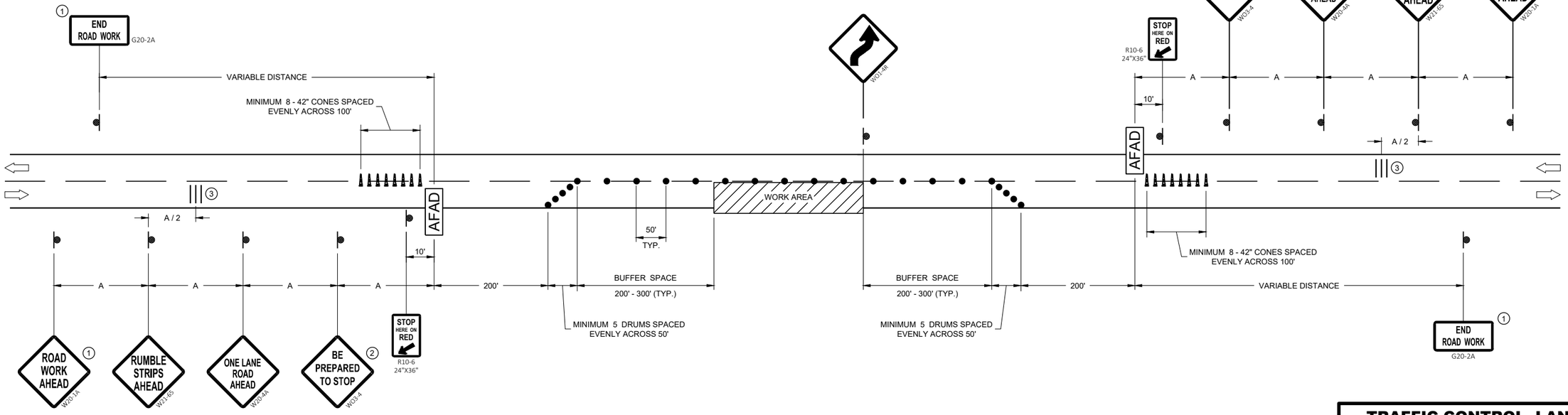

TRAFFIC CONTROL, LANE CLOSURE WITH AUTOMATED FLAGGER ASSISTANCE DEVICE

STATE OF WISCONSIN
DEPARTMENT OF TRANSPORTATION

APPROVED
May 2022 — DATE
/S/ Andrew Heidtke — WORK ZONE ENGINEER
FHWA

SDD 15C12 - 09b

SDD 15C12 - 09b

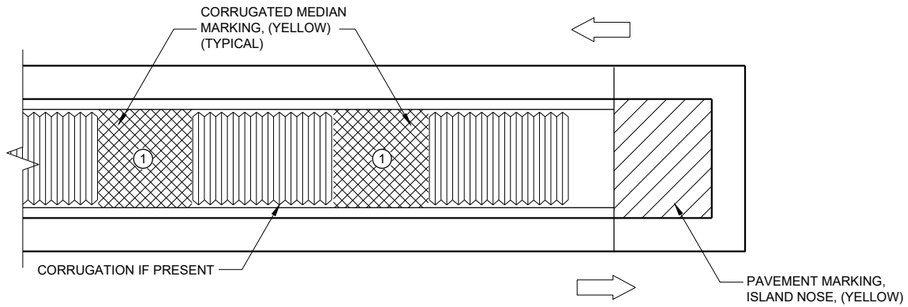

MEDIAN ISLAND WITH SQUARE BLUNT NOSE

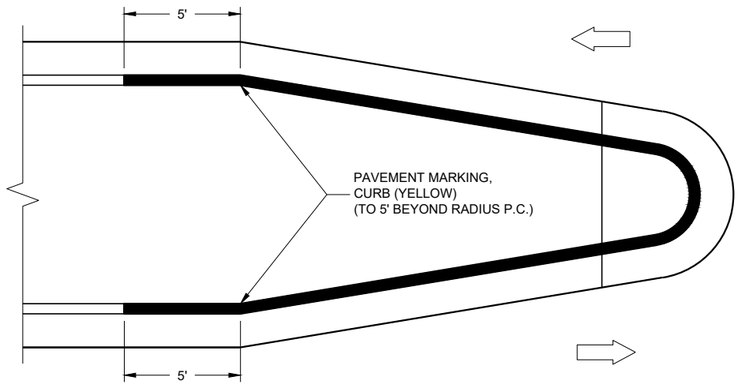

MEDIAN ISLAND WITH ROUND BLUNT NOSE

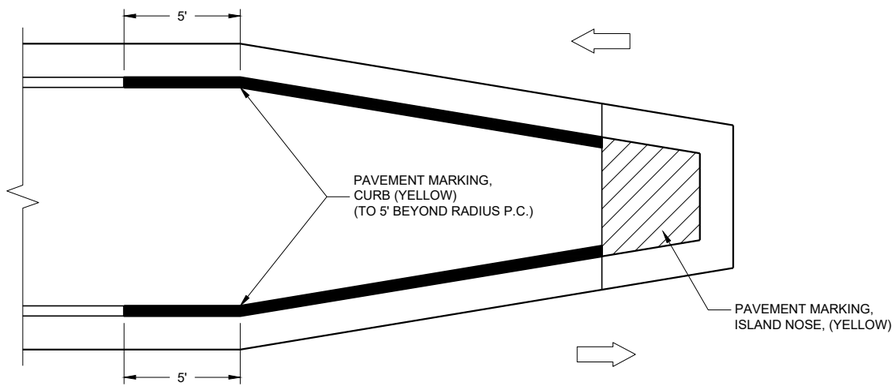

MEDIAN ISLAND WITH SLOPED NOSE

TYPICAL PLACEMENT OF PAVEMENT MARKING ON MEDIAN ISLANDS

GENERAL NOTES

WHEN CONCRETE CORRUGATED MEDIAN IS CONSTRUCTED TO SEPARATE TRAFFIC OPERATING IN THE OPPOSING DIRECTION, YELLOW PAVEMENT MARKING SHALL BE APPLIED TO THE FLAT PORTION OF THE CONCRETE CORRUGATED MEDIAN. THE ITEM OF PAVEMENT MARKING, CONCRETE CORRUGATED MEDIAN, WILL BE MEASURED IN PLACE AND ACCEPTED IN ACCORDANCE WITH THE CONTRACT AND PAID FOR AT THE CONTRACT UNIT PRICE PER SQUARE FOOT.

(1) APPLY PAVEMENT MARKING TO THE FLAT PORTION OF CORRUGATED MEDIAN.

ISLAND NOSE MARKING

CURB MARKING

CORRUGATED MEDIAN MARKING

DIRECTION OF TRAVEL

PAVEMENT MARKINGS, MEDIAN ISLAND NOSE

STATE OF WISCONSIN
DEPARTMENT OF TRANSPORTATION

APPROVED

May 2023
DATE

/S/ Jeannie Silver
STATE SIGNING AND MAR ENGINEER

FHWA

6

SDD 15C18-08b

LEGEND

V1 LEAD VEHICLE

V2 MARKING VEHICLE

V3 SHADOW VEHICLE

TRUCK MOUNTED ATTENUATOR (TMA)

SIGN ON TEMPORARY SUPPORT

DIRECTION OF TRAFFIC

FLASHING ARROW PANEL (CAUTION)

GENERAL NOTES

ALL VEHICLES SHALL BE EQUIPPED WITH TWO 360 DEGREE HIGH INTENSITY YELLOW FLASHING LIGHTS OR STROBE LIGHTS AND OPERATED WITH HEADLIGHTS TURNED ON.

ALL VEHICLES SHALL BE EQUIPPED WITH REAR FACING TYPE B OR C FLASHING ARROW PANEL OPERATING IN CAUTION MODE. SIGNS PLACED ON VEHICLES MUST NOT OBSCURE THE ARROW PANEL.

ALL SIGNS ARE 48" X 48" UNLESS OTHERWISE SPECIFIED.

DISTANCE BETWEEN VEHICLES MAY VARY ACCORDING TO TERRAIN, SIGHT DISTANCE, PAINT DRYING TIME, AND OTHER FACTORS. WHENEVER ADEQUATE STOPPING SIGHT DISTANCE EXISTS TO THE REAR, SHADOW VEHICLES SHOULD MAINTAIN THE MINIMUM DISTANCE FROM THE WORK VEHICLE AND PROCEED AT THE SAME SPEED AS THE WORK VEHICLE. SHADOW VEHICLES SHOULD SLOW DOWN IN ADVANCE OF VERTICAL AND HORIZONTAL CURVES THAT RESTRICT SIGHT DISTANCE.

THE WORK AND SHADOW VEHICLES SHOULD PULL OVER PERIODICALLY TO ALLOW TRAFFIC TO PASS.

WHEN NO WORK ACTIVITY IS TAKING PLACE, REMOVE OR LAY STATIONARY SIGNS AND SUPPORTS FLAT ON THE GRADE WITH UPRIGHTS ORIENTED PARALLEL TO AND DOWNSTREAM FROM TRAFFIC.

CONES SHOULD BE USED BETWEEN THE MARKING AND SHADOW VEHICLE AT 100 FOOT SPACING. CONES MAY BE OMITTED ON PAINTED LINE IF APPROVED BY THE ENGINEER. CONSIDER PAVEMENT MARKING DRY OR CURE TIMES AND TRAFFIC VOLUME.

CONES SHALL BE A MINIMUM OF 28" FOR WET PAVEMENT MARKING .

1. SIGNS SHALL BE REPEATED APPROXIMATELY EVERY THREE MILES.
2. IF CONSTRUCTION WORK ZONE SIGNS ARE IN PLACE, W20-1A OR W21-63 ARE NOT REQUIRED.
3. V1 AND V2 CAN BE SWITCHED SO THAT THE MARKER IS THE LEAD VEHICLE.

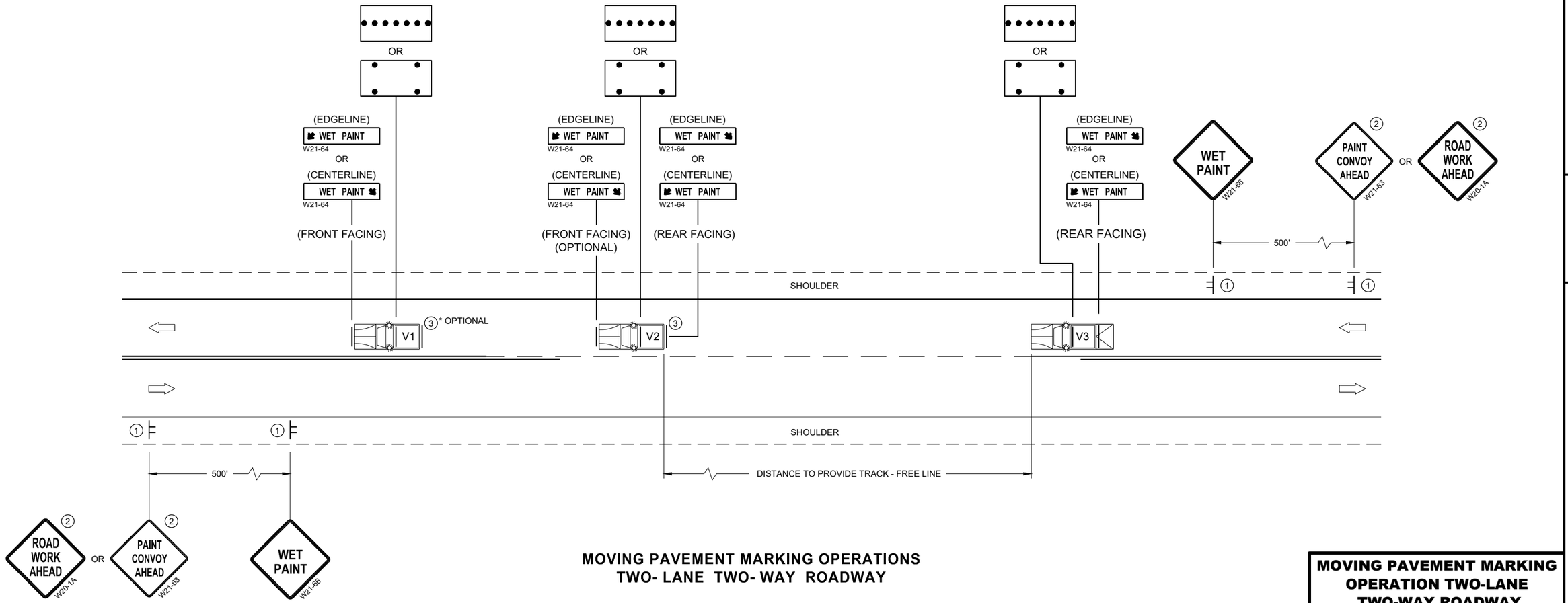

MOVING PAVEMENT MARKING OPERATIONS
TWO- LANE TWO- WAY ROADWAY

MOVING PAVEMENT MARKING OPERATION TWO-LANE TWO-WAY ROADWAY

STATE OF WISCONSIN
DEPARTMENT OF TRANSPORTATION

APPROVED
February 2023
DATE

/S/ Andrew I...
WORK ZONE EN

FHWA

6

SDD 15C19-08a

6

SDD 15C19-08a

GENERAL NOTES

STOP SIGN SHALL BE PLACED A MINIMUM OF 6 FEET TO A MAXIMUM OF 50 FEET FROM THE EDGELINE LOCATION.

1. 18-INCH STOP LINES MAY BE DELETED OR ADDED BY THE REGION MARKING ENGINEER BASED ON VISIBILITY AND SIGHT LINES.
2. NO STOP LINE IS REQUIRED IF STOP SIGN IS LESS THAN OR EQUAL TO 40 FEET FROM THE EDGELINE.
3. NO STOP LINE IS REQUIRED IF STOP SIGN IS LESS THAN OR EQUAL TO 30 FEET FROM THE FLANGELINE EXTENSION.
4. MOVE CLOSER TO THE EDGE OF TRAVEL LINE AS NEEDED FOR VISIBILITY AND SIGHT LINES (NO CLOSER THAN 4 FEET).
5. LADDER BAR CROSSWALKS SHOULD ONLY BE USED FOR MID BLOCK CROSSINGS. USE 2 - 6" TRANSVERSE LINES INSTEAD.

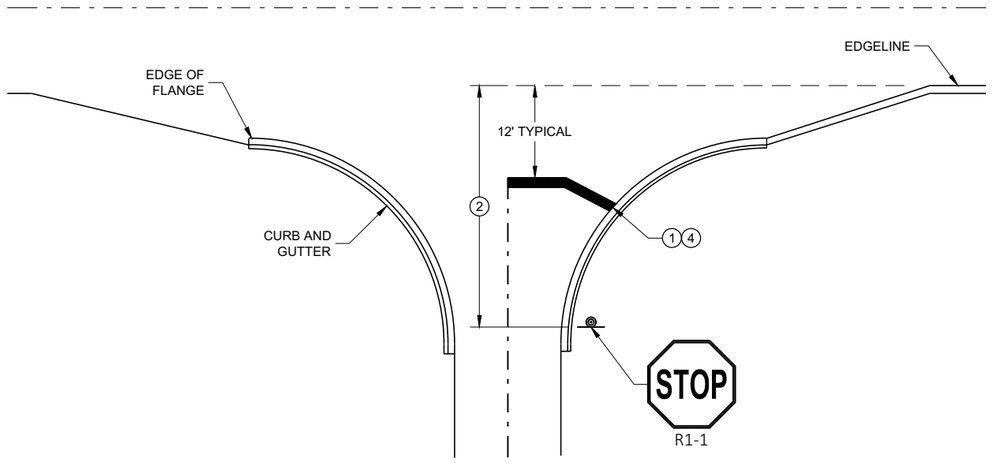

TYPICAL STOP LINE PAVEMENT MARKING WITH CURB AND GUTTER

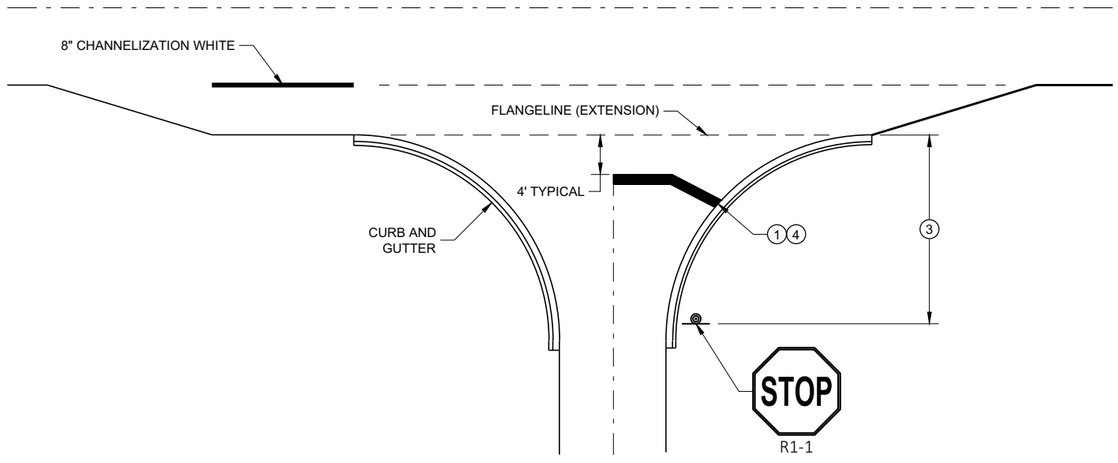

TYPICAL STOP LINE PAVEMENT MARKING FOR SIDEROADS WITH RIGHT TURN LANE

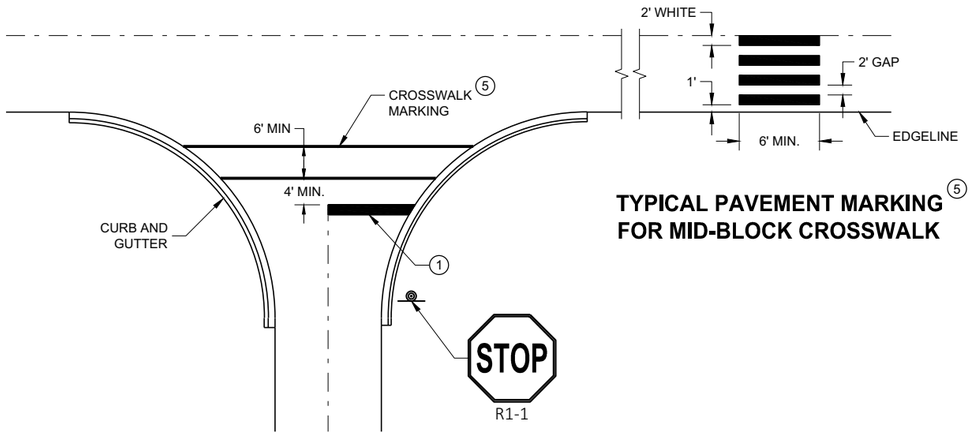

TYPICAL PAVEMENT MARKING FOR MID-BLOCK CROSSWALK 5

TYPICAL STOP LINE PAVEMENT MARKING FOR SIDEROADS WITH CROSSWALK MARKING

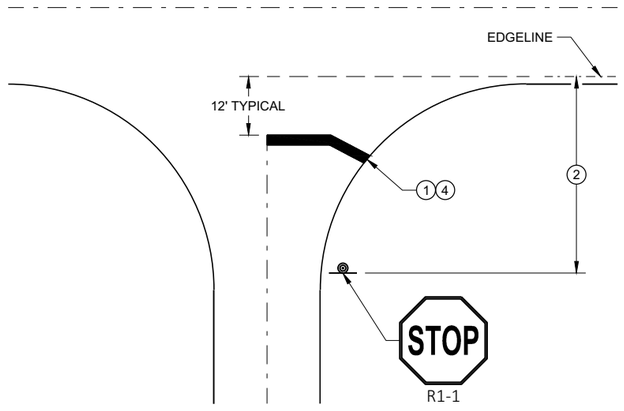

TYPICAL STOP LINE PAVEMENT MARKING WITHOUT CURB AND GUTTER

STOP LINE AND CROSSWALK PAVEMENT MARKING

STATE OF WISCONSIN
DEPARTMENT OF TRANSPORTATION

APPROVED
November 2019 — DATE
/S/ Matthew Rauch — STATE SIGNING AND MARKING ENGINEER
FHWA

6
SDD 15C33 - 04

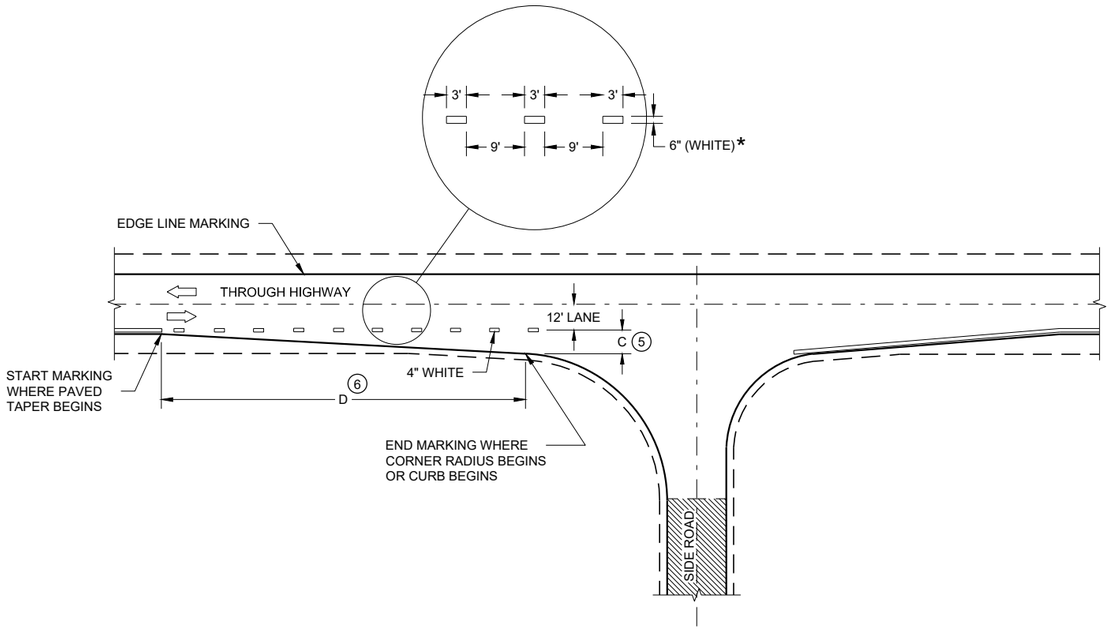

MINOR INTERSECTION

* CONFIRM MARKING LINE WIDTH WITH THE MISCELLANEOUS QUANTITIES

GENERAL NOTES

OMIT EDGE LINES THROUGH INTERSECTIONS. CONTINUE EDGE LINES THROUGH DRIVEWAYS.

1. WHEN DISTANCE "A" IS LESS THAN 250 FEET, OMIT LANE LINE.
2. WHEN DISTANCE "B" IS LESS THAN 100 FEET, OMIT CHANNELIZING LANE LINE.
3. BARRIER LINE ENDS AT SIDE ROAD PAVEMENT / SURFACE EDGE EXTENSION.
4. BARRIER LINE STARTS 500 FEET PRIOR TO THE BYPASS TAPER.
5. WHEN DISTANCE "C" IS LESS THAN 4 FEET, OMIT DOTTED EXTENSION.
6. WHEN DISTANCE "D" IS LESS THAN 50 FEET, OMIT DOTTED EXTENSION.

LEGEND

DIRECTION OF TRAVEL

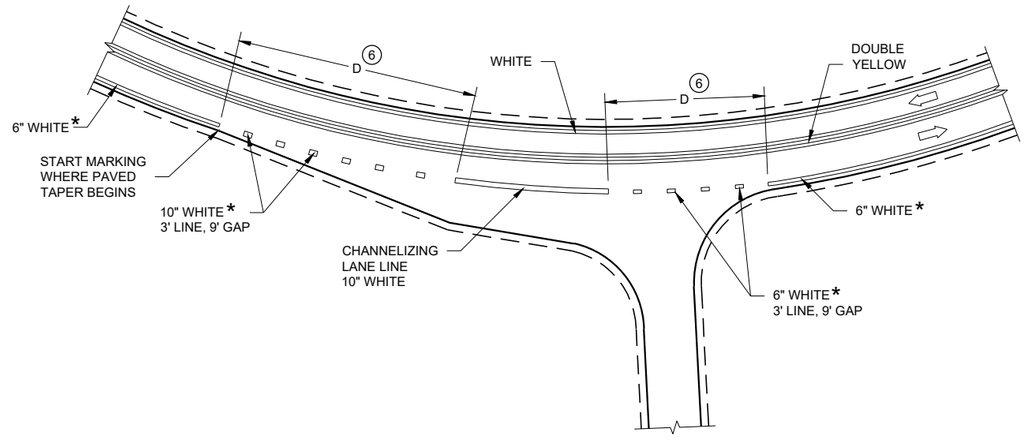

INTERSECTION ON OUTSIDE OF CURVE

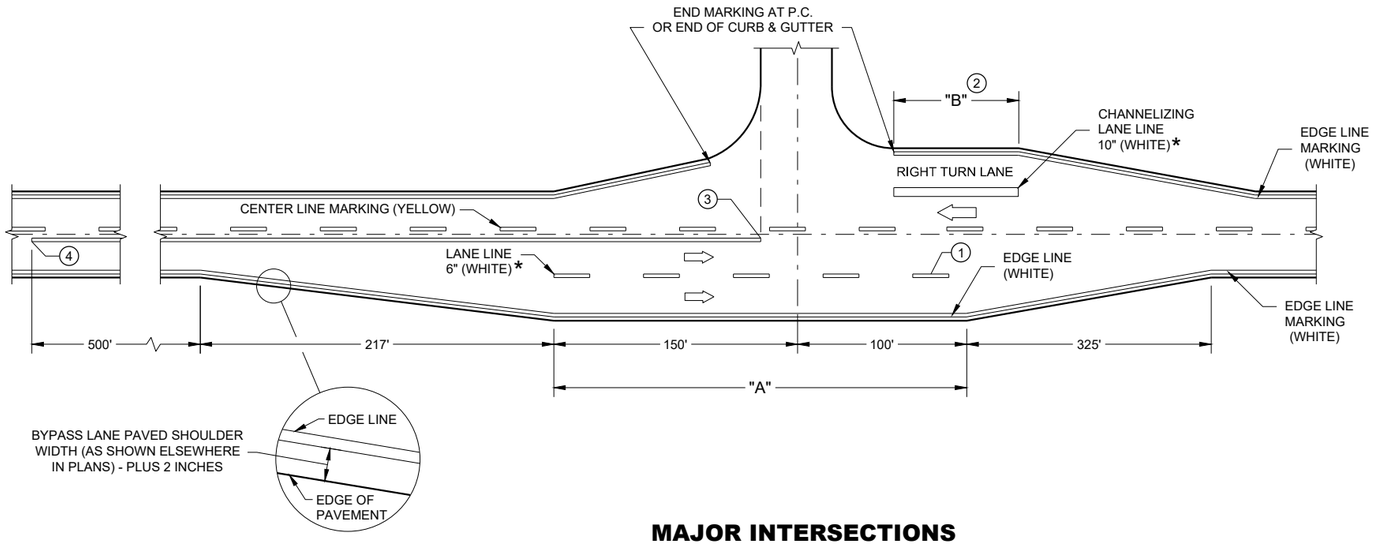

MAJOR INTERSECTIONS

(INTERSECTION WITH FULL RIGHT TURN LANE OR BYPASS LANE)

PAVEMENT MARKING (INTERSECTIONS)

SDD 15C35-06a

6

LEGEND

- SIGN ON PERMANENT SUPPORT
- TRAFFIC CONTROL DRUM
- DIRECTION OF TRAFFIC
- WORK ZONE

GENERAL NOTES

ALL SIGNS ARE 48"X48" UNLESS OTHERWISE NOTED. IF NECESSARY DUE TO SPACE CONSTRAINTS IN URBAN AREAS, 36" X 36" SIGNS MAY BE USED IF APPROVED BY THE REGIONAL TRAFFIC UNIT.

"WO" SIGN IS THE SAME AS "W" SIGN EXCEPT THE BACKGROUND IS ORANGE.

ANY SIGNS TEMPORARY OR EXISTING, WHICH CONFLICT WITH THE TRAFFIC CONTROL "IN USE" SHALL BE REMOVED OR COVERED AS NEEDED AND AS APPROVED BY THE ENGINEER.

THE EXACT NUMBER, LOCATION, AND SPACING OF ALL SIGNS AND DEVICES SHALL BE ADJUSTED TO FIT FIELD CONDITIONS AS APPROVED BY THE ENGINEER.

CHANNELIZING DEVICES PLACED ADJACENT TO WORK AREA SHALL BE PULLED BACK FROM THE TRAVEL LANE WHEN WORK IS NOT IN PROGRESS.

SIGNS THAT WILL BE IN PLACE LESS THAN 7 CONTINUOUS DAYS AND NIGHTS MAY BE MOUNTED ON PORTABLE SUPPORTS.

W20-1A AND G20-2A SIGNS ARE NOT REQUIRED IF THE WORK AREA IS WITHIN A LARGER WORK ZONE WHERE THESE SIGNS ARE ALREADY PRESENT. G20-2A SIGNS MAY ALSO BE OMITTED IF DURATION OF WORK IS LESS THAN 7 CONTINUOUS DAYS AND NIGHTS.

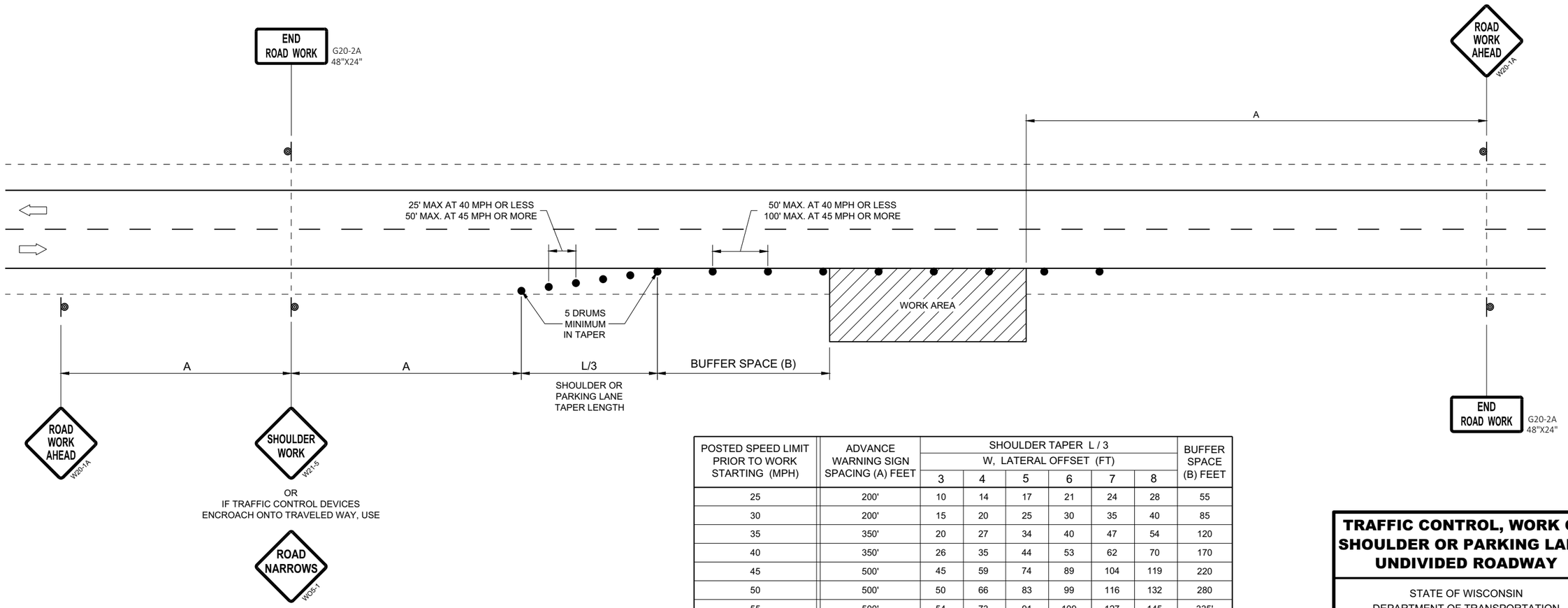

POSTED SPEED LIMIT PRIOR TO WORK STARTING (MPH)	ADVANCE WARNING SIGN SPACING (A) FEET	SHOULDER TAPER L / 3 W, LATERAL OFFSET (FT)						BUFFER SPACE (B) FEET
		3	4	5	6	7	8	
25	200'	10	14	17	21	24	28	55
30	200'	15	20	25	30	35	40	85
35	350'	20	27	34	40	47	54	120
40	350'	26	35	44	53	62	70	170
45	500'	45	59	74	89	104	119	220
50	500'	50	66	83	99	116	132	280
55	500'	54	73	91	109	127	145	335'

TRAFFIC CONTROL, WORK ON SHOULDER OR PARKING LANE, UNDIVIDED ROADWAY

STATE OF WISCONSIN
DEPARTMENT OF TRANSPORTATION

APPROVED
May 2020
DATE

/S/ Andrew Heidtke
STATEWIDE WORK ZONE T SAFETY ENGINEER

FHWA

6

SDD 15D28 - 04

LEGEND

- SIGN ON TEMPORARY SUPPORT
- SIGN ON PERMANENT SUPPORT
- TYPE III BARRICADE
- TYPE III BARRICADE WITH ATTACHED SIGN
- TYPE "A" WARNING LIGHT (FLASHING)
- DIRECTION OF TRAFFIC
- FLAGGER, EQUIPPED WITH STOP/SLOW PADDLE FASTENED ON SUPPORT STAFF

POSTED SPEED LIMIT PRIOR TO WORK STARTING (MPH)	ADVANCE WARNING SIGN SPACING (A) FEET
0-30	200'
35-40	350'
45-55	500'

GENERAL NOTES

ALL SIGNS ARE 48"X48" UNLESS OTHERWISE NOTED.

"WO" SIGN IS THE SAME AS "W" SIGN EXCEPT THE BACKGROUND IS ORANGE.

THE EXACT NUMBER, LOCATION, AND SPACING OF ALL SIGNS AND DEVICES SHALL BE ADJUSTED TO FIT FIELD CONDITIONS AS APPROVED BY THE ENGINEER.

WARNING SIGNS THAT WILL BE IN PLACE LESS THAN 7 CONTINUOUS DAYS AND NIGHTS MAY BE MOUNTED ON PORTABLE SUPPORTS.

WHEN ACTIVITY REFLECTED BY THE SIGN IS NOT CURRENTLY TAKING PLACE, THE HIGHWAY SHALL BE RESTORED TO NORMAL CONDITION AND THE SIGNS SHALL BE REMOVED, COVERED OR TURNED AWAY FROM TRAFFIC.

WHEN A SIDE ROAD OR RAMP INTERSECTS WITHIN THE ADVANCE SIGNING AREA, ADDITIONAL TRAFFIC CONTROLS SHALL BE PROVIDED AS SPECIFIED IN THE PLANS AND / OR THE SPECIAL PROVISIONS OR AS APPROVED BY THE ENGINEER.

PLACE SIGNS ON BOTH SIDES IF USED ON DIVIDED HIGHWAY.

(1) THESE SIGNS ARE TO BE USED ONLY WHEN VEHICLE ENTRANCE / EXIT CONDITIONS ARE SEPARATED BY MORE THAN TWO MILES FROM PREVIOUS WORK AREA OR SIGNING OR AS DIRECTED BY THE ENGINEER.

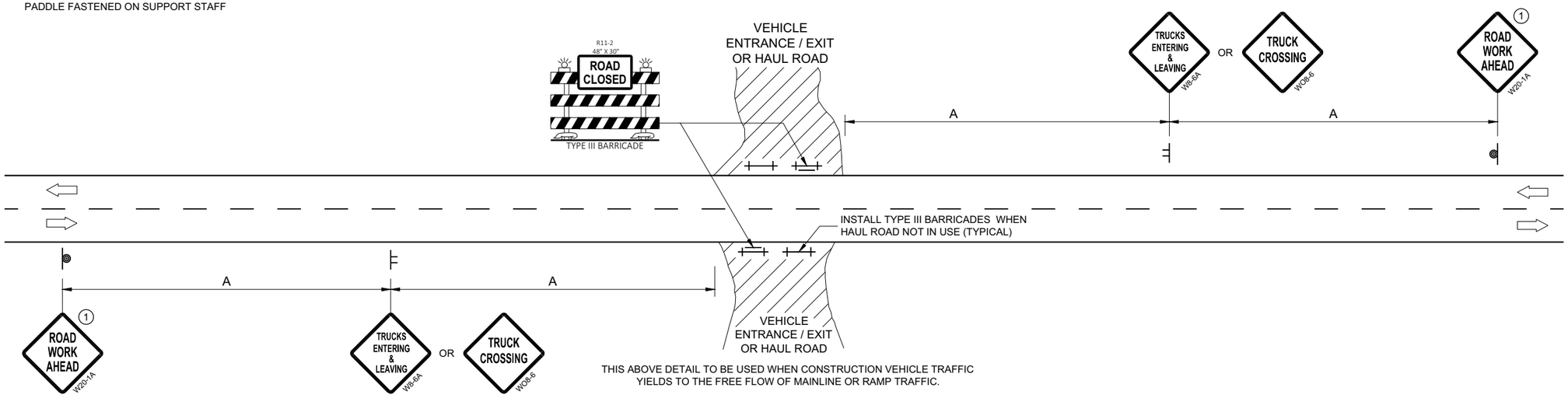

THIS ABOVE DETAIL TO BE USED WHEN CONSTRUCTION VEHICLE TRAFFIC YIELDS TO THE FREE FLOW OF MAINLINE OR RAMP TRAFFIC.

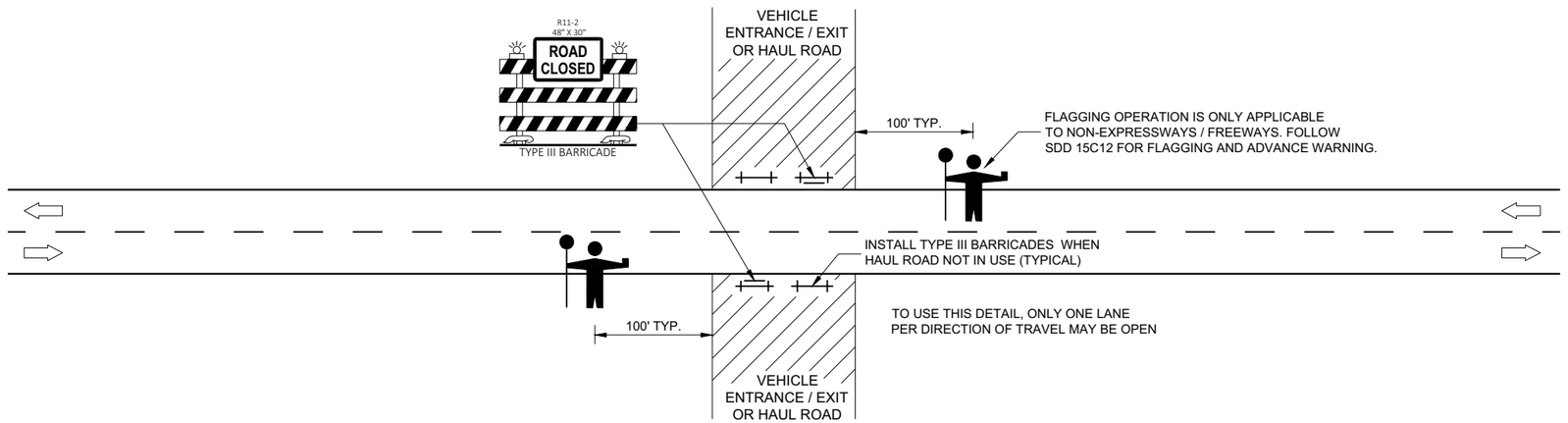

TO USE THIS DETAIL, ONLY ONE LANE PER DIRECTION OF TRAVEL MAY BE OPEN

THIS DETAIL TO BE USED WHEN CONSTRUCTION WORK INCLUDING TRUCKING ACTIVITY REQUIRES MAINLINE TRAFFIC TO BE TEMPORARILY STOPPED IN ONE OR BOTH DIRECTIONS. DELAY TO HIGHWAY TRAFFIC SHALL BE MINIMIZED.

TRAFFIC CONTROL, VEHICLE ENTRANCE/EXIT OR HAUL ROAD

STATE OF WISCONSIN
DEPARTMENT OF TRANSPORTATION

APPROVED
May 2020
DATE

/S/ Andrew Heidtke
WORK ZONE ENGINEER

FHWA

6

SDD 15D29 - 06

GENERAL NOTES

BARRICADE DEVICE SELECTED FROM APPROVED PRODUCT LIST

(1) REFLECTIVE SHEETING SHALL FOLLOW THE REQUIREMENTS IN THE APPROVED PRODUCTS LISTING FOR SIGN SHEETING.

(2) SHEETING REQUIRED ON MORE THAN 50% OF BARRICADE WIDTH.

(3) PLACE SHEETING ON BOTH SIDES OF THE BARRICADE.

* USE THIS DETAIL FOR SHEETING PLACEMENT REFERENCE.

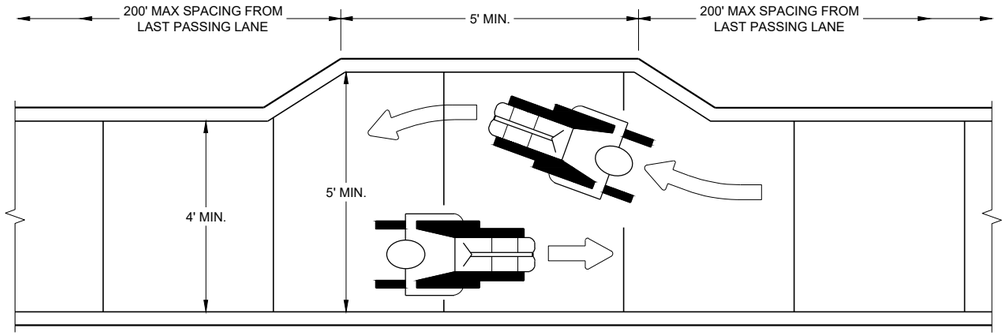

NARROW SIDEWALK PASSING DETAIL

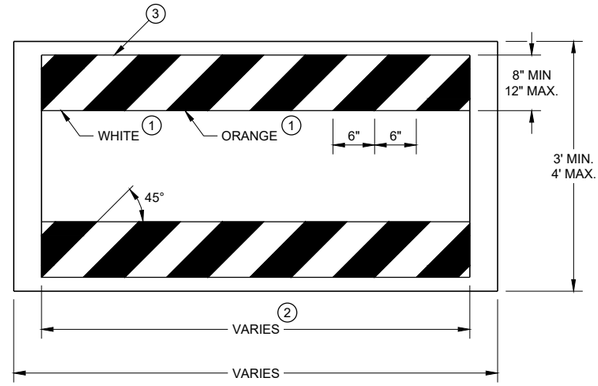

TEMPORARY PEDESTRIAN BARRICADE*

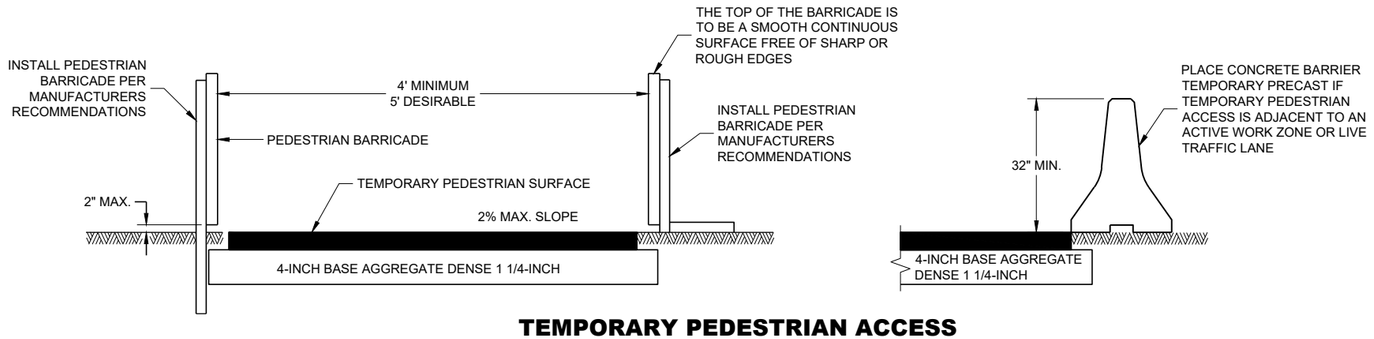

TEMPORARY PEDESTRIAN ACCESS

6

6

SDD 15D30 - 09a

SDD 15D30 - 09a

TRAFFIC CONTROL, PEDESTRIAN ACCOMMODATION

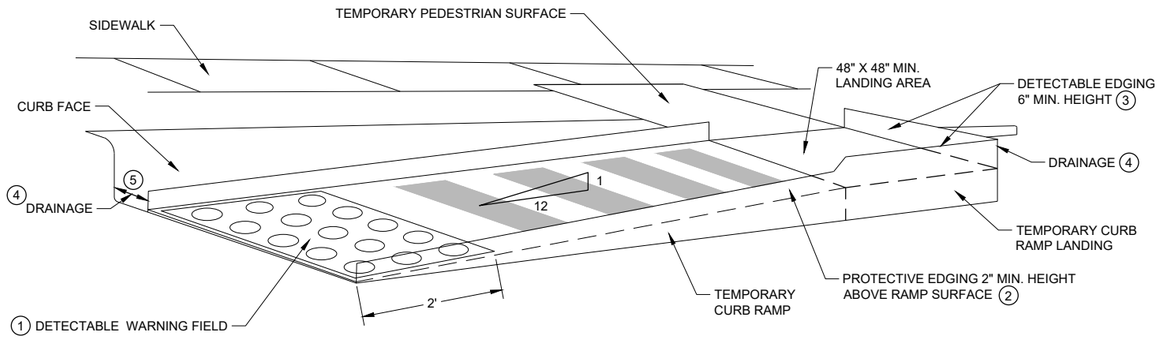

PERSPECTIVE VIEW

GENERAL NOTES

CURB RAMPS SHALL BE 48" MIN. WIDTH WITH A FIRM, STABLE AND SLIP RESISTANT SURFACE.

CURB RAMPS AND LANDINGS SHALL HAVE A 1:50 (2%) MAX. CROSS-SLOPE.

CLEAR SPACE OF 48" X 48" SHALL BE PROVIDED ABOVE AND BELOW THE CURB RAMP. LATERAL JOINTS OR GAPS BETWEEN SURFACES SHALL BE LESS THAN ½" WIDTH.

CHANGES BETWEEN SURFACE HEIGHTS SHALL NOT EXCEED ½". LATERAL EDGES MAY BE VERTICAL UP TO ¼" HIGH AND SHALL BE BEVELED AT 1:2 BETWEEN ¼" AND ½".

(1) INSTALL CONTRASTING TEMPORARY DETECTABLE WARNING FIELD AT PEDESTRIAN STREET CROSSINGS, AS SHOWN IN THE PLANS.

(2) PROTECTIVE EDGING WITH A 2" MIN. HEIGHT SHALL BE INSTALLED WHEN A CURB RAMP OR LANDING PLATFORM HAS A VERTICAL DROP OF 6" OR GREATER OR HAS A SIDE APRON SLOPE STEEPER THAN 1:3 (33%). PROTECTIVE EDGING SHOULD BE CONSIDERED WHEN CURB RAMPS OR LANDING PLATFORMS HAVE A VERTICAL DROP OF 3" OR MORE.

(3) DETECTABLE EDGING WITH 6" MIN. HEIGHT AND CONTRASTING COLOR SHALL BE INSTALLED ON ALL CURB RAMP LANDINGS WHERE THE WALKWAY CHANGES DIRECTION (TURNS).

(4) DO NOT RESTRICT WATER FLOW IN THE GUTTER SYSTEM.

(5) ENSURE CURB RAMP IS OUT OF THE GUTTER PAN.

(6) IF ONLY PART OF THE END PANEL OF TEMPORARY PEDESTRIAN BARRICADE PANEL IS NEEDED, EXTEND EXCESS PORTION OF TEMPORARY PEDESTRIAN BARRICADE PANEL HERE.

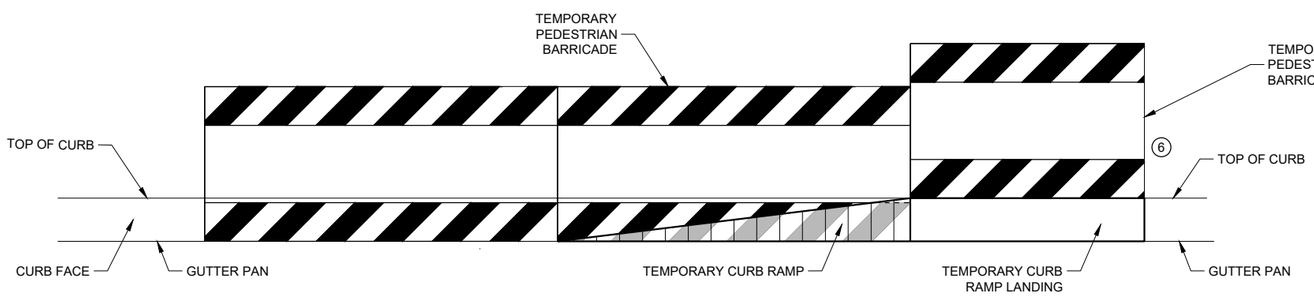

FRONT VIEW

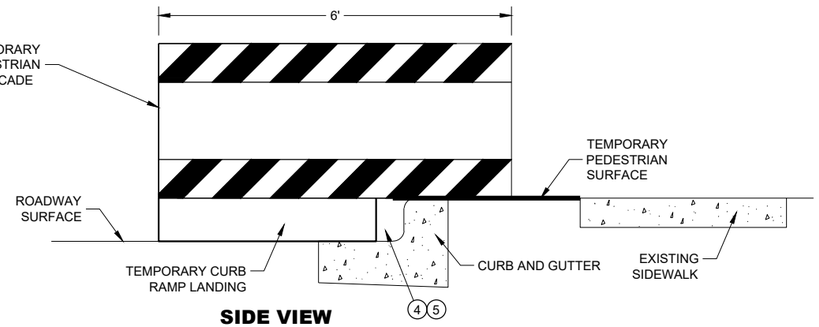

SIDE VIEW

TEMPORARY CURB RAMP PARALLEL TO CURB

TRAFFIC CONTROL, PEDESTRIAN ACCOMMODATION

STATE OF WISCONSIN
DEPARTMENT OF TRANSPORTA

6

SDD 15D30 - 09b

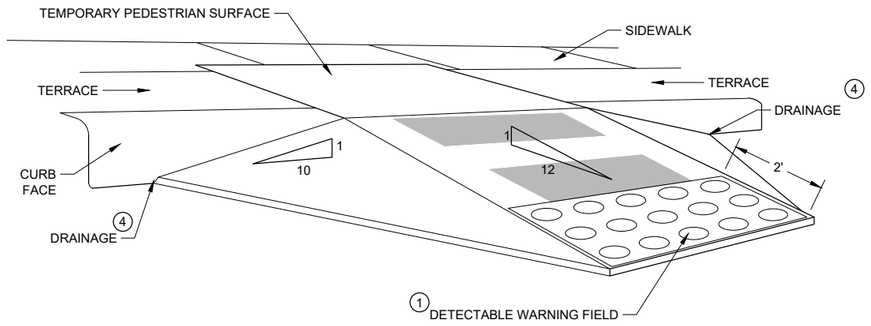

WITH SIDE APRON (5)

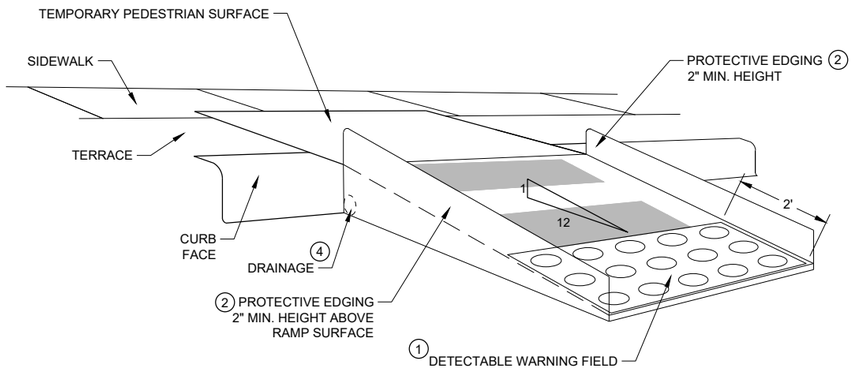

WITH PROTECTIVE EDGE

TEMPORARY CURB RAMP PERPENDICULAR TO CURB

GENERAL NOTES

CURB RAMPS SHALL BE 48" MINIMUM WIDTH WITH A FIRM, STABLE AND SLIP RESISTANT SURFACE.

ALTERNATE SIDEWALK WORK BETWEEN LEFT AND RIGHT SIDE OF ROADWAY TO MAINTAIN PEDESTRIAN ACCESS.

CURB RAMPS AND LANDINGS SHALL HAVE A 1:50 (2%) MAX. CROSS-SLOPE.

CLEAR SPACE OF 48" X 48" SHALL BE PROVIDED ABOVE AND BELOW THE CURB RAMP.

LATERAL JOINTS OR GAPS BETWEEN SURFACES SHALL BE LESS THAN ½" WIDTH.

CHANGES BETWEEN SURFACE HEIGHTS SHALL NOT EXCEED ½". LATERAL EDGES MAY BE VERTICAL UP TO ¼" HIGH AND SHALL BE BEVELED AT 1:2 BETWEEN ¼" AND ½".

(1) INSTALL CONTRASTING TEMPORARY DETECTABLE WARNING FIELD AT PEDESTRIAN STREET CROSSINGS, AS SHOWN IN THE PLANS

(2) PROTECTIVE EDGING WITH A 2" MIN. HEIGHT SHALL BE INSTALLED WHEN A CURB RAMP OR LANDING PLATFORM HAS A VERTICAL DROP OF 6" OR GREATER OR HAS A SIDE APRON SLOPE STEEPER THAN 1:3 (33%). PROTECTIVE EDGING SHOULD BE CONSIDERED WHEN CURB RAMPS OR LANDING PLATFORMS HAVE A VERTICAL DROP OF 3" OR MORE.

(3) DETECTABLE EDGING WITH 6" MIN. HEIGHT AND CONTRASTING COLOR SHALL BE INSTALLED ON ALL CURB RAMP LANDINGS WHERE THE WALKWAY CHANGES DIRECTION (TURNS).

(4) DO NOT RESTRICT WATER FLOW IN THE GUTTER SYSTEM.

(5) CAN ONLY BE USED FOR RAMPS WITH 6" OR LESS OF VERTICAL CHANGE.

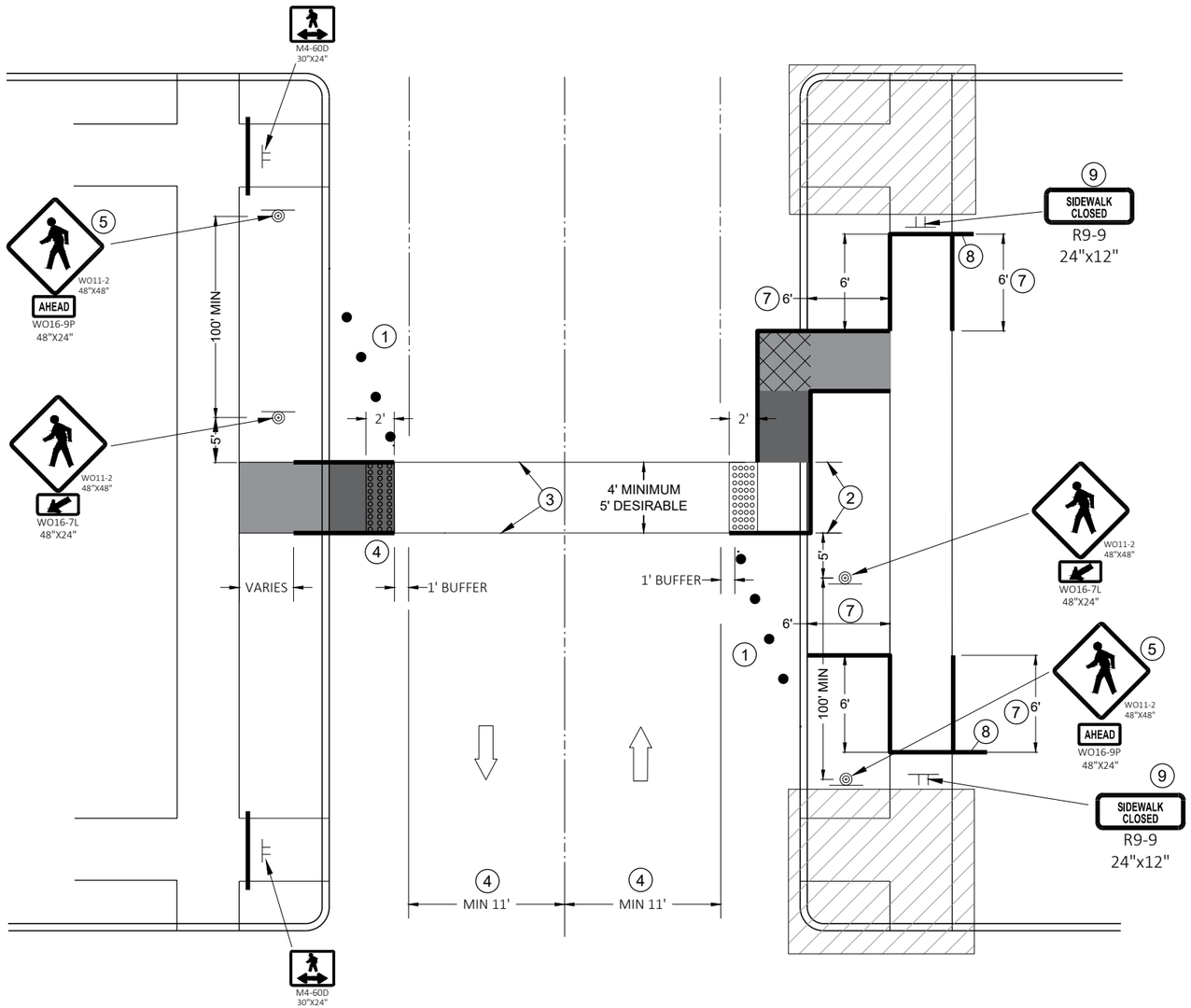

TEMPORARY PEDESTRIAN CROSSING

GENERAL NOTES

TYPICAL TEMPORARY PEDESTRIAN BARRICADE PANEL IS 6 FEET LONG.

SIGN LAYOUTS SHALL BE IN ACCORDANCE WITH THE WISCONSIN STANDARD SIGN PLATES.

SEE OTHER PEDESTRIAN ACCOMMODATION DETAILS FOR SIGNING AND DEVICES FOR DIFFERENT PEDESTRIAN FACILITIES CLOSURES.

(1) SHOULDER OR LANE CLOSURE ADVANCED WARNING AND PROPER BUFFER SPACE REQUIRED.

(2) 4 FEET MINIMUM, 5 FEET DESIRABLE.

(3) WHITE 6" TEMPORARY PAVEMENT MARKING.

(4) IF MINIMUM LANE WIDTHS CAN'T BE ATTAINED, PERPENDICULAR CURB RAMPS MAY NEED TO BE UTILIZED.

(5) IF MINIMUM 100' SPACING FROM THE MID-BLOCK CROSSING CANNOT BE ATTAINED BEFORE THE INTERSECTION, REMOVE THIS SIGN ASSEMBLY.

(6) IF TERRACE IS LESS THAN 6 FEET WIDE, OMIT TEMPORARY PEDESTRIAN BARRICADE FROM THE SIDEWALK TO THE CURB.

(7) PLACE BARRICADE CLOSURE SO THAT THE TEMPORARY PEDESTRIAN BARRICADE END IS AT THE LAST OPEN SIDEWALK ACCESS TO RESIDENCES OR BUSINESSES BEFORE THE SIDEWALK CLOSURE.

(8) IF TEMPORARY PEDESTRIAN BARRICADE PANEL IS WIDER THAN THE SIDEWALK WIDTH, THE PORTION OF THE EXCESS PANEL SHOULD EXTEND INTO THE TERRACE.

(9) MOUNTING HEIGHT OF 5 FEET FROM THE SURFACE TO THE BOTTOM OF THE SIGN.

LEGEND

- TRAFFIC CONTROL DRUM
- SIGN ON TEMPORARY SUPPORT
- TEMPORARY CURB RAMP
- TEMPORARY DETECTABLE WARNING FIELD
- TEMPORARY PEDESTRIAN SURFACE "A"
- TEMPORARY PEDESTRIAN SURFACE "B"
- WORK AREA
- TEMPORARY PEDESTRIAN BARRICADE
- DIRECTION OF TRAFFIC

TRAFFIC CONTROL, PEDESTRIAN ACCOMMODATION

6

SDD 15D30 - 09L

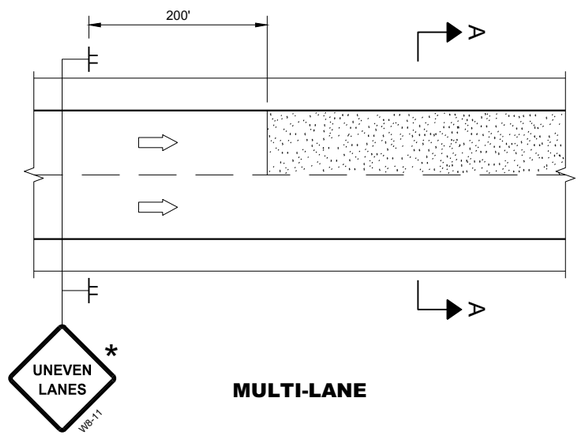

MULTI-LANE

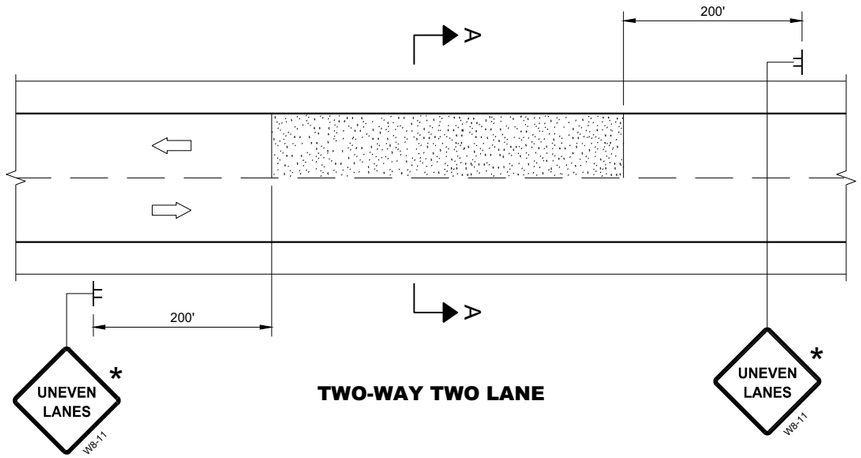

TWO-WAY TWO LANE

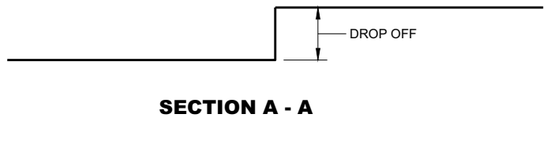

SECTION A - A

OR

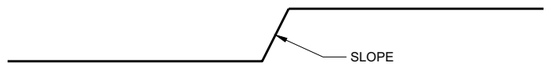

SECTION A - A

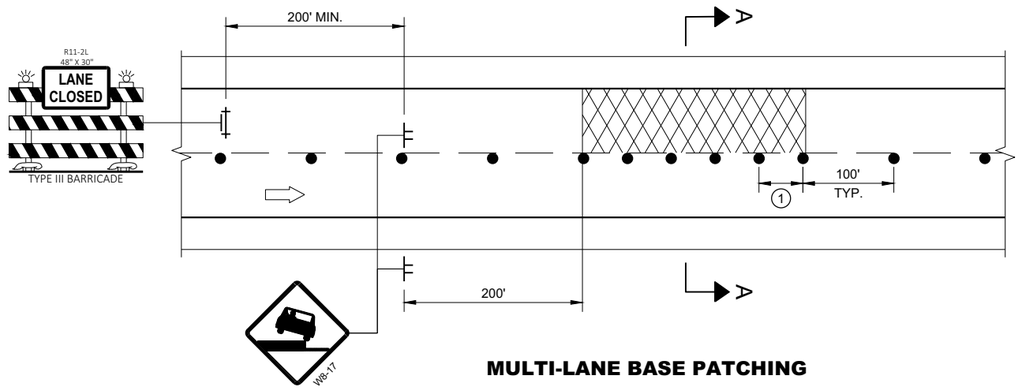

MULTI-LANE BASE PATCHING

ADJACENT LANE DROP-OFFS

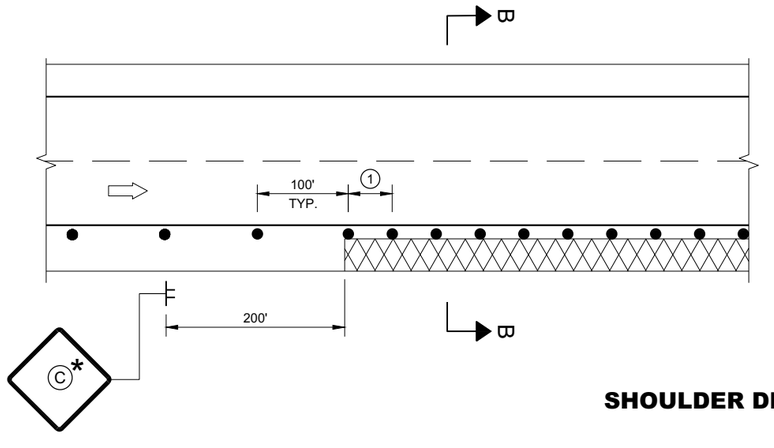

SHOULDER DROP-OFFS

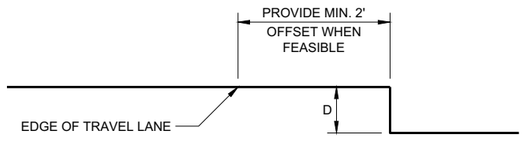

SECTION B - B

D	SIGN (C)
< 2" WITH A SLOPE STEEPER THAN 3:1	LOW SHOULDER WO8-9
2" < 6" WITH A SLOPE STEEPER THAN 3:1	SHOULDER DROP - OFF W8-9A PROVIDE A 3:1 OR FLATTER SLOPE OF MATERIAL ADJACENT TO THE PAVEMENT

GENERAL NOTES

FOR SPOT LOCATIONS USE ENGINEERING JUDGEMENT WHEN PLACING ADDITIONAL SIGNS.

ALL SIGNS ARE 48" X 48" UNLESS OTHERWISE NOTED.

"WO" SIGNS ARE THE SAME AS "W" SIGNS EXCEPT THE BACKGROUND IS ORANGE.

WARNING LIGHTS ARE NOT REQUIRED IF THE LANE CLOSURE IS A DAYTIME ONLY OPERATION.

* IF THE DROP-OFF IS CONTINUOUS ALONG THE PROJECT, PLACE ADDITIONAL SIGNS EVERY 1 MILE AND AFTER EVERY ENTRANCE RAMP.

(1) USE CLOSER SPACING WHEN DELINEATING DROP-OFF.

LEGEND

- SIGN ON TEMPORARY SUPPORT
- TRAFFIC CONTROL DRUM
- TYPE III BARRICADE WITH ATTACHED SIGN
- TYPE "A" WARNING LIGHT (FLASHING)
- DIRECTION OF TRAFFIC
- WORK AREA WITH DROP-OFF
- MILLED SURFACE

TRAFFIC CONTROL, DROP-OFF SIGNING

STATE OF WISCONSIN
DEPARTMENT OF TRANSPORTATION

APPROVED
March 2018
DATE

/S/ Andrew Heidtke
WORK ZONE ENGINEE

FHWA

6

SDD 15D39 - 02

GENERAL NOTES

DRAWING NOT TO SCALE. ALL SIGNS AND POSTS ON THIS SHEET SHALL BE PAID FOR WITH 'TRAFFIC CONTROL SIGNS' BID ITEM. ALL SIDE ROADS WHICH ARE UNDER CONSTRUCTION OF CURB AND GUTTER AND/OR GRADING SHALL BE ADEQUATELY SIGNED.

ALL SIGNS AND DEVICES SHALL BE IN CONFORMANCE WITH THE WISCONSIN MANUAL OF UNIFORM TRAFFIC CONTROL DEVICES (WMUTCD). SIGN LAYOUTS SHALL BE IN ACCORDANCE WITH THE WISDOT STANDARD SIGN PLATES.

"WO" SIGNS ARE THE SAME AS "W" SIGNS EXCEPT THAT THE BACKGROUND IS ORANGE.

ALL SIGNS ARE 48" X 48" UNLESS OTHERWISE NOTED.

THE EXACT NUMBER, LOCATION AND SPACING OF ALL SIGNS AND DEVICES SHALL BE ADJUSTED TO FIT FIELD CONDITIONS AS DIRECTED BY THE ENGINEER.

ALL SIGNS INAPPROPRIATE TO THE STATUS OF THE CONTROL ZONE, INCLUDING PRE-EXISTING SIGNS IN THE VICINITY, SHALL BE COVERED OR REMOVED AS DIRECTED BY THE ENGINEER.

SEE 15C34 FOR ADDITIONAL TRAFFIC CONTROL SIGNING WHEN CENTERLINE PAVEMENT MAKINGS ARE MISSING. 'DO NOT PASS' SIGNS MUST BE INSTALLED ON THE SAME DAY AS MILLING OPERATIONS.

(1) PLACE SIGNS 350' IN ADVANCE OF MILLED SURFACES AND AT 1 MILE INTERVALS, OR AS DIRECTED BY THE ENGINEER.

(2) PLACE SIGN 200' MIN. FROM INTERSECTION AND 200' MIN. AFTER ADVANCE WARNING SIGN SHOWN IN SDD 15C04.

LEGEND

SIGN ON TEMPORARY SUPPORT

DIRECTION OF TRAFFIC

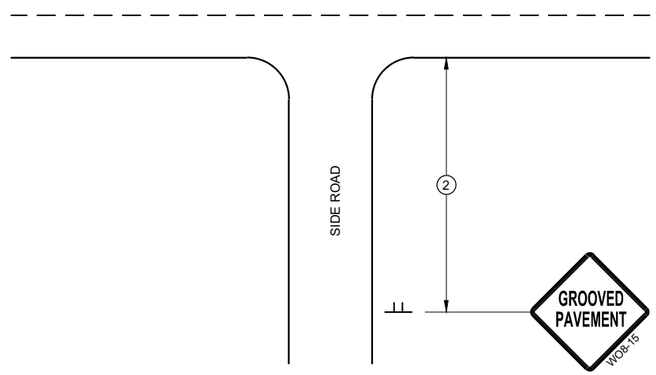

TYPICAL SIDE ROAD APPROACH SIGN DETAIL

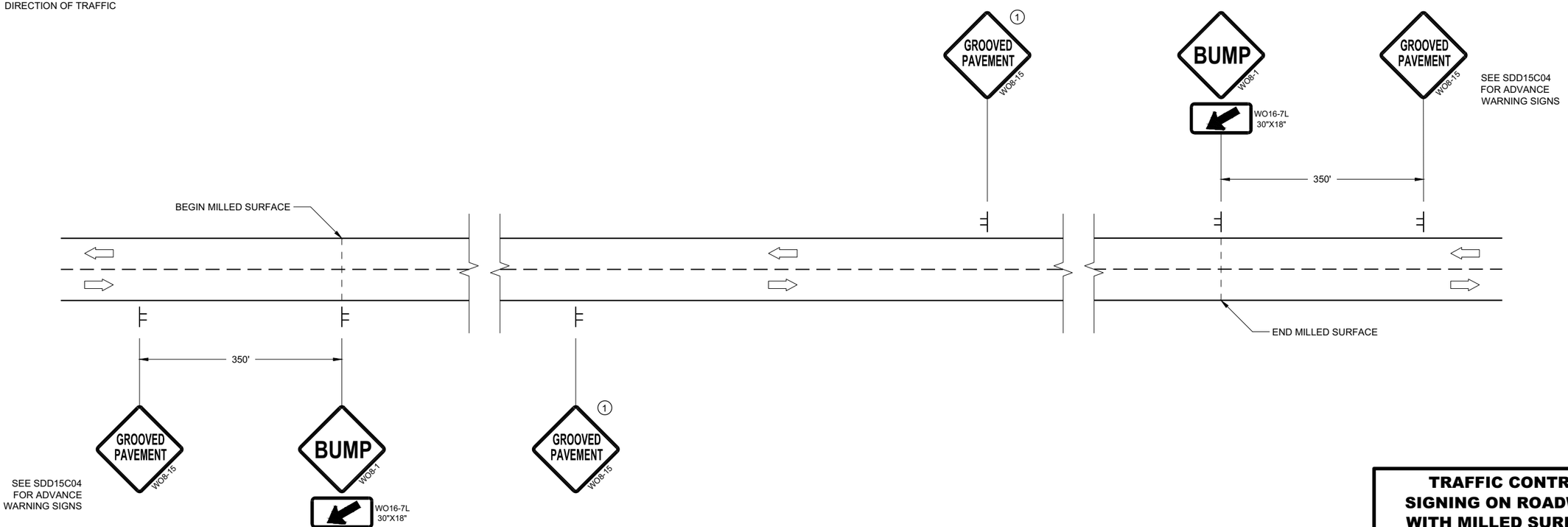

DETAIL FOR SIGNING ON MILLED SURFACES

TRAFFIC CONTROL, SIGNING ON ROADWAYS WITH MILLED SURFACES

STATE OF WISCONSIN
DEPARTMENT OF TRANSPORTATION

APPROVED
February 2020
DATE

/S/ Andrew Heidtke
WORK ZONE ENGINEER

FHWA

SDD 15D44 - 02

SDD 15D44 - 02

LEGEND

V1 WORK VEHICLE

V2 SHADOW VEHICLE

TRUCK MOUNTED ATTENUATOR (TMA)

FLASHING ARROW PANEL (CAUTION)

WORK AREA

DIRECTION OF TRAFFIC

POSTED SPEED PRIOR TO WORK STARTING (MPH)	DECISION SIGHT DISTANCE (D)
0 - 25	550'
30	550'
35	700'
40	700'
45	900'
50	900'
55	1200'

GENERAL NOTES

ALL SIGNS ARE 48"X48" UNLESS OTHERWISE NOTED.

MOBILE IS WORK THAT MOVES CONTINUOUSLY OR MOVES AT LEAST THE DECISION SIGHT DISTANCE EVERY 15 MINUTES.

ALL VEHICLES SHALL BE EQUIPPED WITH TWO 360 DEGREE HIGH INTENSITY YELLOW FLASHING LIGHTS OR STROBE LIGHTS AND OPERATED WITH HEADLIGHTS TURNED ON.

ALL ARROW PANELS SHALL BE REAR FACING, TYPE "B" OR "C", AND DISPLAYING THE FLASHING CAUTION MODE. SIGNS PLACED ON VEHICLES MUST NOT OBSCURE THE ARROW PANEL.

USE AN ATTENUATOR ON THE REARMOST VEHICLE THAT BLOCKS ALL OR PART OF THE TRAFFIC LANE.

(1) DISTANCE BETWEEN VEHICLES MAY INCREASE FROM THE ATTENUATOR'S ROLL AHEAD BASED ON TERRAIN, SIGHT DISTANCE, AND OTHER FACTORS. WHENEVER ADEQUATE STOPPING SIGHT DISTANCE EXISTS TO THE REAR, SHADOW VEHICLES SHOULD MAINTAIN THE MINIMUM DISTANCE FROM THE WORK VEHICLE AND PROCEED AT THE SAME SPEED AS THE WORK VEHICLE. SHADOW VEHICLES SHOULD SLOW DOWN IN ADVANCE OF VERTICAL OR HORIZONTAL CURVES THAT RESTRICT SIGHT DISTANCE.

(2) ALIGN LEFT SIDE OF SHADOW VEHICLE WITH EDGE OF WORK AREA.

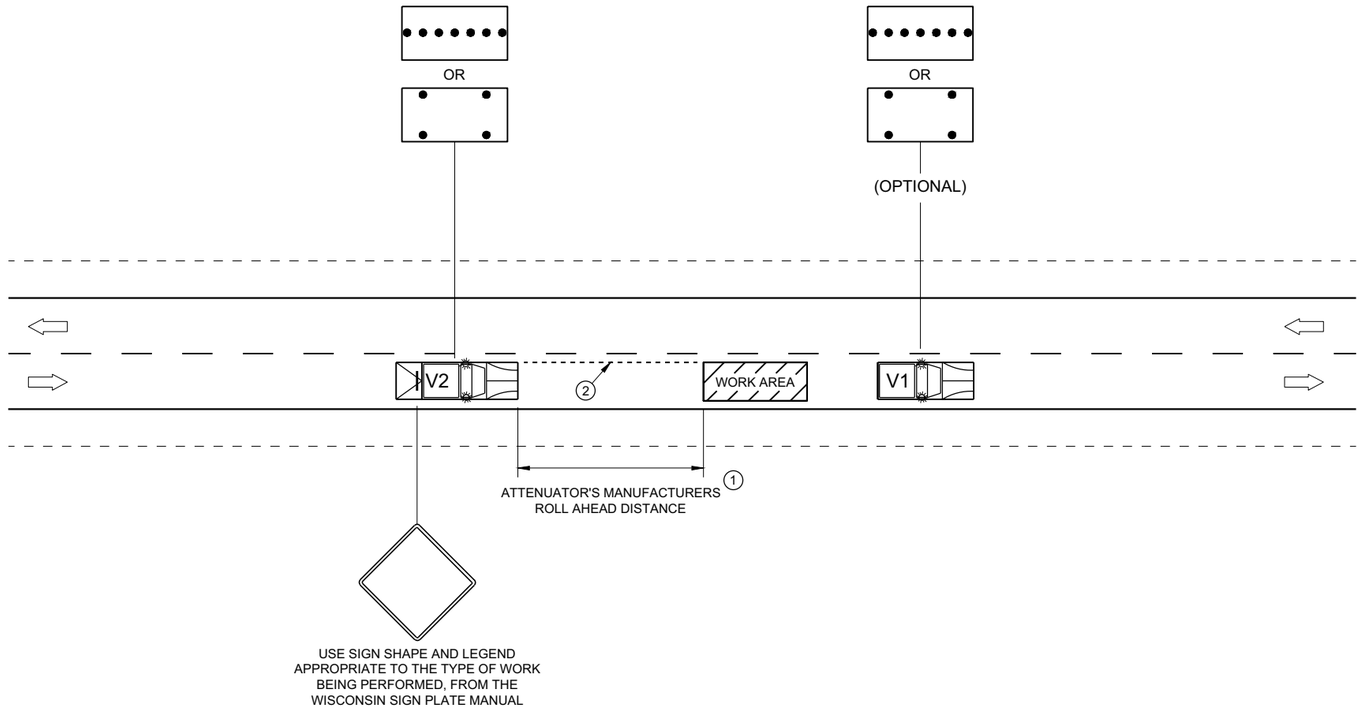

TRAFFIC CONTROL, MOBILE OPERATIONS ON AN UNDIVIDED ROADWAY

STATE OF WISCONSIN
DEPARTMENT OF TRANSPORTATION

APPROVED
February 2021 — DATE
/S/ Andrew Heidtke — STATEWIDE WORK ZONE T SAFETY ENGINEER
FHWA

6

SDD 15D51 - 01

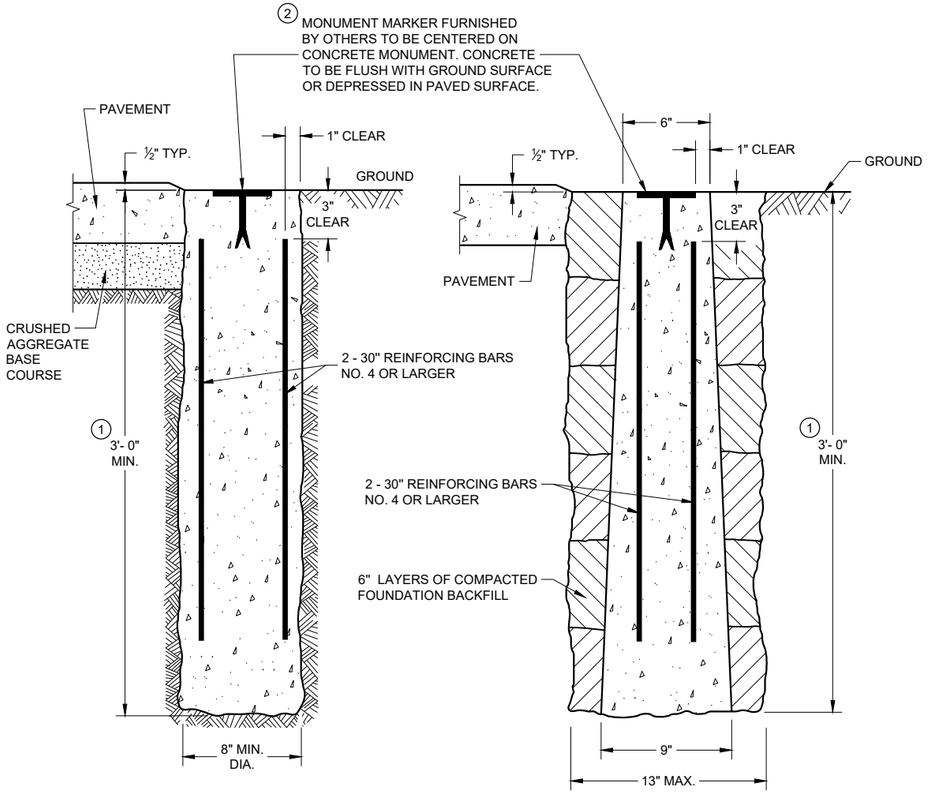

CAST-IN-PLACE **PRECAST**

CONCRETE MONUMENTS
TYPE A

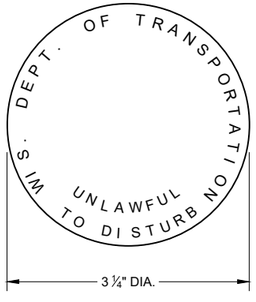

② **WIS DOT MONUMENT MARKER LOGO**

FOR TYPES "A", "C" & "D"

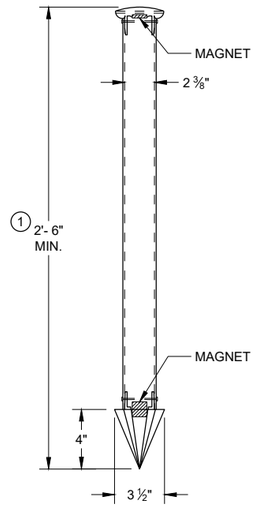

TYPE C
DRIVEN MONUMENT

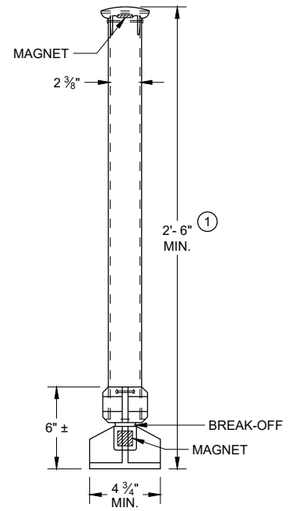

TYPE D
NON-DRIVEN
BREAK-OFF MONUMENT

ALUMINUM MONUMENTS
(INCLUDES MARKER)

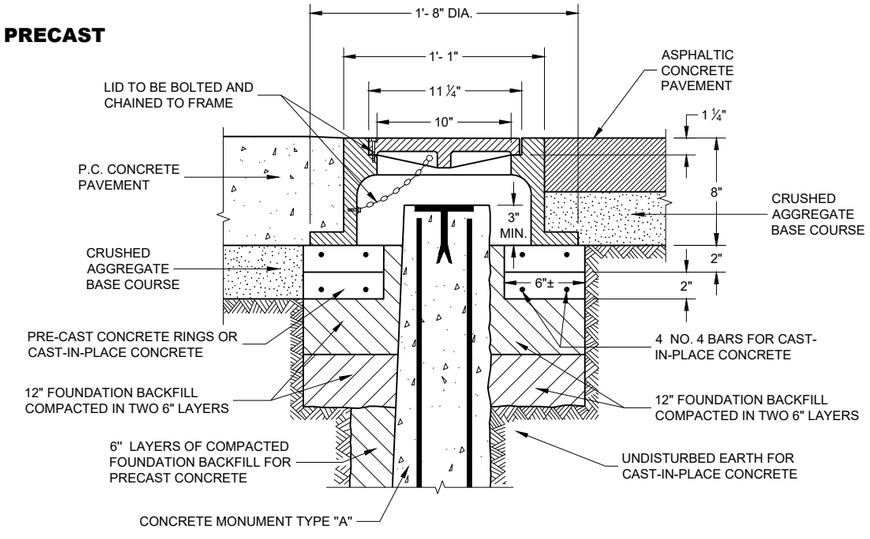

CAST IRON MONUMENT COVER
(APPROXIMATE WEIGHT 95 LBS)

GENERAL NOTES

DETAILS OF CONSTRUCTION, MATERIALS AND WORKMANSHIP NOT SHOWN ON THIS DRAWING SHALL CONFORM TO THE PERTINENT REQUIREMENTS OF THE STANDARD SPECIFICATIONS AND THE APPLICABLE SPECIAL PROVISIONS.

DETAILED DRAWINGS OF PROPOSED ALTERNATE DESIGNS FOR METAL MONUMENTS OR MONUMENT COVERS SHALL BE SUBMITTED TO THE ENGINEER FOR APPROVAL.

PERMANENT MAGNETS SHALL BE INSERTED NEAR THE TOP AND BOTTOM OF ALL ALUMINUM MONUMENTS SO THE MONUMENT CAN EASILY BE DETECTED BY A METAL DETECTOR.

THE CAST IRON MONUMENT COVER SHALL BE A "NON-ROCKING" TYPE. ADJUSTMENT OF THE COVER TO GRADE MAY BE ACCOMPLISHED BY THE USE OF MORTAR AND BRICK, OR BY EITHER PRECAST OR CAST-IN-PLACE REINFORCED CONCRETE GRADE RINGS.

MONUMENTS SHALL BE LOCATED AND PLACED AT THE DIRECTION OF THE ENGINEER.

ALUMINUM MONUMENTS AND MONUMENT COVERS SHALL BE MADE FROM AN ALUMINUM AND MAGNESIUM ALLOY AS DETERMINED BY THE MANUFACTURER.

THE MONUMENT COVERS DETAILED ON THIS DRAWING ARE NOT EQUAL ALTERNATES. MONUMENT COVERS SHALL BE CAST IRON UNLESS ALUMINUM IS SPECIFIED ELSEWHERE IN THE CONTRACT.

MONUMENT SHALL BE CAST-IN-PLACE CONCRETE UNLESS PRECAST CONCRETE OR ALUMINUM MONUMENTS ARE SPECIFIED IN THE CONTRACT OR PERMITTED BY THE ENGINEER.

① MINIMUM LENGTH SHALL BE 4'-0" FOR MONUMENTS INSTALLED IN PAVED AREAS.

② AN OFFICIAL COUNTY MONUMENT MARKER SUPPLIED BY A COUNTY MAY BE REQUIRED FOR SOME SECTION CORNERS AND WITNESS MONUMENTS INSTEAD OF THIS WISDOT MARKER.

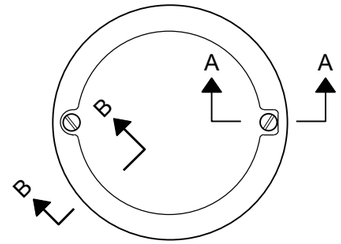

TOP VIEW

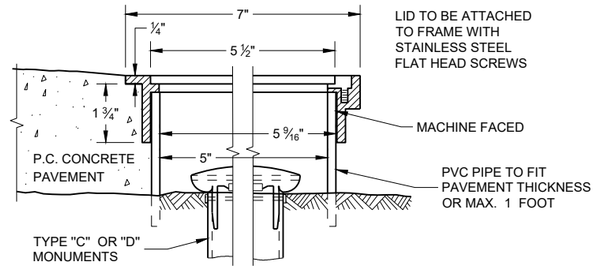

SECTION B-B **SECTION A-A**

ALUMINUM MONUMENT COVER
(APPROXIMATE WEIGHT 2 LBS)
(FOR CONCRETE PAVEMENT ONLY)

LANDMARK REFERENCE MONUMENTS AND COVERS

STATE OF WISCONSIN
DEPARTMENT OF TRANSPORTATION

APPROVED
March 2018
DATE

/S/ Raymond A. Kumapayii
CHIEF SURVEYING AND MAPPING ENGINEER

FHWA

6

SDD 16A01 - 07

NOTES

1. Fixed Message Type II Signs - Type F Reflective
2. Color:
   Background - Orange
   Message - Black
3. Message Series - C

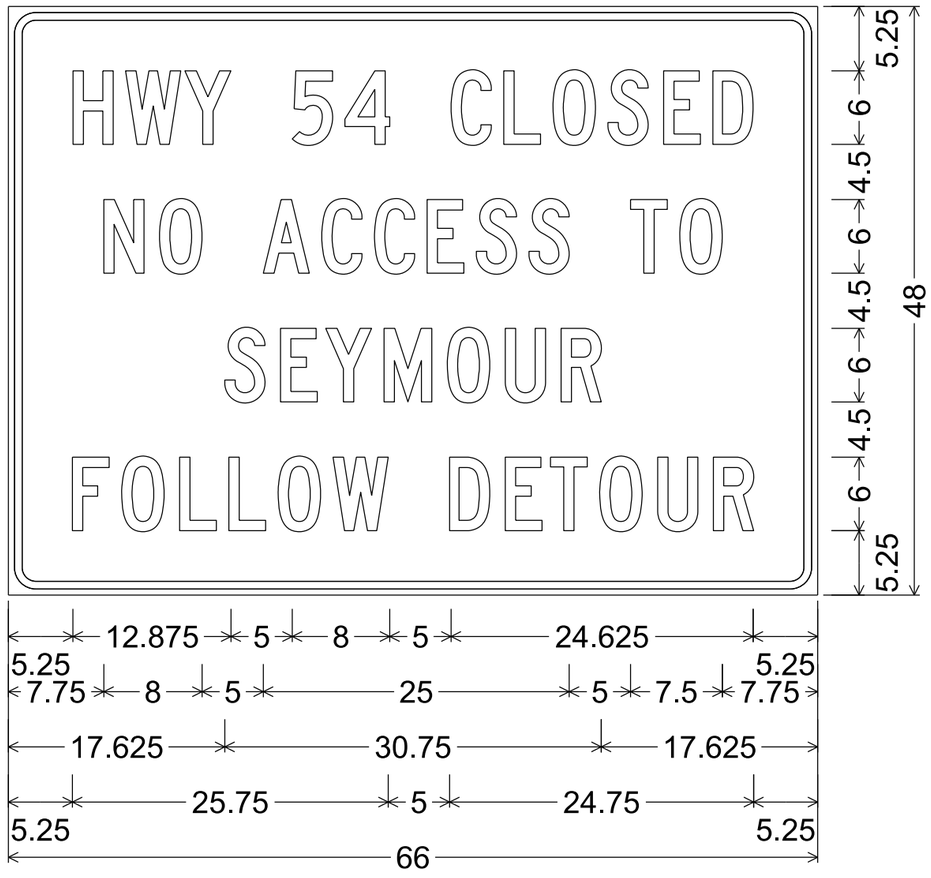

2.250" Radius, 0.625" Border, 0.500" Indent

NOTES:
1. ALL SIGNS TYPE II - TYPE F REFLECTIVE
2. COLOR:
   BACKGROUND - ORANGE
   MESSAGE - BLACK
3. MESSAGE SERIES - C

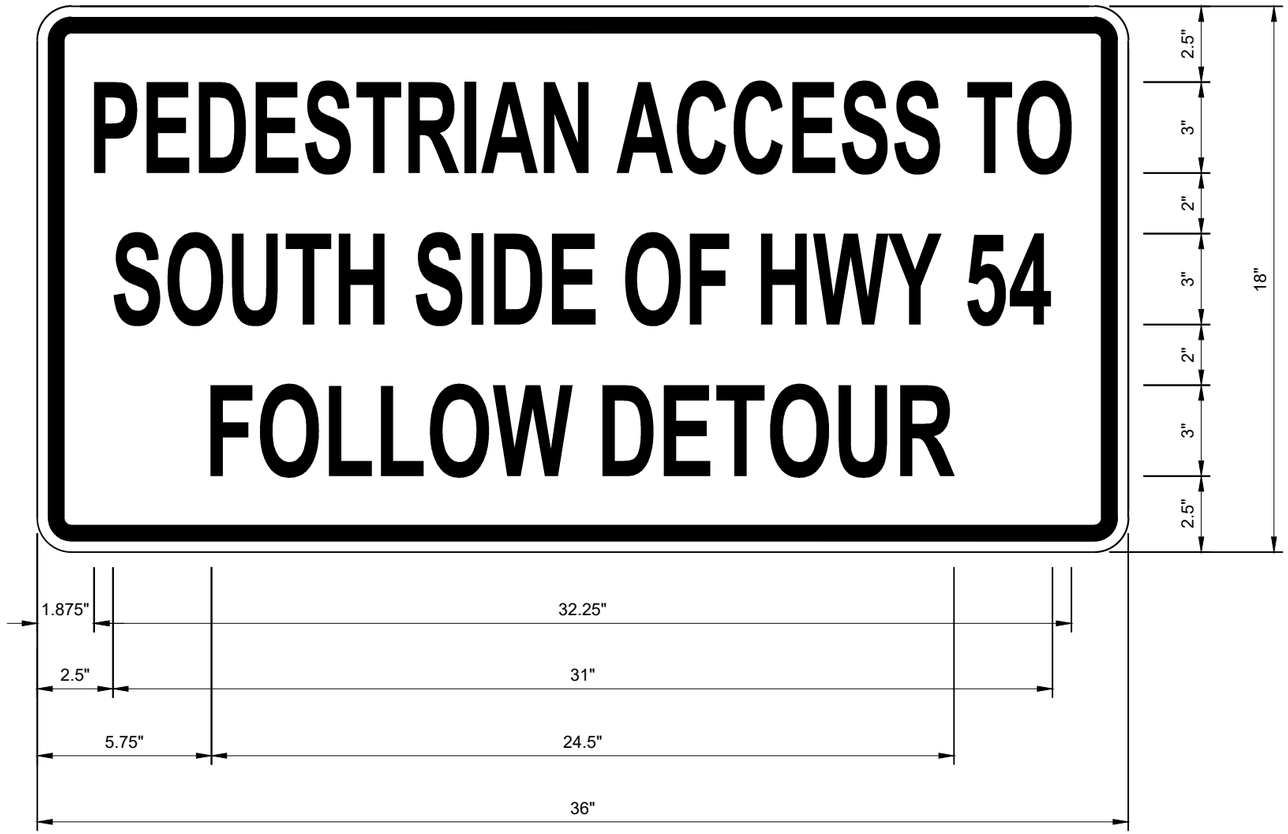

1.125" Radius, 0.50" Boarder, 0.375" Indent

7

7

PROJECT NO: 6230-20-71	HWY: STH 54	COUNTY: OUTAGAMIE	TEMPORARY SIGNING DETAIL	SHEET 207	E

TYPICAL ASSEMBLIES

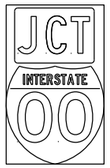

J1-1

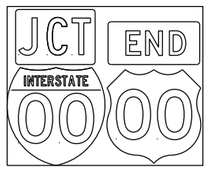

J1-2

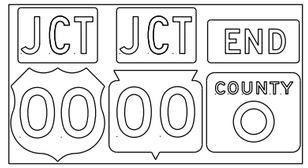

J1-3



JR1-1



J2-1

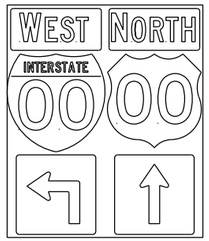

J2-2

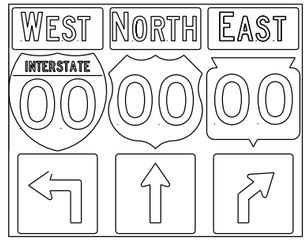

J2-3



JV
(Typical Vertical J-Assembly
See Note 10 and 11)

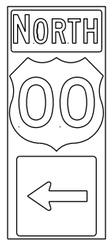

J3-1

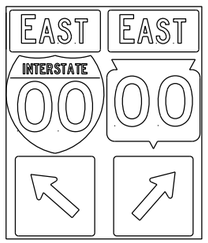

J3-2

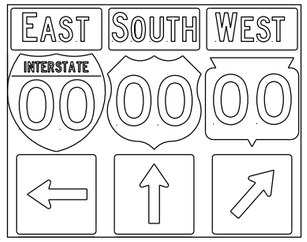

J3-3

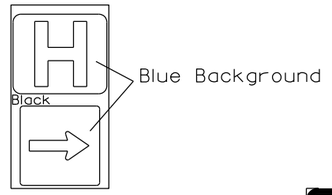

JH-1



J4-1

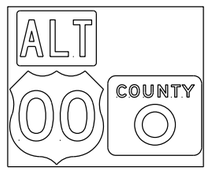

J4-2

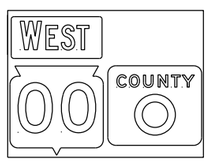

J4-2

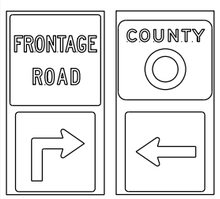

J12-1

J13-1



J32-1

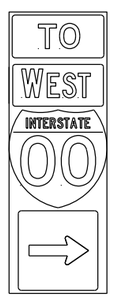

J33-1



J22-1



J23-1



JR13-1



JR23-1



JR99-1

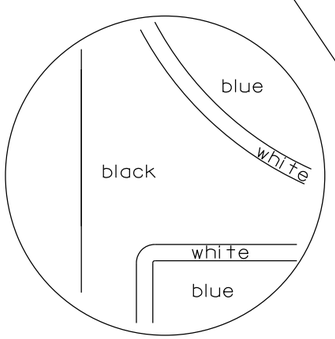

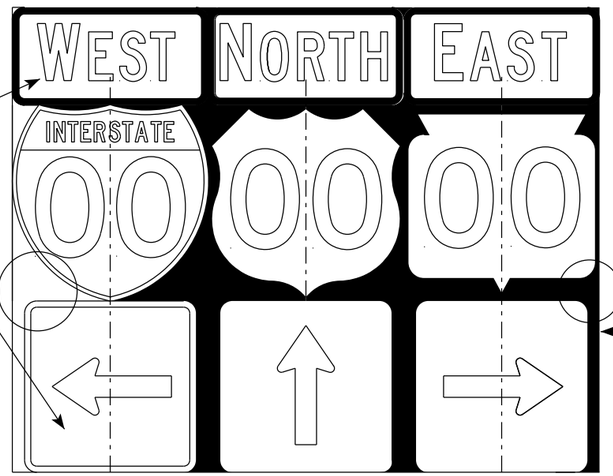

NOTES

1. Signs are Type II - Type H Reflective
2. Color:
   Background - Black Non-reflective
   Message - see Note 5
3. Message Series - See Note 5
4. Corners shall be square or rounded if base material is plywood. If base material is metal the corners shall be rounded.
5. The colors and message spacing on each marker shall be according to the applicable route marker panel specifications.
6. Certain marker heads require the component pieces to be the same color. As an example, all the components used with an M1-1 Interstate marker shall be blue.
7. Single panel j-assemblies shall only be used with route marker shields that are same size. If the route marker shields are different size use multiple piece component.
8. Route assemblies that have 24 inch route shields and have dimensions greater than 48 inches (both vertical and horizontal) shall have one horizontal splice between the arrows and route shields. Vertical splices shall not be used on route assemblies with a horizontal dimension of 144 inches or less. The contractor shall not use more than one vertical joint per sign and the joint shall be between route shields.
9. Route assemblies that have 36 inch shields and have dimensions greater than 48 inchs (both vertical and horizontal) shall have two horizontal splices. One horizontal splice shall be between the cardinal direction and route shields and the other horizontal splice shall be between the arrows and route shields. Vertical splices shall not be used on route assemblies with a horizontal dimension of 144 or less. The contractor shall not use more than one vertical joint per sign and the joint shall be between route shields.
10. All Vertical J Assemblies are given a Sign Code of JV
11. For JV Assemblies that have a mixture of Interstate and non Interstate shields, arrows and cardinals shall be white on blue.

ROUTE MARKERS & COMPONENTS
IN TYPICAL ASSEMBLIES

WISCONSIN DEPT OF TRANSPORTATION

APPROVED Matthew R Rauch
for State Traffic Engineer

DATE 3/18/21 PLATE NO. A2-1S.9

PROJECT NO:

SHEET NO: 208 **E**

URBAN AREA

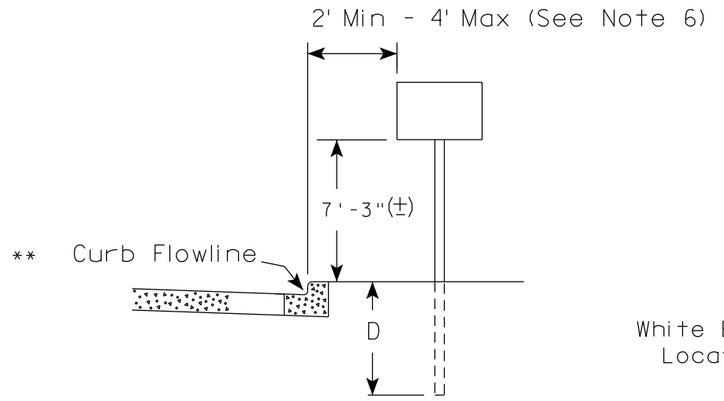

RURAL AREA (See Note 2)

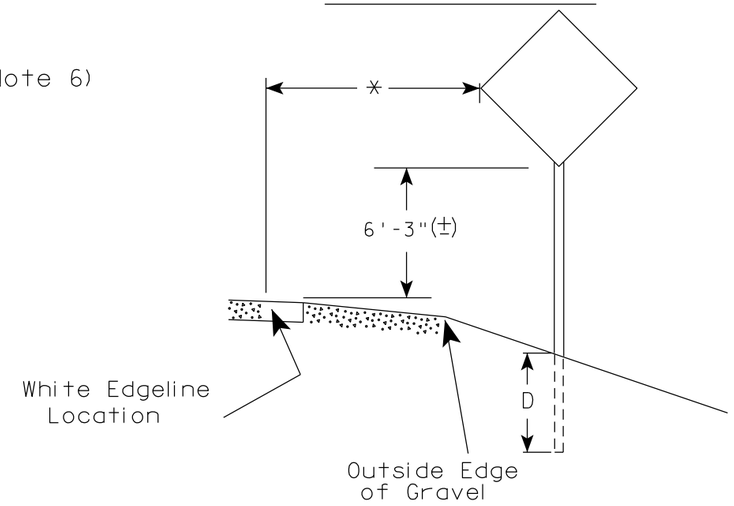

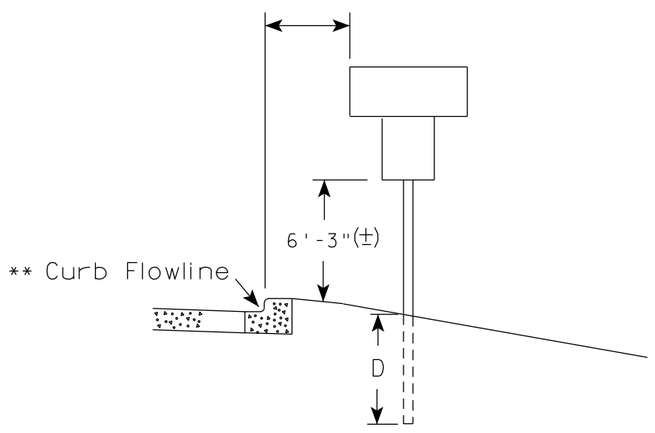

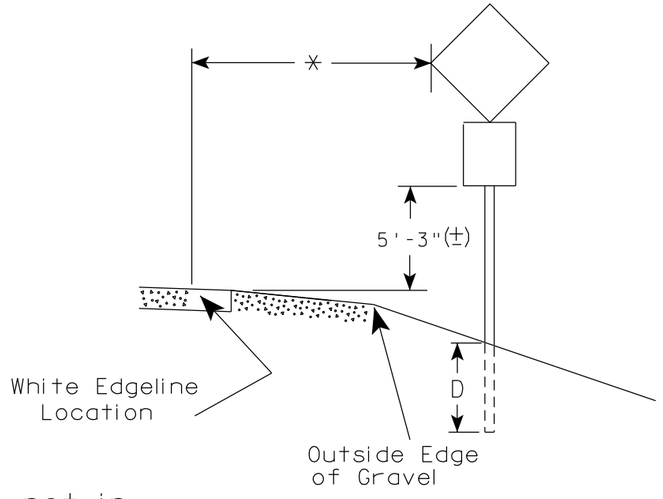

** The existence of curb and gutter does not in itself mandate the vertical clearance illustrated. That height is typically measured where there is sidewalk adjacent to the roadway or parking is permitted. In the absence of sidewalk vertical clearance is measured from the top of the curb. Offset of signs is measured from the flow line.

* 6 feet from edge of a paved shoulder or 12 feet from the edge of pavement (edge line location) or 2 feet from outside edge of gravel, whichever is greater unless directed by project engineer.

POST EMBEDMENT DEPTH

Area of Sign Installation (Sq.Ft.)	D (Min)
20 or Less	4'
Greater than 20	5'

GENERAL NOTES

1. Signs wider than 4 feet or 20 sq.ft or larger, shall be mounted on multiple posts. Refer to plate A4-4.
2. If signs are mounted on or behind barrier wall, see A4-10 sign plate.
   The Double Arrow sign (W12-1D) shall be mounted at a height of 2'-3" (±). The Chevron sign (W1-8), Roundabout Chevron panel (R6-4B), Enhanced Reference Markers, Clearance Markers (W5-52), Mile Markers (D10 series), In Road Object Markers (W5-54) & End of Road Markers (W5-56) shall be mounted at a height of 4'-3" (±).
3. For expressways and freeways, mounting height is 7'- 3" (±) or 6'-3" (±) depending upon existence of a sub-sign.
4. Minimum mounting height for signs mounted on traffic signal poles is 5'- 3" (±).
5. Offset distance shall be consistent with existing signs or consistent throughout length of project.
6. The (±) tolerance for mounting height is 3 inches.
7. Folding signs shall be mounted at a height of 5'-3" (±) or as directd by the Engineer.

TYPICAL INSTALLATION OF PERMANENT TYPE II SIGNS ON SINGLE POSTS

WISCONSIN DEPT OF TRANSPORTATION

APPROVED Matthew R Rauch
for State Traffic Engineer

DATE 5/13/2020 PLATE NO. A4-3.22

PROJECT NO:	HWY:	COUNTY:		SHEET NO: 209	E

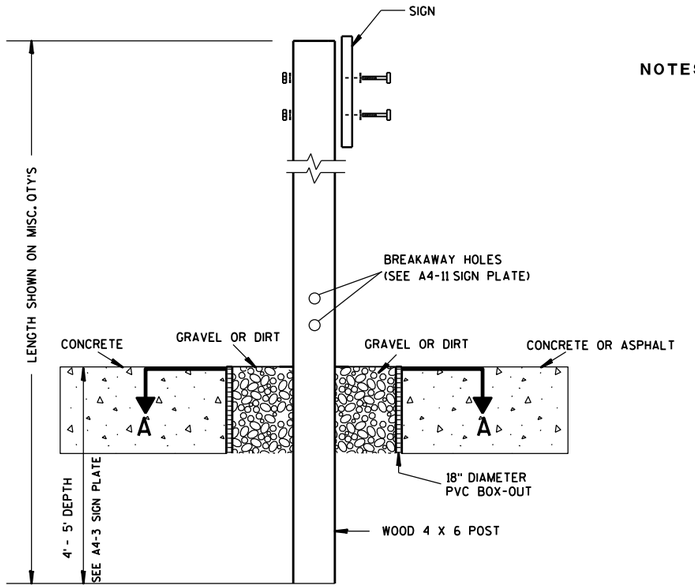

ELEVATION VIEW

DETAIL OF WOOD 4 X 6 SIGN POST IN BOX-OUT

NOTES:
1. ALL MATERIAL TO BE APPROVED BY ENGINEER PRIOR TO INSTALLATION
2. SEE SIGN PLATE A4-8 FOR SIGN HARDWARE REQUIREMENTS
3. 18 INCH X 18 INCH SQUARE BOX-OUTS MAY BE USED FOR INSTALLATIONS IN EXISTING CONCRETE OR ASPHALT LOCATIONS.

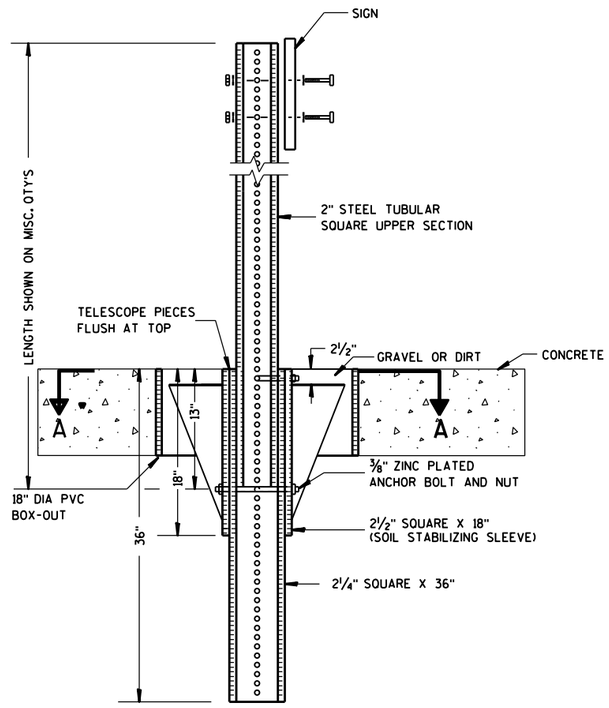

ELEVATION VIEW

DETAIL OF STEEL 2 X 2 SIGN POST IN BOX-OUT

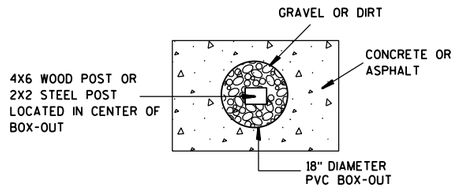

PLAN VIEW

FOR NEW CONCRETE/ASPHALT INSTALLATIONS

SIGN POST BOX-OUTS A4-3B

WISCONSIN DEPT OF TRANSPORTATION

APPROVED Matthew R Rauch
for State Traffic Engineer

DATE 1/27/14 PLATE NO. A4-3B.1

PROJECT NO:	HWY:	COUNTY:		SHEET NO:	E

FILE NAME : C:\CAEFiles\Projects\tr_stdplate\A43B.DGN PLOT DATE : 27-JAN-2014 09:48 PLOT BY : mscsja PLOT NAME : PLOT SCALE : 13.659812:1.000000 WISDOT/CADDS SHEET 42

URBAN AREA

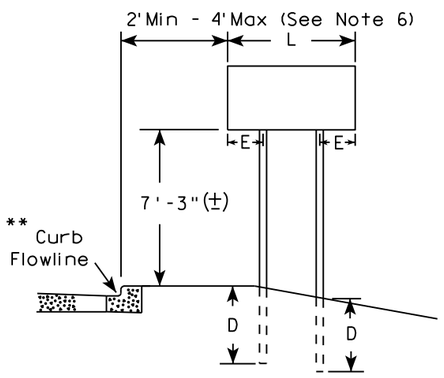

RURAL AREA (See Note 3)

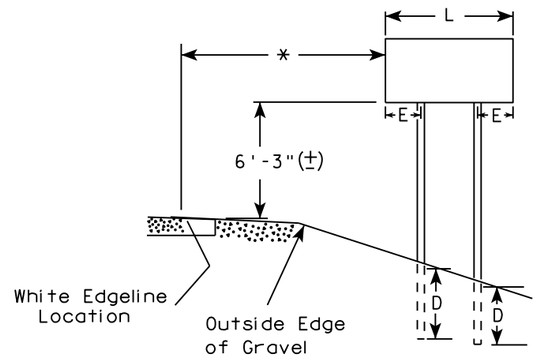

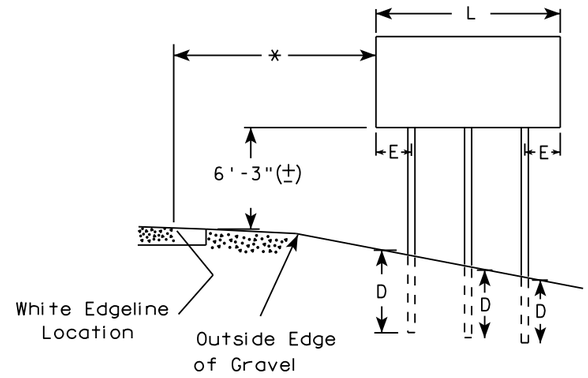

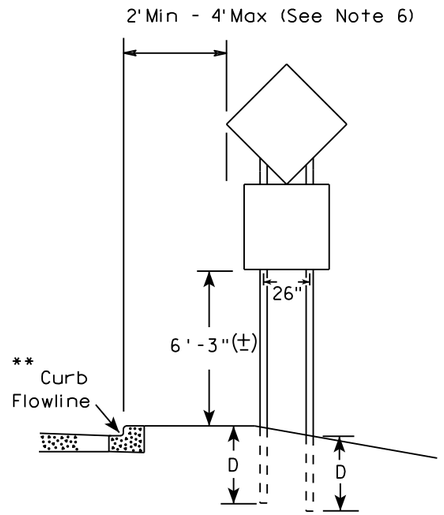

48" DIAMOND WARNING SIGN

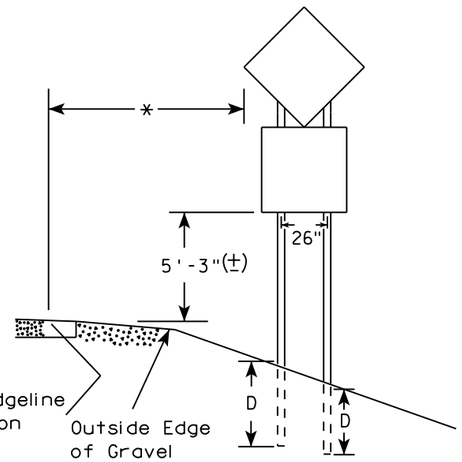

48" DIAMOND WARNING SIGN

SIGN SHAPE OTHER THAN DIAMOND (TWO POSTS REQUIRED)		
	L	E
***	Greater than 48" Less than 60"	12"
	60" to 108"	L/5

SIGN SHAPE OTHER THAN DIAMOND (THREE POSTS REQUIRED)	
L	E
Greater than 108" to 144"	12"

GENERAL NOTES

1. For 3 or 4 post installations, individual post spacing shall be greater than 3'-6".
2. See tables below for required number of posts.
3. For expressways and freeways, mounting height is 7'-3" (±) or 6'-3" (±) depending upon existence of sub-sign.
4. The (±) tolerance for mounting height is 3 inches.
5. J-Assemblies are considered to be one sign for mounting height.
6. Offset distance shall be consistent with existing signs or consistent throughout length of project.
7. Folding signs shall be mounted at a height of 5'-3" (±) or as directed by the engineer.
8. The Double Arrow sign (W12-1) shall be mounted at a height of 2'-3" (±). The Chevron sign (W1-8), Roundabout Chevron panel (R6-4B), Clearance Markers (W5-52), Mile Markers (D10 series), In Road Object Markers (W5-54) & End of Road Markers (W5-56) shall be mounted at a height of 4"-3" (±).

* 6 feet from edge of a paved shoulder or 12 feet from the edge of pavement (edge line location) or 2 feet from outside edge of gravel, whichever is greater unless directed by project engineer.

** The existence of curb and gutter does not in itself mandate the vertical clearance illustrated. That height is typically measured where there is sidewalk adjacent to the roadway or parking is permitted. In the absence of sidewalk vertical clearance is measured from the top of the curb. Offset of signs is measured from the flow line.

*** See A4-3 sign plate for signs 4' or less in width and less than 20 S.F. in area.

POST EMBEDMENT DEPTH

Area of Sign Installation (Sq. Ft.)	D (Min)
20 or Less	4'
Greater than 20	5'

TYPICAL INSTALLATION OF TYPE II SIGNS ON MULTIPLE POSTS

WISCONSIN DEPT OF TRANSPORTATION

APPROVED Matthew R Rauch
For State Traffic Engineer

DATE 8/21/17 PLATE NO. A4-4.15

PROJECT NO:	HWY:	COUNTY:		SHEET NO: 211	E

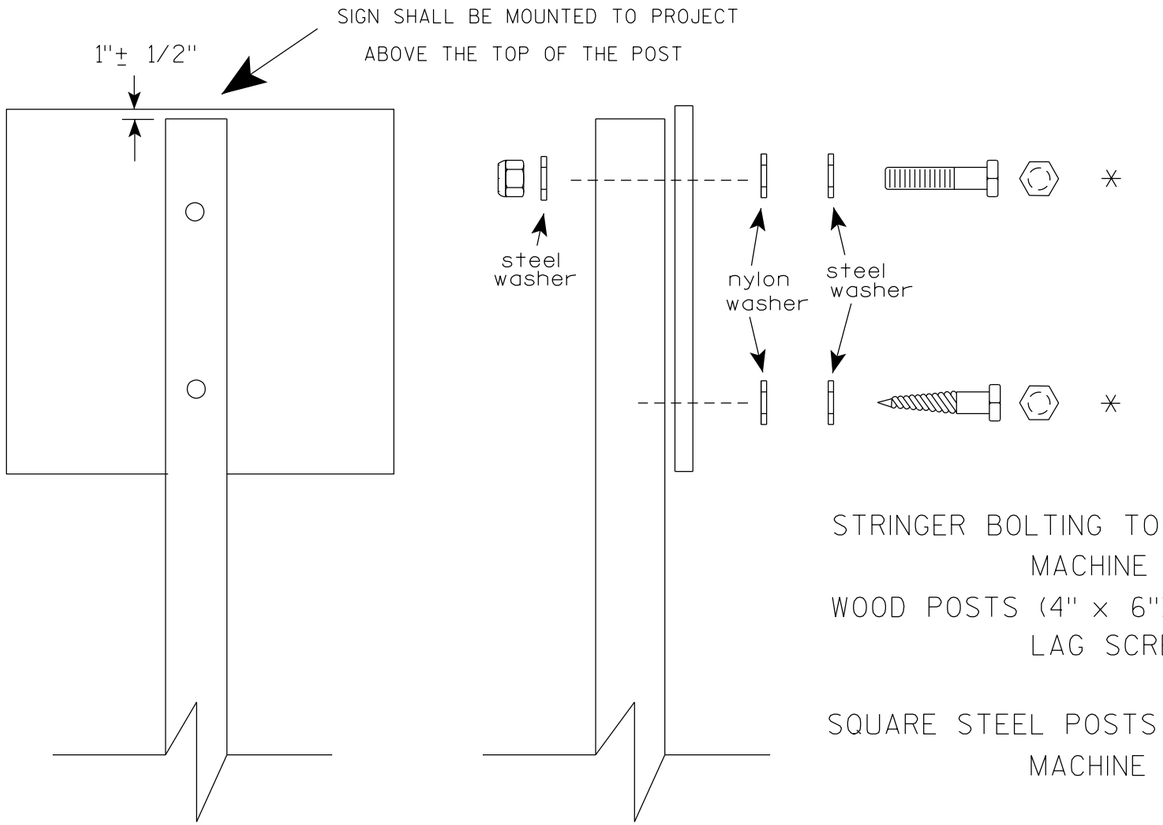

Nuts, bolts and lags used for mounting signs shall have hexagonal heads and shall be either :

a. Hot dip galvanized in accordance with ASTM Designation: A 153, Class D, or SC 3

b. Electro-galvanized in accordance with ASTM Designation : B 633, TYPE III, SC 3.

Threads on bolts and nuts shall be manufactured with sufficient allowance for the cadmium plate or galvanized coating to permit the nuts to run freely on the bolts.

STRINGER BOLTING TO ALUMINUM SIGNS (SEE SIGN PLATE A4-18)

MACHINE BOLTS - 5/16" X 1-3/4" Length w/ lock nuts

WOOD POSTS (4" x 6")

LAG SCREWS - 3/8" X 3" (NO STRINGERS ON BACK OF SIGN)
3/8" X 4" (STRINGERS ON BACK OF SIGN)

SQUARE STEEL POSTS (2" x 2")

MACHINE BOLTS - 3/8" X 3-1/4" Length w/ nuts (NO STRINGER ON BACK OF SIGN)
3/8" X 5" Length w/ nuts (STRINGERS ON BACK OF SIGN)

RIVETS - 9/32" (6605-9-6) BULB-TITE, TRI-FOLD, ALUMINUM BODY/MANDREL
O.D. FLANGE .720-.765 INCH, GRIP RANGE .042-.375 INCH

WASHERS (ALL POSTS) -

1-1/4" O.D. X 3/8" I.D. X 1/16" STEEL
1-1/4" O.D. X 3/8" I.D. X .080 NYLON

* Two different fastening systems are shown for illustration purposes. On any individual sign, either one or the other system shall be used. Actual number of fasteners per sign varies with the sign area, but normally there are two. For a single post installation, all signs greater than 9 sq. ft. require the use of 3 fasteners.

ATTACHMENT OF SIGNS TO POSTS

WISCONSIN DEPT OF TRANSPORTATION

APPROVED Matthew R Rauch
for State Traffic Engineer

DATE 4/1/2020 PLATE NO. A4-8.9

PROJECT NO:

SHEET NO: 212 E

TELESCOPIC TUBING ANCHORS
TWO PIECE SYSTEM

2 1/4 " SQUARE
12 GAUGE
PERFORATED
GALVANIZED FINISH

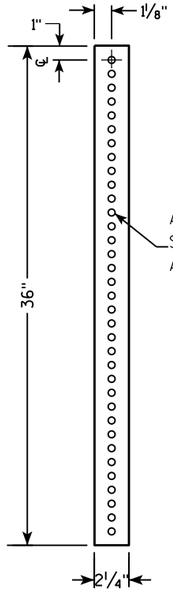

2 1/2 " SQUARE
12 GAUGE
OMNI-DIRECTIONAL
PERFORATED
SOIL STABILIZING SLEEVE
GALVANIZED FINISH

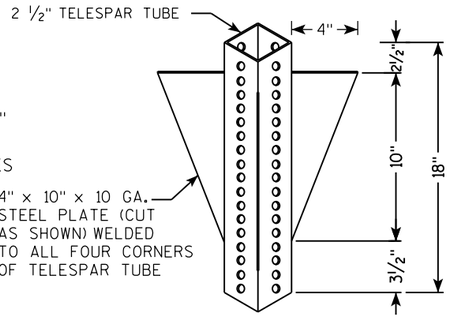

DETAIL OF TUBULAR STEEL SIGN POST
(IN POURED CONCRETE OR ASPHALT)

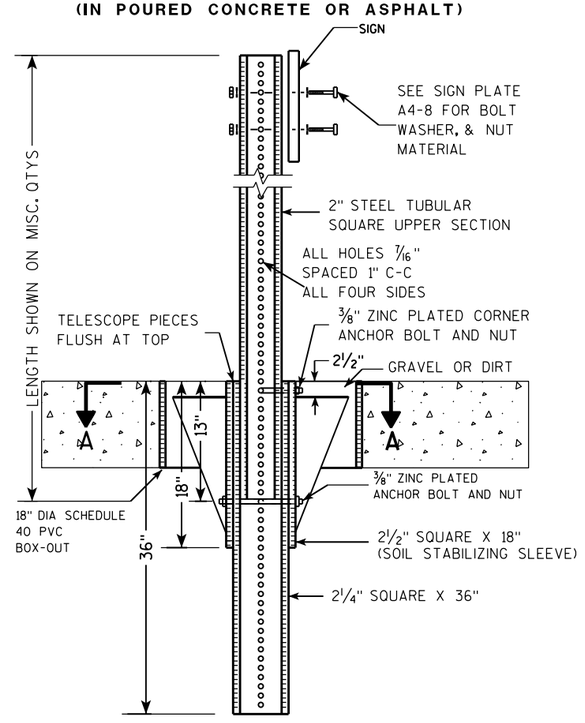

DETAIL OF TUBULAR STEEL SIGN POST
(IN LOCATIONS OTHER THAN POURED CONCRETE OR ASPHALT)

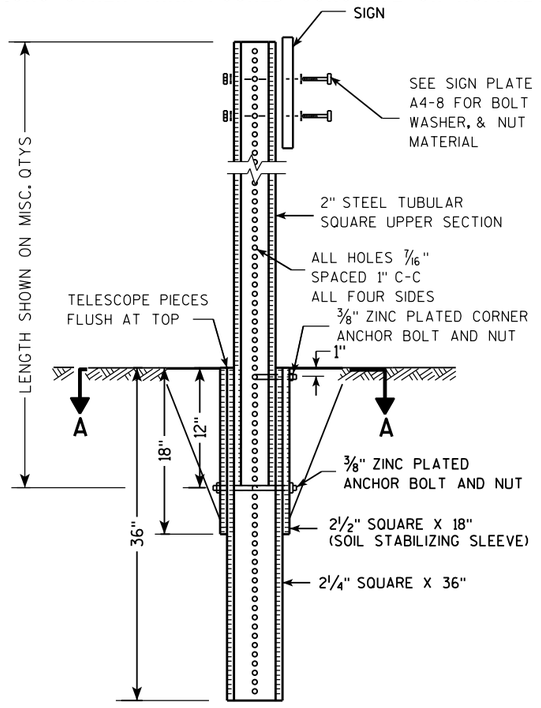

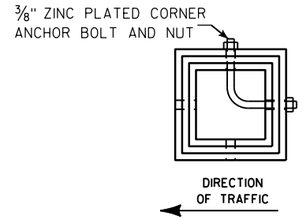

SECTION A-A

Area of Sign Installation (Sq. Ft.)	Number of Required Posts
9 or less	1
Greater than 9 less than or equal to 18	2
Greater than 18 less than or equal to 27	3

Signs wider than 3 feet or larger than 9 sq. ft shall be mounted on multiple posts (see above table).

TUBULAR STEEL
SIGN POST
A4-9

WISCONSIN DEPT OF TRANSPORTATION

APPROVED Matthew R Rauch
for State Traffic Engineer

DATE 2/05/15 PLATE 213 A4-9.9

PROJECT NO:	HWY:	COUNTY:		SHEET NO:	E

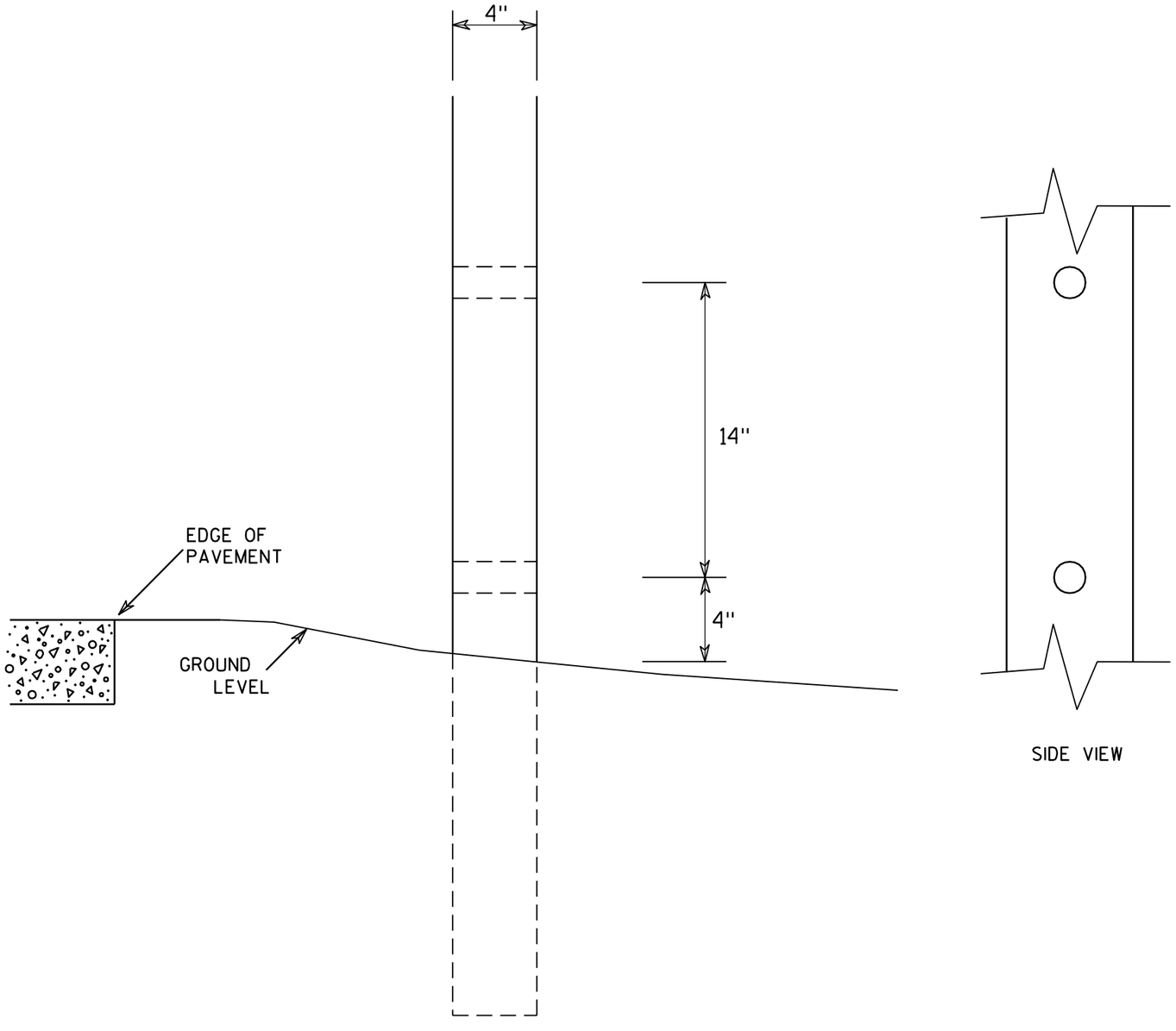

SIDE VIEW

GENERAL NOTES

1. All 4 x 6 Wood Posts shall be modified by having two 1½" diameter holes drilled perpendicular to the roadway centerline.

7

7

4 X 6 WOOD POST MODIFICATIONS

WISCONSIN DEPT OF TRANSPORTATION

APPROVED Chester J Spang for State Traffic Engineer

DATE 3/27/97 PLATE NO. A4-11.2

PROJECT NO:	HWY:	COUNTY:		SHEET NO: 214	E

BANDING

SINGLE SIGN

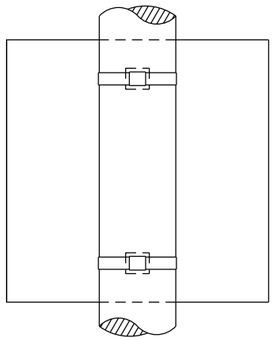

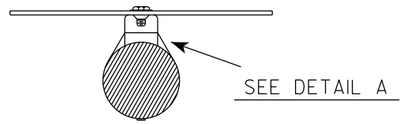

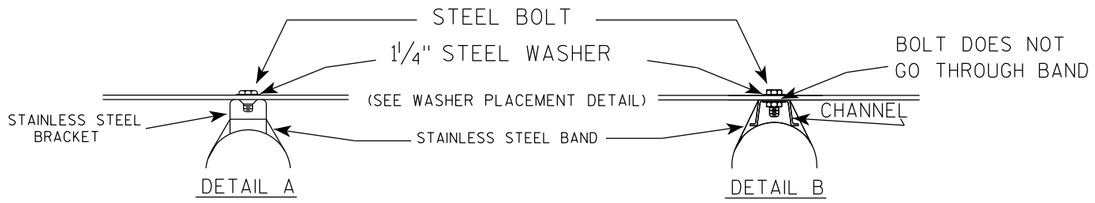

GENERAL NOTES

1. Any sign over 3 feet in width shall use the V-Block banding method. See A5-10 standard plate.
2. Signs 3 feet or greater in height shall have three bracket bands installed. Signs less than 3 feet in height shall have two bracket bands installed.
3. Banding and assembly bracket shall be stainless steel. All bands shall be ¾" in width and 0.025" thickness.
4. ALL SIGN MOUNTING BOLTS AND WASHERS SHALL BE EITHER:
   a. Hot dip or mechanically galvanized in accordance with ASTM Designation: A 153, Class D
   b. Electro-galvanized in accordance with ASTM designation: B 633, Type III, SC 3

"J" ASSEMBLY

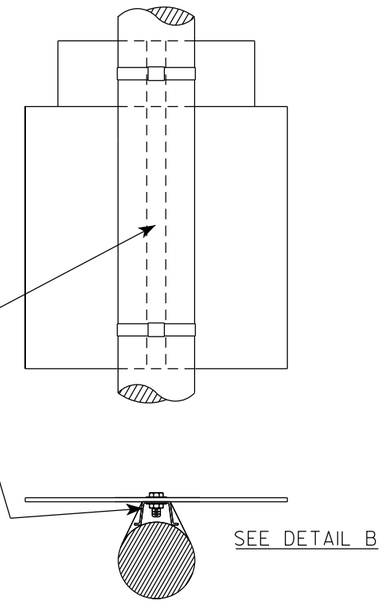

WASHER PLACEMENT

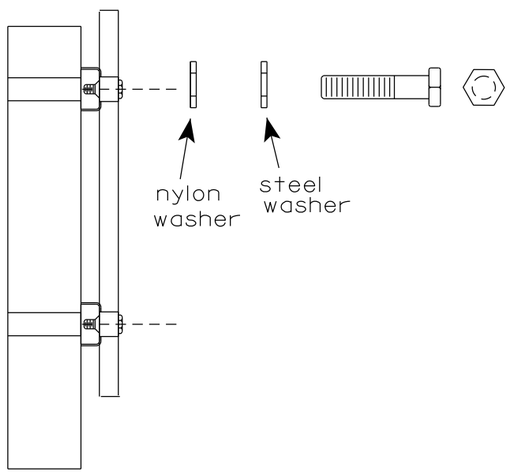

WASHERS (ALL POSTS) -
1-1/4" O.D. X ⅜" I.D. X 1/16" STEEL
1-1/4" O.D. X ⅜" I.D. X .080 NYLON
FOR ALL TYPE H SIGNS

STANDARD SIGN
SIGN BANDING DETAILS

WISCONSIN DEPT OF TRANSPORTATION

APPROVED Matthew R Rauch
for State Traffic Engineer

DATE 6/10/19 PLATE NO. A5-9.4

PROJECT NO:	HWY:	COUNTY:		SHEET NO: 215	E

FILE NAME : C:\CAEfiles\Projects\tr_stdplate\A59.dgn PLOT DATE : 10-JUN 2019 4:10 PLOT BY : mscj9h PLOT NAME : PLOT SCALE : $$.....plotscale.....$$ WISDOT/CADDS SHEET 42

7

7

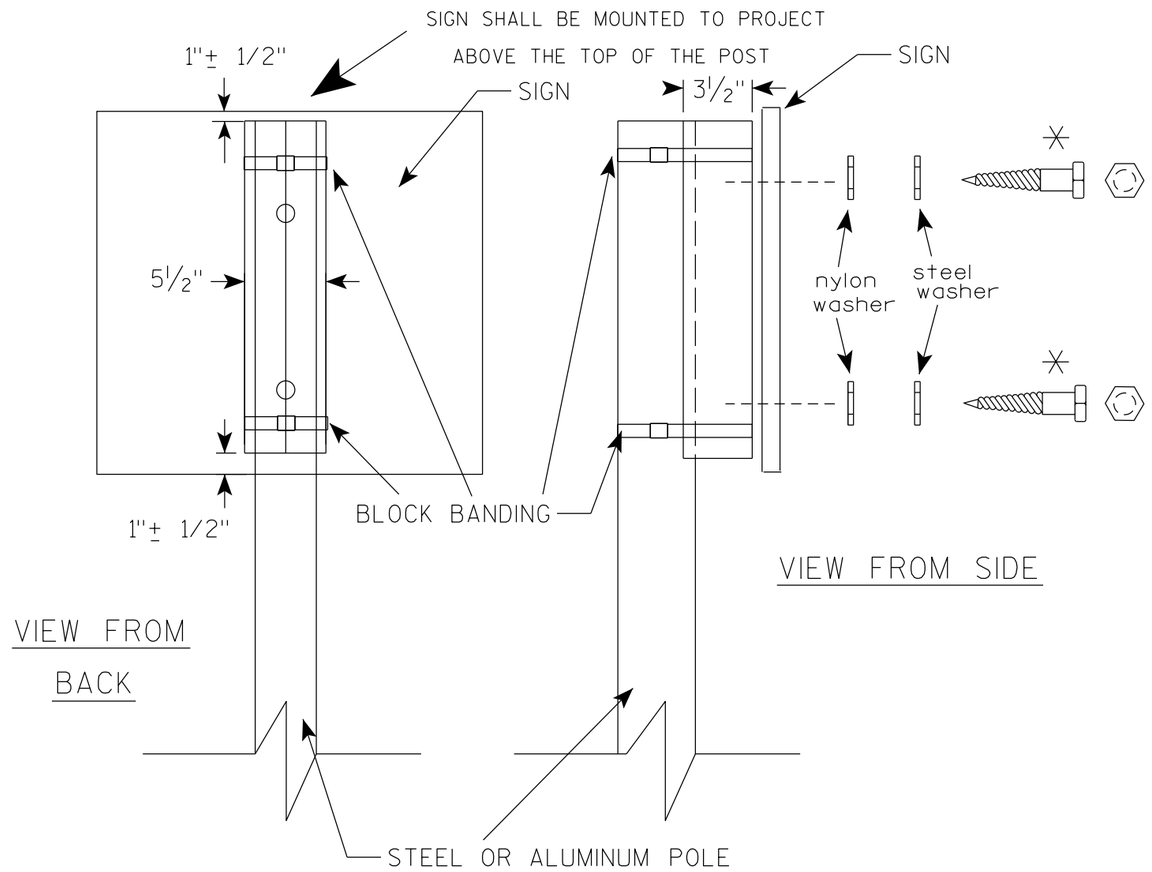

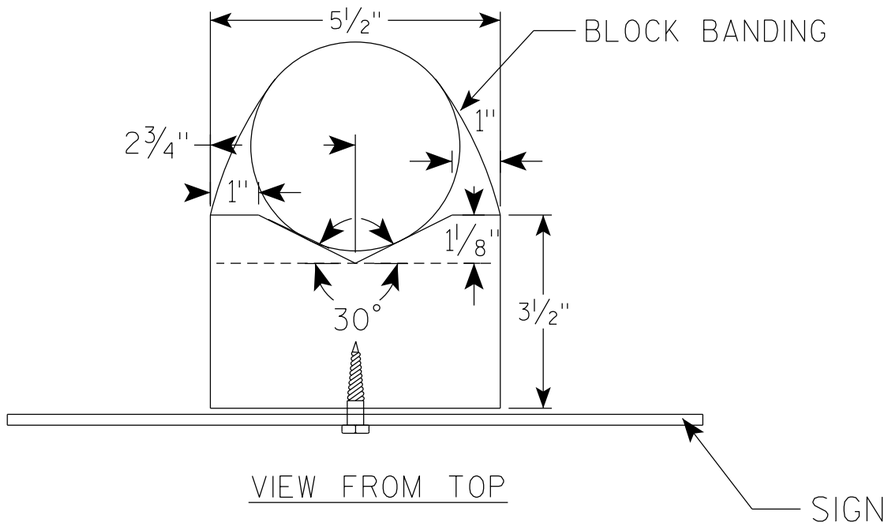

GENERAL NOTES

1. WOOD 4"X6" POST MATERIAL SHALL CONFORM TO 507.2.2 OF THE WisDOT STANDARD SPECIFICATIONS
2. BLOCK BANDING AND CLIPS SHALL BE STAINLESS STEEL, ¾" WIDTH AND 0.025" THICKNESS
3. SIGNS 3' OR GREATER IN HEIGHT SHALL UTILIZE 3 BLOCK BANDS. SIGNS UNDER 3' IN HEIGHT SHALL UTILIZE 2 BLOCK BANDS
4. ACTUAL NUMBER OF FASTENERS PER SIGN VARIES WITH THE SIGN AREA, BUT NORNALLY THERE ARE TWO. FOR SIGNS GREATER THAN 9 S.F. 3 FASTENERS SHALL BE USED.
5. ALL SIGN MOUNTING BOLTS AND WASHERS SHALL BE EITHER:
   a. Hot dip or mechanically galvanized in accordance with ASTM Designation: A 153, Class D
   b. Electro-galvanized in accordance with ASTM Designation : B 633, TYPE III, SC 3
6. ALL BOLTS SHALL HAVE HEXAGONAL HEADS.
7. STEEL WASHERS SHALL BE 1¼" O.D. X ⅜" I.D. X 1/16"
8. NYLON WASHERS SHALL BE 1¼" O.D. X ⅜" I.D. X .080 FOR TYPE H OR TYPE F FACE SIGN

✳ LAG BOLTS SHALL BE ⅜" X 2½"

BLOCK BANDING DETAIL (V-BLOCK OPTION)

WISCONSIN DEPT OF TRANSPORTATION

APPROVED Matthew R Rauch
for State Traffic Engineer

DATE 4/19/2022 PLATE NO. A5-10.3

PROJECT NO:

SHEET NO: 216 E

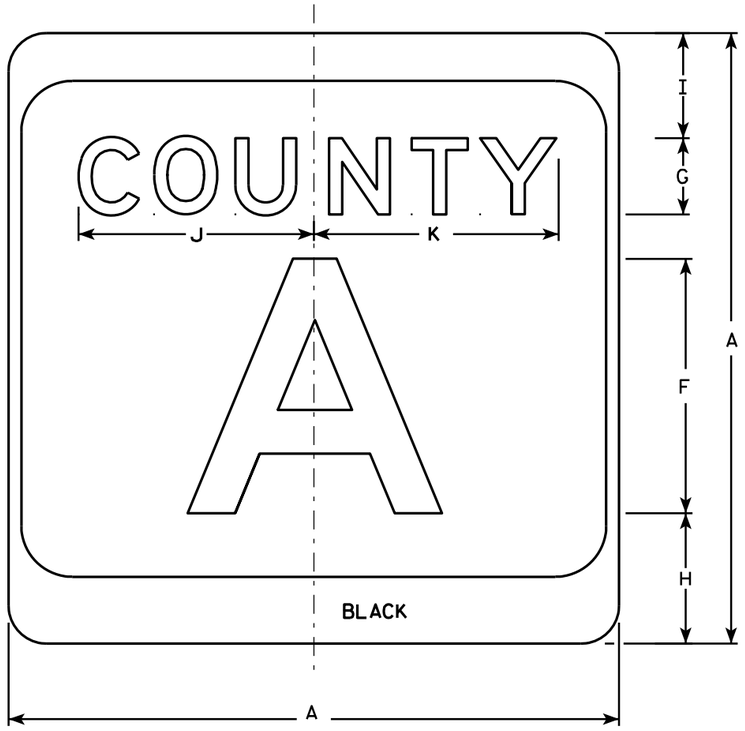

M1-5A

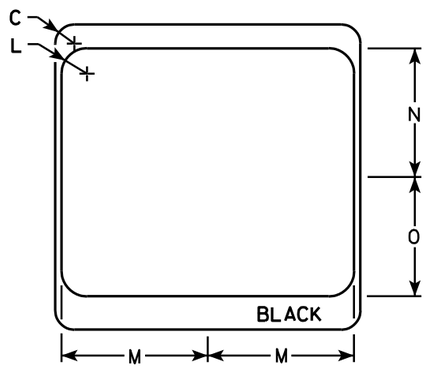

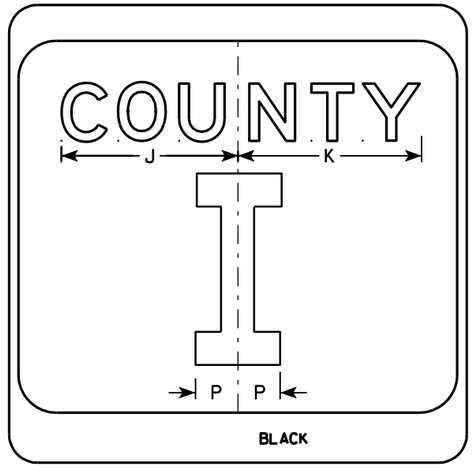

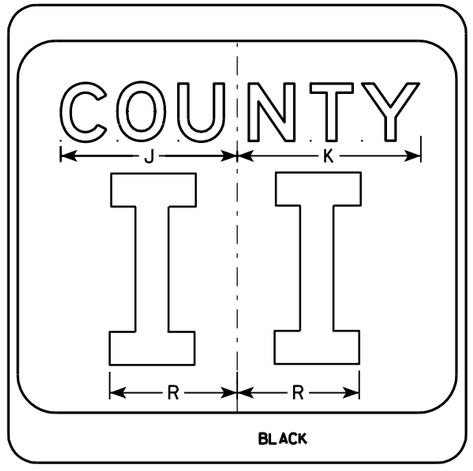

NOTES

1. Sign is Type II - see Note 7 - reference WIS DOT Standard Specification for HIGHWAY and STRUCTURE CONSTRUCTION latest edition.
2. Color:
   Background - White & Black - See Note 7
   Message - Black
3. Message Series - see Note 5
4. Corners may be square or rounded when base material is plywood but borders shall be rounded as shown. When base material is metal, the corners and borders shall be rounded.
5. Message Series E for 1 letter.
   Message Series D for 2 letters unless message is too big then Series C.
   Message Series C for 3 letters unless message is too big then Series B.
6. Substitute appropriate letters & optically center to achieve proper balance.
7. Permanent Signs
   Background - Type H Reflective
   Detour or temporary Signs
   Background - Reflective

SIZE	A	B	C	D	E	F	G	H	I	J	K	L	M	N	O	P	Q	R	S	T	U	V	W	X	Y	Z	Area sq. ft.
1																											
2	24		1 1/2			10	3	5 1/8	4 1/8	9 1/4	9 5/8	2	11 1/2	10 1/8	9 3/8	2 1/4		6 5/8									4.0
3	36		2 1/4			16	4	7 5/8	5 5/8	12 1/4	12 7/8	3	17 1/8	15 1/4	14	3 3/8		10									9.0
4	36		2 1/4			16	4	7 5/8	5 5/8	12 1/4	12 7/8	3	17 1/8	15 1/4	14	3 3/8		10									9.0
5	36		2 1/4			16	4	7 5/8	5 5/8	12 1/4	12 7/8	3	17 1/8	15 1/4	14	3 3/8		10									9.0

CTH MARKER
M1-5A FOR ASSEMBLIES

WISCONSIN DEPT OF TRANSPORTATION

APPROVED Matthew R Rauch
for State Traffic Engineer

DATE 9/27/11 PLATE NO. M1-5A.8

PROJECT NO:	HWY:	COUNTY:		SHEET NO: 217	E

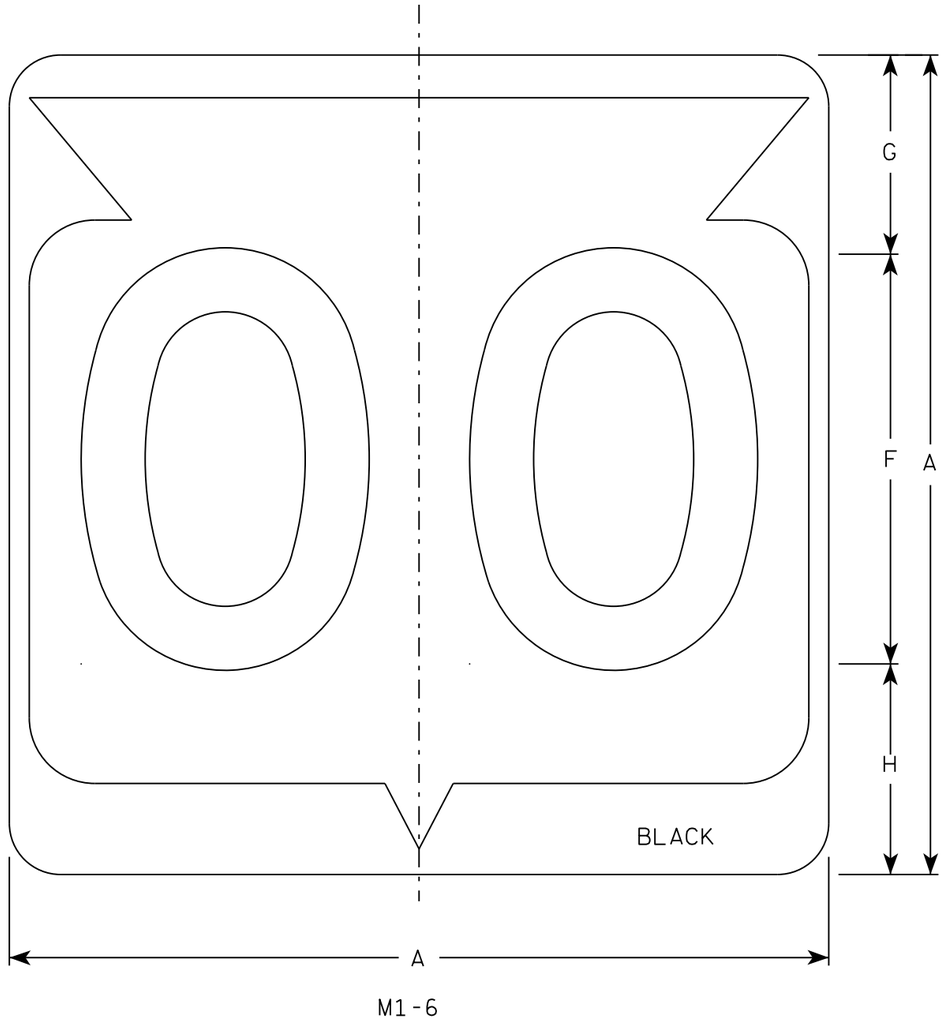

M1-6

NOTES

1. Sign is Type II - Type H Reflective
2. Color:
   Background - White
   Message - Black
3. Message Series - D except 3 number signs Series C
4. Corners may be square or rounded when base material is plywood but borders shall be rounded as shown. When base material is metal, the corners and borders shall be rounded.

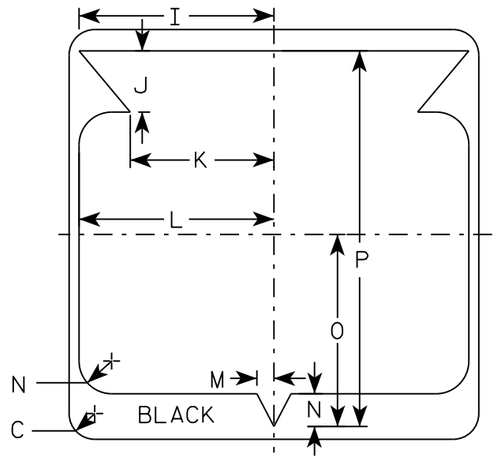

SIZE	A	B	C	D	E	F	G	H	I	J	K	L	M	N	O	P	Q	R	S	T	U	V	W	X	Y	Z	Area sq. ft.
1																											
2	24		1 1/2			12	5 1/2	6 1/2	10 1/4	2 1/2	8 7/8	11 1/2	1	1 7/8	11 1/4	21 7/8											4.0
3	36		2 1/4			18	8 3/4	9 1/4	15 3/8	5 3/8	12 5/8	17 1/8	1 1/2	2 7/8	16 7/8	33											9.0
4	36		2 1/4			18	8 3/4	9 1/4	15 3/8	5 3/8	12 5/8	17 1/8	1 1/2	2 7/8	16 7/8	33											9.0
5	36		2 1/4			18	8 3/4	9 1/4	15 3/8	5 3/8	12 5/8	17 1/8	1 1/2	2 7/8	16 7/8	33											9.0

STATE ROUTE MARKER M1-6 FOR ASSEMBLIES

WISCONSIN DEPT OF TRANSPORTATION

APPROVED Matthew R Rauch for State Traffic Engineer

DATE 3/16/18 PLATE NO. M1-6.10

PROJECT NO: | HWY: | COUNTY: | SHEET NO: 218 | E

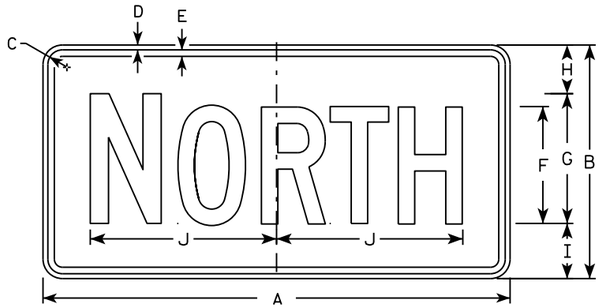

M3-1
MM3-1
MP3-1

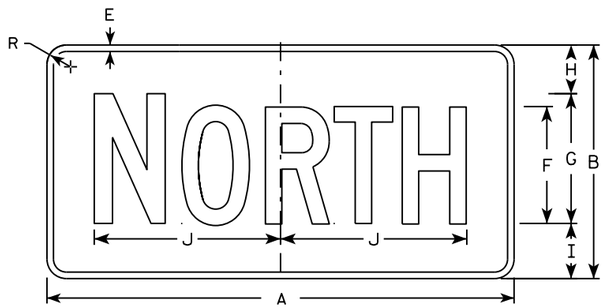

MB3-1
MK3-1
MN3-1



M3-2
MM3-2
MP3-2



MB3-2
MK3-2
MN3-2

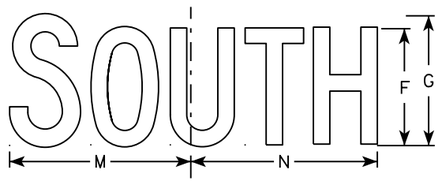

M3-3
MM3-3
MP3-3

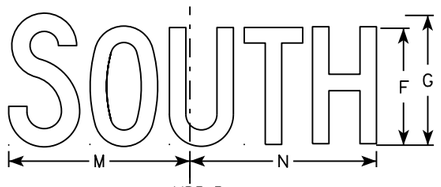

MB3-3
MK3-3
MN3-3

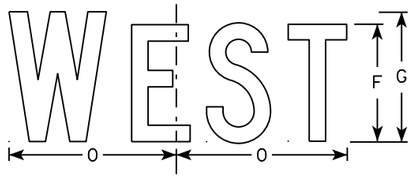

M3-4
MM3-4
MP3-4

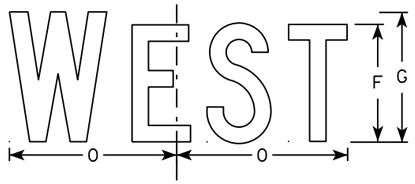

MB3-4
MK3-4
MN3-4

NOTES

1. All Signs Type II - Type H
2. Color:
   Background - See note 5
   Message - See note 5
3. Message Series - C
4. Corners may be square or rounded when base material is plywood but borders shall be rounded as shown. When base material is metal, the corners and borders shall be rounded.
5. M3-1 thru M3-4 Background - White
   Message - Black
   MB3-1 thru MB3-4 Background - Blue
   Message - White
   MK3-1 thru MK3-4 Background - Green
   Message - White
   MM3-1 thru MM3-4 Background - White
   Message - Green
   MN3-1 thru MN3-4 Background - Brown
   Message - White
   MP3-1 thru MP3-4 Background - White
   Message - Blue
6. Note the first letter of each direction is larger than the remainder of the message.

SIZE	A	B	C	D	E	F	G	H	I	J	K	L	M	N	O	P	Q	R	S	T	U	V	W	X	Y	Z	Area sq. ft.
1																											
2	24	12	1 1/8	3/8	3/8	6	7	2 1/4	2 3/4	10 1/4	7 7/8	8 3/8	10 1/4	9 3/4	8 3/4			1 1/2									2.00
3	36	18	1 1/8	3/8	1/2	9	10	3 3/4	4 1/4	14 3/8	12	12 1/8	14	14 1/8	13			1 1/2									4.5
4	36	18	1 1/8	3/8	1/2	9	10	3 3/4	4 1/4	14 3/8	12	12 1/8	14	14 1/8	13			1 1/2									4.5
5	36	18	1 1/8	3/8	1/2	9	10	3 3/4	4 1/4	14 3/8	12	12 1/8	14	14 1/8	13			1 1/2									4.5

STANDARD SIGNS
M3-1 thur M3-4
SERIES

WISCONSIN DEPT OF TRANSPORTATION

APPROVED Matthew P Rauch for State Traffic Engineer

DATE 10/15/15 PLATE NO M3-1.14

PROJECT NO: | HWY: | COUNTY: | SHEET NO: E

FILE NAME : C:\CAEfiles\Projects\tr_stdplate\M31.DGN PLOT DATE : 01-DEC-2015 17:54 PLOT BY : $$ plotuser $$ PLOT NAME : PLOT SCALE : 11.675051:1.000000

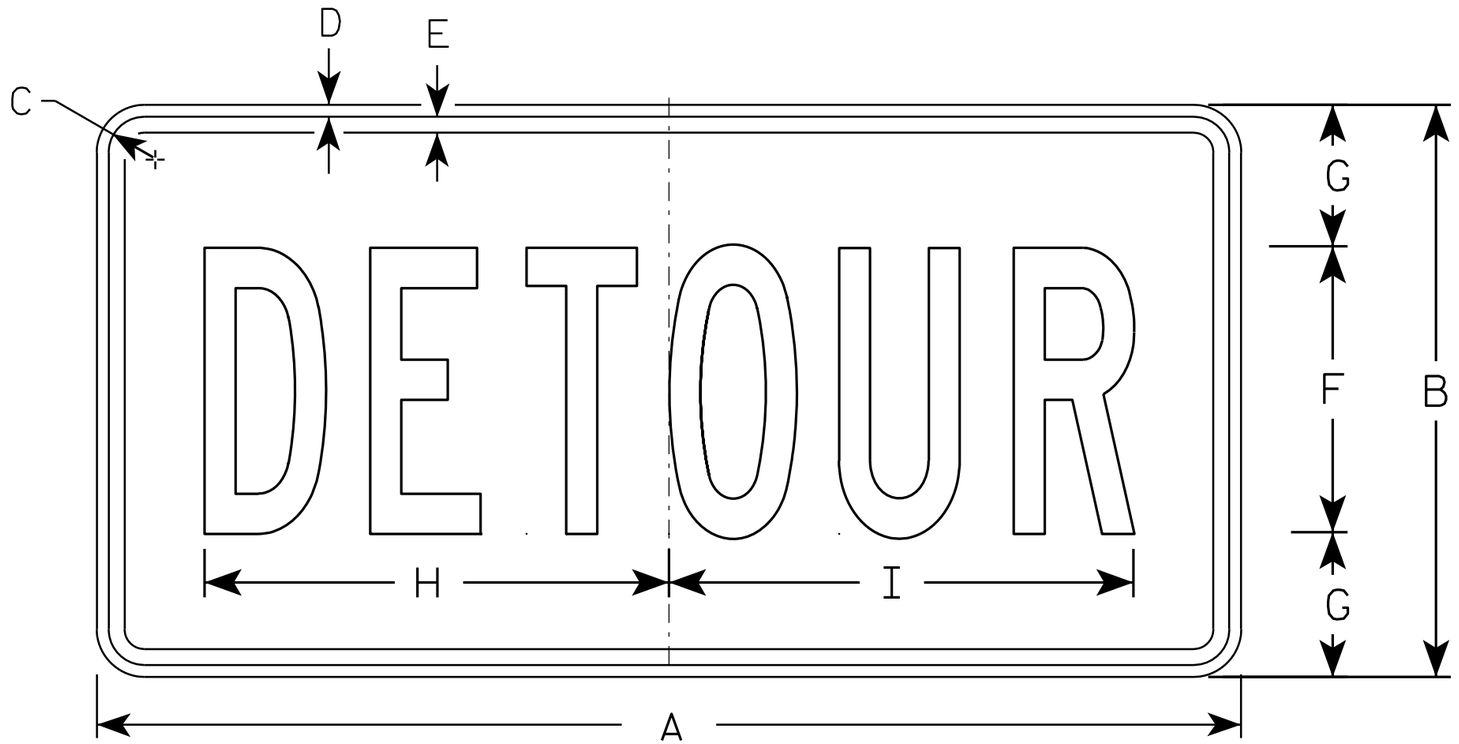

M4-8

NOTES

1. Sign is Type II - Type F Reflective - reference WIS DOT Standard Specification for HIGHWAY and STRUCTURE CONSTRUCTION latest edition.
2. Color:
   Background - Orange
   Message - Black
3. Message Series - B
4. Corners may be square or rounded when base material is plywood but borders shall be rounded as shown. When base material is metal, the corners and borders shall be rounded.

SIZE	A	B	C	D	E	F	G	H	I	J	K	L	M	N	O	P	Q	R	S	T	U	V	W	X	Y	Z	Area sq. ft.
1																											
2	24	12	1 1/8	3/8	3/8	6	3	10	10 1/4																		2.0
3	36	18	1 1/8	3/8	1/2	9	4 1/2	14 5/8	14 1/2																		4.5
4																											
5																											

STANDARD SIGN
M4-8

WISCONSIN DEPT OF TRANSPORTATION

APPROVED Matthew R Rauch
for State Traffic Engineer

DATE 11/10/10 PLATE NO. M4-8.2

PROJECT NO:	HWY:	COUNTY:		SHEET NO: 220	E

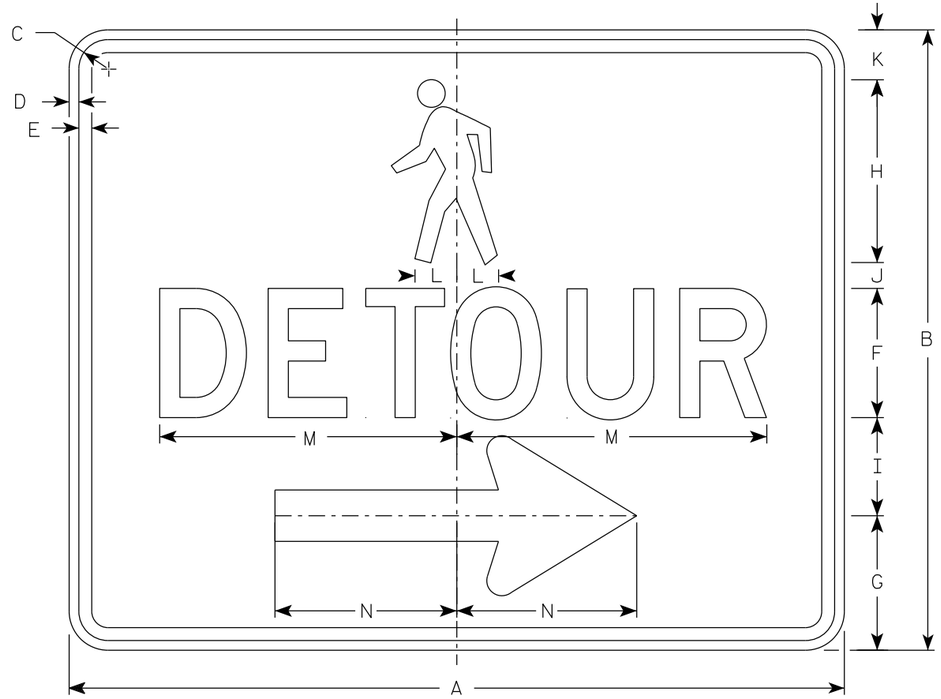

M4-9BR

NOTES

1. Sign is Type II-Type F Reflective
2. Color:
   Background - Orange
   Message - Black
3. Message Series - D
4. Corners may be square or rounded when base material is plywood but borders shall be rounded as shown. When base material is metal, the corners and borders shall be rounded.
5. M4-9BL is the same as M4-9BR except the arrow is reversed.

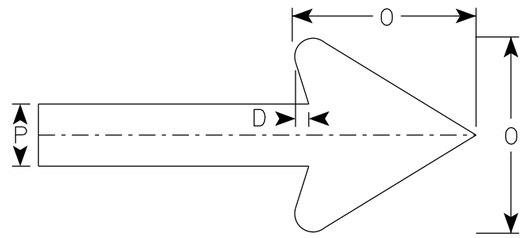

Arrow Detail

SIZE	A	B	C	D	E	F	G	H	I	J	K	L	M	N	O	P	Q	R	S	T	U	V	W	X	Y	Z	Area sq. ft.
1																											
2	30	24	1 1/8	3/8	1/2	5	5 1/4	7 1/8	3 3/4	1	1 1/8	1 5/8	11 3/4	7	6	2											5.00
3																											
4																											
5																											

STANDARD SIGN
M4-9B L&R

WISCONSIN DEPT OF TRANSPORTATION

APPROVED Matthew R Rauch
For State Traffic Engineer

DATE 7/1/19 PLATE NO. M4-9B.2

PROJECT NO: | HWY: | COUNTY: | SHEET NO: 221 | E

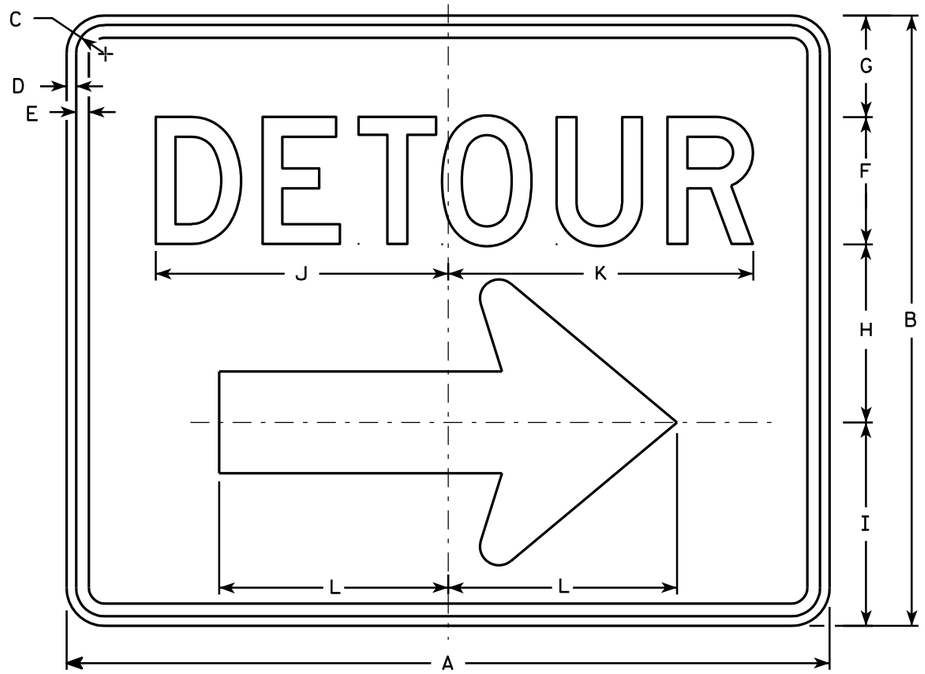

M4-9R

NOTES

1. Sign is Type II - Type F Reflective - reference WIS DOT Standard Specification for HIGHWAY and STRUCTURE CONSTRUCTION latest edition.
2. Color:
   Background - Orange
   Message - Black
3. Message Series - D
4. Corners may be square or rounded when base material is plywood but borders shall be rounded as shown. When base material is metal, the corners and borders shall be rounded.
5. M4-9L is the same as M4-9R except the arrow is reversed.

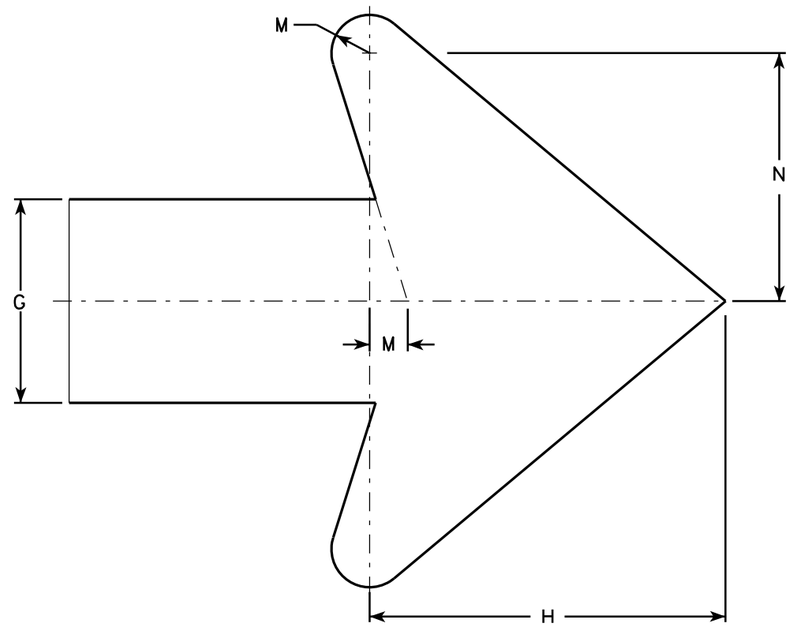

Arrow Detail

SIZE	A	B	C	D	E	F	G	H	I	J	K	L	M	N	O	P	Q	R	S	T	U	V	W	X	Y	Z	Area sq. ft.
1																											
2	30	24	1 1/8	3/8	1/2	5	4	7	8	11 1/2	12	9	3/4	4 7/8													5.00
3	30	24	1 1/8	3/8	1/2	5	4	7	8	11 1/2	12	9	3/4	4 7/8													5.00
4	48	36	1 3/8	1/2	5/8	8	6	10 1/2	11 5/8	20 5/8	20 1/2	13 1/4	1 1/8	6 7/8													12.0
5	48	36	1 3/8	1/2	5/8	8	6	10 1/2	11 5/8	20 5/8	20 1/2	13 1/4	1 1/8	6 7/8													12.0

STANDARD SIGN
M4-9 R & L

WISCONSIN DEPT OF TRANSPORTATION

APPROVED Matthew R Rauch
for State Traffic Engineer

DATE 3/9/11 PLATE NO. M4-9R.4

PROJECT NO: | HWY: | COUNTY: | SHEET NO: 222 | E

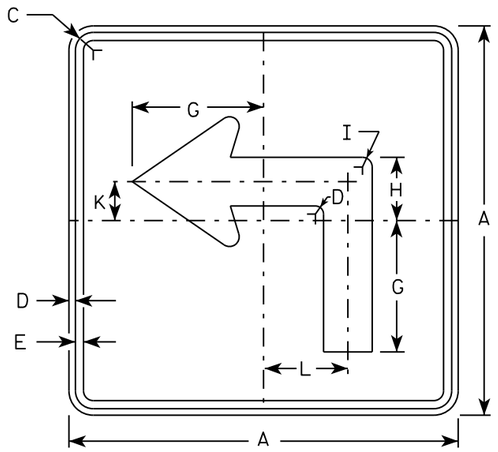

M5-1L
MM5-1L
MO5-1L
MP5-1L

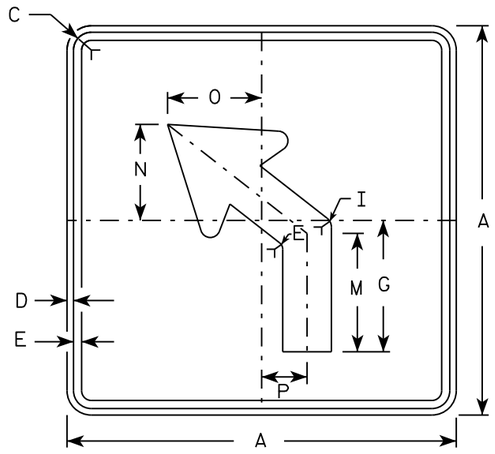

M5-2L
MM5-2L
MO5-2L
MP5-2L

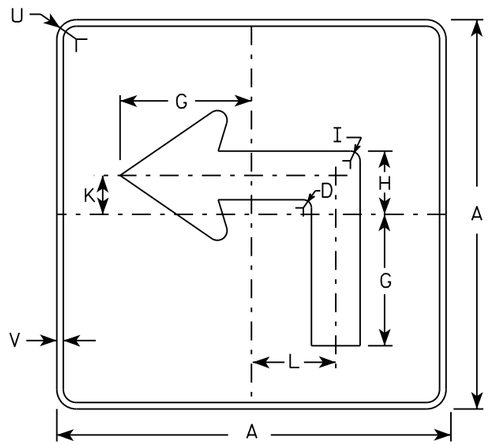

MB5-1L
MK5-1L
MN5-1L
MR5-1L

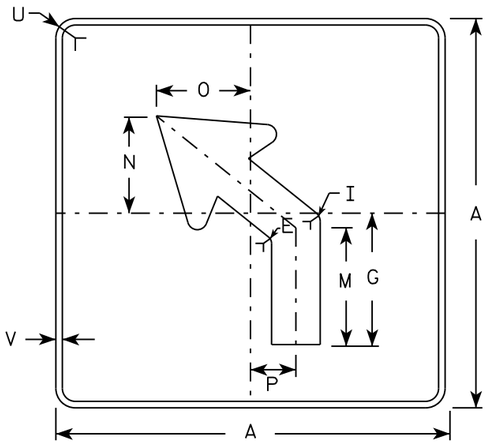

MB5-2L
MK5-2L
MN5-2L
MR5-2L

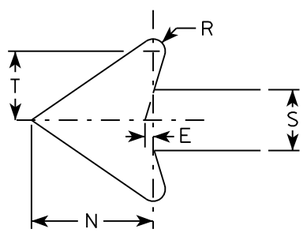

NOTES

1. Signs are Type II - Type H reflective except as shown
2. Color:
   Background - See note 4
   Message - See note 4
3. Corners may be square or rounded when base material is plywood but borders shall be rounded as shown. When base material is metal, the corners and borders shall be rounded.
4. M5-1 and M5-2 Background - White
   Message - Black
   MB5-1 and MB5-2 Background - Blue
   Message - White
   MK5-1 and MK5-2 Background - Green
   Message - White
   MM5-1 and MM5-2 Background - White
   Message - Green
   MN5-1 and MN5-2 Background - Brown
   Message - White
   MO5-1 and MO5-2 Background - Orange - Type F Reflective
   Message - Black
   MP5-1 and MP5-2 Background - White - Type H Reflective
   Message - Blue
   MR5-1 and MR5-2 Background - Brown
   Message - Yellow
5. M5-1R same as M5-1L except arrow points right.
6. M5-2R same as M5-2L except arrow tilts right.

SIZE	A	B	C	D	E	F	G	H	I	J	K	L	M	N	O	P	Q	R	S	T	U	V	W	X	Y	Z	Area sq. ft.
1																											
2	21		1 1/8	3/8	3/8		7	3 3/8	5/8		2 1/8	4 1/2	6 3/8	5 1/4	5	2 1/2		1/2	2 5/8	3	1 1/2	1/2					3.06
3	30		1 3/8	1/2	5/8		10 1/8	4 7/8	7/8		3	6 1/2	9 1/8	7 1/2	7 1/4	3 1/2		3/4	3 3/4	4 1/4	1 7/8	1/2					6.25
4	30		1 3/8	1/2	5/8		10 1/8	4 7/8	7/8		3	6 1/2	9 1/8	7 1/2	7 1/4	3 1/2		3/4	3 3/4	4 1/4	1 7/8	1/2					6.25
5	30		1 3/8	1/2	5/8		10 1/8	4 7/8	7/8		3	6 1/2	9 1/8	7 1/2	7 1/4	3 1/2		3/4	3 3/4	4 1/4	1 7/8	1/2					6.25

STANDARD SIGN
M5-1 & M5-2

WISCONSIN DEPT OF TRANSPORTATION

APPROVED Matthew R Rauch
for State Traffic Engineer

DATE 10/15/15 PLATE NO. M5-1.13

PROJECT NO: | HWY: | COUNTY: | SHEET NO: E

FILE NAME : C:\CAEfiles\Projects\tr_stdplate\M51.DGN PLOT DATE : 01-DEC-2015 18:07 PLOT BY : $$ plotuser $$ PLOT NAME : PLOT SCALE : 11.675051:1.000000

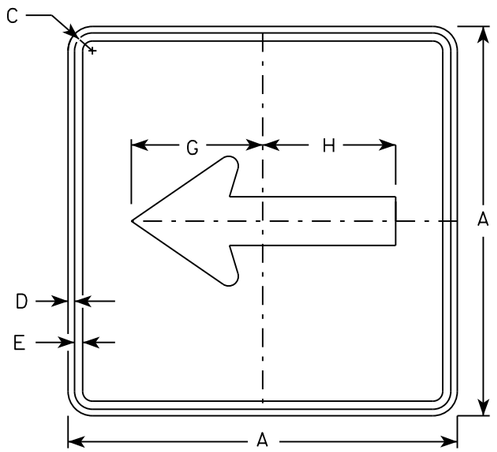

M6-1
MM6-1
MO6-1
MP6-1

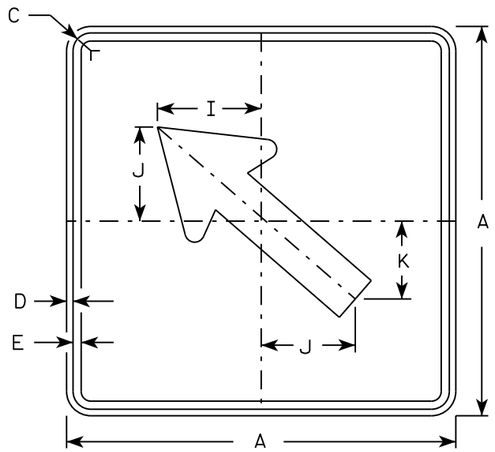

M6-2
MM6-2
MO6-2
MP6-2

NOTES

1. Signs are Type II - Type H except as Shown
2. Color:
   Background - See note 4
   Message - See note 4
3. Corners may be square or rounded when base material is plywood but borders shall be rounded as shown. When base material is metal, the corners and borders shall be rounded.
4. M6-1 and M6-2 Background - White
   Message - Black
   MB6-1 and MB6-2 Background - Blue
   Message - White
   MK6-1 and MK6-2 Background - Green
   Message - White
   MM6-1 and MM6-2 Background - White
   Message - Green
   MN6-1 and MN6-2 Background - Brown
   Message - White
   MO6-1 and MO6-2 Background - Orange - Type F Reflective
   Message - Black
   MP6-1 and MP6-2 Background - White
   Message - Blue
   MR6-1 and MR6-2 Background - Brown
   Message - Yellow

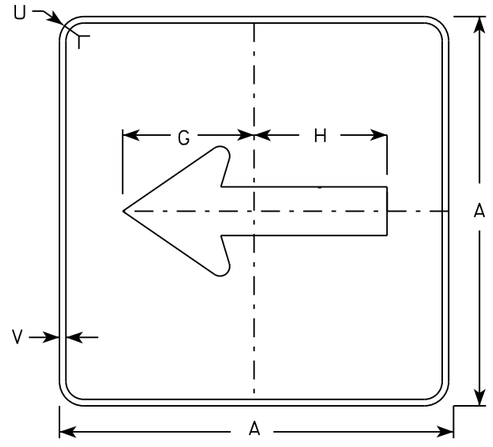

MB6-1
MK6-1
MN6-1
MR6-1

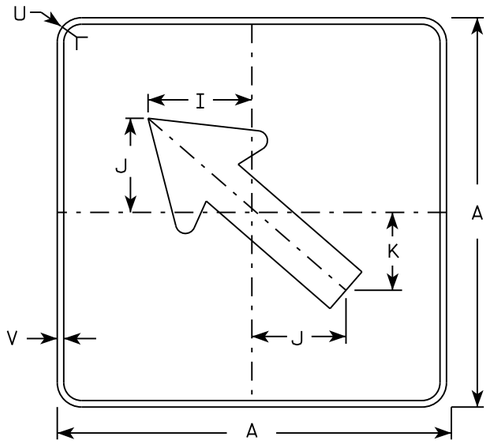

MB6-2
MK6-2
MN6-2
MR6-2

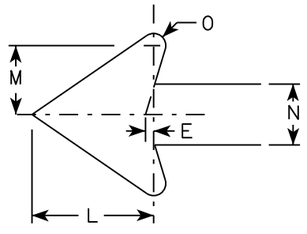

SIZE	A	B	C	D	E	F	G	H	I	J	K	L	M	N	O	P	Q	R	S	T	U	V	W	X	Y	Z	Area sq. ft.
1																											
2	21		1 1/8	3/8	3/8		7 1/2	7 1/8	5 5/8	5	4 1/4	5 1/4	3	2 5/8	1/2						1 1/2	1/2						3.06
3	30		1 3/8	1/2	5/8		10 3/4	10 1/4	8	7 1/4	6	7 1/2	4 1/4	3 3/4	3/4						1 7/8	1/2						6.25
4	30		1 3/8	1/2	5/8		10 3/4	10 1/4	8	7 1/4	6	7 1/2	4 1/4	3 3/4	3/4						1 7/8	1/2						6.25
5	30		1 3/8	1/2	5/8		10 3/4	10 1/4	8	7 1/4	6	7 1/2	4 1/4	3 3/4	3/4						1 7/8	1/2						6.25

STANDARD SIGN
M6-1 & M6-2
SERIES

WISCONSIN DEPT OF TRANSPORTATION

APPROVED Matthew R Rauch
for State Traffic Engineer

DATE 10/15/15 PLATE 224 M6-1.15

PROJECT NO:	HWY:	COUNTY:		SHEET NO:	E

FILE NAME : C:\CAEfiles\Projects\tr_stdplate\M61.DGN PLOT DATE : 01-DEC-2015 17:57 PLOT BY : $$ plotuser $$ PLOT NAME : PLOT SCALE : 11.675051:1.000000

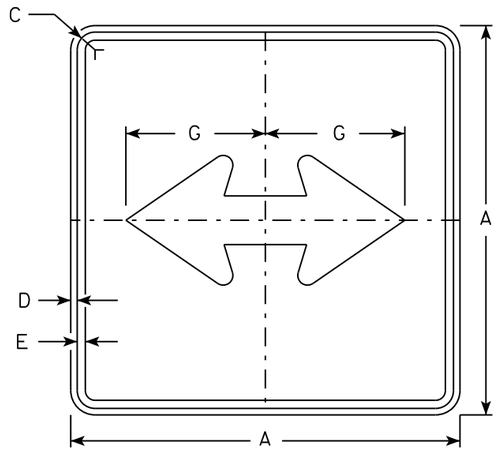

M6-4
MM6-4
MO6-4
MP6-4

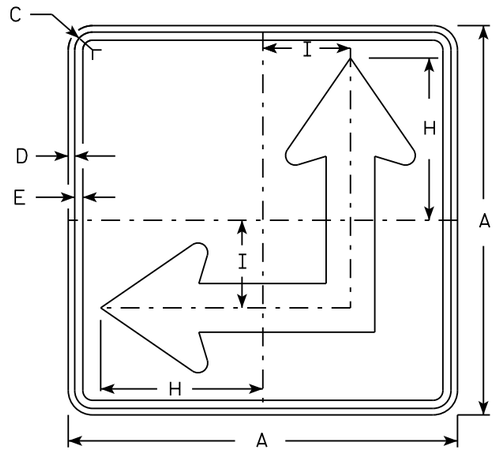

M6-6
MM6-6
MO6-6
MP6-6

NOTES

1. Signs are Type II - Type H except as Shown
2. Color:
   Background - See Note 4
   Message - See Note 4
3. Corners may be square or rounded when base material is plywood but borders shall be rounded as shown. When base material is metal, the corners and borders shall be rounded.
4. M6-4 and M6-6 Background - White
   Message - Black
   MB6-4 and MB6-6 Background - Blue
   Message - White
   MK6-4 and MK6-6 Background - Green
   Message - White
   MM6-4 and MM6-6 Background - White
   Message - Green
   MN6-4 and MN6-6 Background - Brown
   Message - White
   MO6-4 and MO6-6 Background - Orange - Type F Reflective
   Message - Black
   MP6-4 and MP6-6 Background - White
   Message - Blue
   MR6-4 and MR6-6 Background - Brown
   Message - Yellow
5. M6-6R same as M6-6L except arrow points ahead and right.

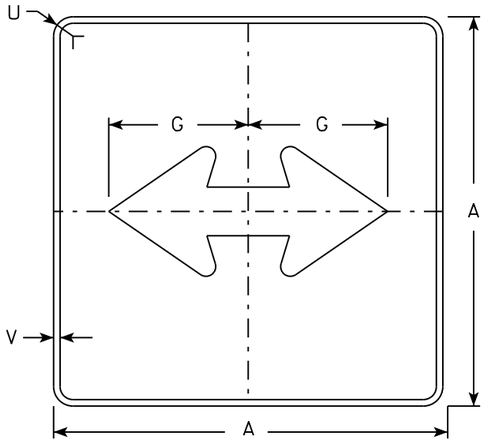

MB6-4
MK6-4
MN6-4
MR6-4

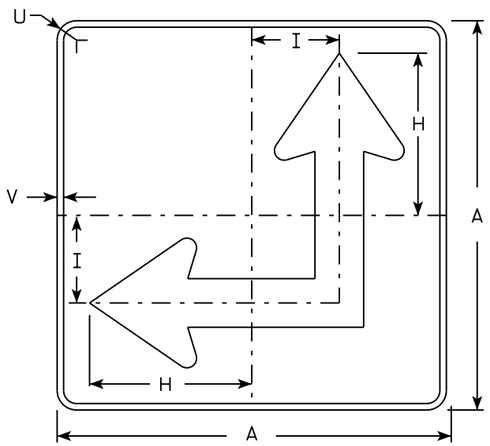

MB6-6
MK6-6
MN6-6
MR6-6

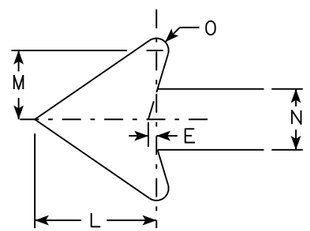

SIZE	A	B	C	D	E	F	G	H	I	J	K	L	M	N	O	P	Q	R	S	T	U	V	W	X	Y	Z	Area sq. ft.
1																											
2	21		1 1/8	3/8	3/8		7 1/2	8 3/4	4 1/4			5 1/4	3	2 5/8	1/2						1 1/2	1/2					3.06
3	30		1 3/8	1/2	5/8		10 3/4	12 1/2	6 3/4			7 1/2	4 1/4	3 3/4	3/4						1 7/8	1/2					6.25
4	30		1 3/8	1/2	5/8		10 3/4	12 1/2	6 3/4			7 1/2	4 1/4	3 3/4	3/4						1 7/8	1/2					6.25
5	30		1 3/8	1/2	5/8		10 3/4	12 1/2	6 3/4			7 1/2	4 1/4	3 3/4	3/4						1 7/8	1/2					6.25

STANDARD SIGN
M6-4 & M6-6
SERIES

WISCONSIN DEPT OF TRANSPORTATION

APPROVED Matthew R Rauch
for State Traffic Engineer

DATE 10/15/15 PLATE 225 M6-4.10

PROJECT NO: | HWY: | COUNTY: | SHEET NO: E

FILE NAME : C:\CAEfiles\Projects\tr_stdplate\M64.DGN PLOT DATE : 01-DEC-2015 17:58 PLOT BY : $$ platuser $$ PLOT NAME : PLOT SCALE : 11.675051:1.000000

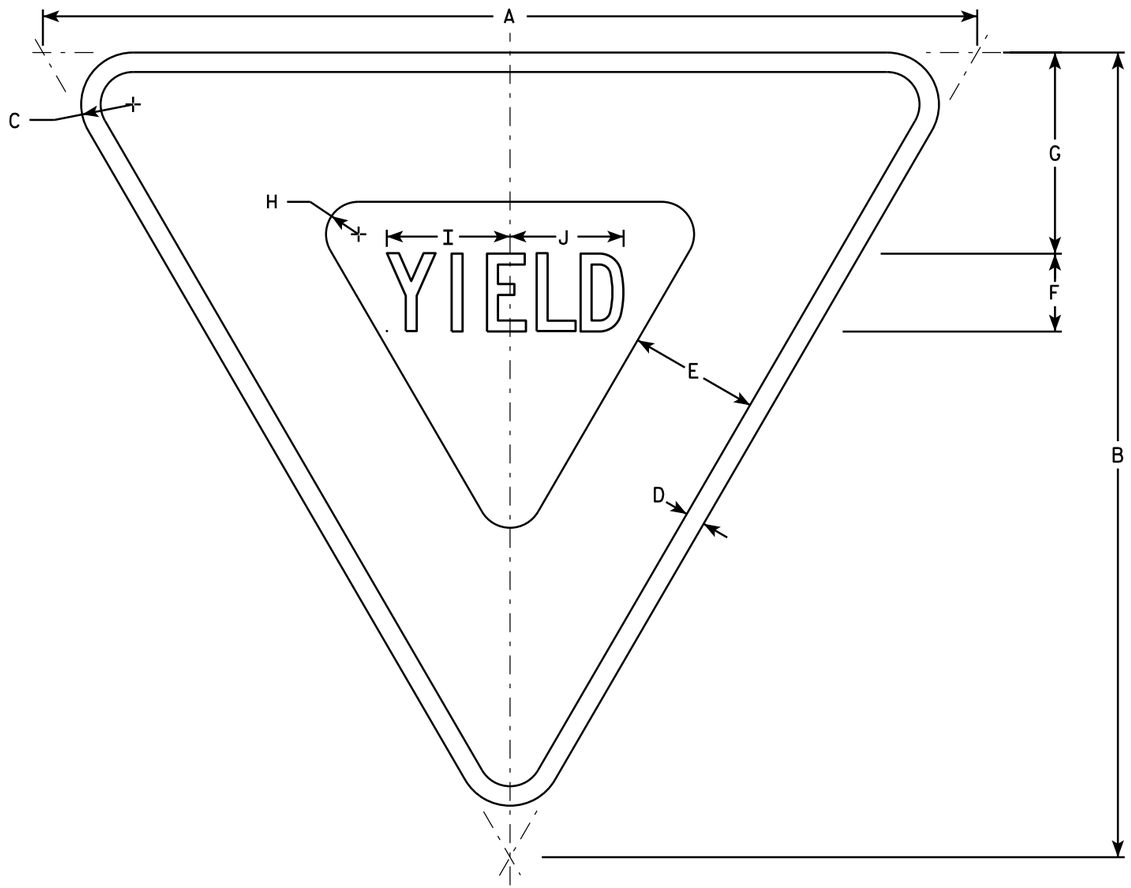

R1-2

NOTES

1. Sign is Type II - Type H Reflective - reference WIS DOT Standard Specification for HIGHWAY and STRUCTURE CONSTRUCTION latest edition.
2. Color:
   Background - White
   Message - See note 5
3. Message Series - C
4. Corners may be square or rounded when base material is plywood but borders shall be rounded as shown. When base material is metal, the corners and borders shall be rounded.
5. The border strip and word message are reflectorized red.

SIZE	A	B	C	D	E	F	G	H	I	J	K	L	M	N	O	P	Q	R	S	T	U	V	W	X	Y	Z	Area sq. ft.
1	30	26	1 1/2	5/8	4	2 1/2	6 3/8	7/8	4	3 5/8																	2.71
2S	36	31	2	3/4	5	3	7 3/4	1 1/4	4 3/4	4 3/8																	3.88
2M	48	42	3	1	6	4	9 3/4	2	6 1/4	5 7/8																	7.00
3	48	42	3	1	6	4	9 3/4	2	6 1/4	5 7/8																	7.00
4	48	42	3	1	6	4	9 3/4	2	6 1/4	5 7/8																	7.00
5	60	52	3	1 1/2	8	5	13	2 1/2	7 7/8	7 1/4																	10.83
6																											
7	18	15 1/2	1	3/8	2 1/2	1 1/2	3 7/8	5/8	2 3/8	2 1/4																	0.97

STANDARD SIGN
R1-2

WISCONSIN DEPT OF TRANSPORTATION

APPROVED Matthew R Rauch
for State Traffic Engineer

DATE 10/13/14 PLATE R1-2.12

PROJECT NO: | HWY: | COUNTY: | SHEET NO: E

FILE NAME : C:\CAEFiles\Projects\tr_stdplate\R12.DGN PLOT DATE : 13-OCT-2014 15:12 PLOT BY : mscsja PLOT NAME : PLOT SCALE : 5.837526:1.000000
WISDOT/CADDS SHEET 42

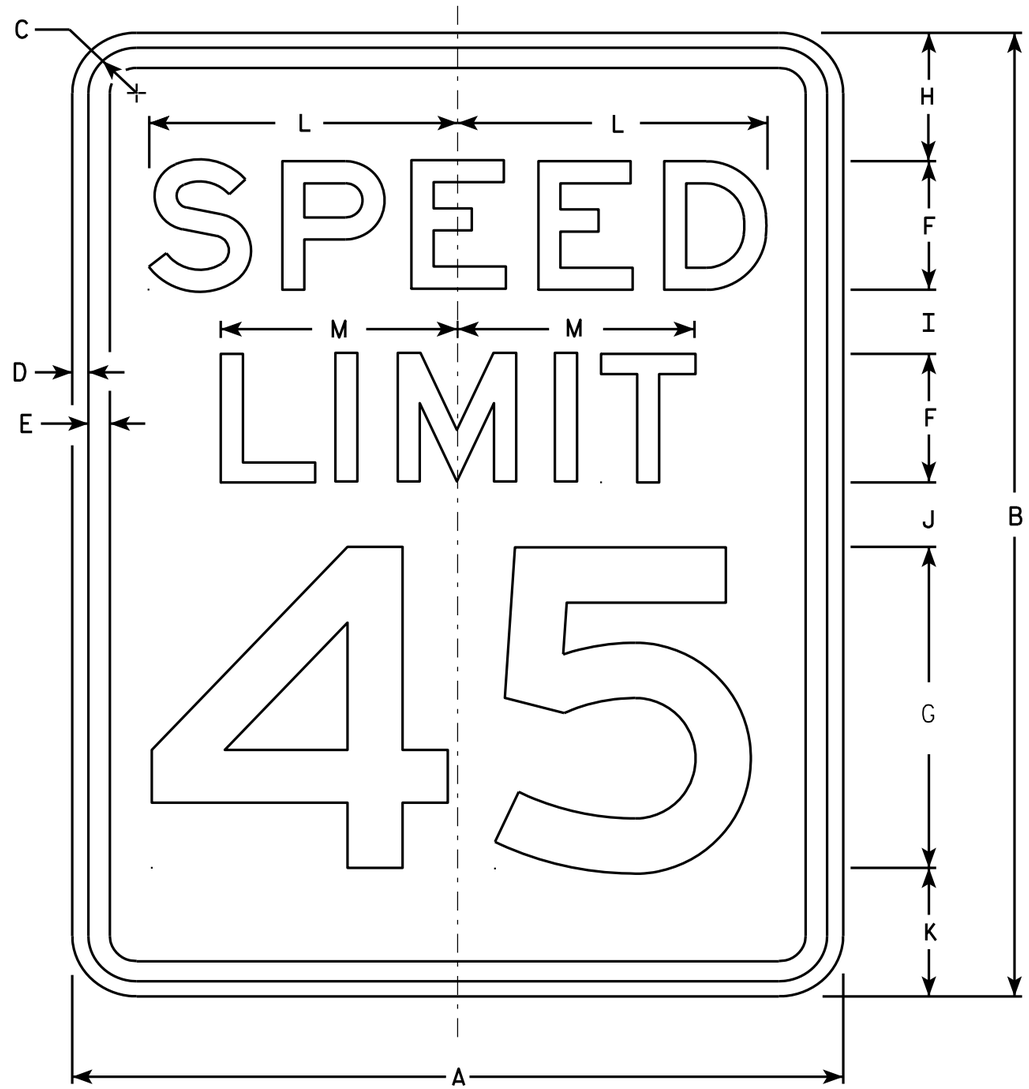

R2-1

NOTES

1. Sign is Type II - Type H Reflective - reference WIS DOT Standard Specification for HIGHWAY and STRUCTURE CONSTRUCTION latest edition.
2. Color:
   Background - White
   Message - Black
3. Message Series - E
4. Corners may be square or rounded when base material is plywood but borders shall be rounded as shown. When base material is metal, the corners and borders shall be rounded.
5. Substitute appropriate numerals and optically adjust spacing to achieve proper balance.

SIZE	A	B	C	D	E	F	G	H	I	J	K	L	M	N	O	P	Q	R	S	T	U	V	W	X	Y	Z	Area sq. ft.
1	18	24	1 1/8	3/8	1/2	3	8	3	2	2	3	7 1/4	5 1/2														3.0
2S	24	30	1 1/8	3/8	1/2	4	10	3	2 1/4	3 3/8	3 3/8	9 5/8	7 3/8														5.0
2M	30	36	1 3/8	1/2	5/8	5	12	5	2 1/2	2 1/2	4	12	9 1/4														7.5
3	36	48	1 3/8	1/2	5/8	6	14	6	5	5	6	14 3/8	11														12.0
4	36	48	1 3/8	1/2	5/8	6	14	6	5	5	6	14 3/8	11														12.0
5	48	60	2 1/4	3/4	1	8	20	6	4 1/2	6 3/4	6 3/4	19 1/4	14 5/8														20.0

STANDARD SIGN
R2-1

WISCONSIN DEPT OF TRANSPORTATION

APPROVED Matthew R Rauch
for State Traffic Engineer

DATE 5/26/10 PLATE NO. R2-1.13

PROJECT NO:	HWY:	COUNTY:		SHEET NO: 227	E

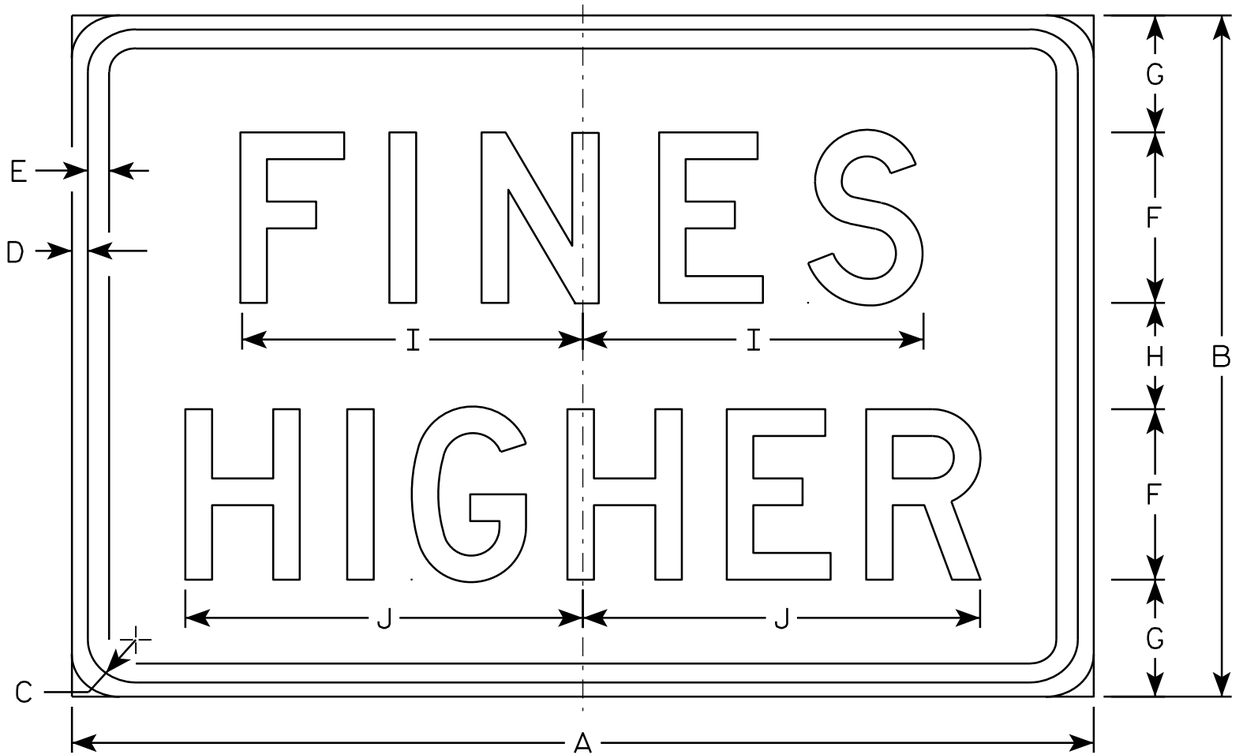

R2-6P

NOTES

1. Sign is Type II - Type H Reflective - reference WIS DOT Standard Specification for HIGHWAY and STRUCTURE CONSTRUCTION latest edition.
2. Color:
   Background - White
   Message - Black
3. Message Series - D
4. Corners may be square or rounded when base material is plywood but borders shall be rounded as shown. When base material is metal, the corners and borders shall be rounded.

SIZE	A	B	C	D	E	F	G	H	I	J	K	L	M	N	O	P	Q	R	S	T	U	V	W	X	Y	Z	Area sq. ft.
1																											
2S	24	18	1 1/8	3/8	3/8	4	3 1/2	3	7 5/8	9 1/4																	3.0
2M	24	18	1 1/8	3/8	3/8	4	3 1/2	3	7 5/8	9 1/4																	3.0
3	36	24	1 1/8	3/8	1/2	6	4 1/8	3 3/4	12	14																	6.0
4	36	24	1 1/8	3/8	1/2	6	4 1/8	3 3/4	12	14																	6.0
5	48	36	1 3/8	1/2	5/8	8	7	6	15 1/8	19																	12.0

STANDARD SIGN
R2-6P

WISCONSIN DEPT OF TRANSPORTATION

APPROVED Matthew R Rauch
for State Traffic Engineer

DATE 12/20/10 PLATE NO. R2-6P.2

PROJECT NO: | HWY: | COUNTY: | SHEET NO: 228 | E

7

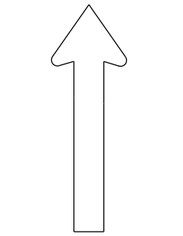

(A)



(B)

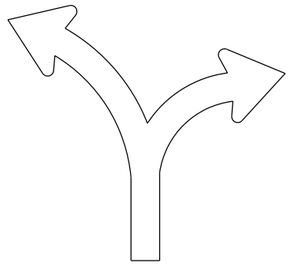
(C)

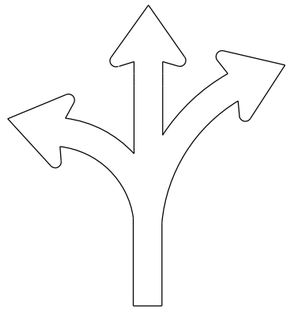
(D)

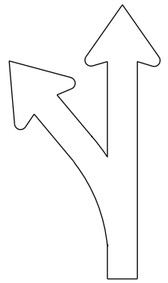
(E)

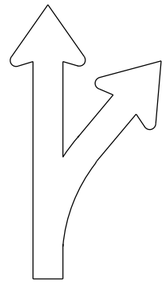
(F)

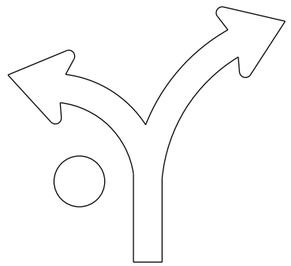
(G)

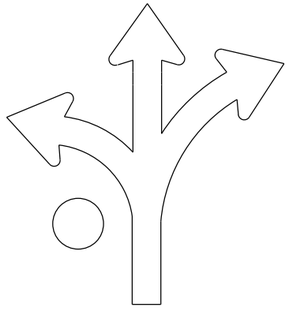
(H)

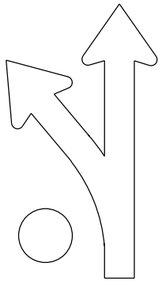
(I)



(L)

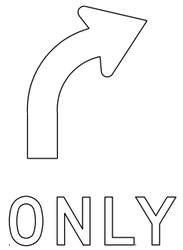

(R)

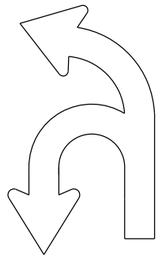
(U)

NOTES

1. Sigs are Type II - Type H Reflective
2. Color:
   Background - White
   Message - Black
3. Message Series - D
4. Use appropriate Letter for Sign Code
   Each letter added makes sign wider. Example R3-8EAR
5. Square footage of sign varies by letters

1	Letter =	3.75 sq ft for Size 2
		6.0 sq ft for Size 3
		10.0 sq ft for Size 4 or 5
2	Letters =	7.5 sq ft for Size 2
		12.0 sq ft for Size 3
		20.0 sq ft for Size 4 or 5
3	Letters =	11.25 sq ft for Size 2
		18.0 sq ft for Size 3
		30.0 sq ft for Size 4 or 5
4	Letters =	15.0 sq ft for Size 2
		24.0 sq ft for Size 3
		40.0 sq ft for Size 4 or 5
5	Letters =	18.75 sq ft for Size 2
		30.0 sq ft for Size 3
		50.0 sq ft for Size 4 or 5
6	Letters =	22.5 sq ft for Size 2
		36.0 sq ft for Size 3
		60.0 sq ft for Size 4 or 5

6. When letters C,D,G,H are used on the Left or Right end of the sign the Sq. Ft. changes.
   Add the amounts when these letters are used:
   1.25 sq ft for Size 2
   1.5 sq ft for Size 3
   2.0 sq ft for Size 4 or 5

STANDARD SIGN
R3-8 Series

WISCONSIN DEPT OF TRANSPORTATION

APPROVED Matthew R Rauch
For State Traffic Engineer

DATE 5/21/19 PLATE NO. R3-8.1

PROJECT NO:

SHEET NO: 229 E

FILE NAME : C:\CAEfiles\Projects\stdplate_R38.dgn PLOT DATE : 21-MAY 2019 4:37 PLOT BY : mscj9h PLOT NAME :

WISDOT/CADDS SHEET 42

7

7

NOTES

1. Sign is Type II - Type H Reflective
2. Color:
   Background - White
   Message - Black
3. Message Series - D

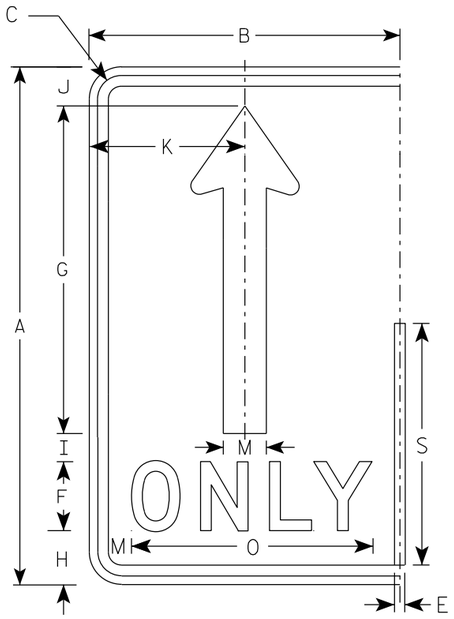

(A)

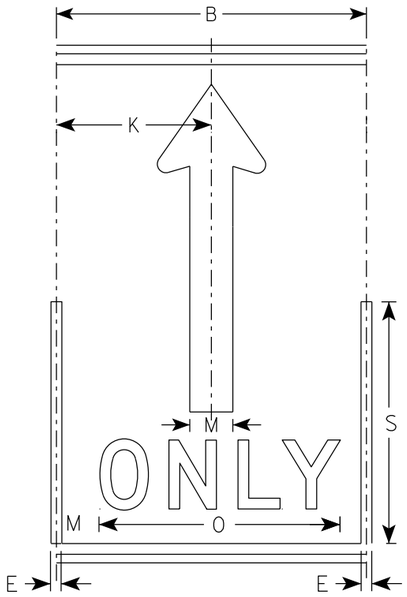

(A)

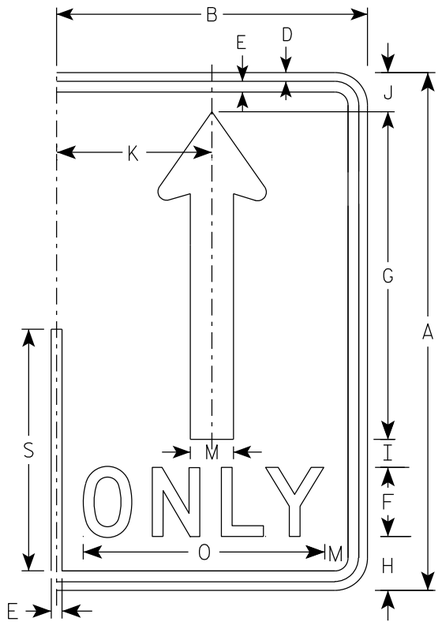

(A)

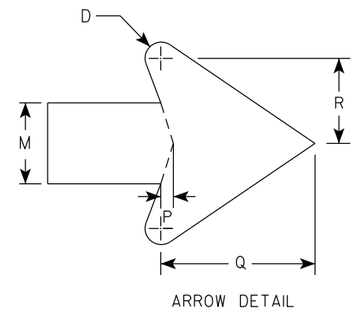

ARROW DETAIL

SIZE	A	B	C	D	E	F	G	H	I	J	K	L	M	N	O	P	Q	R	S	T	U	V	W	X	Y	Z	Area sq. ft.
1																											
2S	30	18	1 3/8	1/2	5/8	4	19	3 1/8	1 5/8	2 1/4	9		2 1/2		14	3/8	4 3/4	2 5/8	14								3.75
2M	30	18	1 3/8	1/2	5/8	4	19	3 1/8	1 5/8	2 1/4	9		2 1/2		14	3/8	4 3/4	2 5/8	14								3.75
3	36	24	1 3/8	1/2	5/8	5	22 3/4	3 3/4	1 3/4	2 3/4	12		3		17 5/8	1/2	5 3/4	3 1/8	16 3/4								6.0
4	48	30	2 1/4	3/4	1	6	30 3/8	5 1/8	2 7/8	3 5/8	15		4		21 3/4	5/8	7 5/8	4 1/4	22 3/8								10.0
5	48	30	2 1/4	3/4	1	6	30 3/8	5 1/8	2 7/8	3 5/8	15		4		21 3/4	5/8	7 5/8	4 1/4	22 3/8								10.0

STANDARD SIGN
R3-8 (A) Arrow

WISCONSIN DEPT OF TRANSPORTATION

APPROVED Matthew R Rauch
for State Traffic Engineer

DATE 5/21/19 PLATE NO. R3-8.1

PROJECT NO: | HWY: | COUNTY: | SHEET NO: 230 | E

NOTES

1. Sign is Type II - Type H Reflective
2. Color:
   Background - White
   Message - Black
   Message Series - D

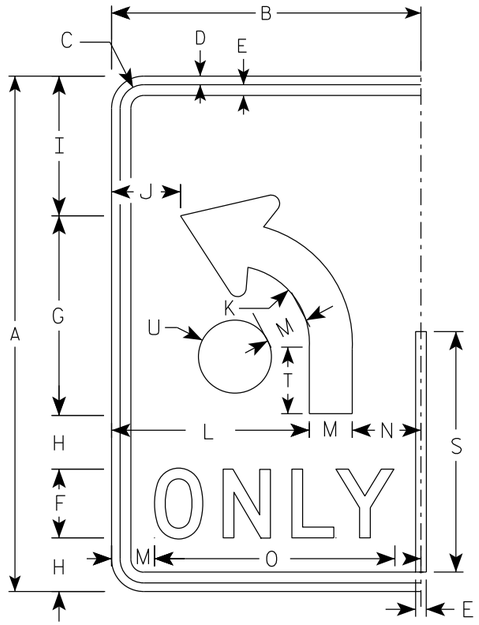

(B)

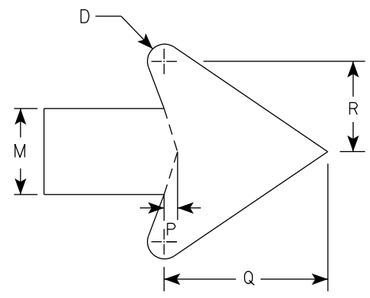

ARROW DETAIL

SIZE	A	B	C	D	E	F	G	H	I	J	K	L	M	N	O	P	Q	R	S	T	U	V	W	X	Y	Z	Area sq. ft.
1																											
2S	30	18	1 3/8	1/2	5/8	4	11 5/8	3 1/8	8 1/8	4	4 1/2	11 1/2	2 1/2	4	14	3/8	4 3/4	2 5/8	14	3 7/8	2 1/8						3.75
2M	30	18	1 3/8	1/2	5/8	4	11 5/8	3 1/8	8 1/8	4	4 1/2	11 1/2	2 1/2	4	14	3/8	4 3/4	2 5/8	14	3 7/8	2 1/8						3.75
3	36	24	1 3/8	1/2	5/8	5	14	3 1/2	9 3/4	6	5 3/8	15	3	6	17 5/8	1/2	5 3/4	3 1/8	16 3/4	4 5/8	2 1/2						6.0
4	48	30	2 1/4	3/4	1	6	18 5/8	5 1/8	13 1/8	6 1/8	7 1/4	18	4	8	21 3/4	5/8	7 5/8	4 1/4	22 3/8	6 1/4	3 3/8						10.0
5	48	30	2 1/4	3/4	1	6	18 5/8	5 1/8	13 1/8	6 1/8	7 1/4	18	4	8	21 3/4	5/8	7 5/8	4 1/4	22 3/8	6 1/4	3 3/8						10.0

STANDARD SIGN

R3-8 (B) Arrow

WISCONSIN DEPT OF TRANSPORTATION

APPROVED Matthew R Rauch

for State Traffic Engineer

DATE 5/21/19 PLATE NO. R3-8.1

PROJECT NO:

SHEET NO: 231 E

NOTES

1. Sign is Type II - Type H Reflective
2. Color:
   Background - White
   Message - Black
3. Message Series - None

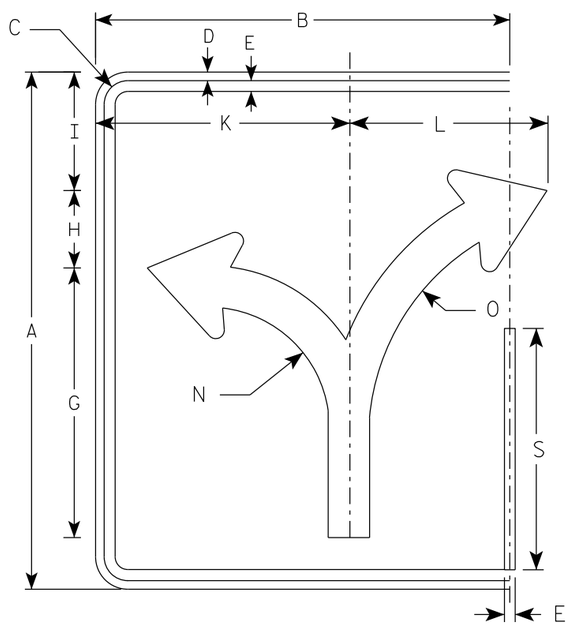

(C)

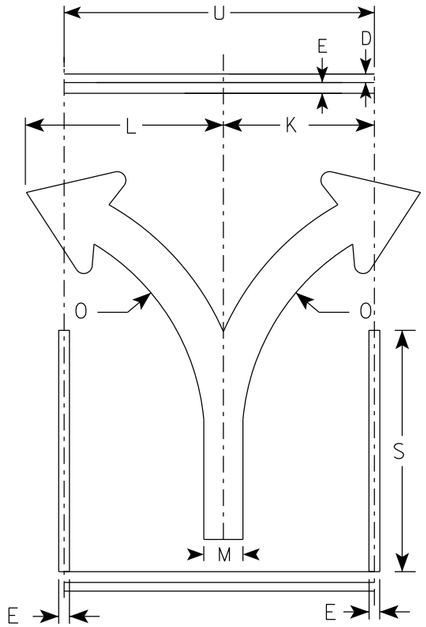

(C)

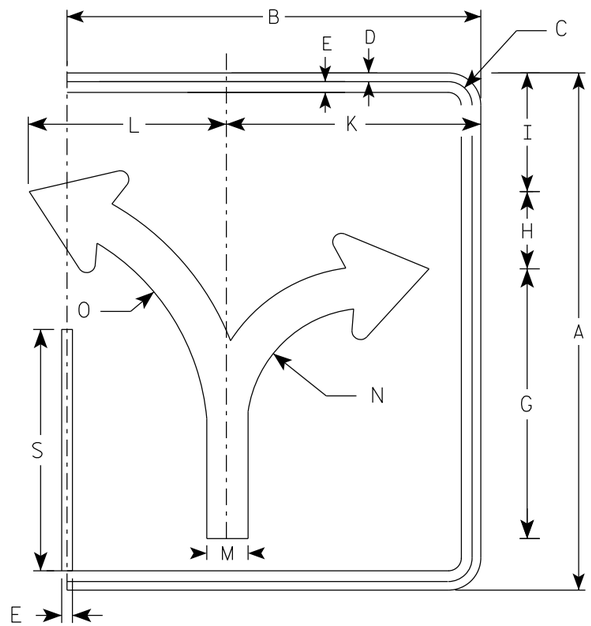

(C)

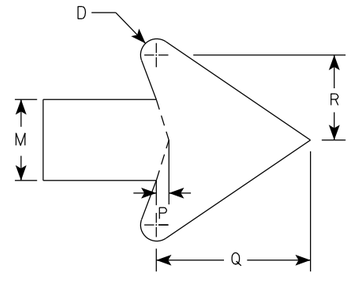

ARROW DETAIL

SIZE	A	B	C	D	E	F	G	H	I	J	K	L	M	N	O	P	Q	R	S	T	U	V	W	X	Y	Z	ENDS Area sq. ft.	MIDDLE Area sq. ft.
1																												
2S	30	24	1 3/8	1/2	5/8		15 5/8	4 1/2	6 7/8		14 3/4	11 1/2	2 3/8	7	13 1/4	3/8	4 1/2	2 1/2	14		18						5.0	3.75
2M	30	24	1 3/8	1/2	5/8		15 5/8	4 1/2	6 7/8		14 3/4	11 1/2	2 3/8	7	13 1/4	3/8	4 1/2	2 1/2	14		18						5.0	3.75
3	36	30	1 3/8	1/2	5/8		18 3/4	5 1/2	8 1/4		17 1/4	17 1/4	2 7/8	8 3/8	16	1/2	5 1/2	3	16 3/4		24						7.5	6.0
4	48	36	2 1/4	3/4	1		24 7/8	7 1/4	11		23 1/8	18	3 3/4	11 1/8	21 1/4	5/8	7 1/8	4	22 3/8		30						12.0	10.0
5	48	36	2 1/4	3/4	1		24 7/8	7 1/4	11		23 1/8	18	3 3/4	11 1/8	21 1/4	5/8	7 1/8	4	22 3/8		30						12.0	10.0

STANDARD SIGN
R3-8 (C) Arrow

WISCONSIN DEPT OF TRANSPORTATION

APPROVED Matthew R Rauch
for State Traffic Engineer

DATE 5/21/19 PLATE NO. R3-8.1

PROJECT NO: | HWY: | COUNTY: | SHEET NO: 232 | E

NOTES

1. Sign is Type II - Type H Reflective
2. Color:
   Background - White
   Message - Black
3. Message Series - None

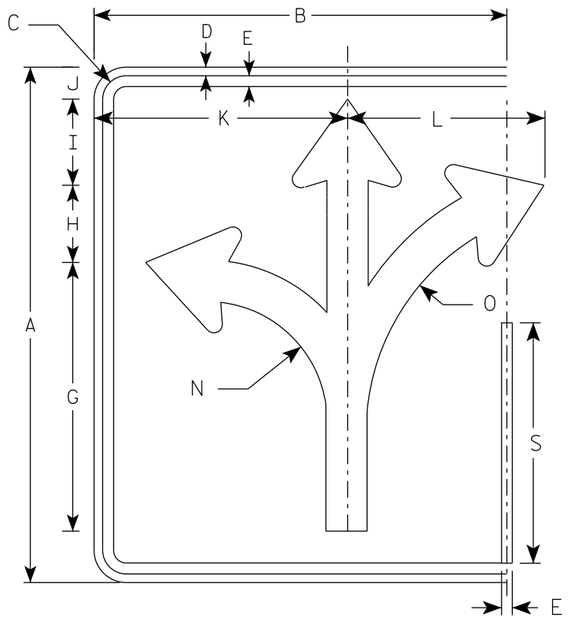

(D)

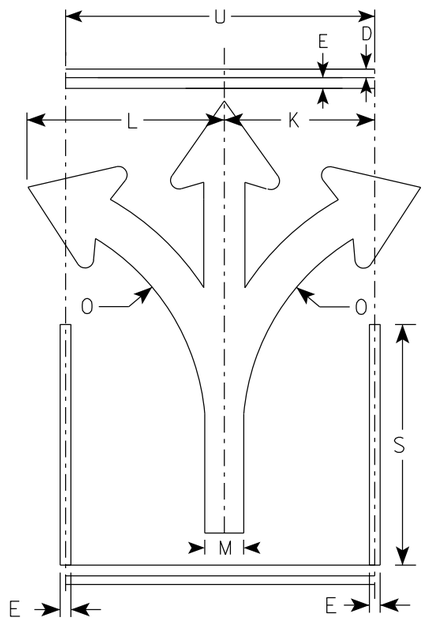

(D)

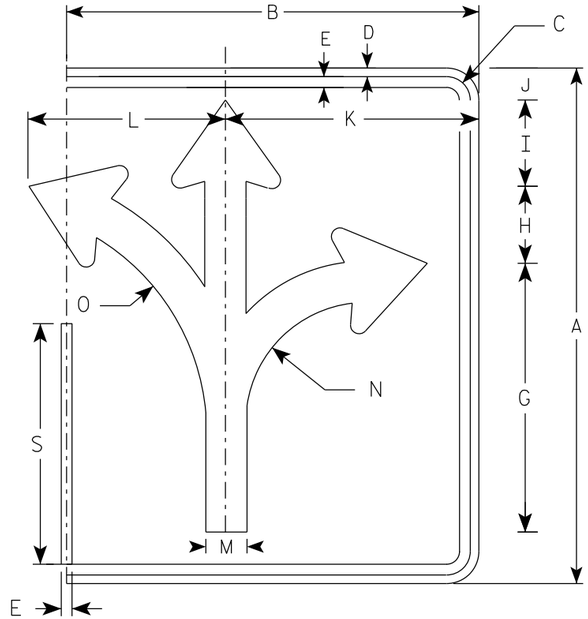

(D)

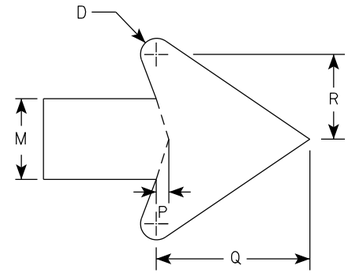

ARROW DETAIL

SIZE	A	B	C	D	E	F	G	H	I	J	K	L	M	N	O	P	Q	R	S	T	U	V	W	X	Y	Z	ENDS Area sq. ft.	MIDDLE Area sq. ft.
1																												
2S	30	24	1 3/8	1/2	5/8		15 5/8	4 1/2	5	1 7/8	14 3/4	11 1/2	2 3/8	7	13 1/4	3/8	4 1/2	2 1/2	14		18						5.0	3.75
2M	30	24	1 3/8	1/2	5/8		15 5/8	4 1/2	5	1 7/8	14 3/4	11 1/2	2 3/8	7	13 1/4	3/8	4 1/2	2 1/2	14		18						5.0	3.75
3	36	30	1 3/8	1/2	5/8		18 3/4	5 1/2	6	2 1/4	17 1/4	17 1/4	2 7/8	8 3/8	16	1/2	5 1/2	3	16 3/4		24						7.5	6.0
4	48	36	2 1/4	3/4	1		24 7/8	7 1/4	7 7/8	3 1/8	23 1/8	18	3 3/4	11 1/8	21 1/4	5/8	7 1/8	4	22 3/8		30						12.0	10.0
5	48	36	2 1/4	3/4	1		24 7/8	7 1/4	7 7/8	3 1/8	23 1/8	18	3 3/4	11 1/8	21 1/4	5/8	7 1/8	4	22 3/8		30						12.0	10.0

STANDARD SIGN
R3-8 (D) Arrow

WISCONSIN DEPT OF TRANSPORTATION

APPROVED Matthew R Rauch
for State Traffic Engineer

DATE 5/21/19 PLATE NO. R3-8.1

PROJECT NO: | HWY: | COUNTY: | SHEET NO: 233 | E

NOTES

1. Sign is Type II - Type H Reflective
2. Color:
   Background - White
   Message - Black
3. Message Series - None

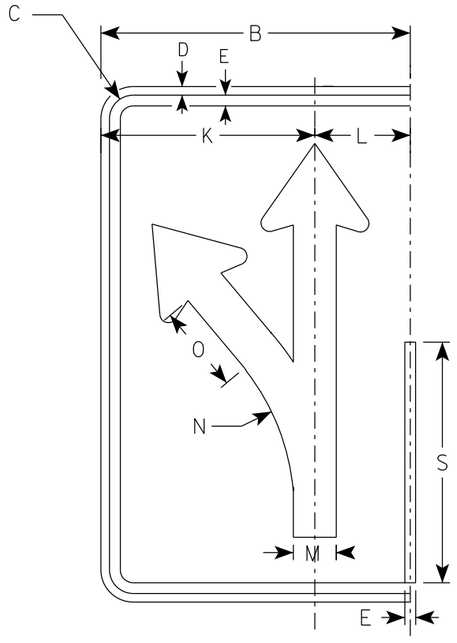

(E)

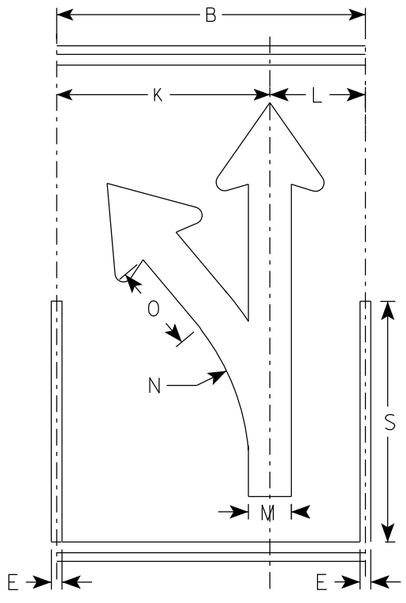

(E)

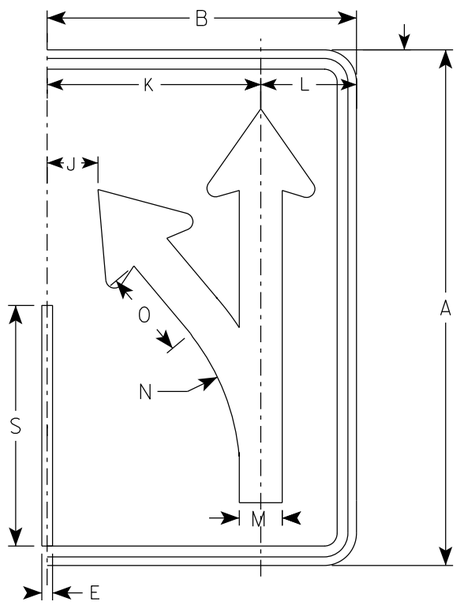

(E)

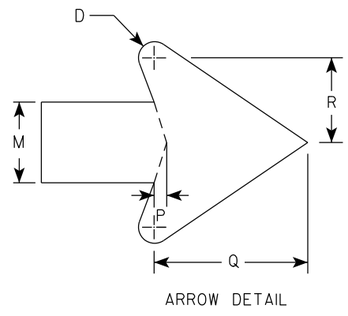

ARROW DETAIL

SIZE	A	B	C	D	E	F	G	H	I	J	K	L	M	N	O	P	Q	R	S	T	U	V	W	X	Y	Z	Area sq. ft.
1																											
2S	30	18	1 3/8	1/2	5/8		18 1/4	4 3/4	3 1/4	3	12 1/2	5 1/2	2 1/2	13 1/4	5 1/8	3/8	4 3/4	2 5/8	14								3.75
2M	30	18	1 3/8	1/2	5/8		18 1/4	4 3/4	3 1/4	3	12 1/2	5 1/2	2 1/2	13 1/4	5 1/8	3/8	4 3/4	2 5/8	14								3.75
3	36	24	1 3/8	1/2	5/8		21 7/8	5 5/8	4	4 7/8	16 1/8	7 3/4	3	15 7/8	6 1/8	1/2	5 3/4	3 1/8	16 3/4								6.0
4	48	30	2 1/4	3/4	1		29 1/8	7 1/2	5 1/4	5 3/8	20 1/2	9 1/2	4	21 1/4	8 1/4	5/8	7 5/8	4 1/4	22 3/8								10.0
5	48	30	2 1/4	3/4	1		29 1/8	7 1/2	5 1/4	5 3/8	20 1/2	9 1/2	4	21 1/4	8 1/4	5/8	7 5/8	4 1/4	22 3/8								10.0

STANDARD SIGN
R3-8 (E) Arrow

WISCONSIN DEPT OF TRANSPORTATION

APPROVED Matthew R Rauch
For State Traffic Engineer

DATE 5/21/19 PLATE NO. R3-8.1

PROJECT NO: | HWY: | COUNTY: | SHEET NO: 234 | E

NOTES

1. Sign is Type II - Type H Reflective
2. Color:
   Background - White
   Message - Black
3. Message Series - None

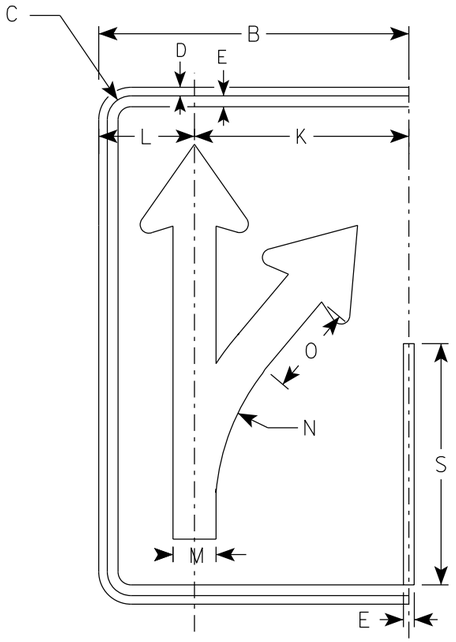

(F)

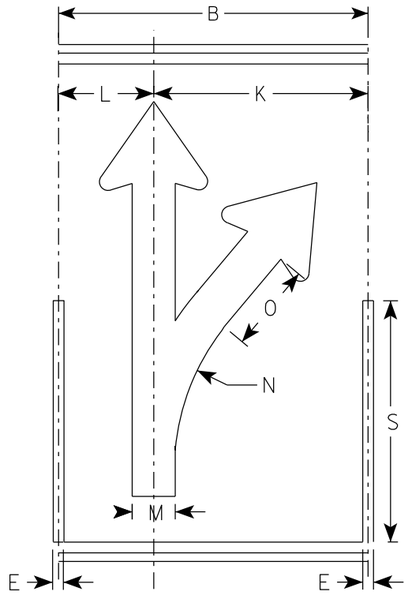

(F)

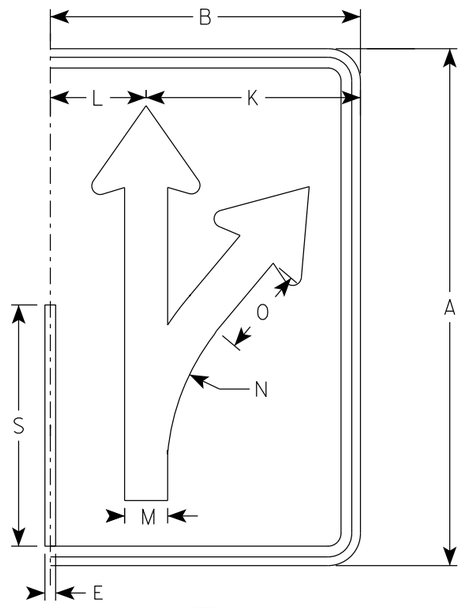

(F)

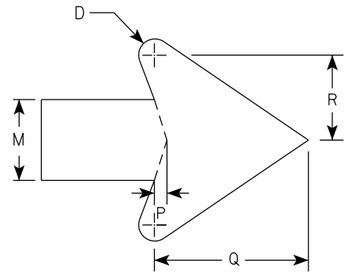

ARROW DETAIL

SIZE	A	B	C	D	E	F	G	H	I	J	K	L	M	N	O	P	Q	R	S	T	U	V	W	X	Y	Z	Area sq. ft.
1																											
2S	30	18	1 3/8	1/2	5/8		18 1/4	4 3/4	3 1/4	3	12 1/2	5 1/2	2 1/2	13 1/4	5 1/8	3/8	4 3/4	2 5/8	14								3.75
2M	30	18	1 3/8	1/2	5/8		18 1/4	4 3/4	3 1/4	3	12 1/2	5 1/2	2 1/2	13 1/4	5 1/8	3/8	4 3/4	2 5/8	14								3.75
3	36	24	1 3/8	1/2	5/8		21 7/8	5 5/8	4	4 7/8	16 1/8	7 3/4	3	15 7/8	6 1/8	1/2	5 3/4	3 1/8	16 3/4								6.0
4	48	30	2 1/4	3/4	1		29 1/8	7 1/2	5 1/4	5 3/8	20 1/2	9 1/2	4	21 1/4	8 1/4	5/8	7 5/8	4 1/4	22 3/8								10.0
5	48	30	2 1/4	3/4	1		29 1/8	7 1/2	5 1/4	5 3/8	20 1/2	9 1/2	4	21 1/4	8 1/4	5/8	7 5/8	4 1/4	22 3/8								10.0

STANDARD SIGN
R3-8 (F) Arrow

WISCONSIN DEPT OF TRANSPORTATION

APPROVED Matthew R Rauch
for State Traffic Engineer

DATE 5/21/19 PLATE NO. R3-8.1

PROJECT NO: | HWY: | COUNTY: | SHEET NO: 235 | E

NOTES

1. Sign is Type II - Type H Reflective
2. Color:
   Background - White
   Message - Black
3. Message Series - None

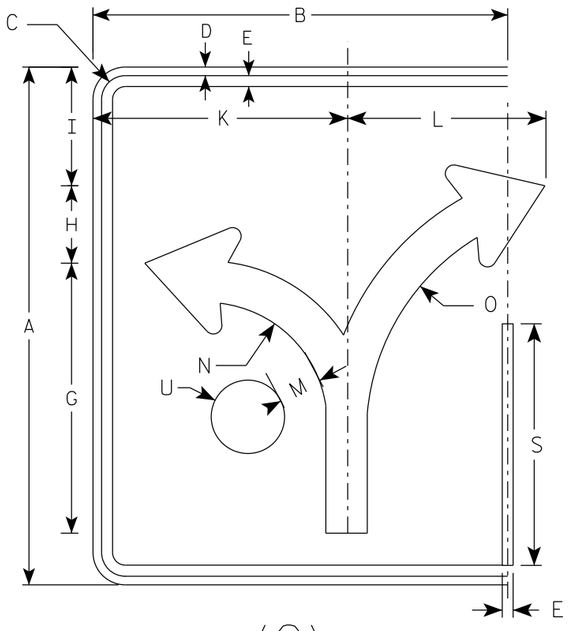

(G)

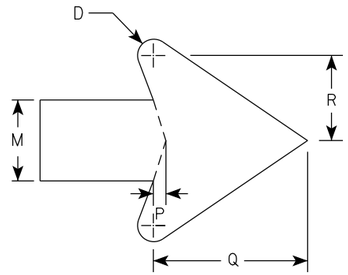

ARROW DETAIL

SIZE	A	B	C	D	E	F	G	H	I	J	K	L	M	N	O	P	Q	R	S	T	U	V	W	X	Y	Z	Area sq. ft.
1																											
2S	30	24	1 3/8	1/2	5/8		15 5/8	4 1/2	6 7/8		14 3/4	11 1/2	2 3/8	7	13 1/4	3/8	4 1/2	2 1/2	14		2 1/8						5.0
2M	30	24	1 3/8	1/2	5/8		15 5/8	4 1/2	6 7/8		14 3/4	11 1/2	2 3/8	7	13 1/4	3/8	4 1/2	2 1/2	14		2 1/8						5.0
3	36	30	1 3/8	1/2	5/8		18 3/4	5 1/2	8 1/4		17 1/4	17 1/4	2 7/8	8 3/8	16	1/2	5 1/2	3	16 3/4		2 1/2						7.5
4	48	36	2 1/4	3/4	1		24 7/8	7 1/4	11		23 1/8	18	3 3/4	11 1/8	21 1/4	5/8	7 1/8	4	22 3/8		3 3/8						12.0
5	48	36	2 1/4	3/4	1		24 7/8	7 1/4	11		23 1/8	18	3 3/4	11 1/8	21 1/4	5/8	7 1/8	4	22 3/8		3 3/8						12.0

STANDARD SIGN
R3-8 (G) Arrow

WISCONSIN DEPT OF TRANSPORTATION

APPROVED Matthew R Rauch
for State Traffic Engineer

DATE 5/21/19 PLATE NO. R3-8.1

PROJECT NO: | HWY: | COUNTY: | SHEET NO: 236 | E

FILE NAME : C:\CAEfiles\Projects\stdplate_R38.dgn PLOT DATE : 21-MAY 2019 4:38 PLOT BY : mscj9h PLOT NAME : PLOT SCALE : $$.....plotscale.....$$ WISDOT/CADDS SHEET 42

NOTES

1. Sign is Type II - Type H Reflective
2. Color:
   Background - White
   Message - Black
3. Message Series - None

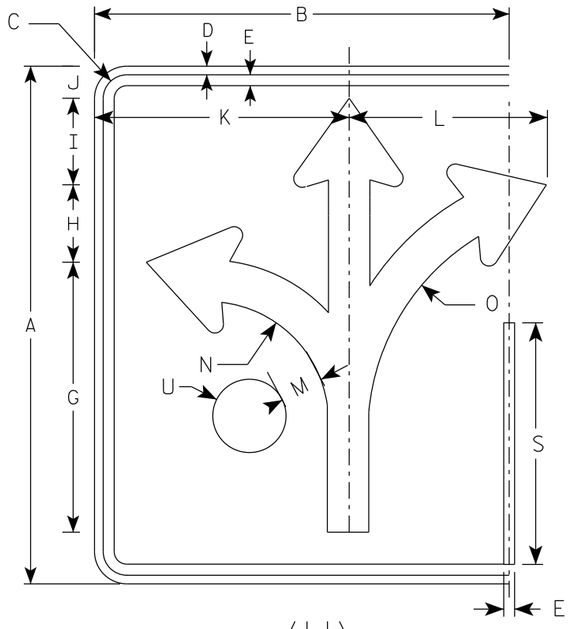

(H)

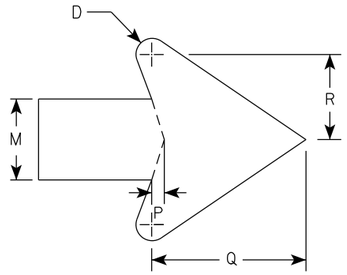

ARROW DETAIL

SIZE	A	B	C	D	E	F	G	H	I	J	K	L	M	N	O	P	Q	R	S	T	U	V	W	X	Y	Z	Area sq. ft.
1																											
2S	30	24	1 3/8	1/2	5/8		15 5/8	4 1/2	5	1 7/8	14 3/4	11 1/2	2 3/8	7	13 1/4	3/8	4 1/2	2 1/2	14		2 1/8						5.0
2M	30	24	1 3/8	1/2	5/8		15 5/8	4 1/2	5	1 7/8	14 3/4	11 1/2	2 3/8	7	13 1/4	3/8	4 1/2	2 1/2	14		2 1/8						5.0
3	36	30	1 3/8	1/2	5/8		18 3/4	5 1/2	6	3 1/8	17 1/4	17 1/4	2 7/8	8 3/8	16	1/2	5 1/2	3	16 3/4		2 1/2						7.5
4	48	36	2 1/4	3/4	1		24 7/8	7 1/4	7 7/8	3 1/8	23 1/8	18	3 3/4	11 1/8	21 1/4	5/8	7 1/8	4	22 3/8		3 3/8						12.0
5	48	36	2 1/4	3/4	1		24 7/8	7 1/4	7 7/8	3 1/8	23 1/8	18	3 3/4	11 1/8	21 1/4	5/8	7 1/8	4	22 3/8		3 3/8						12.0

STANDARD SIGN
R3-8 (H) Arrow

WISCONSIN DEPT OF TRANSPORTATION

APPROVED Matthew R Rauch
for State Traffic Engineer

DATE 5/21/19 PLATE NO. R3-8.1

PROJECT NO:	HWY:	COUNTY:		SHEET NO: 237	E

NOTES

1. Sign is Type II - Type H Reflective
2. Color:
   Background - White
   Message - Black
3. Message Series - None

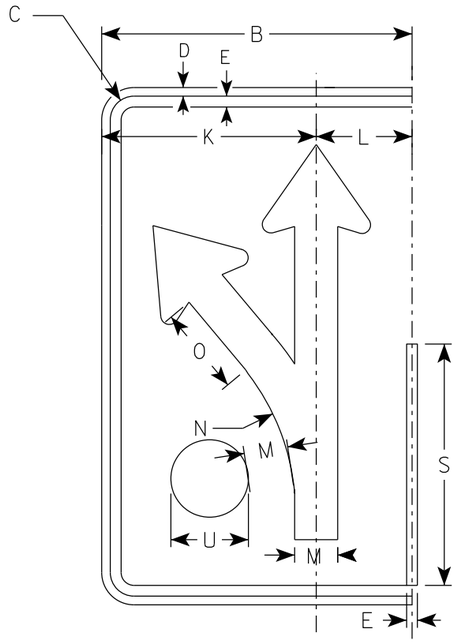

(I)

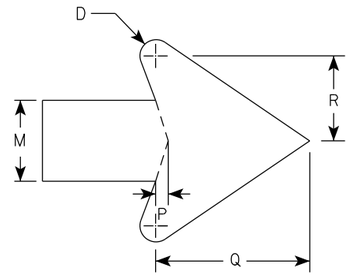

ARROW DETAIL

SIZE	A	B	C	D	E	F	G	H	I	J	K	L	M	N	O	P	Q	R	S	T	U	V	W	X	Y	Z	Area sq. ft.
1																											
2S	30	18	1 3/8	1/2	5/8		18 1/4	4 3/4	3 1/4	3	12 1/2	5 1/2	2 1/2	13 1/4	5 1/8	3/8	4 3/4	2 5/8	14		2 1/8						3.75
2M	30	18	1 3/8	1/2	5/8		18 1/4	4 3/4	3 1/4	3	12 1/2	5 1/2	2 1/2	13 1/4	5 1/8	3/8	4 3/4	2 5/8	14		2 1/8						3.75
3	36	24	1 3/8	1/2	5/8		21 7/8	5 5/8	4	4 7/8	16 1/8	7 3/4	3	15 7/8	6 1/8	1/2	5 3/4	3 1/8	16 3/4		2 1/2						6.0
4	48	30	2 1/4	3/4	1		29 1/8	7 1/2	5 1/4	5 3/8	20 1/2	9 1/2	4	21 1/4	8 1/4	5/8	7 5/8	4 1/4	22 3/8		3 3/8						10.0
5	48	30	2 1/4	3/4	1		29 1/8	7 1/2	5 1/4	5 3/8	20 1/2	9 1/2	4	21 1/4	8 1/4	5/8	7 5/8	4 1/4	22 3/8		3 3/8						10.0

STANDARD SIGN
R3-8 (I) Arrow

WISCONSIN DEPT OF TRANSPORTATION

APPROVED Matthew R Rauch
For State Traffic Engineer

DATE 5/21/19 PLATE NO. R3-8.1

PROJECT NO: | HWY: | COUNTY: | SHEET NO: 238 | E

NOTES

1. Sign is Type II - Type H Reflective
2. Color:
   Background - White
   Message - Black
3. Message Series - D

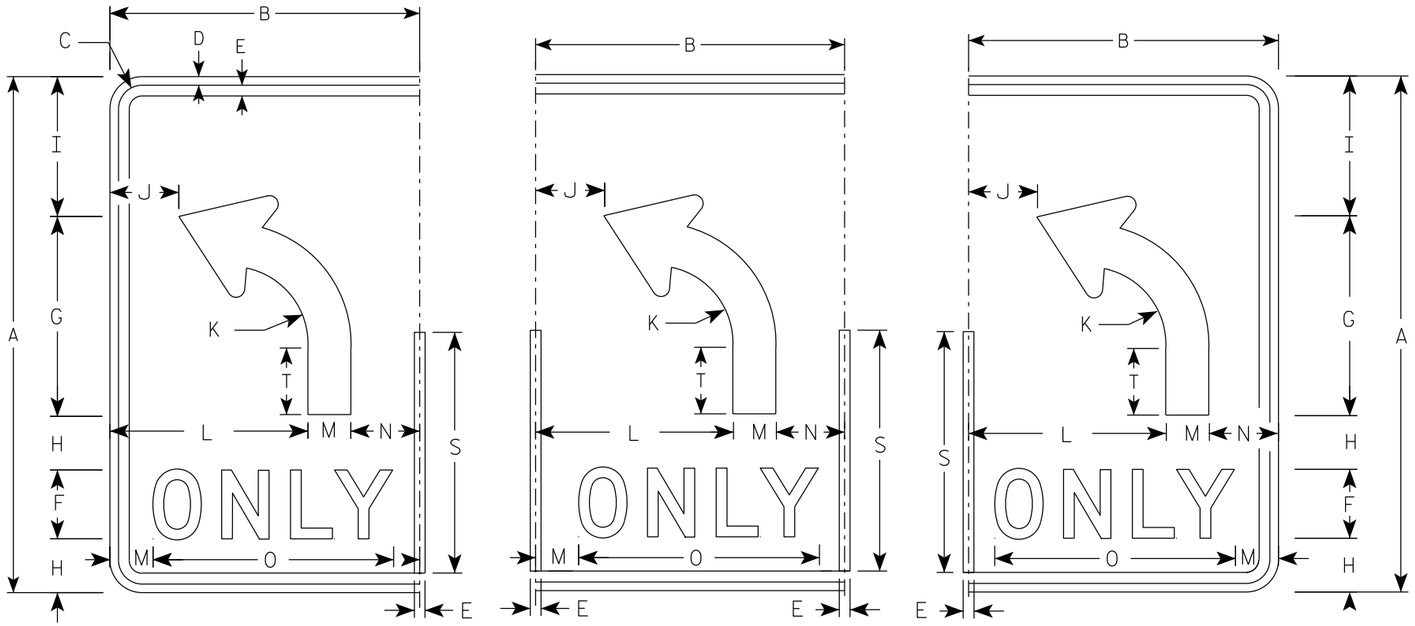

(L) (L) (L)

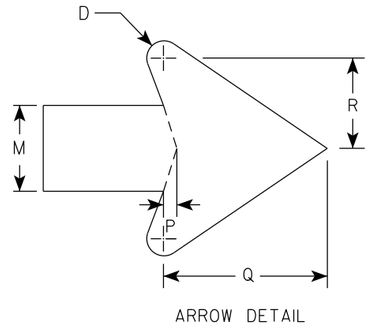

ARROW DETAIL

SIZE	A	B	C	D	E	F	G	H	I	J	K	L	M	N	O	P	Q	R	S	T	U	V	W	X	Y	Z	Area sq. ft.
1																											
2S	30	18	1 3/8	1/2	5/8	4	11 5/8	3 1/8	8 1/8	4	4 1/2	11 1/2	2 1/2	4	14	3/8	4 3/4	2 5/8	14	3 7/8							3.75
2M	30	18	1 3/8	1/2	5/8	4	11 5/8	3 1/8	8 1/8	4	4 1/2	11 1/2	2 1/2	4	14	3/8	4 3/4	2 5/8	14	3 7/8							3.75
3	36	24	1 3/8	1/2	5/8	5	14	3 1/2	9 3/4		5 3/8	15	3	6	17 5/8	1/2	5 3/4	3 1/8	16 3/4	4 5/8							6.0
4	48	30	2 1/4	3/4	1	6	18 5/8	5 1/8	13 1/8	6 1/8	7 1/4	18	4	8	21 3/4	5/8	7 5/8	4 1/4	22 3/8	6 1/4							10.0
5	48	30	2 1/4	3/4	1	6	18 5/8	5 1/8	13 1/8	6 1/8	7 1/4	18	4	8	21 3/4	5/8	7 5/8	4 1/4	22 3/8	6 1/4							10.0

STANDARD SIGN

R3-8 (L) Arrow

WISCONSIN DEPT OF TRANSPORTATION

APPROVED Matthew R Rauch
for State Traffic Engineer

DATE 5/21/19 PLATE NO. R3-8.1

PROJECT NO:

SHEET NO: 239 E

NOTES

1. Sign is Type II - Type H Reflective
2. Color:
   Background - White
   Message - Black
3. Message Series - D

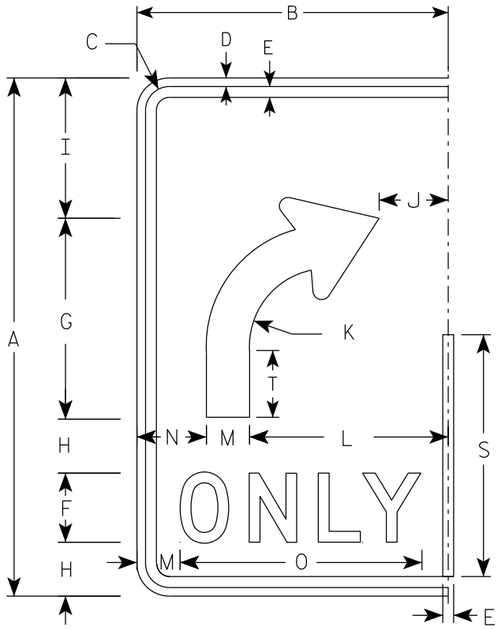

(R)

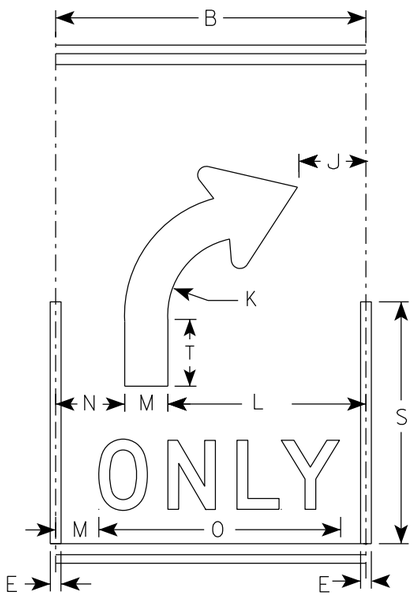

(R)

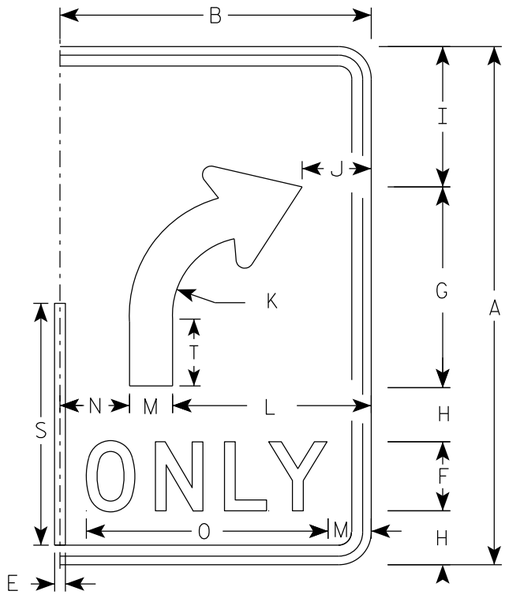

(R)

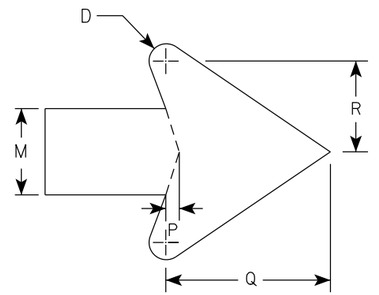

ARROW DETAIL

SIZE	A	B	C	D	E	F	G	H	I	J	K	L	M	N	O	P	Q	R	S	T	U	V	W	X	Y	Z	Area sq. ft.
1																											
2S	30	18	1 3/8	1/2	5/8	4	11 5/8	3 1/8	8 1/8	4	4 1/2	11 1/2	2 1/2	4	14	3/8	4 3/4	2 5/8	14	3 7/8							3.75
2M	30	18	1 3/8	1/2	5/8	4	11 5/8	3 1/8	8 1/8	4	4 1/2	11 1/2	2 1/2	4	14	3/8	4 3/4	2 5/8	14	3 7/8							3.75
3	36	24	1 3/8	1/2	5/8	5	14	3 1/2	9 3/4	6	5 3/8	15	3	6	17 5/8	1/2	5 3/4	3 1/8	16 3/4	4 5/8							6.0
4	48	30	2 1/4	3/4	1	6	18 5/8	5 1/8	13 1/8	6 1/8	7 1/4	18	4	8	21 3/4	5/8	7 5/8	4 1/4	22 3/8	6 1/4							10.0
5	48	30	2 1/4	3/4	1	6	18 5/8	5 1/8	13 1/8	6 1/8	7 1/4	18	4	8	21 3/4	5/8	7 5/8	4 1/4	22 3/8	6 1/4							10.0

STANDARD SIGN
R3-8 (R) Arrow

WISCONSIN DEPT OF TRANSPORTATION

APPROVED Matthew R Rauch
for State Traffic Engineer

DATE 5/21/19 PLATE NO. R3-8.1

PROJECT NO:

SHEET NO: 240 **E**

NOTES

1. Sign is Type II - Type H Reflective
2. Color:
   Background - White
   Message - Black
3. Message Series - None

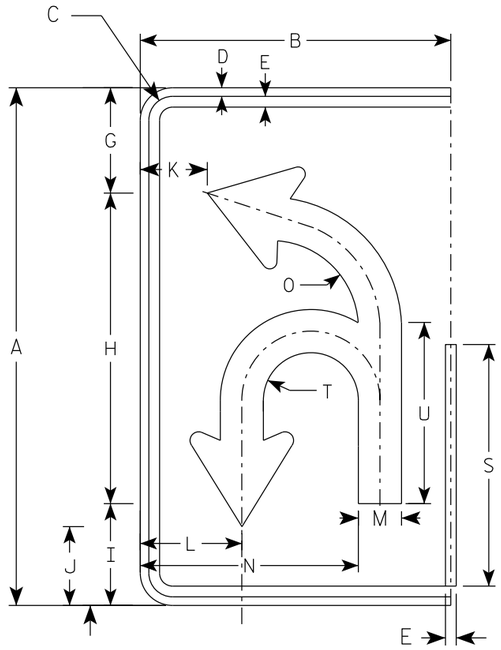

(U)

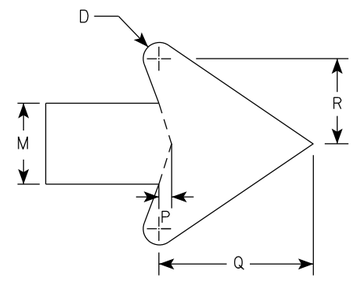

ARROW DETAIL

SIZE	A	B	C	D	E	F	G	H	I	J	K	L	M	N	O	P	Q	R	S	T	U	V	W	X	Y	Z	Area sq. ft.
1																											
2S	30	18	1 3/8	1/2	5/8		6 1/8	18	5 7/8	4 5/8	3 7/8	5 7/8	2 1/2	12 5/8	5 1/8	3/8	4 3/4	2 5/8	14	2 3/4	10 1/2						3.75
2M	30	18	1 3/8	1/2	5/8		6 1/8	18	5 7/8	4 5/8	3 7/8	5 7/8	2 1/2	12 5/8	5 1/8	3/8	4 3/4	2 5/8	14	2 3/4	10 1/2						3.75
3	36	24	1 3/8	1/2	5/8		21 7/8	21 5/8	7 1/8	5 1/2	5 7/8	8 1/4	3	16 3/8	6 1/8	1/2	5 3/4	3 1/8	16 3/4	3 1/4	12 5/8						6.0
4	48	30	2 1/4	3/4	1		29 1/8	28 3/4	9 3/8	7 1/4	6 7/8	10	4	20 7/8	8 1/8	5/8	7 5/8	4 1/4	22 3/8	4 3/8	16 3/4						10.0
5	48	30	2 1/4	3/4	1		29 1/8	28 3/4	9 3/8	7 1/4	6 7/8	10	4	20 7/8	8 1/8	5/8	7 5/8	4 1/4	22 3/8	4 3/8	16 3/4						10.0

STANDARD SIGN
R3-8 (U) Arrow

WISCONSIN DEPT OF TRANSPORTATION

APPROVED Matthew R Rauch
for State Traffic Engineer

DATE 5/21/19 PLATE NO. R3-8.1

PROJECT NO: | HWY: | COUNTY: | SHEET NO: 241 | E

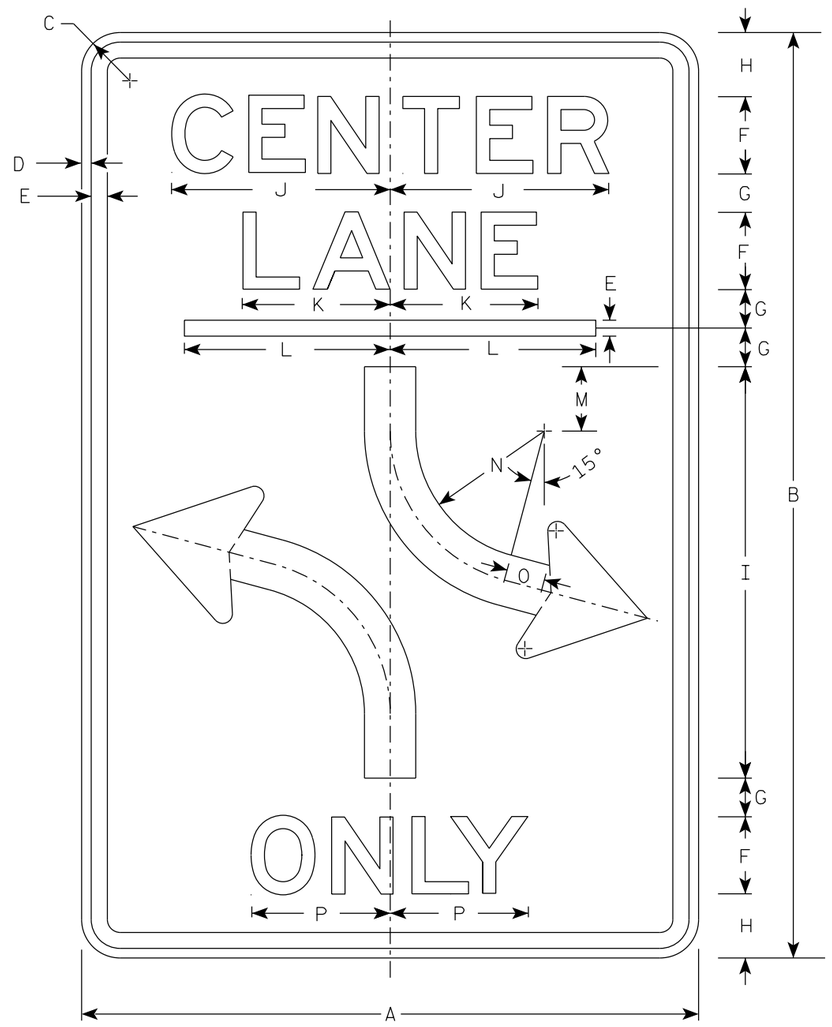

R3-9B

NOTES

1. Sign is Type II - Type H Reflective
2. Color:
   Background - White
   Message - Black
3. Message Series - E

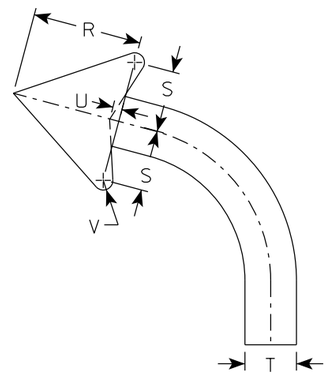

ARROW DETAIL

SIZE	A	B	C	D	E	F	G	H	I	J	K	L	M	N	O	P	Q	R	S	T	U	V	W	X	Y	Z	Area sq. ft.
1																											
2S	24	36	1 1/2	3/8	1/2	3	1 1/2	2 1/2	16	8 1/2	5 3/4	8	2 1/2	5	1 1/2	5 1/8		4 3/8	2 3/8	2	3/8	3/8					6.0
2M	24	36	1 1/2	3/8	1/2	3	1 1/2	2 1/2	16	8 1/2	5 3/4	8	2 1/2	5	1 1/2	5 1/8		4 3/8	2 3/8	2	3/8	3/8					6.0
3	36	48	2 1/4	5/8	7/8	5	1 1/2	3 1/2	20	14 1/8	9 1/2	12	3	7 3/8	2	9 7/8		6 1/8	3 1/2	3	1/2	5/8					12.0
4																											
5																											

STANDARD SIGN
R3-9B

WISCONSIN DEPT OF TRANSPORTATION

APPROVED Matthew R Rauch
for State Traffic Engineer

DATE 3/24/2022 PLATE NO. R3-9B.6

PROJECT NO: | HWY: | COUNTY: | SHEET NO: 242 | E

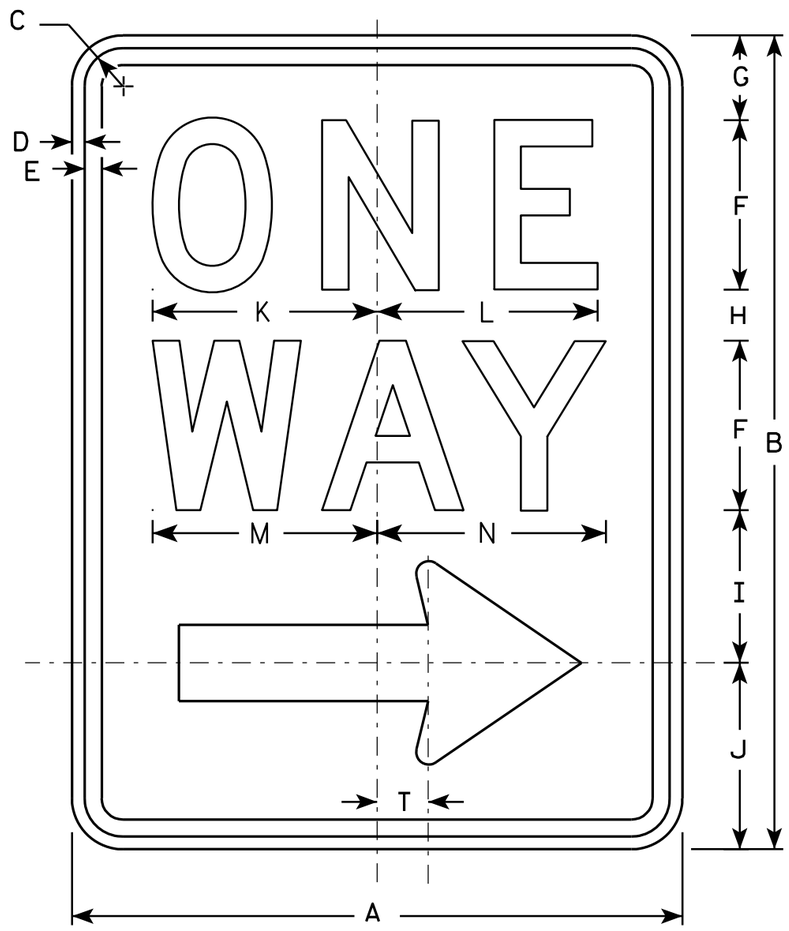

R6-2R

NOTES

1. Sign is Type II - Type H Reflective - reference WIS DOT Standard Specification for HIGHWAY and STRUCTURE CONSTRUCTION latest edition.
2. Color:
   Background - White
   Message - Black
3. Message Series - D
4. Corners may be square or rounded when base material is plywood but borders shall be rounded as shown. When base material is metal, the corners and borders shall be rounded.
5. R6-2L same as R6-2R except arrow points to the left.

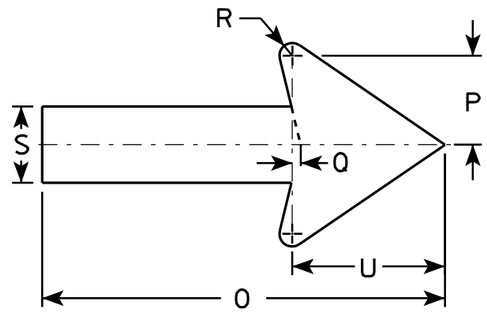

SIZE	A	B	C	D	E	F	G	H	I	J	K	L	M	N	O	P	O	R	S	T	U	V	W	X	Y	Z
1	18	24	1 1/8	3/8	1/2	5	2 1/2	1 1/2	4 1/2	5 1/2	6 5/8	6 1/2	6 5/8	6 3/4	11 7/8	2 5/8	1/4	3/8	2 1/4	1 1/2	4 1/2					
2S	24	30	1 1/8	3/8	1/2	6	3	2 1/2	5 1/2	7	8 1/8	8 1/8	8 1/2	8 5/8	16	3 1/2	3/8	1/2	3	2	6					
2M	30	36	1 3/8	1/2	5/8	8	2 1/2	2 5/8	6 7/8	8	10 1/2	10 1/2	11 1/4	11 1/4	20	4 3/8	1/2	5/8	3 3/4	2 1/2	7 1/2					
3	36	48	1 7/8	1/2	5/8	10	5 1/4	3 1/4	9	10 1/2	12 3/4	12 3/4	13 1/4	13 1/2	24	5 5/8	1/2	3/4	4 3/4	3	9					
4	36	48	1 7/8	1/2	5/8	10	5 1/4	3 1/4	9	10 1/2	12 3/4	12 3/4	13 1/4	13 1/2	24	5 5/8	1/2	3/4	4 3/4	3	9					
5																										

STANDARD SIGN
R6-2 R&L

WISCONSIN DEPT OF TRANSPORTATION

APPROVED Matthew R Rauch
for State Traffic Engineer

DATE 11/2/10 PLATE NO. R6-2.8

PROJECT NO:	HWY:	COUNTY:		SHEET NO: 243	E

NOTES

1. Sign is Type II - Type H Reflective
2. Color:
   Background - White
   Message - Black

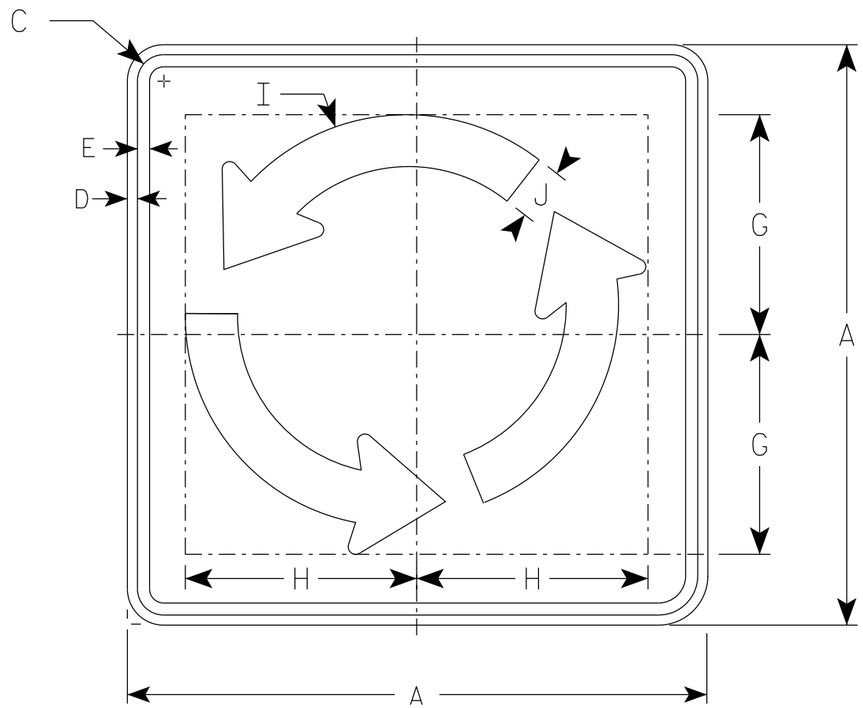

R6-5P

Arrow Detail

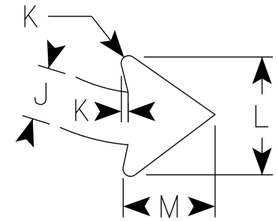

SIZE	A	B	C	D	E	F	G	H	I	J	K	L	M	N	O	P	Q	R	S	T	U	V	W	X	Area sq. ft.
1																									
2S	30		1 3/8	1/2	5/8		11 3/8	12	11 1/8	2 3/4	3/8	6	4 3/4												6.25
2M	30		1 3/8	1/2	5/8		11 3/8	12	11 1/8	2 3/4	3/8	6	4 3/4												6.25
3																									
4																									
5																									

STANDARD SIGN
R6-5P

WISCONSIN DEPT OF TRANSPORTATION

APPROVED Matthew R Rauch
for State Traffic Engineer

DATE 3/24/21 PLATE NO. R6-5P.1

PROJECT NO:

SHEET NO: 244 E

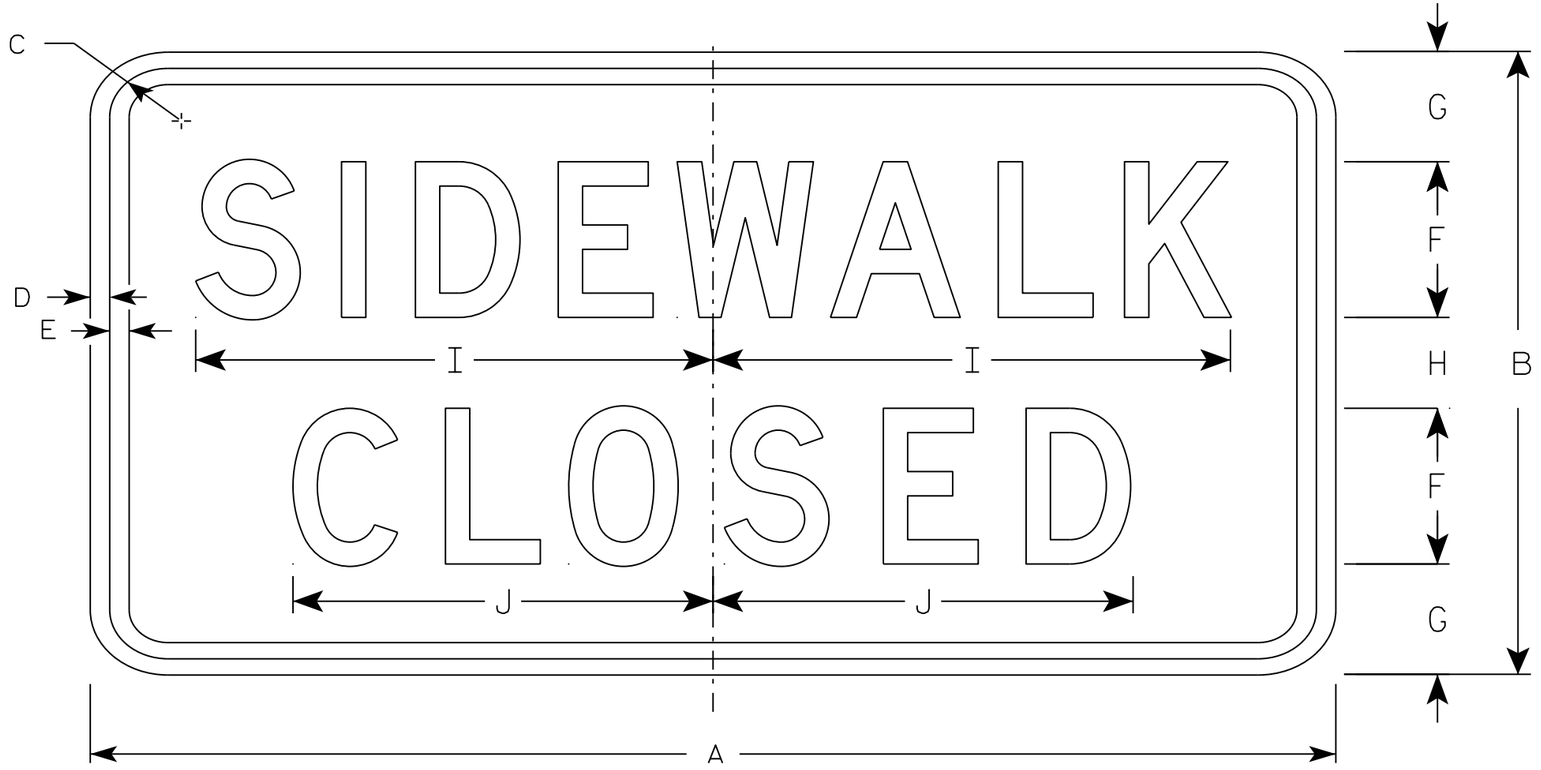

R9-9

NOTES

1. Sign is Type II - Type H Reflective - reference WIS DOT Standard Specification for HIGHWAY and STRUCTURE CONSTRUCTION latest edition.
2. Color:
   Background - White
   Message - Black
3. Message Series - C
4. Corners may be square or rounded when base material is plywood but borders shall be rounded as shown. When base material is metal, the corners and borders shall be rounded.
5. Use Size 2 for Sidewalks. Use Size 3 for Paths and Trails.

SIZE	A	B	C	D	E	F	G	H	I	J	K	L	M	N	O	P	Q	R	S	T	U	V	W	X	Y	Z	Area sq. ft.
1																											
2S	24	12	1 3/4	1/2	1/2	3	2 1/8	1 3/4	10	8 1/8																	2.0
2M	24	12	1 3/4	1/2	1/2	3	2 1/8	1 3/4	10	8 1/8																	2.0
3	30	18	1 3/4	1/2	1/2	4	3 1/2	3	12 1/2	10 1/4																	3.75
4																											
5																											

STANDARD SIGN
R9-9

WISCONSIN DEPT OF TRANSPORTATION

APPROVED Matthew R Rauch
for State Traffic Engineer

DATE 8/11/16 PLATE 245 R9-9.6

PROJECT NO: | HWY: | COUNTY: | SHEET NO: E

FILE NAME : C:\CAEfiles\Projects\tr_stdplate\R99.DGN PLOT DATE : 11-AUG-2016 11:33 PLOT BY : $$ plotuser $$ PLOT NAME : PLOT SCALE : 2.918761:1.000000

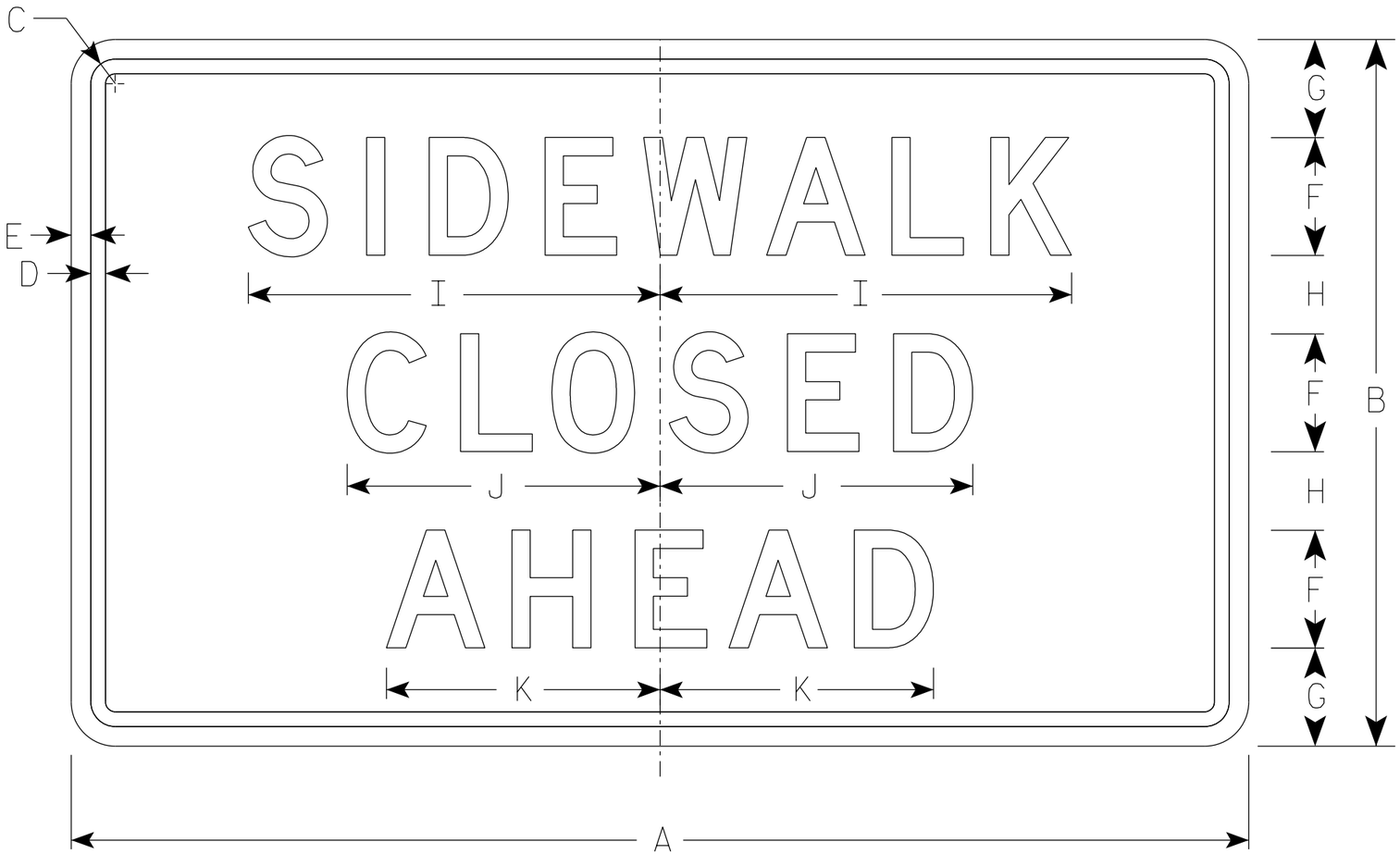

R9-9A

NOTES

1. Sign is Type II - Type H Reflective
2. Color:
   Background - White
   Message - Black
3. Message Series - D
4. Corners may be square or rounded when base material is plywood but borders shall be rounded as shown. When base material is metal, the corners and borders shall be rounded.

SIZE	A	B	C	D	E	F	G	H	I	J	K	L	M	N	O	P	Q	R	S	T	U	V	W	X	Y	Z	Area sq. ft.
1																											
2S	30	18	1 1/8	3/8	1/2	3	2 1/2	2	10 1/2	8	7																3.75
2M	30	18	1 1/8	3/8	1/2	3	2 1/2	2	10 1/2	8	7																3.75
3																											
4																											
5																											

STANDARD SIGN
R9-9A

WISCONSIN DEPT OF TRANSPORTATION

APPROVED Matthew R Rauch
For State Traffic Engineer

DATE 8/31/2020 PLATE NO. R9-9A.1

PROJECT NO: | HWY: | COUNTY: | SHEET NO: 246 | E

FILE NAME : C:\CAEFiles\Projects\tr_stdplate\R99A.DGN PLOT DATE : 31-AUG-2020 3:26 PLOT BY : dotc4c PLOT SCALE : $$.....plotscale.....$$

7

NOTES

1. Sign is Type II - Type H Reflective
2. Color:
   Background - White
   Message - Black
3. Message Series - C
4. Corners may be square or rounded when base material is plywood but borders shall be rounded as shown. When base material is metal, the corners and borders shall be rounded.
5. Substitute appropriate numerals to nearest quarter mile and optically adjust spacing to achieve proper balance.

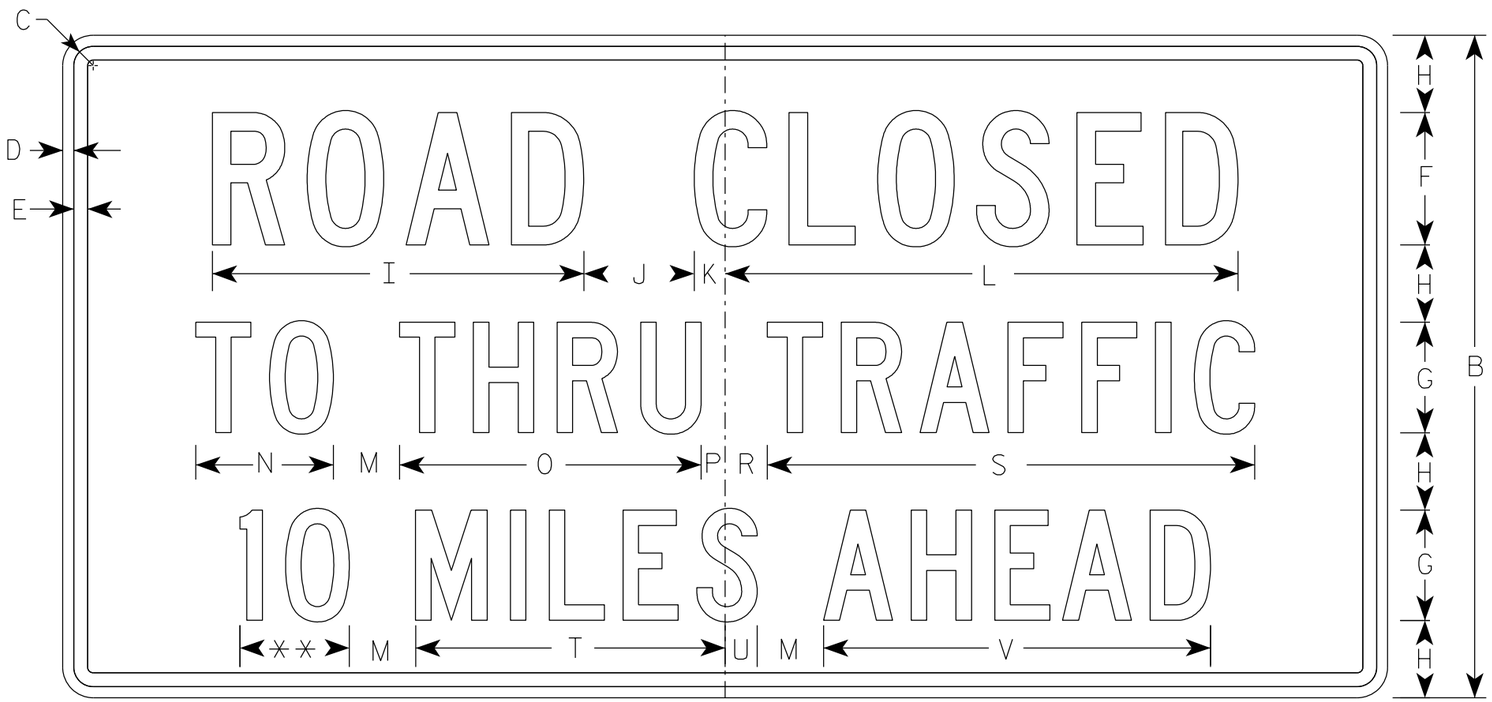

R11-3

** See Note 5

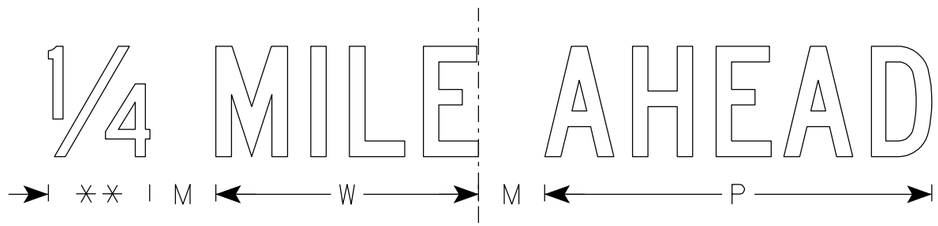

SIZE	A	B	C	D	E	F	G	H	I	J	K	L	M	N	O	P	Q	R	S	T	U	V	W	X	Y	Z	Area sq. ft.
1	36	18	1 1/4	3/8	3/8	4	3	2	11 1/4	3	1 1/8	15 3/8	2	3 3/4	8 1/4	5/8		1 3/8	13 1/4	8 3/8	7/8	10 1/2	7 1/8				4.5
2S	60	30	1 3/8	1/2	5/8	6	5	3 1/2	16 7/8	5	1 3/8	23 1/4	3	6 1/4	13 5/8	1 1/8		1 7/8	22 1/8	14	1 1/2	17 1/2	11 7/8				12.5
2M	60	30	1 3/8	1/2	5/8	6	5	3 1/2	16 7/8	5	1 3/8	23 1/4	3	6 1/4	13 5/8	1 1/8		1 7/8	22 1/8	14	1 1/2	17 1/2	11 7/8				12.5
3																											
4																											
5																											

STANDARD SIGN
R11-3

WISCONSIN DEPT OF TRANSPORTATION

APPROVED Matthew R Rauch
for State Traffic Engineer
DATE 6/14/2021 PLATE NO. R11-3.9

PROJECT NO:	HWY:	COUNTY:		SHEET NO: 247	E

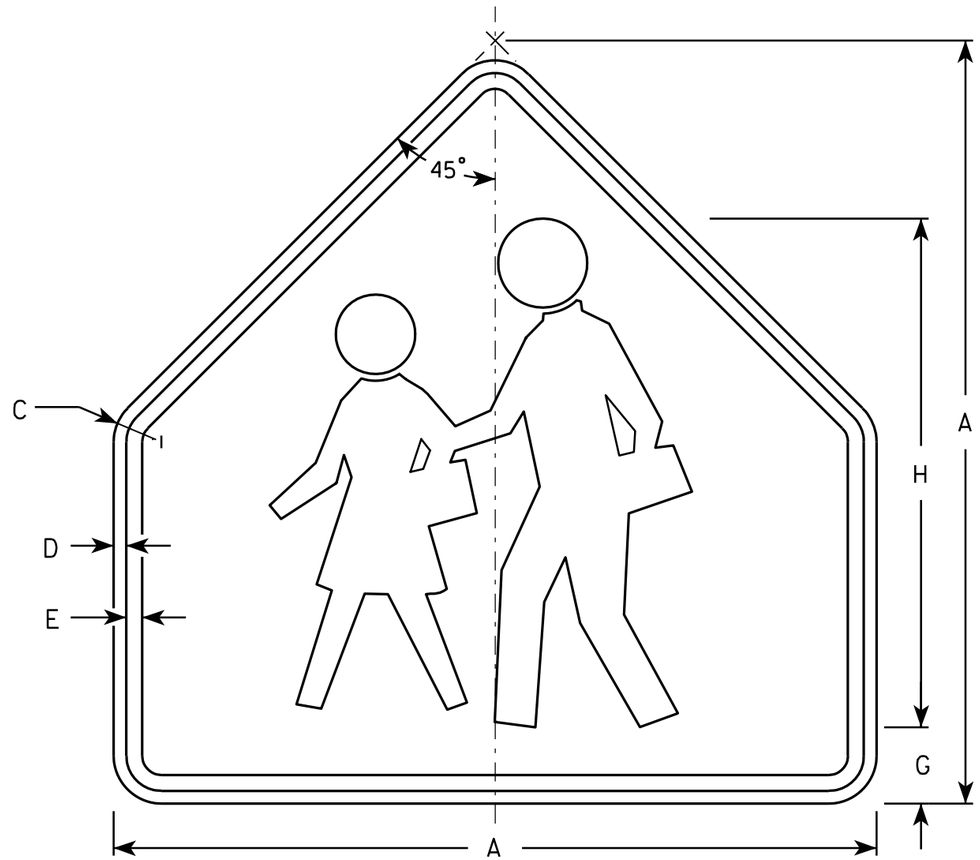

S1-1

NOTES

1. Sign is Type II - Type F Reflective - reference WIS DOT Standard Specification for HIGHWAY and STRUCTURE CONSTRUCTION latest edition.
2. Color:
   Background - Yellow-Green
   Message - Black
3. Corners may be square or rounded when base material is plywood but borders shall be rounded as shown. When base material is metal, the corners and borders shall be rounded.

SIZE	A	B	C	D	E	F	G	H	I	J	K	L	M	N	O	P	Q	R	S	T	U	V	W	X	Y	Z	Area sq. ft.
1	30		1 3/8	1/2	5/8		3	20																			4.69
2	36		1 5/8	5/8	3/4		3 1/2	24																			6.75
3	36		1 5/8	5/8	3/4		3 1/2	24																			6.75
4	48		2 1/4	3/4	1		4 3/4	32																			12
5																											

STANDARD SIGN
S1-1

WISCONSIN DEPT OF TRANSPORTATION

APPROVED Matthew R Rauch
for State Traffic Engineer

DATE 6/30/05 PLATE NO. S1-1.8

PROJECT NO:	HWY:	COUNTY:		SHEET NO: 248	E

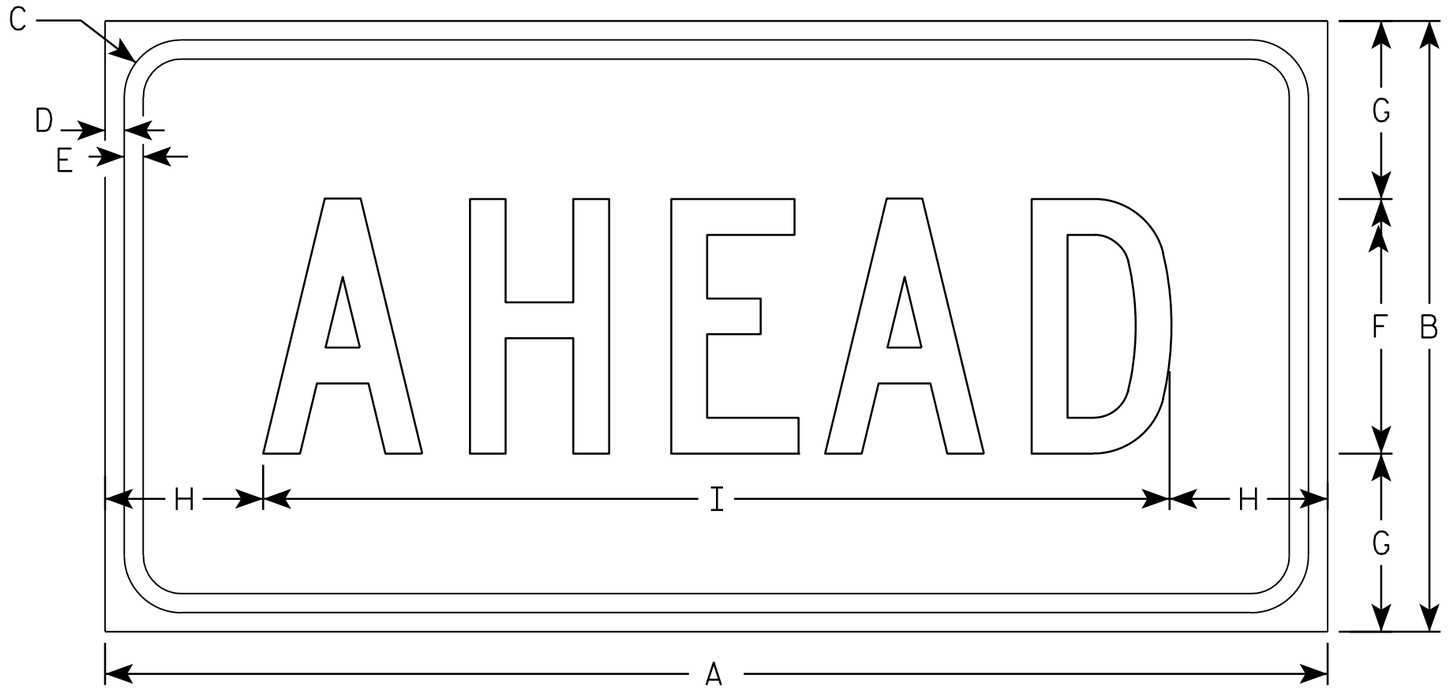

S16-9P

NOTES

1. Sign is Type II - Type F Reflective - reference WIS DOT Standard Specification for HIGHWAY and STRUCTURE CONSTRUCTION latest edition.
2. Color:
   Background - Yellow-Green
   Message - Black
3. Message Series - C
4. Corners may be square or rounded when base material is plywood but borders shall be rounded as shown. When base material is metal, the corners and borders shall be rounded.

SIZE	A	B	C	D	E	F	G	H	I	J	K	L	M	N	O	P	Q	R	S	T	U	V	W	X	Y	Z	Area sq. ft.
1	24	12	1 1/8	3/8	3/8	5	3 1/2	3 1/8	17 3/4																		2.0
2S	30	18	1 1/8	3/8	1/2	7	5 1/2	2 3/4	24 1/2																		3.75
2M	30	18	1 1/8	3/8	1/2	7	5 1/2	2 3/4	24 1/2																		3.75
3	30	18	1 1/8	3/8	1/2	7	3 1/2	2 3/4	24 1/2																		3.75
4	48	24	1 3/8	1/2	5/8	10	7	6 1/8	35 3/4																		8.0
5																											

STANDARD SIGN
S16-9P

WISCONSIN DEPT OF TRANSPORTATION

APPROVED Matthew R Rauch
for State Traffic Engineer

DATE 7/22/13 PLATE NO. S16-9P.1

PROJECT NO: | HWY: | COUNTY: | SHEET NO: 249 | E

FILE NAME : C:\CAEFiles\Projects\tr_stdplate\S169P.dgn PLOT DATE : 22-JUL-2013 10:32 PLOT BY : mscj9h PLOT NAME : PLOT SCALE : 2.977140:1.000000
WISDOT/CADDS SHEET 42

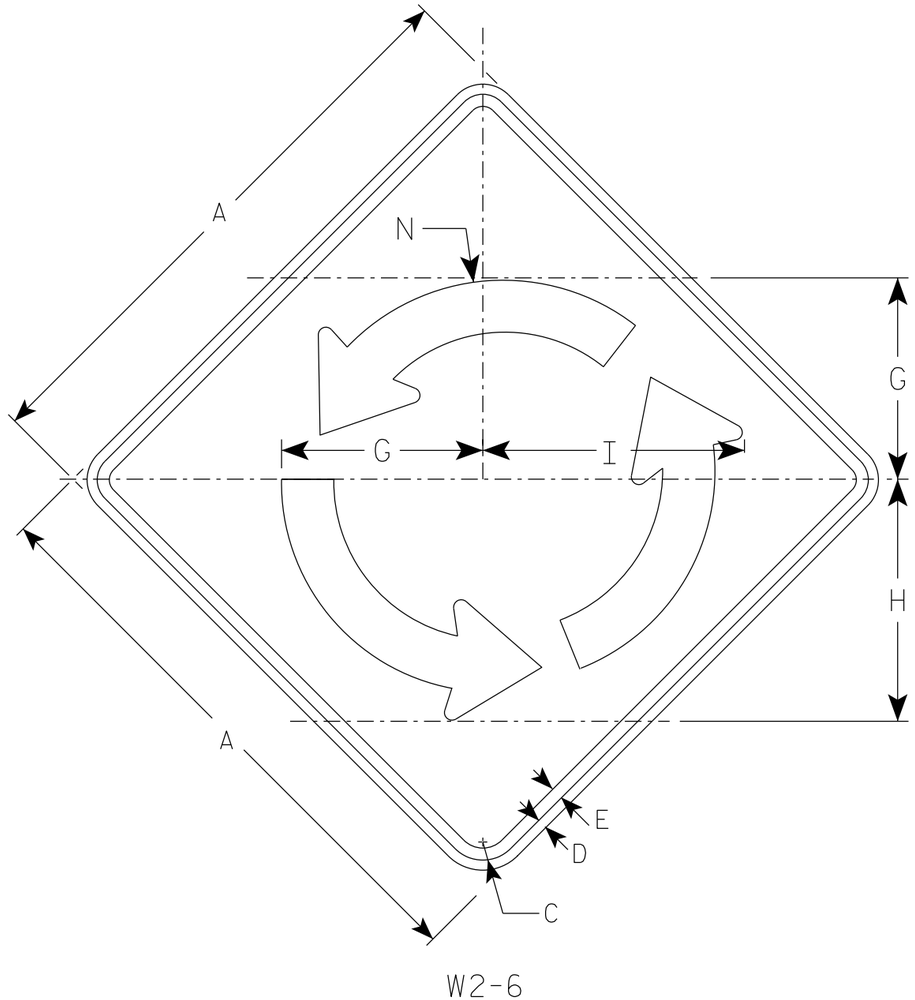

W2-6

NOTES

1. Sign is Type II - Type F Reflective
2. Color:
   Background - Yellow
   Message - Black

Arrow Detail

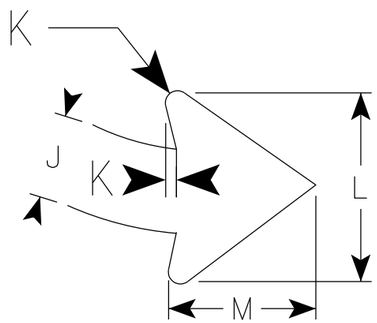

SIZE	A	B	C	D	E	F	G	H	I	J	K	L	M	N	O	P	Q	R	S	T	U	V	W	X	Area sq. ft.
1																									
2S	30		1 3/8	1/2	5/8		10 3/8	12 1/2	13 1/2	2 3/4	3/8	6	4 3/4	11 1/8											6.25
2M	30		1 3/8	1/2	5/8		10 3/8	12 1/2	13 1/2	2 3/4	3/8	6	4 3/4	11 1/8											6.25
3	36		1 5/8	5/8	3/4		12 1/2	15	16 1/4	3 1/4	1/2	7 3/8	5 3/4	13 3/8											9.00
4	48		2 1/4	3/4	1		16 5/8	20	16 1/4	4 3/8	5/8	9 3/4	7 5/8	17 7/8											16.0
5																									

STANDARD SIGN
W2-6

WISCONSIN DEPT OF TRANSPORTATION

APPROVED Matthew R Rauch
for State Traffic Engineer

DATE 3/24/21 PLATE NO. W2-6.7

PROJECT NO:

SHEET NO: 250 E

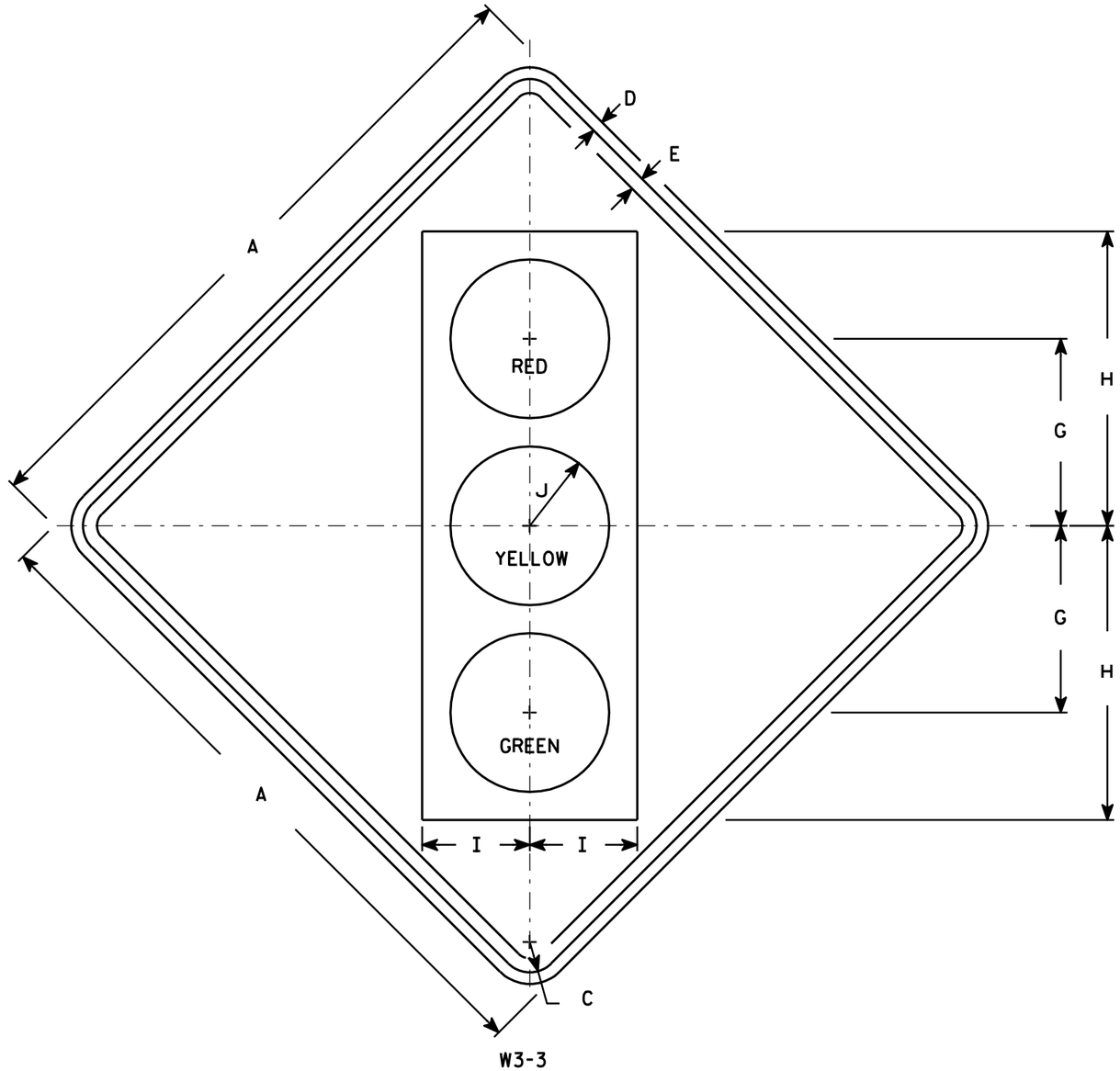

NOTES

1. Sign is Type II - Type F Reflective - reference WIS DOT Standard Specification for HIGHWAY and STRUCTURE CONSTRUCTION latest edition.
2. Color:
   Background - Yellow
   Message - See Note 4
3. Corners may be square or rounded when base material is plywood but borders shall be rounded as shown. When base material is metal, the corners and borders shall be rounded.
4. Symbol and border are non-reflective black.
   Top circle - Type H Reflectorized Red
   Center circle - Same as background
   Bottom circle - Type H Reflectorized Green

SIZE	A	B	C	D	E	F	G	H	I	J	K	L	M	N	O	P	Q	R	S	T	U	V	W	X	Y	Z	Area sq. ft.
1	30		1 3/8	1/2	5/8		8 3/4	13 3/4	5	3 3/4																	6.25
2S	36		1 5/8	5/8	3/4		10	15 3/4	5 3/4	4 1/4																	9.0
2M	36		1 5/8	5/8	3/4		10	15 3/4	5 3/4	4 1/4																	9.0
3	36		1 5/8	5/8	3/4		10	15 3/4	5 3/4	4 1/4																	9.0
4	48		2 1/4	3/4	1		12 1/2	20	7 1/2	5																	16.0
5	48		2 1/4	3/4	1		12 1/2	20	7 1/2	5																	16.0

STANDARD SIGN
W3-3

WISCONSIN DEPT OF TRANSPORTATION

APPROVED Matthew R Rauch
for State Traffic Engineer

DATE 6/7/10 PLATE NO. W3-3.11

PROJECT NO: | HWY: | COUNTY: | SHEET NO: 251 | E

7

FILE NAME : C:\Users\PROJECTS\tr_stdplate\W33.DGN PLOT DATE : 07-JUN-2010 13:07 PLOT BY : ditjph PLOT NAME : PLOT SCALE : 7.448805:1.000000

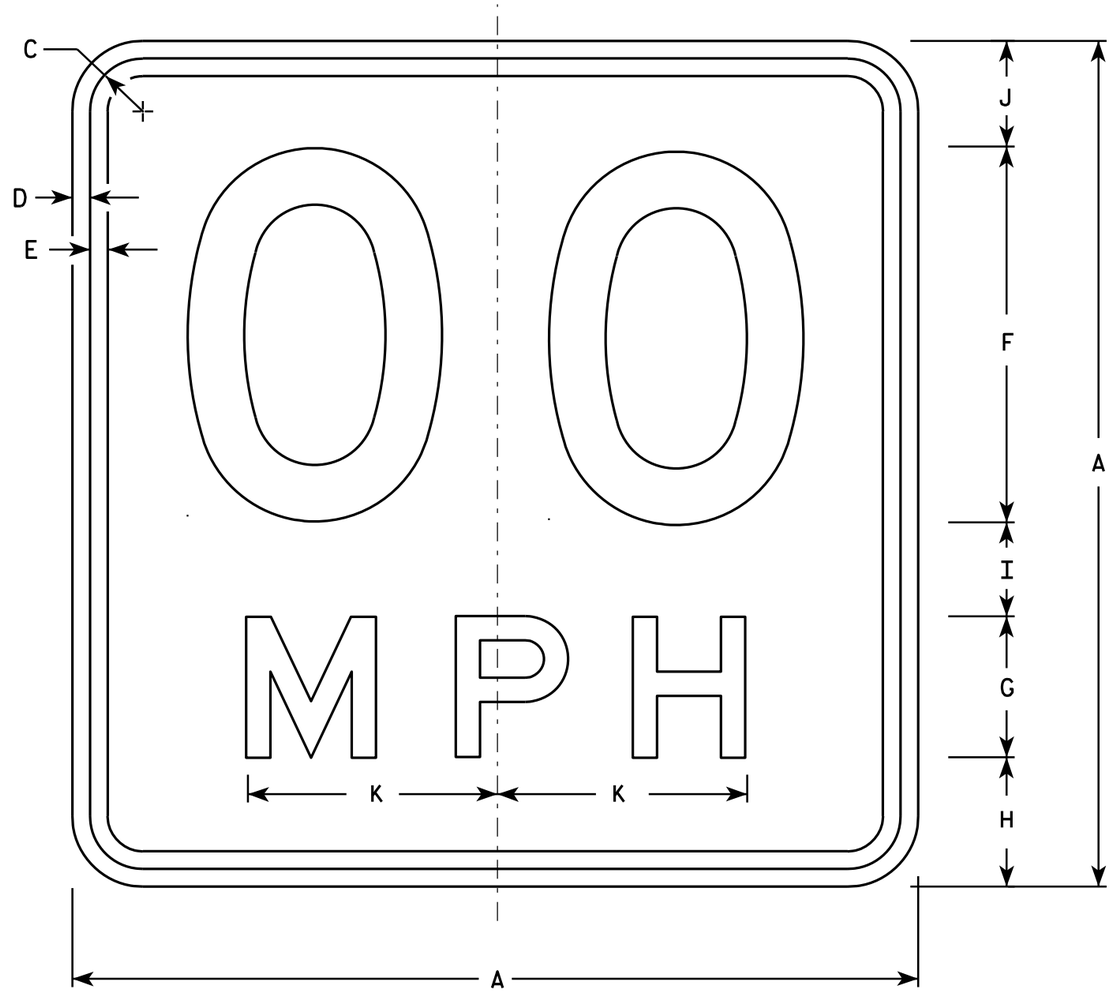

W13-1

* For 30" x 30" Warning Signs, use 18" x 18" W13-1 signs.
For 36" x 36" Warning Signs, use 24" x 24" W13-1 signs.

NOTES

1. Sign is Type II - Type F Reflective - reference WIS DOT Standard Specification for HIGHWAY and STRUCTURE CONSTRUCTION latest edition.
2. Color:
   Background - Yellow
   Message - Black
3. Message Series - See Note 6
4. Corners may be square or rounded when base material is plywood but borders shall be rounded as shown. When base material is metal, the corners and borders shall be rounded.
5. Substitute appropriate numerals and optically space about centerline to achieve proper balance.
6. Line 1 is Series D
   Line 2 is Series E

	SIZE	A	B	C	D	E	F	G	H	I	J	K	L	M	N	O	P	Q	R	S	T	U	V	W	X	Y	Z	Area sq. ft.
	1	18		1 1/8	3/8	3/8	8	3	2 3/4	2	2 1/4	5 3/8																2.25
*	2S	18		1 1/8	3/8	3/8	8	3	2 3/4	2	2 1/4	5 3/8																2.25
*	2M	18		1 1/8	3/8	3/8	8	3	2 3/4	2	2 1/4	5 3/8																2.25
	3	24		1 1/8	3/8	1/2	10	4	4	2 3/4	3 1/4	6 5/8																4.00
	4	36		1 5/8	5/8	3/4	16	6	5 1/2	4	4 1/2	10 5/8																9.00
	5	36		1 5/8	5/8	3/4	16	6	5 1/2	4	4 1/2	10 5/8																9.00

STANDARD SIGN
W13-1

WISCONSIN DEPT OF TRANSPORTATION

APPROVED Matthew R Rauch
for State Traffic Engineer

DATE 5/31/12 PLATE NO. W13-1.16

PROJECT NO: | HWY: | COUNTY: | SHEET NO: 252 | E

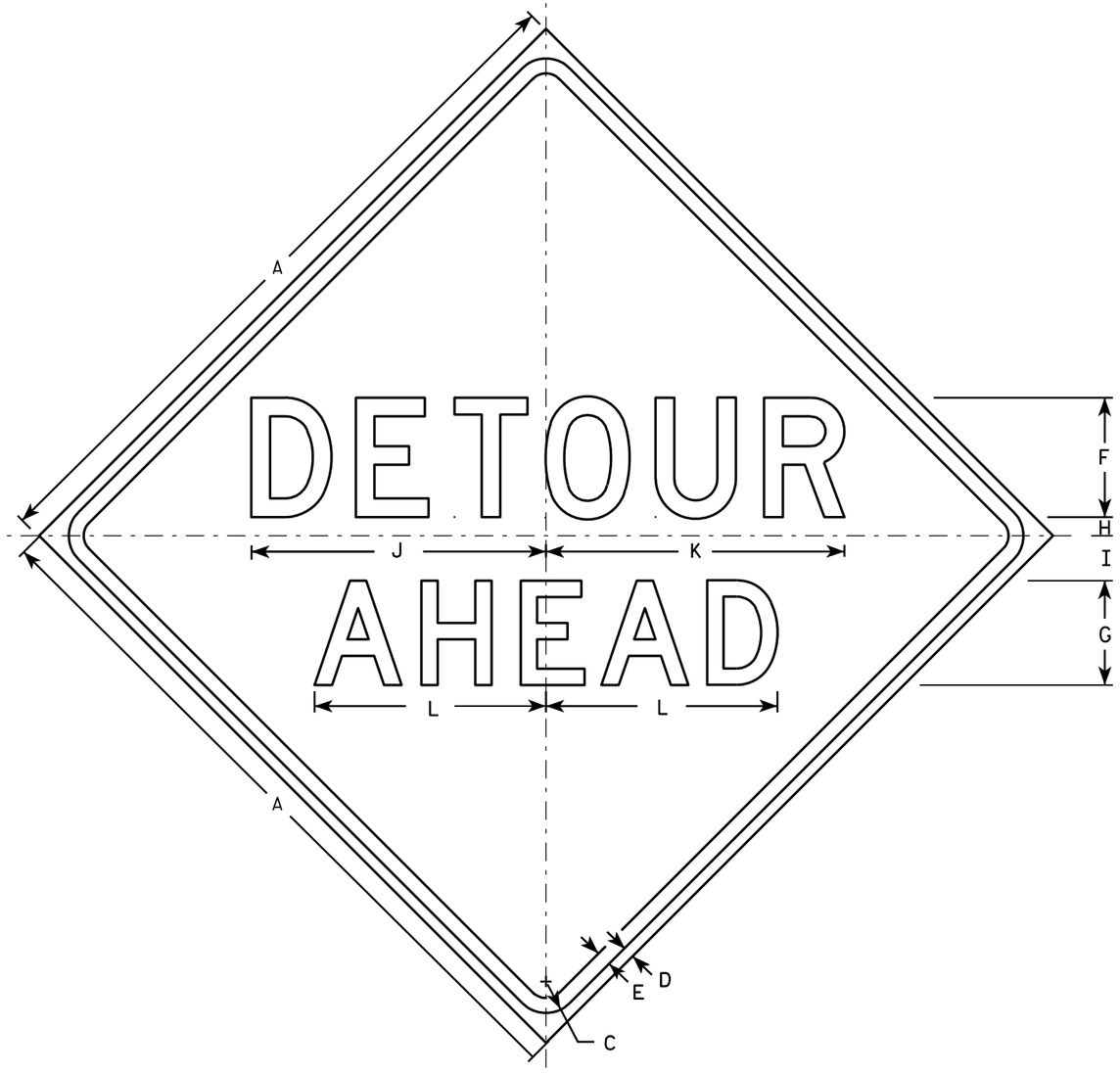

W20-2A

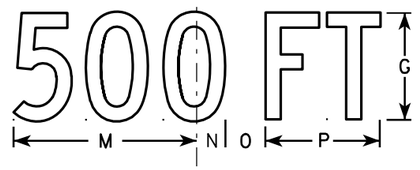

W20-2D

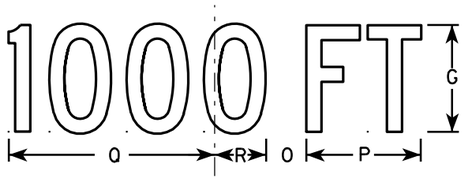

W20-2C

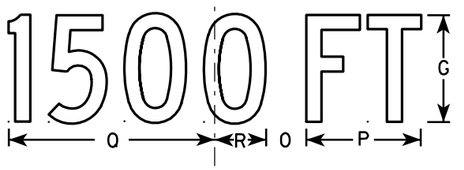

W20-2B

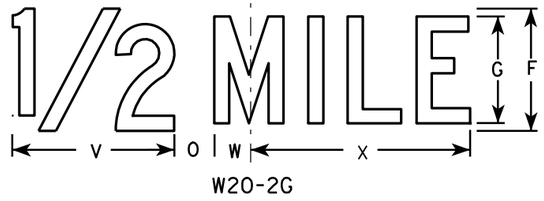

W20-2G



W20-2F

NOTES

1. Sign is Type II - Type F Reflective - reference WIS DOT Standard Specification for HIGHWAY and STRUCTURE CONSTRUCTION latest edition.
2. Color:
   Background - Orange
   Message - Black
3. Message Series - See note 5
4. Corners may be square or rounded when base material is plywood but borders shall be rounded as shown. When base material is metal, the corners and borders shall be rounded.
5. Line 1 is Series D.
   Line 2 is Series D for AHEAD and Series C for all other distances.

SIZE	A	B	C	D	E	F	G	H	I	J	K	L	M	N	O	P	Q	R	S	T	U	V	W	X	Y	Z	Area sq. ft.
1	36		1 5/8	5/8	3/4	6	5	1	2 1/4	14 3/4	15	11 5/8	9	1 3/8	1 7/8	5 5/8	10 1/8	2 1/2	1 1/8	4 1/2	3 1/2	8	1 3/4	10 3/4			9.0
2S	48		2 1/4	3/4	1	8	7	1 1/4	3	19 3/4	20	15 1/2	12	1 7/8	2 5/8	7 1/2	13 1/2	3 3/8	1 1/2	6	4 5/8	10 5/8	2 3/8	14 3/8			16.0
2M	48		2 1/4	3/4	1	8	7	1 1/4	3	19 3/4	20	15 1/2	12	1 7/8	2 5/8	7 1/2	13 1/2	3 3/8	1 1/2	6	4 5/8	10 5/8	2 3/8	14 3/8			16.0
3	48		2 1/4	3/4	1	8	7	1 1/4	3	19 3/4	20	15 1/2	12	1 7/8	2 5/8	7 1/2	13 1/2	3 3/8	1 1/2	6	4 5/8	10 5/8	2 3/8	14 3/8			16.0
4	48		2 1/4	3/4	1	8	7	1 1/4	3	19 3/4	20	15 1/2	12	1 7/8	2 5/8	7 1/2	13 1/2	3 3/8	1 1/2	6	4 5/8	10 5/8	2 3/8	14 3/8			16.0
5	48		2 1/4	3/4	1	8	7	1 1/4	3	19 3/4	20	15 1/2	12	1 7/8	2 5/8	7 1/2	13 1/2	3 3/8	1 1/2	6	4 5/8	10 5/8	2 3/8	14 3/8			16.0

STANDARD SIGN
W20-2A,B,C,D,F & G

WISCONSIN DEPT OF TRANSPORTATION

APPROVED Matthew R Rauch
for State Traffic Engineer

DATE 3/18/11 PLATE NO. W20-2.6

PROJECT NO:	HWY:	COUNTY:		SHEET NO: 253	E

EARTHWORK - STH 54 EB

STATION	AREA (SF)		Incremental Vol (CY) (Unadjusted)		Cumulative Vol (CY)		Mass Ordinate
	Cut	Fill	Cut	Fill	Cut 1.00	Expanded Fill 1.30	Note 8
1186+75	152.0	0.0					
1187+00	146.9	0.0	138	0	138	0	138
1187+25	151.6	0.0	138	0	277	0	277
1187+50	153.5	0.0	141	0	418	0	418
1187+75	146.9	0.4	139	0	557	0	557
1188+00	151.6	2.2	140	1	697	2	695
1188+25	163.1	2.7	149	2	846	5	841
1188+50	102.3	1.7	122	2	968	8	961
1188+55	88.0	1.3	18	0	986	8	978
1189+54	79.8	0.0					
1189+75	87.8	0.0	65	0	1,051	8	1,043
1190+00	151.6	2.9	111	1	1,162	10	1,152
1190+25	144.9	2.5	137	2	1,299	13	1,286
1190+50	150.1	0.6	137	1	1,436	15	1,421
1190+75	167.2	0.0	147	0	1,582	15	1,567
1191+00	173.1	0.0	158	0	1,740	15	1,725
1191+25	189.8	0.4	168	0	1,908	15	1,893
1191+50	203.1	0.0	182	0	2,090	16	2,074
1191+75	196.8	0.0	185	0	2,275	16	2,259
1192+00	181.0	1.3	175	1	2,450	16	2,433
1192+25	162.3	2.8	159	2	2,609	19	2,590
1192+50	87.5	1.2	116	2	2,724	21	2,703
1192+68	79.5	0.0	57	0	2,781	22	2,759
1193+69	84.9	1.1					
1193+75	94.0	0.4	20	0	2,801	22	2,779
1194+00	80.5	0.2	81	0	2,882	22	2,859
1194+25	164.0	0.7	113	0	2,995	23	2,972
1194+50	172.3	2.3	156	1	3,151	25	3,126
1194+75	167.4	5.1	157	3	3,308	29	3,279
1195+00	175.6	0.5	159	3	3,467	33	3,434
1195+15	153.8	5.5	91	2	3,558	35	3,523

Notes:	
8 - Mass Ordinate	Cut - (Fill * Fill Factor)

EARTHWORK - STH 54 WB

STATION	AREA (SF)		Incremental Vol (CY) (Unadjusted)		Cumulative Vol (CY)		Mass Ordinate
	Cut	Fill	Cut	Fill	Cut 1.00	Expanded Fill 1.30	Note 8
1188+49	110.5	0.0					
1188+55	104.1	0.0	23	0	23	0	23
1189+56	87.0	0.0					
1189+75	94.6	0.0	63	0	86	0	86
1192+50	85.9	0.0					
1192+69	82.4	0.0	59	0	144	0	144
1193+69	78.9	0.9					
1194+00	84.4	1.3	93	1	237	2	236

EARTHWORK - STH 55 NB

STATION	AREA (SF)		Incremental Vol (CY) (Unadjusted)		Cumulative Vol (CY)		Mass Ordinate
	Cut	Fill	Cut	Fill	Cut 1.00	Expanded Fill 1.30	Note 8
10+00	117.3	0.0					
10+25	118.3	0.0	109	0	109	0	109
10+50	179.6	1.9	138	1	247	1	246
10+75	170.5	1.6	162	2	409	3	406
11+00	163.5	2.3	155	2	564	6	558
11+25	155.9	1.3	148	2	712	8	704
11+50	148.3	0.0	137	0	849	8	841
11+75	148.6	0.0	137	0	986	8	979

EARTHWORK - STH 55 SB

STATION	AREA (SF)		Incremental Vol (CY) (Unadjusted)		Cumulative Vol (CY)		Mass Ordinate
	Cut	Fill	Cut	Fill	Cut 1.00	Expanded Fill 1.30	Note 8
10+00	96.4	0.0					
10+25	96.5	0.0	89	0	89	0	89

EARTHWORK - IVORY NB

STATION	AREA (SF)		Incremental Vol (CY) (Unadjusted)		Cumulative Vol (CY)		Mass Ordinate
	Cut	Fill	Cut	Fill	Cut 1.00	Expanded Fill 1.30	Note 8
31+25	143.4	1.0					
31+50	142.2	0.1	132	1	132	1	131
31+75	134.3	1.6	128	1	260	2	258
32+00	134.2	2.8	124	2	385	4	380
32+25	87.4	0.1	103	1	487	6	481
32+29	75.5	0.1	13	0	500	6	494
33+30	83.6	0.0					
33+50	82.4	0.0	63	0	562	6	556
33+75	74.8	0.0	73	0	635	6	629
34+00	128.0	0.0	94	0	729	6	723
34+25	128.9	0.9	119	0	848	7	841
34+50	126.2	0.6	117	1	965	7	958

EARTHWORK - IVORY SB

STATION	AREA (SF)		Incremental Vol (CY) (Unadjusted)		Cumulative Vol (CY)		Mass Ordinate
	Cut	Fill	Cut	Fill	Cut 1.00	Expanded Fill 1.30	Note 8
32+24	95.2	0.0					
32+30	101.2	0.0	20	0	20	0	20
33+30	73.7	0.0					
33+50	73.9	2.3	55	1	75	1	74

EARTHWORK - STH 54/STH 55 RAB

STATION	AREA (SF)		Incremental Vol (CY) (Unadjusted)		Cumulative Vol (CY)		Mass Ordinate
	Cut	Fill	Cut	Fill	Cut 1.00	Expanded Fill 1.30	Note 8
50+00	192.8	0.0					
50+25	221.5	0.0	192	0	192	0	192
50+50	174.0	0.0	183	0	375	0	375
50+75	219.1	0.0	182	0	557	0	557
51+00	212.2	0.0	200	0	757	0	757
51+25	213.4	0.0	197	0	954	0	954
51+50	180.2	0.0	167	0	1,120	0	1,120
51+75	242.3	0.0	196	0	1,316	0	1,316
51+92	192.8	0.0	141	0	1,457	0	1,457

EARTHWORK - STH 54/IVORY ST RAB

STATION	AREA (SF)		Incremental Vol (CY) (Unadjusted)		Cumulative Vol (CY)		Mass Ordinate
	Cut	Fill	Cut	Fill	Cut 1.00	Expanded Fill 1.30	Note 8
60+00	149.1	0.0					
60+25	159.3	0.0	143	0	143	0	143
60+50	159.3	0.0	148	0	148	0	290
60+75	180.3	0.0	157	0	305	0	448
61+00	149.1	0.0	152	0	457	0	600
61+25	182.4	0.0	153	0	611	0	754
61+50	158.4	0.0	158	0	769	0	911
61+75	184.7	0.0	171	0	940	0	1,082
61+91	149.1	0.0	99	0	1,039	0	1,182

Notes:	
8 - Mass Ordinate	Cut - (Fill * Fill Factor)

EARTHWORK - STH 54 EB GUARDRAIL (STATION 1327+14 LT - STATION 1331+05 LT)

STATION	AREA (SF)		Incremental Vol (CY) (Unadjusted)		Cumulative Vol (CY)		Mass Ordinate
	Cut	Fill	Cut	Fill	Cut 1.00	Expanded Fill 1.30	Note 8
1327+14	0.0	0.0					
1327+95	14.0	12.6	21	19	21	24	-4
1328+20	0.0	0.0	6	6	27	32	-5
1328+29	15.3	9.9	3	2	30	34	-4
1328+45	0.0	0.0	5	3	35	38	-3
1328+70	12.0	14.0	6	6	40	46	-6
1328+95	0.0	0.0	0	0	40	46	-6
1329+25	14.2	2.6	8	1	48	48	0
1329+50	14.7	1.2	13	2	61	50	11
1329+76	15.5	5.5	14	3	76	55	21
1330+01	15.6	3.1	14	4	90	60	30
1330+26	18.7	1.1	16	2	106	62	44
1330+75	13.5	1.3	29	2	135	65	70
1331+05	0.0	0.0	7	1	143	66	77

EARTHWORK - STH 54 EB GUARDRAIL (STATION 1327+56 RT - STATION 1331+17 RT)

STATION	AREA (SF)		Incremental Vol (CY) (Unadjusted)		Cumulative Vol (CY)		Mass Ordinate
	Cut	Fill	Cut	Fill	Cut 1.00	Expanded Fill 1.30	Note 8
1327+56	0.0	0.0					
1327+95	12.1	3.3	9	2	9	3	6
1328+29	0.0	0.0	8	2	16	6	11
1328+45	0.0	0.0	0	0	16	6	11
1328+70	13.0	10.0	6	5	22	12	11
1328+95	11.3	13.4	11	11	34	26	8
1329+25	0.0	0.0	6	7	40	35	4
1329+50	8.0	16.2	4	8	44	45	-2
1329+76	10.6	10.8	9	13	52	62	-10
1330+01	11.4	12.4	10	11	63	76	-13
1330+26	7.3	18.9	9	15	71	95	-24
1330+50	7.3	14.4	6	15	78	114	-36
1330+75	8.9	10.0	7	11	85	129	-44
1331+17	0.0	0.0	7	8	92	139	-47

Notes:	
8 - Mass Ordinate	Cut - (Fill * Fill Factor)

EARTHWORK - STH 54 EB GUARDRAIL (STATION 1415+50 LT - STATION 1419+52 LT)

STATION	AREA (SF)		Incremental Vol (CY) (Unadjusted)		Cumulative Vol (CY)		Mass Ordinate
	Cut	Fill	Cut	Fill	Cut 1.00	Expanded Fill 1.30	Note 8
1415+50	0.0	0.0					
1415+74	11.6	13.9	5	6	5	8	-3
1415+99	12.6	17.3	7	10	7	21	-8
1416+17	16.8	19.4	10	12	17	37	-14
1416+24	17.4	17.6	4	5	22	43	-16
1416+42	16.7	14.4	11	11	33	57	-18
1416+67	13.1	13.6	14	13	47	73	-21
1417+17	0.0	0.0	0	0	47	73	-21
1417+67	12.7	6.2	12	6	59	81	-17
1417+92	12.7	6.6	12	6	70	89	-13
1418+11	12.0	12.2	9	7	79	97	-13
1418+18	12.2	18.9	3	4	82	102	-15
1418+36	7.3	21.2	7	13	89	120	-26
1418+61	5.1	28.1	6	23	94	149	-50
1418+85	8.6	27.4	6	25	101	182	-76
1419+52	0.0	0.0	11	34	111	226	-110

EARTHWORK - STH 54 EB GUARDRAIL (STATION 1415+07 RT - STATION 1418+60 RT)

STATION	AREA (SF)		Incremental Vol (CY) (Unadjusted)		Cumulative Vol (CY)		Mass Ordinate
	Cut	Fill	Cut	Fill	Cut 1.00	Expanded Fill 1.30	Note 8
1415+07	0.0	0.0					
1415+50	12.3	13.2	10	11	10	14	-4
1415+74	14.1	15.6	12	13	21	30	-9
1415+99	15.7	9.5	14	12	35	45	-10
1416+17	16.7	6.7	11	5	46	52	-6
1416+24	17.0	5.8	4	2	50	55	-4
1416+42	17.6	1.3	12	2	62	58	4
1416+67	15.5	0.8	15	1	77	59	18
1417+17	0.0	0.0	14	1	92	60	32
1417+67	79.1	0.0	73	0	165	60	105
1417+92	67.2	0.0	68	0	233	60	173
1418+11	13.5	11.2	28	4	261	65	196
1418+18	14.1	12.3	4	3	265	69	196
1418+36	13.2	12.8	9	8	274	80	194
1418+60	0.0	0.0	6	6	280	87	192

EARTHWORK - STH 54 EB GUARDRAIL (STATION 1438+27 LT - STATION 1442+20 LT)

STATION	AREA (SF)		Incremental Vol (CY) (Unadjusted)		Cumulative Vol (CY)		Mass Ordinate
	Cut	Fill	Cut	Fill	Cut 1.00	Expanded Fill 1.30	Note 8
1438+27	0.0	0.0					
1438+50	11.4	8.4	5	4	5	5	0
1438+80	9.6	13.2	8	8	8	15	-2
1438+97	9.7	22.3	6	11	14	30	-11
1439+22	10.9	21.9	10	20	23	56	-28
1439+47	11.9	28.8	11	23	34	87	-48
1440+00	0.0	0.0	12	28	46	123	-73
1440+50	13.8	0.8	26	1	71	125	-49
1440+91	12.5	10.9	20	9	91	137	-41
1441+16	11.6	14.9	11	12	102	152	-45
1441+41	11.0	18.9	10	16	113	173	-55
1442+00	10.8	10.8	24	33	136	215	-74
1442+20	0.0	0.0	4	4	140	220	-75

EARTHWORK - STH 54 EB GUARDRAIL (STATION 1438+40 RT - STATION 1442+20 RT)

STATION	AREA (SF)		Incremental Vol (CY) (Unadjusted)		Cumulative Vol (CY)		Mass Ordinate
	Cut	Fill	Cut	Fill	Cut 1.00	Expanded Fill 1.30	Note 8
1438+40	0.0	0.0					
1438+50	16.2	5.1	3	1	3	1	2
1438+80	13.7	11.1	17	9	20	13	7
1438+97	14.0	14.3	9	8	28	23	5
1439+22	15.2	9.5	14	11	42	38	4
1439+47	16.4	4.6	15	7	56	46	10
1440+00	9.0	0.0	25	5	81	52	29
1440+50	0.0	0.0	8	0	90	52	38
1440+91	13.6	17.0	10	13	100	69	31
1441+16	13.6	18.3	13	16	113	90	23
1441+41	12.9	22.3	12	19	125	114	11
1442+00	13.8	6.2	29	31	154	155	-1
1442+20	0.0	0.0	5	2	159	158	1

EARTHWORK - STH 54 EB GUARDRAIL (STATION 1522+00 LT - STATION 1525+73 LT)

STATION	AREA (SF)		Incremental Vol (CY) (Unadjusted)		Cumulative Vol (CY)		Mass Ordinate
	Cut	Fill	Cut	Fill	Cut 1.00	Expanded Fill 1.30	Note 8
1522+00	0.0	0.0					
1522+30	13.1	15.6	7	9	7	11	-4
1522+69	15.6	15.7	14	15	14	31	-10
1522+94	15.7	11.8	15	13	28	47	-12
1523+00	15.8	12.6	4	3	32	51	-12
1523+19	11.7	17.2	10	10	42	65	-16
1523+25	11.9	15.3	3	4	44	69	-18
1523+50	11.4	5.1	11	5	55	75	-13
1523+75	0.0	0.0	5	2	60	78	-11
1524+00	12.9	12.1	6	6	66	86	-13
1524+31	13.5	7.7	15	11	81	101	-12
1524+56	13.5	7.2	12	7	94	109	-9
1524+63	15.2	8.4	4	2	97	112	-8
1524+81	17.0	5.0	11	4	108	118	-3
1524+88	16.8	5.3	4	1	112	120	0
1525+13	15.7	7.0	15	6	127	127	8
1525+34	15.5	2.6	12	4	140	132	15
1525+73	0.0	0.0	11	2	150.77	134	24

EARTHWORK - STH 54 EB GUARDRAIL (STATION 1522+09 RT - STATION 1525+34 RT)

STATION	AREA (SF)		Incremental Vol (CY) (Unadjusted)		Cumulative Vol (CY)		Mass Ordinate
	Cut	Fill	Cut	Fill	Cut 1.00	Expanded Fill 1.30	Note 8
1522+09	0.0	0.0					
1522+30	11.0	10.4	4	4	4	5	-1
1522+69	14.7	6.7	19	12	23	21	2
1522+94	0.0	0.0	7	3	30	25	4
1523+00	20.4	1.5	2	0	32	26	6
1523+19	12.0	25.4	11	9	43	38	5
1523+25	11.5	24.3	3	6	46	45	1
1523+50	11.1	21.9	10	21	56	73	-17
1523+75	0.0	0.0	5	10	61	86	-25
1524+00	8.9	15.1	4	7	66	95	-30
1524+31	11.8	17.3	12	19	77	119	-42
1524+56	12.8	17.3	11	16	89	140	-51
1524+63	13.4	18.8	3	5	92	146	-54
1524+81	14.6	21.5	9	13	102	164	-62
1524+88	14.4	20.1	4	5	105	171	-65
1525+13	12.5	15.8	12	17	118	192	-74
1525+34	0.0	0.0	5	6	122.59	200	-78

Notes:	
8 - Mass Ordinate	Cut - (Fill * Fill Factor)

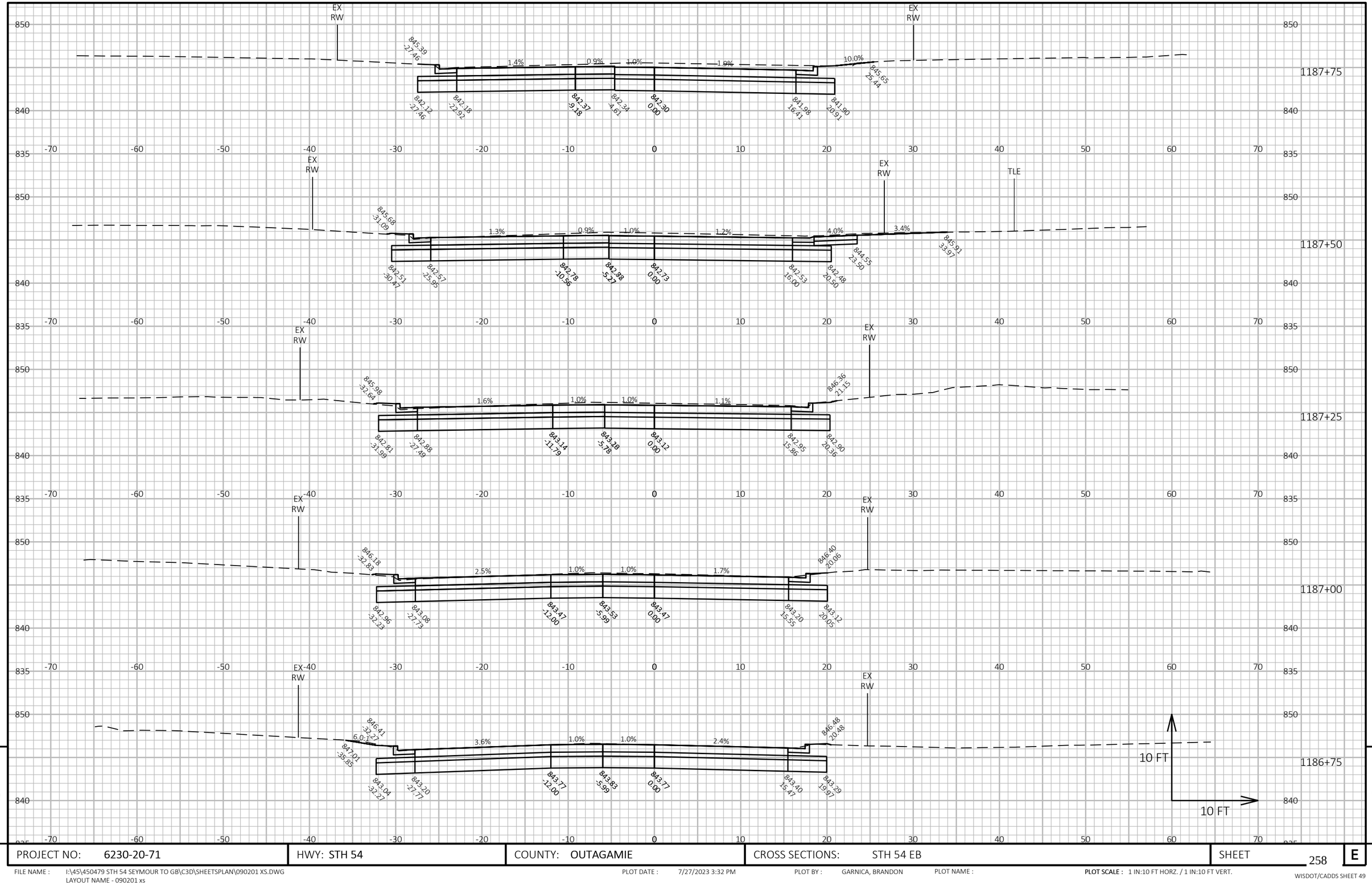

9

9

PROJECT NO: 6230-20-71	HWY: STH 54	COUNTY: OUTAGAMIE	CROSS SECTIONS: STH 54 EB	SHEET 258	E

FILE NAME : I:\45\450479 STH 54 SEYMOUR TO GB\C3D\SHEETSPLAN\090201 XS.DWG
LAYOUT NAME - 090201 xs

PLOT DATE : 7/27/2023 3:32 PM

PLOT BY : GARNICA, BRANDON

PLOT NAME :

PLOT SCALE : 1 IN:10 FT HORZ. / 1 IN:10 FT VERT.

WISDOT/CADDS SHEET 49

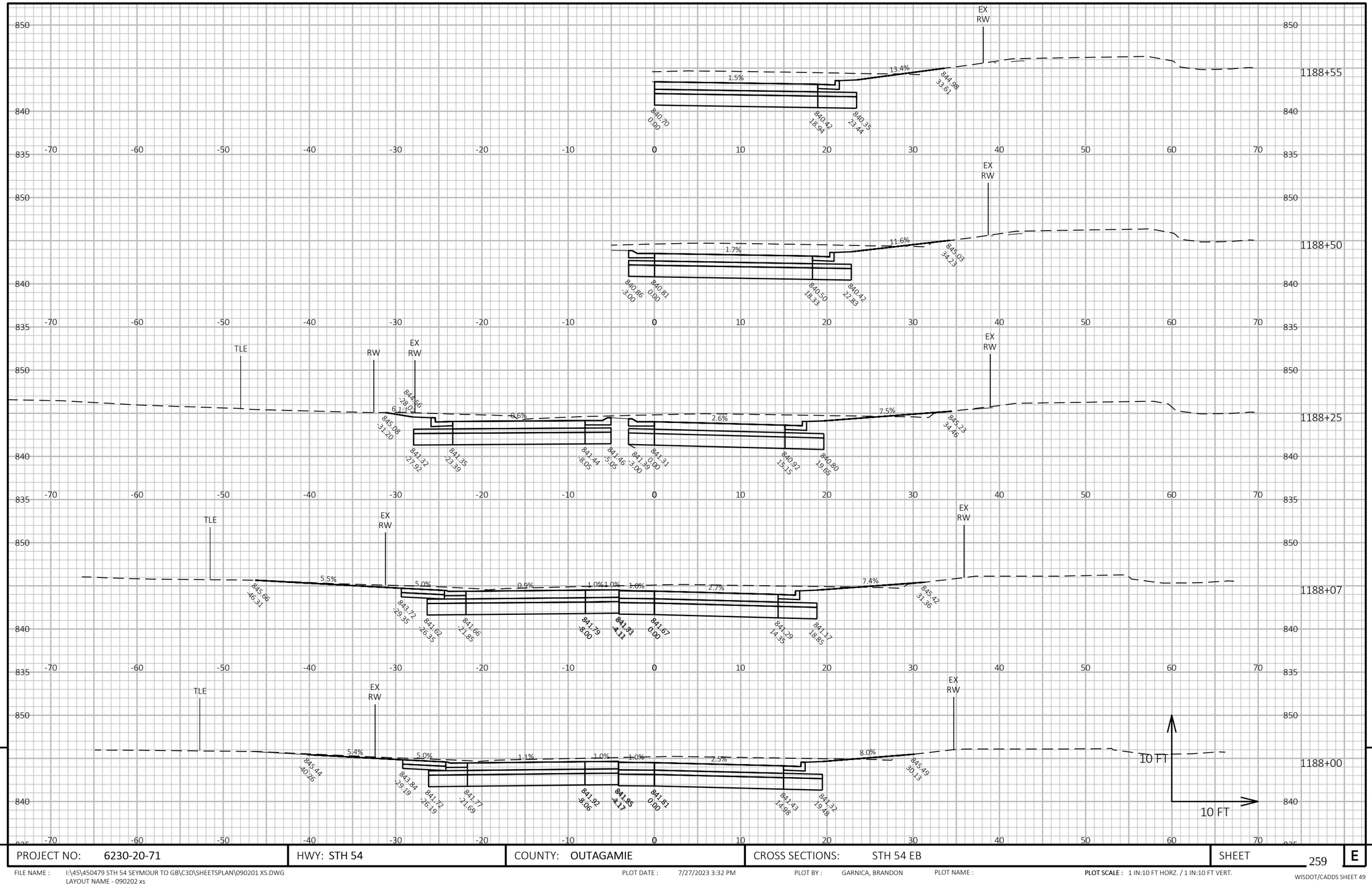

PROJECT NO: 6230-20-71	HWY: STH 54	COUNTY: OUTAGAMIE	CROSS SECTIONS: STH 54 EB	SHEET 259	E

FILE NAME : I:\45\450479 STH 54 SEYMOUR TO GB\C3D\SHEETSPLAN\090201 XS.DWG
LAYOUT NAME - 090202 xs

PLOT DATE : 7/27/2023 3:32 PM

PLOT BY : GARNICA, BRANDON

PLOT NAME :

PLOT SCALE : 1 IN:10 FT HORZ. / 1 IN:10 FT VERT.

WISDOT/CADDS SHEET 49

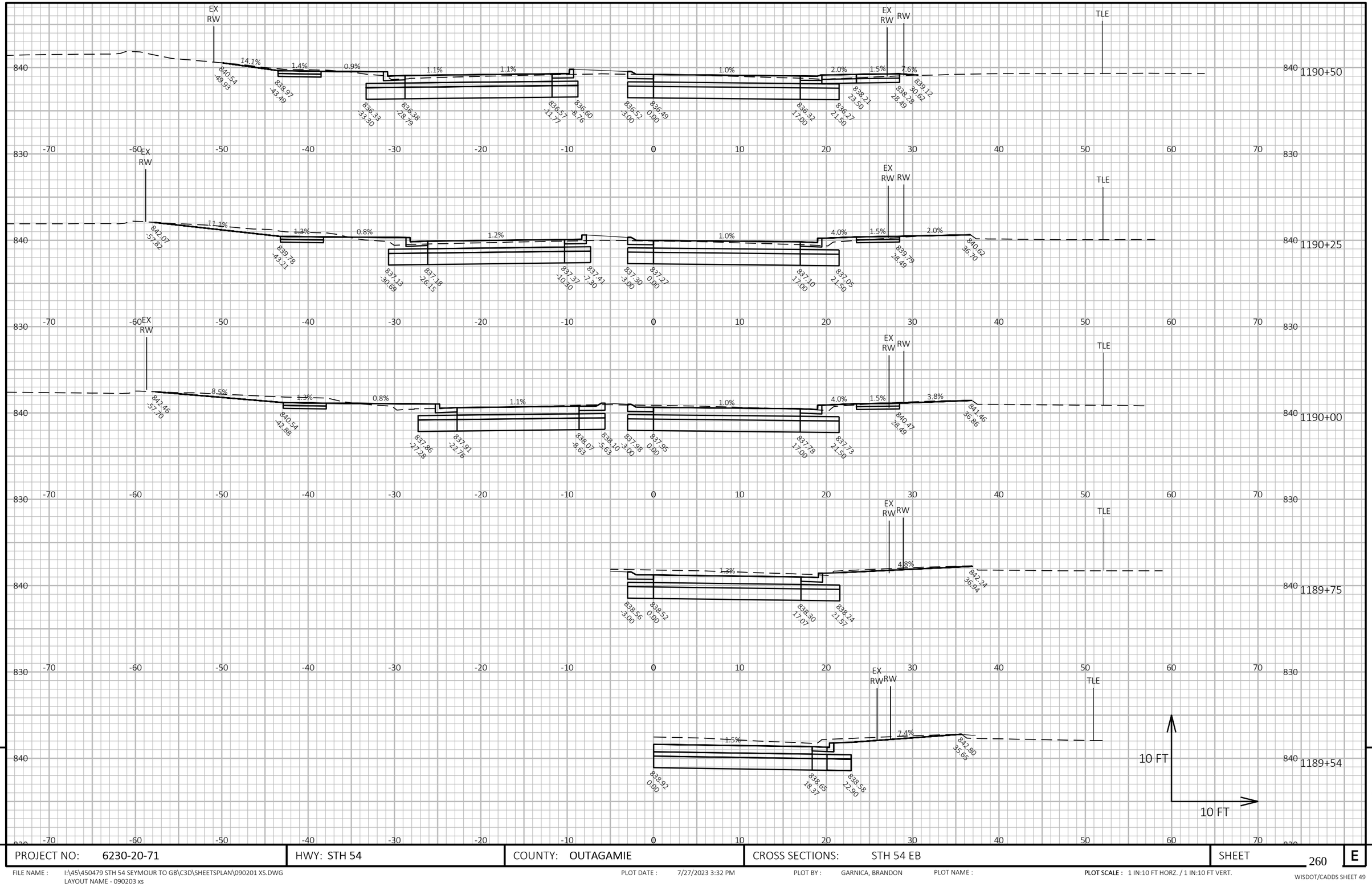

9

9

PROJECT NO: 6230-20-71	HWY: STH 54	COUNTY: OUTAGAMIE	CROSS SECTIONS: STH 54 EB	SHEET 260	E

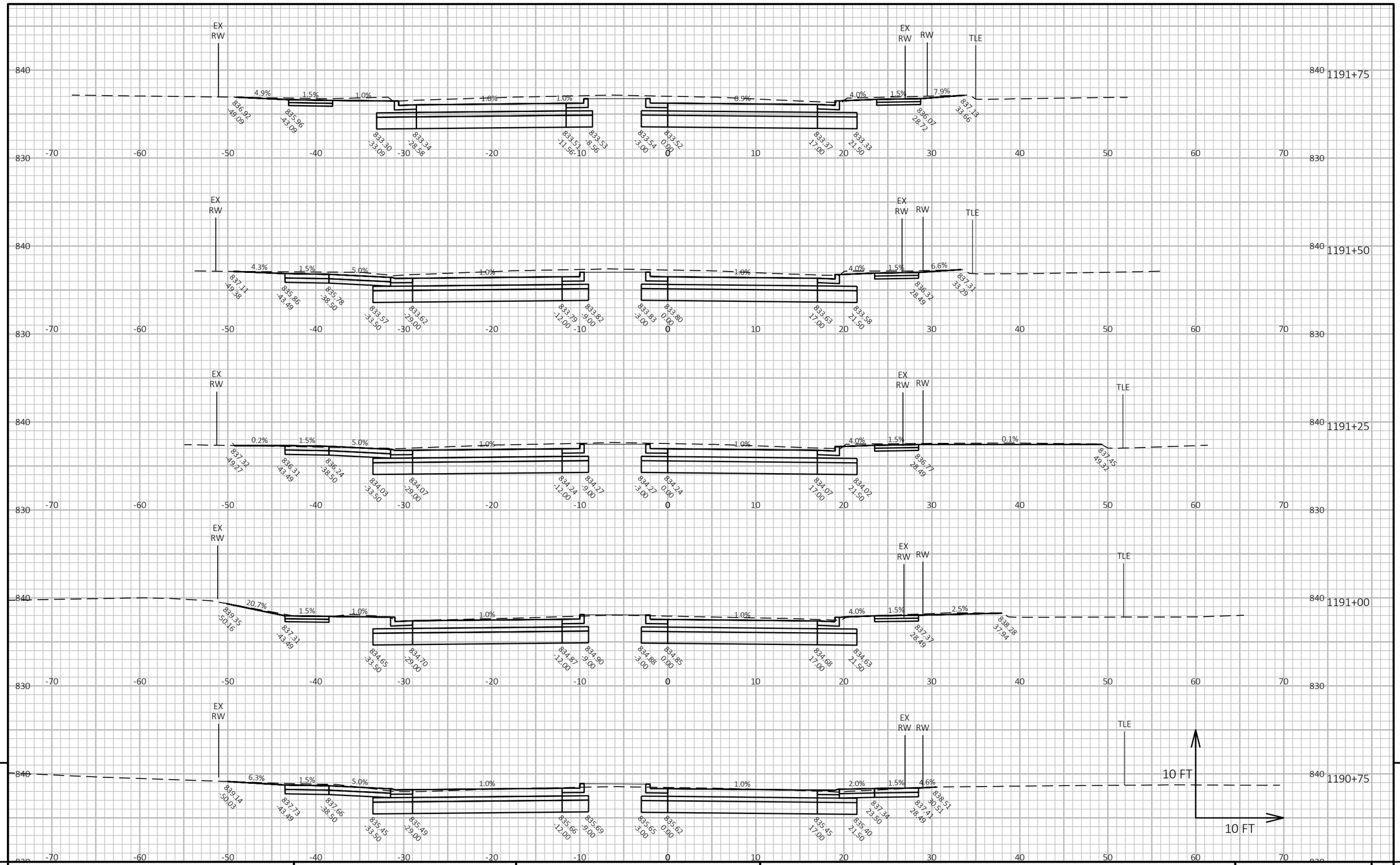

PROJECT NO: 6230-20-71	HWY: STH 54	COUNTY: OUTAGAMIE	CROSS SECTIONS: STH 54 EB	SHEET 261	E

FILE NAME : I:\45\450479 STH 54 SEYMOUR TO GB\C3D\SHEETSPLAN\090201 XS.DWG
LAYOUT NAME - 090204 xs

PLOT DATE : 7/27/2023 3:32 PM PLOT BY : GARNICA, BRANDON PLOT NAME :

PLOT SCALE : 1 IN:10 FT HORZ. / 1 IN:10 FT VERT.

WISDOT/CADDS SHEET 49

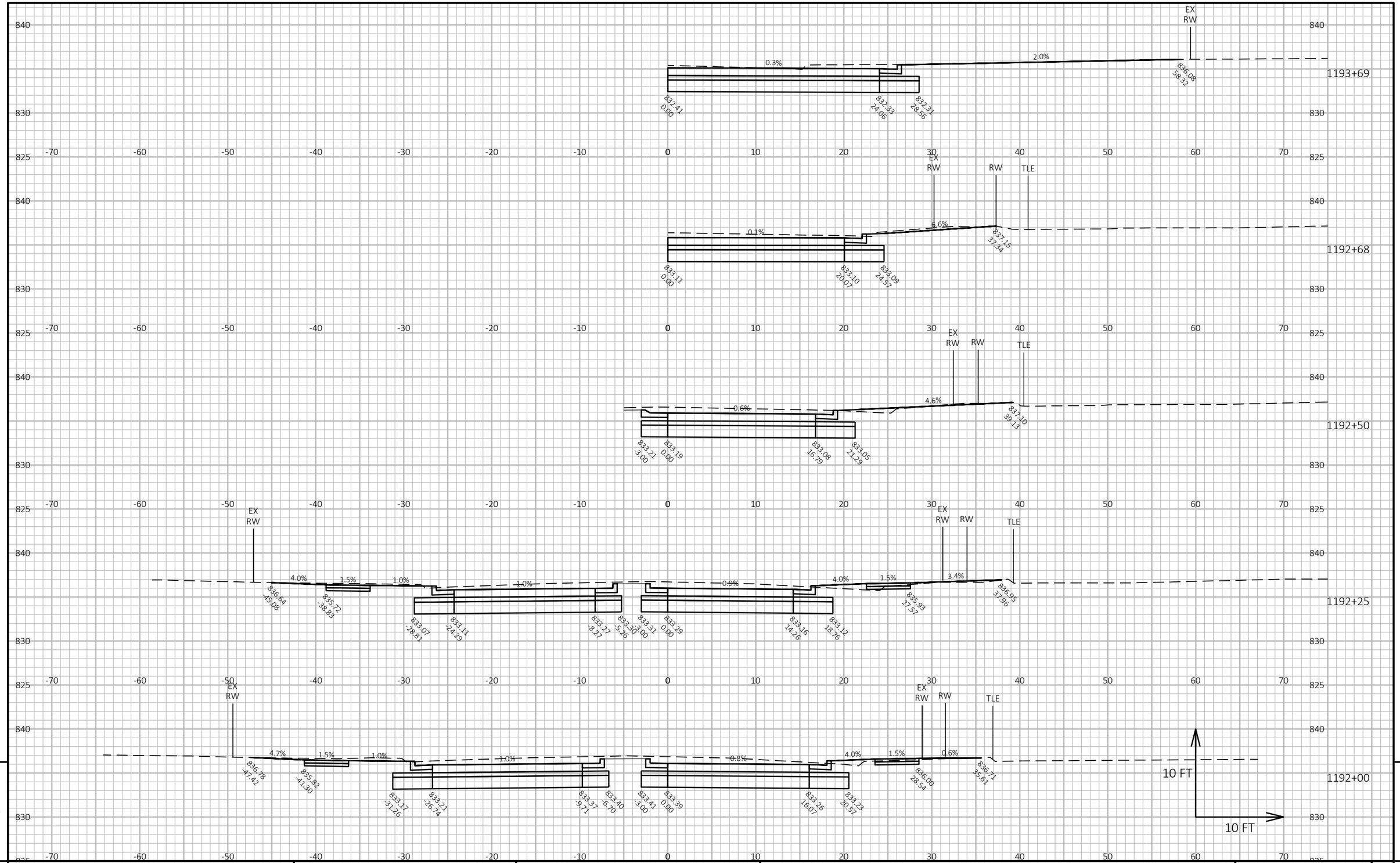

9

9

PROJECT NO: 6230-20-71	HWY: STH 54	COUNTY: OUTAGAMIE	CROSS SECTIONS: STH 54 EB	SHEET 262	E

FILE NAME : I:\45\450479 STH 54 SEYMOUR TO GB\C3D\SHEETSPLAN\090201 XS.DWG
LAYOUT NAME - 090205 xs

PLOT DATE : 7/27/2023 3:32 PM PLOT BY : GARNICA, BRANDON PLOT NAME : PLOT SCALE : 1 IN:10 FT HORZ. / 1 IN:10 FT VERT.

WISDOT/CADDS SHEET 49

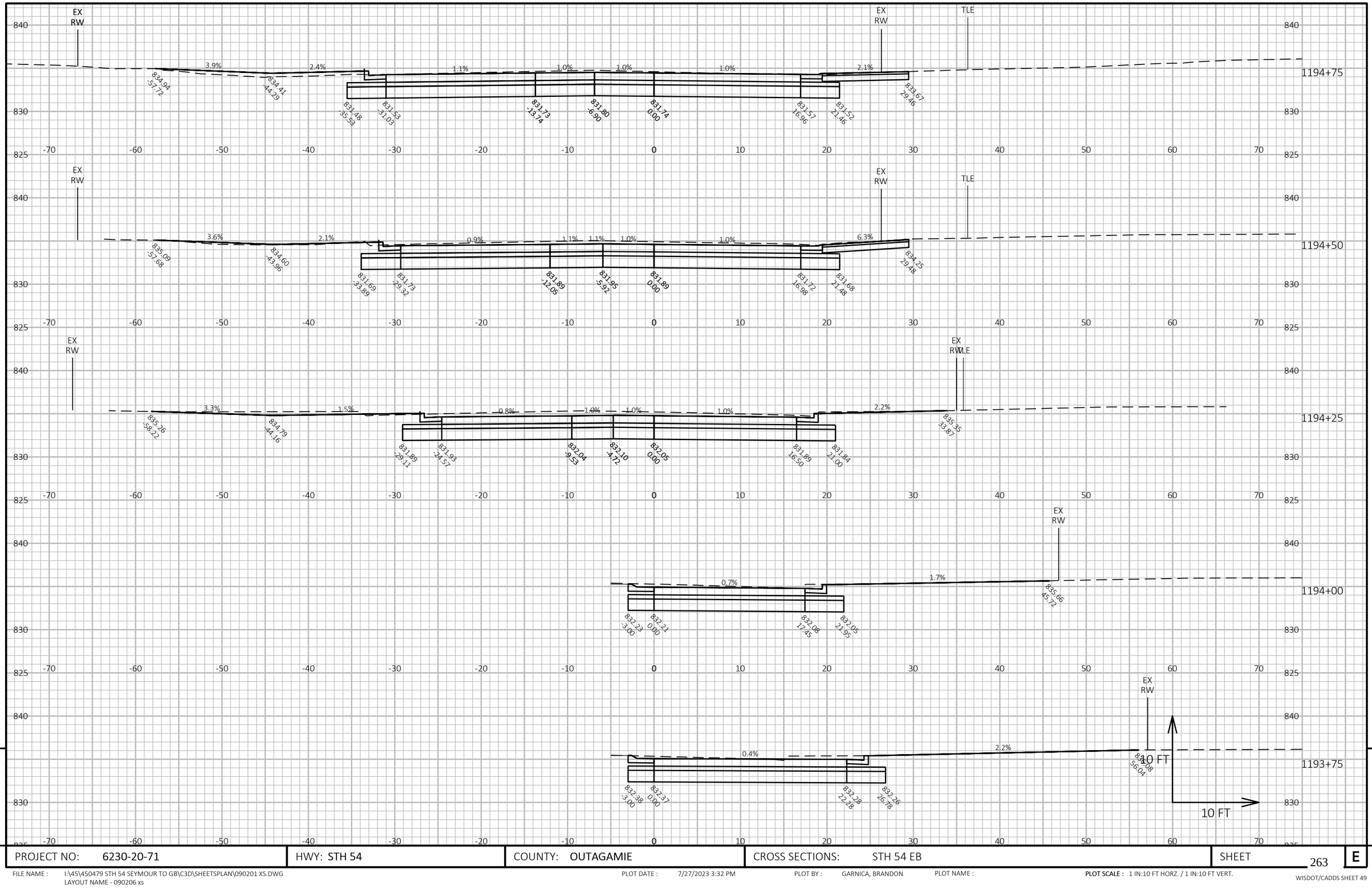

PROJECT NO: 6230-20-71	HWY: STH 54	COUNTY: OUTAGAMIE	CROSS SECTIONS: STH 54 EB	SHEET 263	E

FILE NAME : I:\45\450479 STH 54 SEYMOUR TO GB\C3D\SHEETSPLAN\090201 XS.DWG
LAYOUT NAME - 090206 xs

PLOT DATE : 7/27/2023 3:32 PM

PLOT BY : GARNICA, BRANDON

PLOT NAME :

PLOT SCALE : 1 IN:10 FT HORZ. / 1 IN:10 FT VERT.

WISDOT/CADDS SHEET 49

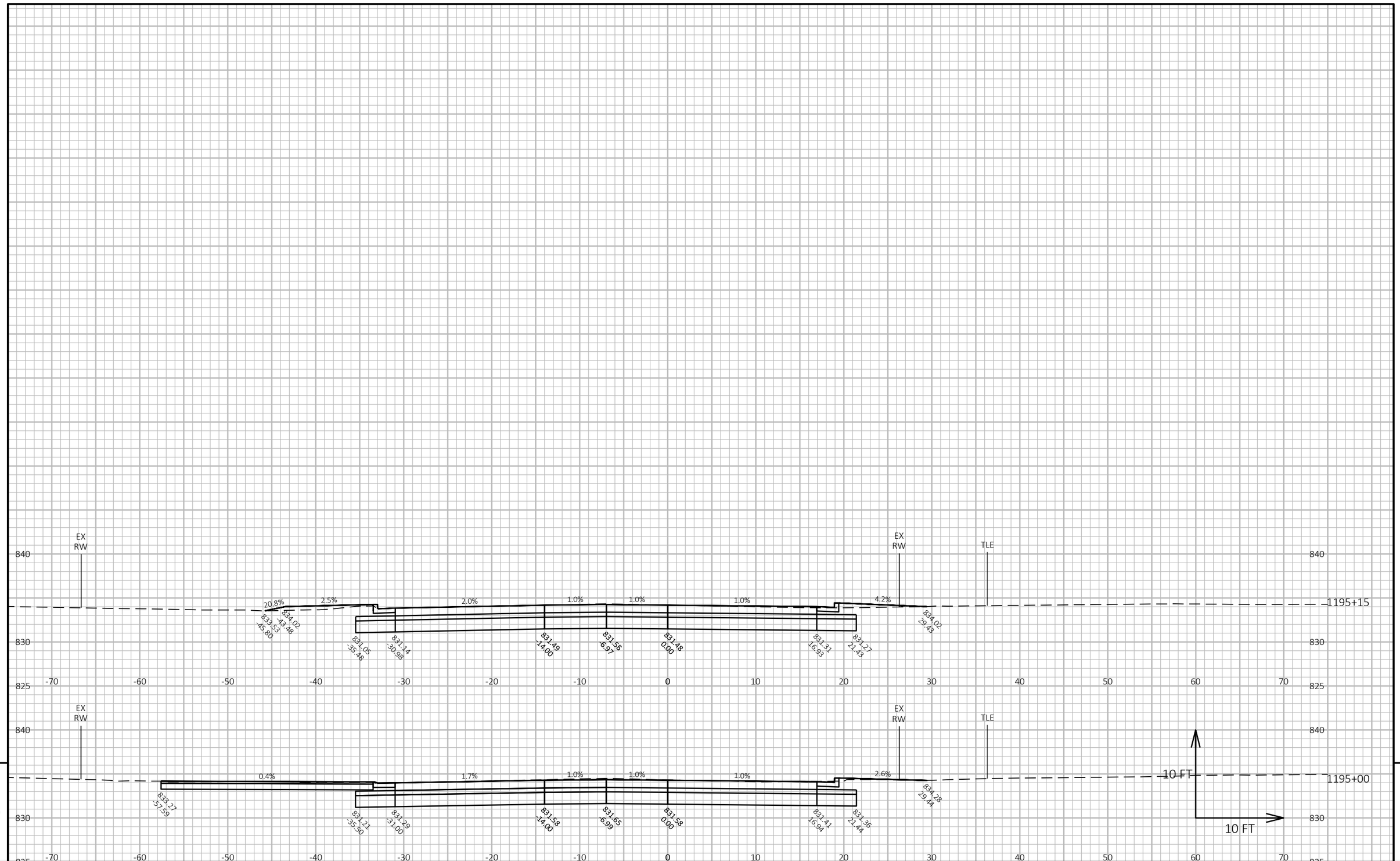

9

9

PROJECT NO: 6230-20-71	HWY: STH 54	COUNTY: OUTAGAMIE	CROSS SECTIONS: STH 54 EB	SHEET 264	E

FILE NAME : I:\45\450479 STH 54 SEYMOUR TO GB\C3D\SHEETSPLAN\090201 XS.DWG
LAYOUT NAME - 090207 xs

PLOT DATE : 7/27/2023 3:32 PM

PLOT BY : GARNICA, BRANDON

PLOT NAME :

PLOT SCALE : 1 IN:10 FT HORZ. / 1 IN:10 FT VERT.

WISDOT/CADDS SHEET 49

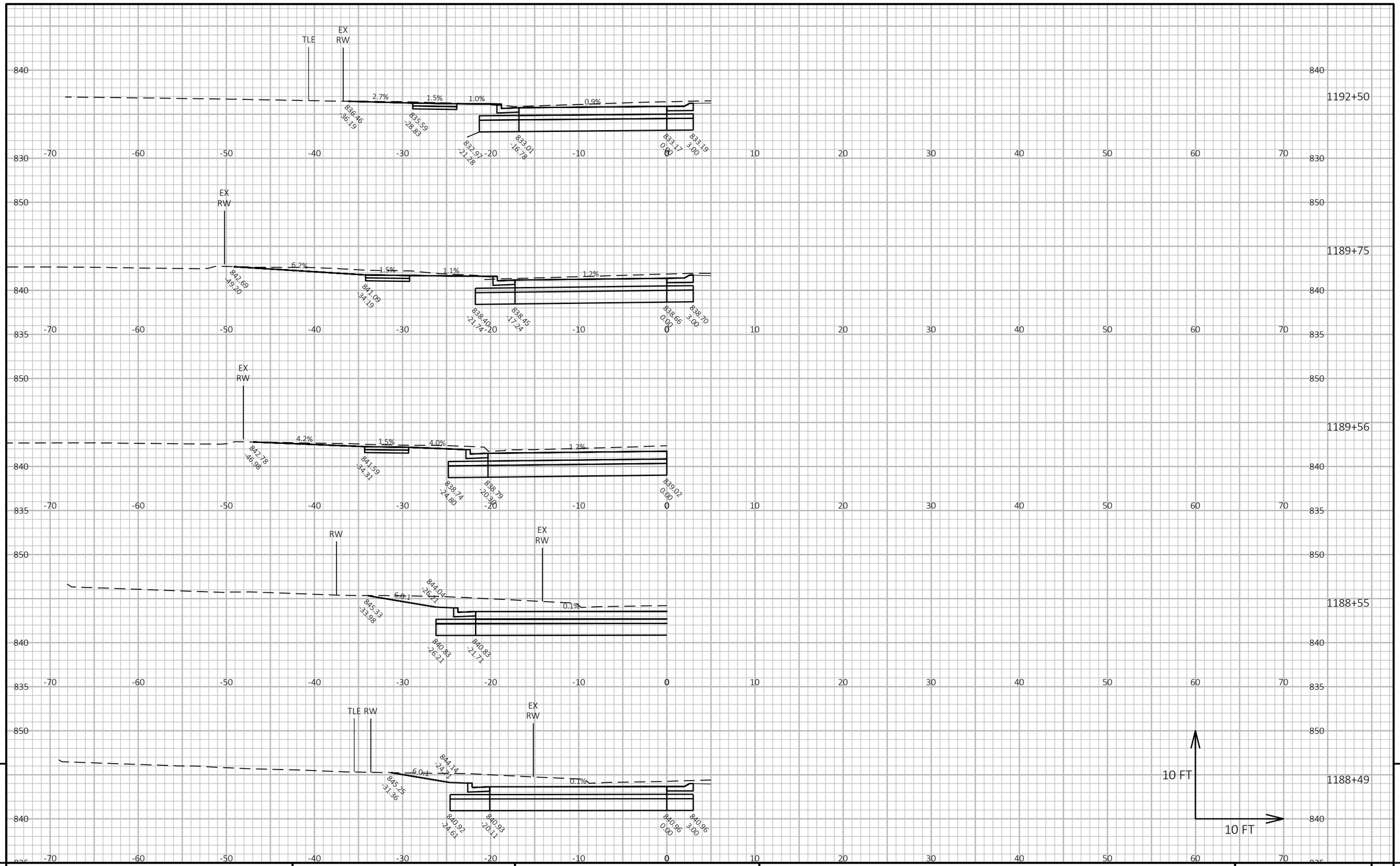

9

9

PROJECT NO: 6230-20-71	HWY: STH 54	COUNTY: OUTAGAMIE	CROSS SECTIONS: STH 54 WB	SHEET 265	E

FILE NAME : I:\45\450479 STH 54 SEYMOUR TO GB\C3D\SHEETSPLAN\090201 XS.DWG
LAYOUT NAME - 090208 xs

PLOT DATE : 7/27/2023 3:32 PM

PLOT BY : GARNICA, BRANDON

PLOT NAME :

PLOT SCALE : 1 IN:10 FT HORZ. / 1 IN:10 FT VERT.

WISDOT/CADDS SHEET 49

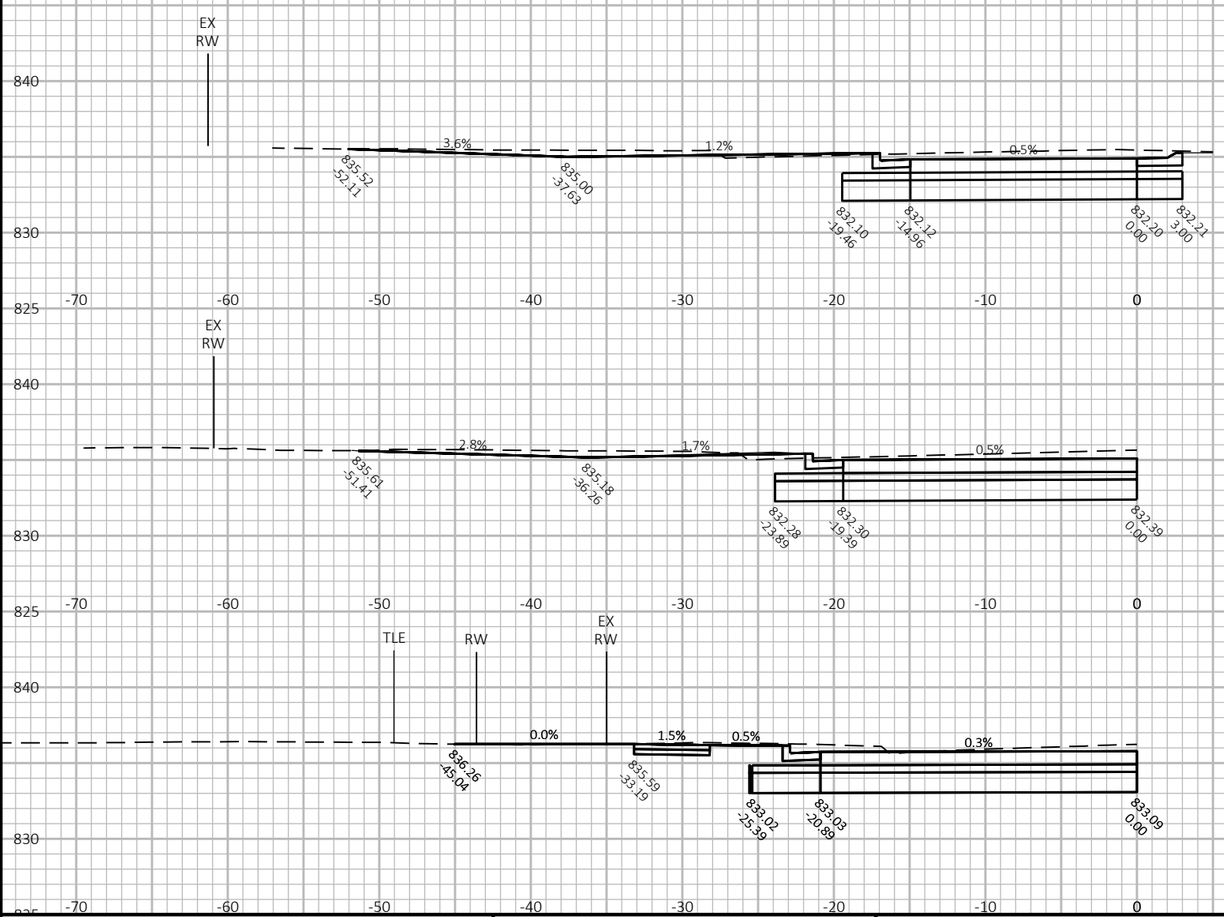

9

9

PROJECT NO: 6230-20-71	HWY: STH 54	COUNTY: OUTAGAMIE	CROSS SECTIONS: STH 54 WB	SHEET 266	E

FILE NAME : I:\45\450479 STH 54 SEYMOUR TO GB\C3D\SHEETSPLAN\090201 XS.DWG
LAYOUT NAME - 090209 xs

PLOT DATE : 7/27/2023 3:32 PM PLOT BY : GARNICA, BRANDON PLOT NAME : **PLOT SCALE :** 1 IN:10 FT HORZ. / 1 IN:10 FT VERT.

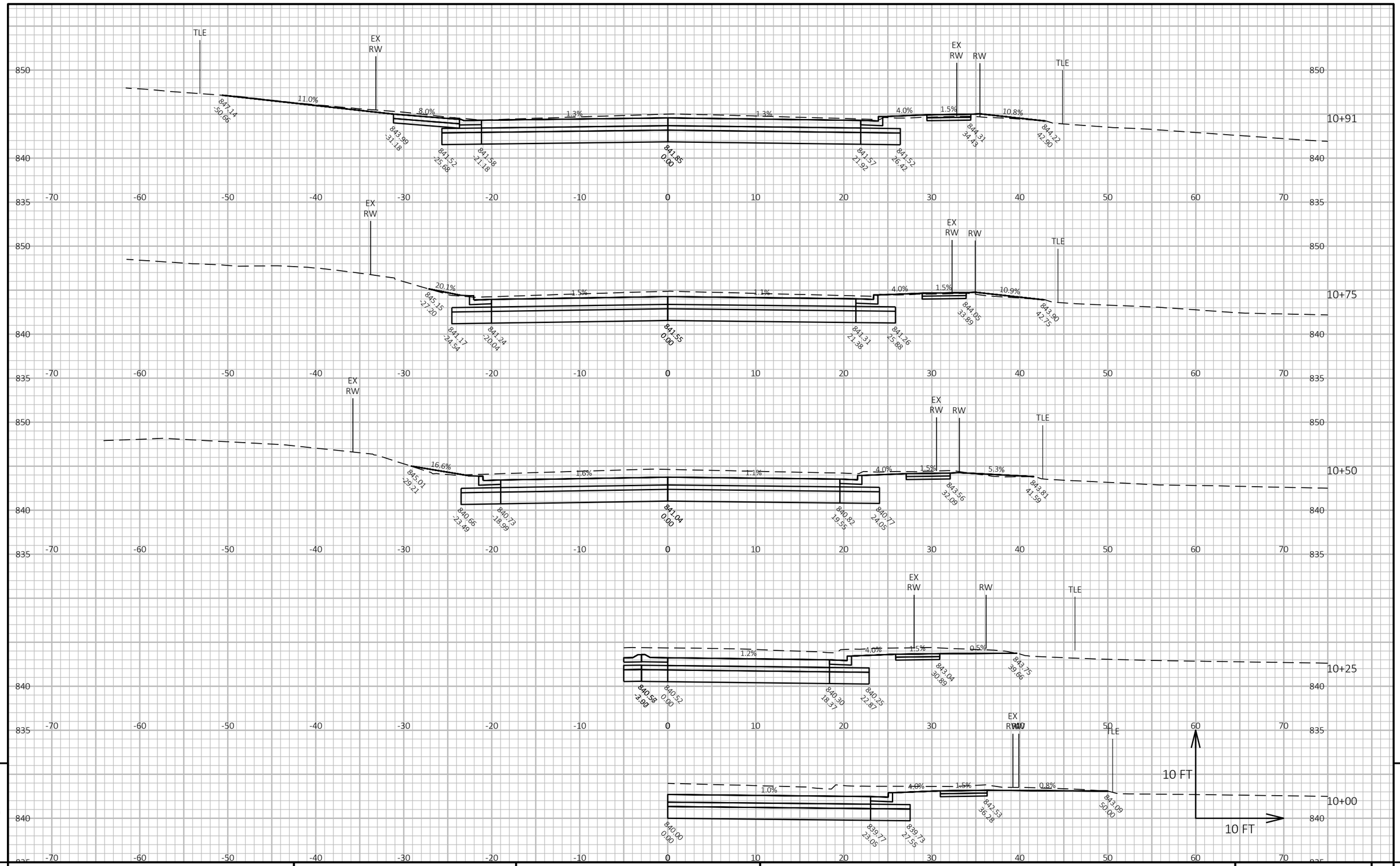

9

9

PROJECT NO: 6230-20-71	HWY: STH 54	COUNTY: OUTAGAMIE	CROSS SECTIONS: STH 55 NB	SHEET 267	E

FILE NAME : I:\45\450479 STH 54 SEYMOUR TO GB\C3D\SHEETSPLAN\090201 XS.DWG
LAYOUT NAME - 090210 xs

PLOT DATE : 7/27/2023 3:33 PM

PLOT BY : GARNICA, BRANDON

PLOT NAME :

PLOT SCALE : 1 IN:10 FT HORZ. / 1 IN:10 FT VERT.

WISDOT/CADDS SHEET 49

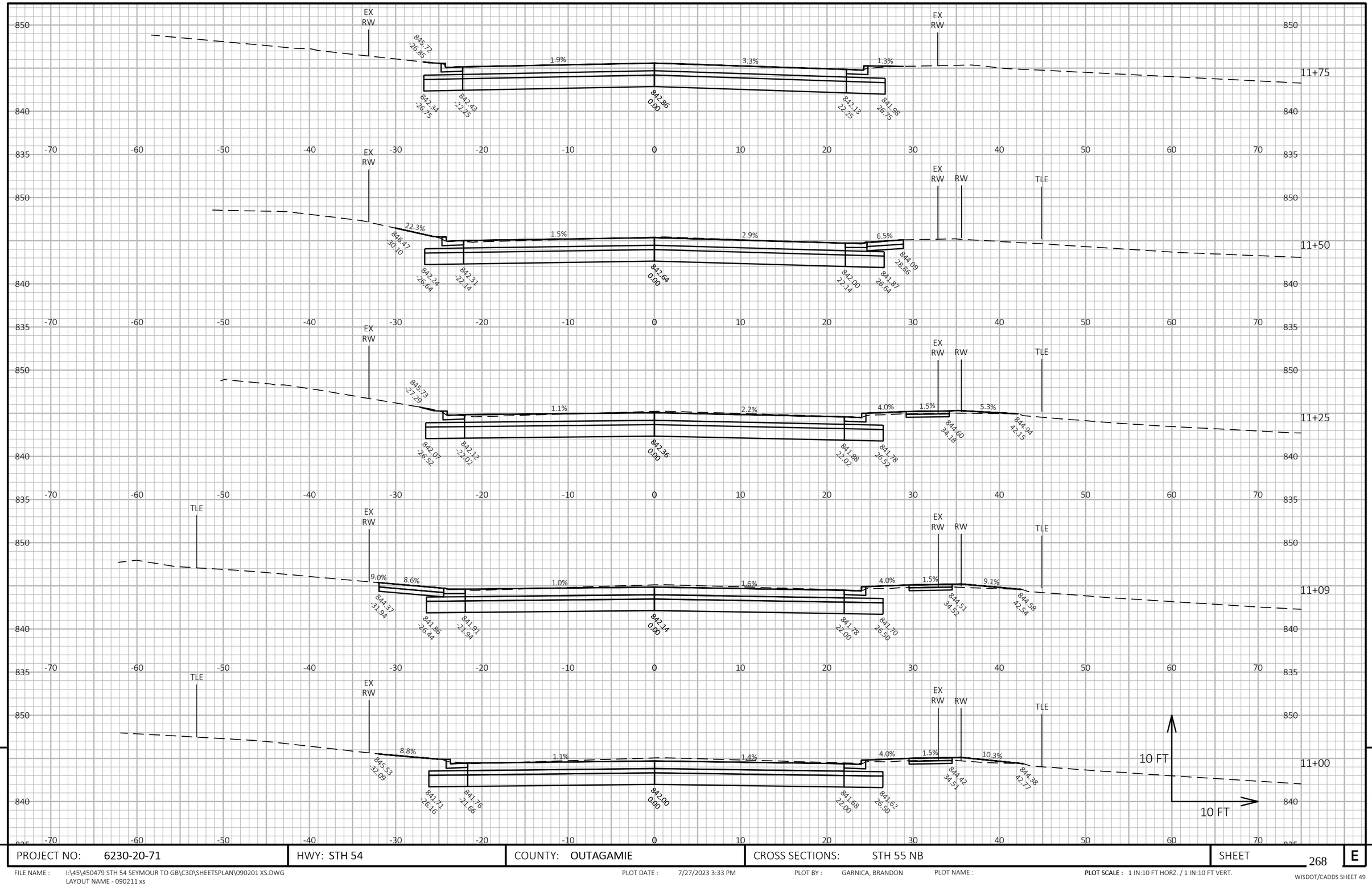

PROJECT NO: 6230-20-71	HWY: STH 54	COUNTY: OUTAGAMIE	CROSS SECTIONS: STH 55 NB	SHEET 268 E

FILE NAME : I:\45\450479 STH 54 SEYMOUR TO GB\C3D\SHEETSPLAN\090201 XS.DWG
LAYOUT NAME - 090211 xs

PLOT DATE : 7/27/2023 3:33 PM

PLOT BY : GARNICA, BRANDON

PLOT NAME :

PLOT SCALE : 1 IN:10 FT HORZ. / 1 IN:10 FT VERT.

WISDOT/CADDS SHEET 49

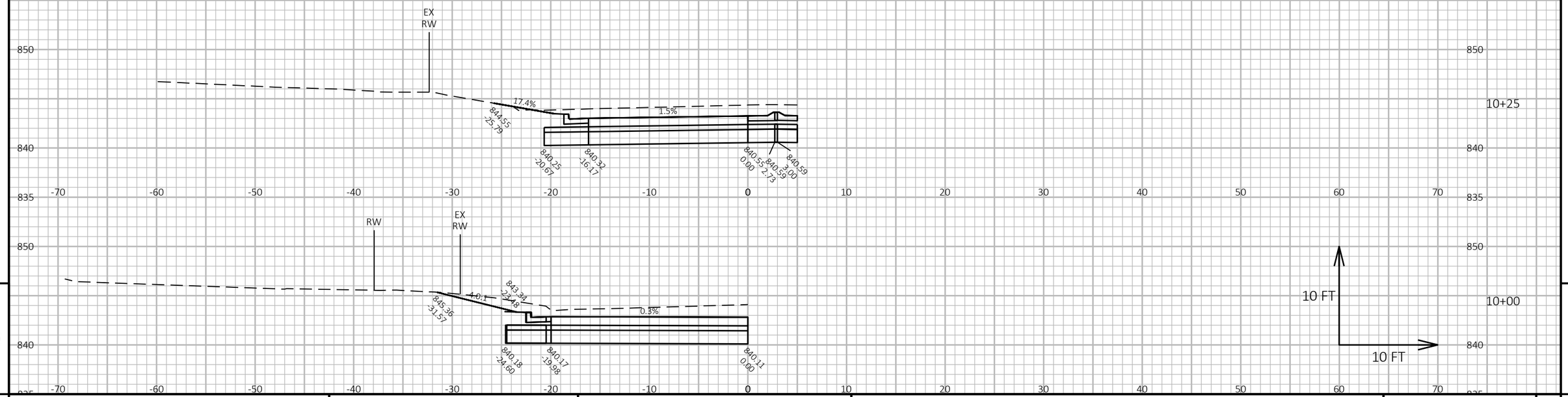

9

9

PROJECT NO: 6230-20-71	HWY: STH 54	COUNTY: OUTAGAMIE	CROSS SECTIONS: STH 55 SB	SHEET 269	E

FILE NAME : I:\45\450479 STH 54 SEYMOUR TO GB\C3D\SHEETSPLAN\090201 XS.DWG
LAYOUT NAME - 090212 xs

PLOT DATE : 7/27/2023 3:33 PM

PLOT BY : GARNICA, BRANDON

PLOT NAME :

PLOT SCALE : 1 IN:10 FT HORZ. / 1 IN:10 FT VERT.

WISDOT/CADDS SHEET 49

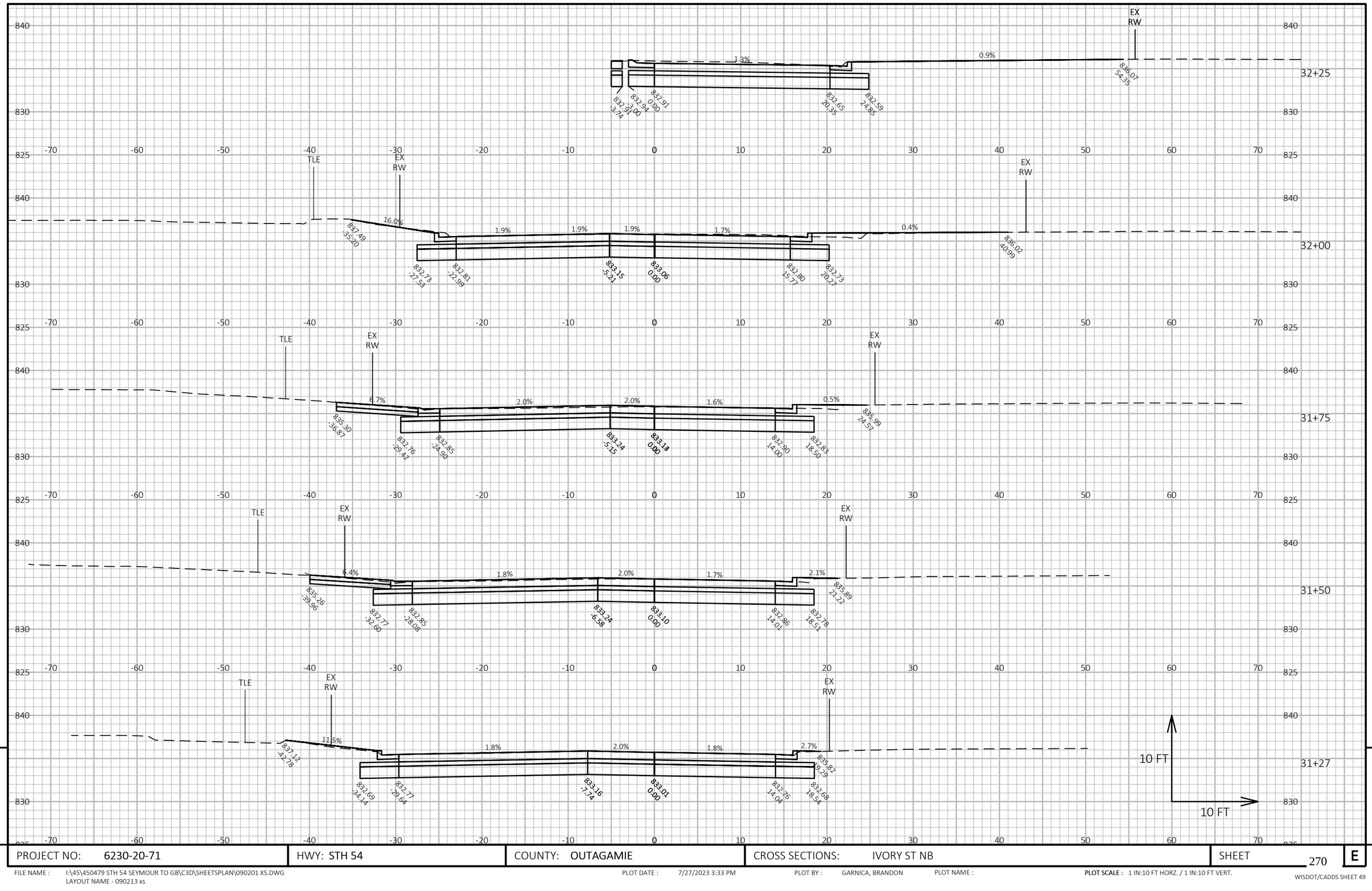

PROJECT NO: 6230-20-71	HWY: STH 54	COUNTY: OUTAGAMIE	CROSS SECTIONS: IVORY ST NB	SHEET 270	E

FILE NAME : I:\45\450479 STH 54 SEYMOUR TO GB\C3D\SHEETSPLAN\090201 XS.DWG
LAYOUT NAME - 090213 xs

PLOT DATE : 7/27/2023 3:33 PM PLOT BY : GARNICA, BRANDON PLOT NAME : **PLOT SCALE :** 1 IN:10 FT HORZ. / 1 IN:10 FT VERT.

WISDOT/CADDS SHEET 49

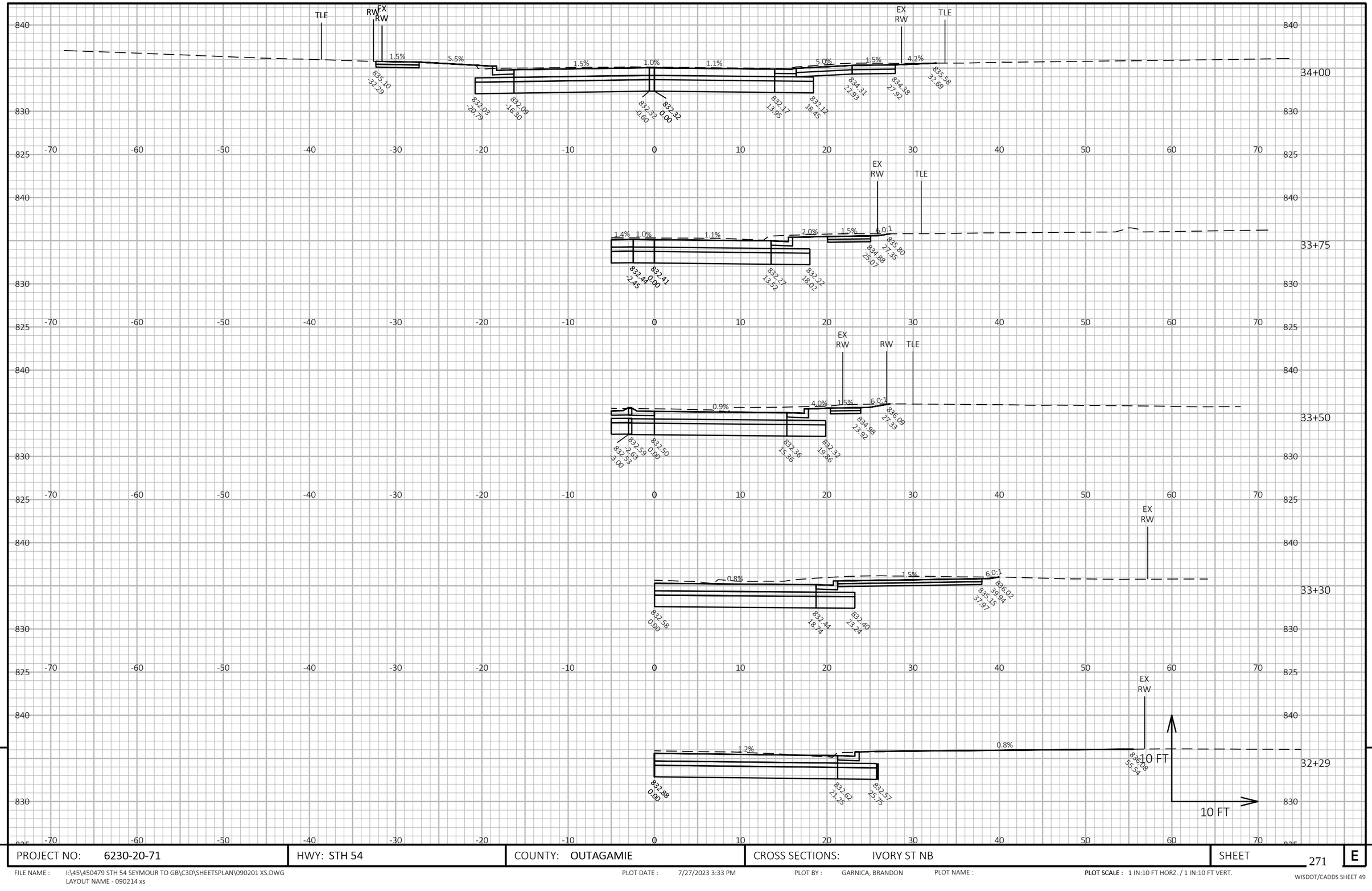

PROJECT NO: 6230-20-71	HWY: STH 54	COUNTY: OUTAGAMIE	CROSS SECTIONS: IVORY ST NB	SHEET 271	E

FILE NAME : I:\45\450479 STH 54 SEYMOUR TO GB\C3D\SHEETSPLAN\090201 XS.DWG
LAYOUT NAME - 090214 xs

PLOT DATE : 7/27/2023 3:33 PM PLOT BY : GARNICA, BRANDON PLOT NAME : **PLOT SCALE :** 1 IN:10 FT HORZ. / 1 IN:10 FT VERT.

WISDOT/CADDS SHEET 49

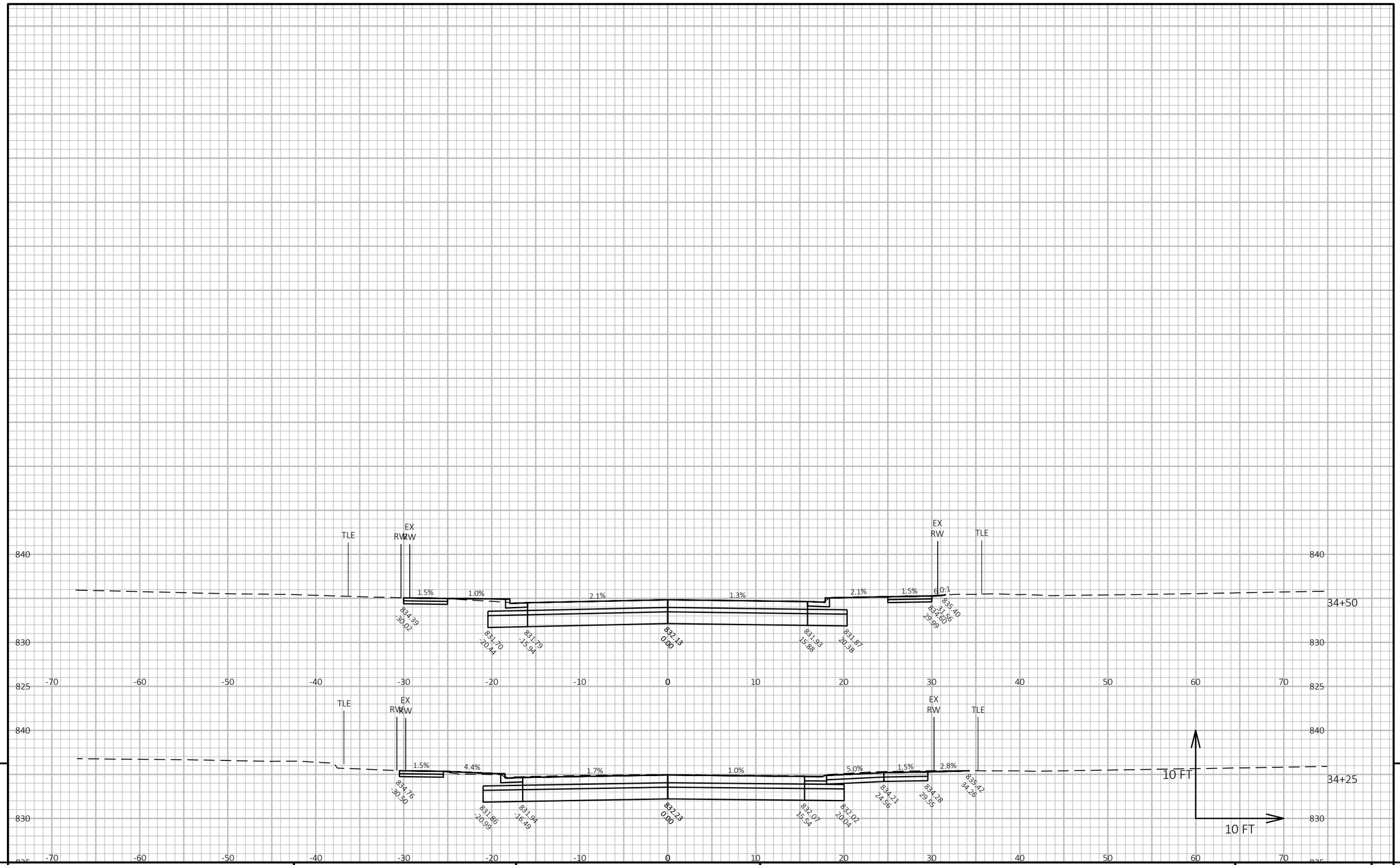

9

9

PROJECT NO: 6230-20-71	HWY: STH 54	COUNTY: OUTAGAMIE	CROSS SECTIONS: IVORY ST NB	SHEET 272	E

FILE NAME : I:\45\450479 STH 54 SEYMOUR TO GB\C3D\SHEETSPLAN\090201 XS.DWG
LAYOUT NAME - 090215 xs

PLOT DATE : 7/27/2023 3:33 PM

PLOT BY : GARNICA, BRANDON

PLOT NAME :

PLOT SCALE : 1 IN:10 FT HORZ. / 1 IN:10 FT VERT.

WISDOT/CADDS SHEET 49

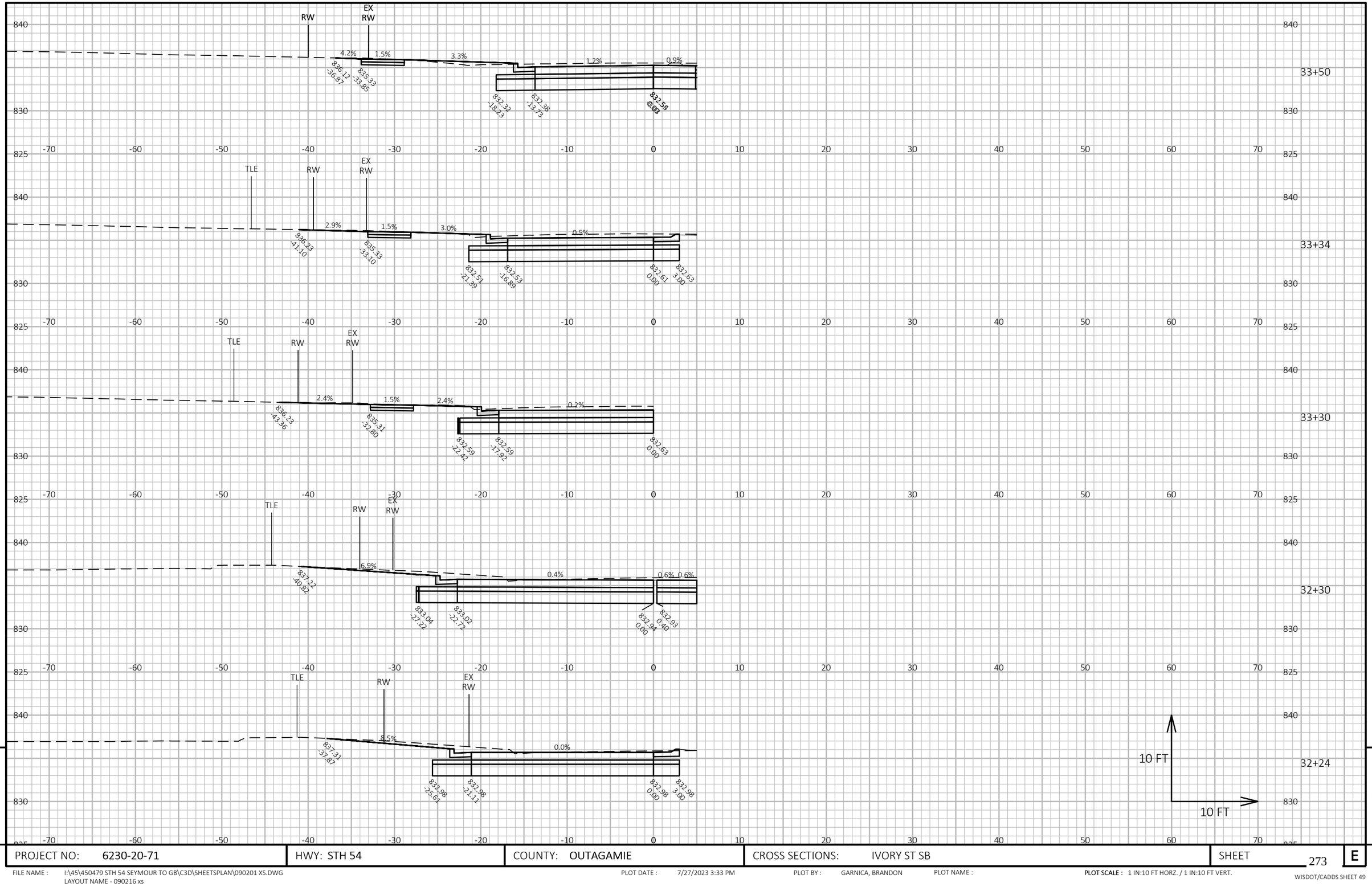

9

9

PROJECT NO: 6230-20-71	HWY: STH 54	COUNTY: OUTAGAMIE	CROSS SECTIONS: IVORY ST SB	SHEET 273	E

FILE NAME : I:\45\450479 STH 54 SEYMOUR TO GB\C3D\SHEETSPLAN\090201 XS.DWG
LAYOUT NAME - 090216 xs

PLOT DATE : 7/27/2023 3:33 PM

PLOT BY : GARNICA, BRANDON

PLOT NAME :

PLOT SCALE : 1 IN:10 FT HORZ. / 1 IN:10 FT VERT.

WISDOT/CADDS SHEET 49

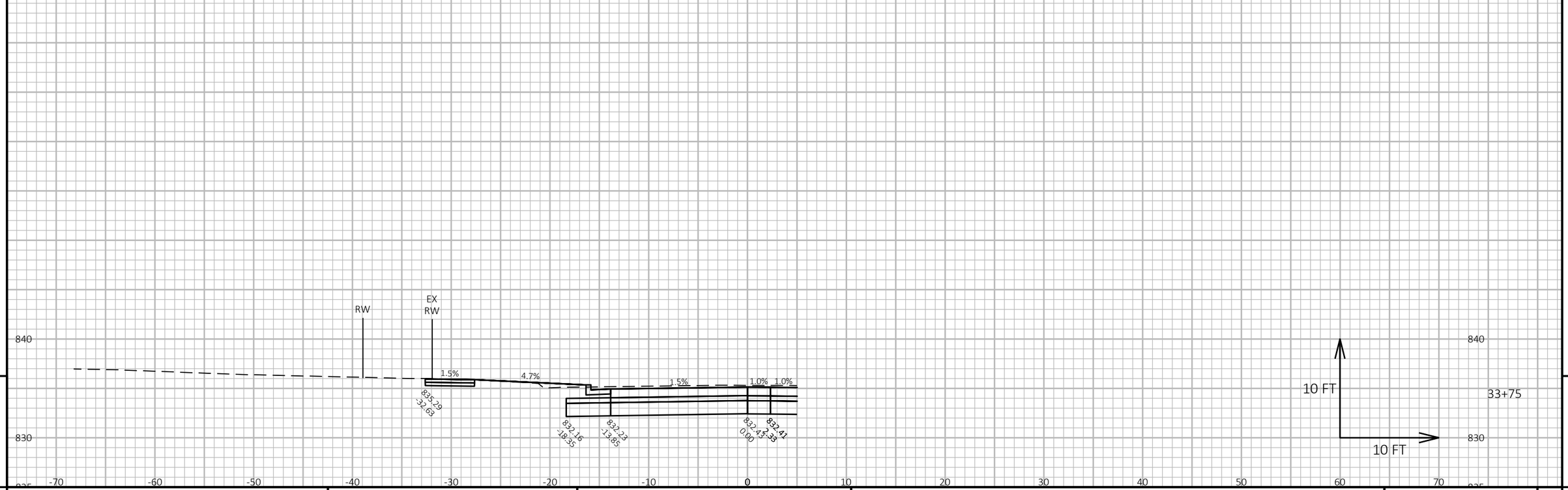

9

9

PROJECT NO: 6230-20-71	HWY: STH 54	COUNTY: OUTAGAMIE	CROSS SECTIONS: IVORY ST SB	SHEET 274	E

FILE NAME : I:\45\450479 STH 54 SEYMOUR TO GB\C3D\SHEETSPLAN\090201 XS.DWG
LAYOUT NAME - 090217 xs

PLOT DATE : 7/27/2023 3:33 PM

PLOT BY : GARNICA, BRANDON

PLOT NAME :

PLOT SCALE : 1 IN:10 FT HORZ. / 1 IN:10 FT VERT.

WISDOT/CADDS SHEET 49

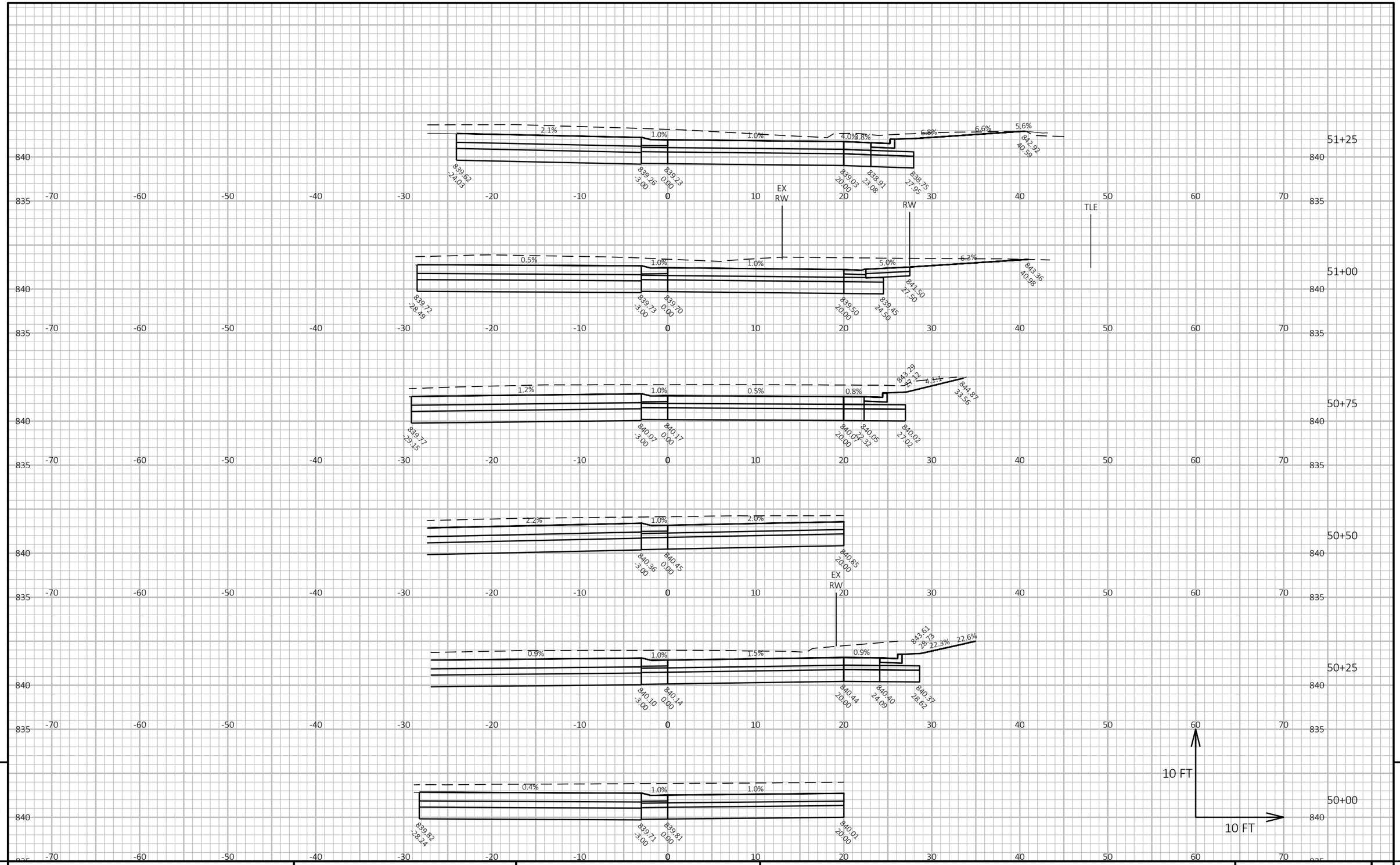

PROJECT NO: 6230-20-71	HWY: STH 54	COUNTY: OUTAGAMIE	CROSS SECTIONS: STH 55 RAB CENTER CIRCLE	SHEET 275	E

FILE NAME : I:\45\450479 STH 54 SEYMOUR TO GB\C3D\SHEETSPLAN\090201 XS.DWG
LAYOUT NAME - 090218 xs

PLOT DATE : 7/27/2023 3:33 PM PLOT BY : GARNICA, BRANDON PLOT NAME : PLOT SCALE : 1 IN:10 FT HORZ. / 1 IN:10 FT VERT.

WISDOT/CADDS SHEET 49

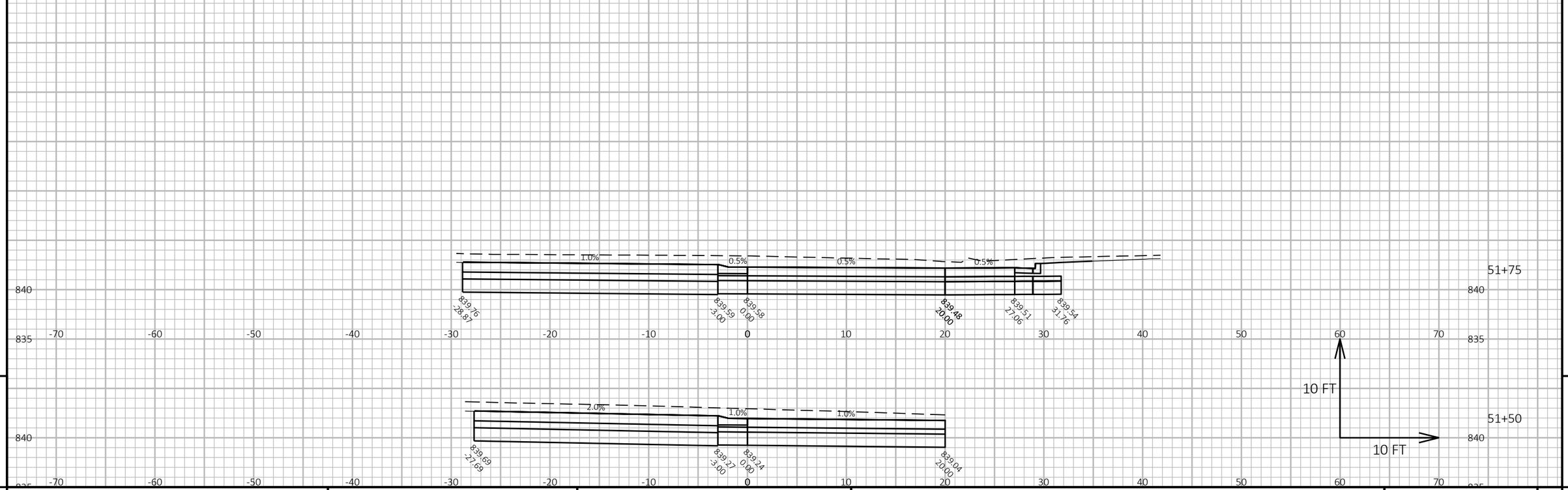

9

9

PROJECT NO: 6230-20-71	HWY: STH 54	COUNTY: OUTAGAMIE	CROSS SECTIONS: STH 55 RAB CENTER CIRCLE	SHEET 276	E

FILE NAME : I:\45\450479 STH 54 SEYMOUR TO GB\C3D\SHEETSPLAN\090201 XS.DWG
LAYOUT NAME - 090219 xs

PLOT DATE : 7/27/2023 3:33 PM PLOT BY : GARNICA, BRANDON PLOT NAME :

PLOT SCALE : 1 IN:10 FT HORZ. / 1 IN:10 FT VERT.

WISDOT/CADDS SHEET 49

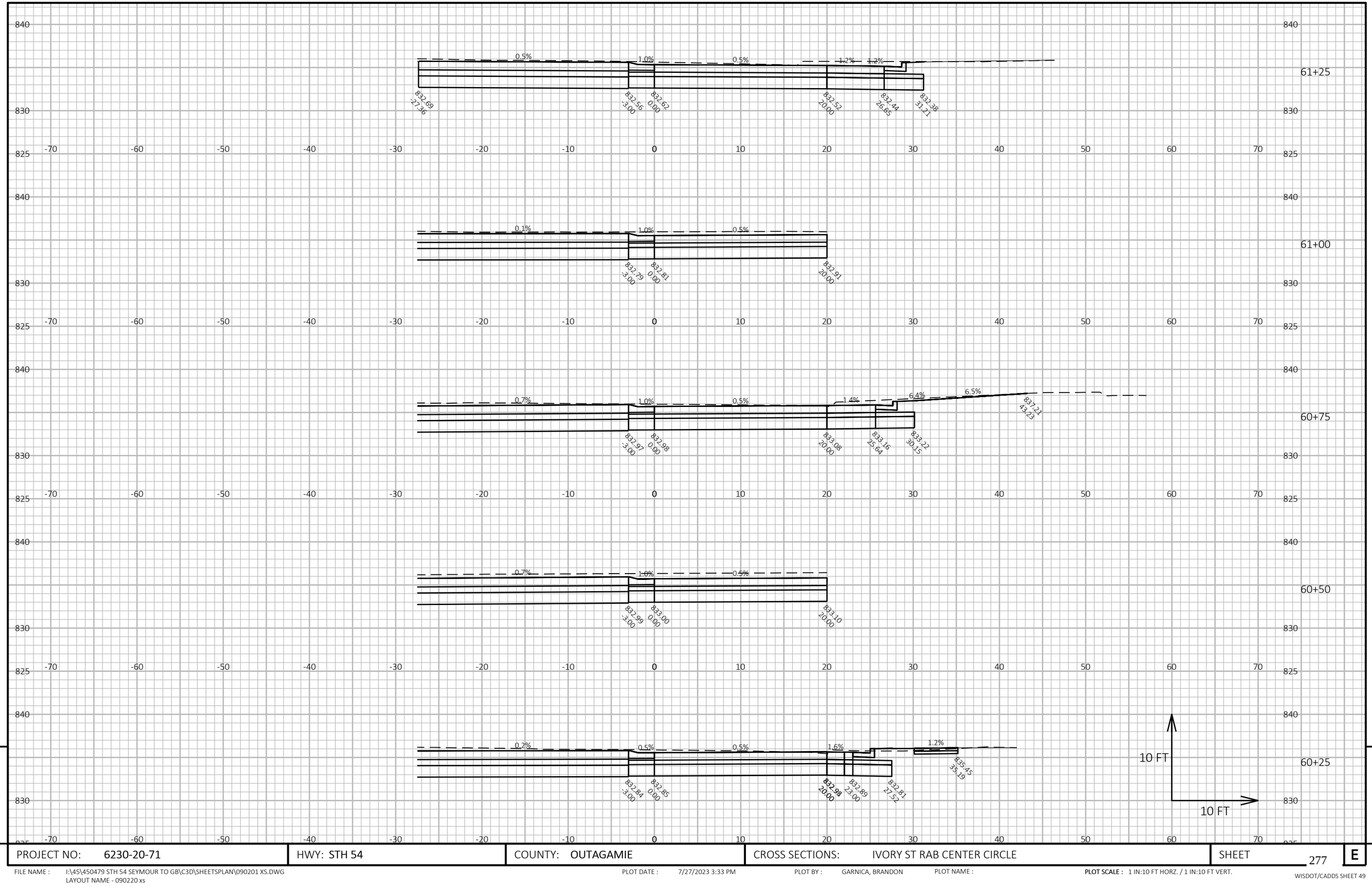

9

9

PROJECT NO: 6230-20-71	HWY: STH 54	COUNTY: OUTAGAMIE	CROSS SECTIONS: IVORY ST RAB CENTER CIRCLE	SHEET 277	E

FILE NAME : I:\45\450479 STH 54 SEYMOUR TO GB\C3D\SHEETSPLAN\090201 XS.DWG
LAYOUT NAME - 090220 xs

PLOT DATE : 7/27/2023 3:33 PM PLOT BY : GARNICA, BRANDON PLOT NAME : **PLOT SCALE :** 1 IN:10 FT HORZ. / 1 IN:10 FT VERT.

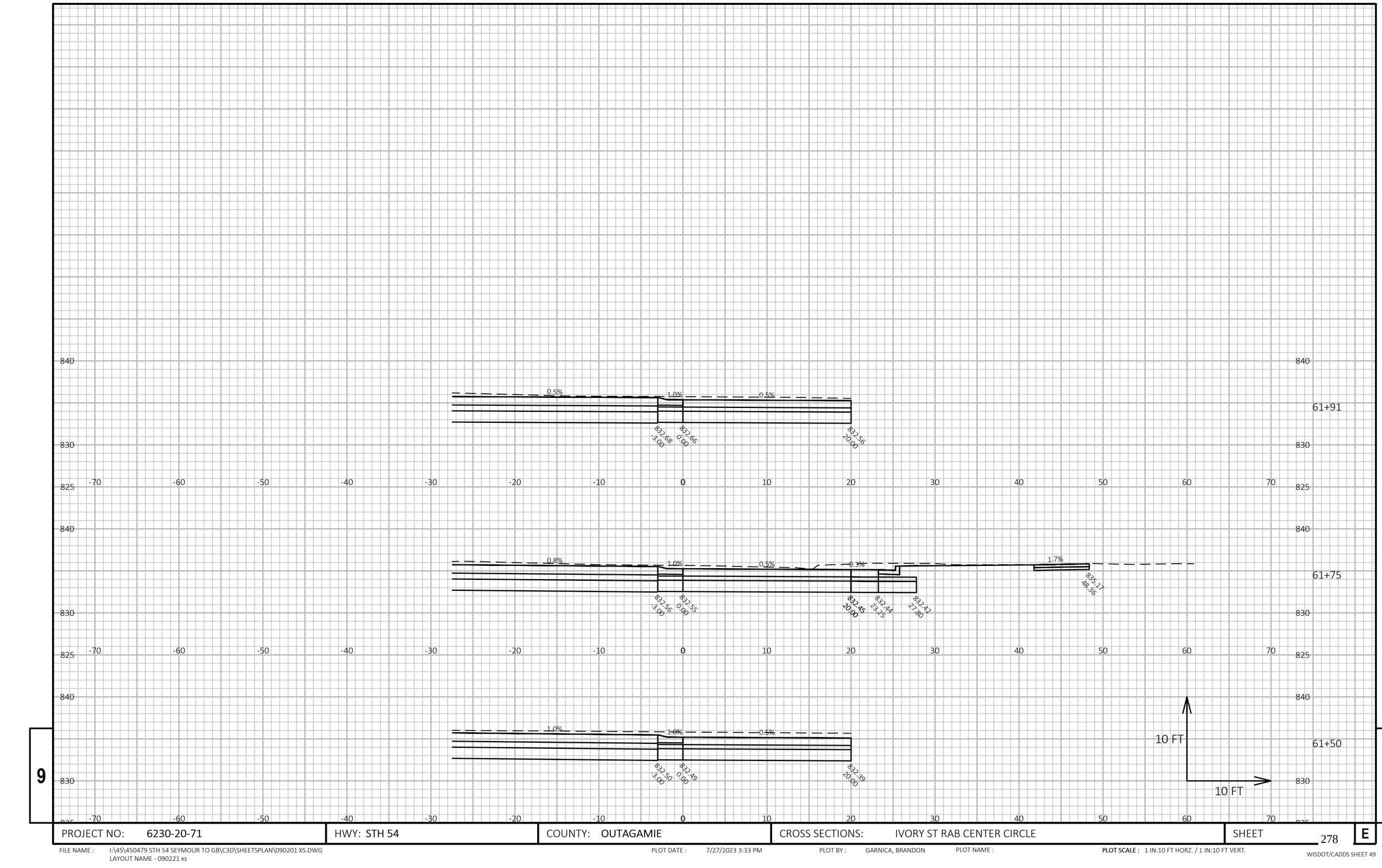

PROJECT NO: 6230-20-71	HWY: STH 54	COUNTY: OUTAGAMIE	CROSS SECTIONS: IVORY ST RAB CENTER CIRCLE	SHEET 278	E

FILE NAME : I:\45\450479 STH 54 SEYMOUR TO GB\C3D\SHEETSPLAN\090201 XS.DWG
LAYOUT NAME - 090221 xs

PLOT DATE : 7/27/2023 3:33 PM PLOT BY : GARNICA, BRANDON PLOT NAME : **PLOT SCALE :** 1 IN:10 FT HORZ. / 1 IN:10 FT VERT.

WISDOT/CADDS SHEET 49

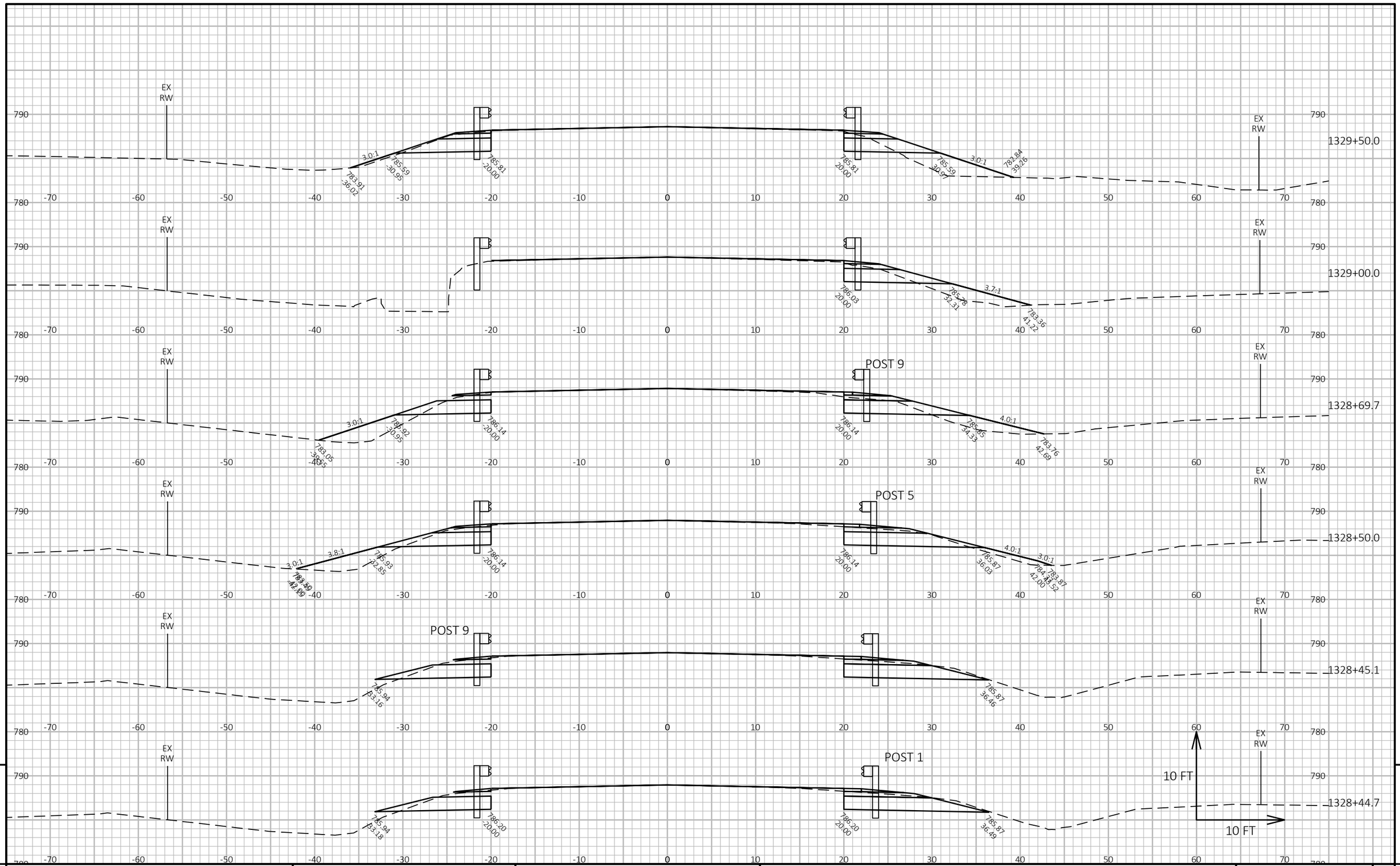

9

9

PROJECT NO: 6230-20-71	HWY: STH 54	COUNTY: OUTAGAMIE	CROSS SECTIONS: STH 54 GUARDRAIL	SHEET 279	E

FILE NAME : I:\45\450479 STH 54 SEYMOUR TO GB\C3D\SHEETSPLAN\090202 XS - GUARDRAIL.DWG
LAYOUT NAME - 090223 xs

PLOT DATE : 7/27/2023 3:34 PM

PLOT BY : GARNICA, BRANDON

PLOT NAME :

PLOT SCALE : 1 IN:10 FT HORZ. / 1 IN:10 FT VERT.

WISDOT/CADDS SHEET 49

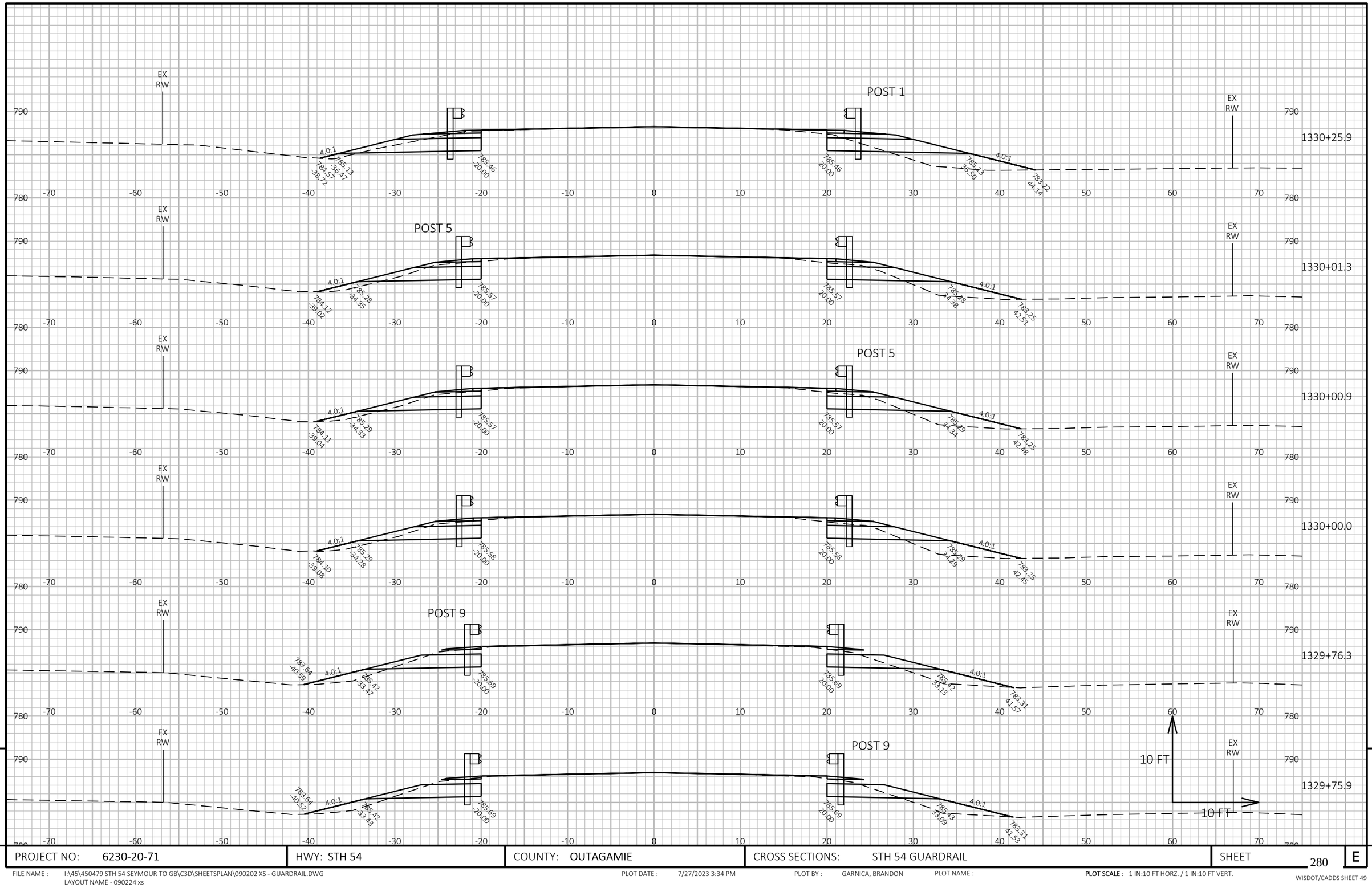

9

9

PROJECT NO: 6230-20-71	HWY: STH 54	COUNTY: OUTAGAMIE	CROSS SECTIONS: STH 54 GUARDRAIL	SHEET 280	E

FILE NAME : I:\45\450479 STH 54 SEYMOUR TO GB\C3D\SHEETSPLAN\090202 XS - GUARDRAIL.DWG
LAYOUT NAME - 090224 xs

PLOT DATE : 7/27/2023 3:34 PM

PLOT BY : GARNICA, BRANDON

PLOT NAME :

PLOT SCALE : 1 IN:10 FT HORZ. / 1 IN:10 FT VERT.

WISDOT/CADDS SHEET 49

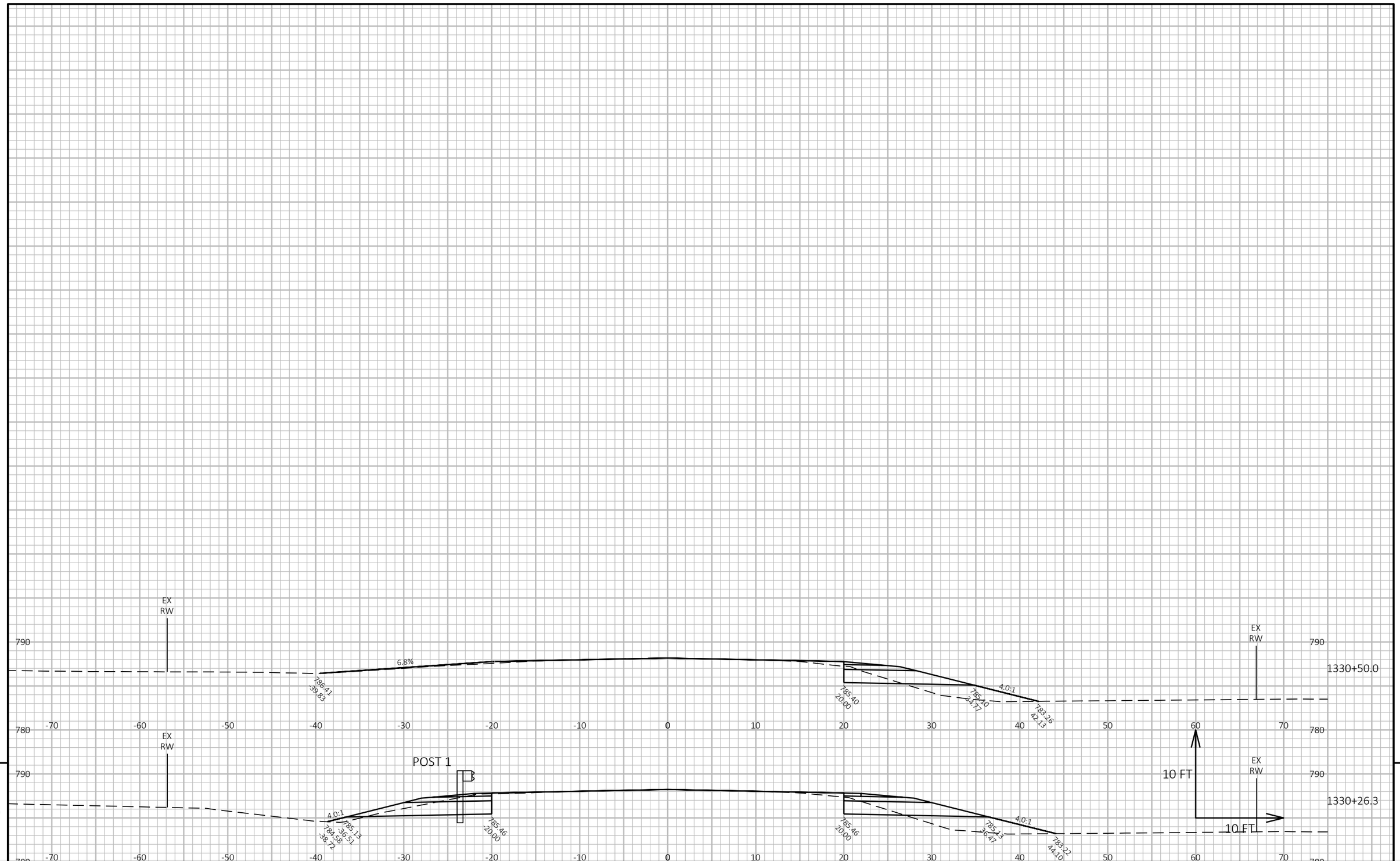

9 9

PROJECT NO: 6230-20-71	HWY: STH 54	COUNTY: OUTAGAMIE	CROSS SECTIONS: STH 54 GUARDRAIL	SHEET 281	E

FILE NAME : I:\45\450479 STH 54 SEYMOUR TO GB\C3D\SHEETSPLAN\090202 XS - GUARDRAIL.DWG
LAYOUT NAME - 090225 xs

PLOT DATE : 7/27/2023 3:34 PM PLOT BY : GARNICA, BRANDON PLOT NAME : **PLOT SCALE :** 1 IN:10 FT HORZ. / 1 IN:10 FT VERT.

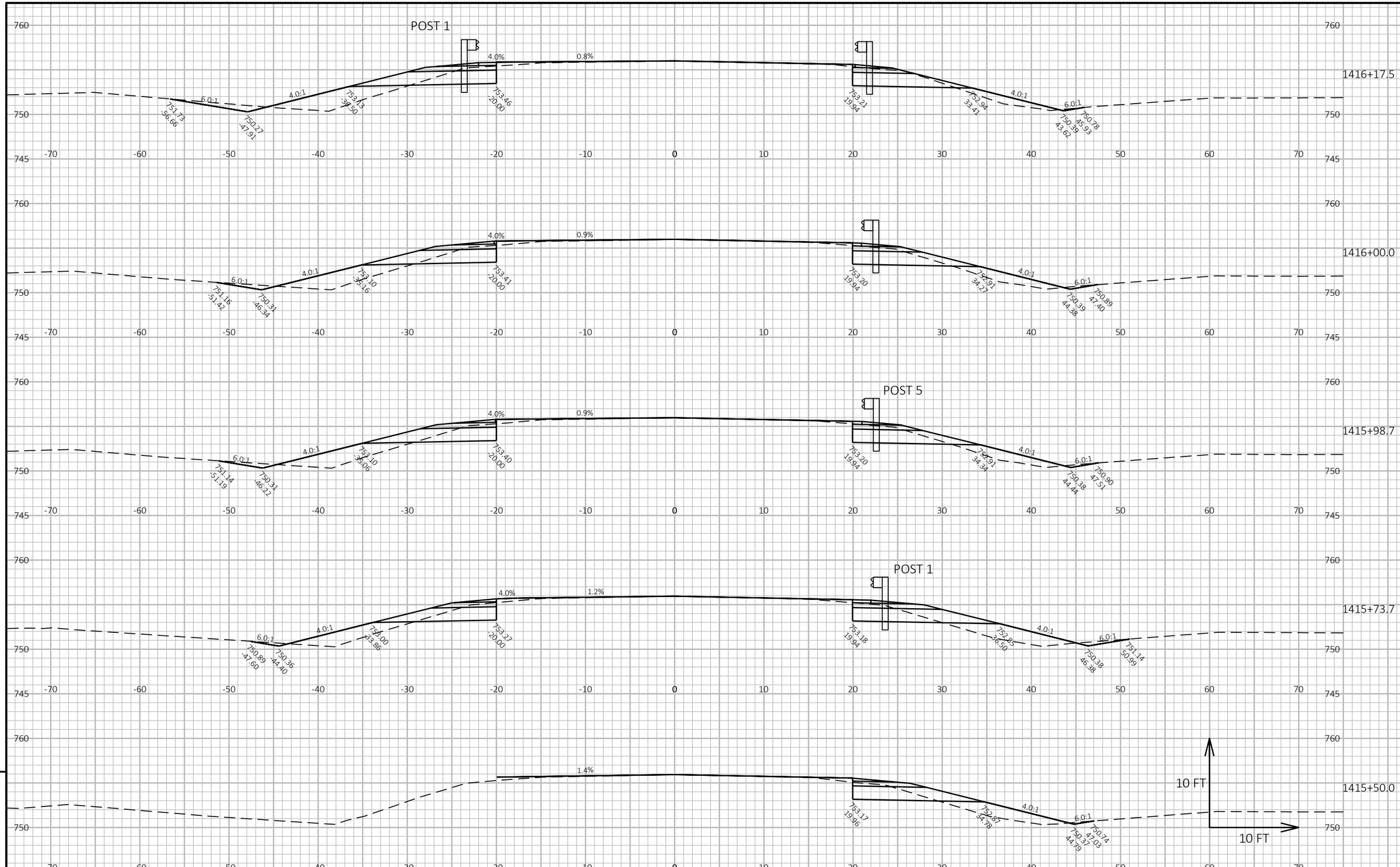

9

9

PROJECT NO: 6230-20-71	HWY: STH 54	COUNTY: OUTAGAMIE	CROSS SECTIONS: STH 54 GUARDRAIL	SHEET 282	E

FILE NAME : I:\45\450479 STH 54 SEYMOUR TO GB\C3D\SHEETSPLAN\090202 XS - GUARDRAIL.DWG
LAYOUT NAME - 090226 xs
PLOT DATE : 7/27/2023 3:34 PM
PLOT BY : GARNICA, BRANDON
PLOT NAME :
PLOT SCALE : 1 IN:10 FT HORZ. / 1 IN:10 FT VERT.
WISDOT/CADDS SHEET 49

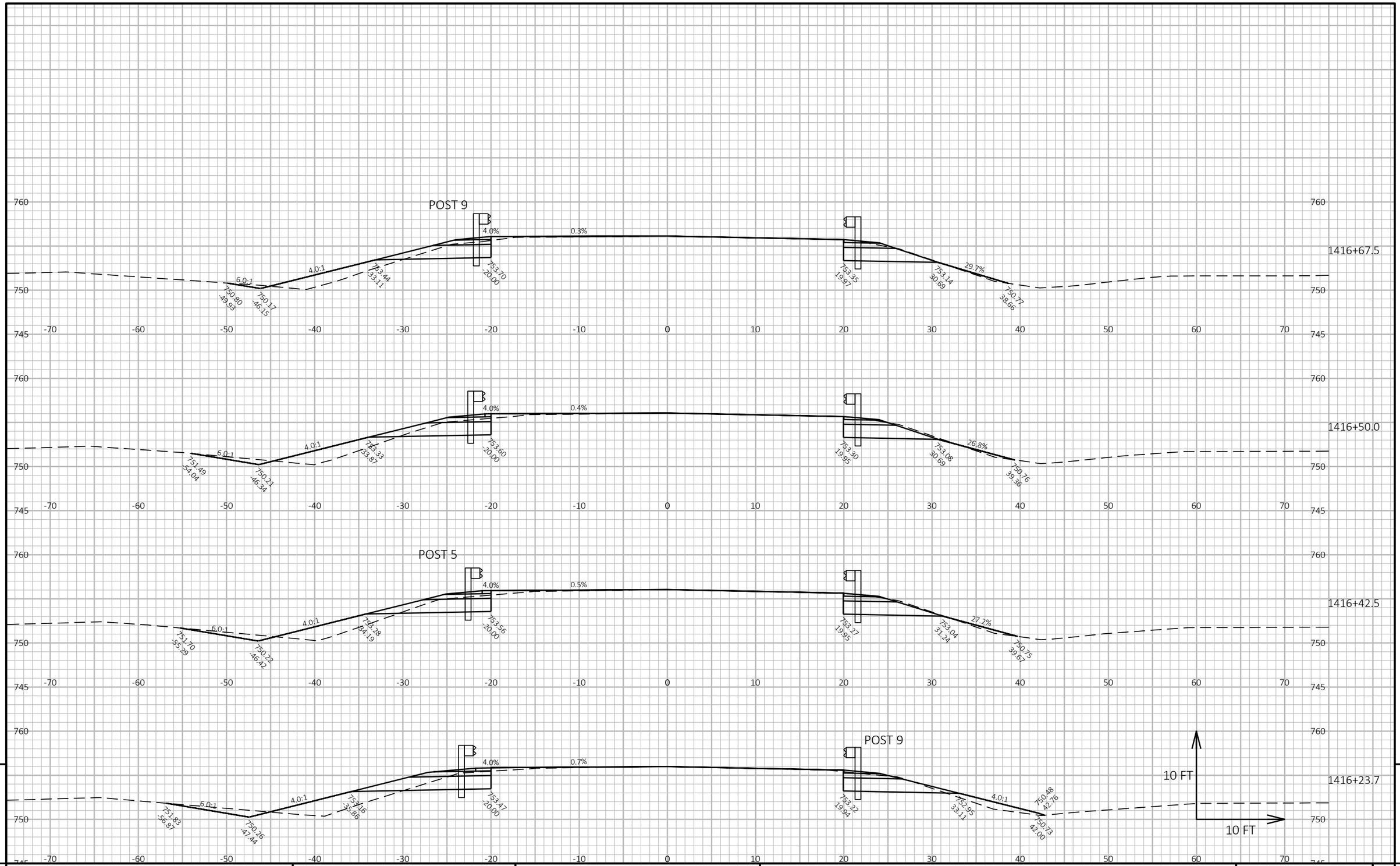

PROJECT NO: 6230-20-71	HWY: STH 54	COUNTY: OUTAGAMIE	CROSS SECTIONS: STH 54 GUARDRAIL	SHEET 283	E

FILE NAME : I:\45\450479 STH 54 SEYMOUR TO GB\C3D\SHEETSPLAN\090202 XS - GUARDRAIL.DWG
LAYOUT NAME - 090227 xs

PLOT DATE : 7/27/2023 3:34 PM PLOT BY : GARNICA, BRANDON PLOT NAME : **PLOT SCALE :** 1 IN:10 FT HORZ. / 1 IN:10 FT VERT.

WISDOT/CADDS SHEET 49

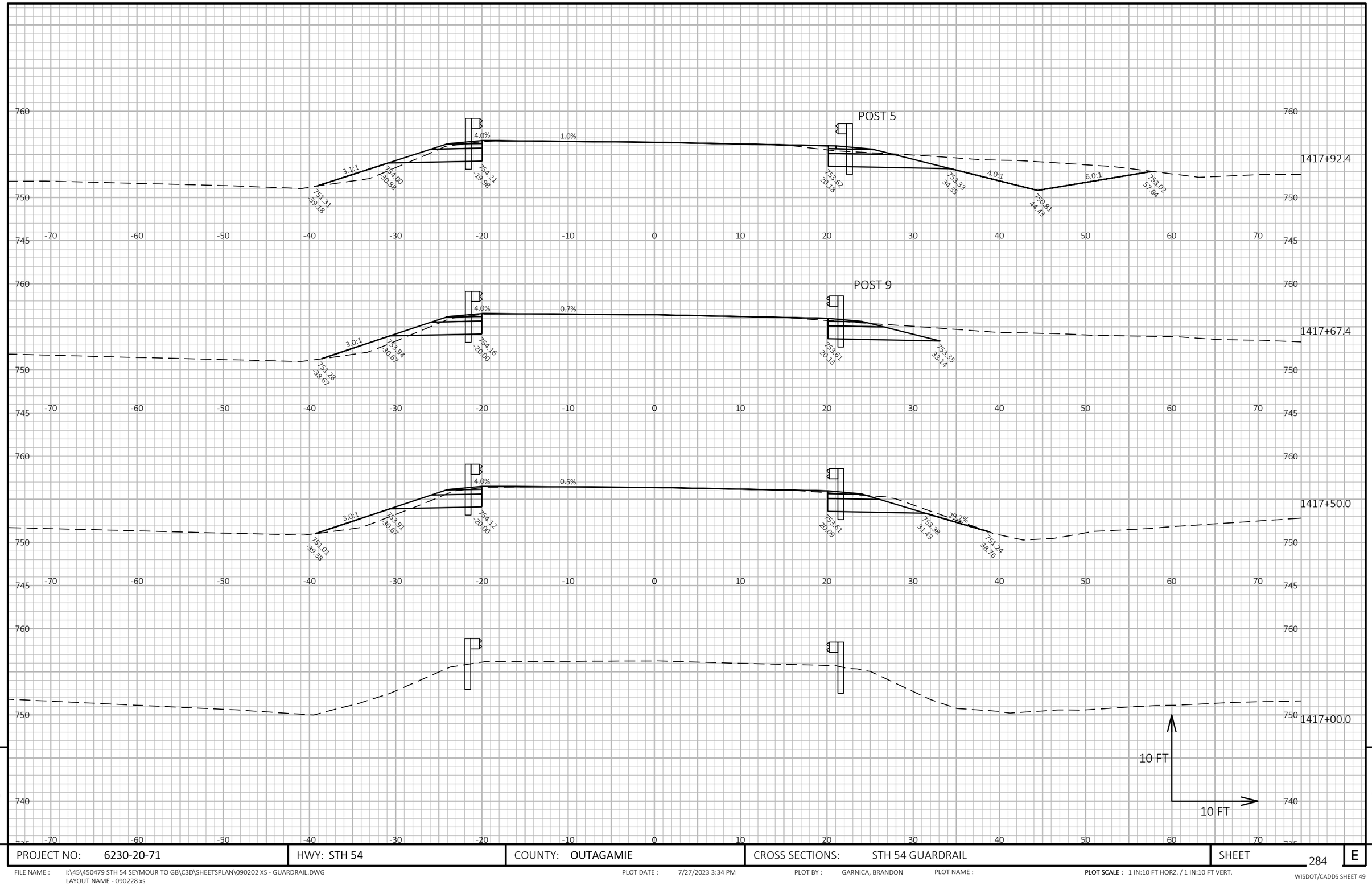

9

9

PROJECT NO: 6230-20-71	HWY: STH 54	COUNTY: OUTAGAMIE	CROSS SECTIONS: STH 54 GUARDRAIL	SHEET 284	E

FILE NAME : I:\45\450479 STH 54 SEYMOUR TO GB\C3D\SHEETSPLAN\090202 XS - GUARDRAIL.DWG
LAYOUT NAME - 090228 xs

PLOT DATE : 7/27/2023 3:34 PM PLOT BY : GARNICA, BRANDON PLOT NAME : **PLOT SCALE :** 1 IN:10 FT HORZ. / 1 IN:10 FT VERT.

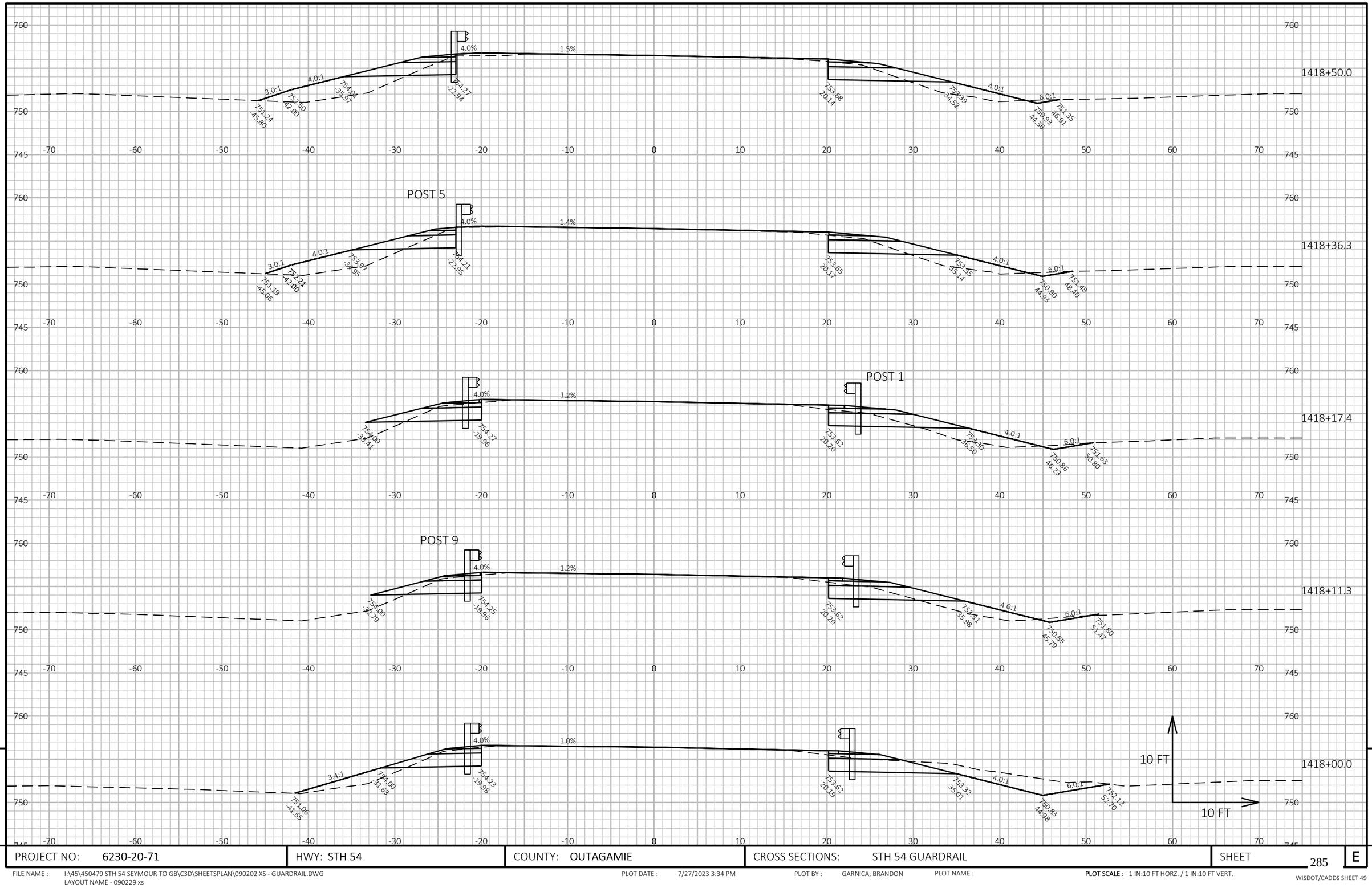

PROJECT NO: 6230-20-71	HWY: STH 54	COUNTY: OUTAGAMIE	CROSS SECTIONS: STH 54 GUARDRAIL	SHEET 285	E

FILE NAME : I:\45\450479 STH 54 SEYMOUR TO GB\C3D\SHEETSPLAN\090202 XS - GUARDRAIL.DWG
LAYOUT NAME - 090229 xs

PLOT DATE : 7/27/2023 3:34 PM PLOT BY : GARNICA, BRANDON PLOT NAME : **PLOT SCALE :** 1 IN:10 FT HORZ. / 1 IN:10 FT VERT.

WISDOT/CADDS SHEET 49

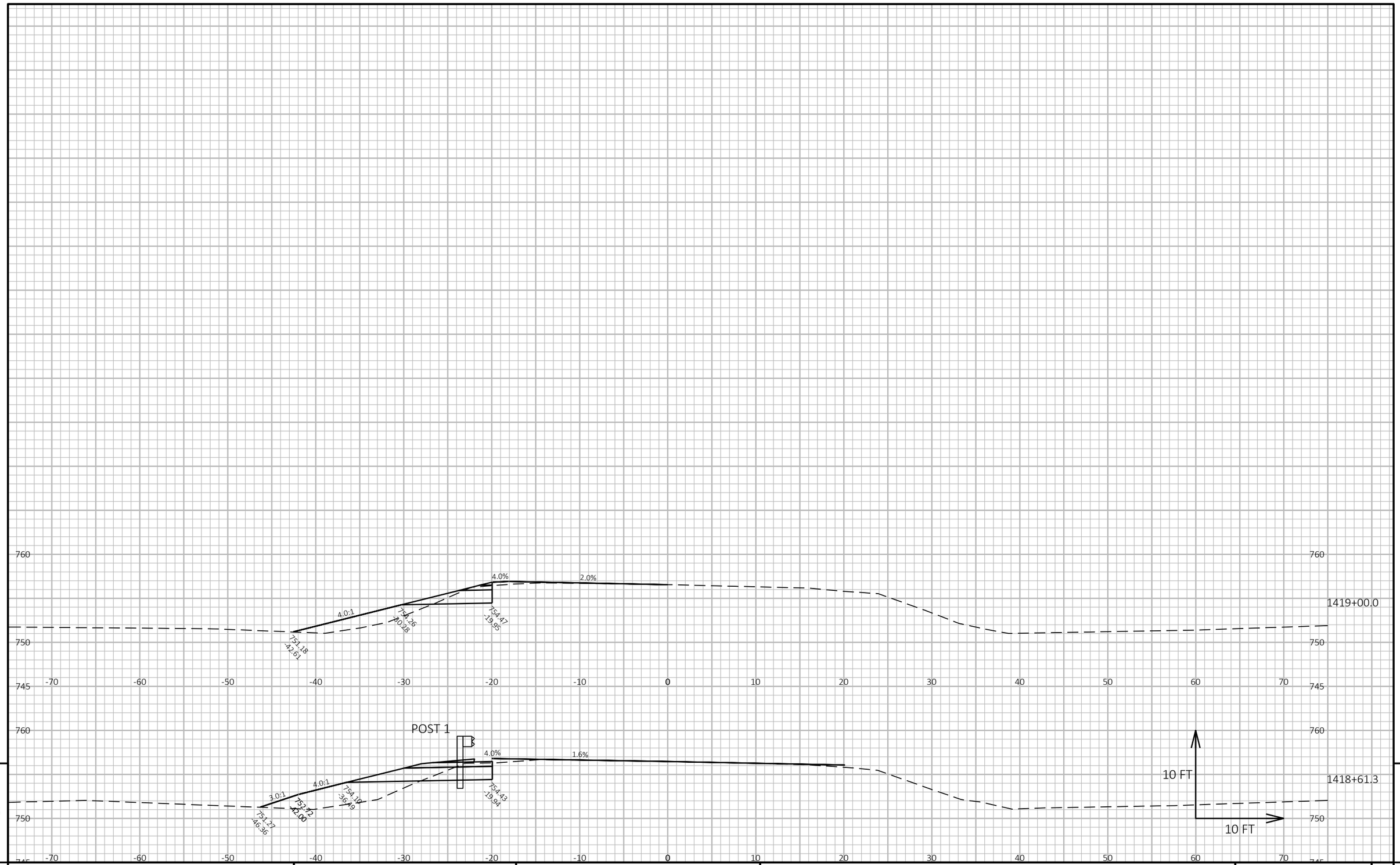

PROJECT NO: 6230-20-71	HWY: STH 54	COUNTY: OUTAGAMIE	CROSS SECTIONS: STH 54 GUARDRAIL	SHEET 286	E

FILE NAME : I:\45\450479 STH 54 SEYMOUR TO GB\C3D\SHEETSPLAN\090202 XS - GUARDRAIL.DWG
LAYOUT NAME - 090230 xs

PLOT DATE : 7/27/2023 3:34 PM PLOT BY : GARNICA, BRANDON PLOT NAME : PLOT SCALE : 1 IN:10 FT HORZ. / 1 IN:10 FT VERT.

WISDOT/CADDS SHEET 49

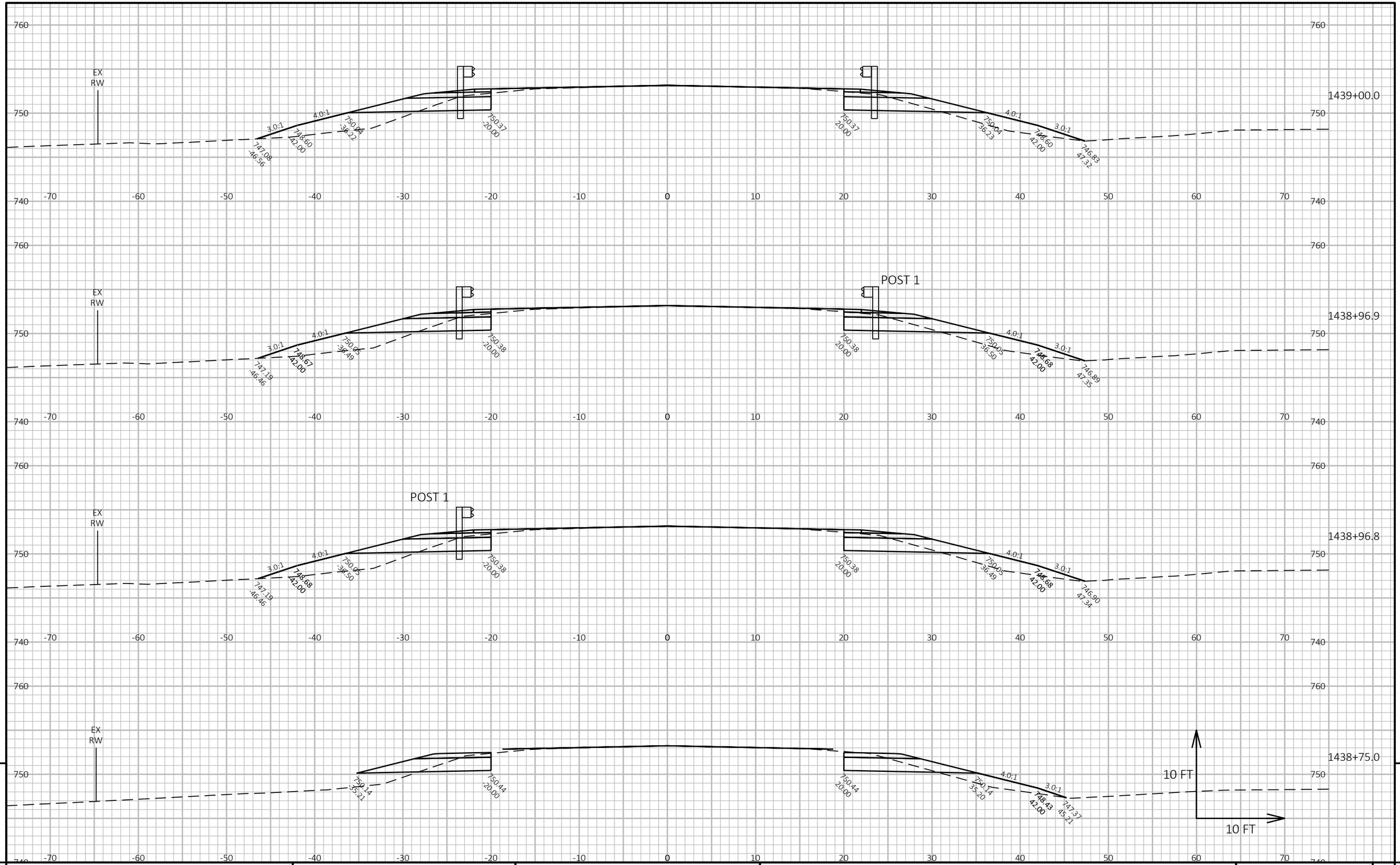

9

9

PROJECT NO: 6230-20-71	HWY: STH 54	COUNTY: OUTAGAMIE	CROSS SECTIONS: STH 54 GUARDRAIL	SHEET 287	E

FILE NAME : I:\45\450479 STH 54 SEYMOUR TO GB\C3D\SHEETSPLAN\090202 XS - GUARDRAIL.DWG
LAYOUT NAME - 090231 xs

PLOT DATE : 7/27/2023 3:34 PM PLOT BY : GARNICA, BRANDON PLOT NAME : **PLOT SCALE :** 1 IN:10 FT HORZ. / 1 IN:10 FT VERT.

WISDOT/CADDS SHEET 49

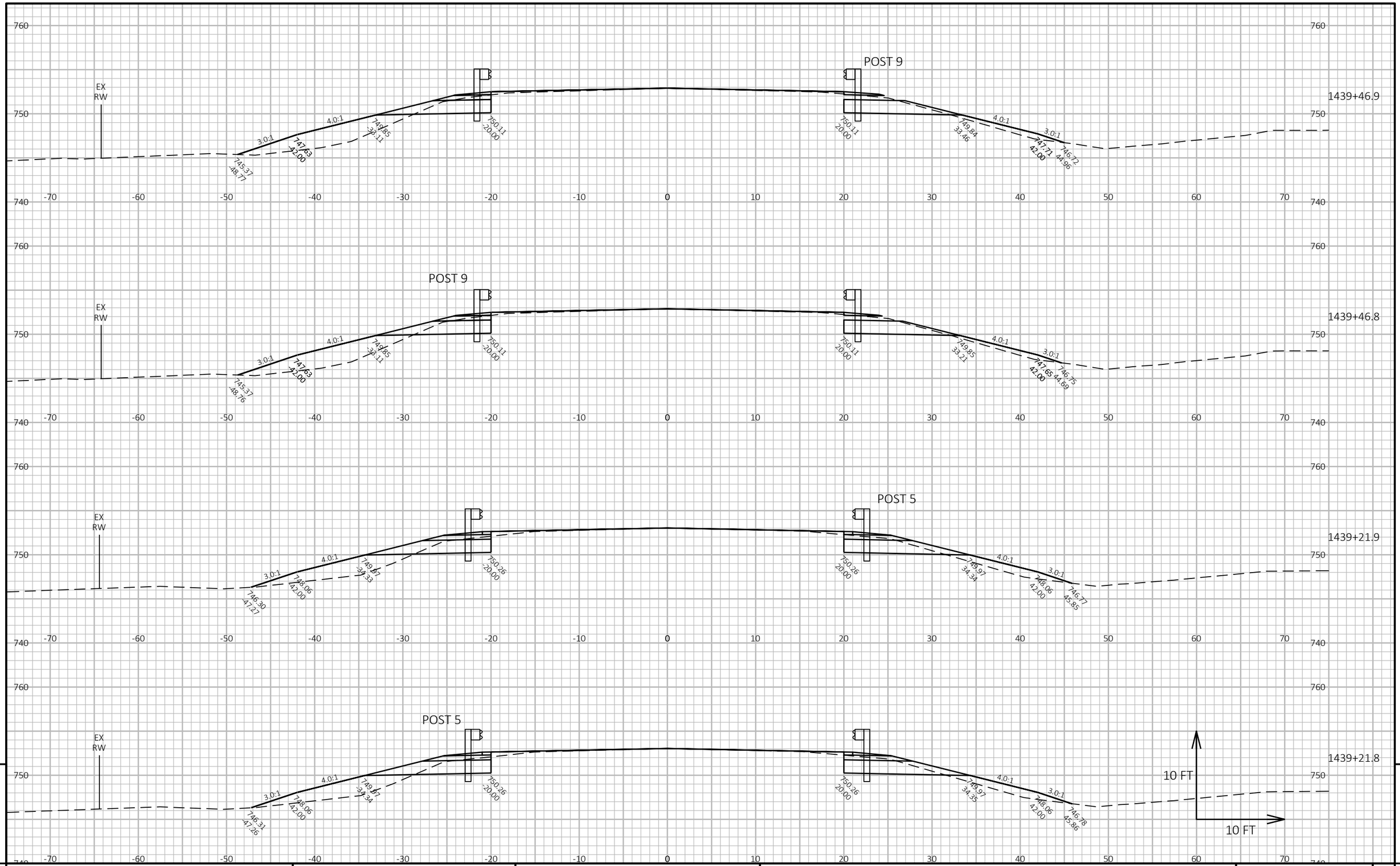

9

9

PROJECT NO: 6230-20-71	HWY: STH 54	COUNTY: OUTAGAMIE	CROSS SECTIONS: STH 54 GUARDRAIL	SHEET 288	E

FILE NAME : I:\45\450479 STH 54 SEYMOUR TO GB\C3D\SHEETSPLAN\090202 XS - GUARDRAIL.DWG
LAYOUT NAME - 090232 xs

PLOT DATE : 7/27/2023 3:34 PM PLOT BY : GARNICA, BRANDON PLOT NAME :

PLOT SCALE : 1 IN:10 FT HORZ. / 1 IN:10 FT VERT.

WISDOT/CADDS SHEET 49

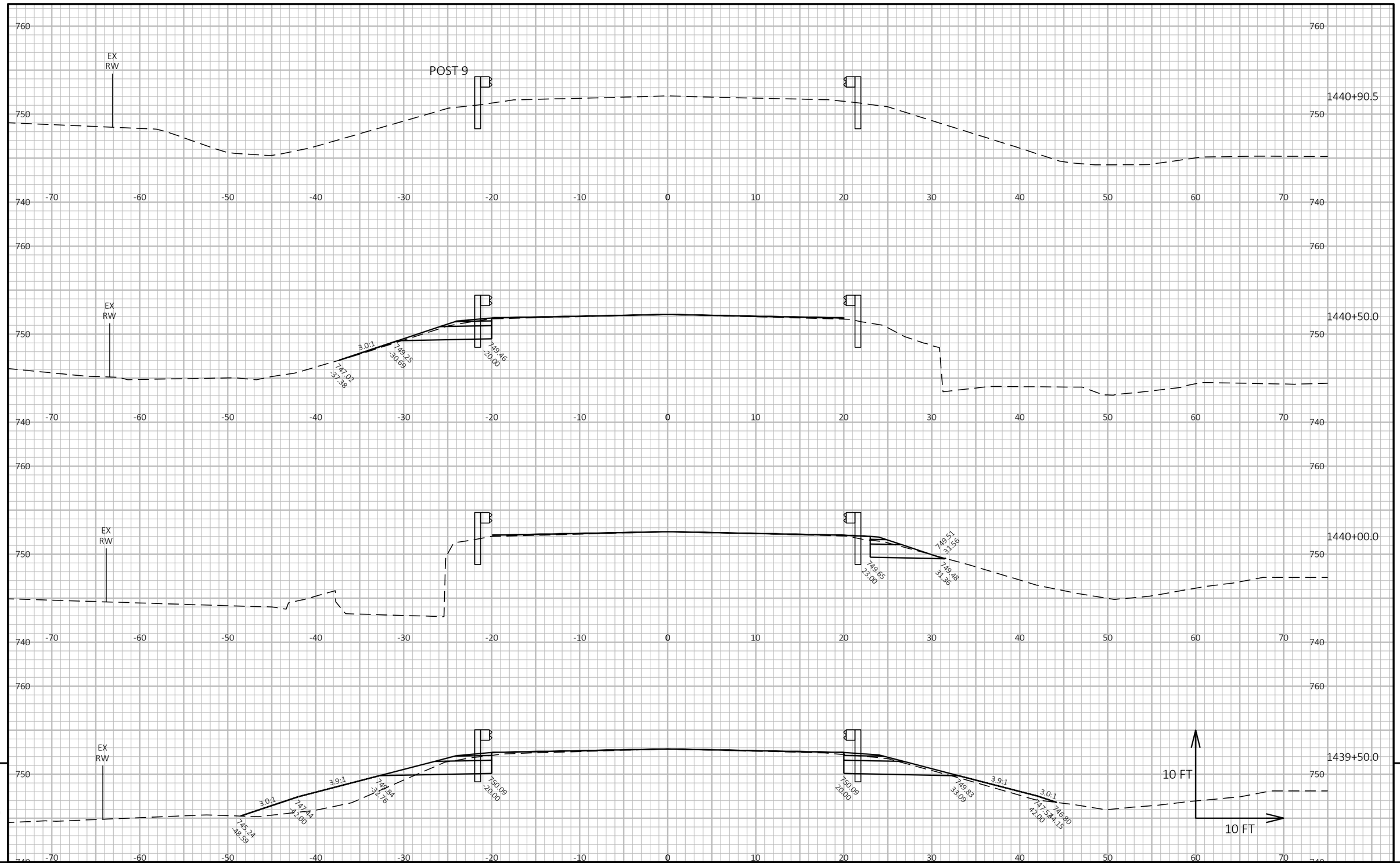

9

9

PROJECT NO: 6230-20-71	HWY: STH 54	COUNTY: OUTAGAMIE	CROSS SECTIONS: STH 54 GUARDRAIL	SHEET 289	E

FILE NAME : I:\45\450479 STH 54 SEYMOUR TO GB\C3D\SHEETSPLAN\090202 XS - GUARDRAIL.DWG
LAYOUT NAME - 090233 xs

PLOT DATE : 7/27/2023 3:35 PM PLOT BY : GARNICA, BRANDON PLOT NAME :

PLOT SCALE : 1 IN:10 FT HORZ. / 1 IN:10 FT VERT.

WISDOT/CADDS SHEET 49

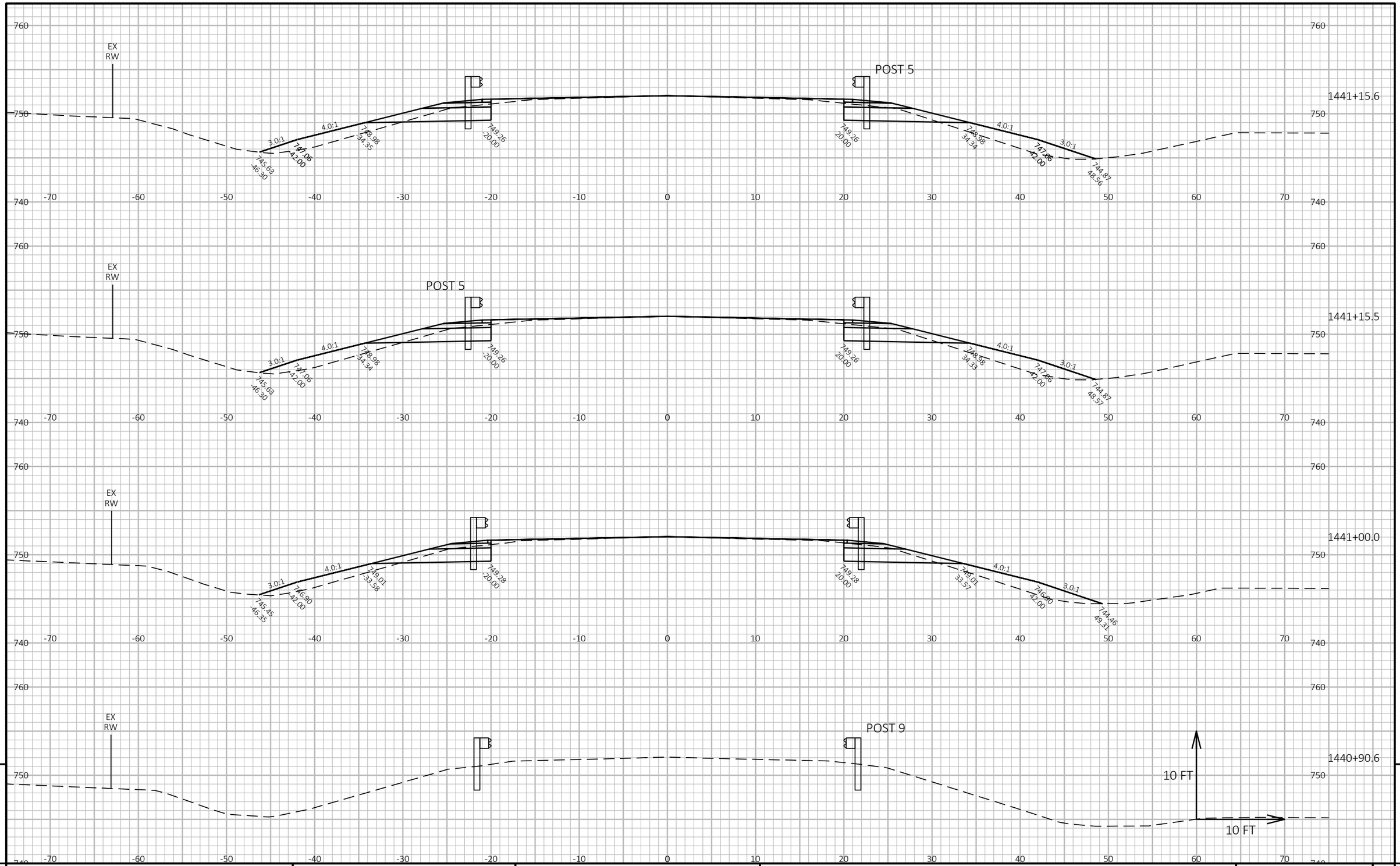

9

9

PROJECT NO: 6230-20-71	HWY: STH 54	COUNTY: OUTAGAMIE	CROSS SECTIONS: STH 54 GUARDRAIL	SHEET 290	E

FILE NAME : I:\45\450479 STH 54 SEYMOUR TO GB\C3D\SHEETSPLAN\090202 XS - GUARDRAIL.DWG
LAYOUT NAME - 090234 xs

PLOT DATE : 7/27/2023 3:35 PM PLOT BY : GARNICA, BRANDON PLOT NAME :

PLOT SCALE : 1 IN:10 FT HORZ. / 1 IN:10 FT VERT.

WISDOT/CADDS SHEET 49

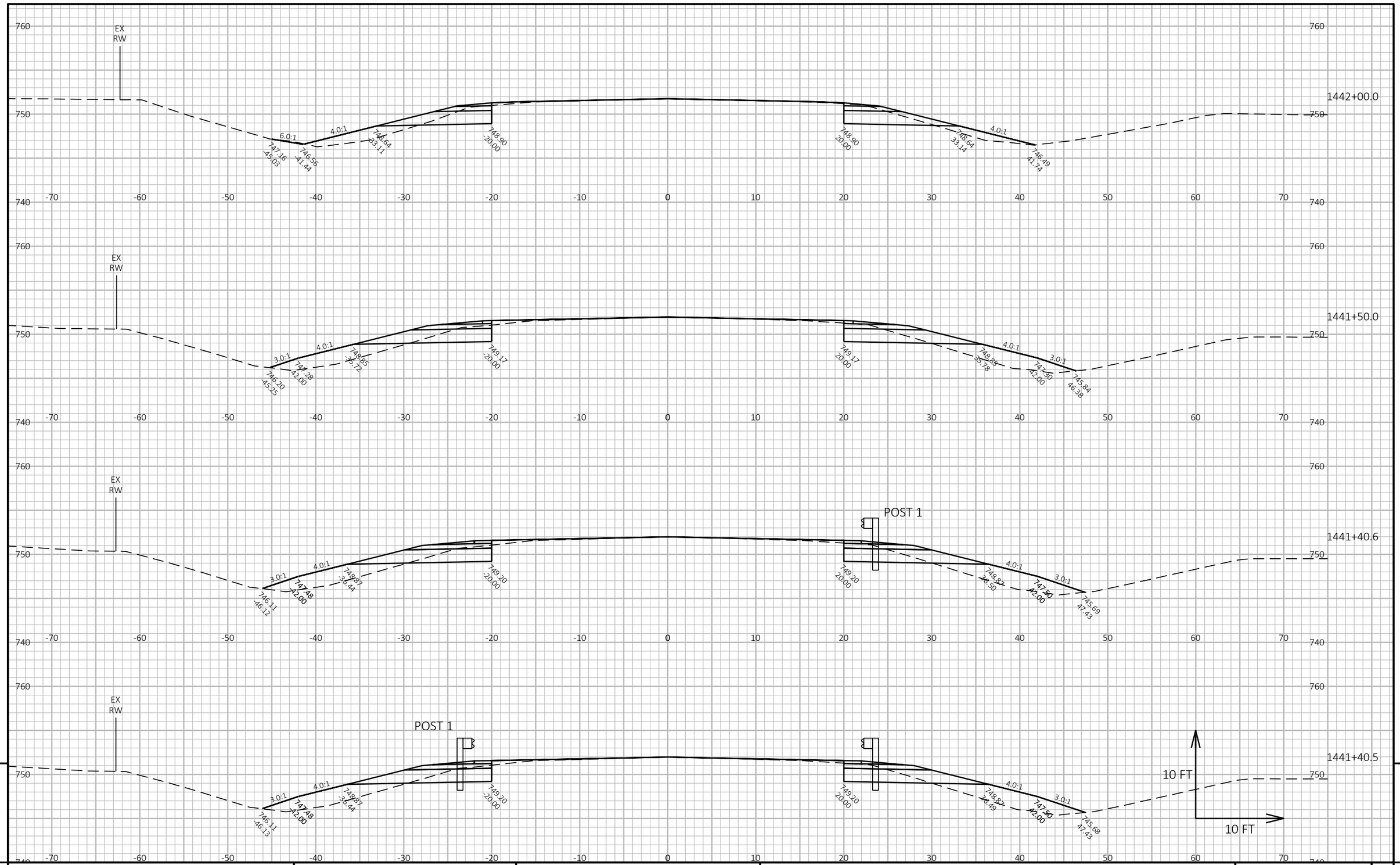

9

9

PROJECT NO: 6230-20-71	HWY: STH 54	COUNTY: OUTAGAMIE	CROSS SECTIONS: STH 54 GUARDRAIL	SHEET 291	E

FILE NAME : I:\45\450479 STH 54 SEYMOUR TO GB\C3D\SHEETSPLAN\090202 XS - GUARDRAIL.DWG
LAYOUT NAME - 090235 xs

PLOT DATE : 7/27/2023 3:35 PM PLOT BY : GARNICA, BRANDON PLOT NAME : PLOT SCALE : 1 IN:10 FT HORZ. / 1 IN:10 FT VERT.

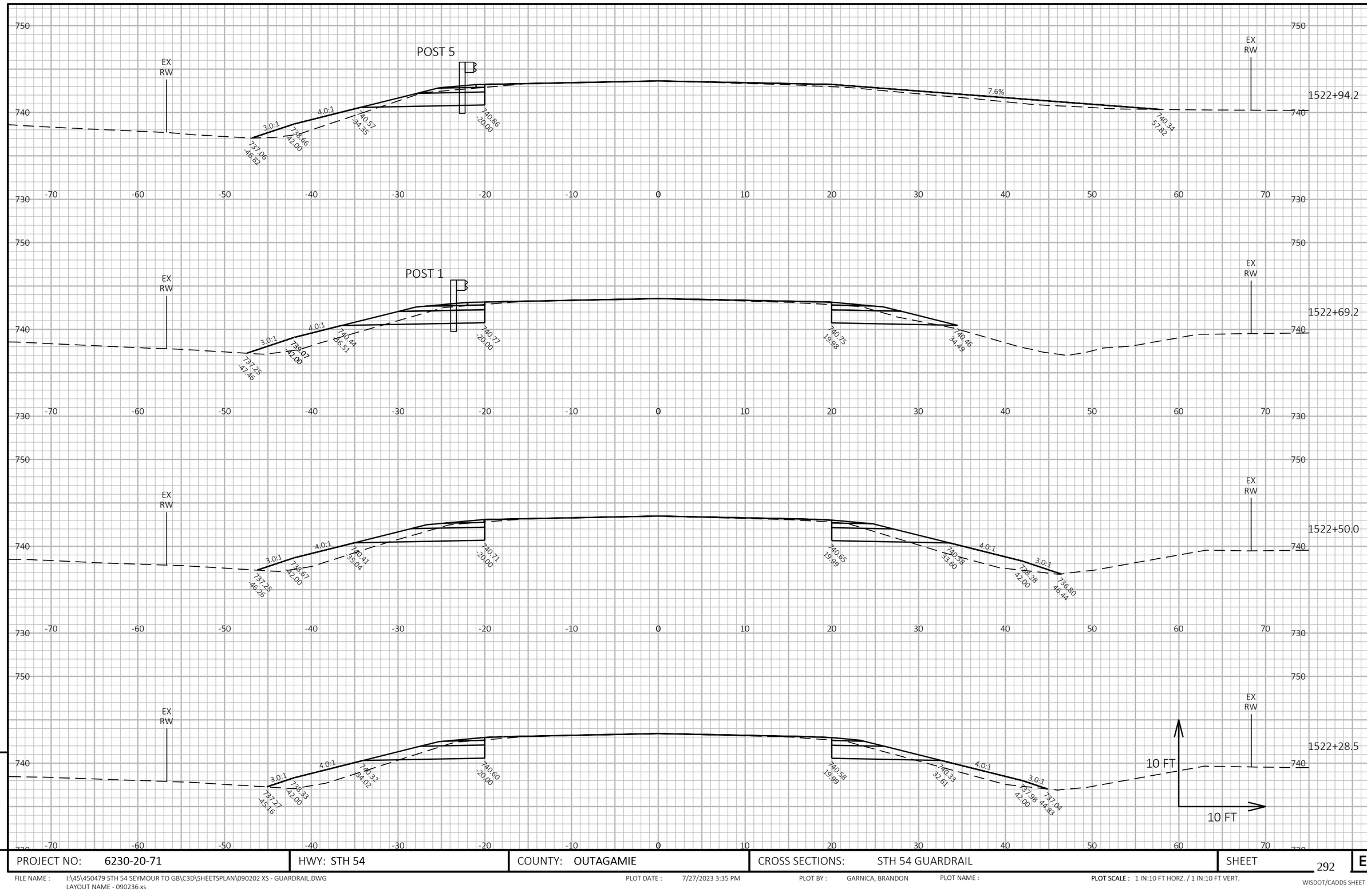

9

9

PROJECT NO: 6230-20-71	HWY: STH 54	COUNTY: OUTAGAMIE	CROSS SECTIONS: STH 54 GUARDRAIL	SHEET 292	E

FILE NAME : I:\45\450479 STH 54 SEYMOUR TO GB\C3D\SHEETSPLAN\090202 XS - GUARDRAIL.DWG
LAYOUT NAME - 090236 xs

PLOT DATE : 7/27/2023 3:35 PM

PLOT BY : GARNICA, BRANDON

PLOT NAME :

PLOT SCALE : 1 IN:10 FT HORZ. / 1 IN:10 FT VERT.

WISDOT/CADDS SHEET 49

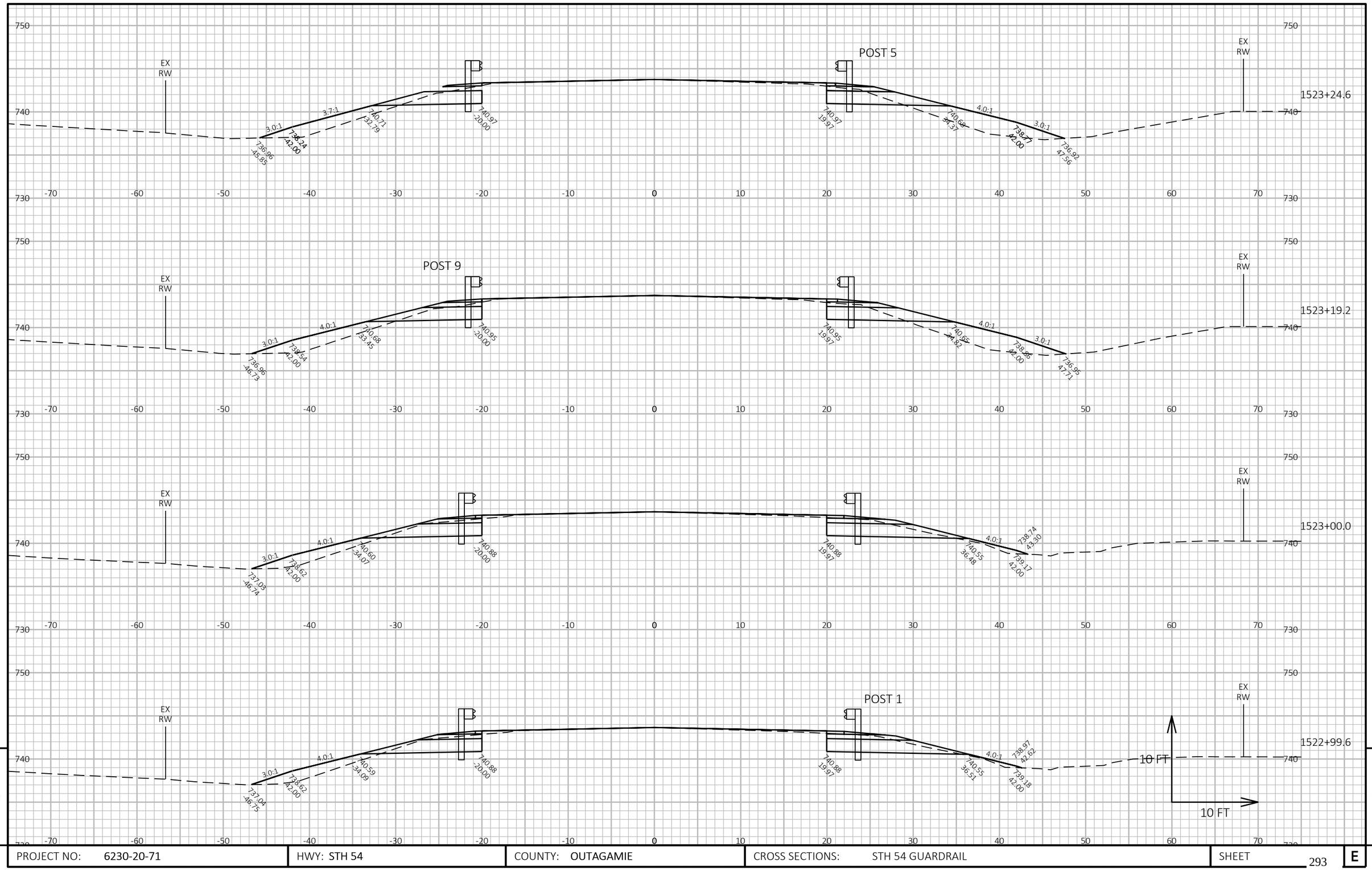

9

9

PROJECT NO: 6230-20-71	HWY: STH 54	COUNTY: OUTAGAMIE	CROSS SECTIONS: STH 54 GUARDRAIL	SHEET 293	E

FILE NAME : I:\45\450479 STH 54 SEYMOUR TO GB\C3D\SHEETSPLAN\090202 XS - GUARDRAIL.DWG
LAYOUT NAME - 090237 xs

PLOT DATE : 7/27/2023 3:35 PM PLOT BY : GARNICA, BRANDON PLOT NAME :

PLOT SCALE : 1 IN:10 FT HORZ. / 1 IN:10 FT VERT.

WISDOT/CADDS SHEET 49

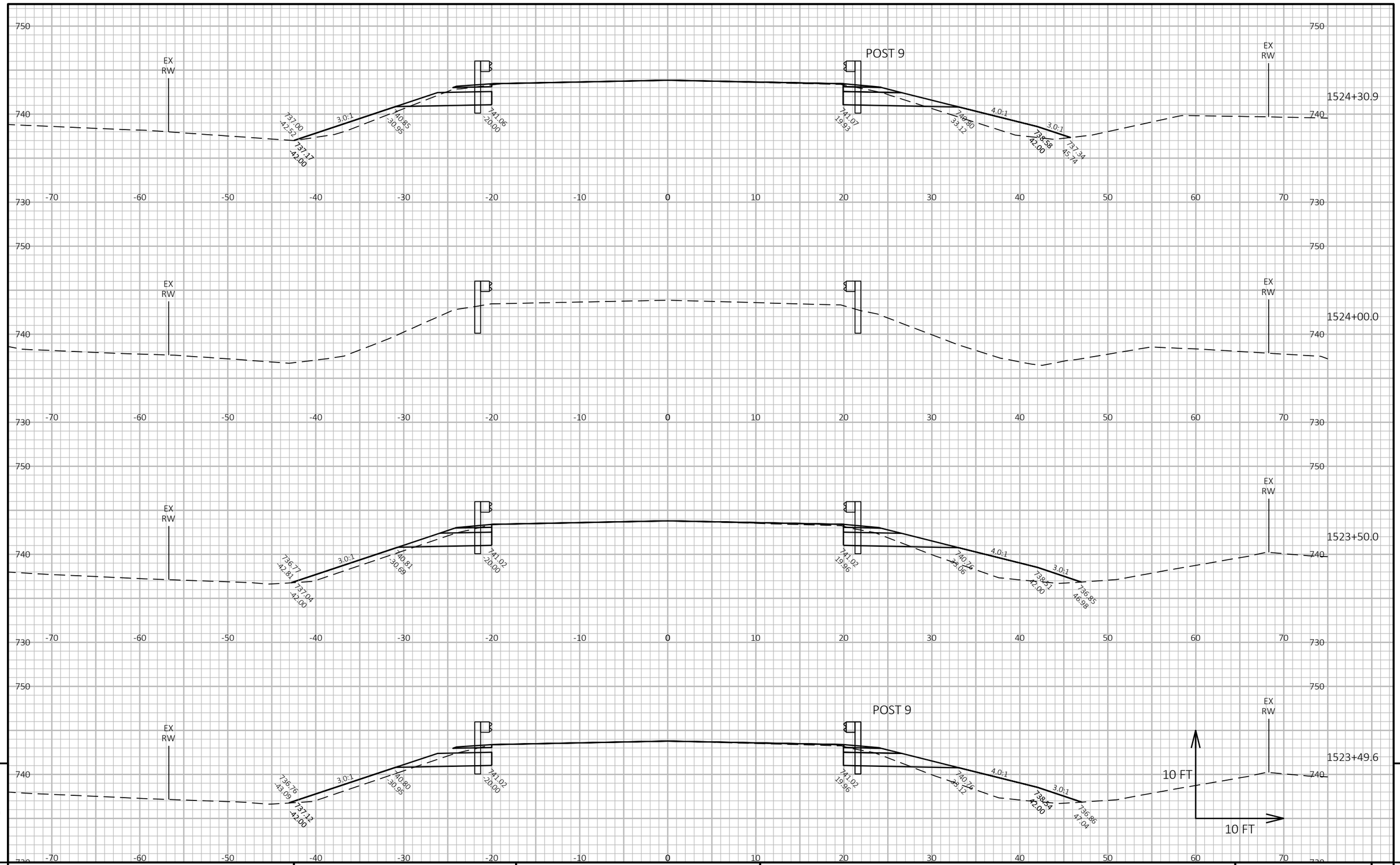

9

9

PROJECT NO: 6230-20-71	HWY: STH 54	COUNTY: OUTAGAMIE	CROSS SECTIONS: STH 54 GUARDRAIL	SHEET 294	E

FILE NAME : I:\45\450479 STH 54 SEYMOUR TO GB\C3D\SHEETSPLAN\090202 XS - GUARDRAIL.DWG
LAYOUT NAME - 090238 xs

PLOT DATE : 7/27/2023 3:35 PM PLOT BY : GARNICA, BRANDON PLOT NAME : **PLOT SCALE :** 1 IN:10 FT HORZ. / 1 IN:10 FT VERT.

WISDOT/CADDS SHEET 49

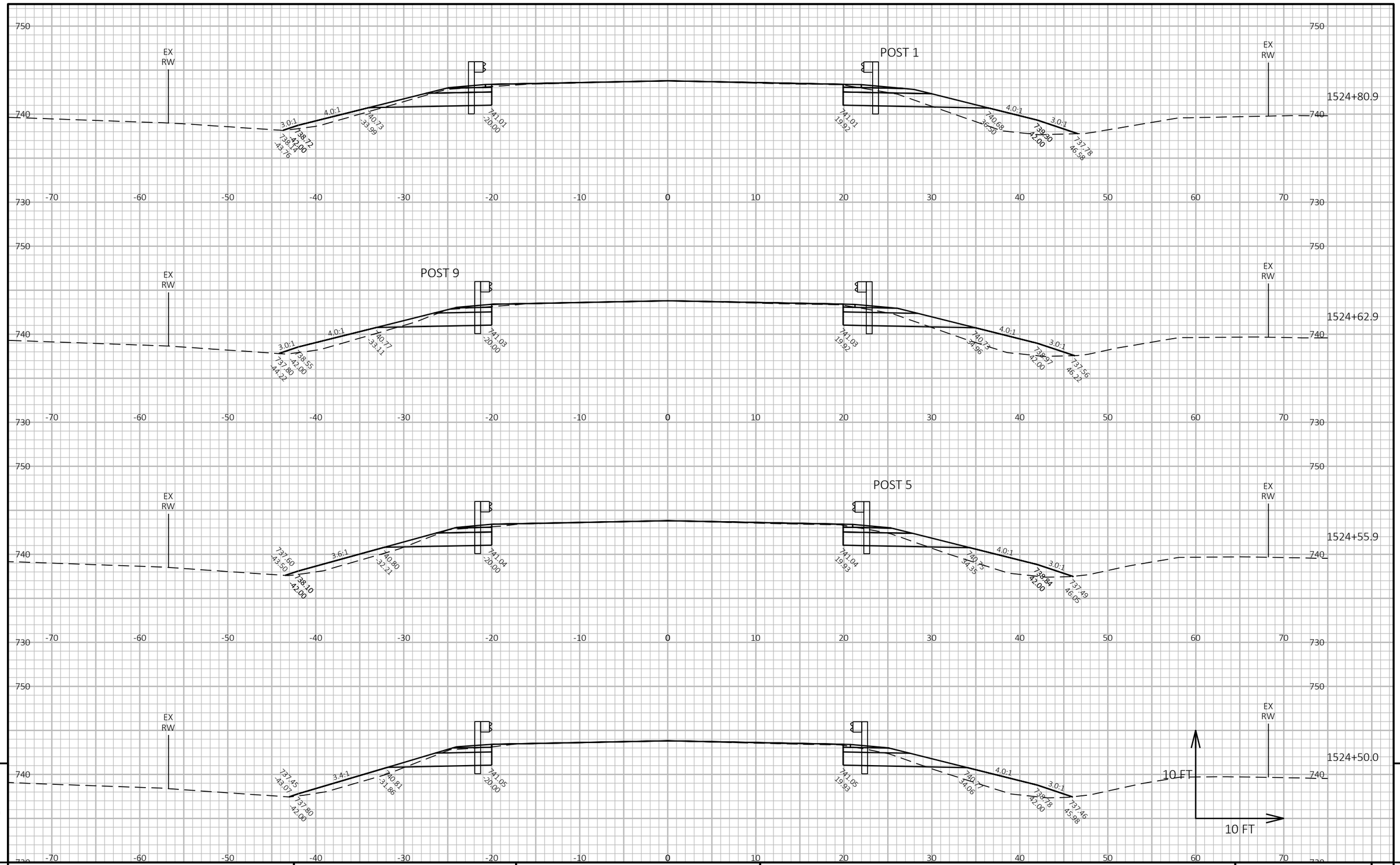

9 9

PROJECT NO: 6230-20-71	HWY: STH 54	COUNTY: OUTAGAMIE	CROSS SECTIONS: STH 54 GUARDRAIL	SHEET 295	E

FILE NAME : I:\45\450479 STH 54 SEYMOUR TO GB\C3D\SHEETSPLAN\090202 XS - GUARDRAIL.DWG
LAYOUT NAME - 090239 xs

PLOT DATE : 7/27/2023 3:35 PM PLOT BY : GARNICA, BRANDON PLOT NAME : **PLOT SCALE :** 1 IN:10 FT HORZ. / 1 IN:10 FT VERT.

WISDOT/CADDS SHEET 49

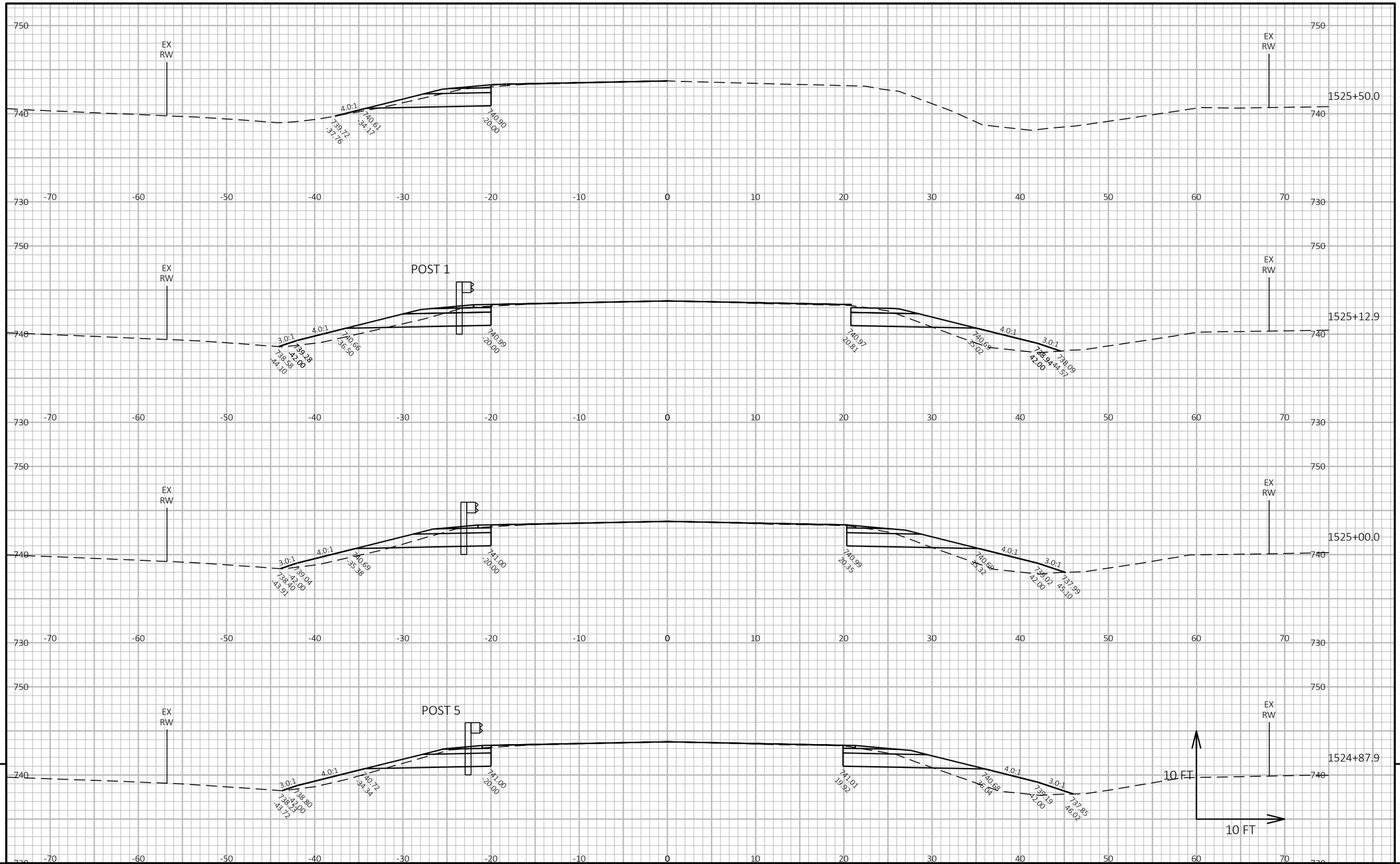

9

9

PROJECT NO: 6230-20-71	HWY: STH 54	COUNTY: OUTAGAMIE	CROSS SECTIONS: STH 54 GUARDRAIL	SHEET 296	E

FILE NAME : I:\45\450479 STH 54 SEYMOUR TO GB\C3D\SHEETSPLAN\090202 XS - GUARDRAIL.DWG
LAYOUT NAME - 090240 xs

PLOT DATE : 7/27/2023 3:35 PM PLOT BY : GARNICA, BRANDON PLOT NAME :

PLOT SCALE : 1 IN:10 FT HORZ. / 1 IN:10 FT VERT.

WISDOT/CADDS SHEET 49

Notes

Wisconsin Department of Transportation

Dedicated people creating transportation solutions
through innovation and exceptional service.

http://www.dot.wisconsin.gov