WKE

Feb 14, 2023

PROJECT ID: 3700-11-70

WITH: 3700-11-00

COUNTY: KENOSHA

ORDER OF SHEETS

Section No.	1	Title
Section No.	2	Typical Sections and Details
Section No.	3	Estimate of Quantities
Section No.	3	Miscellaneous Quantities
~~Section No.~~	~~4~~	~~Right of Way Plat~~
~~Section No.~~	~~5~~	~~Plan and Profile~~
~~Section No.~~	~~6~~	~~Standard Detail Drawings~~
Section No.	7	Sign Plates
Section No.	8	Structure Plans
~~Section No.~~	~~9~~	~~Computer Earthwork Data~~
~~Section No.~~	~~9~~	~~Cross Sections~~

TOTAL SHEETS = 214

25

N

DESIGN DESIGNATION		STH 158	EFR	STH 165	CTH H
A.A.D.T.	=	15,800	3,000	16,600	6,100
A.A.D.T.	=				
D.H.V.	=				
D.D.	=				
T.	=				
DESIGN SPEED	=	50 MPH	40 MPH	50 MPH	40 MPH
ESALS	=				

CONVENTIONAL SYMBOLS

PLAN

CORPORATE LIMITS

PROPERTY LINE

LOT LINE

LIMITED HIGHWAY EASEMENT

EXISTING RIGHT OF WAY

PROPOSED OR NEW R/W LINE

SLOPE INTERCEPT

REFERENCE LINE (300'EB')

EXISTING CULVERT

PROPOSED CULVERT (Box or Pipe)

COMBUSTIBLE FLUIDS (CAUTION)

MARSH AREA

WOODED OR SHRUB AREA

PROFILE

GRADE LINE

ORIGINAL GROUND

MARSH OR ROCK PROFILE (To be noted as such) (ROCK)

SPECIAL DITCH (LABEL)

GRADE ELEVATION (95.36)

CULVERT (Profile View)

UTILITIES

ELECTRIC — E

FIBER OPTIC — FO

GAS — G

SANITARY SEWER — SAN

STORM SEWER — SS

TELEPHONE — T

WATER — W

UTILITY PEDESTAL

POWER POLE

TELEPHONE POLE

STATE OF WISCONSIN
DEPARTMENT OF TRANSPORTATION

PLAN OF PROPOSED IMPROVEMENT

SIGNAL INSTALL AND SIGNAL REPLACEMENT

VARIOUS SIGNALIZED INTERSECTIONS

VARIOUS HIGHWAYS
KENOSHA COUNTY

STATE PROJECT NUMBER
3700-11-70

STATE PROJECT	FEDERAL PROJECT	
	PROJECT	CONTRACT
3700-11-70		

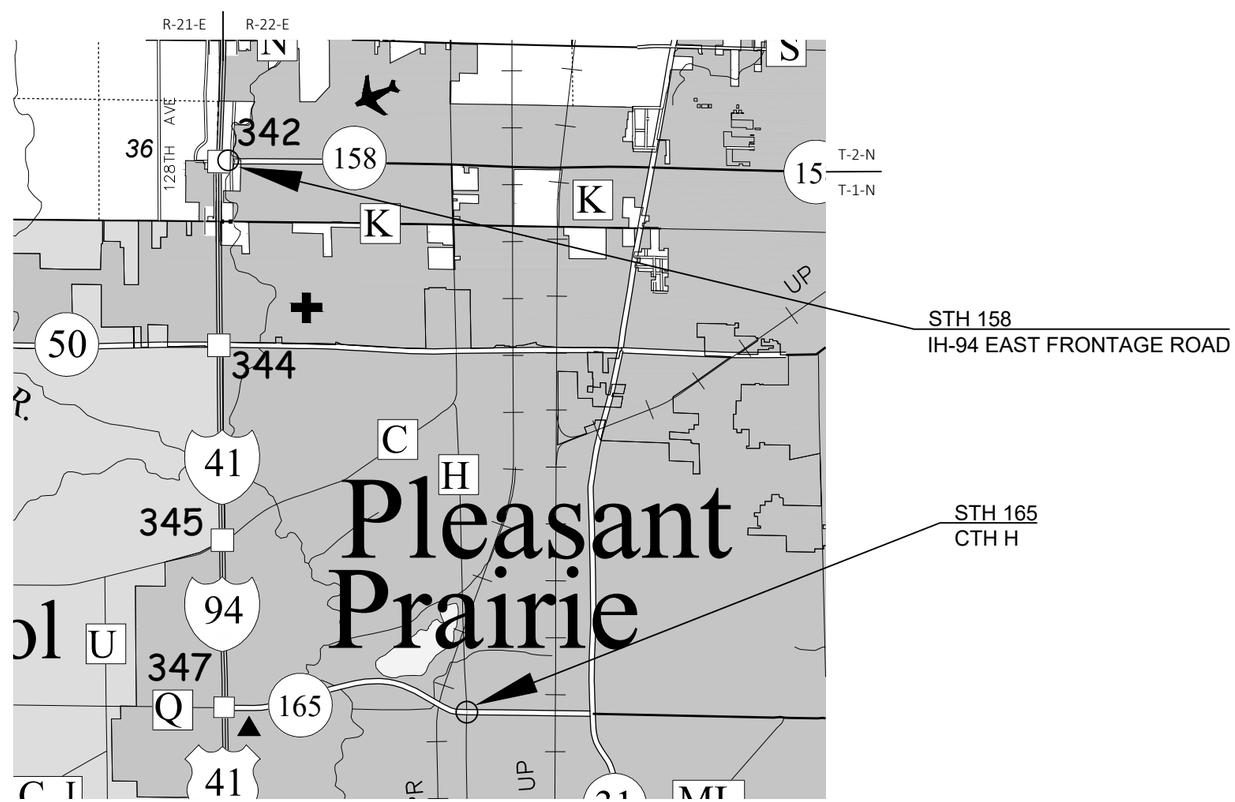

LAYOUT

SCALE 0 — 2 MI

TOTAL NET LENGTH OF CENTERLINE = 0.000 MI

HORIZONTAL POSITIONS SHOWN ON THIS PLAN ARE WISCONSIN COORDINATE REFERENCE SYSTEM (WISCRS), KENOSHA COUNTY, NAD83 (2011), IN U.S. SURVEY FEET. POSITIONS SHOWN ARE GRID COORDINATES, GRID BEARINGS, AND GRID DISTANCES. GRID DISTANCES ARE THE SAME AS GROUND DISTANCES.

ELEVATIONS ARE REFERENCED TO NAVD 88 (2012). GPS DERIVED ELEVATIONS ARE BASED ON GEOID 12A

STATE OF WISCONSIN
DEPARTMENT OF TRANSPORTATION

PREPARED BY

Surveyor	CORRE
Designer	BHUVAN MANANDHAR
Project Manager	MALATHI KARRI
Regional Examiner	
Regional Supervisor	JANET CANNON

APPROVED FOR THE DEPARTMENT

DATE: 11-22-2022 Malathi Karri (Signature)

E

2

GENERAL NOTES

THE LOCATIONS OF EXISTING AND PROPOSED UTILITY INSTALLATIONS AS SHOWN ON THE PLANS ARE APPROXIMATE. THERE MAY BE OTHER UTILITY INSTALLATIONS WITHIN THE PROJECT AREA THAT ARE NOT SHOWN. COORDINATE CONSTRUCTION ACTIVITIES WITH A CALL TO DIGGERS HOTLINE AND/OR A DIRECT CALL TO THE UTILITIES THAT HAVE FACILITIES IN THE AREA. NOT ALL UTILITIES ARE MEMBERS OF DIGGERS HOTLINE.

ANY REINFORCEMENT LOCATED IN EXISTING CONCRETE PAVEMENT SHALL BE CONSIDERED INCIDENTAL TO THE REMOVING PAVEMENT ITEM, AND NO ADDITIONAL COMPENSATION WILL BE GRANTED.

CONTACT THE PROJECT ENGINEER, THE COUNTY SURVEYOR, AND SEWRPC AT LEAST TWO WEEKS BEFORE WORKING NEAR ANY SECTION CORNER MONUMENT.

VERIFY EXISTING PAVEMENT ELEVATIONS AT ALL TIE-INS TO EXISTING PAVEMENT PRIOR TO CONSTRUCTION. NOTIFY ENGINEER IF A DISCREPANCY IS FOUND BETWEEN PROPOSED PLAN ELEVATIONS AND EXISTING PAVEMENT ELEVATIONS.

TINE CONCRETE PAVEMENT LONGITUDINALLY UNLESS OTHERWISE IDENTIFIED IN THE PLAN OR DIRECTED BY THE ENGINEER.

CONSTRUCT INSIDE EDGE OF SIDEWALK 1/2 INCH HIGHER THAN TOP OF CURB WHEN THEY ARE ADJACENT TO EACH OTHER.

RESHAPE, RESTORE AND FINISH ALL PREVIOUSLY GRASSED AREAS DISTURBED BY OPERATIONS OUTSIDE OF THE NORMAL CONSTRUCTION LIMITS AT NO EXPENSE TO THE DEPARTMENT.

DISTURBED AREAS WITHIN THE RIGHT OF WAY ARE TO BE TOPSOILED (SALVAGED), FERTILIZED, SEEDED, AND EROSION MATTED AS DIRECTED BY THE ENGINEER.

BACKFILL ALL OPENINGS AND HOLES LOCATED WITHIN THE ROADWAY RESULTING FROM REMOVALS OR ABANDONMENTS WITH GRANULAR BACKFILL UNLESS THE PLANS PROVIDE FOR ALTERNATE BACKFILL.

DO NOT REMOVE ANY TREES OR SHRUBS WITHOUT APPROVAL OF THE ENGINEER.

ALL SIGN LOCATIONS SHALL BE REVIEWED BY THE ENGINEER PRIOR TO INSTALLATION.

RE-TOPSOIL OF GRADED AREAS, AS DESIGNATED BY THE ENGINEER, IMMEDIATELY AFTER GRADING IS COMPLETED WITHIN THOSE AREAS.

STOCKPILE EXCESS MATERIAL OR SPOILS ON UPLAND AREAS AWAY FROM WETLANDS, FLOODPLAINS AND WATERWAYS. STOCKPILED SOIL SHALL BE PROTECTED AGAINST EROSION. IF STOCKPILED MATERIAL IS LEFT FOR MORE THAN FOURTEEN (14) CALENDAR DAYS, SEED THE STOCKPILE WITH TEMPORARY SEED.

EROSION CONTROL BMP'S ARE AT SUGGESTED LOCATIONS. THE ACTUAL LOCATIONS WILL BE DETERMINED BY THE CONTRACTORS ECIP AND BY THE ENGINEER. EROSION CONTROL BMP'S SHALL BE MAINTAINED UNTIL PERMANENT VEGETATION IS ESTABLISHED OR UNTIL THE ENGINEER DETERMINES THAT THE BMP IS NO LONGER REQUIRED.

DIGGERS HOTLINE

Dial 811 or (800) 242-8511

www.DiggersHotline.com

UTILITY CONTACTS

DALE DEFEVER
AT&T LOCAL NETWORK - COMMUNICATION LINE
39869 LINN ST
CANTON, MI 48147
(586) 242-2671
DD2579@ATT.COM

JEFF MADSON
WISCONSIN DEPARTMENT OF TRANSPORTATION - COMMUNICATION LIN
STE. 300
433 W. ST. PAUL AVE.
MILWAUKEE, WI 53203-3007
(414) 225-3723
JEFFREY.MADSON@DOT.WI.GOV

BEAU ABUYA
SPECTRUM - COMMUNICATION LINE
1320 N DR MARTIN LUTHER KING JR DR
MILWAUKEE, WI 53212
(414) 908-1343
WIS.ENGINEERING@CHARTER.COM

JOHN STEINBRINK, JR.
VILLAGE OF PLEASANT PRAIRIE - WATER
8600 GREEN BAY ROAD
PLEASANT PRAIRIE, WI 53158
(262) 925-6768
JSTEINBRINK@PLEASANTPRAIRIEWI.GOV

WE ENERGIES UTILITY COORDINATOR
WE ENERGIES - ELECTRICITY
500 S 116TH STREET
WEST ALLIS, WI 53214
(414) 221-2738
WE-UTILITY-RELOCATIONS@WE-ENERGIES.COM

GENERAL MAILBOX CENTURYLINK NATIONAL OSP RELOC
CENTURYLINK COMMUNICATIONS, LLC - COMMUNICATION LINE
RELOCATIONS@LUMEN.COM

VINAKOM COMMUNICATIONS
860 REMINGTON ROAD
SCHAUMBURG, IL 60173
(866) 435-7846

MIKE VANBOVEN
AT&T WISCONSIN - COMMUNICATION LINE
411 7TH STREET
RACINE, WI 53403
(262) 676-3958
MV3658@ATT.COM

BRIAN CATER
CITY OF KENOSHA - STREET LIGHTING
ROOM 305
625 52ND ST.
KENOSHA, WI 53140
(262) 653-4156
BCATER@KENOSHA.ORG

RICHARD TRGOVEC
MIDWEST FIBER NETWORKS LLC - COMMUNICATION LINE
6070 NORTH FLINT RD
GLENDALE, WI 53209
(414) 459-3554
RTRGOVEC@MIDWESTFIBERNETWORKS.COM

JOHN STEINBRINK, JR.
VILLAGE OF PLEASANT PRAIRIE - SEWER
8600 GREEN BAY ROAD
PLEASANT PRAIRIE, WI 53158
(262) 925-6768
JSTEINBRINK@PLEASANTPRAIRIEWI.GOV

WE ENERGIES UTILITY COORDINATOR
WE ENERGIES - GAS/PETROLEUM
500 S 116TH STREET
WEST ALLIS, WI 53214
(414) 221-2738
WE-UTILITY-RELOCATIONS@WE-ENERGIES.COM

NETWORK RELOCATIONS
LEVEL 3 COMMUNICATIONS LLC - COMMUNICATION LINE
1025 ELDORADO BLVD
BROOMFIELD, CO 80021
RELOCATIONS@LUMEN.COM

DNR CONTACT

BENTON STELZEL
141 NW BARSTOW ST
WAUKESHA WI 53188
(262) 623-0194
BENTON.STELZEL@WISCONSIN.GOV

SEWRPC CONTACTS

ROB MERRY (CHIEF SURVEYOR)
SOUTHEASTERN WISCONSIN REGIONAL PLANNING COMMISSION
W239N1812 ROCKWOOD DRIVE
P.O. BOX 1607
WAUKESHA, WI 53187-1607
(262)953-4289
CELL (920)912-1036
FAX (262)547-1103
RMERRY@SEWRPC.ORG

ANDY TRAEGER (CONSTRUCTION COORDINATOR)
SOUTHEASTERN WISCONSIN REGIONAL PLANNING COMMISSION
W239N1812 ROCKWOOD DRIVE
P.O. BOX 1607
WAUKESHA, WI 53187-1607
(262)953-4296
CELL (262)853-8463
FAX (262)547-1103
ATRAEGER@SEWRPC.ORG

WISDOT CONTACTS

WISDOT SIGNALS ENGINEER
JOYCE MURPHY
141 NW BARSTOW ST
WAUKESHA, WI 53187
(262) 548-5933
JOYCE.MURPHY@DOT.WI.GOV

WISDOT ELECTRICAL FIELD UNIT
PETER ADAMCZYK
935 S 60TH STREET
WEST ALLIS, WI 53214
(414) 380-1827
PETER.ADAMCZYK@DOT.WI.GOV

WISDOT CONTACTS

WISDOT PROJECT MANAGER
MALATHI KARRI
141 NW BARSTOW ST
WAUKESHA WI 53187
(262) 548-5847
MALATHI.KARRI@DOT.WI.GOV

WISDOT TRAFFIC LIGHTING
ERIC PEREA
935 S 60TH STREET
WEST ALLIS, WI 53214
(262) 574-5422
ERIC.PEREA@DOT.WI.GOV

WISDOT ELECTRICAL FIELD UNIT
DENNIS CAULEY (LEAD ELECTRICIAN)
935 S 60TH STREET
WEST ALLIS, WI 53214
(414) 266-1162
DENNIS.CAULEY@DOT.WI.GOV

WISDOT REGIONAL ENVIRONMENTAL COORDINATOR
THOMAS CURRAN
141 NW BARSTOW STREET
WAUKESHA, WI 53187
(262) 548-5682
THOMAS1.CURRAN@DOT.WI.GOV

DIGGERS HOTLINE
Dial 811 or (800) 242-8511
www.DiggersHotline.com

2

STH 158 & IH-41/94 EAST FRONTAGE RD INTERSECTION

STH 165 & CTH H INTERSECTION

2

PROJECT NO: 3700-11-70	HWY: VAR. SIGNALIZED INTERSECTIONS	COUNTY: KENOSHA	PROJECT OVERVIEW	SHEET 4	E

FILE NAME : N:\PDS\C3D\37001100\SHEETSPLAN\020201-PO.DWG
LAYOUT NAME - po-1
PLOT DATE : 8/29/2022 1:22 PM
PLOT BY : MANANDHAR, BHUVAN K
PLOT NAME :
PLOT SCALE : 1 IN:1000 FT
WISDOT/CADDS SHEET 42

2

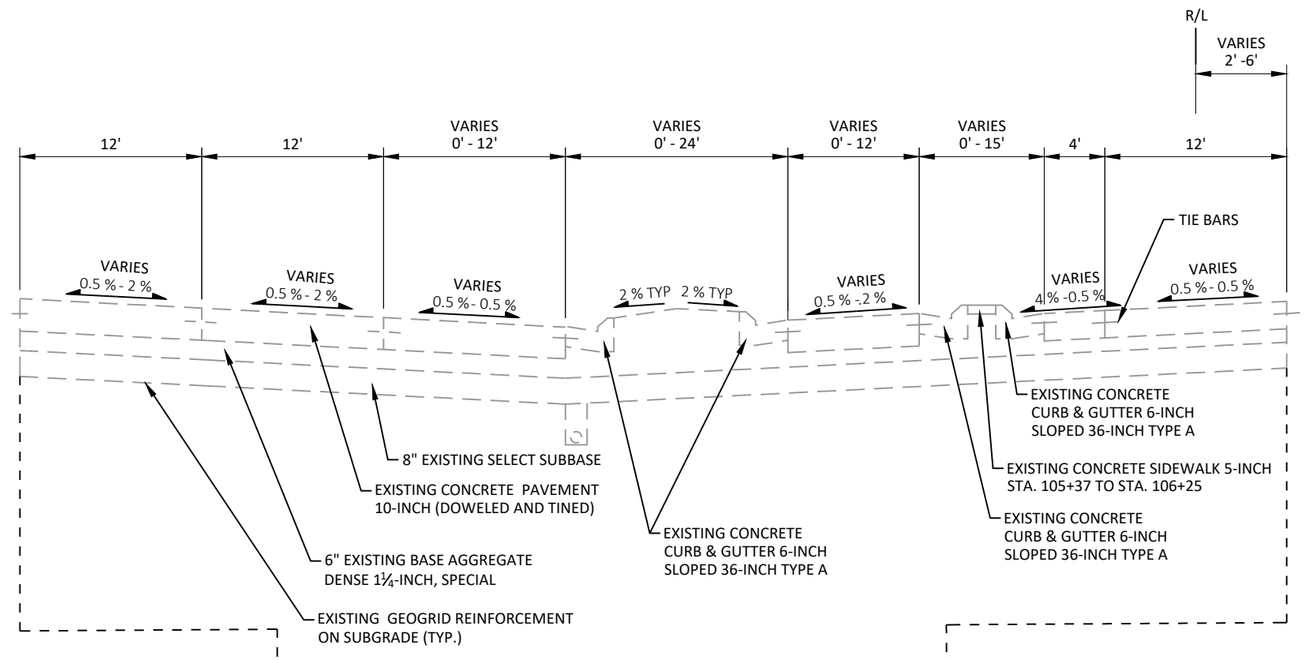

EXISTING / PROPOSED TYPICAL SECTION
STH 158

STA. 103+00 - STA. 106+25

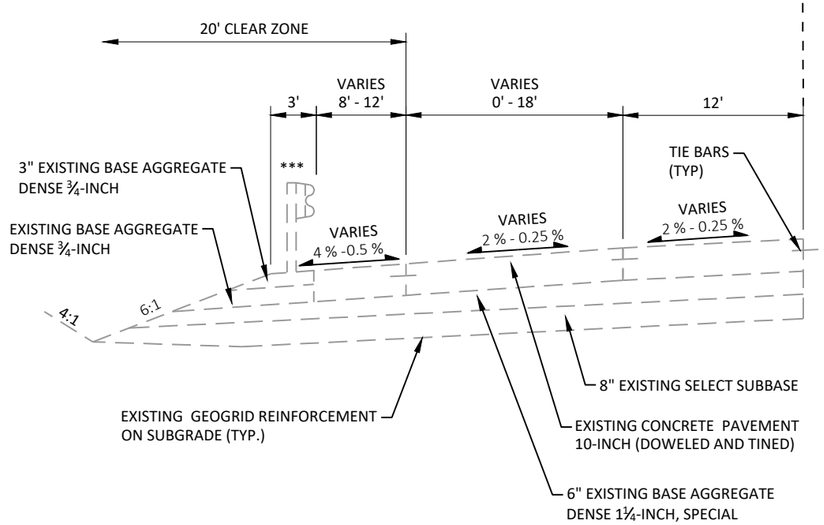

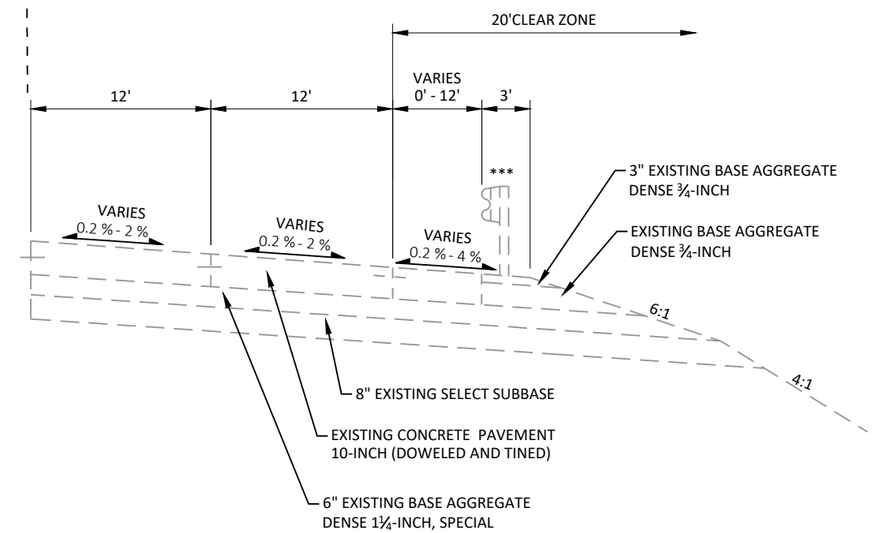

*** BEAM GUARD BEGINS AT STA. 105+25

2

PROJECT NO: 3700-11-70	HWY: VAR. SIGNALIZED INTERSECTIONS	COUNTY: KENOSHA	TYPICAL SECTION	SHEET 5	E

FILE NAME : N:\PDS\C3D\37001100\SHEETSPLAN\020301-TS.DWG
LAYOUT NAME - 01-10ft
PLOT DATE : 11/8/2022 3:03 PM
PLOT BY : MANANDHAR, BHUVAN K
PLOT NAME :
PLOT SCALE : 1 IN:10 FT
WISDOT/CADDS SHEET 42

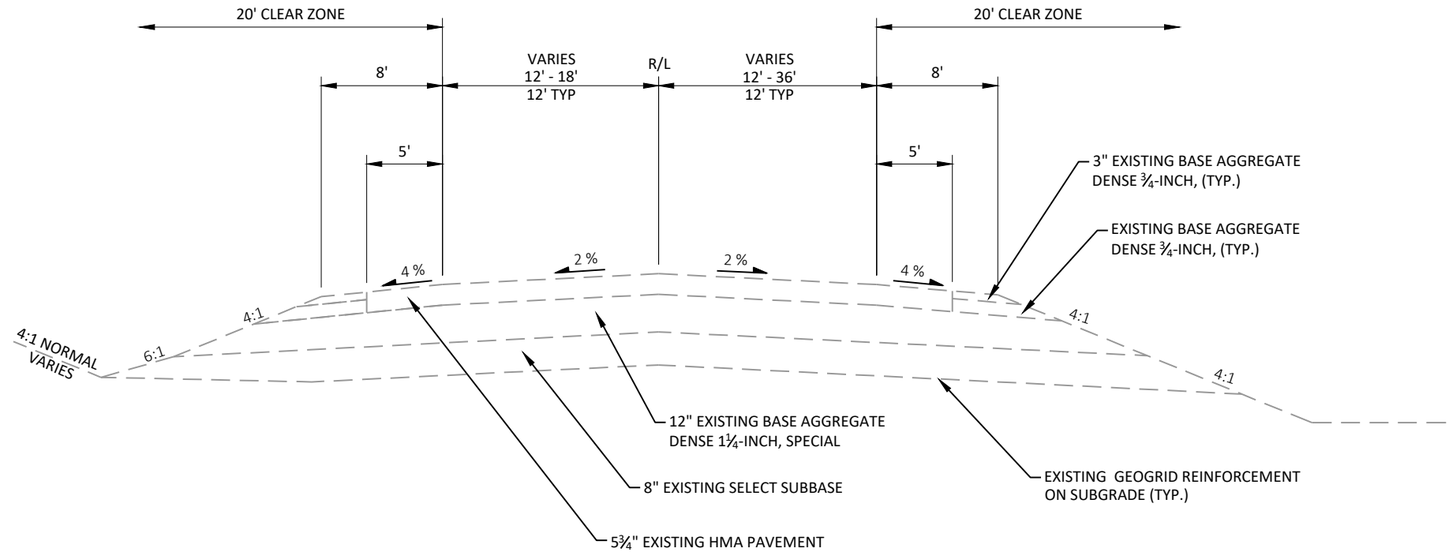

EXISTING / PROPOSED TYPICAL SECTION
EAST FRONTAGE ROAD - SOUTH

STA. 3362+54 - STA. 3364+58

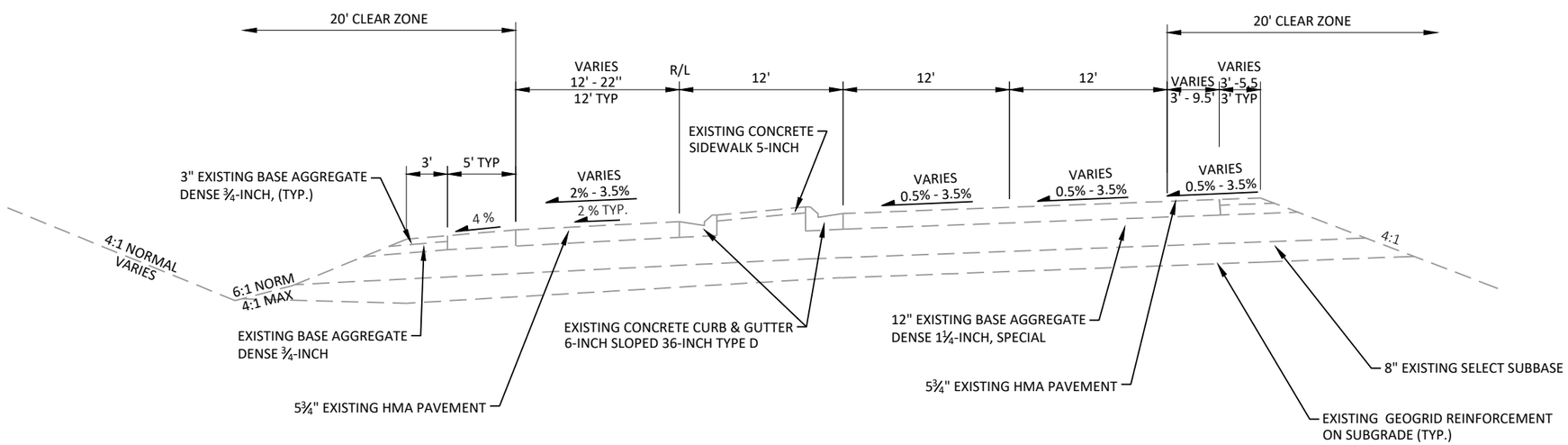

EXISTING / PROPOSED TYPICAL SECTION
EAST FRONTAGE ROAD - SOUTH

STA. 3364+58 - STA. 3365+90

PROJECT NO: 3700-11-70	HWY: VAR. SIGNALIZED INTERSECTIOONS	COUNTY: KENOSHA	TYPICAL SECTION	SHEET 6	E

FILE NAME : N:\PDS\C3D\37001100\SHEETSPLAN\020301-TS.DWG
LAYOUT NAME - 02-10ft
PLOT DATE : 11/8/2022 3:03 PM PLOT BY : MANANDHAR, BHUVAN K PLOT NAME : PLOT SCALE : 1 IN:10 FT

2

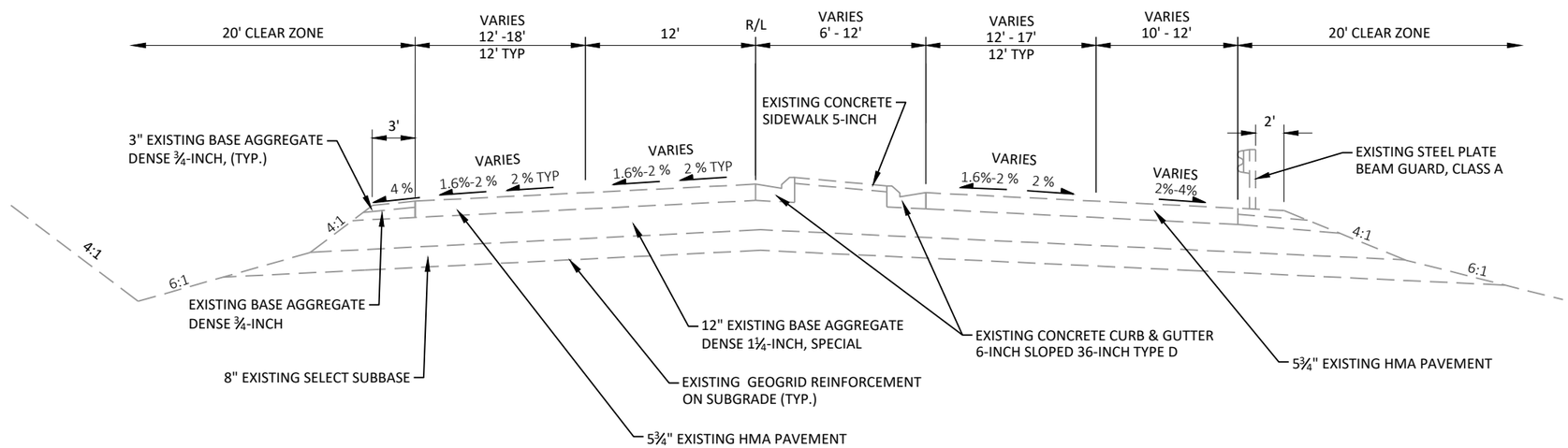

EXISTING / PROPOSED TYPICAL SECTION
EAST FRONTAGE ROAD - NORTH

STA. 5367+69 - STA. 5368+36

PROJECT NO: 3700-00-70	HWY: VAR. SIGNALIZED INTERSECTIONS	COUNTY: KENOSHA	TYPICAL SECTION	SHEET 7	E

FILE NAME : N:\PDS\C3D\37001100\SHEETSPLAN\020301-TS.DWG
LAYOUT NAME - 03-10ft
PLOT DATE : 11/8/2022 3:03 PM
PLOT BY : MANANDHAR, BHUVAN K
PLOT NAME :
PLOT SCALE : 1 IN:10 FT
WISDOT/CADDS SHEET 42

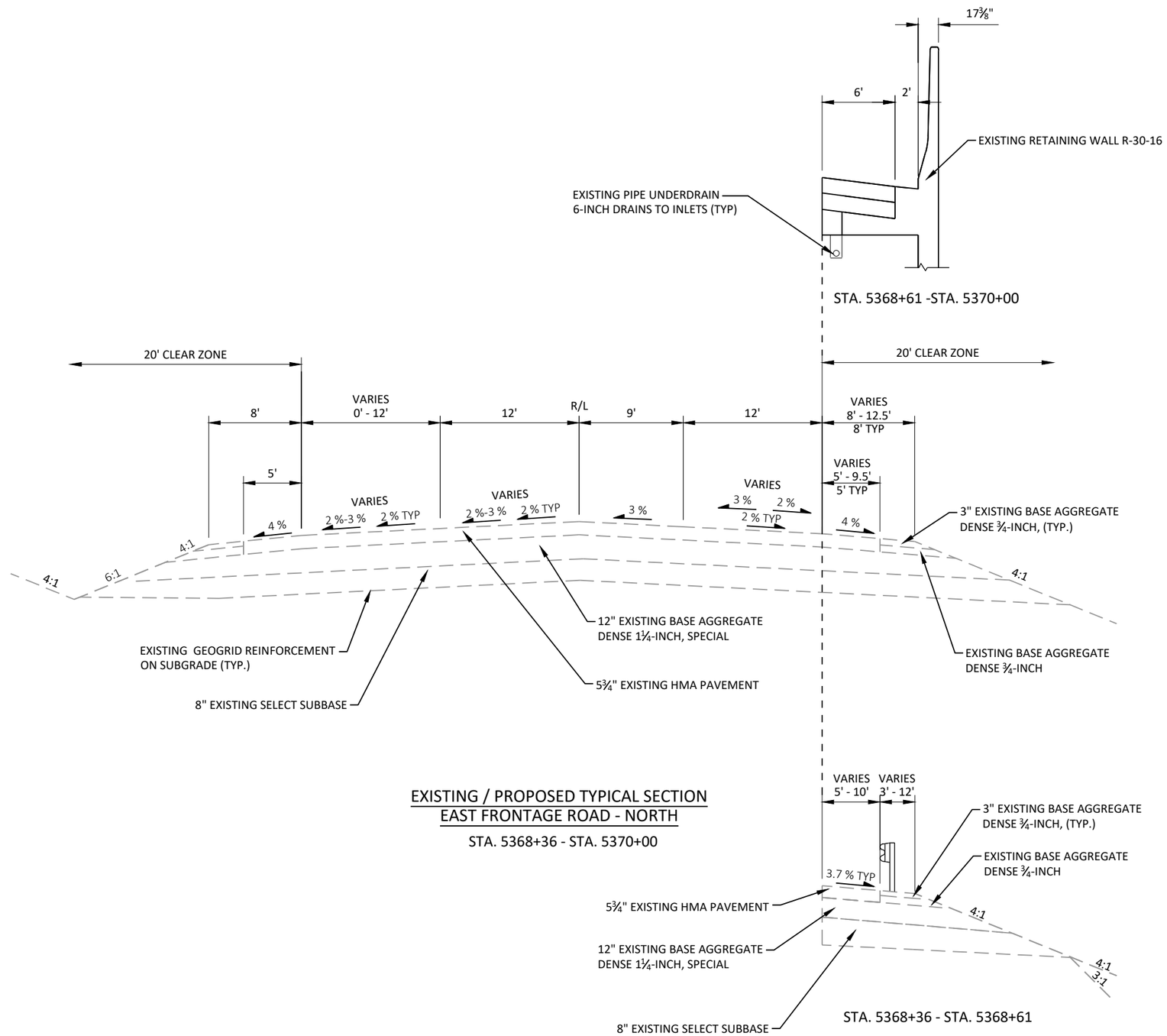

EXISTING / PROPOSED TYPICAL SECTION
EAST FRONTAGE ROAD - NORTH

STA. 5368+36 - STA. 5370+00

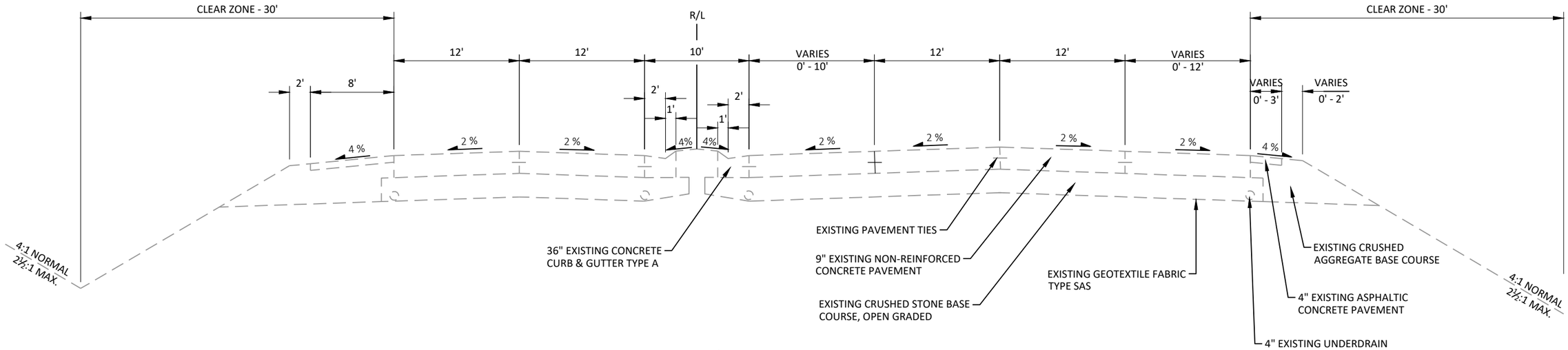

EXISTING / PROPOSED TYPICAL SECTION
STH 165
STA. 506+00 - STA. 510+69

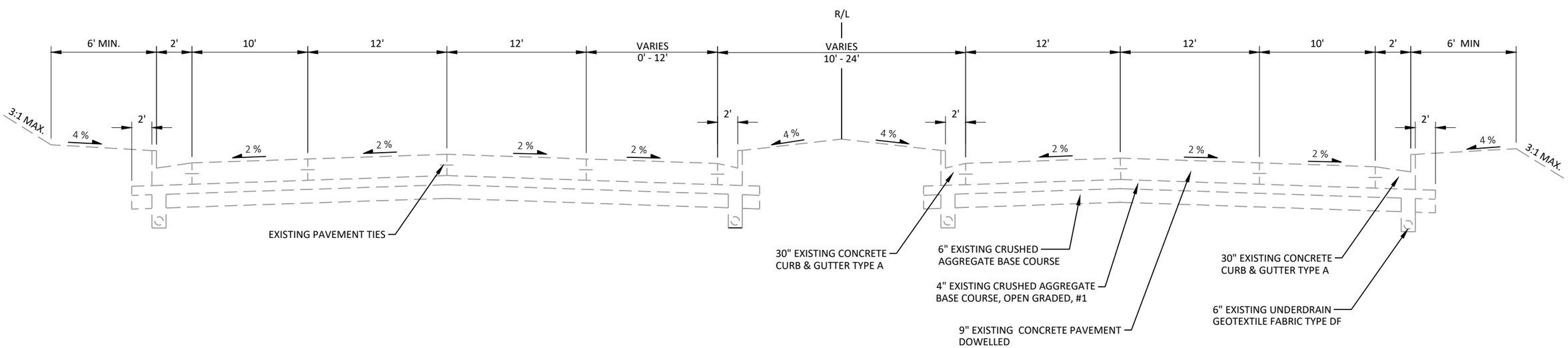

EXISTING / PROPOSED TYPICAL SECTION
STH 165
STA. 510+69 - STA. 516+00

2

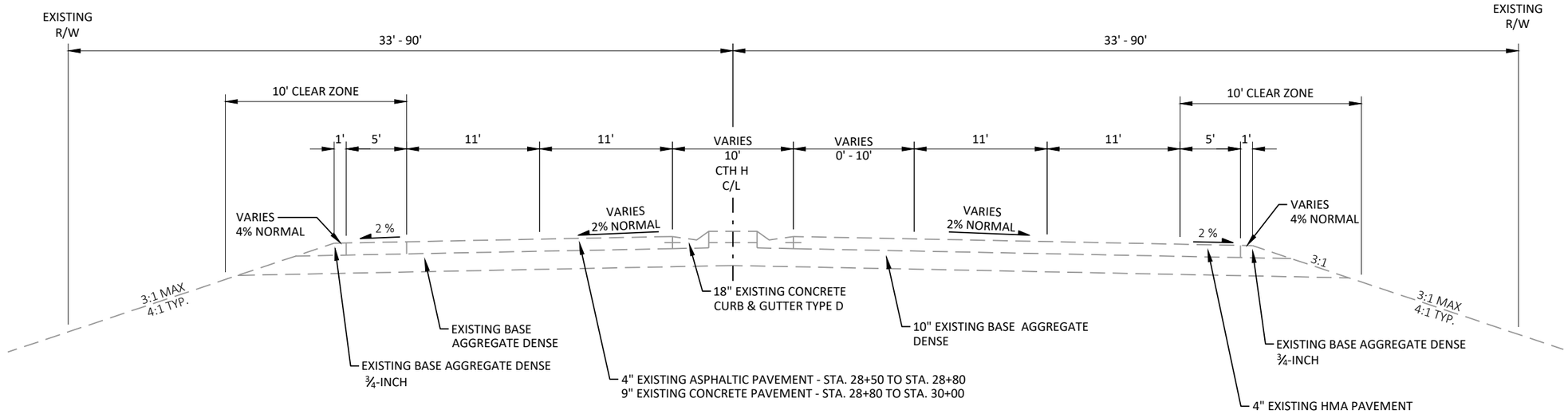

EXISTING / PROPOSED TYPICAL SECTION
CTH H
STA. 28+50 - STA. 30+00

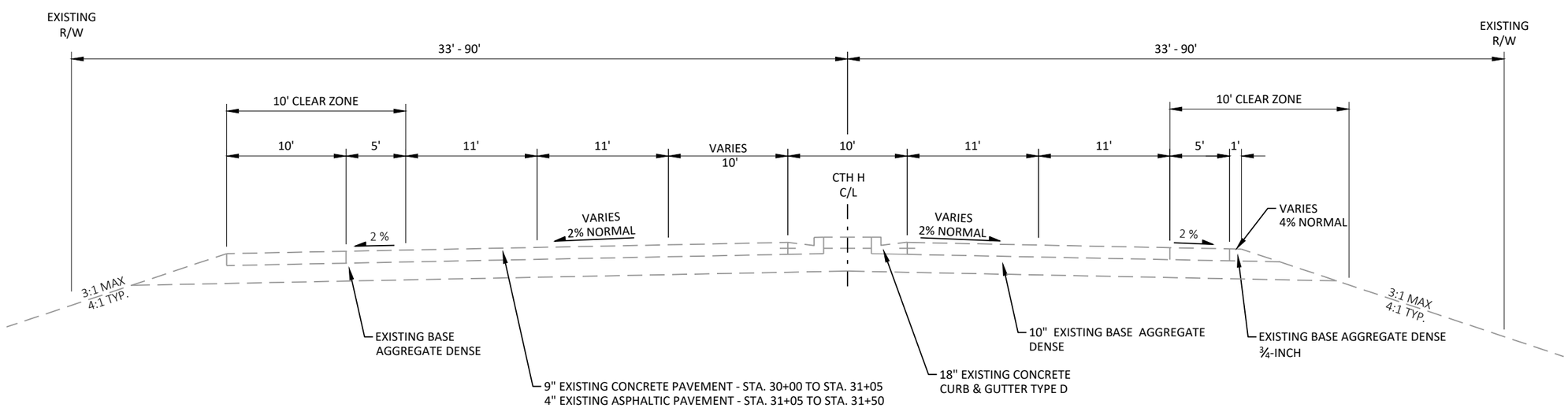

EXISTING / PROPOSED TYPICAL SECTION
CTH H
STA. 30+00 - STA. 31+50

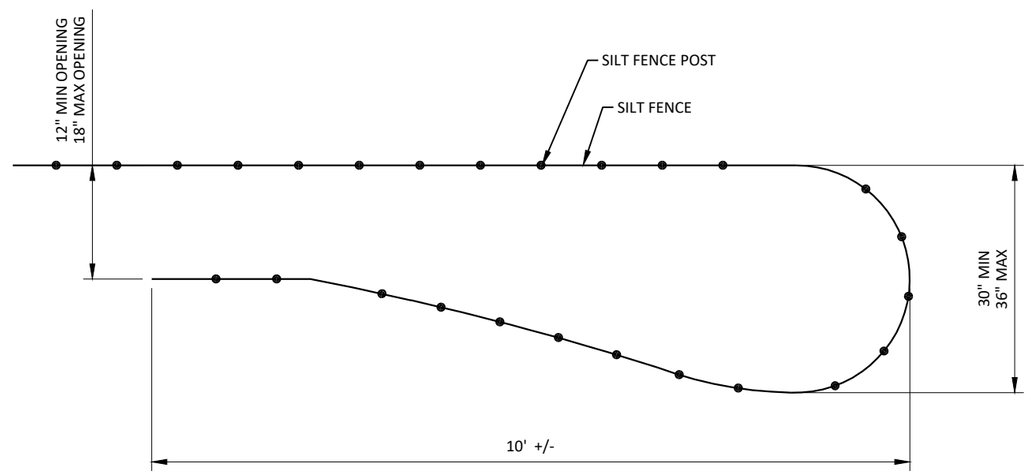
12" MIN OPENING
18" MAX OPENING
SILT FENCE POST
SILT FENCE
30" MIN
36" MAX
10' +/-

LEGEND

ASPHALTIC REPAIR

SSSSSS VERTICAL MILLED EDGE
SAW CUTTING AT THE CONTRACTORS DISCRETION

TTTTTTT TACK COAT

GENERAL NOTES

1. EXACT LOCATION, DEPTH AND SIZE OF REPAIR TO BE DETERMINED BY THE ENGINEER IN THE FIELD.
2. LOCATE LONGITUDINAL REPAIR JOINTS OUTSIDE OF WHEEL PATH. 12-INCH MINIMUM (24-INCH RECOMMENDED) FROM THE CENTER OF THE WHEEL PATH.
3. ASPHALTIC REPAIR PAVING TO BE DONE ON THE SAME DAY AS REMOVAL.

2

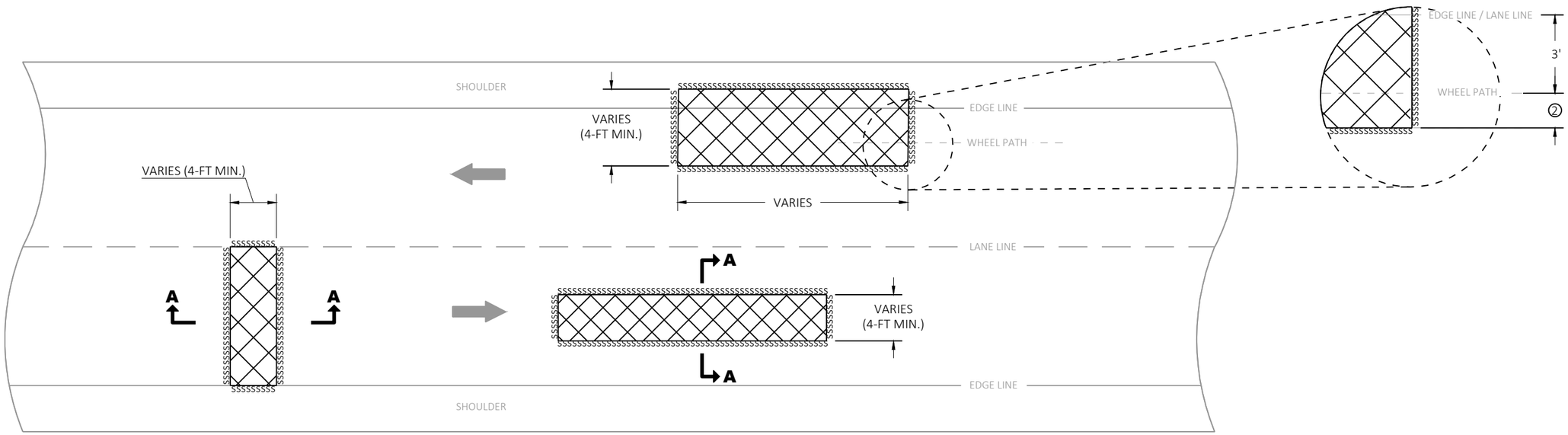

PLAN VIEW

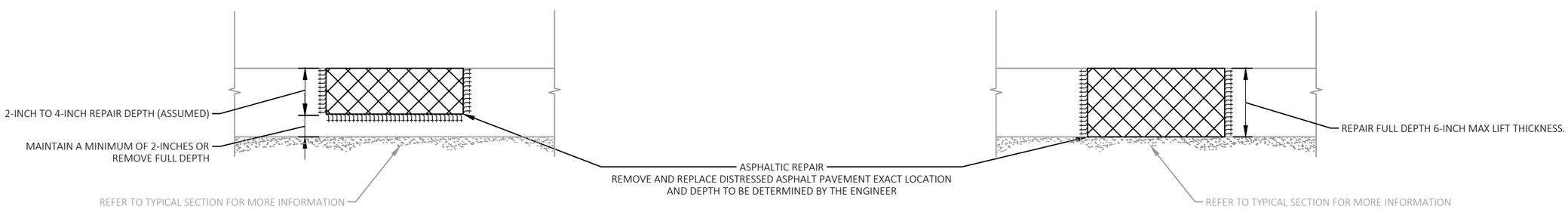

PARTIAL DEPTH **FULL DEPTH**

SECTION A-A

ASPHALTIC REPAIR

PROJECT NO: 3700-11-70	HWY: VAR. SIGNSLIZED INTERSECTIONS	COUNTY: KENOSHA	CONSTRUCTION DETAILS	SHEET 12	E

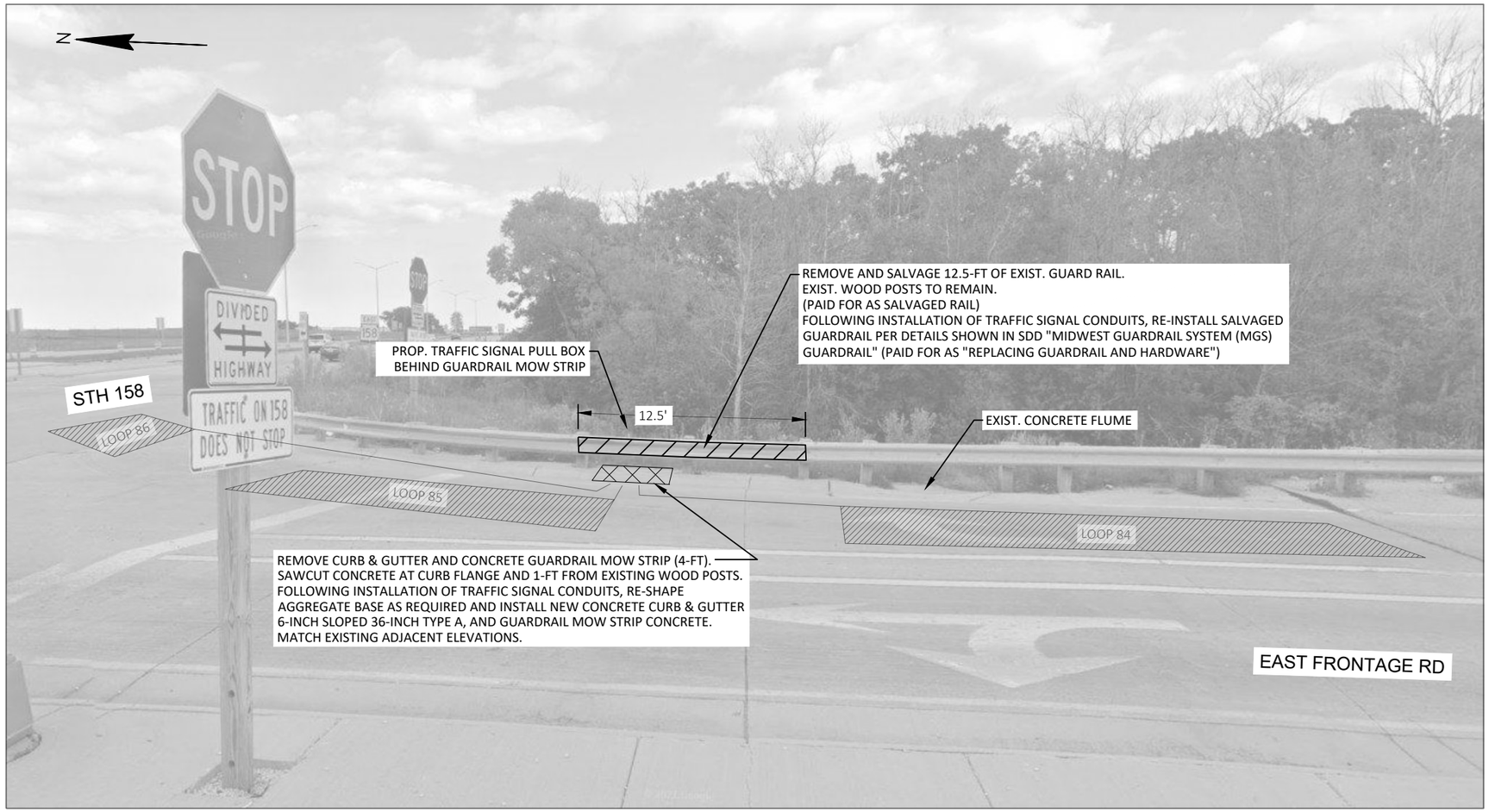

STH 158 AND EAST FRONTAGE ROAD INTERSECTION
CONCRETE CURB & GUTTER, GUARDRAIL MOW STRIP AND BEAM GUARD
REMOVAL AND REPLACEMENT

STA. 3366+12 - STA. 3366+25
(FACING EAST)

NOTES:

1. CONSTRUCTION DETAIL SHOWS EXTENT OF EXISTING CONCRETE CURB & GUTTER, GUARDRAIL MOW STRIP AND BEAM GUARD RAIL REMOVAL AND REPLACEMENT TO FACILITATE THE INSTALLATION OF TRAFFIC SIGNAL LOOP DETECTOR CONDUITS. ADDITIONAL WORK REQUIRED IS NOT SHOWN ON THIS CONSTRUCTION DETAIL FOR CLARITY.
2. PROPOSED TRAFFIC SIGNAL LOOP DETECTORS AND CONDUITS ARE SHOWN FOR INFORMATION ONLY. SEE TRAFFIC SIGNAL PLANS FOR ADDITIONAL INFORMATION.
3. SALVAGE THE 12.5-FT SECTION OF BEAM GUARD RAIL FOR RE-INSTALLATION FOLLOWING TRAFFIC SIGNAL CONDUIT INSTALLATION.
4. EXISTING BEAM GUARD POSTS ARE NOT TO BE REMOVED.
5. ORDER OF CONSTRUCTION:
   - 5.1. REMOVE EXISTING BEAM GUARD RAIL AND SALVAGE FOR RE-INSTALLATION (PAID FOR AS "SALVAGED RAIL").
   - 5.2. SAWCUT AND REMOVE CONCRETE CURB & GUTTER AND GUARDRAIL MOW STRIP TO EXTENTS SHOWN. REMOVAL OF GUARDRAIL MOW STRIP PAID FOR AS "REMOVING CONCRETE PAVEMENT"
   - 5.3. INSTALL TRAFFIC SIGNAL CONDUITS AS SHOWN ELSEWHERE IN THE PLAN.
   - 5.4. INSTALL TIE BARS IN ADJACENT CONCRETE PAVEMENT (INCIDENTAL TO CONCRETE PAVEMENT ITEM)
   - 5.5. INSTALL NEW CONCRETE CURB & GUTTER 6-INCH SLOPED 36-INCH TYPE A, PER SDD "CONCRETE CURB & GUTTER 5-INCH SLOPED 36-INCH TYPE A"
   - 5.6. RE-INSTALL GUARDRAIL MOW STRIP CONCRETE PER SDD "GUARDRAIL MOW STRIP"

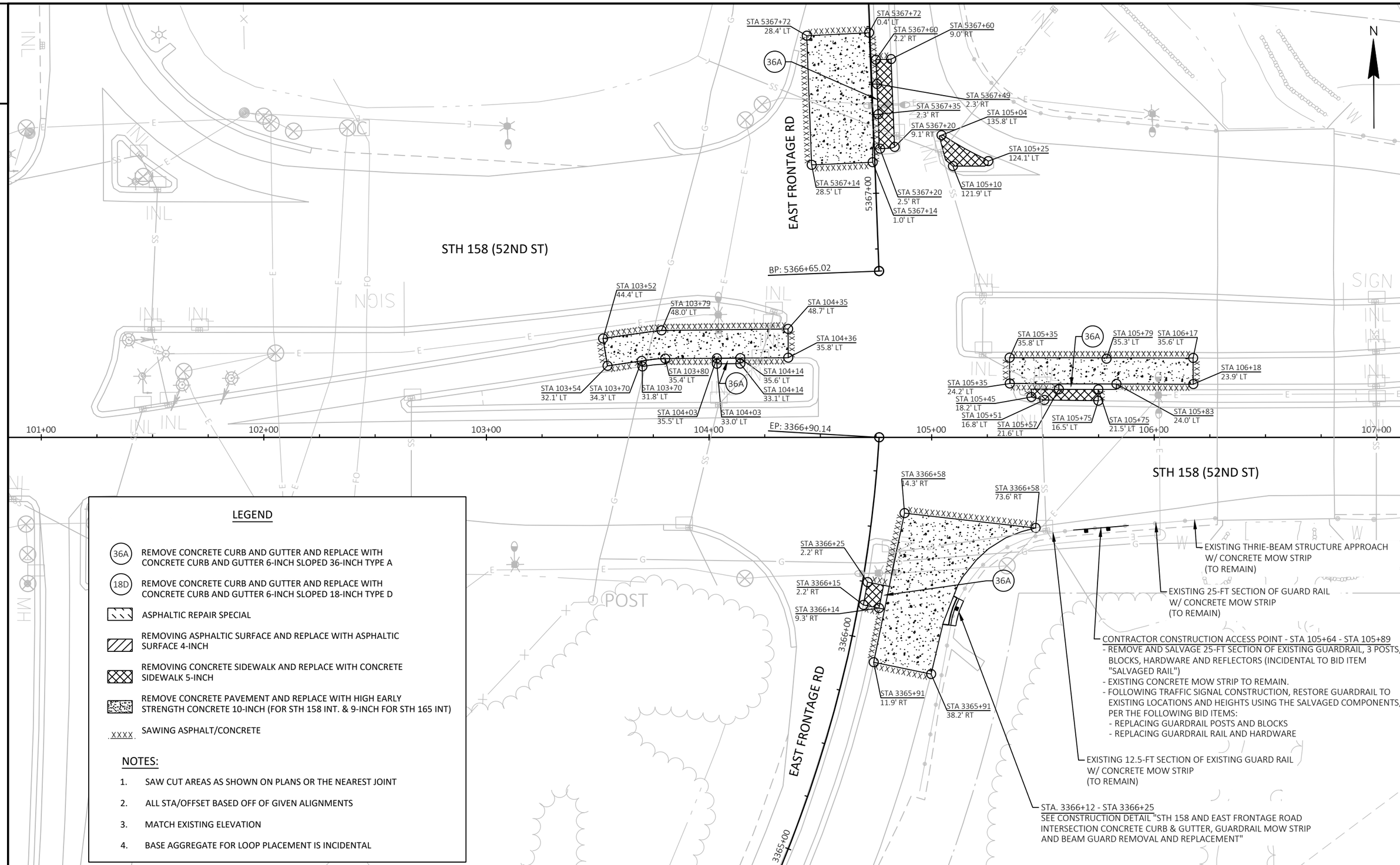

PROJECT NO: 3700-11-70	HWY: VAR. SIGNSLIZED INTERSECTIONS	COUNTY: KENOSHA	PLAN DETAIL	SHEET 14	E

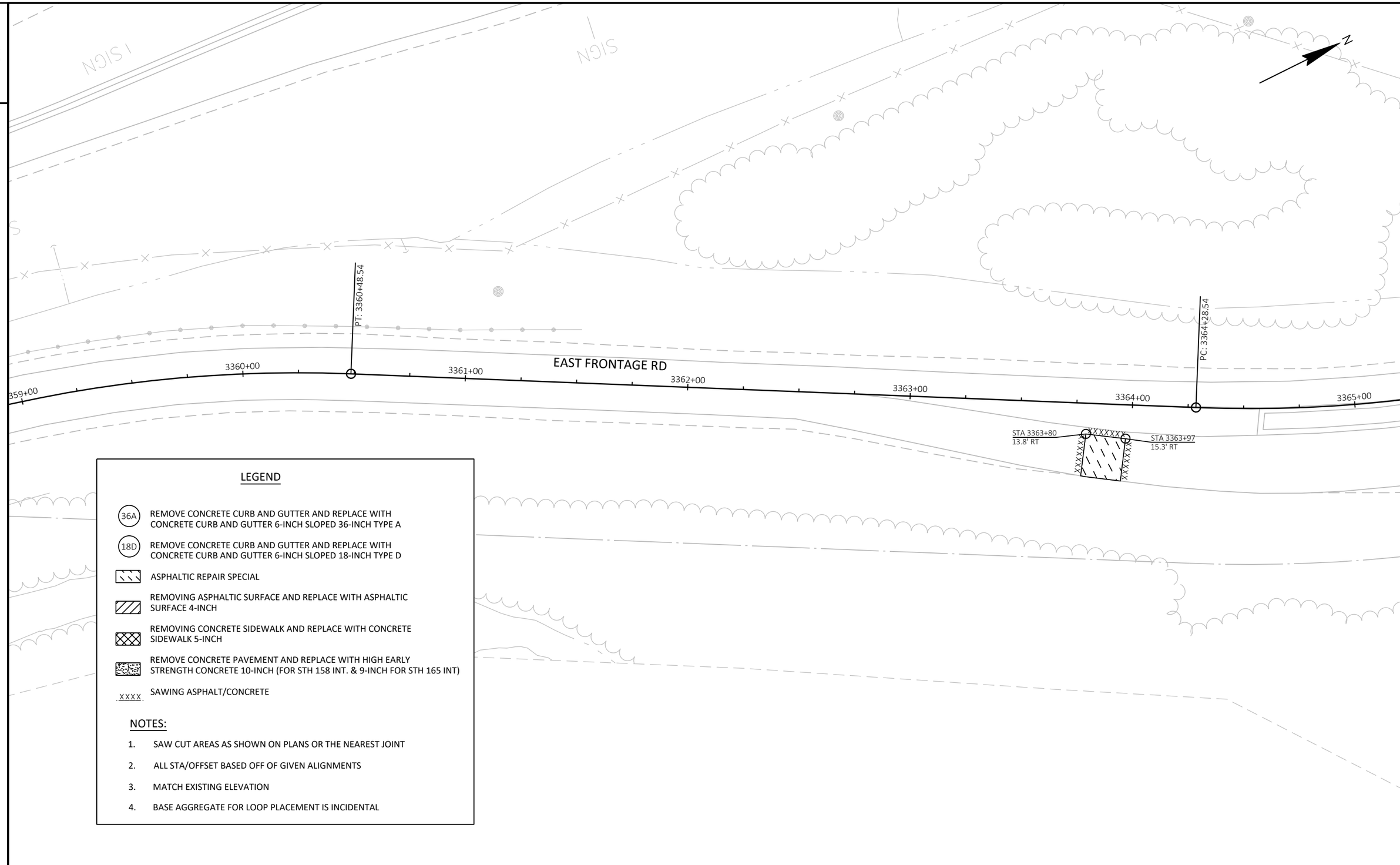

LEGEND

- (36A) REMOVE CONCRETE CURB AND GUTTER AND REPLACE WITH CONCRETE CURB AND GUTTER 6-INCH SLOPED 36-INCH TYPE A
- (18D) REMOVE CONCRETE CURB AND GUTTER AND REPLACE WITH CONCRETE CURB AND GUTTER 6-INCH SLOPED 18-INCH TYPE D
- ASPHALTIC REPAIR SPECIAL
- REMOVING ASPHALTIC SURFACE AND REPLACE WITH ASPHALTIC SURFACE 4-INCH
- REMOVING CONCRETE SIDEWALK AND REPLACE WITH CONCRETE SIDEWALK 5-INCH
- REMOVE CONCRETE PAVEMENT AND REPLACE WITH HIGH EARLY STRENGTH CONCRETE 10-INCH (FOR STH 158 INT. & 9-INCH FOR STH 165 INT)
- XXXX SAWING ASPHALT/CONCRETE

NOTES:

1. SAW CUT AREAS AS SHOWN ON PLANS OR THE NEAREST JOINT
2. ALL STA/OFFSET BASED OFF OF GIVEN ALIGNMENTS
3. MATCH EXISTING ELEVATION
4. BASE AGGREGATE FOR LOOP PLACEMENT IS INCIDENTAL

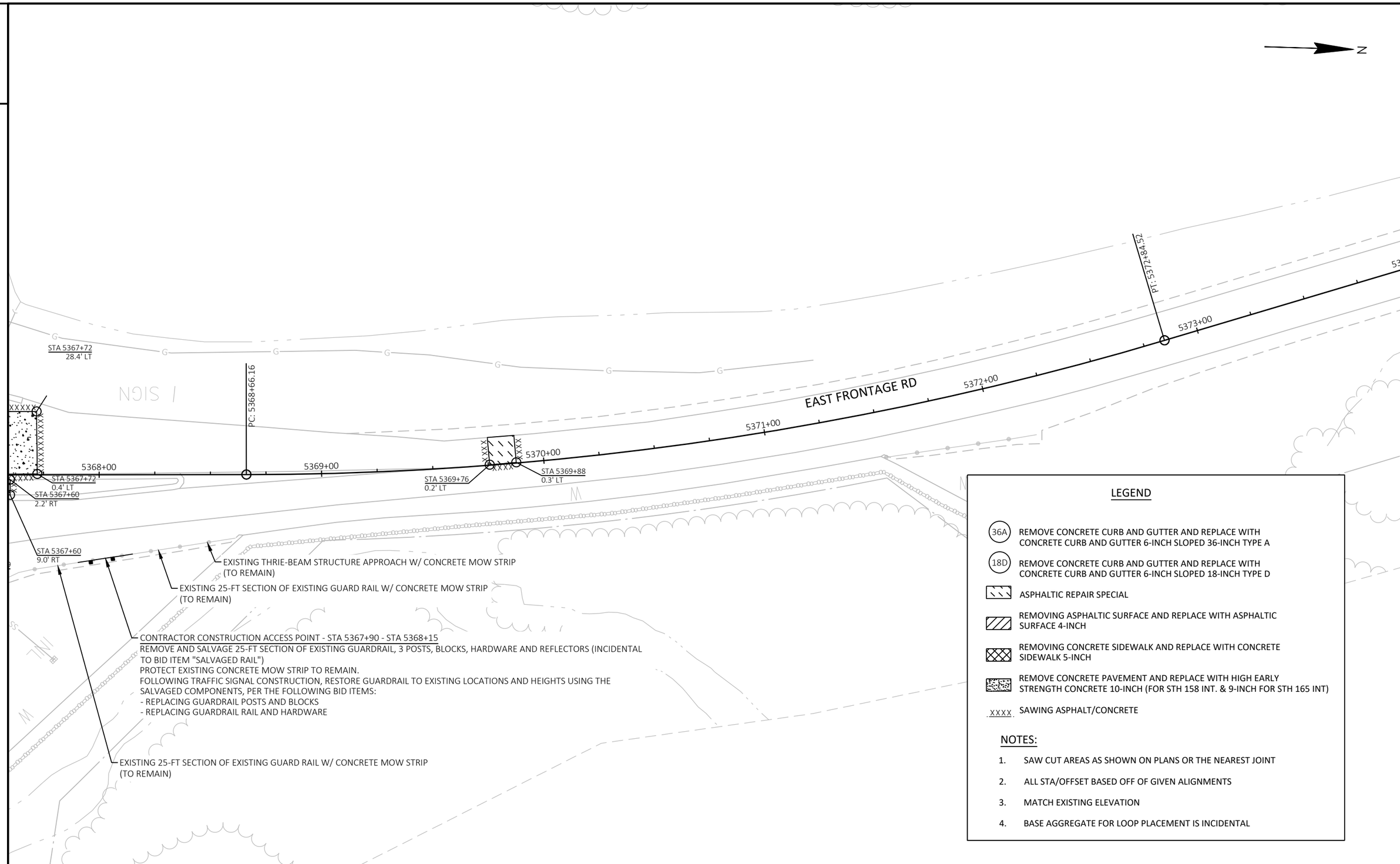
N
EAST FRONTAGE RD
5368+00
5369+00
5370+00
5371+00
5372+00
5373+00
PC: 5368+66.16
PT: 5372+84.52
STA 5367+72
28.4' LT
STA 5367+72
0.4' LT
STA 5367+60
2.2' RT
STA 5367+60
9.0' RT
STA 5369+76
0.2' LT
STA 5369+88
0.3' LT
EXISTING THRIE-BEAM STRUCTURE APPROACH W/ CONCRETE MOW STRIP (TO REMAIN)
EXISTING 25-FT SECTION OF EXISTING GUARD RAIL W/ CONCRETE MOW STRIP (TO REMAIN)
CONTRACTOR CONSTRUCTION ACCESS POINT - STA 5367+90 - STA 5368+15
REMOVE AND SALVAGE 25-FT SECTION OF EXISTING GUARDRAIL, 3 POSTS, BLOCKS, HARDWARE AND REFLECTORS (INCIDENTAL TO BID ITEM "SALVAGED RAIL")
PROTECT EXISTING CONCRETE MOW STRIP TO REMAIN.
FOLLOWING TRAFFIC SIGNAL CONSTRUCTION, RESTORE GUARDRAIL TO EXISTING LOCATIONS AND HEIGHTS USING THE SALVAGED COMPONENTS, PER THE FOLLOWING BID ITEMS:
- REPLACING GUARDRAIL POSTS AND BLOCKS
- REPLACING GUARDRAIL RAIL AND HARDWARE
EXISTING 25-FT SECTION OF EXISTING GUARD RAIL W/ CONCRETE MOW STRIP (TO REMAIN)
LEGEND
36A REMOVE CONCRETE CURB AND GUTTER AND REPLACE WITH CONCRETE CURB AND GUTTER 6-INCH SLOPED 36-INCH TYPE A
18D REMOVE CONCRETE CURB AND GUTTER AND REPLACE WITH CONCRETE CURB AND GUTTER 6-INCH SLOPED 18-INCH TYPE D
ASPHALTIC REPAIR SPECIAL
REMOVING ASPHALTIC SURFACE AND REPLACE WITH ASPHALTIC SURFACE 4-INCH
REMOVING CONCRETE SIDEWALK AND REPLACE WITH CONCRETE SIDEWALK 5-INCH
REMOVE CONCRETE PAVEMENT AND REPLACE WITH HIGH EARLY STRENGTH CONCRETE 10-INCH (FOR STH 158 INT. & 9-INCH FOR STH 165 INT)
XXXX SAWING ASPHALT/CONCRETE
NOTES:
1. SAW CUT AREAS AS SHOWN ON PLANS OR THE NEAREST JOINT
2. ALL STA/OFFSET BASED OFF OF GIVEN ALIGNMENTS
3. MATCH EXISTING ELEVATION
4. BASE AGGREGATE FOR LOOP PLACEMENT IS INCIDENTAL

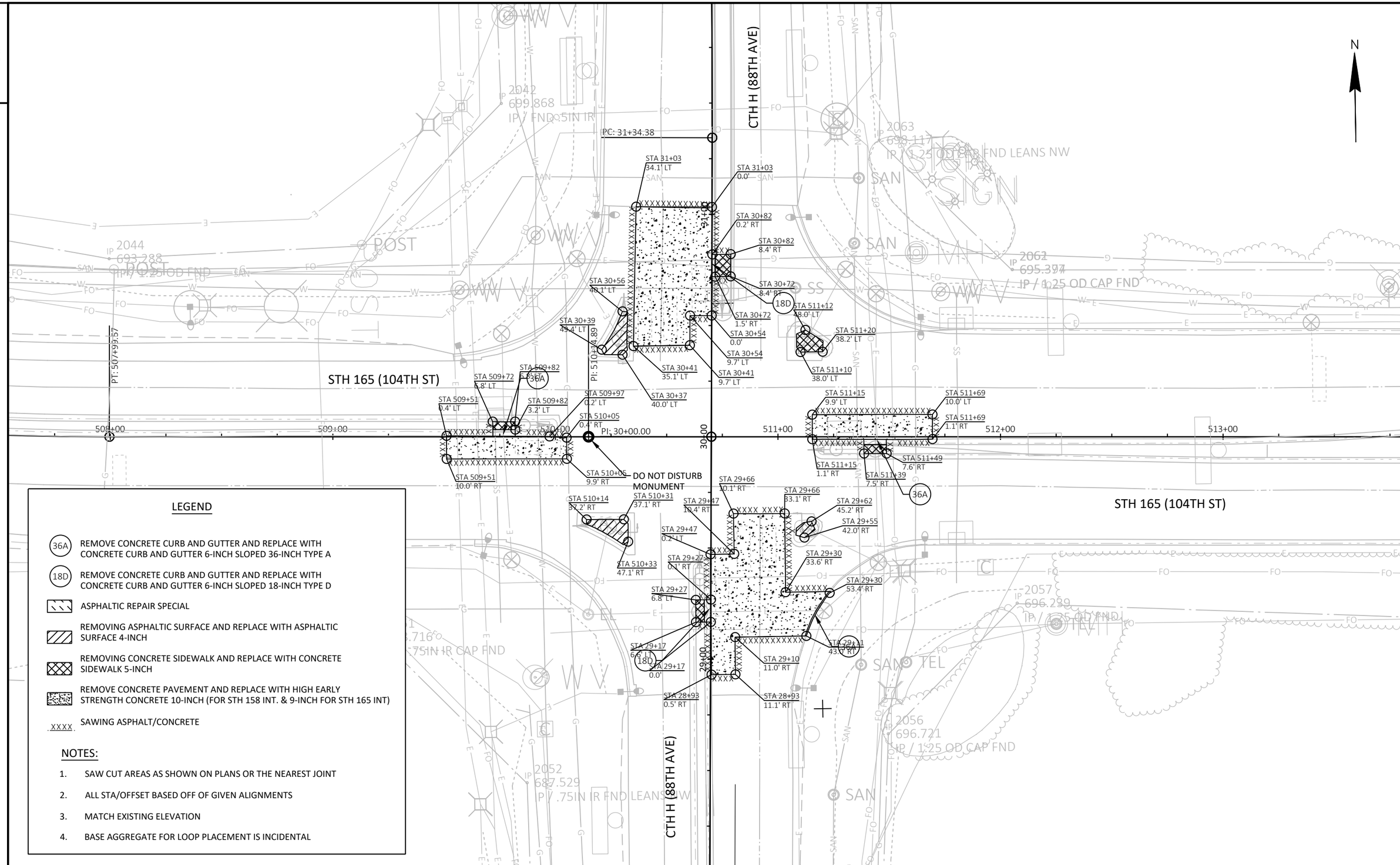

LEGEND

- (36A) REMOVE CONCRETE CURB AND GUTTER AND REPLACE WITH CONCRETE CURB AND GUTTER 6-INCH SLOPED 36-INCH TYPE A
- (18D) REMOVE CONCRETE CURB AND GUTTER AND REPLACE WITH CONCRETE CURB AND GUTTER 6-INCH SLOPED 18-INCH TYPE D
- ASPHALTIC REPAIR SPECIAL
- REMOVING ASPHALTIC SURFACE AND REPLACE WITH ASPHALTIC SURFACE 4-INCH
- REMOVING CONCRETE SIDEWALK AND REPLACE WITH CONCRETE SIDEWALK 5-INCH
- REMOVE CONCRETE PAVEMENT AND REPLACE WITH HIGH EARLY STRENGTH CONCRETE 10-INCH (FOR STH 158 INT. & 9-INCH FOR STH 165 INT)
- XXXX SAWING ASPHALT/CONCRETE

NOTES:

1. SAW CUT AREAS AS SHOWN ON PLANS OR THE NEAREST JOINT
2. ALL STA/OFFSET BASED OFF OF GIVEN ALIGNMENTS
3. MATCH EXISTING ELEVATION
4. BASE AGGREGATE FOR LOOP PLACEMENT IS INCIDENTAL

PROJECT NO: 3700-11-70	HWY: VAR. SIGNSLIZED INTERSECTIONS	COUNTY: KENOSHA	PLAN DETAIL	SHEET 17	E

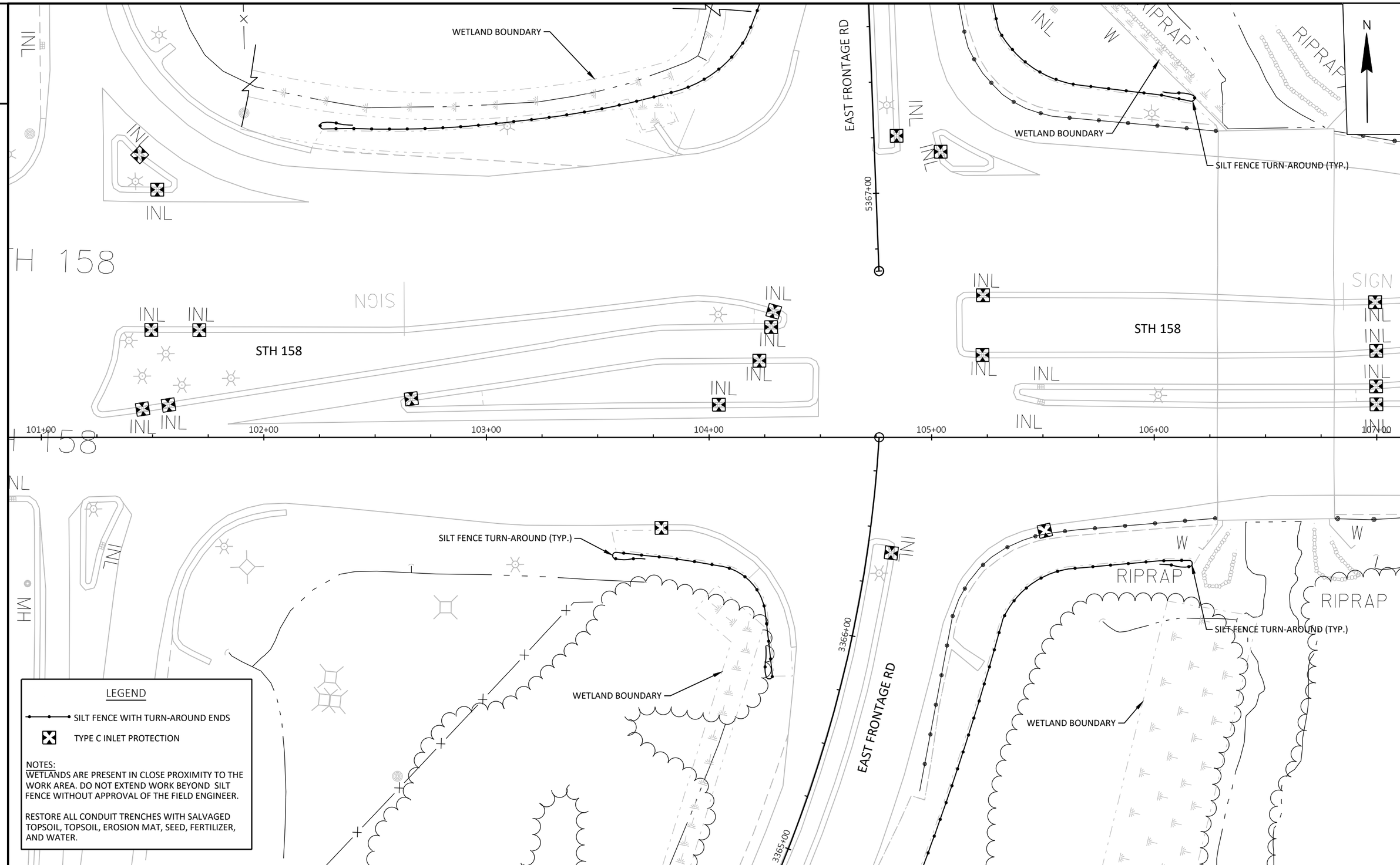

PROJECT NO: 3700-11-70	HWY: VAR. SIGNSLIZED INTERSECTIONS	COUNTY: KENOSHA	EROSION CONTROL	SHEET 18	E

FILE NAME : N:\PDS\C3D\37001100\SHEETSPLAN\022001-EC.DWG
LAYOUT NAME - 022001-ec 1
PLOT DATE : 11/8/2022 3:09 PM
PLOT BY : MANANDHAR, BHUVAN K
PLOT NAME :
PLOT SCALE : 1 IN:40 FT
WISDOT/CADDS SHEET 42

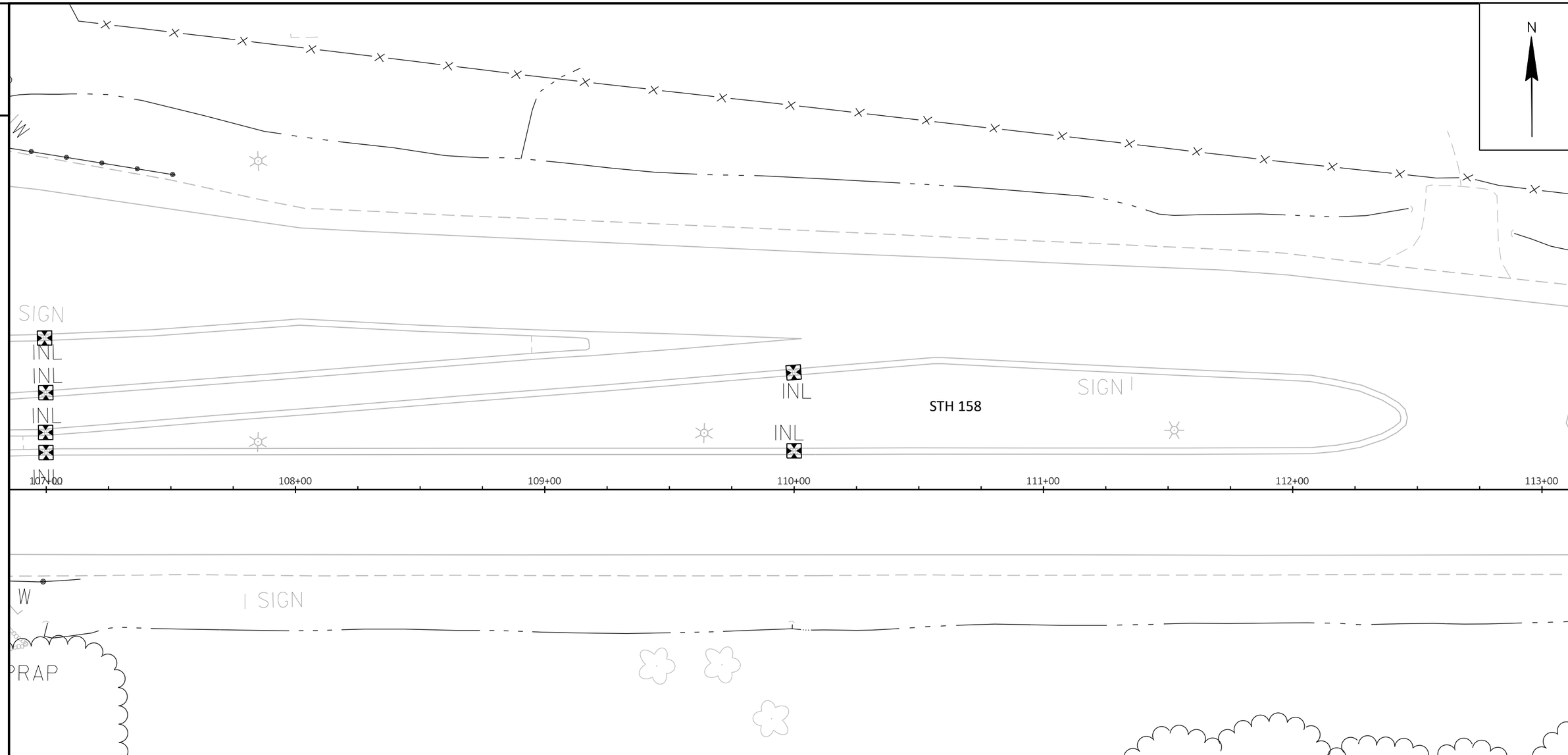

LEGEND

SILT FENCE WITH TURN-AROUND ENDS

TYPE C INLET PROTECTION

NOTES:
WETLANDS ARE PRESENT IN CLOSE PROXIMITY TO THE WORK AREA. DO NOT EXTEND WORK BEYOND SILT FENCE WITHOUT APPROVAL OF THE FIELD ENGINEER.

RESTORE ALL CONDUIT TRENCHES WITH SALVAGED TOPSOIL, TOPSOIL, EROSION MAT, SEED, FERTILIZER, AND WATER.

PROJECT NO: 3700-11-70	HWY: VAR. SIGNSLIZED INTERSECTIONS	COUNTY: KENOSHA	EROSION CONTROL	SHEET 19	E

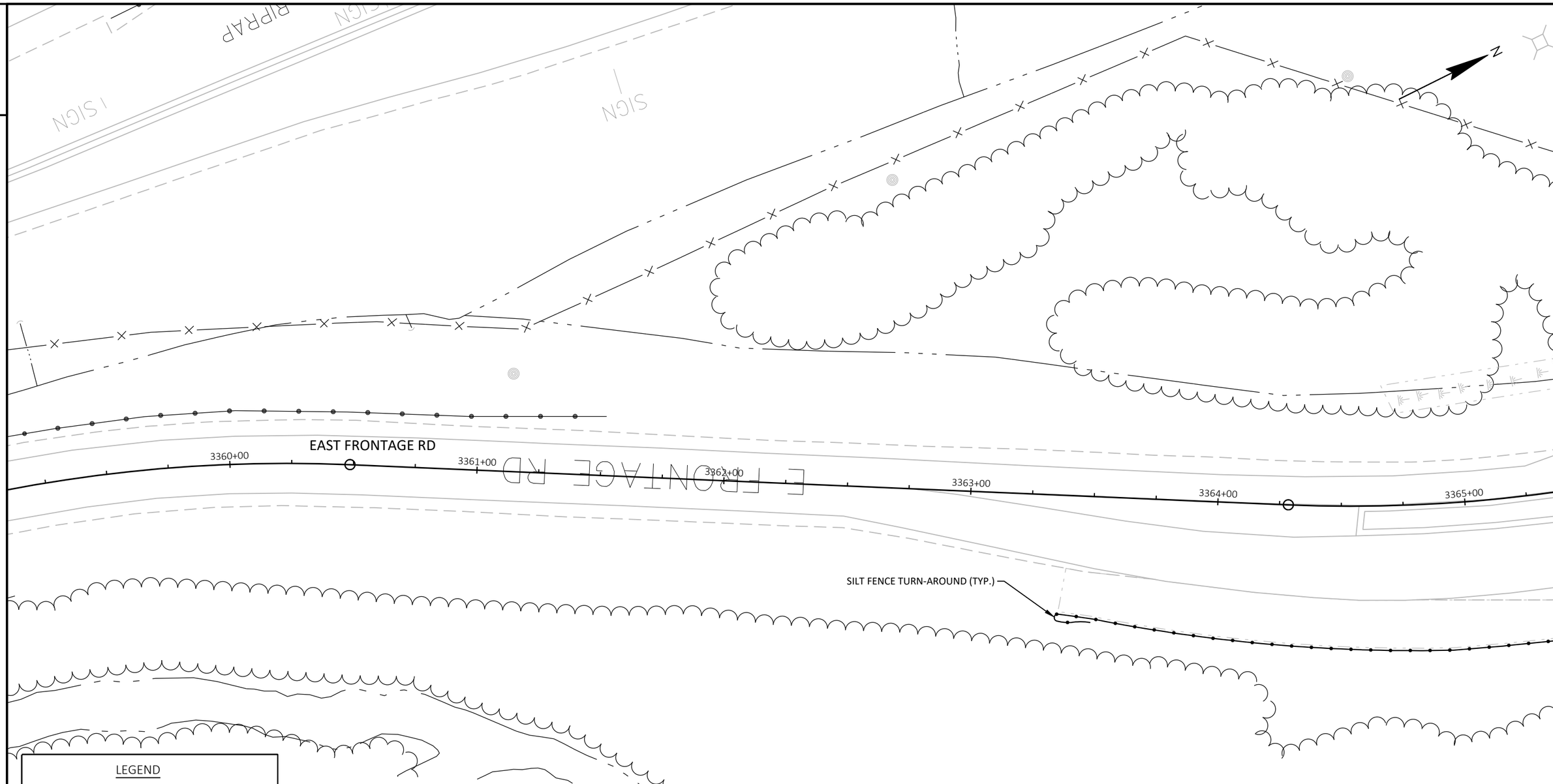

LEGEND

SILT FENCE WITH TURN-AROUND ENDS

TYPE C INLET PROTECTION

NOTES:
WETLANDS ARE PRESENT IN CLOSE PROXIMITY TO THE WORK AREA. DO NOT EXTEND WORK BEYOND SILT FENCE WITHOUT APPROVAL OF THE FIELD ENGINEER.

RESTORE ALL CONDUIT TRENCHES WITH SALVAGED TOPSOIL, TOPSOIL, EROSION MAT, SEED, FERTILIZER, AND WATER.

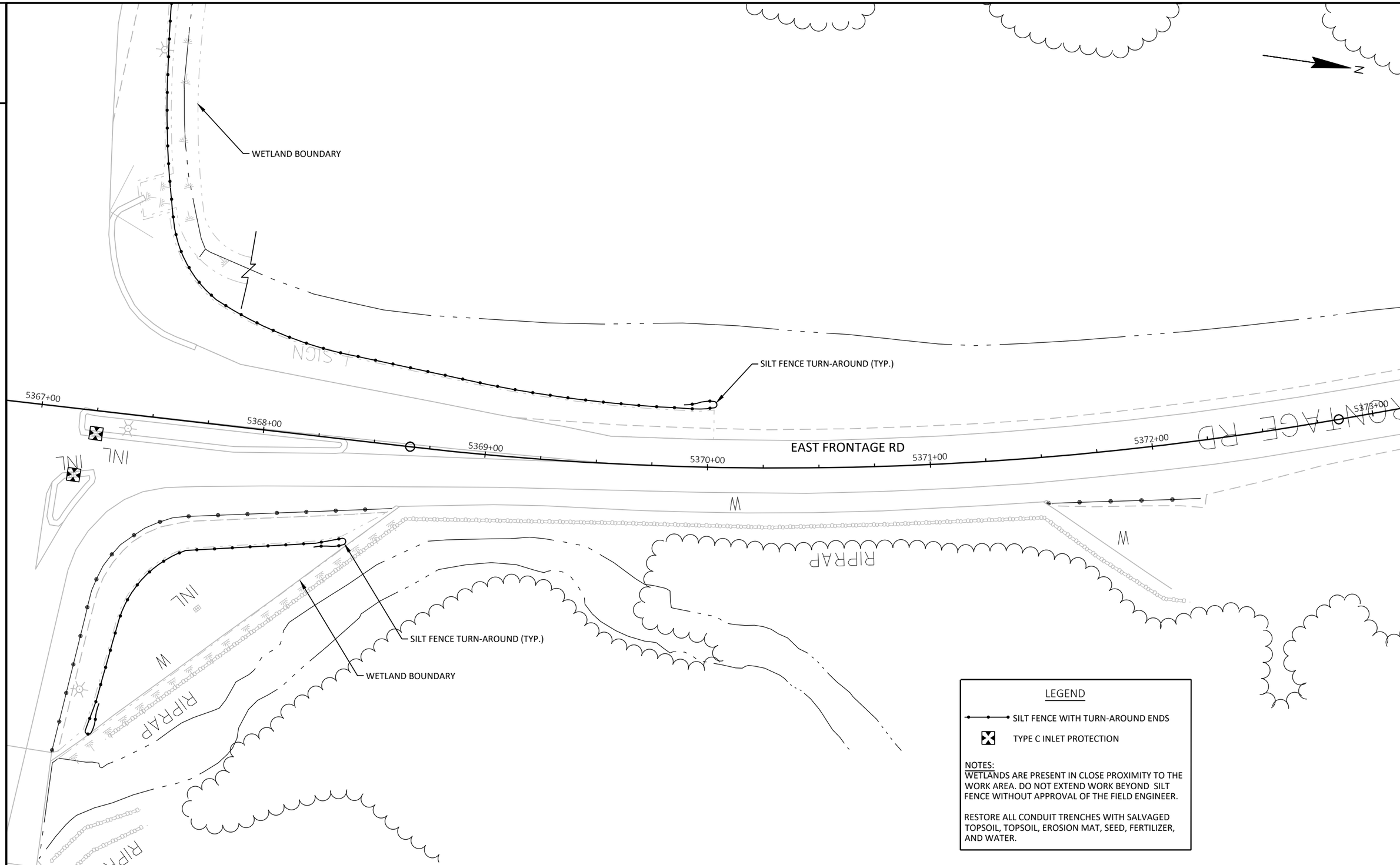

PROJECT NO: 3700-11-70	HWY: VAR. SIGNSLIZED INTERSECTIONS	COUNTY: KENOSHA	EROSION CONTROL	SHEET 21	E

2

LEGEND

SILT FENCE WITH TURN-AROUND ENDS

TYPE C INLET PROTECTION

NOTES:
WETLANDS ARE PRESENT IN CLOSE PROXIMITY TO THE WORK AREA. DO NOT EXTEND WORK BEYOND SILT FENCE WITHOUT APPROVAL OF THE FIELD ENGINEER.

RESTORE ALL CONDUIT TRENCHES WITH SALVAGED TOPSOIL, TOPSOIL, EROSION MAT, SEED, FERTILIZER, AND WATER.

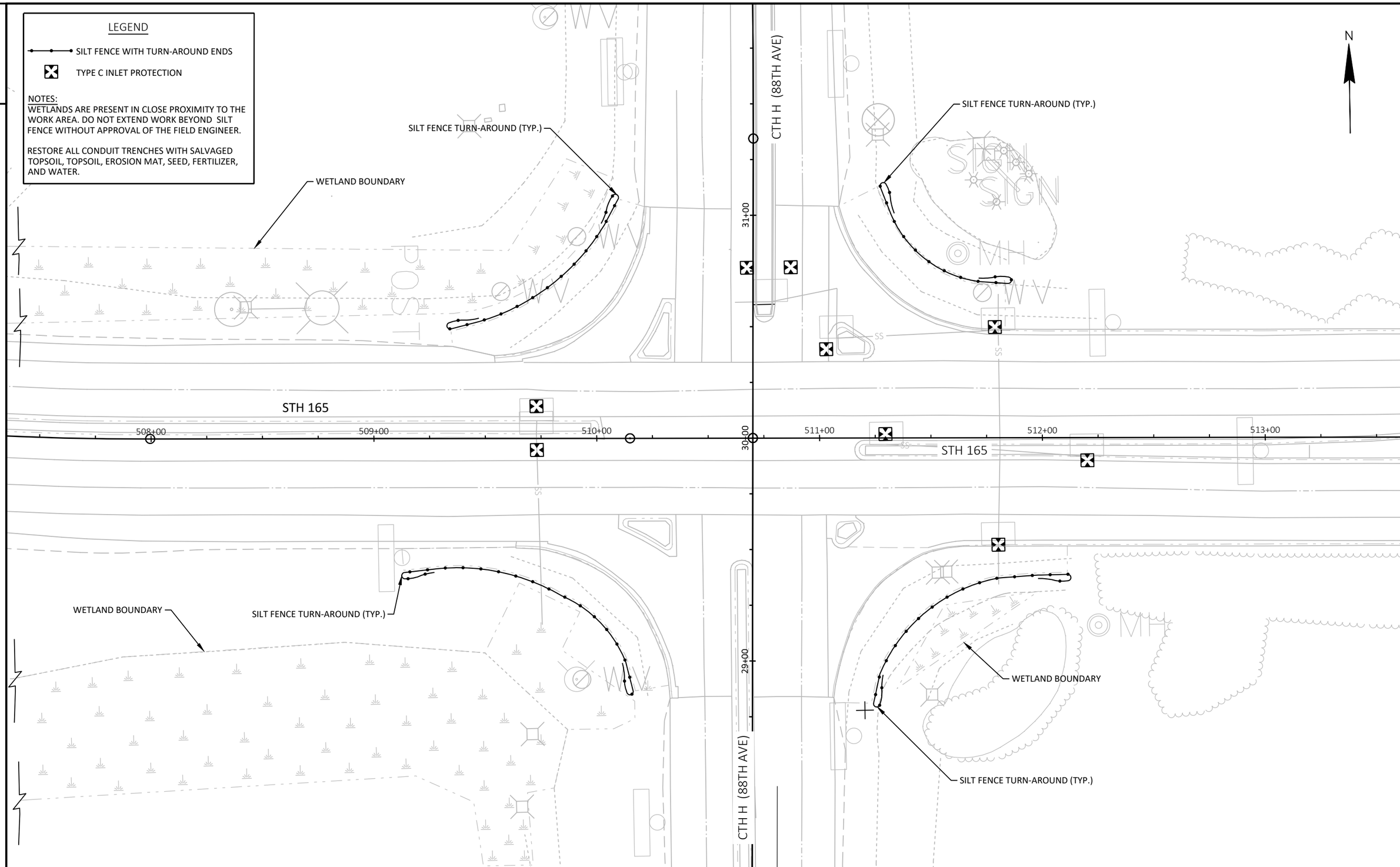

2

PROJECT NO: 3700-11-70	HWY: VAR. SIGNSLIZED INTERSECTIONS	COUNTY: KENOSHA	EROSION CONTROL	SHEET 22	E

FILE NAME : N:\PDS\C3D\37001100\SHEETSPLAN\022002-EC.DWG
LAYOUT NAME - 022002-ec1
PLOT DATE : 11/8/2022 3:13 PM
PLOT BY : MANANDHAR, BHUVAN K
PLOT NAME :
PLOT SCALE : 1 IN:40 FT
WISDOT/CADDS SHEET 42

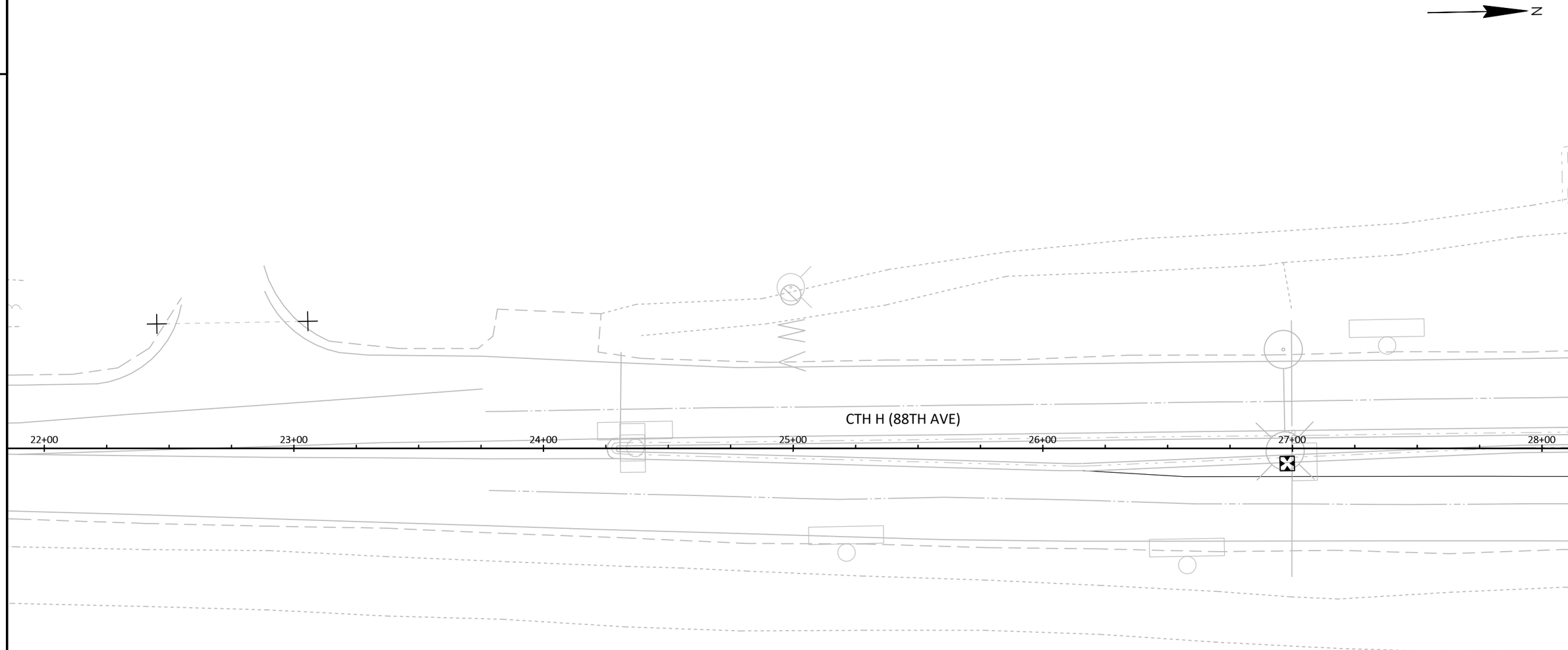

LEGEND

SILT FENCE WITH TURN-AROUND ENDS

TYPE C INLET PROTECTION

NOTES:
WETLANDS ARE PRESENT IN CLOSE PROXIMITY TO THE WORK AREA. DO NOT EXTEND WORK BEYOND SILT FENCE WITHOUT APPROVAL OF THE FIELD ENGINEER.

RESTORE ALL CONDUIT TRENCHES WITH SALVAGED TOPSOIL, TOPSOIL, EROSION MAT, SEED, FERTILIZER, AND WATER.

2

LEGEND

- EXISTING SIGN MOUNTED ON POST(S)
- EXISTING SIGN MOUNTED ON BRIDGE OR SIGN BRIDGE
- PROPOSED SIGN MOUNTED ON POST(S)
- PROPOSED SIGN MOUNTED ON BRIDGE OR SIGN BRIDGE
- EXISTING LIGHT OR SIGNAL POLE
- CANTILEVER SIGN BRIDGE
- (XXX) DENOTES SIGN NUMBER
- (X) INDICATES SIGN SIZE
- ESTR EXISTING SIGN TO REMAIN

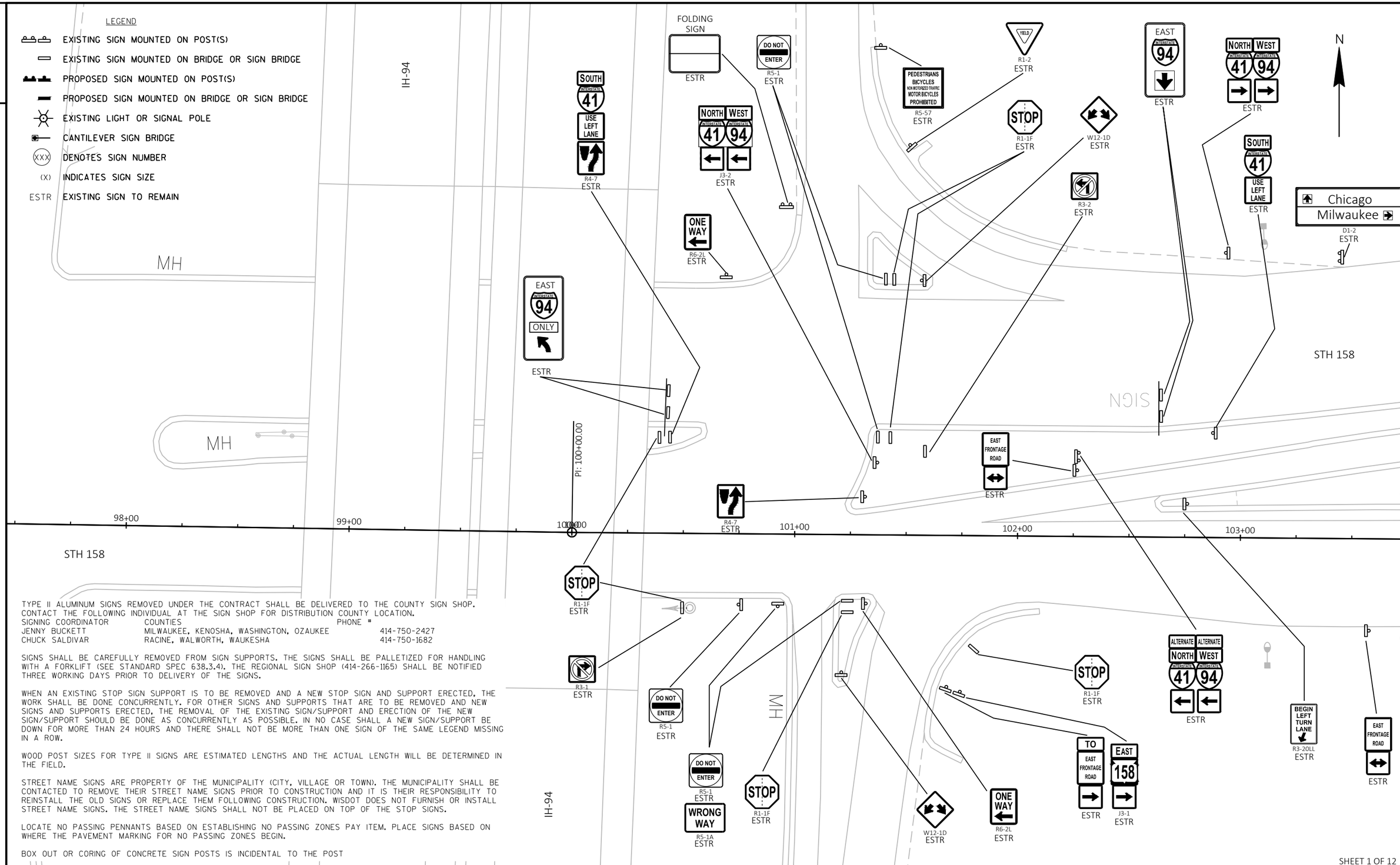

TYPE II ALUMINUM SIGNS REMOVED UNDER THE CONTRACT SHALL BE DELIVERED TO THE COUNTY SIGN SHOP. CONTACT THE FOLLOWING INDIVIDUAL AT THE SIGN SHOP FOR DISTRIBUTION COUNTY LOCATION.

SIGNING COORDINATOR	COUNTIES	PHONE #
JENNY BUCKETT	MILWAUKEE, KENOSHA, WASHINGTON, OZAUKEE	414-750-2427
CHUCK SALDIVAR	RACINE, WALWORTH, WAUKESHA	414-750-1682

SIGNS SHALL BE CAREFULLY REMOVED FROM SIGN SUPPORTS. THE SIGNS SHALL BE PALLETIZED FOR HANDLING WITH A FORKLIFT (SEE STANDARD SPEC 638.3.4). THE REGIONAL SIGN SHOP (414-266-1165) SHALL BE NOTIFIED THREE WORKING DAYS PRIOR TO DELIVERY OF THE SIGNS.

WHEN AN EXISTING STOP SIGN SUPPORT IS TO BE REMOVED AND A NEW STOP SIGN AND SUPPORT ERECTED, THE WORK SHALL BE DONE CONCURRENTLY. FOR OTHER SIGNS AND SUPPORTS THAT ARE TO BE REMOVED AND NEW SIGNS AND SUPPORTS ERECTED, THE REMOVAL OF THE EXISTING SIGN/SUPPORT AND ERECTION OF THE NEW SIGN/SUPPORT SHOULD BE DONE AS CONCURRENTLY AS POSSIBLE. IN NO CASE SHALL A NEW SIGN/SUPPORT BE DOWN FOR MORE THAN 24 HOURS AND THERE SHALL NOT BE MORE THAN ONE SIGN OF THE SAME LEGEND MISSING IN A ROW.

WOOD POST SIZES FOR TYPE II SIGNS ARE ESTIMATED LENGTHS AND THE ACTUAL LENGTH WILL BE DETERMINED IN THE FIELD.

STREET NAME SIGNS ARE PROPERTY OF THE MUNICIPALITY (CITY, VILLAGE OR TOWN). THE MUNICIPALITY SHALL BE CONTACTED TO REMOVE THEIR STREET NAME SIGNS PRIOR TO CONSTRUCTION AND IT IS THEIR RESPONSIBILITY TO REINSTALL THE OLD SIGNS OR REPLACE THEM FOLLOWING CONSTRUCTION. WISDOT DOES NOT FURNISH OR INSTALL STREET NAME SIGNS. THE STREET NAME SIGNS SHALL NOT BE PLACED ON TOP OF THE STOP SIGNS.

LOCATE NO PASSING PENNANTS BASED ON ESTABLISHING NO PASSING ZONES PAY ITEM. PLACE SIGNS BASED ON WHERE THE PAVEMENT MARKING FOR NO PASSING ZONES BEGIN.

BOX OUT OR CORING OF CONCRETE SIGN POSTS IS INCIDENTAL TO THE POST

SHEET 1 OF 12

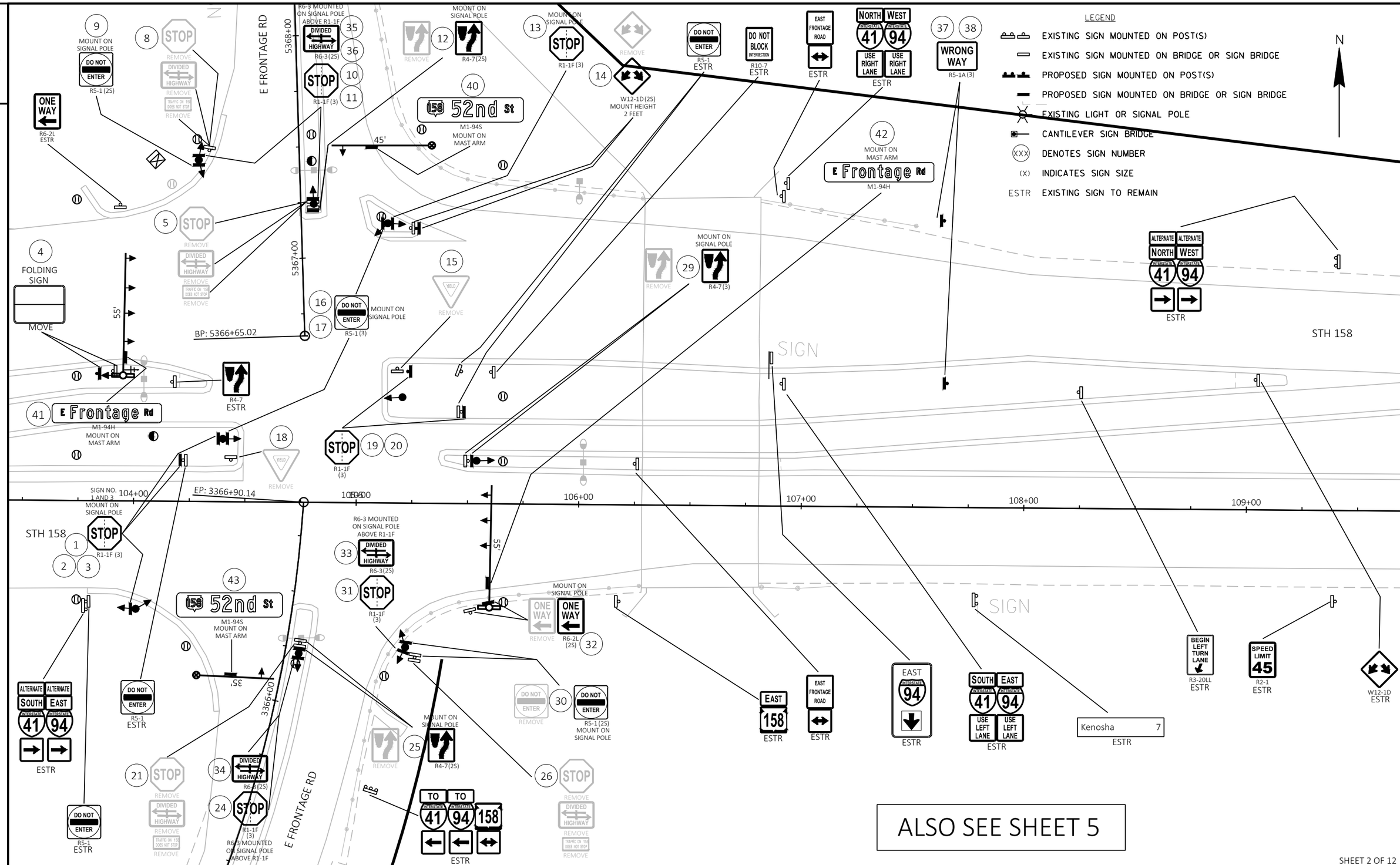

SHEET 2 OF 12

PROJECT NO: 3700-11-70	HWY: STH 158 & STH 165	COUNTY: KENOSHA	PERMANENT SIGNING	SHEET 25	E

FILE NAME : N:\PDS\C3D\CAD\37001100\SIGN\030201_PS.DWG
LAYOUT NAME - 02
PLOT DATE : 6/28/2022 2:44 PM
PLOT BY : ASHENFELTER, DANIEL
PLOT NAME :
PLOT SCALE : 1 IN:40 FT
WISDOT/CADDS SHEET 42

LEGEND

- EXISTING SIGN MOUNTED ON POST(S)
- EXISTING SIGN MOUNTED ON BRIDGE OR SIGN BRIDGE
- PROPOSED SIGN MOUNTED ON POST(S)
- PROPOSED SIGN MOUNTED ON BRIDGE OR SIGN BRIDGE
- EXISTING LIGHT OR SIGNAL POLE
- CANTILEVER SIGN BRIDGE
- XXX DENOTES SIGN NUMBER
- (X) INDICATES SIGN SIZE
- ESTR EXISTING SIGN TO REMAIN

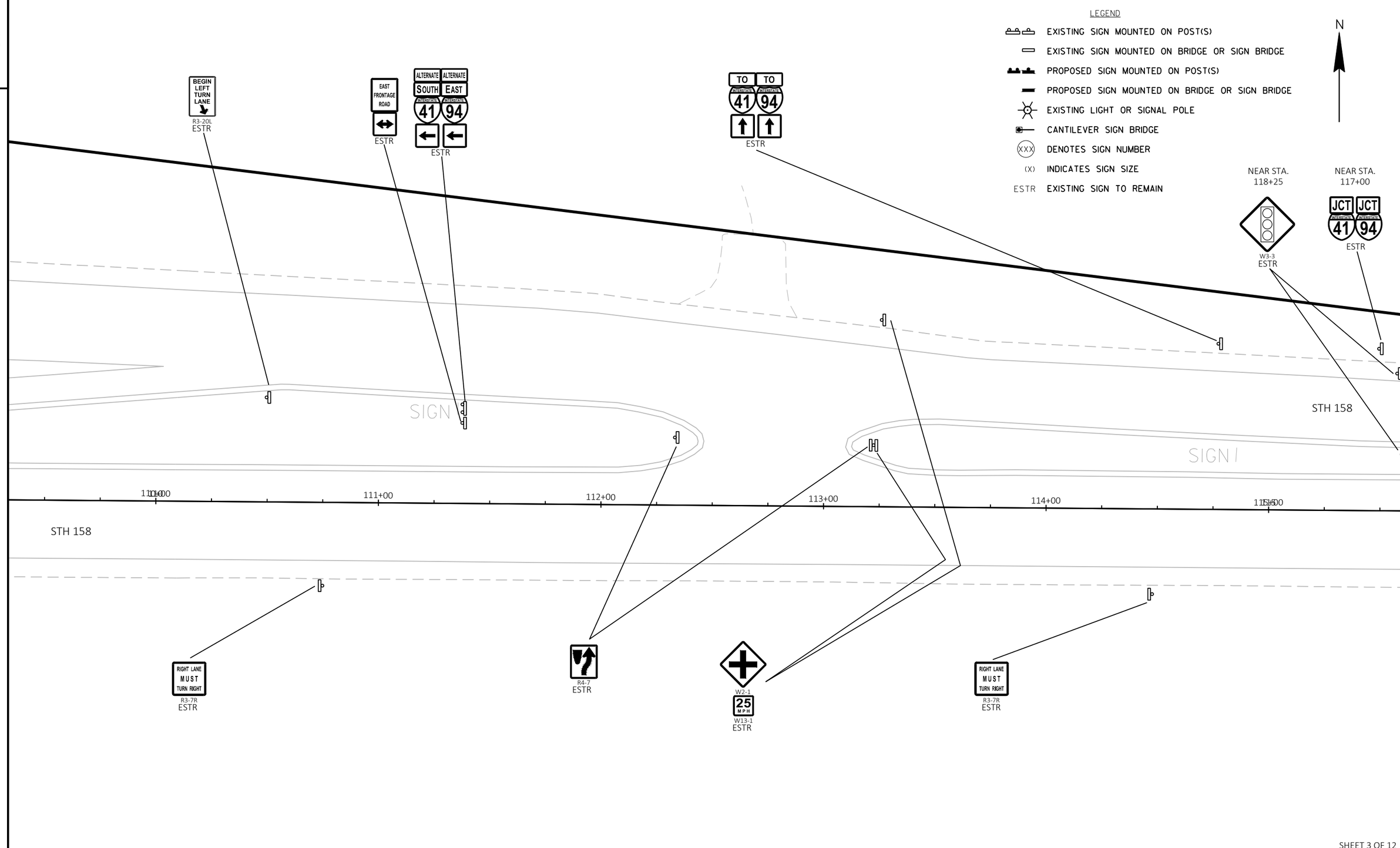

SHEET 3 OF 12

PROJECT NO: 3700-11-70	HWY: STH 158 & STH 165	COUNTY: KENOSHA	PERMANENT SIGNING	SHEET 26	E

FILE NAME : N:\PDS\C3D\CAD\37001100\SIGN\030201_PS.DWG
LAYOUT NAME - 03
PLOT DATE : 6/28/2022 2:45 PM
PLOT BY : ASHENFELTER, DANIEL
PLOT NAME :
PLOT SCALE : 1 IN:40 FT
WISDOT/CADDS SHEET 42

LEGEND

- EXISTING SIGN MOUNTED ON POST(S)
- EXISTING SIGN MOUNTED ON BRIDGE OR SIGN BRIDGE
- PROPOSED SIGN MOUNTED ON POST(S)
- PROPOSED SIGN MOUNTED ON BRIDGE OR SIGN BRIDGE
- EXISTING LIGHT OR SIGNAL POLE
- CANTILEVER SIGN BRIDGE
- (XXX) DENOTES SIGN NUMBER
- (X) INDICATES SIGN SIZE
- ESTR EXISTING SIGN TO REMAIN

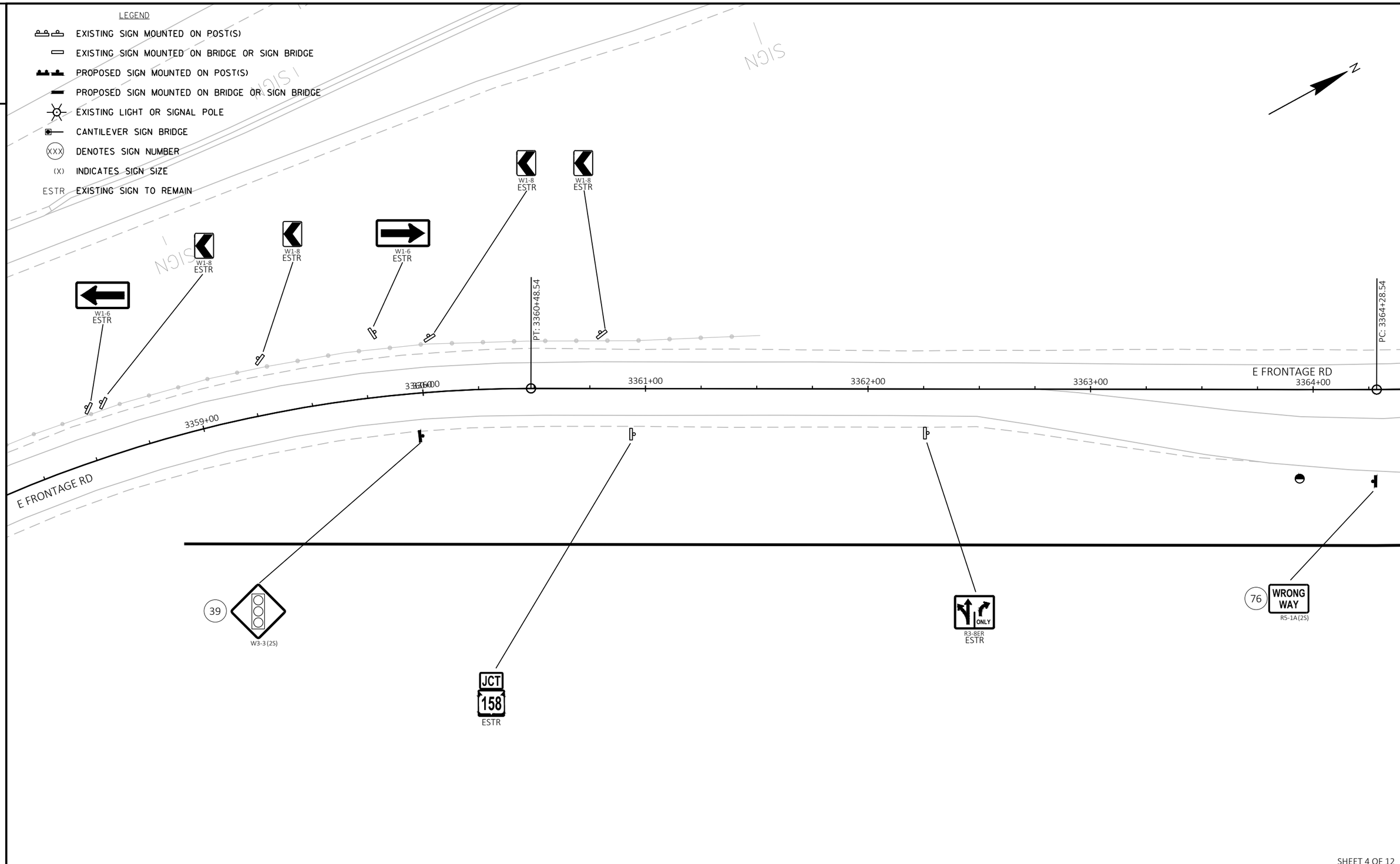

SHEET 4 OF 12

PROJECT NO: 3700-11-70	HWY: STH 158 & STH 165	COUNTY: KENOSHA	PERMANENT SIGNING	SHEET 27	E

2

LEGEND

- EXISTING SIGN MOUNTED ON POST(S)
- EXISTING SIGN MOUNTED ON BRIDGE OR SIGN BRIDGE
- PROPOSED SIGN MOUNTED ON POST(S)
- PROPOSED SIGN MOUNTED ON BRIDGE OR SIGN BRIDGE
- EXISTING LIGHT OR SIGNAL POLE
- CANTILEVER SIGN BRIDGE
- XXX DENOTES SIGN NUMBER
- (X) INDICATES SIGN SIZE
- ESTR EXISTING SIGN TO REMAIN

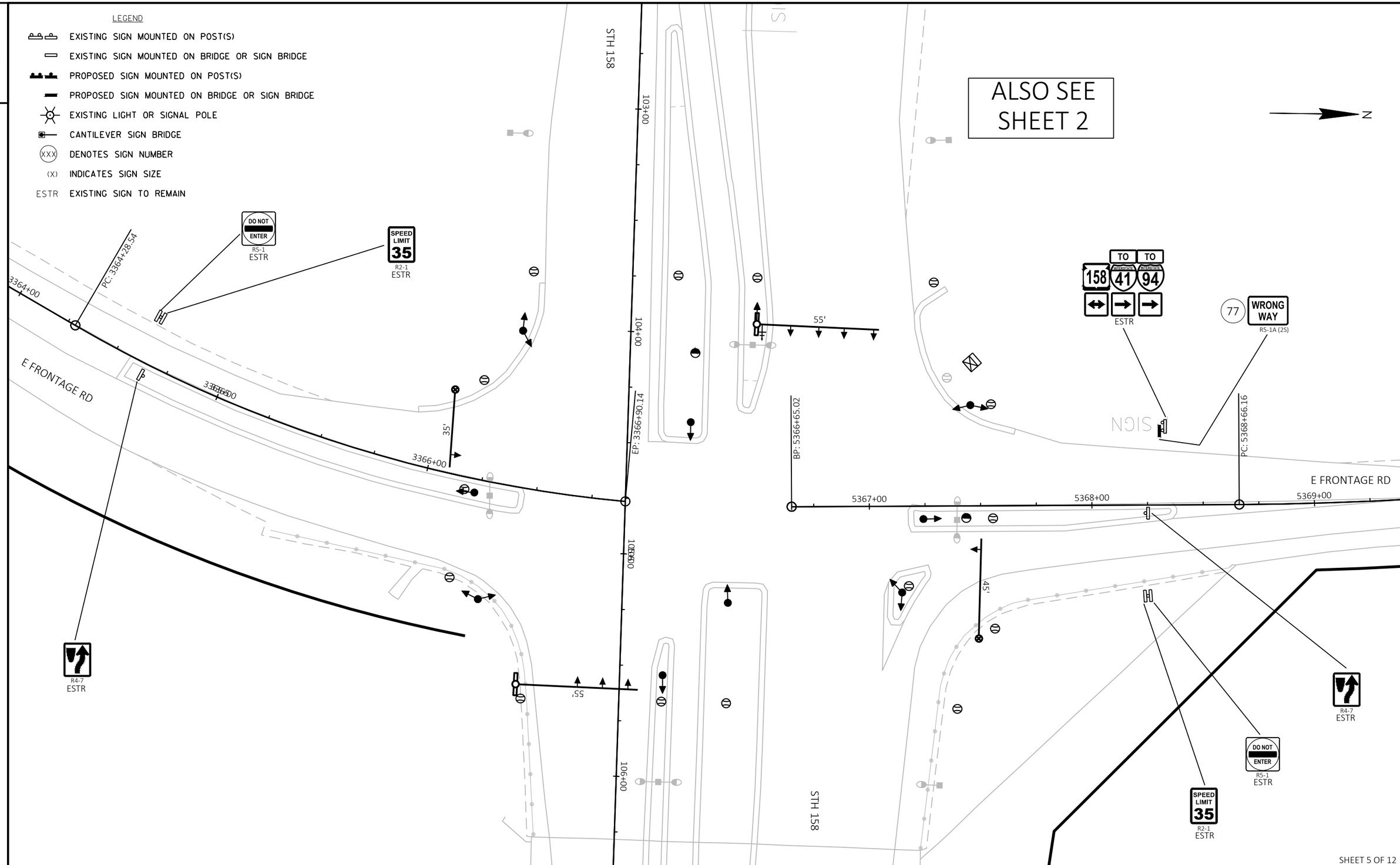

SHEET 5 OF 12

PROJECT NO: 3700-11-70	HWY: STH 158 & STH 165	COUNTY: KENOSHA	PERMANENT SIGNING	SHEET 28	E

FILE NAME : N:\PDS\C3D\CAD\37001100\SIGN\030201_PS.DWG
LAYOUT NAME - 05
PLOT DATE : 6/28/2022 2:46 PM
PLOT BY : ASHENFELTER, DANIEL
PLOT NAME :
PLOT SCALE : 1 IN:40 FT
WISDOT/CADDS SHEET 42

2

LEGEND

- EXISTING SIGN MOUNTED ON POST(S)
- EXISTING SIGN MOUNTED ON BRIDGE OR SIGN BRIDGE
- PROPOSED SIGN MOUNTED ON POST(S)
- PROPOSED SIGN MOUNTED ON BRIDGE OR SIGN BRIDGE
- EXISTING LIGHT OR SIGNAL POLE
- CANTILEVER SIGN BRIDGE
- (XXX) DENOTES SIGN NUMBER
- (X) INDICATES SIGN SIZE
- ESTR EXISTING SIGN TO REMAIN

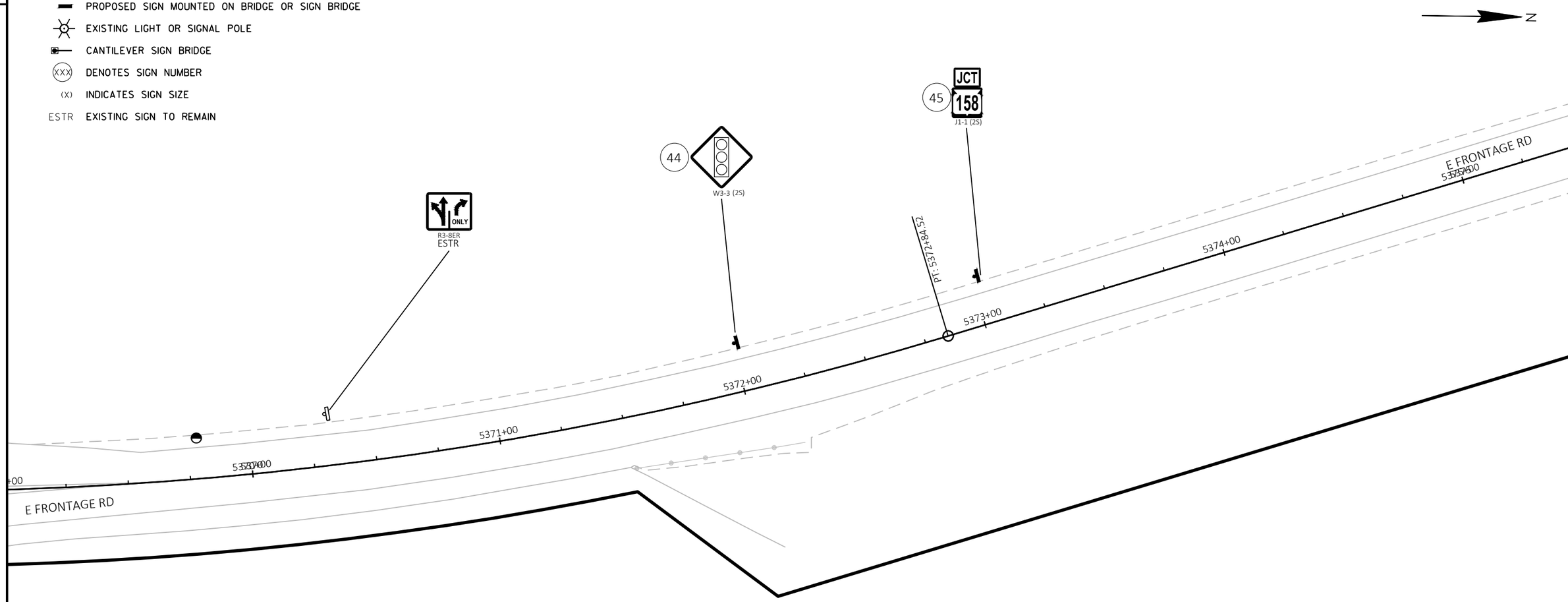

SHEET 6 OF 12

PROJECT NO: 3700-11-70	HWY: STH 158 & STH 165	COUNTY: KENOSHA	PERMANENT SIGNING	SHEET 29	E

FILE NAME : N:\PDS\C3D\CAD\37001100\SIGN\030201_PS.DWG
LAYOUT NAME - 06
PLOT DATE : 6/28/2022 2:46 PM PLOT BY : ASHENFELTER, DANIEL PLOT NAME : PLOT SCALE : 1 IN:40 FT

WISDOT/CADDS SHEET 42

LEGEND

- EXISTING SIGN MOUNTED ON POST(S)
- EXISTING SIGN MOUNTED ON BRIDGE OR SIGN BRIDGE
- PROPOSED SIGN MOUNTED ON POST(S)
- PROPOSED SIGN MOUNTED ON BRIDGE OR SIGN BRIDGE
- EXISTING LIGHT OR SIGNAL POLE
- CANTILEVER SIGN BRIDGE
- (XXX) DENOTES SIGN NUMBER
- (X) INDICATES SIGN SIZE
- ESTR EXISTING SIGN TO REMAIN

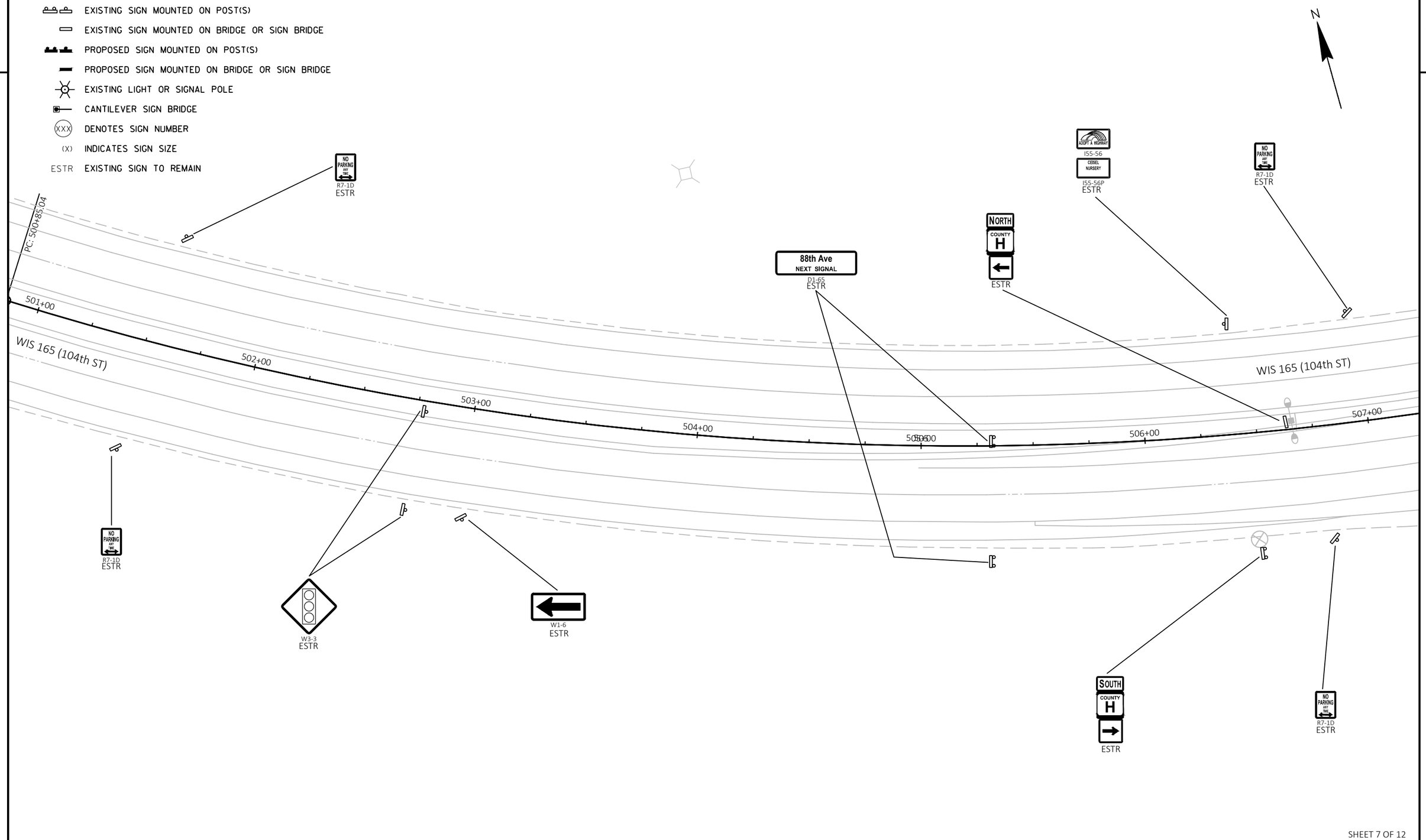

SHEET 7 OF 12

PROJECT NO: 3700-11-70	HWY: STH 158 & STH 165	COUNTY: KENOSHA	PERMANENT SIGNING	SHEET 30	E

FILE NAME : N:\PDS\C3D\CAD\37001100\SIGN\030201_PS.DWG
LAYOUT NAME - 07
PLOT DATE : 6/28/2022 2:47 PM
PLOT BY : ASHENFELTER, DANIEL
PLOT NAME :
PLOT SCALE : 1 IN:40 FT
WISDOT/CADDS SHEET 42

LEGEND

- EXISTING SIGN MOUNTED ON POST(S)
- EXISTING SIGN MOUNTED ON BRIDGE OR SIGN BRIDGE
- PROPOSED SIGN MOUNTED ON POST(S)
- PROPOSED SIGN MOUNTED ON BRIDGE OR SIGN BRIDGE
- EXISTING LIGHT OR SIGNAL POLE
- CANTILEVER SIGN BRIDGE
- (XXX) DENOTES SIGN NUMBER
- (X) INDICATES SIGN SIZE
- ESTR EXISTING SIGN TO REMAIN

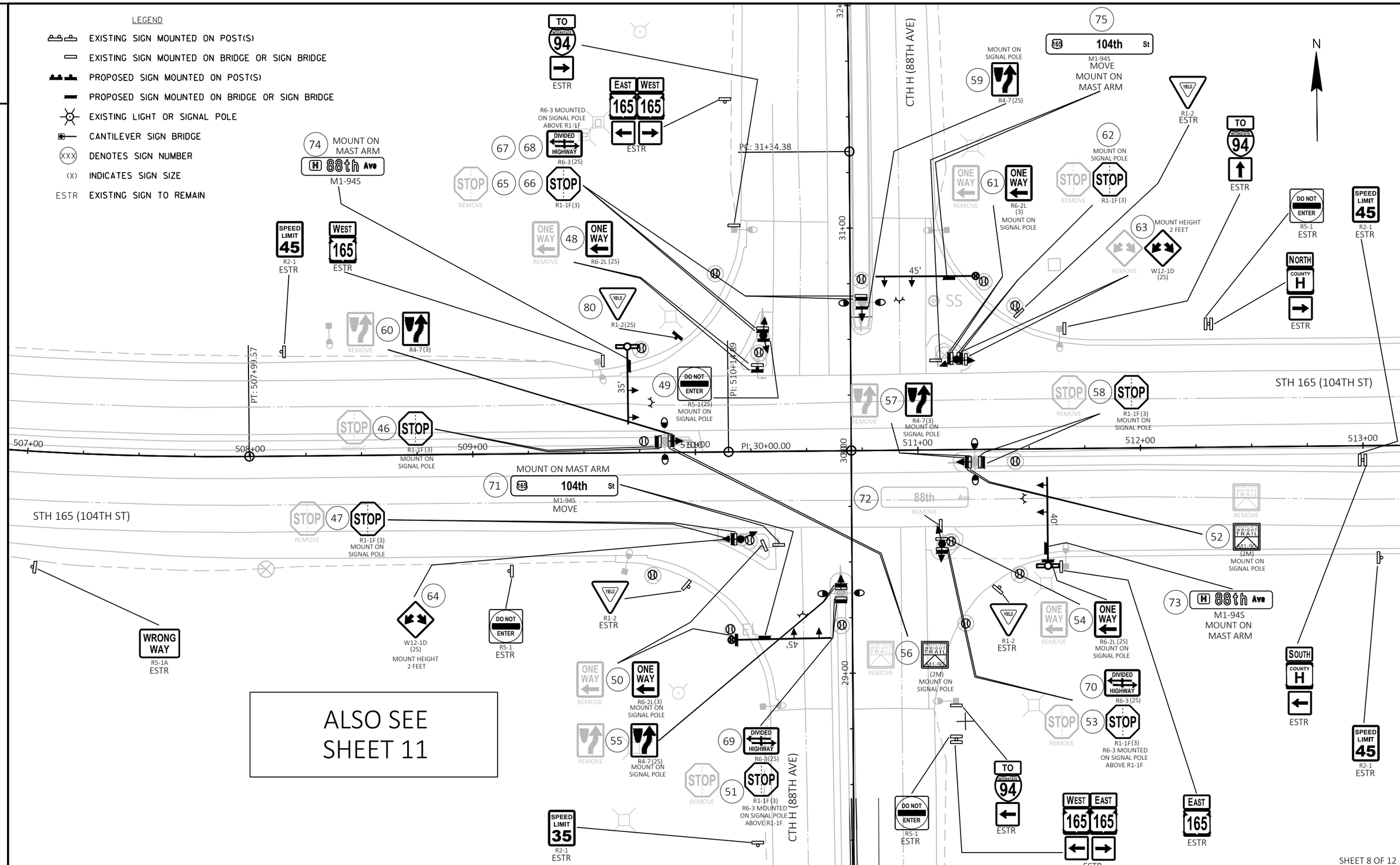

SHEET 8 OF 12

PROJECT NO: 3700-11-70	HWY: STH 158 & STH 165	COUNTY: KENOSHA	PERMANENT SIGNING	SHEET 31	E

2

LEGEND

- EXISTING SIGN MOUNTED ON POST(S)
- EXISTING SIGN MOUNTED ON BRIDGE OR SIGN BRIDGE
- PROPOSED SIGN MOUNTED ON POST(S)
- PROPOSED SIGN MOUNTED ON BRIDGE OR SIGN BRIDGE
- EXISTING LIGHT OR SIGNAL POLE
- CANTILEVER SIGN BRIDGE
- (XXX) DENOTES SIGN NUMBER
- (X) INDICATES SIGN SIZE
- ESTR EXISTING SIGN TO REMAIN

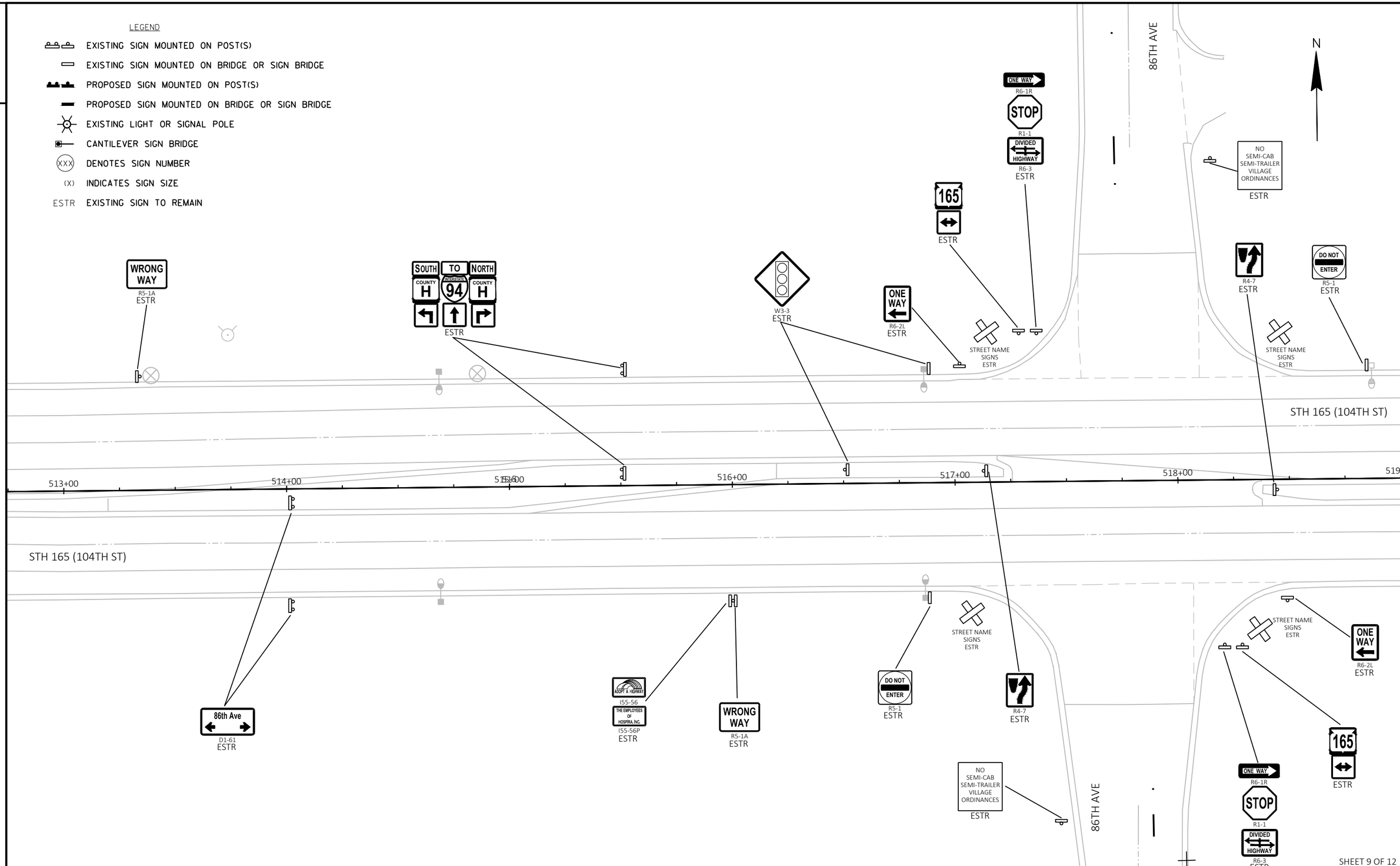

SHEET 9 OF 12

PROJECT NO: 3700-11-70	HWY: STH 158 & STH 165	COUNTY: KENOSHA	PERMANENT SIGNING	SHEET 32	E

FILE NAME : N:\PDS\C3D\CAD\37001100\SIGN\030201_PS.DWG
LAYOUT NAME - 09
PLOT DATE : 6/28/2022 2:47 PM
PLOT BY : ASHENFELTER, DANIEL
PLOT NAME :
PLOT SCALE : 1 IN:40 FT

WISDOT/CADDS SHEET 42

2

LEGEND

- EXISTING SIGN MOUNTED ON POST(S)
- EXISTING SIGN MOUNTED ON BRIDGE OR SIGN BRIDGE
- PROPOSED SIGN MOUNTED ON POST(S)
- PROPOSED SIGN MOUNTED ON BRIDGE OR SIGN BRIDGE
- EXISTING LIGHT OR SIGNAL POLE
- CANTILEVER SIGN BRIDGE
- (XXX) DENOTES SIGN NUMBER
- (X) INDICATES SIGN SIZE
- ESTR EXISTING SIGN TO REMAIN

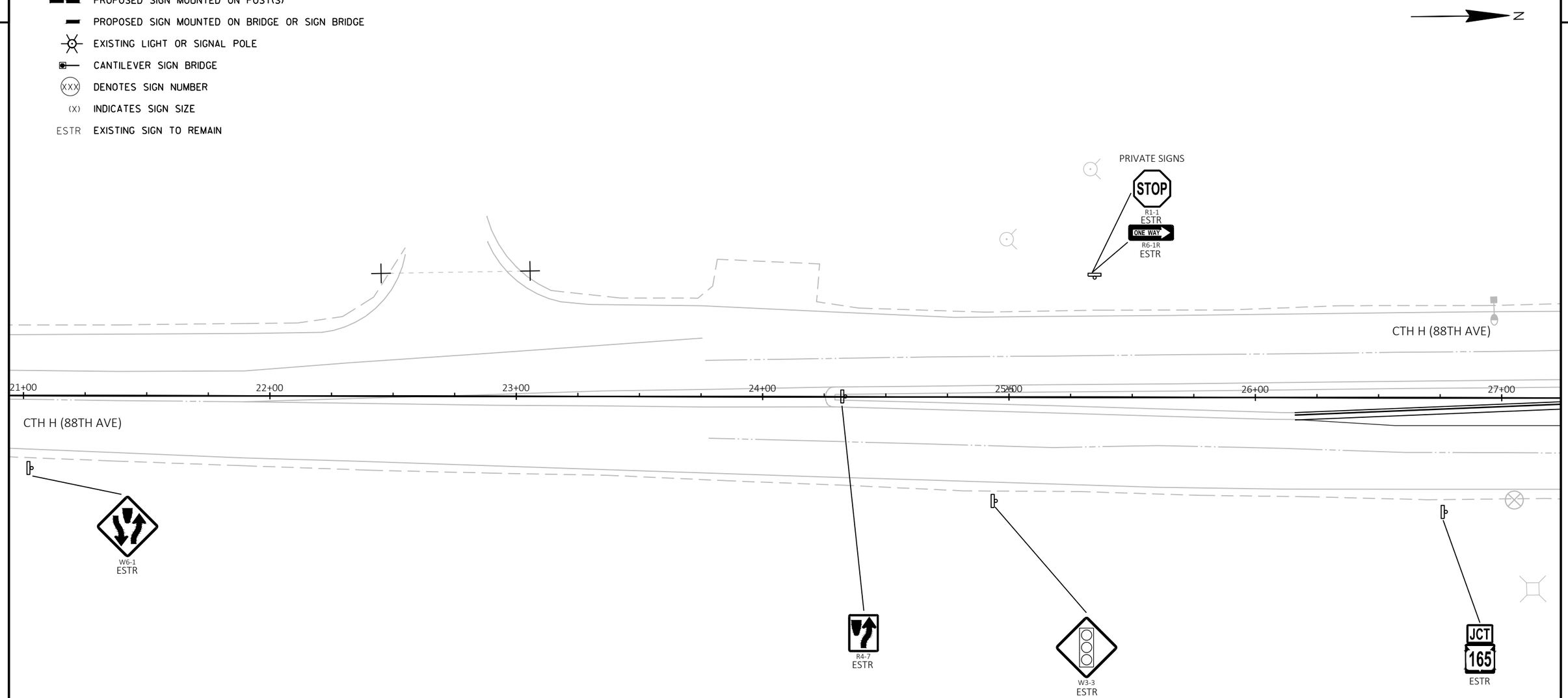

SHEET 10 OF 12

PROJECT NO: 3700-11-70	HWY: STH 158 & STH 165	COUNTY: KENOSHA	PERMANENT SIGNING	SHEET 33	E

FILE NAME : N:\PDS\C3D\CAD\37001100\SIGN\030201_PS.DWG
LAYOUT NAME - 10
PLOT DATE : 6/28/2022 2:47 PM
PLOT BY : ASHENFELTER, DANIEL
PLOT NAME :
PLOT SCALE : 1 IN:40 FT
WISDOT/CADDS SHEET 42

2

LEGEND

- EXISTING SIGN MOUNTED ON POST(S)
- EXISTING SIGN MOUNTED ON BRIDGE OR SIGN BRIDGE
- PROPOSED SIGN MOUNTED ON POST(S)
- PROPOSED SIGN MOUNTED ON BRIDGE OR SIGN BRIDGE
- EXISTING LIGHT OR SIGNAL POLE
- CANTILEVER SIGN BRIDGE
- (XXX) DENOTES SIGN NUMBER
- (X) INDICATES SIGN SIZE
- ESTR EXISTING SIGN TO REMAIN

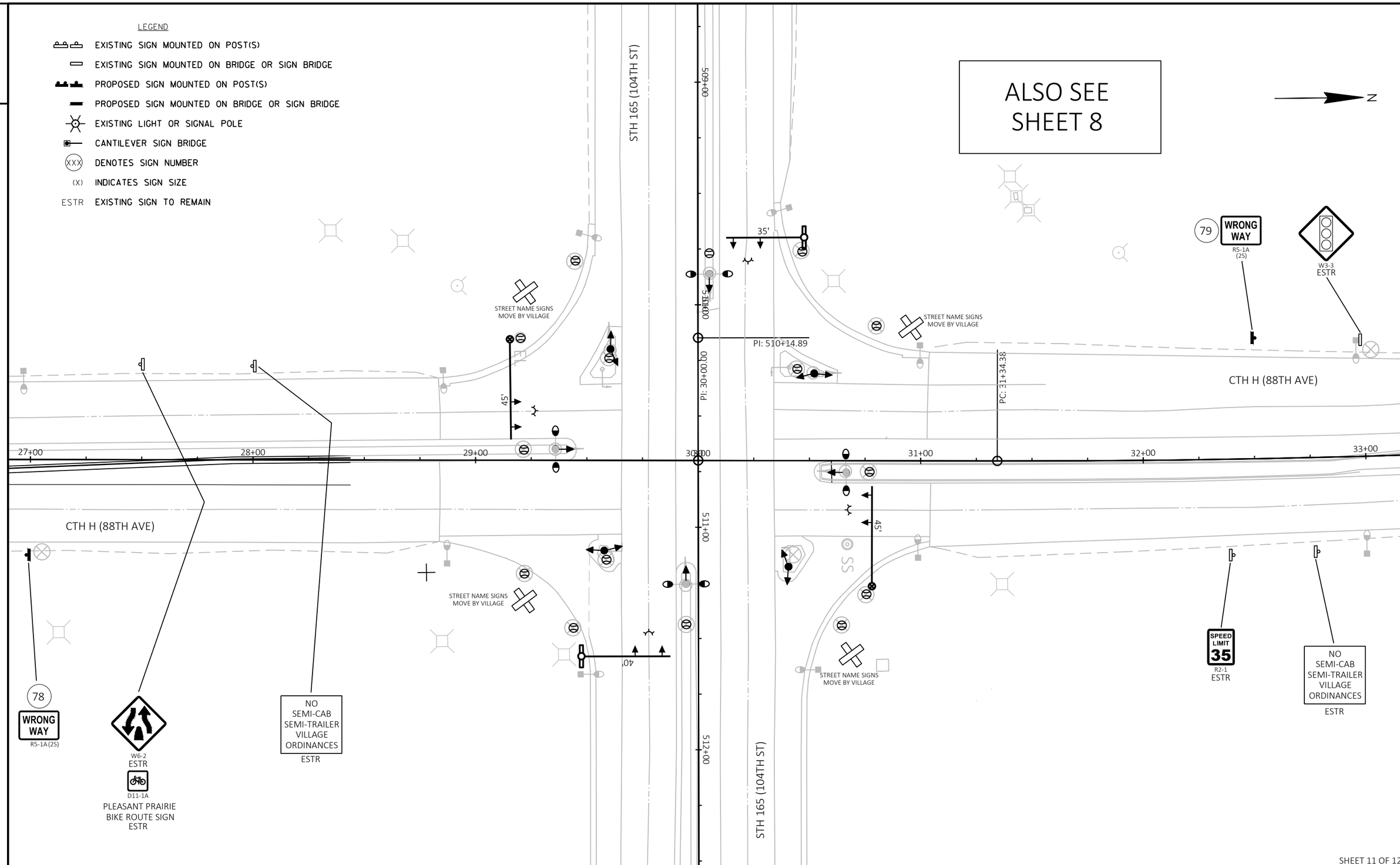

2

PROJECT NO: 3700-11-70	HWY: STH 158 & STH 165	COUNTY: KENOSHA	PERMANENT SIGNING	SHEET 34	E

FILE NAME : N:\PDS\C3D\CAD\37001100\SIGN\030201_PS.DWG
LAYOUT NAME - 11
PLOT DATE : 6/28/2022 2:48 PM
PLOT BY : ASHENFELTER, DANIEL
PLOT NAME :
PLOT SCALE : 1 IN:40 FT

2

LEGEND

- EXISTING SIGN MOUNTED ON POST(S)
- EXISTING SIGN MOUNTED ON BRIDGE OR SIGN BRIDGE
- PROPOSED SIGN MOUNTED ON POST(S)
- PROPOSED SIGN MOUNTED ON BRIDGE OR SIGN BRIDGE
- EXISTING LIGHT OR SIGNAL POLE
- CANTILEVER SIGN BRIDGE
- (XXX) DENOTES SIGN NUMBER
- (X) INDICATES SIGN SIZE
- ESTR EXISTING SIGN TO REMAIN

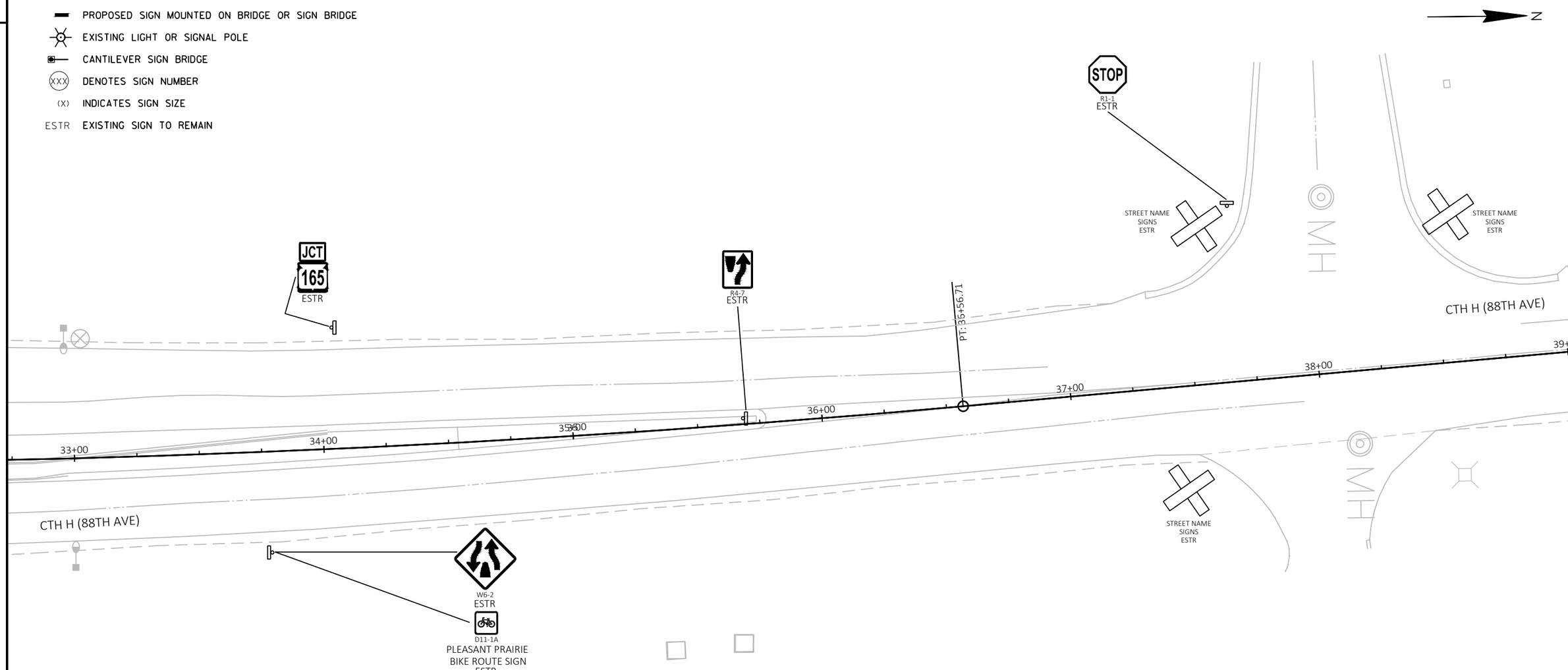

2

SHEET 12 OF 12

PROJECT NO: 3700-11-70	HWY: STH 158 & STH 165	COUNTY: KENOSHA	PERMANENT SIGNING	SHEET 35	E

FILE NAME : N:\PDS\C3D\CAD\37001100\SIGN\030201_PS.DWG
LAYOUT NAME - 12
PLOT DATE : 6/28/2022 2:48 PM
PLOT BY : ASHENFELTER, DANIEL
PLOT NAME :
PLOT SCALE : 1 IN:40 FT
WISDOT/CADDS SHEET 42

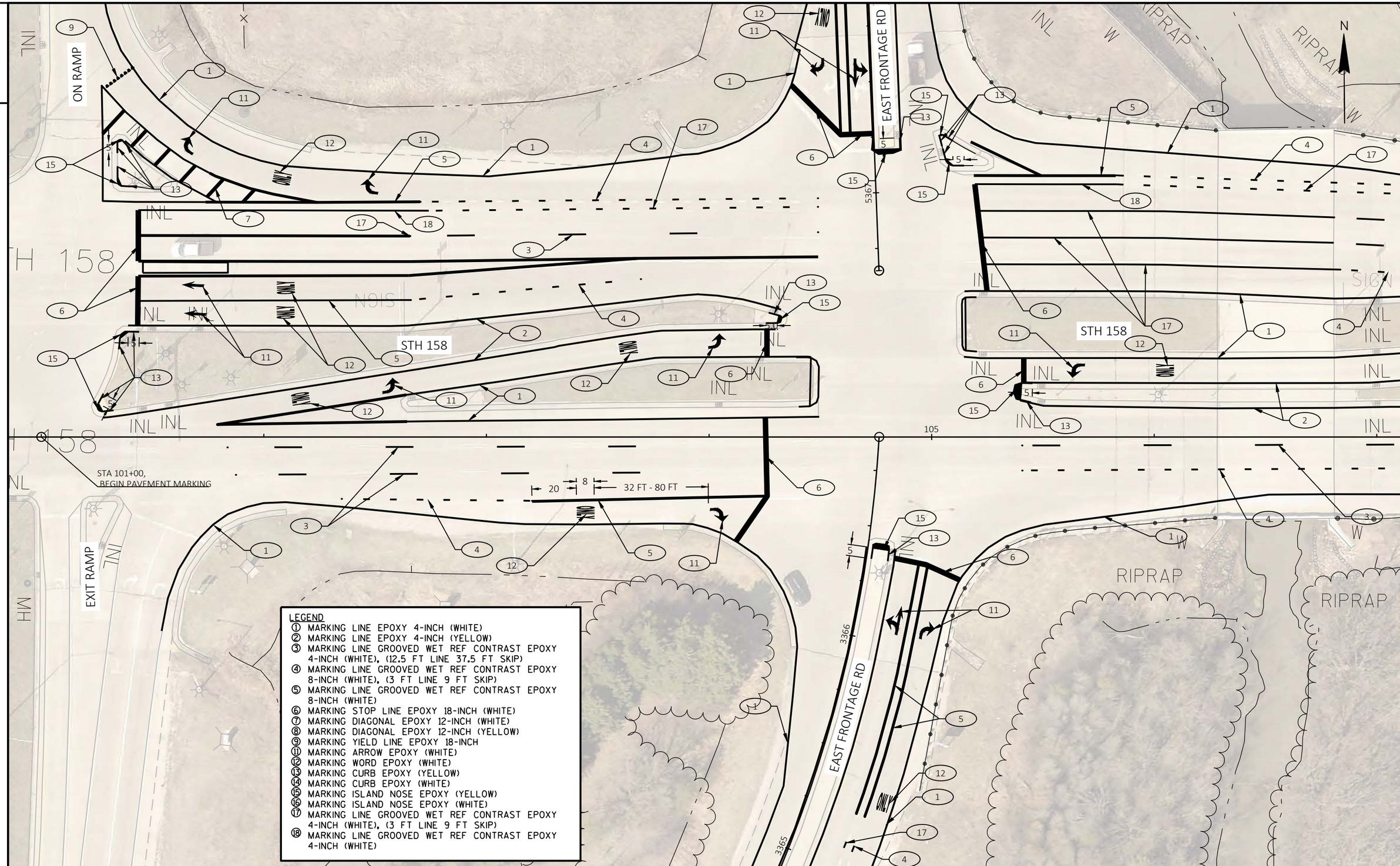

PROJECT NO: 3700-11-70	HWY: VAR. SIGNSLIZED INTERSECTIONS	COUNTY: KENOSHA	PAVEMENT MARKING	SHEET 36	E

FILE NAME : N:\PDS\C3D\37001100\SHEETSPLAN\024501-PM.DWG
LAYOUT NAME - 024501-pm (1)
PLOT DATE : 11/8/2022 3:14 PM
PLOT BY : MANANDHAR, BHUVAN K
PLOT NAME :
PLOT SCALE : 1 IN:40 FT
WISDOT/CADDS SHEET 42

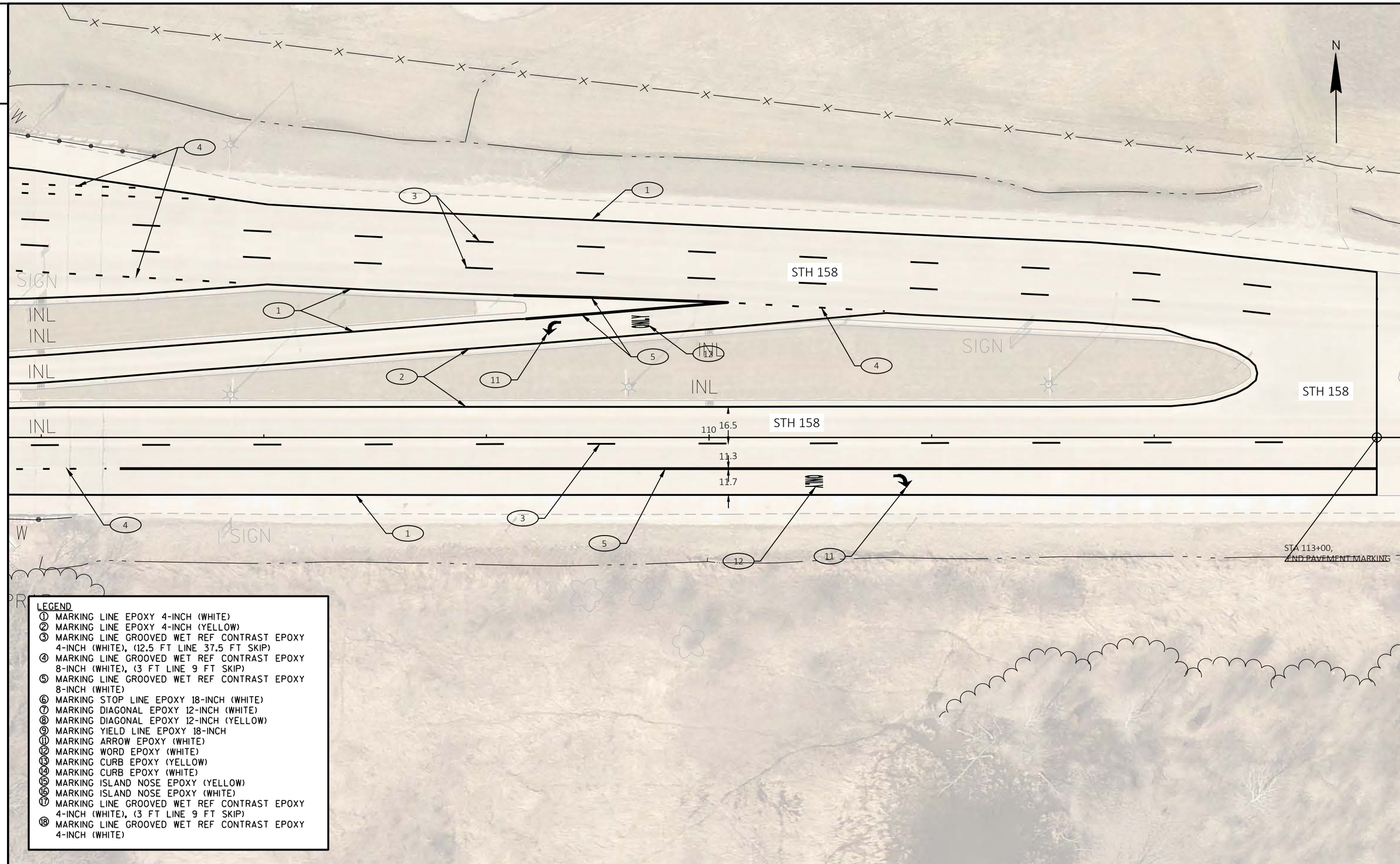

LEGEND
① MARKING LINE EPOXY 4-INCH (WHITE)
② MARKING LINE EPOXY 4-INCH (YELLOW)
③ MARKING LINE GROOVED WET REF CONTRAST EPOXY 4-INCH (WHITE), (12.5 FT LINE 37.5 FT SKIP)
④ MARKING LINE GROOVED WET REF CONTRAST EPOXY 8-INCH (WHITE), (3 FT LINE 9 FT SKIP)
⑤ MARKING LINE GROOVED WET REF CONTRAST EPOXY 8-INCH (WHITE)
⑥ MARKING STOP LINE EPOXY 18-INCH (WHITE)
⑦ MARKING DIAGONAL EPOXY 12-INCH (WHITE)
⑧ MARKING DIAGONAL EPOXY 12-INCH (YELLOW)
⑨ MARKING YIELD LINE EPOXY 18-INCH
⑪ MARKING ARROW EPOXY (WHITE)
⑫ MARKING WORD EPOXY (WHITE)
⑬ MARKING CURB EPOXY (YELLOW)
⑭ MARKING CURB EPOXY (WHITE)
⑮ MARKING ISLAND NOSE EPOXY (YELLOW)
⑯ MARKING ISLAND NOSE EPOXY (WHITE)
⑰ MARKING LINE GROOVED WET REF CONTRAST EPOXY 4-INCH (WHITE), (3 FT LINE 9 FT SKIP)
⑱ MARKING LINE GROOVED WET REF CONTRAST EPOXY 4-INCH (WHITE)

PROJECT NO: 3700-11-70	HWY: VAR. SIGNSLIZED INTERSECTIONS	COUNTY: KENOSHA	PAVEMENT MARKING	SHEET 37	E

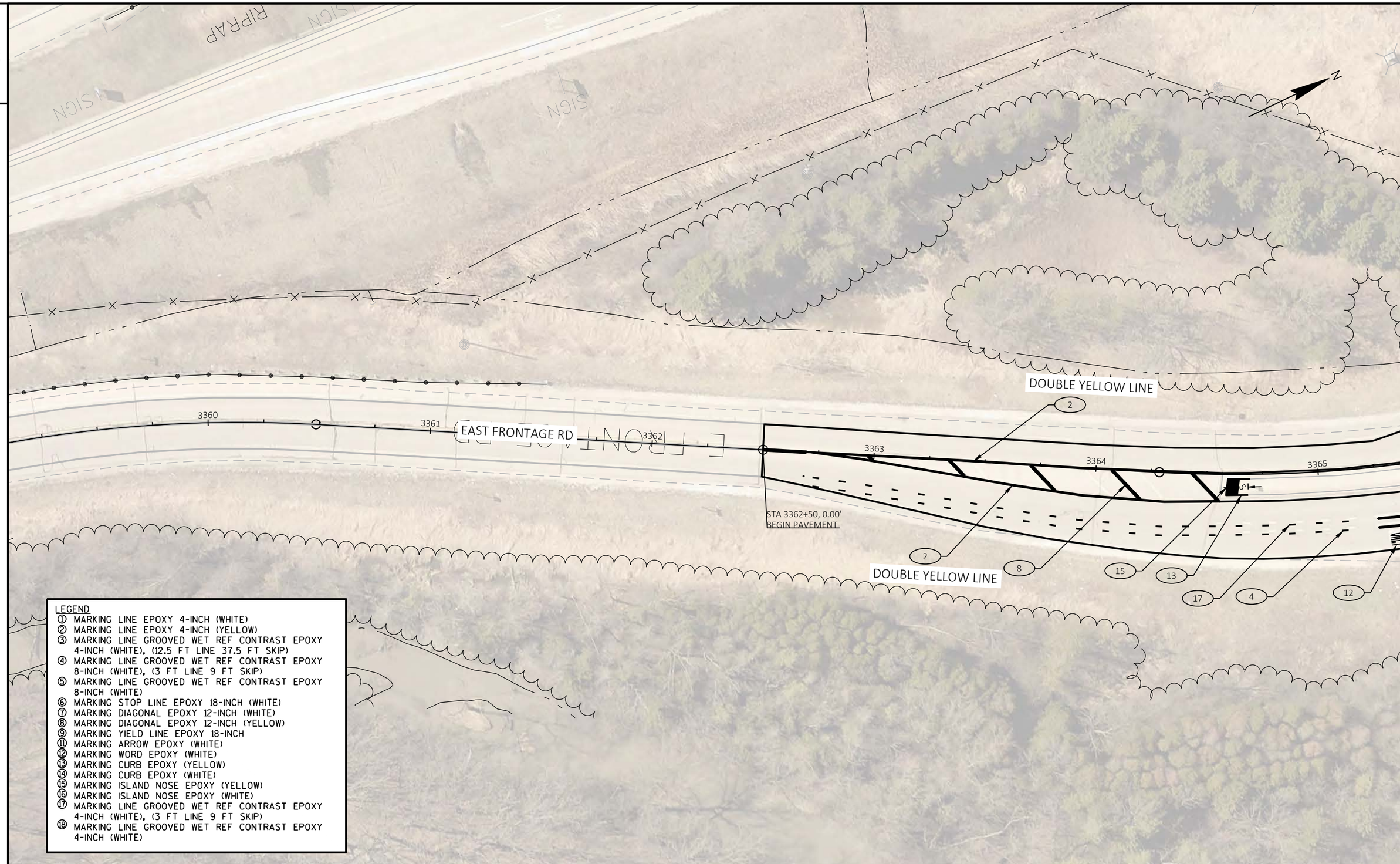

LEGEND
① MARKING LINE EPOXY 4-INCH (WHITE)
② MARKING LINE EPOXY 4-INCH (YELLOW)
③ MARKING LINE GROOVED WET REF CONTRAST EPOXY 4-INCH (WHITE), (12.5 FT LINE 37.5 FT SKIP)
④ MARKING LINE GROOVED WET REF CONTRAST EPOXY 8-INCH (WHITE), (3 FT LINE 9 FT SKIP)
⑤ MARKING LINE GROOVED WET REF CONTRAST EPOXY 8-INCH (WHITE)
⑥ MARKING STOP LINE EPOXY 18-INCH (WHITE)
⑦ MARKING DIAGONAL EPOXY 12-INCH (WHITE)
⑧ MARKING DIAGONAL EPOXY 12-INCH (YELLOW)
⑨ MARKING YIELD LINE EPOXY 18-INCH
⑪ MARKING ARROW EPOXY (WHITE)
⑫ MARKING WORD EPOXY (WHITE)
⑬ MARKING CURB EPOXY (YELLOW)
⑭ MARKING CURB EPOXY (WHITE)
⑮ MARKING ISLAND NOSE EPOXY (YELLOW)
⑯ MARKING ISLAND NOSE EPOXY (WHITE)
⑰ MARKING LINE GROOVED WET REF CONTRAST EPOXY 4-INCH (WHITE), (3 FT LINE 9 FT SKIP)
⑱ MARKING LINE GROOVED WET REF CONTRAST EPOXY 4-INCH (WHITE)

PROJECT NO: 3700-11-70	HWY: VAR. SIGNSLIZED INTERSECTIONS	COUNTY: KENOSHA	PAVEMENT MARKING	SHEET 38	E

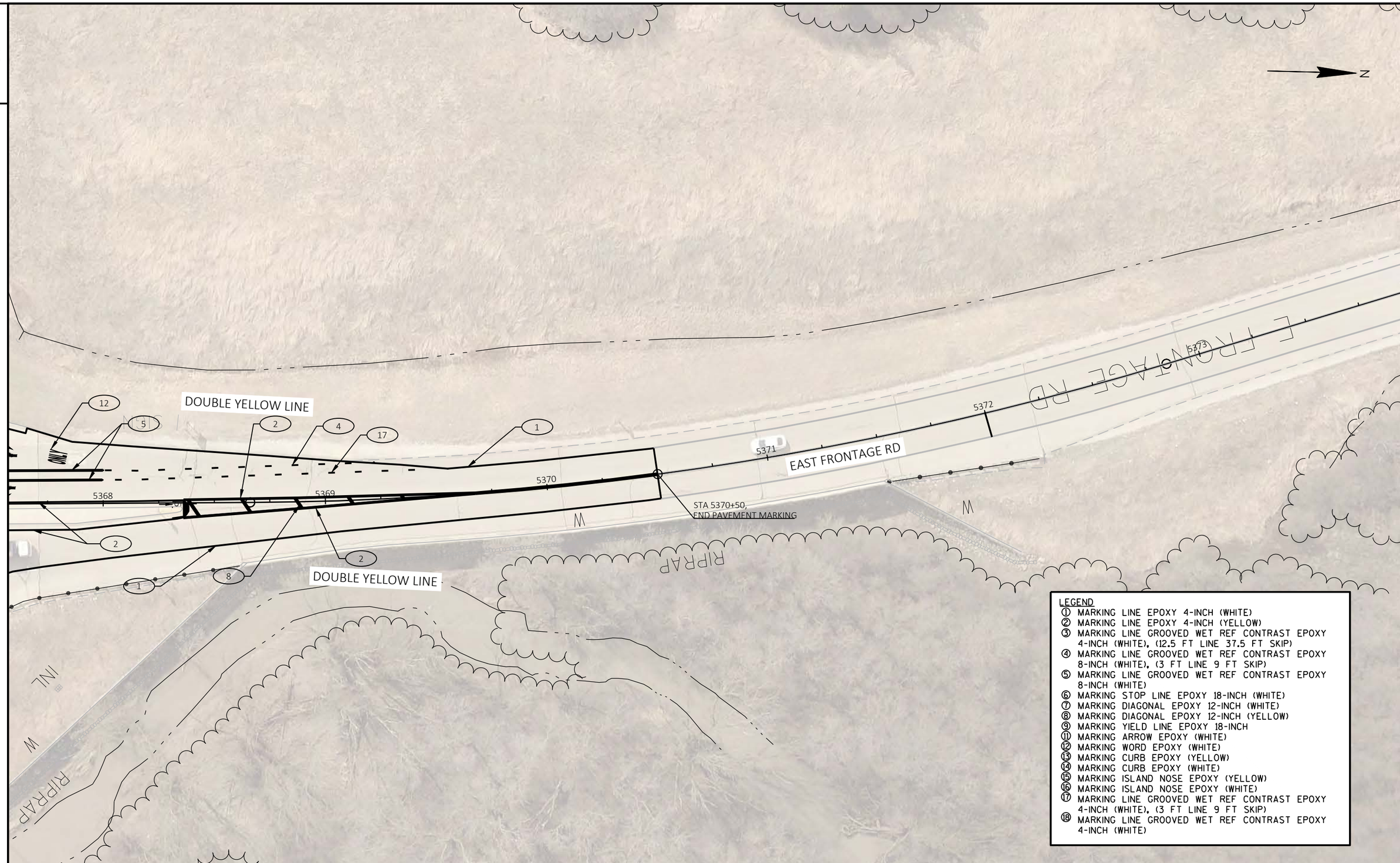

PROJECT NO: 3700-11-70	HWY: VAR. SIGNSLIZED INTERSECTIONS	COUNTY: KENOSHA	PAVEMENT MARKING	SHEET 39	E

FILE NAME : N:\PDS\C3D\37001100\SHEETSPLAN\024501-PM.DWG
LAYOUT NAME - 024501-pm (4)
PLOT DATE : 11/8/2022 3:17 PM
PLOT BY : MANANDHAR, BHUVAN K
PLOT NAME :
PLOT SCALE : 1 IN:40 FT
WISDOT/CADDS SHEET 42

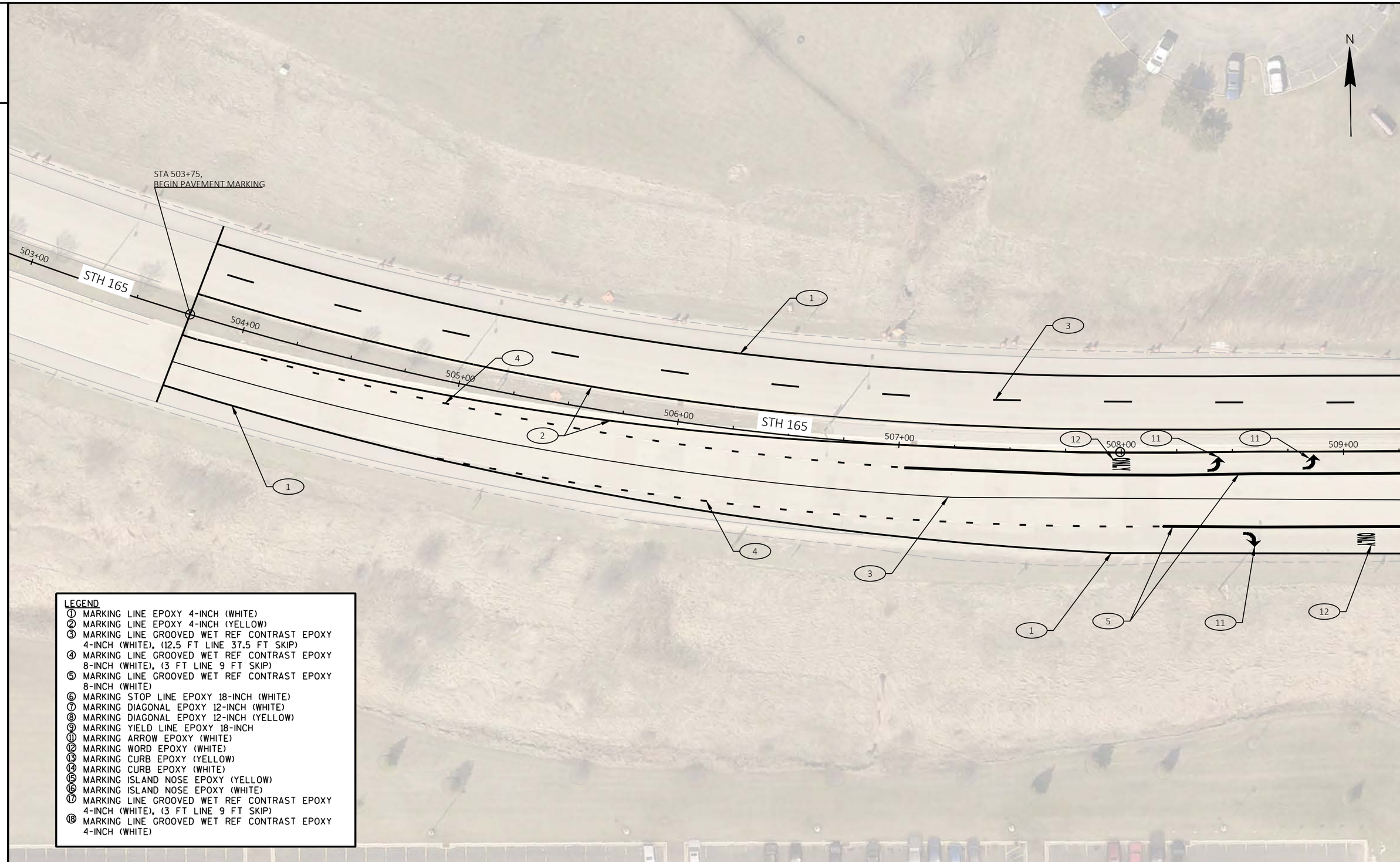

LEGEND

① MARKING LINE EPOXY 4-INCH (WHITE)
② MARKING LINE EPOXY 4-INCH (YELLOW)
③ MARKING LINE GROOVED WET REF CONTRAST EPOXY 4-INCH (WHITE), (12.5 FT LINE 37.5 FT SKIP)
④ MARKING LINE GROOVED WET REF CONTRAST EPOXY 8-INCH (WHITE), (3 FT LINE 9 FT SKIP)
⑤ MARKING LINE GROOVED WET REF CONTRAST EPOXY 8-INCH (WHITE)
⑥ MARKING STOP LINE EPOXY 18-INCH (WHITE)
⑦ MARKING DIAGONAL EPOXY 12-INCH (WHITE)
⑧ MARKING DIAGONAL EPOXY 12-INCH (YELLOW)
⑨ MARKING YIELD LINE EPOXY 18-INCH
⑪ MARKING ARROW EPOXY (WHITE)
⑫ MARKING WORD EPOXY (WHITE)
⑬ MARKING CURB EPOXY (YELLOW)
⑭ MARKING CURB EPOXY (WHITE)
⑮ MARKING ISLAND NOSE EPOXY (YELLOW)
⑯ MARKING ISLAND NOSE EPOXY (WHITE)
⑰ MARKING LINE GROOVED WET REF CONTRAST EPOXY 4-INCH (WHITE), (3 FT LINE 9 FT SKIP)
⑱ MARKING LINE GROOVED WET REF CONTRAST EPOXY 4-INCH (WHITE)

PROJECT NO: 3700-11-70	HWY: VAR. SIGNSLIZED INTERSECTIONS	COUNTY: KENOSHA	PAVEMENT MARKING	SHEET 40	E

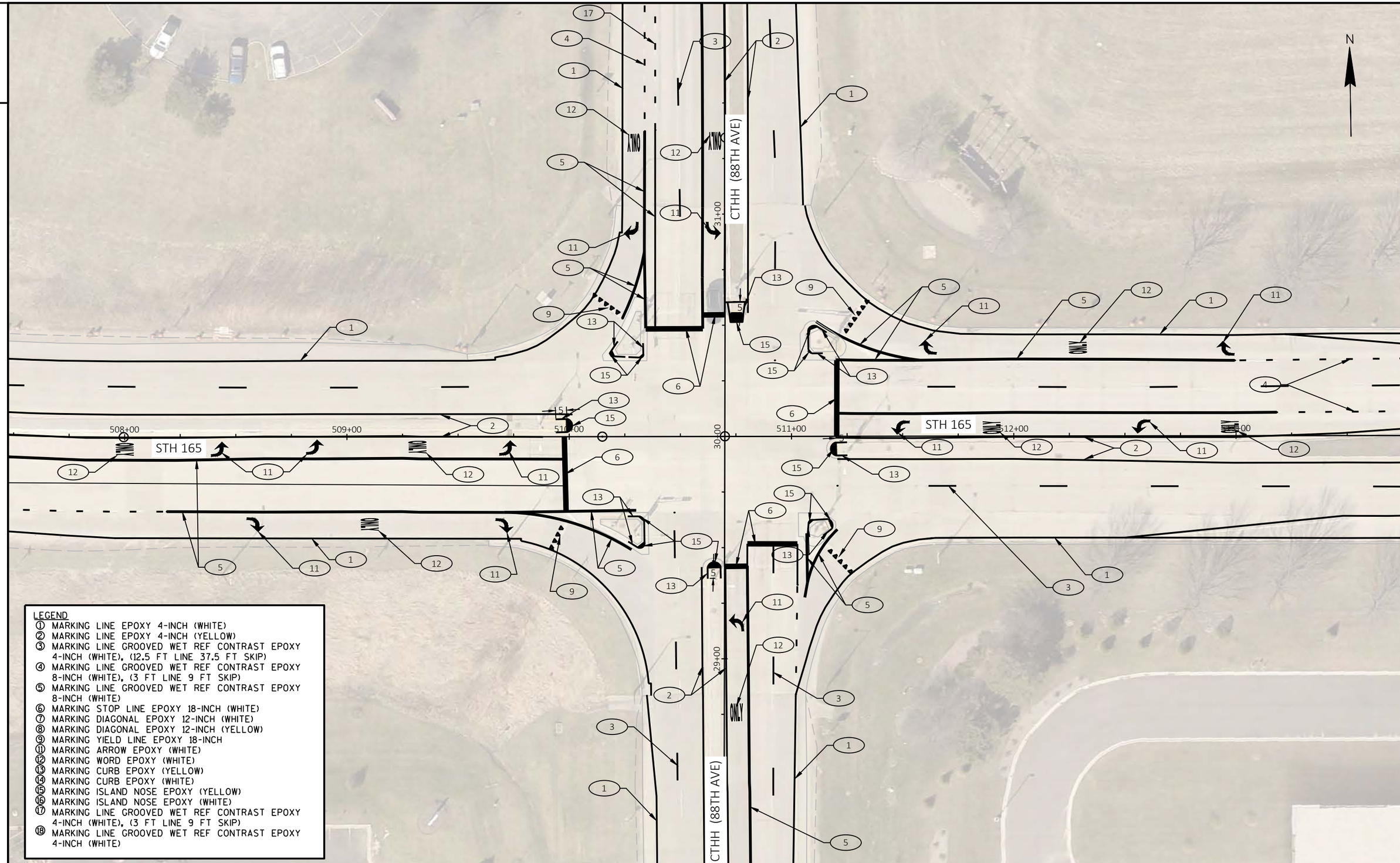

PROJECT NO: 3700-11-70	HWY: VAR. SIGNSLIZED INTERSECTIONS	COUNTY: KENOSHA	PAVEMENT MARKING	SHEET 41	E

FILE NAME : N:\PDS\C3D\37001100\SHEETSPLAN\024502-PM.DWG
LAYOUT NAME - 024502-pm2
PLOT DATE : 11/8/2022 3:18 PM
PLOT BY : MANANDHAR, BHUVAN K
PLOT NAME :
PLOT SCALE : 1 IN:40 FT
WISDOT/CADDS SHEET 42

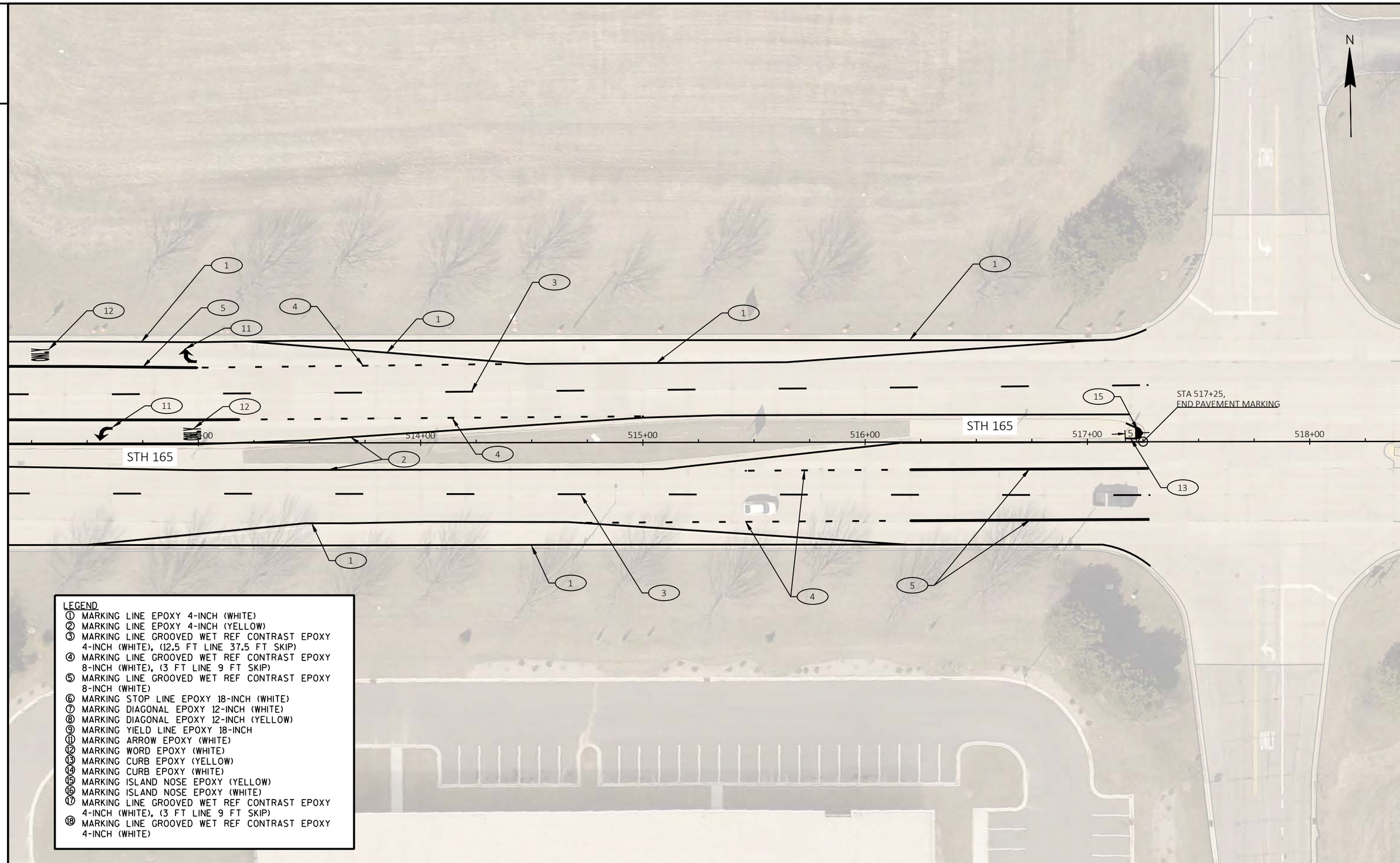

LEGEND
① MARKING LINE EPOXY 4-INCH (WHITE)
② MARKING LINE EPOXY 4-INCH (YELLOW)
③ MARKING LINE GROOVED WET REF CONTRAST EPOXY 4-INCH (WHITE), (12.5 FT LINE 37.5 FT SKIP)
④ MARKING LINE GROOVED WET REF CONTRAST EPOXY 8-INCH (WHITE), (3 FT LINE 9 FT SKIP)
⑤ MARKING LINE GROOVED WET REF CONTRAST EPOXY 8-INCH (WHITE)
⑥ MARKING STOP LINE EPOXY 18-INCH (WHITE)
⑦ MARKING DIAGONAL EPOXY 12-INCH (WHITE)
⑧ MARKING DIAGONAL EPOXY 12-INCH (YELLOW)
⑨ MARKING YIELD LINE EPOXY 18-INCH
⑪ MARKING ARROW EPOXY (WHITE)
⑫ MARKING WORD EPOXY (WHITE)
⑬ MARKING CURB EPOXY (YELLOW)
⑭ MARKING CURB EPOXY (WHITE)
⑮ MARKING ISLAND NOSE EPOXY (YELLOW)
⑯ MARKING ISLAND NOSE EPOXY (WHITE)
⑰ MARKING LINE GROOVED WET REF CONTRAST EPOXY 4-INCH (WHITE), (3 FT LINE 9 FT SKIP)
⑱ MARKING LINE GROOVED WET REF CONTRAST EPOXY 4-INCH (WHITE)

PROJECT NO: 3700-11-70	HWY: VAR. SIGNSLIZED INTERSECTIONS	COUNTY: KENOSHA	PAVEMENT MARKING	SHEET 42	E

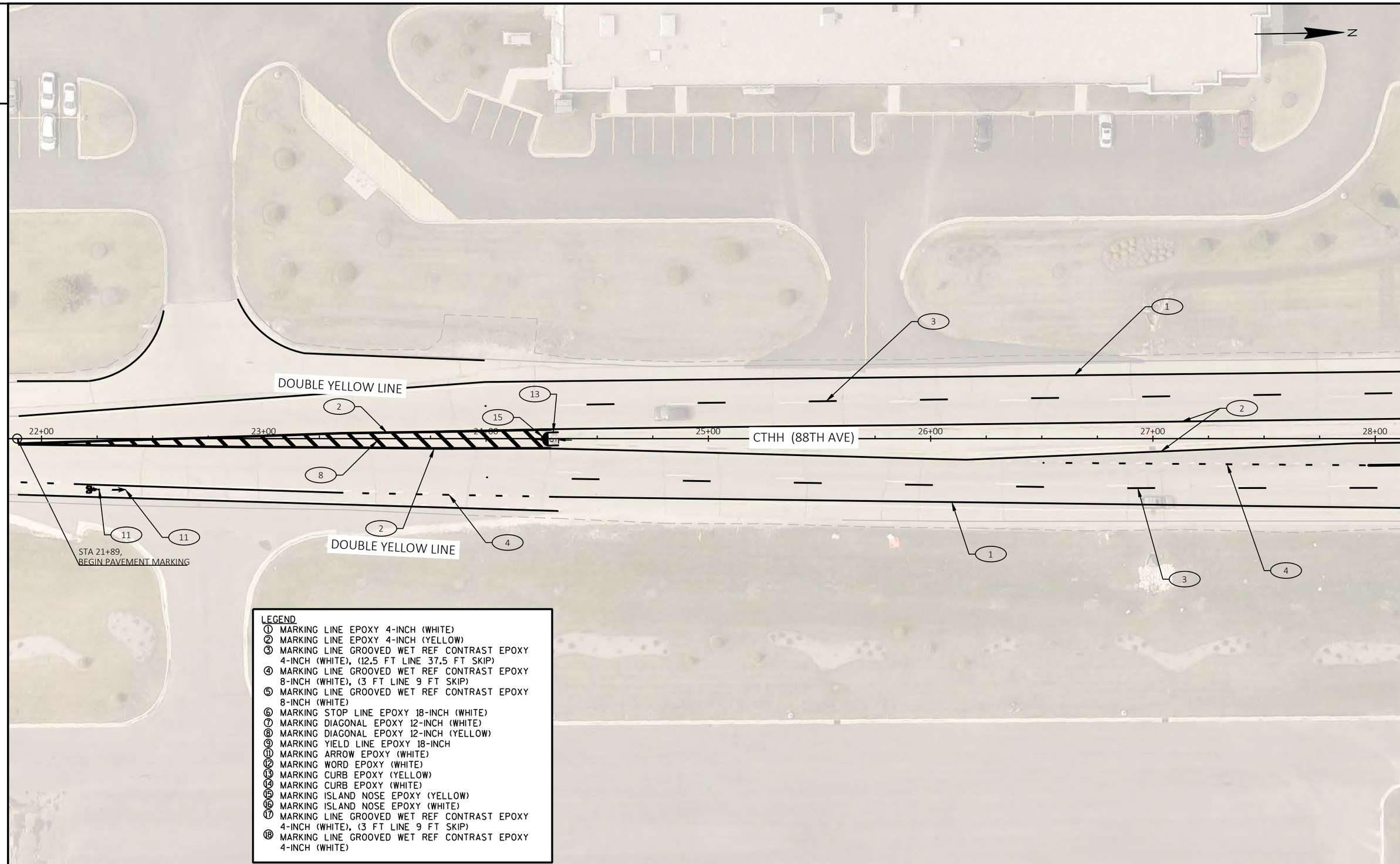

LEGEND

① MARKING LINE EPOXY 4-INCH (WHITE)
② MARKING LINE EPOXY 4-INCH (YELLOW)
③ MARKING LINE GROOVED WET REF CONTRAST EPOXY 4-INCH (WHITE), (12.5 FT LINE 37.5 FT SKIP)
④ MARKING LINE GROOVED WET REF CONTRAST EPOXY 8-INCH (WHITE), (3 FT LINE 9 FT SKIP)
⑤ MARKING LINE GROOVED WET REF CONTRAST EPOXY 8-INCH (WHITE)
⑥ MARKING STOP LINE EPOXY 18-INCH (WHITE)
⑦ MARKING DIAGONAL EPOXY 12-INCH (WHITE)
⑧ MARKING DIAGONAL EPOXY 12-INCH (YELLOW)
⑨ MARKING YIELD LINE EPOXY 18-INCH
⑪ MARKING ARROW EPOXY (WHITE)
⑫ MARKING WORD EPOXY (WHITE)
⑬ MARKING CURB EPOXY (YELLOW)
⑭ MARKING CURB EPOXY (WHITE)
⑮ MARKING ISLAND NOSE EPOXY (YELLOW)
⑯ MARKING ISLAND NOSE EPOXY (WHITE)
⑰ MARKING LINE GROOVED WET REF CONTRAST EPOXY 4-INCH (WHITE), (3 FT LINE 9 FT SKIP)
⑱ MARKING LINE GROOVED WET REF CONTRAST EPOXY 4-INCH (WHITE)

PROJECT NO: 3700-11-70	HWY: VAR. SIGNSLIZED INTERSECTIONS	COUNTY: KENOSHA	PAVEMENT MARKING	SHEET 43	E

FILE NAME : N:\PDS\C3D\37001100\SHEETSPLAN\024502-PM.DWG
LAYOUT NAME - 024502-pm4
PLOT DATE : 11/8/2022 3:18 PM
PLOT BY : MANANDHAR, BHUVAN K
PLOT NAME :
PLOT SCALE : 1 IN:40 FT

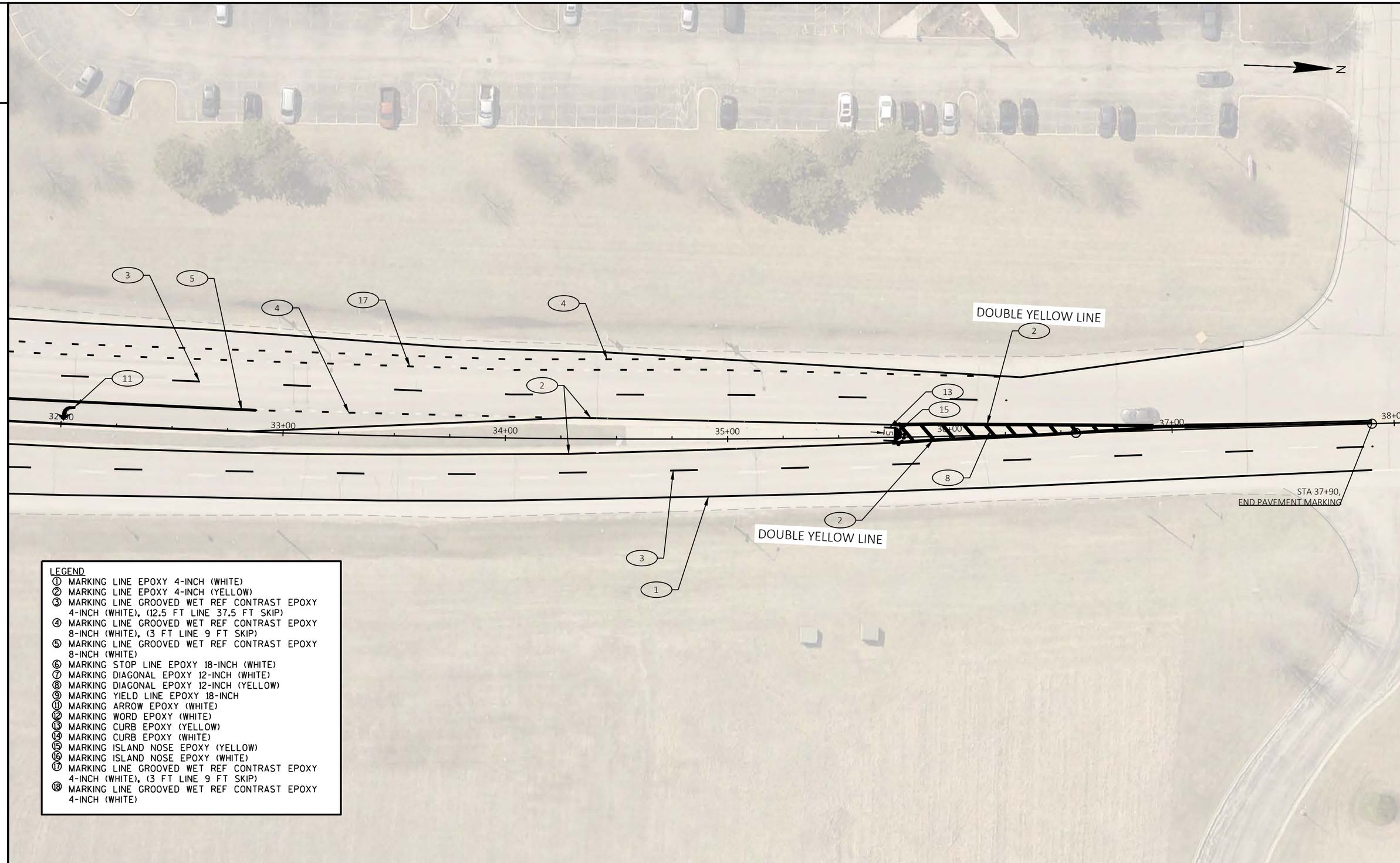

LEGEND

① MARKING LINE EPOXY 4-INCH (WHITE)
② MARKING LINE EPOXY 4-INCH (YELLOW)
③ MARKING LINE GROOVED WET REF CONTRAST EPOXY 4-INCH (WHITE), (12.5 FT LINE 37.5 FT SKIP)
④ MARKING LINE GROOVED WET REF CONTRAST EPOXY 8-INCH (WHITE), (3 FT LINE 9 FT SKIP)
⑤ MARKING LINE GROOVED WET REF CONTRAST EPOXY 8-INCH (WHITE)
⑥ MARKING STOP LINE EPOXY 18-INCH (WHITE)
⑦ MARKING DIAGONAL EPOXY 12-INCH (WHITE)
⑧ MARKING DIAGONAL EPOXY 12-INCH (YELLOW)
⑨ MARKING YIELD LINE EPOXY 18-INCH
⑪ MARKING ARROW EPOXY (WHITE)
⑫ MARKING WORD EPOXY (WHITE)
⑬ MARKING CURB EPOXY (YELLOW)
⑭ MARKING CURB EPOXY (WHITE)
⑮ MARKING ISLAND NOSE EPOXY (YELLOW)
⑯ MARKING ISLAND NOSE EPOXY (WHITE)
⑰ MARKING LINE GROOVED WET REF CONTRAST EPOXY 4-INCH (WHITE), (3 FT LINE 9 FT SKIP)
⑱ MARKING LINE GROOVED WET REF CONTRAST EPOXY 4-INCH (WHITE)

PROJECT NO: 3700-11-70	HWY: VAR. SIGNSLIZED INTERSECTIONS	COUNTY: KENOSHA	PAVEMENT MARKING	SHEET 44	E

2

REINFORCEMENT AND CONCRETE QUANTITIES
ADJUSTED FOR EXTENDED TYPE 10 SPECIAL CONCRETE BASE

HEIGHT INCREASE REQUIRED	*HEIGHT ABOVE GROUND SURFACE ON LOW SIDE (MAX.)	SHAFT LENGTH	LENGTH OF #8 VERTICAL REINF.	NO. OF #5 HOOPS	CU. YD. OF CONCRETE	LBS. OF HOOP BAR STEEL	LBS. OF VERTICAL STEEL
>0" TO 6"	10"	18' - 0"	17' - 7"	25	4.7	241	563
>6" TO 1' - 0"	1' - 4"	18' - 6"	18' - 1"	25	4.8	241	579
>1' - 0" TO 1' - 6"	1' - 10"	19' - 0"	18' - 7"	26	5.0	251	595
>1' - 6" TO 2 - 0"	2' - 4"	19' - 6"	19' - 1"	27	5.1	260	611

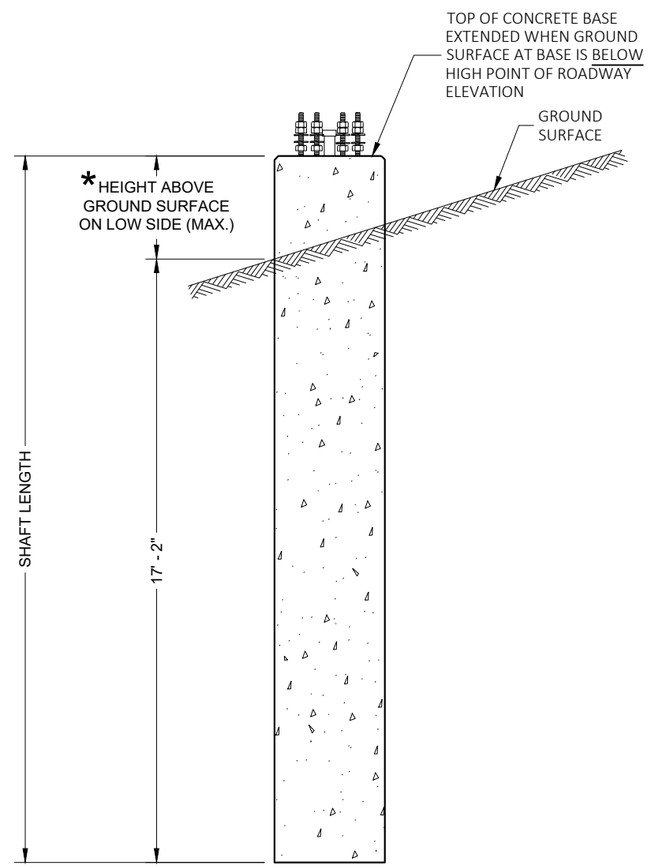

CONCRETE BASE TYPE 10 SPECIAL (EXTENDED)

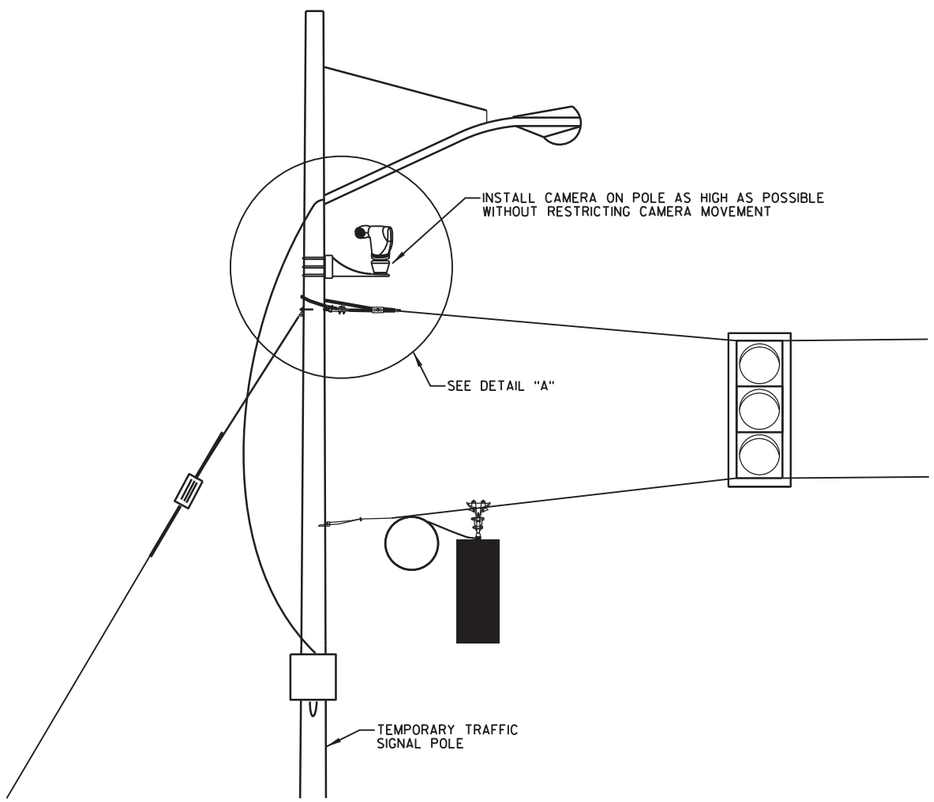

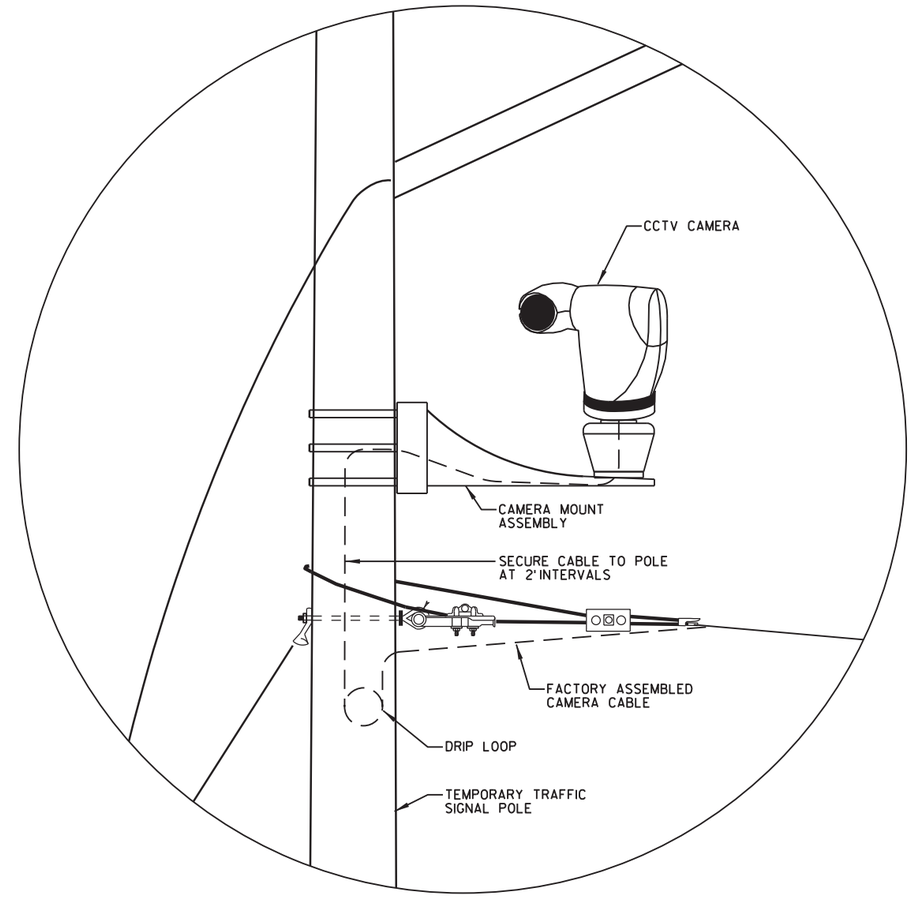

DETAIL "A"

CCTV MOUNTING DETAIL
(TEMPORARY TRAFFIC SIGNAL MOUNT)

NOT TO SCALE

PROJECT NO: 3700-11-70	HWY: STH 165	COUNTY: KENOSHA	TEMPORARY TRAFFIC SIGNAL DETAILS	SHEET 46	E

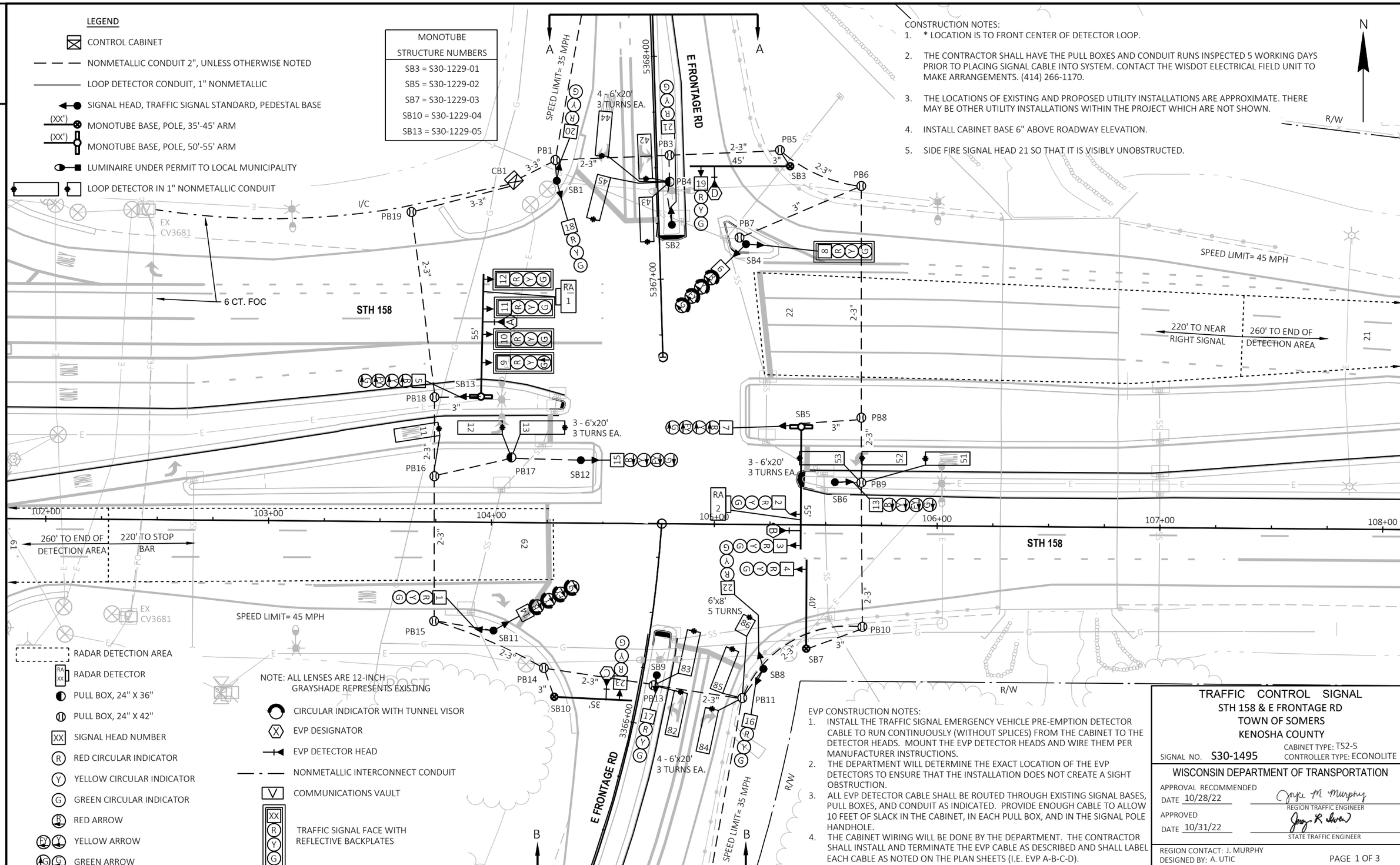

PROJECT NO: 3700-11-70	HWY: STH 158	COUNTY: KENOSHA	TRAFFIC SIGNAL PLAN	SHEET 47	E

FILE NAME : N:\PDS\C3D\CAD\37001100\SIG\S30-1495\S30-1495_20.DWG
LAYOUT NAME - S30-1495_pg1
PLOT DATE : 10/31/2022 2:40 PM PLOT BY : UTIC, ANDY PLOT NAME : PLOT SCALE : 1 IN:40 FT
WISDOT/CADDS SHEET 42

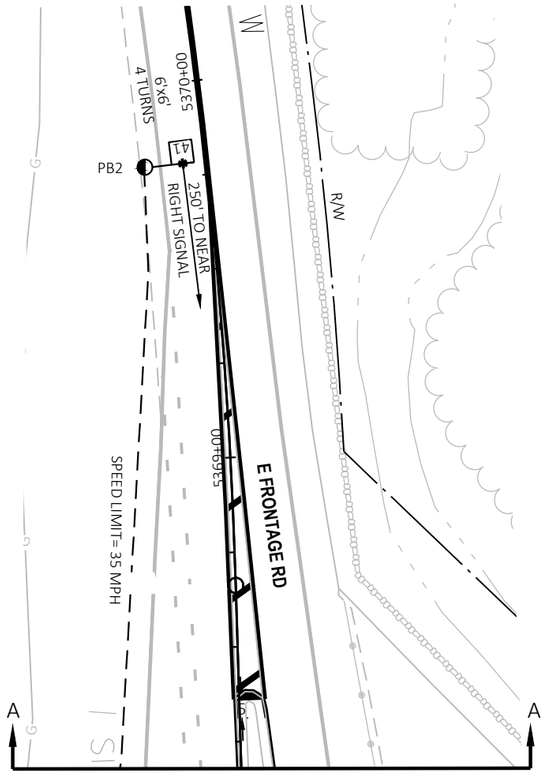

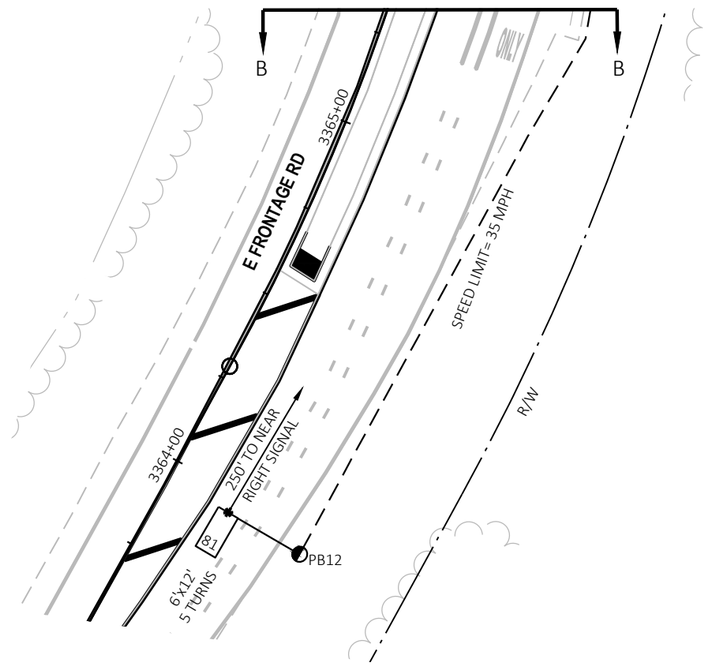

N

TRAFFIC CONTROL SIGNAL
STH 158 & E FRONTAGE RD
TOWN OF SOMERS
KENOSHA COUNTY

SIGNAL NO. S30-1495

REGION CONTACT: J. MURPHY
DESIGNED BY: A. UTIC
REVISED BY:

PAGE 2 OF 3

PROJECT NO: 3700-11-70	HWY: STH 158	COUNTY: KENOSHA	TRAFFIC SIGNAL PLAN	SHEET 48	E

FILE NAME : N:\PDS\C3D\CAD\37001100\SIG\S30-1495\S30-1495_20.DWG
LAYOUT NAME - S30-1495_pg2
PLOT DATE : 10/26/2022 8:11 AM
PLOT BY : UTIC, ANDY
PLOT NAME :
PLOT SCALE : 1 IN:40 FT

	HEAD NUMBERS	FLASH
Ø1	5,6,7	R ←
Ø2	8,9,10,11,12	R
Ø3		
Ø4	20,21,22,23	R
Ø5	13,14,15	R ←
Ø6	1,2,3,4	R
Ø7		
Ø8	16,17,18,19	R
Ø2P		
Ø4P		
Ø6P		
Ø8P		
OLE	5,6,7	-
OLF		
OLG	13,14,15	-
OLH		

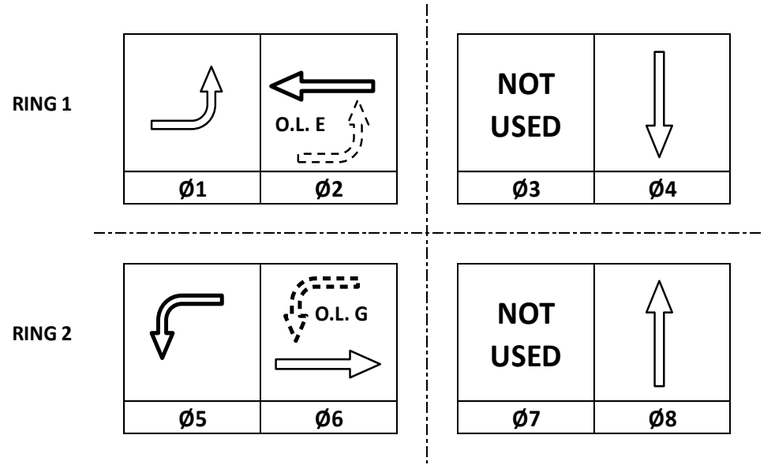

CONTROLLER LOGIC

PHASE NUMBER	PHASE LOCKING	DUAL ENTRY W / Ø	PHASE RECALL	PHASE ACTIVE
1		6		X
2	X	6	MIN	X
3				
4		8		X
5		2		X
6	X	2	MIN	X
7				
8		4		X

EMERGENCY VEHICLE PREEMPTION SEQUENCE

EMERGENCY VEHICLE PREEMPTOR	A	B	C	D
MOVEMENT				
PHASE	2+5	6+1	4+8	8+4

AFTER PREEMPTION SEQUENCE 2+5 OR 6+1, CONTROLLER SHALL RETURN TO PHASES 2+6.
AFTER PREEMPTION SEQUENCE 4+8 OR 8+4, CONTROLLER SHALL RETURN TO PHASES 4+8.

TYPE OF INTERCONNECT/COMMUNICATION	
NONE	
CLOSED LOOP	
TWISTED PAIR	
FIBER OPTIC*	
FIBER OPTIC (ETHERNET)	X
RADIO	
CELL MODEM	

TYPE OF COORDINATION	
NONE	
TBC	X
TRAFFIC RESPONSIVE	
ADAPTIVE	
*LOCATION OF MASTER CONTROLLER NO: S-	
SIGNAL SYSTEM NO: SS-	

TYPE OF LIGHTING	
BY OTHER AGENCY	
IN TRAFFIC CABINET	
IN SEPARATE DOT LIGHTING CABINET	X

TYPE OF PRE-EMPT	
NONE	
RAILROAD	
EMERGENCY VEHICLE	X
GTT	X
TOMAR	
HARDWIRE	
OTHER	
CONFIRMATION LIGHTS	
LIFT BRIDGE	
QUEUE DETECTION	

DETECTOR LOGIC

DETECTOR INPUT	3	1	7	5	11	9	15	13	19	17	23	21	35	33	39	37	DETECTOR INPUT
PLAN LOOP DETECTOR*(S)	11	13	42	44	51	53	81	83	85				21	61			PLAN LOOP DETECTOR*(S)
CALLED PHASE	1	1	4	4	5	5	8	8	8				2	6			CALLED PHASE
CALL OPTION	X	X	X	X	X	X		X	X				X	X			CALL OPTION
DELAY TIME				X					X								DELAY TIME
EXTENTION OPTION	X	X	X	X	X	X	X	X	X				X	X			EXTENTION OPTION
EXTEND TIME							X	X									EXTEND TIME
USE ADDED INITIAL																	USE ADDED INITIAL
CROSS SWITCH PHASE	2	2			6	6											CROSS SWITCH PHASE

DETECTOR INPUT	4	2	8	6	12	10	16	14	20	18	24	22	36	34	40	38	DETECTOR INPUT
PLAN LOOP DETECTOR*(S)	12	41	43	45	52		82	84	86				22	62			PLAN LOOP DETECTOR*(S)
CALLED PHASE	1		4	4	5		8	8	8				2	6			CALLED PHASE
CALL OPTION	X		X	X	X		X	X	X				X	X			CALL OPTION
DELAY TIME				X				X	X								DELAY TIME
EXTENTION OPTION	X	X	X	X	X		X	X	X				X	X			EXTENTION OPTION
EXTEND TIME		X															EXTEND TIME
USE ADDED INITIAL																	USE ADDED INITIAL
CROSS SWITCH PHASE	2				6												CROSS SWITCH PHASE

STH 158 & E FRONTAGE RD
TOWN OF SOMERS
KENOSHA COUNTY

SIGNAL NO: S30-1495	CABINET TYPE: TS2-S
	CONTROLLER TYPE: ECONOLITE
DATE: 11/22	PAGE NUMBER: 3 OF 3

2

PROJECT ID:	3700-11-70
INTERSECTION:	STH 158 & E FRONTAGE RD

Signal Wire Color Coding	BLK - black	RED - red	GRN - green
	WHT - white	BLU - blue	ORG - orange

CB1 TO	AWG14 # OF CONDUCTORS	HEAD NO.	SIGNAL INDICATION WIRE COLOR									PED NEUTRAL	PED INPUT
			RED	YELLOW	GREEN	<RED>	<YELLOW>	<GREEN>	<FLASHING YELLOW>	D/WALK	WALK		
SB1	12	18	RED	ORG	GRN								
		20	RED/BLK	ORG/BLK	GRN/BLK								
SB2	7	21	RED	ORG	GRN								
SB3	7	19	RED	ORG	GRN								
SB4	12	6				RED	ORG	GRN	BLK/WHT				
		8	RED/BLK	ORG/BLK	GRN/BLK								
SB5	12	2	RED	ORG	GRN								
		3	RED	ORG	GRN								
		7				RED/BLK	ORG/BLK	GRN/BLK	BLK/WHT				
SB6	7	13				RED	ORG	GRN	BLK				
SB7	7	4	RED	ORG	GRN								
SB8	12	16	RED	ORG	GRN								
		22	RED/BLK	ORG/BLK	GRN/BLK								
SB9	7	17	RED	ORG	GRN								
SB10	7	23	RED	ORG	GRN								
SB11	12	1	RED	ORG	GRN								
		14				RED/BLK	ORG/BLK	GRN/BLK	BLK/WHT				
SB12	7	15				RED/BLK	ORG/BLK	GRN/BLK	BLK				
SB13	12	5				RED	ORG	GRN	BLK/WHT				
		9	RED/BLK	ORG/BLK				GRN/BLK					
		10	RED/BLK	ORG/BLK	GRN/BLK								
		11	RED/BLK	ORG/BLK	GRN/BLK								
		12	RED/BLK	ORG/BLK	GRN/BLK								

Equipment Grounding Conductor 10 AWG Green XLP	
From	To
CB1	SB1
SB1	SB2
SB2	SB3
SB3	SB4
SB4	SB5
SB5	SB6
SB6	SB7
SB7	SB8
SB8	SB9
SB9	SB10
SB10	SB11
SB11	SB12
SB12	SB13
SB13	CB1

Pull Box Bonding Jumper 10 AWG Green XLP	
From	To
PB1	SB1
PB3	SB2
PB4	SB2
PB5	SB3
PB6	SB3
PB7	SB4
PB8	SB5
PB9	SB6
PB10	SB7
PB11	SB8
PB13	SB9
PB14	SB10
PB15	SB11
PB16	SB13
PB17	SB12
PB18	SB13
PB19	CB1

Emergency Vehicle Preemption	
From	To
CB1	HEAD A (SB13)
CB1	HEAD B (SB7)
CB1	HEAD C (SB10)
CB1	HEAD D (SB3)

Radar Detection Cable	
From	To
CB1	RA1 (SB13)
CB1	RA2 (SB7)

*Use the white conductor in the cable assembly as the grounded conductor for all traffic signal indications
*Ensure the grounded conductor in the feeder cable and the pole cables are both 18" longer than the ungrounded conductors.
*At the signal bases, connect one terminal from the pedestrian push buttons to the color indicated in the chart. Connect the other terminal to the grounded conductor.
*Reconnect the grounding conductors wherever the circuit has been interrupted to ensure the grounding circuit is complete.

2

LEGEND

- CONTROL CABINET
- NONMETALLIC CONDUIT 2", UNLESS OTHERWISE NOTED
- LOOP DETECTOR CONDUIT, 1" NONMETALLIC
- SIGNAL HEAD, TRAFFIC SIGNAL STANDARD, PEDESTAL BASE
- (XX') SIGNAL HEAD, TRAFFIC SIGNAL POLE, TRANSFORMER BASE
- LUMINAIRE, TRAFFIC POLE, TRANSFORMER BASE
- LOOP DETECTOR IN 1" NONMETALLIC CONDUIT
- PULL BOX, 24" X 36"
- PULL BOX, 24" X 48"

CONSTRUCTION NOTES:

1. EXISTING CONDUIT RUNS TO BE ABANDONED IN PLACE. CONTRACTOR TO REMOVE ANY CONDUCTORS REMAINING IN THE CONDUIT.
2. ABANDONED LOOP DETECTOR CONDUIT TO REMAIN IN PLACE. LOOP DETECTOR WIRE AND LEAD-IN CABLE TO BE REMOVED BY THE CONTRACTOR.
3. THE LOCATIONS OF EXISTING UTILITY INSTALLATIONS ARE APPROXIMATE. THERE MAY BE OTHER UTILITY INSTALLATIONS WITHIN THE PROJECT WHICH ARE NOT SHOWN.
4. GRAYSHADE REPRESENTS EXISTING.
   BOLD REPRESENTS ITEMS TO BE REMOVED.
5. CONCRETE BASES SB1, SB2, SB4, SB5, SB7, & SB9 TO REMAIN.

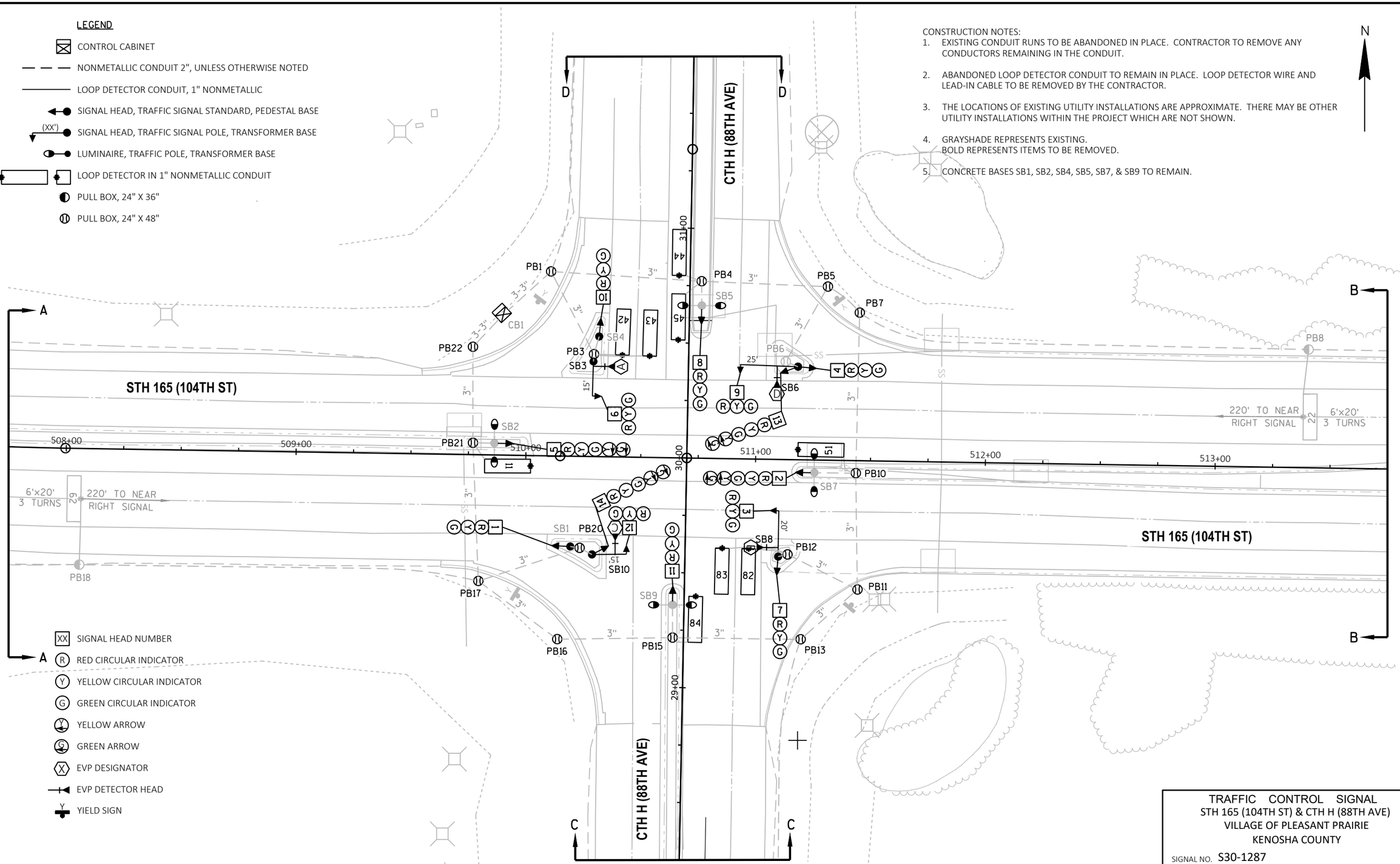

TRAFFIC CONTROL SIGNAL
STH 165 (104TH ST) & CTH H (88TH AVE)
VILLAGE OF PLEASANT PRAIRIE
KENOSHA COUNTY

SIGNAL NO. S30-1287

REGION CONTACT: J. MURPHY
DESIGNED BY: A. UTIC
REVISED BY:

PAGE 1 OF 2

PROJECT NO: 3700-11-70	HWY: STH 165	COUNTY: KENOSHA	TRAFFIC SIGNAL REMOVAL PLAN	SHEET 51	E

FILE NAME : N:\PDS\C3D\CAD\37001100\SIG\S30-1287\S30-1287_REM.DWG
LAYOUT NAME - Plan 1 IN 40 FT
PLOT DATE : 10/26/2022 11:42 AM PLOT BY : UTIC, ANDY PLOT NAME : PLOT SCALE : 1 IN:40 FT

WISDOT/CADDS SHEET 42

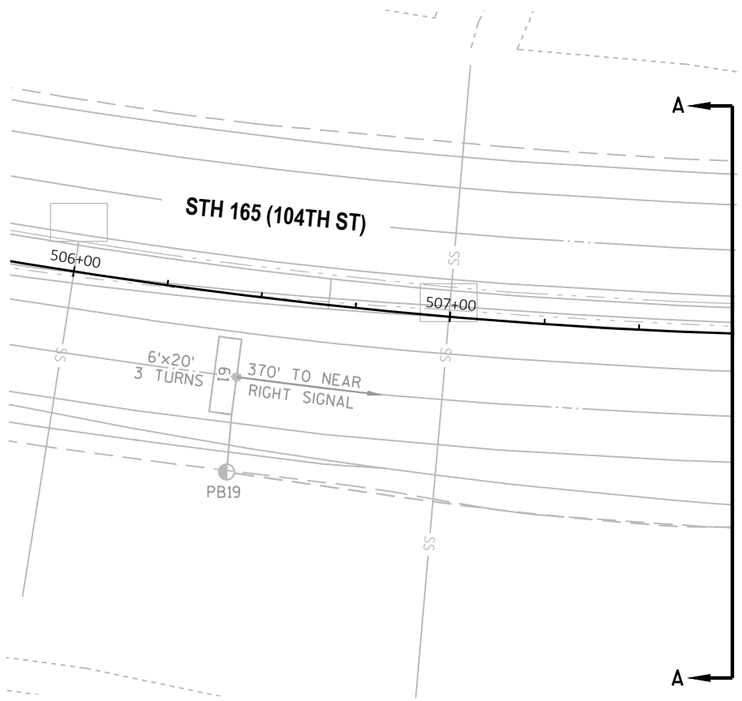

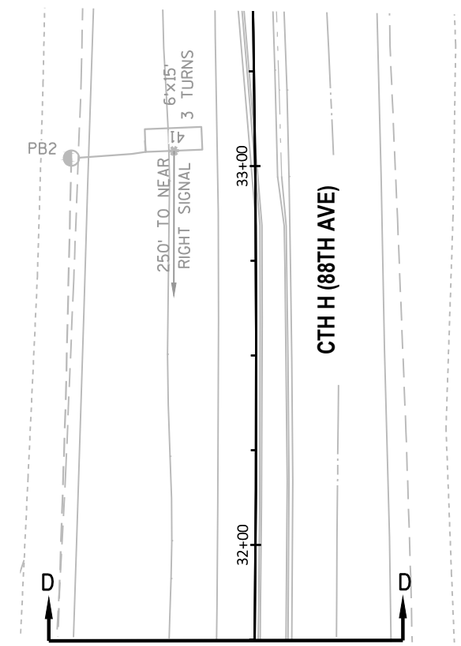

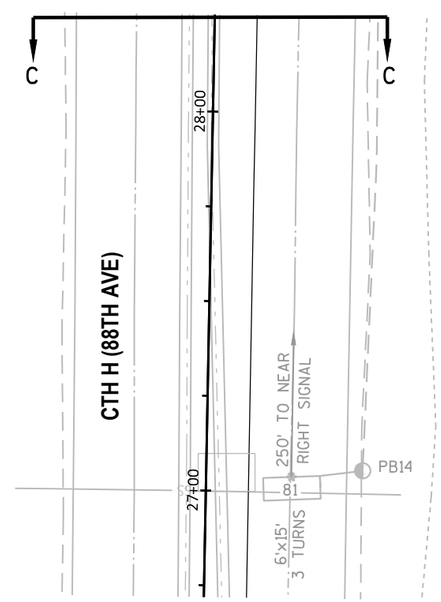

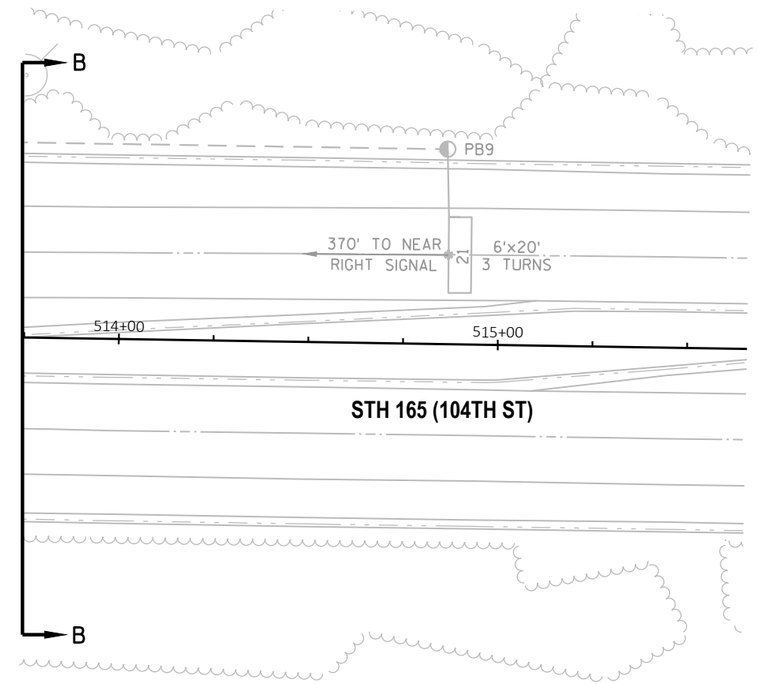

N

TRAFFIC CONTROL SIGNAL
STH 165 (104TH ST) & CTH H (88TH AVE)
VILLAGE OF PLEASANT PRAIRIE
KENOSHA COUNTY

SIGNAL NO. S30-1287

REGION CONTACT: J. MURPHY
DESIGNED BY: A. UTIC
REVISED BY:

PAGE 2 OF 2

PROJECT NO: 3700-11-70	HWY: STH 165	COUNTY: KENOSHA	TRAFFIC SIGNAL REMOVAL PLAN	SHEET 52	E

2

LEGEND

- WOOD POLE CLASS 4
- SPAN WIRE
- TEMPORARY LUMINAIRE, 250W OR LED-C
- TEMPORARY SIGNAL HEAD
- XX SIGNAL HEAD NUMBER
- R RED CIRCULAR INDICATOR
- Y YELLOW CIRCULAR INDICATOR
- G GREEN CIRCULAR INDICATOR
- R RED ARROW
- EY Y YELLOW ARROW
- G GREEN ARROW
- X EVP DESIGNATOR
- EVP DETECTOR HEAD

NOTE: ALL LENSES ARE 12-INCH
GRAYSHADE REPRESENTS EXISTING

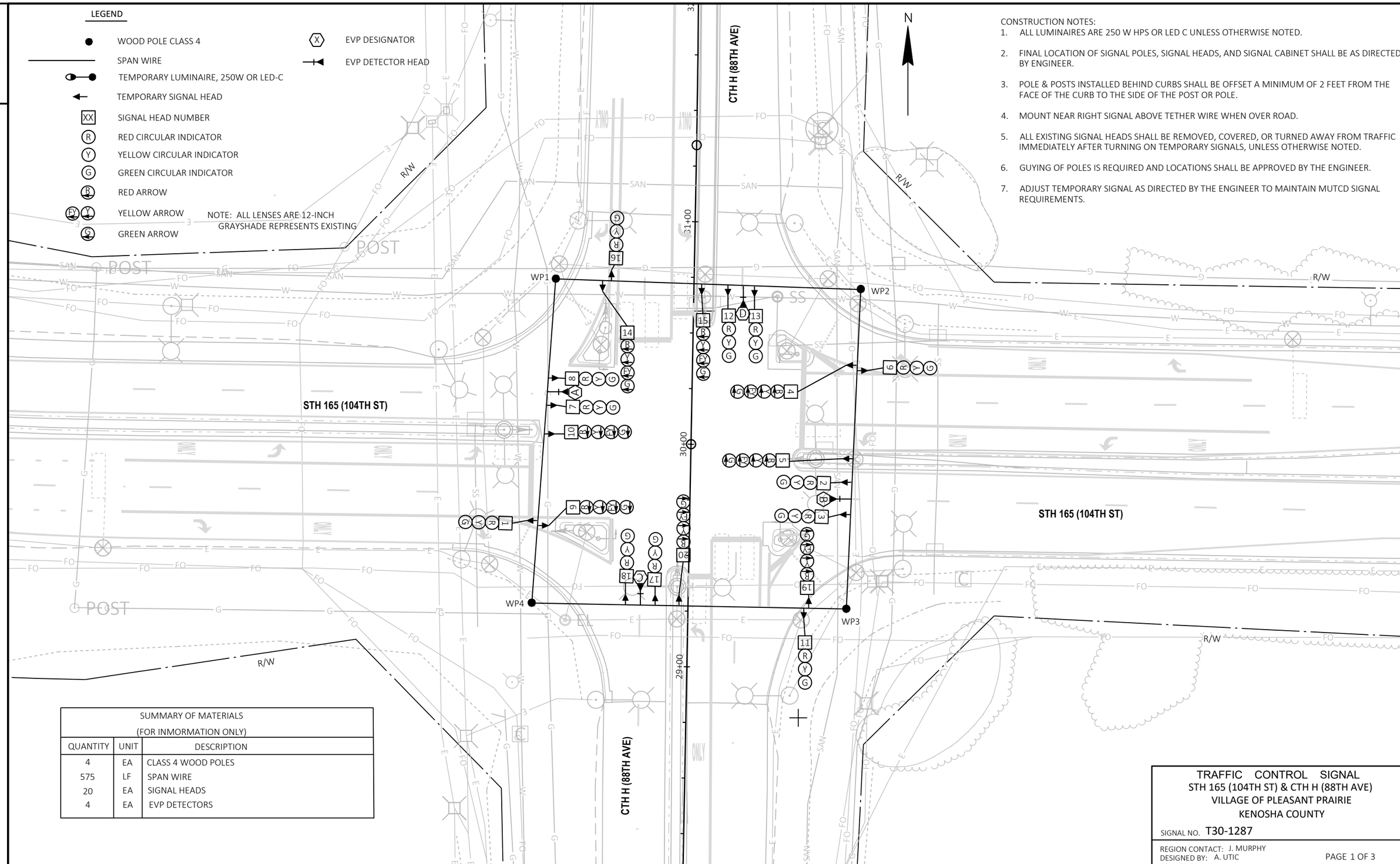

CONSTRUCTION NOTES:

1. ALL LUMINAIRES ARE 250 W HPS OR LED C UNLESS OTHERWISE NOTED.
2. FINAL LOCATION OF SIGNAL POLES, SIGNAL HEADS, AND SIGNAL CABINET SHALL BE AS DIRECTED BY ENGINEER.
3. POLE & POSTS INSTALLED BEHIND CURBS SHALL BE OFFSET A MINIMUM OF 2 FEET FROM THE FACE OF THE CURB TO THE SIDE OF THE POST OR POLE.
4. MOUNT NEAR RIGHT SIGNAL ABOVE TETHER WIRE WHEN OVER ROAD.
5. ALL EXISTING SIGNAL HEADS SHALL BE REMOVED, COVERED, OR TURNED AWAY FROM TRAFFIC IMMEDIATELY AFTER TURNING ON TEMPORARY SIGNALS, UNLESS OTHERWISE NOTED.
6. GUYING OF POLES IS REQUIRED AND LOCATIONS SHALL BE APPROVED BY THE ENGINEER.
7. ADJUST TEMPORARY SIGNAL AS DIRECTED BY THE ENGINEER TO MAINTAIN MUTCD SIGNAL REQUIREMENTS.

SUMMARY OF MATERIALS
(FOR INMORMATION ONLY)

QUANTITY	UNIT	DESCRIPTION
4	EA	CLASS 4 WOOD POLES
575	LF	SPAN WIRE
20	EA	SIGNAL HEADS
4	EA	EVP DETECTORS

TRAFFIC CONTROL SIGNAL
STH 165 (104TH ST) & CTH H (88TH AVE)
VILLAGE OF PLEASANT PRAIRIE
KENOSHA COUNTY

SIGNAL NO. T30-1287

REGION CONTACT: J. MURPHY
DESIGNED BY: A. UTIC
REVISED BY:

PAGE 1 OF 3

PROJECT NO: 3700-11-70	HWY: STH 165	COUNTY: KENOSHA	TEMPORARY TRAFFIC SIGNAL PLAN - PRE-CONSTRUCTION	SHEET 53	E

2

LEGEND

- WOOD POLE CLASS 4
- SPAN WIRE
- TEMPORARY LUMINAIRE, 250W OR LED-C
- TEMPORARY SIGNAL HEAD
- XX SIGNAL HEAD NUMBER
- R RED CIRCULAR INDICATOR
- Y YELLOW CIRCULAR INDICATOR
- G GREEN CIRCULAR INDICATOR
- R RED ARROW
- EY Y YELLOW ARROW
- G GREEN ARROW
- X EVP DESIGNATOR
- EVP DETECTOR HEAD
- DIRECTION OF TRAFFIC
- WORK AREA
- TRAFFIC SIGNAL HEAD TO BE COVERED AND DE-ENERGIZED

NOTE: ALL LENSES ARE 12-INCH
GRAYSHADE REPRESENTS EXISTING

CONSTRUCTION NOTES:

1. ALL LUMINAIRES ARE 250 W HPS OR LED C UNLESS OTHERWISE NOTED.
2. FINAL LOCATION OF SIGNAL POLES, SIGNAL HEADS, AND SIGNAL CABINET SHALL BE AS DIRECTED BY ENGINEER.
3. POLE & POSTS INSTALLED BEHIND CURBS SHALL BE OFFSET A MINIMUM OF 2 FEET FROM THE FACE OF THE CURB TO THE SIDE OF THE POST OR POLE.
4. MOUNT NEAR RIGHT SIGNAL ABOVE TETHER WIRE WHEN OVER ROAD.
5. ALL EXISTING SIGNAL HEADS SHALL BE REMOVED, COVERED, OR TURNED AWAY FROM TRAFFIC IMMEDIATELY AFTER TURNING ON TEMPORARY SIGNALS, UNLESS OTHERWISE NOTED.
6. GUYING OF POLES IS REQUIRED AND LOCATIONS SHALL BE APPROVED BY THE ENGINEER.
7. ADJUST TEMPORARY SIGNAL AS DIRECTED BY THE ENGINEER TO MAINTAIN MUTCD SIGNAL REQUIREMENTS.

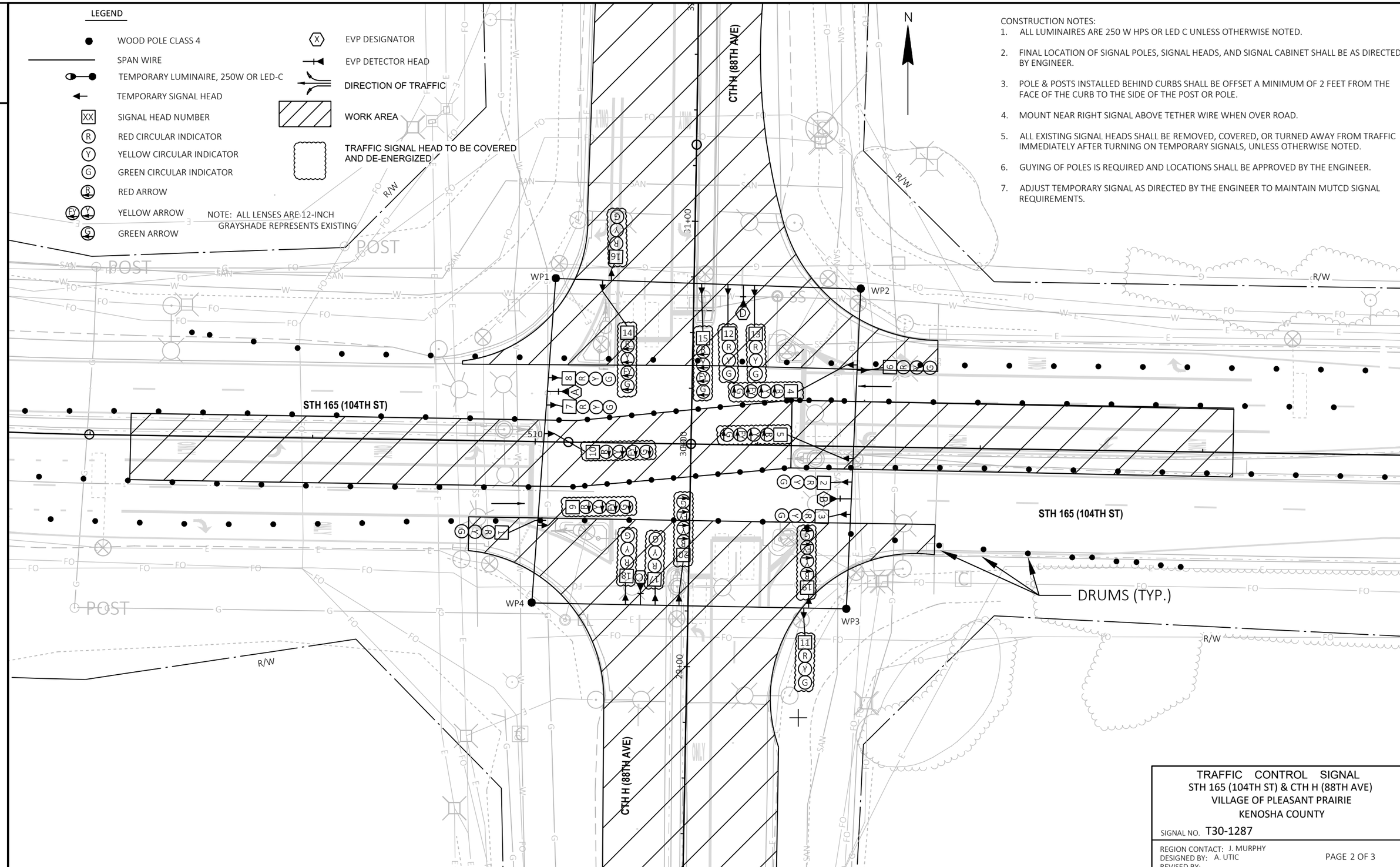

TRAFFIC CONTROL SIGNAL
STH 165 (104TH ST) & CTH H (88TH AVE)
VILLAGE OF PLEASANT PRAIRIE
KENOSHA COUNTY

SIGNAL NO. T30-1287

REGION CONTACT: J. MURPHY
DESIGNED BY: A. UTIC
REVISED BY:

PAGE 2 OF 3

PROJECT NO: 3700-11-70	HWY: STH 165	COUNTY: KENOSHA	TEMPORARY TRAFFIC SIGNAL PLAN - TRAFFIC CONTROL	SHEET 54	E

FILE NAME : N:\PDS\C3D\CAD\37001100\SIG\S30-1287\S30-1287_ST-PH1.DWG
LAYOUT NAME - Plan 1 IN 40 FT
PLOT DATE : 10/31/2022 3:10 PM PLOT BY : UTIC, ANDY PLOT NAME : PLOT SCALE : 1 IN:40 FT

WISDOT/CADDS SHEET 42

	HEAD NUMBERS	FLASH
Ø1	4,5	R
Ø2	6,7,8	R
Ø3	14,15	R
Ø4	16,17,18	R
Ø5	9,10	R
Ø6	1,2,3	R
Ø7	19,20	R
Ø8	11,12,13	R
Ø2P		
Ø4P		
Ø6P		
Ø8P		
OLA	4,5	-
OLB	14,15	-
OLC	9,10	-
OLD	19,20	-

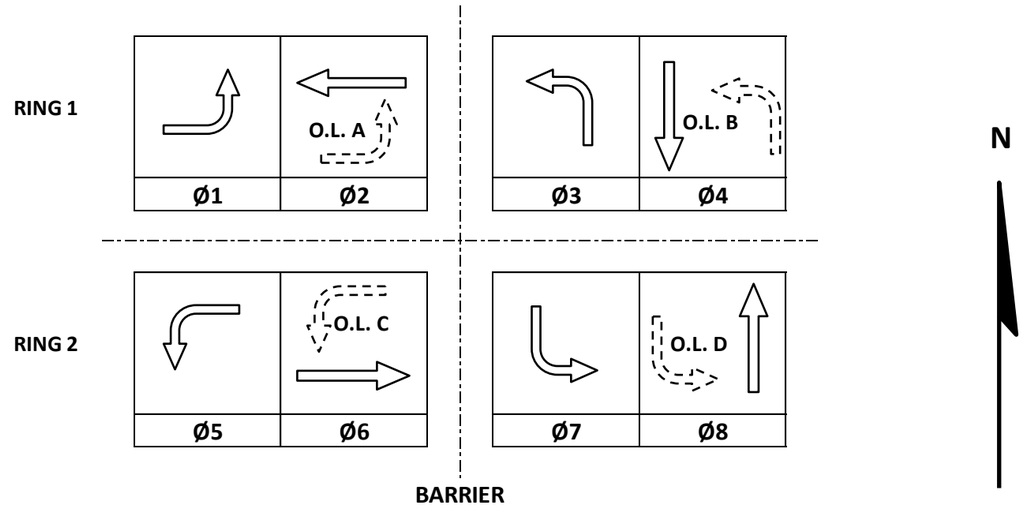

CONTROLLER LOGIC

PHASE NUMBER	PHASE LOCKING	DUAL ENTRY W / Ø	PHASE RECALL	PHASE ACTIVE
1	X	6	MAX	X
2	X	6	MAX	X
3	X	8	MAX	X
4	X	8	MAX	X
5	X	2	MAX	X
6	X	2	MAX	X
7	X	4	MAX	X
8	X	4	MAX	X

TYPE OF INTERCONNECT/COMMUNICATION	
NONE	
CLOSED LOOP	
TWISTED PAIR	
FIBER OPTIC*	
FIBER OPTIC (ETHERNET)	
RADIO	
CELL MODEM	X

TYPE OF COORDINATION	
NONE	X
TBC	
TRAFFIC RESPONSIVE	
ADAPTIVE	
*LOCATION OF MASTER CONTROLLER NO:	S-
SIGNAL SYSTEM NO:	SS-

TYPE OF LIGHTING	
BY OTHER AGENCY	
IN TRAFFIC CABINET	
IN SEPARATE DOT LIGHTING CABINET	X

TYPE OF PRE-EMPT	
NONE	
RAILROAD	
EMERGENCY VEHICLE	X
GTT	
TOMAR	
HARDWIRE	
OTHER	
CONFIRMATION LIGHTS	
LIFT BRIDGE	
QUEUE DETECTION	

EMERGENCY VEHICLE PREEMPTION SEQUENCE

EMERGENCY VEHICLE PREEMPTOR	A	B	C	D
MOVEMENT				
PHASE	2+5	6+1	4+7	8+3

AFTER PREEMPTION SEQUENCE 2+5 OR 6+1, CONTROLLER SHALL RETURN TO PHASES 2+6.
AFTER PREEMPTION SEQUENCE 4+7 OR 8+3, CONTROLLER SHALL RETURN TO PHASES 4+8.

GENERAL NOTES:

1. OMIT ANY PHASES DURING STAGES WHERE VEHICULAR MOVEMENTS ARE RESTRICTED.

STH 165 (104TH ST) & CTH H (88TH AVE)
VILLAGE OF PLEASANT PRAIRIE
KENOSHA COUNTY

SIGNAL NO:	T30-1287	CABINET TYPE:	TEMP
		CONTROLLER TYPE:	TEMP
DATE:	11/22	PAGE NUMBER:	3 OF 3

PROJECT NO: 3700-11-70	HWY: STH 165	COUNTY: KENOSHA	TEMPORARY SEQUENCE OF OPERATIONS – ALL STAGES	SHEET NO:	E

FILE NAME: \\wkertovfilpi01\N3PUBLIC\PDS\C3D\CAD\37001100\SIG\S30-1287\TS1.xlsx PLOT DATE: ######## PLOT NAME: TS1.xlsx PLOT BY: _____ PLOT SCALE: 1:1

2

LEGEND

- CONTROL CABINET
- NONMETALLIC CONDUIT 2", UNLESS OTHERWISE NOTED
- LOOP DETECTOR CONDUIT, 1" NONMETALLIC
- SIGNAL HEAD, TRAFFIC SIGNAL STANDARD, PEDESTAL BASE
- (XX') MONOTUBE BASE, POLE, 35'-45' ARM
- (XX') MONOTUBE BASE, OVERHEIGHT POLE, 35'-55' ARM
- LUMINAIRE, TRAFFIC POLE, TRANSFORMER BASE
- LUMINAIRE UNDER PERMIT TO LOCAL MUNICIPALITY
- LOOP DETECTOR IN 1" NONMETALLIC CONDUIT
- PULL BOX, 24" X 36"

CONSTRUCTION NOTES:

1. * LOCATION IS TO FRONT CENTER OF DETECTOR LOOP.
2. THE CONTRACTOR SHALL HAVE THE PULL BOXES AND CONDUIT RUNS INSPECTED 5 WORKING DAYS PRIOR TO PLACING SIGNAL CABLE INTO SYSTEM. CONTACT THE WISDOT ELECTRICAL FIELD UNIT TO MAKE ARRANGEMENTS. (414) 266-1170.
3. THE LOCATIONS OF EXISTING AND PROPOSED UTILITY INSTALLATIONS ARE APPROXIMATE. THERE MAY BE OTHER UTILITY INSTALLATIONS WITHIN THE PROJECT WHICH ARE NOT SHOWN.
4. CONCRETE BASES SB1, SB2, SB4, SB5, SB7, & SB9 TO REMAIN.
5. ALL LUMINAIRES ARE LED-C UNLESS OTHERWISE NOTED.
6. PUSH BUTTONS PLACE A CALL INTO THE CONTROLLER FOR PHASE 4 AND PHASE 8 FOR BICYCLE USE. SEE SPECIAL PROVISIONS.

EVP CONSTRUCTION NOTES:

1. INSTALL THE TRAFFIC SIGNAL EMERGENCY VEHICLE PRE-EMPTION DETECTOR CABLE TO RUN CONTINUOUSLY (WITHOUT SPLICES) FROM THE CABINET TO THE DETECTOR HEADS. MOUNT THE EVP DETECTOR HEADS AND WIRE THEM PER MANUFACTURER INSTRUCTIONS.
2. THE DEPARTMENT WILL DETERMINE THE EXACT LOCATION OF THE EVP DETECTORS TO ENSURE THAT THE INSTALLATION DOES NOT CREATE A SIGHT OBSTRUCTION.
3. ALL EVP DETECTOR CABLE SHALL BE ROUTED THROUGH EXISTING SIGNAL BASES, PULL BOXES, AND CONDUIT AS INDICATED. PROVIDE ENOUGH CABLE TO ALLOW 10 FEET OF SLACK IN THE CABINET, IN EACH PULL BOX, AND IN THE SIGNAL POLE HANDHOLE.
4. THE CABINET WIRING WILL BE DONE BY THE DEPARTMENT. THE CONTRACTOR SHALL INSTALL AND TERMINATE THE EVP CABLE AS DESCRIBED AND SHALL LABEL EACH CABLE AS NOTED ON THE PLAN SHEETS (I.E. EVP A-B-C-D).

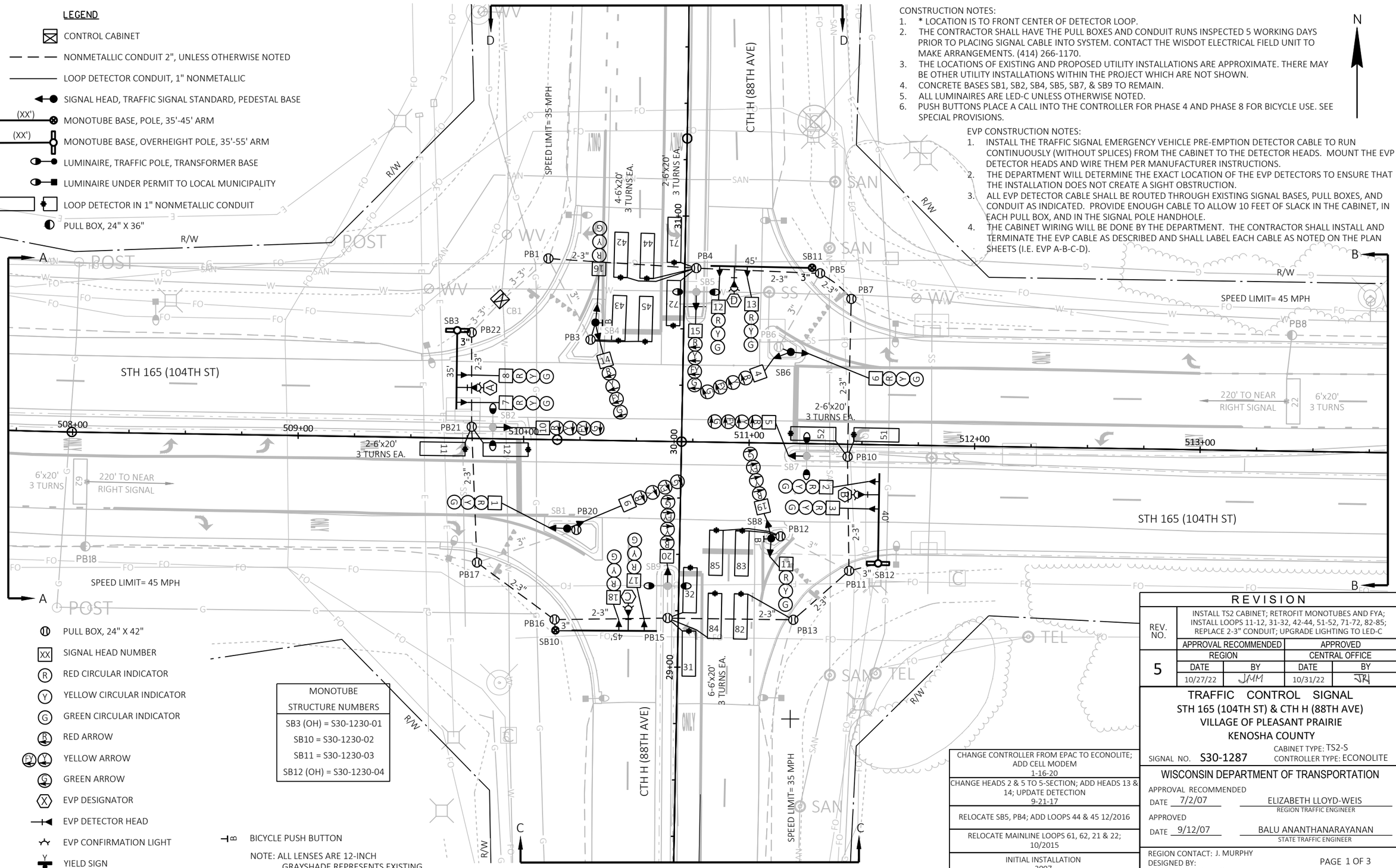

- PULL BOX, 24" X 42"
- XX SIGNAL HEAD NUMBER
- R RED CIRCULAR INDICATOR
- Y YELLOW CIRCULAR INDICATOR
- G GREEN CIRCULAR INDICATOR
- R RED ARROW
- EVY YELLOW ARROW
- G GREEN ARROW
- X EVP DESIGNATOR
- EVP DETECTOR HEAD
- EVP CONFIRMATION LIGHT
- Y YIELD SIGN
- B BICYCLE PUSH BUTTON

NOTE: ALL LENSES ARE 12-INCH
GRAYSHADE REPRESENTS EXISTING

MONOTUBE STRUCTURE NUMBERS
SB3 (OH) = S30-1230-01
SB10 = S30-1230-02
SB11 = S30-1230-03
SB12 (OH) = S30-1230-04

CHANGE CONTROLLER FROM EPAC TO ECONOLITE; ADD CELL MODEM 1-16-20
CHANGE HEADS 2 & 5 TO 5-SECTION; ADD HEADS 13 & 14; UPDATE DETECTION 9-21-17
RELOCATE SB5, PB4; ADD LOOPS 44 & 45 12/2016
RELOCATE MAINLINE LOOPS 61, 62, 21 & 22; 10/2015
INITIAL INSTALLATION 2007

REVISION

REV. NO.				
5	INSTALL TS2 CABINET; RETROFIT MONOTUBES AND FYA; INSTALL LOOPS 11-12, 31-32, 42-44, 51-52, 71-72, 82-85; REPLACE 2-3" CONDUIT; UPGRADE LIGHTING TO LED-C			
	APPROVAL RECOMMENDED		APPROVED	
	REGION		CENTRAL OFFICE	
	DATE	BY	DATE	BY
	10/27/22	JMM	10/31/22	JRJ

10-28-22 JNG

TRAFFIC CONTROL SIGNAL
STH 165 (104TH ST) & CTH H (88TH AVE)
VILLAGE OF PLEASANT PRAIRIE
KENOSHA COUNTY

SIGNAL NO. S30-1287 CABINET TYPE: TS2-S CONTROLLER TYPE: ECONOLITE

WISCONSIN DEPARTMENT OF TRANSPORTATION

APPROVAL RECOMMENDED
DATE 7/2/07 ELIZABETH LLOYD-WEIS, REGION TRAFFIC ENGINEER

APPROVED
DATE 9/12/07 BALU ANANTHANARAYANAN, STATE TRAFFIC ENGINEER

REGION CONTACT: J. MURPHY
DESIGNED BY:
REVISED BY: A. UTIC

PAGE 1 OF 3

PROJECT NO: 3700-11-70	HWY: STH 165	COUNTY: KENOSHA	TRAFFIC SIGNAL PLAN	SHEET 56	E

FILE NAME : N:\PDS\C3D\CAD\37001100\SIG\S30-1287\S30-1287_R5.DWG
LAYOUT NAME - S30-1287_R5_pg1
PLOT DATE : 10/31/2022 2:47 PM PLOT BY : UTIC, ANDY PLOT NAME : PLOT SCALE : 1 IN:40 FT
WISDOT/CADDS SHEET 42

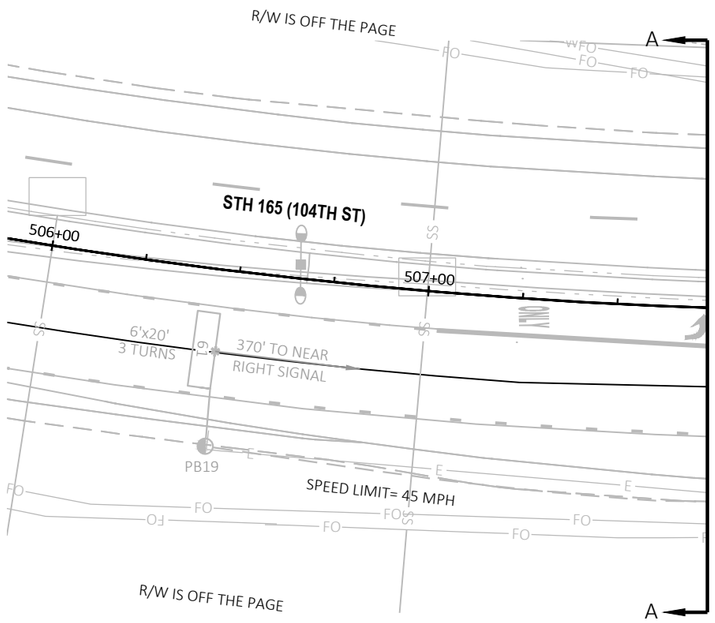

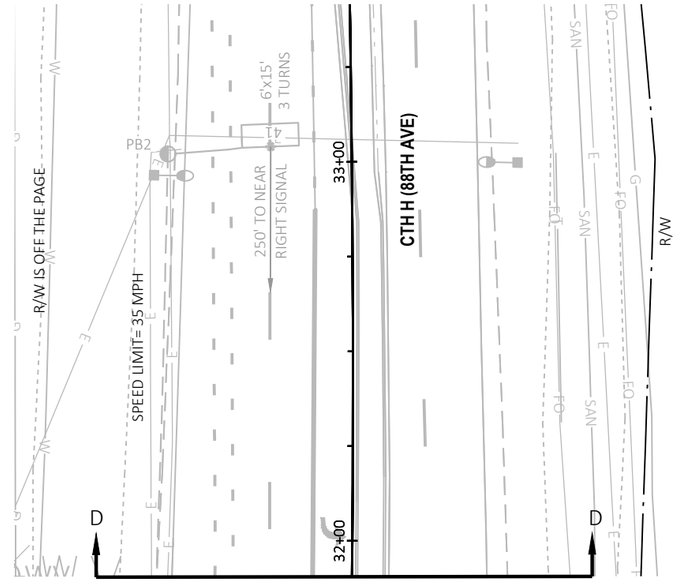

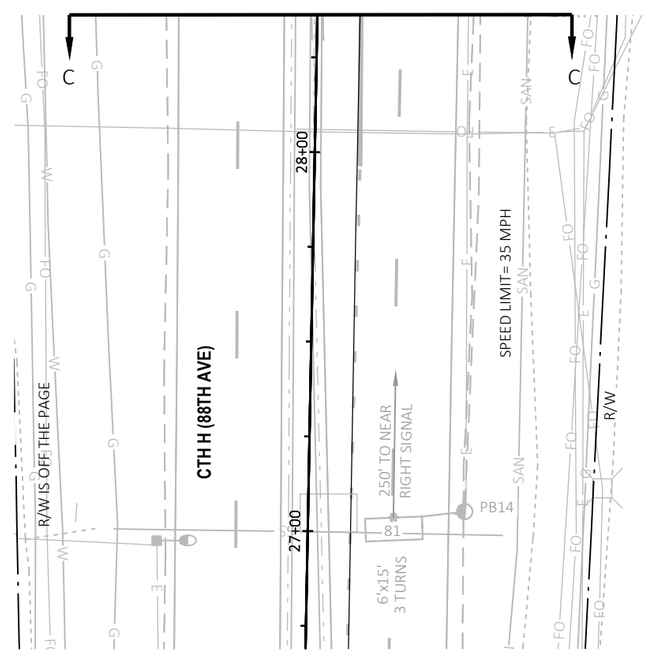

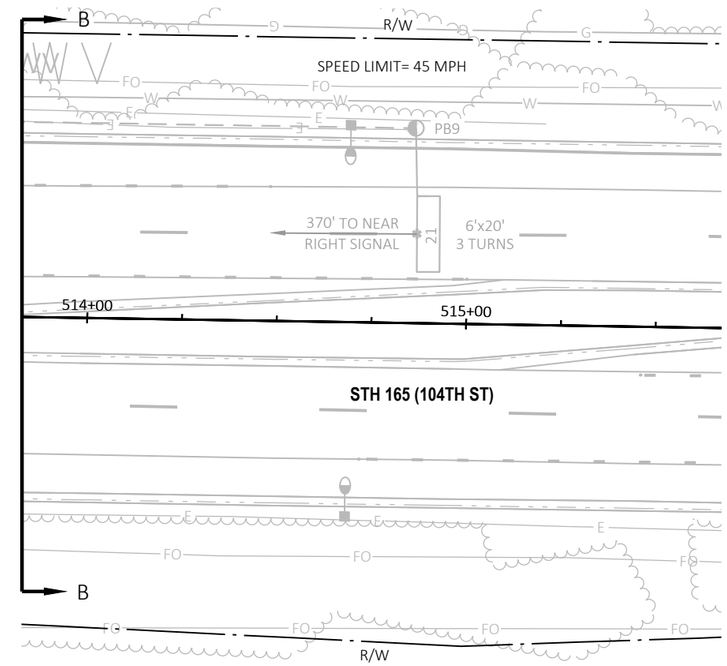

TRAFFIC CONTROL SIGNAL
STH 165 (104TH ST) & CTH H (88TH AVE)
VILLAGE OF PLEASANT PRAIRIE
KENOSHA COUNTY

SIGNAL NO. S30-1287

REGION CONTACT: J. MURPHY
DESIGNED BY:
REVISED BY: A. UTIC

PAGE 2 OF 3

	HEAD NUMBERS	FLASH
Ø1	4,5	R ←
Ø2	6,7,8	R
Ø3	14,15	R ←
Ø4	16,17,18	R
Ø5	9,10	R ←
Ø6	1,2,3	R
Ø7	19,20	R ←
Ø8	11,12,13	R
Ø2P		
Ø4P		
Ø6P		
Ø8P		
OLE	4,5	-
OLF	14,15	-
OLG	9,10	-
OLH	19,20	-

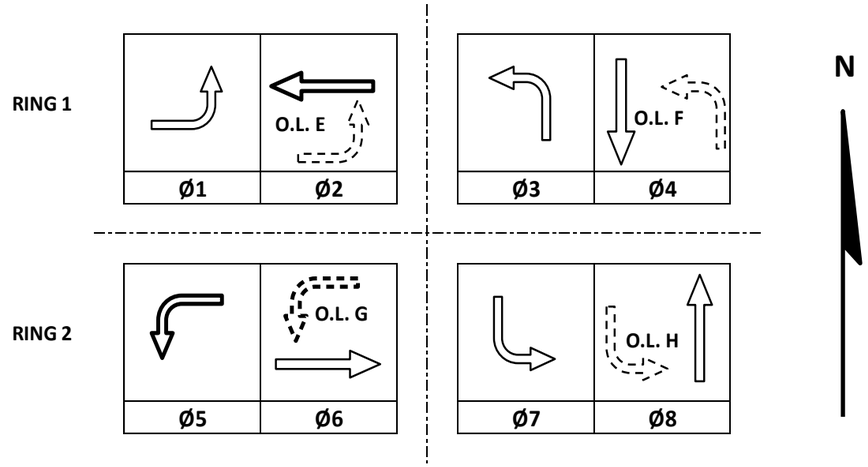

CONTROLLER LOGIC

PHASE NUMBER	PHASE LOCKING	DUAL ENTRY W / Ø	PHASE RECALL	PHASE ACTIVE
1		6		X
2	X	6	MIN	X
3		8		X
4		8		X
5		2		X
6	X	2	MIN	X
7		4		X
8		4		X

EMERGENCY VEHICLE PREEMPTION SEQUENCE

EMERGENCY VEHICLE PREEMPTOR	A	B	C	D
MOVEMENT				
PHASE	2+5	6+1	4+7	8+3

AFTER PREEMPTION SEQUENCE 2+5 OR 6+1, CONTROLLER SHALL RETURN TO PHASES 2+6.
AFTER PREEMPTION SEQUENCE 4+7 OR 8+3, CONTROLLER SHALL RETURN TO PHASES 4+8.

TYPE OF INTERCONNECT/COMMUNICATION	
NONE	
CLOSED LOOP	
TWISTED PAIR	
FIBER OPTIC*	
FIBER OPTIC (ETHERNET)	
RADIO	
CELL MODEM	X

TYPE OF COORDINATION	
NONE	X
TBC	
TRAFFIC RESPONSIVE	
ADAPTIVE	
*LOCATION OF MASTER CONTROLLER NO: S-	
SIGNAL SYSTEM NO: SS-	

TYPE OF LIGHTING	
BY OTHER AGENCY	X
IN TRAFFIC CABINET	X
IN SEPARATE DOT LIGHTING CABINET	

TYPE OF PRE-EMPT	
NONE	
RAILROAD	
EMERGENCY VEHICLE	X
GTT	
TOMAR	X
HARDWIRE	
OTHER	
CONFIRMATION LIGHTS	X
LIFT BRIDGE	
QUEUE DETECTION	

DETECTOR LOGIC

DETECTOR INPUT	3	1	7	5	11	9	15	13	19	17	23	21	27	25	31	29	DETECTOR INPUT
PLAN LOOP DETECTOR*(S)	11	21	31	41	43	45	52	62	71	81	83	85					PLAN LOOP DETECTOR*(S)
CALLED PHASE	1	2	3	4	4	4	5	6	7	8	8	8					CALLED PHASE
CALL OPTION	X	X	X		X	X	X	X	X		X	X					CALL OPTION
DELAY TIME																	DELAY TIME
EXTENTION OPTION	X	X	X	X	X	X	X	X	X	X	X	X					EXTENTION OPTION
EXTEND TIME				X						X							EXTEND TIME
USE ADDED INITIAL		X						X									USE ADDED INITIAL
CROSS SWITCH PHASE	2		4				6		8								CROSS SWITCH PHASE

DETECTOR INPUT	4	2	8	6	12	10	16	14	20	18	24	22	28	26	32	30	DETECTOR INPUT
PLAN LOOP DETECTOR*(S)	12	22	32	42	44	51	61		72	82	84						PLAN LOOP DETECTOR*(S)
CALLED PHASE	1	2	3	4	4	5	6		7	8	8						CALLED PHASE
CALL OPTION	X	X	X	X	X	X	X		X	X	X						CALL OPTION
DELAY TIME																	DELAY TIME
EXTENTION OPTION	X	X	X	X	X	X	X		X	X	X						EXTENTION OPTION
EXTEND TIME																	EXTEND TIME
USE ADDED INITIAL		X					X										USE ADDED INITIAL
CROSS SWITCH PHASE	2		4			6			8								CROSS SWITCH PHASE

STH 165 (104TH ST) & CTH H (88TH AVE)
VILLAGE OF PLEASANT PRAIRIE
KENOSHA COUNTY

SIGNAL NO: S30-1287		CABINET TYPE: TS2-S
		CONTROLLER TYPE: ECONOLITE
DATE: 11/22		PAGE NUMBER: 3 OF 3

2

PROJECT ID:	3700-11-70
INTERSECTION:	STH 165 (104TH ST) & CTH H (88TH AVE)

Signal Wire Color Coding	BLK - black	RED - red	GRN - green
	WHT - white	BLU - blue	ORG - orange

CB1 TO	AWG14 # OF CONDUCTORS	HEAD NO.	SIGNAL INDICATION WIRE COLOR									PED NEUTRAL	PED INPUT
			RED	YELLOW	GREEN	<RED>	<YELLOW>	<GREEN>	<FLASHING YELLOW>	D/WALK	WALK		
SB1	12	1	RED	ORG	GRN								
		9				RED/BLK	ORG/BLK	GRN/BLK	BLK/WHT				
SB2	7	10				RED	ORG	GRN	BLK				
SB3	7	7	RED	ORG	GRN								
		8	RED	ORG	GRN								
SB4	12	14				RED	ORG	GRN	BLK/WHT				
		16	RED/BLK	ORG/BLK	GRN/BLK								
		BUTTON										WHT/BLK	BLU/BLK
SB5	7	15				RED	ORG	GRN	BLK				
SB6	12	4				RED	ORG	GRN	BLK/WHT				
		6	RED/BLK	ORG/BLK	GRN/BLK								
SB7	7	5				RED	ORG	GRN	BLK				
SB8	12	11	RED	ORG	GRN								
		19				RED/BLK	ORG/BLK	GRN/BLK	BLK/WHT				
		BUTTON										WHT/BLK	BLU/BLK
SB9	7	20				RED	ORG	GRN	BLK				
SB10	7	17	RED	ORG	GRN								
		18	RED	ORG	GRN								
SB11	7	12	RED	ORG	GRN								
		13	RED	ORG	GRN								
SB12	7	2	RED	ORG	GRN								
		3	RED	ORG	GRN								

Equipment Grounding Conductor 10 AWG Green XLP	
From	To
CB1	SB4
SB4	SB5
SB5	SB11
SB11	SB6
SB6	SB7
SB7	SB12
SB12	SB8
SB8	SB9
SB9	SB10
SB10	SB1
SB1	SB2
SB2	SB3
SB3	CB1

Pull Box Bonding Jumper 10 AWG Green XLP	
From	To
PB1	CB1
PB3	SB4
PB4	SB5
PB5	SB11
PB6	SB6
PB7	SB11
PB10	SB7
PB11	SB12
PB12	SB8
PB13	SB12
PB15	SB9
PB16	SB10
PB17	SB10
PB20	SB1
PB21	SB2
PB22	SB3

Lighting UF 2-10 AWG Grounded	
From	To
CB1	SB5
SB5	SB7
CB1	SB2
SB2	SB9

Emergency Vehicle Preemption	
From	To
CB1	HEAD A (SB3)
CB1	HEAD B (SB12)
CB1	HEAD C (SB10)
CB1	HEAD D (SB11)

Confirmation Beacon Cable Traffic Signal 3-14 AWG	
From	To
CB1	HEAD A (SB3)
CB1	HEAD B (SB12)
CB1	HEAD C (SB10)
CB1	HEAD D (SB11)

*Use the white conductor in the cable assembly as the grounded conductor for all traffic signal indications
*Ensure the grounded conductor in the feeder cable and the pole cables are both 18" longer than the ungrounded conductors.
*At the signal bases, connect one terminal from the pedestrian push buttons to the color indicated in the chart. Connect the other terminal to the grounded conductor.
*Reconnect the grounding conductors wherever the circuit has been interrupted to ensure the grounding circuit is complete.

2

PCMS TO BE PLACED 7 DAYS BEFORE ROAD CLOSURE
AND TO BE REMOVED UPON ROAD CLOSURE

PCMS 1	
FRAME 1	FRAME 2
E FRONTAGE RD TO CLOSE	BEGINS XXXDAY

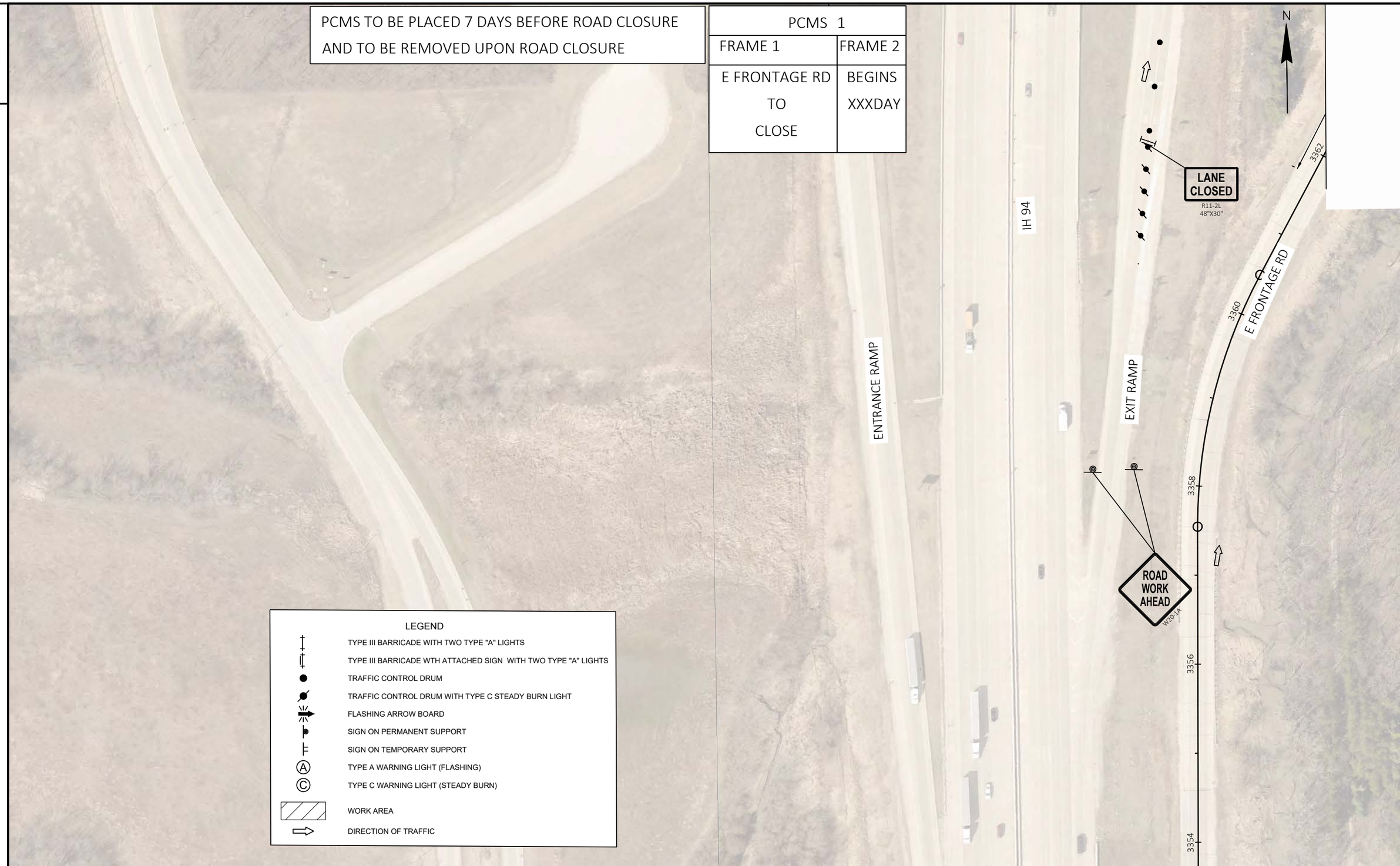

LEGEND

- TYPE III BARRICADE WITH TWO TYPE "A" LIGHTS
- TYPE III BARRICADE WTH ATTACHED SIGN WITH TWO TYPE "A" LIGHTS
- TRAFFIC CONTROL DRUM
- TRAFFIC CONTROL DRUM WITH TYPE C STEADY BURN LIGHT
- FLASHING ARROW BOARD
- SIGN ON PERMANENT SUPPORT
- SIGN ON TEMPORARY SUPPORT
- TYPE A WARNING LIGHT (FLASHING)
- TYPE C WARNING LIGHT (STEADY BURN)
- WORK AREA
- DIRECTION OF TRAFFIC

2

PROJECT NO: 3700-11-70	HWY: VAR. SIGNSLIZED INTERSECTIONS	COUNTY: KENOSHA	TRAFFIC CONTROL STH 158 AND EAST FRONTAGE RD	SHEET 60	E

2

PCMS TO BE PLACED 7 DAYS BEFORE ROAD CLOSURE
AND TO BE REMOVED UPON ROAD CLOSURE

PCMS 1	
FRAME 1	FRAME 2
E FRONTAGE RD TO CLOSE	BEGINS XXXDAY

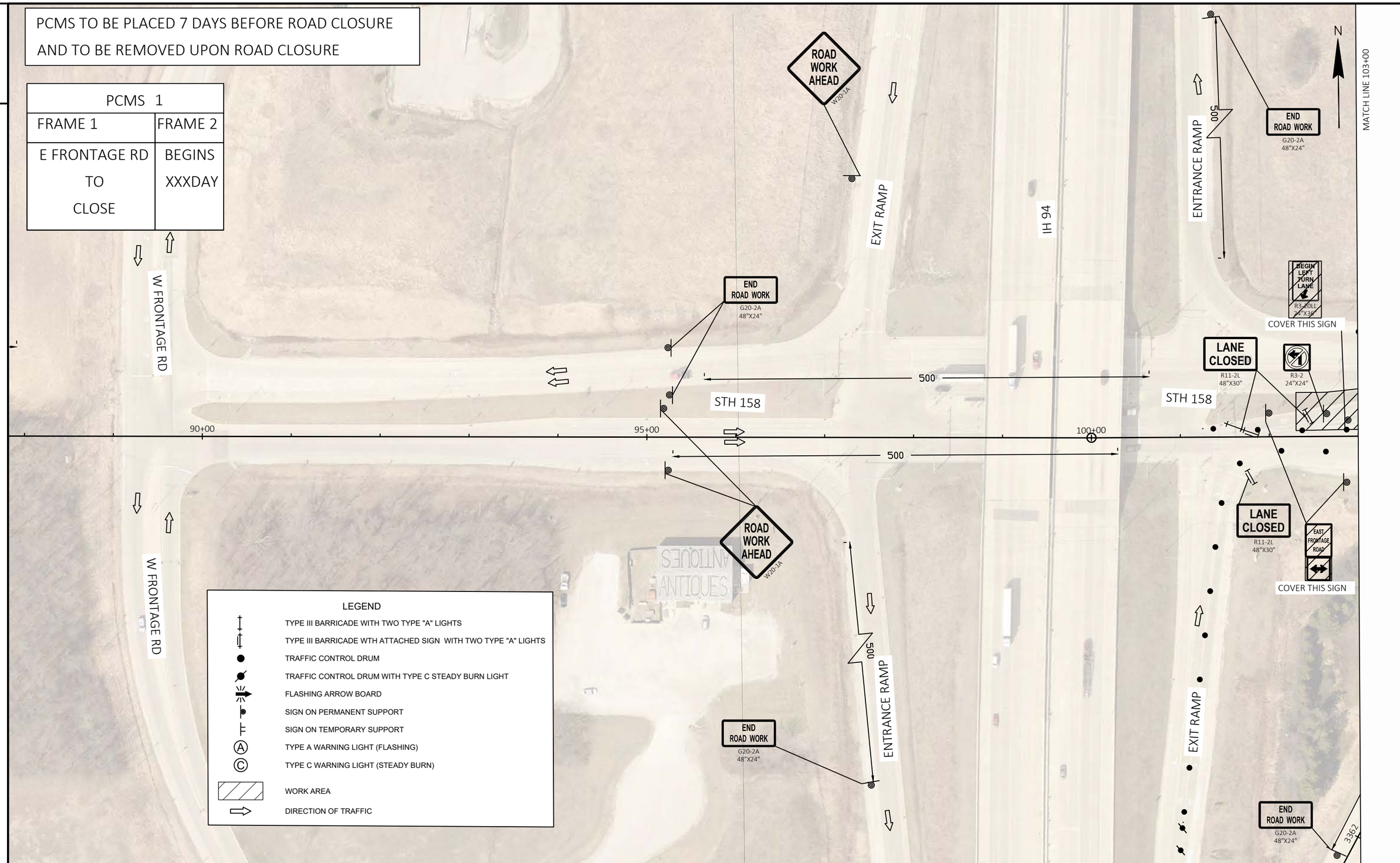

2

PROJECT NO: 3700-11-70	HWY: VAR. SIGNSLIZED INTERSECTIONS	COUNTY: KENOSHA	TRAFFIC CONTROL STH 158 AND EAST FRONTAGE RD	SHEET 61	E

FILE NAME : N:\PDS\C3D\37001100\SHEETSPLAN\025001-TC.DWG
LAYOUT NAME - 025001-tc2
PLOT DATE : 11/8/2022 3:19 PM
PLOT BY : MANANDHAR, BHUVAN K
PLOT NAME :
PLOT SCALE : 1 IN:100 FT
WISDOT/CADDS SHEET 42

2

PCMS TO BE PLACED 7 DAYS BEFORE ROAD CLOSURE
AND TO BE REMOVED UPON ROAD CLOSURE

PCMS 1	
FRAME 1	FRAME 2
E FRONTAGE RD TO CLOSE	BEGINS XXXDAY

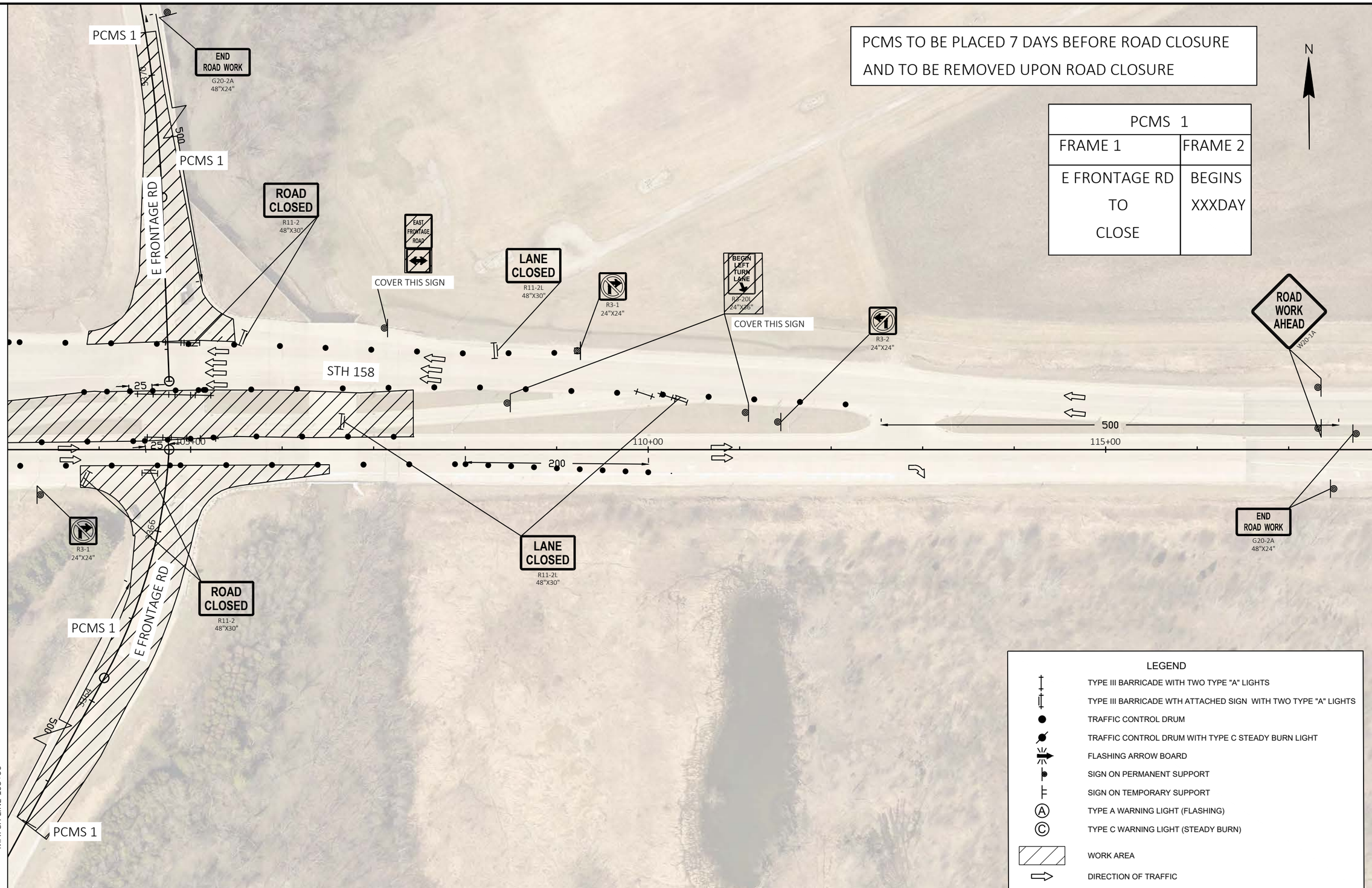

2

PROJECT NO: 3700-11-70	HWY: VAR. SIGNSLIZED INTERSECTIONS	COUNTY: KENOSHA	TRAFFIC CONTROL STH 158 AND EAST FRONTAGE RD	SHEET 62	E

FILE NAME : N:\PDS\C3D\37001100\SHEETSPLAN\025001-TC.DWG
LAYOUT NAME - 025001-tc3
PLOT DATE : 11/8/2022 3:20 PM
PLOT BY : MANANDHAR, BHUVAN K
PLOT NAME :
PLOT SCALE : 1 IN:100 FT
WISDOT/CADDS SHEET 42

2

PCMS TO BE PLACED 7 DAYS BEFORE ROAD CLOSURE
AND TO BE REMOVED UPON ROAD CLOSURE

PCMS 1	
FRAME 1	FRAME 2
E FRONTAGE RD TO CLOSE	BEGINS XXXDAY

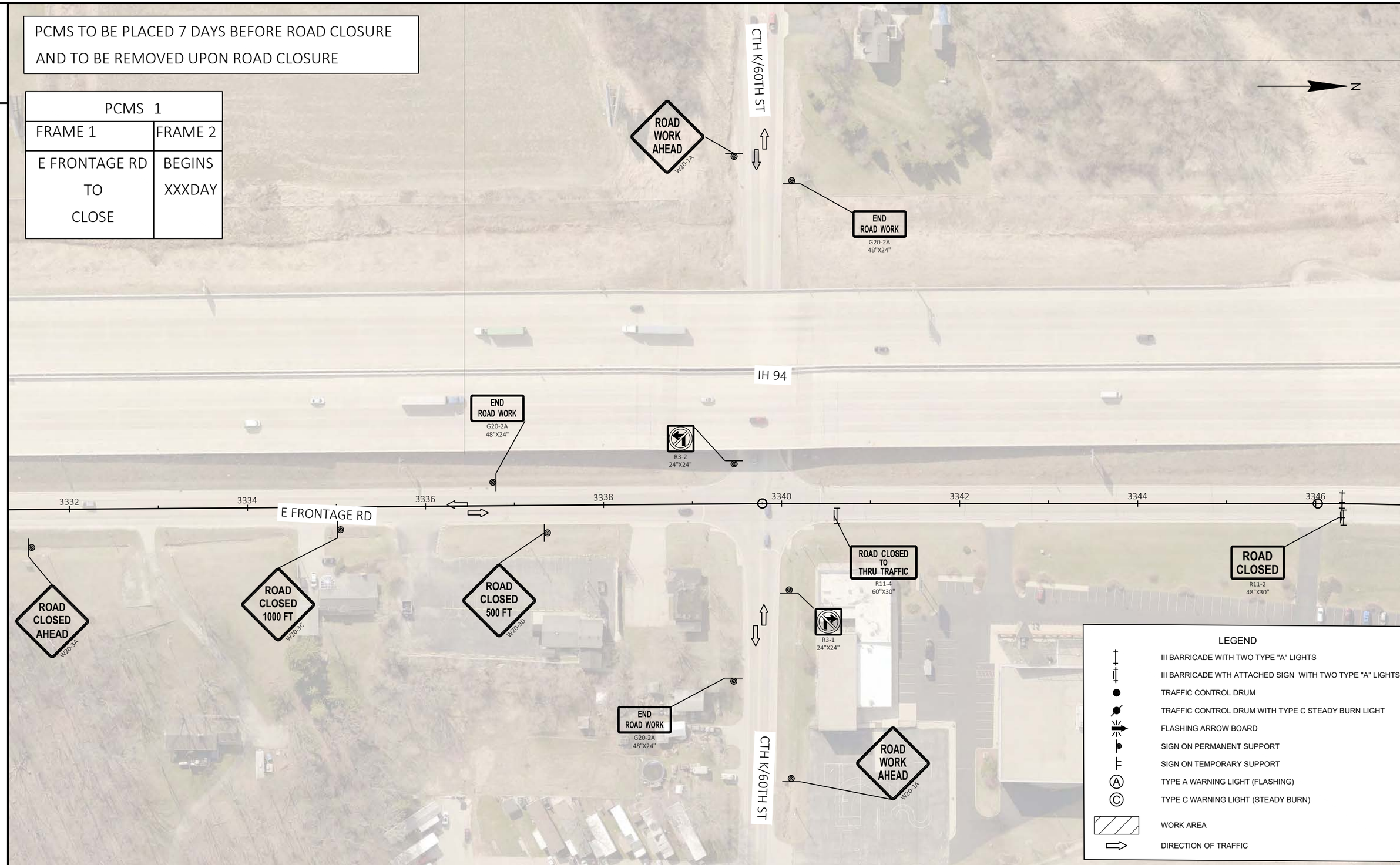

2

PROJECT NO: 3700-11-70	HWY: VAR. SIGNSLIZED INTERSECTIONS	COUNTY: KENOSHA	TRAFFIC CONTROL STH 158 AND EAST FRONTAGE RD	SHEET 63	E

FILE NAME : N:\PDS\C3D\37001100\SHEETSPLAN\025001-TC.DWG
LAYOUT NAME - 025001-tc5
PLOT DATE : 11/8/2022 3:22 PM
PLOT BY : MANANDHAR, BHUVAN K
PLOT NAME :
PLOT SCALE : 1 IN:100 FT

2

PCMS TO BE PLACED 7 DAYS BEFORE ROAD CLOSURE AND TO BE REMOVED UPON ROAD CLOSURE

PCMS 1	
FRAME 1	FRAME 2
E FRONTAGE RD TO CLOSE	BEGINS XXXDAY

N

38TH ST

W FRONTAGE RD

ROAD WORK AHEAD
W20-1A

END ROAD WORK
G20-2A
48"X24"

IH 94

ROAD CLOSED 500 FT
W20-3D

ROAD CLOSED 1000 FT
W20-3C

ROAD CLOSED AHEAD
W20-3A

R3-1
24"X24"

E FRONTAGE RD

R3-2
24"X24"

END ROAD WORK
G20-2A
48"X24"

ROAD CLOSED
R11-2
48"X30"

38TH ST

END ROAD WORK
G20-2A
48"X24"

ROAD WORK AHEAD
W20-1A

LEGEND

- TYPE III BARRICADE WITH TWO TYPE "A" LIGHTS
- TYPE III BARRICADE WTH ATTACHED SIGN WITH TWO TYPE "A" LIGHTS
- TRAFFIC CONTROL DRUM
- TRAFFIC CONTROL DRUM WITH TYPE C STEADY BURN LIGHT
- FLASHING ARROW BOARD
- SIGN ON PERMANENT SUPPORT
- SIGN ON TEMPORARY SUPPORT
- TYPE A WARNING LIGHT (FLASHING)
- TYPE C WARNING LIGHT (STEADY BURN)
- WORK AREA
- DIRECTION OF TRAFFIC

2

PROJECT NO: 3700-11-70	HWY/VAR. SIGNSLIZED INTERSECTIONS	COUNTY: KENOSHA	TRAFFIC CONTROL STH 158 AND EAST FRONTAGE RD	SHEET 64	E

FILE NAME : N:\PDS\C3D\37001100\SHEETSPLAN\025001-TC.DWG
LAYOUT NAME - 025001-tc6
PLOT DATE : 11/8/2022 3:23 PM
PLOT BY : MANANDHAR, BHUVAN K
PLOT NAME :
PLOT SCALE : 1 IN:100 FT

WISDOT/CADDS SHEET 42

2

PCMS TO BE PLACED 7 DAYS BEFORE ROAD CLOSURE
AND TO BE REMOVED UPON ROAD CLOSURE

LEGEND

- TYPE III BARRICADE WITH TWO TYPE "A" LIGHTS
- TYPE III BARRICADE WTH ATTACHED SIGN WITH TWO TYPE "A" LIGHTS
- TRAFFIC CONTROL DRUM
- TRAFFIC CONTROL DRUM WITH TYPE C STEADY BURN LIGHT
- FLASHING ARROW BOARD
- SIGN ON PERMANENT SUPPORT
- SIGN ON TEMPORARY SUPPORT
- TYPE A WARNING LIGHT (FLASHING)
- TYPE C WARNING LIGHT (STEADY BURN)
- WORK AREA
- DIRECTION OF TRAFFIC

PCMS 2	
FRAME 1	FRAME 2
CTH H TO CLOSE	BEGINS XXXDAY

FMS-1
CTH H CLOSED AHEAD
USE ALT ROUTE
TRUCKS USE WIS 31

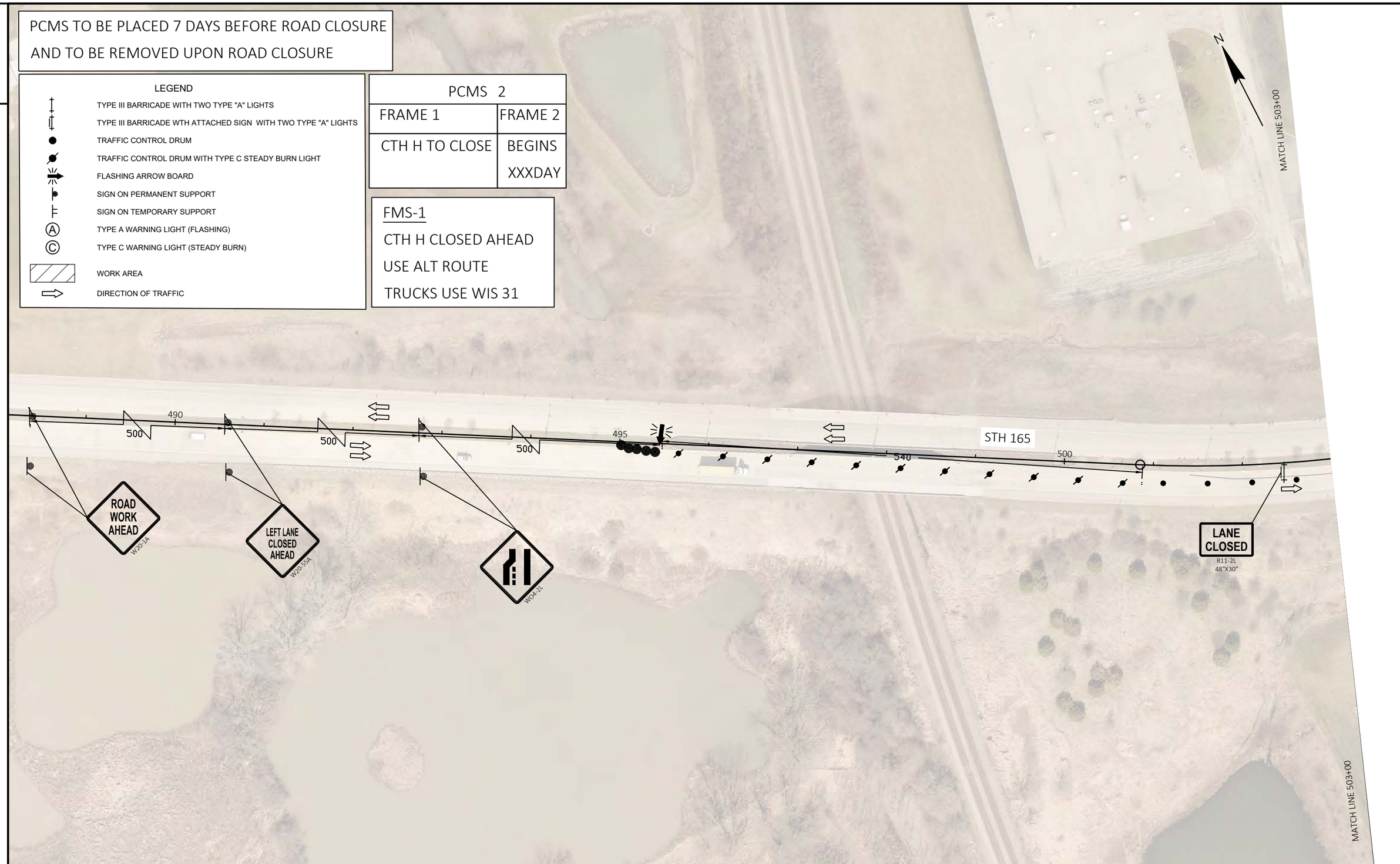

2

PROJECT NO: 3700-11-70	HWY: VAR. SIGNSLIZED INTERSECTIONS	COUNTY: KENOSHA	TRAFFIC CONTROL STH 165 AND CTH H	SHEET 65	E

FILE NAME : N:\PDS\C3D\37001100\SHEETSPLAN\025002-TC.DWG
LAYOUT NAME - 025002-tc1
PLOT DATE : 11/8/2022 3:23 PM
PLOT BY : MANANDHAR, BHUVAN K
PLOT NAME :
PLOT SCALE : 1 IN:100 FT
WISDOT/CADDS SHEET 42

2

PCMS TO BE PLACED 7 DAYS BEFORE ROAD CLOSURE AND TO BE REMOVED UPON ROAD CLOSURE

FMS-1

CTH H CLOSED AHEAD

USE ALT ROUTE

TRUCKS USE WIS 31

PCMS 2	
FRAME 1	FRAME 2
CTH H TO CLOSE	BEGINS XXXDAY

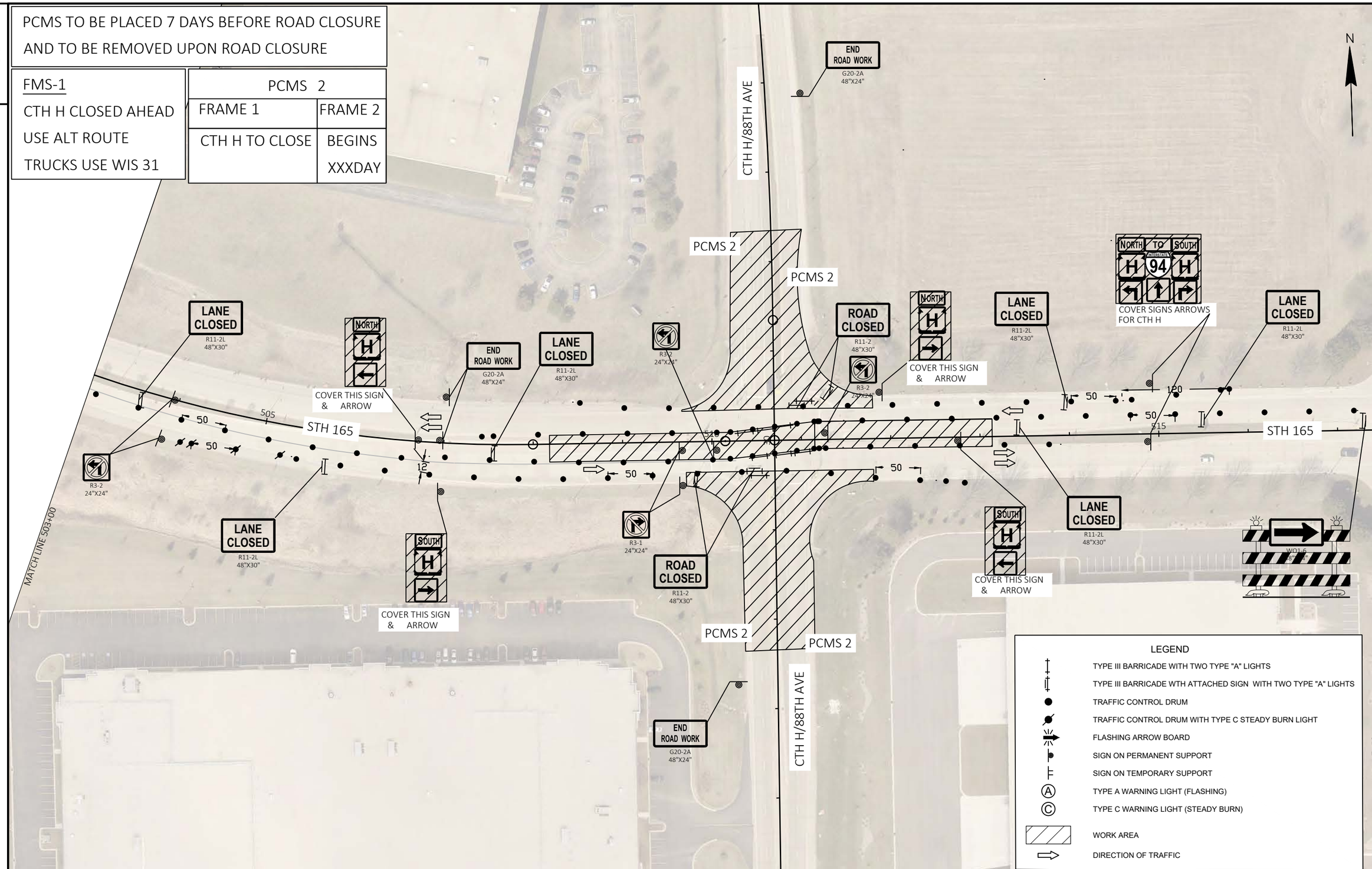

2

PROJECT NO: 3700-11-70	HWY: VAR. SIGNSLIZED INTERSECTIONS	COUNTY: KENOSHA	TRAFFIC CONTROL STH 165 AND CTH H	SHEET 66	E

FILE NAME : N:\PDS\C3D\37001100\SHEETSPLAN\025002-TC.DWG
LAYOUT NAME - 025002-tc2
PLOT DATE : 11/8/2022 3:23 PM
PLOT BY : MANANDHAR, BHUVAN K
PLOT NAME :
PLOT SCALE : 1 IN:100 FT

WISDOT/CADDS SHEET 42

2

PCMS TO BE PLACED 7 DAYS BEFORE ROAD CLOSURE AND TO BE REMOVED UPON ROAD CLOSURE

FMS-1
CTH H CLOSED AHEAD
USE ALT ROUTE
TRUCKS USE WIS 31

PCMS 2	
FRAME 1	FRAME 2
CTH H TO CLOSE	BEGINS XXXDAY

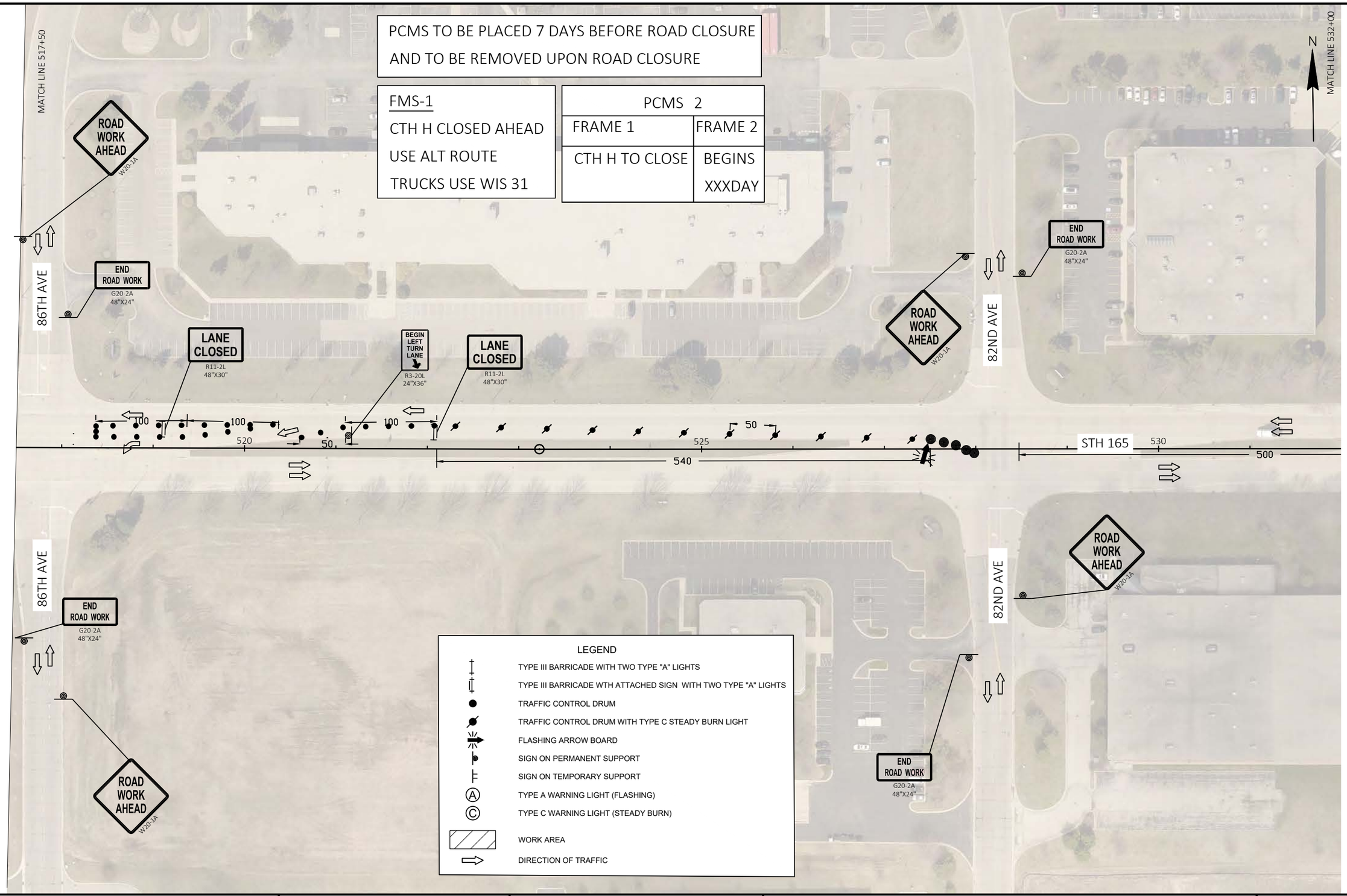

2

PROJECT NO: 3700-11-70	HWY: VAR. SIGNSLIZED INTERSECTIONS	COUNTY: KENOSHA	TRAFFIC CONTROL STH 165 AND CTH H	SHEET 67	E

FILE NAME : N:\PDS\C3D\37001100\SHEETSPLAN\025002-TC.DWG
LAYOUT NAME - 025002-tc3
PLOT DATE : 11/8/2022 3:23 PM
PLOT BY : MANANDHAR, BHUVAN K
PLOT NAME :
PLOT SCALE : 1 IN:100 FT
WISDOT/CADDS SHEET 42

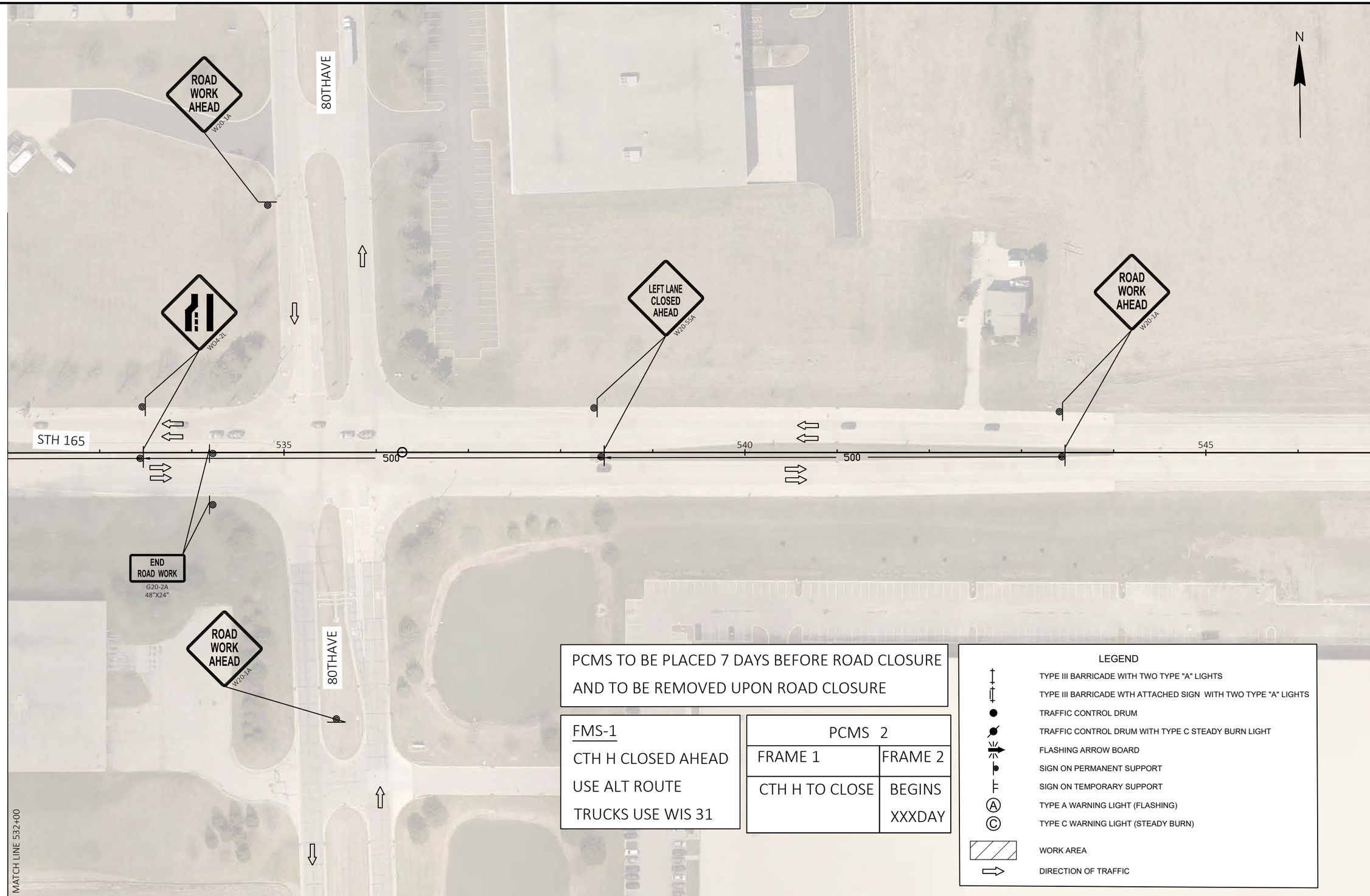

PCMS TO BE PLACED 7 DAYS BEFORE ROAD CLOSURE AND TO BE REMOVED UPON ROAD CLOSURE

FMS-1

CTH H CLOSED AHEAD

USE ALT ROUTE

TRUCKS USE WIS 31

PCMS 2	
FRAME 1	FRAME 2
CTH H TO CLOSE	BEGINS XXXDAY

LEGEND

- TYPE III BARRICADE WITH TWO TYPE "A" LIGHTS
- TYPE III BARRICADE WTH ATTACHED SIGN WITH TWO TYPE "A" LIGHTS
- TRAFFIC CONTROL DRUM
- TRAFFIC CONTROL DRUM WITH TYPE C STEADY BURN LIGHT
- FLASHING ARROW BOARD
- SIGN ON PERMANENT SUPPORT
- SIGN ON TEMPORARY SUPPORT
- TYPE A WARNING LIGHT (FLASHING)
- TYPE C WARNING LIGHT (STEADY BURN)
- WORK AREA
- DIRECTION OF TRAFFIC

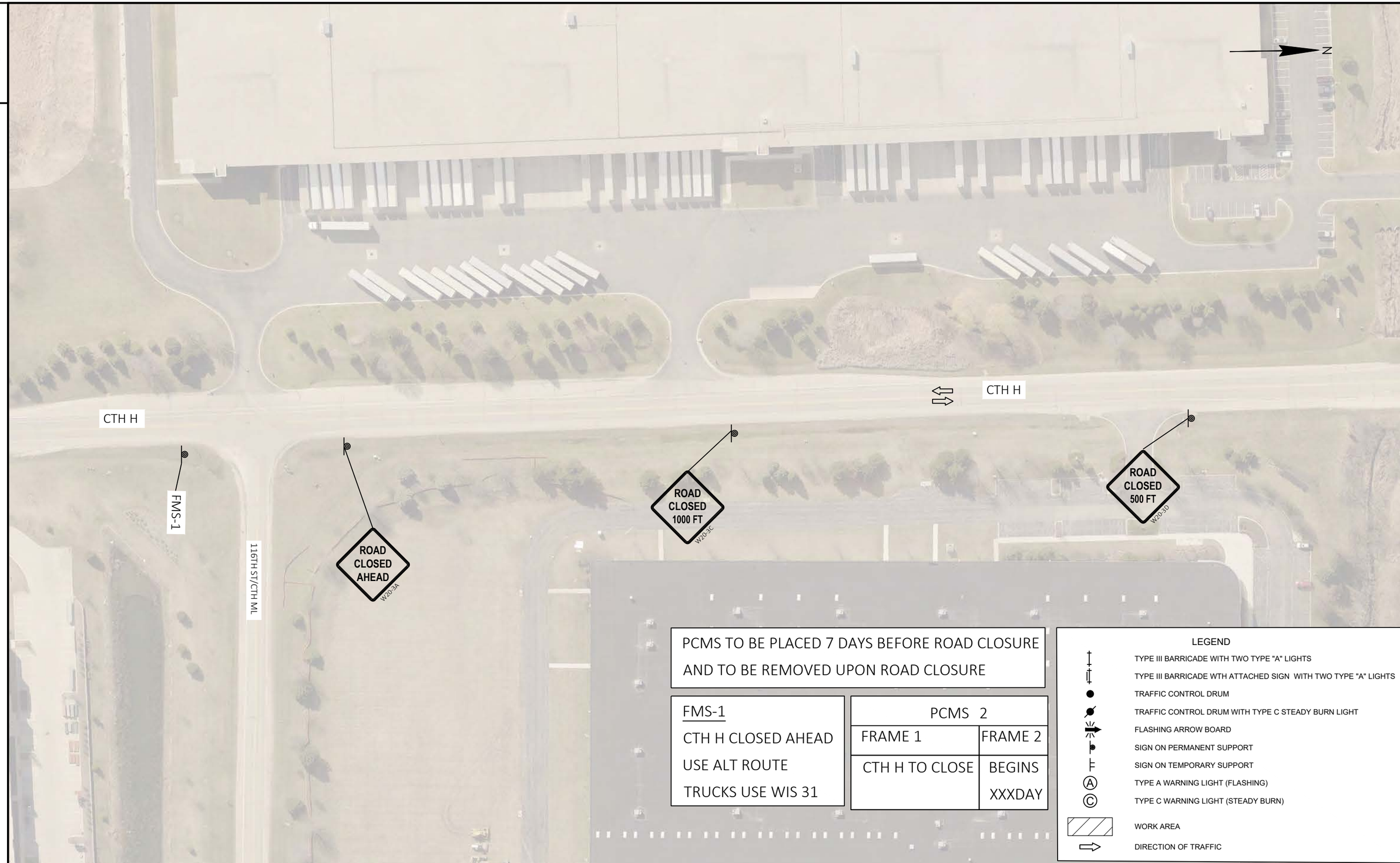

PCMS TO BE PLACED 7 DAYS BEFORE ROAD CLOSURE
AND TO BE REMOVED UPON ROAD CLOSURE

FMS-1
CTH H CLOSED AHEAD
USE ALT ROUTE
TRUCKS USE WIS 31

PCMS 2	
FRAME 1	FRAME 2
CTH H TO CLOSE	BEGINS XXXDAY

LEGEND

- TYPE III BARRICADE WITH TWO TYPE "A" LIGHTS
- TYPE III BARRICADE WTH ATTACHED SIGN WITH TWO TYPE "A" LIGHTS
- TRAFFIC CONTROL DRUM
- TRAFFIC CONTROL DRUM WITH TYPE C STEADY BURN LIGHT
- FLASHING ARROW BOARD
- SIGN ON PERMANENT SUPPORT
- SIGN ON TEMPORARY SUPPORT
- TYPE A WARNING LIGHT (FLASHING)
- TYPE C WARNING LIGHT (STEADY BURN)
- WORK AREA
- DIRECTION OF TRAFFIC

PROJECT NO: 3700-11-70	HWY: VAR. SIGNSLIZED INTERSECTIONS	COUNTY: KENOSHA	TRAFFIC CONTROL STH 165 AND CTH H	SHEET 69	E

FILE NAME : N:\PDS\C3D\37001100\SHEETSPLAN\025002-TC.DWG
LAYOUT NAME - 025002-tc5
PLOT DATE : 11/8/2022 3:24 PM PLOT BY : MANANDHAR, BHUVAN K PLOT NAME : PLOT SCALE : 1 IN:100 FT
WISDOT/CADDS SHEET 42

2

LEGEND

- TYPE III BARRICADE WITH TWO TYPE "A" LIGHTS
- TYPE III BARRICADE WTH ATTACHED SIGN WITH TWO TYPE "A" LIGHTS
- TRAFFIC CONTROL DRUM
- TRAFFIC CONTROL DRUM WITH TYPE C STEADY BURN LIGHT
- FLASHING ARROW BOARD
- SIGN ON PERMANENT SUPPORT
- SIGN ON TEMPORARY SUPPORT
- TYPE A WARNING LIGHT (FLASHING)
- TYPE C WARNING LIGHT (STEADY BURN)
- WORK AREA
- DIRECTION OF TRAFFIC

PCMS TO BE PLACED 7 DAYS BEFORE ROAD CLOSURE AND TO BE REMOVED UPON ROAD CLOSURE

FMS-1

CTH H CLOSED AHEAD
USE ALT ROUTE
TRUCKS USE WIS 31

PCMS 2	
FRAME 1	FRAME 2
CTH H TO CLOSE	BEGINS XXXDAY

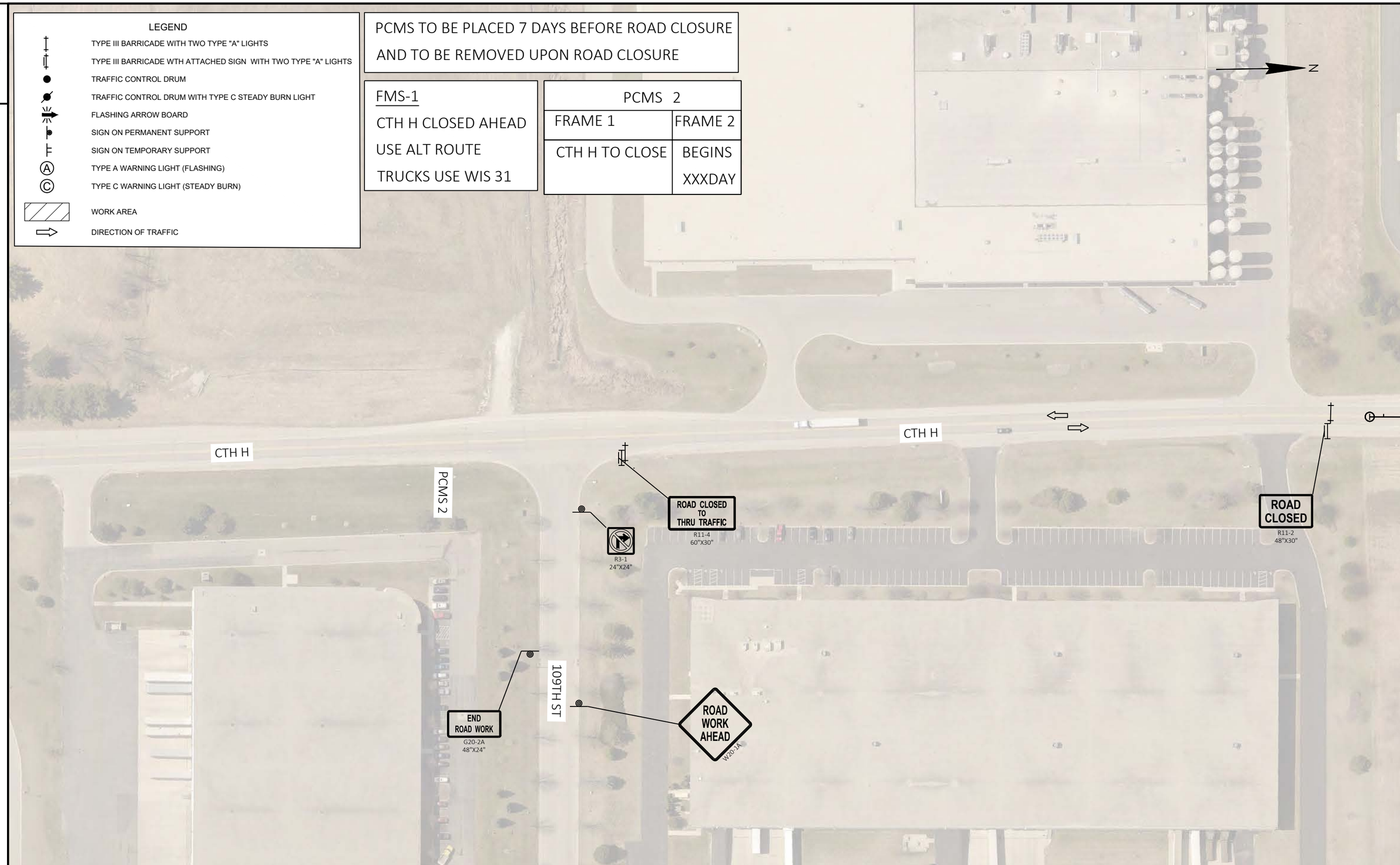

2

PROJECT NO: 3700-11-70	HWY: VAR. SIGNSLIZED INTERSECTIONS	COUNTY: KENOSHA	TRAFFIC CONTROL STH 165 AND CTH H	SHEET 70	E

FILE NAME : N:\PDS\C3D\37001100\SHEETSPLAN\025002-TC.DWG
LAYOUT NAME - 025002-tc6
PLOT DATE : 11/8/2022 3:24 PM
PLOT BY : MANANDHAR, BHUVAN K
PLOT NAME :
PLOT SCALE : 1 IN:100 FT

WISDOT/CADDS SHEET 42

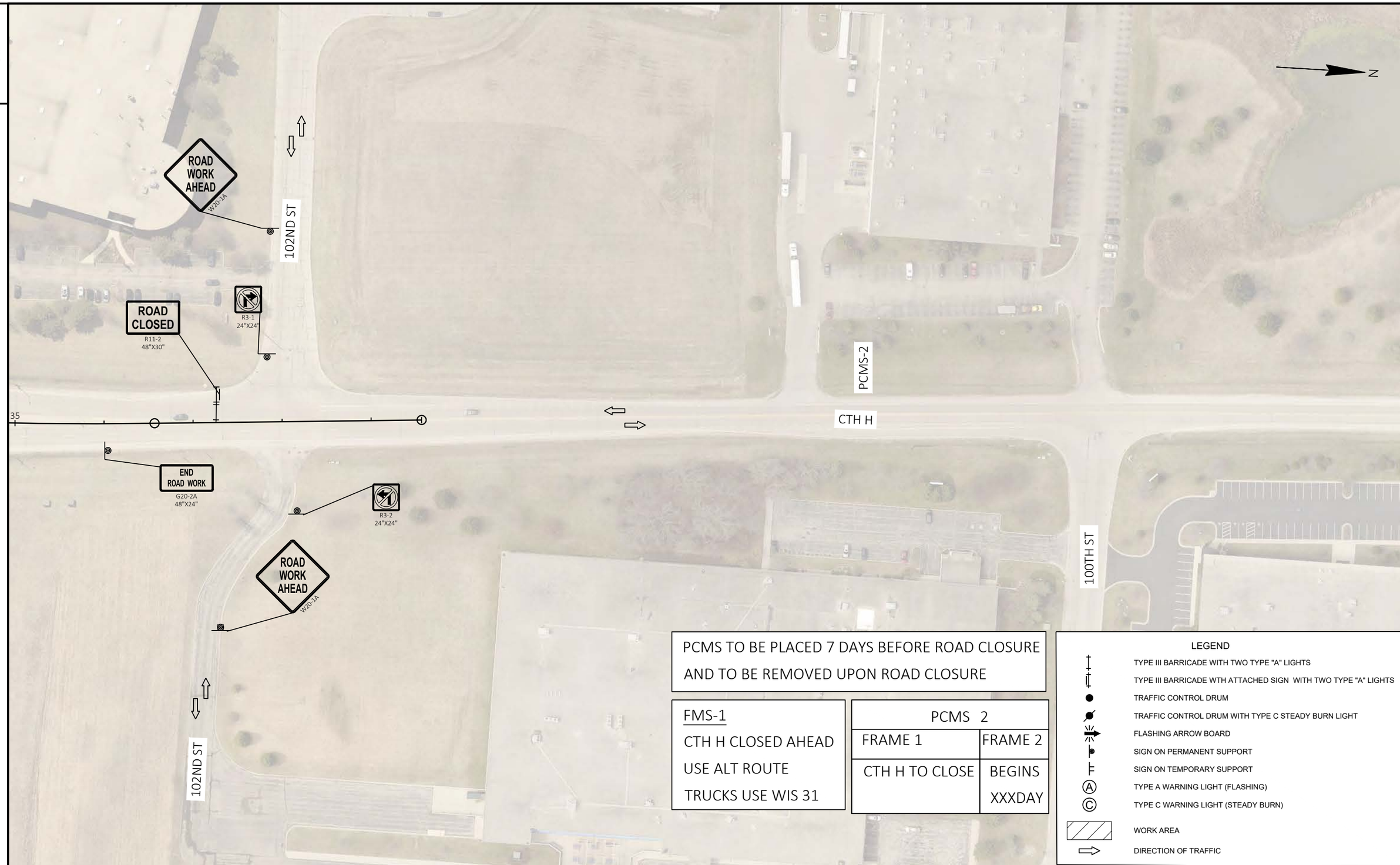

PCMS TO BE PLACED 7 DAYS BEFORE ROAD CLOSURE
AND TO BE REMOVED UPON ROAD CLOSURE

FMS-1
CTH H CLOSED AHEAD
USE ALT ROUTE
TRUCKS USE WIS 31

PCMS 2	
FRAME 1	FRAME 2
CTH H TO CLOSE	BEGINS XXXDAY

LEGEND

- TYPE III BARRICADE WITH TWO TYPE "A" LIGHTS
- TYPE III BARRICADE WTH ATTACHED SIGN WITH TWO TYPE "A" LIGHTS
- TRAFFIC CONTROL DRUM
- TRAFFIC CONTROL DRUM WITH TYPE C STEADY BURN LIGHT
- FLASHING ARROW BOARD
- SIGN ON PERMANENT SUPPORT
- SIGN ON TEMPORARY SUPPORT
- TYPE A WARNING LIGHT (FLASHING)
- TYPE C WARNING LIGHT (STEADY BURN)
- WORK AREA
- DIRECTION OF TRAFFIC

PROJECT NO: 3700-11-70	HWY: VAR. SIGNSLIZED INTERSECTIONS	COUNTY: KENOSHA	TRAFFIC CONTROL STH 165 AND CTH H	SHEET 71	E

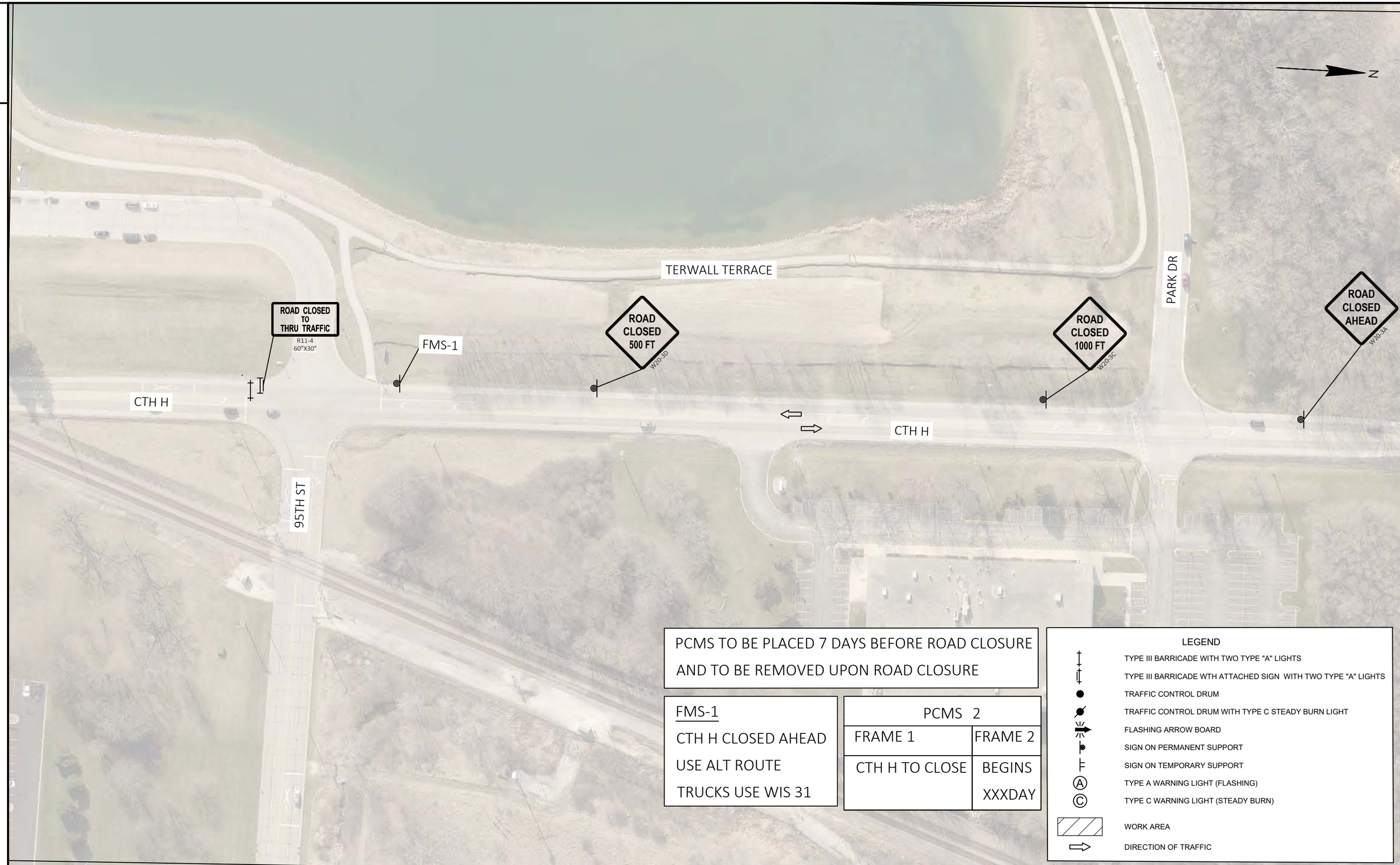

PCMS TO BE PLACED 7 DAYS BEFORE ROAD CLOSURE AND TO BE REMOVED UPON ROAD CLOSURE

FMS-1

CTH H CLOSED AHEAD

USE ALT ROUTE

TRUCKS USE WIS 31

PCMS 2	
FRAME 1	FRAME 2
CTH H TO CLOSE	BEGINS XXXDAY

LEGEND

- TYPE III BARRICADE WITH TWO TYPE "A" LIGHTS
- TYPE III BARRICADE WTH ATTACHED SIGN WITH TWO TYPE "A" LIGHTS
- TRAFFIC CONTROL DRUM
- TRAFFIC CONTROL DRUM WITH TYPE C STEADY BURN LIGHT
- FLASHING ARROW BOARD
- SIGN ON PERMANENT SUPPORT
- SIGN ON TEMPORARY SUPPORT
- TYPE A WARNING LIGHT (FLASHING)
- TYPE C WARNING LIGHT (STEADY BURN)
- WORK AREA
- DIRECTION OF TRAFFIC

PROJECT NO: 3700-11-70	HWY: VAR. SIGNSLIZED INTERSECTIONS	COUNTY: KENOSHA	TRAFFIC CONTROL STH 165 AND CTH H	SHEET 72	E

2

LEGEND

- DETOUR ROUTE
- WORK ZONE
- TRAFFIC SIGN ON PERMANENT SUPPORT
- TRAFFIC SIGN ON TEMPORARY SUPPORT
- TYPE III BARRICADE WITH SIGN AND TWO TYPE A LIGHTS
- TYPE III BARRICADE

NOTES

* SIGN TO BE PLACED ON THE MEDIAN SIDE AS WELL

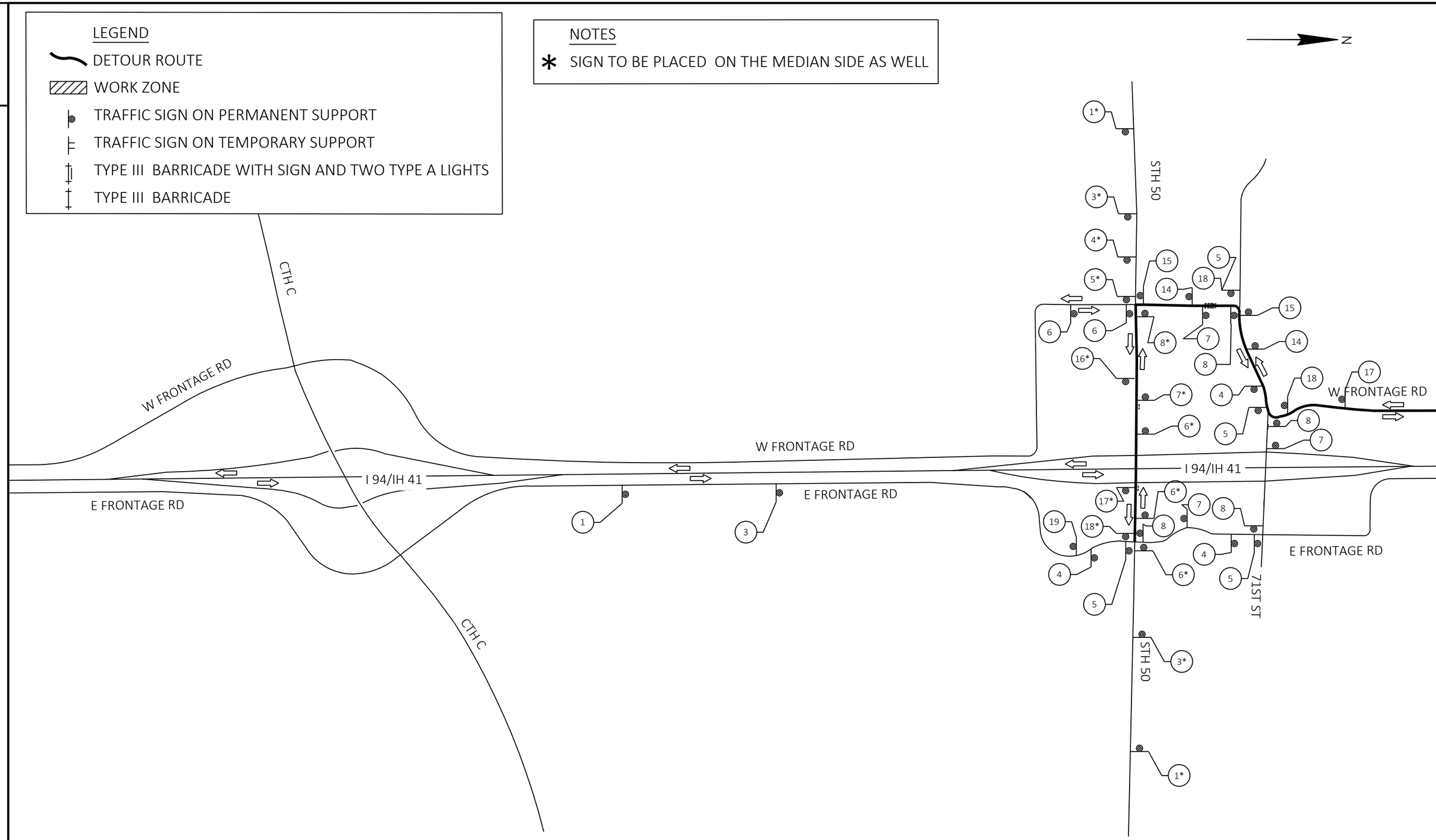

PROJECT NO: 3700-11-70	HWY: VAR. SIGNSLIZED INTERSECTIONS	COUNTY: KENOSHA	DETOUR ROUTE	SHEET 73	E

FILE NAME : N:\PDS\C3D\37001100\SHEETSPLAN\027001-DT.DWG
LAYOUT NAME - 027001_dt (1)
PLOT DATE : 11/8/2022 3:26 PM
PLOT BY : MANANDHAR, BHUVAN K
PLOT NAME :
PLOT SCALE : 1 IN:1000 FT
WISDOT/CADDS SHEET 42

2

LEGEND

- DETOUR ROUTE
- WORK ZONE
- TRAFFIC SIGN ON PERMANENT SUPPORT
- TRAFFIC SIGN ON TEMPORARY SUPPORT
- TYPE III BARRICADE WITH SIGN AND TWO TYPE A LIGHTS
- TYPE III BARRICADE

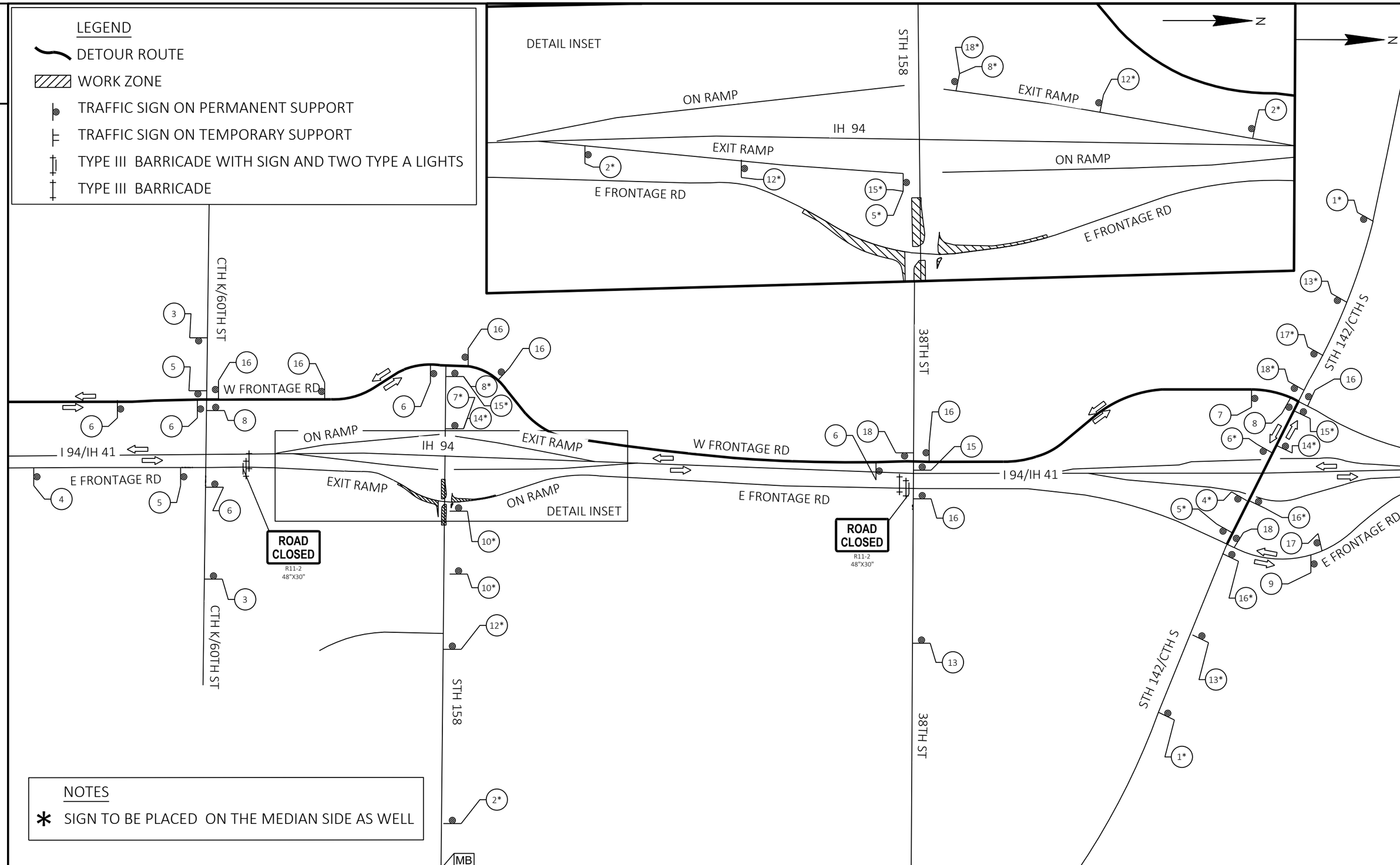

NOTES

* SIGN TO BE PLACED ON THE MEDIAN SIDE AS WELL

STH 158

PROJECT NO: 3700-11-70	HWY: VAR. SIGNSLIZED INTERSECTIONS	COUNTY: KENOSHA	DETOUR ROUTE	SHEET 74	E

FILE NAME : N:\PDS\C3D\37001100\SHEETSPLAN\027001-DT.DWG
LAYOUT NAME - 027001_dt (2)
PLOT DATE : 11/8/2022 3:26 PM PLOT BY : MANANDHAR, BHUVAN K PLOT NAME : PLOT SCALE : 1 IN:1000 FT
WISDOT/CADDS SHEET 42

2

LEGEND

- DETOUR ROUTE
- WORK ZONE
- TRAFFIC SIGN ON PERMANENT SUPPORT
- TRAFFIC SIGN ON TEMPORARY SUPPORT
- TYPE III BARRICADE WITH SIGN AND TWO TYPE A LIGHTS
- TYPE III BARRICADE

NOTES

* SIGN TO BE PLACED ON THE MEDIAN SIDE AS WELL

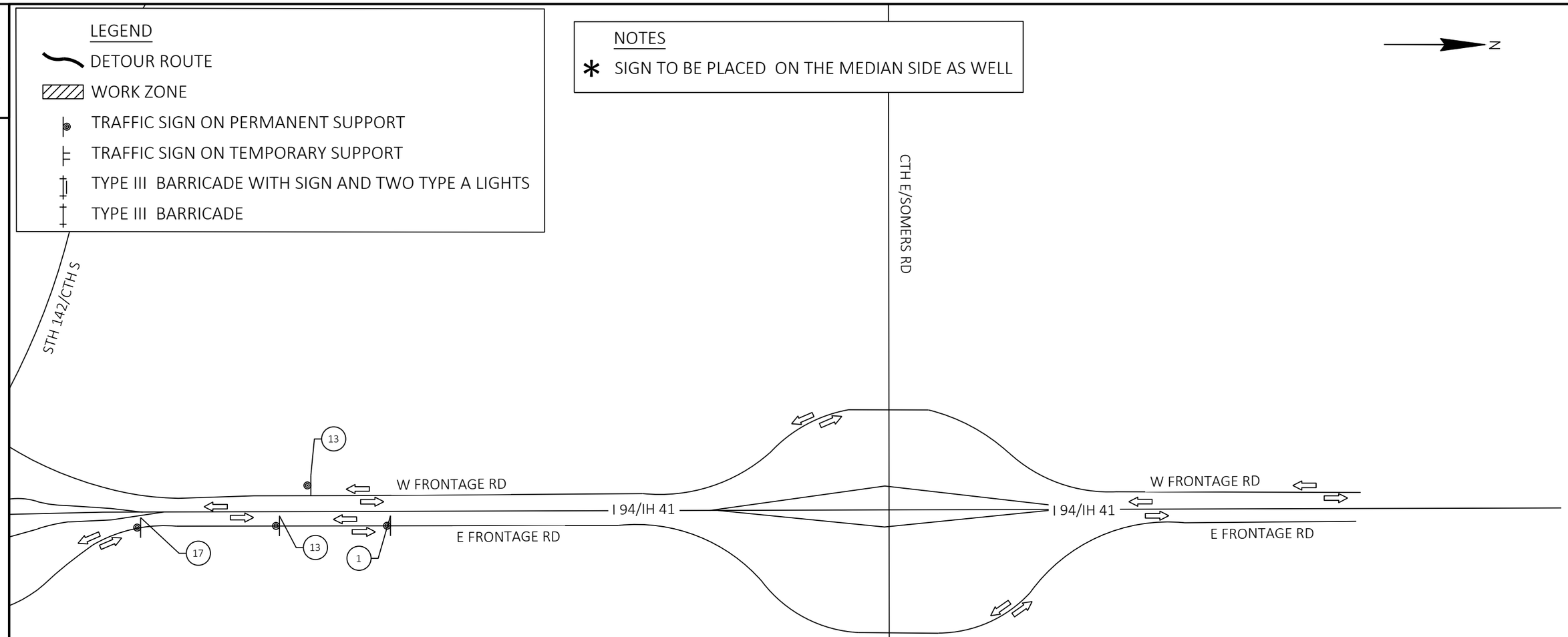

2

PROJECT NO: 3700-11-70	HWY: VAR. SIGNSLIZED INTERSECTIONS	COUNTY: KENOSHA	DETOUR ROUTE	SHEET 75	E

FILE NAME : N:\PDS\C3D\37001100\SHEETSPLAN\027001-DT.DWG
LAYOUT NAME - 027001_dt (3)
PLOT DATE : 11/8/2022 3:26 PM PLOT BY : MANANDHAR, BHUVAN K PLOT NAME : PLOT SCALE : 1 IN:1000 FT

WISDOT/CADDS SHEET 42

1

E FRONTAGE RD

CLOSED AT WIS 158

FOLLOW DETOUR

2

E FRONTAGE RD

CLOSED AHEAD

FOLLOW DETOUR

3

NORTH
MB3-1
36"X18"

EAST FRONTAGE ROAD
M1-95A
24"X30"

DETOUR AHEAD
W20-2A

4

DETOUR
M4-8
24"X12"

NORTH
M3-1
24"X12"

EAST FRONTAGE ROAD
M1-95A
24"X30"

MO5-1L
21"X21"

5

DETOUR
M4-8
24"X12"

NORTH
M3-1
24"X12"

EAST FRONTAGE ROAD
M1-95A
24"X30"

MN6-1
21"X21"

6

DETOUR
M4-8
24"X12"

NORTH
M3-1
24"X12"

EAST FRONTAGE ROAD
M1-95A
24"X30"

MO6-1
21"X21"

7

DETOUR
M4-8
24"X12"

NORTH
M3-1
24"X12"

EAST FRONTAGE ROAD
M1-95A
24"X30"

M5-1R
21"X21"

8

DETOUR
M4-8
24"X12"

NORTH
M3-1
24"X12"

EAST FRONTAGE ROAD
M1-95A
24"X30"

MN6-1
21"X21"

9

END DETOUR
M4-8A
24"X18"

NORTH
M3-1
24"X12"

EAST FRONTAGE ROAD
M1-95A
24"X30"

10

DETOUR
M4-8
24"X12"

EAST FRONTAGE ROAD
M1-95A
24"X30"

MO6-1
21"X21"

11

DETOUR
M4-8
24"X12"

EAST FRONTAGE ROAD
M1-95A
24"X30"

MO5-1L
21"X21"

12

EAST FRONTAGE ROAD
M1-95A
24"X30"

DETOUR AHEAD
W20-2A

13

SOUTH
MB3-3
36"X18"

EAST FRONTAGE ROAD
M1-95A
24"X30"

DETOUR AHEAD
W20-2A

14

DETOUR
M4-8
24"X12"

SOUTH
MB3-3
36"X18"

EAST FRONTAGE ROAD
M1-95A
24"X30"

MO5-1L
21"X21"

15

DETOUR
M4-8
24"X12"

SOUTH
MB3-3
36"X18"

EAST FRONTAGE ROAD
M1-95A
24"X30"

MN6-1
21"X21"

16

DETOUR
M4-8
24"X12"

SOUTH
MB3-3
36"X18"

EAST FRONTAGE ROAD
M1-95A
24"X30"

MO6-1
21"X21"

17

DETOUR
M4-8
24"X12"

SOUTH
MB3-3
36"X18"

EAST FRONTAGE ROAD
M1-95A
24"X30"

M5-1R
21"X21"

18

DETOUR
M4-8
24"X12"

SOUTH
MB3-3
36"X18"

EAST FRONTAGE ROAD
M1-95A
24"X30"

MN6-1
21"X21"

19

END DETOUR
M4-8A
24"X18"

SOUTH
MB3-3
36"X18"

EAST FRONTAGE ROAD
M1-95A
24"X30"

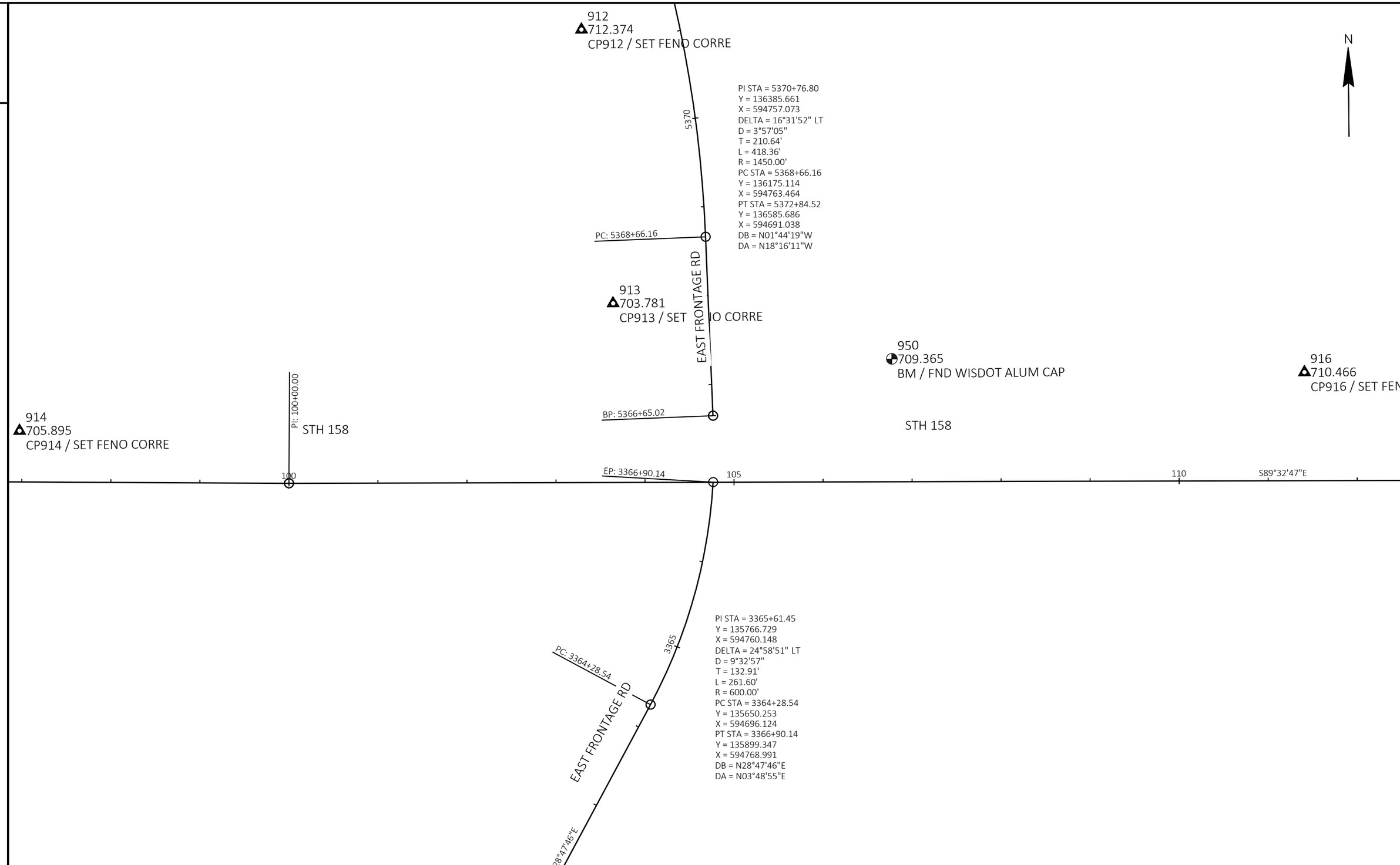
912
712.374
CP912 / SET FENO CORRE
N
PI STA = 5370+76.80
Y = 136385.661
X = 594757.073
DELTA = 16°31'52" LT
D = 3°57'05"
T = 210.64'
L = 418.36'
R = 1450.00'
PC STA = 5368+66.16
Y = 136175.114
X = 594763.464
PT STA = 5372+84.52
Y = 136585.686
X = 594691.038
DB = N01°44'19"W
DA = N18°16'11"W
5370
PC: 5368+66.16
EAST FRONTAGE RD
913
703.781
CP913 / SET FENO CORRE
950
709.365
BM / FND WISDOT ALUM CAP
916
710.466
CP916 / SET FENO
914
705.895
CP914 / SET FENO CORRE
PI: 100+00.00
STH 158
BP: 5366+65.02
STH 158
EP: 3366+90.14
100
105
110
S89°32'47"E
PI STA = 3365+61.45
Y = 135766.729
X = 594760.148
DELTA = 24°58'51" LT
D = 9°32'57"
T = 132.91'
L = 261.60'
R = 600.00'
PC STA = 3364+28.54
Y = 135650.253
X = 594696.124
PT STA = 3366+90.14
Y = 135899.347
X = 594768.991
DB = N28°47'46"E
DA = N03°48'55"E
3365
PC: 3364+28.54
EAST FRONTAGE RD
N28°47'46"E

2

PI STA = 33+95.73
Y = 112116.347
X = 605154.968
DELTA = 5°13'24" LT
D = 1°00'00"
T = 261.35'
L = 522.33'
R = 5729.54'
PC STA = 31+34.38
Y = 111855.047
X = 605150.039
PT STA = 36+56.71
Y = 112377.010
X = 605136.088
DB = N01°04'50"E
DA = N04°08'34"W

N

908
691.691
CP908 / FD FENO EMCS

909
699.354
CP909 / FD FENO EMCS

910
694.762
CP910 / FD FENO EMCS

PC: 31+34.38

PT: 507+99.57

PI: 510+17.39

N1°04'50"E

CTHH (88TH AVE)

505

S89°05'39"E

PI: 30+00.00

510

515

S89°05'54"E

PI STA = 504+49.90
Y = 111730.727
X = 604512.254
DELTA = 28°35'01" LT
D = 4°00'01"
T = 364.86'
L = 714.53'
R = 1432.28'
PC STA = 500+85.04
Y = 111910.336
X = 604194.659
PT STA = 507+99.57
Y = 111724.959
X = 604877.072
DB = S60°30'38"E
DA = S89°05'39"E

STH 165

STH 165

CTHH (88TH AVE)

919
693.179
CP919 / SET FENO CORRE

2

PROJECT NO: 3700-11-70	HWY: VAR. SIGNSLIZED INTERSECTIONS	COUNTY: KENOSHA	ALIGNMENT DETAILS	SHEET 78	E

3700-11-70

Line	Item	Item Description	Unit	Total	Qty
0002	204.0100	Removing Concrete Pavement	SY	1,250.000	1,250.000
0004	204.0110	Removing Asphaltic Surface	SY	46.000	46.000
0006	204.0150	Removing Curb & Gutter	LF	116.000	116.000
0008	204.0155	Removing Concrete Sidewalk	SY	94.000	94.000
0010	204.0195	Removing Concrete Bases	EACH	4.000	4.000
0012	204.9060.S	Removing (item description) 01. Traffic Signal STH 165 & CTH H	EACH	1.000	1.000
0014	204.9090.S	Removing (item description) 02. Loop Detector Wire & Lead-In Cable STH 165 & CTH H	LF	1.000	1.000
0016	213.0100	Finishing Roadway (project) 01. 3700-11-70	EACH	1.000	1.000
0018	305.0110	Base Aggregate Dense 3/4-Inch	TON	5.000	5.000
0020	415.1090	Concrete Pavement HES 9-Inch	SY	588.000	588.000
0022	415.1100	Concrete Pavement HES 10-Inch	SY	660.000	660.000
0024	416.0610	Drilled Tie Bars	EACH	393.000	393.000
0026	416.0620	Drilled Dowel Bars	EACH	417.000	417.000
0028	455.0605	Tack Coat	GAL	7.000	7.000
0030	460.5224	HMA Pavement 4 LT 58-28 S	TON	10.000	10.000
0032	601.0555	Concrete Curb & Gutter 6-Inch Sloped 36-Inch Type A	LF	96.000	96.000
0034	601.0557	Concrete Curb & Gutter 6-Inch Sloped 36-Inch Type D	LF	20.000	20.000
0036	602.0410	Concrete Sidewalk 5-Inch	SF	850.000	850.000
0038	614.0395	Guardrail Mow Strip Concrete	SY	2.000	2.000
0040	614.0920	Salvaged Rail	LF	113.000	113.000
0042	614.0950	Replacing Guardrail Posts and Blocks	EACH	6.000	6.000
0044	614.0951	Replacing Guardrail Rail and Hardware	LF	113.000	113.000
0046	619.1000	Mobilization	EACH	1.000	1.000
0048	625.0100	Topsoil	SY	550.000	550.000
0050	625.0500	Salvaged Topsoil	SY	840.000	840.000
0052	628.1504	Silt Fence	LF	1,820.000	1,820.000
0054	628.1520	Silt Fence Maintenance	LF	1,820.000	1,820.000
0056	628.1905	Mobilizations Erosion Control	EACH	2.000	2.000
0058	628.1910	Mobilizations Emergency Erosion Control	EACH	2.000	2.000
0060	628.2006	Erosion Mat Urban Class I Type A	SY	1,390.000	1,390.000
0062	628.7015	Inlet Protection Type C	EACH	32.000	32.000
0064	628.7020	Inlet Protection Type D	EACH	4.000	4.000
0066	629.0210	Fertilizer Type B	CWT	1.000	1.000
0068	630.0130	Seeding Mixture No. 30	LB	63.000	63.000
0070	630.0500	Seed Water	MGAL	8.000	8.000
0072	634.0618	Posts Wood 4x6-Inch X 18-FT	EACH	17.000	17.000
0074	637.2210	Signs Type II Reflective H	SF	297.630	297.630
0076	637.2215	Signs Type II Reflective H Folding	SF	134.280	134.280
0078	637.2230	Signs Type II Reflective F	SF	30.000	30.000
0080	638.2102	Moving Signs Type II	EACH	3.000	3.000
0082	638.2602	Removing Signs Type II	EACH	28.000	28.000
0084	638.3000	Removing Small Sign Supports	EACH	11.000	11.000
0086	642.5001	Field Office Type B	EACH	1.000	1.000
0088	643.0300	Traffic Control Drums	DAY	7,021.000	7,021.000
0090	643.0420	Traffic Control Barricades Type III	DAY	4,431.000	4,431.000
0092	643.0705	Traffic Control Warning Lights Type A	DAY	8,862.000	8,862.000
0094	643.0715	Traffic Control Warning Lights Type C	DAY	4,428.000	4,428.000
0096	643.0800	Traffic Control Arrow Boards	DAY	226.000	226.000
0098	643.0900	Traffic Control Signs	DAY	32,821.000	32,821.000

3700-11-70

Line	Item	Item Description	Unit	Total	Qty
0100	643.1000	Traffic Control Signs Fixed Message	SF	76.000	76.000
0102	643.1050	Traffic Control Signs PCMS	DAY	56.000	56.000
0104	643.5000	Traffic Control	EACH	1.000	1.000
0106	646.1020	Marking Line Epoxy 4-Inch	LF	22,875.000	22,875.000
0108	646.1545	Marking Line Grooved Wet Ref Contrast Epoxy 4-Inch	LF	2,898.000	2,898.000
0110	646.3545	Marking Line Grooved Wet Ref Contrast Epoxy 8-Inch	LF	6,158.000	6,158.000
0112	646.5020	Marking Arrow Epoxy	EACH	28.000	28.000
0114	646.5120	Marking Word Epoxy	EACH	20.000	20.000
0116	646.5220	Marking Symbol Epoxy	EACH	1.000	1.000
0118	646.6120	Marking Stop Line Epoxy 18-Inch	LF	325.000	325.000
0120	646.6220	Marking Yield Line Epoxy 18-Inch	EACH	75.000	75.000
0122	646.7120	Marking Diagonal Epoxy 12-Inch	LF	540.000	540.000
0124	646.8120	Marking Curb Epoxy	LF	270.000	270.000
0126	646.8220	Marking Island Nose Epoxy	EACH	27.000	27.000
0128	652.0225	Conduit Rigid Nonmetallic Schedule 40 2-Inch	LF	811.000	811.000
0130	652.0235	Conduit Rigid Nonmetallic Schedule 40 3-Inch	LF	850.000	850.000
0132	652.0605	Conduit Special 2-Inch	LF	15.000	15.000
0134	652.0615	Conduit Special 3-Inch	LF	2,101.000	2,101.000
0136	652.0800	Conduit Loop Detector	LF	2,534.000	2,534.000
0138	653.0135	Pull Boxes Steel 24x36-Inch	EACH	4.000	4.000
0140	653.0140	Pull Boxes Steel 24x42-Inch	EACH	30.000	30.000
0142	653.0905	Removing Pull Boxes	EACH	15.000	15.000
0144	654.0101	Concrete Bases Type 1	EACH	10.000	10.000
0146	654.0113	Concrete Bases Type 13	EACH	4.000	4.000
0148	654.0120	Concrete Bases Type 10-Special	EACH	4.000	4.000
0150	654.0217	Concrete Control Cabinet Bases Type 9 Special	EACH	1.000	1.000
0152	655.0230	Cable Traffic Signal 5-14 AWG	LF	1,447.000	1,447.000
0154	655.0240	Cable Traffic Signal 7-14 AWG	LF	4,342.000	4,342.000
0156	655.0260	Cable Traffic Signal 12-14 AWG	LF	2,769.000	2,769.000
0158	655.0320	Cable Type UF 2-10 AWG Grounded	LF	713.000	713.000
0160	655.0515	Electrical Wire Traffic Signals 10 AWG	LF	4,673.000	4,673.000
0162	655.0610	Electrical Wire Lighting 12 AWG	LF	936.000	936.000
0164	655.0700	Loop Detector Lead In Cable	LF	9,347.000	9,347.000
0166	655.0800	Loop Detector Wire	LF	7,418.000	7,418.000
0168	655.0900	Traffic Signal EVP Detector Cable	LF	2,457.000	2,457.000
0170	656.0201	Electrical Service Meter Breaker Pedestal (location) 01. STH 158 & E Frontage Rd	EACH	1.000	1.000
0172	657.0100	Pedestal Bases	EACH	12.000	12.000
0174	657.0420	Traffic Signal Standards Aluminum 13-FT	EACH	4.000	4.000
0176	657.0425	Traffic Signal Standards Aluminum 15-FT	EACH	8.000	8.000
0178	658.0173	Traffic Signal Face 3S 12-Inch	EACH	29.000	29.000
0180	658.0174	Traffic Signal Face 4S 12-Inch	EACH	14.000	14.000
0182	658.0500	Pedestrian Push Buttons	EACH	2.000	2.000
0184	658.5070	Signal Mounting Hardware (location) 01. STH 158 & E Frontage Rd	EACH	1.000	1.000
0186	658.5070	Signal Mounting Hardware (location) 02. STH 165 & CTH H	EACH	1.000	1.000
0188	659.1125	Luminaires Utility LED C	EACH	8.000	8.000
0190	659.5000.S	Lamp, Ballast, LED, Switch Disposal by Contractor	EACH	22.000	22.000
0192	661.0201	Temporary Traffic Signals for Intersections (location) 01. STH 165 &CTH H	EACH	1.000	1.000
0194	661.0300	Generators	DAY	1.000	1.000
0196	670.0101	Field System Integrator	EACH	1.000	1.000

3700-11-70

Line	Item	Item Description	Unit	Total	Qty
0198	670.0201	ITS Documentation	EACH	1.000	1.000
0200	677.0200	Install Camera Assembly	EACH	1.000	1.000
0202	678.0501	Communication System Testing	EACH	1.000	1.000
0204	678.0600	Install Ethernet Switches	EACH	1.000	1.000
0206	690.0150	Sawing Asphalt	LF	105.000	105.000
0208	690.0250	Sawing Concrete	LF	1,412.000	1,412.000
0210	SPV.0060	Special 01. Install Poles Type 9 Special	EACH	5.000	5.000
0212	SPV.0060	Special 02. Install Poles Type 12	EACH	2.000	2.000
0214	SPV.0060	Special 03. Install Poles Type 12 - Over Height	EACH	2.000	2.000
0216	SPV.0060	Special 04. Install Monotubes Arms 35-FT Type 9/10 Special Pole	EACH	1.000	1.000
0218	SPV.0060	Special 05. Install Monotubes Arms 40-FT Type 9/10 Special Pole	EACH	1.000	1.000
0220	SPV.0060	Special 06. Install Monotubes Arms 45-FT Type 9/10 Special Pole	EACH	3.000	3.000
0222	SPV.0060	Special 07. Install Monotubes Arms 35-FT Type 12/13 Pole	EACH	1.000	1.000
0224	SPV.0060	Special 08. Install Monotubes Arms 40-FT Type 12/13 Pole	EACH	1.000	1.000
0226	SPV.0060	Special 09. Install Monotubes Arms 55-FT	EACH	2.000	2.000
0228	SPV.0060	Special 10. TRNSPT & Inst State Furnished Traffic Signal Cabinet STH 158 & E Frontage Rd	EACH	1.000	1.000
0230	SPV.0060	Special 11. TRNSPT & INSTALL STATE FURNISHED TRAFFIC SIGNAL CABINET STH 165 & CTH H	EACH	1.000	1.000
0232	SPV.0060	Special 12. TRNSPT TRAFFIC SIGNAL & INTERSECTION LTG MATERIALS STH 158 & E Frontage Rd	EACH	1.000	1.000
0234	SPV.0060	Special 13. TRNSPT TRAFFIC SIGNAL & INTERSECTION LIGHTING MATERIALS STH 165 & CTH H	EACH	1.000	1.000
0236	SPV.0060	Special 14. TRNSPT & INSTALL STATE FURNISHED EVP DETECTOR HEADS STH 158 & E Frontage Rd	EACH	1.000	1.000
0238	SPV.0060	Special 15. TRNSPT & INSTALL STATE FURNISHED EVP DETECTOR HEADS STH 165 & CTH H	EACH	1.000	1.000
0240	SPV.0060	Special 16. TRNSPT & INST STATE FURNISHED RADAR DETECTION SYSTEM STH 158 & E Frontage Rd	EACH	1.000	1.000
0242	SPV.0060	Special 17. TEMPORARY INFRARED EVP SYSTEM STH 165 & CTH H	EACH	1.000	1.000
0244	SPV.0060	Special 18. INSTALL FIBER OPTIC COMMUNICATIONS IN CABINET STH 158 & E Frontage Rd	EACH	1.000	1.000
0246	SPV.0060	Special 19. CONCRETE BASE TYPE 10 SPECIAL EXTENSION	EACH	1.000	1.000
0248	SPV.0060	Special 20. SPECIAL (UTILITY LINE OPENING (ULO))	EACH	6.000	6.000
0250	SPV.0090	Special 01. CABLE TYPE UF 3-14 AWG	LF	1,135.000	1,135.000
0252	SPV.0195	Special 01. ASPHALT REPAIR SPECIAL	TON	18.000	18.000

3

3

REMOVAL ITEMS

CATEGORY	STATION	TO	STATION	LOCATION	204.0100 REMOVING CONCRETE PAVEMENT SY	204.0110 REMOVING ASPHALTIC SURFACE SY	204.0150 REMOVING CURB & GUTTER LF	204.0155 REMOVING CONCRETE SIDEWALK SY
0010	3363+75	-	3366+60	SOUTH OF INTERSECTION OF STH 158 & E FRONTAGE RD	253		11	9
0010	3366+19		3366+23	SE QUADRANT OF STH 158 & E FRONTAGE RD (GUARDRAIL MOW STRIP)	2		4	
0010	3367+10		3369+90	NORTH OF INTERSECTION AT STH 158 & E FRONTAGE RD	182		14	31
0010				NE CORNER ISLAND OF STH 158 & CTH H				17
0010	103+50		104+40	WEST OF INTERSECTION AT STH 158 & FRONTAGE RD	117		21	
0010	105+35		106+20	EAST OF INTERSECTION AT STH 158 & FRONTAGE RD	108		26	16
0010	28+90	-	29+70	SOUTH OF INTERSECTION AT STH 165 & CTH H	234	15	10	4
0010	30+35	-	31+05	NORTH OF INTERSECTION AT STH 165 & CTH H	226	15	10	8
0010	509+50	-	510+05	WEST OF INTERSECTION AT STH 165 & CTH H	61	5	10	4
0010	511+15	-	511+70	EAST OF INTERSECTION AT STH 165 & CTH H	67	11	10	5
0010		-						
				TOTAL 0010	1,250	46	116	94

3

CONCRETE PAVEMENT

CATEGORY	STATION	TO	STATION	LOCATION	415.1090 CONCRETE PAVEMENT HES 9-INCH SY	415.1100 CONCRETE PAVEMENT HES 10-INCH SY	416.0610 DRILLED TIE BARS EACH	416.0620 DRILLED DOWEL BARS EACH	602.0410 CONCRETE SIDEWALK 5-INCH SF	690.0250 SAWING CONCRETE LF
0010	3365+90	-	3366+60	SOUTH OF INTERSECTION OF STH 158 & FRONTAGE RD		253	60	82	80	159
0010	3366+19		3366+23	SE QUADRANT OF STH 158 & E FRONTAGE RD (TRAFFIC SIGNAL CONDUIT INSTALLATION)						17
0010	3367+10		3367+75	NORTH OF INTERSECTION AT STH 158 & FRONTAGE RD		182	42	58	275	178
0010				NE CORNER ISLAND OF STH 158 & CTH H					155	
0010	103+50		104+40	WEST OF INTERSECTION AT STH 158 & FRONTAGE RD		117	60	32		191
0010	105+35		106+20	EAST OF INTERSECTION AT STH 158 & FRONTAGE RD		108	57	26	145	184
0010	28+90	-	29+70	SOUTH OF INTERSECTION AT STH 165 & CTH H	234		46	91	40	222
0010	30+35	-	31+05	NORTH OF INTERSECTION AT STH 165 & CTH H	226		48	72	70	200
0010	509+50	-	510+05	WEST OF INTERSECTION AT STH 165 & CTH H	61		40	28	40	129
0010	511+15	-	511+70	EAST OF INTERSECTION AT STH 165 & CTH H	67		40	28	45	132
0010		-								
				TOTAL 0010	588	660	393	417	850	1,412

3

3

ASPHALTIC PAVEMENT

CATEGORY	STATION	TO	STATION	LOCATION	305.0110 BASE AGGREGATE DENSE 3/4-INCH TON	455.0605 TACK COAT GAL	460.5224 HMA PAVEMENT 4 LT 58-28 S TON	690.0150 SAWING ASPHALT LF	SPV.0195.01 SPECIAL (01. ASPHALTIC REPAIR) TON
0010	3363+75	-	3364+00	SOUTH OF INTERSECTION OF STH 158 & FRONTAGE RD		3		60	13
0010	5369+75		5369+90	NORTH OF INTERSECTION AT STH 158 & FRONTAGE RD		1		45	5
0010	29+40	-	29+70	SW CORNER OF INTERSECTION AT STH 165 & CTH H		1	3		
0010	30+30	-	30+65	NW CORNER OF INTERSECTION AT STH 165 & CTH H		1	3		
0010	29+40	-	29+70	SE CORNER OF INTERSECTION AT STH 165 & CTH H		0	1		
0010	30+30	-	30+65	NE CORNER OF INTERSECTION ATF STH 165 & CTH H		1	2		
0010		-		UNDISTRIBUTED	5				
				TOTAL 0010	5	7	10	105	18

3

EROSION CONTROL

STATION	TO	STATION	LOCATION	625.0100 TOPSOIL SY	625.0500 SALVAGED TOPSOIL SY	628.1504 SILT FENCE LF	628.1520 SILT FENCE MAINTENANCE LF	628.1905 MOBILIZATIONS EROSION CONTROL EACH	628.1910 MOBILIZATIONS EMERGENCY EROSION CONTROL EACH	628.2006 EROSION MAT URBAN CLASS I TYPE A SY	628.7015 INLET PROTECTION TYPE C EACH	628.7020 INLET PROTECTION TYPE D EACH	629.0210 FERTILIZER TYPE B CWT	630.0130 SEEDING MIXTURE NO. 30 LB	630.0500 SEED WATER MGAL
3365+90	-	3366+60	SOUTH OF INTERSECTION OF STH 158 & FRONTAGE RD												
			SW CORNER OF STH 158 & FRONTAGE RD			145.00	145.00				3.00				
3367+10		3367+75	NORTH OF INTERSECTION AT STH 158 & FRONTAGE RD												
			NE CORNER OF STH 158 & FRONTAGE RD			205.00	205.00				1.00				
			NE CORNER ISLAND OF STH 158 & CTH H	440.00	670.00					1110.00			0.50	50.00	4.00
103+50		104+40	WEST OF INTERSECTION AT STH 158 & FRONTAGE RD								11.00				
			NW CORNER OF STH 158 & FRONTAGE RD			470.00	470.00								
105+35		106+20	EAST OF INTERSECTION AT STH 158 & FRONTAGE RD								7.00				
			SE CORNER OF STH 158 & FRONTAGE RD			430.00	430.00								
			UNDISTRIBUTED					1	1			2			
28+90	-	29+70	SOUTH OF INTERSECTION AT STH 165 & CTH H												
			SW CORNER OF STH 165 & CTH H			165.00	165.00				1.00				
30+35	-	31+05	NORTH OF INTERSECTION AT STH 165 & CTH H												
			NE CORNER OF STH 165 & CTH H			115.00	115.00				2.00				
509+50	-	510+05	WEST OF INTERSECTION AT STH 165 & CTH H	110.00	170.00					280.00			0.13	12.50	4.00
			NW CORNER OF STH 165 & CTH H			135.00	135.00				2.00				
511+15	-	511+70	EAST OF INTERSECTION AT STH 165 & CTH H												
			SE CORNER OF STH 165 & CTH H			155.00	155.00				5.00				
	-		UNDISTRIBUTED					1	1			2			
	-														
			TOTAL 0010	550	840	1,820	1,820	2	2	1,390	32	4	1	63	8

3

3

TRAFFIC CONTROL

CATEGORY	STATION	TO	STATION	LOCATION	643.0300 TRAFFIC CONTROL DRUMS DAY	643.0420 TRAFFIC CONTROL BARRICADES TYPE III DAY	643.0705 TRAFFIC CONTROL WARNING LIGHTS TYPE A DAY	643.0715 TRAFFIC CONTROL WARNING LIGHTS TYPE C DAY	643.0800 TRAFFIC CONTROL ARROW BOARDS DAY	643.0900 TRAFFIC CONTROL SIGNS DAY	643.1050 TRAFFIC CONTROL SIGNS PCMS DAY	643.5000 TRAFFIC CONTROL EACH
0010	3365+90	-	3366+60	SOUTH OF INTERSECTION OF STH 158 & FRONTAGE RD	600	500	1000	-	-	600	14	
0010	3367+10		3367+75	NORTH OF INTERSECTION AT STH 158 & FRONTAGE RD	550	500	1000	-	-	550	14	
0010	103+50		104+40	WEST OF INTERSECTION AT STH 158 & FRONTAGE RD	700	350	700	700	50	700	-	1
0010	105+35		106+20	EAST OF INTERSECTION AT STH 158 & FRONTAGE RD	450	350	700	-	50	450	-	
0010	rr	-	29+70	SOUTH OF INTERSECTION AT STH 165 & CTH H	693	756	1512	-	-	693	14	
0010	30+35	-	31+05	NORTH OF INTERSECTION AT STH 165 & CTH H	819	756	1512	-	-	819	14	
0010	509+50	-	510+05	WEST OF INTERSECTION AT STH 165 & CTH H	1071	378	756	2016	63	1071	-	
0010	511+15	-	511+70	EAST OF INTERSECTION AT STH 165 & CTH H	1638	441	882	1512	63	1638	-	
0010				E FRONTAGE Rd NB (CTH C - 71ST ST)		-	-			1000		
0010				E FRONTAGE Rd NB (71ST ST - CTH S)		150	300			450		
0010				E FRONTAGE Rd NB (CTH S - CTH E)		-	-			150		
0010				W FRONTAGE Rd NB (CTH C - 71ST ST)		-	-			1200		
0010				W FRONTAGE Rd NB (71ST ST - CTH S)		-	-			1200		
0010				W FRONTAGE Rd NB (CTH S - CTH E)		-	-			-		
0010				E FRONTAGE Rd SB (CTH C - 71ST ST)		-	-			550		
0010				E FRONTAGE RD SB (71ST ST - CTH S)		150	300			50		
0010				E FRONTAGE Rd SB (CTH S - CTH E)		-	-			800		
0010				W FRONTAGE Rd SB (CTH C - 71ST ST)		-	-			800		
0010				W FRONTAGE RD SB (71ST ST - CTH S)		-	-			1400		
0010				W FRONTAGE Rd SB (CTH S - CTH E)		-	-			350		
0010				STH 50 (NB & SB)		-	-			4800		
0010				71ST ST		-	-			1800		
0010				CTH K/60TH ST (NB & SB)		-	-			900		
0010				STH 158 (NB & SB)		-	-			2500		
				38TH ST (NB & SB)		-	-			750		
0010				STH 142/CTH S		-	-			4400		
				IH 94 NB EXIT RAMP		-	-			1100		
				IH 94 SB EXIT RAMP		-	-			1100		
0010		-		UNDISTRIBBUTED	500	100	200	200		1,000		
				TOTAL 0010	7,021	4,431	8,862	4,428	226	32,821	56	1

3

PAVEMENT MARKING

CATEGORY	STATION	TO	STATION	LOCATION	646.1020 MARKING LINE EPOXY 4-INCH WHITE LF	646.1020 MARKING LINE EPOXY 4-INCH YELLOW LF	646.1545 MARKING LINE GROOVED WET REF CONTRAST EPOXY 4-INCH LF	646.3545 MARKING LINE GROOVED WET REF CONTRAST EPOXY 8-INCH LF	646.5020 MARKING ARROW EPOXY EACH	646.5120 MARKING WORD EPOXY EACH	646.5220 MARKING SYMBOL EPOXY EACH	646.6120 MARKING STOP LINE EPOXY 18-INCH LF	646.6220 MARKING YIELD LINE EPOXY 18-INCH EACH	646.7120 MARKING DIAGONAL EPOXY 12-INCH WHITE LF	646.7120 MARKING DIAGONAL EPOXY 12-INCH YELLOW LF	646.8120 MARKING CURB EPOXY LF	646.8220 MARKING ISLAND NOSE EPOXY EACH
0010	3365+90	-	3366+60	SOUTH OF INTERSECTION OF STH 158 & FRONTAGE RD	805	1,180	90	308	2	1		40			90	20	2
0010	3367+10		3367+75	NORTH OF INTERSECTION AT STH 158 & FRONTAGE RD	625	960	55	201	2	1		55			45	20	2
0010	103+50		104+40	WEST OF INTERSECTION AT STH 158 & FRONTAGE RD	1,300	610	229	1,449	7	6		65	20	90		50	5
0010	105+35		106+20	EAST OF INTERSECTION AT STH 158 & FRONTAGE RD	2,350	1,430	636	1,335	3	3		65				30	3
0010	21+89	-	30+00	SOUTH OF INTERSECTION AT STH 165 & CTH H	1,710	1,990	280	408	2	1	1	25	20		215	40	4
0010	30+00	-	37+90	NORTH OF INTERSECTION AT STH 165 & CTH H	1,440	1,750	590	495	3	2		40	20		100	40	4
0010	503+75	-	510+75	WEST OF INTERSECTION AT STH 165 & CTH H	1,290	1,250	313	768	5	3		35	15			30	3
0010	510+75	-	517+25	EAST OF INTERSECTION AT STH 165 & CTH H	1,975	1,210	305	795	4	3						40	4
0010		-		UNDISTRIBUTED	500	500	400	400									
0010		-		SUB-TOTAL	11,995	10,880								90	450		
				TOTAL 0010	22,875		2,898	6,158	28	20	1	325	75	540		270	27

3

ROADWAY

CATEGORY	STATION TO STATION	LOCATION	213.0100.01 FINISHING ROADWAY (PROJECT) (01. 3700-11-70) EACH	642.5001 FIELD OFFICE TYPE B EACH	SPV.0060.20 SPECIAL (20. UTILITY LINE OPENING (ULO)) EACH
0010	-	INTERSECTION OF STH 158 & E FRONTAGE RD	1	1	3
0010	-	INTERSECTION OF STH 165 & CTH H			3
0010	-				
		TOTAL 0010	1	1	6

FMS

CATEGORY	STATION TO STATION	LOCATION	643.1000 TRAFFIC CONTROL SIGNS FIXED MESSAGE SF
0010	-		24
0010	-		20
0010	-		
0010	-		32
0010	-		
		TOTAL 0010	76

3

CURB & GUTTER

CATEGORY	STATION	TO	STATION	LOCATION	601.0555 CONCRETE CURB & GUTTER 6-INCH SLOPED 36-INCH TYPE A LF	601.0557 CONCRETE CURB & GUTTER 6-INCH SLOPED 36-INCH TYPE D LF
0010	3365+90	-	3366+60	SOUTH OF INTERSECTION OF STH 158 & FRONTAGE RD	11	
0010	3366+19		3366+23	SE QUADRANT OF STH 158 & E FRONTAGE RD (TRAFFIC SIGNAL CONDUIT INSTALLATION)	4	
0010	3367+10		3367+75	NORTH OF INTERSECTION AT STH 158 & FRONTAGE RD	14	
0010	103+50		104+40	WEST OF INTERSECTION AT STH 158 & FRONTAGE RD	21	
0010	105+35		106+20	EAST OF INTERSECTION AT STH 158 & FRONTAGE RD	26	
0010	28+90	-	29+70	SOUTH OF INTERSECTION AT STH 165 & CTH H		10
0010	30+35	-	31+05	NORTH OF INTERSECTION AT STH 165 & CTH H		10
0010	509+50	-	510+05	WEST OF INTERSECTION AT STH 165 & CTH H	10	
0010	511+15	-	511+70	EAST OF INTERSECTION AT STH 165 & CTH H	10	
0010		-				
				TOTAL 0010	96	20

3

3

3

GUARDRAIL

CATEGORY	STATION	TO	STATION	LOCATION	614.0395 GUARDRAIL MOW STRIP CONCRETE SY	614.0920 SALVAGED RAIL LF	614.0950 REPLACING GUARDRAIL POSTS AND BLOCKS EACH	614.0951 REPLACING GUARDRAIL RAIL AND HARDWARE LF
	3366+12		3366+25	SE QUADRANT OF STH 158 & E FRONTAGE RD (TRAFFIC SIGNAL CONDUIT INSTALLATION)	2	13		13
0010	105+64	-	105+89	EB STH 158 (RT)		50	3	50
0010	5367+90	-	5368+15	EAST FRONTAGE RD (RT)		50	3	50
0010		-						
				TOTAL 0010	2	113	6	113

3

SIGN NO.	SIGN CODE & SIZE	SIGN MESSAGE	SIGN SIZE W [IN.]	X x	H [IN.]	637.2210 SIGNS TYPE II REFLC H [SF]	637.2230 SIGNS TYPE II REFLC F [SF]	637.2215 SIGNS TYPE II REFLC H FOLDING [SF]	638.2602 REMOVING SIGNS TYPE II [EA]	638.3000 REMOVING SMALL SIGN SUPPORTS [EA]	634.0618 WOOD POSTS 4"X 6"x18' [EA]	638.2102 MOVE SIGNS TYPE II [EA]	MOUNT ON SAME POST AS SIGN #	REMARKS / NEW SIGN LOCATION
1	R1-1F (3)		36	X	36	--	--	7.460	--	--	--	--	--	MOUNT ON SIGNAL POLE
2	R1-1F (3)		36	X	36	--	--	7.460	--	--	--	--	--	MOUNT ON BACK OF EXISTING R5-1
3	R1-1F (3)		36	X	36	--	--	7.460	--	--	--	--	--	MOUNT ON SIGNAL POLE
4	SP	FOLDING SIGN				--	--	--	--	1	1	1	--	
5	R1-1					--	--	--	1	1	--	--	--	ALSO REMOVES R6-3A, W4-4C AND R4-7
6	NOT USED													
7	NOT USED													
8	R1-1					--	--	--	1	1	--	--	--	ALSO REMOVES R6-3 AND W4-4C
9	R5-1 (2S)		30	X	30	6.250	--	--	--	--	--	--	--	MOUNT ON SIGNAL POLE
10	R1-1F (3)		36	X	36	--	--	7.460	--	--	--	--	9	MOUNT ON SIGNAL POLE
11	R1-1F (3)		36	X	36	--	--	7.460	--	--	--	--	--	MOUNT ON SIGNAL POLE
12	R4-7 (2S)		24	X	30	5.000	--	--	--	--	--	--	11	MOUNT ON SIGNAL POLE
13	R1-1F (3)		36	X	36	--	--	7.460	--	--	--	--	--	MOUNT ON SIGNAL POLE
14	W12-1D (2S)		24	X	24	--	4.000	--	1	1	1	--	--	MOUNT HEIGHT 2 FEET
15	R1-2					--	--	--	1	1	--	--	--	
16	R5-1 (3)		36	X	36	9.000	--	--	--	--	--	--	13	MOUNT ON SIGNAL POLE
17	R5-1 (3)		36	X	36	9.000	--	--	--	--	--	--	3	MOUNT ON SIGNAL POLE
18	R1-2					--	--	--	1	1	--	--	--	
19	R1-1F (3)		36	X	36	--	--	7.460	--	--	1	--	--	--
20	R1-1F (3)		36	X	36	--	--	7.460	--	--	--	--	--	MOUNT ON BACK OF EXISTING R5-1
21	R1-1					--	--	--	1	1	--	--	--	ALSO REMOVES R6-3, W4-4C AND R4-7
22	NOT USED													
23	NOT USED													
24	R1-1F (3)		36	X	36	--	--	7.460	--	--	--	--	--	MOUNT ON SIGNAL POLE
25	R4-7 (2S)		24	X	30	5.000	--	--	--	--	--	--	21	MOUNT ON SIGNAL POLE
26	R1-1					--	--	--	1	1	--	--	--	ALSO REMOVES R6-3, R5-1 AND W4-4C
27	NOT USED													
28	NOT USED													
29	R4-7 (3)		36	X	48	12.000	--	--	1	1	--	--	--	MOUNT ON SIGNAL POLE
30	R5-1 (2S)		30	X	30	6.250	--	--	--	--	--	--	--	MOUNT ON SIGNAL POLE

3

SIGN NO.	SIGN CODE & SIZE	SIGN MESSAGE	SIGN SIZE W [IN.]	X x	H [IN.]	637.2210 SIGNS TYPE II REFLC H [SF]	637.2230 SIGNS TYPE II REFLC F [SF]	637.2215 SIGNS TYPE II REFLC H FOLDING [SF]	638.2602 REMOVING SIGNS TYPE II [EA]	638.3000 REMOVING SMALL SIGN SUPPORTS [EA]	634.0618 WOOD POSTS 4"X 6"x18' [EA]	638.2102 MOVE SIGNS TYPE II [EA]	MOUNT ON SAME POST AS SIGN #	REMARKS / NEW SIGN LOCATION
31	R1-1F (3)		36	X	36	--	--	7.460	--	--	--	--	30	MOUNT ON SIGNAL POLE
32	R6-2L (2S)		24	X	30	5.000	--	--	1	1	--	--	--	MOUNT ON SIGNAL POLE
33	R6-3 (2S)		30	X	24	5.000	--	--	--	--	--	--	31	MOUNT ABOVE R1-1F ON SIGNAL POLE
34	R6-3 (2S)		30	X	24	5.000	--	--	--	--	--	--	24	MOUNT ABOVE R1-1F ON SIGNAL POLE
35	R6-3 (2S)		30	X	24	5.000	--	--	--	--	--	--	10	MOUNT ABOVE R1-1F ON SIGNAL POLE
36	R6-3 (2S)		30	X	24	5.000	--	--	--	--	--	--	11	MOUNT ABOVE R1-1F ON SIGNAL POLE
37	R5-1A (3)		42	X	30	8.750	--	--	--	--	1	--	--	--
38	R5-1A (3)		42	X	30	8.750	--	--	--	--	1	--	--	--
39	W3-3 (2S)		36	X	36	--	9.000	--	--	--	1	--	--	SHEET 4 OF 12
40	M1-94S	STH 158 52ND ST	78	X	18	9.750	--	--	--	--	--	--	--	SHEET 2 OF 12; MOUNT ON MAST ARM
41	M1-94H	E FRONTAGE RD	102	X	18	12.750	--	--	--	--	--	--	--	MOUNT ON MAST ARM
42	M1-94H	E FRONTAGE RD	102	X	18	12.750	--	--	--	--	--	--	--	MOUNT ON MAST ARM
43	M1-94S	STH 158 52ND ST	78	X	18	9.750	--	--	--	--	--	--	--	MOUNT ON MAST ARM
44	W3-3 (2S)		36	X	36	--	9.000	--	--	--	1	--	--	SHEET 6 OF 12
45	J1-1 (2S)		24	X	39	6.500	--	--	--	--	1	--	--	--
	M2-1		21	x	15									
	M1-6	STH 158	24	x	24									
46	R1-1F (3)		36	X	36	--	--	7.460	1	--	--	--	--	SHEET 8 OF 12; MOUNT ON SIGNAL POLE
47	R1-1F (3)		36	X	36	--	--	7.460	1	--	--	--	--	MOUNT ON SIGNAL POLE
48	R6-2L (2S)		24	X	30	5.000	--	--	1	--	1	--	--	--
49	R5-1 (2S)		30	X	30	6.250	--	--	--	--	--	--	--	MOUNT ON SIGNAL POLE
50	R6-2L (3)		36	X	48	12.000	--	--	1	--	--	--	--	MOUNT ON SIGNAL POLE
51	R1-1F (3)		36	X	36	--	--	7.460	1	--	--	--	--	MOUNT ON SIGNAL POLE
52	M1-90 (2M)		24	X	24	4.000	--	--	1	--	--	--	--	MOUNT ON SIGNAL POLE
53	R1-1F (3)		36	X	36	--	--	7.460	1	--	--	--	--	MOUNT ON SIGNAL POLE
54	R6-2L (2S)		24	X	30	5.000	--	--	1	--	--	--	--	MOUNT ON SIGNAL POLE
55	R4-7 (2S)		24	X	30	5.000	--	--	1	--	--	--	51	MOUNT ON SIGNAL POLE

3

SIGN NO.	SIGN CODE & SIZE	SIGN MESSAGE	SIGN SIZE W [IN.]	X x	H [IN.]	637.2210 SIGNS TYPE II REFLC H [SF]	637.2230 SIGNS TYPE II REFLC F [SF]	637.2215 SIGNS TYPE II REFLC H FOLDING [SF]	638.2602 REMOVING SIGNS TYPE II [EA]	638.3000 REMOVING SMALL SIGN SUPPORTS [EA]	634.0618 WOOD POSTS 4"X 6"x18' [EA]	638.2102 MOVE SIGNS TYPE II [EA]	MOUNT ON SAME POST AS SIGN #	REMARKS / NEW SIGN LOCATION
56	M1-90 (2M)		24	X	24	4.000	--	--	1	--	--	--	46	MOUNT ON SIGNAL POLE
57	R4-7 (3)		36	X	48	12.000	--	--	1	--	--	--	52	MOUNT ON SIGNAL POLE
58	R1-1F (3)		36	X	36	--	--	7.460	1	--	--	--	57	MOUNT ON SIGNAL POLE
59	R4-7 (2S)		24	X	30	5.000	--	--	--	--	--	--	--	MOUNT ON SIGNAL POLE
60	R4-7 (3)		36	X	48	12.000	--	--	1	--	--	--	56	MOUNT ON SIGNAL POLE
61	R6-2L (3)		36	X	48	12.000	--	--	1	--	--	--	--	MOUNT ON SIGNAL POLE
62	R1-1F (3)		36	X	36	--	--	7.460	1	--	--	--	61	MOUNT ON SIGNAL POLE
63	W12-1D (2S)		24	X	24	--	4.000	--	1	1	1	--	--	MOUNT HEIGHT 2 FEET
64	W12-1D (2S)		24	X	24	--	4.000	--	--	--	1	--	--	MOUNT HEIGHT 2 FEET
65	R1-1F (3)		36	X	36	--	--	7.460	1	--	--	--	49	MOUNT ON SIGNAL POLE
66	R1-1F (3)		36	X	36	--	--	7.460	1	--	--	--	59	MOUNT ON SIGNAL POLE
67	R6-3 (2S)		30	X	24	5.000	--	--	--	--	--	--	65	MOUNT ABOVE R1-1F ON SIGNAL POLE
68	R6-3 (2S)		30	X	24	5.000	--	--	--	--	--	--	66	MOUNT ABOVE R1-1F ON SIGNAL POLE
69	R6-3 (2S)		30	X	24	5.000	--	--	--	--	--	--	51	MOUNT ABOVE R1-1F ON SIGNAL POLE
70	R6-3 (2S)		30	X	24	5.000	--	--	--	--	--	--	53	MOUNT ABOVE R1-1F ON SIGNAL POLE
71	M1-95S	STH 165 104TH ST				--	--	--	--	--	--	1	--	MOUNT ON MAST ARM
72	M1-94H	88TH AVE				--	--	--	1	--	--	--	--	--
73	M1-94S	COUNTY H 88TH AVE	84	X	18	10.500	--	--	--	--	--	--	--	MOUNT ON MAST ARM
74	M1-94S	COUNTY H 88TH AVE	84	X	18	10.500	--	--	--	--	--	--	--	MOUNT ON MAST ARM
75	M1-94S	STH 165 104TH ST				--	--	--	--	--	--	1	--	MOUNT ON MAST ARM
76	R5-1A (2S)		36	X	24	6.000	--	--	--	--	1	--	--	SHEET 4 OF 12
77	R5-1A (2S)		36	X	24	6.000	--	--	--	--	--	--	--	SHEET 5 OF 12; MOUNT BACK OF ESTR
78	R5-1A (2S)		36	X	24	6.000	--	--	--	--	1	--	--	SHEET 11 OF 12
79	R5-1A (2S)		36	X	24	6.000	--	--	--	--	1	--	--	SHEET 11 OF 12
80	R1-2 (2S)		36	X	31	3.880	--	--	--	--	1	--	--	SHEET 8 OF 12
		UNDISTRIBUTED									2			
	TOTALS					297.630	30.000	134.280	28	11	17	3		

SHEET 3 OF 3

STH 158 & E FRONTAGE RD
KENOSHA COUNTY
CATEGORY 0010
S30-1495

3

STATE FURNISHED MATERIALS SUMMARY

EACH	DESCRIPTION
1	TRAFFIC SIGNAL CONTROLLER, FULLY ACTUATED, 8 PHASE
1	TRAFFIC SIGNAL CABINET
1	ETHERNET SWITCH
3	POLES TYPE 9 SPECIAL
2	POLES TYPE 12
1	MONOTUBE ARMS 35-FT TYPE 9/10 SPEC POLE
1	MONOTUBE ARMS 40-FT TYPE 9/10 SPEC POLE
1	MONOTUBE ARMS 45-FT TYPE 9/10 SPEC POLE
2	MONOTUBE ARMS 55-FT
2	RADAR DETECTOR
4	EVP DETECTOR HEADS

STATE FURNISHED FOR INFORMATION ONLY

SIGNAL BASE NO.	POLES TYPE 9 SPECIAL EACH	POLES TYPE 12 EACH	MONOTUBE ARMS 35-FT TYPE 9/10 SPEC POLE EACH	MONOTUBE ARMS 40-FT TYPE 9/10 SPEC POLE EACH	MONOTUBE ARMS 45-FT TYPE 9/10 SPEC POLE EACH	MONOTUBE ARMS 55-FT EACH	RADAR DETECTOR EACH	EVP DETECTOR HEADS EACH
SB3	1	--	--	--	1	--	--	1
SB5	--	1	--	--	--			
SB7	1	--	--	1	--	1	1	1
SB10	1	--	1	--	--	--	--	1
SB13	--	1	--	--	--	1	1	1
TOTAL	3	2	1	1	1	2	2	4

3

CONDUIT

FROM	TO	652.0225 CONDUIT RIGID NONMETALLIC SCHEDULE 40 2-INCH L.F.	652.0235 CONDUIT RIGID NONMETALLIC SCHEDULE 40 3-INCH L.F.	652.0605 CONDUIT SPECIAL 2-INCH L.F.	652.0615 CONDUIT SPECIAL 3-INCH L.F.
CB1	PB1	--	63	--	--
CB1	PB19	--	144	--	--
PB1	PB2	224	--	--	--
PB1	SB1	9	--	--	--
EX CV3681	CB1	165	--	--	--
PB1	PB3	--	--	--	102
PB3	PB4	12	--	--	--
PB3	PB5	--	--	--	100
PB4	SB2	20	--	--	--
PB5	SB3	--	9	--	--
PB5	PB6	--	82	--	--
PB6	PB7	--	--	--	59
PB6	PB8	--	--	--	208
PB7	SB4	5	--	--	--
PB8	SB5	--	28	--	--
PB8	PB9	--	--	--	58
PB9	SB6	12	--	--	--
PB9	PB10	--	--	--	126
PB10	SB7	--	27	--	--
PB10	PB11	--	136	--	--
PB11	SB8	16	--	--	--
PB11	PB12	225	--	15	--
PB11	PB13	--	--	--	80
PB13	SB9	5	--	--	--
PB13	PB14	--	--	--	100
PB14	SB10	--	14	--	--
PB14	PB15	--	108	--	--
PB15	SB11	27	--	--	--
PB15	PB16	--	--	--	130
PB16	PB17	36	--	--	--
PB16	PB18	--	--	--	70
PB17	SB12	31	--	--	--
PB18	SB13	--	21	--	--
PB18	PB19	--	--	--	168
TOTAL		787	632	15	1201

COMMUNICATIONS EQUIPMENT (FOR INFORMATION ONLY)

LOCATION	INSTALL FIBER OPTIC COMMUNICATIONS IN CABINET EACH	ST-ST SINGLE MODE FIBER JUMPER 4-FEET EACH	CAT-5E-CABLE 5-FEET EACH
CB1 (S30-1495)	1	2	2
TOTAL	1	2	2

STATE-FURNISHED COMM. EQUIPMENT

(FOR INFORMATION ONLY)

FROM	TO	PATCH PANEL WITH FIBER OPTIC CABLE PIGTAIL 6-CT EACH	LF
CB1 (S30-1495)	I/C PB1	1	500
	TOTAL	1	500

PAGE 1 OF 7

STH 158 & E FRONTAGE RD
KENOSHA COUNTY
CATEGORY 0010
S30-1495

3

TRAFFIC DETECTOR LOOPS

LOOP NO.	HOME RUN PB	LOCATION** ^	SIZE (FT)x(FT)	NO. OF TURNS	PAVEMENT TYPE	SDD INSTALLATION REFERENCE	652.0800 CONDUIT LOOP DETECTOR L.F.	655.0700 LOOP DETECTOR LEAD IN CABLE L.F.	655.0800 LOOP DETECTOR WIRE L.F.
11	PB16	STA 103+76; 41.8' LT	6X20	3	CONCRETE	9F15-4B - LOOP DETECTOR INSTALLED IN BASE COURSE WITH PULL (SPLICE) BOX OFF ROADWAY (OPTION 2)	90	164	206
12	PB17	STA 104+05; 42.6' LT	6X20	3	CONCRETE	9F15-4B - LOOP DETECTOR INSTALLED IN BASE COURSE WITH PULL (SPLICE) BOX OFF ROADWAY (OPTION 2)	76	200	192
13	PB17	STA 104+33; 42.8' LT	6X20	3	CONCRETE	9F15-4B - LOOP DETECTOR INSTALLED IN BASE COURSE WITH PULL (SPLICE) BOX OFF ROADWAY (OPTION 2)	76	200	192
41	PB2	STA 104+54; 387' LT	6X6	4	ASPHALT	9F15-4B - LOOP DETECTOR INSTALLED IN BASE COURSE WITH PULL (SPLICE) BOX OFF ROADWAY (OPTION 2)	38	253	122
42	PB4	STA 104+68; 154.7' LT	6X20	3	CONCRETE	9F15-4B - LOOP DETECTOR INSTALLED IN BASE COURSE WITH PULL (SPLICE) BOX OFF ROADWAY (OPTION 2)	68	89	184
43	PB4	STA 104+69; 126.4' LT	6X20	3	CONCRETE	9F15-4B - LOOP DETECTOR INSTALLED IN BASE COURSE WITH PULL (SPLICE) BOX OFF ROADWAY (OPTION 2)	72	89	188
44	PB4	STA 104+48; 164.8' LT	6X20	3	CONCRETE	9F15-4B - LOOP DETECTOR INSTALLED IN BASE COURSE WITH PULL (SPLICE) BOX OFF ROADWAY (OPTION 2)	116	89	232
45	PB4	STA 104+44; 136.2' LT	6X20	3	CONCRETE	9F15-4B - LOOP DETECTOR INSTALLED IN BASE COURSE WITH PULL (SPLICE) BOX OFF ROADWAY (OPTION 2)	110	89	226
51	PB9	STA 105+95; 30.2' LT	6X20	3	CONCRETE	9F15-4B - LOOP DETECTOR INSTALLED IN BASE COURSE WITH PULL (SPLICE) BOX OFF ROADWAY (OPTION 2)	112	303	228
52	PB9	STA 105+66; 30.1' LT	6X20	3	CONCRETE	9F15-4B - LOOP DETECTOR INSTALLED IN BASE COURSE WITH PULL (SPLICE) BOX OFF ROADWAY (OPTION 2)	68	303	184
53	PB9	STA 105+38; 29.9' LT	6X20	3	CONCRETE		74	303	190
81	PB12	STA 104+05; 288.2' RT	6X12	5	ASPHALT	9F15-4B - LOOP DETECTOR INSTALLED IN BASE COURSE WITH PULL (SPLICE) BOX OFF ROADWAY (OPTION 2)	70	609	226
82	PB13	STA 104+86; 75.5' RT	6X20	3	CONCRETE	9F15-4B - LOOP DETECTOR INSTALLED IN BASE COURSE WITH PULL (SPLICE) BOX OFF ROADWAY (OPTION 2)	72	330	188
83	PB13	STA 104+91; 48.0' RT	6X20	3	CONCRETE	9F15-4B - LOOP DETECTOR INSTALLED IN BASE COURSE WITH PULL (SPLICE) BOX OFF ROADWAY (OPTION 2)	76	330	192
84	PB11	STA 105+00; 82.9' RT	6X20	3	CONCRETE	9F15-4B - LOOP DETECTOR INSTALLED IN BASE COURSE WITH PULL (SPLICE) BOX OFF ROADWAY (OPTION 2)	76	370	192
85	PB11	STA 105+09; 56.0' RT	6X20	3	CONCRETE	9F15-4B - LOOP DETECTOR INSTALLED IN BASE COURSE WITH PULL (SPLICE) BOX OFF ROADWAY (OPTION 2)	70	370	186
86	PB11	STA 105+16; 41.7' RT	6X8	5	CONCRETE	9F15-4B - LOOP DETECTOR INSTALLED IN BASE COURSE WITH PULL (SPLICE) BOX OFF ROADWAY (OPTION 2)	84	370	208
						TOTAL	1348	4461	3336

** LOCATION IS TO FRONT CENTER OF DETECTOR LOOP
^ FINAL LOCATION TO BE DETERMINED BY THE ENGINEER IN THE FIELD.

3

PULL BOXES

PULL BOX NO.	LOCATION^	653.0135 PULL BOXES STEEL 24x36-INCH EACH	653.0140 PULL BOXES STEEL 24x42-INCH EACH
PB1	STA 104+27; 162.7' LT	--	1
PB2	STA 104+44; 385.9' LT	1	--
PB3	STA 104+79; 165.3' LT	--	1
PB4	STA 104+79; 153.1' LT	1	--
PB5	STA 105+28; 167.9' LT	--	1
PB6	STA 105+65; 152.2' LT	--	1
PB7	STA 105+10; 128.6' LT	--	1
PB8	STA 105+66; 48.2' LT	--	1
PB9	STA 105+66; 19.1' LT	--	1
PB10	STA 105+67; 45.5' RT	--	1
PB11	STA 105+13; 77.9' RT	--	1
PB12	STA 104+24; 299.1' RT	1	--
PB13	STA 104+73; 72.5' RT	--	1
PB14	STA 104+24; 65.1' RT	--	1
PB15	STA 103+75; 44.5' RT	--	1
PB16	STA 103+74; 20.5' LT	--	1
PB17	STA 104+09; 29.2' LT	1	--
PB18	STA 103+74; 55.9' LT	--	1
PB19	STA 103+63; 138.9' LT	--	1
	TOTAL	4	15

^ FINAL LOCATION TO BE DETERMINED BY THE ENGINEER IN THE FIELD.

CONCRETE BASES

SIGNAL BASE NO.	LOCATION^	654.0101 CONCRETE BASES TYPE 1 EACH	654.0113 CONCRETE BASES TYPE 13 EACH	654.0120 CONCRETE BASES TYPE 10-SPECIAL EACH	SPV.0060.19 CONCRETE BASE TYPE 10 SPECIAL EXTENSION EACH	654.0217 CONCRETE CONTROL CABINET BASES TYPE 9 SPECIAL EACH
CB1	STA 104+10; 152.9' LT	--	--	--	--	1
SB1	STA 104+28; 153.4' LT	1	--	--	--	--
SB2	STA 104+80; 134.1' LT	1	--	--	--	--
SB3	STA 105+33; 160.8' LT	--	--	1	--	--
SB4	STA 105+13; 125.7' LT	1	--	--	--	--
SB5	STA 105+39; 44.0' LT	--	1	--	--	--
SB6	STA 105+54; 19.3' LT	1	--	--	--	--
SB7	STA 105+42; 55.5' RT	--	--	--	1	--
SB8	STA 105+23; 64.8' RT	1	--	--	--	--
SB9	STA 104+75; 68.0' RT	1	--	--	--	--
SB10	STA 104+29; 78.0' RT	--	--	1	--	--
SB11	STA 104+01; 48.5' RT	1	--	--	--	--
SB12	STA 104+40; 28.2' LT	1	--	--	--	--
SB13	STA 103+95; 56.4' LT	--	1	--	--	--
	TOTAL	8	2	2	1	1

^ FINAL LOCATION TO BE DETERMINED BY THE ENGINEER IN THE FIELD.

STH 158 & E FRONTAGE RD
KENOSHA COUNTY
CATEGORY 0010
S30-1495

3

TRAFFIC SIGNAL CABLE AND WIRE

FROM	TO	655.0240 CABLE TRAFFIC SIGNAL 7-14 AWG L.F.	655.0260 CABLE TRAFFIC SIGNAL 12-14 AWG L.F.
CB1	SB1	--	44
CB1	SB2	145	--
CB1	SB3	175	--
CB1	SB4	--	306
CB1	SB5	--	399
CB1	SB6	402	--
CB1	SB7	479	--
CB1	SB8	--	495
CB1	SB9	427	--
CB1	SB10	371	--
CB1	SB11	--	317
CB1	SB12	287	--
CB1	SB13	--	177
	TOTAL	2286 *	1738

* ADDITIONAL QUANTITY SHOWN ELSEWHERE ON PLAN

TRAFFIC SIGNAL EVP DETECTOR CABLE

FROM	TO	655.0900 TRAFFIC SIGNAL EVP DETECTOR CABLE L.F.
CB1	SB13 (HEAD A)	207
CB1	SB7 (HEAD B)	509
CB1	SB10 (HEAD C)	401
CB1	SB3 (HEAD D)	205
	TOTAL	1322

TRAFFIC SIGNAL CABLE AND WIRE

FROM	TO	655.0515 ELECTRICAL WIRE TRAFFIC SIGNALS 10 AWG L.F.
CB1	SB1	44
SB1	SB2	134
SB2	SB3	130
SB3	SB4	157
SB4	SB5	268
SB5	SB6	116
SB6	SB7	110
SB7	SB8	121
SB8	SB9	88
SB9	SB10	97
SB10	SB11	127
SB11	SB12	208
SB12	SB13	166
SB13	CB1	175
PB1	SB1	21
PB3	SB2	56
PB4	SB2	32
PB5	SB3	21
PB6	SB3	75
PB7	SB4	17
PB8	SB5	61
PB9	SB6	24
PB10	SB7	18
PB11	SB8	29
PB13	SB9	17
PB14	SB10	26
PB15	SB11	41
PB16	SB13	85
PB17	SB12	45
PB18	SB13	34
PB19	CB1	55
	TOTAL	2598

TRAFFIC SIGNAL CABLE AND WIRE

FROM	TO	655.0230 CABLE TRAFFIC SIGNAL 5-14 AWG L.F.	655.0240 CABLE TRAFFIC SIGNAL 7-14 AWG L.F.
SB1	HEAD 18	19	--
SB1	HEAD 20	19	--
SB2	HEAD 21	19	--
SB3	HEAD19	70	--
SB4	HEAD 6	--	22
SB4	HEAD 8	21	--
SB5	HEAD 7	--	22
SB5	HEAD 2	80	--
SB5	HEAD 3	80	--
SB6	HEAD 13	--	22
SB7	HEAD 4	65	--
SB8	HEAD 16	21	--
SB8	HEAD 22	19	--
SB9	HEAD 17	19	--
SB10	HEAD 23	60	--
SB11	HEAD 1	21	--
SB11	HEAD 14	--	22
SB12	HEAD 15	--	22
SB13	HEAD 5	--	22
SB13	HEAD 9	80	--
SB13	HEAD 10	80	--
SB13	HEAD 11	80	--
SB13	HEAD 12	80	--
	TOTAL	833	132 *

* ADDITIONAL QUANTITY SHOWN ELSEWHERE ON PLAN

3

STH 158 & E FRONTAGE RD
KENOSHA COUNTY
CATEGORY 0010
S30-1495

3

ELECTRICAL SERVICE METER BREAKER PEDESTAL

LOCATION*	656.0201.01 ELECTRICAL SERVICE METER BREAKER PEDESTAL EACH
STH 158 & E FRONTAGE RD	1
TOTAL	1

* FINAL LOCATION TO BE DETERMINED BY THE ENGINEER IN THE FIELD

POLES (CONTRACTOR FURNISHED)

SIGNAL BASE NO.	657.0100 PEDESTAL BASES EACH	657.0420 TRAFFIC SIGNAL STANDARDS ALUMINUM 13-FT EACH	657.0425 TRAFFIC SIGNAL STANDARDS ALUMINUM 15-FT EACH
SB1	1	1	--
SB2	1	1	--
SB4	1	--	1
SB6	1	--	1
SB8	1	1	--
SB9	1	1	--
SB11	1	--	1
SB12	1	--	1
TOTAL	8	4	4

POLES (STATE FURNISHED)

SIGNAL BASE NO.	SPV.0060.01 INSTALL POLES TYPE 9 SPECIAL EACH	SPV.0060.02 INSTALL POLES TYPE 12 EACH	SPV.0060.04 INSTALL MONOTUBE ARMS 35-FT TYPE 9/10 SPEC POLE EACH	SPV.0060.05 INSTALL MONOTUBE ARMS 40-FT TYPE 9/10 SPEC POLE EACH	SPV.0060.06 INSTALL MONOTUBE ARMS 45-FT TYPE 9/10 SPEC POLE EACH	SPV.0060.09 INSTALL MONOTUBE ARMS 55-FT EACH
SB3	1	--	--	--	1	--
SB5	--	1	--	--	--	1
SB7	1	--	--	1	--	--
SB10	1	--	1	--	--	--
SB13	--	1	--	--	--	1
TOTAL	3	2	1	1	1	2

PROJECT NO: 3700-11-70	HWY: STH 158	COUNTY: KENOSHA	MISCELLANEOUS QUANTITIES	SHEET: 98	E

STH 158 & E FRONTAGE RD
KENOSHA COUNTY
CATEGORY 0010
S30-1495

3

FACES

SIGNAL HEAD NO.	SIGNAL BASE NO.	658.0173 TRAFFIC SIGNAL FACE 3S 12-INCH EACH	658.0174 TRAFFIC SIGNAL FACE 4S 12-INCH EACH
1	SB11	1	--
2	SB5	1	--
3	SB5	1	--
4	SB7	1	--
5	SB13	--	1
6	SB4	--	1
7	SB5	--	1
8^	SB4	1	--
9^	SB13	1	--
10^	SB13	1	--
11^	SB13	1	--
12^	SB13	1	--
13	SB6	--	1
14	SB11	--	1
15	SB12	--	1
16	SB8	1	--
17	SB9	1	--
18	SB1	1	--
19	SB3	1	--
20	SB1	1	--
21	SB2	1	--
22	SB8	1	--
23	SB10	1	--
	TOTAL	17	6

^ DENOTES SIGNAL HOUSING WITH REFLECTIVE BACKPLATE

LED MODULES SUMMARY

SIGNAL HEAD NO.	SIGNAL BASE NO.	LED MODULES 12-INCH RED BALL EACH	LED MODULES 12-INCH YELLOW BALL EACH	LED MODULES 12-INCH GREEN BALL EACH	LED MODULES 12-INCH RED ARROW EACH	LED MODULES 12-INCH YELLOW ARROW EACH	LED MODULES 12-INCH GREEN ARROW EACH
1	SB11	1	1	1	--	--	--
2	SB5	1	1	1	--	--	--
3	SB5	1	1	1	--	--	--
4	SB7	1	1	1	--	--	--
5	SB13	--	--	--	1	2	1
6	SB4	--	--	--	1	2	1
7	SB5	--	--	--	1	2	1
8	SB4	1	1	1	--	--	--
9	SB13	1	1	--	--	--	1
10	SB13	1	1	1	--	--	--
11	SB13	1	1	1	--	--	--
12	SB13	1	1	1	--	--	--
13	SB6	--	--	--	1	2	1
14	SB11	--	--	--	1	2	1
15	SB12	--	--	--	1	2	1
16	SB8	1	1	1	--	--	--
17	SB9	1	1	1	--	--	--
18	SB1	1	1	1	--	--	--
19	SB3	1	1	1	--	--	--
20	SB1	1	1	1	--	--	--
21	SB2	1	1	1	--	--	--
22	SB8	1	1	1	--	--	--
23	SB10	1	1	1	--	--	--
	TOTAL	17	17	16	6	12	7

SIGNAL MOUNTING HARDWARE

LOCATION	658.5070.01 SIGNAL MOUNTING HARDWARE EACH
STH 158 & E FRONTAGE RD	1
TOTAL	1

FIELD SYSTEM INTEGRATOR

LOCATION	670.0101 FIELD SYSTEM INTEGRATOR EACH	670.0201 ITS DOCUMENTATION EACH
3700-11-00	1	1
TOTAL	1	1

COMMUNICATIONS EQUIPMENT

LOCATION	678.0501 COMMUNICATION SYSTEM TESTING EACH	678.0600 INSTALL ETHERNET SWITCHES EACH
3700-11-00	1	1
TOTAL	1	1

STH 158 & E FRONTAGE RD
KENOSHA COUNTY
CATEGORY 0010
S30-1495

3

TRANSPORT AND INSTALL STATE FURNISHED TRAFFIC SIGNAL CABINET

LOCATION	SPV.0060.10 TRNSPT & INSTALL STATE FURNISHED TRAFFIC SIGNAL CABINET EACH
STH 158 & E FRONTAGE RD	1
TOTAL	1

TRANSPORT TRAFFIC SIGNAL AND INTERSECTION LIGHTING MATERIALS

LOCATION	SPV.0060.12 TRANSPORT TRAFFIC SIGNAL & INTERSECTION LIGHTING MATERIALS EACH
STH 158 & E FRONTAGE RD	1
TOTAL	1

EVP DETECTOR HEAD INSTALLATION

LOCATION	SPV.0060.14 TRANSPORT & INSTALL STATE FURNISHED EVP DETECTOR HEADS EACH
STH 158 & E FRONTAGE RD	1
TOTAL	1

TRANSPORT AND INSTALL STATE FURNISHED RADAR DETECTION SYSTEM

LOCATION	SPV.0060.16 TRANSPORT & INSTALL STATE-FURNISHED RADAR DETECTION SYSTEM EACH
STH 158 & E FRONTAGE RD	1
TOTAL	1

INSTALL FIBER OPTIC COMMUNICATIONS IN CABINET

LOCATION	SPV.0060.18 INSTALL FIBER OPTIC COMMUNICATIONS IN CABINET EACH
STH 158 & E FRONTAGE RD	1
TOTAL	1

STH 165 & CTH H
KENOSHA COUNTY
CATEGORY 0010
S30-1287

3

STATE FURNISHED MATERIALS SUMMARY

EACH	DESCRIPTION
2	POLES TYPE 9 SPECIAL
2	POLES TYPE 12 OVER HEIGHT
2	MONOTUBE ARMS 45-FT TYPE 9/10 SPEC POLE
1	MONOTUBE ARMS 35-FT TYPE 12/13 POLE
1	MONOTUBE ARMS 40-FT TYPE 12/13 POLE
4	EVP DETECTOR HEADS
4	EVP CONFIRMATION LIGHTS

STATE FURNISHED FOR INFORMATION ONLY

SIGNAL BASE NO.	POLES TYPE 9 SPECIAL EACH	POLES TYPE 12 OVER HEIGHT EACH	MONOTUBE ARMS 45-FT TYPE 9/10 SPEC POLE EACH	MONOTUBE ARMS 35-FT TYPE 12/13 POLE EACH	MONOTUBE ARMS 40-FT TYPE 12/13 POLE EACH	EVP DETECTOR HEADS EACH	EVP CONFIRMATION LIGHTS EACH
SB3	--	1	--	1	--	1	1
SB10	1	--	1	--	--	1	1
SB11	1	--	1	--	--	1	1
SB12	--	1	--	--	1	1	1
TOTAL	2	2	2	1	1	4	4

3

REMOVING CONCRETE BASES

SIGNAL BASE NO.	204.0195 REMOVING CONCRETE BASES EACH
SB3	1
SB6	1
SB8	1
SB10	1
TOTAL	4

TRAFFIC SIGNAL REMOVALS

LOCATION	204.9060.S.01 REMOVING TRAFFIC SIGNALS EACH	204.9060.S.02 REMOVING LOOP DETECTOR WIRE & LEAD-IN CABLE EACH
STH 165 & CTH H	1	1
TOTAL	1	1

3

LAMP, BALLAST, LED, SWITCH DISPOSAL

FIXTURE TYPE	659.5000.S LAMP, BALLAST, LED, SWITCH DISPOSAL BY CONTRACTOR EACH
TRAFFIC SIGNAL, THREE SECTION	10
TRAFFIC SIGNAL, FIVE SECTION	4
LUMINAIRES, UTILITY, LED C	8
TOTAL	22

LAMP, BALLAST, LED, SWITCH DISPOSAL (FOR INFORMATION ONLY)

SIGNAL BASE NO.	TRAFFIC SIGNAL, THREE SECTION EACH	TRAFFIC SIGNAL, FIVE SECTION EACH	LUMINAIRES UTILITY LED C EACH
SB1	1	--	--
SB2	--	1	2
SB3	1	--	--
SB4	1	--	--
SB5	1	--	2
SB6	2	1	--
SB7	--	1	2
SB8	2	--	--
SB9	1	--	2
SB10	1	1	--
TOTAL	10	4	8

REMOVING PULL BOXES

PULL BOX NO.	653.0905 REMOVING PULL BOXES EACH
PB1	1
PB3	1
PB4	1
PB5	1
PB7	1
PB10	1
PB11	1
PB12	1
PB13	1
PB15	1
PB16	1
PB17	1
PB20	1
PB21	1
PB22	1
TOTAL	15

CONDUIT

FROM	TO	652.0225 CONDUIT RIGID NONMETALLIC SCHEDULE 40 2-INCH L.F.	652.0235 CONDUIT RIGID NONMETALLIC SCHEDULE 40 3-INCH L.F.	652.0615 CONDUIT SPECIAL 3-INCH L.F.
PB1	PB4	--	--	132
PB3	SB4	8	--	--
PB4	PB5	--	--	110
PB5	SB11	--	5	--
PB5	PB7	--	36	--
PB6	SB6	6	--	--
PB7	PB10	--	--	140
PB10	PB11	--	--	102
PB11	SB12	--	13	--
PB11	PB13	--	66	--
PB12	SB8	5	--	--
PB13	PB15	--	--	112
PB15	PB16	--	--	100
PB16	SB10	--	5	--
PB16	PB17	--	86	--
PB17	PB21	--	--	120
PB20	SB1	5	--	--
PB21	PB22	--	--	84
PB22	SB3	--	7	--
	TOTAL	24	218	900

STH 165 & CTH H
KENOSHA COUNTY
CATEGORY 0010
S30-1287

TRAFFIC DETECTOR LOOPS

3

LOOP NO.	HOME RUN PB	LOCATION** ^	SIZE (FT)x(FT)	NO. OF TURNS	PAVEMENT TYPE	SDD INSTALLATION REFERENCE	652.0800 CONDUIT LOOP DETECTOR L.F.	655.0700 LOOP DETECTOR LEAD IN CABLE L.F.	655.0800 LOOP DETECTOR WIRE L.F.
11	PB21	STA 509+74; 5' RT	6X20	3	CONCRETE	9F15-4B - LOOP DETECTOR INSTALLED IN BASE COURSE WITH PULL (SPLICE) BOX OFF ROADWAY (OPTION 2)	66	77	182
12	PB21	STA 510+02; 5' RT	6X20	3	CONCRETE	9F15-4B - LOOP DETECTOR INSTALLED IN BASE COURSE WITH PULL (SPLICE) BOX OFF ROADWAY (OPTION 2)	68	77	184
21	PB9	RE-WIRE ONLY	6X20	3	-	-	--	520	204
22	PB8	RE-WIRE ONLY	6X20	3	-	-	--	373	206
31	PB15	STA 510+75; 84' RT	6X20	3	CONCRETE	9F15-4B - LOOP DETECTOR INSTALLED IN BASE COURSE WITH PULL (SPLICE) BOX OFF ROADWAY (OPTION 2)	66	220	182
32	PB15	STA 510+75; 56' RT	6X20	3	CONCRETE	9F15-4B - LOOP DETECTOR INSTALLED IN BASE COURSE WITH PULL (SPLICE) BOX OFF ROADWAY (OPTION 2)	68	220	184
41	PB2	RE-WIRE ONLY	6X15	3	-	-	--	256	178
42	PB4	STA 510+42; 72' LT	6X20	3	CONCRETE	9F15-4B - LOOP DETECTOR INSTALLED IN BASE COURSE WITH PULL (SPLICE) BOX OFF ROADWAY (OPTION 2)	116	103	232
43	PB3	STA 510+41; 44' LT	6X20	3	CONCRETE	9F15-4B - LOOP DETECTOR INSTALLED IN BASE COURSE WITH PULL (SPLICE) BOX OFF ROADWAY (OPTION 2)	72	78	188
44	PB4	STA 510+53; 72' LT	6X20	3	CONCRETE	9F15-4B - LOOP DETECTOR INSTALLED IN BASE COURSE WITH PULL (SPLICE) BOX OFF ROADWAY (OPTION 2)	92	103	208
45	PB3	STA 510+53; 44' LT	6X20	3	CONCRETE		96	78	212
51	PB10	STA 511+46; 4' LT	6X20	3	CONCRETE	9F15-4B - LOOP DETECTOR INSTALLED IN BASE COURSE WITH PULL (SPLICE) BOX OFF ROADWAY (OPTION 2)	66	245	182
52	PB10	STA 511+18; 4' LT	6X20	3	CONCRETE	9F15-4B - LOOP DETECTOR INSTALLED IN BASE COURSE WITH PULL (SPLICE) BOX OFF ROADWAY (OPTION 2)	70	245	186
61	PB19	RE-WIRE ONLY	6X20	3	-	-	--	301	200
62	PB18	RE-WIRE ONLY	6X20	3	-	-	--	466	206
71	PB4	STA 510+65; 79.4' LT	6X20	3	CONCRETE	9F15-4B - LOOP DETECTOR INSTALLED IN BASE COURSE WITH PULL (SPLICE) BOX OFF ROADWAY (OPTION 2)	66	103	182
72	PB4	STA 510+65; 51.4' LT	6X20	3	CONCRETE	9F15-4B - LOOP DETECTOR INSTALLED IN BASE COURSE WITH PULL (SPLICE) BOX OFF ROADWAY (OPTION 2)	68	103	184
81	PB14	RE-WIRE ONLY	6X15	3	-	-	--	493	162
82	PB13	STA 510+97; 67' RT	6X20	3	CONCRETE	9F15-4B - LOOP DETECTOR INSTALLED IN BASE COURSE WITH PULL (SPLICE) BOX OFF ROADWAY (OPTION 2)	98	278	214
83	PB12	STA 510+98; 39' RT	6X20	3	CONCRETE	9F15-4B - LOOP DETECTOR INSTALLED IN BASE COURSE WITH PULL (SPLICE) BOX OFF ROADWAY (OPTION 2)	80	327	196
84	PB15	STA 510+86; 67' RT	6X20	3	CONCRETE	9F15-4B - LOOP DETECTOR INSTALLED IN BASE COURSE WITH PULL (SPLICE) BOX OFF ROADWAY (OPTION 2)	94	220	210
85	PB12	STA 510+86; 39' RT	6X20	3	CONCRETE	9F15-4B - LOOP DETECTOR INSTALLED IN BASE COURSE WITH PULL (SPLICE) BOX OFF ROADWAY (OPTION 2)	104	327	220
						TOTAL	1186	4886	4082

3

** LOCATION IS TO FRONT CENTER OF DETECTOR LOOP
^ FINAL LOCATION TO BE DETERMINED BY THE ENGINEER IN THE FIELD.

3

PULL BOXES

PULL BOX NO.	LOCATION	653.0140 PULL BOXES STEEL 24x42-INCH EACH
PB1	REPLACE IN-KIND	1
PB3	REPLACE IN-KIND	1
PB4	REPLACE IN-KIND	1
PB5	REPLACE IN-KIND	1
PB7	REPLACE IN-KIND	1
PB10	REPLACE IN-KIND	1
PB11	REPLACE IN-KIND	1
PB12	REPLACE IN-KIND	1
PB13	REPLACE IN-KIND	1
PB15	REPLACE IN-KIND	1
PB16	REPLACE IN-KIND	1
PB17	REPLACE IN-KIND	1
PB20	REPLACE IN-KIND	1
PB21	REPLACE IN-KIND	1
PB22	REPLACE IN-KIND	1
	TOTAL	15

CONCRETE BASES

SIGNAL BASE NO.	LOCATION^	654.0101 CONCRETE BASES TYPE 1 EACH	654.0113 CONCRETE BASES TYPE 13 EACH	654.0120 CONCRETE BASES TYPE 10-SPECIAL EACH
SB3	STA 509+70; 47.8' LT	--	1	--
SB6	STA 511+18; 40.5' LT	1	--	--
SB8	STA 511+10; 42.3' RT	1	--	--
SB10	STA 510+15; 84.5' RT	--	--	1
SB11	STA 511+27; 78.0' LT	--	--	1
SB12	STA 511+58; 52.6' RT	--	1	--
	TOTAL	2	2	2

^ FINAL LOCATION TO BE DETERMINED BY THE ENGINEER IN THE FIELD.

STH 165 & CTH H
KENOSHA COUNTY
CATEGORY 0010
S30-1287

3

TRAFFIC SIGNAL CABLE AND WIRE

FROM	TO	655.0240 CABLE TRAFFIC SIGNAL 7-14 AWG L.F.	655.0260 CABLE TRAFFIC SIGNAL 12-14 AWG L.F.	655.0320 CABLE TYPE UF 2-10 AWG GROUNDED L.F.
CB1	SB1	--	234	--
CB1	SB2	99	--	99
CB1	SB3	40	--	--
CB1	SB4	--	106	--
CB1	SB5	137	--	137
CB1	SB6	--	256	--
CB1	SB7	335	--	--
CB1	SB8	--	435	--
CB1	SB9	307	--	--
CB1	SB10	229	--	--
CB1	SB11	203	--	--
CB1	SB12	398	--	--
SB5	SB7	--	--	236
SB2	SB9	--	--	241
	TOTAL	1748 *	1031	713

* ADDITIONAL QUANTITY SHOWN ELSEWHERE ON PLAN

TRAFFIC SIGNAL CABLE AND WIRE

FROM	TO	655.0515 ELECTRICAL WIRE TRAFFIC SIGNALS 10 AWG L.F.
CB1	SB4	107
SB4	SB5	171
SB5	SB11	99
SB11	SB6	76
SB6	SB7	209
SB7	SB12	113
SB12	SB8	79
SB8	SB9	200
SB9	SB10	98
SB10	SB1	145
SB1	SB2	168
SB2	SB3	85
SB3	CB1	39
PB1	CB1	41
PB3	SB4	20
PB4	SB5	22
PB5	SB11	16
PB6	SB6	18
PB7	SB11	48
PB10	SB7	31
PB11	SB12	27
PB12	SB8	16
PB13	SB12	73
PB15	SB9	27
PB16	SB10	17
PB17	SB10	74
PB20	SB1	16
PB21	SB2	21
PB22	SB3	19
	TOTAL	2075

3

3

TRAFFIC SIGNAL CABLE AND WIRE

FROM	TO	655.0230 CABLE TRAFFIC SIGNAL 5-14 AWG L.F.	655.0240 CABLE TRAFFIC SIGNAL 7-14 AWG L.F.
SB1	HEAD 1	21	--
SB1	HEAD 9	--	22
SB2	HEAD 10	--	22
SB3	HEAD 7	60	--
SB3	HEAD 8	60	--
SB4	HEAD 14	--	22
SB4	HEAD 16	21	--
SB5	HEAD 15	--	22
SB6	HEAD 4	--	22
SB6	HEAD 6	21	--
SB7	HEAD 5	--	22
SB8	HEAD 11	21	--
SB8	HEAD 19	--	22
SB9	HEAD 20	--	22
SB10	HEAD 17	70	--
SB10	HEAD 18	70	--
SB11	HEAD 12	70	--
SB11	HEAD 13	70	--
SB12	HEAD 2	65	--
SB12	HEAD 3	65	--
	TOTAL	614	176 *

* ADDITIONAL QUANTITY SHOWN ELSEWHERE ON PLAN

TRAFFIC SIGNAL CABLE AND WIRE

FROM	TO	655.0610 ELECTRICAL WIRE LIGHTING 12 AWG L.F.
SB2	LUM. (2)	234
SB5	LUM. (2)	234
SB7	LUM. (2)	234
SB9	LUM. (2)	234
	TOTAL	936

TRAFFIC SIGNAL EVP DETECTOR CABLE

FROM	TO	SPV.0090.01 CABLE TRAFFIC SIGNAL 3-14 AWG L.F.	655.0900 TRAFFIC SIGNAL EVP DETECTOR CABLE L.F.
CB1	SB3 (HEAD A)	100	100
CB1	SB12 (HEAD B)	463	463
CB1	SB10 (HEAD C)	299	299
CB1	SB11 (HEAD D)	273	273
	TOTAL	1135	1135

3

STH 165 & CTH H
KENOSHA COUNTY
CATEGORY 0010
S30-1287

3

POLES (CONTRACTOR FURNISHED)

SIGNAL BASE NO.	657.0100 PEDESTAL BASES EACH	657.0425 TRAFFIC SIGNAL STANDARDS ALUMINUM 15-FT EACH	658.0500 PEDESTRIAN PUSH BUTTONS EACH	659.1125 LUMINAIRES UTILITY LED C EACH
SB1	1	1	--	--
SB2	--	--	--	2
SB4	1	1	1	--
SB5	--	--	--	2
SB6	1	1	--	--
SB7	--	--	--	2
SB8	1	1	1	--
SB9	--	--	--	2
TOTAL	4	4	2	8

POLES (STATE FURNISHED)

SIGNAL BASE NO.	SPV.0060.01 INSTALL POLES TYPE 9 SPECIAL EACH	SPV.0060.03 INSTALL POLES TYPE 12 OVER HEIGHT EACH	SPV.0060.06 INSTALL MONOTUBE ARMS 45-FT TYPE 9/10 SPEC POLE EACH	SPV.0060.07 INSTALL MONOTUBE ARMS 35-FT TYPE 12/13 POLE EACH	SPV.0060.08 INSTALL MONOTUBE ARMS 40-FT TYPE 12/13 POLE EACH
SB3	--	1	--	1	--
SB10	1	--	1	--	--
SB11	1	--	1	--	--
SB12	--	1	--	--	1
TOTAL	2	2	2	1	1

3

STH 165 & CTH H
KENOSHA COUNTY
CATEGORY 0010
S30-1287

3

FACES

SIGNAL HEAD NO.	SIGNAL BASE NO.	658.0173 TRAFFIC SIGNAL FACE 3S 12-INCH EACH	658.0174 TRAFFIC SIGNAL FACE 4S 12-INCH EACH
1	SB1	1	--
2	SB12	1	--
3	SB12	1	--
4	SB6	--	1
5	SB7	--	1
6	SB6	1	--
7	SB3	1	--
8	SB3	1	--
9	SB1	--	1
10	SB2	--	1
11	SB8	1	--
12	SB11	1	--
13	SB11	1	--
14	SB4	--	1
15	SB5	--	1
16	SB4	1	--
17	SB10	1	--
18	SB10	1	--
19	SB8	--	1
20	SB9	--	1
	TOTAL	12	8

^ DENOTES SIGNAL HOUSING WITH REFLECTIVE BACKPLATE

LED MODULES SUMMARY

SIGNAL HEAD NO.	SIGNAL BASE NO.	LED MODULES 12-INCH RED BALL EACH	LED MODULES 12-INCH YELLOW BALL EACH	LED MODULES 12-INCH GREEN BALL EACH	LED MODULES 12-INCH RED ARROW EACH	LED MODULES 12-INCH YELLOW ARROW EACH	LED MODULES 12-INCH GREEN ARROW EACH
1	SB1	1	1	1	--	--	--
2	SB12	1	1	1	--	--	--
3	SB12	1	1	1	--	--	--
4	SB6	--	--	--	1	2	1
5	SB7	--	--	--	1	2	1
6	SB6	1	1	1	--	--	--
7	SB3	1	1	1	--	--	--
8	SB3	1	1	1	--	--	--
9	SB1	--	--	--	1	2	1
10	SB2	--	--	--	1	2	1
11	SB8	1	1	1	--	--	--
12	SB11	1	1	1	--	--	--
13	SB11	1	1	1	--	--	--
14	SB4	--	--	--	1	2	1
15	SB5	--	--	--	1	2	1
16	SB4	1	1	1	--	--	--
17	SB10	1	1	1	--	--	--
18	SB10	1	1	1	--	--	--
19	SB8	--	--	--	1	2	1
20	SB9	--	--	--	1	2	1
	TOTAL	12	12	12	8	16	8

3

STH 165 & CTH H
KENOSHA COUNTY
CATEGORY 0010
S30-1287

3

SIGNAL MOUNTING HARDWARE

LOCATION	658.5070.02 SIGNAL MOUNTING HARDWARE EACH
STH 165 & CTH H	1
TOTAL	1

TEMPORARY TRAFFIC SIGNALS FOR INTERSECTIONS

LOCATION	661.0201.01 TEMPORARY TRAFFIC SIGNALS FOR INTERSECTIONS EACH	661.0300 GENERATORS DAY	677.0200 INSTALL CAMERA ASSEMBLY EACH
STH 165 & CTH H	1	1	1
TOTAL	1	1	1

3

TRNSPT & INSTALL STATE FURNISHED TRAFFIC SIGNAL CABINET

LOCATION	SPV.0060.11 TRNSPT AND INSTALL STATE FURNISHED TRAFFIC SIGNAL CABINET EACH
STH 165 & CTH H	1
TOTAL	1

TRANSPORT TRAFFIC SIGNAL AND INTERSECTION LIGHTING MATERIALS

LOCATION	SPV.0060.13 TRANSPORT TRAFFIC SIGNAL & INTERSECTION LIGHTING MATERIALS EACH
STH 165 & CTH H	1
TOTAL	1

EVP DETECTOR HEAD INSTALLATION

LOCATION	SPV.0060.15 TRANSPORT & INSTALL STATE FURNISHED EVP DETECTOR HEADS EACH
STH 165 & CTH H	1
TOTAL	1

TEMPORARY INFRARED EVP SYSTEM

LOCATION	SPV.0060.17 TEMPORARY INFRARED EVP SYSTEM EACH
STH 165 & CTH H	1
TOTAL	1

Standard Detail Drawing List

08D01-22A	CONCRETE CURB & GUTTER
08D01-22B	CONCRETE CURB, TIES AND CURB AND GUTTER APPLICATIONS
08D16-11	CONCRETE GUTTER, CURB AND GUTTER AND PAVEMENT TIES
08E09-06	SILT FENCE
08E10-02	INLET PROTECTION TYPE A, B, C AND D
09B02-10	CONDUIT
09B04-12	PULL BOX
09C02-09	CONCRETE BASES, TYPES 1, 2, 5, & 6
09C03-04	TRANSFORMER/PEDESTAL BASES
09C06-07	CONCRETE CONTROL CABINET BASE, TYPE 9, SPECIAL
09C12-09A	CONCRETE BASE TYPE 13
09C12-09B	CONCRETE BASE TYPE 13
09C15-01	CONCRETE BASE TYPE 10 SPECIAL
09D01-05	CABINET SERVICE INSTALLATION (METER BREAKER PEDESTAL)
09D02-03	SIGNAL CONTROL CABINET
09E01-15G	HARDWARE DETAILS FOR POLE MOUNTINGS
09E03-06	NON-FREEWAY LIGHTING UNIT POLE WIRING
09E06-05	TRAFFIC SIGNAL STANDARD POLY BRACKET MOUNTINGS (TYPICAL) 13 FT. OR 15 FT.
09E07-06	TRAFFIC SIGNAL STANDARD PEDESTRIAN AND FLASHER TYPICAL MOUNTING DETAILS
09E08-09B	TYPE 9 SPECIAL POLE 35' MONOTUBE ARM
09E08-09C	TYPE 9 SPECIAL POLE 40' MONOTUBE ARM
09E08-09D	TYPE 9 SPECIAL POLE 45' MONOTUBE ARM
09E08-09I	TYPE 12 POLE 35'-55' MONOTUBE ARM
09E08-09K	GENERAL NOTES,HARDWARE DETAILS FOR TYPE 9/10,9/10 SPECIAL,12 & 13 POLES W/MONOTUBE ARMS
09E12-01C	OVER HEIGHT TYPE 12 POLE 35'-55' MONOTUBE ARM
09E12-01E	GENERAL NOTES AND HARDWARE DETAILS FOR OVER HEIGHT TYPE 9, 10, 12 & 13 POLES WITH MONOTUBE ARMS
09F15-04B	LOOP DETECTOR INSTALLED IN BASE COURSE WITH PULL (SPLICE) BOX OFF ROADWAY (OPTION 2)
09G01-04B	SPAN WIRE TEMPORARY TRAFFIC SIGNAL
09G01-04D	SPAN WIRE TEMPORARY TRAFFIC SIGNAL
09G01-04E	SPAN WIRE TEMPORARY TRAFFIC SIGNAL
09G01-04F	SPAN WIRE TEMPORARY TRAFFIC SIGNAL
09G01-04G	SPAN WIRE TEMPORARY TRAFFIC SIGNAL
13C01-19	CONCRETE PAVEMENT LONGITUDINAL JOINTS AND TIES
13C09-16A	CONCRETE PAVEMENT REPAIR AND REPLACEMENT
13C09-16B	CONCRETE PAVEMENT REPAIR AND REPLACEMENT
13C09-16C	CONCRETE PAVEMENT REPAIR AND REPLACEMENT
13C13-10	URBAN DOWELED CONCRETE PAVEMENT
13C18-07A	CONCRETE PAVEMENT JOINTING
13C18-07B	CONCRETE PAVEMENT STEEL REINFORCEMENT
13C18-07C	CONCRETE PAVEMENT JOINT TYPES
13C18-07D	CONCRETE PAVEMENT JOINT TYPES AT UTILITY FIXTURES
13C18-07F	CONCRETE PAVEMENT INTERSECTION BOXOUT FOR INTEGRAL CURB AND GUTTER
14B15-11A	STEEL PLATE BEAM GUARD, CLASS "A" INSTALLATION & ELEMENTS
14B15-11B	STEEL PLATE BEAM GUARD, CLASS "A" INSTALLATION & ELEMENTS
14B15-11C	STEEL PLATE BEAM GUARD, CLASS "A", INSTALLATION & ELEMENTS
15C02-08A	BARRICADES AND SIGNS FOR MAINLINE CLOSURES
15C02-08B	BARRICADES AND SIGNS FOR VARIOUS CLOSURES
15C02-08C	DETOUR SIGNING FOR MAINLINE CLOSURES
15C03-05	BARRICADES AND SIGNS FOR SIDEROAD CLOSURES
15C07-15A	PAVEMENT MARKING SYMBOLS
15C07-15B	PAVEMENT MARKING WORDS
15C07-15C	PAVEMENT MARKING ARROWS
15C08-21A	LONGITUDINAL MARKING (MAINLINE)
15C08-21D	PAVEMENT MARKING (TURN LANES)
15C11-09B	CHANNELIZING DEVICES DRUMS, CONES, BARRICADES AND VERTICAL PANELS
15C18-06A	MEDIAN ISLAND MARKING PAVEMENT MARKINGS
15C18-06B	MEDIAN ISLAND MARKING MEDIAN ISLAND NOSE
15C19-07C	MOVING PAVEMENT MARKING OPERATION MULTI-LANE DIVIDED ROADWAY
15C20-02	YIELD MARKING
15C33-04	STOP LINE AND CROSSWALK PAVEMENT MARKING
15C35-05A	PAVEMENT MARKING (INTERSECTIONS)
15D20-06A	TRAFFIC CONTROL, SINGLE LANE CLOSURE, NON-FREEWAY/EXPRESSWAY
15D50-02A	TRAFFIC CONTROL, ADDED LANE CLOSURE WITHOUT LANE SHIFT

6

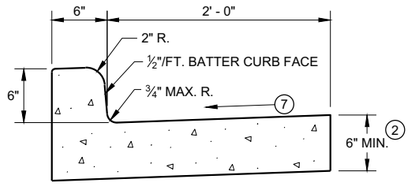

TYPES A[1] & D

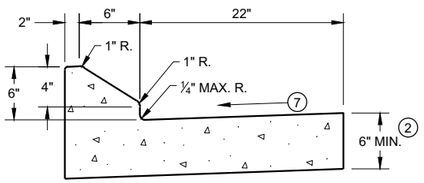

6" SLOPED CURB TYPES G[1] & J

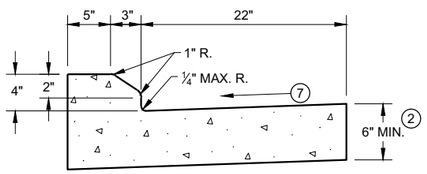

4" SLOPED CURB TYPES G[1] & J

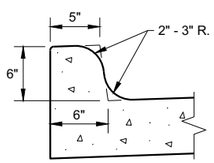

TYPES K[1] & L
(OPTIONAL CURB SHAPE)

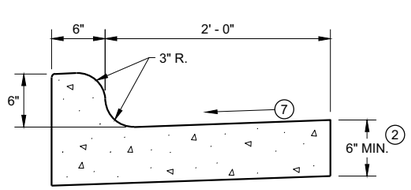

TYPES K[1] & L

CONCRETE CURB AND GUTTER 30"

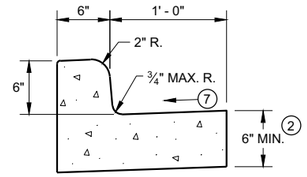

TYPES A[1] & D

CONCRETE CURB AND GUTTER 18"

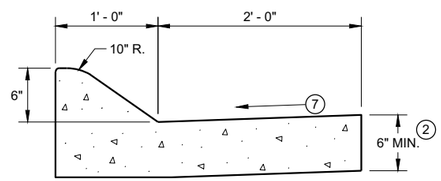

6" SLOPED CURB TYPES A[1] & D

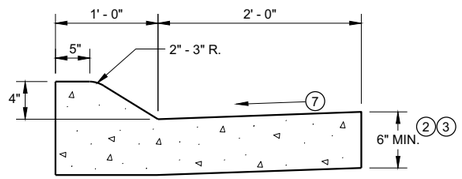

4" SLOPED CURB TYPES A[1] & D

CONCRETE CURB AND GUTTER 36"

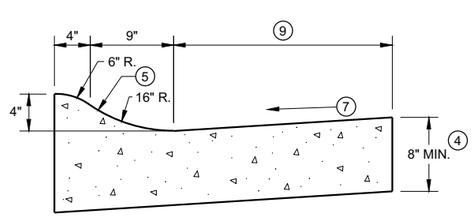

4" SLOPED CURB TYPES R[1] & T

TBT & TBTT	X
30"	22"
36"	28"

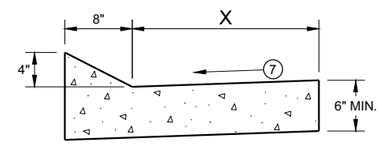

TYPES TBT & TBTT[1]

CONCRETE CURB AND GUTTER

PAVEMENT THICKNESS AND MAXIMUM CONCRETE PANEL WIDTH TABLE

PAVEMENT THICKNESS	MAXIMUM PANEL WIDTH
LESS THAN 10"	12'
10" & ABOVE	15'

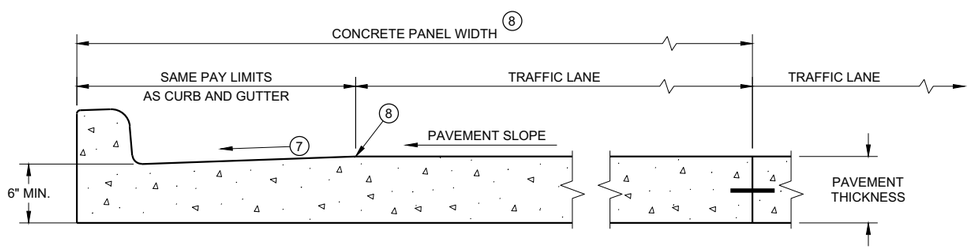

PARTIAL SECTION OF PAVEMENT *
WITH INTEGRAL CURB AND GUTTER

* BIKE LANE IS NOT SHOWN

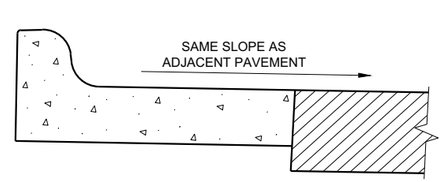

REVERSE SLOPE GUTTER[6]
(TYPICAL FOR ALL CURB & GUTTER TYPES)

GENERAL NOTES

DETAILS OF CONSTRUCTION AND WORKMANSHIP NOT SHOWN ON THIS DRAWING SHALL CONFORM TO THE PERTINENT REQUIREMENTS OF THE CONTRACT.

PAVEMENT TIES AND TIE BARS SHALL BE EPOXY COATED IN CONFORMANCE WITH SUBSECTION 505.2.6.2 OF THE STANDARD SPECIFICATIONS.

INTEGRAL CURB AND GUTTER SHALL CONFORM TO THE DETAILS SHOWN FOR CONCRETE CURB AND GUTTER INCLUDING THE TRANSVERSE GUTTER SLOPE.

UNLESS OTHERWISE SHOWN ON THE TYPICAL CROSS SECTIONS, THE BASE AGGREGATE AND COMMON EXCAVATION LIMITS ARE 2' - 0" BEHIND THE BACK OF CURBS.

1. TIE BARS ARE REQUIRED FOR CURB AND GUTTERS TYPES A, G, K, R, AND TBTT.
2. THE BOTTOM OF CURB AND GUTTER MAY BE CONSTRUCTED EITHER LEVEL OR PARALLEL TO THE SLOPE OF THE SUBGRADE OR BASE AGGREGATE PROVIDED A 6" MINIMUM GUTTER THICKNESS IS MAINTAINED.
3. USE 8" MINIMUM GUTTER THICKNESS WHEN USED WITH AN ADJACENT CONCRETE TRUCK APRON PLACED BEHIND BACK OF CURB.
4. THE BOTTOM OF CURB AND GUTTER MAY BE CONSTRUCTED EITHER LEVEL OR PARALLEL TO THE SLOPE OF THE SUBGRADE OR BASE AGGREGATE PROVIDED A 8" MINIMUM GUTTER THICKNESS IS MAINTAINED.
5. UNLESS OTHERWISE NOTED, FOR STAKING PURPOSES THE FACE OF CURB IS 6" FROM THE BACK OF CURB.
6. WHEN REVERSE SLOPE GUTTER IS REQUIRED, THE LOCATION(S) WILL BE SHOWN ELSEWHERE IN THE PLAN.
7. USE 4% GUTTER CROSS SLOPE UNLESS OTHERWISE NOTED IN THE PLANS.
8. INCLUDE LONGITUDINAL JOINT AND TIE BARS ALONG LANE EDGE WHEN CONCRETE PANEL WIDTH EXCEEDS THE MAXIMUM WIDTH PER TABLE BELOW. LONGITUDINAL JOINT(S) ARE NOT ALLOWED WITHIN TRAFFIC LANES AND BIKE LANES. LONGITUDINAL JOINT MAY BE SAWED.
9. CONCRETE CURB AND GUTTER 4-INCH SLOPED 30-INCH TYPE "R" AND "T" = 17 INCHES
   CONCRETE CURB AND GUTTER 4-INCH SLOPED 36-INCH TYPE "R" AND "T" = 23 INCHES

CONCRETE CURB AND GUTTER

STATE OF WISCONSIN
DEPARTMENT OF TRANSPORTA

6

SDD 08D01 - 22a

GENERAL NOTES

DETAILS OF CONSTRUCTION AND WORKMANSHIP NOT SHOWN ON THIS DRAWING SHALL CONFORM TO THE PERTINENT REQUIREMENTS OF THE CONTRACT.

PAVEMENT TIES AND TIE BARS SHALL BE EPOXY COATED IN CONFORMANCE WITH SUBSECTION 505.2.6.2 OF THE STANDARD SPECIFICATIONS.

UNLESS OTHERWISE SHOWN ON THE TYPICAL CROSS SECTIONS, THE BASE AGGREGATE AND COMMON EXCAVATION LIMITS ARE 2' - 0" BEHIND THE BACK OF CURBS.

(1) TIE BARS ARE REQUIRED FOR CURB AND GUTTERS TYPES A, G, K, R, AND TBTT.

(2) THE BOTTOM OF CURB AND GUTTER MAY BE CONSTRUCTED EITHER LEVEL OR PARALLEL TO THE SLOPE OF THE SUBGRADE OR BASE AGGREGATE PROVIDED A 6" MINIMUM GUTTER THICKNESS IS MAINTAINED.

(9) REFER TO SDD 08D18 AND 08D19 FOR ADDITIONAL DRIVEWAY ENTRANCE CURB DETAILS.

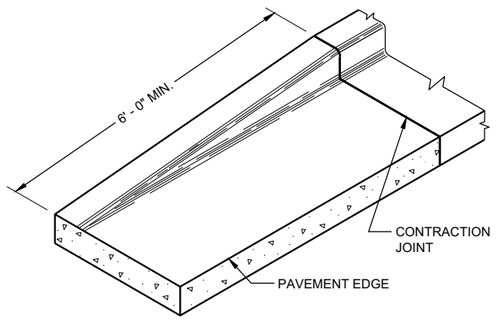

END SECTIONCURB AND GUTTER

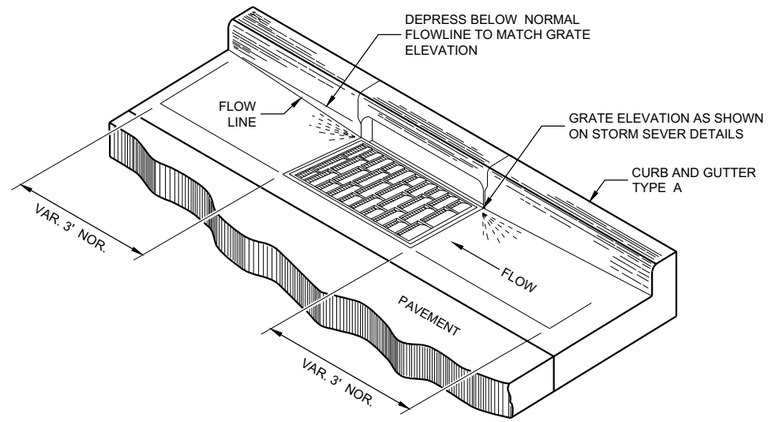

DETAIL OF CURB AND GUTTER AT INLETS
(TYPICAL H INLET COVER SHOWN)

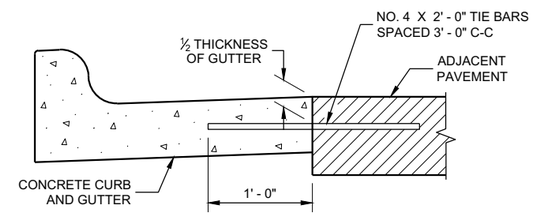

TYPICAL TIE BAR LOCATION (1)

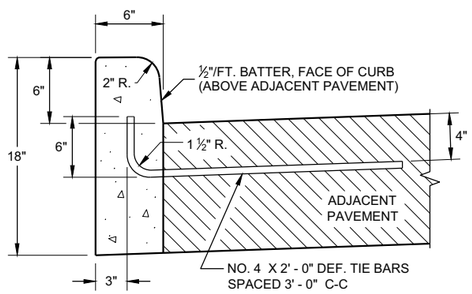

TYPES A (1) & D

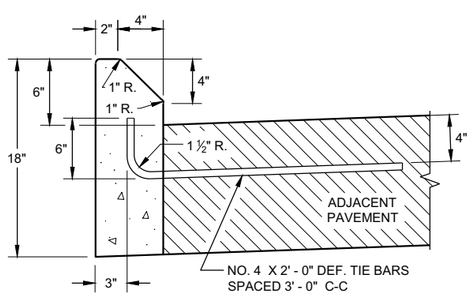

TYPES G (1) & J

CONCRETE CURB

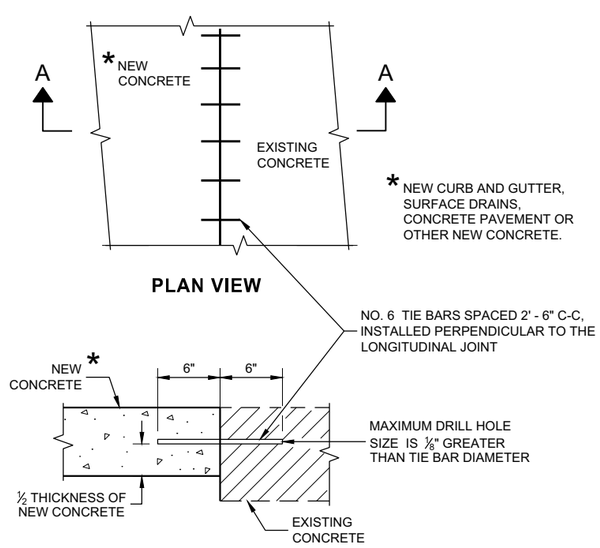

PLAN VIEW

SECTION A - A

TIE BARS DRILLED INTO EXISTING PAVEMENT

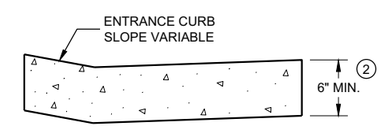

DRIVEWAY ENTRANCE CURB (9)
(WHEN DIRECTED BY THE ENGINEER)

CONCRETE CURB, TIES AND CURB AND GUTTER APPLICATIONS

STATE OF WISCONSIN
DEPARTMENT OF TRANSPORTATION

APPROVED
February 2021 — DATE
/S/ Rodnery Taylor — ROADWAY STANDARDS DEVE ENGINEER
FHWA

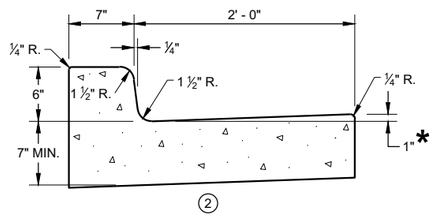

CONCRETE CURB AND GUTTER 31" ①

*TO BE MEASURED TO A MAXIMUM OF 3" WHERE DRAINAGE PROBLEMS EXIST.

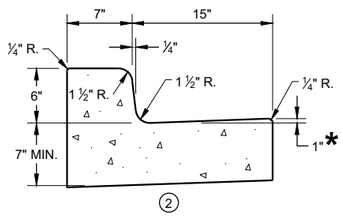

CONCRETE CURB AND GUTTER 22" ①

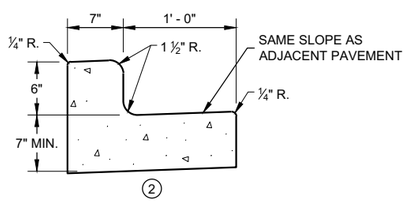

CONCRETE CURB AND GUTTER 19" ①

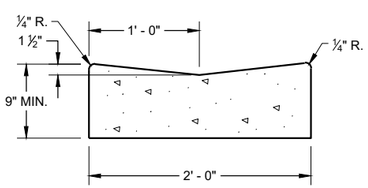

CONCRETE GUTTER 24" ①

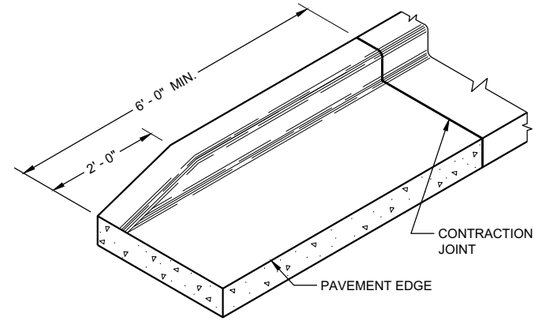

END SECTIONCURB AND GUTTER

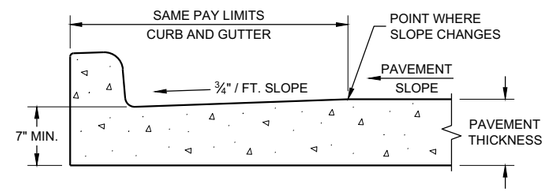

PARTIAL SECTION OF PAVEMENT WITH INTEGRAL CURB AND GUTTER

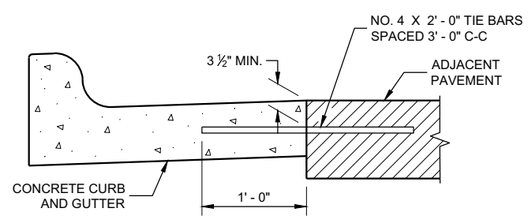

TYPICAL TIE BAR LOCATION ①

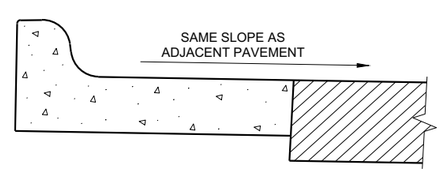

HIGH SIDE SECTION ③

(TYPICAL FOR ALL CURB & GUTTER TYPES)

GENERAL NOTES

DETAILS OF CONSTRUCTION AND WORKMANSHIP NOT SHOWN ON THIS DRAWING SHALL CONFORM TO THE PERTINENT REQUIREMENTS OF THE CONTRACT.

PAVEMENT TIES AND TIE BARS SHALL BE EPOXY COATED IN CONFORMANCE WITH SUBSECTION 505.2.6.2 OF THE STANDARD SPECIFICATIONS.

INTEGRAL CURB AND GUTTER SHALL CONFORM TO THE DETAILS SHOWN FOR CONCRETE CURB AND GUTTER INCLUDING THE TRANSVERSE GUTTER SLOPE. A LONGITUDINAL CONSTRUCTION JOINT IS NOT REQUIRED WITH INTEGRAL CURB AND GUTTER.

UNLESS OTHERWISE SHOWN ON THE TYPICAL CROSS SECTIONS, THE BASE COURSE AND UNCLASSIFIED EXCAVATION LIMITS ARE 2' - 0" BEHIND THE BACK OF CURBS.

① WHEN PLACED ADJACENT TO NEW CONCRETE, TIE BARS ARE REQUITED FOR CURB AND GUTTER 31", 22", 19" AND CONCRETE GUTTER 24".

② THE BOTTOM OF CURB AND GUTTER MAY BE CONSTRUCTED EITHER LEVEL OR PARALLEL TO THE SLOPE OF THE SUBGRADE OR BASE COURSE PROVIDED A 7" MINIMUM GUTTER THICKNESS IS MAINTAINED.

③ WHEN HIGH SIDE CURB SECTION IS REQUIRED, THE LOCATION(S) WILL BE NOTED ON THE PLANS

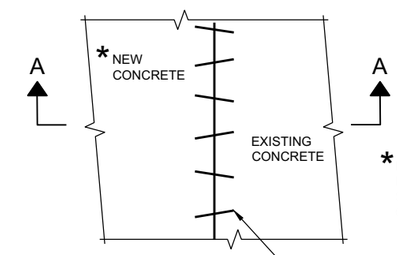

*EXISTING AND NEW CONCRETE MAY BE CURB AND GUTTER, SURFACE DRAINS, PAVEMENT OR OTHER CONCRETE STRUCTURE.

PLAN VIEW

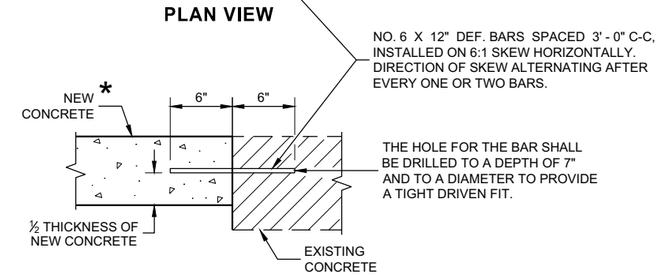

SECTION A - A

PAVEMENT TIES

CONCRETE GUTTER, CURB AND GUTTER AND PAVEMENT TIES

(For Optional use in Milwaukee Co. Only)

STATE OF WISCONSIN
DEPARTMENT OF TRANSPORTATION

APPROVED
February 2020 — DATE
/S/ Rodney Taylor — ROADWAY STANDARDS DEVE ENGINEER
FHWA

6

SDD 08D16 - 11

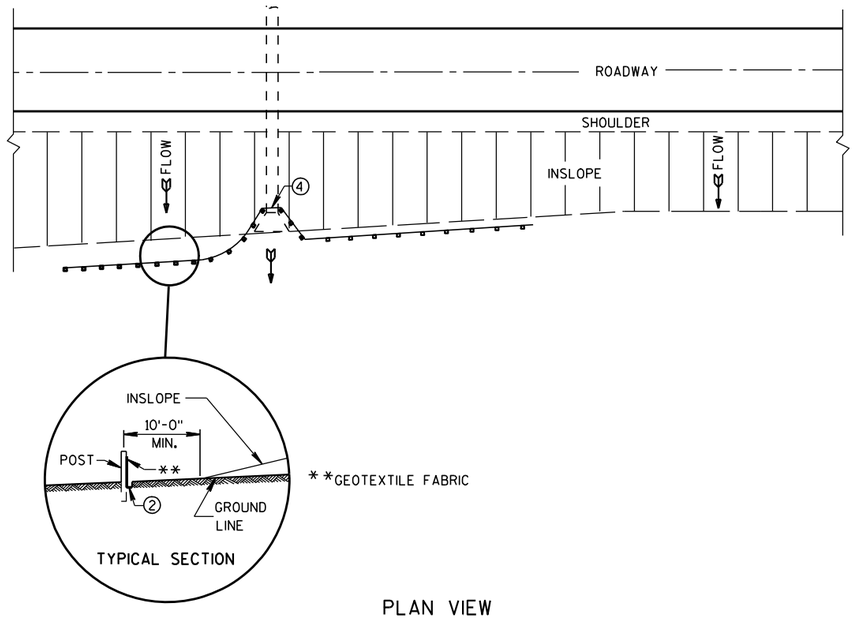

PLAN VIEW

TYPICAL APPLICATION OF SILT FENCE

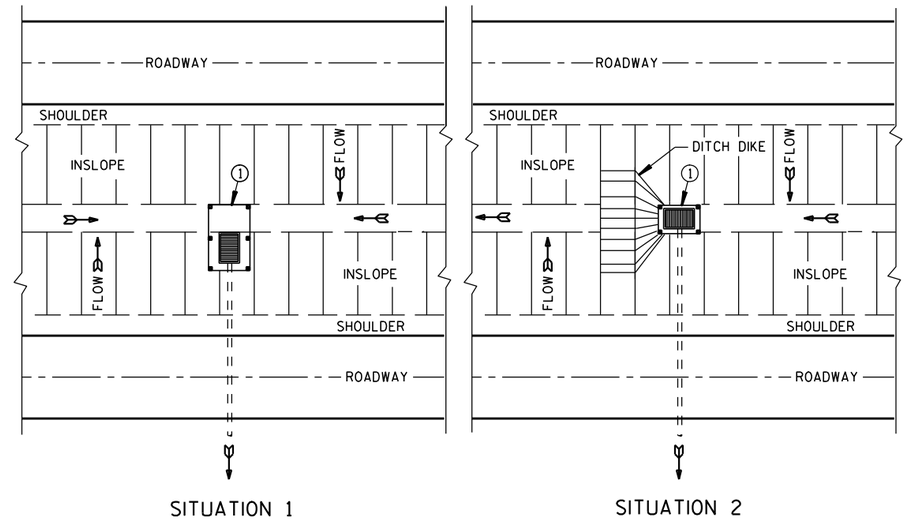

PLAN VIEW

SILT FENCE AT MEDIAN SURFACE DRAINS

GENERAL NOTES

DETAILS OF CONSTRUCTION NOT SHOWN ON THIS DRAWING SHALL CONFORM TO THE PERTINENT REQUIREMENTS OF THE STANDARD SPECIFICATIONS AND APPLICABLE SPECIAL PROVISIONS.

① HORIZONTAL BRACE REQUIRED WITH 2" X 4" WOODEN FRAME OR EQUIVALENT AT TOP OF POSTS.

② FOR MANUAL INSTALLATIONS THE TRENCH SHALL BE A MINIMUM OF 4" WIDE & 6" DEEP TO BURY AND ANCHOR THE GEOTEXTILE FABRIC. FOLD MATERIAL TO FIT TRENCH AND BACKFILL & COMPACT TRENCH WITH EXCAVATED SOIL.

③ WOOD POSTS SHALL BE A MINIMUM SIZE OF 1⅛" X 1⅛" OF OAK OR HICKORY.

④ SILT FENCE TO EXTEND ACROSS THE TOP OF THE PIPE.

⑤ CONSTRUCT SILT FENCE FROM A CONTINUOUS ROLL IF POSSIBLE BY CUTTING LENGTHS TO AVOID JOINTS. IF A JOINT IS NECESSARY USE ONE OF THE FOLLOWING TWO METHODS; A) OVERLAP THE END POSTS AND TWIST, OR ROTATE, AT LEAST 180 DEGREES. B) HOOK THE END OF EACH SILT FENCE LENGTH.

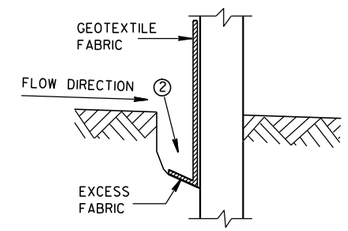

TRENCH DETAIL

NOTE: ADDITIONAL POST DEPTH OR TIE BACKS MAY BE REQUIRED IN UNSTABLE SOILS

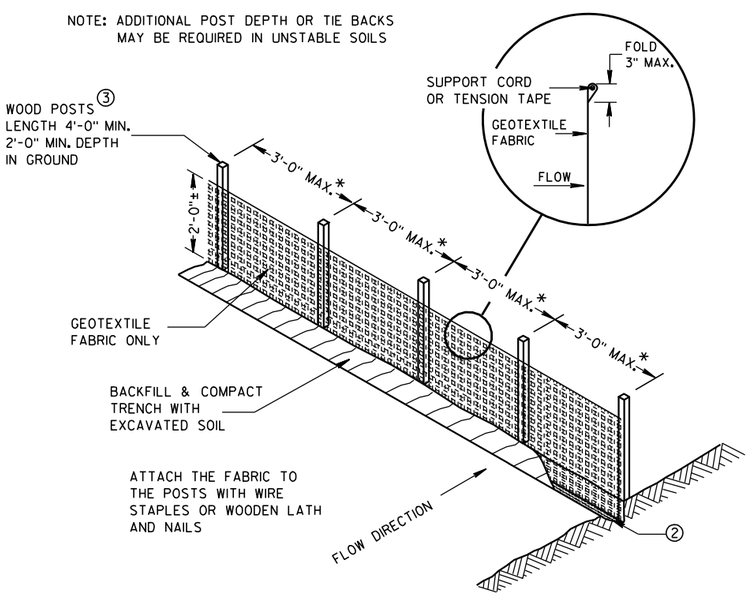

*NOTE: 8'-0" POST SPACING ALLOWED IF A WOVEN GEOTEXTILE FABRIC IS USED.

SILT FENCE

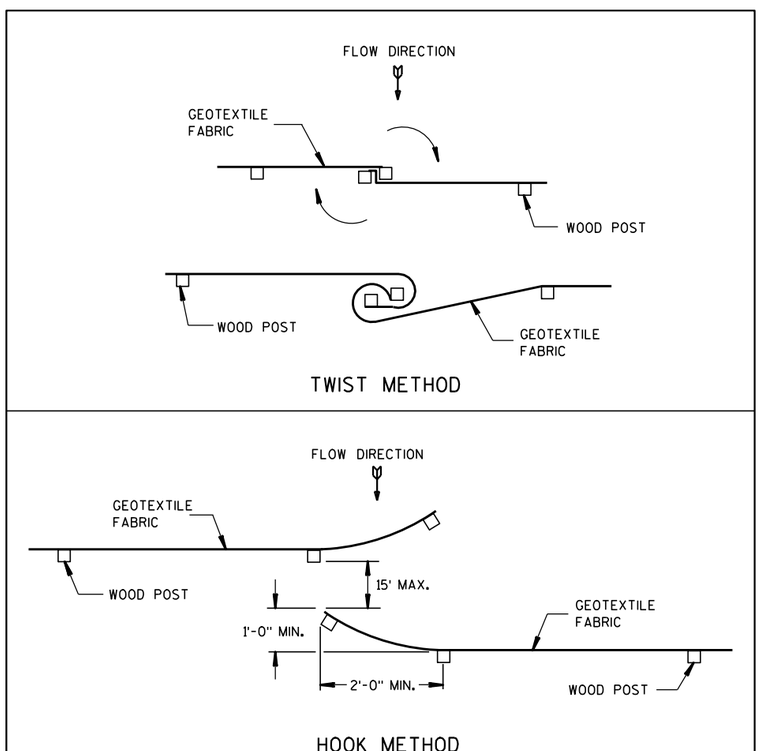

JOINING TWO LENGTHS OF SILT FENCE ⑤

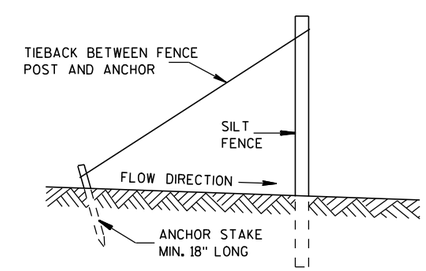

SILT FENCE TIE BACK

(WHEN REQUIRED BY THE ENGINEER)

SILT FENCE
STATE OF WISCONSIN DEPARTMENT OF TRANSPORTATION
APPROVED 4-29-05 /S/ Beth Cann----- DATE CHIEF ROADWAY DEVELOP ENGINEER FHWA

6

6

S.D.D. 8 E 9-6

S.D.D. 8 E 9-6

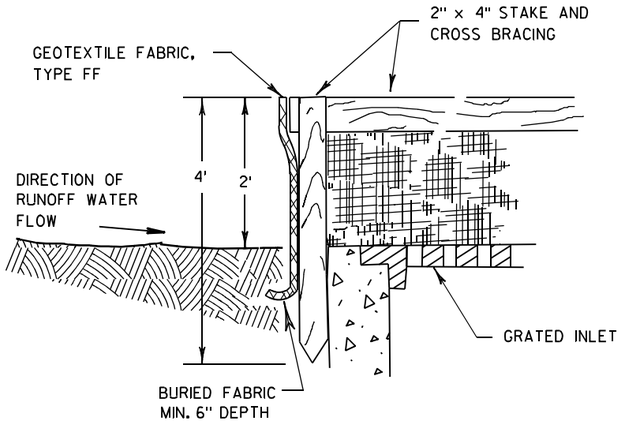

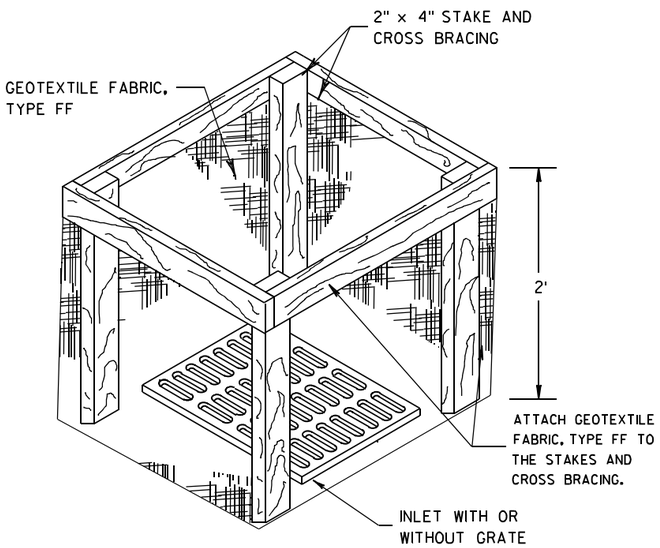

INLET PROTECTION, TYPE A

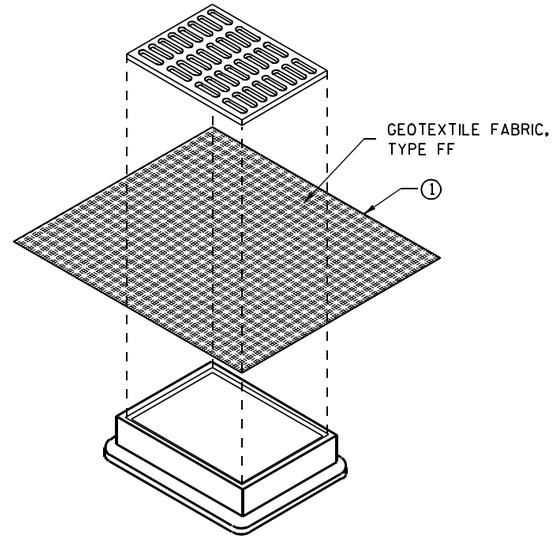

INLET PROTECTION, TYPE B
(WITHOUT CURB BOX)

(CAN BE INSTALLED IN ANY INLET WITHOUT A CURB BOX)

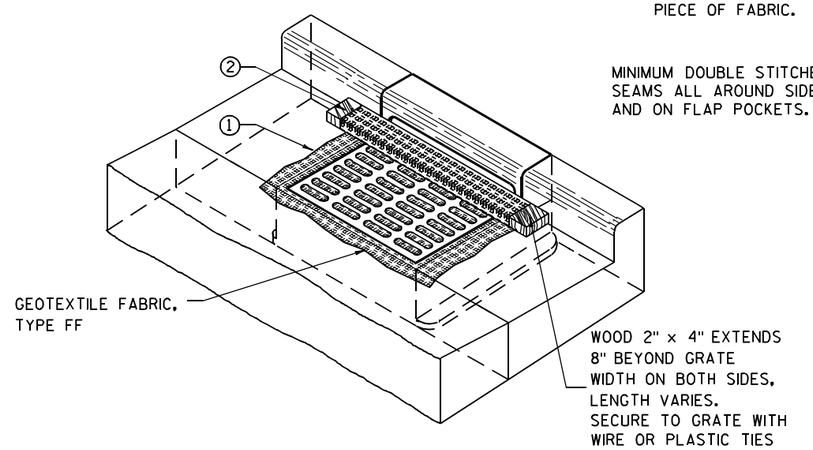

INLET PROTECTION, TYPE C (WITH CURB BOX)

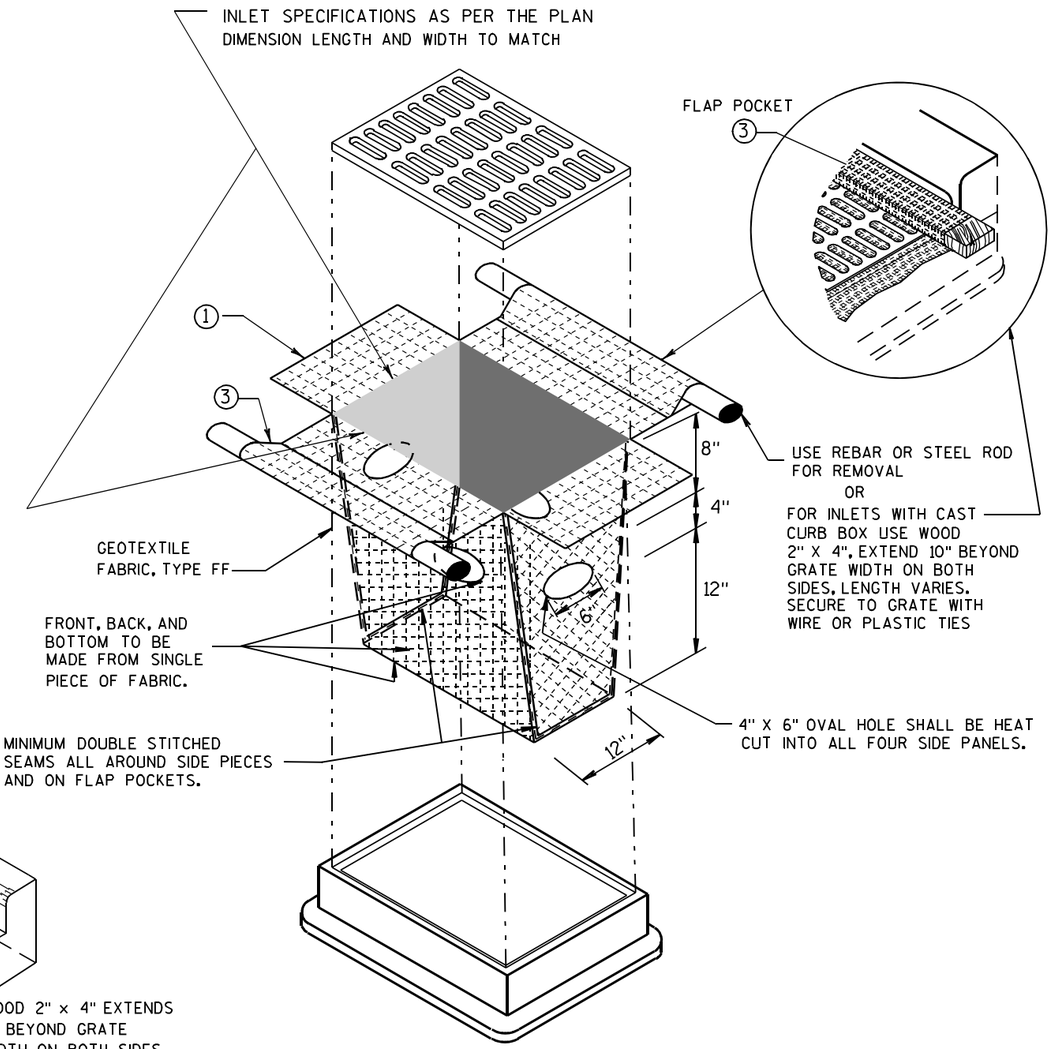

INLET PROTECTION, TYPE D

(CAN BE INSTALLED IN ANY INLET TYPE WITH
OR WITHOUT A CURB BOX AS PER NOTE ②)

GENERAL NOTES

INLET PROTECTION DEVICES SHALL BE MAINTAINED OR REPLACED AT THE DIRECTION OF THE ENGINEER.

MANUFACTURED ALTERNATIVES APPROVED AND LISTED ON THE DEPARTMENT'S EROSION CONTROL PRODUCT ACCEPTABILITY LIST MAY BE SUBSTITUTED.

WHEN REMOVING OR MAINTAINING INLET PROTECTION, CARE SHALL BE TAKEN SO THAT THE SEDIMENT TRAPPED ON THE GEOTEXTILE FABRIC DOES NOT FALL INTO THE INLET. ANY MATERIAL FALLING INTO THE INLET SHALL BE REMOVED IMMEDIATELY.

① FINISHED SIZE, INCLUDING FLAP POCKETS WHERE REQUIRED, SHALL EXTEND A MINIMUM OF 10" AROUND THE PERIMETER TO FACILITATE MAINTENANCE OR REMOVAL.

② FOR INLET PROTECTION, TYPE C (WITH CURB BOX), AN ADDITIONAL 18" OF FABRIC IS WRAPPED AROUND THE WOOD AND SECURED WITH STAPLES. THE WOOD SHALL NOT BLOCK THE ENTIRE HEIGHT OF THE CURB BOX OPENING.

③ FLAP POCKETS SHALL BE LARGE ENOUGH TO ACCEPT WOOD 2X4.

INSTALLATION NOTES

TYPE B & C

TRIM EXCESS FABRIC IN THE FLOW LINE TO WITHIN 3" OF THE GRATE.

THE CONTRACTOR SHALL DEMONSTRATE A METHOD OF MAINTENANCE, USING A SEWN FLAP, HAND HOLDS OR OTHER METHOD TO PREVENT ACCUMULATED SEDIMENT FROM ENTERING THE INLET.

TYPE D

DO NOT INSTALL INLET PROTECTION TYPE D IN INLETS SHALLOWER THAN 30", MEASURED FROM THE BOTTOM OF THE INLET TO THE TOP OF THE GRATE.

TRIM EXCESS FABRIC IN THE FLOW LINE TO WITHIN 3" OF THE GRATE.

THE INSTALLED BAG SHALL HAVE A MINIMUM SIDE CLEARANCE, BETWEEN THE INLET WALLS AND THE BAG, MEASURED AT THE BOTTOM OF THE OVERFLOW HOLES, OF 3". WHERE NECESSARY THE CONTRACTOR SHALL CINCH THE BAG, USING PLASTIC ZIP TIES, TO ACHIEVE THE 3" CLEARANCE. THE TIES SHALL BE PLACED AT A MAXIMUM OF 4" FROM THE BOTTOM OF THE BAG.

INLET PROTECTION
TYPE A, B, C, AND D

STATE OF WISCONSIN
DEPARTMENT OF TRANSPORTATION

APPROVED
10/16/02 — DATE
/S/ Beth Cannatine
CHIEF ROADWAY DEVELOPMENT ENGINEER
FHWA

6

S.D.D. 8 E 10-2

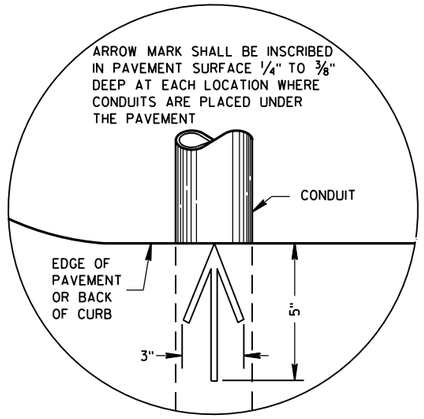

PLAN VIEW

ARROW MARK

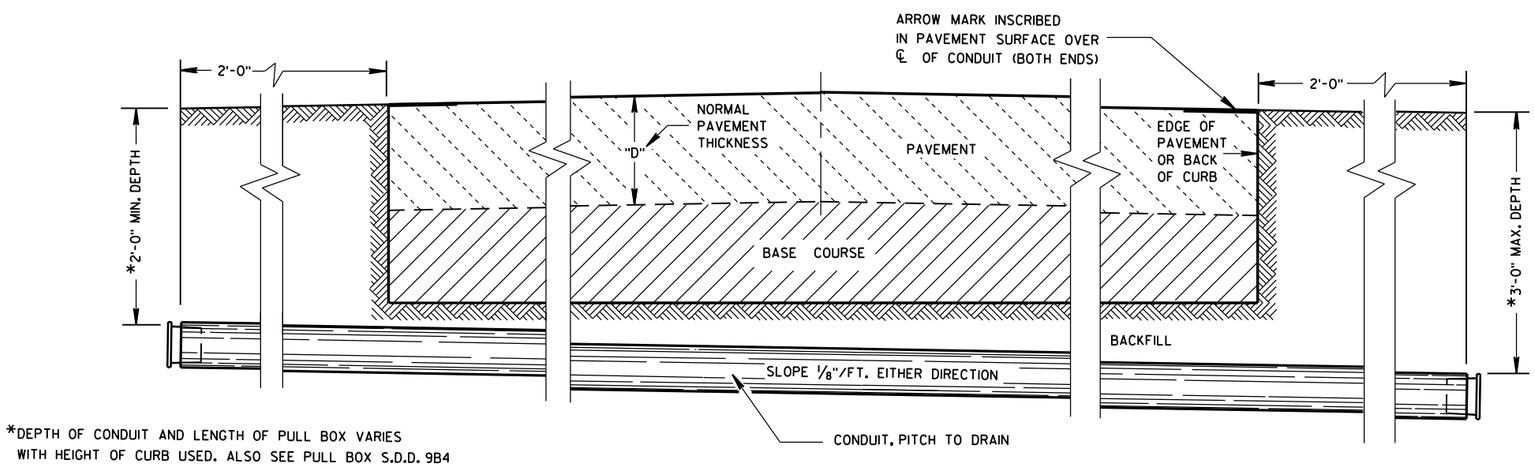

*DEPTH OF CONDUIT AND LENGTH OF PULL BOX VARIES WITH HEIGHT OF CURB USED. ALSO SEE PULL BOX S.D.D. 9B4

SIDE ELEVATION

DETAIL FOR CONDUIT UNDER PAVED HIGHWAYS

GENERAL NOTES

DETAILS OF CONSTRUCTION, MATERIALS AND WORKMANSHIP NOT SHOWN ON THIS DRAWING SHALL CONFORM TO THE PERTINENT REQUIREMENTS OF THE CONTRACT.

METALLIC (STANDARD SPECIFICATION 652.2.2) OR NONMETALLIC (STANDARD SPECIFICATION 652.2.3) CONDUIT SHALL BE FURNISHED AND PLACED AS SHOWN.

DEPTH OF CONDUIT INSTALLED BELOW THE TRAVELED WAY SHALL BE 24 INCHES MINIMUM AND 36 INCHES MAXIMUM.

DEPTH OF CONDUIT INSTALLED THAT IS NOT BELOW THE TRAVELED WAY SHALL BE 18 INCHES MINIMUM AND 36 INCHES MAXIMUM.

ANY EXCEPTION TO THE MAXIMUM DEPTH SHALL BE ONLY WITH THE WRITTEN APPROVAL OF THE ENGINEER.

THE TRENCH SHALL NOT BE BACKFILLED PRIOR TO INSPECTION OF THE CONDUIT.

ALL METALLIC CONDUIT RACEWAY ENDS SHALL BE REAMED AND THREADED.

ALL METALLIC CONDUIT IN WHICH WIRE OR CABLE IS TO BE INSTALLED SHALL BE BUSHED WITH APPROVED THREADED BUSHINGS BEFORE INSTALLATION OF THE WIRE OR CABLE.

ALL METALLIC CONDUITS IN WHICH WIRE OR CABLE IS NOT TO BE INSTALLED SHALL BE CAPPED WITH THREADED PROTECTIVE CAPS, AS APPROVED BY THE ENGINEER.

ALL NONMETALLIC CONDUIT SHALL BE CAPPED OR PLUGGED IMMEDIATELY AFTER INSTALLATION AND SHALL REMAIN CAPPED OR PLUGGED UNTIL WIRE/CABLES ARE INSTALLED.

NONMETALLIC CONDUITS IN WHICH WIRE OR CABLE IS NOT BEING INSTALLED SHALL REMAIN CAPPED OR PLUGGED.

BENDING OF PVC ELECTRICAL CONDUIT SHALL BE ACCOMPLISHED BY USING A BLANKET OR EMERSION TYPE TANK DESIGNED FOR THE PURPOSE OF BENDING PVC ELECTRICAL CONDUIT.

ALL CUT ENDS SHALL BE TRIMMED INSIDE AND OUTSIDE TO REMOVE ALL ROUGH EDGES ON NONMETALLIC CONDUIT. (SEE NEC 347.5)

WHEN REQUIRED TO CONNECT NONMETALLIC CONDUIT TO METALLIC CONDUIT, ONLY U.L. LISTED ADAPTER FITTINGS SHALL BE USED.

PRIOR TO CONDUIT ACCEPTANCE, CONDUIT CAPS OR PLUGS SHALL BE REMOVED, AND THE CAPS, PLUGS AND CONDUIT ENDS SHALL BE THOROUGHLY CLEANED AND THEN THE CAPS OR PLUGS REINSTALLED TO ENSURE THAT THE CAPS OR PLUGS CAN BE EASILY REMOVED IN THE FUTURE.

ALL CONDUIT BEING FURNISHED AND INSTALLED SHALL HAVE THE U.L. LABEL FIRMLY ATTACHED.

CONDUIT RUNS SHALL BE THE SAME SIZE OF CONDUIT FROM ONE END TO THE OTHER (FROM PULL BOX TO PULL BOX-OR-JUNCTION BOX TO JUNCTION BOX-OR-BASE TO BASE, ETC.).

TRACER WIRE SHALL BE INSTALLED AS STATED IN THE STANDARD SPECIFICATION, ITEM 652.3.1.1.

ALL CONDUIT RUNS SHALL BE STRAIGHT (WITHOUT BENDS) FROM PULL BOX TO PULL BOX, PULL BOX TO BASE AND BASE TO BASE AS SHOWN ON THE PLANS.

CONDUIT	
STATE OF WISCONSIN DEPARTMENT OF TRANSPORTATION	
APPROVED March, 2017 DATE	/S/ Ahmet Demirbilek STATE ELECTRICAL
FHWA	

6

S.D.D. 9 B 2-10

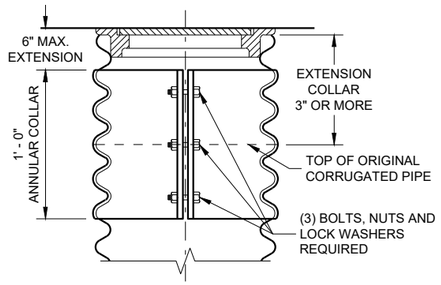

CORRUGATED PIPE EXTENDER

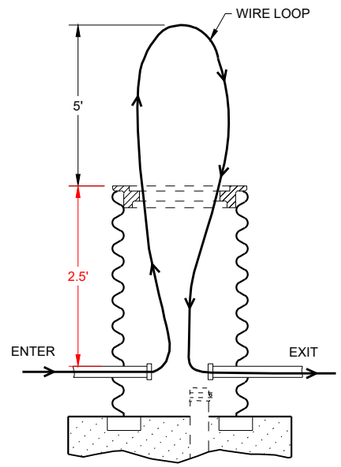

MEASUREMENT DETAIL FOR WIRE/CABLE IN THE PULL BOX

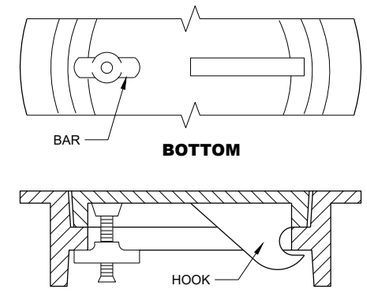

ALTERNATE COVER (LOCKING)

TIGHTENING BAR TYPE

GENERAL NOTES

DETAILS OF CONSTRUCTION, MATERIALS AND WORKMANSHIP NOT SHOWN ON THIS DRAWING SHALL CONFORM TO THE PERTINENT REQUIREMENTS OF THE CONTRACT.

ALL FRAMES AND COVERS SHALL BE HEAVY DUTY TYPE, SUITABLE FOR VEHICULAR TRAFFIC LOADS.

PULL BOXES LOCATED IN THE ROADWAYS SHALL HAVE LOCKING COVERS.

ENTRANCE HOLES INTO PULL BOXES SHALL BE CUT WITH A CIRCULAR HOLE SAW OR HYDRAULIC CONDUIT PUNCH. HOLE SIZE SHALL BE THE OUTSIDE DIAMETER OF THE CONDUIT THAT IS TO FIT IN THE OPENING PLUS NO MORE THAN ¼".

THE CONTRACTOR SHALL NOT INSTALL WIRE IN ANY PULL BOX UNTIL ITS INSTALLATION HAS BEEN INSPECTED AND ACCEPTED BY THE ENGINEER.

GROUNDING LUGS (MECHANICAL CONNECTORS) SHALL BE U.L. LISTED AND APPROVED FOR USE WITH COPPER WIRE.

ALL METALLIC CONDUIT IN WHICH WIRE AND/OR CABLE IS TO BE INSTALLED, SHALL BE BUSHED BEFORE INSTALLATION OF THE WIRE AND/OR CABLE.

WHEN PULL BOXES ARE INSTALLED FOR FUTURE USE, DO NOT INSTALL THE EQUIPMENT GROUNDING LUG. THE EQUIPMENT GROUNDING LUG, THE EQUIPMENT GROUNDING ELECTRODE AND THE EQUIPMENT GROUNDING CONDUCTOR SHALL BE REQUIRED AND INSTALLED UNDER A FUTURE WIRING CONTRACT.

TABLE OF NOMINAL DIMENSIONS AND WEIGHTS

DIMENSION IN INCHES		CORRUGATED STEEL PIPE								
PIPE DIAMETER (INSIDE)	A	12	12	12	18	18	18	24	24	24
PIPE LENGTH**	B	24	30	36	24	30	36	36	42	48
WALL THICKNESS	C	0.064	0.064	0.064	0.064	0.064	0.064	0.064	0.064	0.064
COVER	D	10 ¼	10 ¼	10 ¼	16 ¼	16 ¼	16 ¼	22 ¼	22 ¼	22 ¼
FRAME	E	14 ½	14 ½	14 ½	20 ½	20 ½	20 ½	26 ½	26 ½	26 ½
FRAME	F	8 ½	8 ½	8 ½	14 ½	14 ½	14 ½	20 ½	20 ½	20 ½
FRAME	G	11 ½	11 ½	11 ½	17 ½	17 ½	17 ½	23 ½	23 ½	23 ½
WEIGHT IN POUNDS*										
FRAME AND COVER		60	60	60	110	110	110	155	155	155

*THE ACTUAL WEIGHT OF THE MANHOLE FRAME AND COVER MAY VARY WITHIN 5 PERCENT PLUS OR MINUS OF THE WEIGHTS SHOWN.

**NORMALLY USED LENGTHS. THE PROJECT ENGINEER SHALL DETERMINE IF PIPE LENGTHS, OTHER THAN THOSE SPECIFIED, SHALL BE USED, TO A MAXIMUM OF 48" (CONTINUOUS LENGTH, NON-SPLICED). THE ADDITIONAL LENGTH SHALL BE INCIDENTAL TO THE PULL BOX BID PRICE.

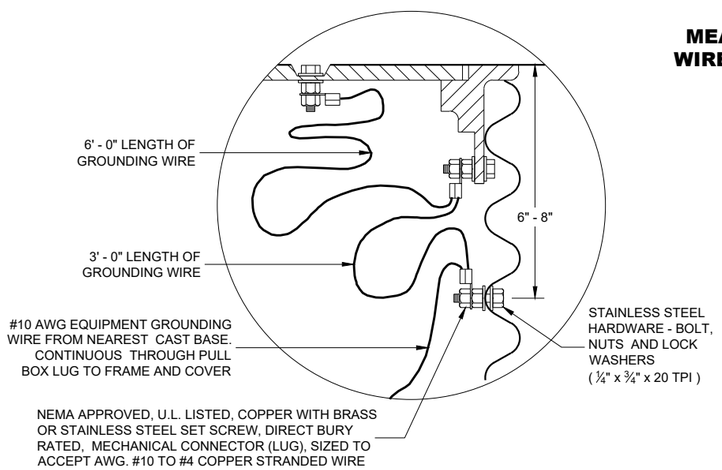

EQUIPMENT GROUNDING LUG AND LOCATION IN STEEL PULL BOXES

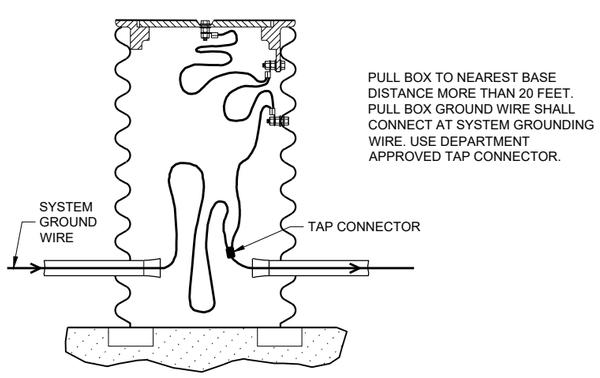

EQUIPMENT GROUNDING LUG AND LOCATION IN STEEL PULL BOXES

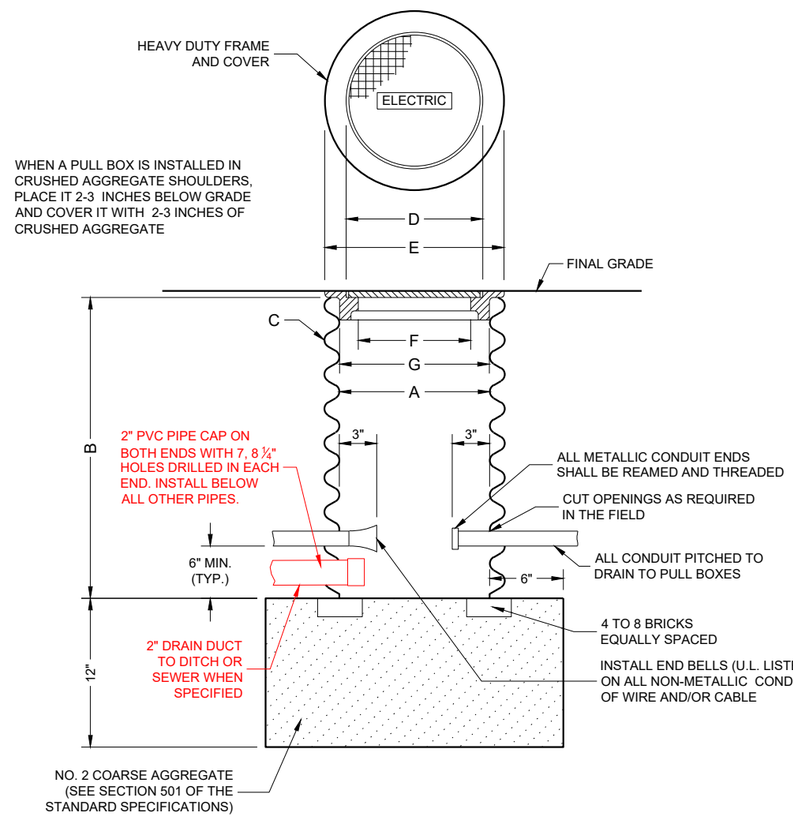

PULL BOX

PULL BOX

STATE OF WISCONSIN
DEPARTMENT OF TRANSPORTATION

APPROVED
May 2022 /S/ Ahmet Demirbilek
DATE STATE ELECTRICAL ENGI

FHWA

FORM DEPTH SHALL BE NO MORE THAN 6" BELOW GRADE ON THE LOWER SIDE OF BASE

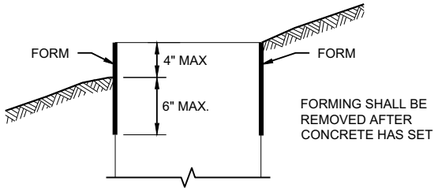

FORMING DETAIL

QUANTITY REQUIREMENTS	CONCRETE BASE TYPE		
	1	2	5 & 6
APPROX. CUBIC YARDS OF CONCRETE	0.40	0.57	0.40
LBS. OF HOOP BAR STEEL	NONE	23	16
LBS. OF VERTICAL BAR STEEL	NONE	60	18

GENERAL NOTES

DETAILS OF CONSTRUCTION, MATERIALS AND WORKMANSHIP NOT SHOWN ON THIS DRAWINGSHALL CONFORM TO THE PERTINENT REQUIREMENTS OF THE CONTRACT.

BASES SHALL BE EXCAVATED BY USE OF A CIRCULAR AUGER.

TOP SURFACES OF CONCRETE BASES SHALL BE TROWEL FINISHED SMOOTH AND LEVEL.

CONDUIT SIZES AND LOCATIONS SHALL BE SHOWN ON THE PLANS

THE FINAL OR TERMINATING CONCRETE BASE IN A CONDUIT RUN SHALL HAVE A 6" EXIT STUB INSTALLED FOR FUTURE CABLING USE. THE EXIT STUB SHALL BE SIZED AS USED THROUGHOUT THE CONDUIT RUN AS SHOWN A THE ENTRANCE OF THE BASE.

ENDS OF CONDUIT INSTALLED BELOW GRADE FRO FUTURE USE SHALL BE CAPPED IF METALLIC OR PLUGGED IF NON-METALLIC.

MINIMUM BENDING RADIUS OF CONDUIT IS EQUAL TO 6X THE DIAMETER.

CONDUIT HEIGHT ABOVE CONCRETE BASES SHALL BE 1 INCH. ALL METALLIC CONDUIT ENDS SHALL BE REAMED AND THREADED.

ALL CONDUIT ENDS AT THE TOP OF CONCRETE BASES SHALL BE CAPPED IF METALLIC OR PLUGGED IF NON-METALLIC IMMEDIATELY AFTER PLACEMENT AND BEFORE CONCRETE IS POURED. CONDUITS IN WHICH WIRE OR CABLE IS NOT INSTALLED SHALL REMAIN CAPPED OR PLUGGED.

BELL ENDS SHALL BE INSTALLED ON ALL PVC CONDUIT EXPOSED AT THE TOP OF CONCRETE BASES BEFORE INSTALLATION.

WHEN REQUIRED TO CONNECT NON-METALLIC CONDUIT TO METALLIC CONDUIT, ONLY ADAPTER FITTINGS, U.L. LISTED FOR ELECTRICAL USE, SHALL BE USED.

IF A BASE REQUIRES A DEEP FORM BECAUSE OF LOOSE DIRT OR FILL, THE FORM SHALL BE REMOVED BEFORE BACKFILLING AROUND THE BASE. BACKFILL SHALL BE TAMPED TIGHT AGAINST THE BARE CONCRETE BASE IN LAYERS OF 1 FOOT OR LESS.

A NO. 4 AWG STRANDED COPPER EQUIPMENT GROUNDING CONDUCTOR SHALL BE EXOTHERMICALLY WELDED TO THE EQUIPMENT GROUNDING ELECTRODE (GROUND ROD) FOR TYPE 2, TYPE 5 AND TYPE 6 BASES.

THE EQUIPMENT GROUNDING CONDUCTOR SHALL BE FURNISHED AND INSTALLED TO ENTER ALL BASE TYPES THROUGH A 1 INCH CONDUIT INSTALLED FOR GROUNDING PURPOSES, LEAVING A 4 FOOT COIL OF WIRE ABOVE THE CONCRETE BASE. THE EQUIPMENT GROUNDING CONDUCTOR SHALL BE NEATLY COILED AND THE COILS TIED TOGETHER.

ANCHOR RODS SHALL BE THREADED 12" IN LENGTH ON EACH END OF THE ROD. ANCHOR RODS SHALL BE MANUFACTURED IN ACCORDANCE WITH SECTION 654.2.1 OF THE STANDARD SPECIFICATIONS.

WASHERS AND LOCK WASHERS ARE REQUIRED ON ALL ANCHOR RODS.

WHEN ANCHOR RODS USING THE ALTERNATE "L" BEND ARE FURNISHED, THE 4 INCH"L" BEND SHALL BE IN ADDITION TO THE SPECIFIED ANCHOR ROD BAR LENGTH. THE "L" BEND SHALL NOT BE THREADED.

ANCHOR RODS SHALL BE INSTALLED WITH MISALIGNMENTS OF LESS THAN 1:40 FROM VERTICAL.

WELDING OF THE ANCHOR RODS TO THE CAGE IS UNACCEPTABLE. TIE WIRES SHALL BE USED.

BAR STEEL REINFORCEMENT SHALL BE COATED WITH POWDERED EPOXY RESIN IN ACCORDANCE WITH SECTION 505 OF THE STANDARD SPECIFICATIONS (LATEST EDITION).

(1) THE MINIMUM DEPTH OF CONDUIT EXITING THE CONCRETE BASE AND INSTALLED BELOW THE TRAVELED WAY SHALL BE 24 INCHES. THE MINIMUM DEPTH OF CONDUIT EXITING THE CONCRETE BASE THAT IS NOT INSTALLED BELOW THE TRAVELED WAY SHALL BE 18 INCHES. THE MAXIMUM DEPTH OF ALL CONDUIT SHALL BE 36 INCHES EXCEPT WITH WRITTEN APPROVAL OF THE ENGINEER.

(2) (4) 1" DIA. X 3' - 6" ANCHOR RODS.

(3) (4) 1" DIA. X 5' - 0" ANCHOR RODS.

(4) (6) NO. 6 X 6' - 8" BAR STEEL REINFORCEMENT.

(5) (7) NO. 4 X 5' - 1" BAR STEEL REINFORCEMENT @ 1' - 0" C - C.

(6) (4) 1" DIA. X 3' - 6" ANCHOR RODS.

(7) (6) NO. 4 X 4' - 8" BAR STEEL REINFORCEMENT.

(8) (5) NO. 4 X 5' - 1" BAR STELL REINFORCEMENT @ 1' - 0" C -C.

(9) EXOTHERMIC CONNECTION TO EUIPMENT GROUNDING CONDUCTOR

(10) ⅝" DIA. X 8' -0" COPPERCLAD EQUIPMENT GROUNDING ELECTRODE REQUIRED

(11) ANY ANCHOR ROD PROJECTION SHORTER THAN 2 ¾" OR LONGER THAN 3 ¼" SHALL REQUIRE THE BASE TO BE REMOVED AND REPLACED AT THE CONTRACTORS EXPENSE.

(12) FOR NON - BREAKAWAY INSTALLATIONS, 4 ½" ± ANCHOR ROD PROJECTION WITH THE USE OF LEVELING NUTS. RODENT SCREEN REQUIRED.

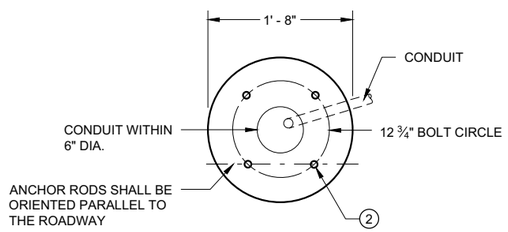

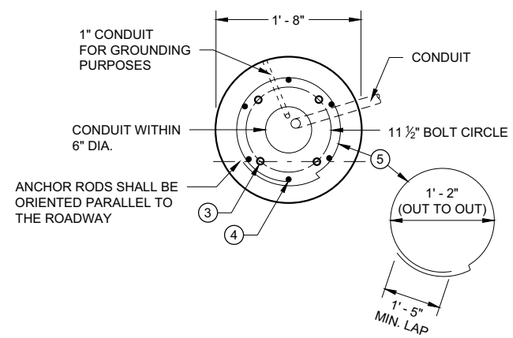

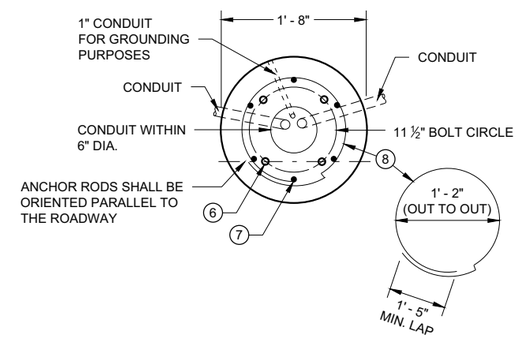

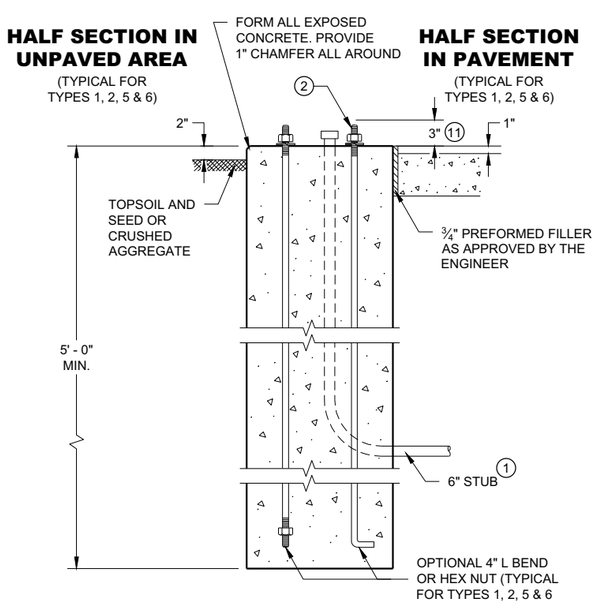

TYPE 1

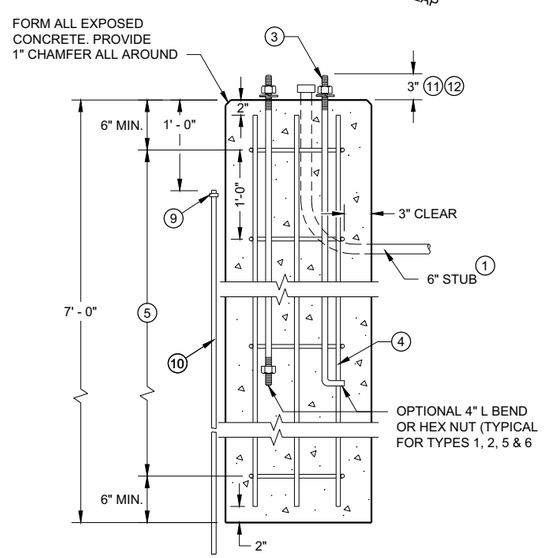

TYPE 2

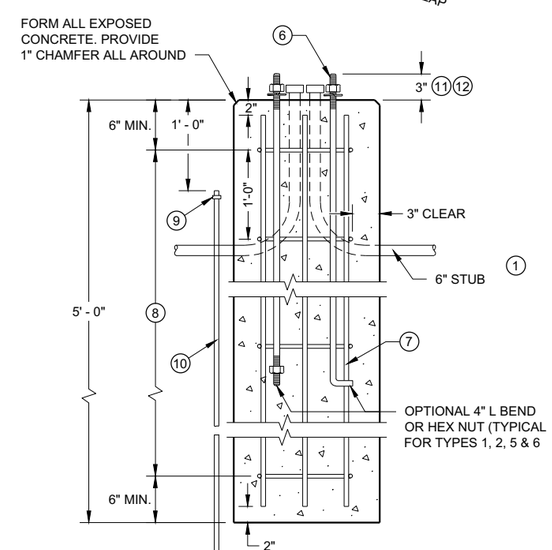

TYPE 5 & 6

CONCRETE BASES

CONCRETE BASES TYPES 1, 2, 5, & 6

STATE OF WISCONSIN
DEPARTMENT OF TRANSPORTATION

APPROVED
May 2019 — DATE
/S/ Ahmet Demirbilek — STATE ELECTRICAL ENGI
FHWA

6

SDD 09C02 - 09

GENERAL NOTES

DETAILS OF CONSTRUCTION, MATERIALS AND WORKMANSHIP NOT SHOWN ON THIS DRAWING SHALL CONFORM TO THE PERTINENT REQUIREMENTS OF THE CONTRACT.

FOUR (4) BOLTS SHALL BE FURNISHED WITH EACH TRANSFORMER BASE. BOLTS SHALL BE 1" DIAMETER, 4" IN LENGTH, WITH WASHERS, LOCK WASHERS AND NUTS. BOLTS, NUTS AND WASHERS SHALL BE MANUFACTURED IN ACCORDANCE WITH SECTION 531.2.2 OF THE STANDARD SPECIFICATIONS.

LEVELING SHIMS, IF NEEDED, SHALL BE DESIGNED FOR THE PURPOSE AND USED UNDER CAST BASES WHEN PLUMBING POLES OR STANDARDS DURING INSTALLATION. THE USE OF WASHERS IN LIEU OF PROPER LEVELING SHIMS IS NOT ACCEPTABLE.

SHIM LENGTH SHALL BE LONG ENOUGH TO COMPLETELY COVER THE AREA UNDER THE LENGTH AND WIDTH OF THE BASE MOUNTING FLANGE.

DOUBLE NUTTING IS NOT ACCEPTABLE FOR LEVELING OR MOUNTING PURPOSES.

A NEMA APPROVED, U.L. LISTED, COPPER WITH BRASS OR STAINLESS STEEL SET SCREW, DIRECT BURY RATED, MECHANICAL CONNECTOR (LUG), SIZED TO ACCEPT AWG. #10 TO #4 COPPER STRANDED WIRE SHALL BE FURNISHED AND INSTALLED IN THE PEDESTAL AND TRANSFORMER BASES.

THE MECHANICAL CONNECTOR SHALL BE INSTALLED USING A 1/4" - 20 (TPI) STAINLESS STEEL HEX HEAD BOLT OF SUFFICIENT LENGTH TO FIRMLY ATTACH THE LUG TO THE BASE.

SHOULD THE MANNER OF ATTACHMENT OF THE LUG REQUIRE WASHERS, HEX NUTS, LOCK WASHER - THEY SHALL BE STAINLESS STEEL AS IS THE BOLT. THE MANNER OF ATTACHMENT SHALL NOT BLOCK ACCESSIBILITY TO WIRE PLACEMENT IN THE CONNECTOR.

PEDESTAL BASE COLLAR THREADING SHALL BE TAPERED AND IN ACCORDANCE WITH NATIONAL PIPE THREADING DIMENSIONS.

BASE COLLAR THREADING SHALL EXTEND INTO THE BASE COLLAR WITH SUFFICIENT DEPTH TO ACCEPT THE INSTALLATION OF TRAFFIC SIGNAL STANDARDS TO A DEPTH OF 1 1/2", THEN TIGHTENING TO A POINT OF BEING IMMOVABLE.

THE ACCESS DOOR SHALL BE OF THE SAME MATERIAL AS THE BASE.

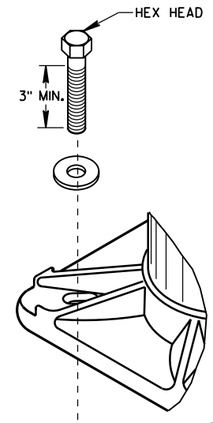

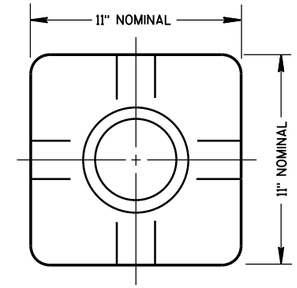

TOP VIEW
(PEDESTAL BASE)

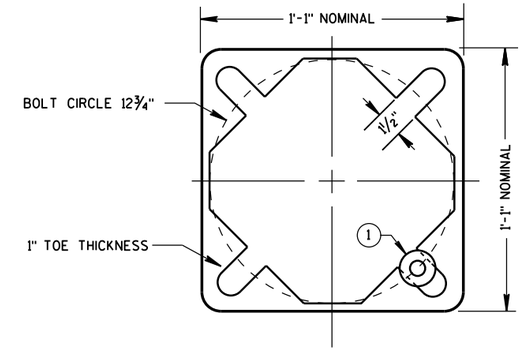

BOTTOM VIEW
(PEDESTAL BASE)

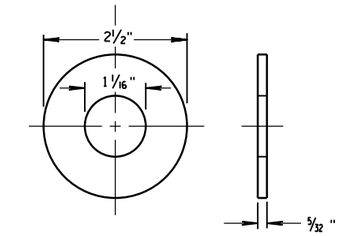

ZINC COATED STEEL WASHER
TO BE PROVIDED BY THE CONTRACTOR

PEDESTAL BASE WASHER (1)

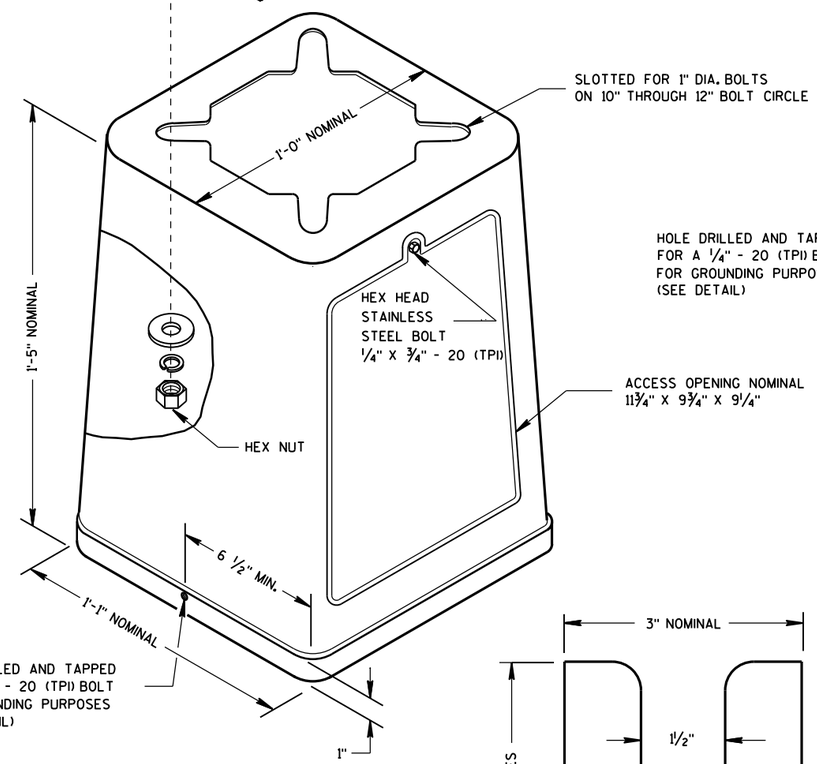

ISOMETRIC VIEW

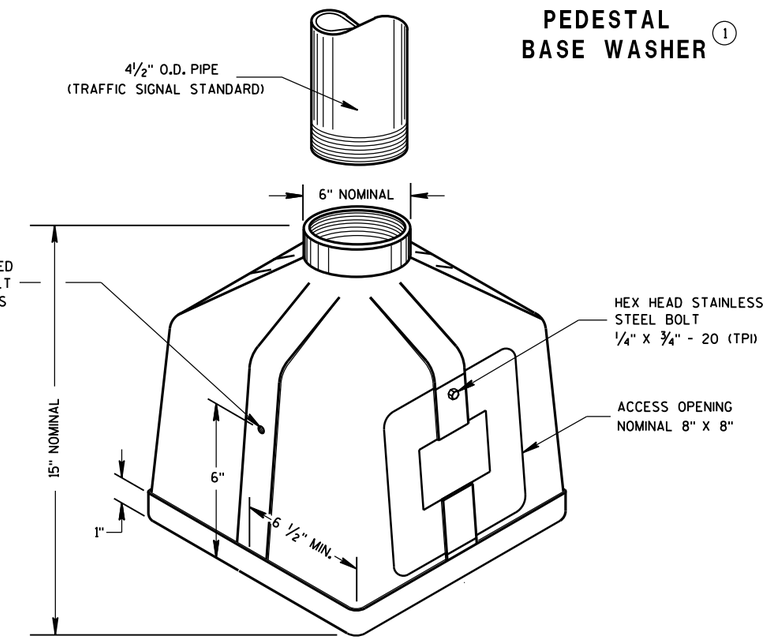

ISOMETRIC VIEW
PEDESTAL BASE

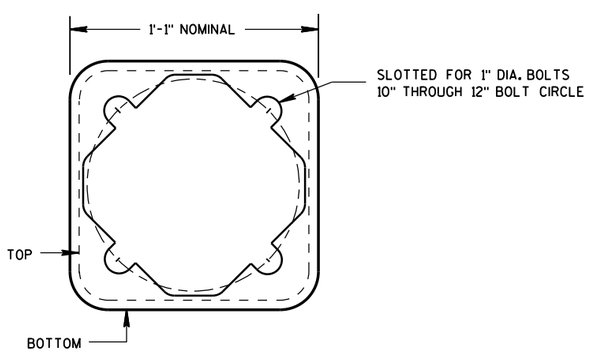

BOTTOM VIEW
(TRANSFORMER BASE)

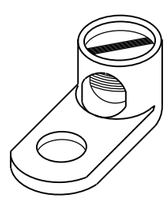

TYPICAL MECHANICAL CONNECTOR LUG

TO BE FURNISHED WITH EACH BASE

TRANSFORMER BASE

INTENDED FOR USE WITH TYPE 2, 3, 4, 5 & 6 POLES

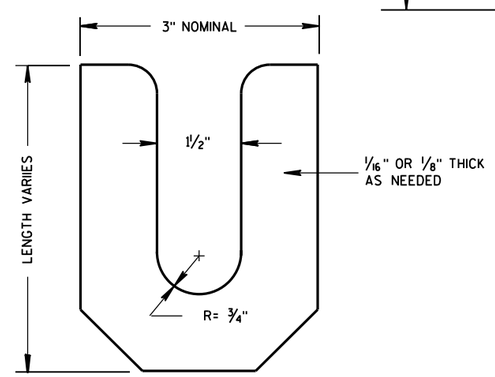

LEVELING SHIM

TRANSFORMER/PEDESTAL BASES	
STATE OF WISCONSIN DEPARTMENT OF TRANSPORTATION	
APPROVED Sept. 2014 DATE	/S/ Ahmet Demirbilek STATE ELECTRICAL
FHWA	

6

6

S.D.D. 9 C 3-4

S.D.D. 9 C 3-4

SDD 09C06 Concrete Control Cabinet Base, Type 9, Special

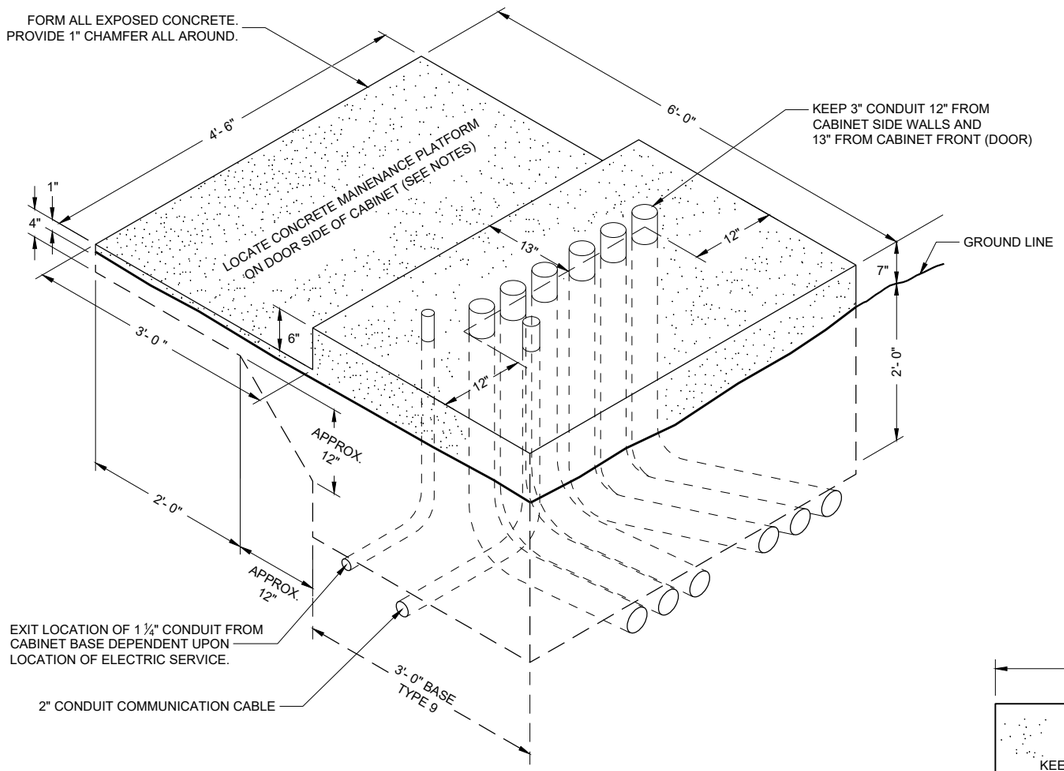

ISOMETRIC VIEW

TYPE 9 SPECIAL

(C.Y. CONCRETE = APPROX. 1.56)

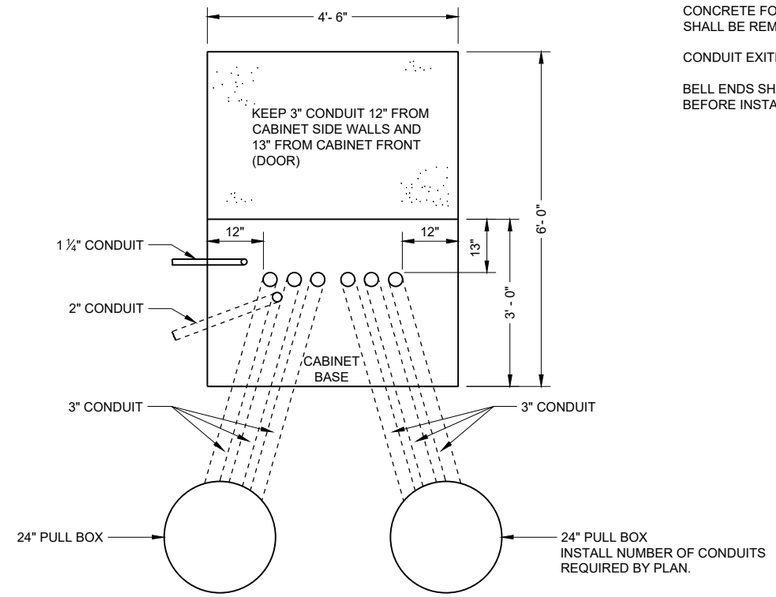

PLAN VIEW

CONCRETE CONTROL CABINET BASE,
TYPE 9 SPECIAL

GENERAL NOTES

DETAILS OF CONSTRUCTION, MATERIALS AND WORKMANSHIP NOT SHOWN ON THIS DRAWING SHALL CONFORM TO THE PERTINENT REQUIREMENTS OF THE CONTRACT.

INSTALL FOUR INCH MINIMUM DIAMETER X 4 INCH MINIMUM LENGTH STAINLESS STEEL APPROVED CONCRETE MASONRY ANCHORS WITH A PULLOUT STRENGTH OF 9,000 LBS. TO ANCHOR THE CABINET TO TYPE 6, 7, 8, AND 9 BASES. THE ANCHOR STUDS SHALL BE LOCATED AS DIRECTED BY THE ENGINEER TO PROPERLY ANCHOR THE CONTROL CABINET TO THE BASE.

WHEN REQUIRED TO CONNECT NON - METALLIC CONDUIT TO METALLIC CONDUIT, ONLY ADAPTER FITTINGS, U. L. LISTED FOR ELECTRICAL USE, SHALL BE USED.

CONDUIT HEIGHT ABOVE THE CONCRETE BASE SHALL BE 1 INCH.

DEPTH OF CONDUIT INSTALLED BELOW THE TRAVELED WAY SHALL BE 24 INCHES MINIMUM AND 36 INCHES MAXIMUM.

DEPTH OF CONDUIT INSTALLED THAT IS NOT BELOW THE TRAVELED WAY SHALL BE 18 INCHES MINIMUM AND 36 INCHES MAXIMUM.

ANY EXCEPTION TO THE MAXIMUM DEPTH SHALL BE ONLY WITH THE WRITTEN APPROVAL OF THE ENGINEER.

CONTROL CABINET BASE TOP SURFACE SHALL BE TROWEL FINISHED SMOOTH AND LEVEL.

MAINTENANCE PLATFORM SHALL BE FLOAT OR BROOM FINISHED AND LEVEL.

MAINTENANCE PLATFORMS ARE NOT REQUIRED WHEN THE SURROUNDING AREA IS PAVED.

MINIMUM BENDING RADIUS OF CONDUIT EQUALS 6 TIMES THE DIAMETER.

ALL METALLIC CONDUIT ENDS SHALL BE REAMED AND THREADED.

CAP ALL BELOW GRADE METALLIC CONDUIT ENDS IN WHICH WIRE OR CABLE IS NOT BEING INSTALLED.

PLUG ALL BELOW GRADE NON - METALLIC CONDUIT ENDS IN WHICH WIRE OR CABLE IS NOT BEING INSTALLED.

ALL CONDUIT ENDS AT THE TOP OF CONCRETE BASES SHALL BE CAPPED IF METALLIC OR PLUGGED IF NON - METALLIC IMMEDIATELY AFTER PLACEMENT AND BEFORE CONCRETE IS POURED. CONDUITS IN WHICH WIRE OR CABLE IS NOT BEING INSTALLED SHALL REMAIN CAPPED OR PLUGGED.

CONCRETE FORM DEPTH BELOW FINISHED GRADE SHALL BE 6 INCHES MAXIMUM. CONCRETE FORMS SHALL BE REMOVED AFTER CONCRETE HAS SET.

CONDUIT EXITING THE CONCRETE BASE (SIX 3") SHALL TERMINATE IN PULL BOXES AS SHOWN ON THE PLANS.

BELL ENDS SHALL BE INSTALLED ON ALL PVC CONDUIT EXPOSED AT THE TOP OF THE CONCRETE BASE BEFORE INSTALLATION OF CABLE OR WIRE.

CONCRETE CONTROL CABINET BASE TYPE 9, SPECIAL

STATE OF WISCONSIN
DEPARTMENT OF TRANSPORTATION

APPROVED
September 2014 /S/ Ahmet Demerbilek
DATE STATE ELECTRICAL ENGI

FHWA

GENERAL NOTES

DETAILS OF CONSTRUCTION, MATERIALS AND WORKMANSHIP NOT SHOWN ON THIS DRAWING SHALL CONFORM TO THE PERTINENT REQUIREMENTS OF THE CONTRACT.

BASES (SHAFT), BELOW THE WING, SHALL BE EXCAVATED BY THE USE OF A CIRCULAR AUGER. IF A BASE REQUIRES A DEEP FORM BECAUSE OF LOOSE SOIL, THE FORM SHALL BE REMOVED BEFORE BACKFILLING AROUND THE BASE. BACKFILL SHALL BE TAMPED TIGHT AGAINST THE BARE CONCRETE BASE IN LAYERS OF 1 FOOT OR LESS.

TOP SURFACE OF THE CONCRETE BASE SHALL BE TROWEL FINISHED AND LEVEL.

USE 3" CLEAR FOR ALL REINFORCEMENT UNLESS NOTED OTHERWISE.

BENDING DIMENSIONS FOR REINFORCING BARS ARE OUT TO OUT.

BAR STEEL REINFORCEMENT SHALL BE COATED WITH POWDERED EPOXY RESIN IN ACCORDANCE WITH SECTION 505 OF THE STANDARD SPECIFICATIONS.

ANCHOR RODS SHALL BE INSTALLED WITH MISALIGNMENTS OF LESS THAN 1:40 FROM VERTICAL.

WELDING OF ANCHOR RODS TO THE CAGE IS UNACCEPTABLE. TEMPLATES SHALL BE USED.

ORIENT ANCHOR RODS IN FOOTING AND PROVIDE ANCHOR ROD PROJECTION ABOVE TOP OF CONCRETE FOOTING BASE PER THIS SHEET.

CONDUIT SIZE AND LOCATIONS SHALL BE AS SHOWN ON THE PLANS.

MINIMUM BENDING RADIUS OF CONDUIT IS EQUAL TO 6 X THE DIAMETER.

CONDUIT HEIGHT ABOVE CONCRETE BASE SHALL BE 4 ½ INCHES. ALL METALLIC CONDUIT ENDS SHALL BE REAMED AND THREADED. NONMETALLIC CONDUIT SHALL HAVE BELL ENDS INSTALLED. ALL CONDUIT SHALL SLOPE TO PULL BOX.

ALL CONDUIT ENDS AT THE TOP OF CONCRETE BASES SHALL BE CAPPED IF METALLIC OR PLUGGED IF NONMETALLIC IMMEDIATELY AFTER PLACEMENT AND BEFORE CONCRETE IS POURED. CONDUITS IN WHICH WIRE OR CABLE IS NOT INSTALLED SHALL REMAIN CAPPED OR PLUGGED.

BELL ENDS SHALL BE INSTALLED ON ALL PVC CONDUIT EXPOSED AT THE TOP OF CONCRETE BASES BEFORE INSTALLATION OF CABLE OR WIRE.

WHEN REQUIRED TO CONNECT NONMETALLIC CONDUIT TO METALLIC CONDUIT, ONLY ADAPTOR FITTINGS, U.L. LISTED FOR ELECTRICAL USE, SHALL BE USED.

A NO. 4 AWG, STRANDED COPPER EQUIPMENT GROUNDING CONDUCTOR SHALL BE EXOTHERMICALLY WELDED TO THE EQUIPMENT GROUNDING ELECTRODE (GROUND ROD).

THE EQUIPMENT GROUNDING CONDUCTOR SHALL BE FURNISHED AND INSTALLED TO ENTER THE BASE THROUGH A 1-INCH CONDUIT INSTALLED FOR GROUNDING PURPOSES, LEAVING A 4-FOOT COIL OF WIRE ABOVE THE CONCRETE BASE, THE EQUIPMENT GROUNDING CONDUCTOR SHALL BE NEATLY COILED AND THE COILS TIED TOGETHER.

THE CONTRACTOR IS RESPONSIBLE FOR MAKING HIS OWN DETERMINATION AS TO THE TYPE AND LOCATION OF THE UNDERGROUND UTILITIES AS MAY BE NECESSARY TO AVOID DAMAGE THERETO.

(1) THE MINIMUM DEPTH OF CONDUIT EXITING THE CONCRETE BASE AND INSTALLED BELOW THE TRAVEL WAY SHALL BE 24-INCHES. THE MINIMUM DEPTH OF CONDUIT EXITING THE CONCRETE BASE THAT IS NOT INSTALLED BELOW THE TRAVELED WAY SHALL BE 18-INCHES. THE MAXIMUM DEPTH OF ALL CONDUIT SHALL BE 36-INCHES, (GREATER THAN 36-INCHES IF INSTALLED IN BREAKER-RUN), EXCEPT WITH THE WRITTEN APPROVAL OF THE ENGINEER.

(2) (6) 1 ¾" DIA. X 7' - 2" ANCHOR RODS

(3) (10) NO. 6 X 14' - 1" BAR STEEL VERTICAL REINFORCEMENT.

(4) (22) NO. 5 X 11'- 0" BAR STEEL REINFORCEMENT @ 8" MAX. C-C.

(5) (10) NO. 5 X 11' - 0" BAR STEEL HORIZONTAL REINFORCEMENT

CONCRETE MASONRY.....fc = 3,500 p.s.i
HIGH STRENGTH BAR STEEL REINFORCEMENT, GRADE 60.....fy = 60,000 p.s.i.
ANCHOR RODS, ASTM F1554 GRADE 55 (IN ACCORDANCE .....fy = 55,000 p.s.i.
WITH SECTION 531.2.2 OF THE STANDARD SPECIFICATION)
TEMPLATES, ASTM A709, GRADE 36.....fy = 36,000 p.s.i.

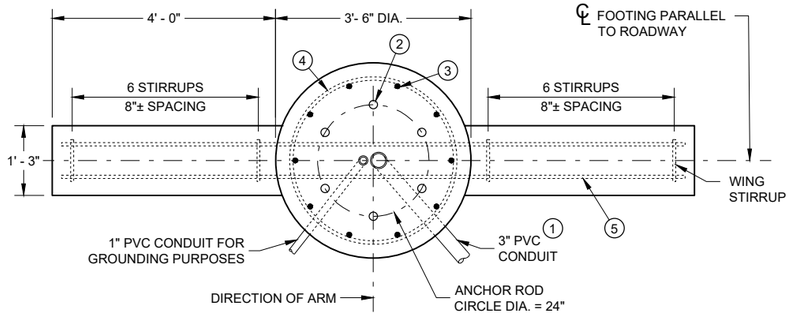

PLAN VIEW

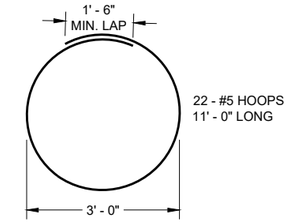

HOOP DETAIL

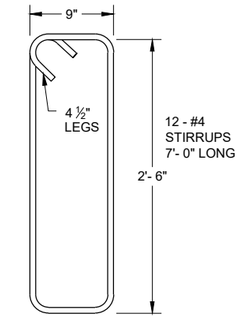

WING STIRRUP DETAIL

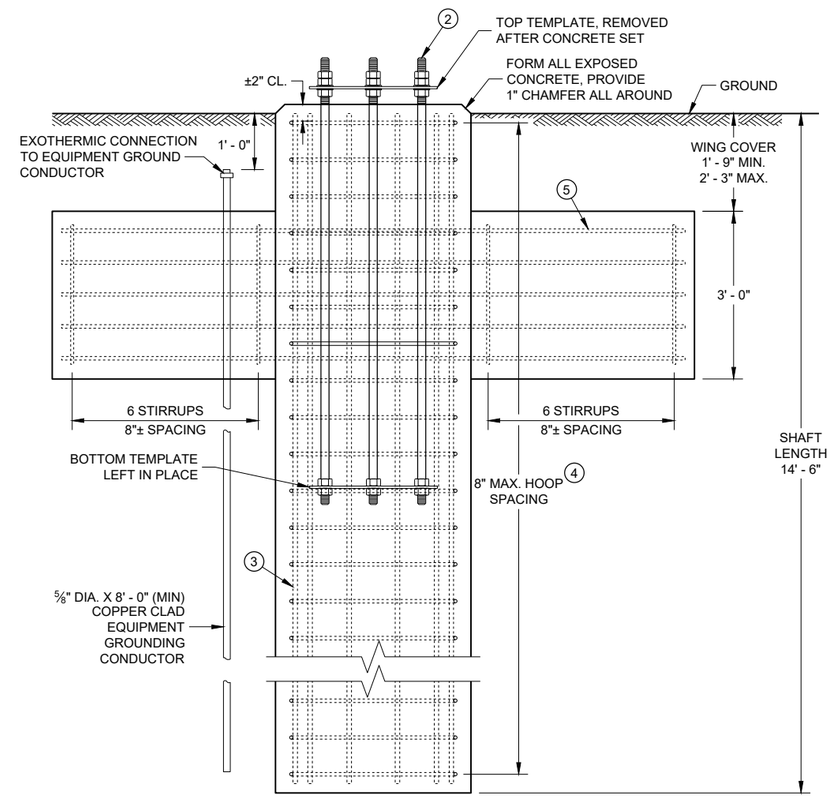

ELEVATION VIEW
(CONDUITS NOT SHOWN ON THIS VIEW FOR CLARITY)

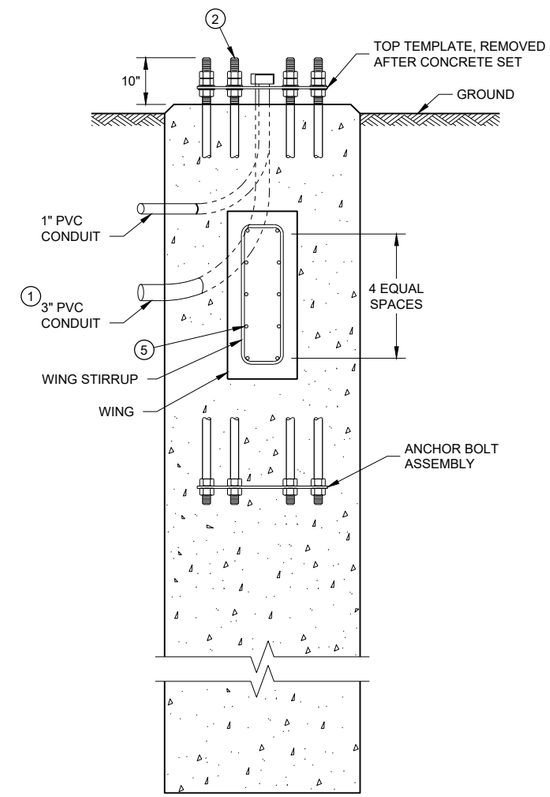

(HOOPS AND VERTICAL SHAFT REINFORCEMENT NOT SHOWN ON THIS VIEW FOR CLARITY)

CONCRETE BASE, TYPE 13
(FOR TYPE 12, TYPE 13 AND OVER HEIGHT (OH) POLES)

CONCRETE = 6.3 CUBIC YARD
H.S. REINFORCEMENT = 635 LBS.

TO BE USED WHEN GROUND ELEVATION AT BASE EQUALS OR IS GREATER THAN HIGH POINT OF ROADWAY ELEVATION. SEE 9C13 WHEN GROUND ELEVATION AT BASE IS LOWER THAN HIGH POINT OF ROADWAY ELEVATION

CONCRETE BASE TYPE 13

STATE OF WISCONSIN
DEPARTMENT OF TRANSPORTATION

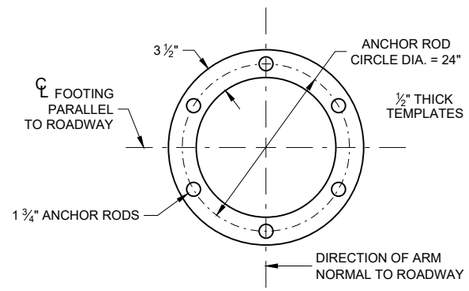

TOP AND BOTTOM TEMPLATE

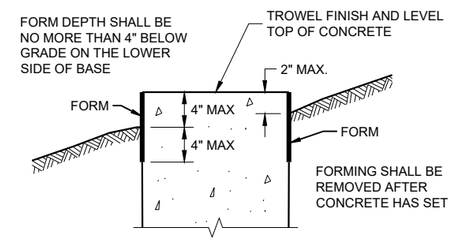

FORMING DETAIL

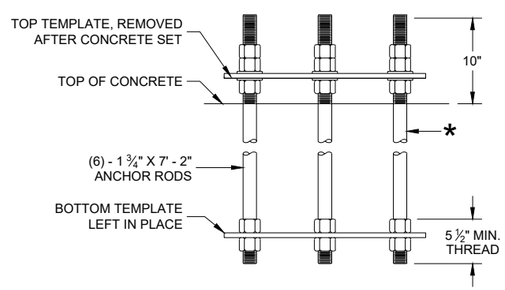

ANCHOR ROD ASSEMBLY DETAILS

* THREAD TOP 11" OF ANCHOR ROD FOR 3 NUTS AND 2 WASHERS AND BOTTOM 5 ½" FOR 2 NUTS PER ANCHOR ROD. HOT DIP GALVANIZE THE ENTIRE LENGTH OF THE ANCHOR ROD (ASTM A123) AND HOT DIP NUTS AND WASHERS (ASTM A153. USE ZINC COATED NUTS MANUFACTURED WITH SUFFICIENT ALLOWANCE TO ALLOW NUTS TO RUN FREELY ON THE THREADS.

6

SDD 09C12 - 09b

CONCRETE BASE TYPE 13

STATE OF WISCONSIN
DEPARTMENT OF TRANSPORTATION

APPROVED
May 2017 — DATE
/S/ Ahmet Demirbilek — WIND LOADED STRUCTU PROGRAM LEADER
FHWA

6

SDD 09C12 - 09b

GENERAL NOTES

DETAILS OF CONSTRUCTION, MATERIALS AND WORKMANSHIP NOT SHOWN ON THIS DRAWING SHALL CONFORM TO THE PERTINENT REQUIREMENTS OF THE CONTRACT.

THE CONTRACTOR IS RESPONSIBLE FOR MAKING THEIR OWN DETERMINATION AS TO THE TYPE AND LOCATION OF UNDERGROUND UTILITIES AS MAY BE NECESSARY TO AVOID DAMAGE THERETO.

BASES (SHAFT) SHALL BE EXCAVATED BY THE USE OF A CIRCULAR AUGER. IF BASE REQUIRES A DEEP FORM BECAUSE OF LOOSE SOIL, THE FORM SHALL BE REMOVED BEFORE BACKFILLING. A STEEL CASING OR CORRUGATED METAL PIPE IS ALLOWED TO REMAIN. BACKFILL SHALL BE TAMPED TIGHT AGAINST THE BASE IN LAYERS OF ONE FOOT OR LESS.

TOP SURFACE OF THE CONCRETE BASE SHALL BE TROWEL FINISHED AND LEVEL.

ANY DAMAGE TO THE CONCRETE BASE AND ANCHOR RODS DURING CONSTRUCTION OPERATIONS SHALL BE REPAIRED AT THE ENGINEER'S DIRECTION, AT THE EXPENSE OF THE CONTRACTOR.

THE REINFORCEMENT AND ANCHOR RODS SHALL BE ADEQUATELY SUPPORTED IN THE PROPER POSITIONS SO NO MOVEMENT OCCURS DURING CONCRETE PLACEMENT.

ORIENT ANCHOR RODS IN FOOTING AND PROVIDE ANCHOR RODS STICK OUT ABOVE TOP OF CONCRETE FOOTING BASE PER THIS SHEET.

ANCHOR RODS SHALL BE INSTALLED WITH MISALIGNMENTS OF LESS THAN 1:40 FROM VERTICAL.

BAR STEEL REINFORCEMENT SHALL BE COATED WITH POWDERED EPOXY RESIN IN ACCORDANCE WITH SECTION 505 OF THE STANDARD SPECIFICATIONS (LATEST EDITION).

BENDING DIMENSIONS FOR REINFORCING BARS ARE OUT TO OUT.

WELDING OF ANCHOR RODS TO THE CAGE IS UNACCEPTABLE. TEMPLATES SHALL BE USED.

USE 3" CLEAR FOR ALL REINFORCEMENT UNLESS NOTED OTHERWISE.

FORM ALL EXPOSED CONCRETE CORNERS WITH 1" CHAMFER ALL AROUND. TOP OF THE CONCRETE BASE SHALL BE TROWEL FINISHED AND LEVEL.

CONDUIT SIZES AND LOCATIONS SHALL BE SHOWN ON THE PLANS.

MINIMUM BENDING RADIUS OF CONDUIT IS EQUAL TO 6 TIMES THE DIAMETER.

CONDUIT HEIGHT ABOVE CONCRETE BASES SHALL BE 4 ½" INCHES. ALL METALLIC CONDUIT ENDS SHALL BE REAMED AND THREADED. NON-METALLIC CONDUIT SHALL HAVE BELL ENDS INSTALLED. ALL CONDUIT SHALL SLOPE TO PULL BOX.

ALL CONDUIT ENDS AT THE TOP OF CONCRETE BASES SHALL BE CAPPED IF METALLIC OR PLUGGED IF NON-METALLIC IMMEDIATELY AFTER PLACEMENT AND BEFORE CONCRETE IS POURED. CONDUITS IN WHICH WIRE OR CABLE IS NOT INSTALLED SHALL REMAIN CAPPED OR PLUGGED.

BELL ENDS SHALL BE INSTALLED ON ALL PVC CONDUIT EXPOSED AT THE TOP OF CONCRETE BASES BEFORE INSTALLATION OF CABLE OR WIRE.

WHEN REQUIRED TO CONNECT NON-METALLIC CONDUIT TO METALLIC CONDUIT, ONLY ADAPTER FITTINGS, U.L. LISTED FOR ELECTRICAL USE, SHALL BE USED.

A NO. 4 AWG STRANDED COPPER EQUIPMENT GROUNDING CONDUCTOR SHALL BE EXOTHERMICALLY WELDED TO THE EQUIPMENT GROUNDING ELECTRODE (GROUND ROD).

THE EQUIPMENT GROUNDING CONDUCTOR SHALL BE FURNISHED AND INSTALLED TO ENTER THE BASE THROUGH A 1 INCH CONDUIT INSTALLED FOR GROUNDING PURPOSES, LEAVING A 4 FOOT COIL OF WIRE ABOVE THE CONCRETE BASE. THE EQUIPMENT GROUNDING CONDUCTOR SHALL BE NEATLY COILED AND THE COILS TIED TOGETHER.

THE FINAL OR TERMINATING CONCRETE BASE IN A CONDUIT RUN SHALL HAVE A 6" EXIT STUB INSTALLED FOR FUTURE CABLING USE. THE EXIT STUB SHALL BE SIZED AS USED THROUGHOUT THE CONDUIT RUN AS SHOWN A THE ENTRANCE OF THE BASE.

(1) THE MINIMUM DEPTH OF CONDUIT EXITING THE CONCRETE BASE AND INSTALLED BELOW THE TRAVELED WAY SHALL BE 24 INCHES. THE MINIMUM DEPTH OF CONDUIT EXITING THE CONCRETE BASE THAT IS NOT INSTALLED BELOW THE TRAVELED WAY SHALL BE 18 INCHES. THE MAXIMUM DEPTH OF ALL CONDUIT SHALL BE 36 INCHES (GREATER THAN 36 INCHES IF INSTALLED IN BREAKER RUN) EXCEPT WITH WRITTEN APPROVAL OF THE ENGINEER.

CONCRETE MASONRY.....fc = 3,500 p.s.i
HIGH STRENGTH BAR STEEL REINFORCEMENT, GRADE 60.....fy = 60,000 p.s.i.
ANCHOR RODS, ASTM F1554 GRADE 55 (IN ACCORDANCE .....fy = 55,000 p.s.i.
WITH SECTION 531.2.2 OF THE STANDARD SPECIFICATION)
TEMPLATES, ASTM A709, GRADE 36.....fy = 36,000 p.s.i.

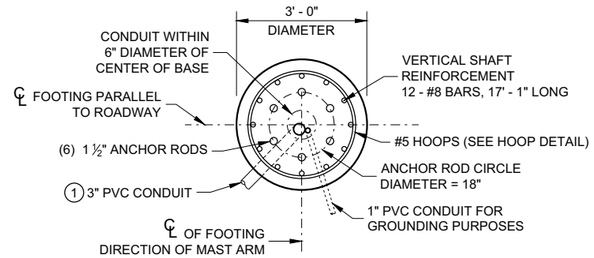

PLAN VIEW

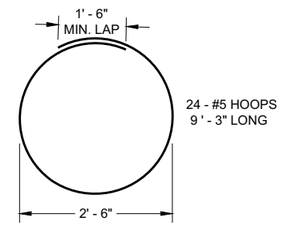

HOOP DETAIL

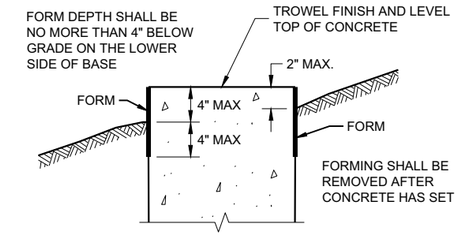

FORMING DETAIL

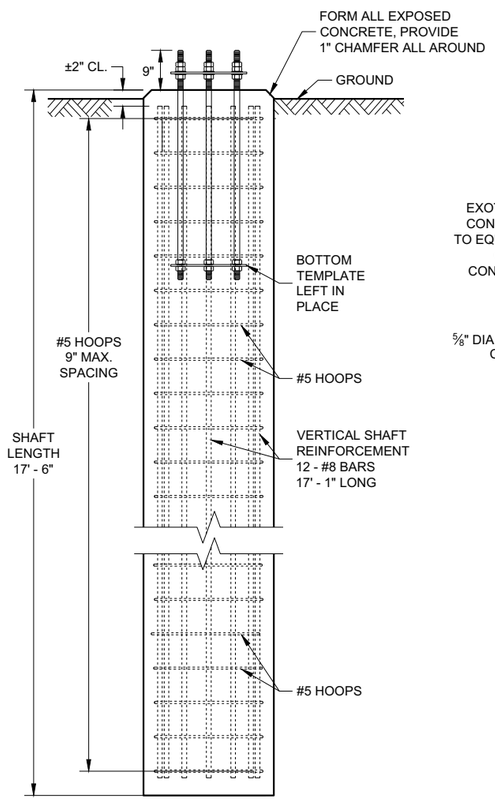

ELEVATION VIEW
(CONDUITS NOT SHOWN ON THIS VIEW FOR CLARITY)

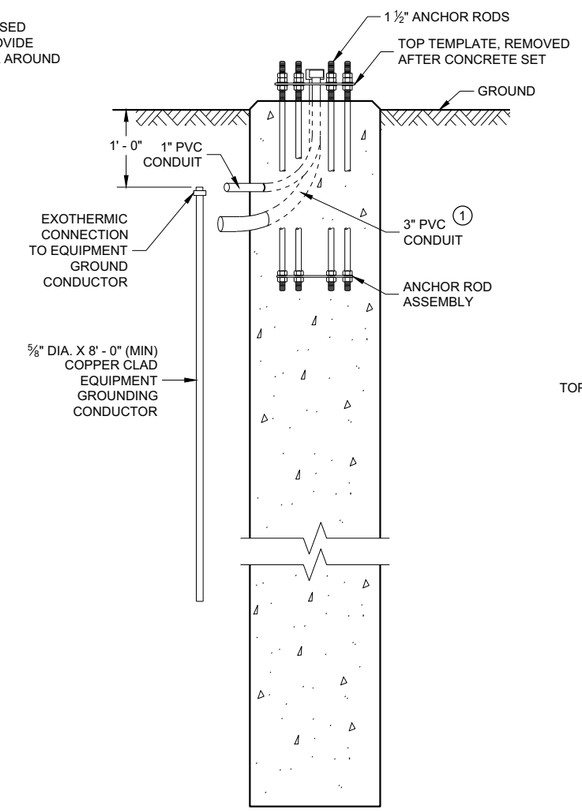

SIDE VIEW
(HOOPS AND VERTICAL SHAFT REINFORCEMENT NOT SHOWN ON THIS VIEW FOR CLARITY)

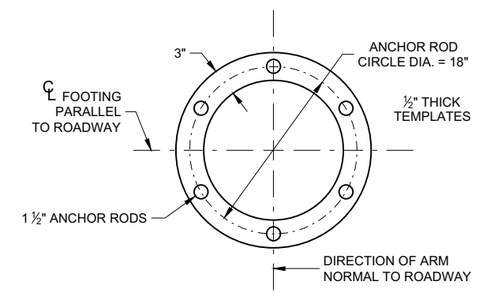

TOP AND BOTTOM TEMPLATE

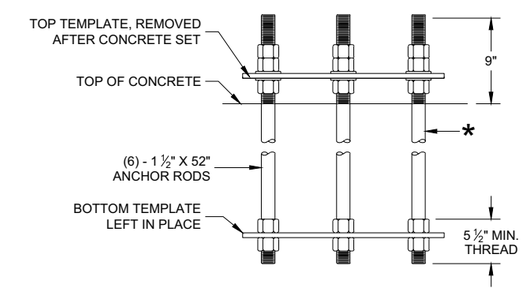

ANCHOR ROD ASSEMBLY DETAILS

* THREAD TOP 10" OF ANCHOR ROD FOR 3 NUTS AND 2 WASHERS AND BOTTOM 5 ½" FOR 2 NUTS PER ANCHOR ROD. HOT DIP GALVANIZE THE ENTIRE LENGTH OF THE ANCHOR ROD (ASTM A123) AND HOT DIP NUTS AND WASHERS (ASTM A153. USE ZINC COATED NUTS MANUFACTURED WITH SUFFICIENT ALLOWANCE TO ALLOW NUTS TO RUN FREELY ON THE THREADS.

CONCRETE BASE, TYPE 10 SPECIAL
(FOR TYPE 9 SPECIAL AND TYPE 10 SPECIAL POLES)

CONCRETE = 4.6 CUBIC YARD
H.S. REINFORCEMENT = 779 LBS.

FOR USE WHEN GROUND ELEVATION AT BASE EQUALS OR IS GREATER THAN HIGH POINT OF ROADWAY ELEVATION.

CONCRETE BASE TYPE 10 SPECIAL

STATE OF WISCONSIN
DEPARTMENT OF TRANSPORTATION

APPROVED
August 2020 — DATE
/S/ Alex Crabtree — WIND LOADED STRUCTU PROGRAM LEADER
FHWA

6

SDD 09C15 - 01

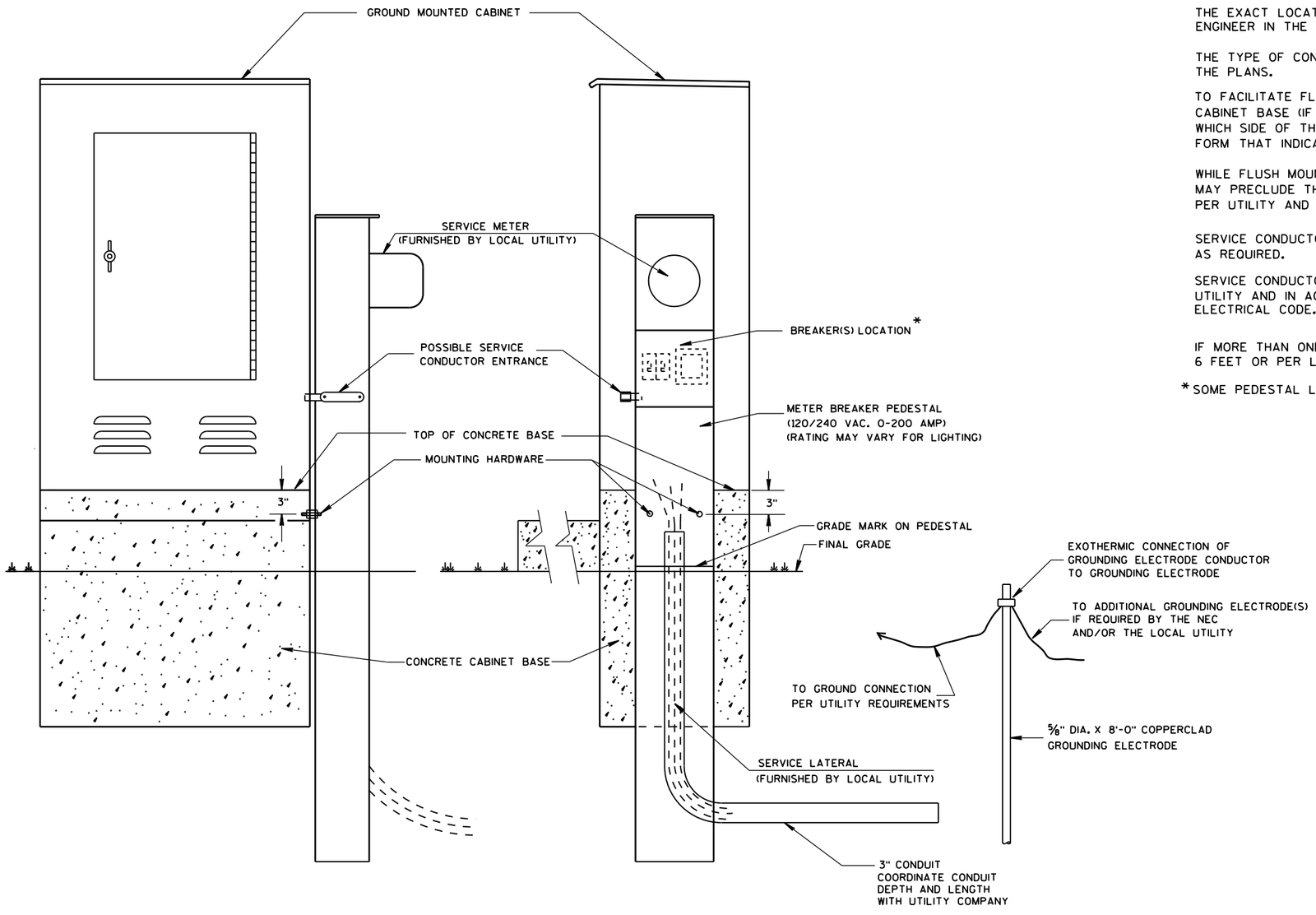

TYPICAL CABINET SERVICE INSTALLATION

GENERAL NOTES

DETAILS OF CONSTRUCTION, MATERIALS AND WORKMANSHIP NOT SHOWN ON THIS DRAWING SHALL CONFORM TO THE PERTINENT REQUIREMENTS OF THE CONTRACT.

THE EXACT LOCATION OF THE METER BREAKER PEDESTAL SHALL BE DETERMINED BY THE ENGINEER IN THE FIELD.

THE TYPE OF CONCRETE CABINET BASE TO BE INSTALLED SHALL BE AS CALLED FOR IN THE PLANS.

TO FACILITATE FLUSH MOUNTING OF THE METER BREAKER PEDESTAL AGAINST THE SIDE OF THE CABINET BASE (IF FLUSH MOUNTING POSSIBLE. CONFER WITH THE LOCAL UTILITY TO DETERMINE WHICH SIDE OF THE CONCRETE BASE THE ELECTRICAL SERVICE LATERAL WILL APPROACH. THEN FORM THAT INDICATED SIDE FOR FULL SIDE DEPTH.

WHILE FLUSH MOUNTING IS THE MOST DESIRABLE MOUNTING CONFIGURATION UTILITY REQUIREMENTS MAY PRECLUDE THIS OPTION. CONTRACTOR MUST PROVIDE UTILITY APPROVED PEDESTAL AND INSTALL PER UTILITY AND MANUFACTURERS REQUIREMENTS.

SERVICE CONDUCTOR ENTRANCES SHALL BE RIGID METALLIC CONDUIT, NIPPLES AND/OR CONDULETS AS REQUIRED.

SERVICE CONDUCTOR ENTRANCES SHALL BE SIZED AND LOCATED AS REQUIRED BY THE LOCAL UTILITY AND IN ACCORDANCE WITH APPROPRIATE ARTICLES OF THE LATEST ACCEPTED NATIONAL ELECTRICAL CODE.

IF MORE THAN ONE GROUNDING ELECTRODE IS REQUIRED, THE DISTANCE APART SHALL BE 6 FEET OR PER LOCAL UTILITY REGULATIONS.

*SOME PEDESTAL LIGHTING PLANS SHOW MAIN LUGS ONLY.

CABINET SERVICE INSTALLATION (METER BREAKER PEDESTAL)
STATE OF WISCONSIN DEPARTMENT OF TRANSPORTATION
APPROVED Sept. 2014 DATE — /S/ Ahmet Demirbilek STATE ELECTRICAL — FHWA

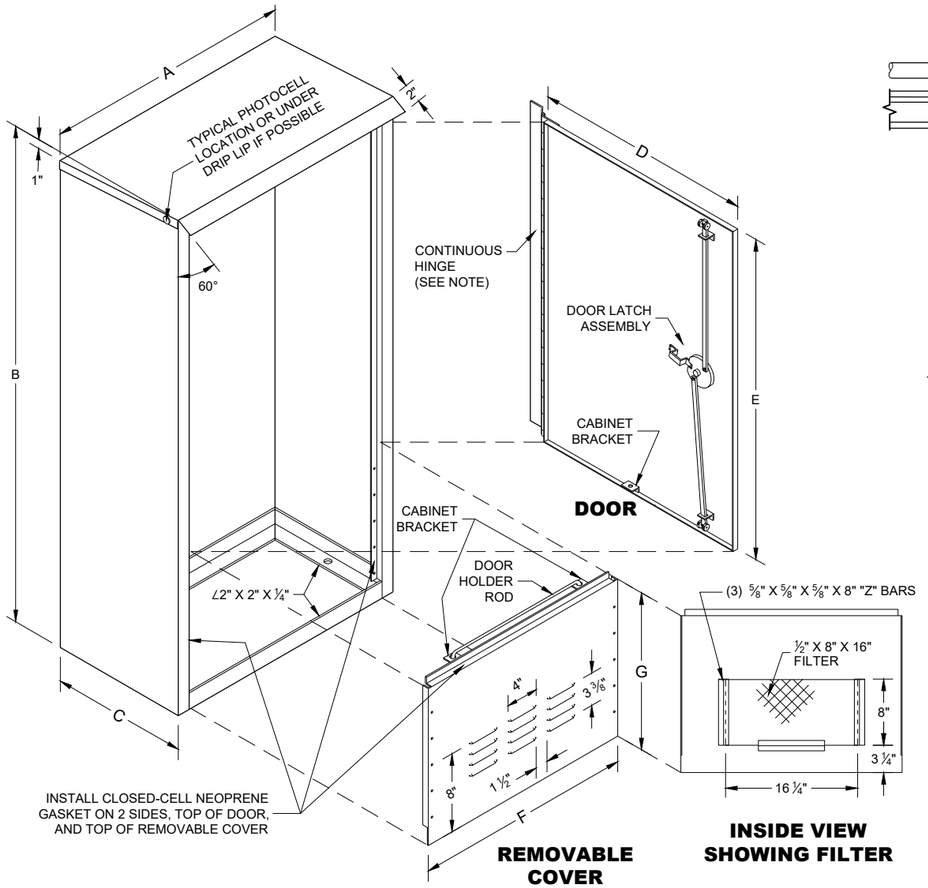

REMOVABLE COVER

INSIDE VIEW SHOWING FILTER

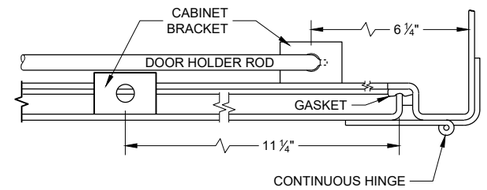

HINGE AND DOOR HOLDER

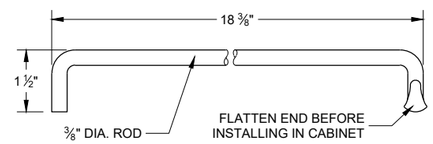

HOLDER ROD

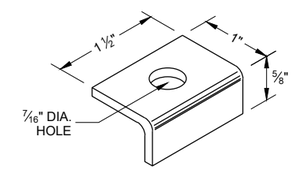

CABINET BRACKET

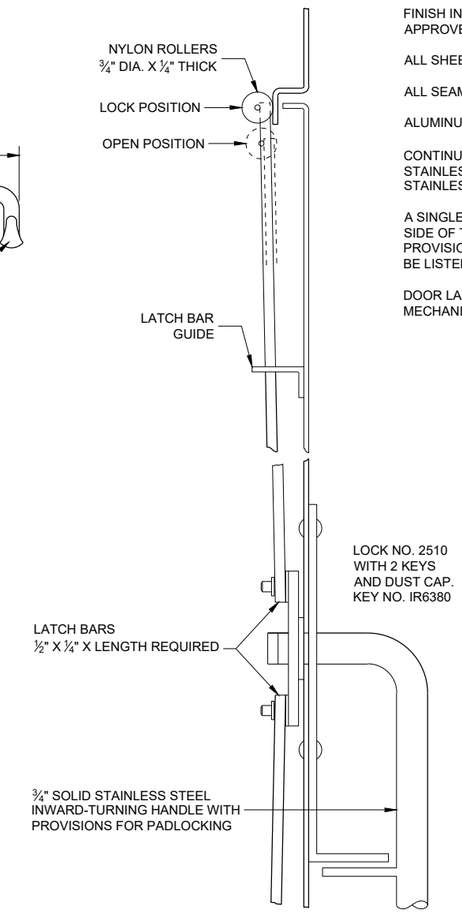

SIDE VIEW

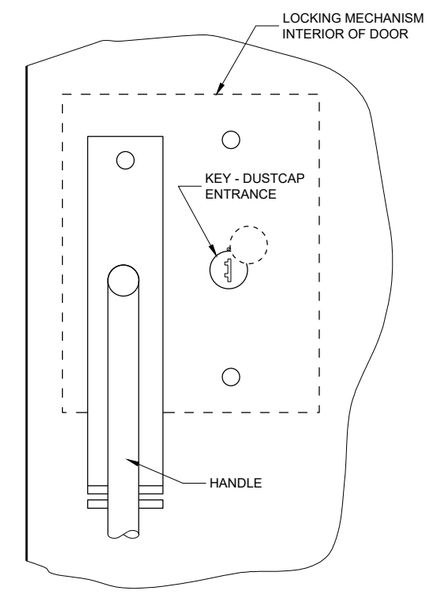

FRONT VIEW

LATCH ASSEMBLY

GENERAL NOTES

DETAILS OF CONSTRUCTION, MATERIALS AND WORKMANSHIP NOT SHOWN ON THIS DRAWING SHALL CONFORM TO THE PERTINENT REQUIREMENTS OF THE STANDARD SPECIFICATIONS AND APPLICABLE SPECIAL PROVISIONS.

PRIME WITH PHOSPHATE TREATMENT AND PRIMER.

FINISH EXTERIOR SURFACES WITH RUSTOLEUM #906 SILVER GRAY OR APPROVED EQUAL.

FINISH INTERIOR WITH RUSTOLEUM #2766 HIGH GLOSS WHITE ENAMEL OR APPROVED EQUAL.

ALL SHEET METAL PARTS SHALL BE .125 INCH THICK ALUMINUM.

ALL SEAMS SHALL BE CONTINUOUSLY WELDED.

ALUMINUM SHALL BE TYPE 5052-H32.

CONTINUOUS HINGE SHALL BE HEAVY GAUGE ALUMINUM WITH ¼" DIAMETER STAINLESS STEEL HINGE PIN. HINGE IS SECURED WITH ¼" X 20 TPI STAINLESS STEEL CARRIAGE BOLTS AND STAINLESS STEEL NYLOCK NUTS.

A SINGLE PHOTOCELL SHALL BE LOCATED ON THE NORTH - NORTHEAST SIDE OF THE CABINET UNLESS OTHERWISE CALLED FOR IN THE SPECIAL PROVISIONS. THE PHOTOCELL SHALL BE PLACED AS SHOWN AND SHALL BE LISTED ON THE DEPARTMENTS APPROVED PRODUCTS LIST.

DOOR LATCH ASSEMBLY TO BE PROVIDED WITH THREE-POINT LOCKING MECHANISM.

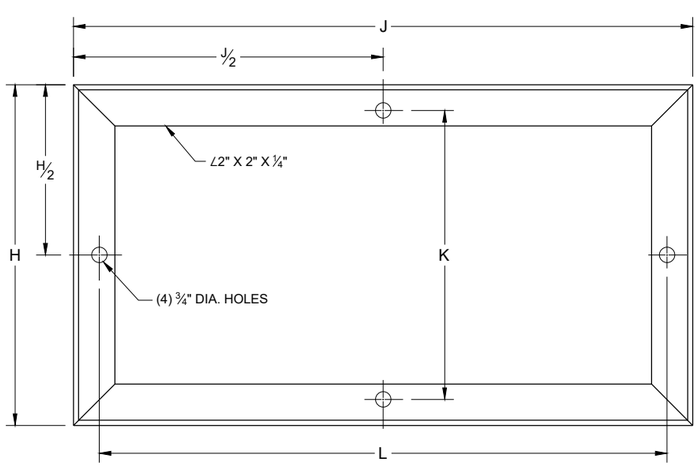

MOUNTING BASE

TABLE OF DIMENSIONS (INCHES)

MARK	CABINET TYPE		
	3060	3860	3866
A	30	38	38
B	60	60	66
C	16 ½	16 ½	24
D	26 ½	34 ¾	33 ¾
E	38 ¾	38 ¾	38 ¾
F	26 ½	34 ¾	33 ¾
G	19	19	25
H	16 ½	16 ½	24
H/2	8 ¼	8 ¼	12
J	30	38	38
J/2	15	19	19
K	13 ¾	13 ¾	21 ¼
L	27 ½	35 ½	35 ½

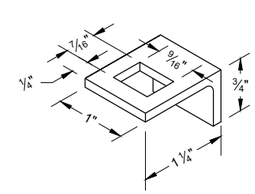

LATCH BAR GUIDE

SIGNAL CONTROL CABINET

STATE OF WISCONSIN
DEPARTMENT OF TRANSPORTATION

APPROVED
September 2014 /S/ Ahmet Demerbilek
DATE STATE ELECTRICAL ENGI

FHWA

6

SDD 09D02 - 03

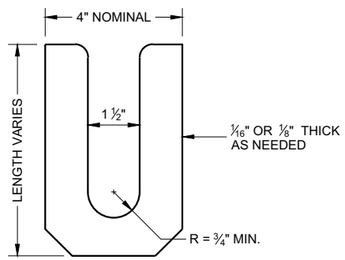

LEVELING SHIM (1)
SHALL BE ALUMINUM

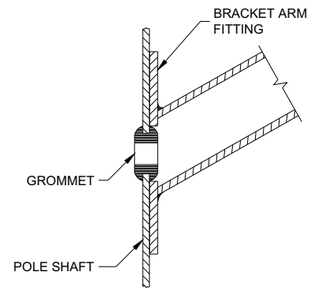

TYPICAL APPLICATION OF GROMMET IN POLE SHAFT

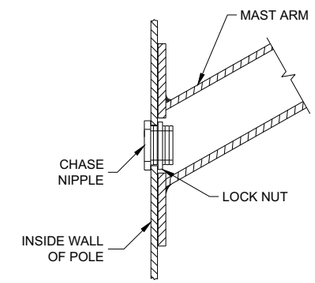

TYPICAL APPLICATION OF CHASE NIPPLE IN POLE SHAFT

GENERAL NOTES

CLAMP BOLT-NUT TIGHTENING TORQUE SHALL BE INDICATED BY INDENT STAMPING (1/2 INCH NUMERALS AND LETTERS) OR WEATHERPROOF PRINTING ON THE INSIDE OF THE CLAMP THAT IS WELDED TO THE ARM MEMBER.

(1) 4.5" I.D. FOR LUMINAIRE MAST ARM CLAMP. 6.625" I.D. FOR TROMBONE MAST ARM CLAMP.

(2) INDIVIDUAL BASE PLATE ANCHOR ROD COVERS. (4 REQUIRED)

(3) BASE PLATE SLOTTED TO ACCEPT 11" THROUGH 12" BOLT CIRCLE USING 1" DIAMETER ANCHOR RODS.

(4) LEVELING SHIMS, DESIGNED FOR THE PURPOSE, SHALL BE USED WHEN PLUMBING POLES. THE USE OF WASHERS IN LIEU OF PROPER LEVELING SHIMS IS NOT ACCEPTABLE. LEVELING SHIMS SHALL BE USED ONLY BETWEEN THE TOP OF THE CONCRETE BASE AND A METALLIC BASE PLATE.

SHIMS SHALL BE LONG ENOUGH AND WIDE ENOUGH TO COMPLETELY COVER THE AREA UNDER THE LENGTH AND WIDTH OF THE BASE MOUNTING FLANGE.

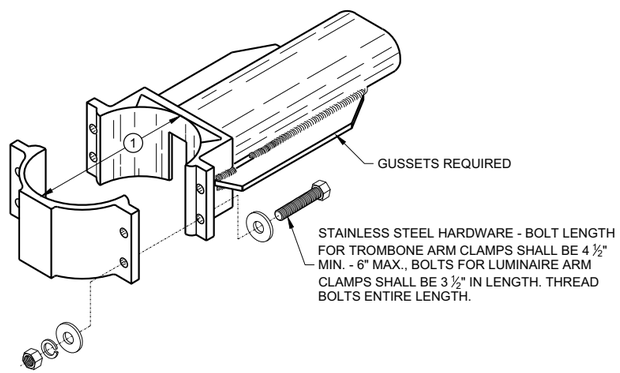

TYPICAL TROMBONE MAST ARM AND SINGLE LUMINAIRE MAST ARM MOUNTING CLAMP

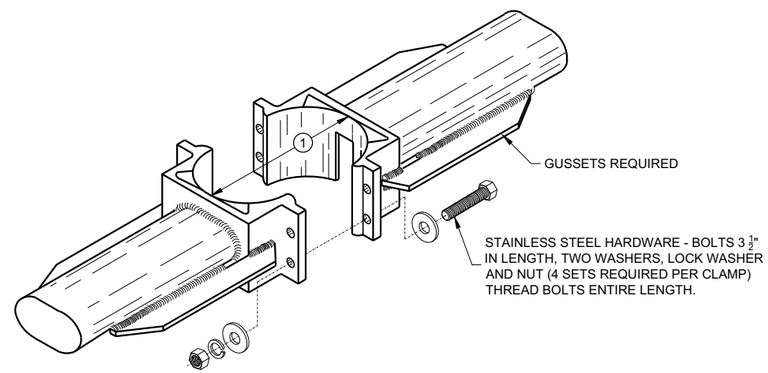

TYPICAL LUMINAIRE MAST ARM (DOUBLE) MOUNTING BRACKETS

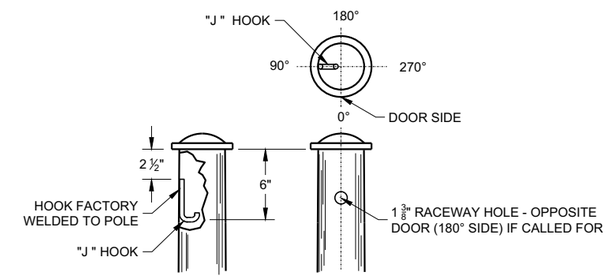

TYPICAL "J" HOOK LOCATION

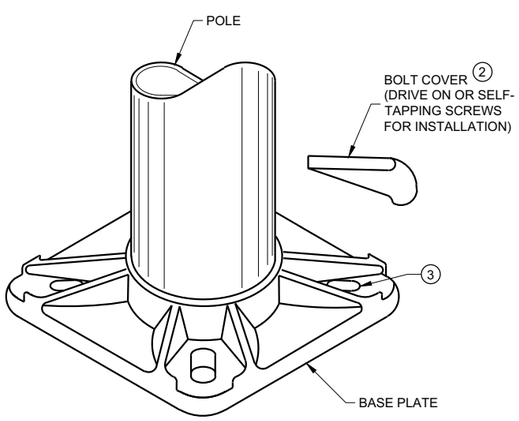

BASE PLATE

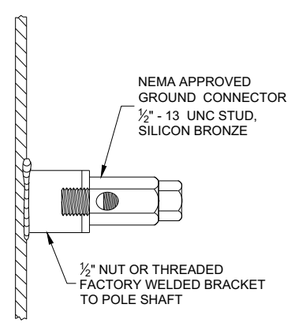

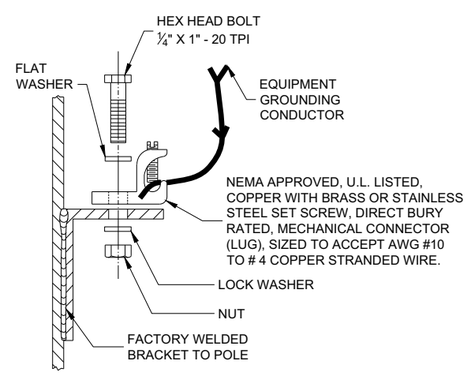

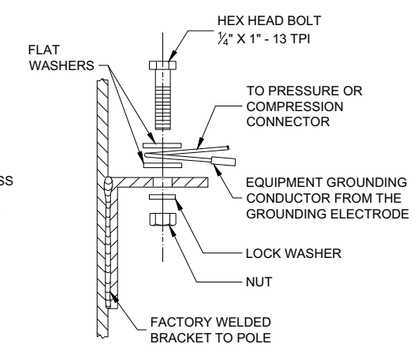

TYPICAL GROUNDING CONNECTIONS
NUT, BOLT AND WASHERS SHALL BE STAINLESS STEEL

HARDWARE DETAILS FOR POLE MOUNTING

STATE OF WISCONSIN
DEPARTMENT OF TRANSPORTATION

APPROVED
November 2018 /S/ Ahmet Demirbilek
DATE STATE ELECTRICAL ENGI

FHWA

6

SDD 09E01 - 15g

GENERAL NOTES

DETAILS OF CONSTRUCTION, MATERIALS AND WORKMANSHIP NOT SHOWN ON THIS DRAWING SHALL CONFORM TO THE PERTINENT REQUIREMENTS OF THE CONTRACT.

THE EQUIPMENT GROUND CONNECTOR SHALL BE TAPED WITH 3 WRAPS (MINIMUM) OF APPROVED RUBBER TAPE AND 3 WRAPS (MINIMUM) OF APPROVED VINYL TAPE TO COVER SHARP WIRE ENDS AFTER THE CONNECTION IS COMPLETED.

WHEN TRANSFORMER BASES ARE USED, ALL WIRING CONNECTIONS SHALL OCCUR WITHIN THE TRANSFORMER BASES.

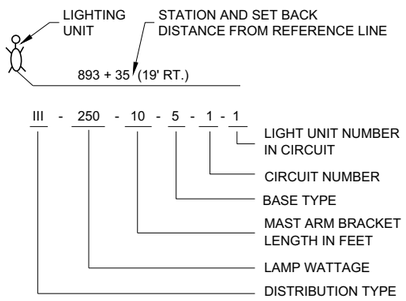

LIGHTING UNIT CODE
(TYPICAL)

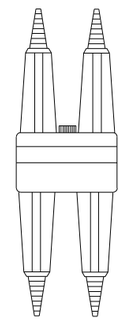

DETAIL "A"
BREAKAWAY DOUBLE POLE WITH WATERPROOF INSULATING BOOT

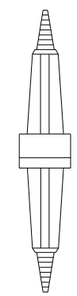

DETAIL "B"
BREAKAWAY SINGLE POLE WITH WATERPROOF INSULATING BOOT

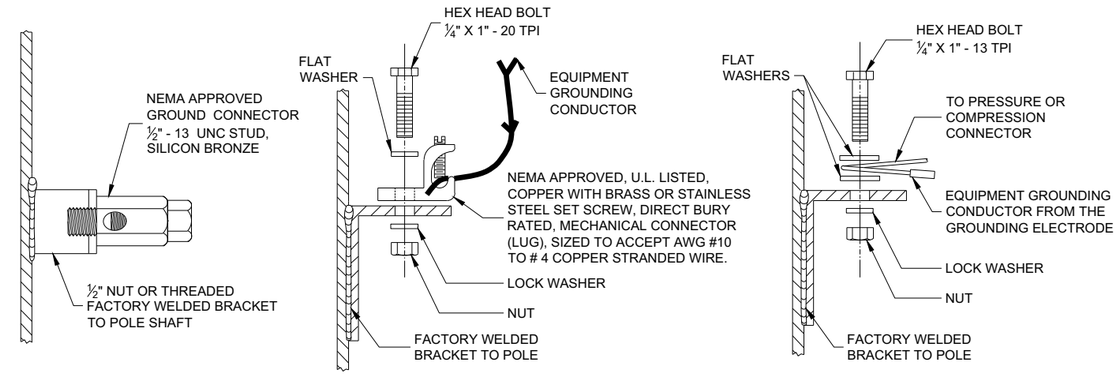

TYPICAL GROUNDING CONNECTIONS
NUT, BOLT AND WASHERS SHALL BE STAINLESS STEEL

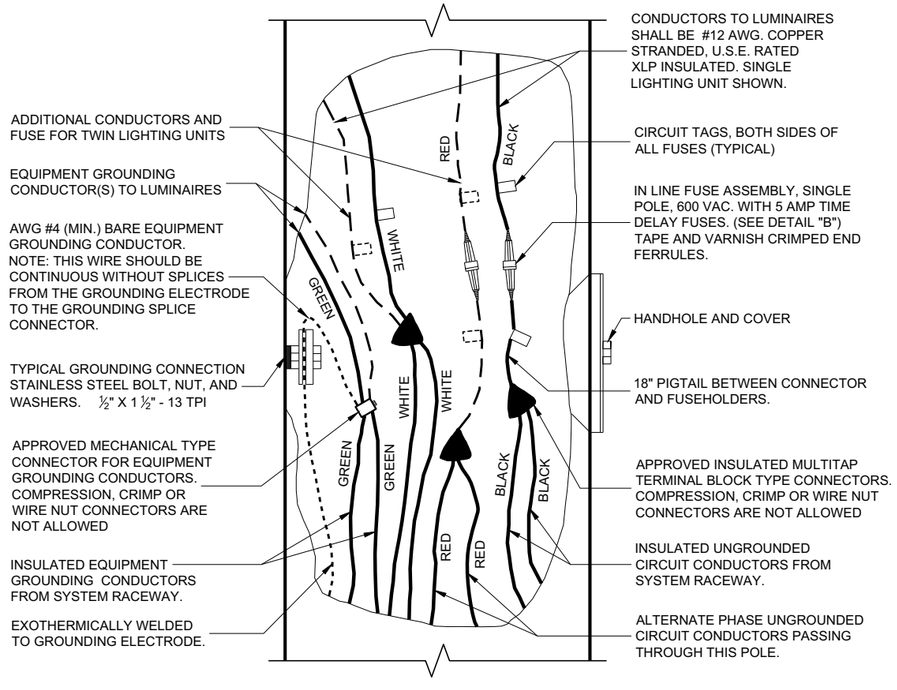

3 WIRE - 120, 240 OR 480 VAC (UNGROUNDED CONDUCTORS) WITH GROUNDING CONDUCTOR AND EQUIPMENT GROUNDING CONDUCTOR

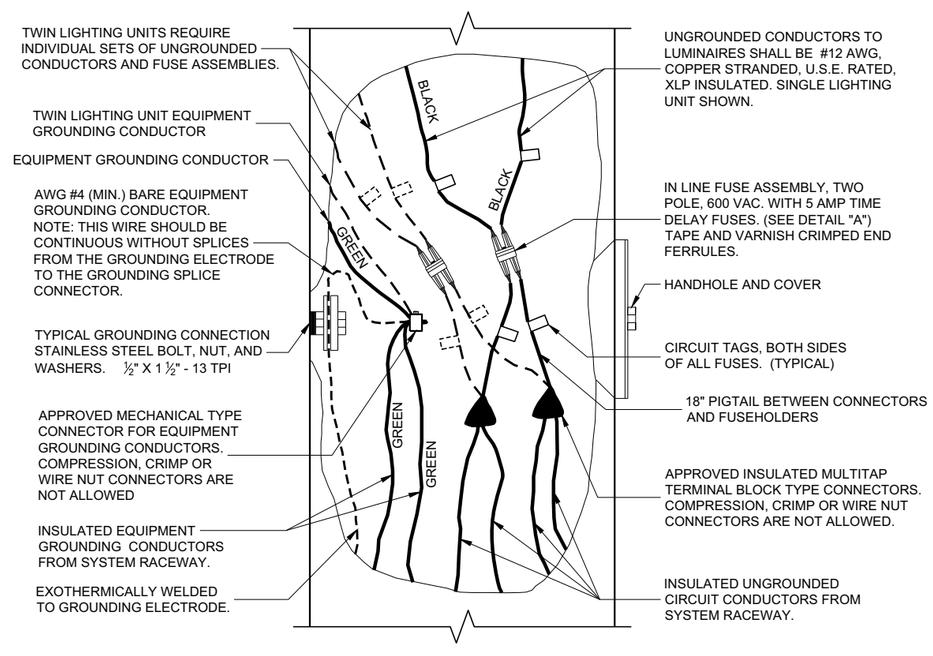

2 WIRE - 240 OR 480 VAC (UNGROUNDED CONDUCTORS) WITH EQUIPMENT GROUNDING CONDUCTOR

NON - FREEWAY LIGHTING UNIT POLE WIRING

STATE OF WISCONSIN
DEPARTMENT OF TRANSPORTATION

APPROVED
November 2018 /S/ Ahmet Demirbilek
DATE STATE ELECTRICAL ENGI 127
FHWA

6
SDD 09E03 - 06

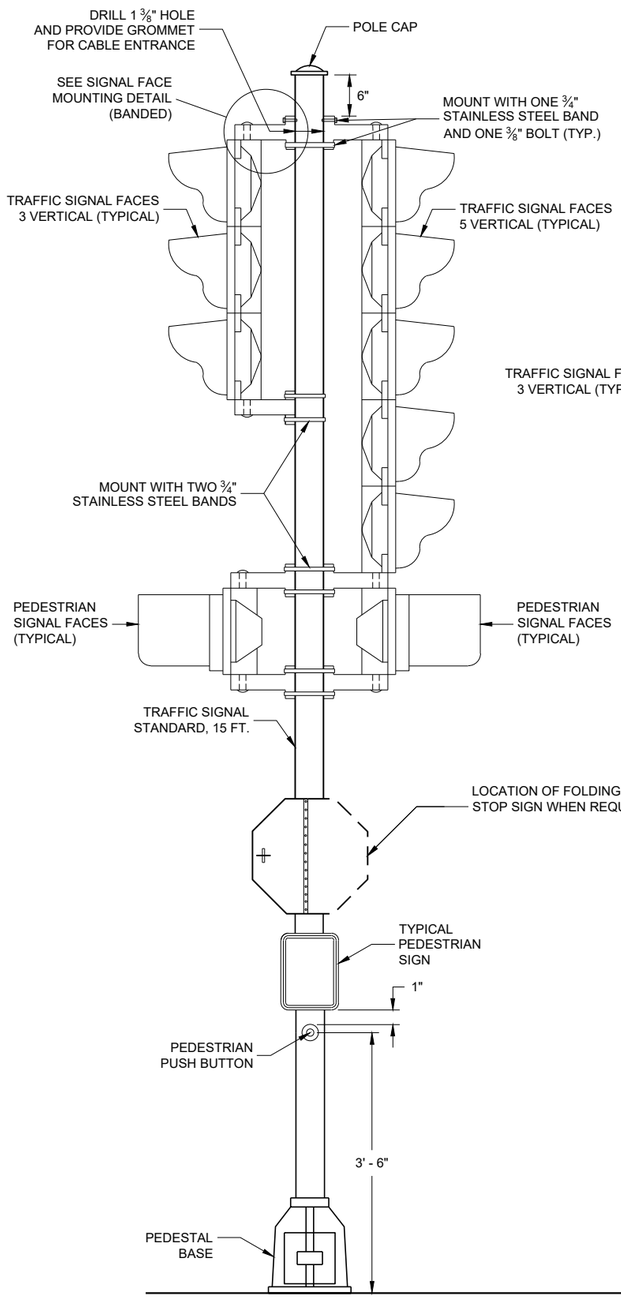

TRAFFIC SIGNAL STANDARD - 15 FT.

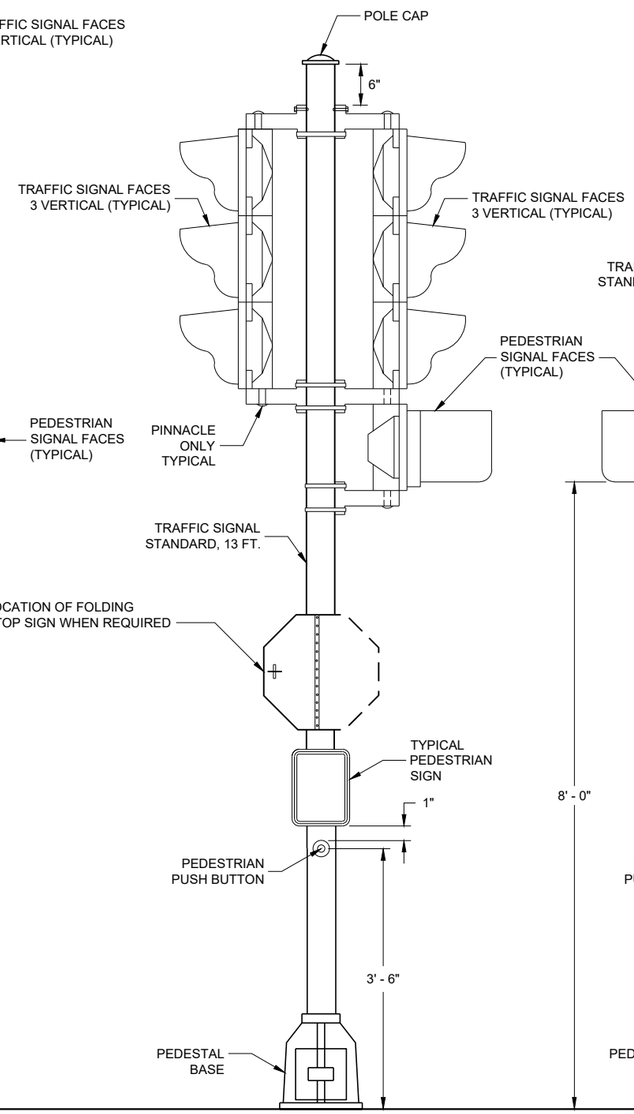

TRAFFIC SIGNAL STANDARD - 13 FT.

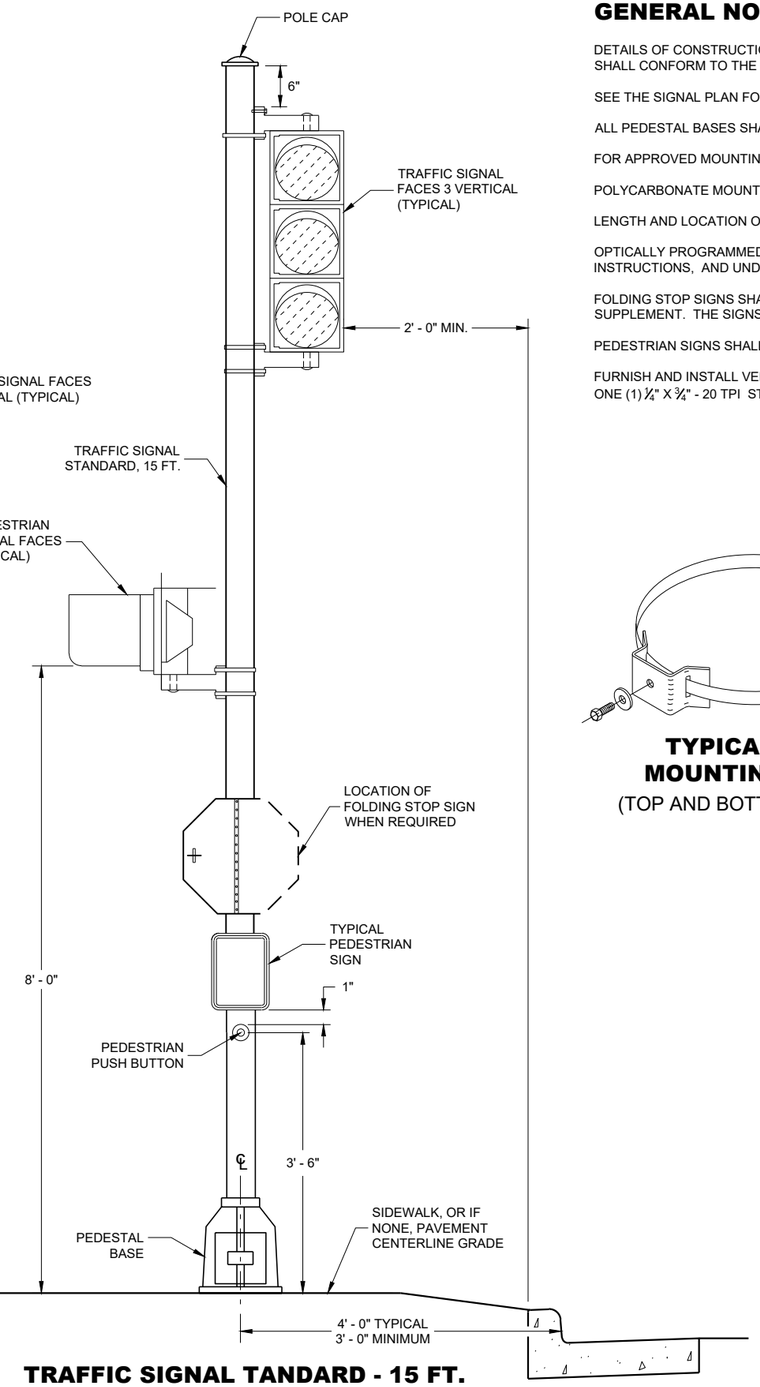

TRAFFIC SIGNAL TANDARD - 15 FT.
3M MOUNTING (TYPICAL)

GENERAL NOTES

DETAILS OF CONSTRUCTION, MATERIALS AND WORKMANSHIP NOT SHOWN ON THIS DRAWING SHALL CONFORM TO THE PERTINENT REQUIREMENTS OF THE CONTRACT.

SEE THE SIGNAL PLAN FOR REQUIRED SIGNAL FACE SIZES.

ALL PEDESTAL BASES SHALL BE MOUNTED ON CONCRETE BASE - TYPE 1.

FOR APPROVED MOUNTING HARDWARE, SEE THE CONTRACT SPECIAL PROVISIONS.

POLYCARBONATE MOUNTING BRACKETS SHALL BE USED.

LENGTH AND LOCATION OF TRAFFIC SIGNAL STANDARDS SHALL BE AS SHOWN ON THE PLANS.

OPTICALLY PROGRAMMED SIGNAL FACES SHALL BE MASKED IN ACCORDANCE WITH MANUFACTURERS INSTRUCTIONS, AND UNDER THE DIRECTIONS OF THE REGION TRAFFIC ENGINEER.

FOLDING STOP SIGNS SHALL BE IN ACCORDANCE WITH THE MUTCD AND/OR THE LATEST WISCONSIN SUPPLEMENT. THE SIGNS SHALL BE SIZED AND LOCATED AS CALLED FOR IN IN THE PLANS.

PEDESTRIAN SIGNS SHALL BE AS DESIGNATED IN THE PLANS.

FURNISH AND INSTALL VENTILATED, CAST, METALLIC (ALUMINUM ALLOY) CAPS. FASTEN CAPS WITH ONE (1) 1/4" X 3/4" - 20 TPI STAINLESS STEEL, HEX HEAD BOLT.

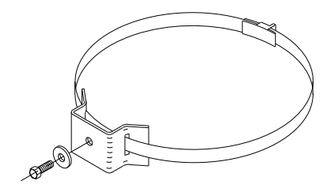

TYPICAL SIGN MOUNTING BAND
(TOP AND BOTTOM OF SIGN)

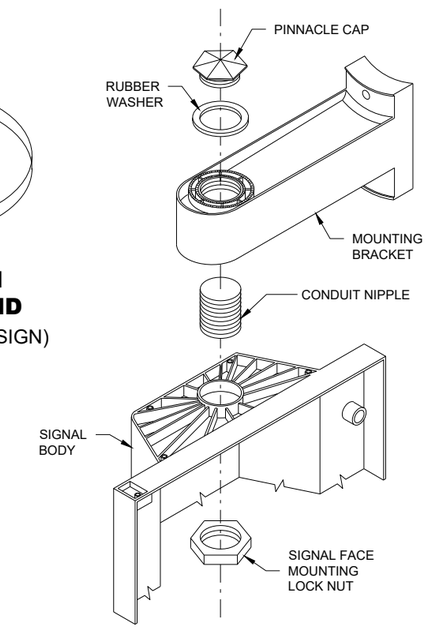

SIGNAL FACE MOUNTING DETAIL (BANDED)

TRAFFIC SIGNAL STANDARD POLY BRACKET MOUNTINGS (TYPICAL) 13 FT. OR 15 FT.

STATE OF WISCONSIN
DEPARTMENT OF TRANSPORTATION

APPROVED
2/28/2013 — DATE
/S/ Ahmet Demirbilek — STATE ELECTRICAL ENGI
FHWA

6

SDD 09E06 - 05

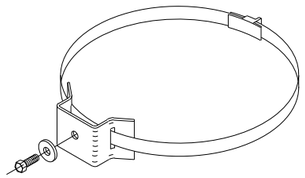

TYPICAL SIGN MOUNTING BAND
(TOP AND BOTTOM OF SIGN)

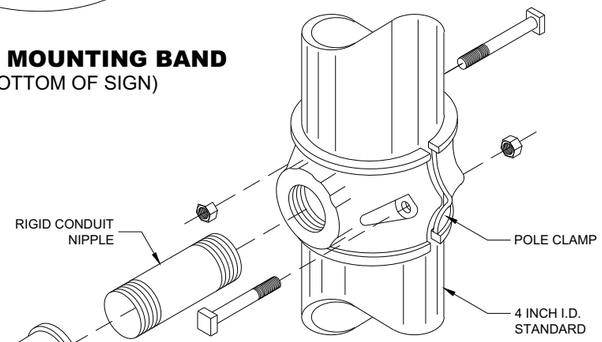

(ORNAMENTAL)

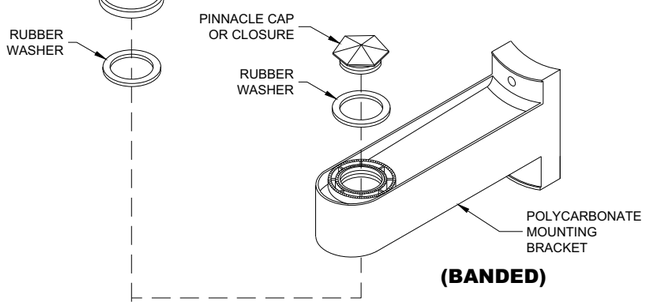

(BANDED)

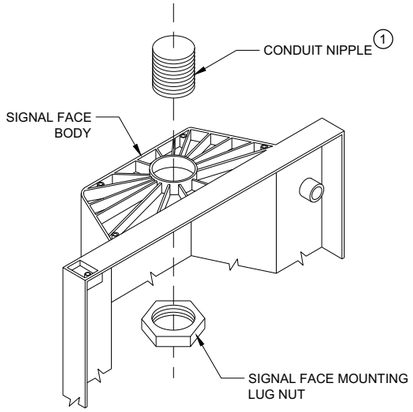

SIGNAL FACE MOUNTING DETAILS

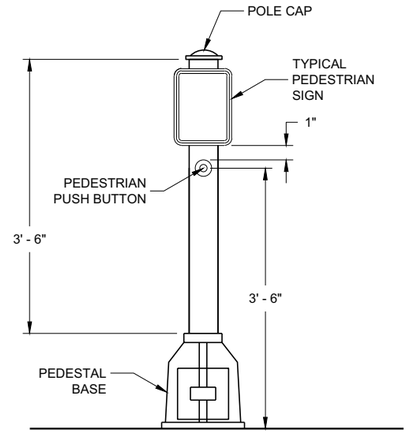

PEDESTRIAN PUSH BUTTON TYPICAL MOUNTING

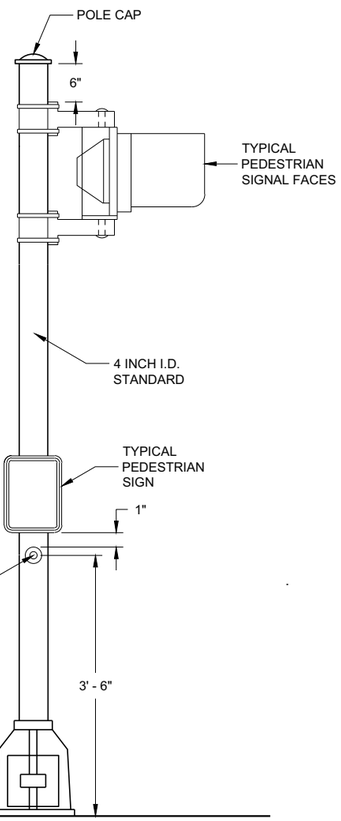

PEDESTRIAN FACE STANDARD - 10 FT.
(WALK - DON'T WALK)

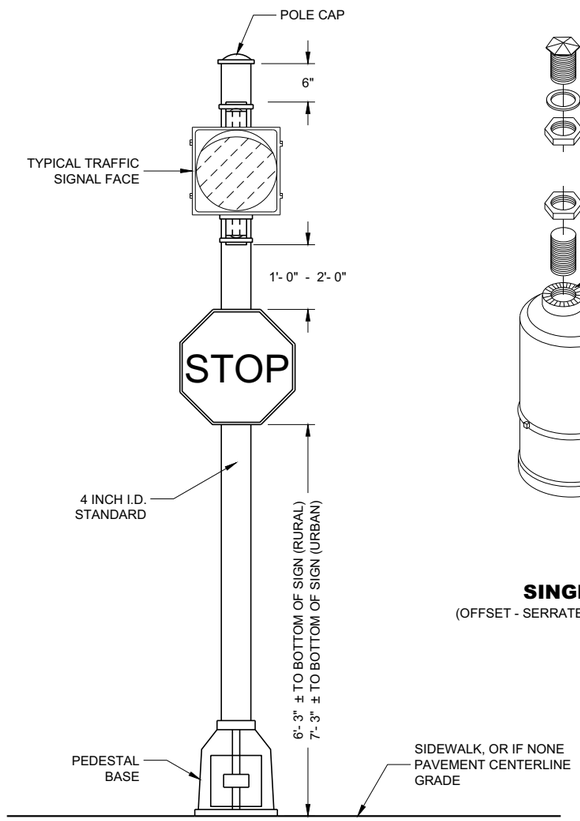

STANDARD FLASHER
10 FOOT, 13 FOOT OR 15 FOOT AS REQUIRED

GENERAL NOTES

DETAILS OF CONSTRUCTION, MATERIALS AND WORKMANSHIP NOT SHOWN ON THIS DRAWING SHALL CONFORM TO THE PERTINENT REQUIREMENTS OF THE CONTRACT.

SEE THE SIGNAL PLAN FOR REQUIRED SIGNAL FACE SIZES.

LOCATIONS SHALL BE AS SHOWN ON THE PLANS, UNLESS APPROVED BY THE ENGINEER IN THE FIELD.

ALL PEDESTAL BASES SHALL BE MOUNTED ON CONCRETE BASE - TYPE 1.

FOR APPROVED MOUNTING HARDWARE, SEE THE CONTRACT SPECIFICATIONS.

POLYCARBONATE SIGNAL FACE MOUNTING BRACKETS SHALL BE USED UNLESS ORNAMENTAL POLE CLAMPS ARE SPECIFIED.

LENGTH OF TRAFFIC STANDARDS SHALL BE AS SHOWN ON THE PLANS.

MOUNTINGS AND BRACKETS SHALL BE AS SHOWN ON THE PLANS OR DESCRIBED IN THE SPECIAL PROVISIONS (BY THE REGION TRAFFIC ENGINEER).

PEDESTRIAN SIGNS SHALL BE AS DESIGNATED IN THE PLANS.

FURNISH AND INSTALL VENTILATED, CAST, METALLIC (ALUMINUM ALLOY) CAPS. FASTEN CAPS WITH ONE (1) ¼" X ¾" - 20 TPI STAINLESS STEEL, HEX HEAD BOLT.

1 USE 1 ½" ID NIPPLES ZINC-COATED RIGID METAL CONDUIT, LONG ENOUGH TO ACCOMMODATE FULL DEPTH THREADING INTO THE HEAD MOUNTING LOCK NUT IN ORDER TO TIGHTEN THE FACE, BUT THAT DO NOT INTERFERE WITH REFLECTOR CLOSURE. THREAD THE NIPPLE INTO THE MOUNTING BRACKET/ELBOW UNTIL TIGHT. USE APPROVED PINNACLE TYPE HARDWARE FROM A DEPARTMENT APPROVED MANUFACTURER TO CLOSE THE UNUSED 1 ½" OPENING IN SIGNAL FACESAND BRACKET ENDS.

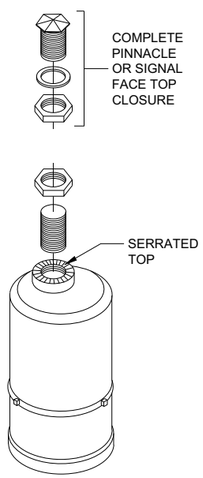

SINGLE
(OFFSET - SERRATED MOUNTING)

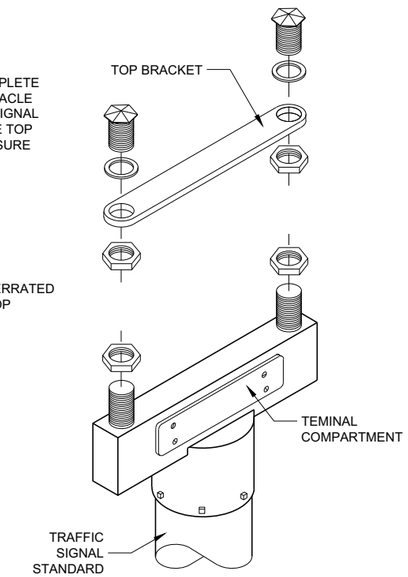

DOUBLE
(SERRATED MOUNTING)

SLIPFITTERS

TRAFFIC SIGNAL STANDARD PEDESTRIAN AND FLASHER TYPICAL MOUNTING DETAILS

STATE OF WISCONSIN
DEPARTMENT OF TRANSPORTATION

APPROVED
November 2018 /S/ Ahmet Demirbilek
DATE STATE ELECTRICAL ENGI

FHWA

6
SDD 09E07 - 06

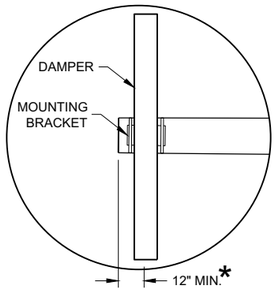

DUMBBELL VIBRATION DAMPER

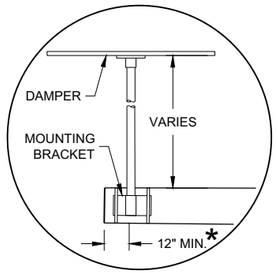

FLAT VIBRATION DAMPER

* MOUNT AS CLOSE TO END OF MAST ARM FOR MAXIMUM DAMPING PER MANUFACTURER'S RECOMMENDATIONS.

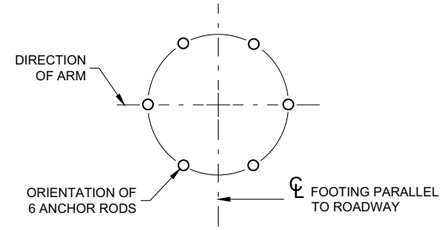

ANCHOR ROD LOCATION

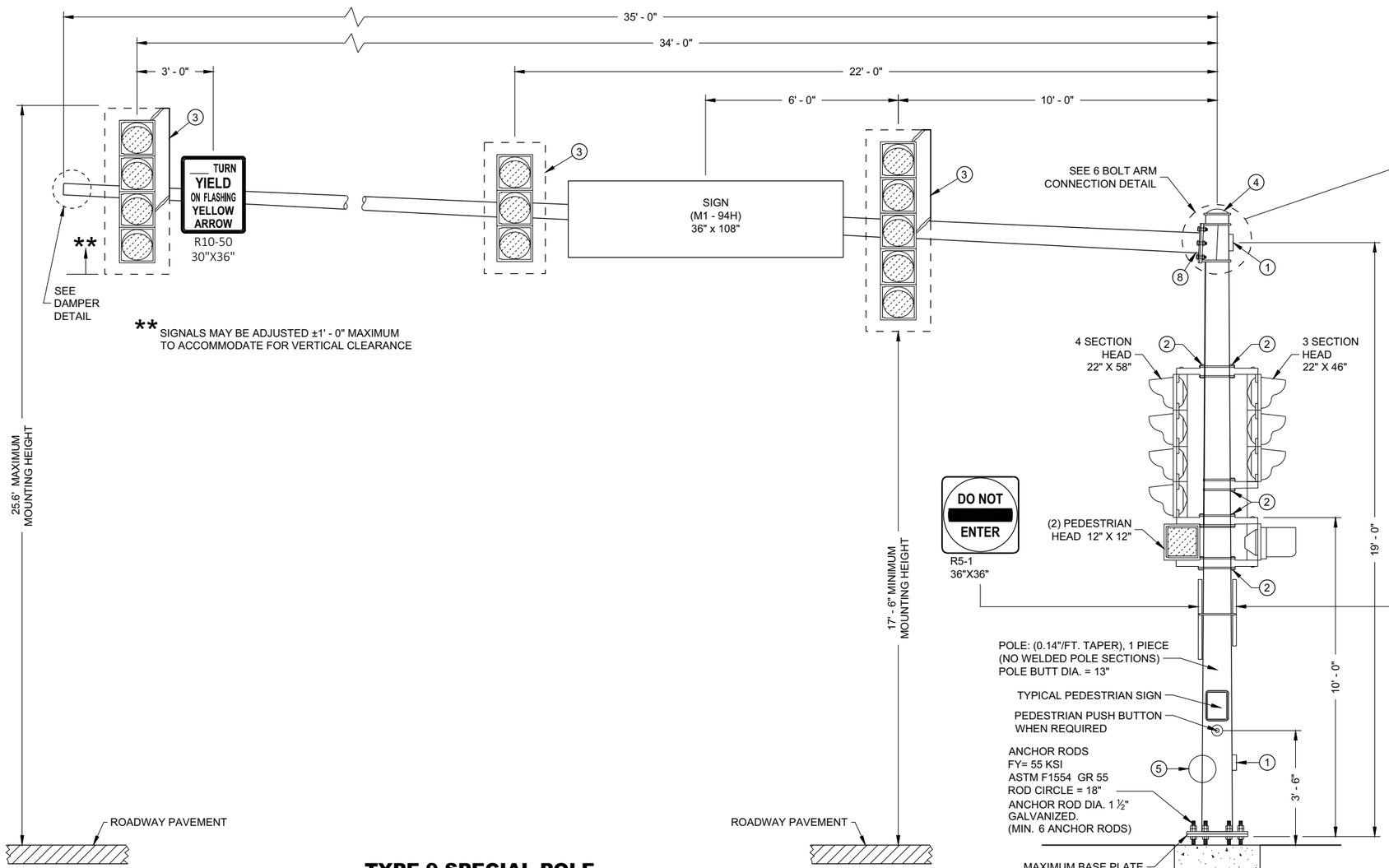

TYPE 9 SPECIAL POLE
35' MONOTUBE ARM
(MAXIMUM LOAD)

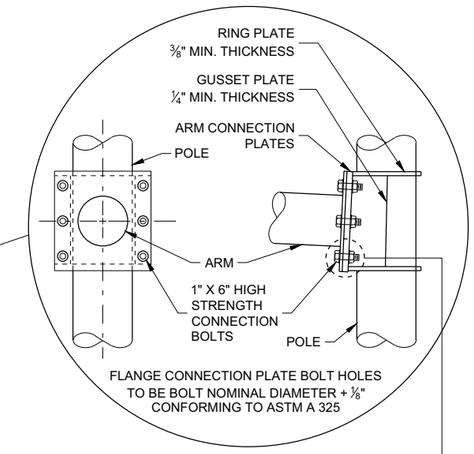

6 BOLT ARM CONNECTION DETAIL

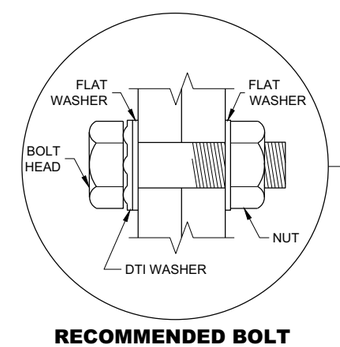

RECOMMENDED BOLT ASSEMBLY DETAIL

TYPE 9 SPECIAL POLE
35' MONOTUBE ARM

STATE OF WISCONSIN
DEPARTMENT OF TRANSPORTATION

APPROVED
August 2020 — /S/ Ahmet Demirbilek
DATE — STATE ELECTRICAL ENGI

FHWA

6

SDD 09E08 - 09b

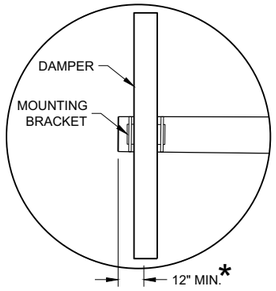

DUMBBELL VIBRATION DAMPER

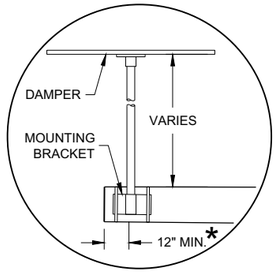

FLAT VIBRATION DAMPER

* MOUNT AS CLOSE TO END OF MAST ARM FOR MAXIMUM DAMPING PER MANUFACTURER'S RECOMMENDATIONS.

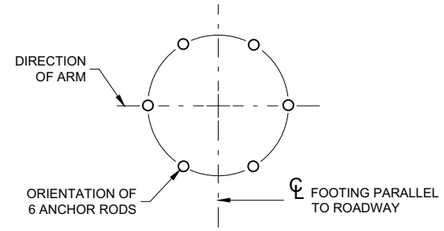

ANCHOR ROD LOCATION

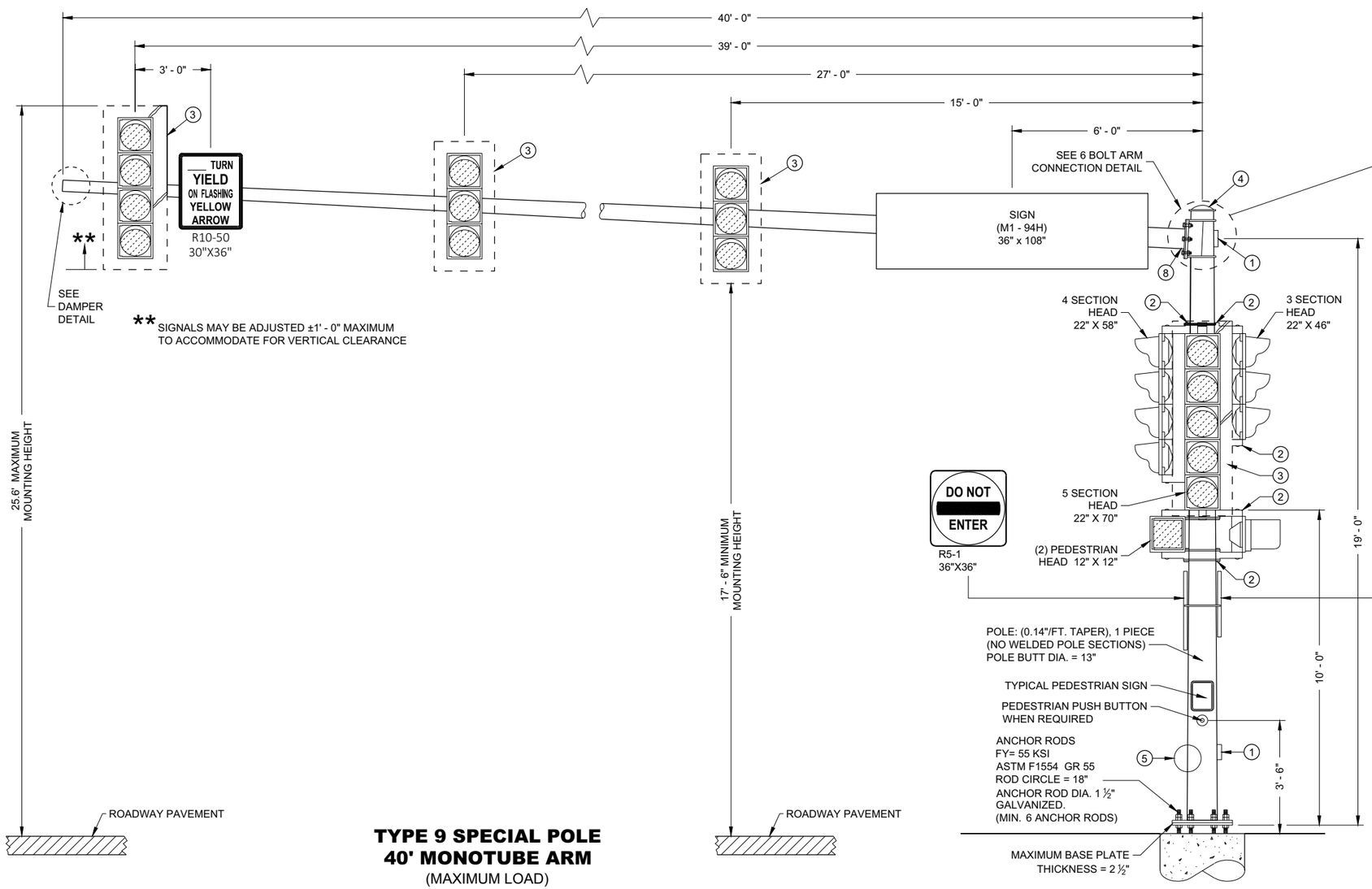

TYPE 9 SPECIAL POLE
40' MONOTUBE ARM
(MAXIMUM LOAD)

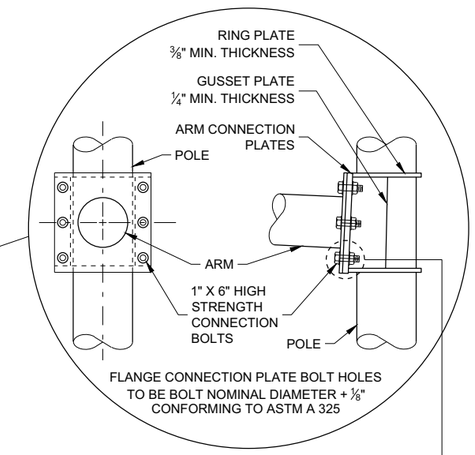

6 BOLT ARM CONNECTION DETAIL

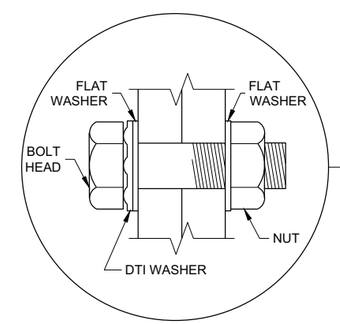

RECOMMENDED BOLT ASSEMBLY DETAIL

TYPE 9 SPECIAL POLE
40' MONOTUBE ARM

STATE OF WISCONSIN
DEPARTMENT OF TRANSPORTATION

APPROVED
August 2020 — DATE
/S/ Ahmet Demirbilek — STATE ELECTRICAL ENGI
FHWA

6

6

SDD 09E08 - 09c

SDD 09E08 - 09c

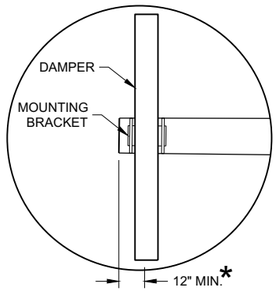

DUMBBELL VIBRATION DAMPER

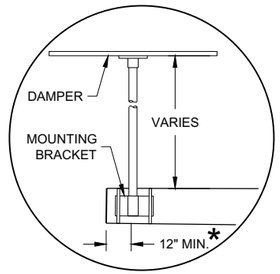

FLAT VIBRATION DAMPER

* MOUNT AS CLOSE TO END OF MAST ARM FOR MAXIMUM DAMPING PER MANUFACTURER'S RECOMMENDATIONS.

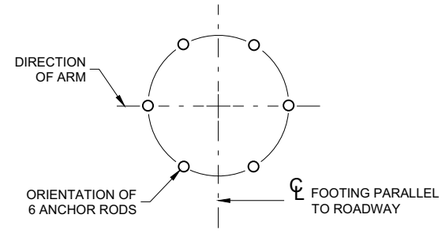

ANCHOR ROD LOCATION

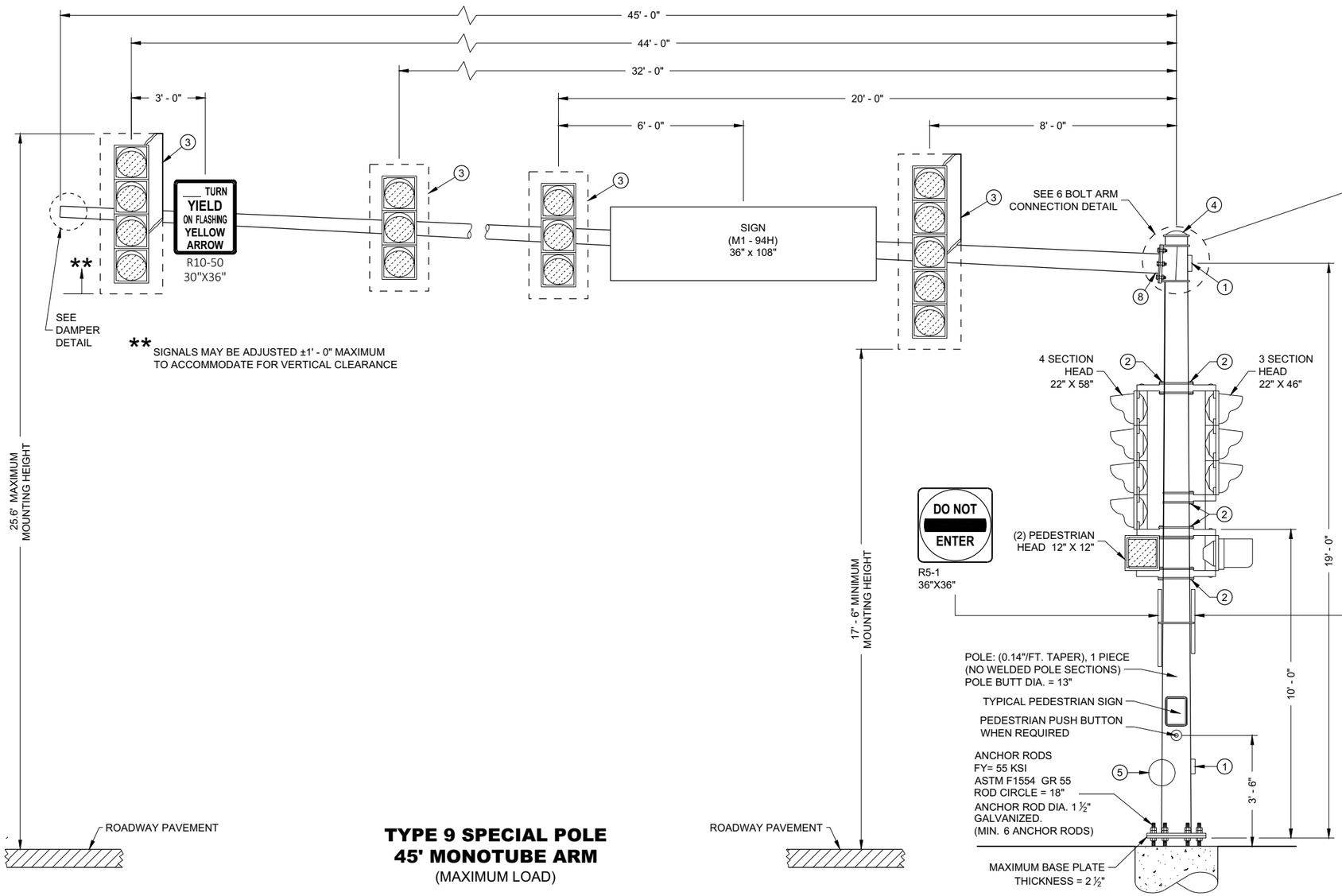

TYPE 9 SPECIAL POLE
45' MONOTUBE ARM
(MAXIMUM LOAD)

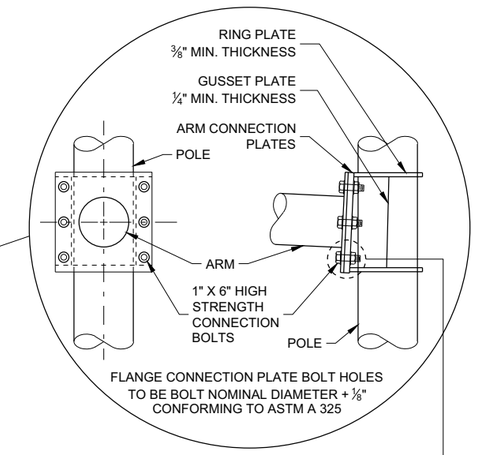

6 BOLT ARM CONNECTION DETAIL

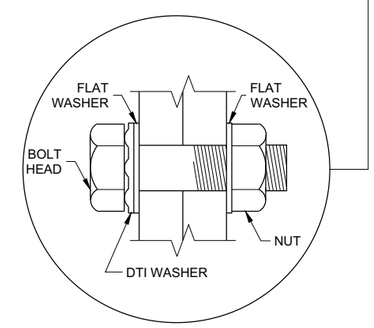

RECOMMENDED BOLT ASSEMBLY DETAIL

TYPE 9 SPECIAL POLE
45' MONOTUBE ARM

STATE OF WISCONSIN
DEPARTMENT OF TRANSPORTATION

APPROVED
August 2020 — DATE
/S/ Ahmet Demirbilek — STATE ELECTRICAL ENGI
FHWA

6
SDD 09E08 - 09d

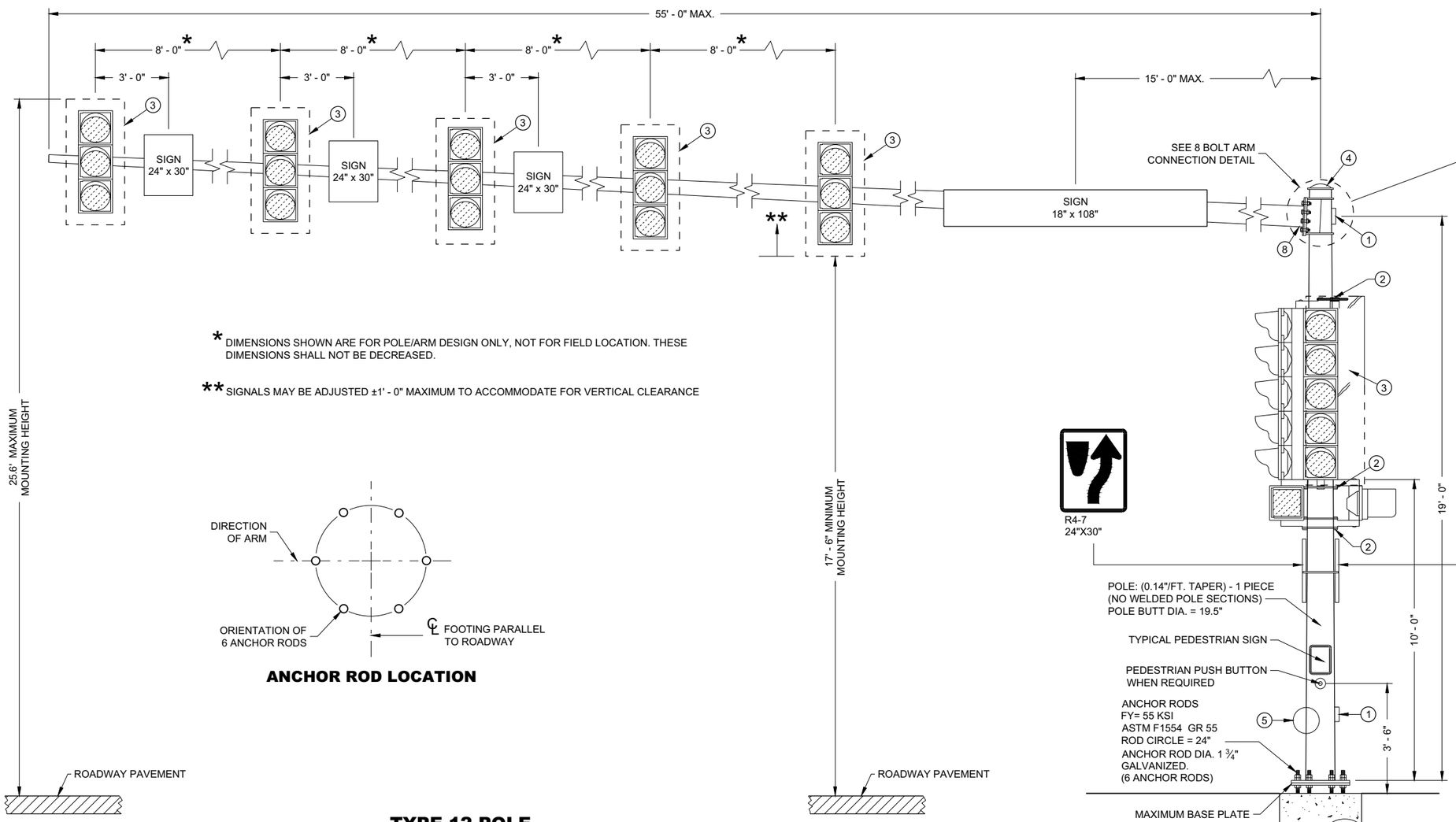

* DIMENSIONS SHOWN ARE FOR POLE/ARM DESIGN ONLY, NOT FOR FIELD LOCATION. THESE DIMENSIONS SHALL NOT BE DECREASED.

** SIGNALS MAY BE ADJUSTED ±1' - 0" MAXIMUM TO ACCOMMODATE FOR VERTICAL CLEARANCE

ANCHOR ROD LOCATION

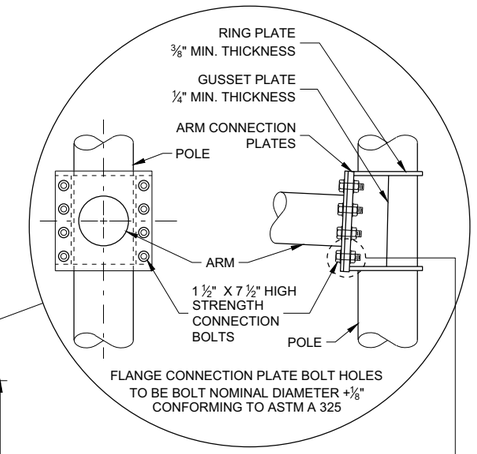

8 BOLT ARM CONNECTION DETAIL

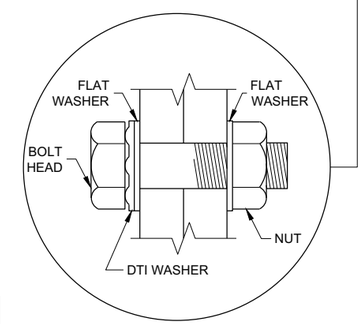

RECOMMENDED BOLT ASSEMBLY DETAIL

TYPE 12 POLE
35' - 55' MONOTUBE ARM
(MAXIMUM LOAD)

TYPE 12 POLE
35' - 55' MONOTUBE ARM

STATE OF WISCONSIN
DEPARTMENT OF TRANSPORTATION

APPROVED
August 2020 — DATE
/S/ Ahmet Demirbilek — STATE ELECTRICAL ENGI

FHWA

6

SDD 09E08 - 09i

GENERAL NOTES

DETAILS OF CONSTRUCTION NOT SHOWN ON THIS DRAWING SHALL CONFORM TO THE PERTINENT REQUIREMENTS OF THE CONTRACT.

POLE TYPES 9 AND 10 ARE FOR ARM LENGTHS 15 FOOT TO 30 FOOT.

POLE TYPES 9 SPECIAL AND 10 SPECIAL ARE FOR ARM LENGTHS 35 FOOT, 40 FOOT, AND 45 FOOT.

POLE TYPES 12 AND 13 ARE FOR ARM LENGTHS 35 FOOT TO 55 FOOT.

MONOTUBE POLES AND ARMS SHALL BE GALVANIZED STEEL.

RING STIFFENED BUILT UP BOX TYPE OF ATTACHMENT FOR TRAFFIC SIGNAL ARM.

ONE PIECE POLE CONSTRUCTION (NO WELDED POLE SECTIONS).

STANDARD STRAIGHT ARM DESIGN (3% ± RISE).

SECTION 657, POLES OF THE STANDARD SPECIFICATION SHALL APPLY TO THIS DRAWING.

PROVIDE WIREWAY THRU POLE WALL AND ARM CONNECTION PLATES. PROVIDE ROUND, SMOOTH INSIDE SURFACE.

MANUFACTURER'S SUBMITTED POLE DESIGNS AND DRAWINGS SHALL BE SIGNED AND STAMPED BY A REGISTERED PROFESSIONAL ENGINEER AND CERTIFIED AS BEING IN COMPLIANCE WITH THE AASHTO "LRFD SPECIFICATIONS FOR STRUCTURAL SUPPORTS FOR HIGHWAY SIGNS, LUMINAIRES AND TRAFFIC SIGNAL 2015 1ST EDITION (INCLUDING INTERIM REVISIONS)" AND ALL PERTINENT WISDOT SPECIFICATIONS AND DRAWINGS FOR THE LIGHTING STRUCTURES AS FOLLOWS:

CATEGORY III FATIGUE LOADS OF GALLOPING, TRUCK GUSTS (AT 45 MPH VEHICLE VELOCITY) AND NATURAL WIND GUSTS FOR DESIGN OF TYPE 9 AND TYPE 10 STRUCTURES.

CATEGORY II FATIGUE LOADS OF TRUCK GUSTS (AT 45 MPH VEHICLE VELOCITY) AND NATURAL WIND GUSTS FOR DESIGN OF TYPE 9 SPECIAL AND TYPE 10 SPECIAL STRUCTURES. IN LIEU OF DESIGNING FOR GALLOPING, A VIBRATION DAMPER MITIGATION DEVICE IS REQUIRED TO BE SUPPLIED AND INSTALLED AT THE END OF THE MAST ARM.

CATEGORY II FATIGUE FATIGUE LOADS OF GALLOPING, TRUCK GUSTS (AT 45 MPH VEHICLE VELOCITY) AND NATURAL WIND GUSTS FOR DESIGN OF TYPE12 AND TYPE 13 STRUCTURES.

115 MPH (700 YEAR MRI BASIC WIND SPEED).

SECURE THE OPENING BELOW THE BASE PLATE WITH STAINLESS STEEL OR GALVANIZED STEEL MESH AND SECURE THE MESH WITH ¾" STAINLESS STEEL BANDING AROUND THE LEVELING NUTS.

INDENT PRINT (NOMINAL ½" HIGH) THE POLE LENGTH AND FIRST TWO LETTERS OF THE MANUFACTURERS NAME ON TWO SIDES OF THE BASE PLATE 180 DEGREES APART, BEFORE GALVANIZING. THE ARM SHALL BE IDENTIFIED WITH THE SAME INFORMATION BY INDENT PRINT.

SIGNAL FACE SHALL BE MOUNTED 6 INCHES (NOMINAL) FROM THE END OF THE MONOTUBE ARM OR AS SHOWN ON THE PLAN CONSTRUCTION DETAIL OR A S DIRECTED BY THE PROJECT ENGINEER/ELECTRICAL OPERATIONS PERSONNEL. MOUNT ALL LIKE HEAD AT SAME ELEVATION.

SIGN MOUNTING BRACKETS SHALL BE FURNISHED IN ACCORDANCE WITH SECTION 637 OF THE STANDARD SPECIFICATIONS FOR HIGHWAY AND STRUCTURE CONSTRUCTION.

1. DESIGN FOR MAXIMUM ALLOWABLE HAND HOLE WITH COVER ASSEMBLY WITH TWO ¼" X ¾" - 20 TPI STAINLESS STEEL HEX HEAD BOLTS.
2. SIGNAL MOUNTING BRACKETS FOR POLE MOUNTING, MOUNT WITH CAP SCREW AND BANDING (SEE SPECIFICATION SECTION 658).
3. SECURELY MOUNT BACK PLATES, PROJECTING 5" BEYOND ALL SIDES OF THE SIGNAL FACE HOUSING, PER MANUFACTURERS RECOMMENDATIONS.
4. THE TOP OF THE POLE SHAFT AND THE MONOTUBE ARM SHALL BE EQUIPPED WITH A REMOVABLE, VENTILATED CAP HELD SECURELY IN PLACE WITH SET SCREWS.
5. FACTORY WELDED BRACKET FOR GROUNDING LUG, OPPOSITE HAND HOLD, (LUG AND HARDWARE PAID UNDER SEPARATE ITEM). PROVIDE HOLE IN BRACKET FOR ¼" X ¾" - 20 TPI STAINLESS STEEL HEX HEAD BOLT.
6. FACTORY WELDED "J" HOOK FOR STRAIN RELIEF FOR POLE LUMINAIRE WIRE.
7. INSTALL STRUCTURAL IDENTIFICATION PLAQUES.

   STRUCTURAL IDENTIFICATION PLAQUES SHALL BE PLACED ON THE POLES IN THE SAME DIRECTION AS THE ARM.

   MOUNTING HEIGHT SHALL BE 6' - 0" ABOVE THE CURB OR SHOULDER. ADJUST IF IT IS KNOWN THAT REQUIRED TRAFFIC SIGNS WILL BE OBSTRUCTED.
8. FACTORY DRILLED ½" DRAIN HOLE 2" FROM FLANGE CONNECTION PLATE.

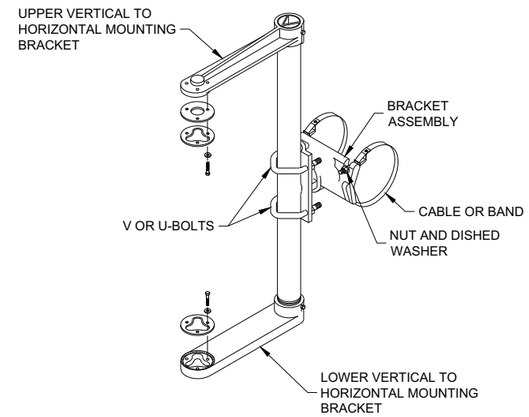

SIGNAL FACE MOUNTING BRACKET DETAIL FOR MONOTUBE ARM

(MOUNT PER MANFACTURER'S RECOMMENDATION)

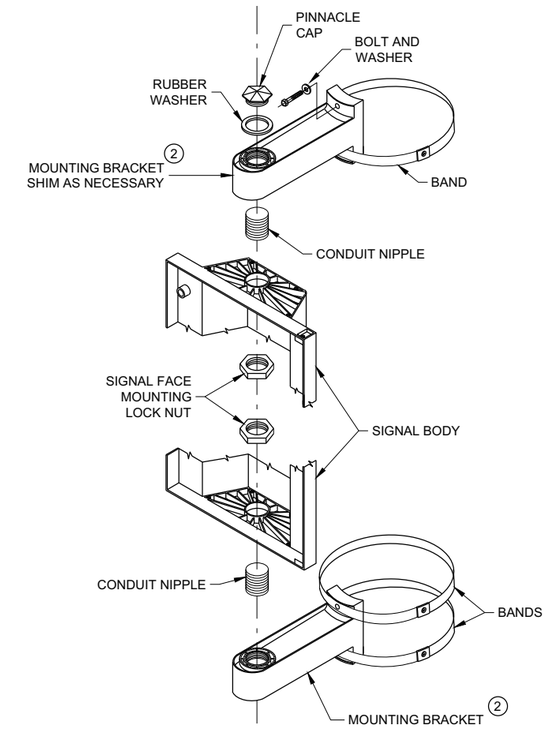

SIGNAL FACE VERTICAL MOUNTING DETAIL

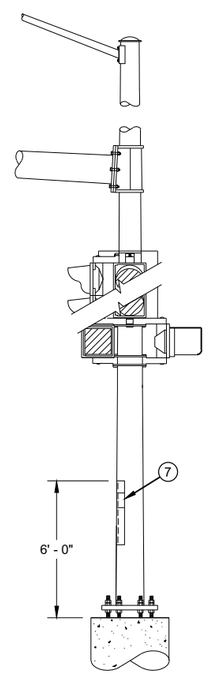

STRUCTURAL IDENTIFICATION PLAQUE PLACEMENT

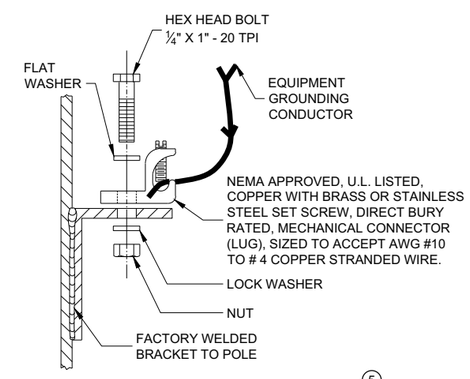

TYPICAL GROUNDING CONNECTIONS 5

NUT, BOLT AND WASHERS SHALL BE STAINLESS STEEL

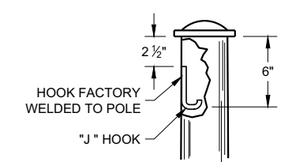

TYPICAL "J" HOOK WIRE SUPPORT 6

GENERAL NOTES AND HARDWARE FOR TYPES 9,10, 9/10 SPECIAL, 12 AND 13 POLES WITH MONOTUBE ARMS

STATE OF WISCONSIN
DEPARTMENT OF TRANSPORTATION

APPROVED
August 2020 — DATE
/S/ Ahmet Demirbilek — STATE ELECTRICAL ENGINEER
FHWA

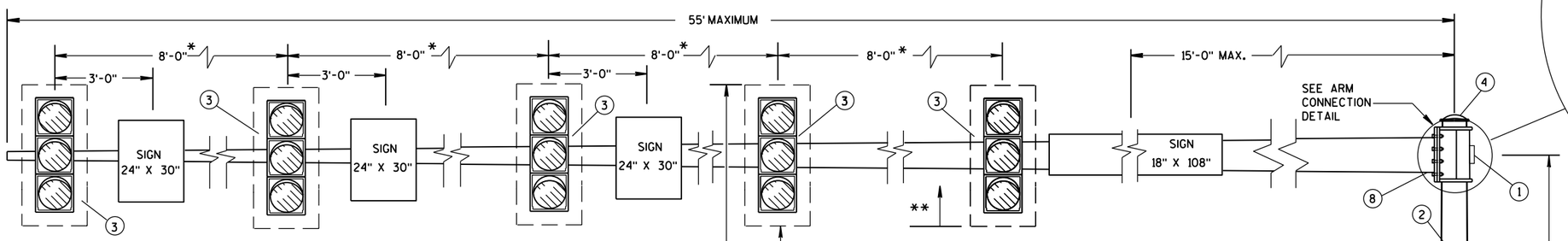

* DIMENSIONS SHOWN ARE FOR POLE/ARM DESIGN ONLY, NOT FOR FIELD LOCATION. THESE DIMENSIONS SHALL NOT BE DECREASED.

** SIGNALS MAY BE ADJUSTED ± 1'-0" MAXIMUM TO ACCOMODATE FOR VERTICAL CLEARANCE.

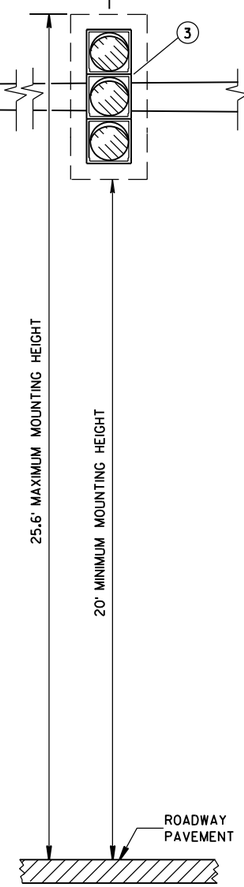

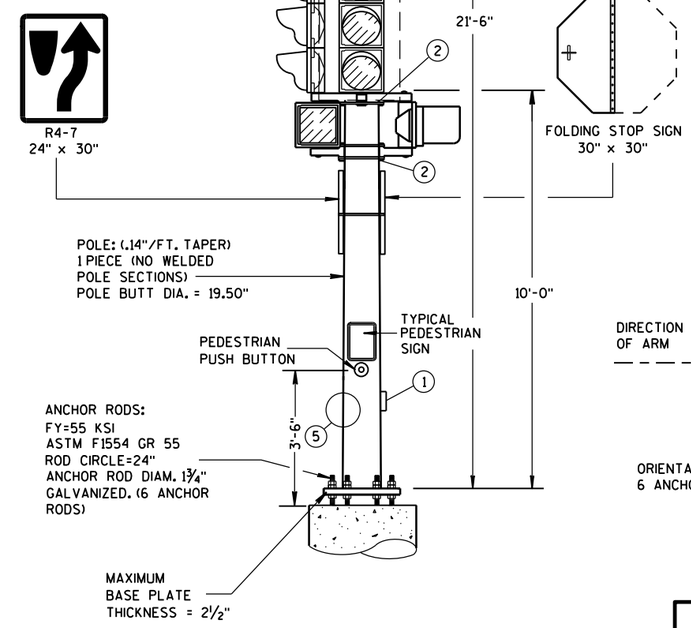

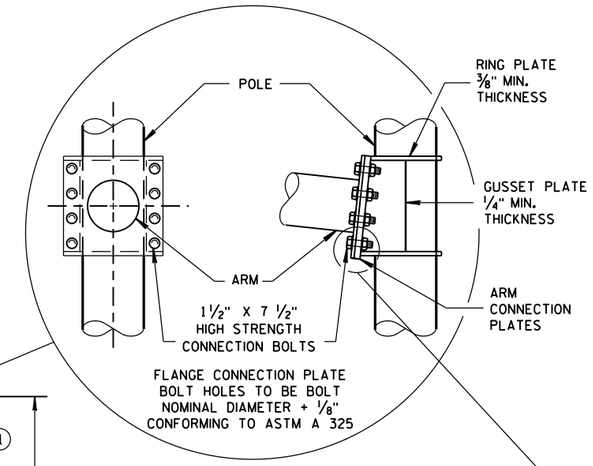

8 BOLT ARM CONNECTION DETAIL

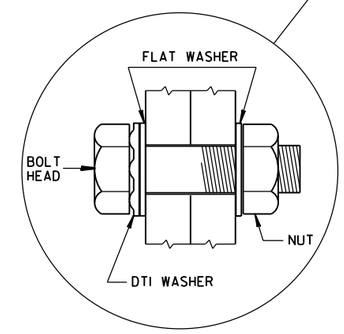

RECOMMENDED
BOLT ASSEMBLY
DETAIL

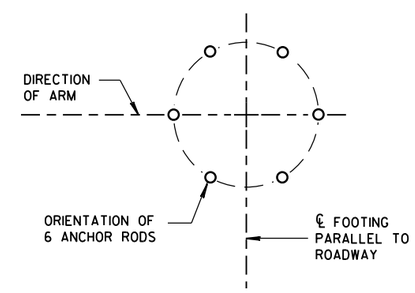

ANCHOR ROD LOCATION

(MAXIMUM LOAD)

OVER HEIGHT TYPE 12 POLE
35'- 55' MONOTUBE ARM

OVER HEIGHT TYPE 12 POLE
35' - 55' MONOTUBE ARM

STATE OF WISCONSIN
DEPARTMENT OF TRANSPORTATION

APPROVED
May, 2017 — /S/ Ahmet Demirbilek
DATE — STATE ELECTRICAL
FHWA

6

6

S.D.D. 9 E 12-1c

S.D.D. 9 E 12-1c

GENERAL NOTES

DETAILS OF CONSTRUCTION, MATERIALS AND WORKMANSHIP NOT SHOWN ON THIS DRAWING SHALL CONFORM TO THE PERTINENT REQUIREMENTS OF THE CONTRACT.

OVER HEIGHT POLE TYPES 9 AND 10 ARE FOR ARM LENGTHS 15-FOOT TO 30-FOOT.

OVER HEIGHT POLE TYPES 12 AND 13 ARE FOR ARM LENGTHS 35-FOOT TO 55-FOOT.

MONOTUBE POLE AND ARM SHALL BE GALVANIZED STEEL.

RING-STIFFENED BUILT-UP BOX TYPE OF ATTACHMENT FOR TRAFFIC SIGNAL ARM.

ONE (1) PIECE POLE CONSTRUCTION (NO WELDED POLE SECTIONS).

STANDARD STRAIGHT ARM DESIGN (3 % ± RISE).

SECTION 657, POLES OF THE STANDARD SPECIFICATIONS SHALL APPLY TO THIS DRAWING.

PROVIDE WIREWAY THRU POLE WALL AND ARM CONNECTION PLATES. PROVIDE ROUND, SMOOTH INSIDE SURFACE.

MANUFACTURER'S SUBMITTED POLE DESIGNS AND DRAWINGS SHALL BE SIGNED AND STAMPED BY A REGISTERED PROFESSIONAL ENGINEER AND CERTIFIED AS BEING IN COMPLIANCE WITH THE AASHTO LRFD SPECIFICATIONS FOR STRUCTURAL SUPPORTS FOR HIGHWAY SIGNS, LUMINAIRES, AND TRAFFIC SIGNAL 2015 1ST EDITION (INCLUDING 2017 INTERIM REVISIONS) AND ALL PERTINENT WISDOT SPECIFICATIONS AND DRAWINGS FOR TRAFFIC AND LIGHTING STRUCTURES AND AS FOLLOWS:

- CATEGORY III FATIGUE LOADS OF GALLOPING, TRUCK GUSTS (AT 45 MPH VEHICLE VELOCITY) AND NATURAL WIND GUSTS FOR DESIGN OF TYPE 9 AND TYPE 10 STRUCTURES.
- CATEGORY II FATIGUE LOADS OF GALLOPING, TRUCK GUSTS (AT 45 MPH VEHICLE VELOCITY) AND NATURAL WIND GUSTS FOR DESIGN OF TYPE 12 AND TYPE 13 STRUCTURES.
- 90 MPH (3-SECOND GUST) WIND SPEED AND A 50 YEAR DESIGN LIFE.

SECURE THE OPENING BELOW THE BASE PLATE WITH STAINLESS STEEL OR GALVANIZED STEEL MESH AND SECURE THE MESH WITH 3/4" S.S. BANDING AROUND THE LEVELING NUTS.

INDENT PRINT (NOMINAL 1/2" HIGH) THE POLE LENGTH AND FIRST TWO LETTERS OF THE MANUFACTURERS NAME ON TWO SIDES OF THE BASE PLATE 180 DEGREES APART, BEFORE GALVANIZING. THE ARM SHALL BE IDENTIFIED WITH THE SAME INFORMATION BY INDENT PRINT.

SIGNAL FACE SHALL BE MOUNTED 6 INCHES (NOMINAL) FROM THE END OF THE MONOTUBE ARM OR AS SHOWN ON THE PLAN CONSTRUCTION DETAIL OR AS DIRECTED BY THE PROJECT ENGINEER/ELECTRICAL OPERATIONS PERSONNEL. MOUNT ALL LIKE HEADS AT SAME ELEVATION.

SIGN MOUNTING BRACKETS SHALL BE FURNISHED IN ACCORDANCE WITH SECTION 637 OF THE STANDARD SPECIFICATIONS FOR HIGHWAY AND STRUCTURE CONSTRUCTION.

6

(1) DESIGN FOR MAXIMUM ALLOWABLE HANDHOLE WITH COVER ASSEMBLY WITH TWO 1/4" X 3/4" - 20 TPI STAINLESS STEEL HEX HEAD BOLTS.

(2) SIGNAL MOUNTING BRACKETS FOR POLE MOUNTING, MOUNT WITH CAP SCREW AND BANDING, (SEE SPECIFICATIONS SEC. 658).

(3) SECURELY MOUNT BACKPLATES, PROJECTING 5" BEYOND ALL SIDES OF THE SIGNAL FACE HOUSING, PER MANUFACTURERS RECOMMENDATIONS.

(4) THE TOP OF THE POLE SHAFT AND THE END OF THE MONOTUBE ARM SHALL BE EQUIPPED WITH A REMOVABLE, VENTILATED CAP HELD SECURELY IN PLACE WITH SET SCREWS.

(5) FACTORY-WELDED BRACKET FOR GROUNDING LUG, OPPOSITE HANDHOLE, (LUG AND HARDWARE PAID UNDER SEPARATE ITEM). PROVIDE HOLE IN BRACKET FOR 1/4" X 3/4" - 20 TPI STAINLESS STEEL HEX HEAD BOLT.

(6) FACTORY-WELDED "J" HOOK FOR STRAIN RELIEF FOR POLE LUMINAIRE WIRE.

(7) INSTALL STRUCTURAL IDENTIFICATION PLAQUES.

STRUCTURAL IDENTIFICATION PLAQUES SHALL BE PLACED ON THE POLES IN THE SAME DIRECTION AS THE ARM.

MOUNTING HEIGHT SHALL BE 6'-0" ABOVE THE CURB OR SHOULDER. ADJUST IF IT IS KNOWN THAT REQUIRED TRAFFIC SIGNS WILL BE OBSTRUCTED.

(8) FACTORY DRILLED 1/2" DRAIN HOLE 2" FROM FLANGE CONNECTION PLATE.

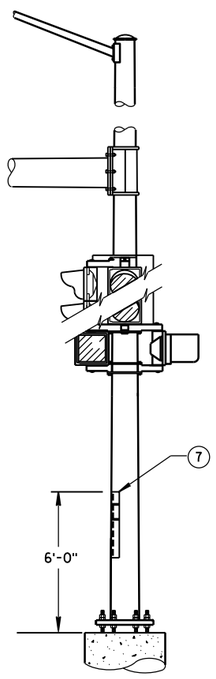

STRUCTURAL IDENTIFICATION PLAQUE PLACEMENT

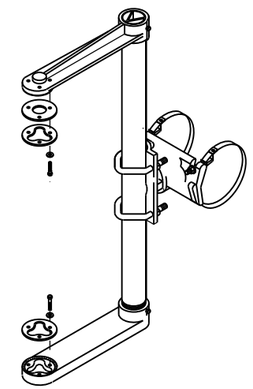

SIGNAL FACE MOUNTING BRACKET DETAIL FOR MONOTUBE ARM

(MOUNT PER MANUFACTURER'S RECOMMENDATION)

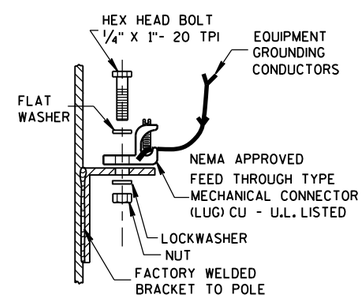

TYPICAL GROUNDING CONNECTIONS (5)

NUT, BOLT AND WASHERS SHALL BE STAINLESS STEEL

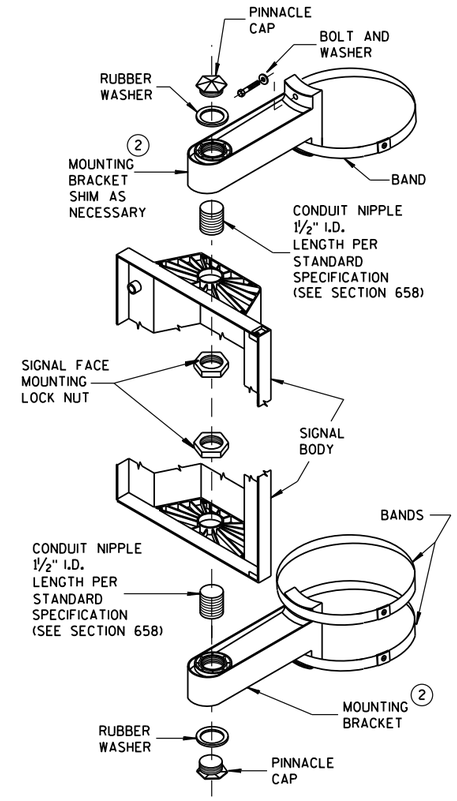

SIGNAL FACE VERTICAL MOUNTING DETAIL

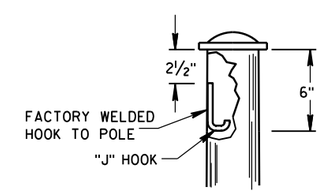

"J" HOOK WIRE SUPPORT (6)

6

GENERAL NOTES AND HARDWARE DETAILS FOR OVER HEIGHT TYPE 9, 10, 12 & 13 POLES WITH MONOTUBE ARMS	
STATE OF WISCONSIN DEPARTMENT OF TRANSPORTATION	
APPROVED May 2017 DATE	/S/ Ahmet Demirbilek STATE ELECTRICAL
FHWA	

S.D.D. 9 E 12-1e

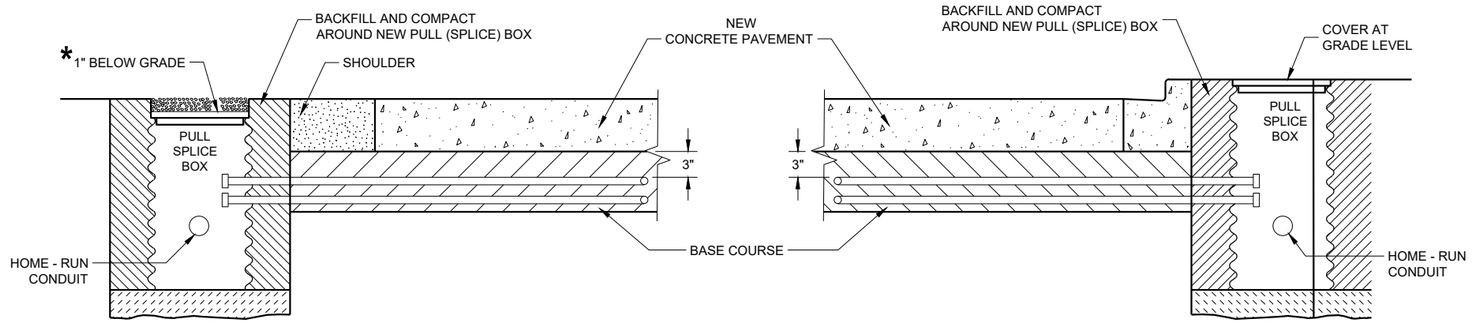

SECTION A - A
NO CURB AND GUTTER

SECTION B - B
CURB AND GUTTER

*RECESS PULL (SPLICE) BOX SO THAT THE COVER IS 3" BELOW GRADE IN SHOULDER AREAS OF CRUSHED AGGREGATE. BACKFILL OVER COVER WITH THE CRUSHED AGGREGATE TO BRING THE AREA TO GRADE LEVEL.

LOOP DETECTOR INSTALLATION DETAIL

GENERAL NOTES

DETAILS OF CONSTRUCTION, MATERIALS AND WORKMANSHIP NOT SHOWN ON THIS DRAWING SHALL CONFORM TO THE PERTINENT REQUIREMENTS OF THE CONTRACT.

PITCH LEAD OUT CONDUIT TO DRAIN TO ROADSIDE PULL (SPLICE) BOX.

LOOP SIZE, LOCATION, NUMBER OF TURNS OF WIRE AND ASSOCIATED SIGNAL PHASE SHALL BE AS SHOWN ON THE PLANS.

SPLICES SHALL BE INSTALLED BY USING CAST IN PLACE SPLICE KITS LISTED ON THE DEPARTMENTS APPROVED PRODUCTS LIST OR AN ENGINEER APPROVED EQUAL. NON-INSULATED BUTT SPLICES TO FIT #12 AWG STRANDED WIRE SHALL BE USED. SPLICES SHALL BE SOLDERED AND INSULATED FROM EACH OTHER AS PER INSTRUCTIONS INCLUDED IN THE SPLICE KIT.

MEASURE GROUND RESISTANCE USING A MEGGER. REPLACE LOOP WIRE NOT ATTAINING A READING OF INFINITY TO GROUND.

AFTER SPLICING THE LOOP WIRE TO THE LOOP LEAD-IN CABLE, THE CONTRACTOR SHALL MEASURE INDUCTANCE, GROUND RESISTANCE AND WIRE RESISTANCE AT THE CABINET END OF THE LEAD-IN CABLE AND FURNISH A COPY OF THE READING TO THE PROJECT ENGINEER FOR EVALUATION.

LOOP DETECTOR LEADS SHALL BE IDENTIFIED WITH THEIR ASSOCIATED LOOP BY USE OF WATERPROOF TAGS AT BOTH ENDS OF THE CABLE. A LISTING OF THE CABLE IDENTIFICATION PER INDIVIDUAL LOOP LEAD-IN SHALL BE PLACED IN THE CABINET.

THE #12 AWG LOOP WIRE IN THE PULL (SPLICE) BOX SHALL BE HAND TWISTED AT LEAST 3 TWISTS PER FOOT BEFORE BEING SPLICED TO THE LOOP LEAD-IN CABLE.

SPLICES OF LOOP WIRE TO LEAD-IN CABLE SHALL BE MADE ONLY IN PULL (SPLICE) BOXES AT THE SIDE OF THE ROAD.

THE #12 AWG LOOP WIRE SHALL BE INSTALLED FROM THE ROADSIDE PULL (SPLICE) BOX, THROUGH THE LOOP CONDUIT, BACK TO THE ROADSIDE PULL (SPLICE) BOX, AND BE INSTALLED IN ONE NON-SPLICED, CONTINUOUS LENGTH.

PROTECTION OF THE CONDUIT IN THE BASE COURSE SHALL BE REQUIRED AFTER INSTALLATION AND BEFORE NEW PAVEMENT IS INSTALLED.

SHOULD INSTALLATION REPAIR BE REQUIRED, IT SHALL BE DONE UNDER THE DIRECTION OF THE PROJECT ENGINEER.

6

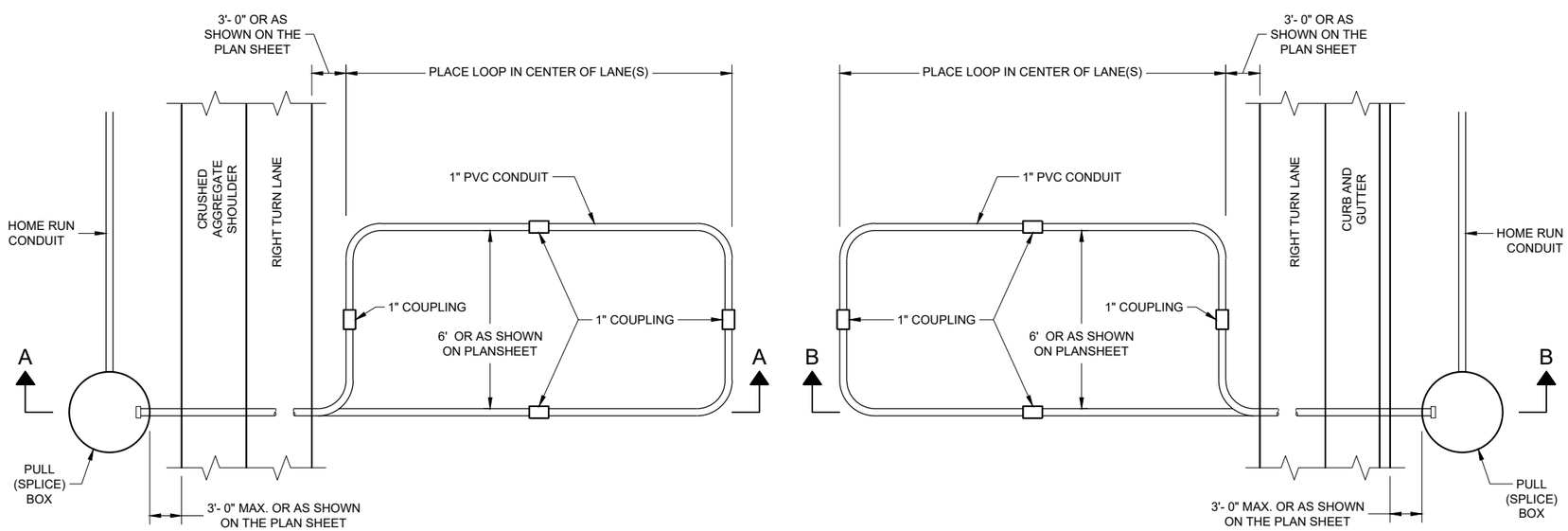

TYPICAL PLAN LOOP DETECTOR
WITH 24" PULL (SPLICE) BOX

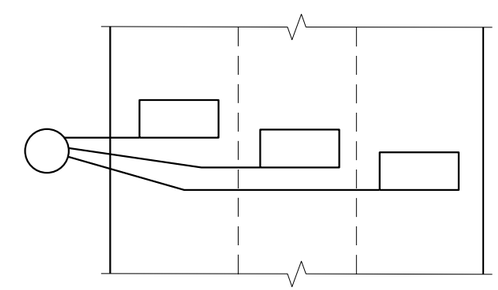

MULTI-LANE
INSTALLATION

6

LOOP DETECTOR INSTALLED IN BASE COURSE WITH PULL (SPLICE) BOX OFF ROADWAY (OPTION 2)

STATE OF WISCONSIN
DEPARTMENT OF TRANSPORTATION

APPROVED
September 2014 /S/ Ahmet Demirbilek
DATE STATE ELECTRICAL ENGI
FHWA

SDD 09F15 - 04b

SDD 09F15 - 04b

MINIMUM POLE LENGTHS	CLASS	POLE BURIAL DEPTHS
25'	V	5'
30'	V	6'
35'	IV	7'
40'	IV	8'
45'	IV	9'

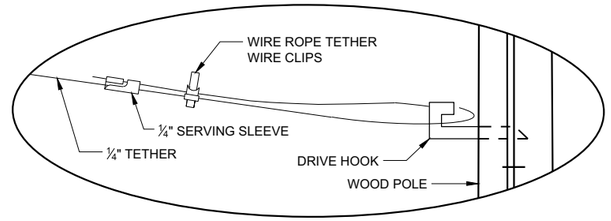

DETAIL "A"

GENERAL NOTES

DETAILS OF CONSTRUCTION, MATERIALS AND WORKMANSHIP NOT SHOWN ON THIS DRAWING SHALL CONFORM TO THE PERTINENT REQUIREMENTS OF THE CONTRACT.

1. WOOD POLES SHALL BE CLASS 4. LENGTH DETERMINED BY SIGNAL PLAN.

2. SIGNAL FACES:
   - A. ALL SECTIONS SHALL BE 12" AND POLYCARBONATE.
   - B. EACH SHALL CONTAIN A 5" WIDE DULL BLACK POLYCARBONATE BACKPLATE.
   - C. EACH SHALL BE WIRED FROM THE TOP SIGNAL MOUNTING BRACKET.
   - D. NEAR RIGHT SIGNAL FACE SUSPENDED ON THE TETHER (NO BACKPLATE) SHALL NOT BE OVER THE TRAVELED WAY. IF THE POLE IS WITHIN 5 FEET OF THE TRAVELED WAY MOUNT THE SIGNAL FACE ON THE WOOD POLE WITH BACKPLATE.
   - E. FAR INDICATION SHALL BE MAINTAINED OVER CENTER OF TRAFFIC LANE.

3. SPAN WIRE:
   - A. EACH SPAN WIRE SHALL BE INDIVIDUALLY DOWN GUYED
   - B. SIGNAL AND LIGHTING CABLES SHALL ONLY BE ATTACHED TO THE UPPER SPAN WIRE.
   - C. THE SIGNAL ASSEMBLY SHALL HAVE A 17' MIN. HEIGHT ABOVE THE ROADWAY. THIS SHALL BE MEASURED AFTER THE SPAN WIRE INSTALLATION IS COMPLETED WITH ALL CABLES AND SIGNAL FACES IN PLACE. MAINTAIN MINIMUM AND MAXIMUM HEIGHTS AS ROADWAY WORK PROGRESSES.

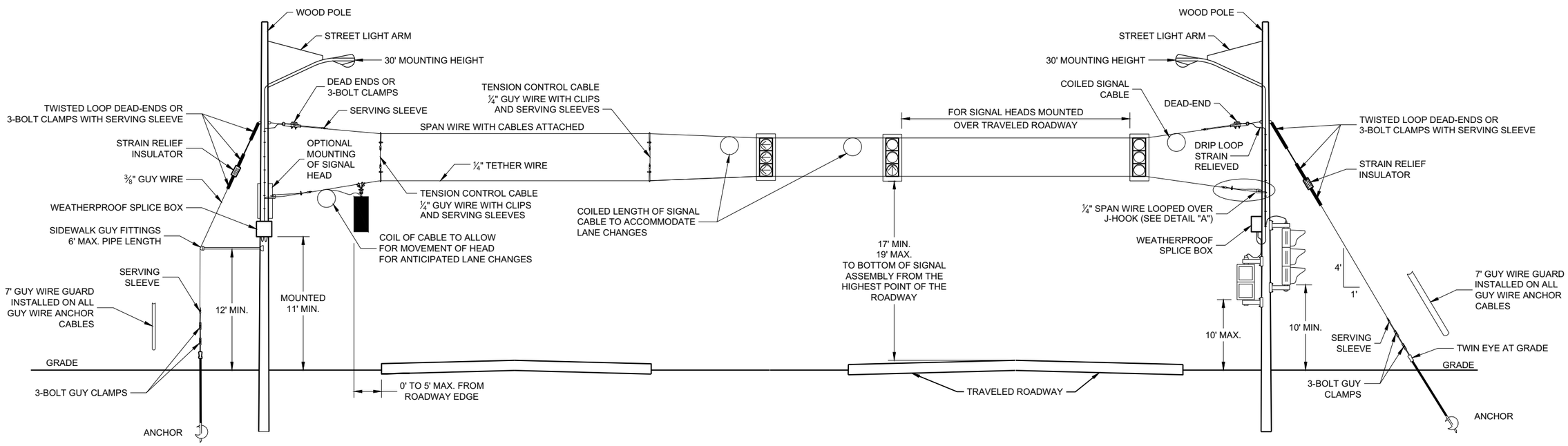

SPAN WIRE
TEMPORARY SIGNALS
4 LANE ROADWAYS

SPAN WIRE TEMPORARY TRAFFIC SIGNAL

STATE OF WISCONSIN
DEPARTMENT OF TRANSPORTATION

APPROVED
June 2015 — DATE
/S/ Ahmet Demerbilek — STATE ELECTRICAL ENGI
FHWA

SDD09G01 - 04b

SDD09G01 - 04b

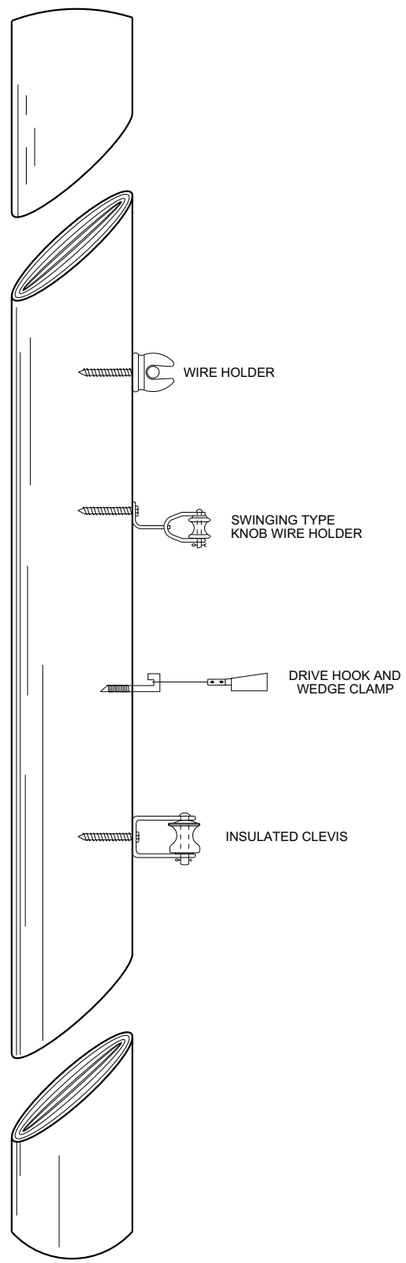

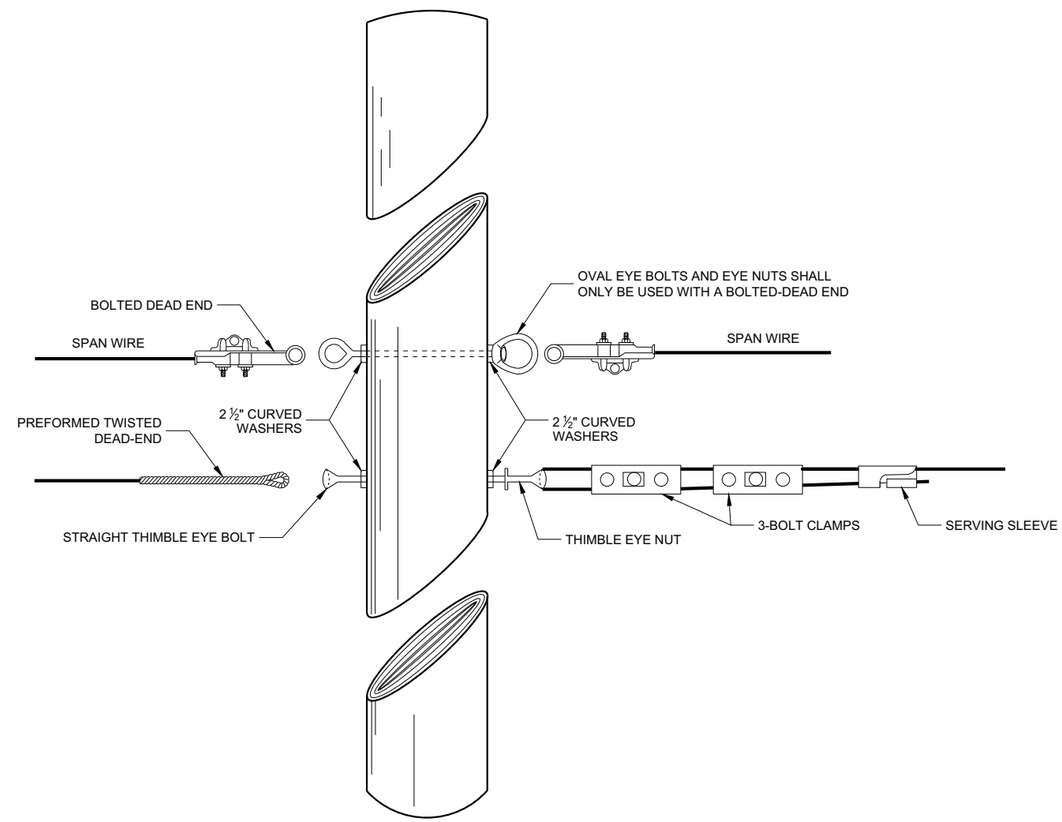

6

6

SPAN WIRE TEMPORARY TRAFFIC SIGNAL

STATE OF WISCONSIN
DEPARTMENT OF TRANSPORTATION

APPROVED
June 2015 — DATE
/S/ Ahmet Demerbilek — ROADWAY STANDARDS DEVE ENGINEER
FHWA

SDD 09G01 - 4d

SDD 09G01 - 4d

GENERAL NOTES

1. USE ¾" DRILL IN WOOD POLE TO PROVIDE FOR ⅝" BOLTS.
2. SAFETY LOOP REQUIRED ON EACH END OF ALL SPAN WIRES.

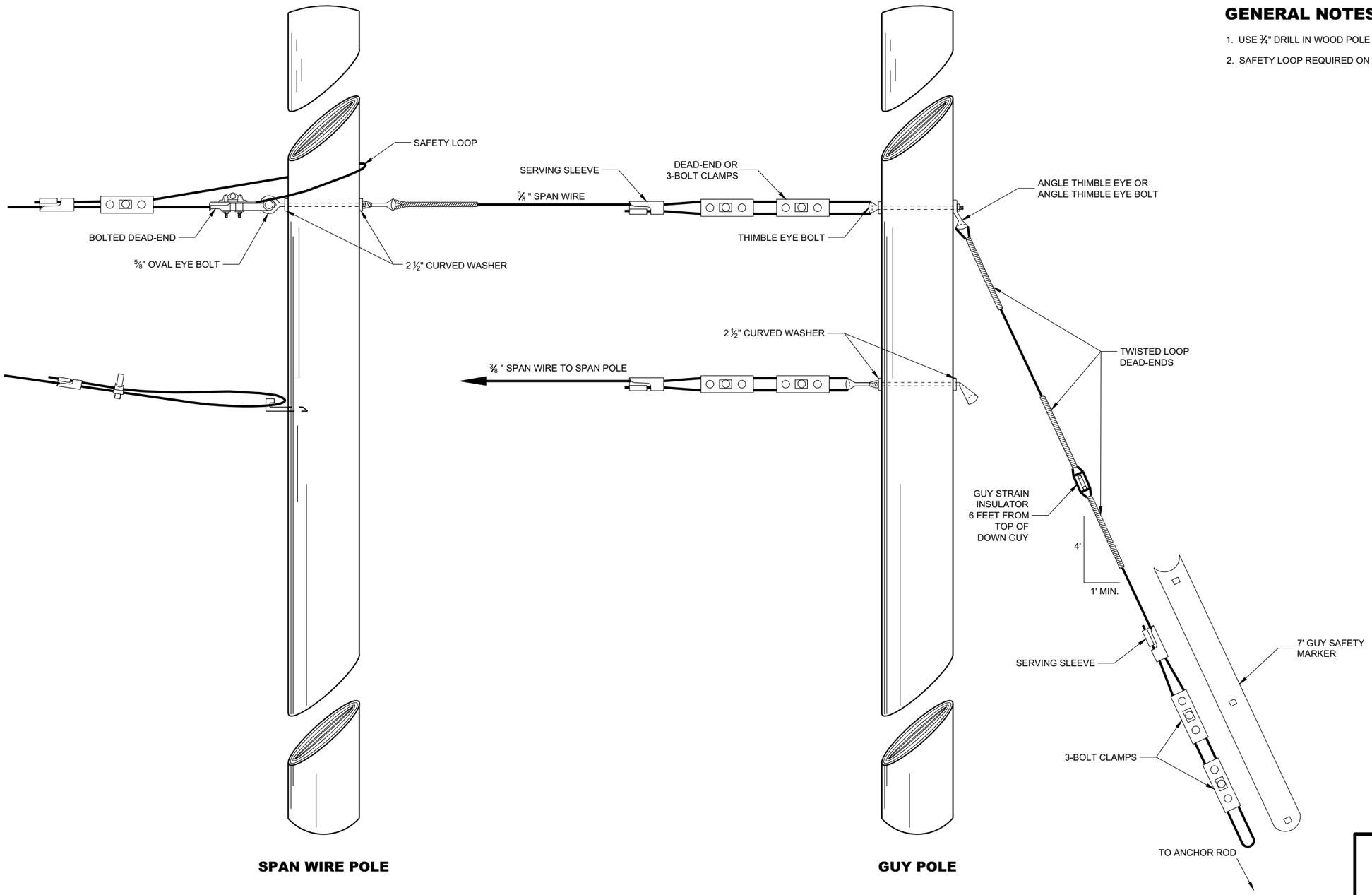

SPAN WIRE POLE

GUY POLE

TYPICAL DEAD-ENDINGS OR GUYING

SPAN WIRE TEMPORARY TRAFFIC SIGNAL

STATE OF WISCONSIN
DEPARTMENT OF TRANSPORTATION

APPROVED
June 2015 — DATE
/S/ Ahmet Demerbilek — ROADWAY STANDARDS DEVE ENGINEER
FHWA

6

SDD 09G01 - 4e

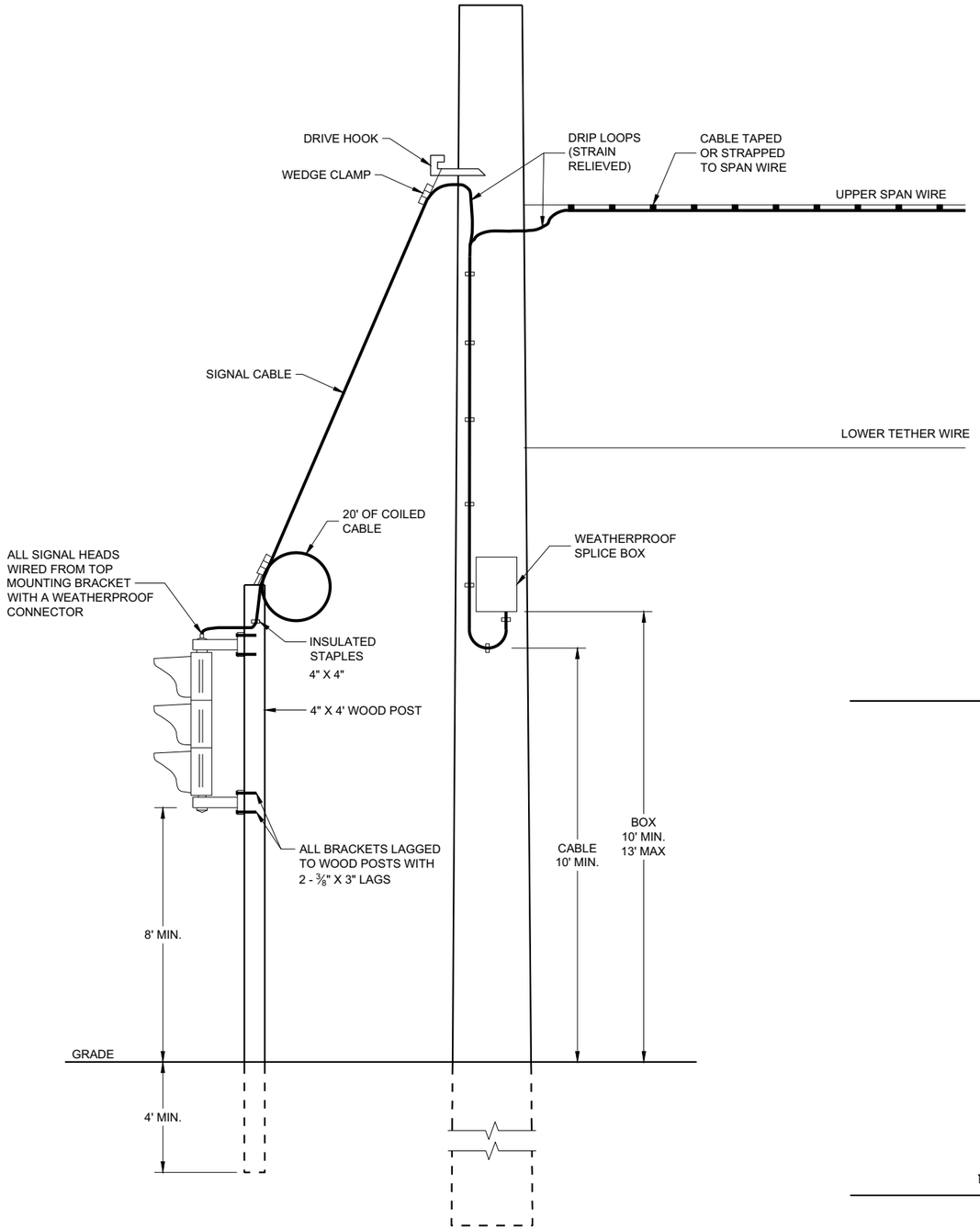

TYPICAL DROP TO TEMPORARY MOVEABLE SIGNAL

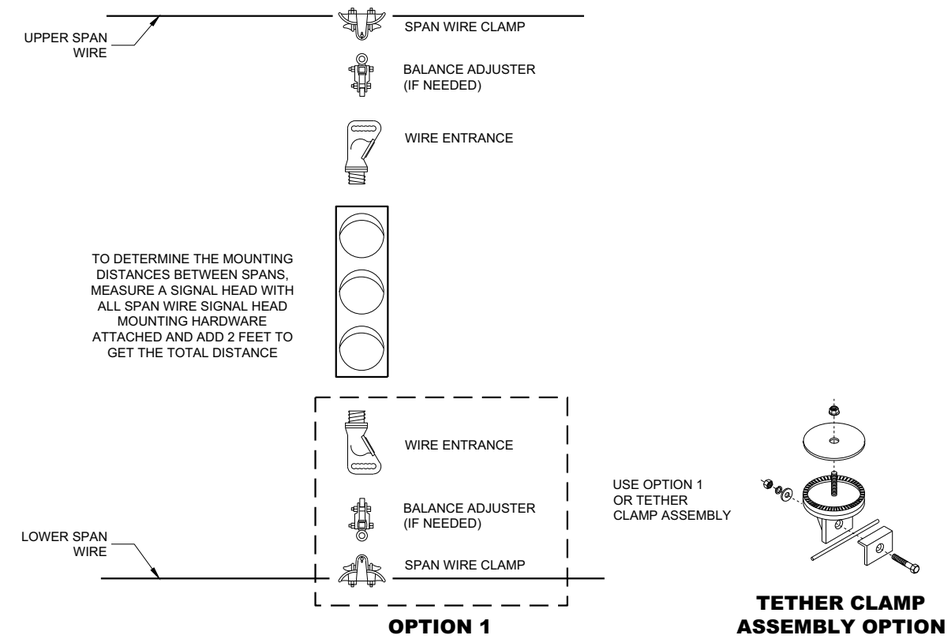

TYPICAL SPAN WIRE MOUNTING HARDWARE

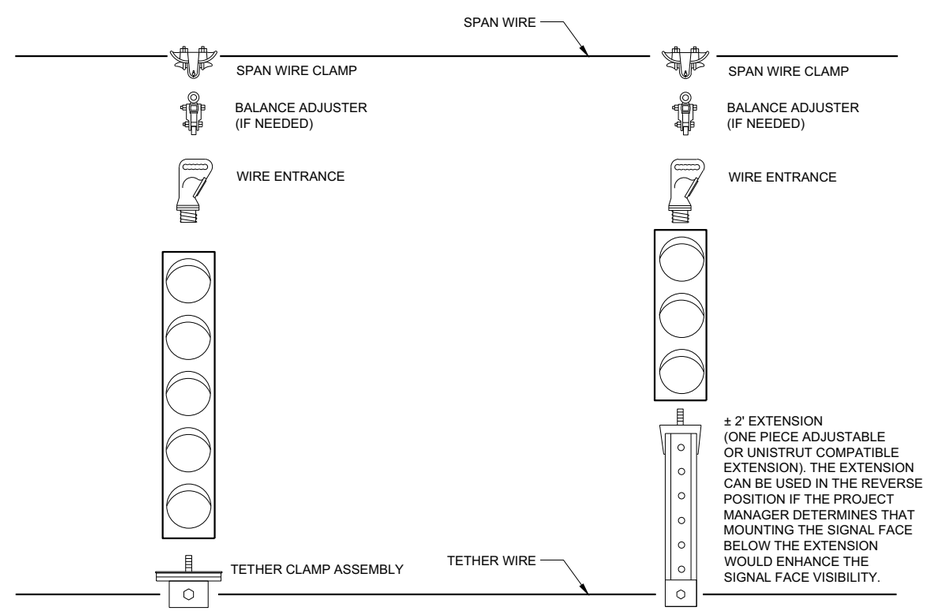

5 SECTION VERTICAL WITH 3 SECTION VERTICAL ON ONE SPAN WIRE

SPAN WIRE TEMPORARY TRAFFIC SIGNAL

STATE OF WISCONSIN
DEPARTMENT OF TRANSPORTATION

APPROVED
June 2015 — DATE
/S/ Ahmet Demerbilek — ROADWAY STANDARDS DEVE ENGINEER
FHWA

6

SDD 09G01 - 4f

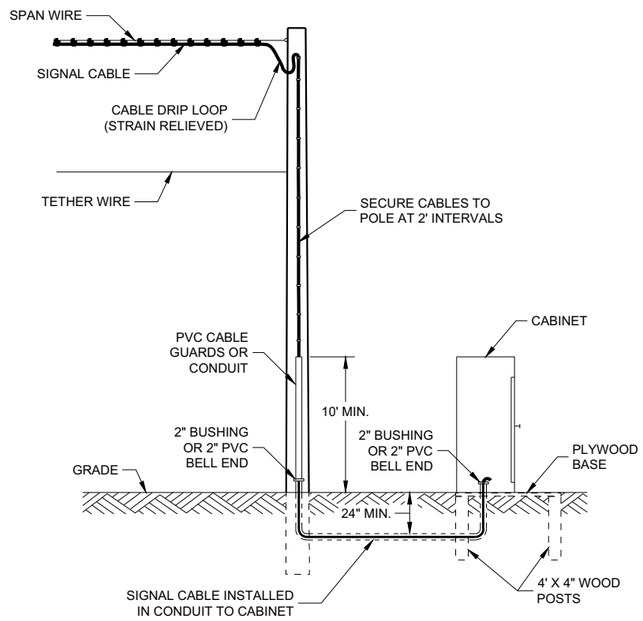

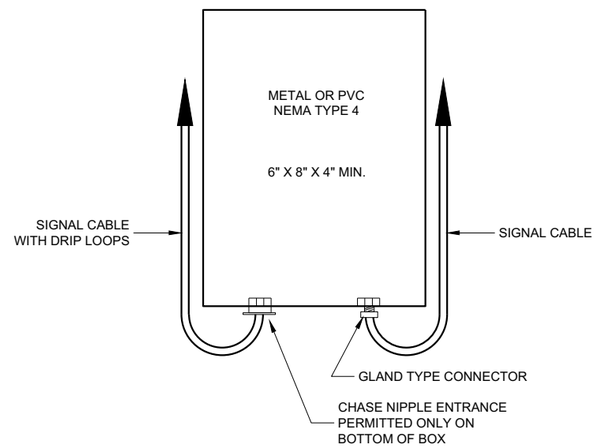

SPLICE BOX

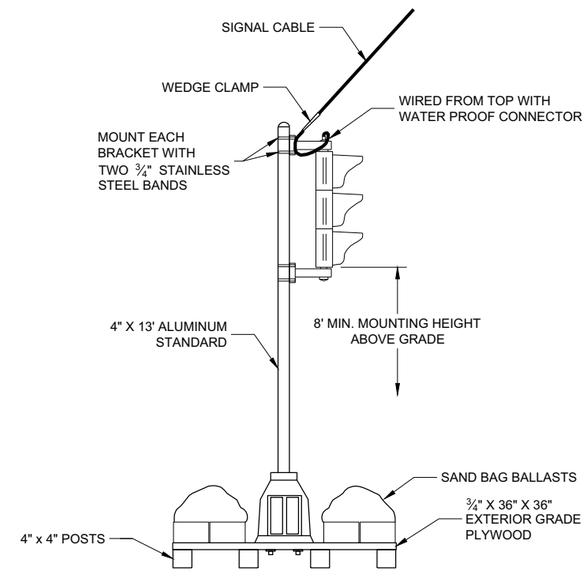

TYPICAL SKID TYPE TEMPORARY

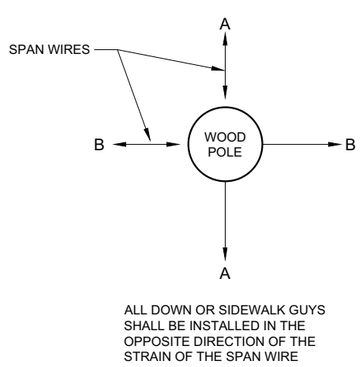

CORNER POLES

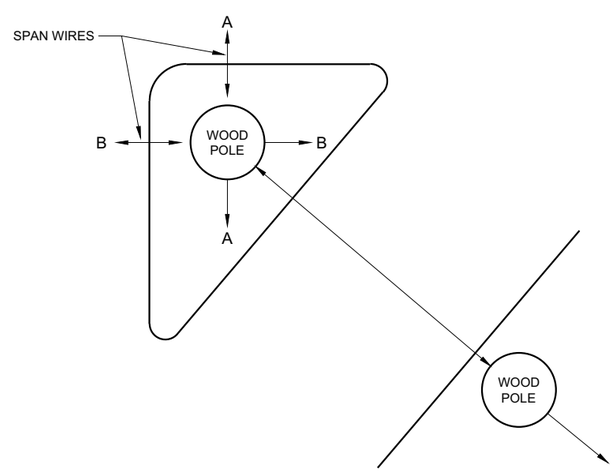

ISLAND POLES

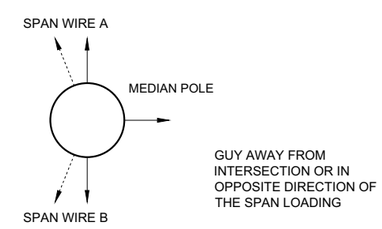

MEDIAN POLES

SPAN WIRE TEMPORARY TRAFFIC SIGNAL

STATE OF WISCONSIN
DEPARTMENT OF TRANSPORTATION

APPROVED
June 2015 — DATE
/S/ Ahmet Demerbilek — ROADWAY STANDARDS DEVE ENGINEER
FHWA

6

6

SDD 09G01 - 4g

SDD 09G01 - 4g

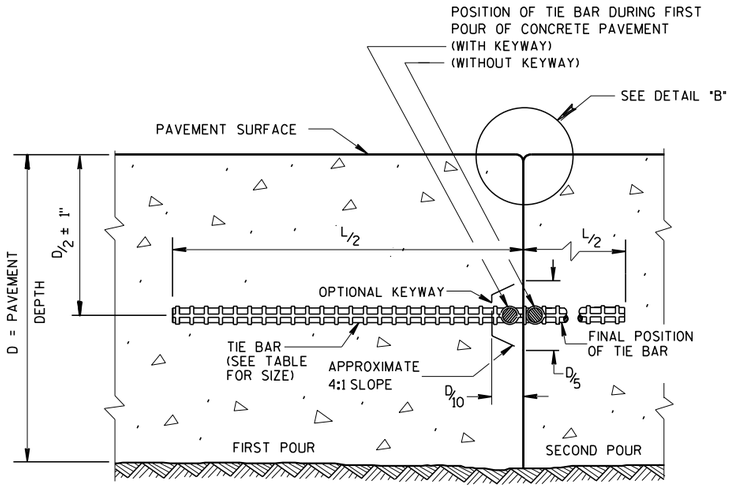

CONSTRUCTION JOINT

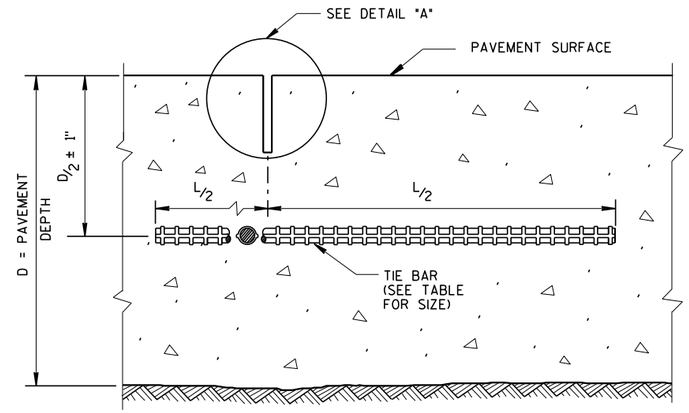

SAWED JOINT

GENERAL NOTES

CREATE A LONGITUDINAL JOINT FOR PAVEMENT WIDTHS GREATER THAN 15 FEET.

CORRELATE LONGITUDINAL JOINTS WITH LANE LINES WHEN POSSIBLE.

1. ANCHOR TIE BARS INTO DRILLED HOLES WITH AN EPOXY.
2. PAVEMENT THAT WAS IN PLACE PRIOR TO THE CONTRACT.

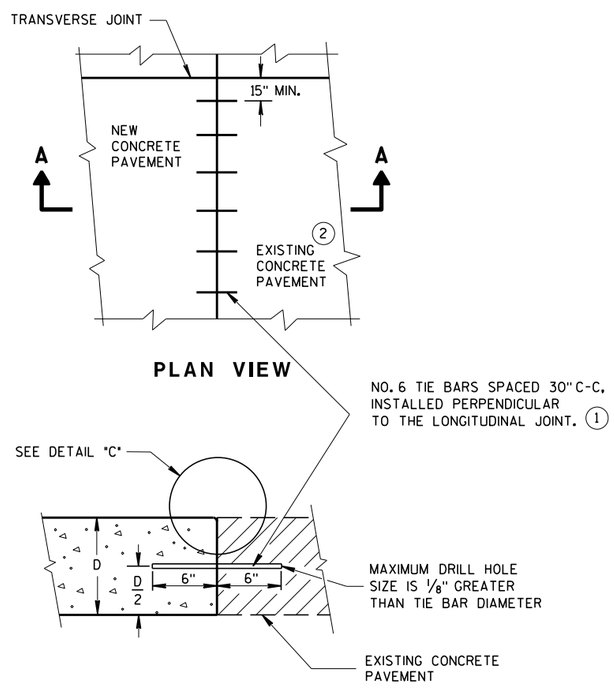

PLAN VIEW

SECTION A-A

LONGITUDINAL CONSTRUCTION JOINT TIE BARS ANCHORED INTO EXISTING PAVEMENT

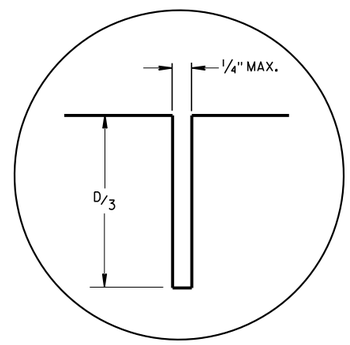

DETAIL "A"

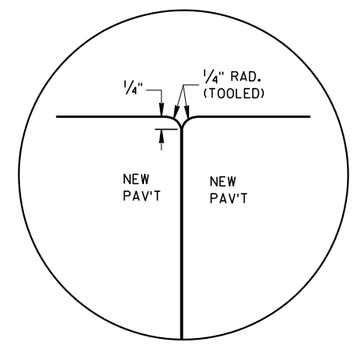

DETAIL "B"

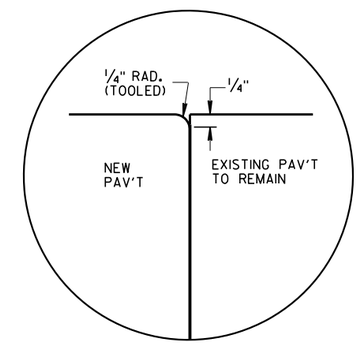

DETAIL "C"

TIE BAR TABLE

PAVEMENT DEPTH (D)	TIE BAR SIZE	TIE BAR LENGTH (L)	MAX. TIE BAR SPACING
< 10 1/2"	NO. 4	30"	36"
≥ 10 1/2"	NO. 5	36"	36"
	NO. 4 *	30"	24" **

* SUBSTITUTE BENT BARS AT LONGITUDINAL JOINTS WHEN EQUIPMENT LIMITATIONS DURING CONSTRUCTION WARRANT (e.g. AUXILIARY LANES OR TURN LANES)

** CONFORM TO 15" MINUMUM SPACING FROM TRANSVERSE JOINTS; SPACING BETWEEN TIE BARS WILL BE 30" AT TRANSVERSE JOINTS.

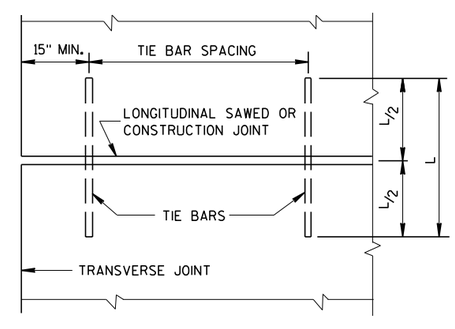

PLAN VIEW

SHOWING LOCATION OF TIE BARS

CONCRETE PAVEMENT LONGITUDINAL JOINTS AND TIES

STATE OF WISCONSIN
DEPARTMENT OF TRANSPORTATION

APPROVED
March 2018 — DATE
/S/ Peter Kerr — PAVEMENT SUPE
FHWA

6

S.D.D. 13 C 1-19

GENERAL NOTES

SAW CUT, DRILL, AND LIFT OUT EXISTING CONCRETE PAVEMENT WITHIN THE BOUNDARIES OF CONCRETE REPAIR AREAS. THE CONTRACTOR MAY MAKE ADDITIONAL SAW CUTS INSIDE THE REPAIR LIMITS TO REDUCE WEIGHT AND SIZE OF CONCRETE PIECES.

PROVIDE A 6 FOOT MINIMUM DISTANCE FROM BOUNDARIES OF CONCRETE REPAIR AREA TO ADJACENT TRANSVERSE JOINT OR CRACK.

THE LENGTH OF THE REPAIRS MAY VARY FROM THE DIMENSIONS SHOWN IF THE EXISTING CONCRETE PAVEMENT IS NON-DOWELED AND THE PAVEMENT IS TO BE OVERLAID AFTER REPAIRING.

(1) DOWEL BARS MAY NOT BE PRESENT.

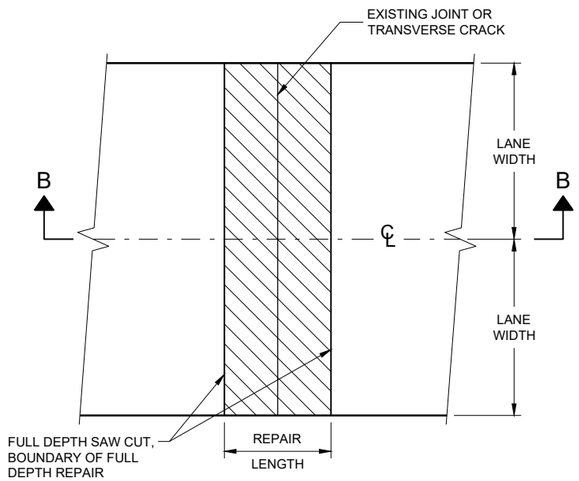

PLAN VIEW (DOUBLE LANE REPAIR)

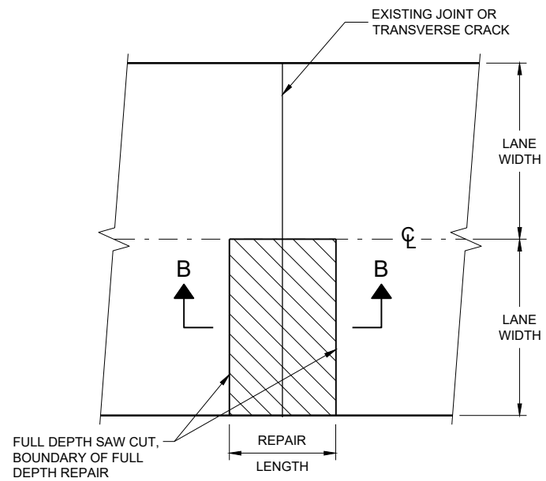

PLAN VIEW (SINGLE LANE REPAIR)

FULL DEPTH CONCRETE PAVEMENT REMOVAL

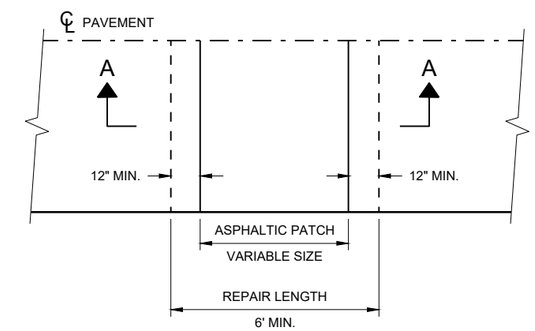

PLAN VIEW

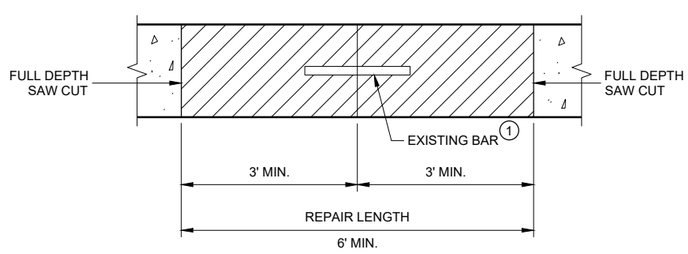

SECTION B - B

CONCRETE REMOVAL

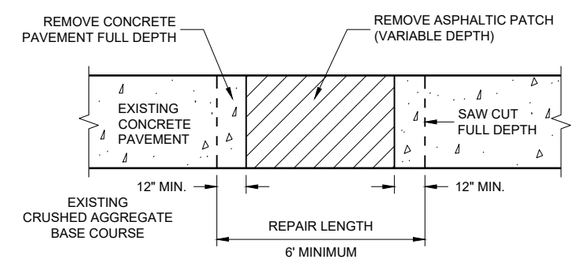

SECTION A - A

HMA PATCH REMOVAL

CONCRETE PAVEMENT REPAIR AND REPLACEMENT

STATE OF WISCONSIN
DEPARTMENT OF TRANSPORTAT

6

SDD 13C09 - 16a

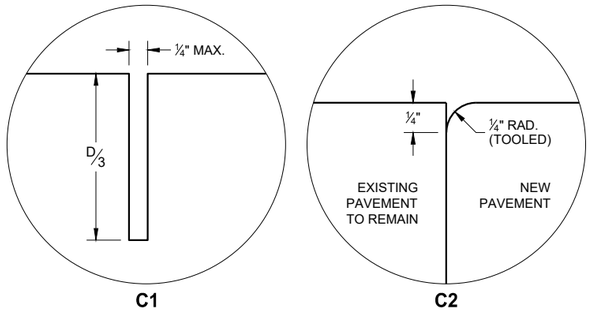

TRANSVERSE JOINTS

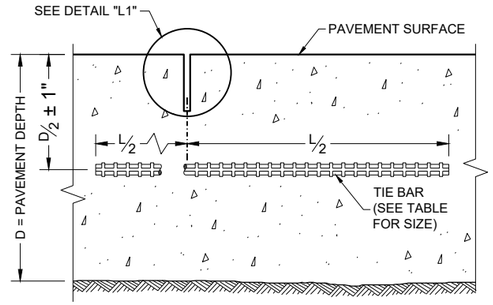

SECTION C - C
SAWED LONGITUDINAL JOINT

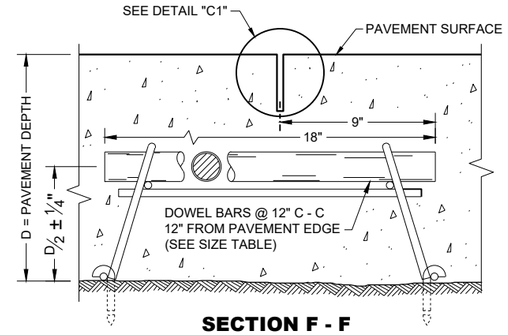

SECTION F - F
DOWELED CONTRACTION JOINT

GENERAL NOTES

INSTALL DOWEL BARS PARALLEL TO THE PAVEMENT CENTERLINE AND PAVEMENT SURFACE.

CONCRETE PAVEMENT REPAIRS OF EXISTING NON-DOWELED CONCRETE PAVEMENTS DO NOT NEED TO BE DOWELED.

ANCHOR DOWEL BARS AND TIE BARS INTO DRILLED HOLES WITH AN EPOXY.

FOR MULTI-LANE CONCRETE PAVEMENT REPLACEMENTS, PROVIDE A MINIMUM DISTANCE OF 15 INCHES FROM ALL TRANSVERSE JOINTS OR EDGES OF REPLACEMENT TO THE CENTER OF THE TIE BAR NEAREST THAT JOINT OR EDGE.

(1) APPLY A THIN UNIFORM COATING OF SURFACE TREATMENT TO THE FREE END OF DOWEL BARS TO PREVENT BONDING.

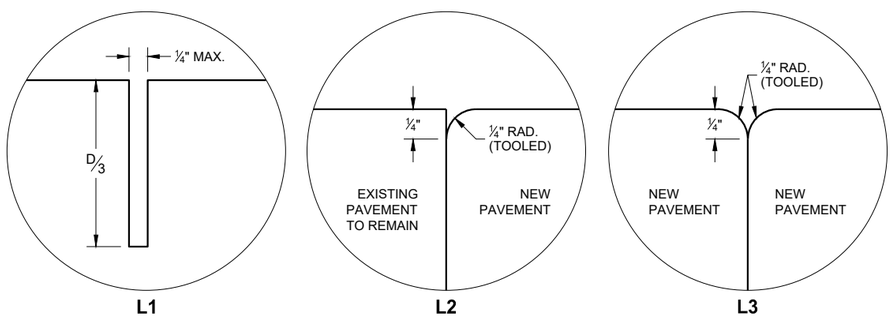

LONGITUDINAL JOINTS

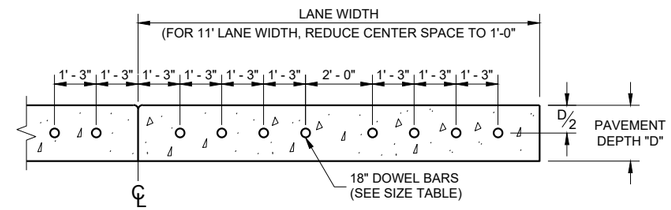

SECTION E - E
DRILLED DOWEL BAR CONSTRUCTION JOINT

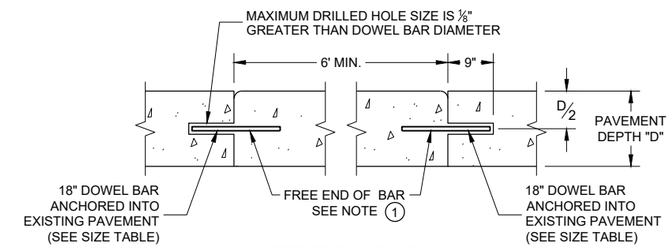

SECTION D - D

TIE BAR TABLE

PAVEMENT DEPTH (D)	TIE BAR SIZE	TIE BAR LENGTH (L)	MAX. TIE BAR SPACING
< 10½"	NO. 4	30"	36"
≥ 10½"	NO. 5	36"	36"
	NO. 4 *	30"	24" **

* SUBSTITUTE BENT BARS AT LONGITUDINAL JOINTS WHEN EQUIPMENT LIMITATIONS DURING CONSTRUCTION WARRANT (e.g. AUXILIARY LANES OR TURN LANES)

** CONFORM TO 15" MINIMUM SPACING FROM TRANSVERSE JOINTS; SPACING BETWEEN TIE BARS WILL BE 30" AT TRANSVERSE JOINTS.

PAVEMENT DEPTH, DOWEL BAR SIZE AND JOINT SPACING TABLE

PAVEMENT DEPTH (D)	DOWEL BAR DIAMETER	DRILLED DOWEL BAR DIAMETER	CONTRACTION JOINT SPACING
5½", 6", 6½"	NONE	NONE	12'
7", 7½"	1"	1"	14'
8", 8½"	1¼"	1¼"	15'
9" & ABOVE	1¼"	1¼"	15'

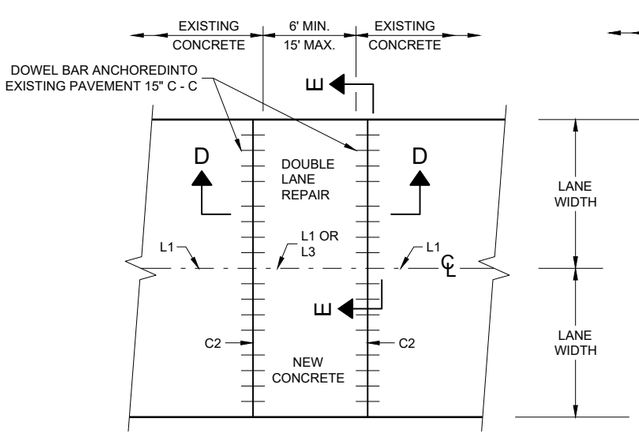

PLAN VIEW
MULTILANE CONCRETE PAVEMENT REPAIR

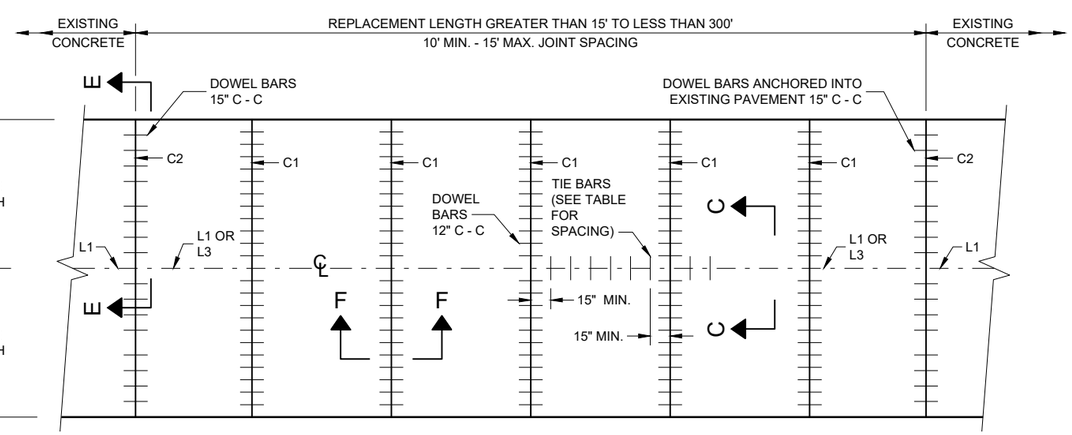

PLAN VIEW
MULTILANE CONCRETE PAVEMENT REPLACEMENT

CONCRETE PAVEMENT REPAIR AND REPLACEMENT

STATE OF WISCONSIN
DEPARTMENT OF TRANSPORTATION

6

6

SDD 13C09 - 16b

SDD 13C09 - 16b

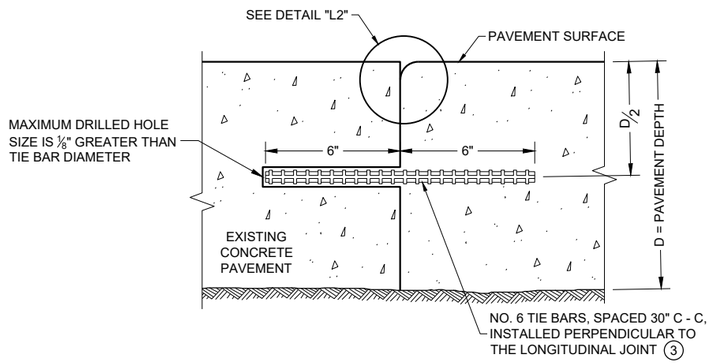

SECTION G - G

TIE BARS ANCHORED INTO EXISTING PAVEMENT

GENERAL NOTES

1. WITH THE APPROVAL OF THE ENGINEER, FOR SINGLE LANE PAVEMENT REPLACEMENTS LESS THAN 30 FEET IN LENGTH, THE CONTRACTOR MAY INSTALL DRILLED TIE BARS ON 6:1 SKEW HORIZONTALLY, DIRECTION OF SKEW ALTERNATING WITH EACH SUCCESSIVE BAR. DRIVE SKEWED TIE BARS TO A DEPTH OF 6 INCHES IN A HOLE OF SUCH A DIAMETER AS TO PROVIDE A TIGHT DRIVEN FIT.
2. USE AN ENGINEER APPROVED BOND BREAKER (E.G. RELEASE AGENT, CURING COMPOUND) FOR SINGLE LANE REPAIRS UP TO 15 FEET IN LENGTH.
3. ANCHOR TIE BARS INTO DRILLED HOLES WITH AN EPOXY.

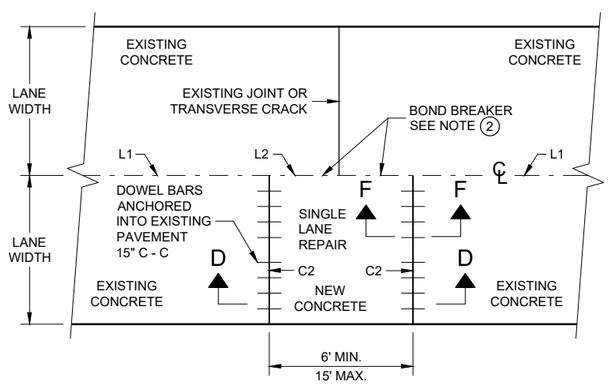

PLAN VIEW

SINGLE LANE CONCRETE PAVEMENT REPAIR

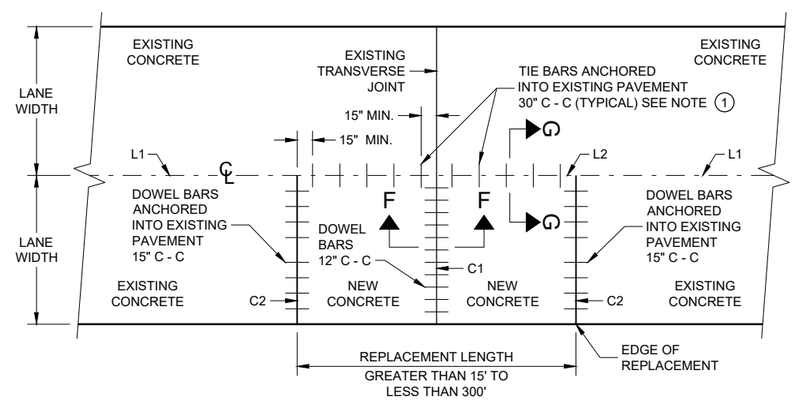

PLAN VIEW

SINGLE LANE CONCRETE PAVEMENT REPLACEMENT

CONCRETE REPAIR AND REPLACEMENT

STATE OF WISCONSIN
DEPARTMENT OF TRANSPORTATION

APPROVED
May 2022 — DATE
/S/ Peter Kemp P.E. — PAVEMENT SUPERVISOR
FHWA

6

SDD 13C09 - 16c

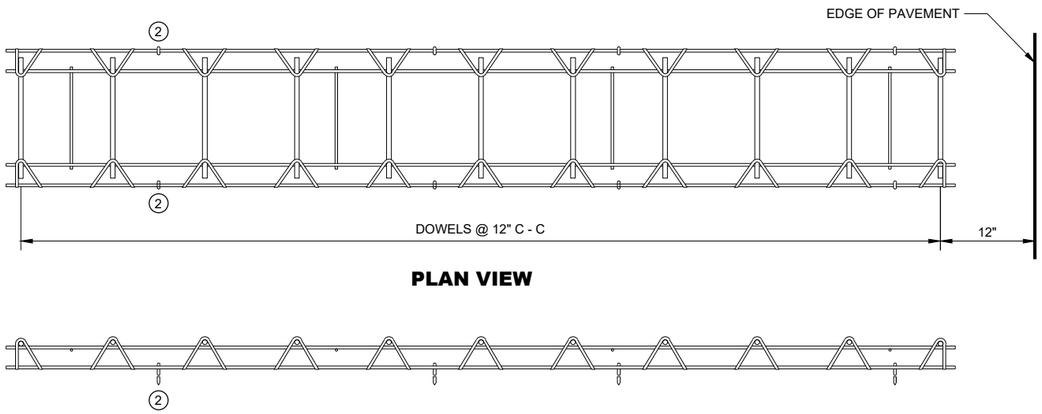

PLAN VIEW

SIDE VIEW

CONTRACTION JOINT DOWEL ASSEMBLY (1)

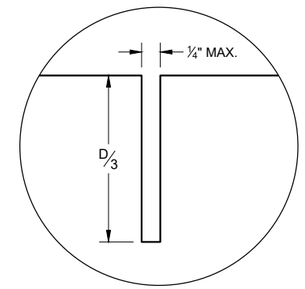

JOINT DETAIL

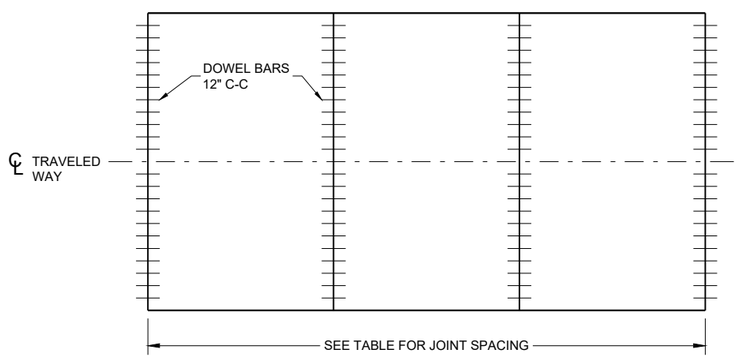

CONTRACTION JOINT LOCATIONS

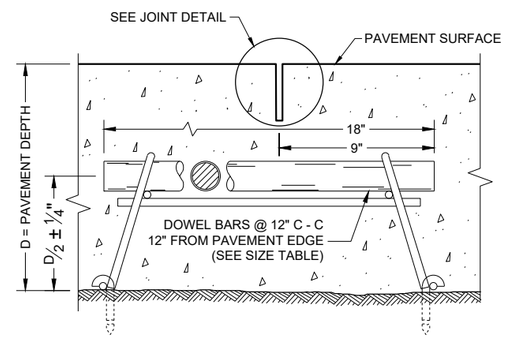

DOWELED CONTRACTION JOINT

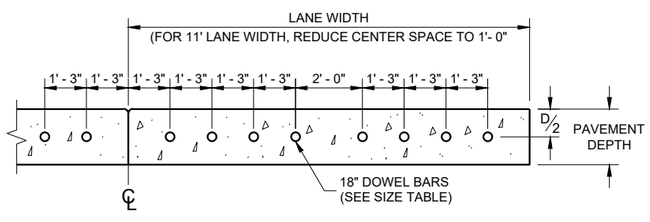

DRILLED DOWEL BAR CONSTRUCTION JOINT (7)

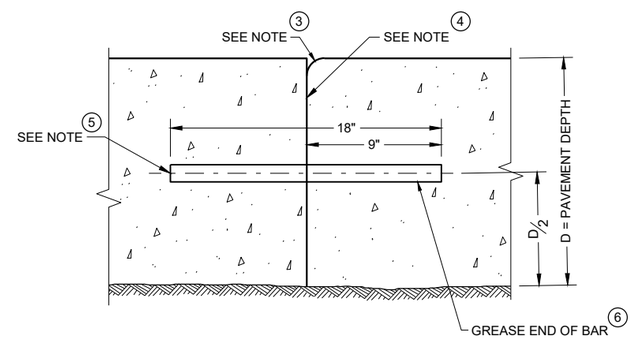

TRANSVERSE CONSTRUCTION JOINT

GENERAL NOTES

CONTRACTION JOINTS

CONSTRUCT TRANSVERSE CONTRACTION JOINTS NORMAL TO THE CENTERLINE. SHOW THE LOCATION OF CONTRACTION JOINTS THROUGH INTERSECTIONS ON THE PLANS OR AS DIRECTED BY THE ENGINEER.

INSTALL DOWEL BARS PARALLEL TO THE PAVEMENT CENTERLINE AND PAVEMENT SURFACE.

FOR PAVEMENT SLABS OF VARYING WIDTHS, LOCATE THE OUTER MOST DOWEL BAR SO THAT THE CENTER OF THE BAR IS A MINIMUM OF 6 INCHES FROM AND A MAXIMUM OF 18 INCHES FROM THE FREE EDGE OF PAVEMENT.

CONSTRUCTION JOINTS

LOCATE CONSTRUCTION JOINTS A MINIMUM OF 6 FEET FROM THE NEAREST CONTRACTION JOINT AND ALIGN PARALLEL TO THE CONTRACTION JOINTS.

1. OBTAIN THE ENGINEER'S APPROVAL FOR THE USE OF ALTERNATIVE DESIGNS OF THE DOWEL ASSEMBLY. USE MECHANICAL DOWEL BAR INSERTERS OR DOWEL ASSEMBLIES WHEN CONSTRUCTION CONTRACTION JOINTS.
2. SECURE BASKETS WITH ANCHORS TO HOLD DOWEL BARS IN THE CORRECT POSITION AND ALIGNMENT. TYPE, LOCATION, NUMBER AND LENGTH OF ANCHORS ARE DEPENDENT UPON FIELD CONDITIONS.
3. FORM OR SAW CONSTRUCTION JOINTS. PROVIDE A ¼" RADIUS AT FORMED JOINTS.
4. PROVIDE A SMOOTH VERTICAL FACE FOR THE ENTIRE DEPTH OF THE PAVEMENT WHEN FORMING CONSTRUCTION JOINTS.
5. INSTALL DOWEL BARS AT CONSTRUCTION JOINTS BY FORMING OR DRILLING. INSTALL FORMED DOWEL BARS 12 INCHES C - C AND 12 INCHES FROM PAVEMENT EDGE. REMOVE EXCESS CONCRETE FROM THE FREE END OF THE DOWEL BAR IF DOWEL BARS ARE FORMED THROUGH A HEADER BOARD. INSTALL DRILLED DOWEL BARS ACCORDING TO THE "DRILLED DOWEL BAR CONSTRUCTION JOINT" DETAIL.
6. APPLY A THIN UNIFORM COATING OF SURFACE TREATMENT TO THE FREE END OF DOWEL BARS TO PREVENT BONDING.
7. ANCHOR DOWEL BARS AND TIE BARS INTO DRILLED HOLES WITH AN EPOXY. MAXIMUM DRILLED HOLE SIZE IS ⅛" GREATER THAN DOWEL BAR DIAMETER, 9 INCHES IN LENGTH.

PAVEMENT DEPTH, DOWEL BAR SIZE AND JOINT SPACING TABLE

PAVEMENT DEPTH (D)	DOWEL BAR DIAMETER	CONTRACTION JOINT SPACING
5 ½", 6", 6 ½"	NONE	12'
7", 7 ½"	1"	14'
8", 8 ½"	1 ¼"	15'
9" & ABOVE	1 ¼"	15'

URBAN DOWELED CONCRETE PAVEMENT

STATE OF WISCONSIN
DEPARTMENT OF TRANSPORTATION

APPROVED
May 2022 — DATE
/S/ Peter Kemp P.E. — PAVEMENT SUPERVISOR
FHWA

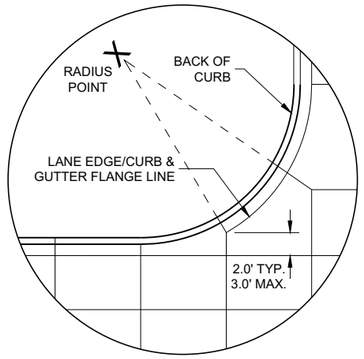

DETAIL "A"

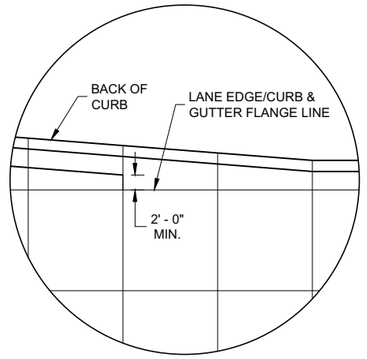

DETAIL "B"

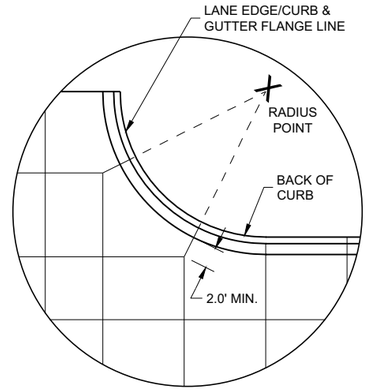

DETAIL "C"

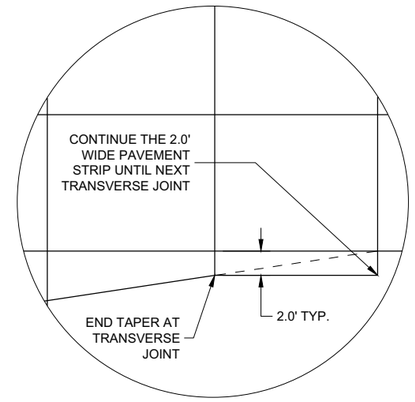

DETAIL "D"

GENERAL NOTES

THE PRIMARY ROADWAY CONTROLS THE TRANSVERSE JOINT PATTERN.

ALIGN NEW JOINTS WITH EXISTING JOINTS OR CRACKS.

CONSTRUCT TRANSVERSE JOINTS PERPENDICULAR TO THE ROADWAY.

ADJUST TRANSVERSE JOINTS TO ALIGN WITH UTILITY FIXTURES (E.G MANHOLES AND INLETS) IN THE PAVEMENT STRUCTURE WHEN POSSIBLE. WATER VALVES DO NOT REQUIRE JOINT ADJUSTMENT.

AVOID SLABS LESS THAN 2 FEET WIDE OR GREATER THAN 15 FEET WIDE.

SEE TABLE FOR TRANSVERSE JOINT SPACING. JOINT SPACING SPECIFIED IS MAXIMUM AND ACTUAL SPACING CAN BE ADJUSTED TO ACCOMMODATE INTERSECTIONS.

AVOID ANGLES LESS THAN 60° BY DOGLEGGING JOINTS THROUGH CURVE RADIUS POINTS. USE 90° ANGLES WHEN POSSIBLE.

CORRELATE LONGITUDINAL JOINTS WITH LANE LINES WHEN POSSIBLE.

1. PROVIDE TRANSVERSE JOINTS AT ALL PAVEMENT WIDTH CHANGES.
2. CONSTRUCT DOWELED EXPANSION JOINT ON THE SIDE ROAD OF AN INTERSECTION IF THE SIDE ROAD IS CONCRETE PAVEMENT AND GREATER THAN 300 FEET IN LENGTH. ALIGN EXPANSION JOINT WITHEDGE OF RADIUS.
3. THE ENGINEER MAY APPROVE SLIGHT VARIATIONS FROM THESE JOINTING DETAILS.

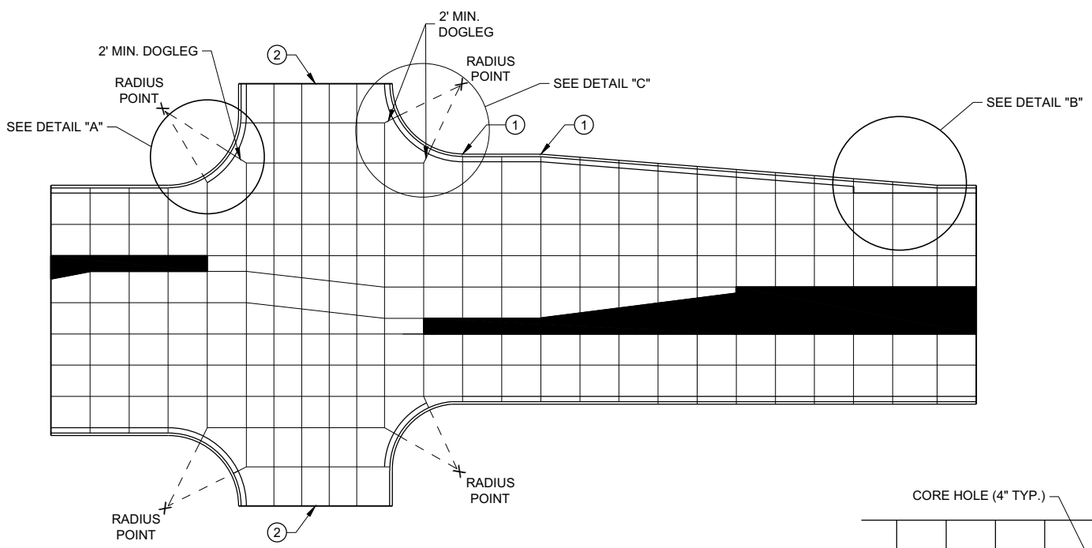

STANDARD INTERSECTION

PAVEMENT DEPTH AND JOINT SPACING TABLE

PAVEMENT DEPTH (D)	CONTRACTION JOINT SPACING
6", 6 ½"	12'
7", 7 ½"	14'
8" & ABOVE	15'

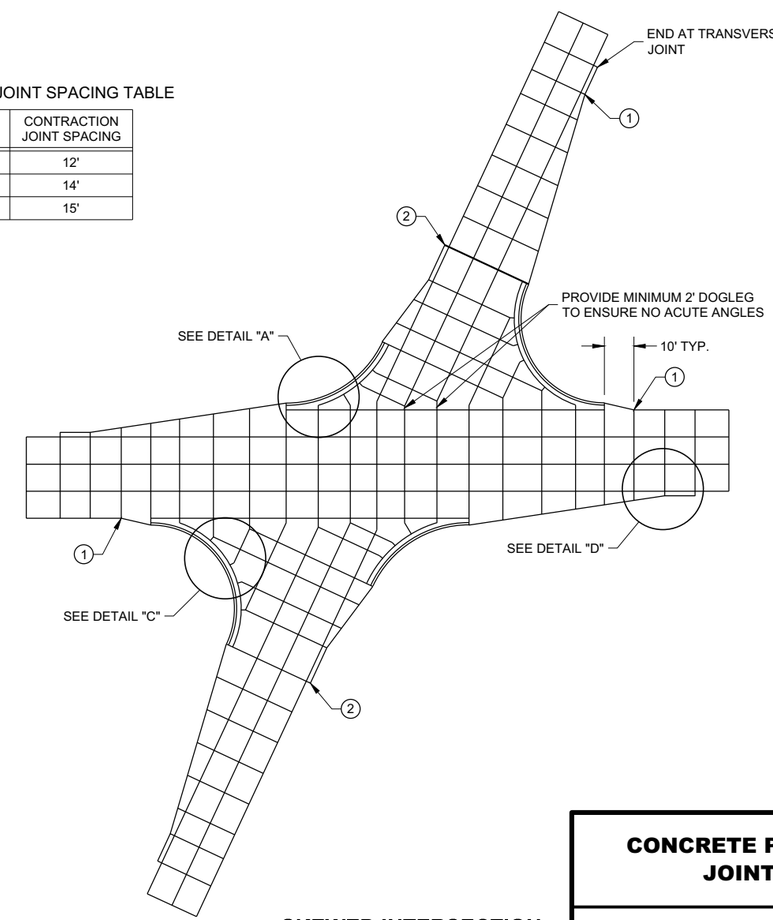

SKEWED INTERSECTION

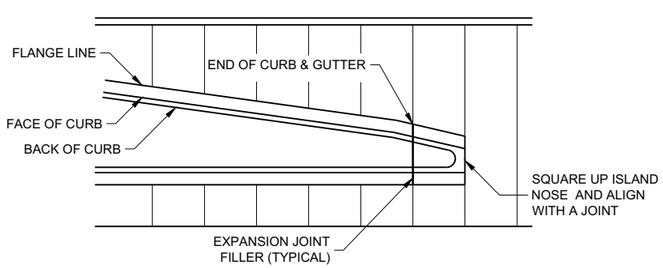

APPROACH TO MEDIAN

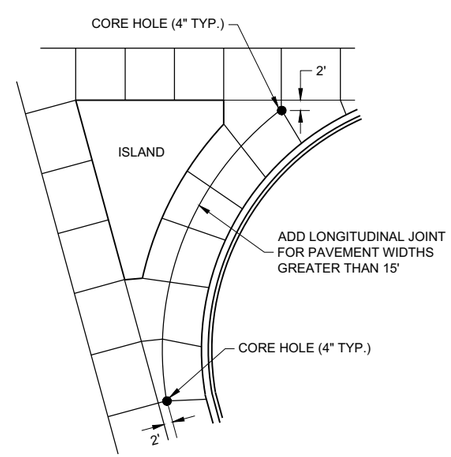

LARGE RIGHT TURN

CONCRETE PAVEMENT JOINTING

STATE OF WISCONSIN
DEPARTMENT OF TRANSPORTAT

6

SDD 13C18 - 07a

LEGEND

POTENTIAL DOWELED EXPANSION JOINT

DOWELED JOINT

TIED JOINT

GENERAL NOTES

USE AN EXPANSION JOINT FILLER MEETING THE REQUIREMENTS OF STANDARD SPECIFICATION 415.

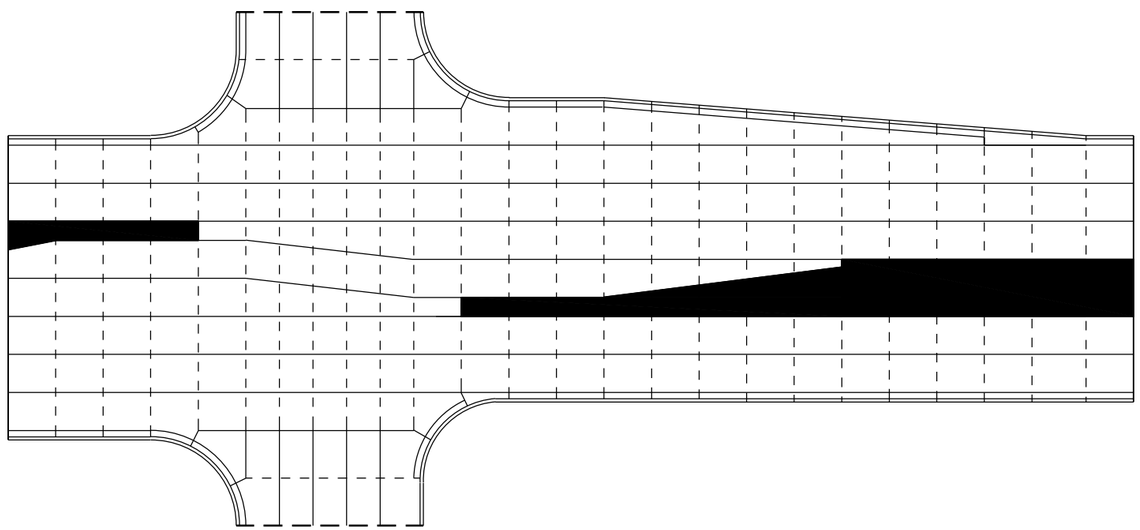

STANDARD INTERSECTION

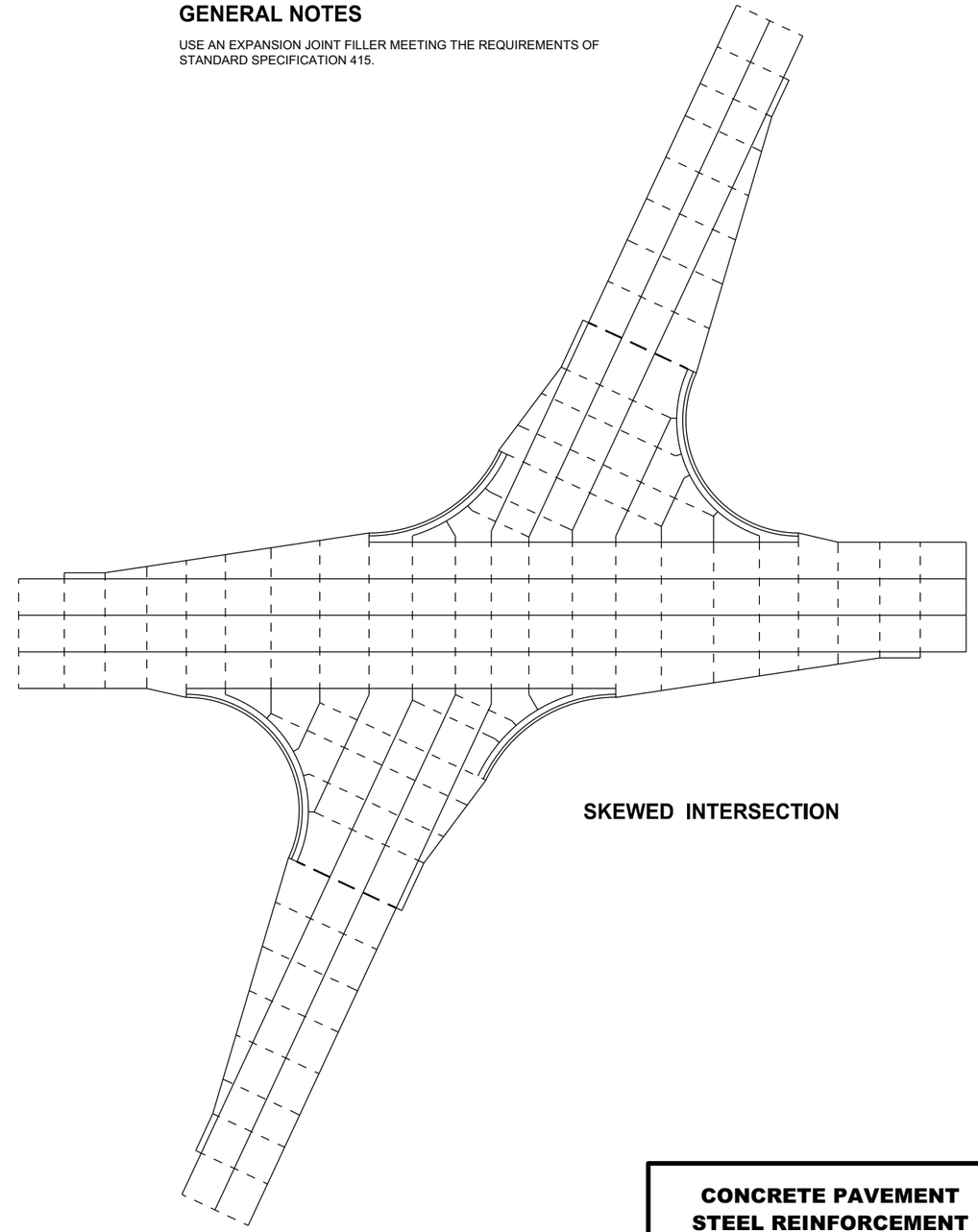

SKEWED INTERSECTION

CONCRETE PAVEMENT STEEL REINFORCEMENT

STATE OF WISCONSIN
DEPARTMENT OF TRANSPORTA

6

SDD 13C18 - 07b

6

SDD 13C18 - 07b

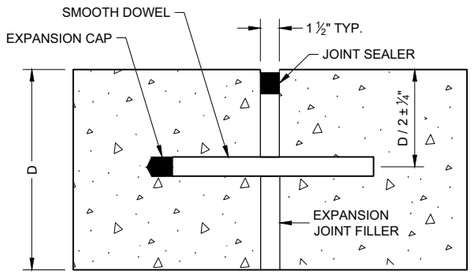

DOWELED TRANSVERSE (1)

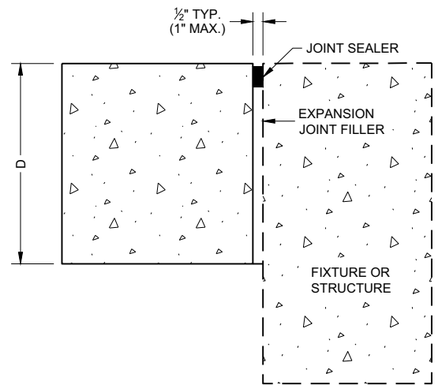

UNTIED - LONGITUDINAL

EXPANSION JOINTS

TIE BAR TABLE

PAVEMENT DEPTH (D)	TIE BAR SIZE	TIE BAR LENGTH (L)	MAX. TIE BAR SPACING
< 10 ½"	NO. 4	30"	36"
≥ 10 ½"	NO. 5	36"	36"
	NO. 4*	30"	24"**

* SUBSTITUTE BENT BARS AT LONGITUDINAL JOINTS WHEN EQUIPMENT LIMITATIONS DURING CONSTRUCTION WARRANT (e.g. AUXILIARY LANES OR TURN LANES)

** CONFORM TO 15" MINIMUM SPACING FROM TRANSVERSE JOINTS; SPACING BETWEEN TIE BARS WILL BE 30" AT TRANSVERSE JOINTS.

GENERAL NOTES

1. USE DOWELED EXPANSION JOINTS ON SIDE ROADS AT INTERSECTIONS (TO ISOLATETHE SIDE ROAD FROM THE THROUGH STREET) IF THE SIDE ROAD IS CONCRETE PAVEMENT AND GREATER THAN 300 FEET IN LENGTH.
2. SPACE CONTRACTION JOINTS IN ACCORDANCE WITH SDD 13C4, 13C11 OR 13C13.
3. LOCATE CONSTRUCTION JOINTS A MINIMUM OF 6 FEET FROM THE NEAREST CONTRACTION JOINT AND ALIGN PARALLEL TO CONTRACTION JOINTS.
4. CONSTRUCTION JOINTS CAN BE FORMED OR SAWED.
5. IF JOINT IS FORMED, PROVIDE A ¼" RADIUS.
6. ANCHOR TIE BARS INTO DRILLED HOLES WITH AN EPOXY.

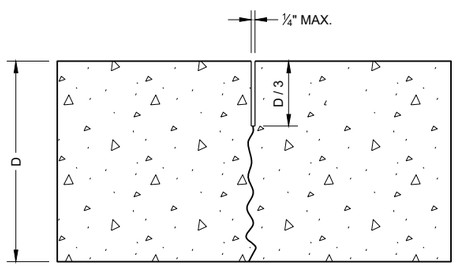

UNDOWELED TRANSVERSE

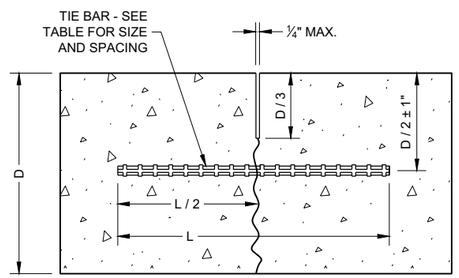

TIED LONGITUDINAL

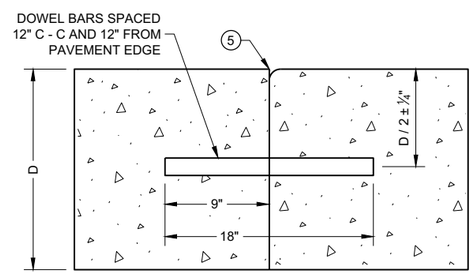

DOWELED TRANSVERSE (3)

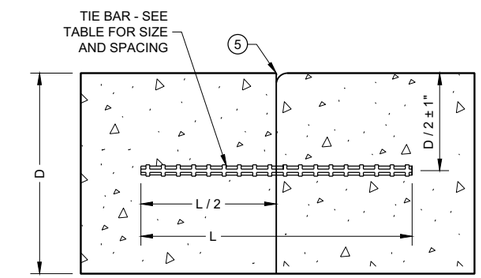

TIED LONGITUDINAL

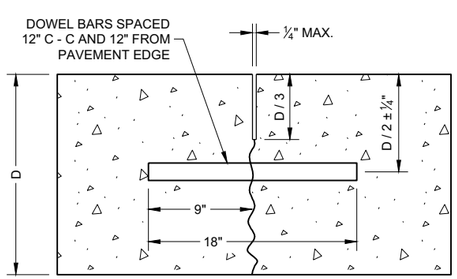

DOWELED TRANSVERSE

CONTRACTION JOINTS (2)

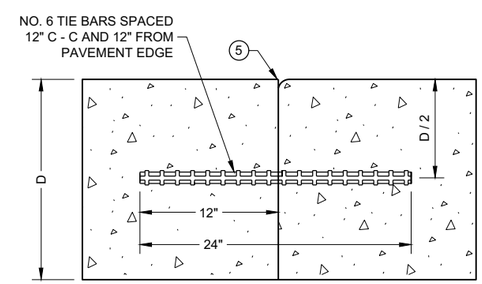

TIED TRANSVERSE (3)
(FOR USE ON NON-DOWELED PAVEMENTS ONLY)

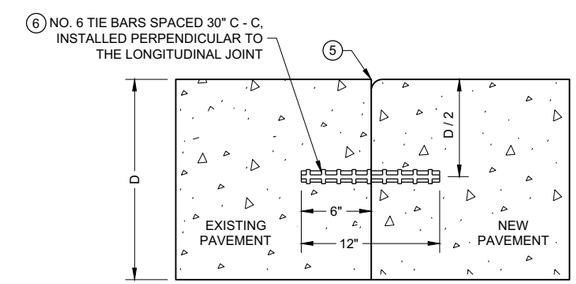

TIED LONGITUDINAL TO EXISTING

CONSTRUCTION JOINTS (4)

CONCRETE PAVEMENT JOINT TYPES

STATE OF WISCONSIN
DEPARTMENT OF TRANSPORTA

6

SDD 13C18 - 07c

GENERAL NOTES

1. USE BOXOUTS WHEN UTILITY STRUCTURE IS IN THE PATH OF CONSTRUCTION JOINTS. PROVIDE A 1 FOOT MINIMUM CLEARANCE BETWEEN THE EXTERIOR LIMIT OF THE STRUCTURE TO THE DIAMOND BOXOUT.
2. ADJUST TRANSVERSE JOINT TO INTERSECT MANHOLE IF POSSIBLE.
3. IF DISTANCE BETWEEN THE LONGITUDINAL JOINT AND THE EDGE OF MANHOLE IS 2 FEET OR LESS, DIVERT THE LONGITUDINAL JOINT AT A 2:1 TAPER RATE TO THE CENTER OF THE MANHOLE. IF THE DISTANCE IS GREATER THAN 2 FEET, DO NOT DIVERT THE JOINT AND SAW AS NORMAL. PLACE REINFORCEMENT REBAR AROUND THE MANHOLE.
4. IF THE DISTANCE FROM THE EDGE OF THE MANHOLE TO THE NEAREST TRANSVERSE JOINT IS LESS 4 FEET OR LESS, REDIRECT JOINT TO INTERSECT THE CENTER OF THE MANHOLE. IF DISTANCE IS GREATER THAN 4 FEET, DO NOT DIVERT THE JOINT AND SAW AS NORMAL. PLACE REINFORCEMENT REBAR AROUND THE MANHOLE.
5. ALIGN TRANSVERSE JOINT WITH ONE EDGE OF INLET WHEN PRACTICAL.

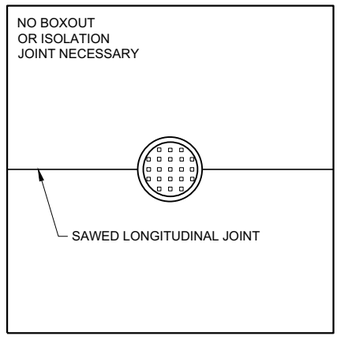

MANHOLE WITH LONGITUDINAL JOINT

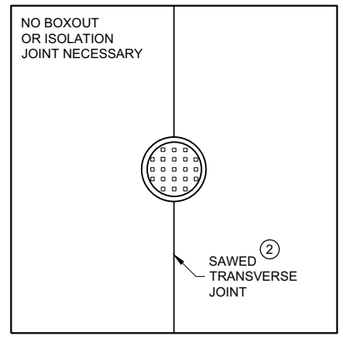

MANHOLE WITH TRANSVERSE JOINT

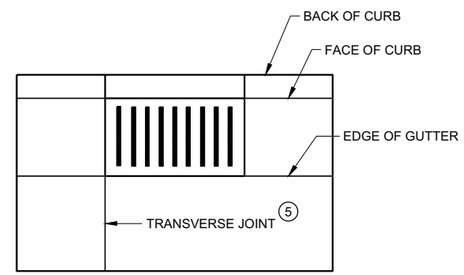

INLET WITH TRANSVERSE JOINT

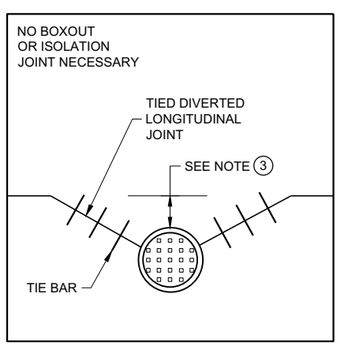

MANHOLE WITH DIVERTED LONGITUDINAL CONTRACTION JOINT

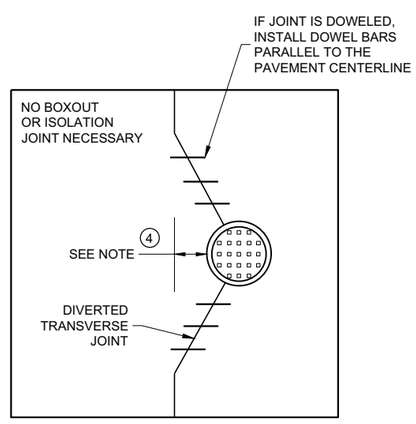

MANHOLE WITH DIVERTED TRANSVERSE CONTRACTION JOINT

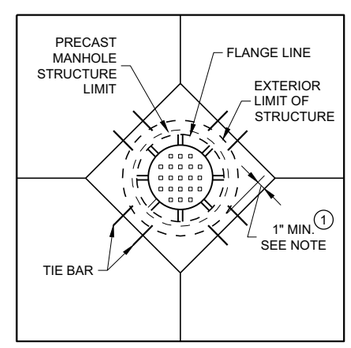

DIAGONAL MANHOLE BOXOUT FOR CONSTRUCTION JOINTS

CONCRETE PAVEMENT JOINTING AT UTILITY FIXTURES

STATE OF WISCONSIN
DEPARTMENT OF TRANSPORTATION

APPROVED
November 2018 /S/ Peter Kemp P.E.
DATE PAVEMENT SUPERVISI
FHWA

6

SDD 13C18 - 07d

LEGEND

- - - - - - DOWELED JOINT
——— TIED JOINT
EXPANSION JOINT
— — POTENTIAL DOWELED EXPANSION JOINT (1)
DIRECTION OF TRAFFIC

GENERAL NOTES

(1) CONSTRUCT DOWELED EXPANSION JOINT ON THE SIDE ROAD OF AN INTERSECTION IF THE SIDE ROAD IS CONCRETE PAVEMENT AND GREATER THAN 300 FEET IN LENGTH. ALIGN EXPANSION JOINT WITH THE EDGE OF RADIUS.

(2) PROVIDE TIED JOINT AT THE FLANGE OF SCAB ON CURB IF SCAB ON CURB AND GUTTER IS USE.

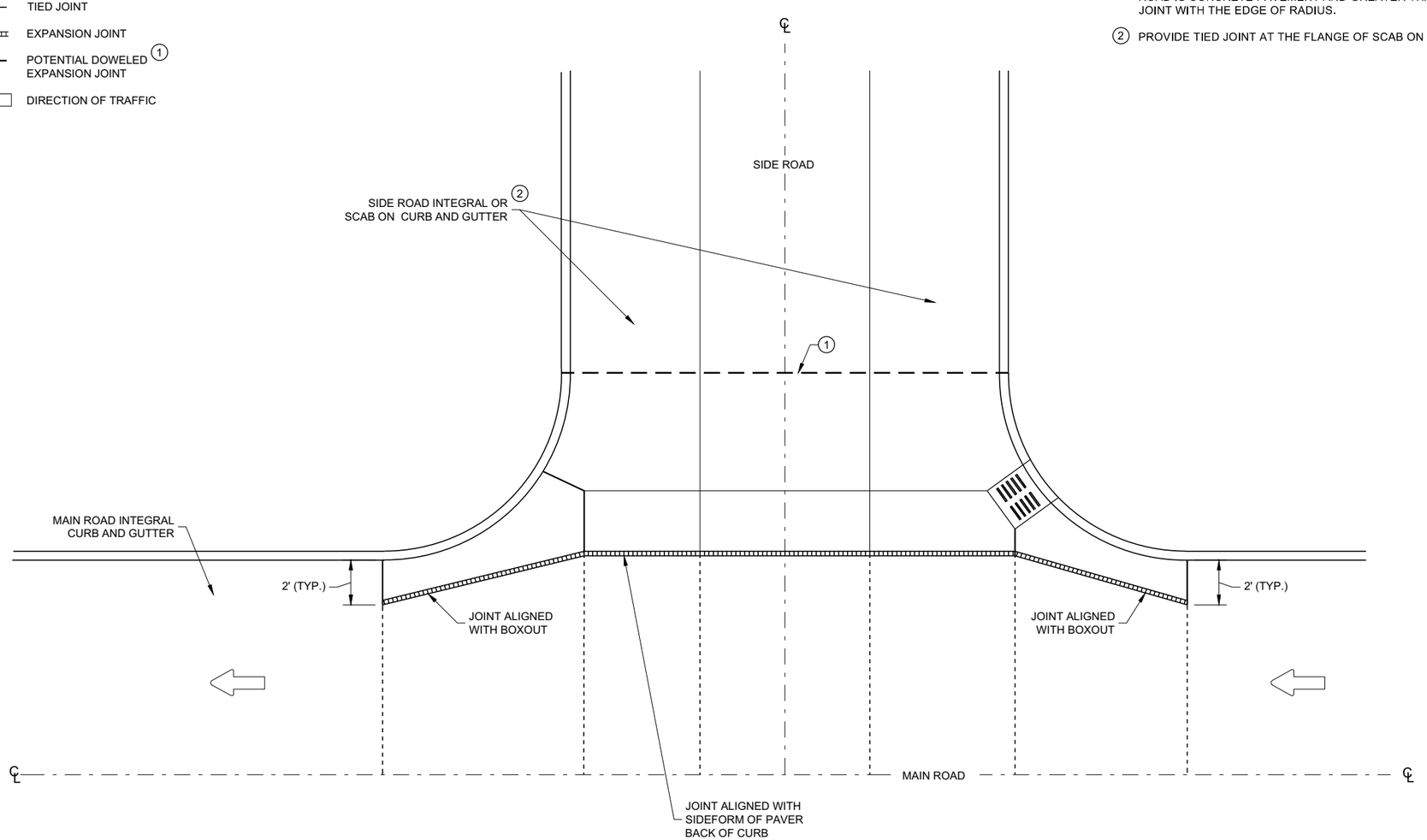

INTERSECTION BOXOUT FOR INTEGRAL CURB AND GUTTER

6

6

SDD 13C18 - 07f

SDD 13C18 - 07f

CONCRETE PAVEMENT INTERSECTION BOXOUT FOR INTEGRAL CURB AND GUTTER

STATE OF WISCONSIN
DEPARTMENT OF TRANSPORTATION

APPROVED
November 2018 — DATE
/S/ Peter Kemp P.E. — ROADWAY STANDARDS DEVE ENGINEER
FHWA

GENERAL NOTES

1. W6 X 9 OR W6 X 8.5 STEEL POSTS AND NOTCHED PLASTIC BLOCKOUTS ARE ACCEPTABLE ALTERNATIVES FOR 6" X 8" WOOD POSTS WITH WOOD OR PLASTIC BLOCKOUTS. USE APPROVED NOTCHED PLASTIC BLOCKOUTS WITH STEEL POSTS. APPROVED PLASTIC BLOCKOUT DESIGNS MAY VARY FROM THIS TYPICAL DETAIL WHEN USED IN CONJUNCTION WITH STEEL POSTS.

   DO NOT MIX STEEL POSTS AND WOOD POSTS IN A SINGLE INSTALLATION.
2. USE STRUCTURAL STEEL POSTS CONFORMING TO ASTM A 36. GALVANIZED POSTS ACCORDING TO AASHTO M 111. EITHER SET THE POSTS IN DRILLED HOLES OR DRIVE TO GRADE. REMOVE MUSHROOMING CAUSED BY DRIVING AND REPAIR DAMAGED SPELTER COATING ON GALVANIZED POSTS.
3. INSTALL STEEL POSTS WITH HOLES ON APPROACHING TRAFFIC SIDE.
4. USE EITHER WOOD OR APPROVED PLASTIC BLOCKOUTS ON WOOD POSTS.
5. IF THE DISTANCE FROM BACK OF POST TO SHOULDER HINGE POINT IS LESS THAN 2 FEET INSTALL LONGER POST AT HALF POST SPACING, W BEAM (LHW).
6. IF ROCK IS ENCOUNTERED DURING EXCAVATION, THE ENGINEER MAY APPROVE USING A 12 INCH DIAMETER POST HOLE EXTENDING 20 INCHES DEEP INTO THE ROCK. PLACE GRANULAR MATERIAL IN THE BOTTOM OF THE HOLE APPROXIMATELY 2½ INCHES DEEP. CUT THE POSTS TO LENGTH AND PLACE IN YHE HOLE. BACKFILL WITH MATERIAL EXCAVATED FROM THE HOLE AND COMPACT ADEQUATEY.
7. WHEN USING STEEL POSTS AND WOOD BLOCKOUTS INSTALL FOUR 16D GALVANIZED NAILS. INSTALL NAILS AT THE BACK CORNERS OF THE BLOCK AND BEND THE NAILS OVER THE FLANGE OF THE STEEL POST.

INSTALL BEAM GUARD SECTIONS AND ALL NECESSARY HARDWARE ACCORDING TO THE APPLICABLE PLAN AND CURRENT STANDARD AND SUPPLEMENTAL SPECIFICATIONS.

ALL DIMENSIONS ARE SUBJECT TO MANUFACTURER'S TOLERANCES EXCEPT WHERE ALLOWABLE TOLERANCES ARE SHOWN.

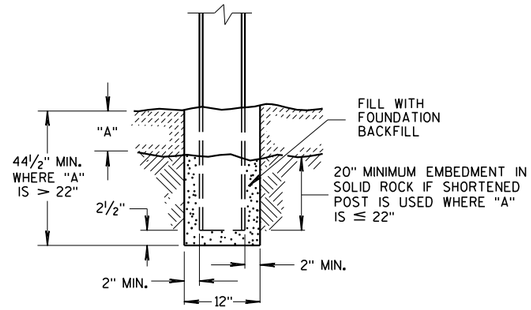

END VIEW
SETTING STEEL OR WOOD POST IN ROCK (6)

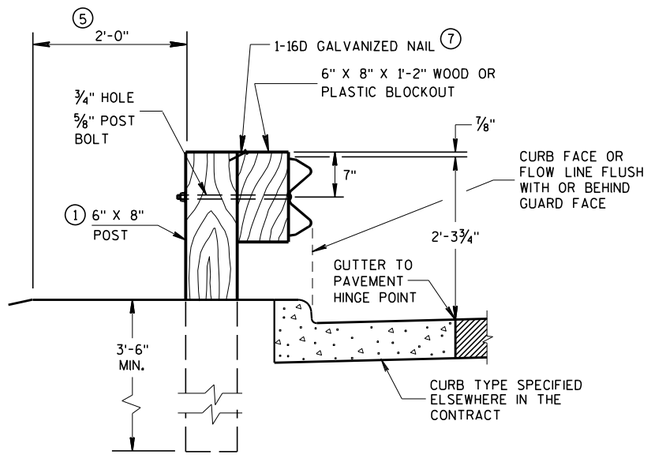

END VIEW
LOCATED ALONG A CURBED ROADWAY

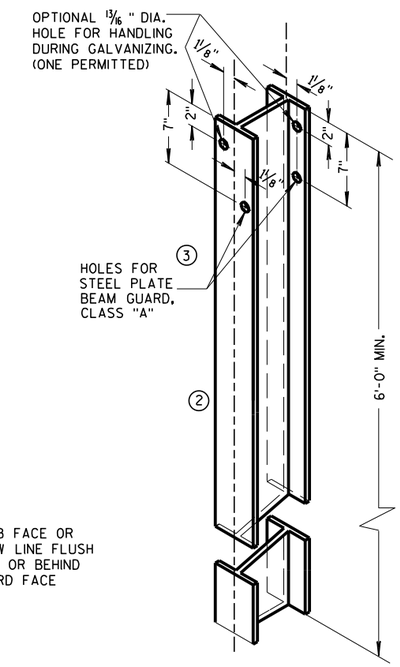

STEEL POST &
HOLE PUNCHING DETAIL
(W6 X 9) (1)

ALL HOLES 13/16" DIAMETER EXCEPT AS NOTED

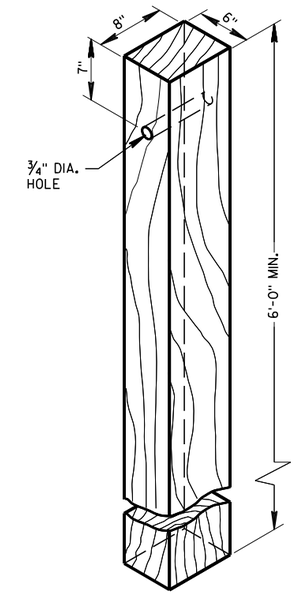

WOOD POST
(6"X8") NOMINAL

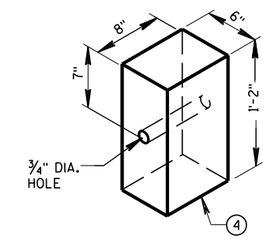

WOOD OR PLASTIC
BLOCKOUT FOR
WOOD POSTS

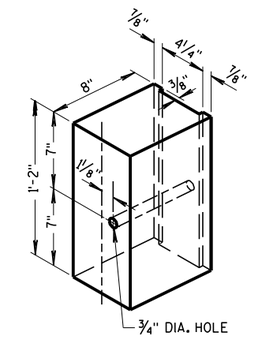

TYPICAL NOTCHED (1)
PLASTIC BLOCKOUT
FOR STEEL POSTS

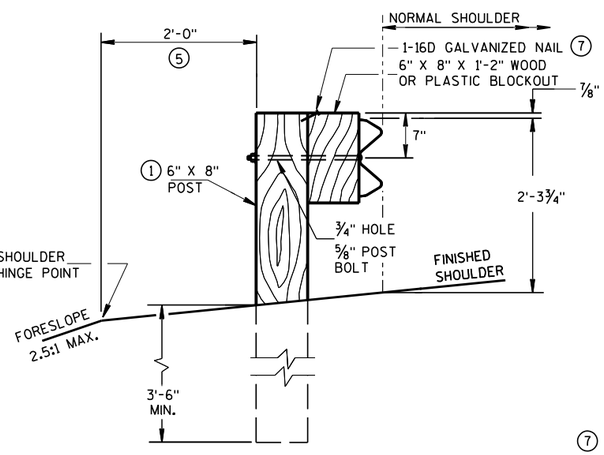

END VIEW
LOCATED ALONG A ROADWAY SHOULDER
STANDARD INSTALLATION

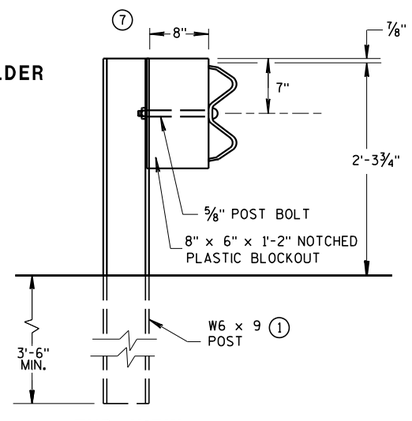

END VIEW
STEEL POST & NOTCHED
PLASTIC BLOCKOUT ALTERNATIVE
STANDARD INSTALLATION

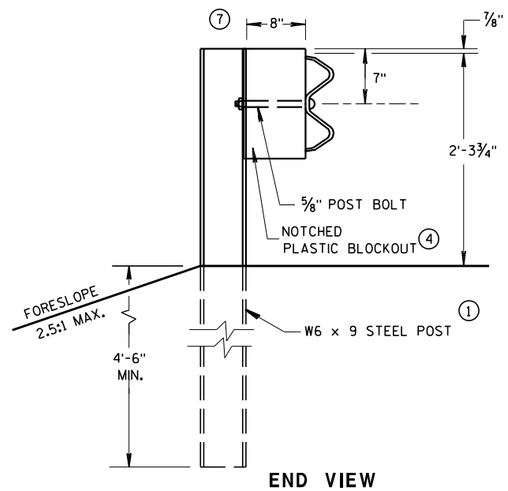

END VIEW
LONGER POST AT HALF
POST SPACING W BEAM
(LHW)

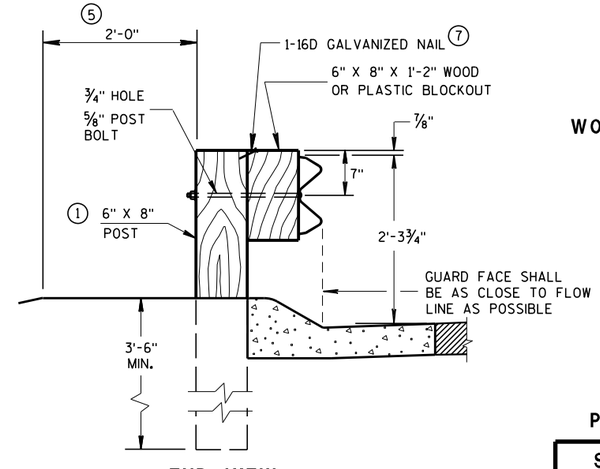

END VIEW
LOCATED ALONG A
MOUNTABLE CURBED ROADWAY

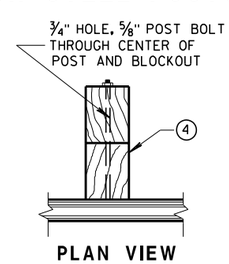

PLAN VIEW
WOOD POST, BLOCKOUT & BEAM

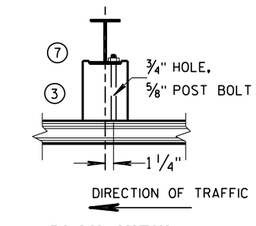

PLAN VIEW
STEEL POST, NOTCHED
PLASTIC BLOCKOUT & BEAM

TYPICAL INSTALLATION OF STEEL PLATE BEAM GUARD

STEEL PLATE BEAM GUARD,
CLASS "A"
INSTALLATION & ELEMENTS

STATE OF WISCONSIN
DEPARTMENT OF TRANSPORTATION

6

6

S.D.D. 14 B 15-11a

S.D.D. 14 B 15-11a

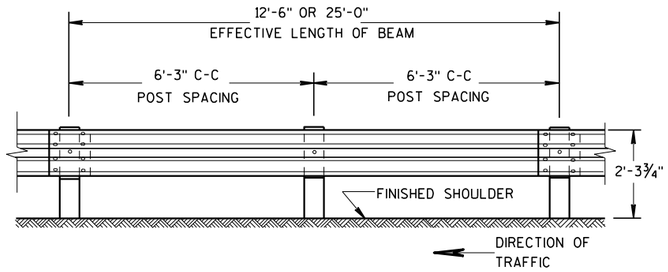

FRONT VIEW

POST SPACING STANDARD INSTALLATION

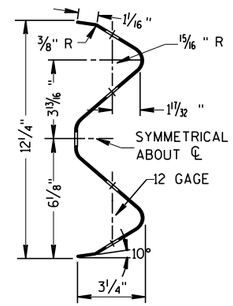

SECTION THRU W BEAM

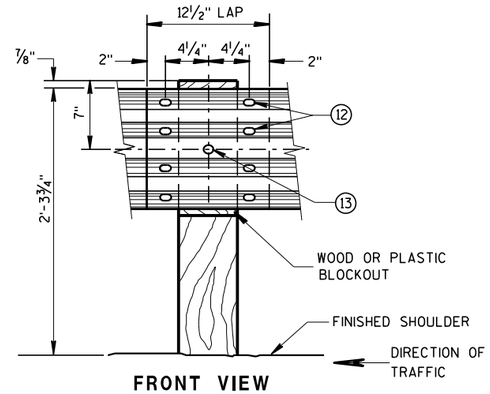

FRONT VIEW

BEAM SPLICE AT WOOD POST AND POST MOUNTING DETAIL

GENERAL NOTES

FURNISH GUARDRAIL DEFLECTORS FROM APPROVED PRODUCTS LIST.

(9) DO NOT INSTALL REFLECTORS ON THE FIRST 50 FEET OF THE APPROACH END OF THE ENERGY ABSORBING TERMINA. START REFLECTORS AT POST #9 AND SPACE EVENLY EVERY 100 FEET (MAX.) TO THE END OF GUARDRAIL RUN, USING A MINIMUM OF 3 REFLECTORS.

(12) 8 -5/8" Φ X 2" BUTTON HEAD BOLTS WITH OVAL SHOULDERS & RECESS NUTS.

(13) 5/8" DIA. BUTTON HEAD BOLT AND RECESS NUT WITH 5/8" DIA. F844 FLAT WASHER UNDER NUT.

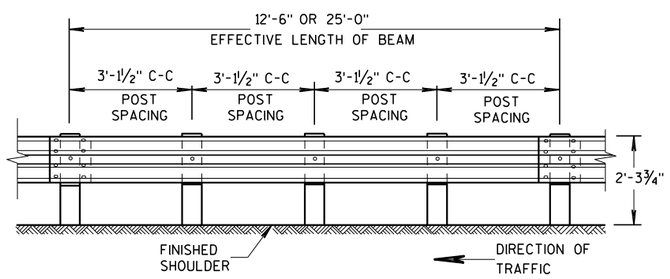

FRONT VIEW

POST SPACING FOR LONGER POST AT HALF POST SPACING W BEAM (LHW)

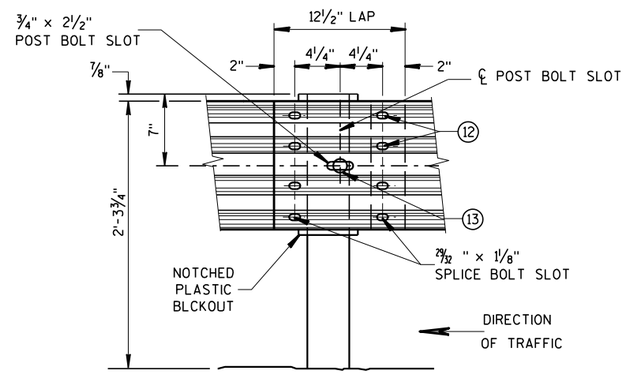

FRONT VIEW
BEAM SPLICE AT STEEL POST

TYPICAL SPLICING DETAILS OF STEEL PLATE BEAM GUARD

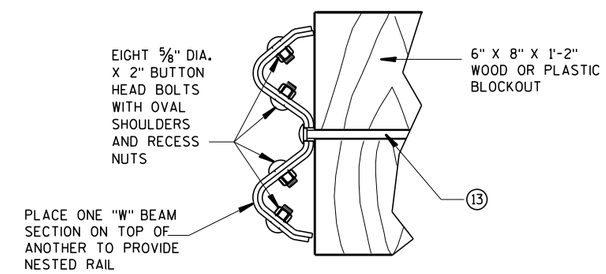

NESTED W BEAM (NW)

USE ALL OTHER STANDARD BEAM GUARD DETAILS FOR CONSTRUCTING NESTED W BEAM (NW)

* USE DOUBLE SIDED WHITE GUADRAIL REFLECTORS ON ROADWAYS WITH BI-DIRECTIONAL TRAFFIC (NO MEDIAN). USE SINGLE SIDED WHITE (RIGHT SIDE) AND SINGLE SIDED YELLOW (LEFT SIDE) ON ROADWAYS WITH MEDIAN SEPARATION.

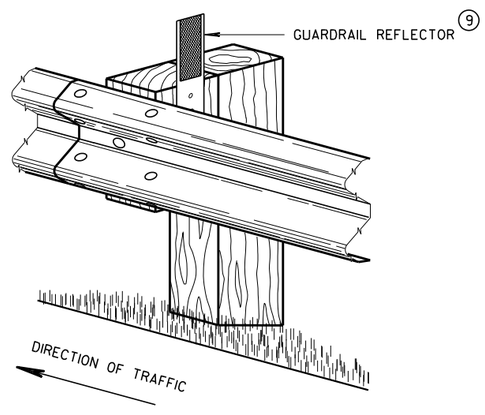

4" X 12" GUARDRAIL REFLECTOR DETAIL AND TYPICAL INSTALLATION *

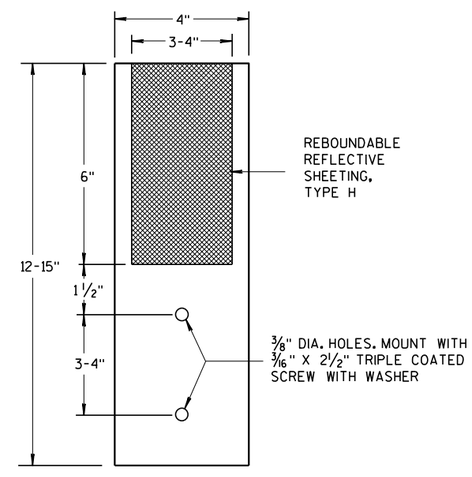

4"x 12" GUARDRAIL REFLECTOR

STEEL PLATE BEAM GUARD, CLASS "A", INSTALLATION & ELEMENTS

STATE OF WISCO 154
DEPARTMENT OF TRANSPORTATION

6

6

S.D.D. 14 B 15-11b

S.D.D. 14 B 15-11b

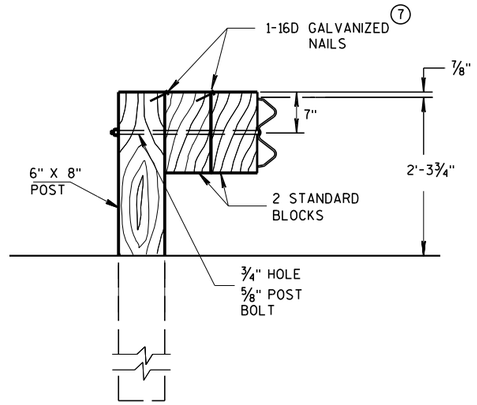

DETAIL FOR DOUBLE BLOCKS

THE NUMBER OF DOUBLE BLOCK POSTS WITHIN A BARRIER RUN IS UNLIMITED

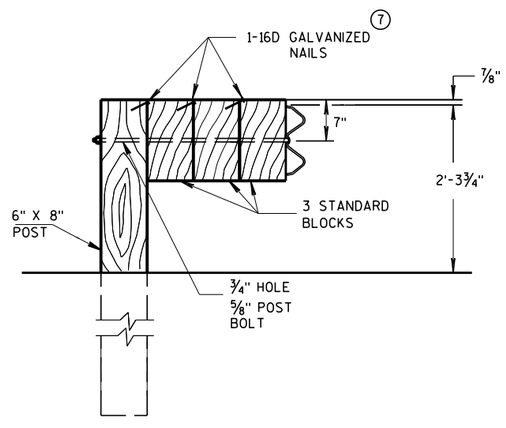

DETAIL FOR TRIPLE BLOCKS

TRIPLE BLOCK DETAIL IS LIMITED TO ONE LOCATION WITHIN A BEAM GUARD RUN.

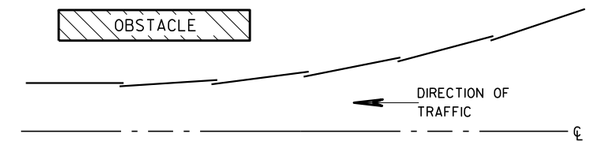

PLAN VIEW
BEAM LAPPING DETAIL

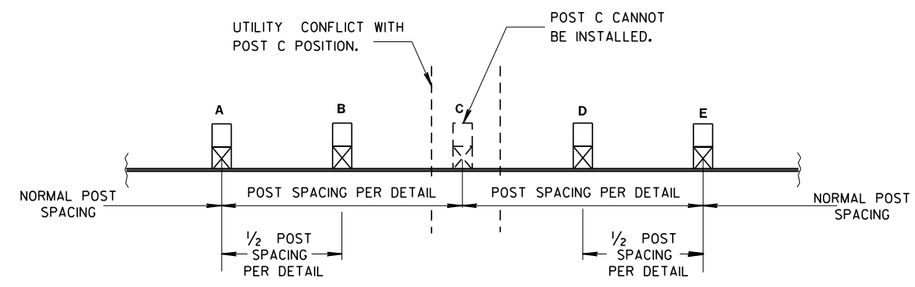

POST DRIVING FOR CONTINUOUS UNDERGROUND OBSTRUCTION

NOTES: USE DOUBLE OR TRIPLE BLOCKS WHEN UNDERGROUND OBSTACLES PREVENT THE POST FROM BEING INSTALLED.

DO NOT USE EXTRA BLOCKOUTS IF IT CAUSES THE POST TO BE DRIVEN BEYOND SHOULDER HINGE POINT OR CAUSES A FIXED OBJECT TO BE WITHIN THE DEFLECTION DISTANCE OF THE BARRIER.

STEEL PLATE BEAM GUARD, CLASS "A", INSTALLATION & ELEMENTS

STATE OF WISCONSIN
DEPARTMENT OF TRANSPORTATION

APPROVED
June 2017 — DATE
/S/ Rodney Taylor — ROADWAY STANDARDS UNIT SUPERVISOR
FHWA

6

S.D.D. 14 B 15-11c

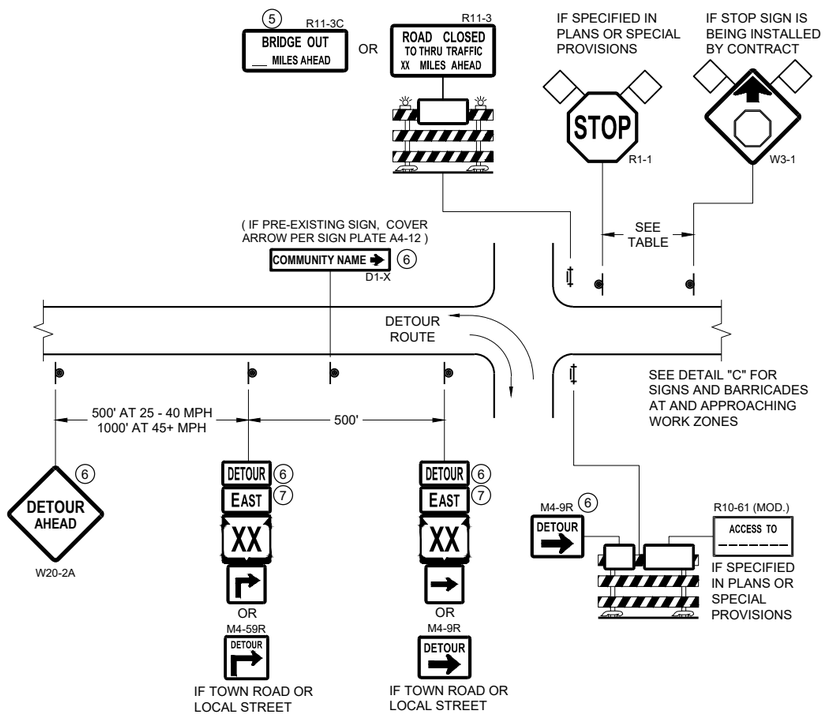

DETAIL A
MAINLINE CLOSURE WITH POSTED DETOUR

WORK ZONE GREATER THAN OR EQUAL TO ½ MILE FROM DETOUR ROUTE (1000 FEET IF URBAN)

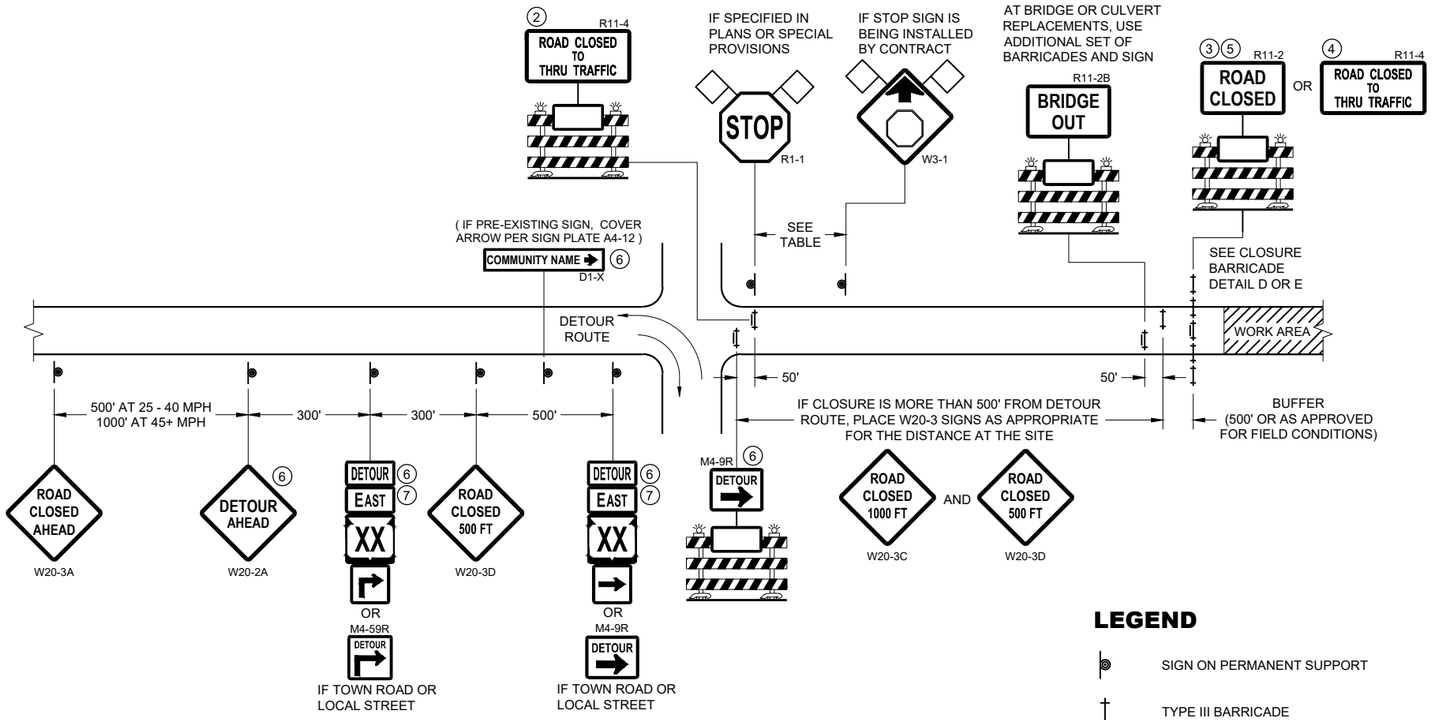

DETAIL B
MAINLINE CLOSURE WITH POSTED DETOUR

WORK ZONE LESS THAN ½ MILE FROM DETOUR ROUTE (1000 FEET IF URBAN)

LEGEND

- SIGN ON PERMANENT SUPPORT
- TYPE III BARRICADE
- TYPE III BARRICADE WITH ATTACHED SIGN
- TYPE "A" WARNING LIGHT (FLASHING)
- WORK AREA
- FLAGS, 16" X 16" MIN. (ORANGE)
- DETOUR — M4 - 8
- EAST — M3 - X
- XX (M1 - 4) OR XX (M1 - 6) OR COUNTY X (M1 - 5A)
- M05 - 1 OR M06 - 1

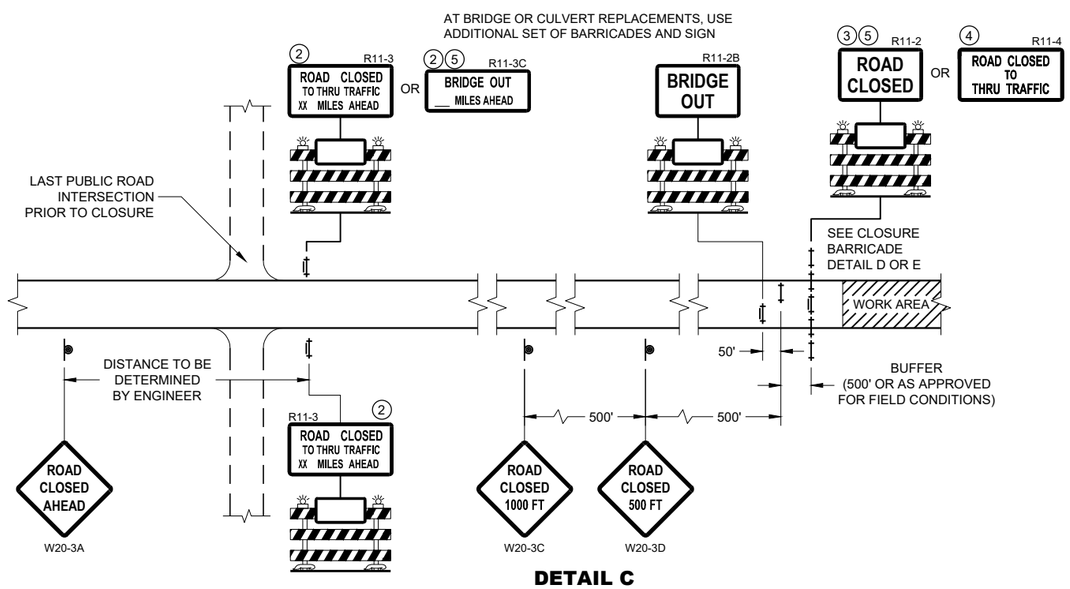

DETAIL C
MAINLINE CLOSURE, NO POSTED DETOUR

SPEED LIMIT (MPH)	"STOP AHEAD" ADVANCE WARNING DISTANCE (FT)
25	200
30	200
35	350
40	350
45	500
50	550
55	750

SEE SDD 15C2-SHEET "b" FOR GENERAL NOTES AND FOOTNOTES 1 THROUGH 7

BARRICADES AND SIGNS FOR MAINLINE CLOSURES

STATE OF WISCONSIN
DEPARTMENT OF TRANSPORTATION

APPROVED
February 2020 — DATE
/S/ Andrew Heidtke — WORK ZONE ENGINEER

FHWA

6

SDD 15C02 - 08a

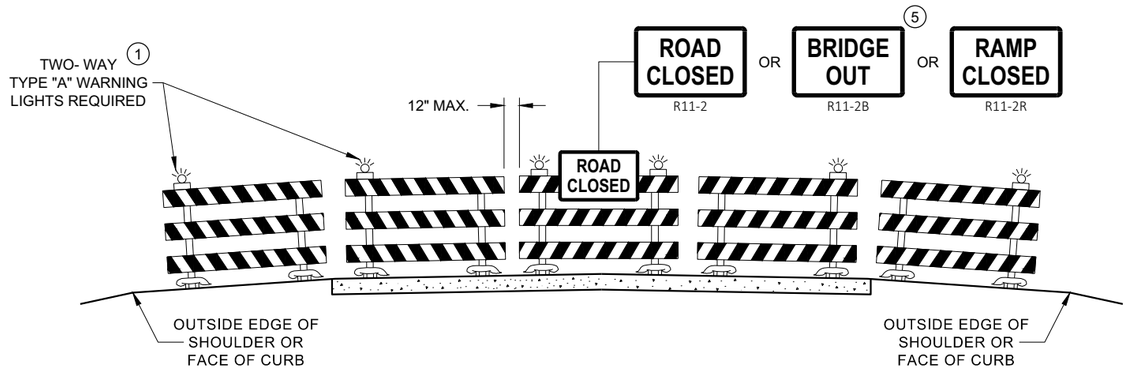

DETAIL D
ROAD CLOSURE BARRICADE DETAIL
APPROACH VIEW

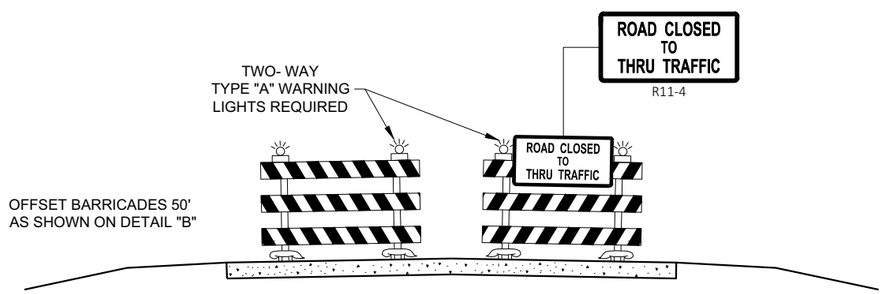

DETAIL E
LANE CLOSURE BARRICADE DETAIL
APPROACH VIEW

SEE SDD 15C2 - SHEET "a" FOR LEGEND

GENERAL NOTES

THE EXACT NUMBER, LOCATION, AND SPACING OF ALL SIGNS AND BARRICADES SHALL BE ADJUSTED TO FIT FIELD CONDITIONS AS APPROVED BY THE ENGINEER.

ANY SIGNS TEMPORARY OR EXISTING, WHICH CONFLICT WITH TRAFFIC CONTROL "IN USE", SHALL BE REMOVED OR COVERED AS NEEDED AND AS APPROVED BY THE ENGINEER.

THE SPACING BETWEEN TRAFFIC CONTROL SIGNS SHOULD BE ADJUSTED TO NOT CONFLICT WITH AND SHOULD PROVIDE A DESIRABLE MINIMUM OF 200 FEET CLEARANCE TO EXISTING SIGNS THAT WILL REMAIN IN PLACE.

BARRICADES THAT MUST BE MOVED FOR A WORK OPERATION SHALL BE IMMEDIATELY RE-ESTABLISHED UPON COMPLETION OF THE OPERATION, OR FOR CONTINUING OPERATIONS, AT THE END OF EACH WORKING DAY.

SIGNS THAT WILL BE IN PLACE LESS THAN 7 CONTINUOUS DAYS AND NIGHTS MAY BE MOUNTED ON PORTABLE SUPPORTS.

ALL TYPE III BARRICADES SHALL HAVE RAILS REFLECTORIZED ON BOTH FACES. STRIPES SHALL BE PROPERLY SLOPED DOWN TOWARD THE TRAFFIC SIDE OR AS SHOWN IN THE ROAD CLOSURE BARRICADE DETAIL "D" FOR FULL ROAD CLOSURES.

TYPE "A" LOW - INTENSITY FLASHING WARNING LIGHTS SHALL BE VISIBLE ON BOTH SIDES OF THE BARRICADE.

THE R11 - 2, R11 - 3, M4 - 9, R11 - 4, AND R10 - 61 SIGNS PLACED ON THE BARRICADES SHALL COVER NO MORE THAN THE TOP RAIL. THE SIGNS SHALL NOT COVER ANY PORTION OF THE MIDDLE RAIL OR BOTTOM RAILS.

"WO" AND "MO" SIGNS ARE THE SAME AS "W" AND "M" SIGNS EXCEPT THE BACKGROUND IS ORANGE.

ALL SIGNS SHALL BE 48" X 48" UNLESS OTHERWISE NOTED BELOW:
- R11 - 2 SHALL BE 48" X 30"
- R11 - 3 SHALL, R11 - 4 AND R10 - 61 SHALL BE 60 " X 30"
- M4 - 9 SHALL BE 30" X 24"
- M3 - X SHALL BE 24" X 12" (36" X 18" IF NEEDED TO MATCH EXISTING SIGNS)
- M4 - 8 SHALL BE 24" X 12" (36" X 18" IF NEEDED TO MATCH EXISTING SIGNS)
- M1 - 4, M1 - 5A AND M1 - 6 SHALL BE 24" X 24" (36" X 36" IF NEEDED TO MATCH EXISTING SIGNS)
- MO5 - 1 AND MO6 - 1 SHALL BE 21" X 21" (30" X 30" IF NEEDED TO MATCH EXISTING SIGNS)
- D1 - X SHALL BE AS SHOWN ON SPECIFIC PROJECT SIGNING DETAIL SHEETS.
- R1 - 1 SHALL BE 36" X 36"

1. TWO WARNING LIGHTS SHALL BE PROVIDED ON THE CENTER BARRICADE AND A MINIMUM OF ONE WARNING LIGHT SHALL BE PROVIDED ON EACH OF THE OTHER BARRICADES WITHIN THE ROADWAY LIMITS. SPACING OF THE WARNING LIGHTS SHALL BE UNIFORM TO THE EDGE OF ROADWAY AS SHOWN (APPROX. 8 FOOT LIGHT SPACING.
2. THESE SIGNS AND BARRICADES ARE NOT REQUIRED IF ROAD CLOSURE BEGINS AT AN INTERSECTION.
3. FOR ROAD CLOSURE WITHOUT LOCAL ACCESS TO PROJECT, SEE ROAD CLOSURE BARRICADE DETAIL "D".
4. FOR ROAD CLOSURE WITH LOCAL ACCESS TO PROJECT, SEE ROAD CLOSURE BARRICADE DETAIL "E".
5. FOR BRIDGE OR CULVERT REPLACEMENTS, SUBSTITUTE "BRIDGE OUT" INSTEAD OF "ROAD CLOSED" ON R11 - 2 AND R11 - 3 SIGNS.
6. INSTALL DETOUR AND COMMUNITY GUIDE SIGNS AND ARROWS ONLY IF SPECIFIED IN THE CONTRACT. IF THERE ARE EXISTING ROUTE MARKER ASSEMBLIES THAT WILL REMAIN IN PLACE, ADJUST THE LOCATION OF THE DETOUR ROUTE SIGNS TO CORRESPOND WITH THE EXISTING ASSEMBLIES. MODIFY EXISTING SIGNS WHERE POSSIBLE. SEE SPECIFIC PROJECT DETOUR SIGNING DETAIL SHEETS. IF DETOUR SIGNS ARE BEING INSTALLED BY OTHERS, PLACE THE CONTRACTED TRAFFIC CONTROL SIGNS TO ALLOW FOR PLACEMENT OF ALL WARNING, DETOUR AND GUIDE SIGNS AS SHOWN.
7. "EAST" CARDINAL DIRECTION MARKERS AND RIGHT TURN ARROWS ARE SHOWN. USE OTHER CARDINAL DIRECTIONS AND ARROWS AS APPROPRIATE.

BARRICADES AND SIGNS FOR VARIOUS CLOSURES

STATE OF WISCONSIN
DEPARTMENT OF TRANSPORTATION

APPROVED
February 2020 — DATE
/S/ Andrew Heidtke — WORK ZONE ENGINEE
FHWA

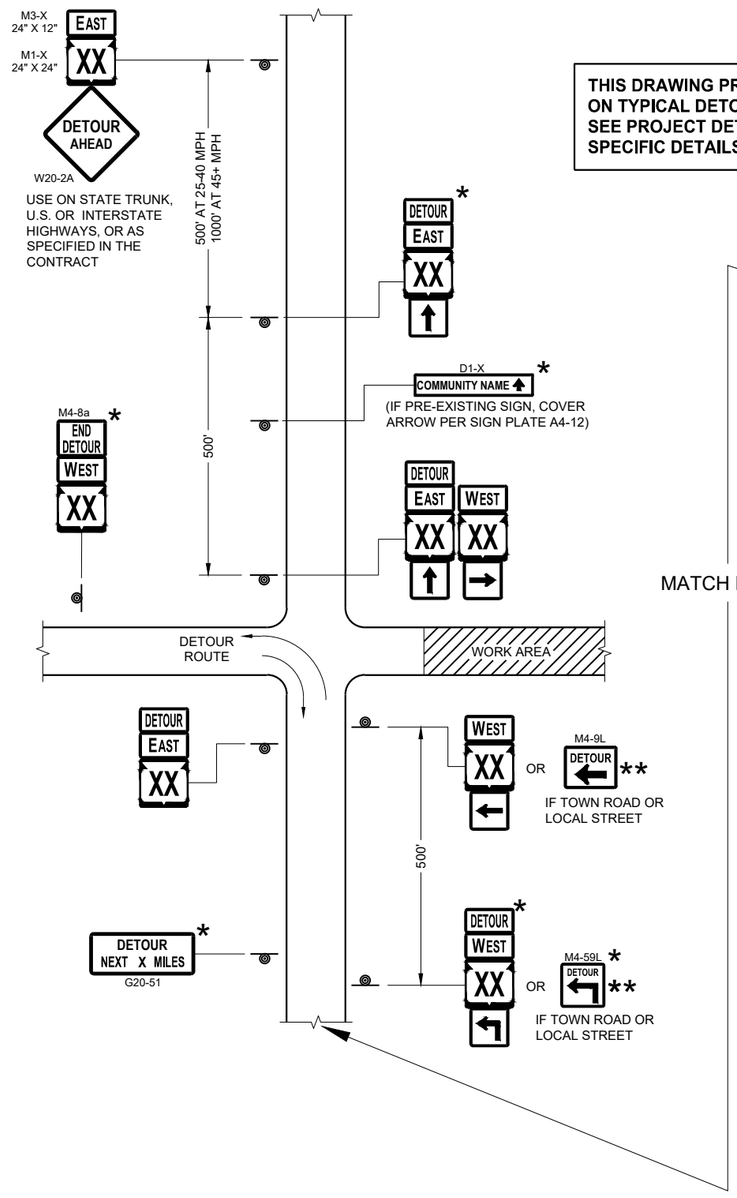

THIS DRAWING PROVIDES GENERAL GUIDANCE ON TYPICAL DETOUR SIGN LAYOUT AND SPACING. SEE PROJECT DETOUR SIGNING SHEETS FOR SPECIFIC DETAILS FOR EACH PROJECT.

LEGEND

- SIGN ON PERMANENT SUPPORT
- WORK AREA
- DETOUR M4 - 8
- EAST M3 - X
- XX M1 - 4 OR XX M1 - 6 OR COUNTY X M1 - 5A
- M05 - 1 OR M06 - 1 OR M06 - 1

GENERAL NOTES

THE EXACT NUMBER, LOCATION AND SPACING OF ALL SIGNS SHALL BE ADJUSTED TO FIT FIELD CONDITIONS AS APPROVED BY THE ENGINEER.

IF THERE ARE EXISTING ROUTE MARKER ASSEMBLIES THAT WILL REMAIN IN PLACE, ADJUST THE LOCATION OF THE DETOUR ROUTE SIGNS TO CORRESPOND WITH THE EXISTING ASSEMBLIES. SEE SPECIFIC PROJECT DETOUR SIGNING DETAIL SHEETS. MODIFY EXISTING SIGNS WHERE POSSIBLE.

THE SPACING BETWEEN TRAFFIC CONTROL AND DETOUR SIGNS SHOULD BE ADJUSTED TO NOT CONFLICT WITH AND TO PROVIDE A DESIRABLE MINIMUM OF 200 FEET CLEARANCE TO EXISTING SIGNS THAT WILL REMAIN IN PLACE.

ANY SIGNS TEMPORARY OR EXISTING, WHICH CONFLICT WITH TRAFFIC CONTROL "IN USE" SHALL BE REMOVED OR COVERED AS NEEDED AND AS APPROVED BY THE ENGINEER.

SIGNS THAT WILL BE IN PLACE LESS THAN 7 CONTINUOUS DAYS AND NIGHTS MAY BE MOUNTED ON PORTABLE SUPPORTS.

"MO" SIGNS ARE THE SAME AS "M" SIGNS EXCEPT THE BACKGROUND IS ORANGE.

SIGN SIZES SHALL BE AS FOLLOWS:

M3-X SHALL BE 24" X 12" (36" X 18" IF NEEDED TO MATCH EXISTING SIGNS)
M4-8 SHALL BE 24" X 12" (36" X 18" IF NEEDED TO MATCH EXISTING SIGNS)
M1-4, M1-5A AND M1-6 SHALL BE 24" X 24" (36" X 36" IF NEEDED TO MATCH EXISTING SIGNS)
M05-1 AND M06-1 SHALL BE 21" X 21" (30" X 30" IF NEEDED TO MATCH EXISTING SIGNS)
M4-9 AND M4-59 SHALL BE 30" X 24"
M4-8a SHALL BE 24" X 18"
G20-51 SHALL BE 60" X 24"
W20-2A SHALL BE 48" X 48"
D1-X SHALL BE AS SHOWN ON SPECIFIC PROJECT SIGNING DETAIL SHEETS.

* OPTIONAL SIGNS. SEE SPECIFIC PROJECT DETOUR SIGNING DETAIL SHEETS.

** FOR A TOWN ROAD OR LOCAL STREET DETOURED ONTO A STATE TRUNK HIGHWAY, PLACE A ROAD NAME PLAQUE ABOVE THE M4-9 SIGN AS SPECIFIED IN THE CONTRACT.

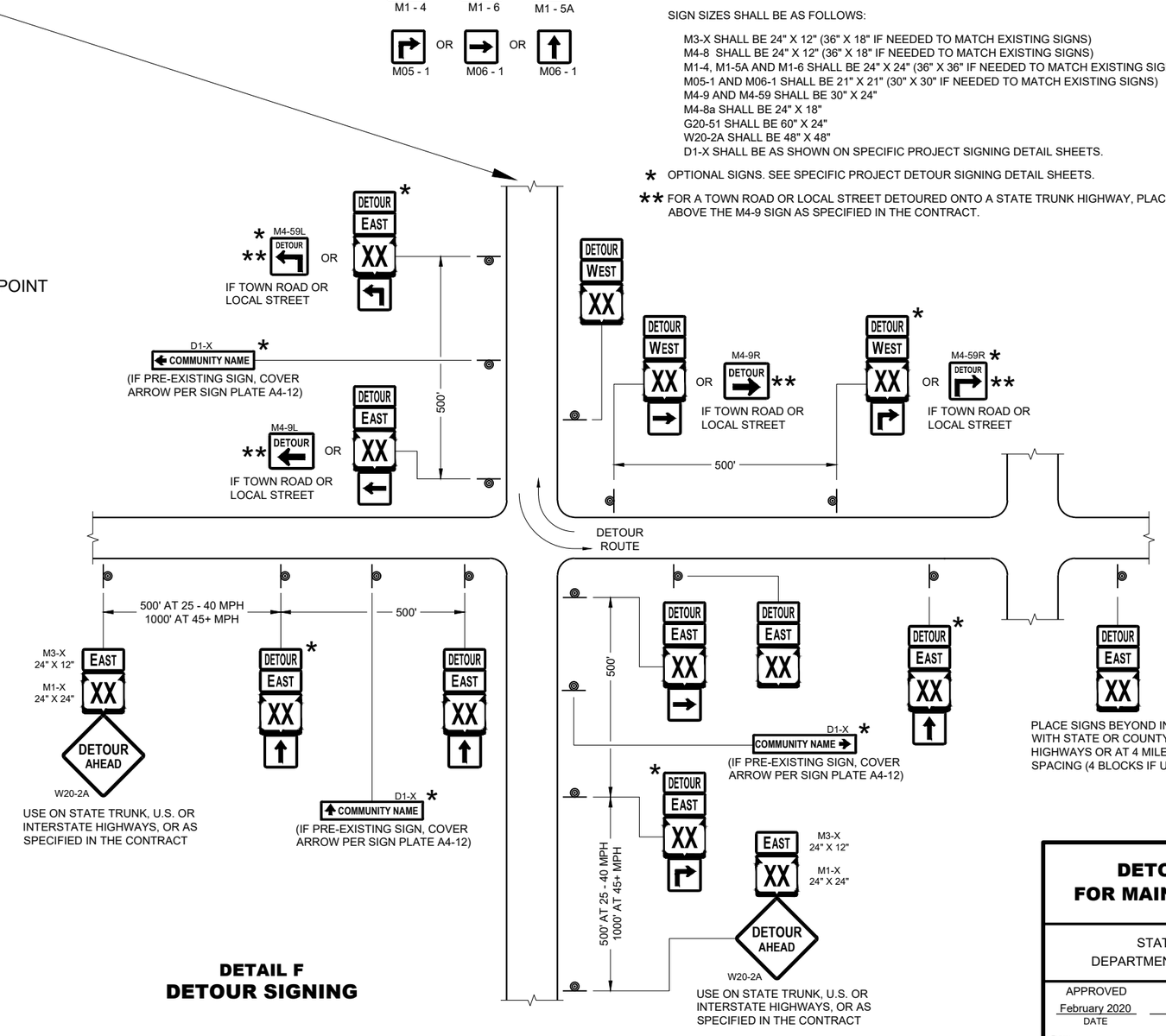

SEE SPECIFIC PROJECT DETOUR SIGNING DETAIL SHEETS AND DETAIL A OR B ON SDD SHEET 15C02 - SHEET "a"

DETAIL F
DETOUR SIGNING

DETOUR SIGNING FOR MAINLINE CLOSURES

STATE OF WISCONSIN
DEPARTMENT OF TRANSPORTATION

APPROVED
February 2020 /S/ Andrew Heidtke
DATE WORK ZONE ENGINEER

FHWA

6

SDD 15C02 - 08c

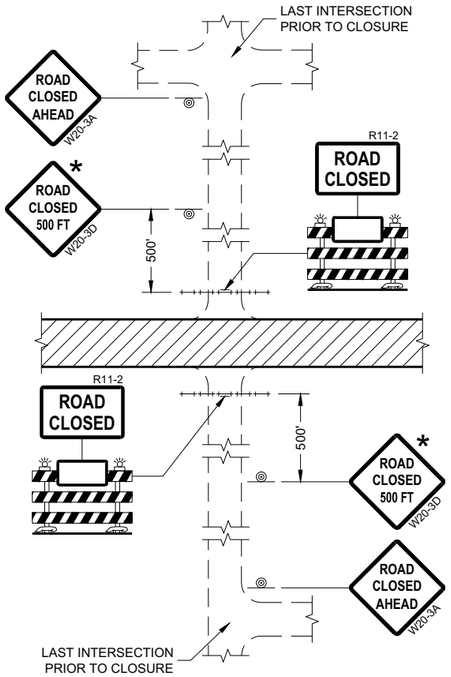

DETAIL 1
(NO ACCESS TO PROJECT)

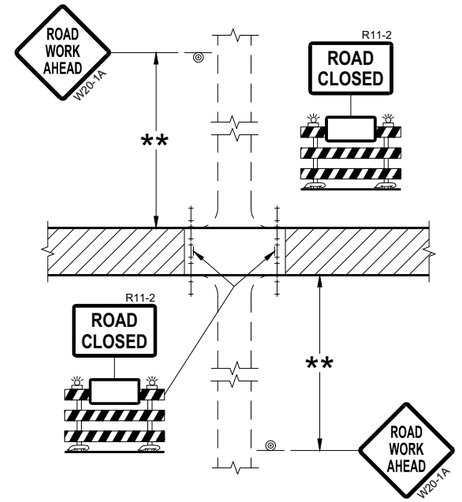

DETAIL 2
(PUBLIC CROSS-TRAFFIC MAINTAINED.
NO ACCESS TO PROJECT)

GENERAL NOTES

THE EXACT NUMBER, LOCATION, AND SPACING OF ALL SIGNS AND BARRICADES SHALL BE ADJUSTED TO FIT FIELD CONDITIONS AS APPROVED BY THE ENGINEER.

ANY SIGNS TEMPORARY OR EXISTING, WHICH CONFLICT WITH TRAFFIC CONTROL "IN USE" SHALL BE REMOVED OR COVERED AS NEEDED AND AS APPROVED BY THE ENGINEER.

THE SPACING BETWEEN TRAFFIC CONTROL SIGNS SHOULD BE ADJUSTED TO NOT CONFLICT WITH AND SHOULD PROVIDE A DESIRABLE MINIMUM OF 200 FEET CLEARANCE (500 FEET DESIRABLE) TO EXISTING SIGNS THAT WILL REMAIN IN PLACE.

IF A "STOP" SIGN MUST BE REMOVED FOR A WORK OPERATION, A TEMPORARY "STOP" SIGN SHALL BE PLACED PRIOR TO THE SIGN REMOVAL, OR A FLAGGER SHALL BE PROVIDED UNTIL THE SIGN IS REESTABLISHED.

BARRICADES THAT MUST BE MOVED FOR A WORK OPERATION SHALL BE IMMEDIATELY REESTABLISHED UPON COMPLETION OF THE OPERATION OR FOR CONTINUING OPERATIONS, AT THE END OF EACH WORKING DAY.

SIGNS THAT WILL BE IN PLACE LESS THAN SEVEN CONTINUOUS DAYS AND NIGHTS MAY BE MOUNTED ON PORTABLE SUPPORTS.

ALL TYPE III BARRICADES SHALL HAVE RAILS REFLECTORIZED ON BOTH FACES. STRIPES SHALL BE PROPERLY SLOPED DOWN TOWARD THE TRAFFIC SIDE OR AS SHOWN IN THE ROAD CLOSURE BARRICADE DETAIL "D" FOR FULL ROAD CLOSURES.

TYPE "A" LOW-INTENSITY FLASHING WARNING LIGHTS SHALL BE VISIBLE ON BOTH SIDES OF THE BARRICADE.

THE R11-2, R11-3, AND R11-4 SIGNS PLACED ON BARRICADES SHALL COVER NO MORE THAN THE TOP RAIL. THE SIGNS SHALL NOT COVER ANY PORTION OF THE MIDDLE OR BOTTOM RAILS.

ALL SIGNS SHALL BE 48" X 48" UNLESS OTHERWISE NOTED BELOW:
R11-2 SHALL BE 48" X 30".
R11-4 AND R11-3 SHALL BE 60" X 30".

* OMIT THE "ROAD CLOSED 500 FT." SIGN IF THE LAST INTERSECTION IS 500 FEET OR LESS FROM THE WORK ZONE.

** 500' MAX. OR AT LAST INTERSECTION, WHICHEVER IS CLOSEST.

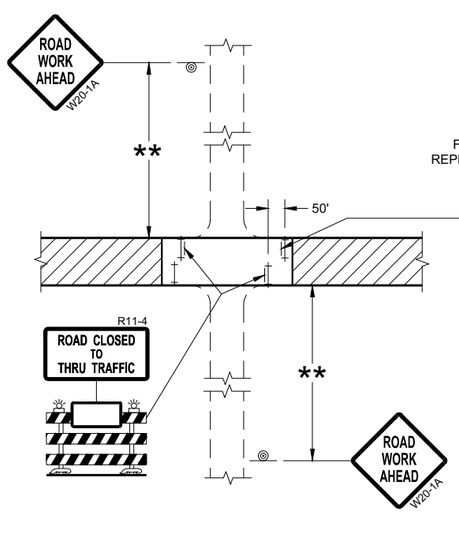

DETAIL 3
(PUBLIC CROSS-TRAFFIC MAINTAINED.
CONTRACTOR, LOCAL BUSINESS AND
RESIDENT ACCESS TO PROJECT)

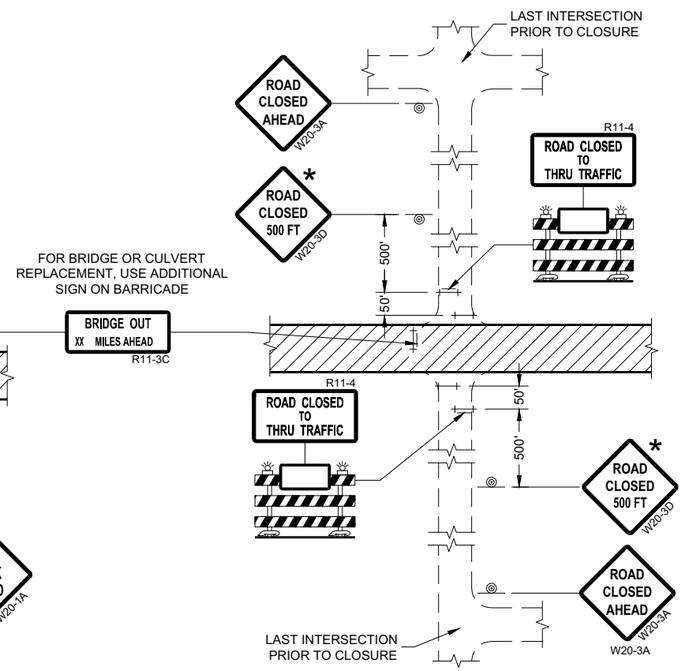

DETAIL 4
(CONTRACTOR, LOCAL BUSINESS AND
RESIDENT ACCESS TO PROJECT)

LEGEND

- SIGN ON PERMANENT SUPPORT
- TYPE III BARRICADE
- TYPE III BARRICADE WITH ATTACHED SIGN
- TYPE "A" WARNING LIGHT (FLASHING)
- WORK AREA

BARRICADES AND SIGNS FOR SIDEROAD CLOSURES

STATE OF WISCONSIN
DEPARTMENT OF TRANSPORTATION

APPROVED
July 2018 — DATE
/S/ Andrew Heidtke — WORK ZONE ENGINEE
FHWA

6

SDD 15C03 - 05

GENERAL NOTES

DETAILS OF INSTALLATION, MATERIALS AND WORKMANSHIP NOT SHOWN ON THIS DRAWING SHALL CONFORM TO THE PERTINENT REQUIREMENTS OF THE STANDARD SPECIFICATIONS AND APPLICABLE SPECIAL PROVISIONS.

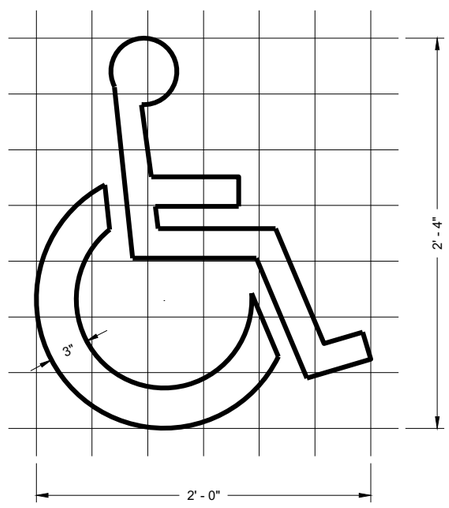

HANDICAP SYMBOL

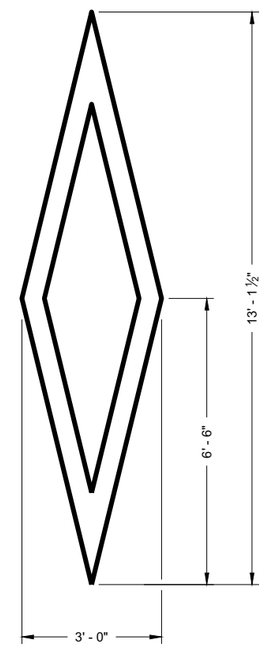

PREFERENTIAL LANE SYMBOL

6

6

SDD 15C07 - 15a

SDD 15C07 - 15a

PAVEMENT MARKING SYMBOLS

STATE OF WISCONSIN
DEPARTMENT OF TRANSPORTATION

APPROVED
November 2019 — DATE
/S/ Matthew Rauch — STATE SIGNING AND MAR ENGINEER
FHWA

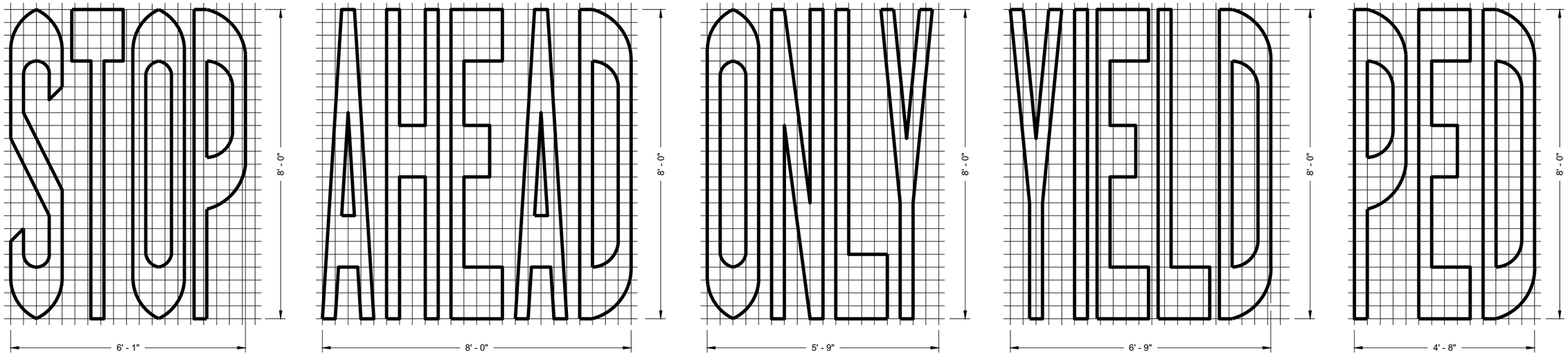

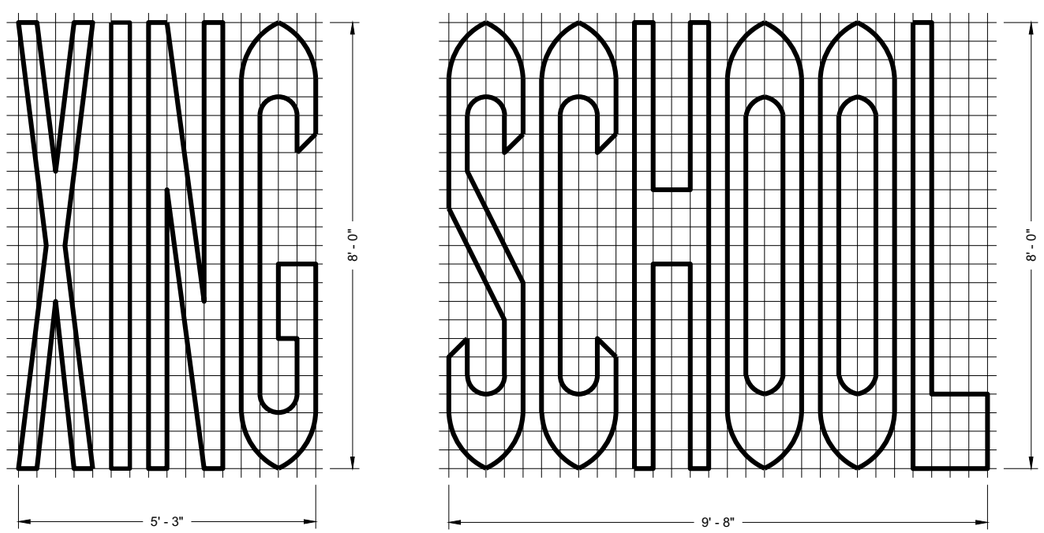

SINGLE LANE

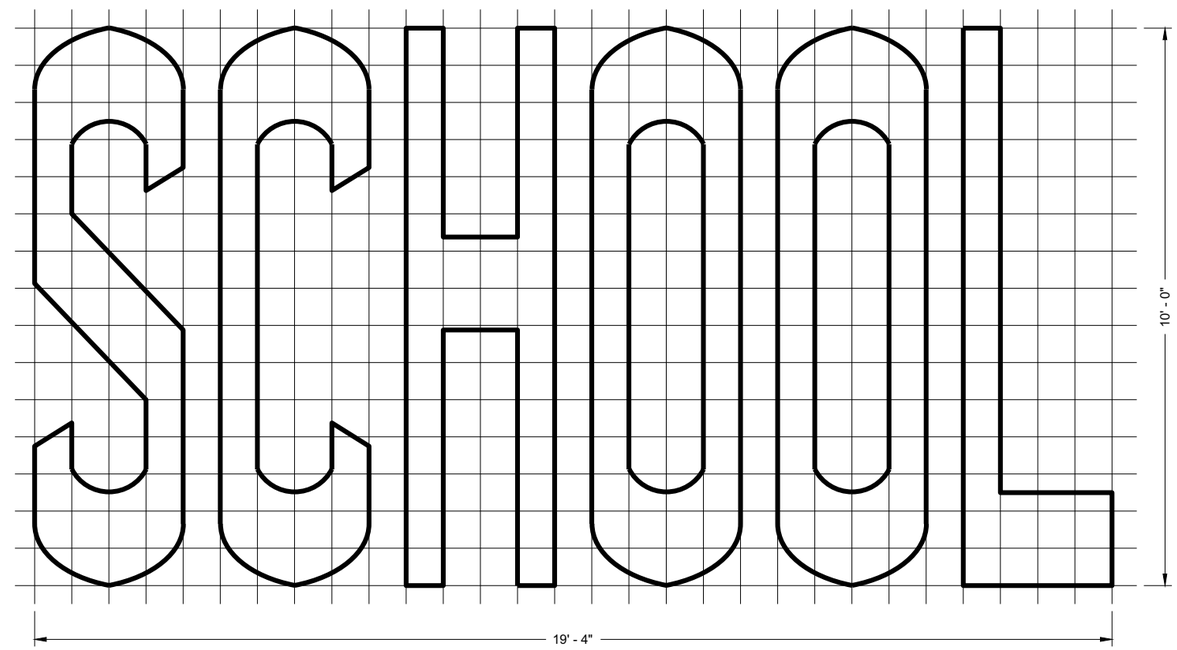

TWO - LANE

6

6

GENERAL NOTES

DETAILS OF INSTALLATION, MATERIALS AND WORKMANSHIP NOT SHOWN ON THIS DRAWING SHALL CONFORM TO THE PERTINENT REQUIREMENTS OF THE STANDARD SPECIFICATIONS AND APPLICABLE SPECIAL PROVISIONS.

PAVEMENT MARKING WORDS

STATE OF WISCONSIN
DEPARTMENT OF TRANSPORTATION

APPROVED

November 2019
DATE

/S/ Matthew Rauch
STATE SIGNING AND MAR
ENGINEER

FHWA

SDD 15C07 - 15b

SDD 15C07 - 15b

GENERAL NOTES

DETAILS OF INSTALLATION, MATERIALS AND WORKMANSHIP NOT SHOWN ON THIS DRAWING SHALL CONFORM TO THE PERTINENT REQUIREMENTS OF THE STANDARD SPECIFICATIONS AND APPLICABLE SPECIAL PROVISIONS.

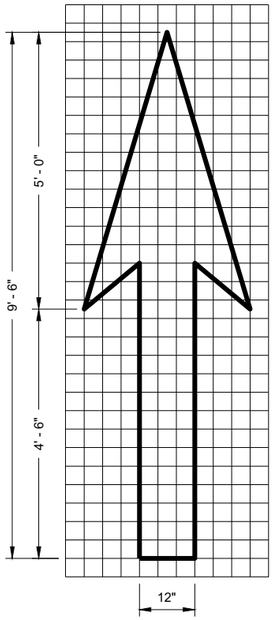

TYPE 1

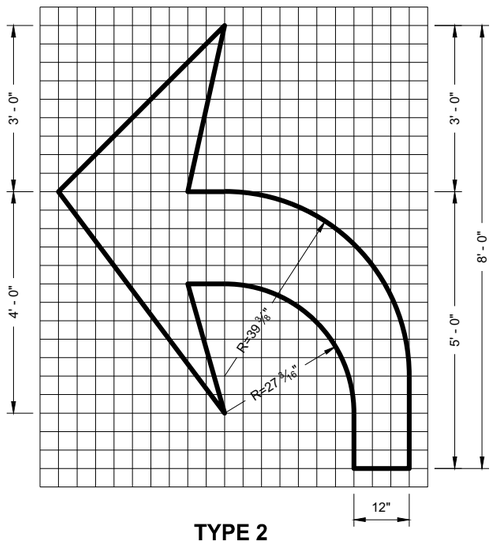

TYPE 2

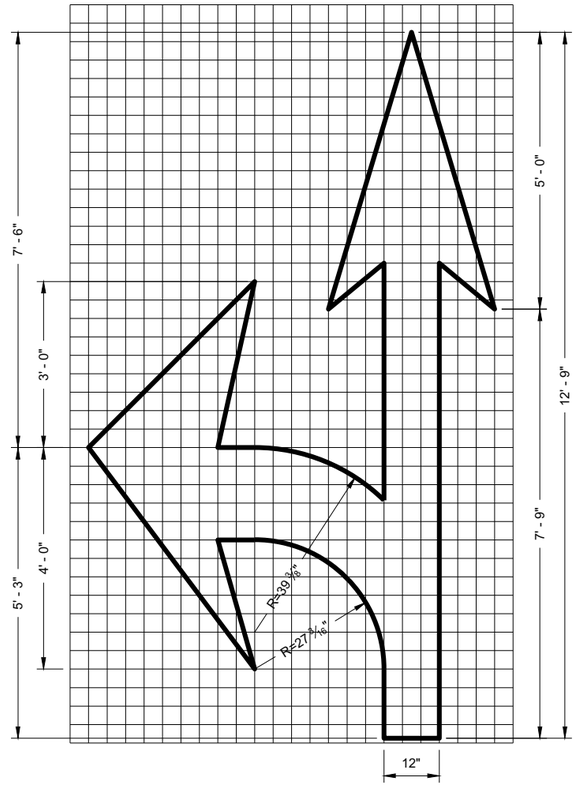

TYPE 3

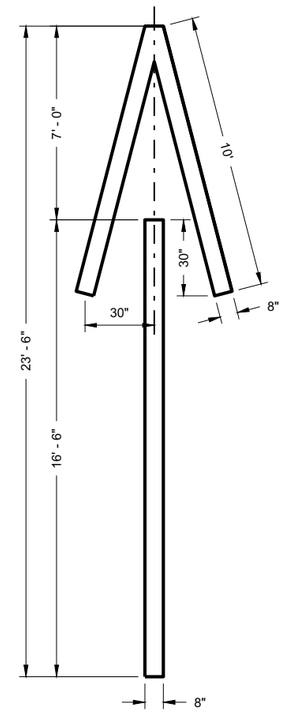

TYPE 4

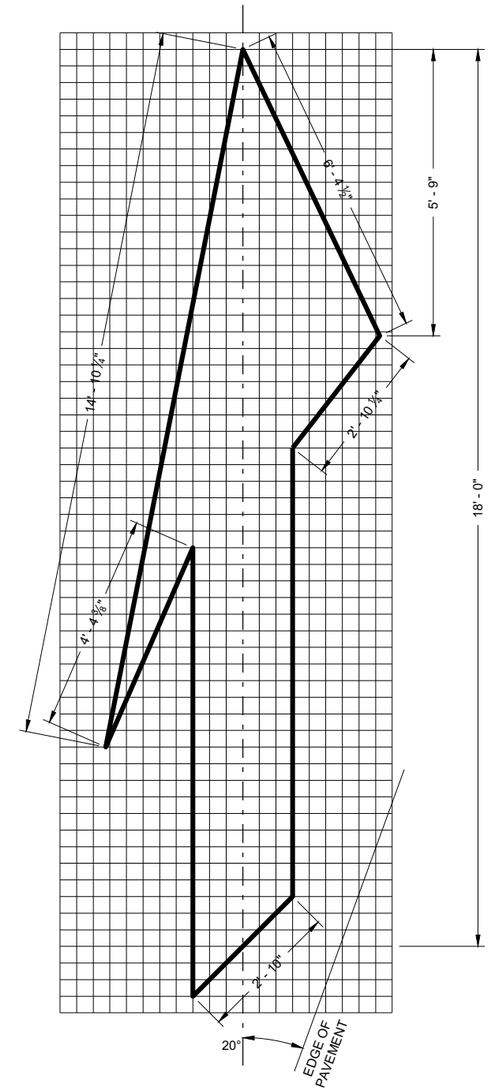

TYPE 5 LANE DROP ARROW

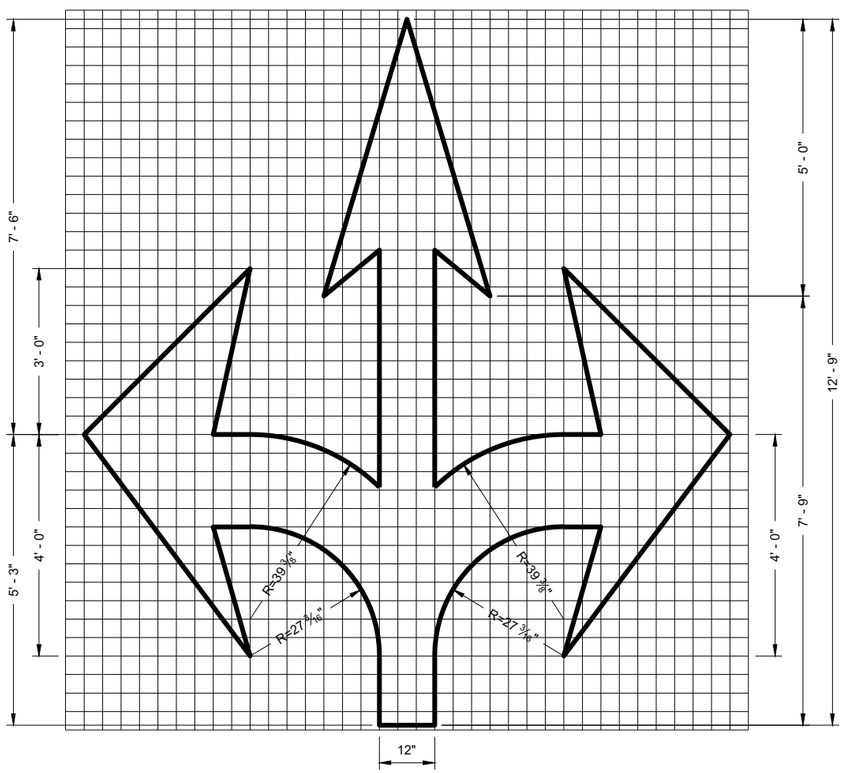

TYPE 6

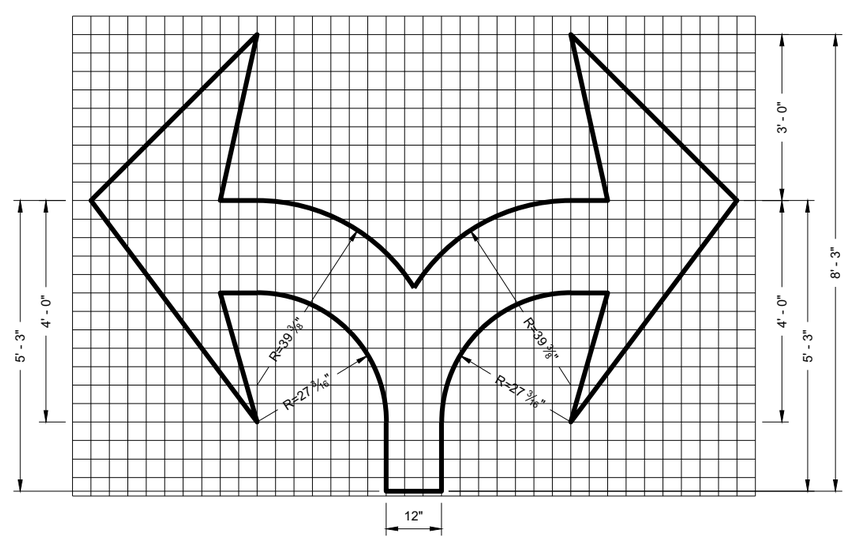

TYPE 7

6

6

PAVEMENT MARKING ARROWS

STATE OF WISCONSIN
DEPARTMENT OF TRANSPORTATION

APPROVED
November 2019 — DATE
/S/ Matthew Rauch — STATE SIGNING AND MAR ENGINEER
FHWA

SDD 15C07 - 15c

SDD 15C07 - 15c

GENERAL NOTES

DETAILS OF CONSTRUCTION NOT SHOWN ON THIS DRAWING SHALL CONFORM TO STANDARD SPECIFICATIONS AND SPECIAL PROVISIONS.

1. LOCATE THE NO PASSING ZONE W14-3 SIGN WITHIN 50 FEET OF THE "T" MARKING
2. MEASURE FROM EDGE OF MARKING TO JOINT LINE. THIS DOES NOT INCLUDE SPACE NEEDED FOR GROOVING OPERATIONS.

LEGEND

"T" MARKING

SIGN ON PERMANENT SUPPORT

DIRECTION OF TRAFFIC

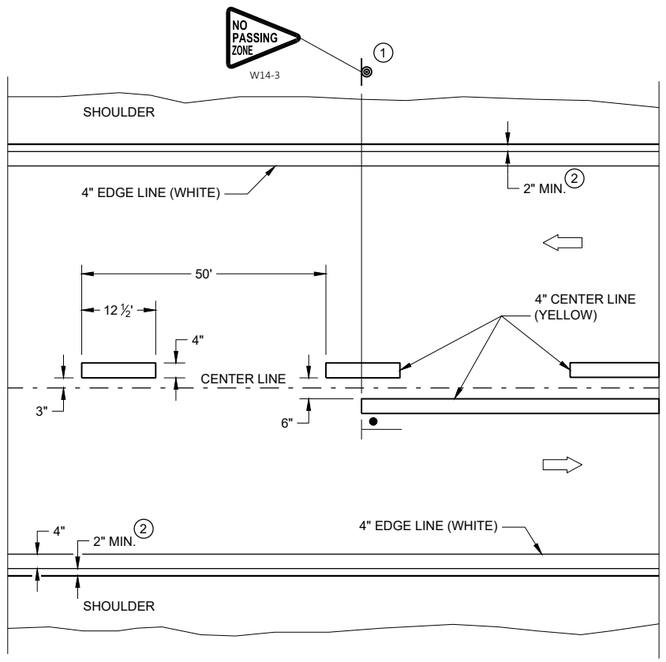

TWO WAY TRAFFIC

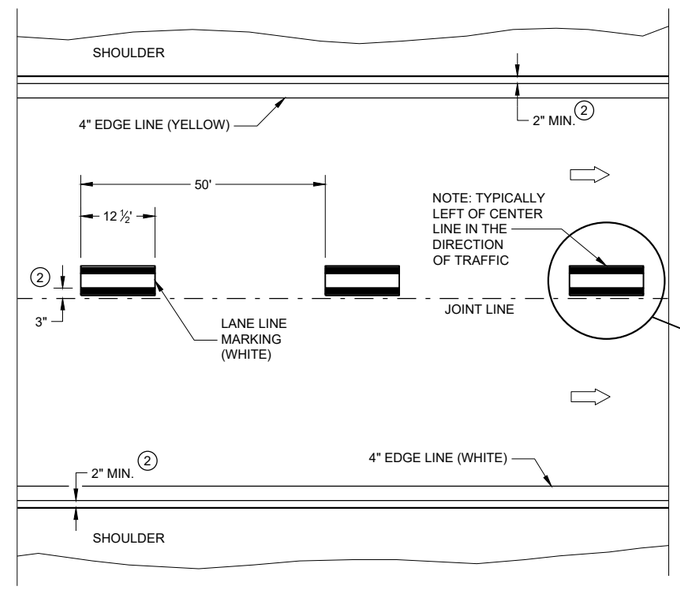

ONE WAY TRAFFIC

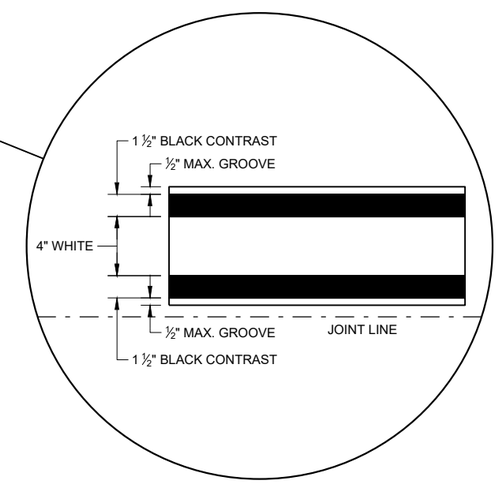

PERMANENT PAVEMENT MARKING

6

SDD 15C08 - 21a

PERMANENT LONGITUDINAL PAVEMENT MARKINGS

STATE OF WISCONSIN
DEPARTMENT OF TRANSPORTATION

APPROVED
May 2022 — DATE
/S/ Jeannie Silver — STATEWIDE SIGNING AND M ENGINEER

FHWA

6

SDD 15C08 - 21a

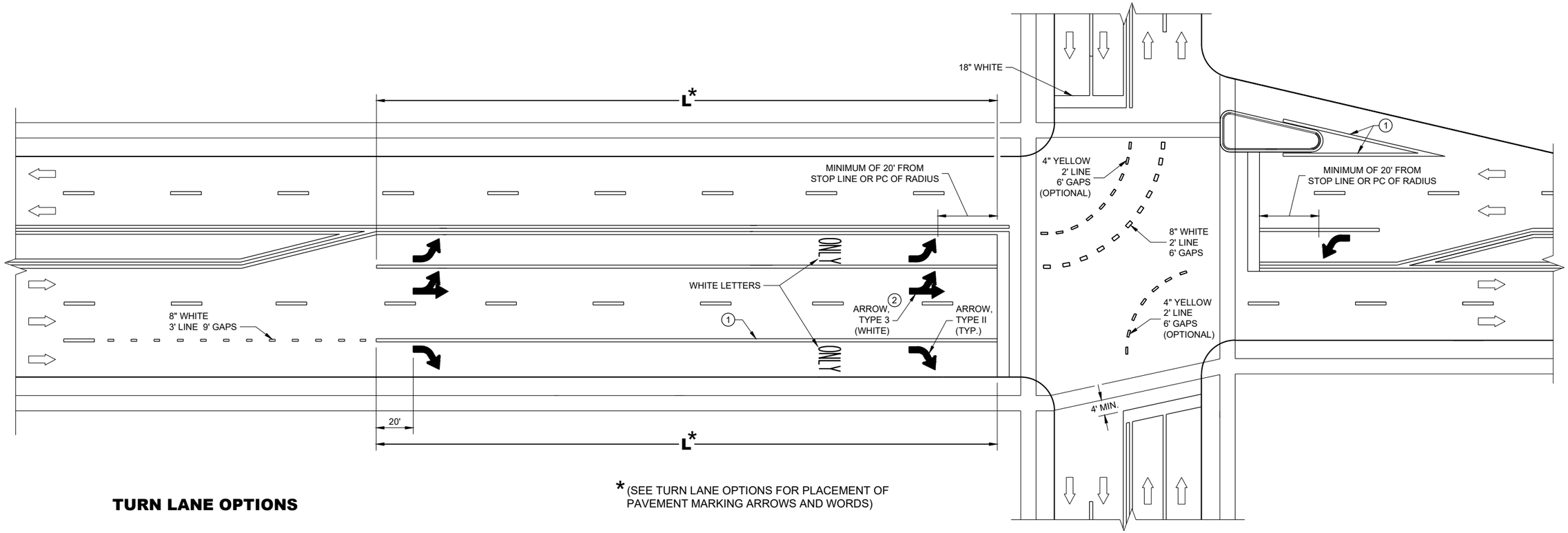

*(SEE TURN LANE OPTIONS FOR PLACEMENT OF PAVEMENT MARKING ARROWS AND WORDS)

TURN LANE OPTIONS

LENGTH OF TURN BAY (L) OF 0 - 47' DOES NOT REQUIRE PAVEMENT MARKING ARROWS OR WORDS

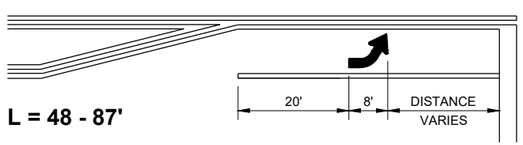

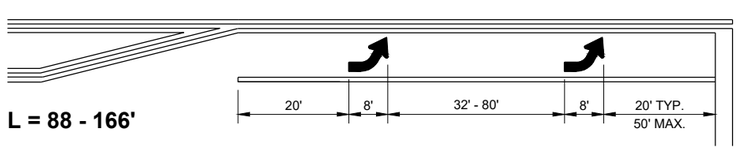

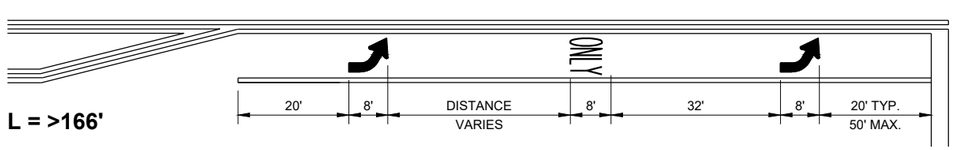

GENERAL NOTES

1. 8" WHITE
2. QUANTITY AND LOCATION OF TYPE 3 ARROWS ARE THE SAME AS THE TYPE II ARROWS IN THE ADJACENT TURN LANE. FOR TURN LANES WITH A PHYSICAL SEPARATION IN THE SAME DIRECTION OF TRAVEL, THE ARROWS AND "ONLY" MARKING MAY BE ELIMINATED.

⇨ DIRECTION OF TRAFFIC

L = LENGTH OF TURN BAY

PAVEMENT MARKING (TURN LANES)

STATE OF WISCONSIN
DEPARTMENT OF TRANSPORTAT

6

SDD 15C08 - 21d

GENERAL NOTES

1. REFLECTIVE SHEETING SHALL FOLLOW THE REQUIREMENTS IN THE APPROVED PRODUCTS LISTING FOR SIGN SHEETING.
2. LOCATION OF WARNING LIGHTS WHEN SHOWN ON THE PLAN.

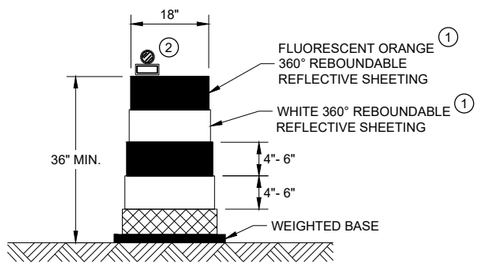

DRUM

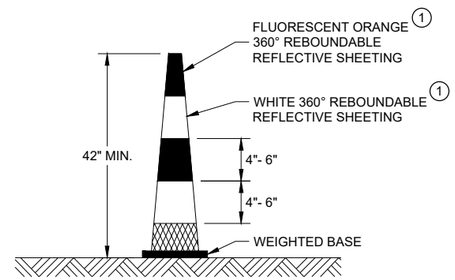

42" CONE

DO NOT USE IN TAPERS
½ SPACING OF DRUMS

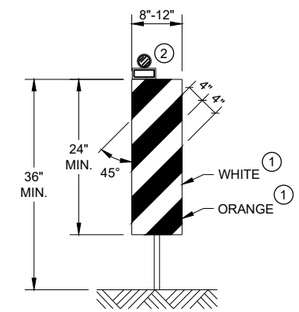

VERTICAL PANEL

THE STRIPES SHALL SLOPE DOWNWARD TO
THE TRAFFIC SIDE FOR CHANNELIZATION.

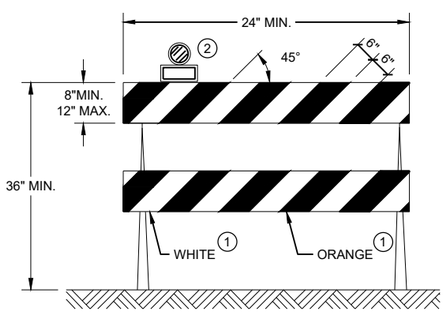

TYPE II BARRICADE

FOR RAILS LESS THAN 36" LONG, 4" WIDE STRIPES
MAY BE USED. ALL STRIPES SHALL SLOPE DOWNWARD
TO THE TRAFFIC SIDE FOR CHANNELIZATION.

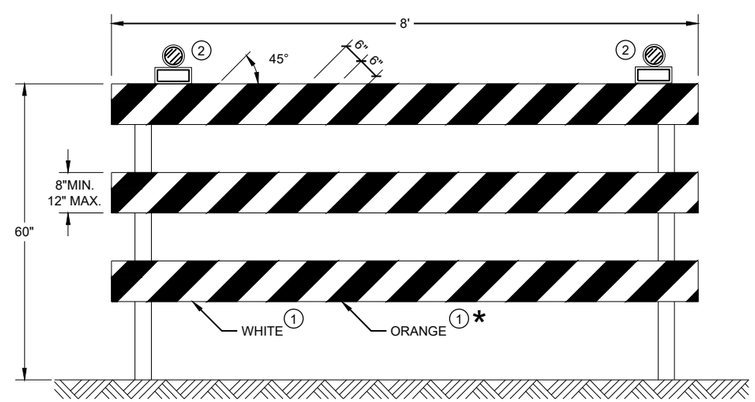

TYPE III BARRICADE

IF SIGN MOUNTED, DO NOT COVER MORE THAN 50% OF THE TOP
TWO RAILS OR 33% OF THE TOTAL AREA OF THE THREE RAILS.

* IF USED FOR A PERMANENT APPLICATION USE RED SHEETING.

CHANNELIZING DEVICES DRUMS, CONES, BARRICADES AND VERTICAL PANELS

STATE OF WISCONSIN
DEPARTMENT OF TRANSPORTATION

APPROVED
May 2021 — DATE
/S/ Andrew Heidtke — WORK ZONE ENGINEE
FHWA

6

6

SDD 15C11 - 09b

SDD 15C11 - 09b

GENERAL NOTES

(1) DIAGONALS ARE OPTIONAL WHEN PAINTED ISLAND IS LESS THAN 6 FEET AT THE WIDEST POINT. OMIT DIAGONALS IF WIDTH IS LESS THAN 4 FEET.

⇨ DIRECTION OF TRAVEL

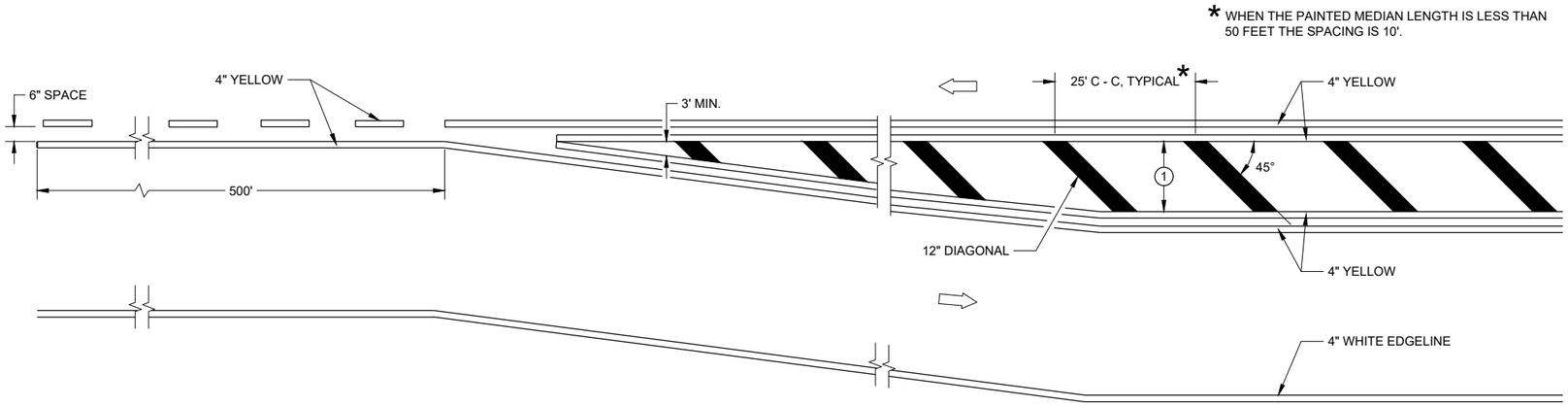

MEDIAN ISLAND DETAIL

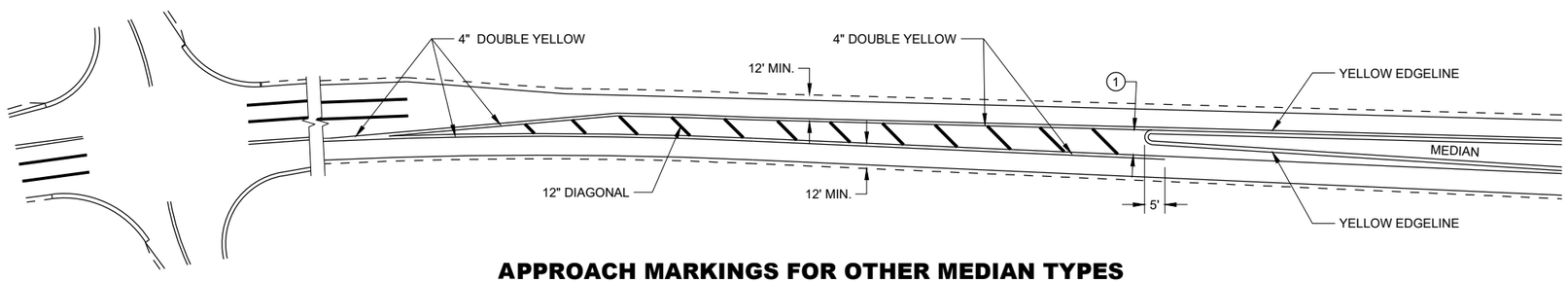

APPROACH MARKINGS FOR OTHER MEDIAN TYPES

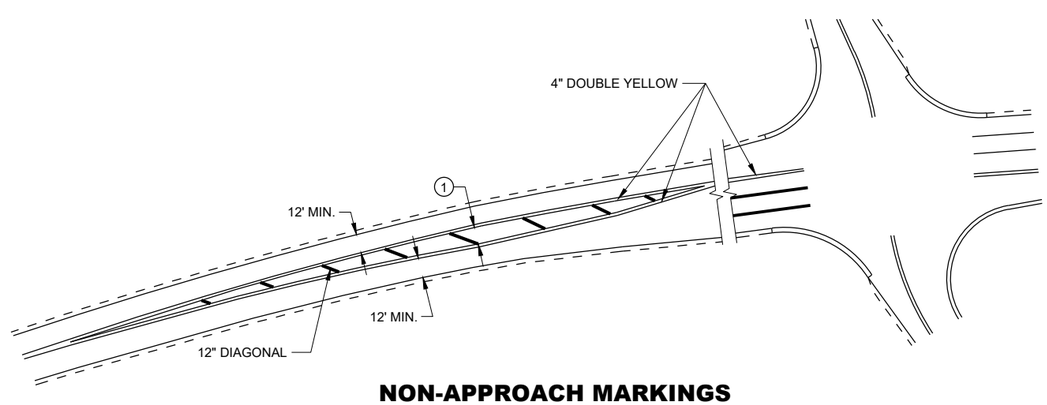

NON-APPROACH MARKINGS

MEDIAN ISLAND PAVEMENT MARKINGS

STATE OF WISCONSIN
DEPARTMENT OF TRANSPORTATION

APPROVED
May 2022 — DATE
/S/ Jeannie Silver — STATE SIGNING AND MAF ENGINEER
FHWA

6

SDD 15C18 - 06a

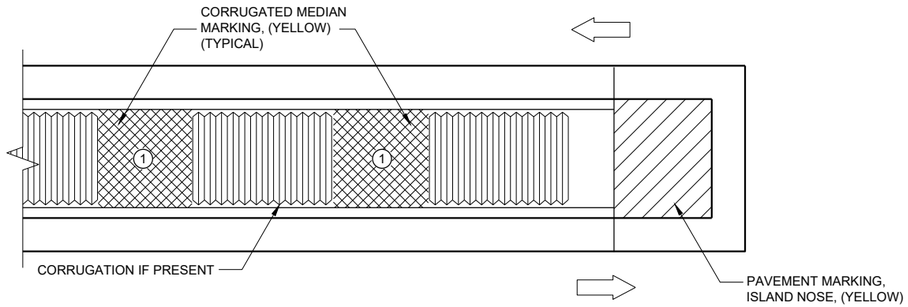

MEDIAN ISLAND WITH SQUARE BLUNT NOSE

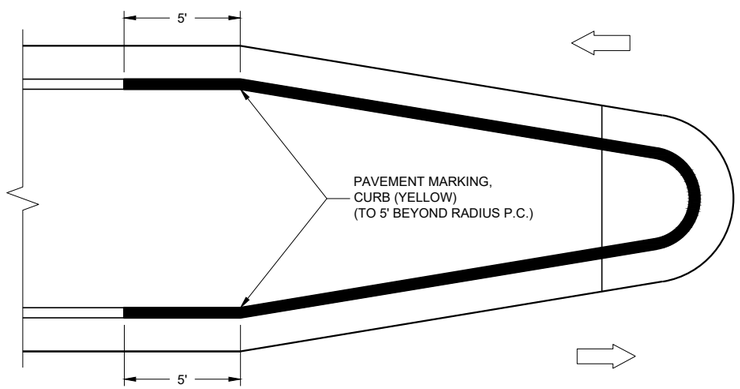

MEDIAN ISLAND WITH ROUND BLUNT NOSE

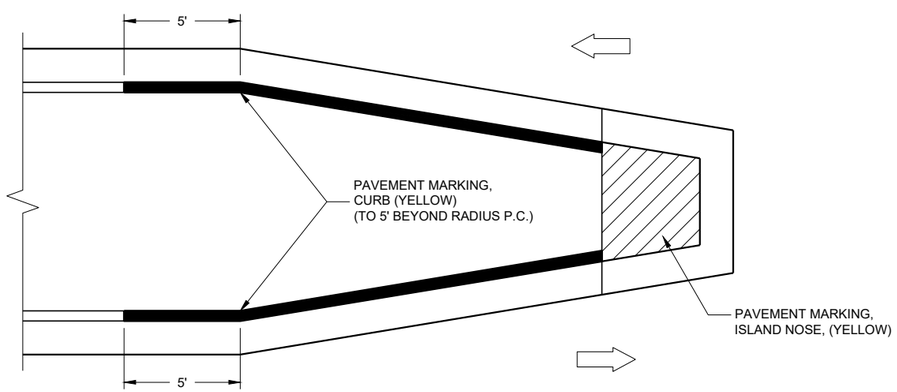

MEDIAN ISLAND WITH SLOPED NOSE

**TYPICAL PLACEMENT OF
PAVEMENT MARKING ON MEDIAN ISLANDS**

GENERAL NOTES

WHEN CONCRETE CORRUGATED MEDIAN IS CONSTRUCTED TO SEPARATE TRAFFIC OPERATING IN THE OPPOSING DIRECTION, YELLOW PAVEMENT MARKING SHALL BE APPLIED TO THE FLAT PORTION OF THE CONCRETE CORRUGATED MEDIAN. THE ITEM OF PAVEMENT MARKING, CONCRETE CORRUGATED MEDIAN, WILL BE MEASURED IN PLACE AND ACCEPTED IN ACCORDANCE WITH THE CONTRACT AND PAID FOR AT THE CONTRACT UNIT PRICE PER SQUARE FOOT.

(1) APPLY PAVEMENT MARKING TO THE FLAT PORTION OF CORRUGATED MEDIAN.

ISLAND NOSE MARKING

CURB MARKING

CORRUGATED MEDIAN MARKING

DIRECTION OF TRAVEL

6

6

SDD 15C18 - 06b

SDD 15C18 - 06b

**PAVEMENT MARKINGS,
MEDIAN ISLAND NOSE**

STATE OF WISCONSIN
DEPARTMENT OF TRANSPORTATION

APPROVED
May 2022 — DATE
/S/ Jeannie Silver — STATE SIGNING AND MAR ENGINEER

FHWA

LEGEND

V1 MARKING VEHICLE

V2 SHADOW VEHICLE

V3 TRAIL VEHICLE

TRUCK MOUNTED ATTENUATOR (TMA)

SIGN ON TEMPORARY SUPPORT

DIRECTION OF TRAFFIC

FLASHING ARROW PANEL (MERGE)

FLASHING ARROW PANEL (CAUTION)

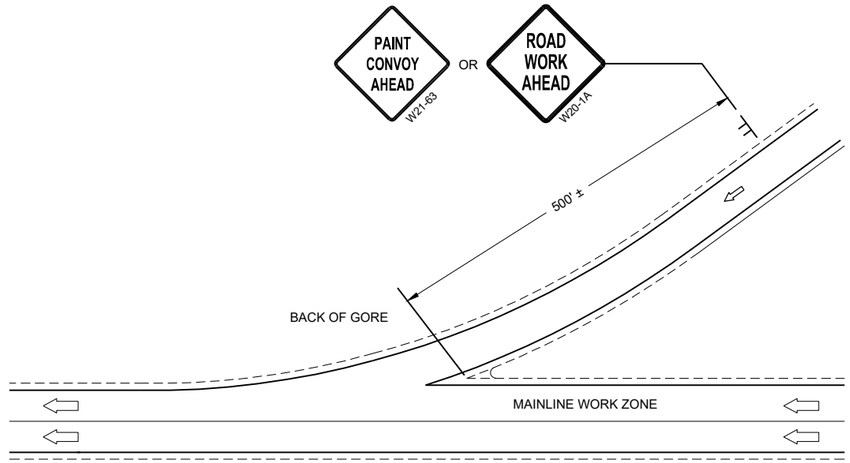

GENERAL NOTES

ALL VEHICLES SHALL BE EQUIPPED WITH TWO 360 DEGREE HIGH INTENSITY YELLOW FLASHING LIGHTS OR STROBE LIGHTS AND OPERATED WITH HEADLIGHTS TURNED ON.

ALL VEHICLES SHALL BE EQUIPPED WITH REAR FACING TYPE B OR C FLASHING ARROW PANEL. SIGNS PLACED ON VEHICLES MUST NOT OBSCURE THE ARROW PANEL.

ALL SIGNS ARE 48" X 48" UNLESS OTHERWISE SPECIFIED.

DISTANCE BETWEEN VEHICLES MAY VARY ACCORDING TO TERRAIN, SIGHT DISTANCE, PAINT DRYING TIME, AND OTHER FACTORS. WHENEVER ADEQUATE STOPPING SIGHT DISTANCE EXISTS TO THE REAR, SHADOW VEHICLES SHOULD MAINTAIN THE MINIMUM DISTANCE FROM THE WORK VEHICLE AND PROCEED AT THE SAME SPEED AS THE WORK VEHICLE. SHADOW VEHICLES SHOULD SLOW DOWN IN ADVANCE OF VERTICAL AND HORIZONTAL CURVES THAT RESTRICT SIGHT DISTANCE.

WHEN WORK ACTIVITY BLOCKS THE LEFT LANE, REVERSE TRAFFIC CONTROL.

WHEN A RAMP INTERSECTS THE FACILITY ON WHICH THE WORK IS BEING PERFORMED, PROVIDE ADDITIONAL TRAFFIC CONTROLS AS SPECIFIED IN THE CONTRACT OR AS APPROVED BY THE ENGINEER.

USE AN ATTENUATOR ON THE REARMOST VEHICLE THAT BLOCKS ALL OR PART OF THE TRAFFIC LANE.

IF THE SHOULDER IS TOO NARROW TO ACCOMMODATE THE LAST TRAILING VEHICLE, THE VEHICLE SHOULD STRADDLE THE EDGE LINE.

WHEN NO WORK ACTIVITY IS TAKING PLACE, REMOVE OR LAY STATIONARY SIGNS AND SUPPORTS FLAT ON THE GRADE WITH UPRIGHTS ORIENTED PARALLEL TO AND DOWNSTREAM FROM TRAFFIC

CONES SHOULD BE USED BETWEEN THE MARKING AND SHADOW VEHICLE AT 100 FOOT SPACING. CONES MAY BE OMITTED ON PAINTED LINE IF APPROVED BY THE ENGINEER. CONSIDER PAVEMENT MARKING DRY OR CURE TIMES AND TRAFFIC VOLUME.

CONES SHALL BE A MINIMUM HEIGHT OF 28" FOR WET PAVEMENT MARKINGS

1. SIGNS SHALL BE REPEATED APPROXIMATELY EVERY THREE MILES AND AFTER EVERY ON RAMP.
2. IF CONSTRUCTION WORK ZONE SIGNS ARE IN PLACE, W20-1A OR W21-63 ARE NOT REQUIRED.

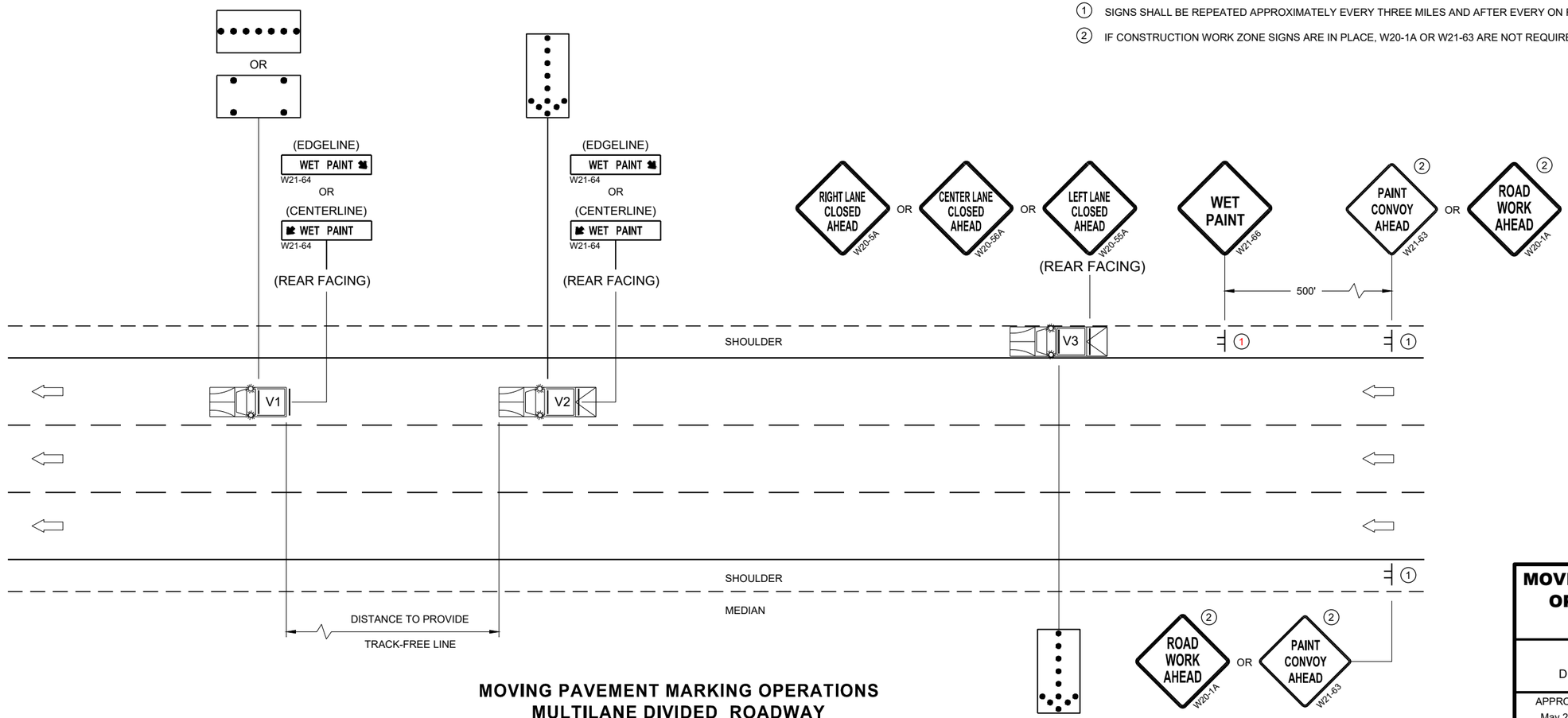

MOVING PAVEMENT MARKING OPERATIONS
MULTILANE DIVIDED ROADWAY

MOVING PAVEMENT MARKING OPERATION MULTI-LANE DIVIDED ROADWAY

STATE OF WISCONSIN
DEPARTMENT OF TRANSPORTATION

APPROVED
May 2022 — DATE
/S/ Andrew Heidtke — WORK ZONE ENGINEE
FHWA

6

SDD 15C19 - 07c

6

SDD 15C19 - 07c

LEGEND

SIGN ON PERMANENT SUPPORT

DIRECTION OF TRAVEL

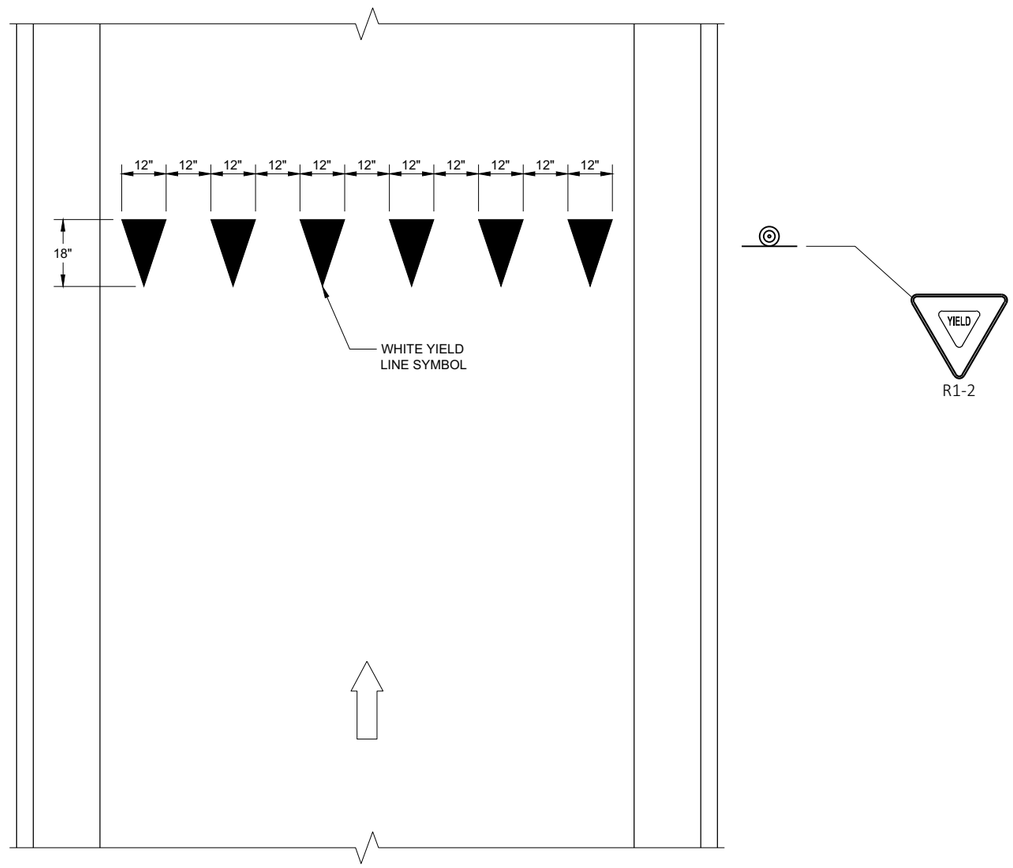

YIELD LINE

6

6

SDD 15C20 - 02

SDD 15C20 - 02

YIELD MARKINGS

STATE OF WISCONSIN
DEPARTMENT OF TRANSPORTATION

APPROVED

4-81-2016
DATE

/S/ Matthew R. Rauch
STATE SIGNING AND MAR
ENGINEER

FHWA

GENERAL NOTES

STOP SIGN SHALL BE PLACED A MINIMUM OF 6 FEET TO A MAXIMUM OF 50 FEET FROM THE EDGELINE LOCATION.

1. 18-INCH STOP LINES MAY BE DELETED OR ADDED BY THE REGION MARKING ENGINEER BASED ON VISIBILITY AND SIGHT LINES.
2. NO STOP LINE IS REQUIRED IF STOP SIGN IS LESS THAN OR EQUAL TO 40 FEET FROM THE EDGELINE.
3. NO STOP LINE IS REQUIRED IF STOP SIGN IS LESS THAN OR EQUAL TO 30 FEET FROM THE FLANGELINE EXTENSION.
4. MOVE CLOSER TO THE EDGE OF TRAVEL LINE AS NEEDED FOR VISIBILITY AND SIGHT LINES (NO CLOSER THAN 4 FEET).
5. LADDER BAR CROSSWALKS SHOULD ONLY BE USED FOR MID BLOCK CROSSINGS. USE 2 - 6" TRANSVERSE LINES INSTEAD.

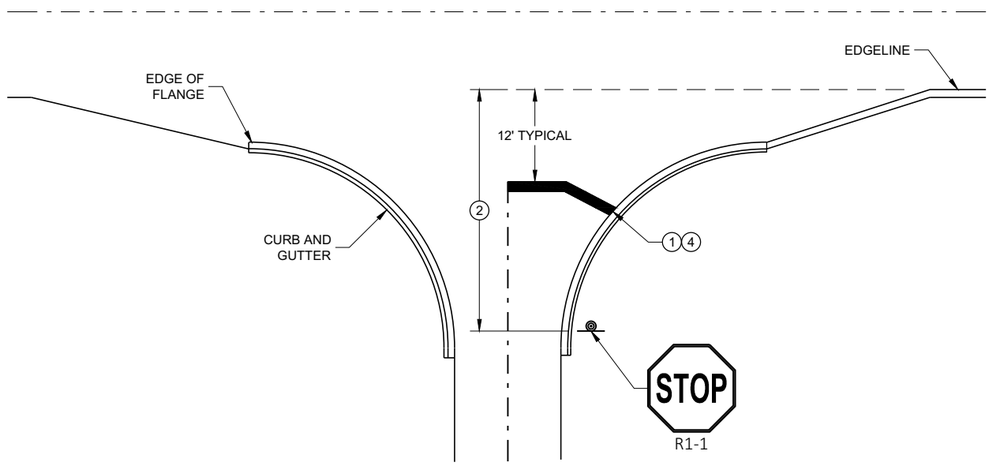

TYPICAL STOP LINE PAVEMENT MARKING WITH CURB AND GUTTER

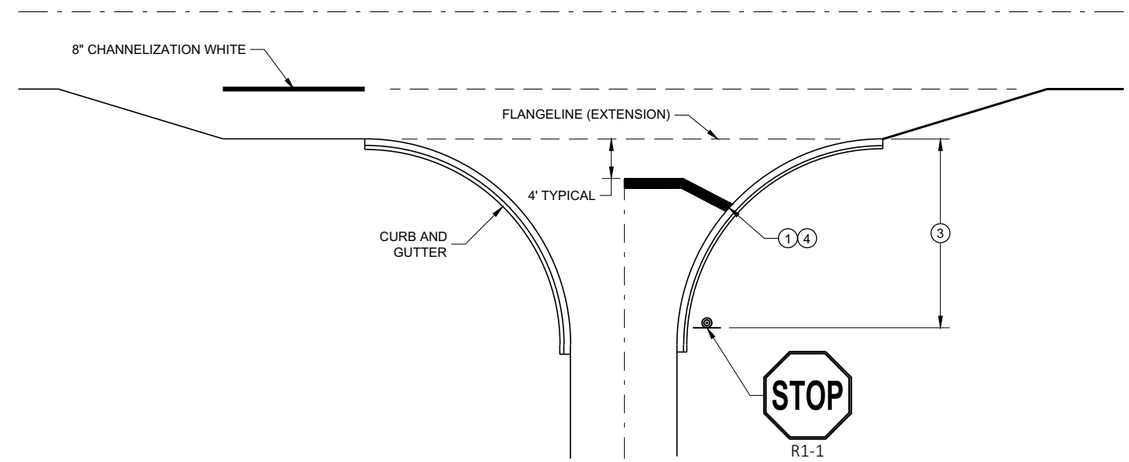

TYPICAL STOP LINE PAVEMENT MARKING FOR SIDEROADS WITH RIGHT TURN LANE

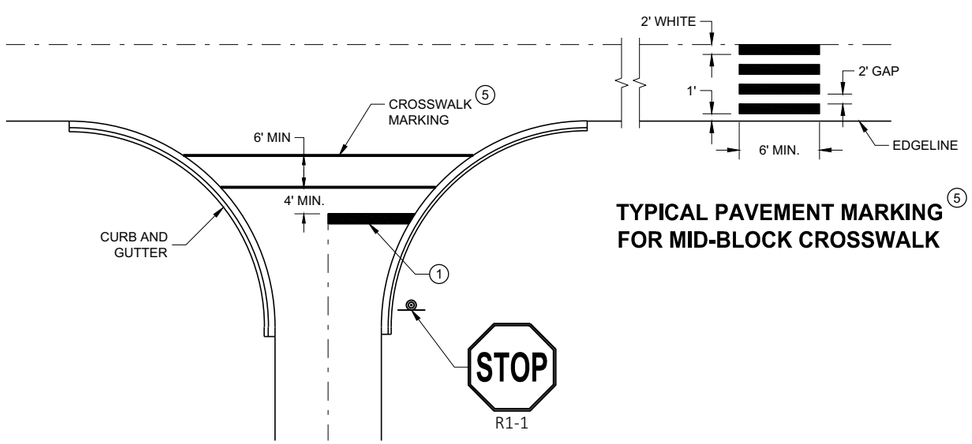

TYPICAL STOP LINE PAVEMENT MARKING FOR SIDEROADS WITH CROSSWALK MARKING

TYPICAL PAVEMENT MARKING 5 FOR MID-BLOCK CROSSWALK

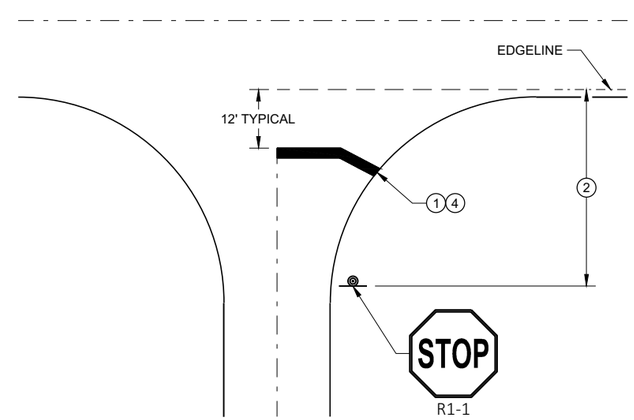

TYPICAL STOP LINE PAVEMENT MARKING WITHOUT CURB AND GUTTER

STOP LINE AND CROSSWALK PAVEMENT MARKING

STATE OF WISCONSIN
DEPARTMENT OF TRANSPORTATION

APPROVED
November 2019 — DATE
/S/ Matthew Rauch — STATE SIGNING AND MAR ENGINEER
FHWA

6

SDD 15C33 - 04

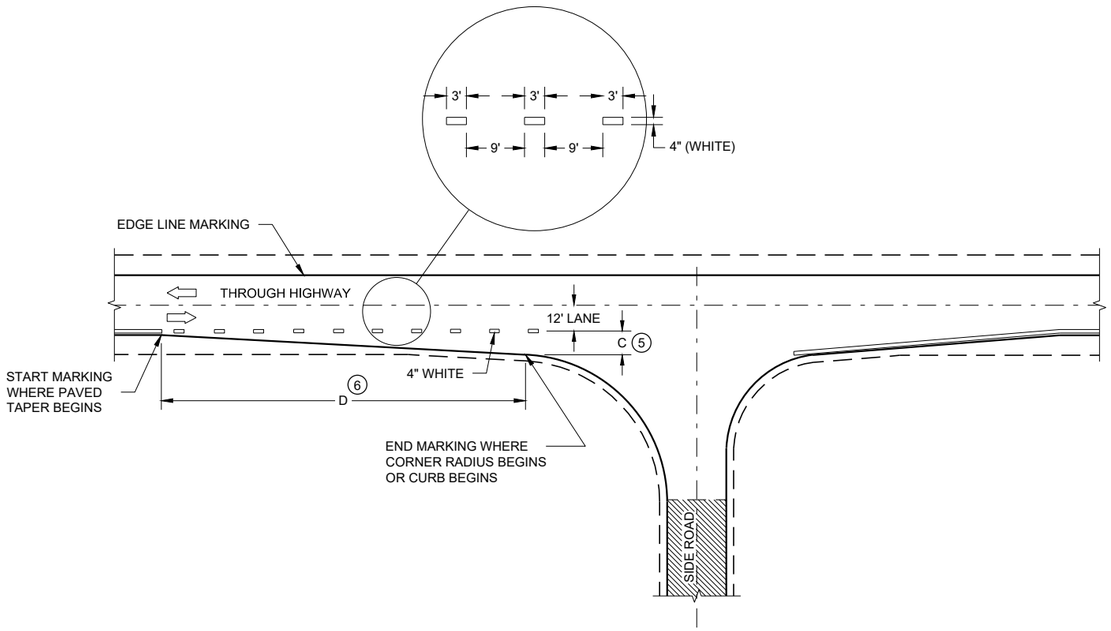

MINOR INTERSECTION

GENERAL NOTES

OMIT EDGE LINES THROUGH INTERSECTIONS. CONTINUE EDGE LINES THROUGH DRIVEWAYS.

1. WHEN DISTANCE "A" IS LESS THAN 250 FEET, OMIT LANE LINE.
2. WHEN DISTANCE "B" IS LESS THAN 100 FEET, OMIT CHANNELIZING LANE LINE.
3. BARRIER LINE ENDS AT SIDE ROAD PAVEMENT / SURFACE EDGE EXTENSION.
4. BARRIER LINE STARTS 500 FEET PRIOR TO THE BYPASS TAPER.
5. WHEN DISTANCE "C" IS LESS THAN 4 FEET, OMIT DOTTED EXTENSION.
6. WHEN DISTANCE "D" IS LESS THAN 50 FEET, OMIT DOTTED EXTENSION.

LEGEND

DIRECTION OF TRAVEL

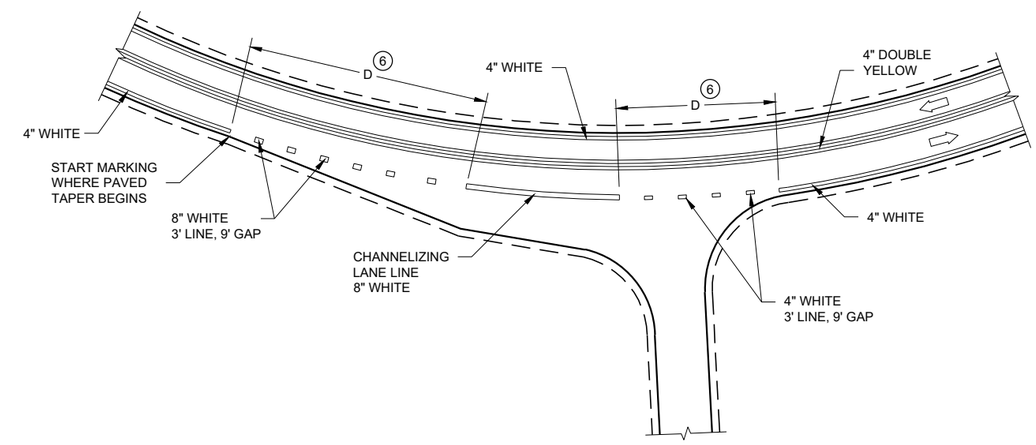

INTERSECTION ON OUTSIDE OF CURVE

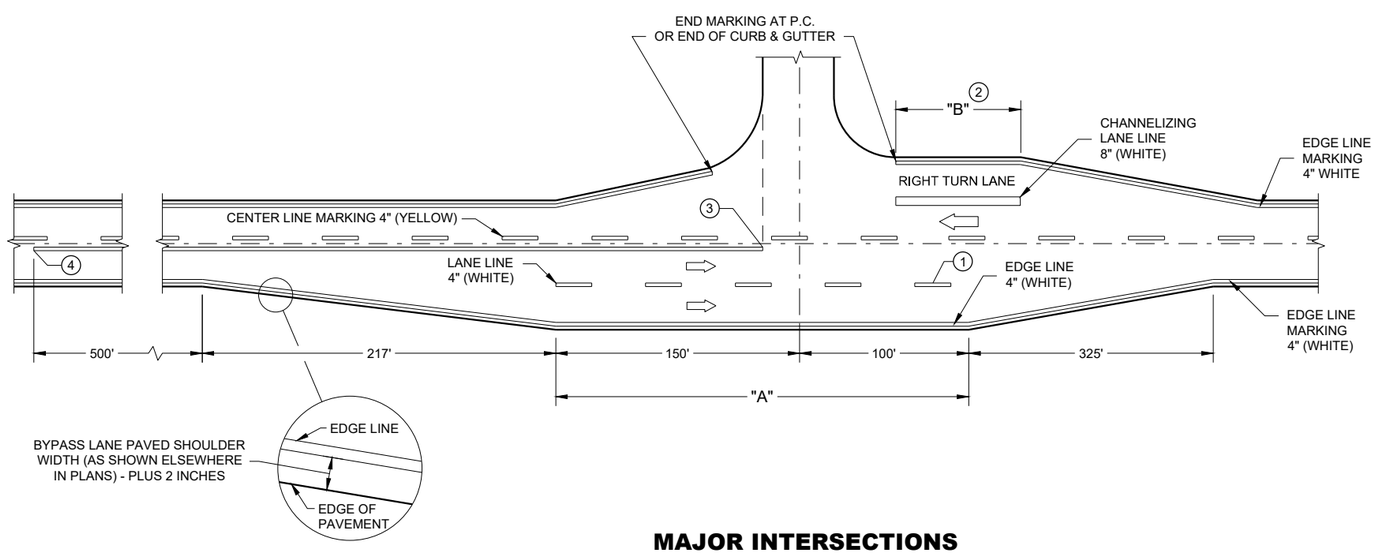

MAJOR INTERSECTIONS

(INTERSECTION WITH FULL RIGHT TURN LANE OR BYPASS LANE)

PAVEMENT MARKING (INTERSECTIONS)

STATE OF WISCONSIN
DEPARTMENT OF TRANSPORTA

6

SDD 15C35 - 05a

LEGEND

- SIGN ON PERMANENT SUPPORT
- TRAFFIC CONTROL DRUM
- TRAFFIC CONTROL DRUM WITH TYPE "C" STEADY BURN LIGHT
- TYPE III BARRICADE WITH ATTACHED SIGN
- TYPE "A" WARNING LIGHT (FLASHING)
- FLASHING ARROW BOARD
- DIRECTION OF TRAFFIC
- REMOVE PAVEMENT MARKING (SEE GENERAL NOTES)
- WORK AREA

GENERAL NOTES

FOR WORK ON ROADWAYS WITH SPEEDS GREATER THAN 45MPH, USE SDD 15D12.

THIS LANE CLOSURE DETAIL IS TYPICAL FOR CLOSING THE LEFT LANE. FOR A RIGHT LANE CLOSURE, REVERSE THE TRAFFIC CONTROL.

THIS DETAIL MAY BE USED FOR ROADWAYS WITH EITHER TWO OR THREE LANES IN EACH DIRECTION.

ALL SIGNS ARE 48"X48" UNLESS OTHERWISE NOTED. IF NECESSARY DUE TO SPACE CONSTRAINTS IN URBAN AREAS, 36"X 36" SIGNS MAY BE USED IF APPROVED BY REGIONAL TRAFFIC UNIT.

"WO" SIGN IS THE SAME AS "W" SIGN EXCEPT THE BACKGROUND IS ORANGE.

ANY SIGNS TEMPORARY OR EXISTING, WHICH CONFLICT WITH THE TRAFFIC CONTROL "IN USE" SHALL BE REMOVED OR COVERED AS NEEDED AND AS APPROVED BY THE ENGINEER. NO WARNING LIGHTS SHALL BE WORKING ON COVERED OR "DOWNED" SIGNS.

SIGNS THAT WILL BE IN PLACE LESS THAN 7 CONTINUOUS DAYS AND NIGHTS OR THAT WILL BE PLACED IN A CLOSED LANE MAY BE MOUNTED ON TEMPORARY SUPPORTS.

THE EXACT NUMBER, LOCATION, AND SPACING OF ALL SIGNS AND DEVICES SHALL BE ADJUSTED TO FIT FIELD CONDITIONS AS APPROVED BY THE ENGINEER.

THE SPACING BETWEEN TRAFFIC CONTROL SIGNS SHOULD BE ADJUSTED TO NOT CONFLICT WITH AND TO PROVIDE A MINIMUM OF 200 FEET (500' DESIRABLE) DISTANCE TO EXISTING SIGNS THAT WILL REMAIN IN PLACE

W20-1A, G20-1 AND G20-2A SIGNS ARE NOT REQUIRED IF THE LANE CLOSURE IS WITHIN A LARGER WORK ZONE WHERE THESE SIGNS ARE ALREADY PRESENT.

REMOVE PAVEMENT MARKINGS AND PLACE TEMPORARY PAVEMENT MARKING LINE IF LANE CLOSURE IS TO BE IN PLACE FOR 4 OR MORE CONTINUOUS DAYS AND NIGHTS.

CONSIDER GEOMETRICS WHEN LOCATING SIGNS AND ARROW BOARDS SO THE APPROACHING DRIVER HAS A CLEAR VIEW OF THE ARROW BOARDS AND LANE CLOSURE DRUMS FOR A MINIMUM 1500 FEET IN FRONT OF DRUMS.

BARRICADES IN A CLOSED LANE THAT MUST BE MOVED FOR A WORK OPERATION SHALL BE IMMEDIATELY REESTABLISHED UPON COMPLETION OF THE OPERATION, OR FOR CONTINUING OPERATIONS, AT THE END OF EACH WORKING DAY.

CHANNELIZING DEVICES PLACED ADJACENT TO WORK AREA SHALL BE PULLED BACK FROM THE TRAVEL LANE WHEN WORK IS NOT IN PROGRESS.

WARNING LIGHTS ARE NOT REQUIRED IF THE LANE CLOSURE IS A DAYTIME ONLY OPERATION.

(1) OMIT G20-1 SIGNS IF LENGTH OF WORK AREA IS 2 MILES OR LESS.

(2) WHERE THE SHOULDER OR TERRACE HAS INSUFFICIENT SPACE TO PLACE THE ARROW BOARD AS SHOWN, PLACE THE ARROW BOARD AT THE END OF THE TAPER.

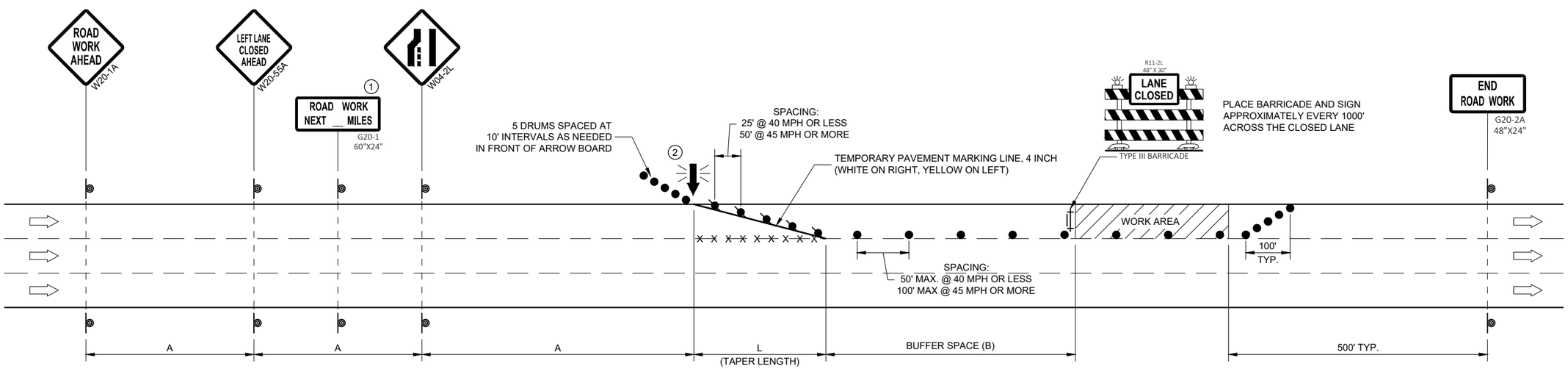

POSTED SPEED LIMIT PRIOR TO WORK STARTING (MPH)	ADVANCE WARNING SIGN SPACING (A) FEET	TAPER LENGTH (12 FT. LANE) (L) FEET	BUFFER SPACE (B) FEET
25	200'	125'	55'
30	200'	180'	85'
35	350'	245'	120'
40	350'	320'	170'
45	500'	540'	220'

TRAFFIC CONTROL, SINGLE LANE CLOSURE, DIVIDED NON-FREEWAY/EXPRESSWAY

STATE OF WISCONSIN
DEPARTMENT OF TRANSPORTATION

APPROVED
February 2022 — DATE
/S/ Andrew Heidtke — WORK ZONE ENGINEE
FHWA

6

SDD 15D20 - 06a

LEGEND

- TYPE III BARRICADE WITH ATTACHED SIGN
- SIGN ON PERMANENT SUPPORT
- TRAFFIC CONTROL DRUM
- TRAFFIC CONTROL DRUM WITH TYPE "C" STEADY BURN LIGHT
- TYPE "A" WARNING LIGHT (FLASHING)
- DIRECTION OF TRAFFIC
- WORK AREA

POSTED SPEED LIMIT PRIOR TO WORK STARTING (MPH)	ADVANCE WARNING SIGN SPACING (A) FEET	SHIFTING TAPER L/2 W, LATERAL OFFSET (FT)					
		3	4	5	6	7	8
25	200	10	14	17	21	24	28
30	200	15	20	25	30	35	40
35	350	20	27	34	40	47	54
40	350	26	35	44	53	62	70
45	500	45	59	74	89	104	119
50	500	50	66	83	99	116	132
55	500	54	73	91	109	127	145

GENERAL NOTES

THE EXACT NUMBER, LOCATION, AND SPACING OF ALL SIGNS AND DEVICES SHALL BE ADJUSTED TO FIT FIELD CONDITIONS AS APPROVED BY THE ENGINEER.

ALL SIGNS ARE 48"x48" UNLESS OTHERWISE NOTED. IF NECESSARY DUE TO SPACE CONSTRAINTS IN URBAN AREAS, 36"x36" SIGNS MAY BE USED IF APPROVED BY THE REGIONAL TRAFFIC UNIT.

"WO" IS THE SAME AS "W" EXCEPT THE BACKGROUND IS ORANGE.

ANY SIGNS TEMPORARY OR EXISTING, WHICH CONFLICT WITH TRAFFIC CONTROL "IN USE" SHALL BE REMOVED OR COVERED AS NEEDED AND AS APPROVED BY THE ENGINEER.

CHANNELIZING DEVICES PLACED ADJACENT TO WORK AREA SHALL BE PULLED BACK FROM THE TRAVEL LANE WHEN WORK IS NOT IN PROGRESS.

SIGNS THAT WILL BE IN PLACE LESS THAN 7 CONTINUOUS DAYS AND NIGHTS MAY BE MOUNTED ON PORTABLE SUPPORTS.

W20-1 AND G20-2A SIGNS ARE NOT REQUIRED IF THE WORK AREA IS WITHIN A LARGER WORK ZONE WHERE THESE SIGNS ARE ALREADY PRESENT. G20-2A SIGNS MAY ALSO BE OMITTED IF DURATION WORK IS LESS THAN SEVEN CONTINUOUS DAYS AND NIGHTS.

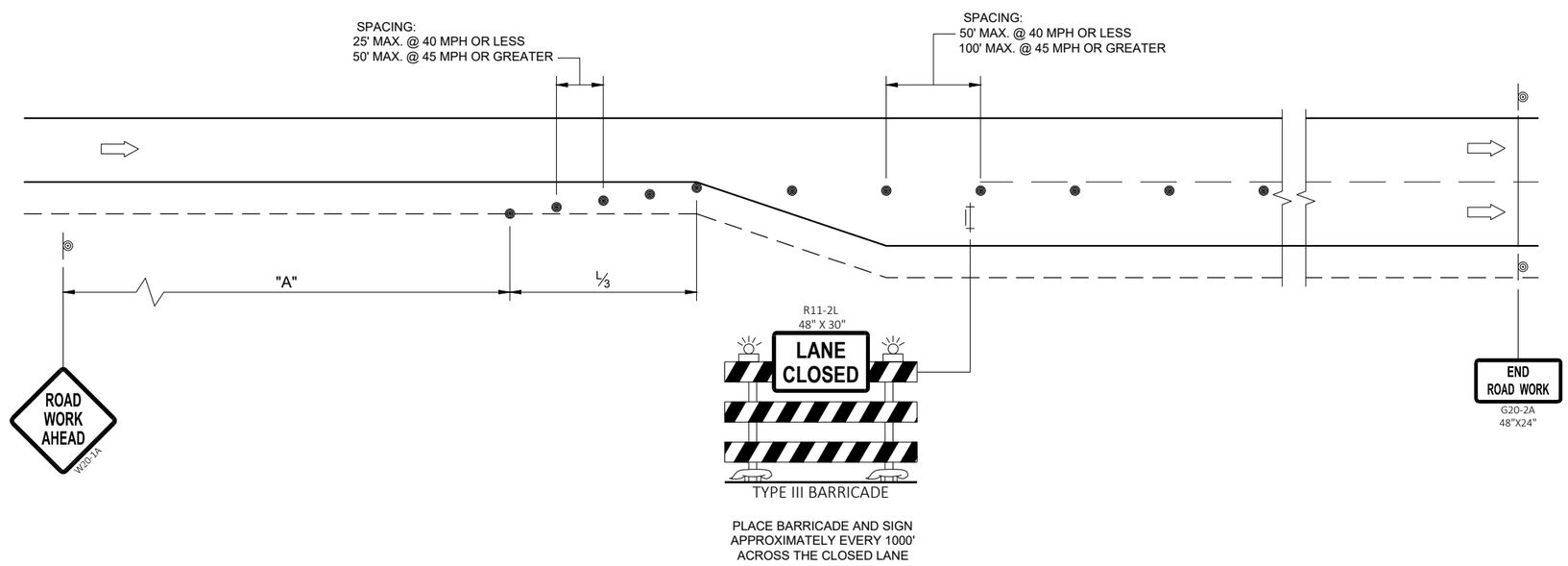

6

6

TRAFFIC CONTROL
ADDED LANE CLOSURE
WITHOUT LANE SHIFT

STATE OF WISCONSIN
DEPARTMENT OF TRANSPORTATION

APPROVED
February 2022 — DATE
/S/ Andrew Heidtke — WORK ZONE ENGINEE
FHWA

SDD 15D50 - 02a

SDD 15D50 - 02a

NOTES

1. Fixed Message signs are Type II - Type F Reflective
2. Color:
   Background - Orange
   Message - Black
3. Message Series - D

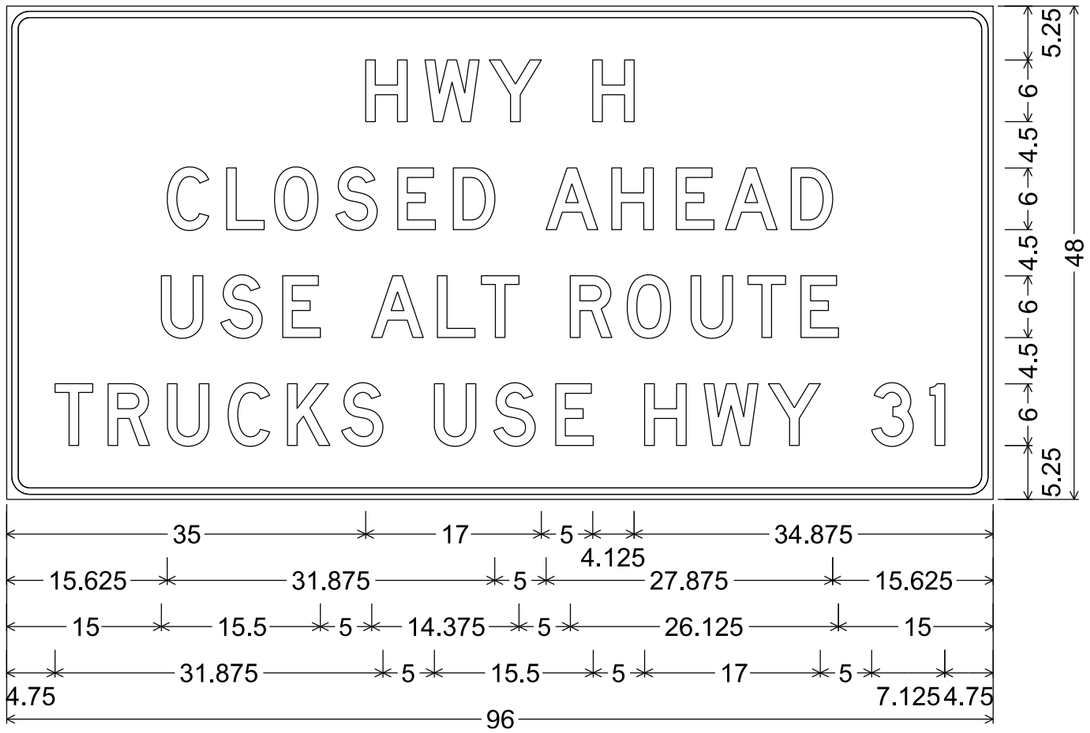

2.250" Radius, 0.625" Border, 0.500" Indent

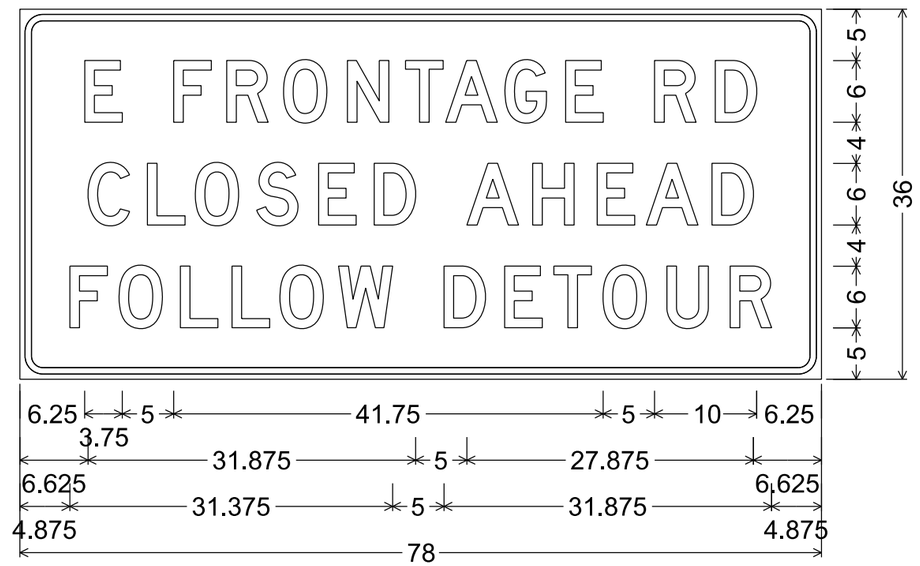

2.250" Radius, 0.625" Border, 0.500" Indent

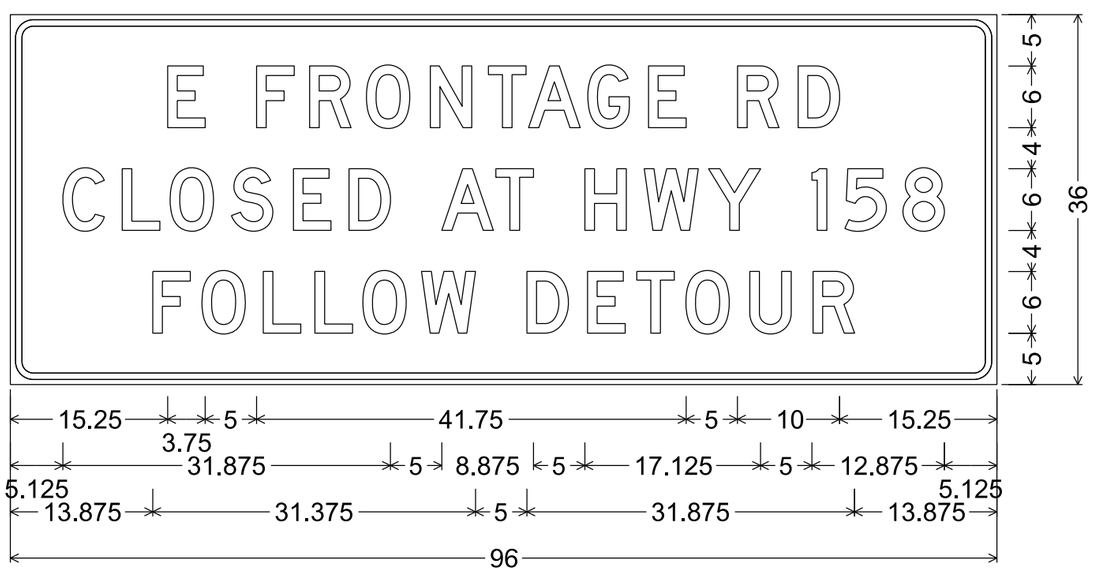

2.250" Radius, 0.625" Border, 0.500" Indent

7

7

PROJECT NO: 3700-11-70	HWY: VAR. SIGNALIZED INTERSECTIONS	COUNTY: KENOSHA	TEMPORARY SIGNING	SHEET NO: 174	E

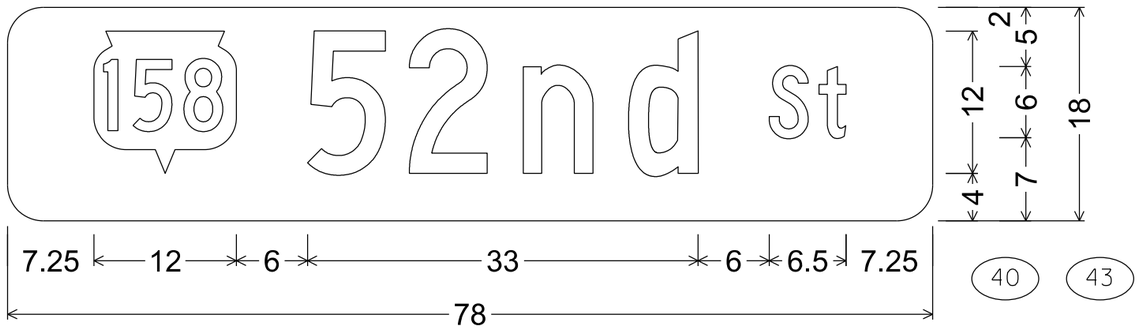

M1-94S; 3.000" Radius, No border

NOTES

1. All Signs Type II - Type H Reflective
2. Color:
   Background - Green
   Message - White
3. Message Series - C

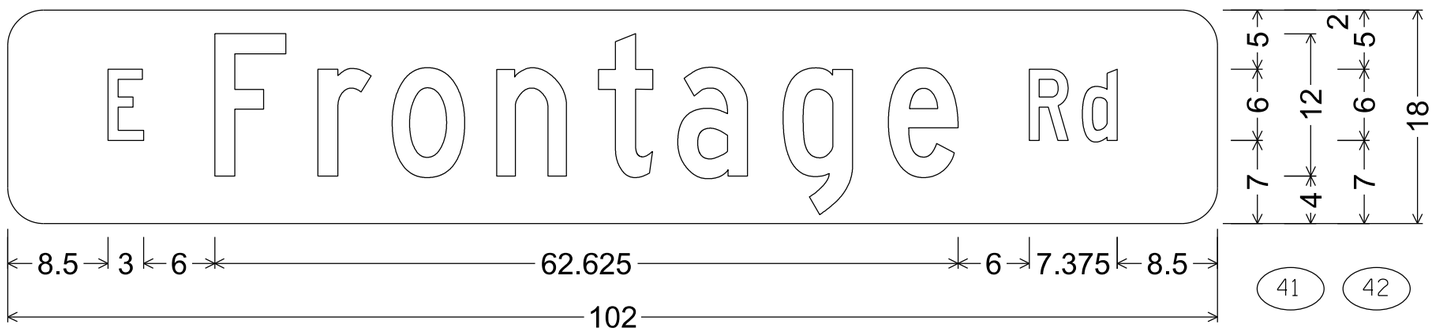

M1-94H; 3.000" Radius, No border

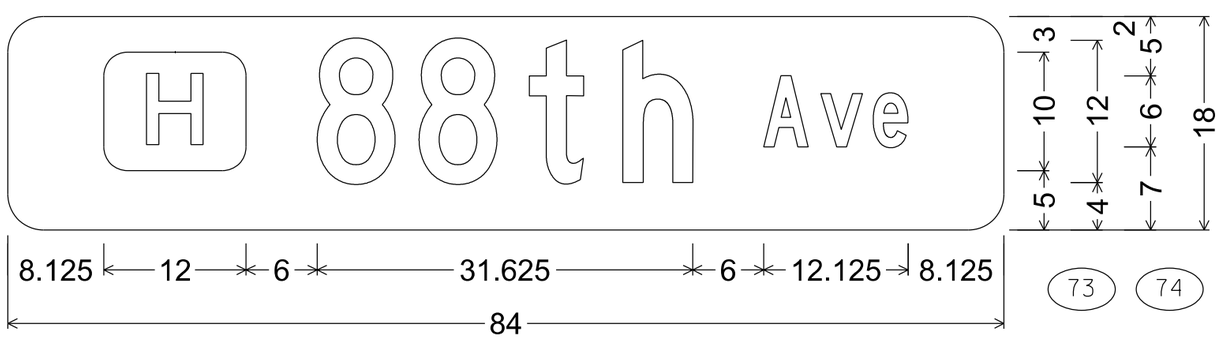

M1-94S; 3.000" Radius, No border

7

7

PROJECT NO: 3700-11-70	HWY: STH 158/165	COUNTY: KENOSHA	PERMANENT SIGNING	SHEET NO: 175	E

TYPICAL ASSEMBLIES

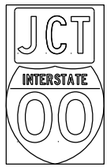

J1-1

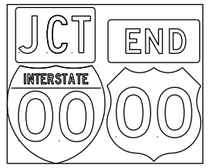

J1-2

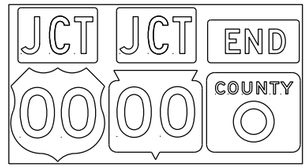

J1-3

JR1-1

JV
(Typical Vertical J-Assembly
See Note 10 and 11)

J2-1

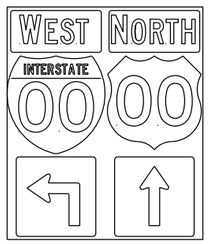

J2-2

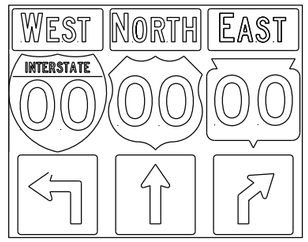

J2-3

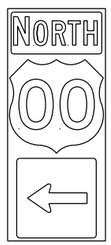

J3-1

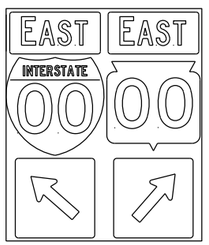

J3-2

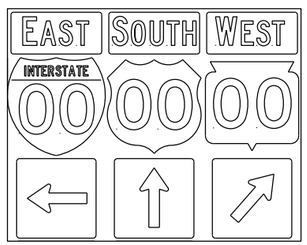

J3-3

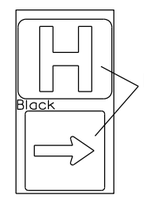

Blue Background
JH-1

J4-1

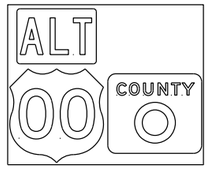

J4-2

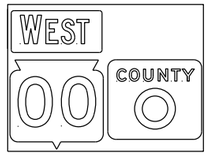

J4-2

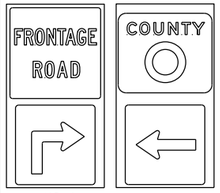

J12-1

J13-1

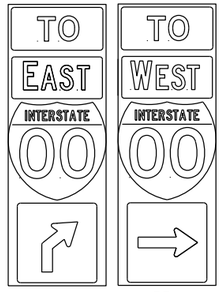

J32-1

J33-1

J22-1

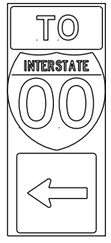

J23-1

JR13-1

JR23-1

JR99-1

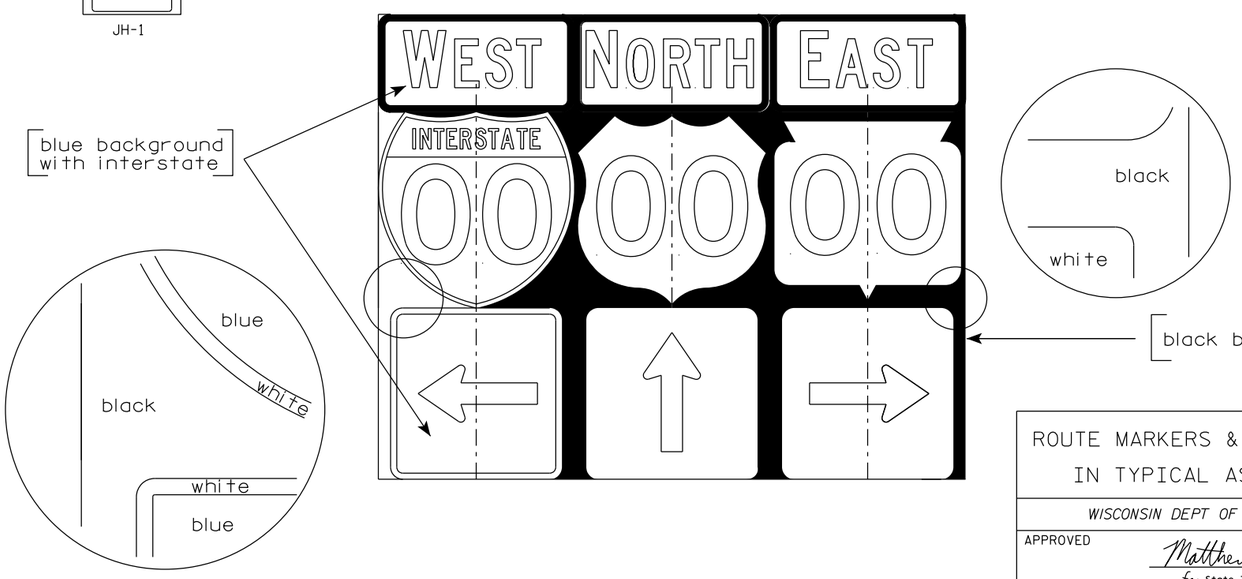

NOTES

1. Signs are Type II - Type H Reflective
2. Color:
   Background - Black Non-reflective
   Message - see Note 5
3. Message Series - See Note 5
4. Corners shall be square or rounded if base material is plywood. If base material is metal the corners shall be rounded.
5. The colors and message spacing on each marker shall be according to the applicable route marker panel specifications.
6. Certain marker heads require the component pieces to be the same color. As an example, all the components used with an M1-1 Interstate marker shall be blue.
7. Single panel j-assemblies shall only be used with route marker shields that are same size. If the route marker shields are different size use multiple piece component.
8. Route assemblies that have 24 inch route shields and have dimensions greater than 48 inches (both vertical and horizontal) shall have one horizontal splice between the arrows and route shields. Vertical splices shall not be used on route assemblies with a horizontal dimension of 144 inches or less. The contractor shall not use more than one vertical joint per sign and the joint shall be between route shields.
9. Route assemblies that have 36 inch shields and have dimensions greater than 48 inchs (both vertical and horizontal) shall have two horizontal splices. One horizontal splice shall be between the cardinal direction and route shields and the other horizontal splice shall be between the arrows and route shields. Vertical splices shall not be used on route assemblies with a horizontal dimension of 144 or less. The contractor shall not use more than one vertical joint per sign and the joint shall be between route shields.
10. All Vertical J Assemblies are given a Sign Code of JV
11. For JV Assemblies that have a mixture of Interstate and non Interstate shields, arrows and cardinals shall be white on blue.

ROUTE MARKERS & COMPONENTS
IN TYPICAL ASSEMBLIES

WISCONSIN DEPT OF TRANSPORTATION

APPROVED Matthew R Rauch
for State Traffic Engineer

DATE 3/18/21 PLATE NO. A2-1S.9

PROJECT NO:

SHEET NO: 176 E

URBAN AREA

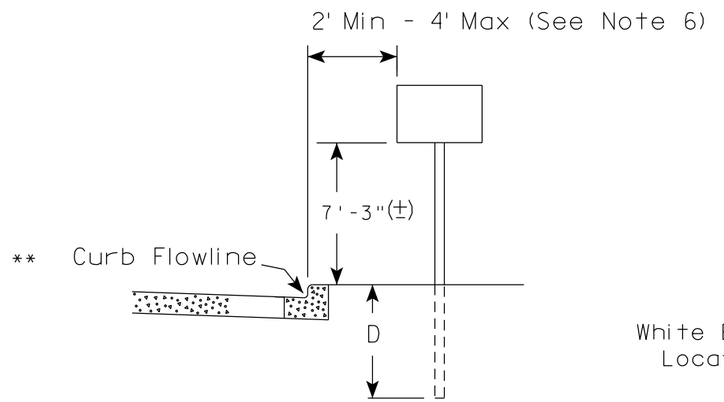

RURAL AREA (See Note 2)

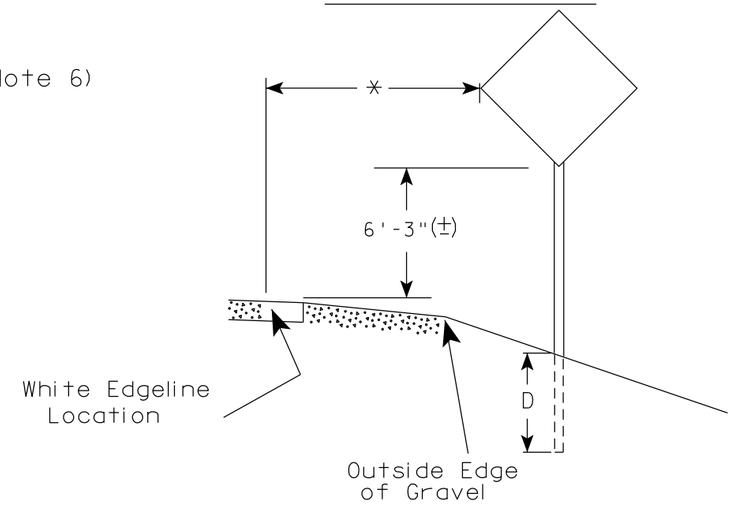

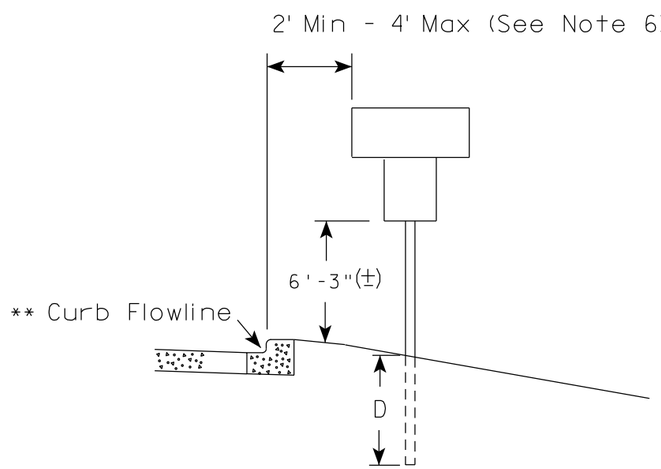

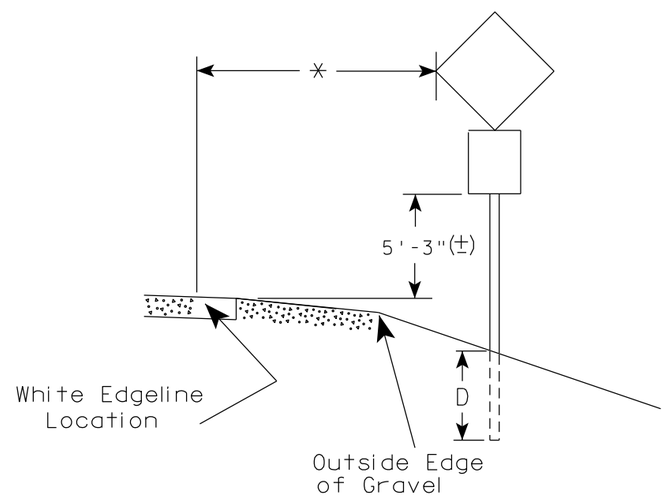

** The existence of curb and gutter does not in itself mandate the vertical clearance illustrated. That height is typically measured where there is sidewalk adjacent to the roadway or parking is permitted. In the absence of sidewalk vertical clearance is measured from the top of the curb. Offset of signs is measured from the flow line.

* 6 feet from edge of a paved shoulder or 12 feet from the edge of pavement (edge line location) or 2 feet from outside edge of gravel, whichever is greater unless directed by project engineer.

GENERAL NOTES

1. Signs wider than 4 feet or 20 sq.ft or larger, shall be mounted on multiple posts. Refer to plate A4-4.
2. If signs are mounted on or behind barrier wall, see A4-10 sign plate.
   The Double Arrow sign (W12-1D) shall be mounted at a height of 2'-3" (±). The Chevron sign (W1-8), Roundabout Chevron panel (R6-4B), Enhanced Reference Markers, Clearance Markers (W5-52), Mile Markers (D10 series), In Road Object Markers (W5-54) & End of Road Markers (W5-56) shall be mounted at a height of 4'-3" (±).
3. For expressways and freeways, mounting height is 7'- 3" (±) or 6'-3" (±) depending upon existence of a sub-sign.
4. Minimum mounting height for signs mounted on traffic signal poles is 5'- 3" (±).
5. Offset distance shall be consistent with existing signs or consistent throughout length of project.
6. The (±) tolerance for mounting height is 3 inches.
7. Folding signs shall be mounted at a height of 5'-3" (±) or as directd by the Engineer.

POST EMBEDMENT DEPTH

Area of Sign Installation (Sq.Ft.)	D (Min)
20 or Less	4'
Greater than 20	5'

TYPICAL INSTALLATION OF PERMANENT TYPE II SIGNS ON SINGLE POSTS

WISCONSIN DEPT OF TRANSPORTATION

APPROVED Matthew R Rauch for State Traffic Engineer

DATE 5/13/2020 PLATE NO. A4-3.22

7 7

PROJECT NO:	HWY:	COUNTY:		SHEET NO: 177	E

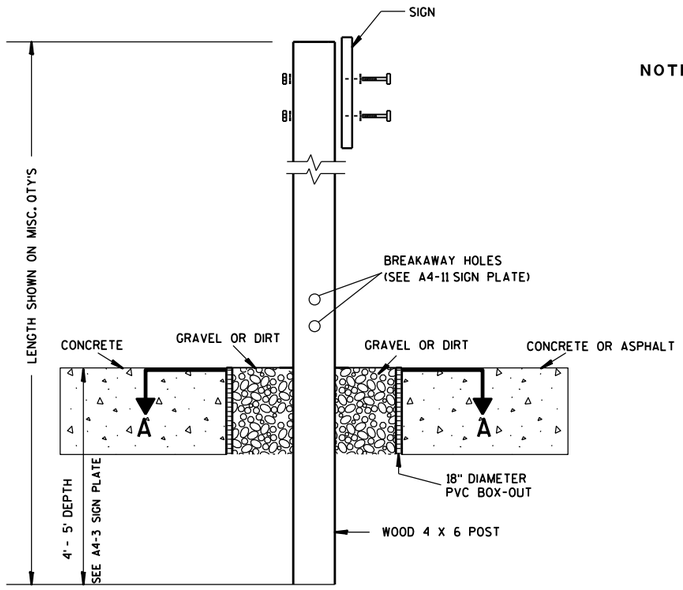

ELEVATION VIEW

DETAIL OF WOOD 4 X 6 SIGN POST IN BOX-OUT

NOTES:
1. ALL MATERIAL TO BE APPROVED BY ENGINEER PRIOR TO INSTALLATION
2. SEE SIGN PLATE A4-8 FOR SIGN HARDWARE REQUIREMENTS
3. 18 INCH X 18 INCH SQUARE BOX-OUTS MAY BE USED FOR INSTALLATIONS IN EXISTING CONCRETE OR ASPHALT LOCATIONS.

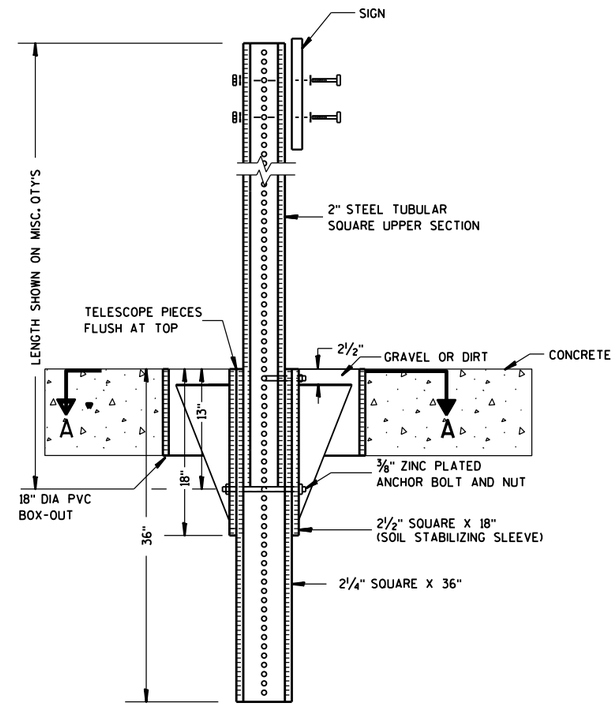

ELEVATION VIEW

DETAIL OF STEEL 2 X 2 SIGN POST IN BOX-OUT

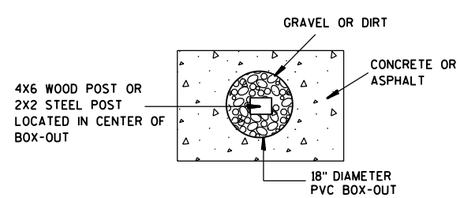

PLAN VIEW

FOR NEW CONCRETE/ASPHALT INSTALLATIONS

SIGN POST
BOX-OUTS
A4-3B

WISCONSIN DEPT OF TRANSPORTATION

APPROVED Matthew R Rauch
for State Traffic Engineer

DATE 1/27/14 PLATE NO. A4-3B.1

PROJECT NO:	HWY:	COUNTY:		SHEET NO:	E

URBAN AREA

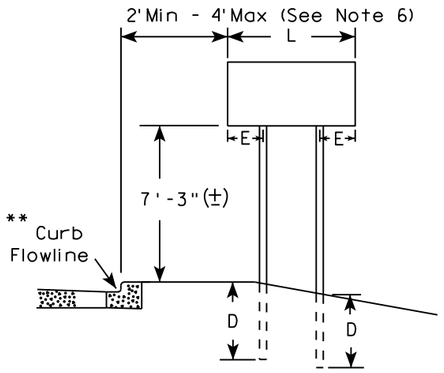

RURAL AREA (See Note 3)

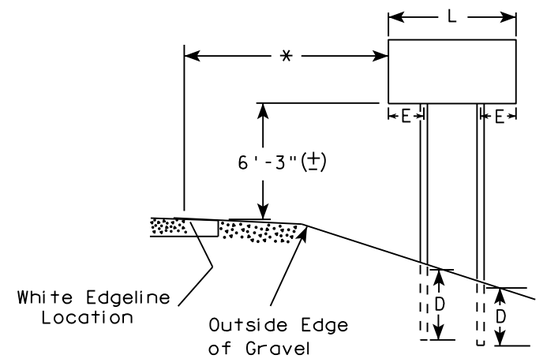

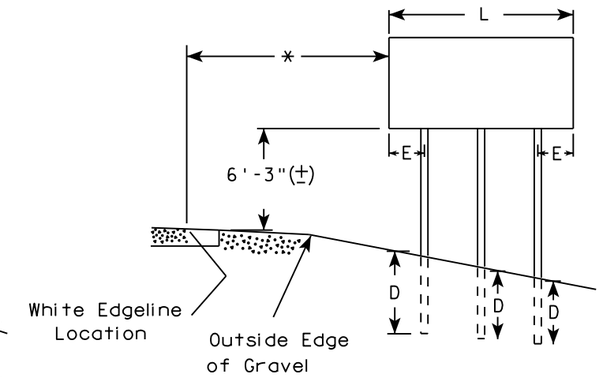

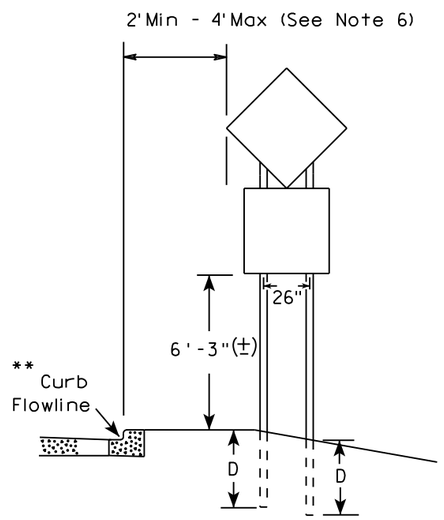

48" DIAMOND WARNING SIGN

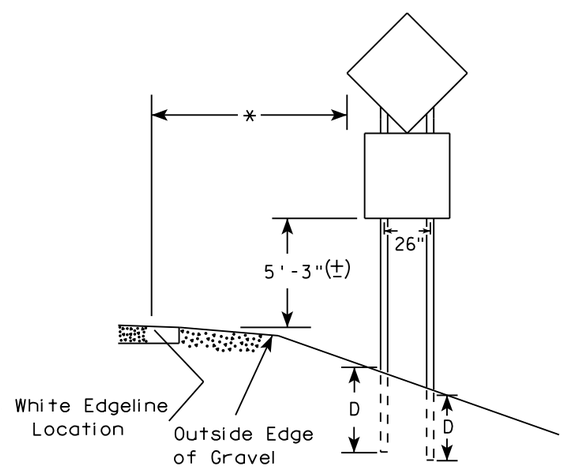

48" DIAMOND WARNING SIGN

SIGN SHAPE OTHER THAN DIAMOND (TWO POSTS REQUIRED)	
L	E
*** Greater than 48" Less than 60"	12"
60" to 108"	L/5

SIGN SHAPE OTHER THAN DIAMOND (THREE POSTS REQUIRED)	
L	E
Greater than 108" to 144"	12"

GENERAL NOTES

1. For 3 or 4 post installations, individual post spacing shall be greater than 3'-6".
2. See tables below for required number of posts.
3. For expressways and freeways, mounting height is 7'-3" (±) or 6'-3" (±) depending upon existence of sub-sign.
4. The (±) tolerance for mounting height is 3 inches.
5. J-Assemblies are considered to be one sign for mounting height.
6. Offset distance shall be consistent with existing signs or consistent throughout length of project.
7. Folding signs shall be mounted at a height of 5'-3" (±) or as directed by the engineer.
8. The Double Arrow sign (W12-1) shall be mounted at a height of 2'-3" (±). The Chevron sign (W1-8), Roundabout Chevron panel (R6-4B), Clearance Markers (W5-52), Mile Markers (D10 series), In Road Object Markers (W5-54) & End of Road Markers (W5-56) shall be mounted at a height of 4"-3" (±).

* 6 feet from edge of a paved shoulder or 12 feet from the edge of pavement (edge line location) or 2 feet from outside edge of gravel, whichever is greater unless directed by project engineer.

** The existence of curb and gutter does not in itself mandate the vertical clearance illustrated. That height is typically measured where there is sidewalk adjacent to the roadway or parking is permitted. In the absence of sidewalk vertical clearance is measured from the top of the curb. Offset of signs is measured from the flow line.

*** See A4-3 sign plate for signs 4' or less in width and less than 20 S.F. in area.

POST EMBEDMENT DEPTH

Area of Sign Installation (Sq. Ft.)	D (Min)
20 or Less	4'
Greater than 20	5'

TYPICAL INSTALLATION OF TYPE II SIGNS ON MULTIPLE POSTS

WISCONSIN DEPT OF TRANSPORTATION

APPROVED Matthew R Rauch
For State Traffic Engineer

DATE 8/21/17 PLATE NO. A4-4.15

7

7

PROJECT NO:	HWY:	COUNTY:		SHEET NO: 179	E

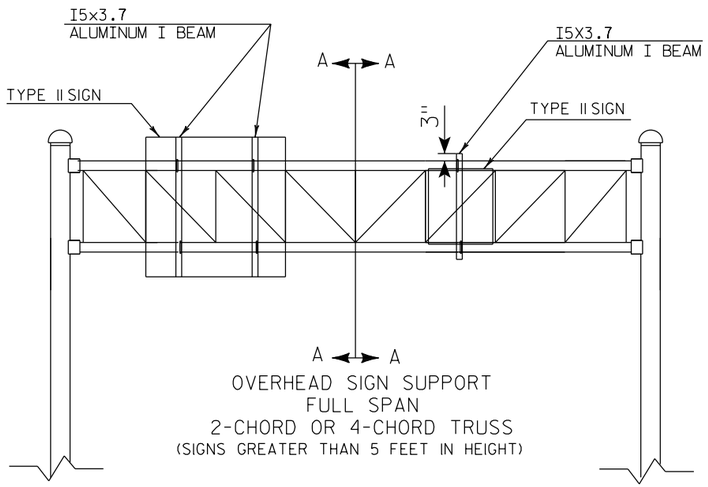

OVERHEAD SIGN SUPPORT
FULL SPAN
2-CHORD OR 4-CHORD TRUSS
(SIGNS GREATER THAN 5 FEET IN HEIGHT)

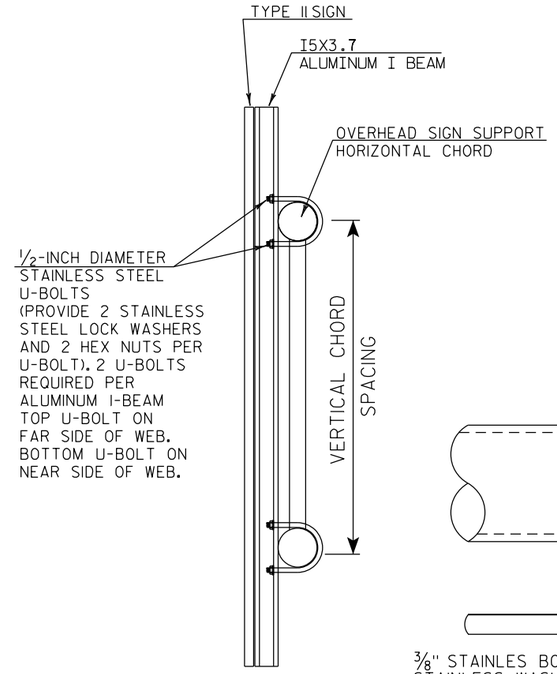

CUT SECTION A-A

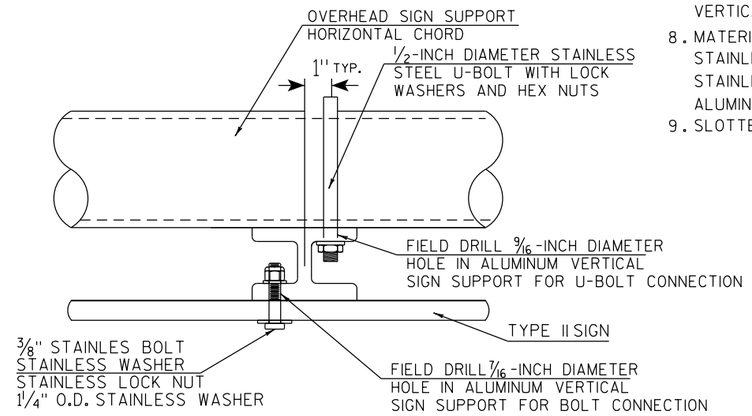

TYPICAL SIGN CONNECTION FOR
2-CHORD OR 4-CHORD TRUSS
PLAN VIEW

GENERAL NOTES

1. USE STAINLESS STEEL U-BOLTS, WASHERS, AND NUTS.
2. USE STAINLESS BOLTS AT BOLT HOLES IN SIGN PANEL PER SIGN PLATE A4-18.
3. USE ALUMINUM VERTICAL SIGN SUPPORT BEAMS HAVING A 5 INCH BEAM DEPTH AND WEIGHT OF 3.7 LBS PER FOOT.
4. U-BOLTS SHALL BE STAINLESS STEEL AND MANUFACTURED TO THE PROPER SIZE TO FIT THE CHORDS OF THE OVERHEAD SIGN STRUCTURE.
5. DIAMETER OF U-BOLTS SHALL BE AS SHOWN.
6. THE LENGTH OF THE ALUMINUM VERTICAL SIGN SUPPORT BEAMS SHALL BE THE SAME AS THE HEIGHT OF THE SIGN THEY ARE SUPPORTING. BEAM LENGTHS MAY BE LONGER FOR PROPER ATTACHMENT TO CHORDS.
7. SEE DETAIL BELOW FOR SPACING OF ALUMINUM VERTICAL SIGN SUPPORTS
8. MATERIAL NOTES:
   STAINLESS STEEL U-BOLTS, BOLTS, AND LOCKWASHERS ASTM 304.
   STAINLESS STEEL HEX NUTS ASTM A276.
   ALUMINUM I-BEAMS ARE 6061-T6.
9. SLOTTED HOLES IN I-BEAMS ARE NOT ALLOWED

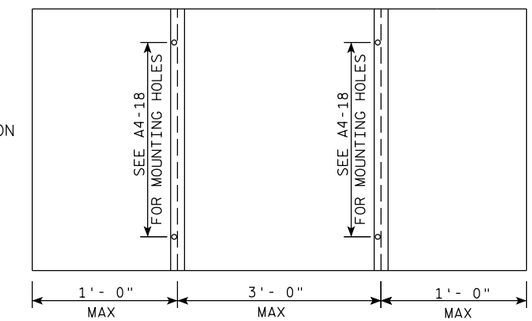

SPACING OF I5X3.7 ALUMINUM
MULTIPLE VERTICAL SIGN SUPPORTS

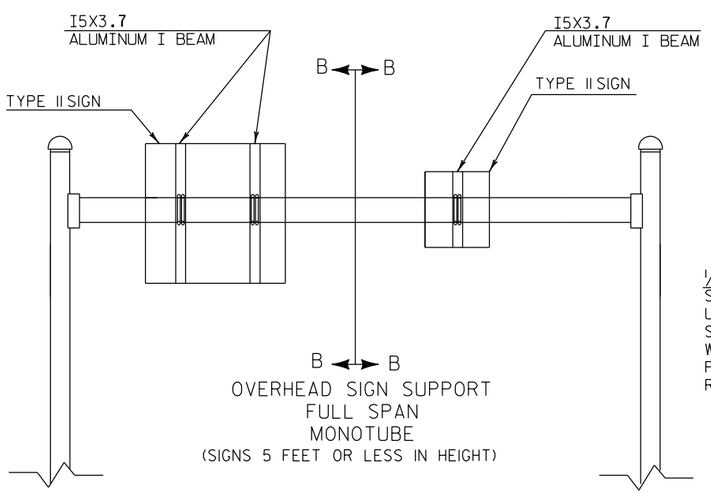

OVERHEAD SIGN SUPPORT
FULL SPAN
MONOTUBE
(SIGNS 5 FEET OR LESS IN HEIGHT)

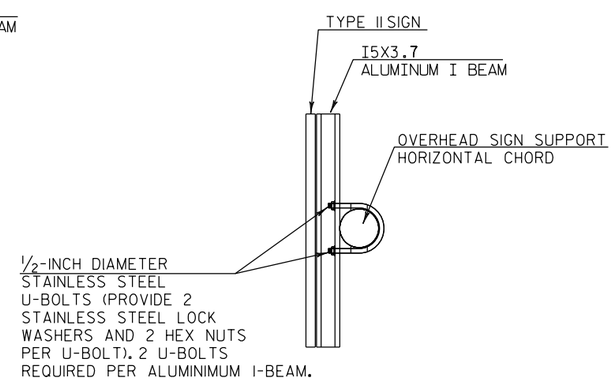

CUT SECTION B-B

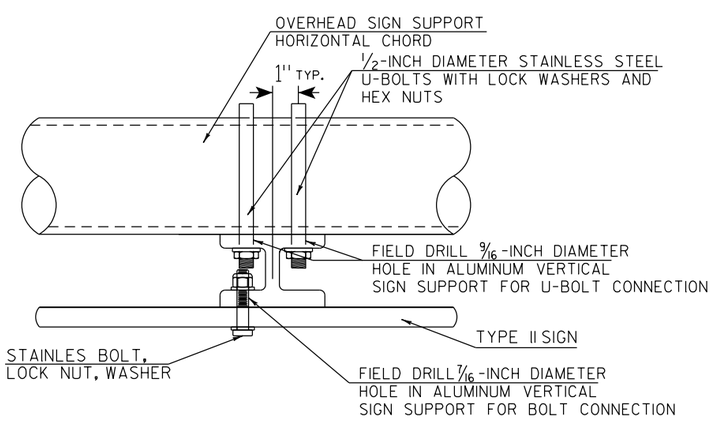

TYPICAL SIGN CONNECTION FOR
MONOTUBE
PLAN VIEW

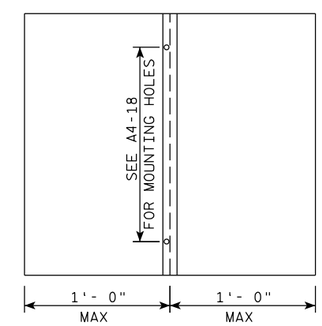

SPACING OF I5X3.7 ALUMINUM
SINGLE VERTICAL SIGN SUPPORT

TYPE II SIGN CONNECTION
TO OVERHEAD SIGN SUPPORT

WISCONSIN DEPT OF TRANSPORTATION

APPROVED Matthew R Rauch
for State Traffic Engineer

DATE 1/07/20 PLATE NO. A4-7B.1

PROJECT NO:	HWY:	COUNTY:		SHEET NO: 180	E

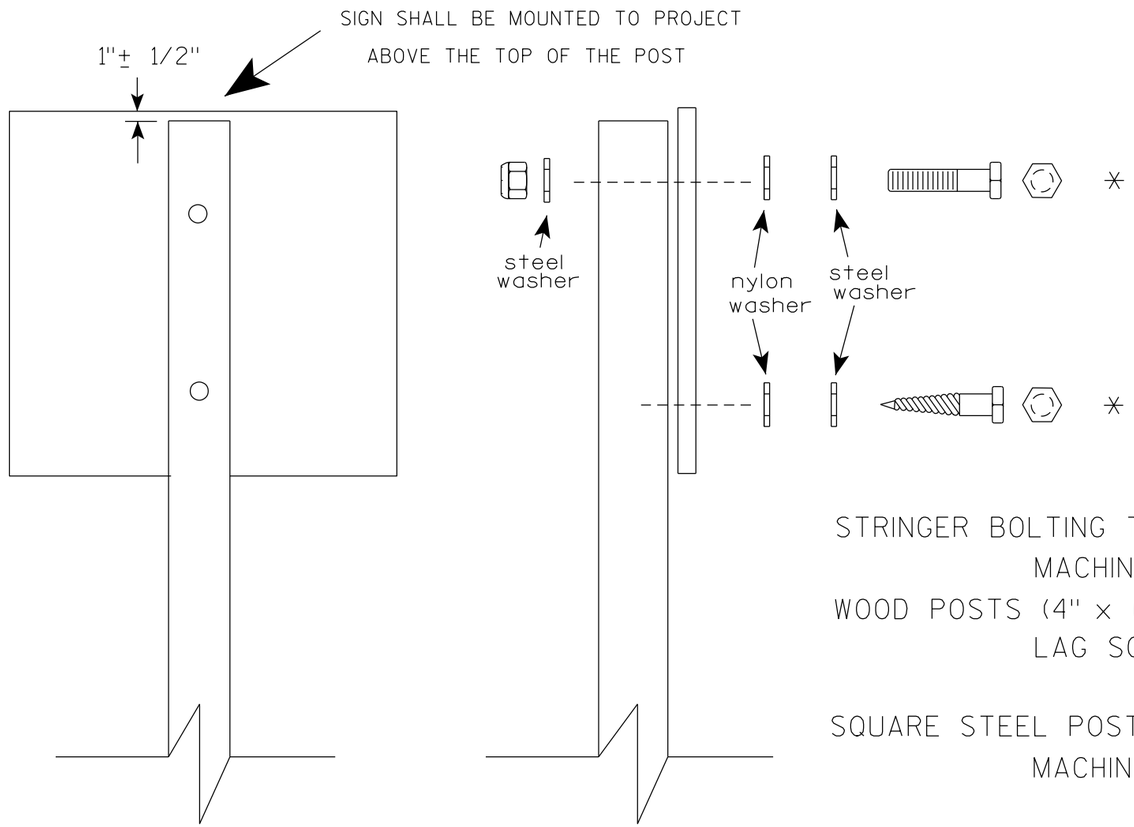

Nuts, bolts and lags used for mounting signs shall have hexagonal heads and shall be either :

a. Hot dip galvanized in accordance with ASTM Designation: A 153, Class D, or SC 3

b. Electro-galvanized in accordance with ASTM Designation : B 633, TYPE III, SC 3.

Threads on bolts and nuts shall be manufactured with sufficient allowance for the cadmium plate or galvanized coating to permit the nuts to run freely on the bolts.

STRINGER BOLTING TO ALUMINUM SIGNS (SEE SIGN PLATE A4-18)

MACHINE BOLTS - 5/16" X 1-3/4" Length w/ lock nuts

WOOD POSTS (4" x 6")

LAG SCREWS - 3/8" X 3" (NO STRINGERS ON BACK OF SIGN)
3/8" X 4" (STRINGERS ON BACK OF SIGN)

SQUARE STEEL POSTS (2" x 2")

MACHINE BOLTS - 3/8" X 3-1/4" Length w/ nuts (NO STRINGER ON BACK OF SIGN)
3/8" X 5" Length w/ nuts (STRINGERS ON BACK OF SIGN)

RIVETS - 9/32 " (6605-9-6) BULB-TITE, TRI-FOLD, ALUMINUM BODY/MANDREL
O.D. FLANGE .720-.765 INCH, GRIP RANGE .042-.375 INCH

WASHERS (ALL POSTS) -

1-1/4" O.D. X 3/8" I.D. X 1/16" STEEL
1-1/4" O.D. X 3/8" I.D. X .080 NYLON

* Two different fastening systems are shown for illustration purposes. On any individual sign, either one or the other system shall be used. Actual number of fasteners per sign varies with the sign area, but normally there are two. For a single post installation, all signs greater than 9 sq. ft. require the use of 3 fasteners.

ATTACHMENT OF SIGNS TO POSTS

WISCONSIN DEPT OF TRANSPORTATION

APPROVED Matthew R Rauch
for State Traffic Engineer

DATE 4/1/2020 PLATE NO. A4-8.9

TELESCOPIC TUBING ANCHORS
TWO PIECE SYSTEM

2 1/4" SQUARE
12 GAUGE
PERFORATED
GALVANIZED FINISH

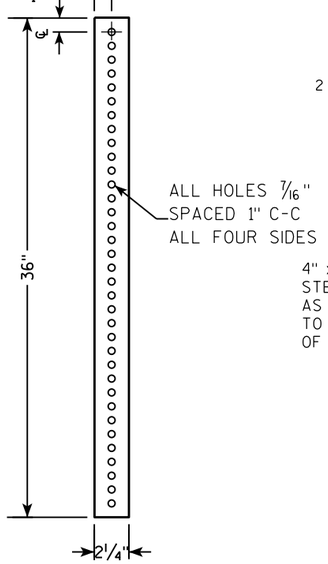

2 1/2" SQUARE
12 GAUGE
OMNI-DIRECTIONAL
PERFORATED
SOIL STABILIZING SLEEVE
GALVANIZED FINISH

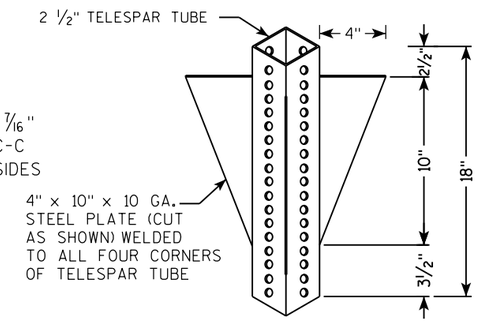

DETAIL OF TUBULAR STEEL SIGN POST
(IN POURED CONCRETE OR ASPHALT)

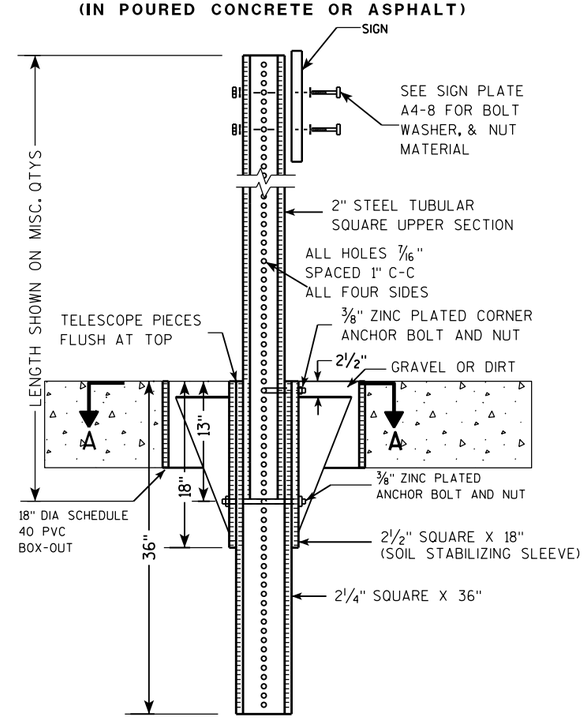

DETAIL OF TUBULAR STEEL SIGN POST
(IN LOCATIONS OTHER THAN POURED CONCRETE OR ASPHALT)

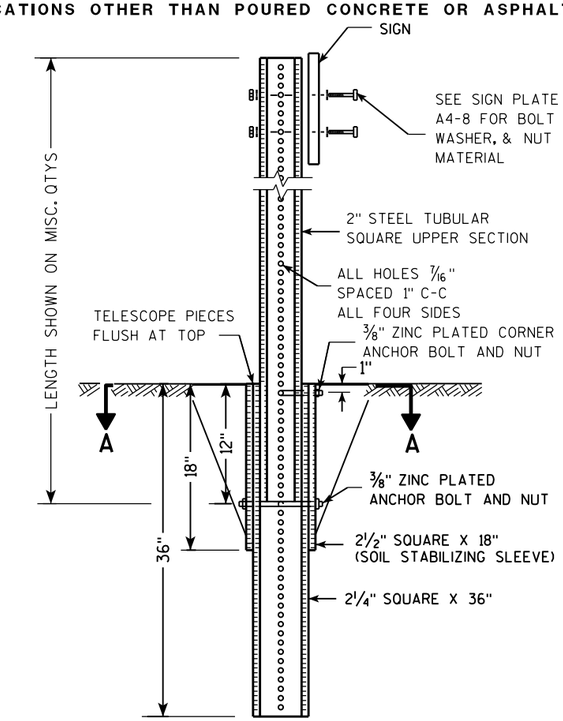

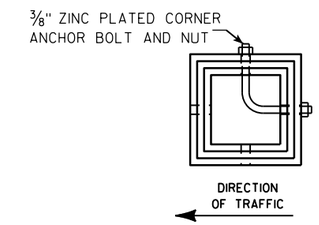

SECTION A-A

Area of Sign Installation (Sq. Ft.)	Number of Required Posts
9 or less	1
Greater than 9 less than or equal to 18	2
Greater than 18 less than or equal to 27	3

Signs wider than 3 feet or larger than 9 sq. ft shall be mounted on multiple posts (see above table).

TUBULAR STEEL
SIGN POST
A4-9

WISCONSIN DEPT OF TRANSPORTATION

APPROVED Matthew R Rauch
for State Traffic Engineer

DATE 2/05/15 PLATE A4-9.9

PROJECT NO:	HWY:	COUNTY:		SHEET NO:	E

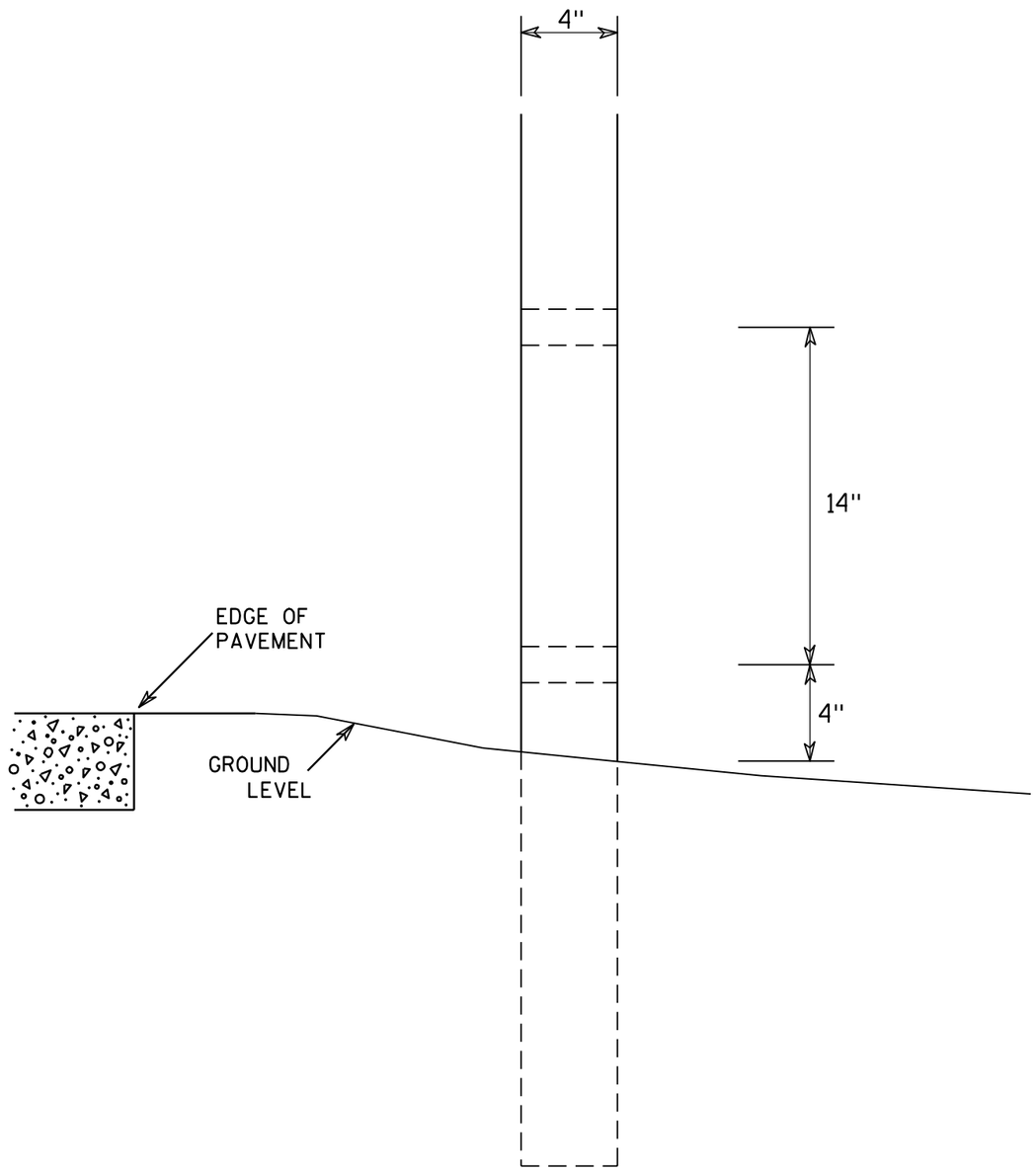

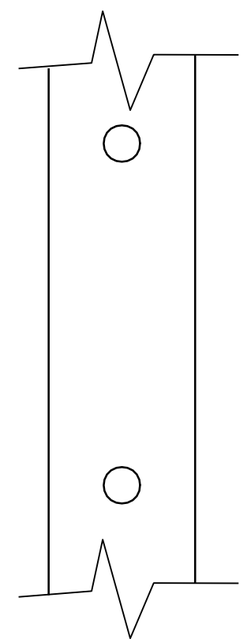

SIDE VIEW

GENERAL NOTES

1. All 4 x 6 Wood Posts shall be modified by having two 1½" diameter holes drilled perpendicular to the roadway centerline.

4 X 6 WOOD POST MODIFICATIONS

WISCONSIN DEPT OF TRANSPORTATION

APPROVED Chester J Spang for State Traffic Engineer

DATE 3/27/97 PLATE NO. A4-11.2

PROJECT NO:	HWY:	COUNTY:		SHEET NO: 183	E

BANDING

SINGLE SIGN

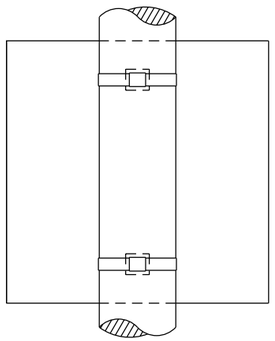

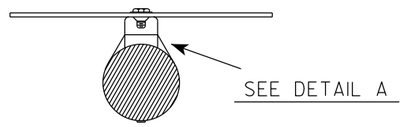

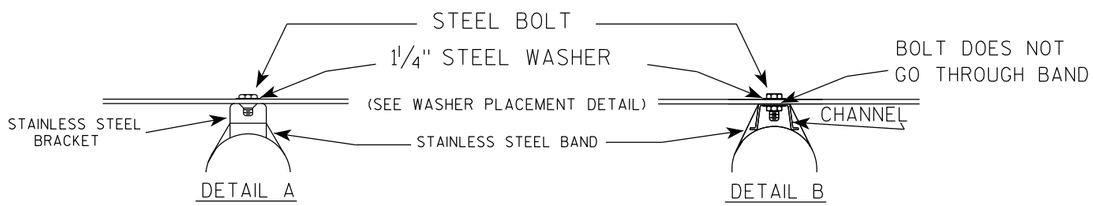

WASHER PLACEMENT

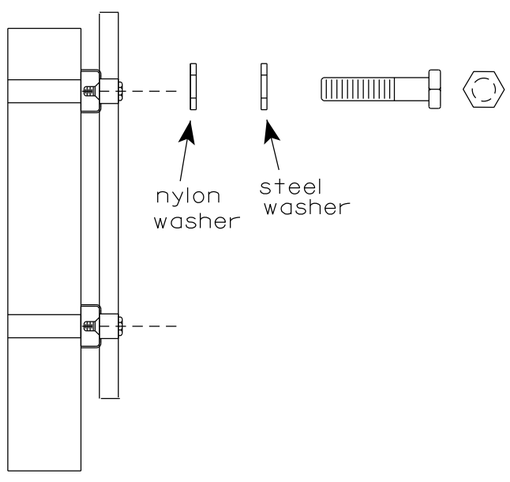

WASHERS (ALL POSTS) -
1-1/4" O.D. X 3/8" I.D. X 1/16" STEEL
1-1/4" O.D. X 3/8" I.D. X .080 NYLON
FOR ALL TYPE H SIGNS

GENERAL NOTES

1. Any sign over 3 feet in width shall use the V-Block banding method. See A5-10 standard plate.
2. Signs 3 feet or greater in height shall have three bracket bands installed. Signs less than 3 feet in height shall have two bracket bands installed.
3. Banding and assembly bracket shall be stainless steel. All bands shall be 3/4" in width and 0.025" thickness.
4. ALL SIGN MOUNTING BOLTS AND WASHERS SHALL BE EITHER:
   a. Hot dip or mechanically galvanized in accordance with ASTM Designation: A 153, Class D
   b. Electro-galvanized in accordance with ASTM designation: B 633, Type III, SC 3

"J" ASSEMBLY

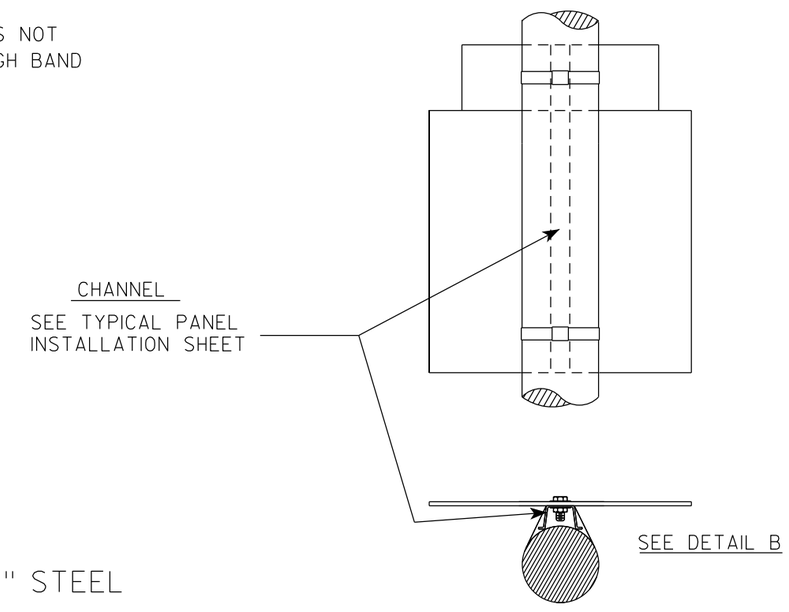

STANDARD SIGN
SIGN BANDING DETAILS

WISCONSIN DEPT OF TRANSPORTATION

APPROVED Matthew R Rauch for State Traffic Engineer

DATE 6/10/19 PLATE NO. A5-9.4

PROJECT NO:	HWY:	COUNTY:		SHEET NO: 184	E

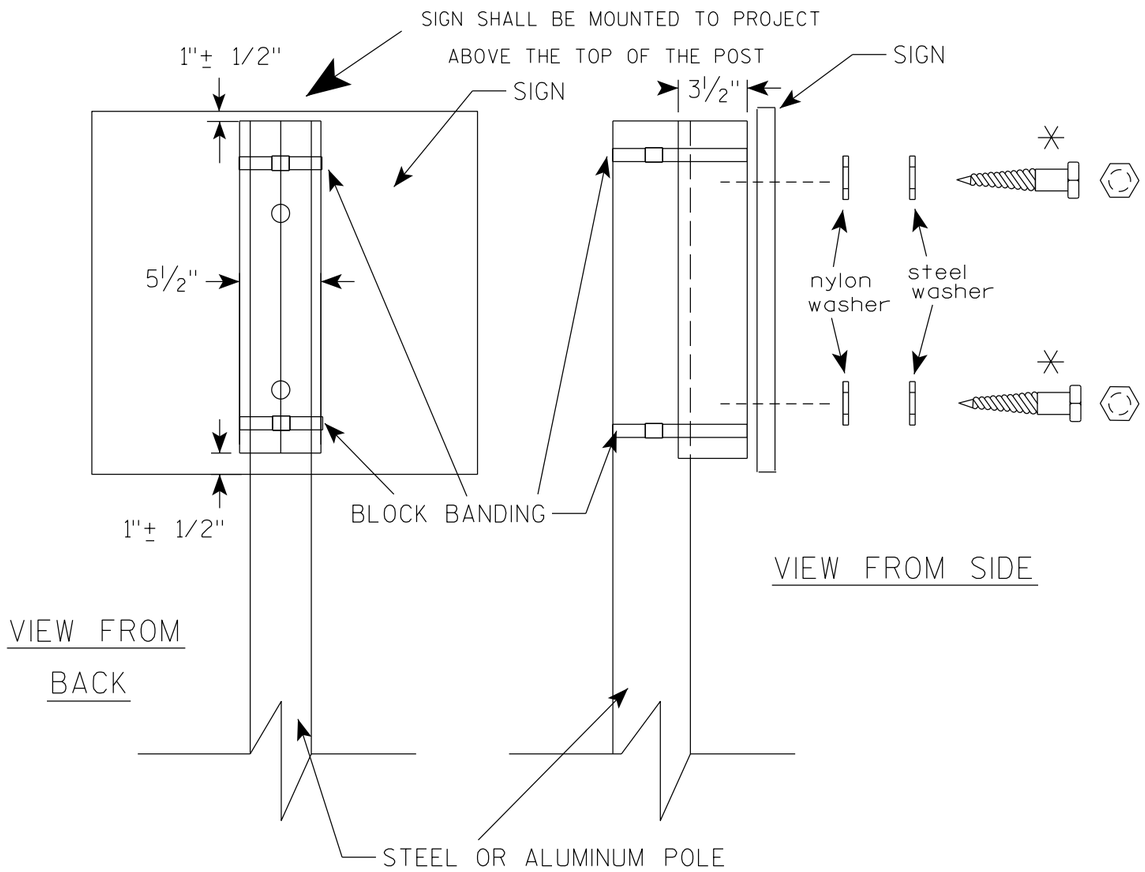

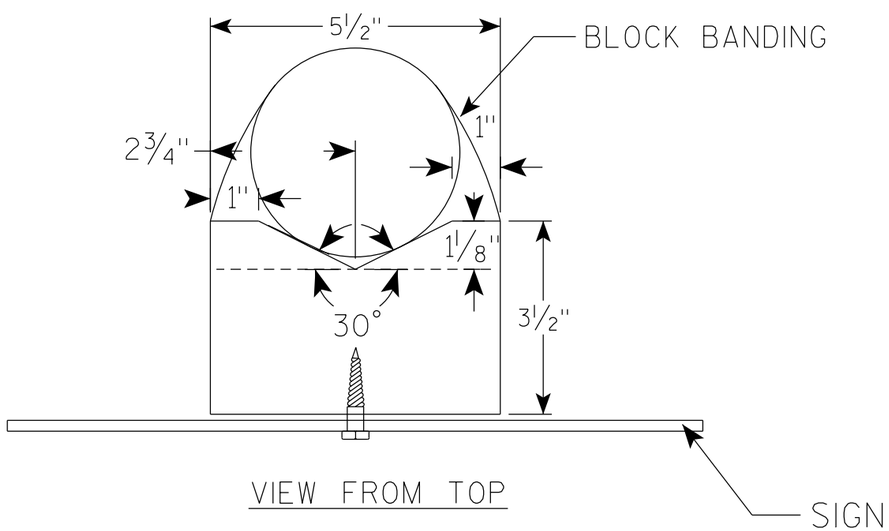

GENERAL NOTES

1. WOOD 4"X6" POST MATERIAL SHALL CONFORM TO 507.2.2 OF THE WisDOT STANDARD SPECIFICATIONS
2. BLOCK BANDING AND CLIPS SHALL BE STAINLESS STEEL, 3/4" WIDTH AND 0.025" THICKNESS
3. SIGNS 3' OR GREATER IN HEIGHT SHALL UTILIZE 3 BLOCK BANDS. SIGNS UNDER 3' IN HEIGHT SHALL UTILIZE 2 BLOCK BANDS
4. ACTUAL NUMBER OF FASTENERS PER SIGN VARIES WITH THE SIGN AREA, BUT NORNALLY THERE ARE TWO. FOR SIGNS GREATER THAN 9 S.F. 3 FASTENERS SHALL BE USED.
5. ALL SIGN MOUNTING BOLTS AND WASHERS SHALL BE EITHER:
   a. Hot dip or mechanically galvanized in accordance with ASTM Designation: A 153, Class D
   b. Electro-galvanized in accordance with ASTM Designation : B 633, TYPE III, SC 3
6. ALL BOLTS SHALL HAVE HEXAGONAL HEADS.
7. STEEL WASHERS SHALL BE 1 1/4" O.D. X 3/8" I.D. X 1/16"
8. NYLON WASHERS SHALL BE 1 1/4" O.D. X 3/8" I.D. X .080 FOR TYPE H OR TYPE F FACE SIGN

✳ LAG BOLTS SHALL BE 3/8" X 2 1/2"

7

7

BLOCK BANDING DETAIL
(V-BLOCK OPTION)

WISCONSIN DEPT OF TRANSPORTATION

APPROVED Matthew R Rauch
for State Traffic Engineer

DATE 4/19/2022 PLATE NO. A5-10.3

PROJECT NO:				SHEET NO: 185	E

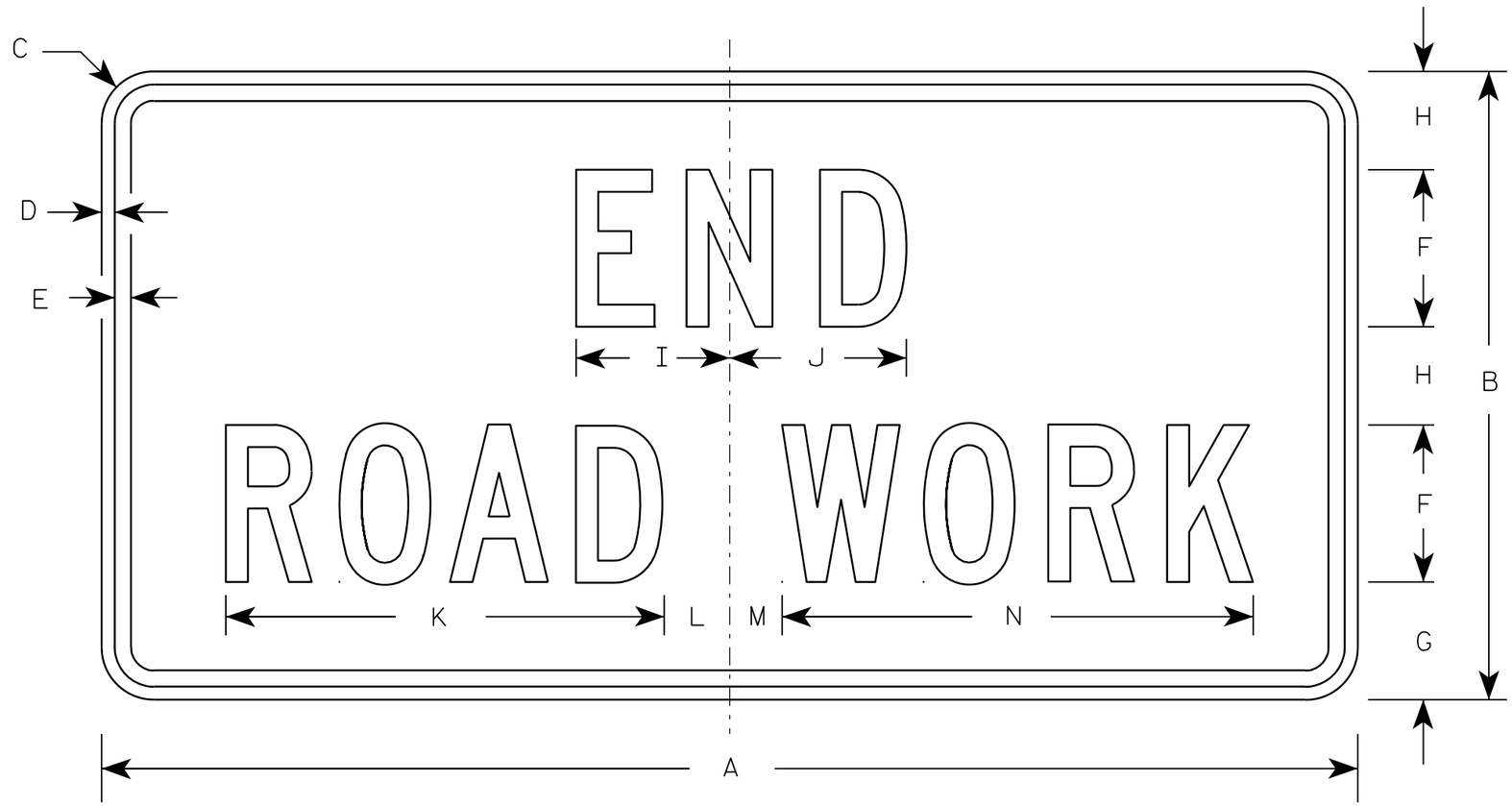

G20-2A

NOTES

1. Sign is Type II - Type F Reflective - reference WIS DOT Standard Specification for HIGHWAY and STRUCTURE CONSTRUCTION latest edition.
2. Color:
   Background - Orange
   Message - Black
3. Message Series - C
4. Corners may be square or rounded when base material is plywood but borders shall be rounded as shown. When base material is metal, the corners and borders shall be rounded.

Metric equivalent for this sign is:

SIZE	
1	900 mm X 450 mm
2	1200 mm X 600 mm
3	1200 mm X 600 mm
4	1200 mm X 600 mm
5	1200 mm X 600 mm

SIZE	A	B	C	D	E	F	G	H	I	J	K	L	M	N	O	P	Q	R	S	T	U	V	W	X	Y	Z	Area sq. ft.	Area m2
1	36	18	1 1/8	3/8	1/2	4	3 3/4	2 1/2	4 1/8	4 1/8	11 1/8	2	1	12 1/8													4.5	0.41
2	48	24	1 1/2	1/2	5/8	6	4 1/2	3 3/4	5 7/8	6 3/4	16 3/4	2 1/2	1 3/4	18 1/2													8.0	0.72
3	48	24	1 1/2	1/2	5/8	6	4 1/2	3 3/4	5 7/8	6 3/4	16 3/4	2 1/2	1 3/4	18 1/2													8.0	0.72
4	48	24	1 1/2	1/2	5/8	6	4 1/2	3 3/4	5 7/8	6 3/4	16 3/4	2 1/2	1 3/4	18 1/2													8.0	0.72
5	48	24	1 1/2	1/2	5/8	6	4 1/2	3 3/4	5 7/8	6 3/4	16 3/4	2 1/2	1 3/4	18 1/2													8.0	0.72

STANDARD SIGN

G20-2A

WISCONSIN DEPT OF TRANSPORTATION

APPROVED Matthew R Rauch
for State Traffic Engineer

DATE 9/30/09 PLATE NO. G20-2A.8

PROJECT NO:	HWY:	COUNTY:		SHEET NO: 186	E

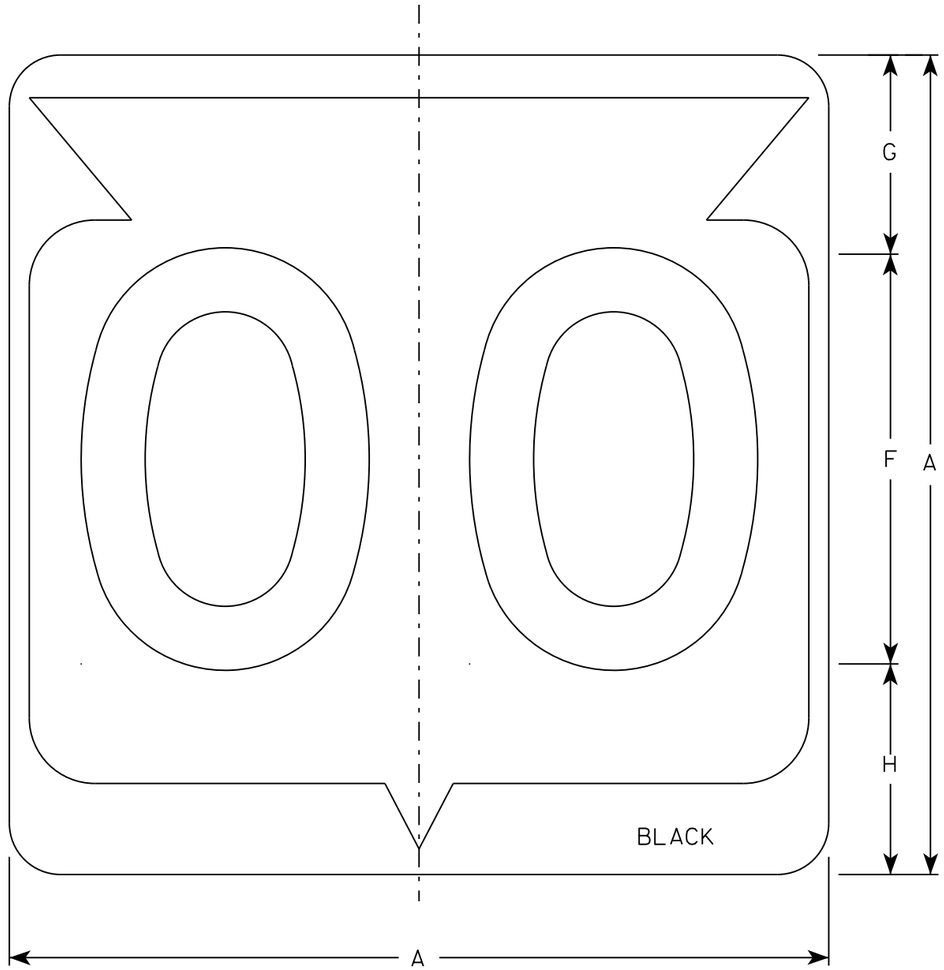

M1-6

NOTES

1. Sign is Type II - Type H Reflective
2. Color:
   Background - White
   Message - Black
3. Message Series - D except 3 number signs Series C
4. Corners may be square or rounded when base material is plywood but borders shall be rounded as shown. When base material is metal, the corners and borders shall be rounded.

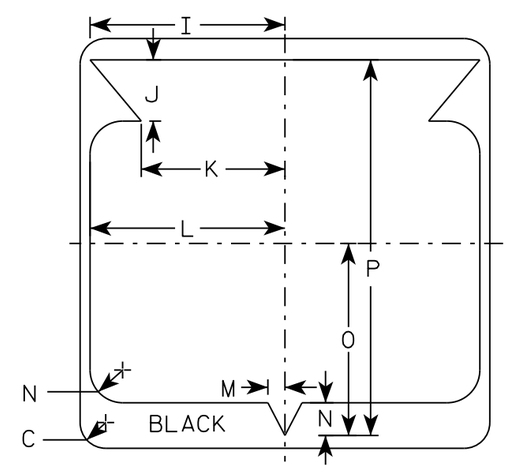

SIZE	A	B	C	D	E	F	G	H	I	J	K	L	M	N	O	P	Q	R	S	T	U	V	W	X	Y	Z	Area sq. ft.
1																											
2	24		1 1/2			12	5 1/2	6 1/2	10 1/4	2 1/2	8 7/8	11 1/2	1	1 7/8	11 1/4	21 7/8											4.0
3	36		2 1/4			18	8 3/4	9 1/4	15 3/8	5 3/8	12 5/8	17 1/8	1 1/2	2 7/8	16 7/8	33											9.0
4	36		2 1/4			18	8 3/4	9 1/4	15 3/8	5 3/8	12 5/8	17 1/8	1 1/2	2 7/8	16 7/8	33											9.0
5	36		2 1/4			18	8 3/4	9 1/4	15 3/8	5 3/8	12 5/8	17 1/8	1 1/2	2 7/8	16 7/8	33											9.0

STATE ROUTE MARKER
M1-6 FOR ASSEMBLIES

WISCONSIN DEPT OF TRANSPORTATION

APPROVED Matthew R Rauch
for State Traffic Engineer

DATE 3/16/18 PLATE NO. M1-6.10

PROJECT NO: | HWY: | COUNTY: | SHEET NO: 187 | E

NOTES

1. Sign is Type II - Type H Reflective
2. Color:
   Background - Brown
   Message - White
3. Message Series - Century Gothic
4. Contact WisDOT with any questions.

SIZE	A	B	C	D	E	F	G	H	I	J	K	L	M	N	O	P	Q	R	S	T	U	V	W	X	Y	Z	Area sq. ft.
1																											
2	24		1 ½																								4.0
3																											
4	36		1 ⅝																								16.0
5																											

STANDARD SIGN
M1-90

WISCONSIN DEPT OF TRANSPORTATION

APPROVED Matthew R Rauch
for State Traffic Engineer

DATE 11/29/16 PLATE NO. M1-90.1

PROJECT NO: | HWY: | COUNTY: | SHEET NO: 188 | E

NOTES

1. Sign is Type II - Type H Reflective
2. Color:
   Background - White
   Message - Black
3. Message Series - C
4. Substitute appropriate message as required.

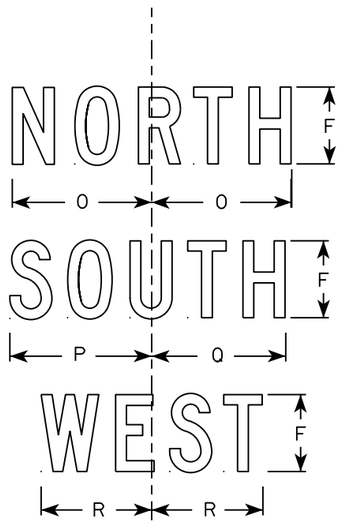

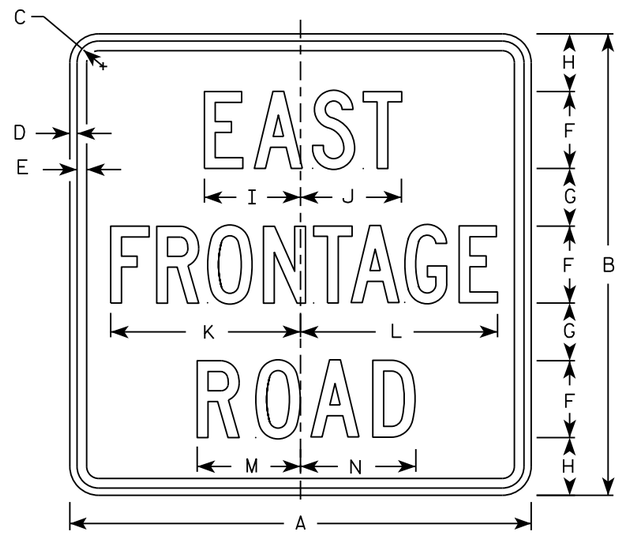

SIZE	A	B	C	D	E	F	G	H	I	J	K	L	M	N	O	P	Q	R	S	T	U	V	W	X	Y	Z	Area sq. ft.
1																											
2	24	24	1 1/8	3/8	1/2	4	3	3	5	5 1/4	9 7/8	10 1/4	5 3/8	6	7 1/4	7 3/8	7	5 3/4									4.0
3																											
4	36	36	1 3/8	5/8	5/8	6	4 1/2	4 1/2	7 1/2	7 7/8	14 3/4	15 3/8	8	9	10 7/8	11	10 1/2	8 5/8									9.0
5																											

STANDARD SIGN
M1-95A

WISCONSIN DEPT OF TRANSPORTATION

APPROVED Matthew R Rauch
for State Traffic Engineer

DATE 3/15/18 PLATE NO. M1-95A.4

PROJECT NO: | HWY: | COUNTY: | SHEET NO: 189 | E

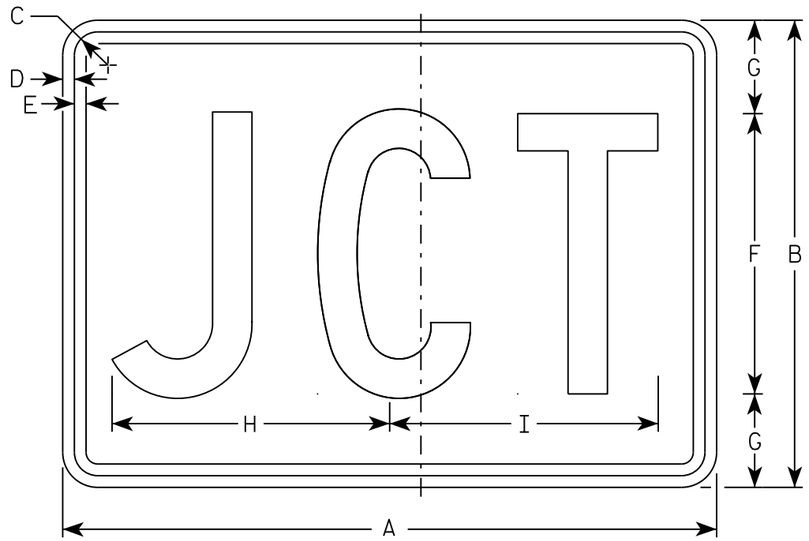

M2-1
MM2-1
MP2-1

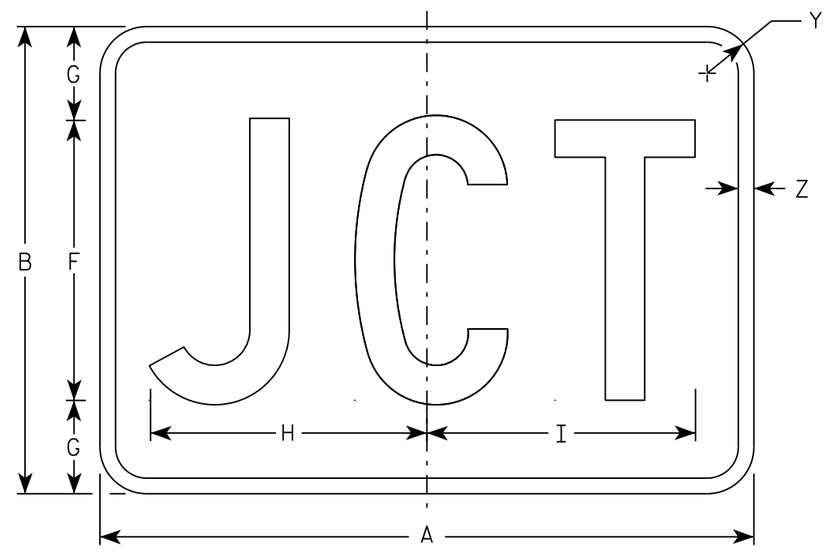

MB2-1
MK2-1
MN2-1
MR2-1

NOTES

1. Sign is Type II - Type H
2. Color:
   Background - See note 5
   Message - See note 5
3. Message Series - C
4. Corners may be square or rounded when base material is plywood but borders shall be rounded as shown. When base material is metal, the corners and borders shall be rounded.
5. M2-1 Background - White
   Message - Black
   MB2-1 Background - Blue
   Message - White
   MK2-1 Background - Green
   Message - White
   MM2-1 Background - White
   Message - Green
   MN2-1 Background - Brown
   Message - White
   MP2-1 Background - White
   Message - Blue
   MR2-1 Background - Brown
   Message - Yellow

SIZE	A	B	C	D	E	F	G	H	I	J	K	L	M	N	O	P	Q	R	S	T	U	V	W	X	Y	Z	Area sq. ft.
1																											
2	21	15	1 1/8	3/8	3/8	9	3	8 7/8	8 5/8																1 1/2	1/2	2.20
3	30	21	1 1/8	3/8	3/8	13	4	12 7/8	12 3/8																1 1/2	1/2	4.40
4	30	21	1 1/8	3/8	3/8	13	4	12 7/8	12 3/8																1 1/2	1/2	4.40
5	30	21	1 1/8	3/8	3/8	13	4	12 7/8	12 3/8																1 1/2	1/2	4.40

STANDARD SIGN
M2-1

WISCONSIN DEPT OF TRANSPORTATION

APPROVED Matthew R Rauch
for State Traffic Engineer

DATE 10/15/15 PLATE 190 M2-1.12

PROJECT NO: | HWY: | COUNTY: | SHEET NO: | E

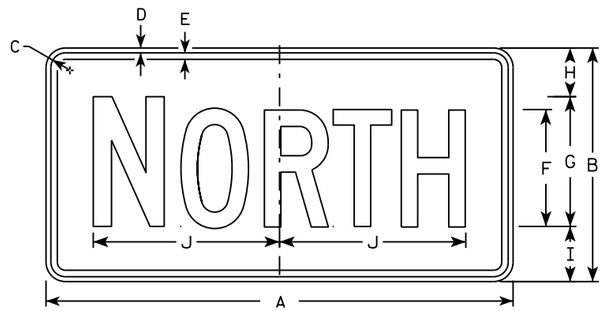

M3-1
MM3-1
MP3-1

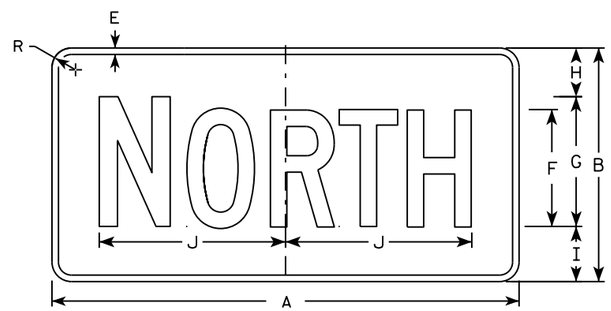

MB3-1
MK3-1
MN3-1

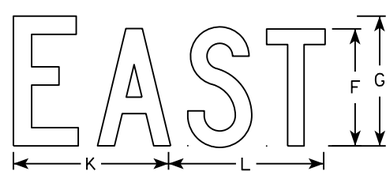

M3-2
MM3-2
MP3-2

MB3-2
MK3-2
MN3-2

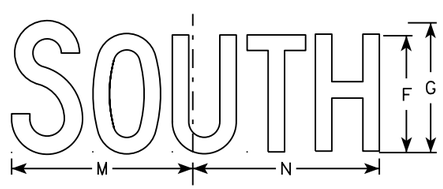

M3-3
MM3-3
MP3-3

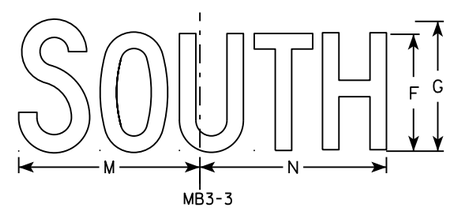

MB3-3
MK3-3
MN3-3

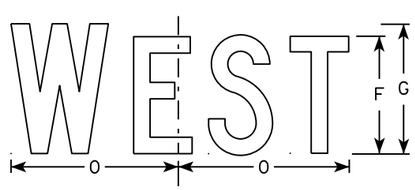

M3-4
MM3-4
MP3-4

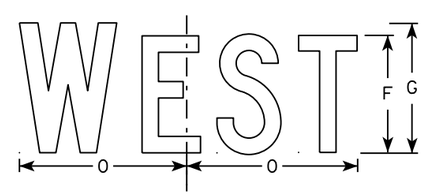

MB3-4
MK3-4
MN3-4

NOTES

1. All Signs Type II - Type H
2. Color:
   Background - See note 5
   Message - See note 5
3. Message Series - C
4. Corners may be square or rounded when base material is plywood but borders shall be rounded as shown. When base material is metal, the corners and borders shall be rounded.
5. M3-1 thru M3-4 Background - White
   Message - Black
   MB3-1 thru MB3-4 Background - Blue
   Message - White
   MK3-1 thru MK3-4 Background - Green
   Message - White
   MM3-1 thru MM3-4 Background - White
   Message - Green
   MN3-1 thru MN3-4 Background - Brown
   Message - White
   MP3-1 thru MP3-4 Background - White
   Message - Blue
6. Note the first letter of each direction is larger than the remainder of the message.

SIZE	A	B	C	D	E	F	G	H	I	J	K	L	M	N	O	P	Q	R	S	T	U	V	W	X	Y	Z	Area sq. ft.
1																											
2	24	12	1 1/8	3/8	3/8	6	7	2 1/4	2 3/4	10 1/4	7 7/8	8 3/8	10 1/4	9 3/4	8 3/4			1 1/2									2.00
3	36	18	1 1/8	3/8	1/2	9	10	3 3/4	4 1/4	14 3/8	12	12 1/8	14	14 1/8	13			1 1/2									4.5
4	36	18	1 1/8	3/8	1/2	9	10	3 3/4	4 1/4	14 3/8	12	12 1/8	14	14 1/8	13			1 1/2									4.5
5	36	18	1 1/8	3/8	1/2	9	10	3 3/4	4 1/4	14 3/8	12	12 1/8	14	14 1/8	13			1 1/2									4.5

STANDARD SIGNS
M3-1 thur M3-4
SERIES

WISCONSIN DEPT OF TRANSPORTATION

APPROVED Matthew R Rauch
for State Traffic Engineer

DATE 10/15/15 PLATE NO M3-1.14

PROJECT NO: | HWY: | COUNTY: | SHEET NO: | E

FILE NAME : C:\CAEfiles\Projects\tr_stdplate\M31.DGN PLOT DATE : 01-DEC-2015 17:54 PLOT BY : $$ plotuser $$ PLOT NAME : PLOT SCALE : 11.675051:1.000000

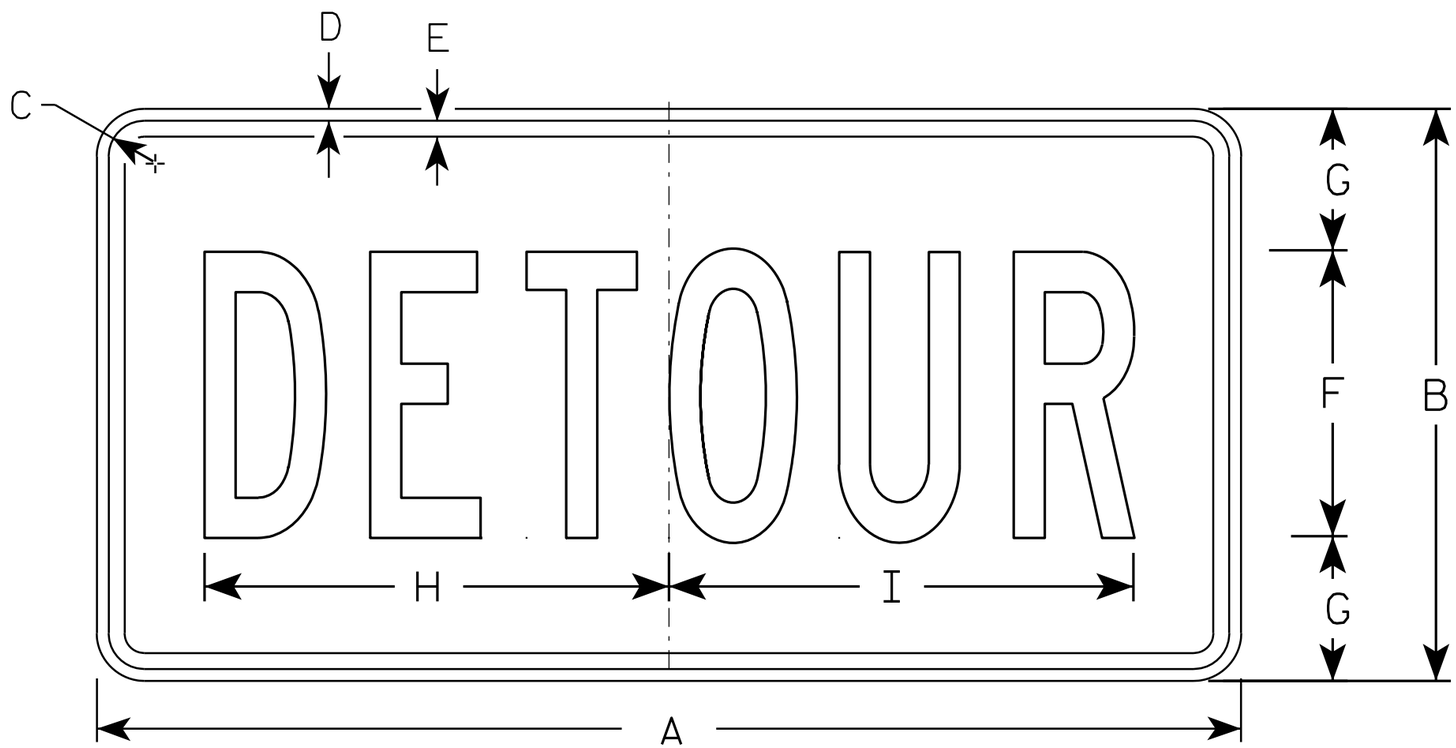

M4-8

NOTES

1. Sign is Type II - Type F Reflective - reference WIS DOT Standard Specification for HIGHWAY and STRUCTURE CONSTRUCTION latest edition.
2. Color:
   Background - Orange
   Message - Black
3. Message Series - B
4. Corners may be square or rounded when base material is plywood but borders shall be rounded as shown. When base material is metal, the corners and borders shall be rounded.

SIZE	A	B	C	D	E	F	G	H	I	J	K	L	M	N	O	P	Q	R	S	T	U	V	W	X	Y	Z	Area sq. ft.
1																											
2	24	12	1 1/8	3/8	3/8	6	3	10	10 1/4																		2.0
3	36	18	1 1/8	3/8	1/2	9	4 1/2	14 5/8	14 1/2																		4.5
4																											
5																											

STANDARD SIGN
M4-8

WISCONSIN DEPT OF TRANSPORTATION

APPROVED Matthew R Rauch
for State Traffic Engineer

DATE 11/10/10 PLATE NO. M4-8.2

PROJECT NO: | HWY: | COUNTY: | SHEET NO: 192 | E

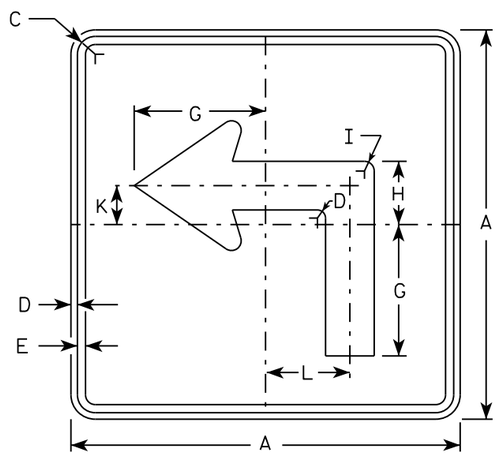

M5-1L
MM5-1L
MO5-1L
MP5-1L

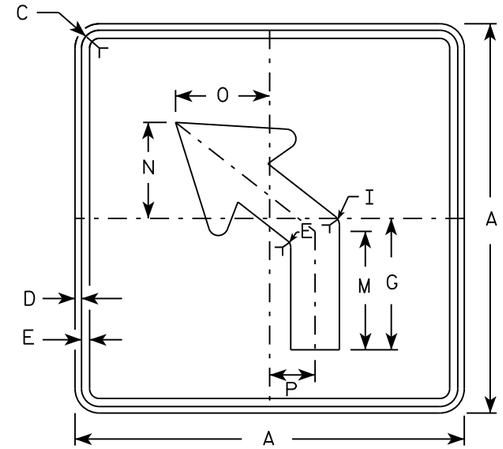

M5-2L
MM5-2L
MO5-2L
MP5-2L

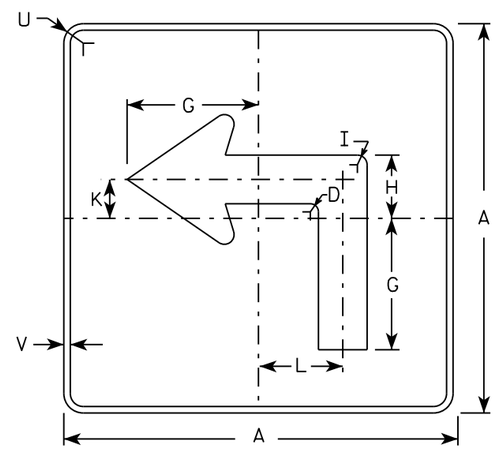

MB5-1L
MK5-1L
MN5-1L
MR5-1L

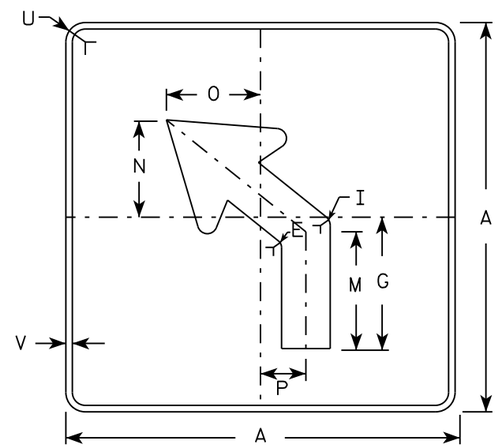

MB5-2L
MK5-2L
MN5-2L
MR5-2L

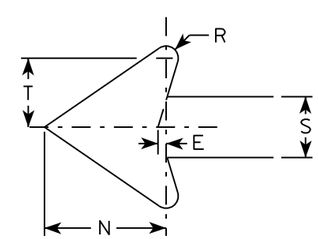

NOTES

1. Signs are Type II - Type H reflective except as shown
2. Color:
   Background - See note 4
   Message - See note 4
3. Corners may be square or rounded when base material is plywood but borders shall be rounded as shown. When base material is metal, the corners and borders shall be rounded.
4. M5-1 and M5-2 Background - White
   Message - Black
   MB5-1 and MB5-2 Background - Blue
   Message - White
   MK5-1 and MK5-2 Background - Green
   Message - White
   MM5-1 and MM5-2 Background - White
   Message - Green
   MN5-1 and MN5-2 Background - Brown
   Message - White
   MO5-1 and MO5-2 Background - Orange - Type F Reflective
   Message - Black
   MP5-1 and MP5-2 Background - White - Type H Reflective
   Message - Blue
   MR5-1 and MR5-2 Background - Brown
   Message - Yellow
5. M5-1R same as M5-1L except arrow points right.
6. M5-2R same as M5-2L except arrow tilts right.

SIZE	A	B	C	D	E	F	G	H	I	J	K	L	M	N	O	P	Q	R	S	T	U	V	W	X	Y	Z	Area sq. ft.
1																											
2	21		1 1/8	3/8	3/8		7	3 3/8	5/8		2 1/8	4 1/2	6 3/8	5 1/4	5	2 1/2		1/2	2 5/8	3	1 1/2	1/2					3.06
3	30		1 3/8	1/2	5/8		10 1/8	4 7/8	7/8		3	6 1/2	9 1/8	7 1/2	7 1/4	3 1/2		3/4	3 3/4	4 1/4	1 7/8	1/2					6.25
4	30		1 3/8	1/2	5/8		10 1/8	4 7/8	7/8		3	6 1/2	9 1/8	7 1/2	7 1/4	3 1/2		3/4	3 3/4	4 1/4	1 7/8	1/2					6.25
5	30		1 3/8	1/2	5/8		10 1/8	4 7/8	7/8		3	6 1/2	9 1/8	7 1/2	7 1/4	3 1/2		3/4	3 3/4	4 1/4	1 7/8	1/2					6.25

STANDARD SIGN
M5-1 & M5-2

WISCONSIN DEPT OF TRANSPORTATION

APPROVED Matthew R Rauch
for State Traffic Engineer

DATE 10/15/15 PLATE NO. M5-1.13

PROJECT NO: | HWY: | COUNTY: | SHEET NO: E

FILE NAME : C:\CAEfiles\Projects\tr stdplate\M51.DGN PLOT DATE : 01-DEC-2015 18:07 PLOT BY : $$ plotuser $$ PLOT NAME : PLOT SCALE : 11.675051:1.000000

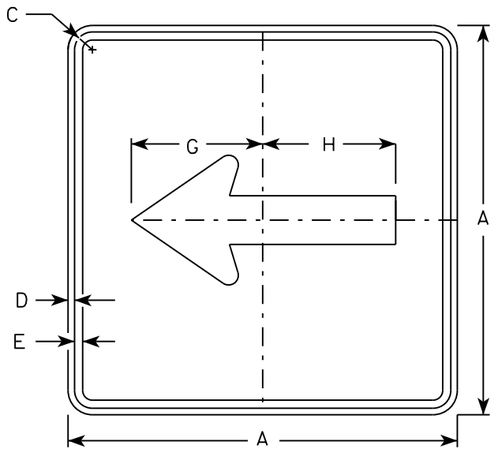

M6-1
MM6-1
MO6-1
MP6-1

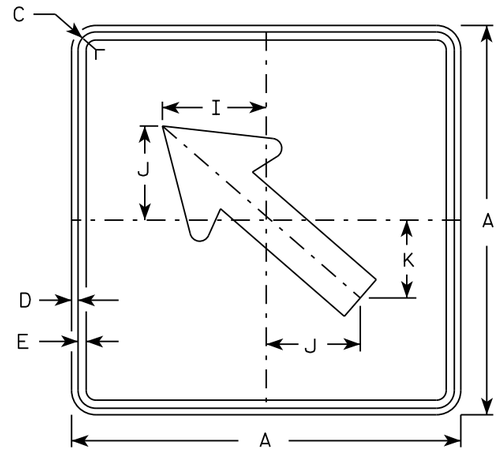

M6-2
MM6-2
MO6-2
MP6-2

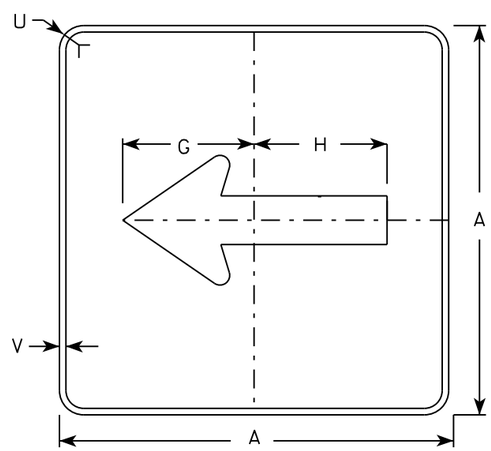

MB6-1
MK6-1
MN6-1
MR6-1

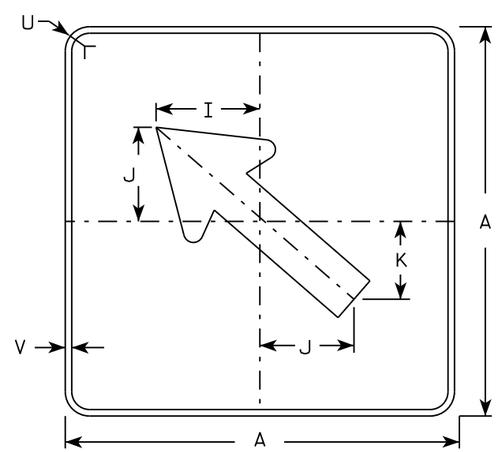

MB6-2
MK6-2
MN6-2
MR6-2

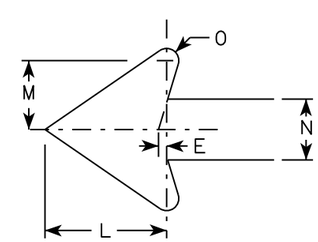

NOTES

1. Signs are Type II - Type H except as Shown
2. Color:
   Background - See note 4
   Message - See note 4
3. Corners may be square or rounded when base material is plywood but borders shall be rounded as shown. When base material is metal, the corners and borders shall be rounded.
4. M6-1 and M6-2 Background - White
   Message - Black
   MB6-1 and MB6-2 Background - Blue
   Message - White
   MK6-1 and MK6-2 Background - Green
   Message - White
   MM6-1 and MM6-2 Background - White
   Message - Green
   MN6-1 and MN6-2 Background - Brown
   Message - White
   MO6-1 and MO6-2 Background - Orange - Type F Reflective
   Message - Black
   MP6-1 and MP6-2 Background - White
   Message - Blue
   MR6-1 and MR6-2 Background - Brown
   Message - Yellow

SIZE	A	B	C	D	E	F	G	H	I	J	K	L	M	N	O	P	Q	R	S	T	U	V	W	X	Y	Z	Area sq. ft.
1																											
2	21		1 1/8	3/8	3/8		7 1/2	7 1/8	5 5/8	5	4 1/4	5 1/4	3	2 5/8	1/2						1 1/2	1/2					3.06
3	30		1 3/8	1/2	5/8		10 3/4	10 1/4	8	7 1/4	6	7 1/2	4 1/4	3 3/4	3/4						1 7/8	1/2					6.25
4	30		1 3/8	1/2	5/8		10 3/4	10 1/4	8	7 1/4	6	7 1/2	4 1/4	3 3/4	3/4						1 7/8	1/2					6.25
5	30		1 3/8	1/2	5/8		10 3/4	10 1/4	8	7 1/4	6	7 1/2	4 1/4	3 3/4	3/4						1 7/8	1/2					6.25

STANDARD SIGN
M6-1 & M6-2
SERIES

WISCONSIN DEPT OF TRANSPORTATION

APPROVED Matthew R Rauch
for State Traffic Engineer

DATE 10/15/15 PLATE 194 M6-1.15

PROJECT NO: | HWY: | COUNTY: | SHEET NO: | E

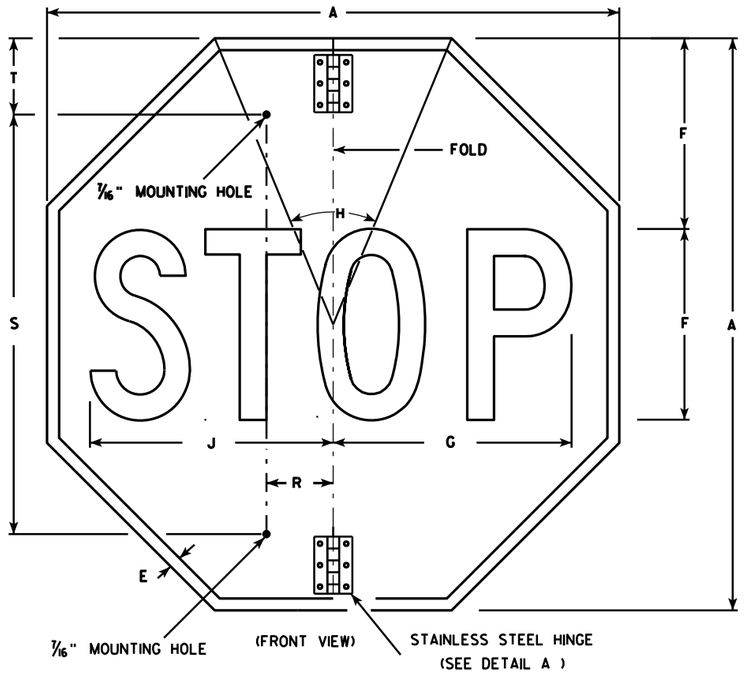

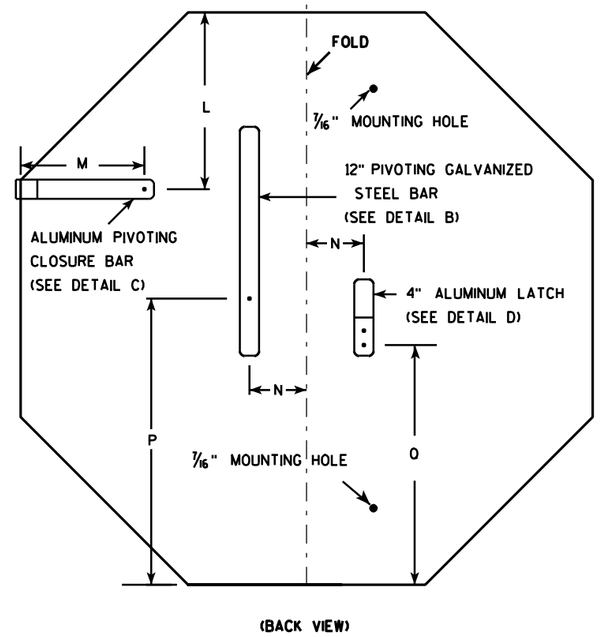

NOTES

1. Sign is Type II - Type H Reflective - reference WIS DOT Standard Specification for HIGHWAY and STRUCTURE CONSTRUCTION latest edition.
2. Color:
   Background - Red
   Message - White
3. Message Series - C
4. All hardware used on the folding STOP sign installation shall conform to 637.2.4 of the WIS DOT Standard Specification.

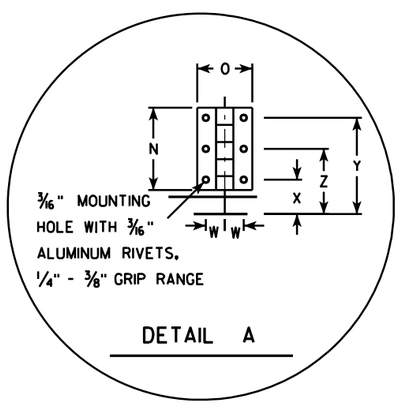

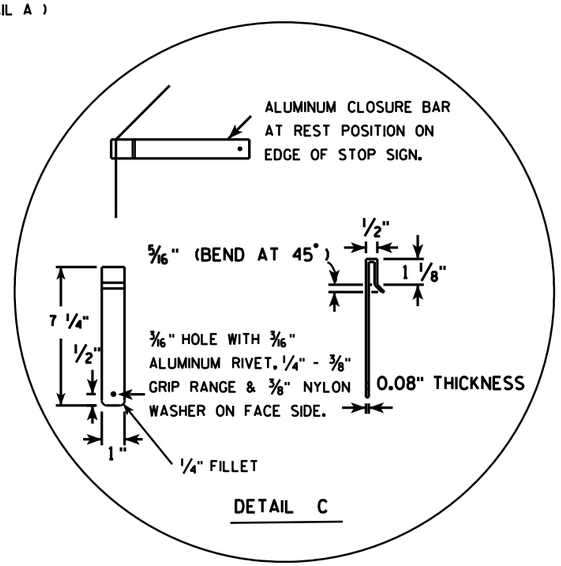

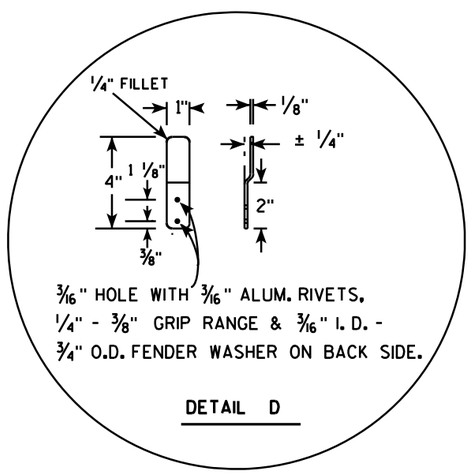

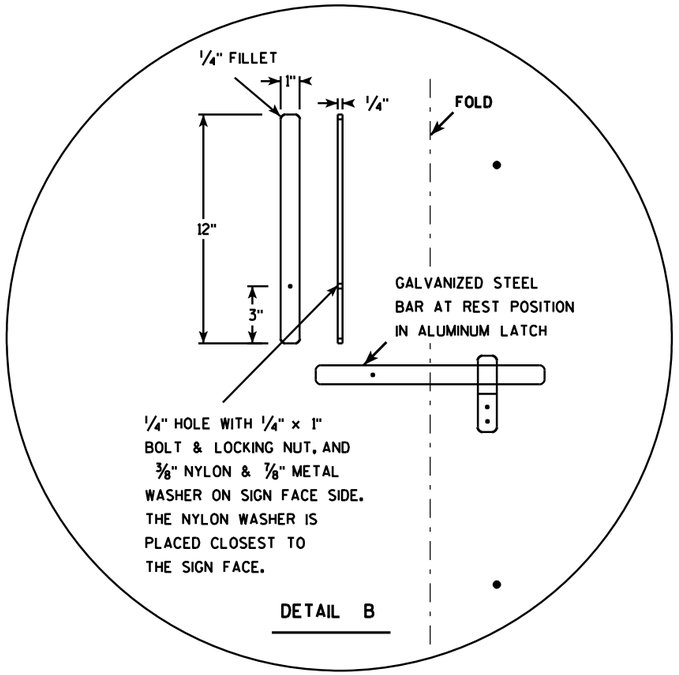

SIZE	A	B	C	D	E	F	G	H	I	J	K	L	M	N	O	P	Q	R	S	T	U	V	W	X	Y	Z	Area sq. ft.
1																											
2S	30				5/8	10	12 1/2	45		12 3/4		9 1/4	6 1/2	3	2	15	12 3/8	2 1/2	22	5			11/16	1 1/4	3 1/2	2 3/8	5.18
2M	36				3/4	12	15	45		15 3/8		11	6 1/2	3	2	18	15 3/8	2 1/2	26	5			11/16	1 1/4	3 1/2	2 3/8	7.46
3	36				3/4	12	15	45		15 3/8		11	6 1/2	3	2	18	15 3/8	2 1/2	26	5			11/16	1 1/4	3 1/2	2 3/8	7.46
4																											
5																											

STANDARD SIGN
R1-1F

WISCONSIN DEPT OF TRANSPORTATION

APPROVED Matthew R Rauch
for State Traffic Engineer

DATE 12/03/10 PLATE NO. R1-1F.3

PROJECT NO:	HWY:	COUNTY:		SHEET NO: 195	E

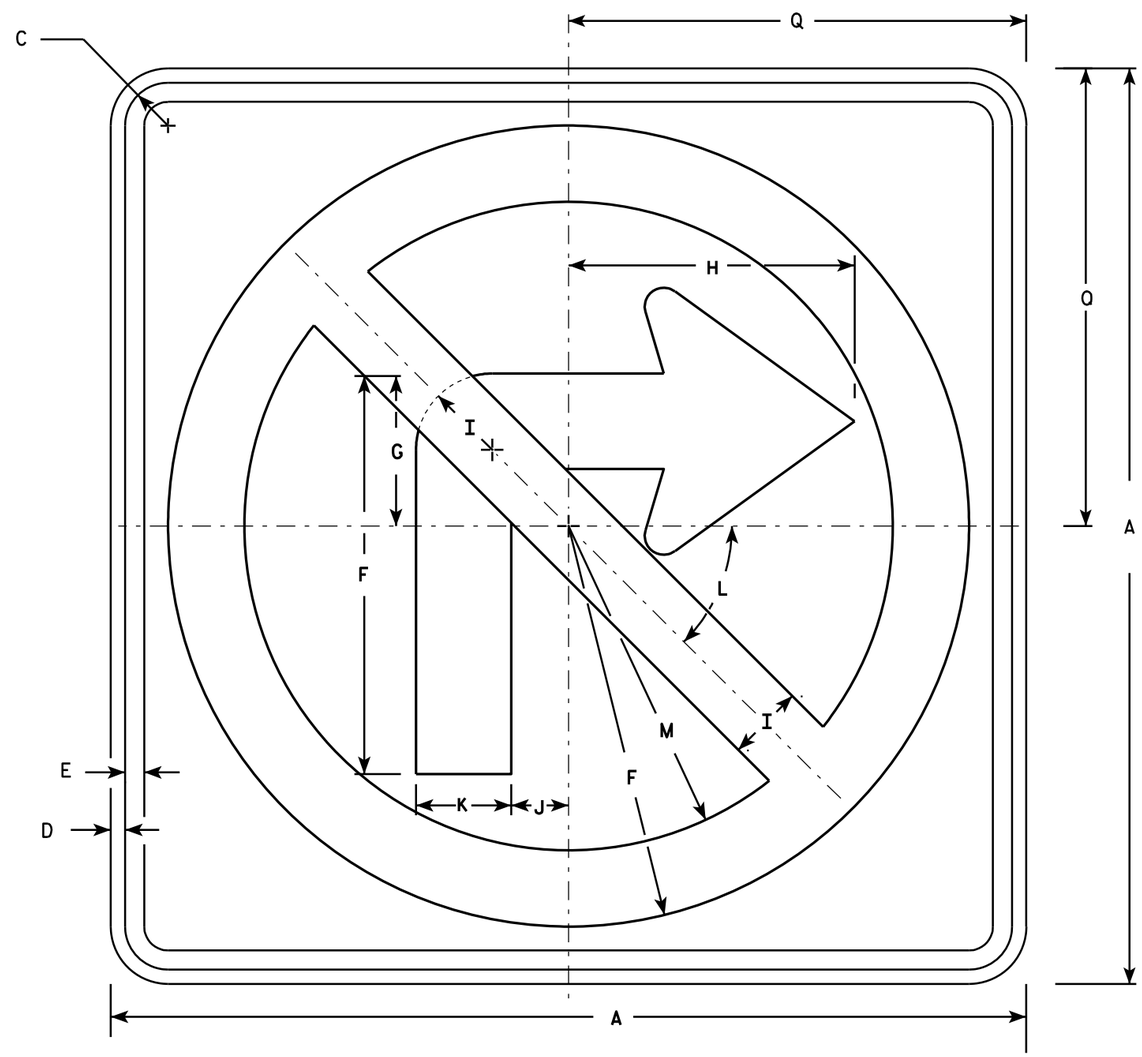

R3-1

NOTES

1. Sign is Type II - Type H Reflective - reference WIS DOT Standard Specification for HIGHWAY and STRUCTURE CONSTRUCTION latest edition.
2. Color:
   Background - White
   Message - See note 4
3. Corners may be square or rounded when base material is plywood but borders shall be rounded as shown. When base material is metal, the corners and borders shall be rounded.
4. Border & Arrow are non reflective black, the circle with diagonal bar is reflective red.

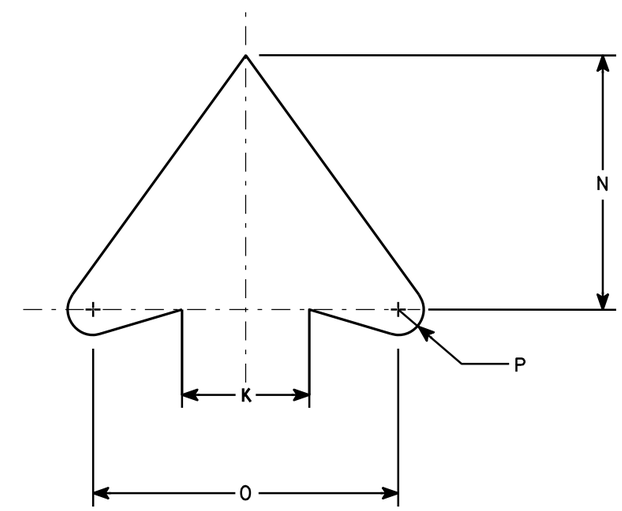

ARROW DETAIL

SIZE	A	B	C	D	E	F	G	H	I	J	K	L	M	N	O	P	Q	R	S	T	U	V	W	X	Y	Z	Area sq. ft.
1	24		1 1/8	3/8	1/2	10 1/2	4	7 1/2	2	1 1/2	2 1/2	45	8 1/2	5	6	1/2	12										4.0
2S	24		1 1/8	3/8	1/2	10 1/2	4	7 1/2	2	1 1/2	2 1/2	45°	8 1/2	5	6	1/2	12										4.0
2M	36		1 5/8	5/8	3/4	15 3/4	6	11 1/4	3	2 1/4	3 3/4	45	12 3/4	7 1/2	9	3/4	18										9.0
3	36		1 5/8	5/8	3/4	15 3/4	6	11 1/4	3	2 1/4	3 3/4	45	12 3/4	7 1/2	9	3/4	18										9.0
4	36		1 5/8	5/8	3/4	15 3/4	6	11 1/4	3	2 1/4	3 3/4	45°	12 3/4	7 1/2	9	3/4	18										9.0
5	48		2 1/4	3/4	1	21	8	15	4	3	5	45°	17	10	12	1	24										16.0

STANDARD SIGN
R3-1

WISCONSIN DEPT OF TRANSPORTATION

APPROVED Matthew R Rauch
for State Traffic Engineer

DATE 12/08/10 PLATE NO. R3-1.5

PROJECT NO:	HWY:	COUNTY:		SHEET NO: 196	E

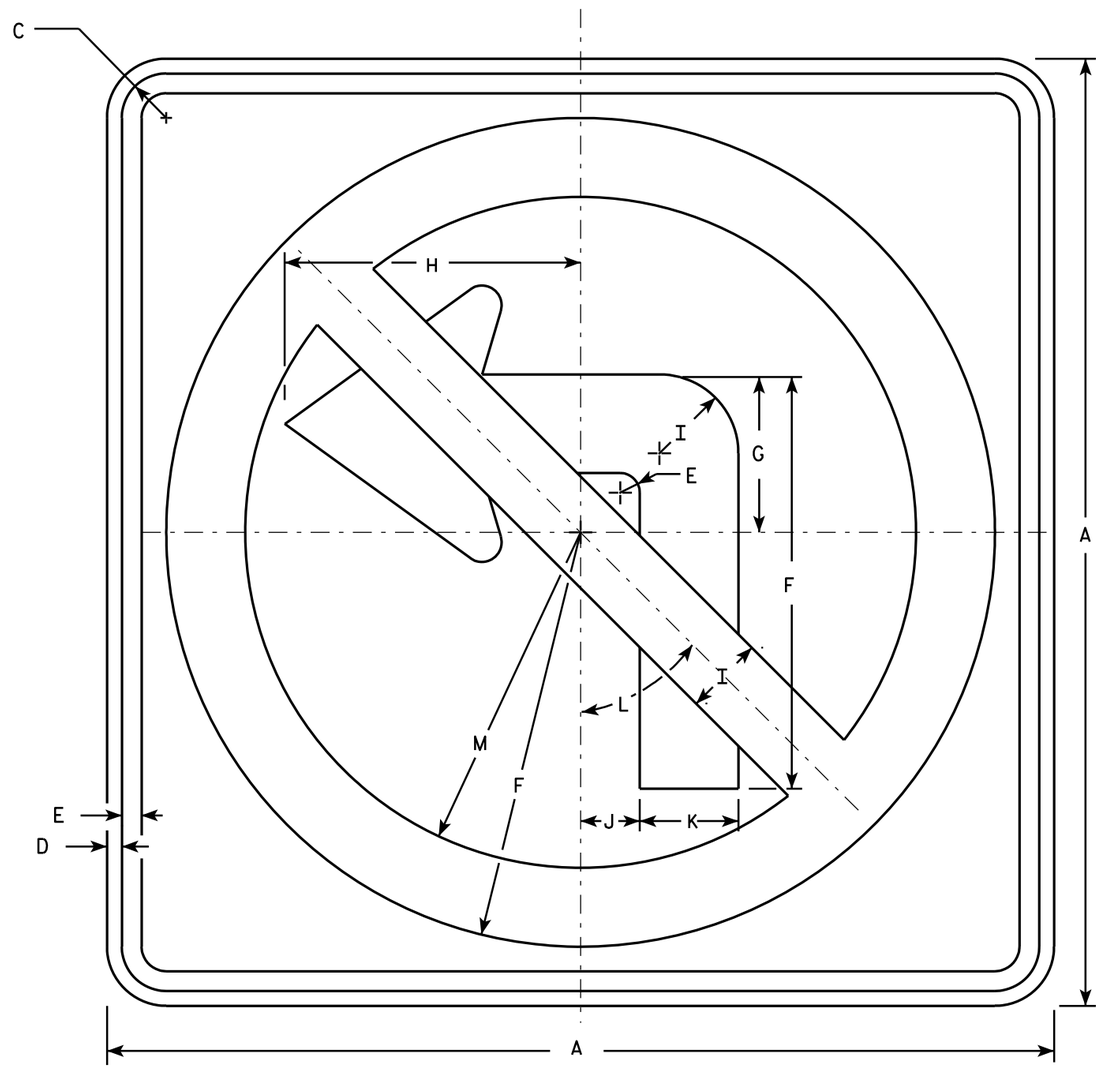

R3-2

NOTES

1. Sign is Type II - Type H Reflective - reference WIS DOT Standard Specification for HIGHWAY and STRUCTURE CONSTRUCTION latest edition.
2. Color:
   Background - White
   Message - See note 4
3. Corners may be square or rounded when base material is plywood but borders shall be rounded as shown. When base material is metal, the corners and borders shall be rounded.
4. Border & Arrow are non reflective black, the circle with diagonal bar is reflective red.

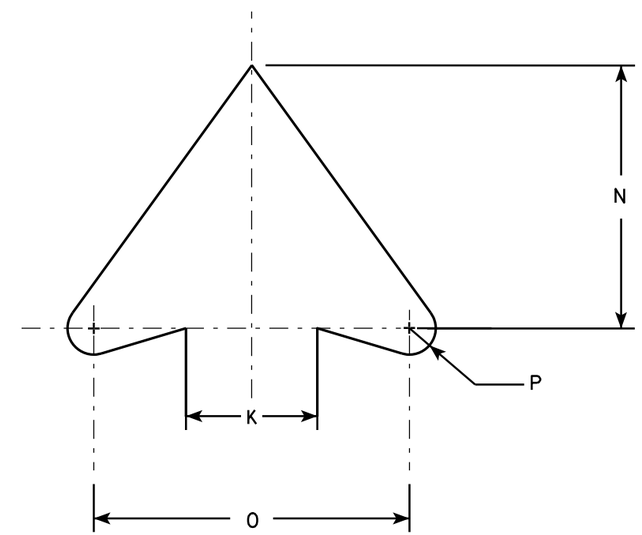

ARROW DETAIL

SIZE	A	B	C	D	E	F	G	H	I	J	K	L	M	N	O	P	Q	R	S	T	U	V	W	X	Y	Z	Area sq. ft.
1	24		1 1/8	3/8	1/2	10 1/2	4	7 1/2	2	1 1/2	2 1/2	45°	8 1/2	5	6	1/2											4.0
2S	24		1 1/8	3/8	1/2	10 1/2	4	7 1/2	2	1 1/2	2 1/2	45°	8 1/2	5	6	1/2											4.0
2M	36		1 5/8	5/8	3/4	15 3/4	6	11 1/4	3	2 1/4	3 3/4	45°	12 3/4	7 1/2	9	3/4											9.0
3	36		1 5/8	5/8	3/4	15 3/4	6	11 1/4	3	2 1/4	3 3/4	45°	12 3/4	7 1/2	9	3/4											9.0
4	36		1 5/8	5/8	3/4	15 3/4	6	11 1/4	3	2 1/4	3 3/4	45°	12 3/4	7 1/2	9	3/4											9.0
5	48		2 1/4	3/4	1	21	8	15	4	3	5	45°	17	10	12	1											16.0

STANDARD SIGN
R3-2

WISCONSIN DEPT OF TRANSPORTATION

APPROVED Matthew R Rauch
for State Traffic Engineer

DATE 12/08/10 PLATE NO. R3-2.10

PROJECT NO:	HWY:	COUNTY:		SHEET NO: 197	E

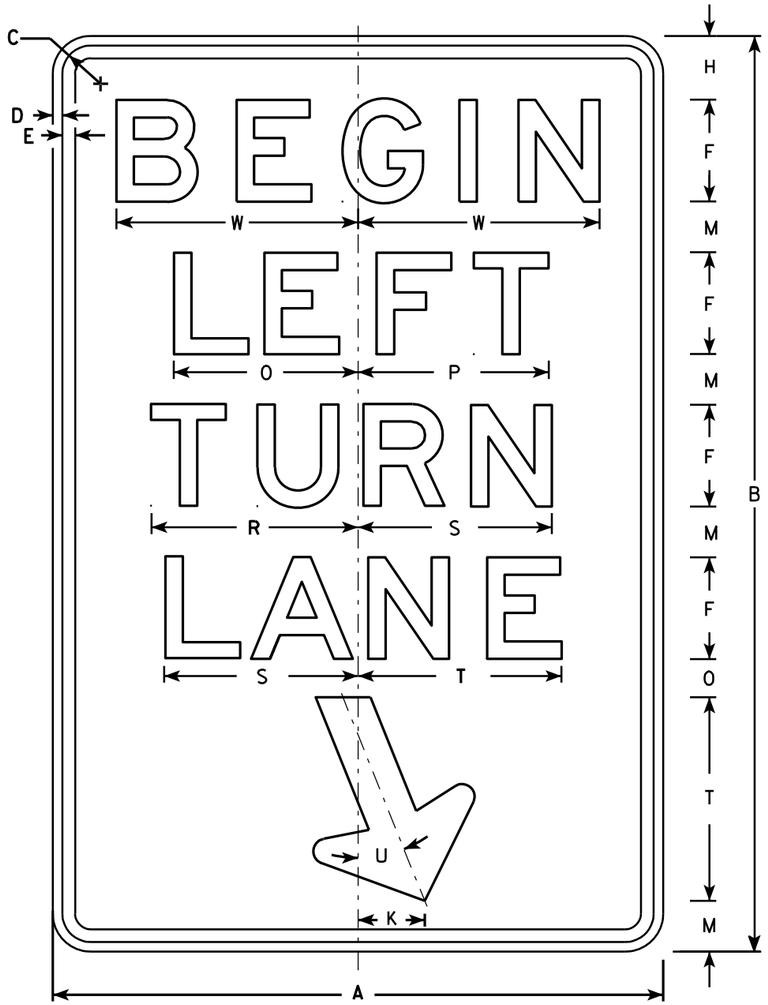

R3-20L

NOTES

1. Sign is Type II - Type H Reflective - reference WIS DOT Standard Specification for HIGHWAY and STRUCTURE CONSTRUCTION latest edition.
2. Color:
   Background - White
   Message - Black
3. Message Series - E
4. Corners may be square or rounded when base material is plywood but borders shall be rounded as shown. When base material is metal, the corners and borders shall be rounded.

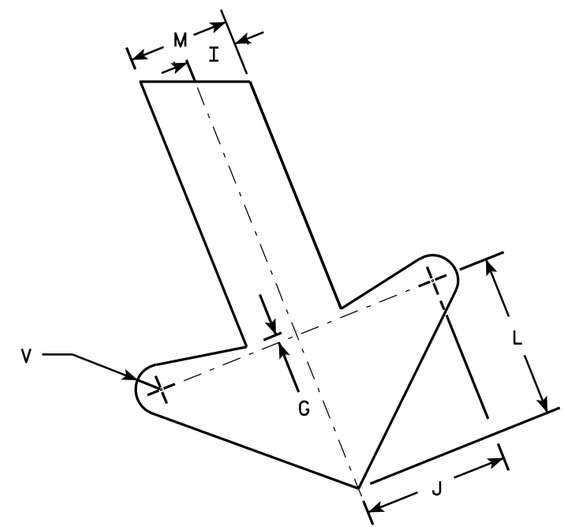

ARROW DETAIL

SIZE	A	B	C	D	E	F	G	H	I	J	K	L	M	N	O	P	Q	R	S	T	U	V	W	X	Y	Z	Area sq. ft.
1																											
2S	24	36	1 1/8	3/8	1/2	4	1/4	2 1/2	1	2 7/8	2 5/8	3 1/4	2	1 1/2	7 1/4	7 1/2		8 1/8	7 5/8	8	22°	1/2	9 1/2				6.0
2M	24	36	1 1/8	3/8	1/2	4	1/4	2 1/2	1	2 7/8	2 5/8	3 1/4	2	1 1/2	7 1/4	7 1/2		8 1/8	7 5/8	8	22°	1/2	9 1/2				6.0
3	36	54	1 3/4	1/2	5/8	6	3/8	3 3/4	1 1/2	4 1/4	4	4 7/8	3	2 1/4	10 7/8	11 1/4		12 1/4	11 1/2	12	22°	3/4	13 1/4				13.5
4																											
5																											

STANDARD SIGN
R3-20L

WISCONSIN DEPT OF TRANSPORTATION

APPROVED Matthew R Rauch
for State Traffic Engineer

DATE 10/18/10 PLATE NO. R3-20L.7

PROJECT NO: | HWY: | COUNTY: | SHEET NO: 198 | E

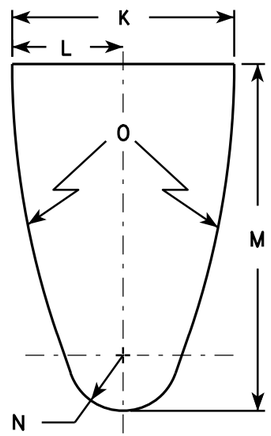

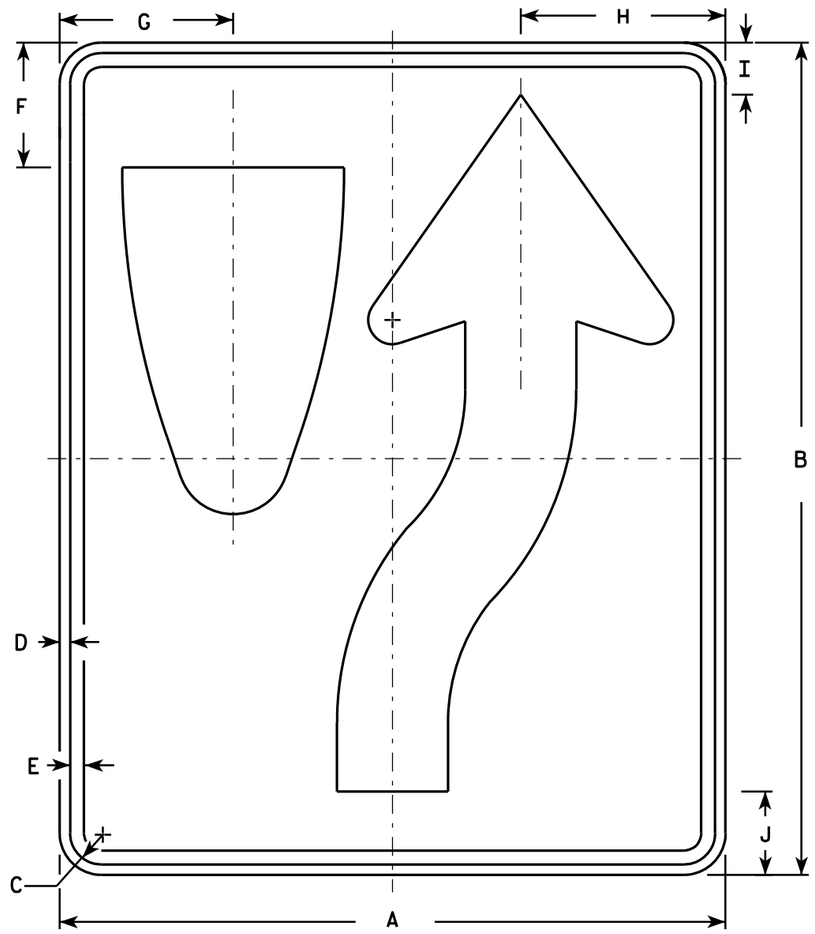

R4-7

NOTES

1. Sign is Type II - Type H Reflective - reference WIS DOT Standard Specification for HIGHWAY and STRUCTURE CONSTRUCTION latest edition. material is plywood but borders shall be rounded
2. Color:
   Background - White
   Message - Black
3. Corners may be square or rounded when base as shown. When base material is metal, the corners and borders shall be rounded.
4. R4-8 is the same as R4-7 except Legend is reversed.

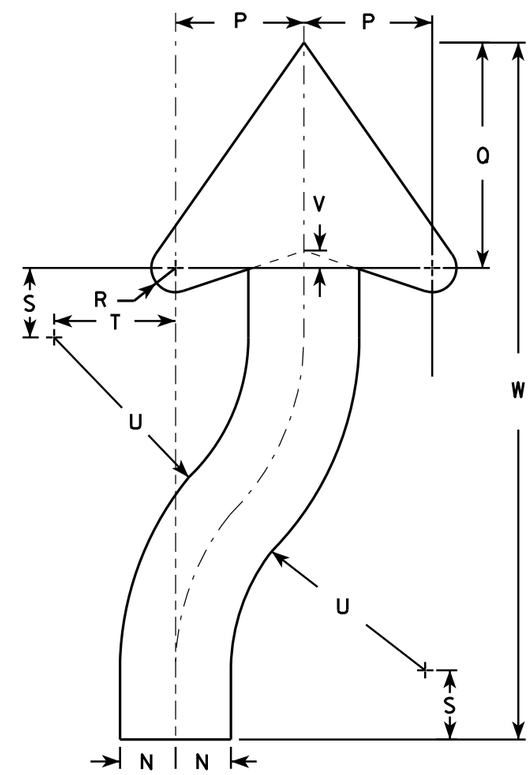

ARROW DETAIL

SIZE	A	B	C	D	E	F	G	H	I	J	K	L	M	N	O	P	Q	R	S	T	U	V	W	X	Y	Z	Area sq. ft.
1	18	24	1 1/8	3/8	1/2	3 3/8	4 3/4	5 1/2	1 3/8	2 1/4	6	3	9 3/8	1 1/2	22 1/2	3 1/2	6 1/8	5/8	1 7/8	3 1/4	6 3/4	1/2	20 3/8				3.0
2S	24	30	1 1/8	3/8	1/2	4 1/2	6 1/4	7 3/8	1 7/8	3	8	4	12 1/2	2	30	4 5/8	8 1/8	7/8	2 1/2	4 3/8	9	5/8	25 1/8				5.0
2M	24	30	1 1/8	3/8	1/2	4 1/2	6 1/4	7 3/8	1 7/8	3	8	4	12 1/2	2	30	4 5/8	8 1/8	7/8	2 1/2	4 3/8	9	5/8	25 1/8				5.0
3	36	48	1 3/4	1/2	5/8	6 3/4	9 3/8	11 1/8	2 7/8	4 1/2	12	6	18 3/4	3	45	6 7/8	12 1/4	1 1/4	3 3/4	6 5/8	13 1/2	1	40 3/4				12.0
4	36	48	1 3/4	1/2	5/8	6 3/4	9 3/8	11 1/8	2 7/8	4 1/2	12	6	18 3/4	3	45	6 7/8	12 1/4	1 1/4	3 3/4	6 5/8	13 1/2	1	40 3/4				12.0
5	48	60	2 1/4	3/4	1	9	12 1/2	14 3/4	3 3/4	6	16	8	25	4	60	9 1/4	16 1/4	1 5/8	5	8 3/4	18	1 1/4	50 1/4				20.0

STANDARD SIGN
R4-7 & R4-8

WISCONSIN DEPT OF TRANSPORTATION

APPROVED Matthew R Rauch for State Traffic Engineer

DATE 3/25/2011 PLATE NO. R4-7.8

PROJECT NO:	HWY:	COUNTY:		SHEET NO: 199	E

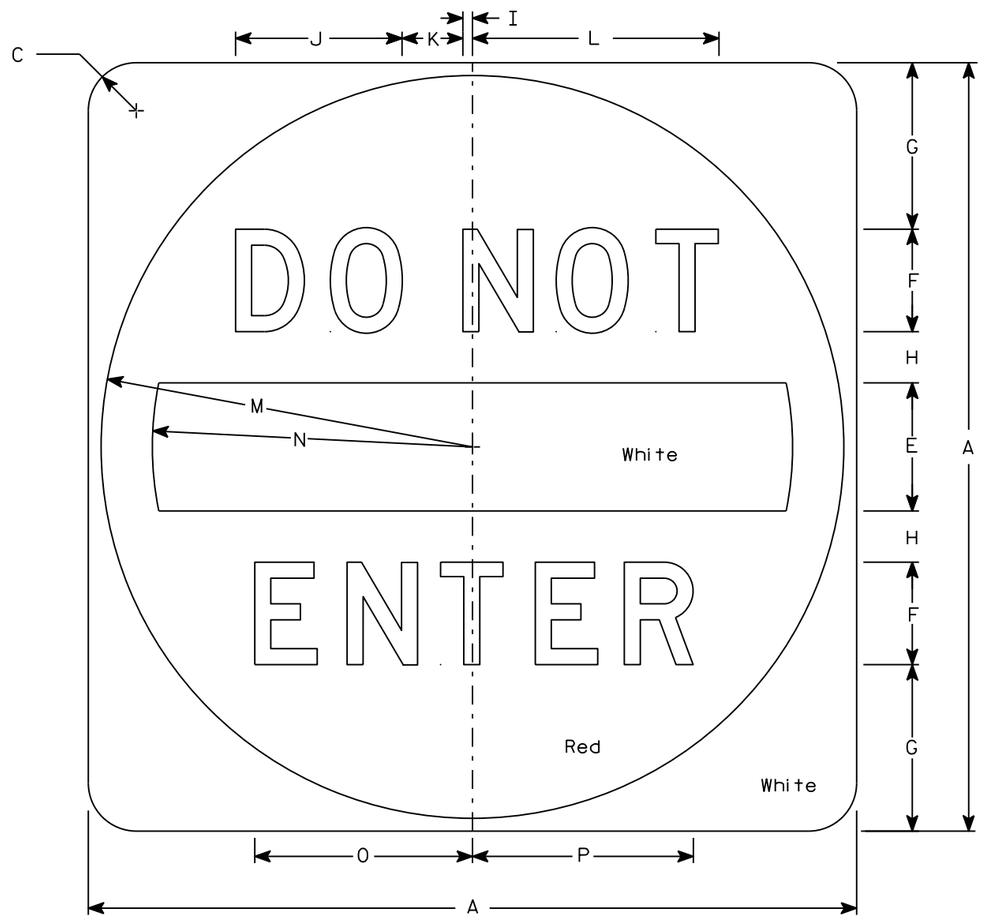

R5-1

NOTES

1. Sign is Type II - Type H Reflective
2. Color:
   Background - See detail
   Message - White
3. Message Series - D

SIZE	A	B	C	D	E	F	G	H	I	J	K	L	M	N	O	P	Q	R	S	T	U	V	W	X	Y	Z	Area sq. ft.
1																											
2S	30		1 7/8		5	4	6 1/2	2	3/8	6 1/2	2 3/8	9 5/8	14 1/2	12 1/2	8 1/2	8 5/8											6.25
2M	36		2 1/4		6	5	7 1/2	2 1/2	1/2	8 1/8	3	12 1/8	17 1/2	15	10 5/8	10 3/4											9.0
3	36		2 1/4		6	5	7 1/2	2 1/2	1/2	8 1/8	3	12 1/8	17 1/2	15	10 5/8	10 3/4											9.0
4	36		2 1/4		6	5	7 1/2	2 1/2	1/2	8 1/8	3	12 1/8	17 1/2	15	10 5/8	10 3/4											9.0
5	48		3		8	6	11	3	5/8	9 3/4	3 5/8	14 1/2	23 1/2	20	12 3/4	12 7/8											16.0

STANDARD SIGN
R5-1

WISCONSIN DEPT OF TRANSPORTATION

APPROVED Matthew R Rauch
for State Traffic Engineer

DATE 3/15/18 PLATE NO. R5-1.16

PROJECT NO: | HWY: | COUNTY: | SHEET NO: 200 | E

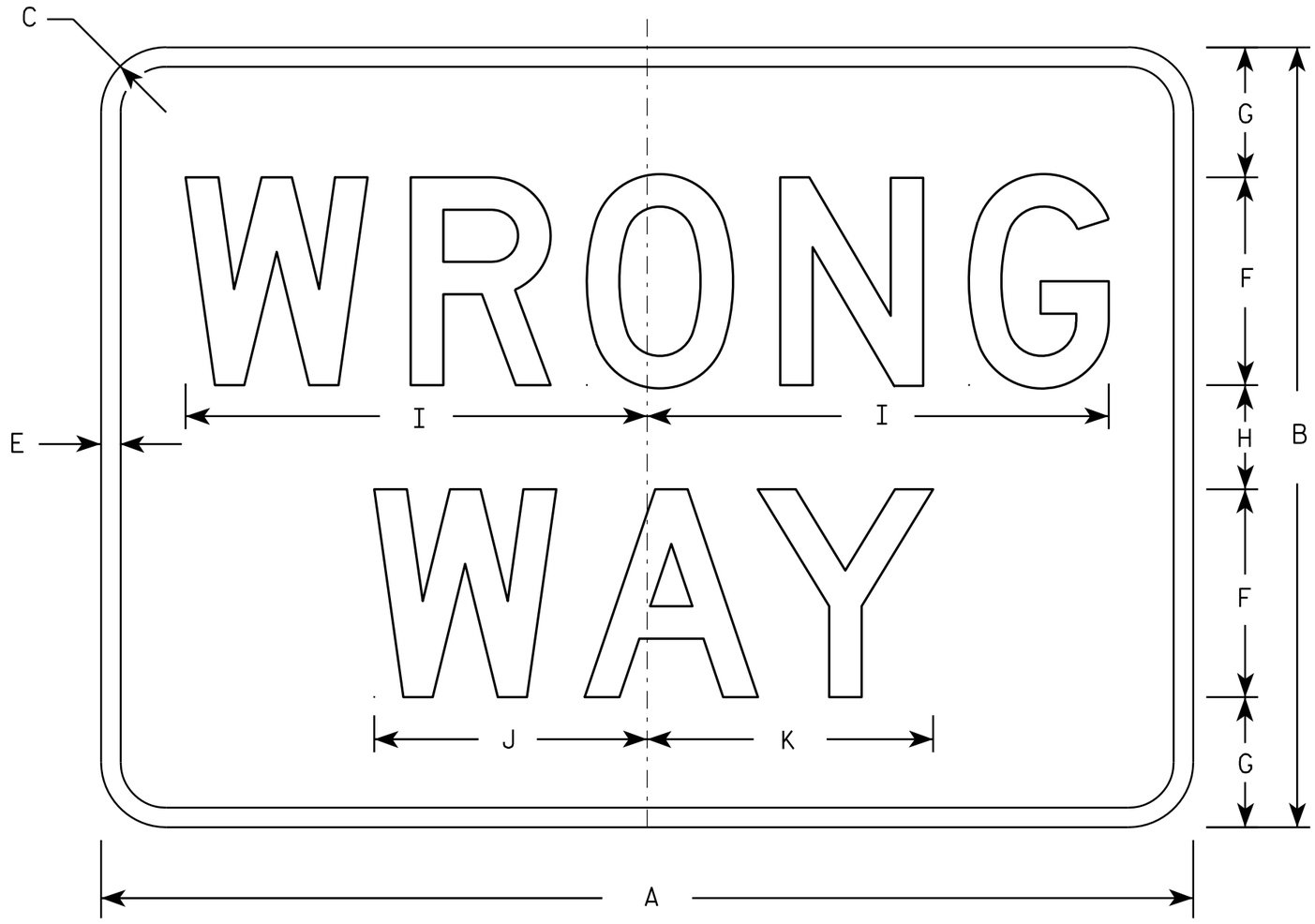

R5-1A

NOTES

1. Sign is Type II - Type H Reflective - reference WIS DOT Standard Specification for HIGHWAY and STRUCTURE CONSTRUCTION latest edition.
2. Color:
   Background - Red
   Message - White
3. Message Series - D
4. Corners may be square or rounded when base material is plywood but borders shall be rounded as shown. When base material is metal, the corners and borders shall be rounded.

SIZE	A	B	C	D	E	F	G	H	I	J	K	L	M	N	O	P	Q	R	S	T	U	V	W	X	Y	Z	Area sq. ft.
1	30	18	1 1/2		1/2	5	3	2	11	6 1/2	6 7/8																3.75
2S	36	24	2		5/8	6	4 1/2	3	13 1/4	7 7/8	8 1/4																6.00
2M	42	30	2 1/2		3/4	8	5	4	17 3/4	10 1/2	11																8.75
3	42	30	2 1/2		3/4	8	5	4	17 3/4	10 1/2	11																8.75
4	42	30	2 1/2		3/4	8	5	4	17 3/4	10 1/2	11																8.75
5	42	30	2 1/2		3/4	8	5	4	17 3/4	10 1/2	11																8.75

STANDARD SIGN
R5-1A

WISCONSIN DEPT OF TRANSPORTATION

APPROVED Matthew R Rauch
for State Traffic Engineer

DATE 12/17/10 PLATE NO. R5-1A.2

PROJECT NO: | HWY: | COUNTY: | SHEET NO: 201 | E

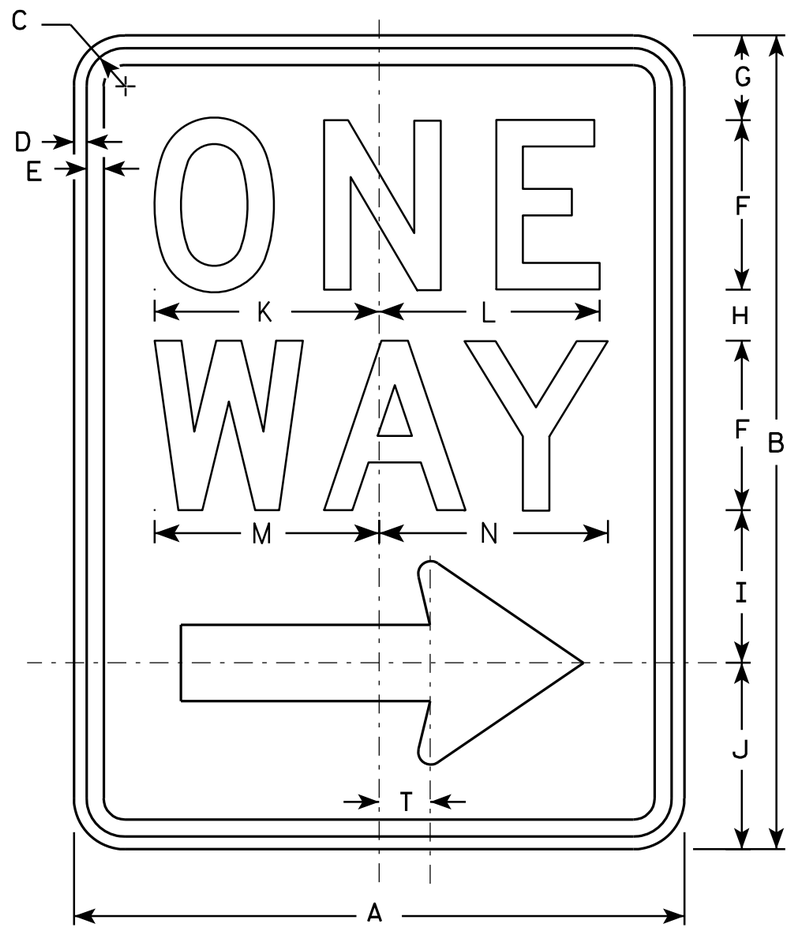

R6-2R

NOTES

1. Sign is Type II - Type H Reflective - reference WIS DOT Standard Specification for HIGHWAY and STRUCTURE CONSTRUCTION latest edition.
2. Color:
   Background - White
   Message - Black
3. Message Series - D
4. Corners may be square or rounded when base material is plywood but borders shall be rounded as shown. When base material is metal, the corners and borders shall be rounded.
5. R6-2L same as R6-2R except arrow points to the left.

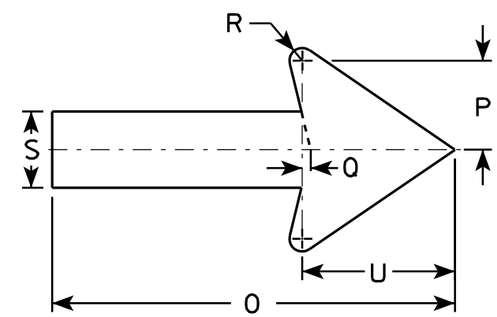

SIZE	A	B	C	D	E	F	G	H	I	J	K	L	M	N	O	P	Q	R	S	T	U	V	W	X	Y	Z
1	18	24	1 1/8	3/8	1/2	5	2 1/2	1 1/2	4 1/2	5 1/2	6 5/8	6 1/2	6 5/8	6 3/4	11 7/8	2 5/8	1/4	3/8	2 1/4	1 1/2	4 1/2					
2S	24	30	1 1/8	3/8	1/2	6	3	2 1/2	5 1/2	7	8 1/8	8 1/8	8 1/2	8 5/8	16	3 1/2	3/8	1/2	3	2	6					
2M	30	36	1 3/8	1/2	5/8	8	2 1/2	2 5/8	6 7/8	8	10 1/2	10 1/2	11 1/4	11 1/4	20	4 3/8	1/2	5/8	3 3/4	2 1/2	7 1/2					
3	36	48	1 7/8	1/2	5/8	10	5 1/4	3 1/4	9	10 1/2	12 3/4	12 3/4	13 1/4	13 1/2	24	5 5/8	1/2	3/4	4 3/4	3	9					
4	36	48	1 7/8	1/2	5/8	10	5 1/4	3 1/4	9	10 1/2	12 3/4	12 3/4	13 1/4	13 1/2	24	5 5/8	1/2	3/4	4 3/4	3	9					
5																										

STANDARD SIGN
R6-2 R&L

WISCONSIN DEPT OF TRANSPORTATION

APPROVED Matthew R Rauch
for State Traffic Engineer

DATE 11/2/10 PLATE NO. R6-2.8

PROJECT NO:	HWY:	COUNTY:		SHEET NO: 202	E

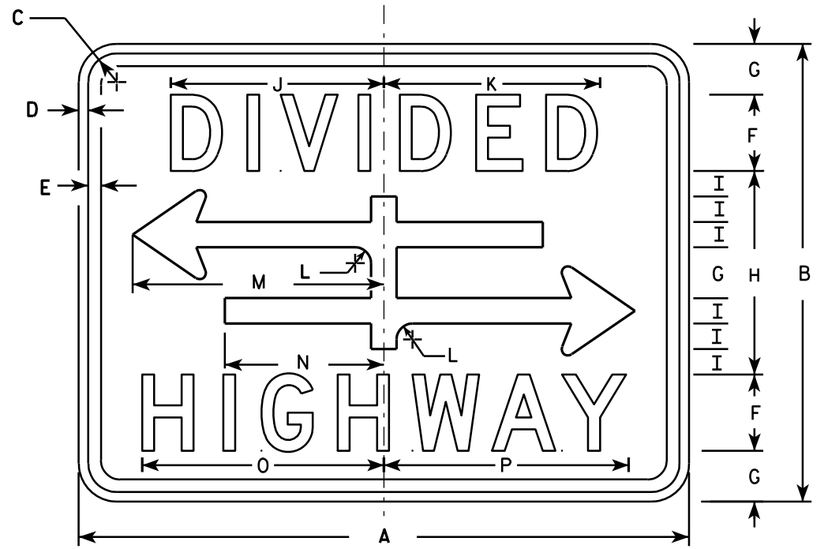

R6-3

NOTES

1. Sign is Type II - Type H Reflective - reference WIS DOT Standard Specification for HIGHWAY and STRUCTURE CONSTRUCTION latest edition.
2. Color:
   Background - White
   Message - Black
3. Message Series - D
4. Corners may be square or rounded when base material is plywood but borders shall be rounded as shown. When base material is metal, the corners and borders shall be rounded.

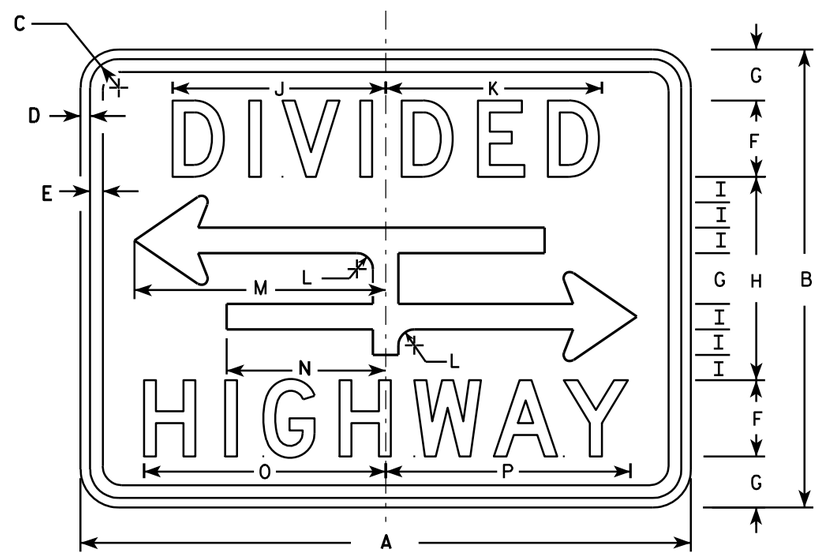

R6-3A

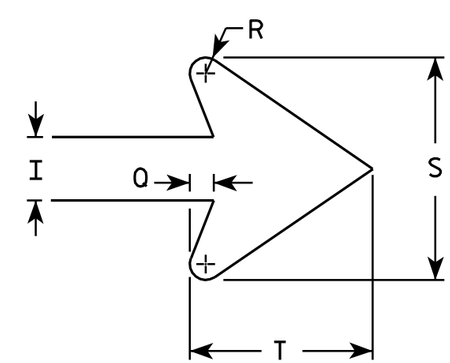

ARROW DETAIL

SIZE	A	B	C	D	E	F	G	H	I	J	K	L	M	N	O	P	Q	R	S	T	U	V	W	X	Y	Z	Area sq. ft.
1	24	18	1 1/8	3/8	3/8	3	2	8	1	8 3/8	8 1/2	5/8	9 7/8	6 1/4	9 1/2	9 5/8	3/8	1/4	3 1/2	2 3/4							3.0
2S	30	24	1 1/8	3/8	1/2	4	2 5/8	10 3/4	1 3/8	10 1/2	10 5/8	7/8	12 1/2	7 7/8	12 1/4	12 3/8	1/2	3/8	4 5/8	3 5/8							5.0
2M	30	24	1 1/8	3/8	1/2	4	2 5/8	10 3/4	1 3/8	10 1/2	10 5/8	7/8	12 1/2	7 7/8	12 1/4	12 3/8	1/2	3/8	4 5/8	3 5/8							5.0
3																											
4																											
5																											

STANDARD SIGN
R6-3 & R6-3A

WISCONSIN DEPT OF TRANSPORTATION

APPROVED Matthew R Rauch
for State Traffic Engineer

DATE 3/31/2011 PLATE NO. R6-3.5

PROJECT NO:

SHEET NO: 203 E

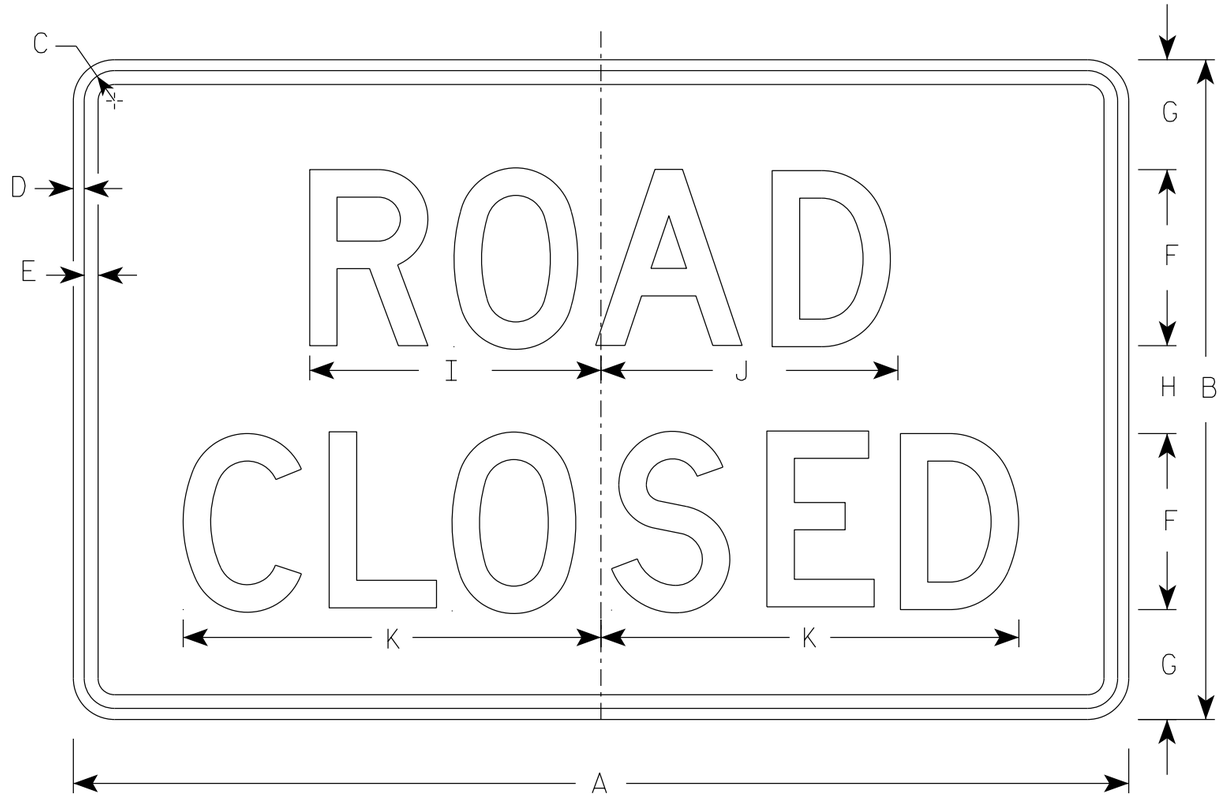

R11-2

NOTES

1. Sign is Type II - Type H Reflective
2. Color:
   Background - White
   Message - Black
3. Message Series - D
4. Corners may be square or rounded when base material is plywood but borders shall be rounded as shown. When base material is metal, the corners and borders shall be rounded.
5. Modify the message as required.

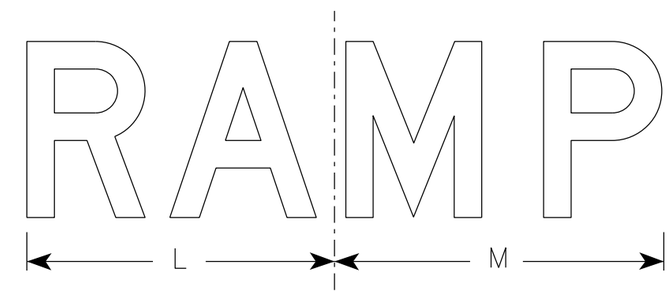

R11-2R

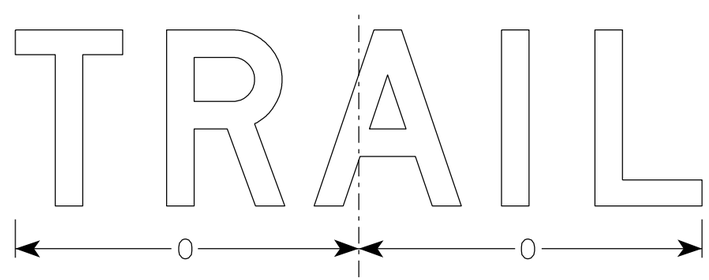

R11-2T

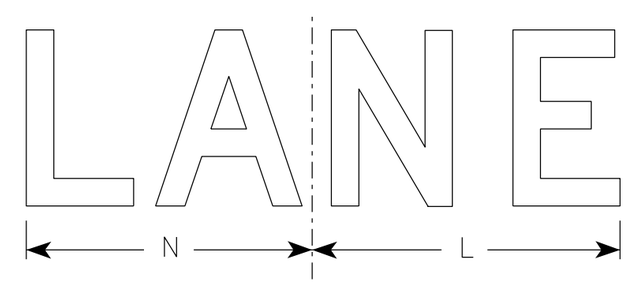

R11-2L

SIZE	A	B	C	D	E	F	G	H	I	J	K	L	M	N	O	P	Q	R	S	T	U	V	W	X	Y	Z	Area sq. ft.
1																											
2S	48	30	1 3/8	1/2	5/8	8	5	4	13 1/4	13 1/2	19	14	15	13	15 5/8												10.0
2M	48	30	1 3/8	1/2	5/8	8	5	4	13 1/4	13 1/2	19	14	15	13	15 5/8												10.0
3	48	30	1 3/8	1/2	5/8	8	5	4	13 1/4	13 1/2	19	14	15	13	15 5/8												10.0
4	48	30	1 3/8	1/2	5/8	8	5	4	13 1/4	13 1/2	19	14	15	13	15 5/8												10.0
5	48	30	1 3/8	1/2	5/8	8	5	4	13 1/4	13 1/2	19	14	15	13	15 5/8												10.0

STANDARD SIGN
R11-2

WISCONSIN DEPT OF TRANSPORTATION

APPROVED Matthew R Rauch
for State Traffic Engineer

DATE 3/29/2021 PLATE NO. R11-2.11

PROJECT NO: | HWY: | COUNTY: | SHEET NO: E

7

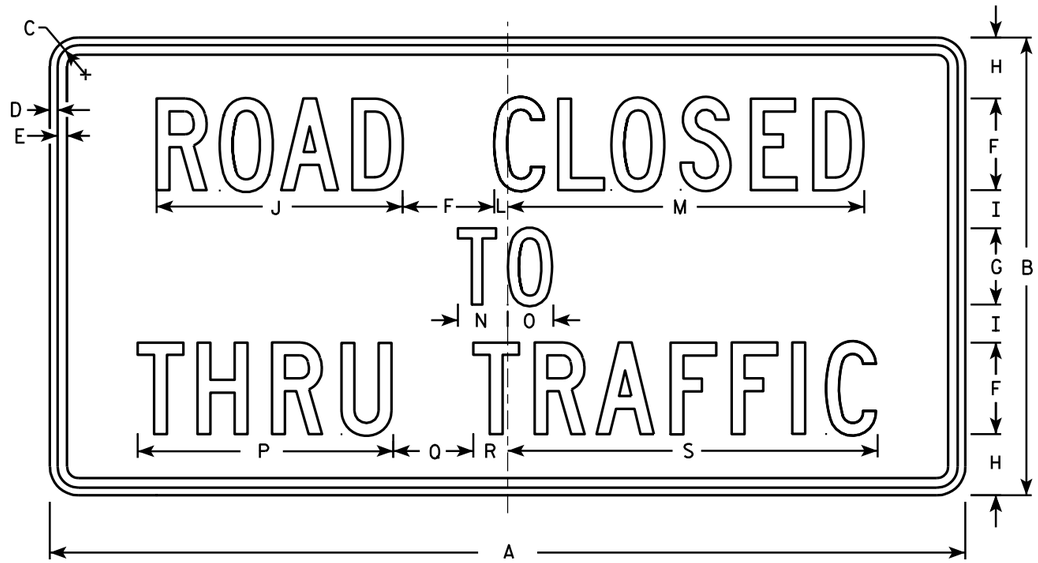

R11-4

NOTES

1. Sign is Type II - Type H Reflective - reference WIS DOT Standard Specification for HIGHWAY and STRUCTURE CONSTRUCTION latest edition.
2. Color:
   Background - White
   Message - Black
3. Message Series - C
4. Corners may be square or rounded when base material is plywood but borders shall be rounded as shown. When base material is metal, the corners and borders shall be rounded.

SIZE	A	B	C	D	E	F	G	H	I	J	K	L	M	N	O	P	Q	R	S	T	U	V	W	X	Y	Z	Area sq. ft.
1																											
2S	60	30	1 3/8	1/2	5/8	6	5	4	2 1/2	16 1/8		7/8	23 3/8	3 1/4	3	16 3/4	5 1/4	2 1/4	24 1/4								12.5
2M	60	30	1 3/8	1/2	5/8	6	5	4	2 1/2	16 1/8		7/8	23 3/8	3 1/4	3	16 3/4	5 1/4	2 1/4	24 1/4								12.5
3																											
4																											
5																											

STANDARD SIGN
R11 - 4

WISCONSIN DEPT OF TRANSPORTATION

APPROVED Matthew R Rauch for State Traffic Engineer

DATE 4/1/11 PLATE NO. R11-4.3

PROJECT NO: | HWY: | COUNTY: | SHEET NO: 205 | E

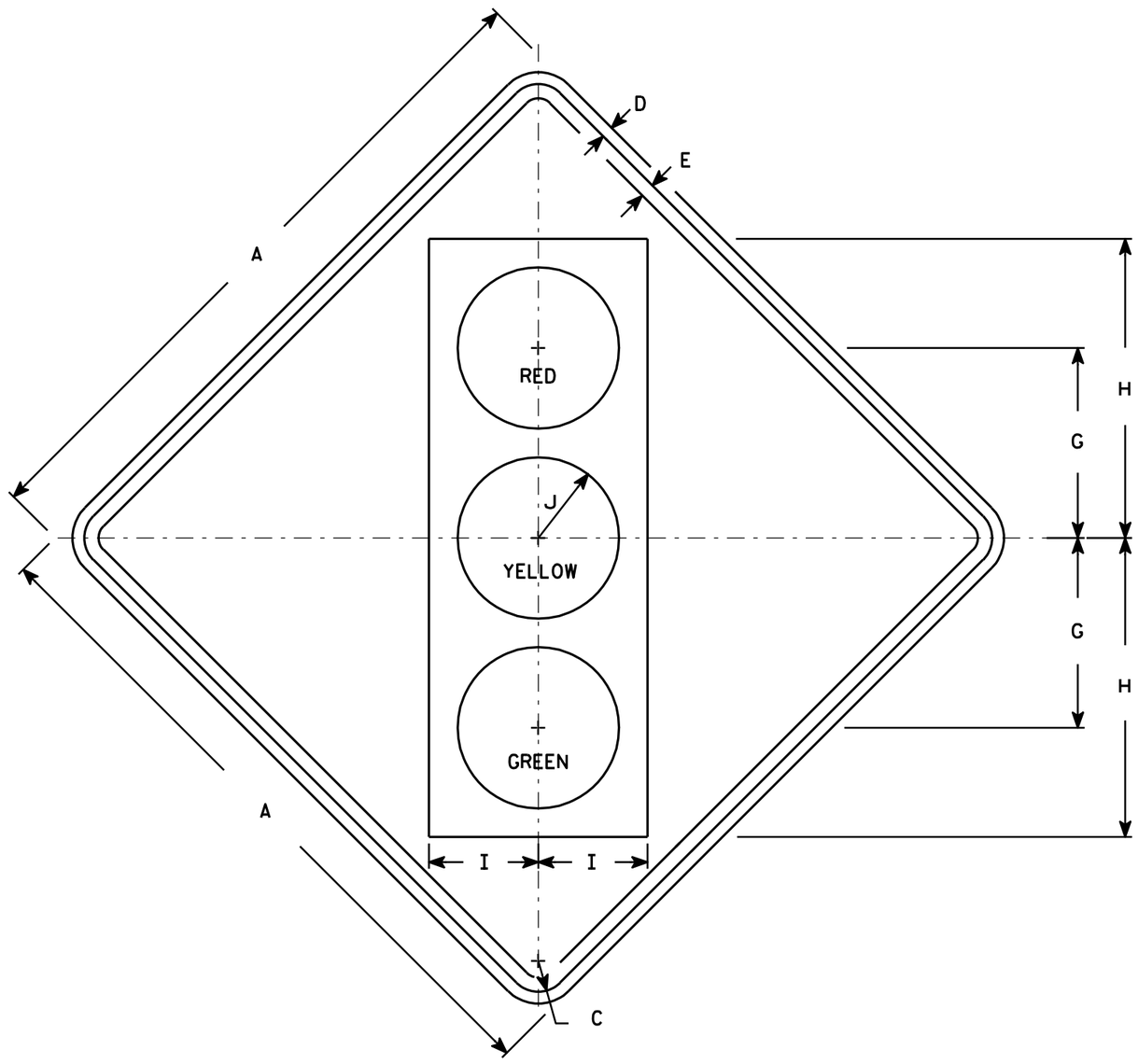

W3-3

NOTES

1. Sign is Type II - Type F Reflective - reference WIS DOT Standard Specification for HIGHWAY and STRUCTURE CONSTRUCTION latest edition.
2. Color:
   Background - Yellow
   Message - See Note 4
3. Corners may be square or rounded when base material is plywood but borders shall be rounded as shown. When base material is metal, the corners and borders shall be rounded.
4. Symbol and border are non-reflective black.
   Top circle - Type H Reflectorized Red
   Center circle - Same as background
   Bottom circle - Type H Reflectorized Green

SIZE	A	B	C	D	E	F	G	H	I	J	K	L	M	N	O	P	Q	R	S	T	U	V	W	X	Y	Z	Area sq. ft.
1	30		1 3/8	1/2	5/8		8 3/4	13 3/4	5	3 3/4																	6.25
2S	36		1 5/8	5/8	3/4		10	15 3/4	5 3/4	4 1/4																	9.0
2M	36		1 5/8	5/8	3/4		10	15 3/4	5 3/4	4 1/4																	9.0
3	36		1 5/8	5/8	3/4		10	15 3/4	5 3/4	4 1/4																	9.0
4	48		2 1/4	3/4	1		12 1/2	20	7 1/2	5																	16.0
5	48		2 1/4	3/4	1		12 1/2	20	7 1/2	5																	16.0

STANDARD SIGN
W3-3

WISCONSIN DEPT OF TRANSPORTATION

APPROVED Matthew R Rauch
for State Traffic Engineer

DATE 6/7/10 PLATE NO. W3-3.11

PROJECT NO: | HWY: | COUNTY: | SHEET NO: 206 | E

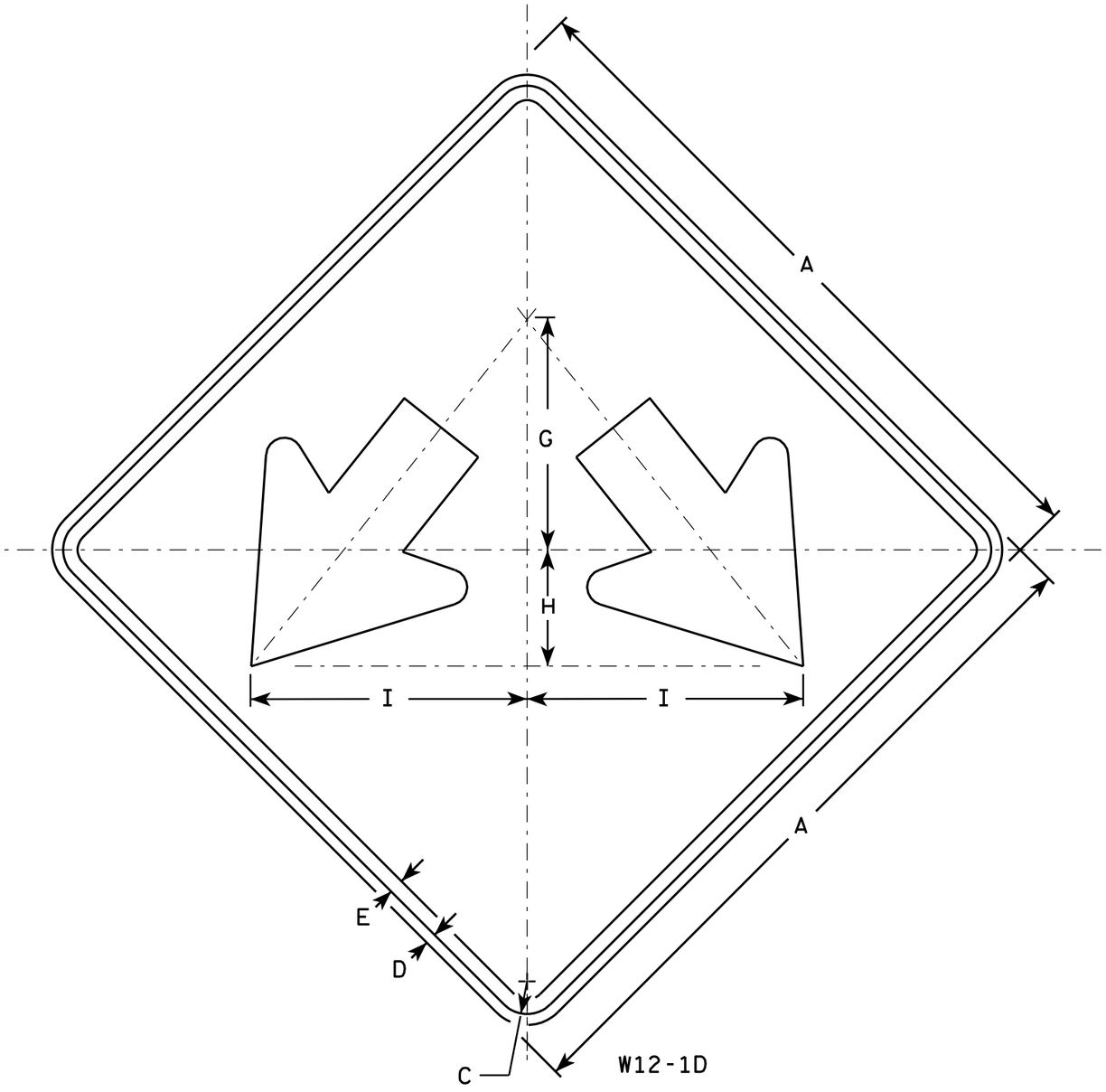

NOTES

1. Sign is Type II - Type F Reflective - reference WIS DOT Standard Specification for HIGHWAY and STRUCTURE CONSTRUCTION latest edition.
2. Color:
   Background - Yellow
   Message - Black
3. Corners may be square or rounded when base material is plywood but borders shall be rounded as shown. When base material is metal, the corners and borders shall be rounded.

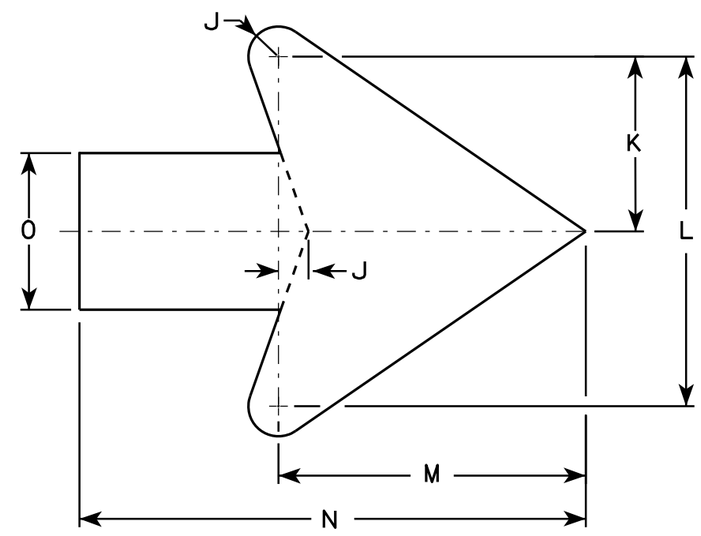

Arrow Detail

SIZE	A	B	C	D	E	F	G	H	I	J	K	L	M	N	O	P	Q	R	S	T	U	V	W	X	Y	Z	Area sq. ft.
1																											
2S	24		1 1/8	1/2	3/8		8	4	9 1/2	3/8	3 3/8	7 1/4	6 3/8	10 3/8	3 1/4												4.0
2M	24		1 1/8	1/2	3/8		8	4	9 1/2	3/8	3 3/8	7 1/4	6 3/8	10 3/8	3 1/4												4.0
3	30		1 3/8	1/2	5/8		10	5	11 7/8	3/4	4 1/2	9	7 7/8	13	4												6.25
4	36		1 3/8	1/2	5/8		12	6	14 1/4	1	5 1/2	10 7/8	9 5/8	15 3/4	4 3/4												9.0
5	48		2 1/4	3/4	1		16	8	19	1 1/4	7 1/4	14 1/2	12 3/4	21	6 1/4												16.0

STANDARD SIGN
W12-1D

WISCONSIN DEPT OF TRANSPORTATION

APPROVED Matthew R Rauch
for State Traffic Engineer

DATE 3/13/13 PLATE NO. W12-1D.15

PROJECT NO: | HWY: | COUNTY: | SHEET NO: 207 | E

NOTES

1. Sign is Type II - Type F Reflective
2. Color:
   Background - Orange
   Message - Black
3. Message Series - C
4. Corners may be square or rounded when base material is plywood but borders shall be rounded as shown. When base material is metal, the corners and borders shall be rounded.

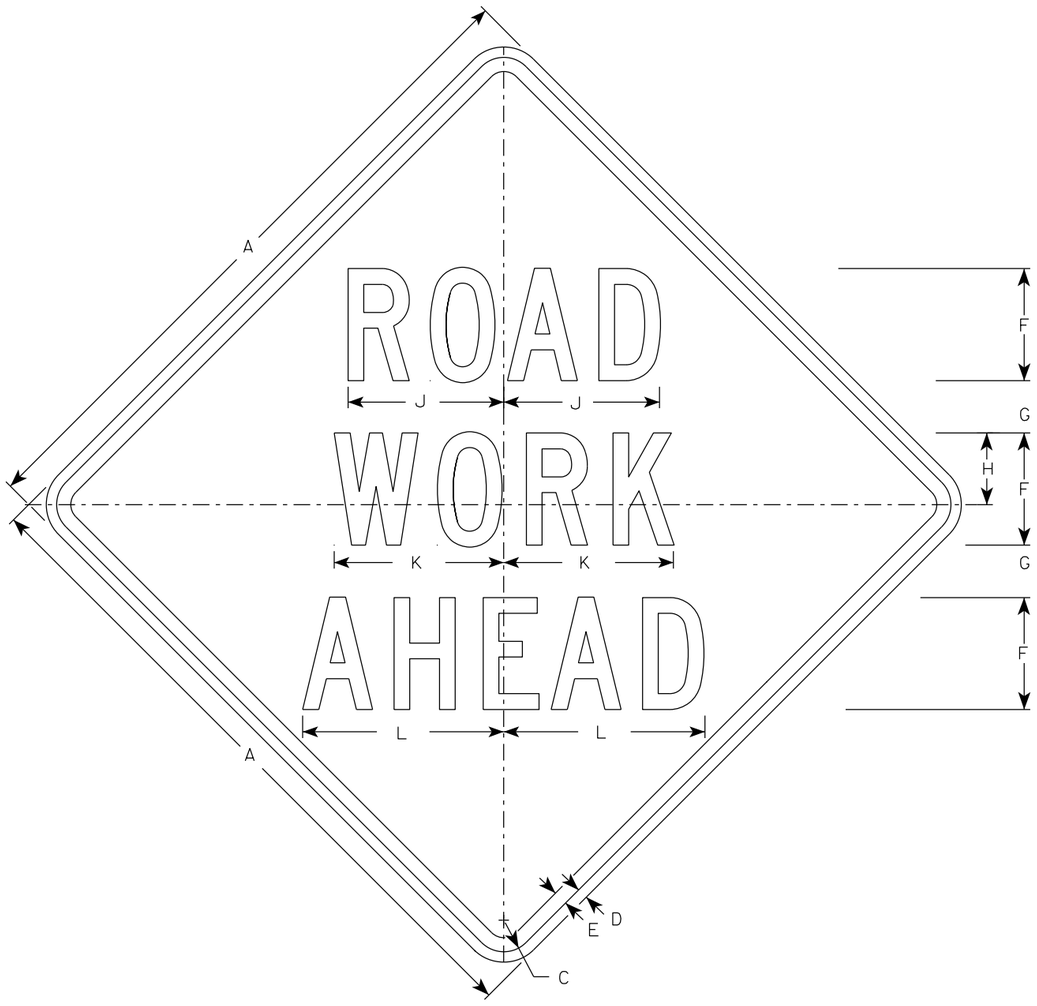

W20-1A

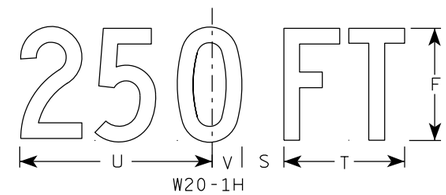

W20-1H

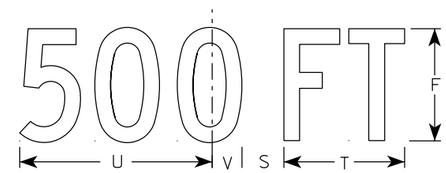

W20-1D

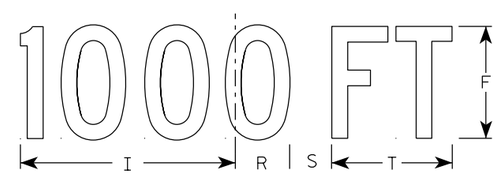

W20-1C

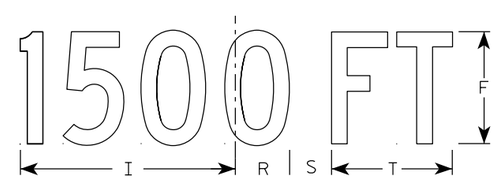

W20-1B

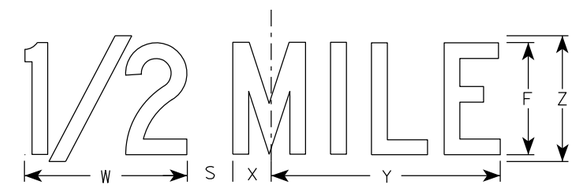

W20-1G

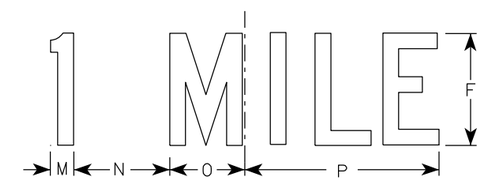

W20-1F

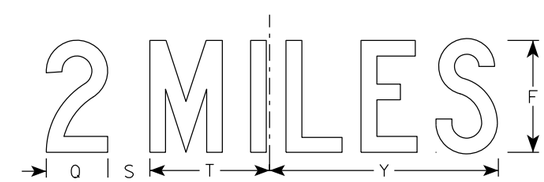

W20-1E

SIZE	A	B	C	D	E	F	G	H	I	J	K	L	M	N	O	P	Q	R	S	T	U	V	W	X	Y	Z	Area sq. ft.
1	36		1 5/8	5/8	3/4	5	2 5/8	3 1/4	10 1/8	7	7 5/8	8 7/8	1 1/8	4 1/2	3 1/2	9	3 1/4	2 1/2	2 1/4	5 5/8	9	1 3/8	8	1 3/4	10 3/4	6	9.0
2S	48		2 1/4	3/4	1	8	3 3/4	5 1/8	15 3/8	11 1/8	12 1/8	14 3/8	1 5/8	6 7/8	5 3/8	13 7/8	4 3/8	3 7/8	3	8 5/8	13 3/4	2 1/8	11 7/8	2 3/4	16 3/8	9	16.0
2M	48		2 1/4	3/4	1	8	3 3/4	5 1/8	15 3/8	11 1/8	12 1/8	14 3/8	1 5/8	6 7/8	5 3/8	13 7/8	4 3/8	3 7/8	3	8 5/8	13 3/4	2 1/8	11 7/8	2 3/4	16 3/8	9	16.0
3	48		2 1/4	3/4	1	8	3 3/4	5 1/8	15 3/8	11 1/8	12 1/8	14 3/8	1 5/8	6 7/8	5 3/8	13 7/8	4 3/8	3 7/8	3	8 5/8	13 3/4	2 1/8	11 7/8	2 3/4	16 3/8	9	16.0
4	48		2 1/4	3/4	1	8	3 3/4	5 1/8	15 3/8	11 1/8	12 1/8	14 3/8	1 5/8	6 7/8	5 3/8	13 7/8	4 3/8	3 7/8	3	8 5/8	13 3/4	2 1/8	11 7/8	2 3/4	16 3/8	9	16.0
5	48		2 1/4	3/4	1	8	3 3/4	5 1/8	15 3/8	11 1/8	12 1/8	14 3/8	1 5/8	6 7/8	5 3/8	13 7/8	4 3/8	3 7/8	3	8 5/8	13 3/4	2 1/8	11 7/8	2 3/4	16 3/8	9	16.0

STANDARD SIGN
W20-1A, B, C, D, E, F, G & H

WISCONSIN DEPT OF TRANSPORTATION

APPROVED Matthew R Rauch
For State Traffic Engineer
DATE 3/25/2020 PLATE NO. W20-1.11

PROJECT NO:

SHEET NO: 208 E

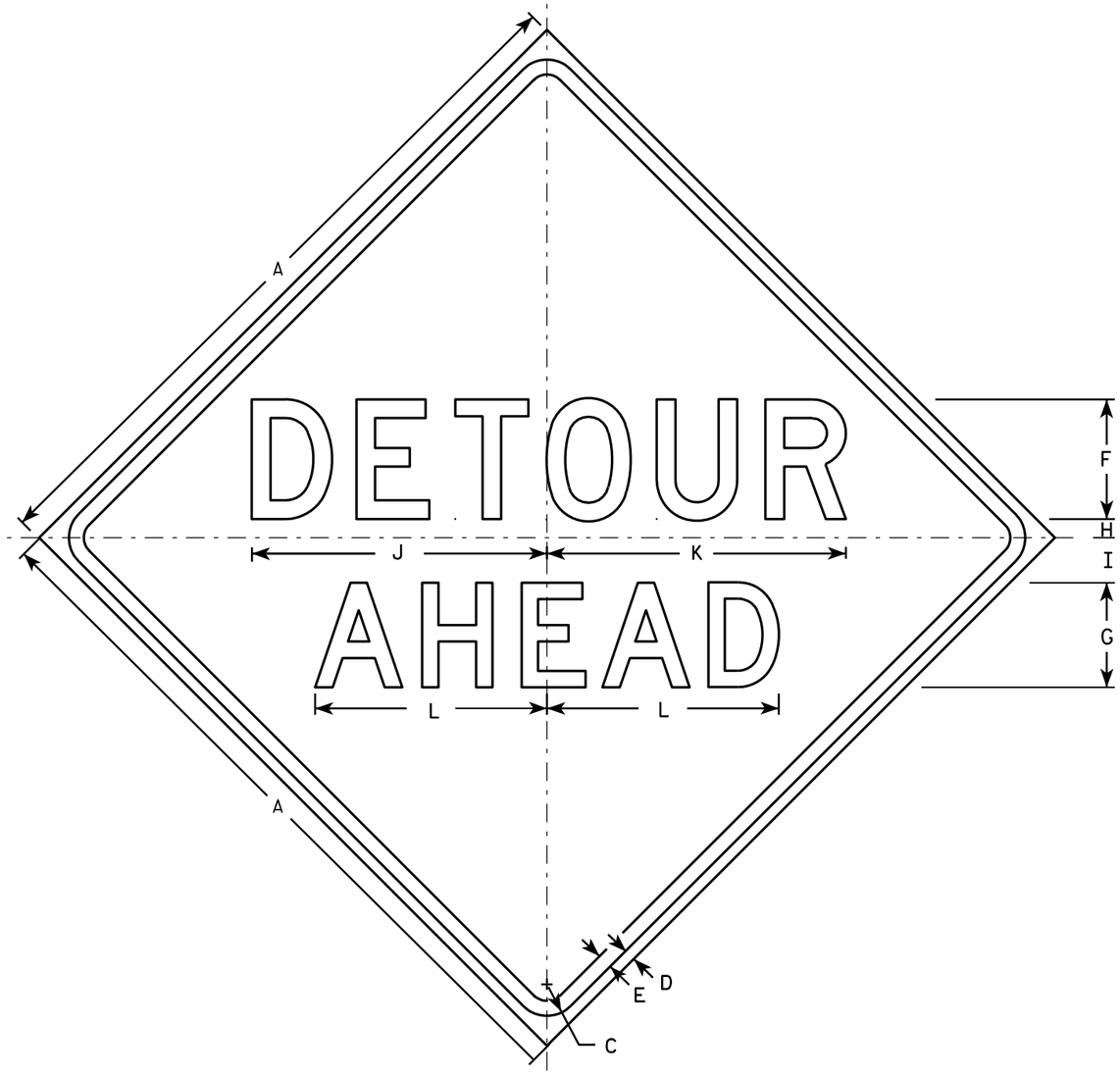

W20-2A

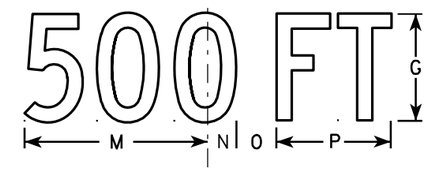

W20-2D

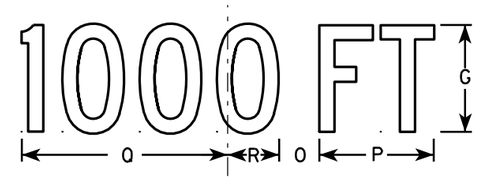

W20-2C

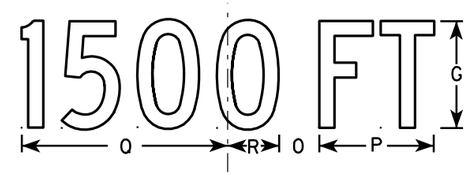

W20-2B

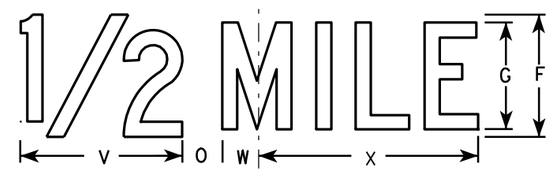

W20-2G

W20-2F

NOTES

1. Sign is Type II - Type F Reflective - reference WIS DOT Standard Specification for HIGHWAY and STRUCTURE CONSTRUCTION latest edition.
2. Color:
   Background - Orange
   Message - Black
3. Message Series - See note 5
4. Corners may be square or rounded when base material is plywood but borders shall be rounded as shown. When base material is metal, the corners and borders shall be rounded.
5. Line 1 is Series D.
   Line 2 is Series D for AHEAD and Series C for all other distances.

SIZE	A	B	C	D	E	F	G	H	I	J	K	L	M	N	O	P	Q	R	S	T	U	V	W	X	Y	Z	Area sq. ft.
1	36		1 5/8	5/8	3/4	6	5	1	2 1/4	14 3/4	15	11 5/8	9	1 3/8	1 7/8	5 5/8	10 1/8	2 1/2	1 1/8	4 1/2	3 1/2	8	1 3/4	10 3/4			9.0
2S	48		2 1/4	3/4	1	8	7	1 1/4	3	19 3/4	20	15 1/2	12	1 7/8	2 5/8	7 1/2	13 1/2	3 3/8	1 1/2	6	4 5/8	10 5/8	2 3/8	14 3/8			16.0
2M	48		2 1/4	3/4	1	8	7	1 1/4	3	19 3/4	20	15 1/2	12	1 7/8	2 5/8	7 1/2	13 1/2	3 3/8	1 1/2	6	4 5/8	10 5/8	2 3/8	14 3/8			16.0
3	48		2 1/4	3/4	1	8	7	1 1/4	3	19 3/4	20	15 1/2	12	1 7/8	2 5/8	7 1/2	13 1/2	3 3/8	1 1/2	6	4 5/8	10 5/8	2 3/8	14 3/8			16.0
4	48		2 1/4	3/4	1	8	7	1 1/4	3	19 3/4	20	15 1/2	12	1 7/8	2 5/8	7 1/2	13 1/2	3 3/8	1 1/2	6	4 5/8	10 5/8	2 3/8	14 3/8			16.0
5	48		2 1/4	3/4	1	8	7	1 1/4	3	19 3/4	20	15 1/2	12	1 7/8	2 5/8	7 1/2	13 1/2	3 3/8	1 1/2	6	4 5/8	10 5/8	2 3/8	14 3/8			16.0

STANDARD SIGN
W20-2A,B,C,D,F & G

WISCONSIN DEPT OF TRANSPORTATION

APPROVED Matthew R Rauch
for State Traffic Engineer
DATE 3/18/11 PLATE NO. W20-2.6

PROJECT NO:	HWY:	COUNTY:		SHEET NO: 209	E

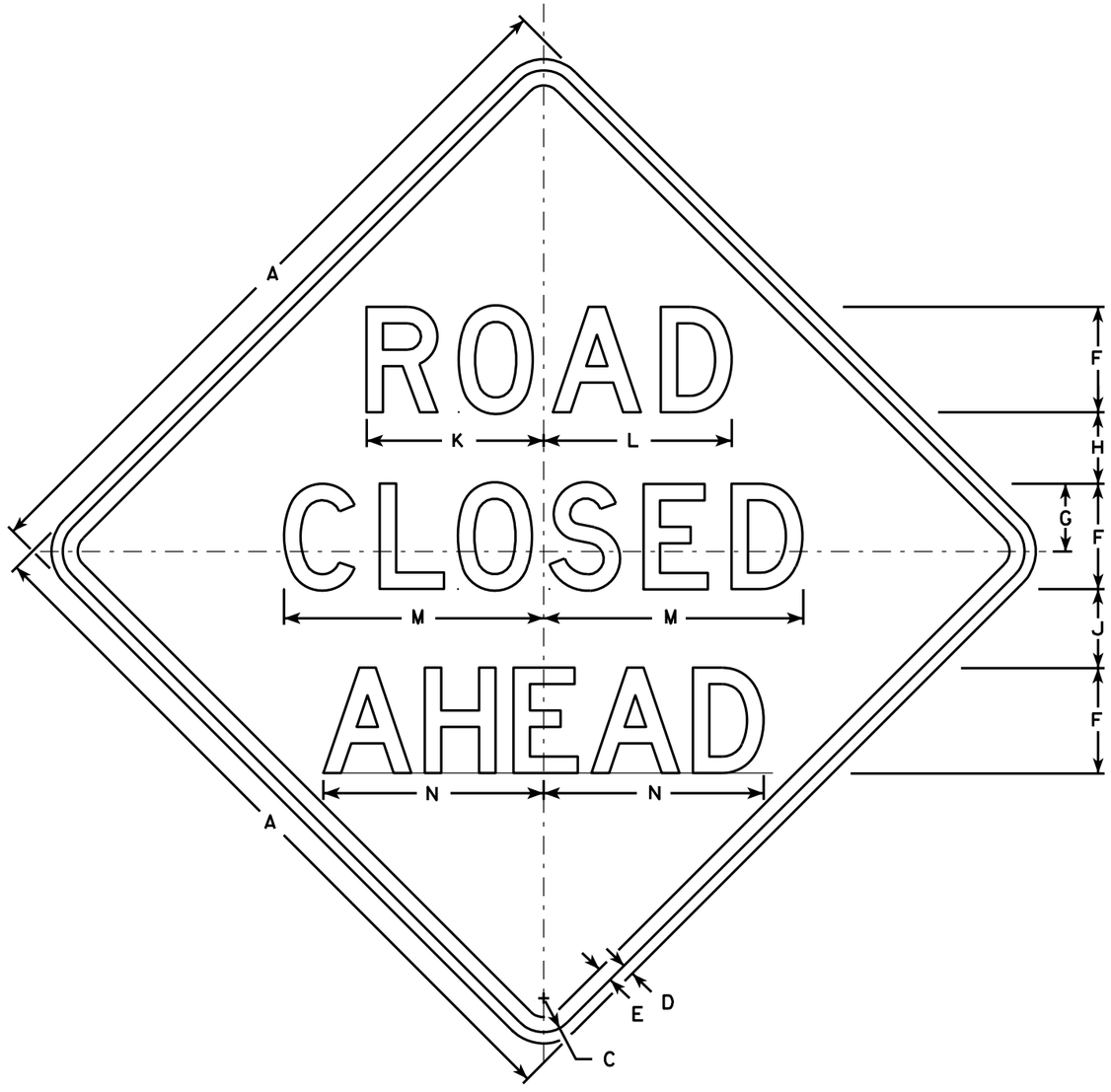

W20-3A

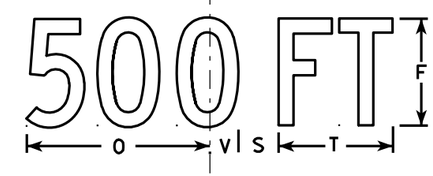

W20-3D

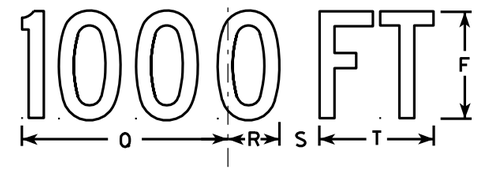

W20-3C

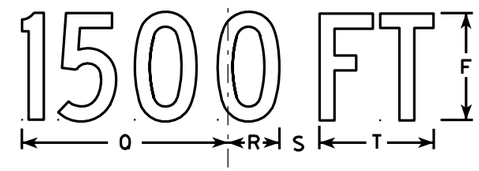

W20-3B

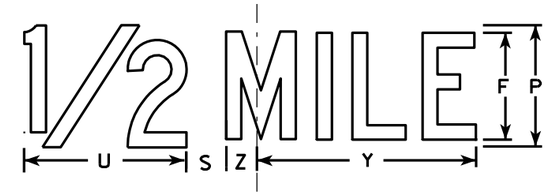

W20-3G

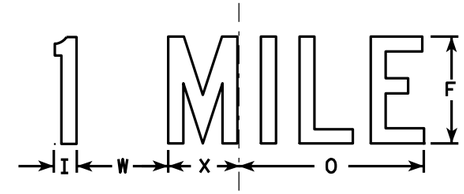

W20-3F

NOTES

1. Sign is Type II - Type F Reflective - reference WIS DOT Standard Specification for HIGHWAY and STRUCTURE CONSTRUCTION latest edition.
2. Color:
   Background - Orange
   Message - Black
3. Message Series - see note 5
4. Corners may be square or rounded when base material is plywood but borders shall be rounded as shown. When base material is metal, the corners and borders shall be rounded.
5. Lines 1 and 2 are Series D.
   Line 3 is Series D for AHEAD and Series C for all other distances.

SIZE	A	B	C	D	E	F	G	H	I	J	K	L	M	N	O	P	Q	R	S	T	U	V	W	X	Y	Z	Area sq. ft.
1	36		1 5/8	5/8	3/4	5	3 3/8	3 1/2	1 1/8	4	8 3/8	8 7/8	12 1/2	11	9	6	10 1/8	2 1/2	1 7/8	5 5/8	8	1 3/8	4 1/2	3 1/2	10 3/4	1 3/4	9.0
2S	48		2 1/4	3/4	1	7	4 1/2	4 3/4	1 1/2	5 1/4	11 3/4	12 1/2	17 1/4	14 5/8	12	8	13 1/2	3 3/8	2 5/8	7 1/2	10 5/8	1 7/8	6	4 5/8	14 3/8	2 3/8	16.0
2M	48		2 1/4	3/4	1	7	4 1/2	4 3/4	1 1/2	5 1/4	11 3/4	12 1/2	17 1/4	14 5/8	12	8	13 1/2	3 3/8	2 5/8	7 1/2	10 5/8	1 7/8	6	4 5/8	14 3/8	2 3/8	16.0
3	48		2 1/4	3/4	1	7	4 1/2	4 3/4	1 1/2	5 1/4	11 3/4	12 1/2	17 1/4	14 5/8	12	8	13 1/2	3 3/8	2 5/8	7 1/2	10 5/8	1 7/8	6	4 5/8	14 3/8	2 3/8	16.0
4	48		2 1/4	3/4	1	7	4 1/2	4 3/4	1 1/2	5 1/4	11 3/4	12 1/2	17 1/4	14 5/8	12	8	13 1/2	3 3/8	2 5/8	7 1/2	10 5/8	1 7/8	6	4 5/8	14 3/8	2 3/8	16.0
5	48		2 1/4	3/4	1	7	4 1/2	4 3/4	1 1/2	5 1/4	11 3/4	12 1/2	17 1/4	14 5/8	12	8	13 1/2	3 3/8	2 5/8	7 1/2	10 5/8	1 7/8	6	4 5/8	14 3/8	2 3/8	16.0

STANDARD SIGN
W20-3A, B, C, D, F & G

WISCONSIN DEPT OF TRANSPORTATION

APPROVED Matthew R Rauch
for State Traffic Engineer
DATE 3/18/11 PLATE NO. W20-3.7

PROJECT NO: | HWY: | COUNTY: | SHEET NO: 210 | E

W20-56A

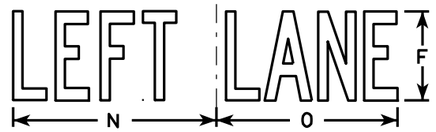

W20-55A

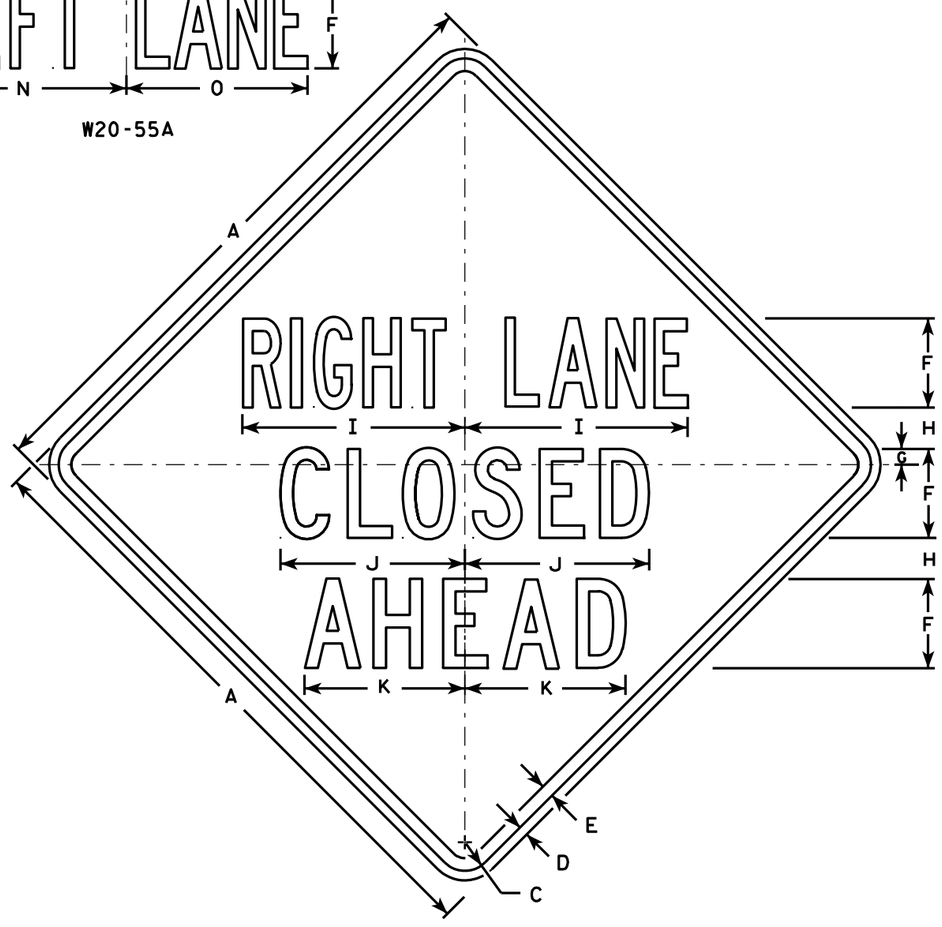

W20-5A

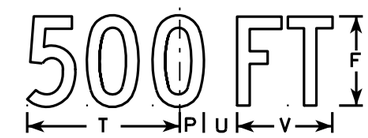

W20-5D

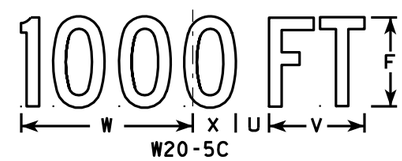

W20-5C

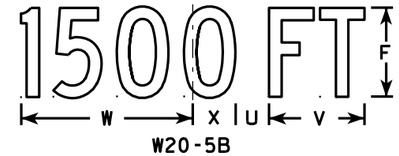

W20-5B

W20-5G

W20-5F

NOTES

1. Sign is Type II - Type F Reflective - reference WIS DOT Standard Specification for HIGHWAY and STRUCTURE CONSTRUCTION latest edition.
2. Color:
   Background - Orange
   Message - Black
3. Message Series - See Note 5
4. Corners may be square or rounded when base material is plywood but borders shall be rounded as shown. When base material is metal, the corners and borders shall be rounded.
5. " ------- LANE" is Series B.
   All other copy is Series C.

SIZE	A	B	C	D	E	F	G	H	I	J	K	L	M	N	O	P	Q	R	S	T	U	V	W	X	Y	Z	Area sq. ft.
1	36	6	1 5/8	5/8	3/4	5	7/8	2 1/2	13 1/8	10 3/4	9 1/2	14 1/4	13 5/8	12	12	1 3/8	1 1/8	4 1/2	3 1/2	9	1 7/8	5 5/8	10 1/8	2 1/2	1 3/4	8	9.0
2S	48	8	2 1/4	3/4	1	7	1 1/4	3 1/4	17 1/2	14 3/8	12 5/8	19	18 3/8	16	14 1/4	1 7/8	1 1/2	6	4 5/8	12	2 5/8	7 1/2	13 1/2	3 3/8	2 3/8	10 5/8	16.0
2M	48	8	2 1/4	3/4	1	7	1 1/4	3 1/4	17 1/2	14 3/8	12 5/8	19	18 3/8	16	14 1/4	1 7/8	1 1/2	6	4 5/8	12	2 5/8	7 1/2	13 1/2	3 3/8	2 3/8	10 5/8	16.0
3	48	8	2 1/4	3/4	1	7	1 1/4	3 1/4	17 1/2	14 3/8	12 5/8	19	18 3/8	16	14 1/4	1 7/8	1 1/2	6	4 5/8	12	2 5/8	7 1/2	13 1/2	3 3/8	2 3/8	10 5/8	16.0
4	48	8	2 1/4	3/4	1	7	1 1/4	3 1/4	17 1/2	14 3/8	12 5/8	19	18 3/8	16	14 1/4	1 7/8	1 1/2	6	4 5/8	12	2 5/8	7 1/2	13 1/2	3 3/8	2 3/8	10 5/8	16.0
5	48	8	2 1/4	3/4	1	7	1 1/4	3 1/4	17 1/2	14 3/8	12 5/8	19	18 3/8	16	14 1/4	1 7/8	1 1/2	6	4 5/8	12	2 5/8	7 1/2	13 1/2	3 3/8	2 3/8	10 5/8	16.0

STANDARD SIGN
W20-5A, B, C, D, F & G

WISCONSIN DEPT OF TRANSPORTATION

APPROVED Matthew R Rauch
for State Traffic Engineer

DATE 3/18/11 PLATE NO. W20-5.11

PROJECT NO:	HWY:	COUNTY:		SHEET NO: 211	E

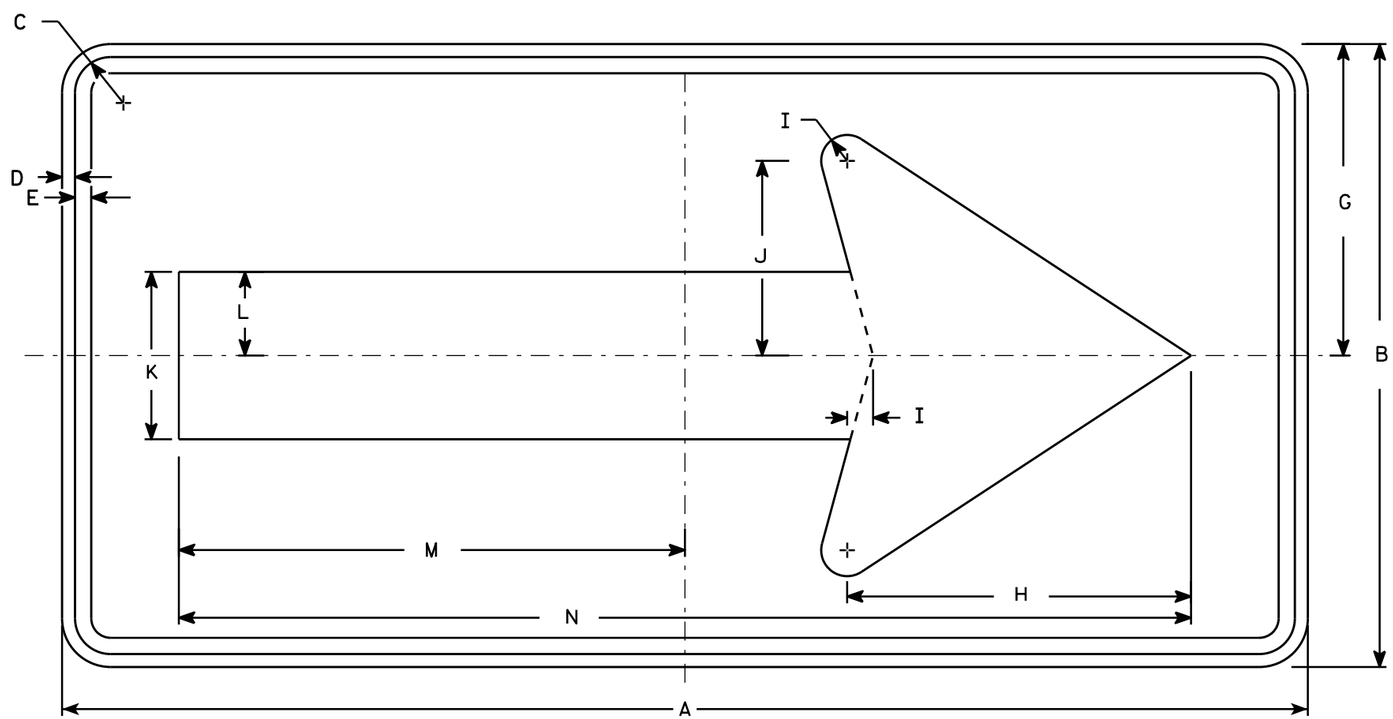

W01-6

NOTES

1. Sign is Type II - Type F Reflective - reference WIS DOT Standard Specification for HIGHWAY and STRUCTURE CONSTRUCTION latest edition.
2. Color:
   Background - Orange
   Message - Black
3. Corners may be square or rounded when base material is plywood but borders shall be rounded as shown. When base material is metal, the corners and borders shall be rounded.

SIZE	A	B	C	D	E	F	G	H	I	J	K	L	M	N	O	P	Q	R	S	T	U	V	W	X	Y	Z	Area sq. ft.
1																											
2S	48	24	1 3/8	1/2	5/8		12	13 1/4	1	7 1/2	6 1/2	3 1/4	19 1/2	39													8.0
2M	48	24	1 3/8	1/2	5/8		12	13 1/4	1	7 1/2	6 1/2	3 1/4	19 1/2	39													8.0
3	60	30	1 3/8	1/2	5/8		15	16 1/4	1 1/4	9 1/4	8	4	24 3/8	48 3/4													12.5
4	60	30	1 3/8	1/2	5/8		15	16 1/4	1 1/4	9 1/4	8	4	24 3/8	48 3/4													12.5
5	60	30	1 3/8	1/2	5/8		15	16 1/4	1 1/4	9 1/4	8	4	24 3/8	48 3/4													12.5

STANDARD SIGN
W01-6

WISCONSIN DEPT OF TRANSPORTATION

APPROVED Matthew R Rauch
for State Traffic Engineer

DATE 11/18/13 PLATE NO. W01-6.1

PROJECT NO: | HWY: | COUNTY: | SHEET NO: | E

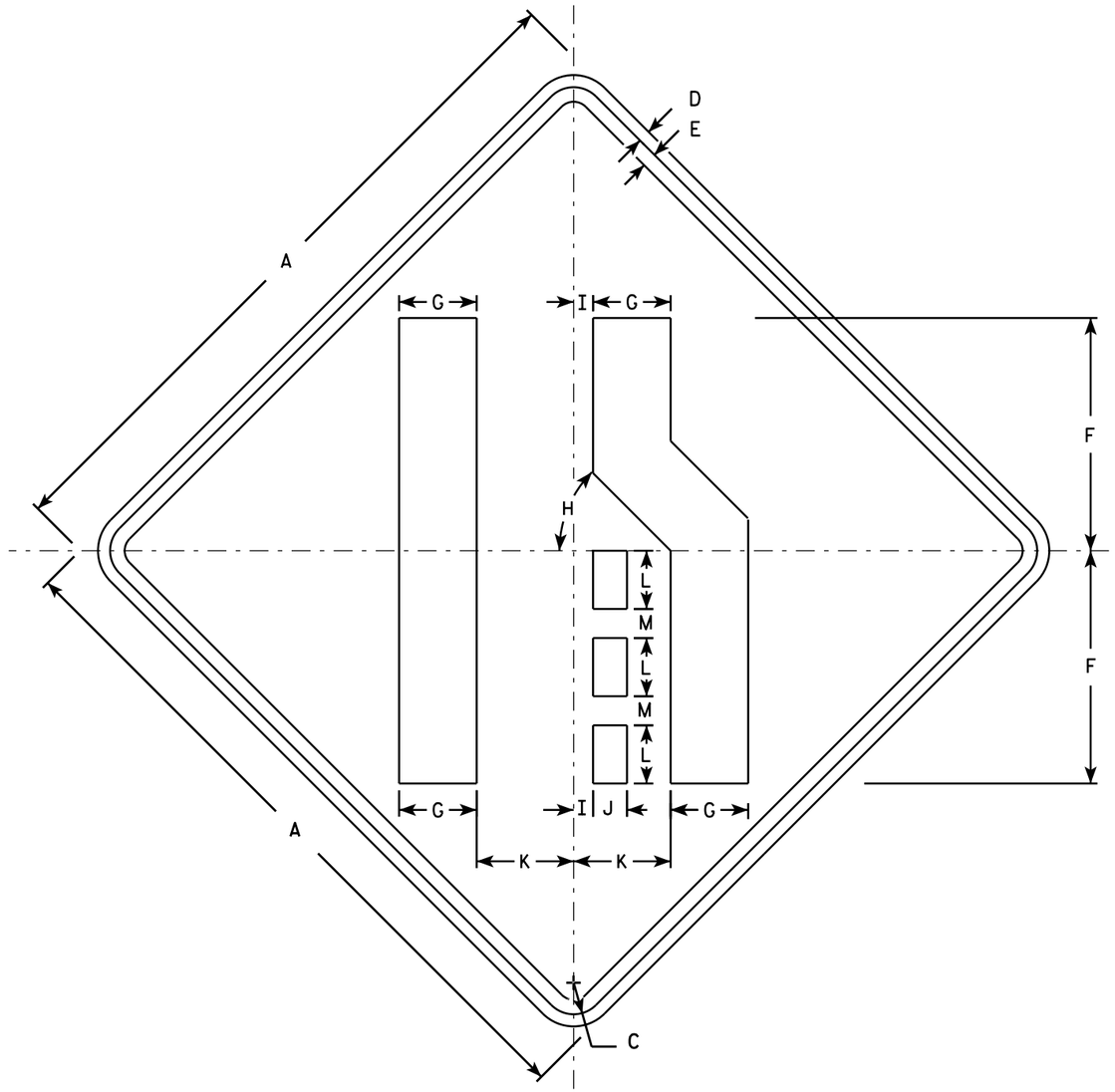

W04-2R

NOTES

1. Sign is Type II - Type F Reflective - reference WIS DOT Standard Specification for HIGHWAY and STRUCTURE CONSTRUCTION latest edition.
2. Color:
   Background - Orange
   Message - Black
3. Corners may be square or rounded when base material is plywood but borders shall be rounded as shown. When base material is metal, the corners and borders shall be rounded.
4. W04-2L is the same as W04-2R except the symbol is reversed along the vertical centerline.

SIZE	A	B	C	D	E	F	G	H	I	J	K	L	M	N	O	P	Q	R	S	T	U	V	W	X	Y	Z	Area sq. ft.
1	36		1 5/8	5/8	3/4	12	4	45°	1	1 3/4	5	3	1 1/2														9.0
2S	48		2 1/4	3/4	1	16	5 3/8	45°	1 1/4	2 3/8	6 3/4	4	2														16.0
2M	48		2 1/4	3/4	1	16	5 3/8	45°	1 1/4	2 3/8	6 3/4	4	2														16.0
3	48		2 1/4	3/4	1	16	5 3/8	45°	1 1/4	2 3/8	6 3/4	4	2														16.0
4	48		2 1/4	3/4	1	16	5 3/8	45°	1 1/4	2 3/8	6 3/4	4	2														16.0
5	48		2 1/4	3/4	1	16	5 3/8	45°	1 1/4	2 3/8	6 3/4	4	2														16.0

STANDARD SIGN
W04-2

WISCONSIN DEPT OF TRANSPORTATION

APPROVED Matthew R Rauch
for State Traffic Engineer

DATE 11/20/13 PLATE 213 W04-2.1

PROJECT NO:

SHEET NO: E

Wisconsin Department of Transportation

Dedicated people creating transportation solutions through innovation and exceptional service.

http://www.dot.wisconsin.gov