WKE

Feb 14, 2023

PROJECT ID: 3240-16-70

WITH:

COUNTY: KENOSHA

ORDER OF SHEETS

Section No.	1	Title
Section No.	2	Typical Sections and Details
Section No.	3	Estimate of Quantities
Section No.	3	Miscellaneous Quantities
Section No.	4	Right of Way Plat
Section No.	5	Plan and Profile
Section No.	6	Standard Detail Drawings
Section No.	7	Sign Plates
Section No.	8	Structure Plans
~~Section No.~~	~~9~~	~~Computer Earthwork Data~~
Section No.	9	Cross Sections

TOTAL SHEETS = 182

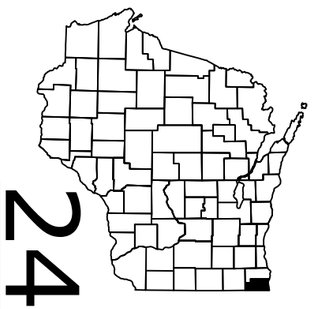

24

N

DESIGN DESIGNATION

A.A.D.T.	(2025)	=	11,315
A.A.D.T.	(2045)	=	13,415
D.H.V.		=	2.2%
D.D.		=	50/50
T.		=	2.4%
DESIGN SPEED		=	50 MPH
ESALS		=	550,000

CONVENTIONAL SYMBOLS

PLAN

CORPORATE LIMITS
PROPERTY LINE
LOT LINE
LIMITED HIGHWAY EASEMENT
EXISTING RIGHT OF WAY
PROPOSED OR NEW R/W LINE
SLOPE INTERCEPT
REFERENCE LINE (300'EB')
EXISTING CULVERT
PROPOSED CULVERT (Box or Pipe)
CAUTION - UTILITY (CAUTION)
WETLAND AREA
WOODED OR SHRUB AREA

PROFILE

GRADE LINE
ORIGINAL GROUND
MARSH OR ROCK PROFILE (To be noted as such) (ROCK)
SPECIAL DITCH (LABEL)
GRADE ELEVATION (95.36)
CULVERT (Profile View)

UTILITIES

ELECTRIC (E)
FIBER OPTIC (FO)
GAS (G)
SANITARY SEWER (SAN)
STORM SEWER (SS)
TELEPHONE (T)
WATER (W)
UTILITY PEDESTAL
POWER POLE
TELEPHONE POLE

STATE OF WISCONSIN
DEPARTMENT OF TRANSPORTATION

PLAN OF PROPOSED IMPROVEMENT

SHERIDAN RD - VIL PLEASANT PRAIRIE

ILLINOIS STATE LINE TO 91ST ST

STH 32
KENOSHA COUNTY

STATE PROJECT NUMBER
3240-16-70

STATE PROJECT	FEDERAL PROJECT	
	PROJECT	CONTRACT
3240-16-70	WISC 2023229	1

R-22-E

T-1-N

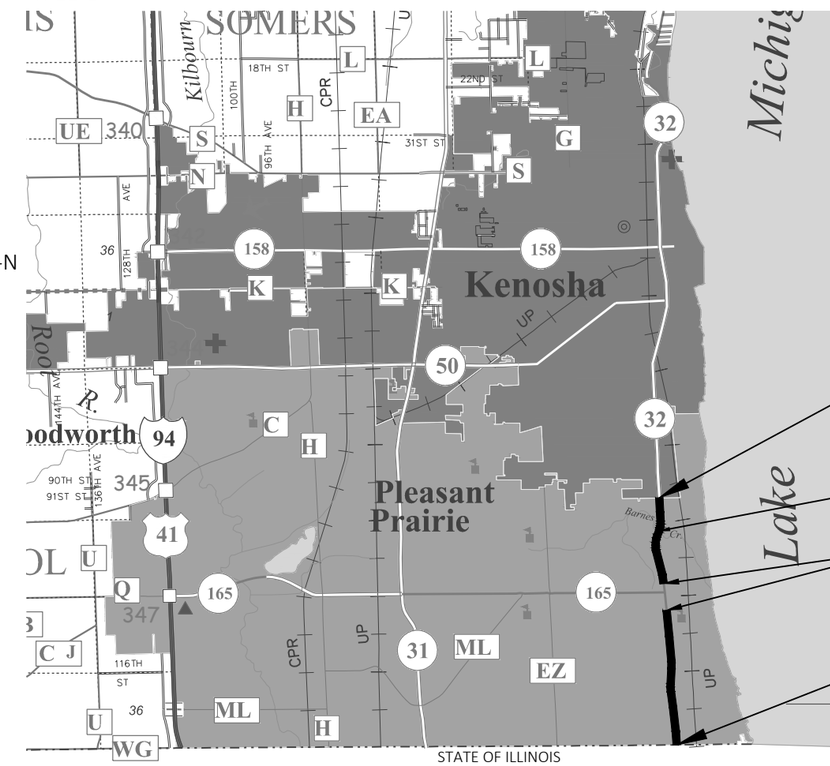

END PROJECT
STA 266+43
X=628814.232
Y=117156.692

CULVERT C-30-62
STA 250+39

NET EXCEPTION TO CL LENGTH
STA 194+00 - STA 214+00
WORK BEING COMPLETED UNDER
3240-11-70

BEGIN PROJECT
STA 100+49
X= 629563.26
Y=100707.02

LAYOUT

SCALE 0 — 2 MI

TOTAL NET LENGTH OF CENTERLINE = 2.764

HORIZONTAL POSITIONS SHOWN ON THIS PLAN ARE WISCONSIN COORDINATE REFERENCE SYSTEM (WISCRS), KENOSHA COUNTY, NAD83 (2011), IN U.S. SURVEY FEET. POSITIONS SHOWN ARE GRID COORDINATES, GRID BEARINGS, AND GRID DISTANCES. GRID DISTANCES ARE THE SAME AS GROUND DISTANCES.

ELEVATIONS ARE REFERENCED TO NAVD 88 (2012). GPS DERIVED ELEVATIONS ARE BASED ON GEOID 12A.

ORIGINAL PLANS PREPARED BY

Lakeside ENGINEERS

WISCONSIN JOSEPH MAAS E-45172 GREENFIELD WI PROFESSIONAL ENGINEER

DATE: 10/24/22 (Signature)

STATE OF WISCONSIN
DEPARTMENT OF TRANSPORTATION

PREPARED BY

Surveyor	DAAR ENGINEERING, INC.
Designer	LAKESIDE ENGINEERS, LLC
Project Manager	GARY METZER, P.E.
Regional Examiner	STEVE CHOJNACKI, P.E.
Regional Supervisor	JANET CANNON, P.E.

APPROVED FOR THE DEPARTMENT

DATE: 10/24/2022 Gary Metzer (Signature)

E

GENERAL NOTES

DISTURBED AREAS WITHIN THE RIGHT-OF-WAY, EXCEPT AREAS WITHIN THE FINISHED SHOULDER POINTS, SHALL BE FERTILIZED, SEEDED, AND MULCHED.

THE LOCATIONS OF EXISTING AND PROPOSED UTILITY INSTALLATIONS AS SHOWN ON THE PLANS ARE APPROXIMATE. THERE MAY BE OTHER UTILITY INSTALLATIONS WITHIN THE PROJECT AREA THAT ARE NOT SHOWN. THE CONTRACTOR IS FULLY RESPONSIBLE FOR LOCATING AND AVOIDING ALL UNDERGROUND AND ABOVE GROUND STRUCTURES AND FACILITIES.

STATIONING, DISTANCES, AND OFFSETS FOR SIGNS SHOWN ON THE PLANS ARE APPROXIMATE AND THE FINAL LOCATION OF SIGNS ARE TO BE DETERMINED BY THE ENGINEER.

TRAFFIC CONTROL DEVICES SHALL BE ADJUSTED TO FIT FIELD CONDITIONS AS DIRECTED BY THE ENGINEER.

WETLAND, WATERWAYS, AND OTHER ENVIRONMENTALLY SENSITIVE AREAS SHALL BE PROTECTED AT ALL TIMES. DO NOT STORE EQUIPMENT OR MATERIAL NEAR THESE SITES UNLESS APPROVED BY THE ENGINEER.

REFER TO THE EROSION CONTROL SPECIAL PROVISION FOR REQUIREMENTS.

REMOVAL OF EROSION CONTROL DEVICES IS INCLUDED IN THE COST OF THEIR RESPECTIVE BID ITEMS.

FERTILIZER SHALL NOT BE USED WITHIN 100' OF NAVIGABLE WATERWAYS OR WETLANDS.

NO TREES OR SHRUBS ARE TO BE REMOVED WITHOUT APPROVAL OF THE ENGINEER.

NOTIFY DIGGERS HOTLINE AND AFFECTED UTILITIES PRIOR TO THE START OF WORK. ANY LOCAL MUNICIPAL UTILITY WHICH IS NOT A MEMBER OF THE DIGGERS HOTLINE MUST BE CONTACTED SEPARATELY.

CONTACT THE PROJECT ENGINEER AND THE SOUTHEASTERN WISCONSIN REGIONAL PLANNING COMMISSION (SEWRPC) AT LEAST TWO WEEKS PRIOR TO WORK NEAR ANY PUBLIC SURVEY MONUMENT.

ABBREVIATIONS

ADT	AVERAGE DAILY TRAFFIC
AGG	AGGREGATE
BAD	BASE AGGREGATE DENSE
BM	BENCH MARK
CL	CENTER LINE
CO	COUNTY
CTH	COUNTY TRUNK HIGHWAY
CR	CREEK
CABC	CRUSHED AGGREGATE BASE COURSE
CY	CUBIC YARD
C&G	CURB AND GUTTER
DHV	DESIGN HOUR VOLUME
DD	DIRECTIONAL DISTRIBUTION
DWY	DRIVEWAY
EB	EASTBOUND
ELEC	ELECTRIC
EL OR ELEV	ELEVATION
ESALS	EQUIVALENT SINGLE AXLE LOADS
EXIST	EXISTING
FERT	FERTILIZER
FT	FOOT
HMA	HOT MIX ASPHALT
INL	INLET
LT	LEFT
LF	LINEAR FOOT
LS	LUMP SUM
MH	MANHOLE
NB	NORTHBOUND
PC	POINT OF CURVATURE
PCC	PORTLAND CEMENT CONCRETE
PI	POINT OF INTERSECTION
PLE	PERMANENT LIMITED EASEMENT
PT	POINT OF TANGENCY
R	RADIUS
RL OR R/L	REFERENCE LINE
R/W	RIGHT-OF-WAY
RD	ROAD
RT	RIGHT
SAN S	SANITARY SEWER
SB	SOUTHBOUND
SF	SQUARE FEET
SY	SQUARE YARD
SDD	STANDARD DETAIL DRAWINGS
STH	STATE TRUNK HIGHWAY
STA	STATION
SURF	SURFACE
TEL	TELEPHONE
TEMP	TEMPORARY
TLE	TEMPORARY LIMITED EASEMENT
T OR TN	TOWN
TYP	TYPICAL
VAR	VARIABLE
WM	WATER MAIN
WV	WATER VALVE
WB	WESTBOUND

UTILITIES

AT&T WISCONSIN - COMMUNICATION LINE

AT&T
MIKE VANBOVEN
411 7TH STREET
RACINE, WI 53403
PHONE: (262) 676-3958
EMAIL: mv3658@att.com

CITY OF KENOSHA - STREET LIGHTING

CITY OF KENOSHA
ROBERT DELGADO-NAVARRO
625 52ND ST., ROOM 305
KENOSHA, WI 53140
PHONE: (262) 653-4148
EMAIL: rdelgado-navarro@kenosha.org

KENOSHA WATER UTILITY - SEWER & WATER

KENOSHA WATER UTILITY
IAN BAGLEY
4401 GREEN BAY ROAD
KENOSHA, WI 53144
PHONE: (262) 653-4349
EMAIL: ibagley@kenosha.org

MIDWEST FIBER NETWORKS - COMMUNICATION LINE

MIDWEST FIBER NETWORKS LLC
CORY SCHMUKI
6070 NORTH FLINT ROAD
GLENDALE, WI 53209
PHONE: (414) 459-3561
EMAIL: cschmuki@midwestfibernetworks.com

SPECTRUM - COMMUNICATION LINE

SPECTRUM
GERALD SCHULTZ
1320 N DR. MARTIN LUTHER KING JR. DR.
MILWAUKEE, WI 53212
PHONE: (414) 908-4863
EMAIL: gerald.schultz@charter.com

VILLAGE OF PLEASANT PRAIRIE - SEWER & WATER

VILLAGE OF PLEASANT PRAIRIE
THOMAS HUPP
8600 GREEN BAY ROAD
PLEASANT PRAIRIE, WI 53158
PHONE: (262) 925-6769
EMAIL: Thupp@pleasantprairiewi.gov

WE ENERGIES - ELECTRICITY

WE ENERGIES
JAMES NELSON
7815 NORTHWESTERN AVE
RACINE, WI 53406
PHONE: (262) 884-6734
EMAIL: James.Nelson@we-energies.com

DIGGERS HOTLINE
Dial 811 or (800)242-8511
www.DiggersHotline.com

AGENCIES

WISCONSIN DEPARTMENT OF TRANSPORATION

WISCONSIN DEPARTMENT OF TRANSPORTATION
GARY METZER
141 NW BARSTOW ST
WAUKESHA, WI 53187
PHONE: (262) 548-5685
EMAIL: Gary.Metzer@dot.wi.gov

WISCONSIN DEPARTMENT OF NATURAL RESOURCES

WISCONSIN DEPARTMENT OF NATURAL RESOURCES
BENTON STELZEL
141 NW BARSTOW ST #180
WAUKESHA, WI 53187
PHONE: (262) 623-0194
EMAIL: benton.stelzel@wisconsin.gov

SEWRPC

SOUTHEASTERN WISCONSIN REGIONAL PLANNING COMMISSION
ROB MERRY
W239 N1812 ROCKWOOD DRIVE
WAUKESHA, WI 53187
PHONE: (262) 953-4289
EMAIL: rmerry@sewrpc.org

DESIGNER

LAKESIDE ENGINEERS, LLC

LAKESIDE ENGINEERS, LLC
JOE MAAS
909 N MAYFAIR ROAD
WAUWATOSA, WI 53226
PHONE: (262) 789-8200
EMAIL: joe.maas@lakesideengineers.com

WE ENERGIES - GAS/PETROLEUM

WE ENERGIES
PAYDEN VOLBRECHT
7815 NORTHWESTERN AVE
RACINE, WI 53406
PHONE: (414) 313-4067
EMAIL: payden.volbrecht@we-energies.com

ORDER OF SECTION 2 SHEETS

PROJECT OVERVIEW
TYPICAL SECTIONS
CONSTRUCTION DETAILS
BEAM GUARD
BARNES CREEK REALIGNMENT
STH 165 DETOUR RESURFACING
C-30-0062 BARNES CREEK CULVERT FILL DETAIL
CULVERT DETAIL
BARNES CREEK EXCAVATION AND BACKFILL DETAIL
ASPHALTIC REPAIR
PLAN DETAILS
EROSION CONTROL
PLANTING DETAIL
PERMANENT SIGNING
PAVEMENT MARKING
TRAFFIC CONTROL
DETOUR PLAN
ALIGNMENT PLAN
ALIGNMENT LAYOUT - SURVEY CONTROL

HMA PAVING

		THICKNESS	MIX
STA 100+49 TO 194+00	UPPER LAYER	1-3/4"	4 LT 58-28S
STA 214+00 TO 249+25	LOWER LAYER	1-3/4"	4 LT 58-28S
STA 251+25 TO 266+43	SHOULDER	1-3/4"	4 LT 58-28S
SIDE ROADS (STA 100+49 - 266+43)	UPPER LAYER	1-3/4"	4 LT 58-28S
STA 249+25 TO 251+25	LOWER LAYER	3"	4 LT 58-28S
	MIDDLE LAYER	2-1/4"	4 LT 58-28S
	UPPER LAYER	1-3/4"	4 LT 58-28S
STH 165	UPPER LAYER	2"	4 LT 58-28S

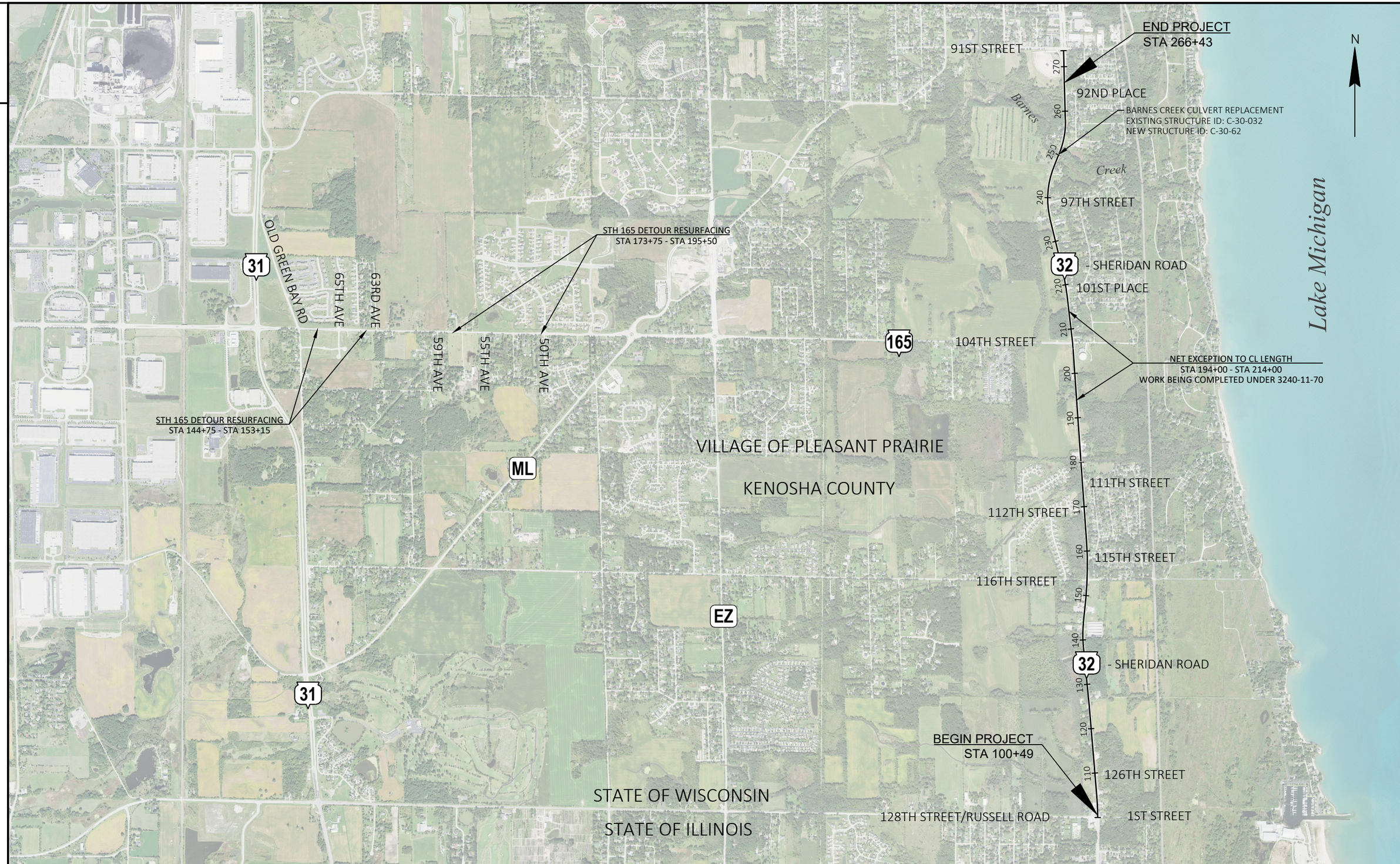

PROJECT NO: 3240-16-70	HWY: STH 32	COUNTY: KENOSHA	PROJECT OVERVIEW	SHEET 3	E

FILE NAME : L:\DESIGN PROJECTS\3240-16-00 STH 32\10. ROADWAY\CIVIL 3D\32401600\SHEETSPLAN\020201-PO.DWG
LAYOUT NAME - 020201-po
PLOT DATE : 10/4/2022 8:56 PM
PLOT BY : REBECCA JONARDI
PLOT NAME :
PLOT SCALE : 1 IN:2000 FT

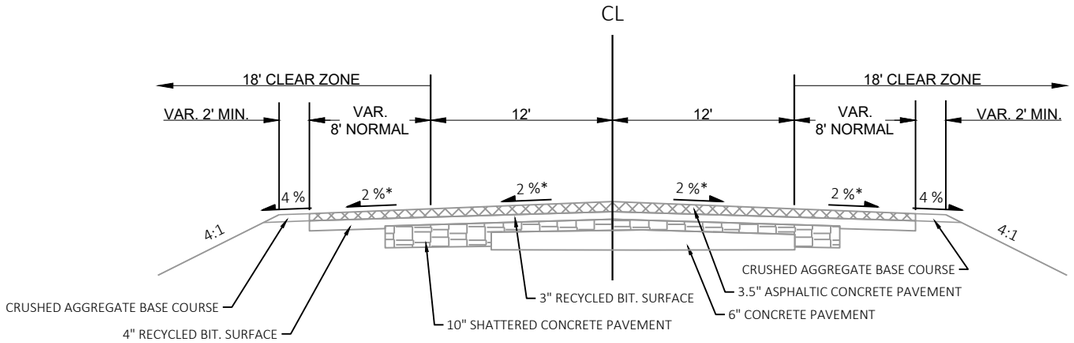

EXISTING TYPICAL SECTION

STA 100+49 - 150+22

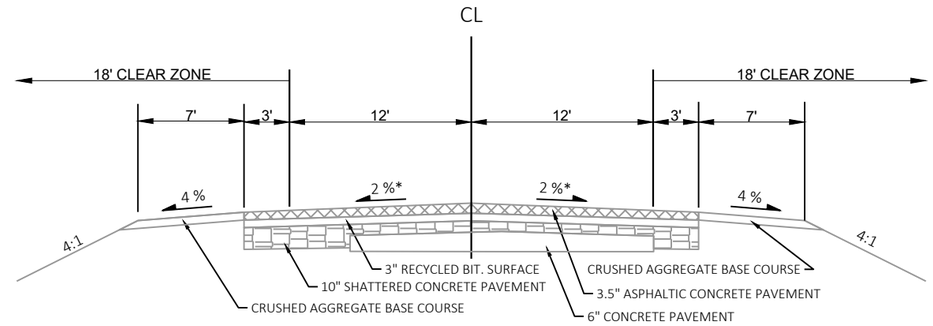

EXISTING TYPICAL SECTION

STA 150+22 - 246+25
STA 254+25 - 266+43

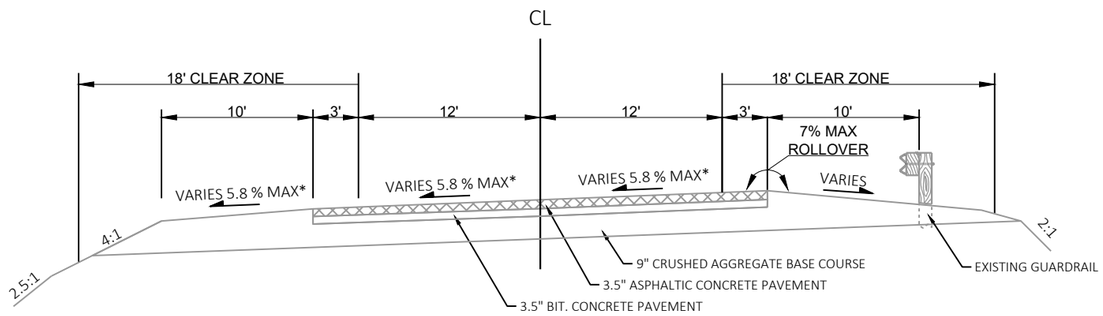

EXISTING TYPICAL SECTION

STA 246+25 - 254+25

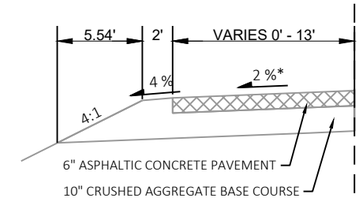

EXISTING PASSING LANE

STA 173+56 - 179+86
STA 236+00 - 242+50
STA 259+83 - 266+43

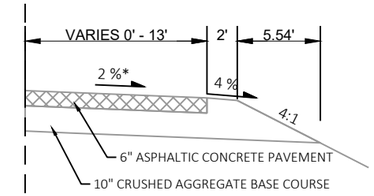

EXISTING PASSING LANE

STA 165+93 - 172+67

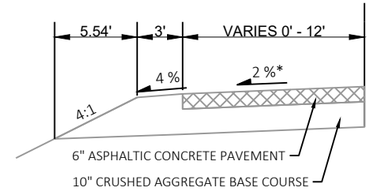

EXISTING TURNING LANE

STA 151+08 - 157+27
STA 167+36 - 173+56
STA 205+23 - 212+35

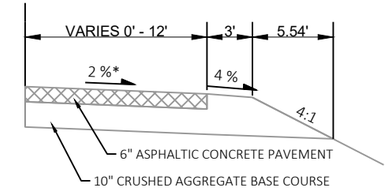

EXISTING TURNING LANE

STA 150+22 - 155+03
STA 155+34 - 160+03
STA 173+48 - 177+71
STA 204+04 - 208+09
STA 215+90 - 220+73
STA 235+88 - 240+28
STA 259+81 - 265+53

*SEE ALIGNMENT PLAN FOR SUPERELEVATION RATES AND LOCATIONS

2

*SEE ALIGNMENT PLAN FOR SUPERELEVATION RATES AND LOCATIONS

**ASPHALT BASE PATCH AND JOINT & CRACK REPAIR AS NEEDED FOR MAINLINE AND SHOULDERS

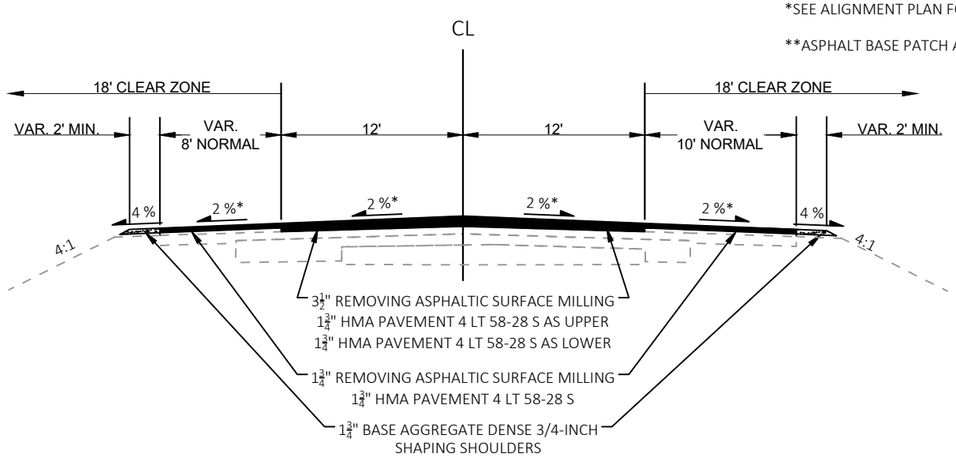

PROPOSED TYPICAL SECTION

STA 100+49 - 150+22

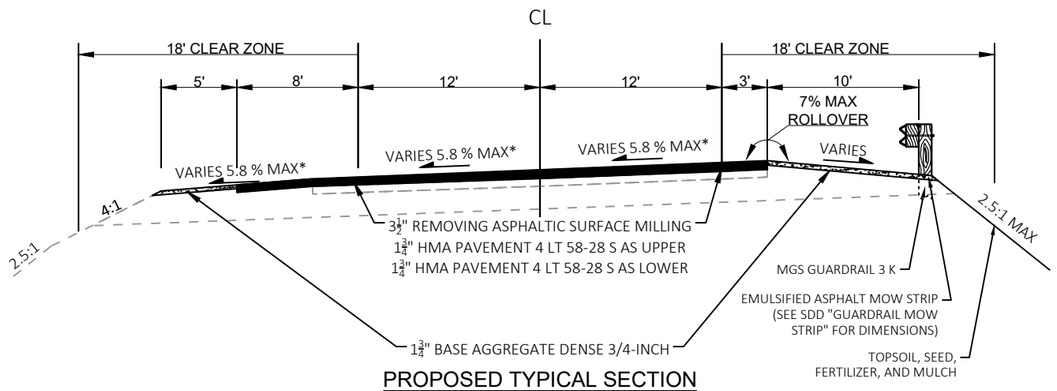

PROPOSED TYPICAL SECTION

STA 246+25 - 249+25
STA 251+25 - 252+00

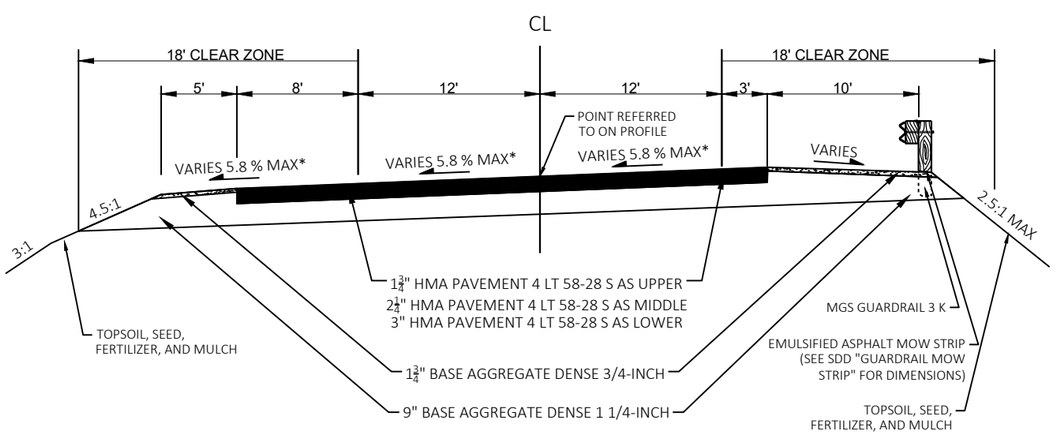

PROPOSED TYPICAL SECTION

STA 249+25 - 251+25

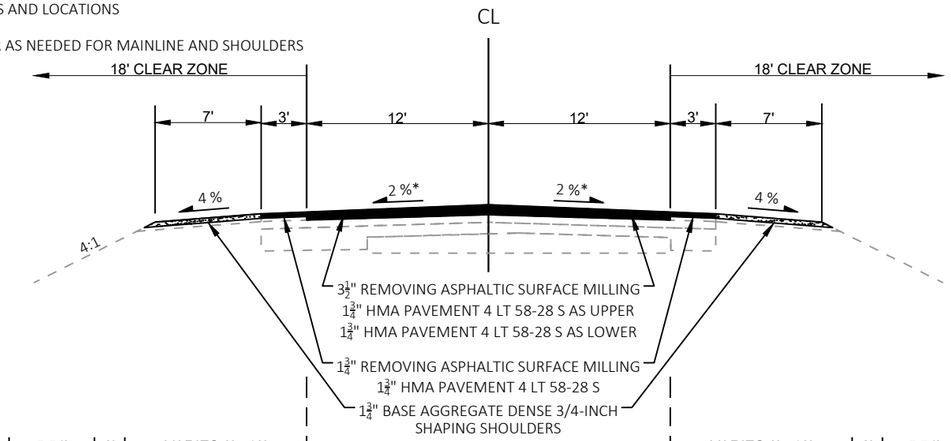

PROPOSED TYPICAL SECTION

STA 150+22 - 194+00
STA 214+00 - 246+25
STA 252+00 - 266+43

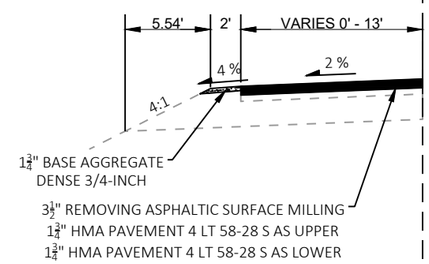

PROPOSED PASSING LANE

STA 173+56 - 179+86
STA 236+00 - 242+50
STA 259+83 - 266+43

PROPOSED TURNING LANE

STA 151+08 - 157+27
STA 167+36 - 173+56
STA 205+23 - 212+35

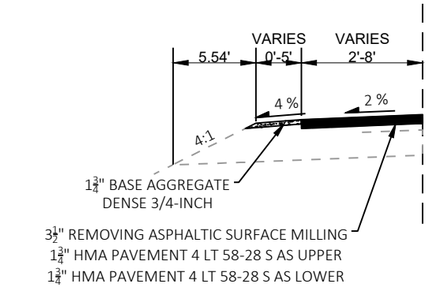

EXTENDED SHOULDER

STA 235+56 - 246+25
STA 251+25 - 260+00

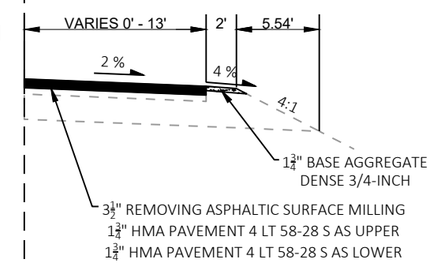

PROPOSED PASSING LANE

STA 165+93 - 172+67

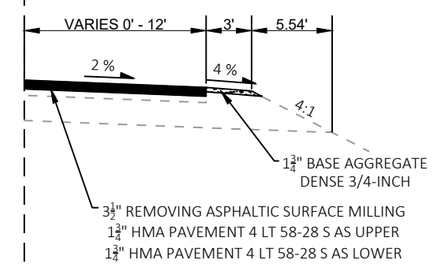

PROPOSED TURNING LANE

STA 150+22 - 155+03
STA 155+34 - 160+03
STA 173+48 - 177+71
STA 204+04 - 208+09
STA 215+90 - 220+73
STA 235+88 - 240+28
STA 259+81 - 265+53

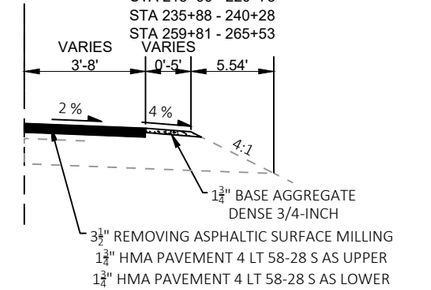

EXTENDED SHOULDER

STA 235+56 - 246+00
STA 252+00 - 260+00

2

PROJECT NO: 3240-16-70	HWY: STH 32	COUNTY: KENOSHA	TYPICAL SECTIONS	SHEET 5	E

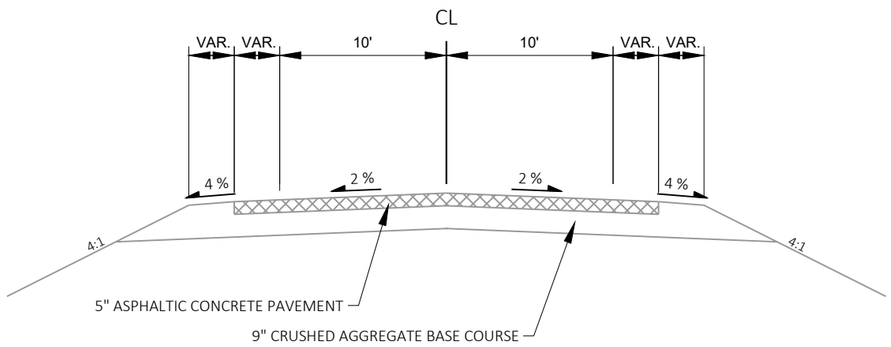

EXISTING TYPICAL SECTION - SIDE ROAD

126TH STREET

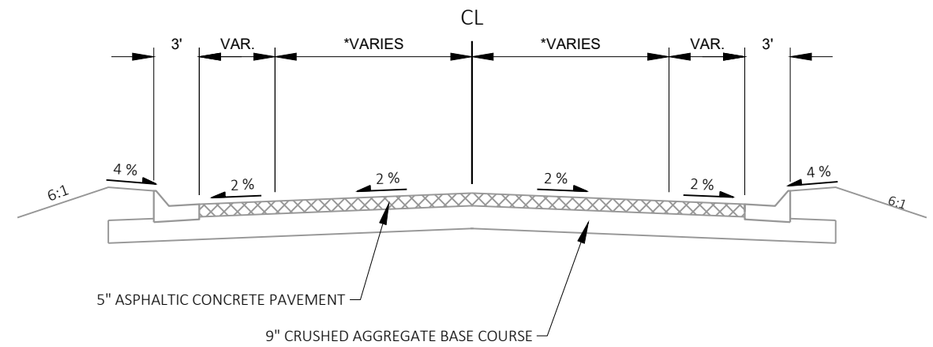

EXISTING TYPICAL SECTION - SIDE ROAD

*14' - 115TH STREET
12' - 111TH STREET
15' - 101ST PLACE
10' - 97TH STREET
14' - 92ND PLACE

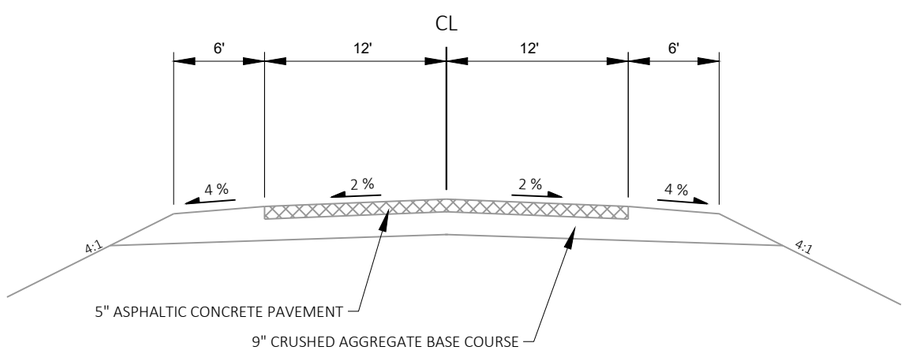

EXISTING TYPICAL SECTION - SIDE ROAD

116TH STREET

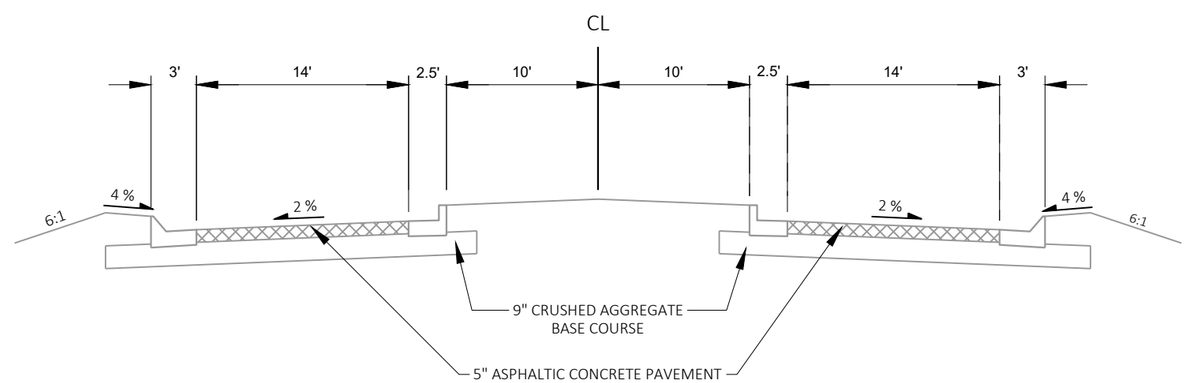

EXISTING TYPICAL SECTION - SIDE ROAD

112TH STREET

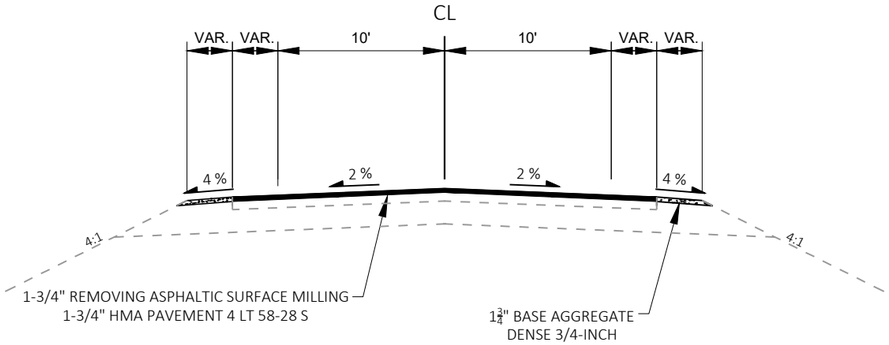

PROPOSED TYPICAL SECTION - SIDE ROAD

126TH STREET

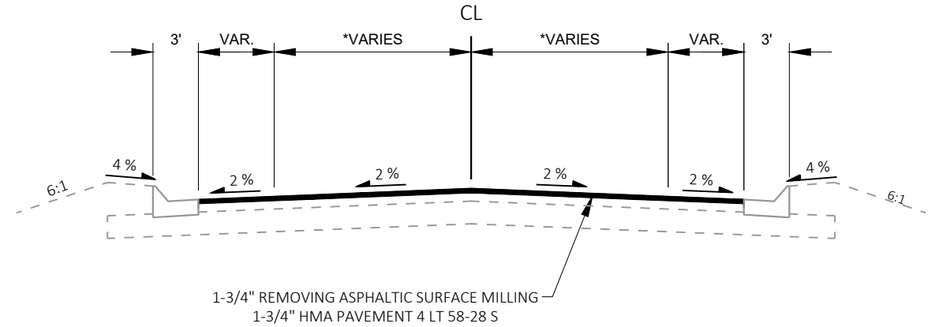

PROPOSED TYPICAL SECTION - SIDE ROAD

*14' - 115TH STREET
12' - 111TH STREET
15' - 101TH PLACE
10' - 97TH STREET
14' - 92ND PLACE

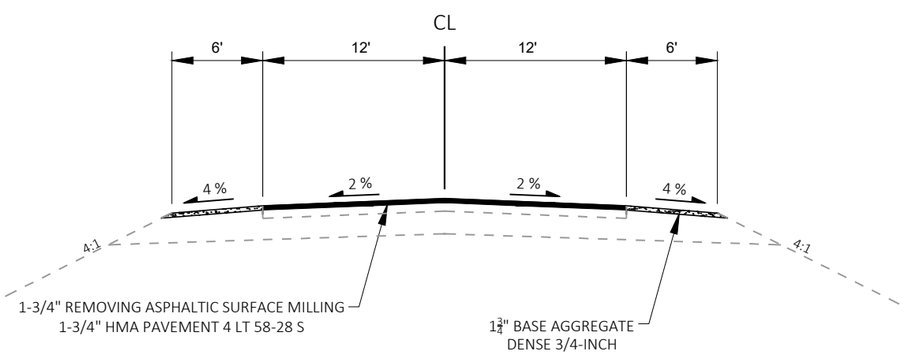

PROPOSED TYPICAL SECTION - SIDE ROAD

116TH STREET

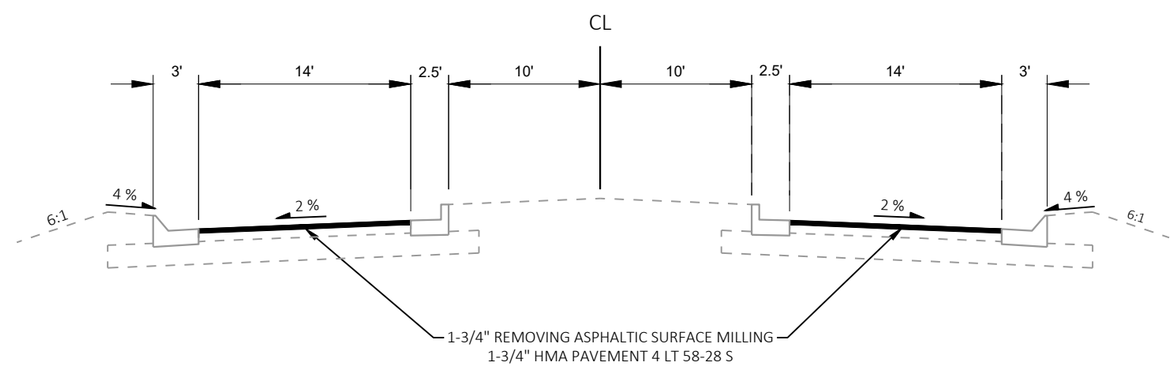

PROPOSED TYPICAL SECTION - SIDE ROAD

112TH STREET

2

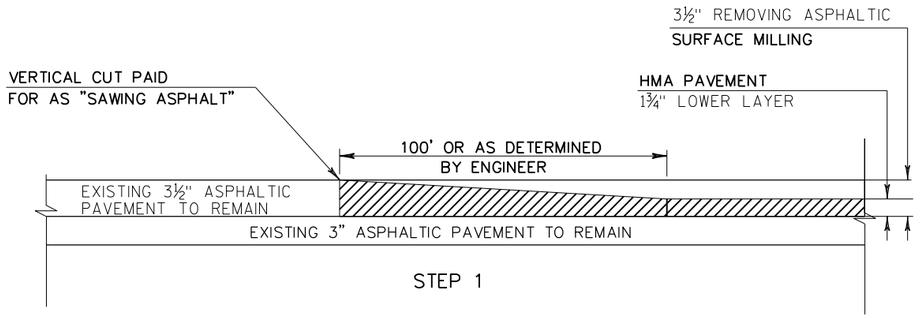

STEP 1

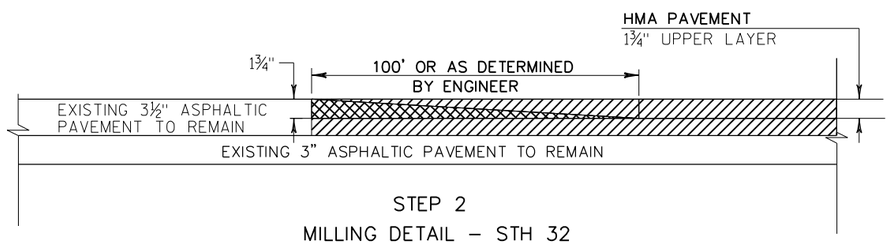

STEP 2

MILLING DETAIL – STH 32

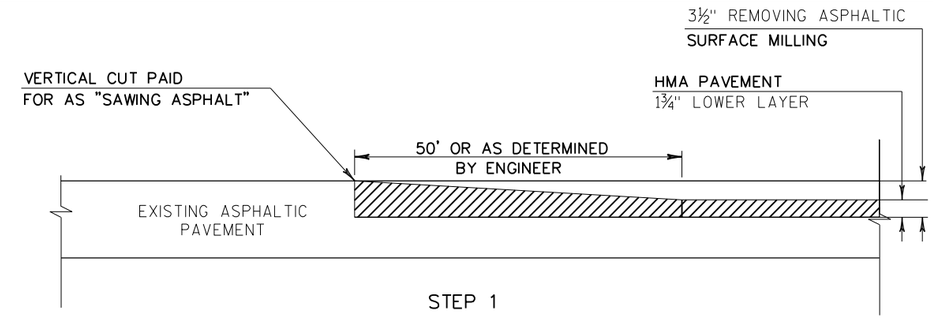

STEP 1

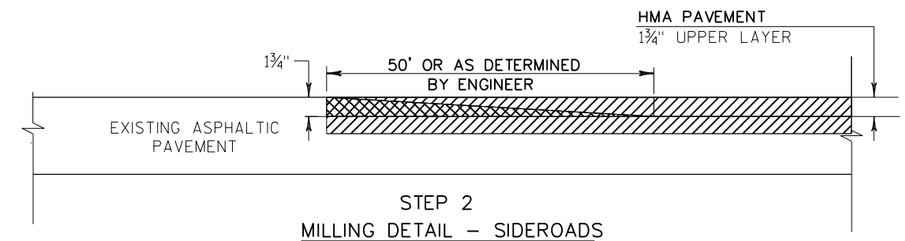

STEP 2

MILLING DETAIL – SIDEROADS

LEGEND

HMA PAVEMENT

REMOVING ASPHALTIC SURFACE BUTT JOINTS

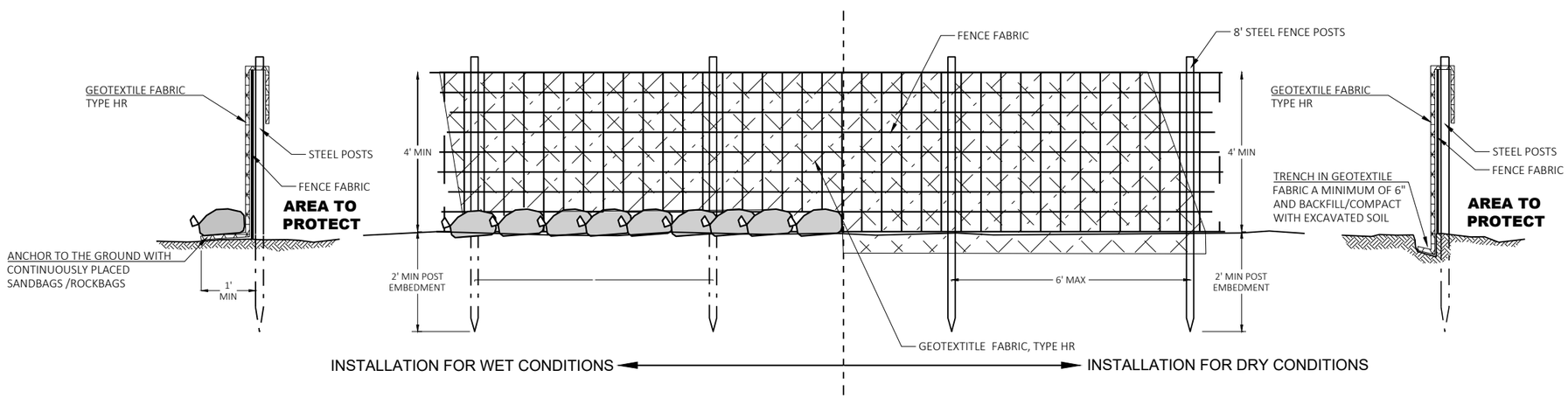

SILT FENCE HEAVY DUTY

GENERAL NOTES:

1. ATTACH FENCE FABRIC TO POSTS A MINIMUM OF 3 TIES PER POST (TOP, MIDDLE, BOTTOM)
2. ATTACH GEOTEXTILE FABRIC TO FENCE FABRIC AND/OR POSTS AT A MAXIMUM SPACING OF EVERY 2 FEET ALONG THE TOP AND ADDITIONALLY AS NECESSARY TO PREVENT DISPLACEMENT BY WIND AND WAVE ACTIONS.

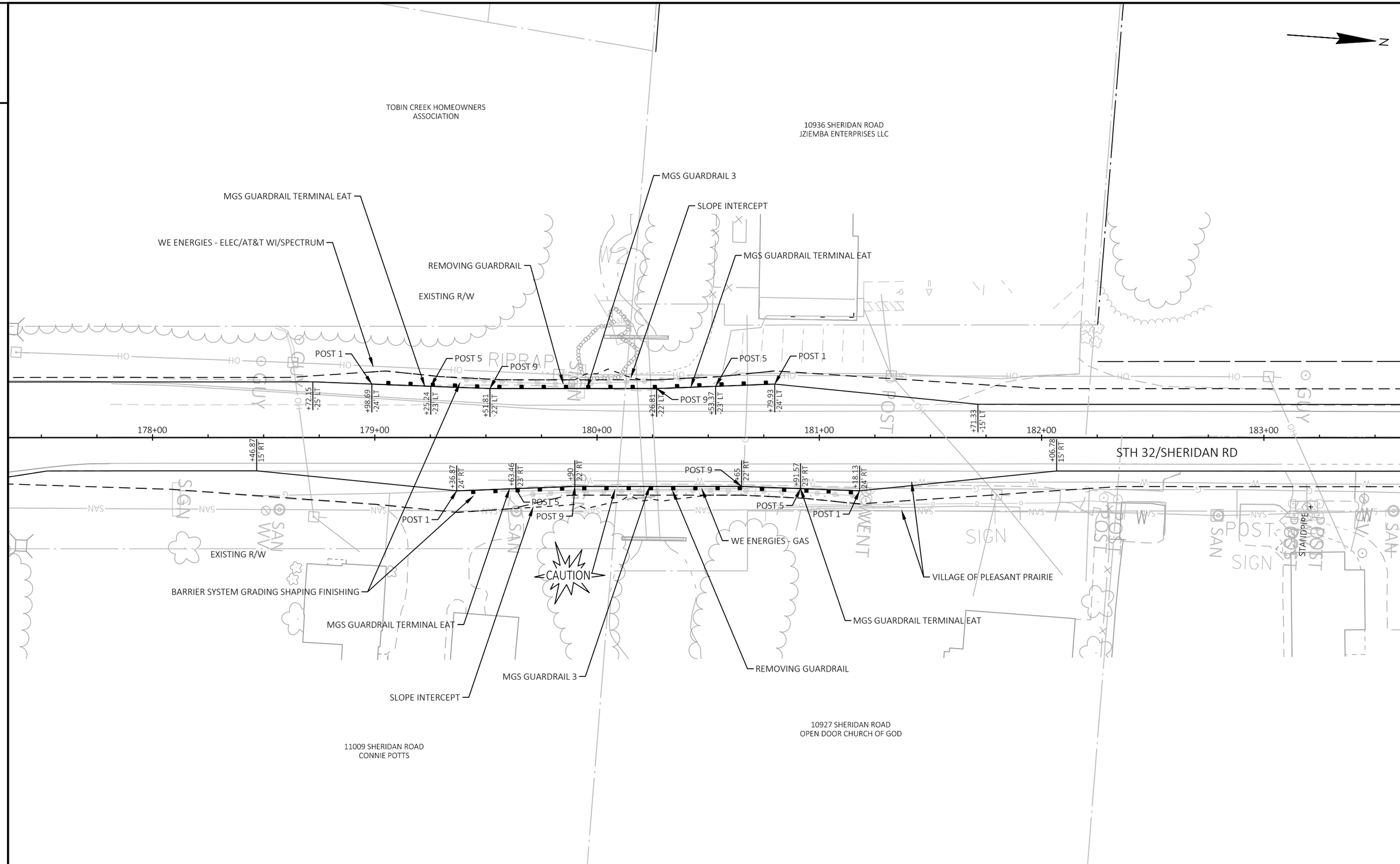

PROJECT NO: 3240-16-70	HWY: STH 32	COUNTY: KENOSHA	BEAM GUARD	SHEET 9	E

FILE NAME : L:\DESIGN PROJECTS\3240-16-00 STH 32\10. ROADWAY\CIVIL 3D\32401600\SHEETSPLAN\021001-CD.DWG
LAYOUT NAME - 021001-cd
PLOT DATE : 10/7/2022 12:56 PM PLOT BY : REBECCA JONARDI PLOT NAME : PLOT SCALE : 1 IN:40 FT

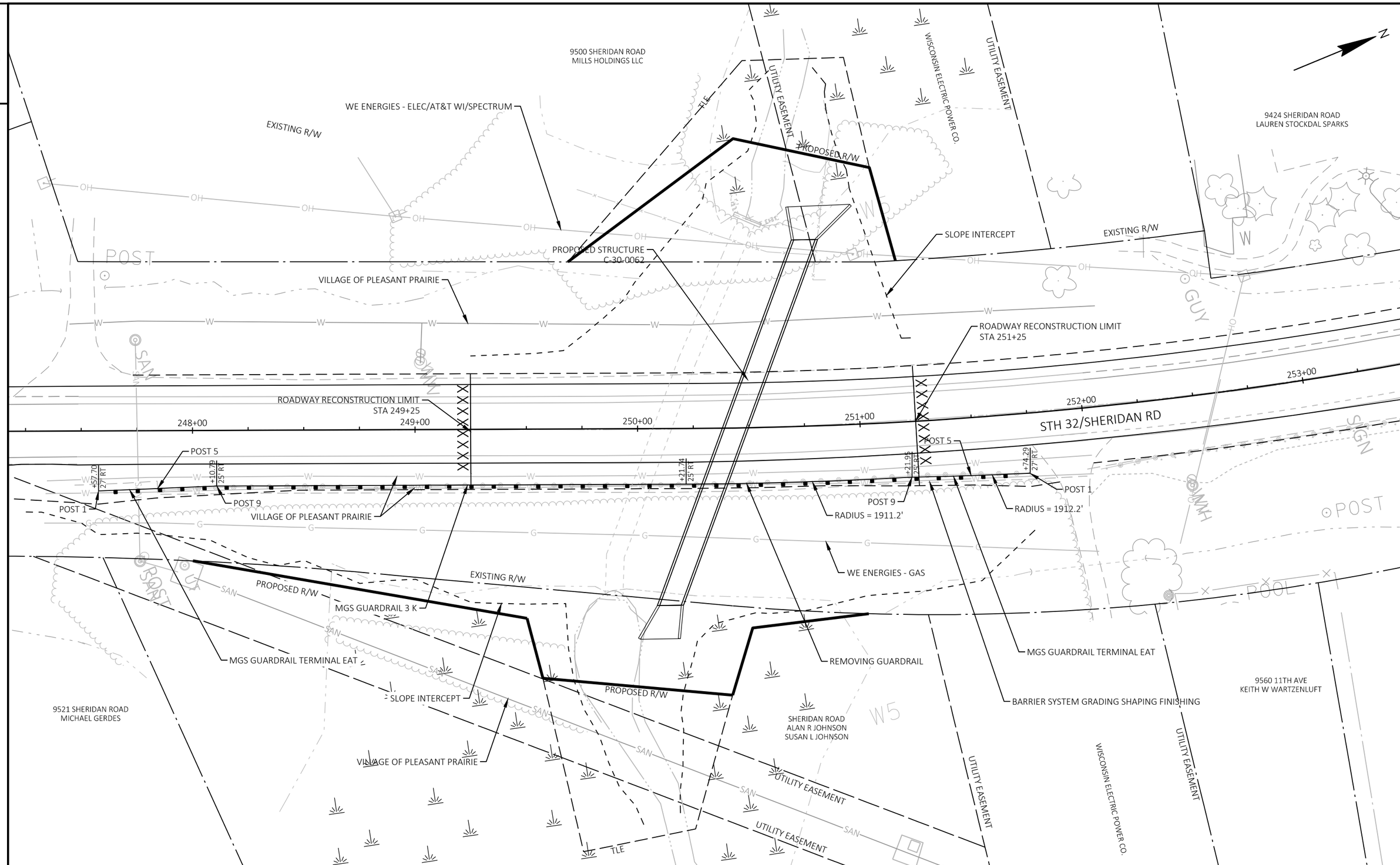

PROJECT NO: 3240-16-70	HWY: STH 32	COUNTY: KENOSHA	BEAM GUARD	SHEET 10	E

FILE NAME : L:\DESIGN PROJECTS\3240-16-00 STH 32\10. ROADWAY\CIVIL 3D\32401600\SHEETSPLAN\021002-CD.DWG
LAYOUT NAME - 021002-cd
PLOT DATE : 10/7/2022 12:57 PM PLOT BY : REBECCA JONARDI PLOT NAME : PLOT SCALE : 1 IN:40 FT

2

CURVE 1
PI STA = 0+78.64
Y = 115654.494
X = 628574.843
DELTA = 12°13'19"
D = 57°17'45"
T = 10.71'
L = 21.33'
R = 100.00'
PC STA = 0+67.93
Y = 115658.568
X = 628564.942
PT STA = 0+89.27
Y = 115652.608
X = 628585.381

CURVE 2
PI STA = 1+32.14
Y = 115645.055
X = 628627.582
DELTA = 32°29'25"
D = 114°35'30"
T = 14.57'
L = 28.35'
R = 50.00'
PC STA = 1+17.57
Y = 115647.622
X = 628613.241
PT STA = 1+45.92
Y = 115635.187
X = 628638.300

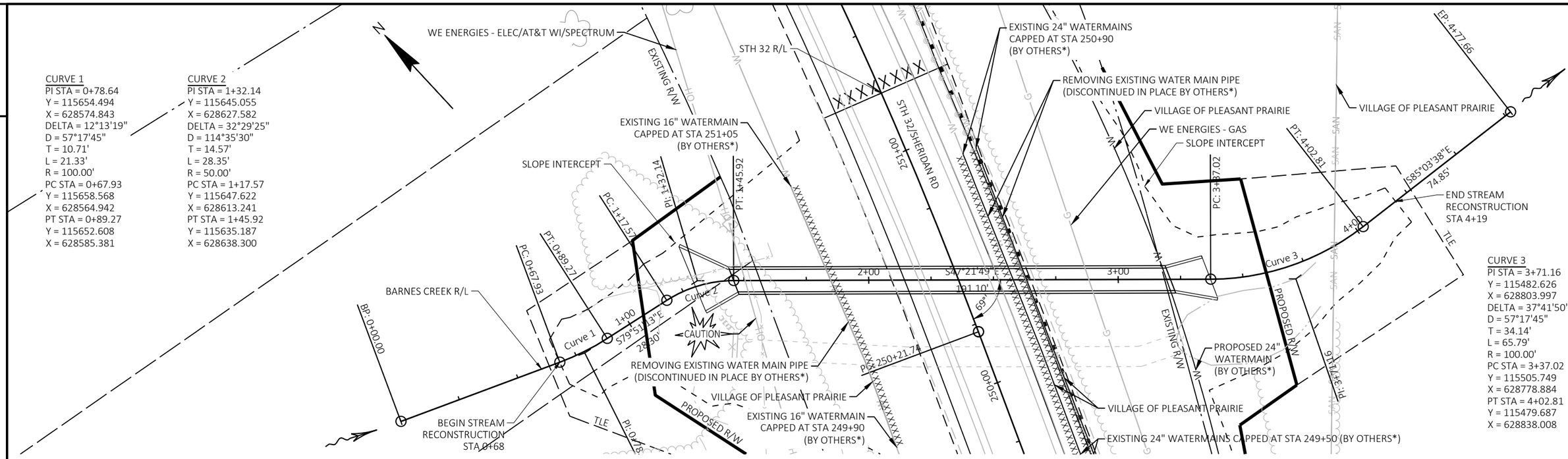

CURVE 3
PI STA = 3+71.16
Y = 115482.626
X = 628803.997
DELTA = 37°41'50"
D = 57°17'45"
T = 34.14'
L = 65.79'
R = 100.00'
PC STA = 3+37.02
Y = 115505.749
X = 628778.884
PT STA = 4+02.81
Y = 115479.687
X = 628838.008

PLAN

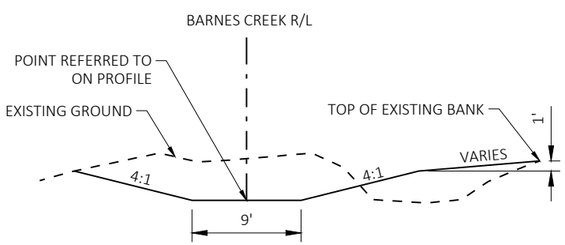

TYPICAL SECTION
NORMAL TO CHANNEL REALIGNMENT

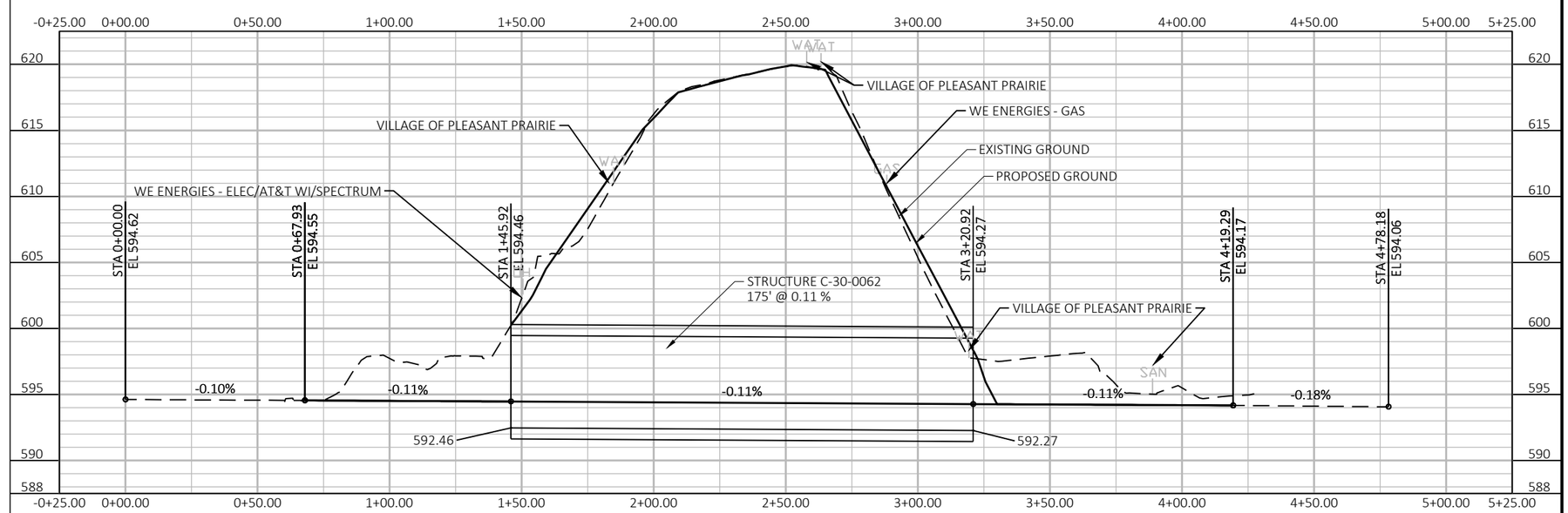

PROFILE

PROJECT NO: 3240-16-70	HWY: STH 32	COUNTY: KENOSHA	BARNES CREEK REALIGNMENT DETAILS	SHEET 11	E

FILE NAME : L:\DESIGN PROJECTS\3240-16-00 STH 32\10. ROADWAY\CIVIL 3D\32401600\SHEETSPLAN\021003-CD.DWG
LAYOUT NAME - 021003-cd
PLOT DATE : 10/5/2022 11:20 AM PLOT BY : REBECCA JONARDI PLOT NAME : PLOT SCALE : 1 IN:40 FT
WISDOT/CADDS SHEET 42

SCALE: 1 IN = 600 FT

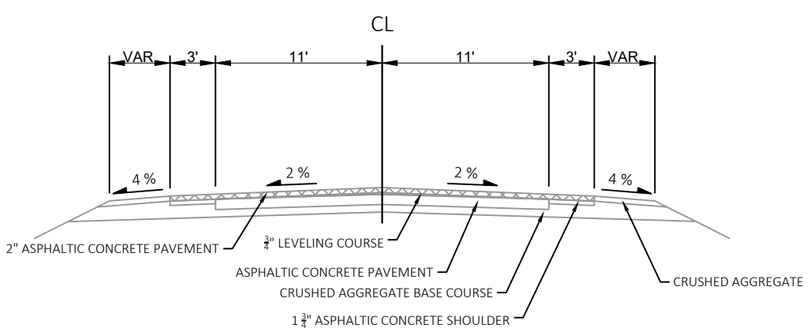

EXISTING TYPICAL SECTION STH 165

STH 31 TO CTH ML

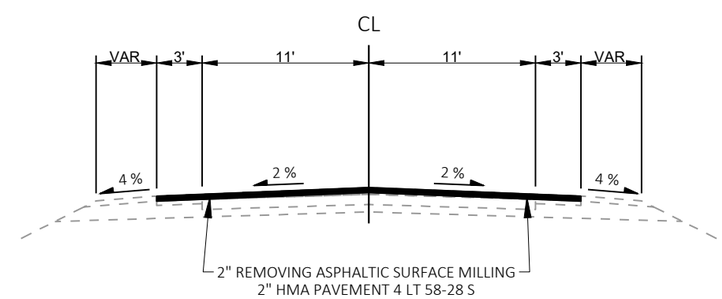

PROPOSED TYPICAL SECTION STH 165

STH 31 TO CTH ML

2

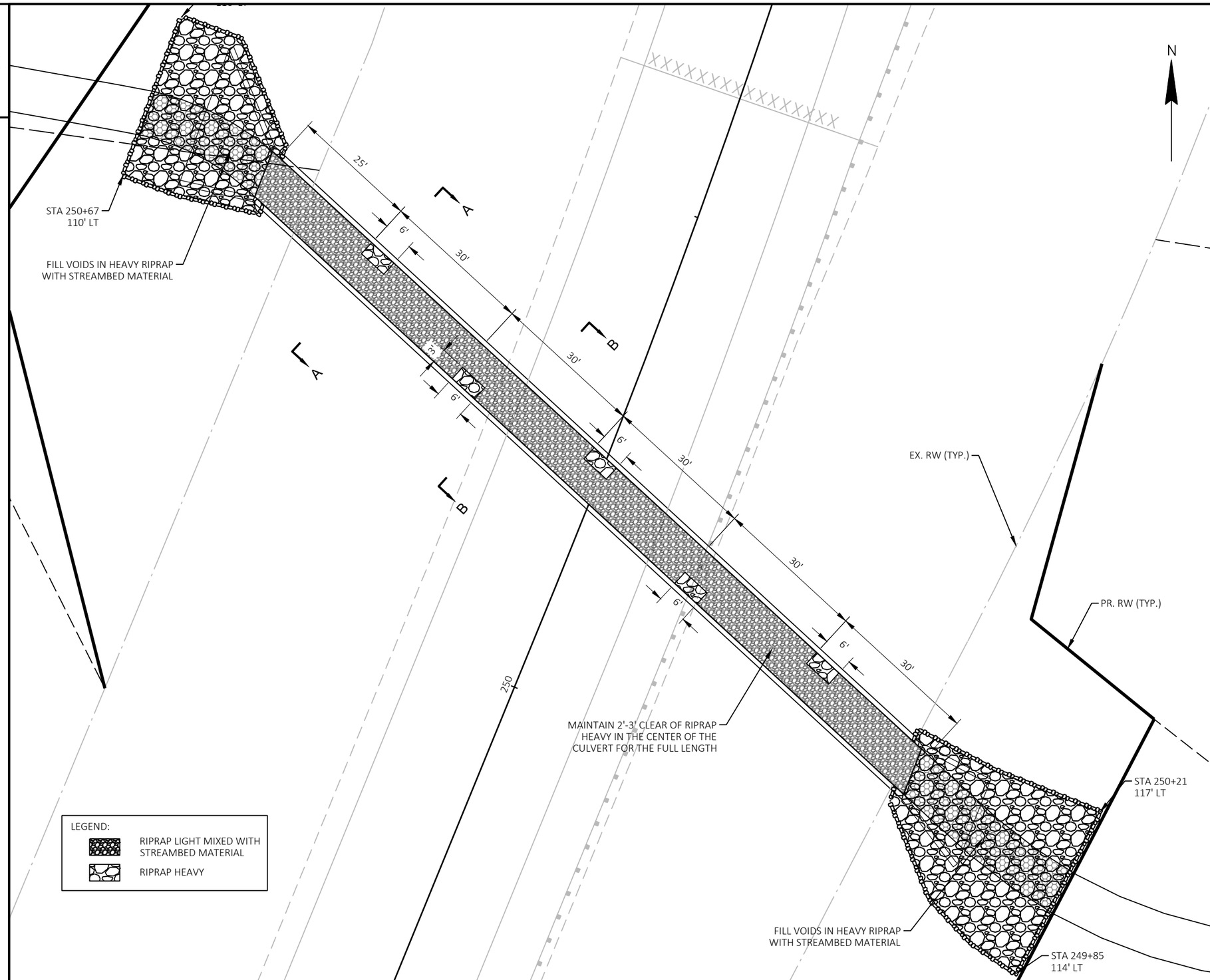

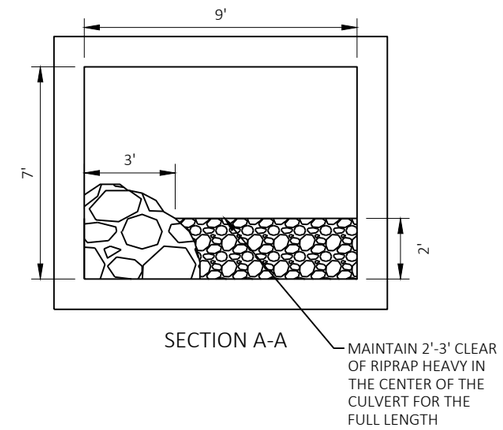

SECTION A-A

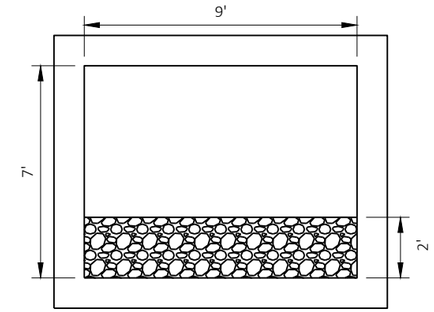

SECTION B-B

2

PROJECT NO: 3240-16-70	HWY: STH 32	COUNTY: KENOSHA	C-30-0062 BARNES CREEK CULVERT - FILL DETAIL	SHEET 13	E

FILE NAME : L:\DESIGN PROJECTS\3240-16-00 STH 32\10. ROADWAY\CIVIL 3D\32401600\SHEETSPLAN\021005-CD.DWG
LAYOUT NAME - 021005-cd
PLOT DATE : 10/5/2022 12:55 PM PLOT BY : REBECCA JONARDI PLOT NAME : PLOT SCALE : 1 IN:20 FT

WISDOT/CADDS SHEET 42

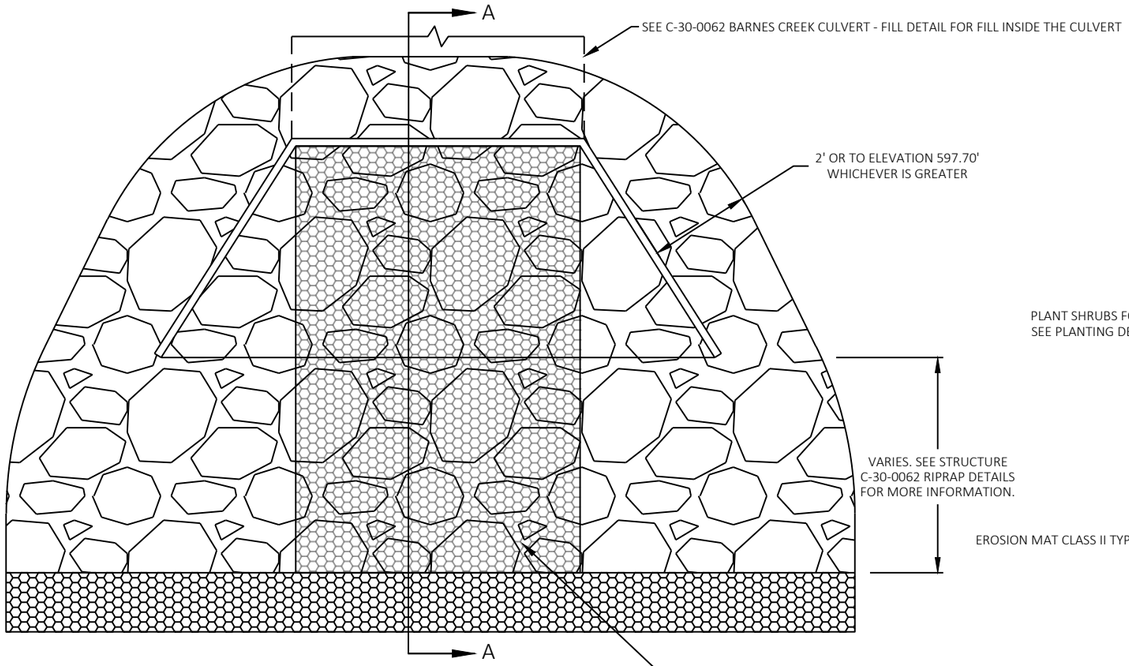

PLAN VIEW

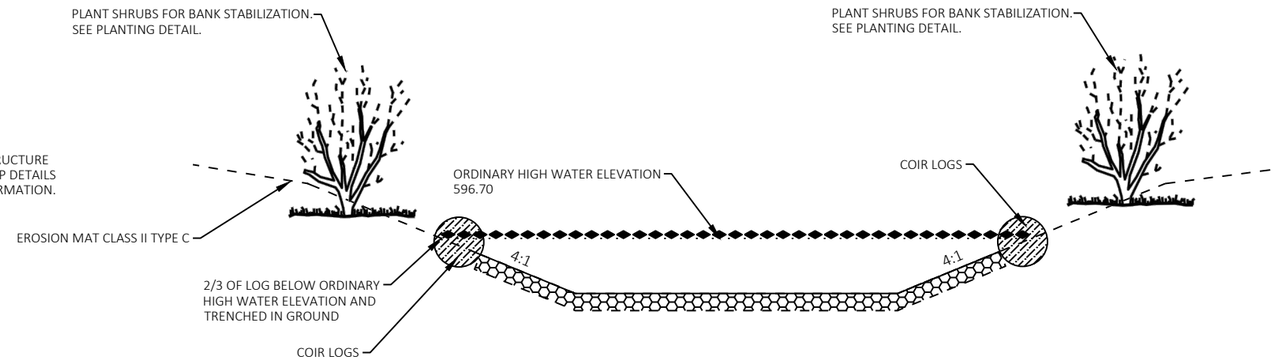

STREAM BED DETAIL – SECTION VIEW B–B

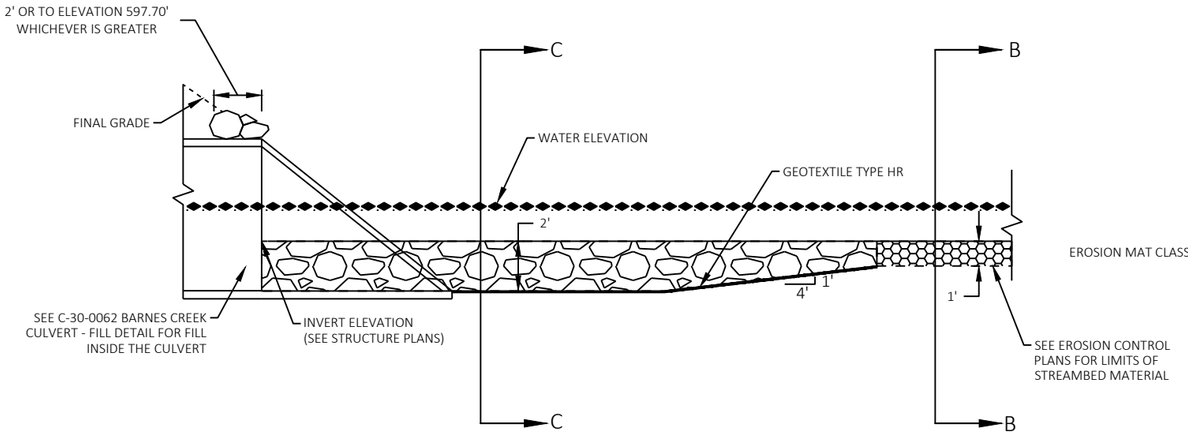

STREAM BED DETAIL – SECTION VIEW A–A

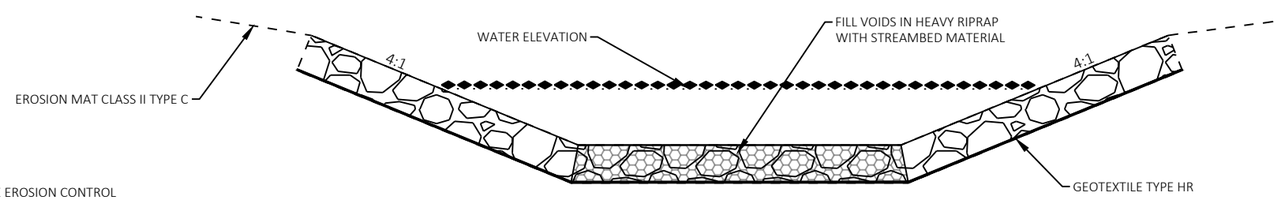

STREAM BED DETAIL – SECTION VIEW C–C

LEGEND

RIPRAP HEAVY

STREAMBED MATERIAL

PROJECT NO: 3240-16-70	HWY: STH 32	COUNTY: KENOSHA	CONSTRUCTION DETAIL - CULVERT DETAIL	SHEET 14	E

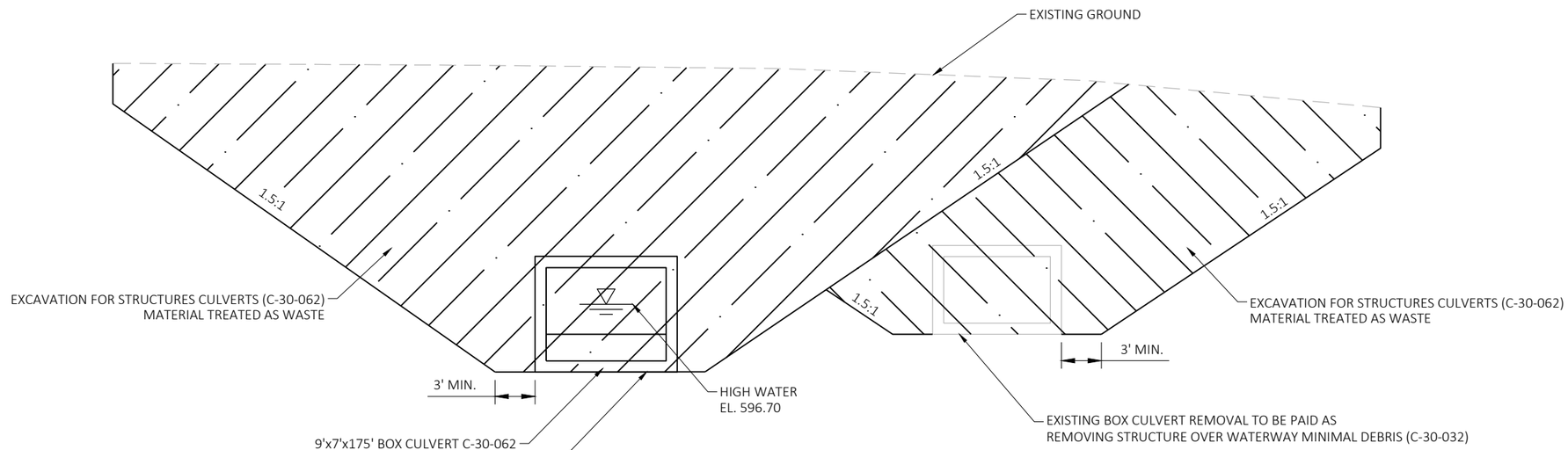

EXCAVATION TYPICAL SECTION
NORMAL TO CHANNEL REALIGNMENT

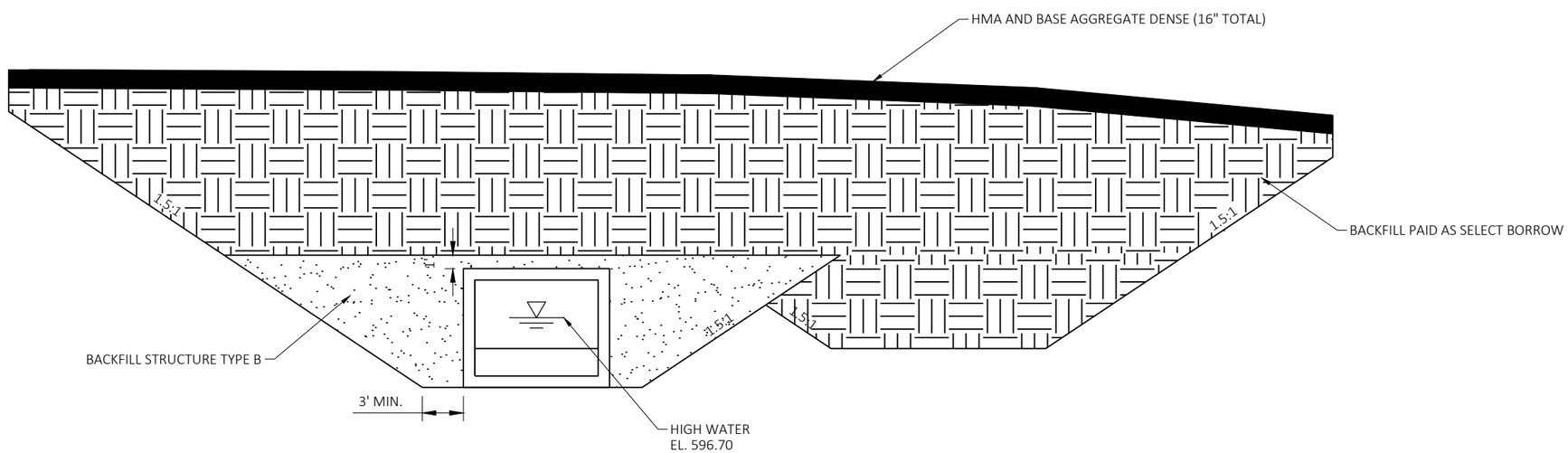

BACKFILL TYPICAL SECTION
NORMAL TO CHANNEL REALIGNMENT

PROJECT NO: 3240-16-70	HWY: STH 32	COUNTY: KENOSHA	CONSTRUCTION DETAIL - BARNES CREEK EXCAVATION AND BACKFILL	SHEET 15	E

LEGEND

ASPHALTIC REPAIR

SSSSSS VERTICAL MILLED EDGE
SAW CUTTING AT THE CONTRACTORS DISCRETION

tttttttt TACK COAT

GENERAL NOTES

1. EXACT LOCATION, DEPTH AND SIZE OF REPAIR TO BE DETERMINED BY THE ENGINEER IN THE FIELD.
2. MILL PAVEMENT PER PLAN PRIOR TO MAKING ASPHALTIC REPAIR.
3. LOCATE LONGITUDINAL REPAIR JOINTS OUTSIDE OF WHEEL PATH. 12-INCH MINIMUM (24-INCH RECOMMENDED) FROM THE CENTER OF THE WHEEL PATH.
4. ASPHALTIC REPAIR PAVING TO BE DONE ON THE SAME DAY AS REMOVAL.

2

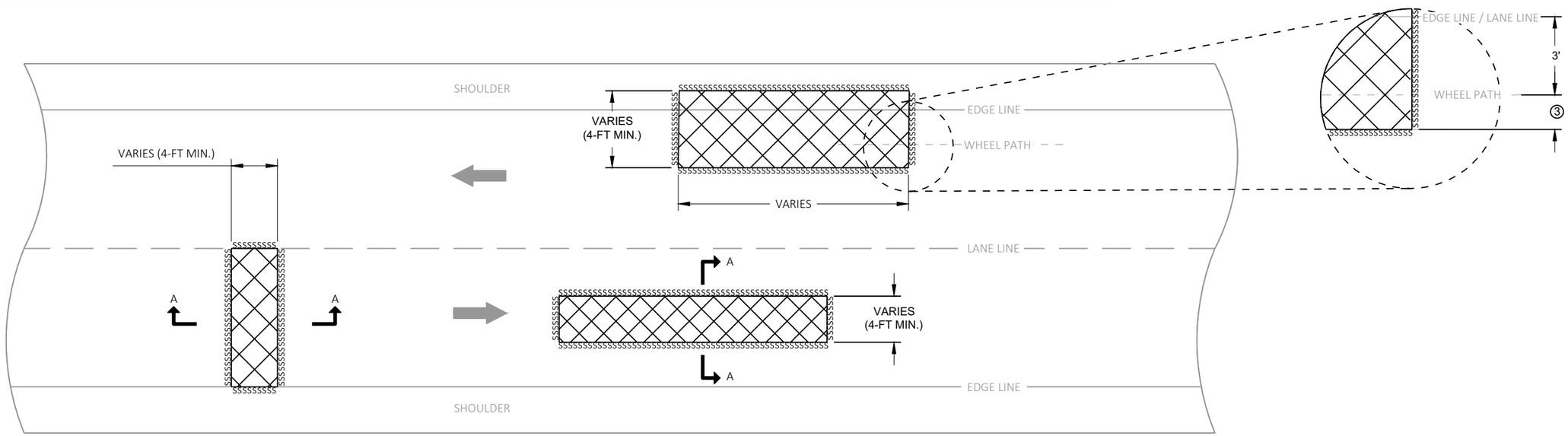

PLAN VIEW

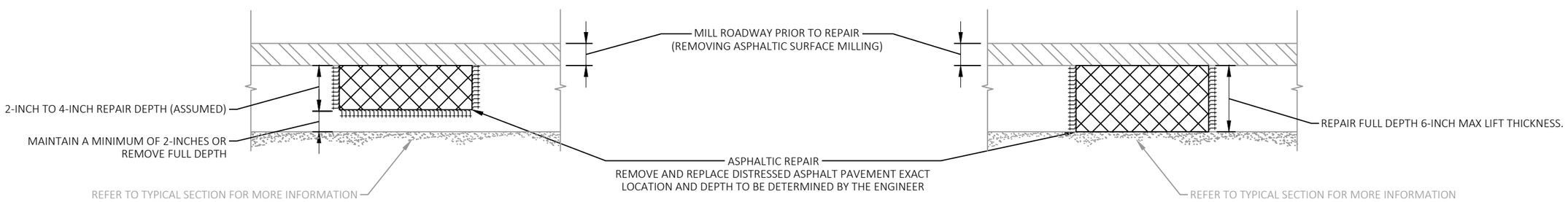

PARTIAL DEPTH

FULL DEPTH

SECTION A-A

ASPHALTIC REPAIR SPECIAL

PROJECT NO: 3240-16-70	HWY: STH 32	COUNTY: KENOSHA	CONSTRUCTION DETAIL - ASPHALTIC REPAIR SPECIAL	SHEET 16	E

2

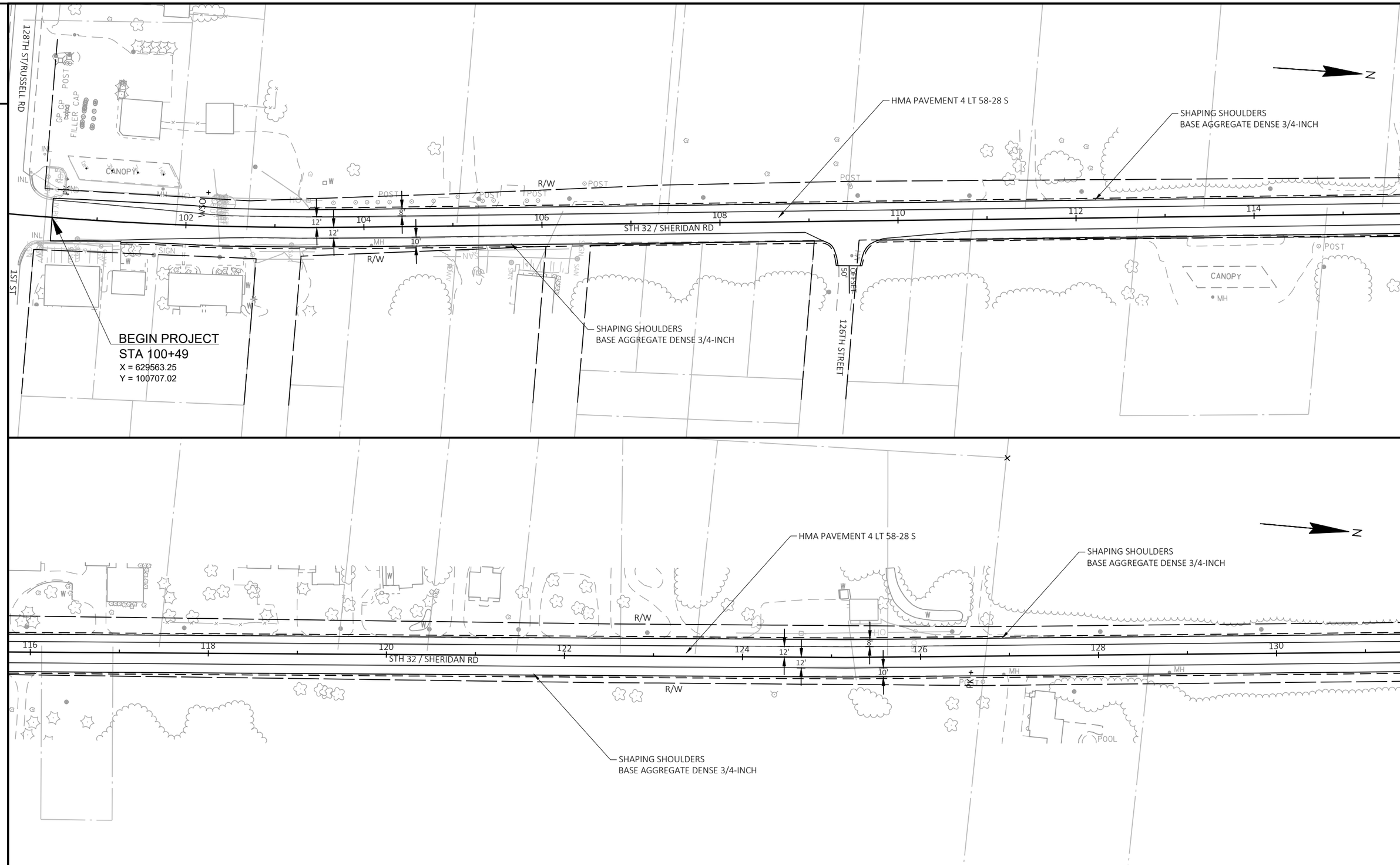

2

PROJECT NO: 3240-16-70	HWY: STH 32	COUNTY: KENOSHA	PLAN DETAILS	SHEET 17	E

FILE NAME : L:\DESIGN PROJECTS\3240-16-00 STH 32\10. ROADWAY\CIVIL 3D\32401600\SHEETSPLAN\021201-PD.DWG
LAYOUT NAME - 021201-pd
PLOT DATE : 10/21/2022 10:22 AM PLOT BY : REBECCA JONARDI PLOT NAME : PLOT SCALE : 1 IN:100 FT
WISDOT/CADDS SHEET 44

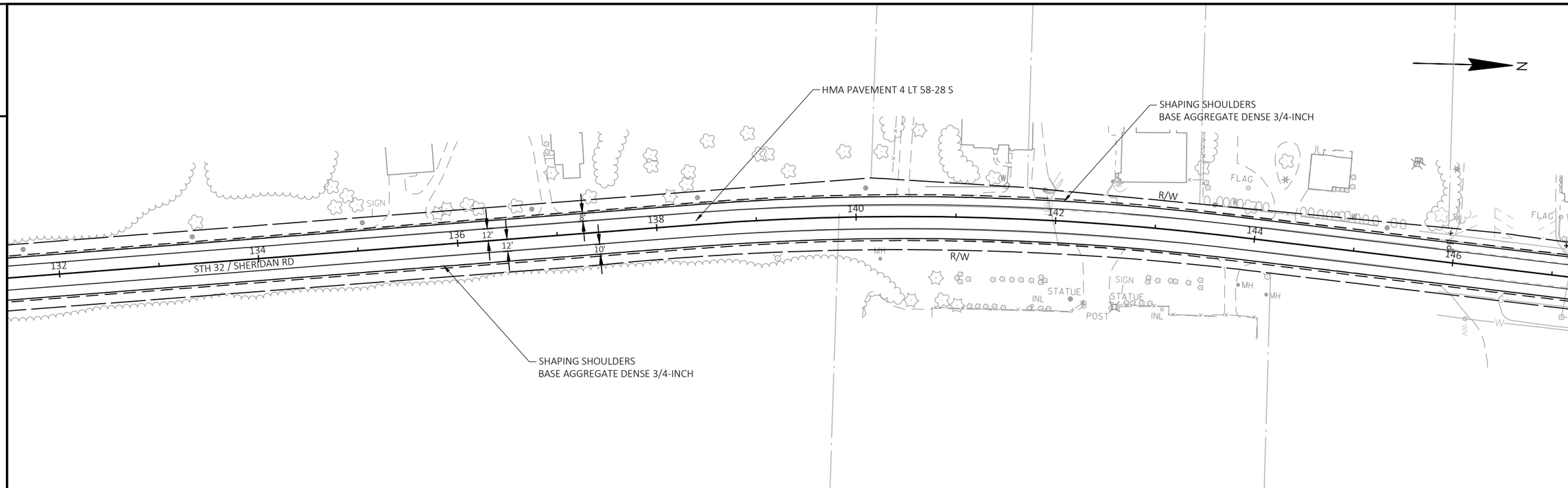

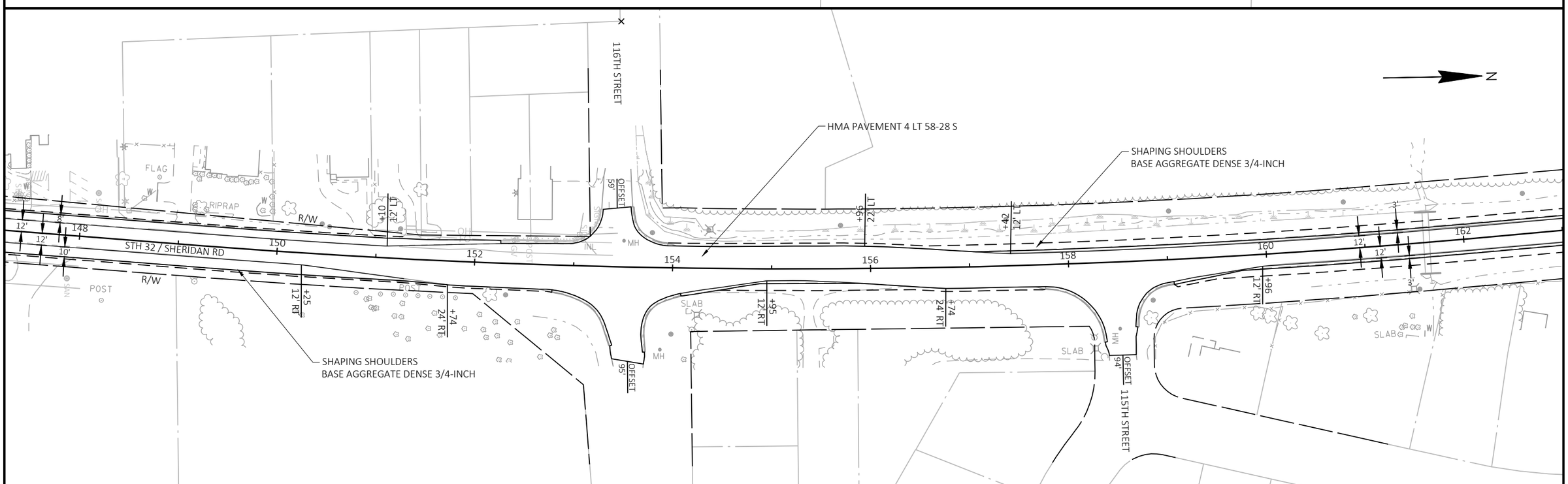

PROJECT NO: 3240-16-70	HWY: STH 32	COUNTY: KENOSHA	PLAN DETAILS	SHEET 18	E

FILE NAME : L:\DESIGN PROJECTS\3240-16-00 STH 32\10. ROADWAY\CIVIL 3D\32401600\SHEETSPLAN\021201-PD.DWG
LAYOUT NAME - 021202-pd
PLOT DATE : 10/21/2022 10:22 AM PLOT BY : REBECCA JONARDI PLOT NAME : PLOT SCALE : 1 IN:100 FT

2

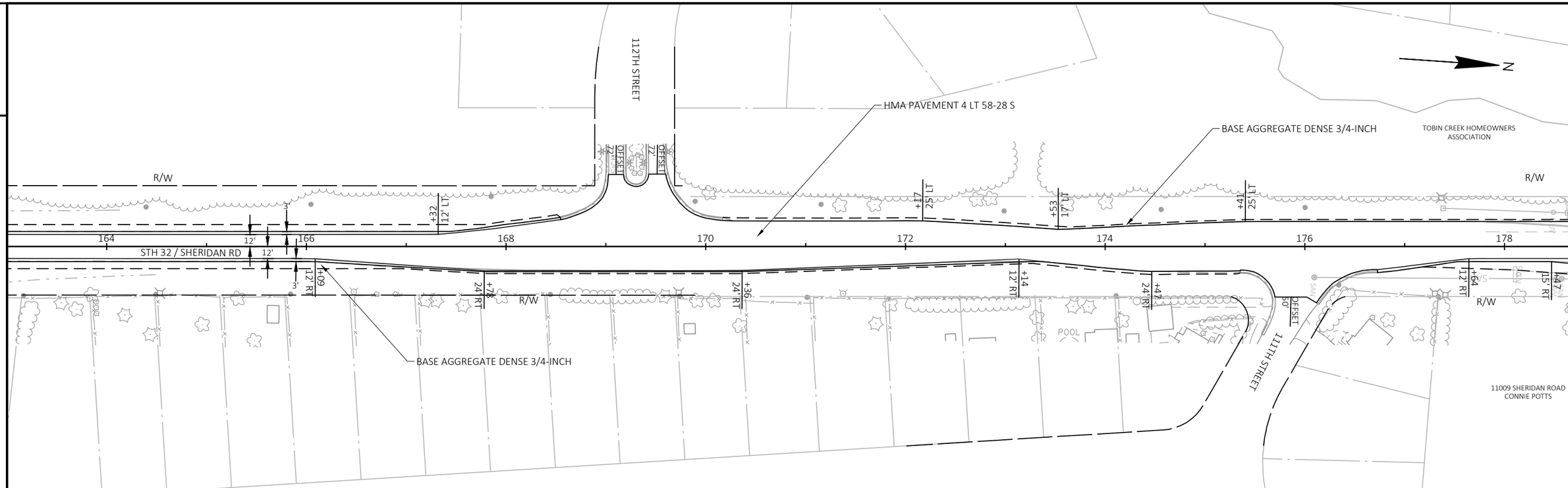

2

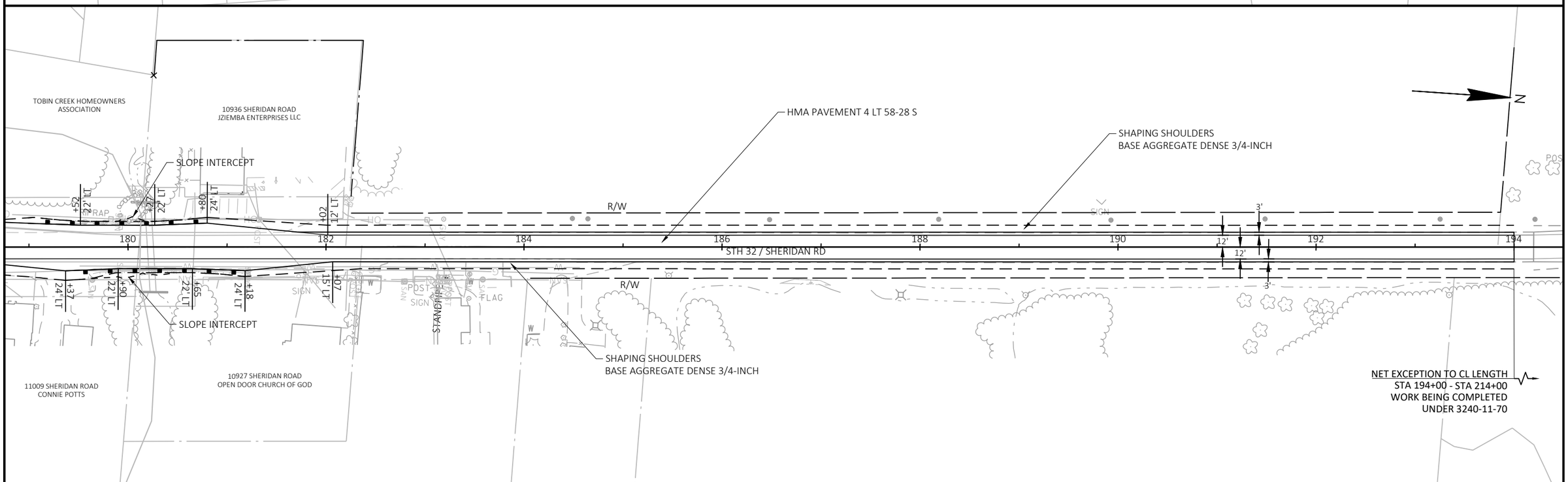

PROJECT NO: 3240-16-70	HWY: STH 32	COUNTY: KENOSHA	PLAN DETAILS	SHEET 19	E

FILE NAME : L:\DESIGN PROJECTS\3240-16-00 STH 32\10. ROADWAY\CIVIL 3D\32401600\SHEETSPLAN\021201-PD.DWG
LAYOUT NAME - 021203-pd
PLOT DATE : 10/21/2022 10:23 AM PLOT BY : REBECCA JONARDI PLOT NAME : PLOT SCALE : 1 IN:100 FT

WISDOT/CADDS SHEET 44

PROJECT NO: 3240-16-70	HWY: STH 32	COUNTY: KENOSHA	PLAN DETAILS	SHEET 20	E

FILE NAME : L:\DESIGN PROJECTS\3240-16-00 STH 32\10. ROADWAY\CIVIL 3D\32401600\SHEETSPLAN\021201-PD.DWG
LAYOUT NAME - 021204-pd
PLOT DATE : 10/21/2022 10:23 AM PLOT BY : REBECCA JONARDI PLOT NAME : PLOT SCALE : 1 IN:100 FT

WISDOT/CADDS SHEET 44

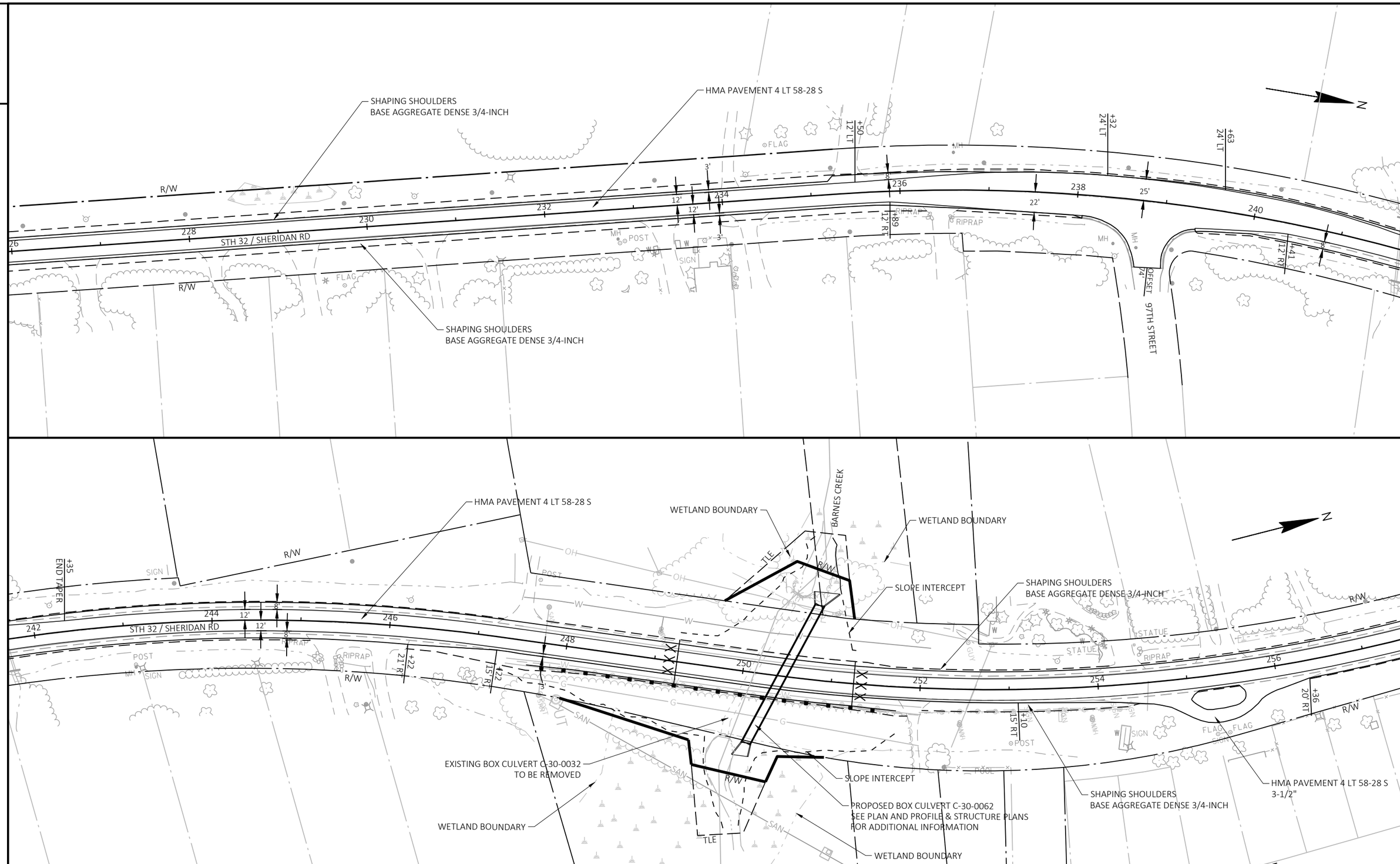

PROJECT NO: 3240-16-70	HWY: STH 32	COUNTY: KENOSHA	PLAN DETAILS	SHEET 21	E

FILE NAME : L:\DESIGN PROJECTS\3240-16-00 STH 32\10. ROADWAY\CIVIL 3D\32401600\SHEETSPLAN\021201-PD.DWG
LAYOUT NAME - 021205-pd
PLOT DATE : 10/21/2022 10:24 AM PLOT BY : REBECCA JONARDI PLOT NAME : PLOT SCALE : 1 IN:100 FT

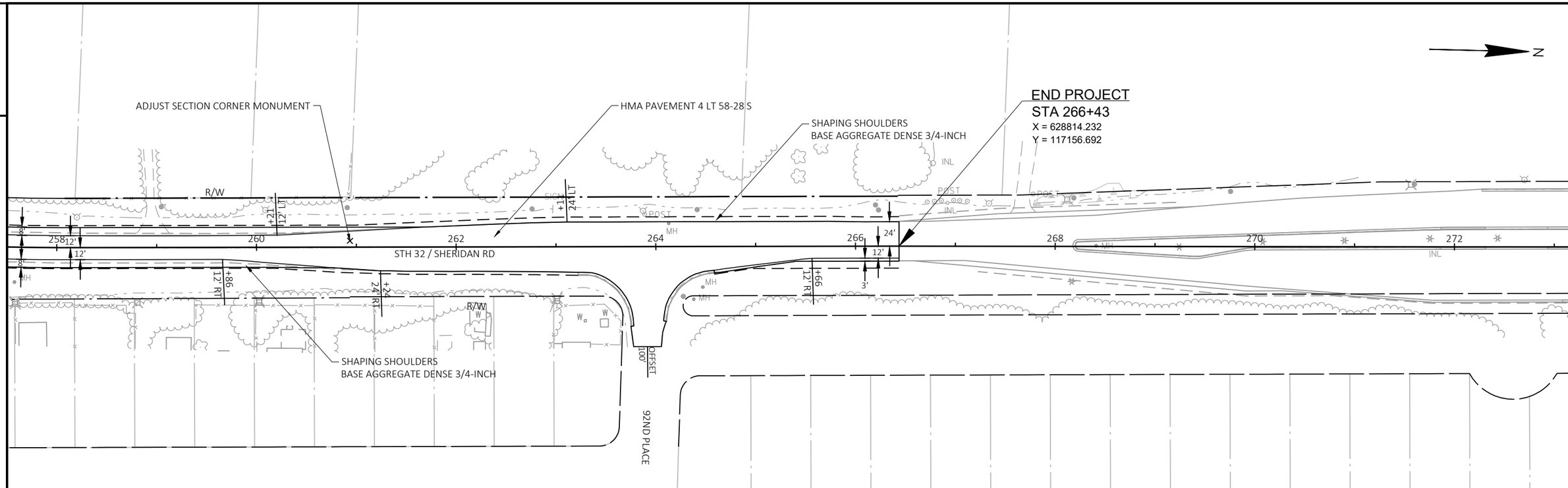
N
ADJUST SECTION CORNER MONUMENT
HMA PAVEMENT 4 LT 58-28 S
SHAPING SHOULDERS
BASE AGGREGATE DENSE 3/4-INCH
END PROJECT
STA 266+43
X = 628814.232
Y = 117156.692
R/W
+21
12' LT
+13
24' LT
POST
MH
INL
258
260
262
264
266
268
270
272
12'
24'
3'
STH 32 / SHERIDAN RD
+86
12' RT
+24
24' RT
+66
12' RT
SHAPING SHOULDERS
BASE AGGREGATE DENSE 3/4-INCH
OFFSET
100'
92ND PLACE

2

LEGEND

- SILT FENCE
- HEAVY DUTY SILT FENCE
- TEMPORARY DIVERSION DEVICE
- EROSION MAT CLASS II TYPE C
- SEEDING TEMPORARY
- RIPRAP HEAVY
- COIR LOGS
- SURFACE WATER FLOW
- TEMPORARY DITCH CHECK
- ROCK BAGS

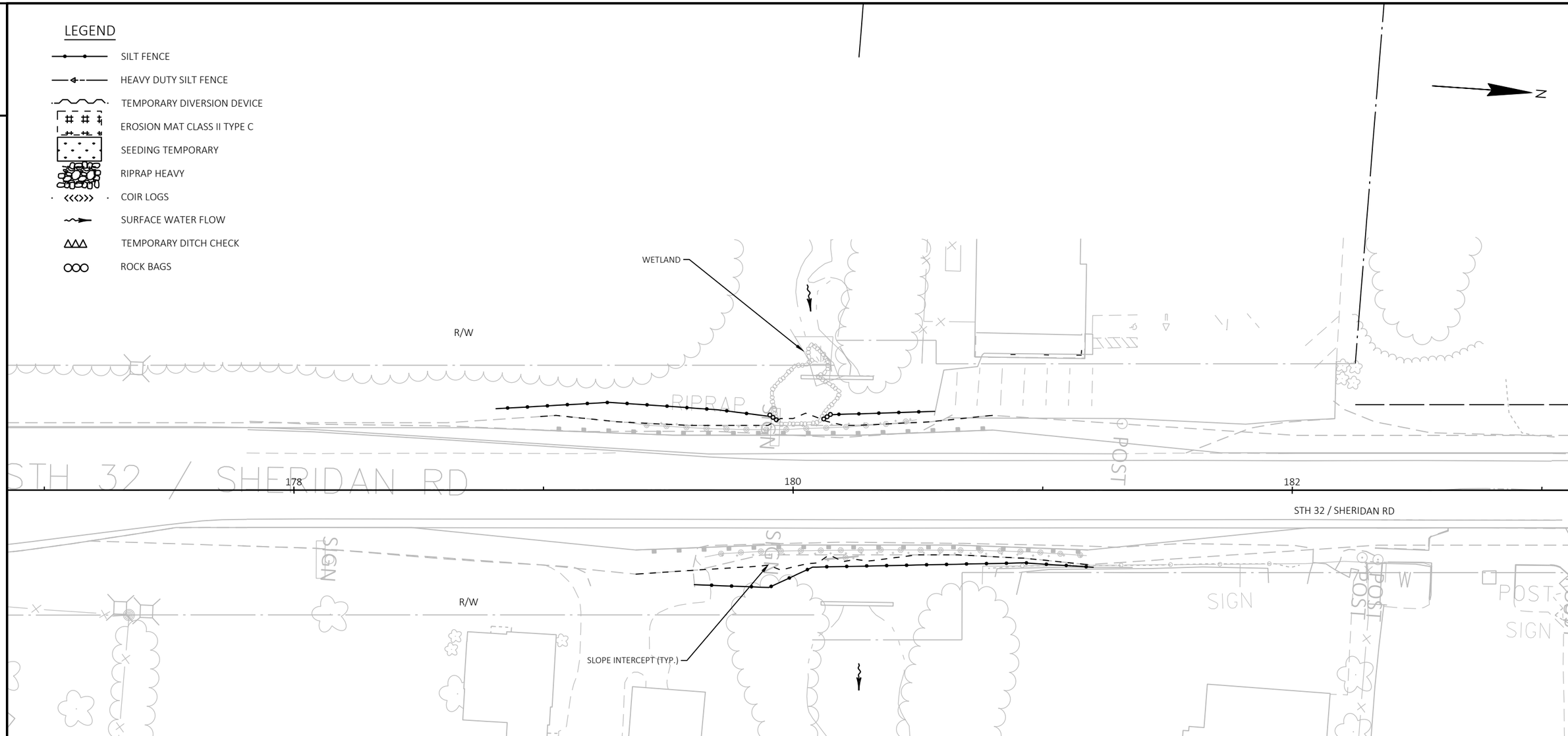

2

PROJECT NO: 3240-16-70	HWY: STH 32	COUNTY: KENOSHA	EROSION CONTROL - TEMPORARY	SHEET 23	E

FILE NAME : L:\DESIGN PROJECTS\3240-16-00 STH 32\10. ROADWAY\CIVIL 3D\32401600\SHEETSPLAN\022001-EC.DWG
LAYOUT NAME - 02201-ec
PLOT DATE : 10/5/2022 1:06 PM PLOT BY : REBECCA JONARDI PLOT NAME : PLOT SCALE : 1 IN:40 FT

WISDOT/CADDS SHEET 42

2

LEGEND

- SILT FENCE
- HEAVY DUTY SILT FENCE
- TEMPORARY DIVERSION DEVICE
- EROSION MAT CLASS II TYPE C
- SEEDING TEMPORARY
- RIPRAP HEAVY
- COIR LOGS
- SURFACE WATER FLOW
- TEMPORARY DITCH CHECK
- ROCK BAGS

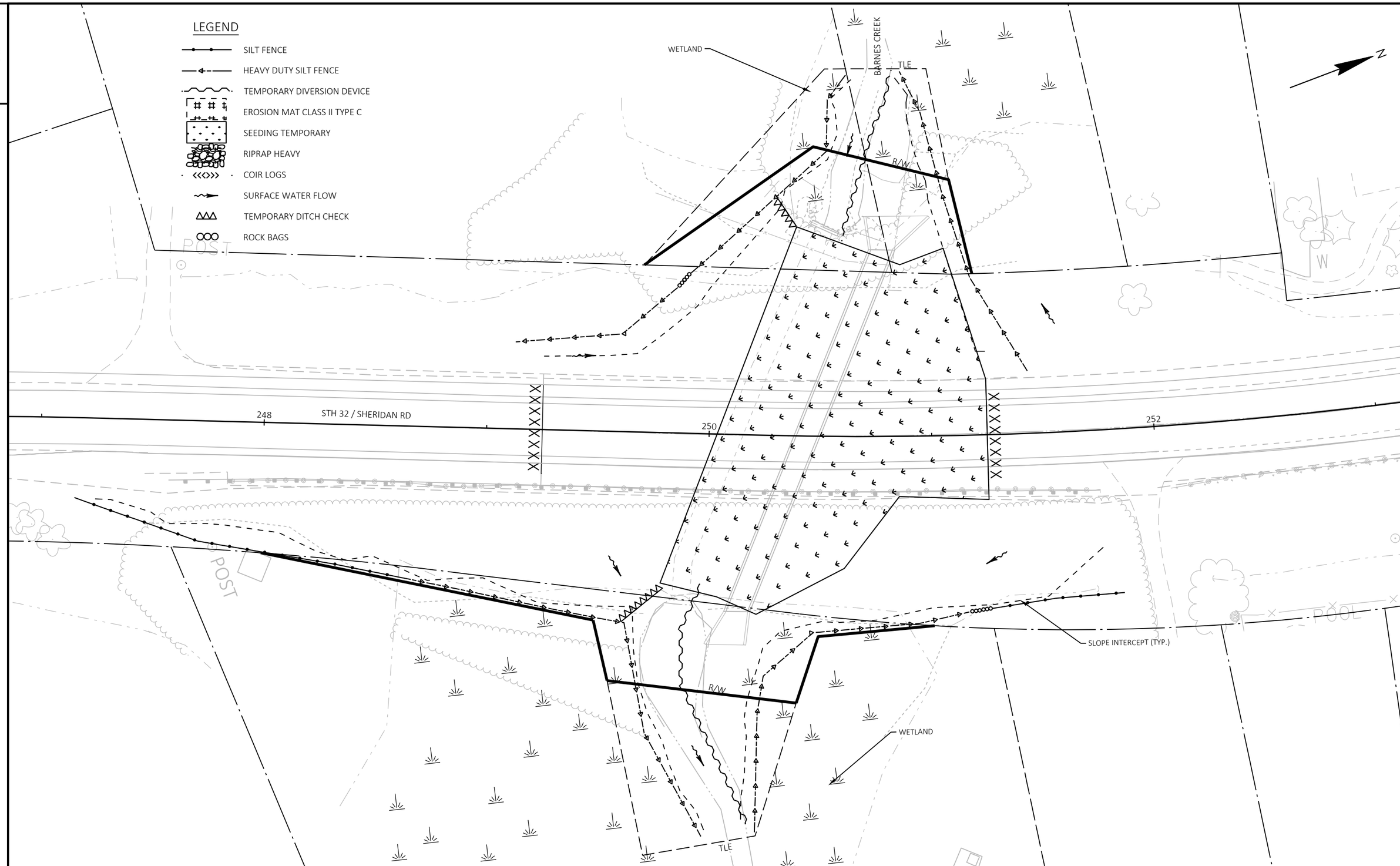

2

PROJECT NO: 3240-16-70	HWY: STH 32	COUNTY: KENOSHA	EROSION CONTROL - TEMPORARY	SHEET 24	E

FILE NAME : L:\DESIGN PROJECTS\3240-16-00 STH 32\10. ROADWAY\CIVIL 3D\32401600\SHEETSPLAN\022001-EC.DWG
LAYOUT NAME - 02202-ec
PLOT DATE : 10/5/2022 1:06 PM
PLOT BY : REBECCA JONARDI
PLOT NAME :
PLOT SCALE : 1 IN:40 FT
WISDOT/CADDS SHEET 42

2

LEGEND

- SILT FENCE
- HEAVY DUTY SILT FENCE
- TEMPORARY DIVERSION DEVICE
- EROSION MAT CLASS II TYPE C
- SEEDING TEMPORARY
- RIPRAP HEAVY
- COIR LOGS
- SURFACE WATER FLOW
- TEMPORARY DITCH CHECK

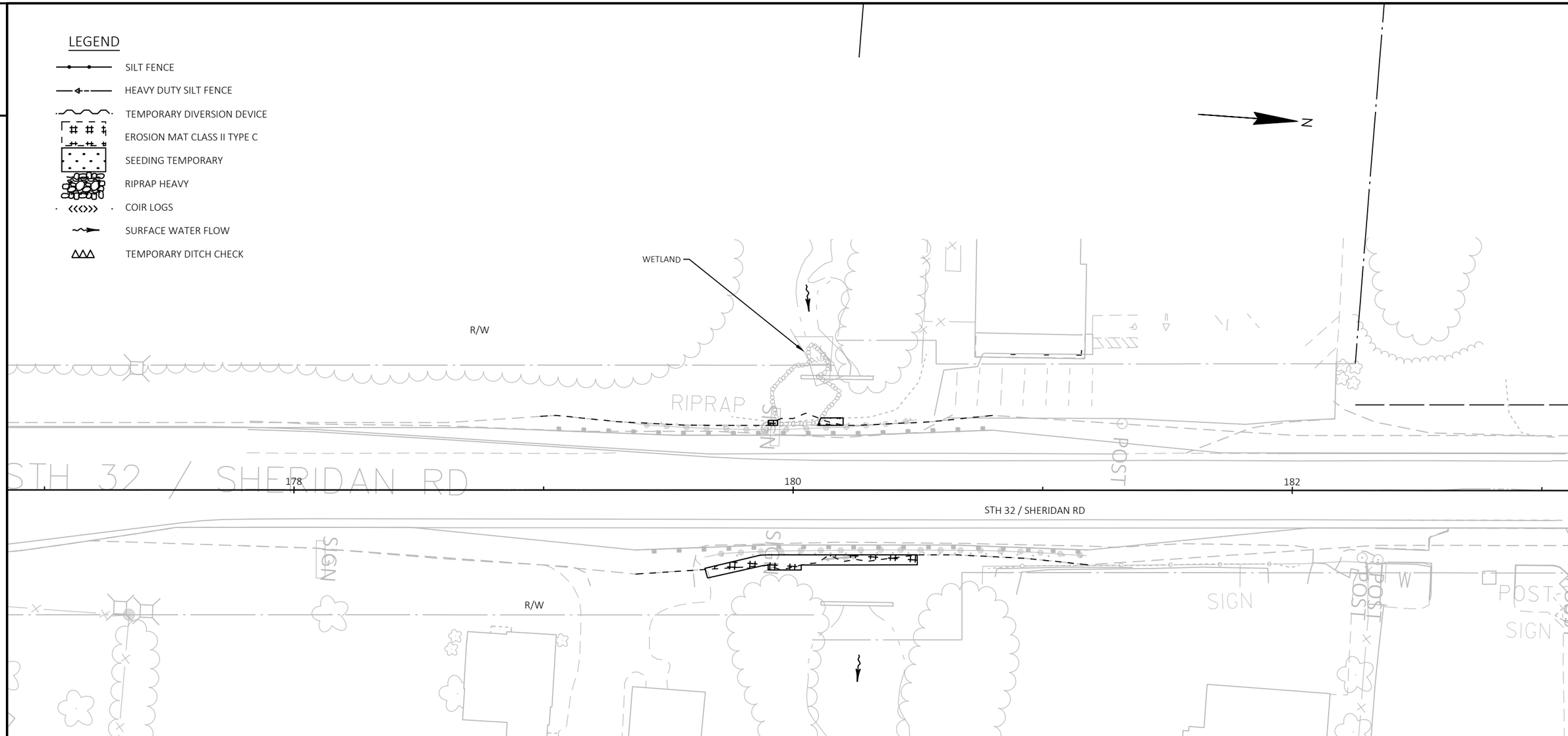

2

PROJECT NO: 3240-16-70	HWY: STH 32	COUNTY: KENOSHA	EROSION CONTROL - FINAL RESTORATION	SHEET 25	E

FILE NAME : L:\DESIGN PROJECTS\3240-16-00 STH 32\10. ROADWAY\CIVIL 3D\32401600\SHEETSPLAN\022003-EC.DWG
LAYOUT NAME - 022006-ec
PLOT DATE : 10/13/2022 1:00 PM PLOT BY : REBECCA JONARDI PLOT NAME : PLOT SCALE : 1 IN:40 FT

WISDOT/CADDS SHEET 42

2

LEGEND

- SILT FENCE
- HEAVY DUTY SILT FENCE
- TEMPORARY DIVERSION DEVICE
- EROSION MAT CLASS II TYPE C
- SEEDING TEMPORARY
- RIPRAP HEAVY
- STREAMBED MATERIAL
- COIR LOGS
- SURFACE WATER FLOW
- TEMPORARY DITCH CHECK

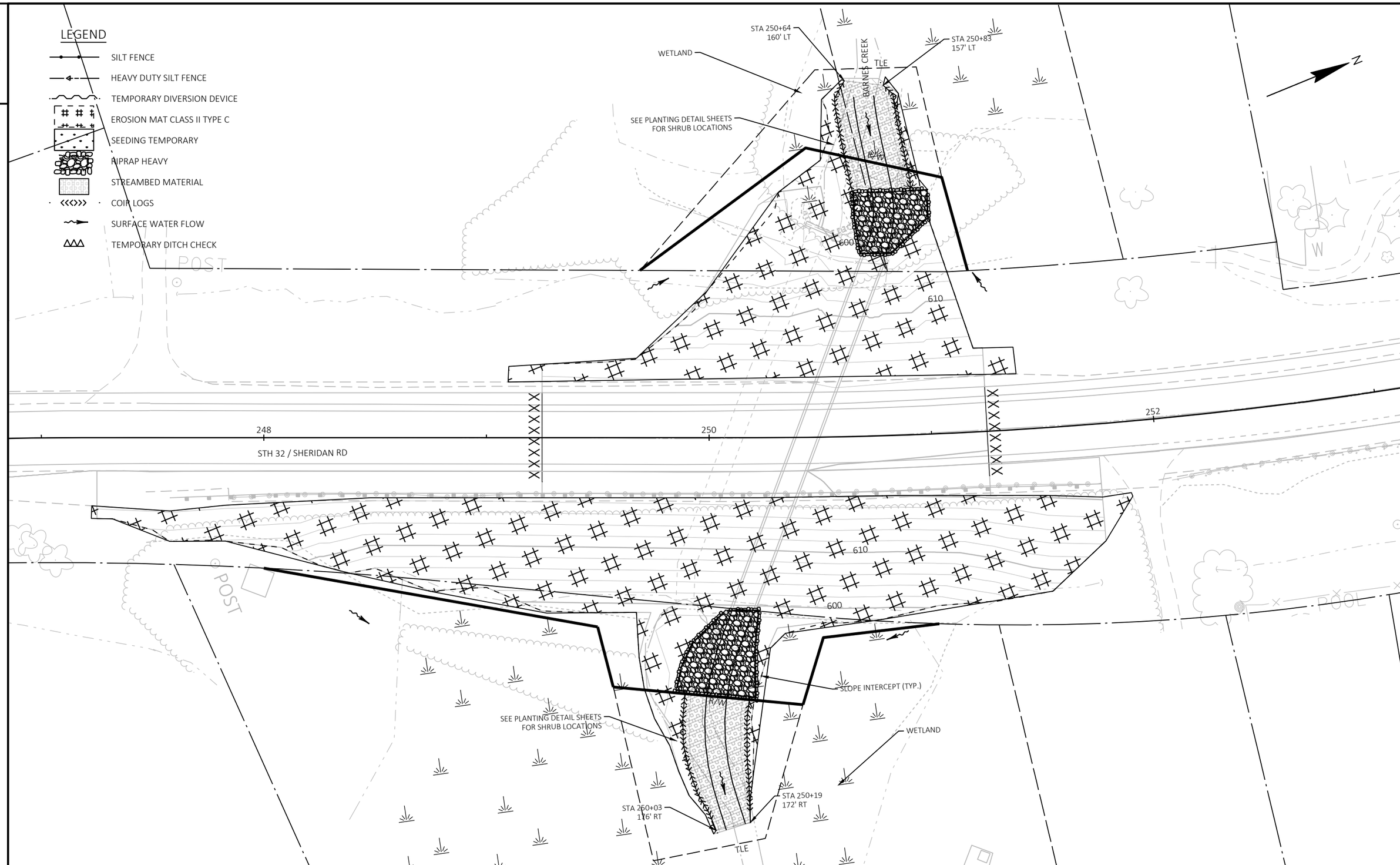

2

PROJECT NO: 3240-16-70	HWY: STH 32	COUNTY: KENOSHA	EROSION CONTROL - FINAL RESTORATION	SHEET 26	E

FILE NAME : L:\DESIGN PROJECTS\3240-16-00 STH 32\10. ROADWAY\CIVIL 3D\32401600\SHEETSPLAN\022003-EC.DWG
LAYOUT NAME - 022007-ec
PLOT DATE : 10/13/2022 1:01 PM PLOT BY : REBECCA JONARDI PLOT NAME : PLOT SCALE : 1 IN:40 FT

WISDOT/CADDS SHEET 42

2

LEGEND

RED TWIG DOGWOOD

GRAY DOGWOOD

COMMON BUTTONBUSH

(SHRUBS TO BE PLANTED 36" ON CENTER)

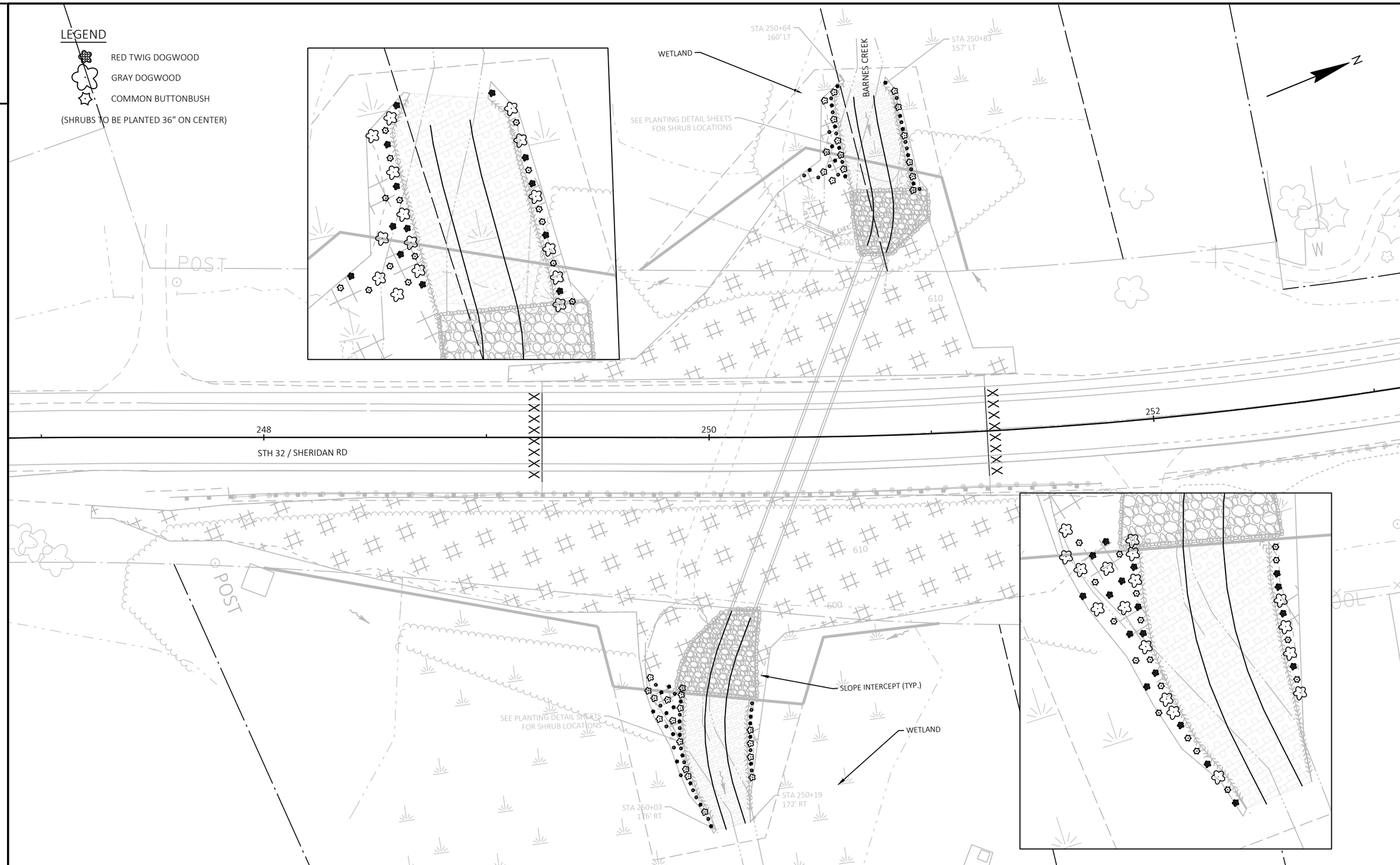

2

PROJECT NO: 3240-16-70	HWY: STH 32	COUNTY: KENOSHA	PLANTING DETAIL	SHEET 27	E

2

LEGEND

- EXISTING SIGN MOUNTED ON POST(S)
- EXISTING SIGN MOUNTED ON BRIDGE OR SIGN BRIDGE
- PROPOSED SIGN MOUNTED ON POST(S)
- PROPOSED SIGN MOUNTED ON BRIDGE OR SIGN BRIDGE
- EXISTING LIGHT OR SIGNAL POLE
- CANTILEVER SIGN BRIDGE
- (XXX) DENOTES SIGN NUMBER
- (X) INDICATES SIGN SIZE
- ESTR EXISTING SIGN TO REMAIN

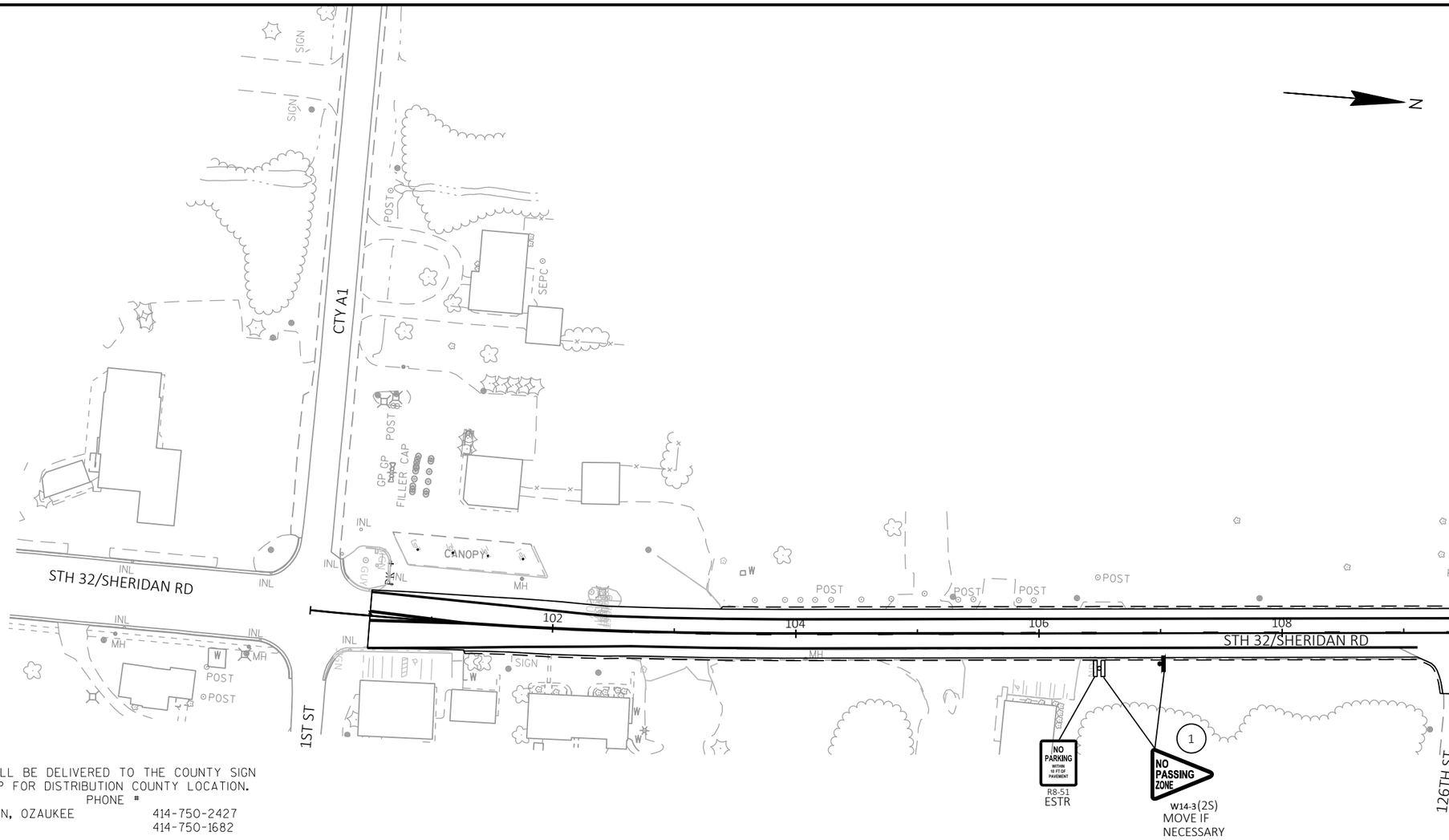

TYPE II ALUMINUM SIGNS REMOVED UNDER THE CONTRACT SHALL BE DELIVERED TO THE COUNTY SIGN SHOP. CONTACT THE FOLLOWING INDIVIDUAL AT THE SIGN SHOP FOR DISTRIBUTION COUNTY LOCATION.

SIGNING COORDINATOR	COUNTIES	PHONE #
JENNY BUCKETT	MILWAUKEE, KENOSHA, WASHINGTON, OZAUKEE	414-750-2427
CHUCK SALDIVAR	RACINE, WALWORTH, WAUKESHA	414-750-1682

SIGNS SHALL BE CAREFULLY REMOVED FROM SIGN SUPPORTS. THE SIGNS SHALL BE PALLETIZED FOR HANDLING WITH A FORKLIFT (SEE STANDARD SPEC 638.3.4). THE REGIONAL SIGN SHOP (414-266-1165) SHALL BE NOTIFIED THREE WORKING DAYS PRIOR TO DELIVERY OF THE SIGNS.

WHEN AN EXISTING STOP SIGN SUPPORT IS TO BE REMOVED AND A NEW STOP SIGN AND SUPPORT ERECTED, THE WORK SHALL BE DONE CONCURRENTLY. FOR OTHER SIGNS AND SUPPORTS THAT ARE TO BE REMOVED AND NEW SIGNS AND SUPPORTS ERECTED, THE REMOVAL OF THE EXISTING SIGN/SUPPORT AND ERECTION OF THE NEW SIGN/SUPPORT SHOULD BE DONE AS CONCURRENTLY AS POSSIBLE. IN NO CASE SHALL A NEW SIGN/SUPPORT BE DOWN FOR MORE THAN 24 HOURS AND THERE SHALL NOT BE MORE THAN ONE SIGN OF THE SAME LEGEND MISSING IN A ROW.

WOOD POST SIZES FOR TYPE II SIGNS ARE ESTIMATED LENGTHS AND THE ACTUAL LENGTH WILL BE DETERMINED IN THE FIELD.

STREET NAME SIGNS ARE PROPERTY OF THE MUNICIPALITY (CITY, VILLAGE OR TOWN). THE MUNICIPALITY SHALL BE CONTACTED TO REMOVE THEIR STREET NAME SIGNS PRIOR TO CONSTRUCTION AND IT IS THEIR RESPONSIBILITY TO REINSTALL THE OLD SIGNS OR REPLACE THEM FOLLOWING CONSTRUCTION. WISDOT DOES NOT FURNISH OR INSTALL STREET NAME SIGNS. THE STREET NAME SIGNS SHALL NOT BE PLACED ON TOP OF THE STOP SIGNS.

LOCATE NO PASSING PENNANTS BASED ON ESTABLISHING NO PASSING ZONES PAY ITEM. PLACE SIGNS BASED ON WHERE THE PAVEMENT MARKING FOR NO PASSING ZONES BEGIN.

BOX OUT OR CORING OF CONCRETE SIGN POSTS IS INCIDENTAL TO THE POST

SHEET 1 OF 13

2

LEGEND

- EXISTING SIGN MOUNTED ON POST(S)
- EXISTING SIGN MOUNTED ON BRIDGE OR SIGN BRIDGE
- PROPOSED SIGN MOUNTED ON POST(S)
- PROPOSED SIGN MOUNTED ON BRIDGE OR SIGN BRIDGE
- EXISTING LIGHT OR SIGNAL POLE
- CANTILEVER SIGN BRIDGE
- XXX DENOTES SIGN NUMBER
- (X) INDICATES SIGN SIZE
- ESTR EXISTING SIGN TO REMAIN

N

NO SIGNS IMPACTED
THIS SHEET

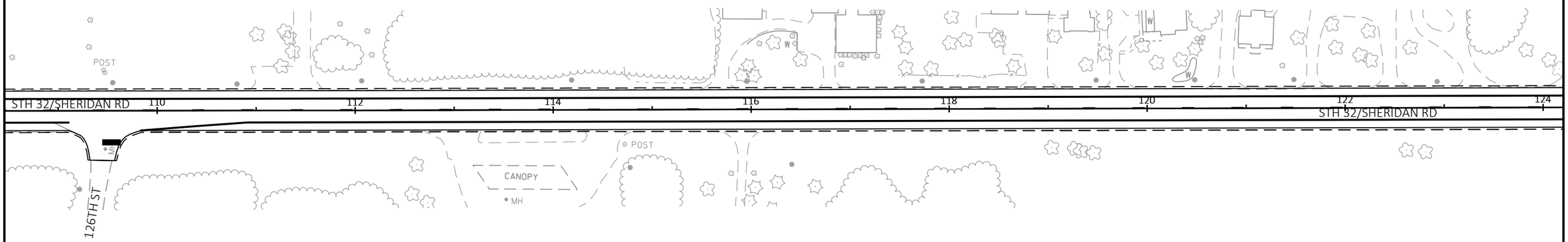

SHEET 2 OF 13

PROJECT NO: 3240-16-70	HWY: STH 32	COUNTY: KENOSHA	PERMANENT SIGNING	SHEET 29	E

FILE NAME : N:\PDS\C3D\CAD\32401600\SIGN\023201_PS.DWG
LAYOUT NAME - 02
PLOT DATE : 9/30/2022 3:39 PM
PLOT BY : MARTENS, KAREN L
PLOT NAME :
PLOT SCALE : 1 IN:100 FT
WISDOT/CADDS SHEET 42

2

LEGEND

- EXISTING SIGN MOUNTED ON POST(S)
- EXISTING SIGN MOUNTED ON BRIDGE OR SIGN BRIDGE
- PROPOSED SIGN MOUNTED ON POST(S)
- PROPOSED SIGN MOUNTED ON BRIDGE OR SIGN BRIDGE
- EXISTING LIGHT OR SIGNAL POLE
- CANTILEVER SIGN BRIDGE
- (XXX) DENOTES SIGN NUMBER
- (X) INDICATES SIGN SIZE
- ESTR EXISTING SIGN TO REMAIN

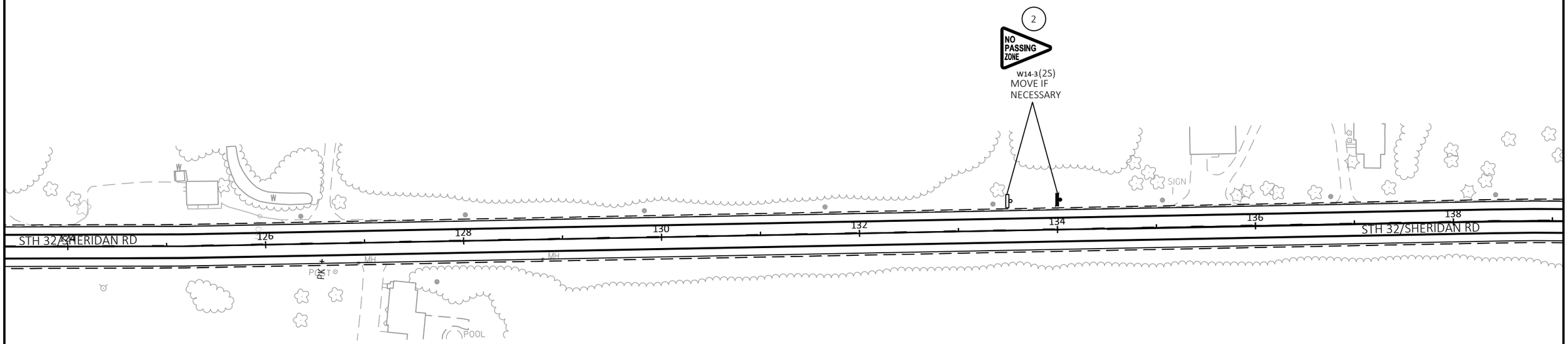

2

SHEET 3 OF 13

PROJECT NO: 3240-16-70	HWY: STH 32	COUNTY: KENOSHA	PERMANENT SIGNING	SHEET 30	E

FILE NAME : N:\PDS\C3D\CAD\32401600\SIGN\023201_PS.DWG
LAYOUT NAME - 03
PLOT DATE : 9/30/2022 3:39 PM
PLOT BY : MARTENS, KAREN L
PLOT NAME :
PLOT SCALE : 1 IN:100 FT
WISDOT/CADDS SHEET 42

2

LEGEND

- EXISTING SIGN MOUNTED ON POST(S)
- EXISTING SIGN MOUNTED ON BRIDGE OR SIGN BRIDGE
- PROPOSED SIGN MOUNTED ON POST(S)
- PROPOSED SIGN MOUNTED ON BRIDGE OR SIGN BRIDGE
- EXISTING LIGHT OR SIGNAL POLE
- CANTILEVER SIGN BRIDGE
- (XXX) DENOTES SIGN NUMBER
- (X) INDICATES SIGN SIZE
- ESTR EXISTING SIGN TO REMAIN

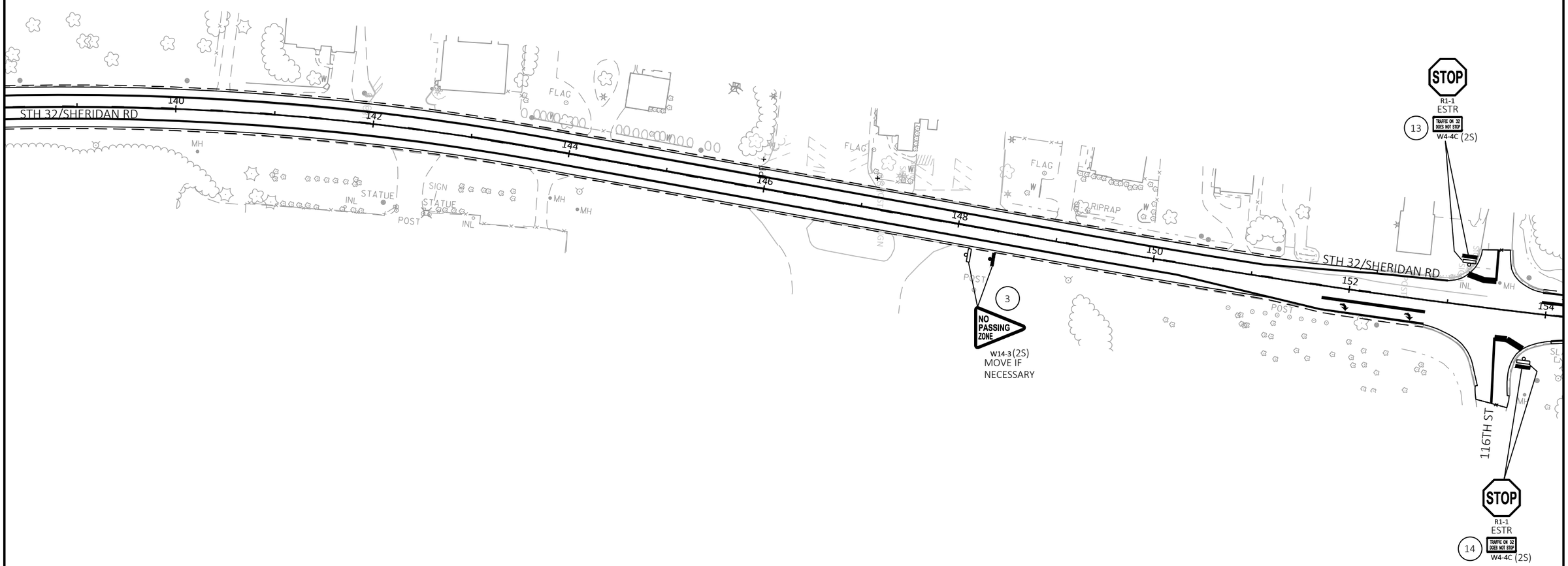

SHEET 4 OF 13

PROJECT NO: 3240-16-70	HWY: STH 32	COUNTY: KENOSHA	PERMANENT SIGNING	SHEET 31	E

FILE NAME : N:\PDS\C3D\CAD\32401600\SIGN\023201_PS.DWG
LAYOUT NAME - 04
PLOT DATE : 9/30/2022 3:39 PM
PLOT BY : MARTENS, KAREN L
PLOT NAME :
PLOT SCALE : 1 IN:100 FT
WISDOT/CADDS SHEET 42

2

LEGEND

- EXISTING SIGN MOUNTED ON POST(S)
- EXISTING SIGN MOUNTED ON BRIDGE OR SIGN BRIDGE
- PROPOSED SIGN MOUNTED ON POST(S)
- PROPOSED SIGN MOUNTED ON BRIDGE OR SIGN BRIDGE
- EXISTING LIGHT OR SIGNAL POLE
- CANTILEVER SIGN BRIDGE
- (XXX) DENOTES SIGN NUMBER
- (X) INDICATES SIGN SIZE
- ESTR EXISTING SIGN TO REMAIN

N

NO SIGNS IMPACTED
THIS SHEET

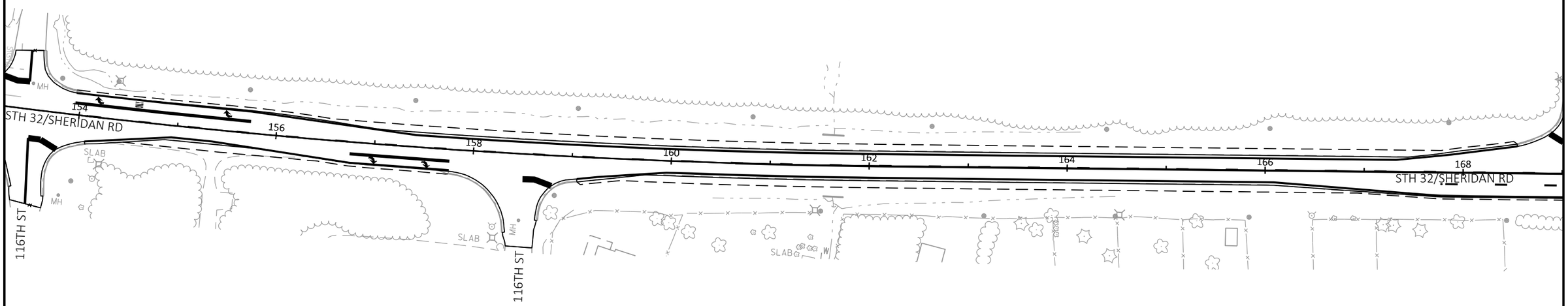

2

SHEET 5 OF 13

PROJECT NO: 3240-16-70	HWY: STH 32	COUNTY: KENOSHA	PERMANENT SIGNING	SHEET 32	E

FILE NAME : N:\PDS\C3D\CAD\32401600\SIGN\023201_PS.DWG
LAYOUT NAME - 05
PLOT DATE : 9/30/2022 3:39 PM
PLOT BY : MARTENS, KAREN L
PLOT NAME :
PLOT SCALE : 1 IN:100 FT
WISDOT/CADDS SHEET 42

2

LEGEND

- EXISTING SIGN MOUNTED ON POST(S)
- EXISTING SIGN MOUNTED ON BRIDGE OR SIGN BRIDGE
- PROPOSED SIGN MOUNTED ON POST(S)
- PROPOSED SIGN MOUNTED ON BRIDGE OR SIGN BRIDGE
- EXISTING LIGHT OR SIGNAL POLE
- CANTILEVER SIGN BRIDGE
- (XXX) DENOTES SIGN NUMBER
- (X) INDICATES SIGN SIZE
- ESTR EXISTING SIGN TO REMAIN

N

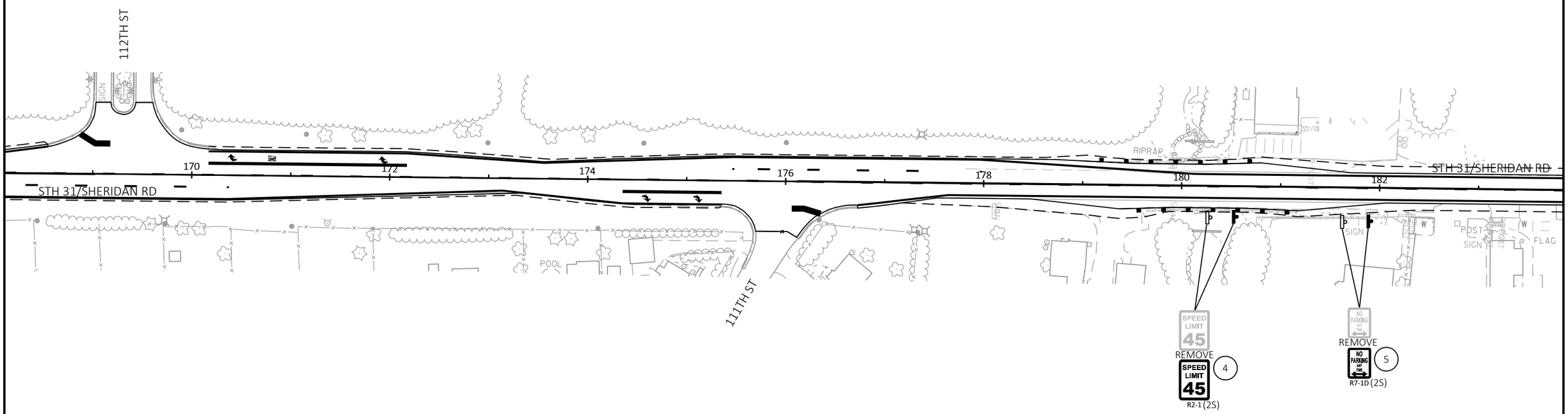

SHEET 6 OF 13

PROJECT NO: 3240-16-70	HWY: STH 32	COUNTY: KENOSHA	PERMANENT SIGNING	SHEET 33	E

FILE NAME : N:\PDS\C3D\CAD\32401600\SIGN\023201_PS.DWG
LAYOUT NAME - 06
PLOT DATE : 9/30/2022 3:39 PM PLOT BY : MARTENS, KAREN L PLOT NAME : PLOT SCALE : 1 IN:100 FT

WISDOT/CADDS SHEET 42

2

LEGEND

- EXISTING SIGN MOUNTED ON POST(S)
- EXISTING SIGN MOUNTED ON BRIDGE OR SIGN BRIDGE
- PROPOSED SIGN MOUNTED ON POST(S)
- PROPOSED SIGN MOUNTED ON BRIDGE OR SIGN BRIDGE
- EXISTING LIGHT OR SIGNAL POLE
- CANTILEVER SIGN BRIDGE
- (XXX) DENOTES SIGN NUMBER
- (X) INDICATES SIGN SIZE
- ESTR EXISTING SIGN TO REMAIN

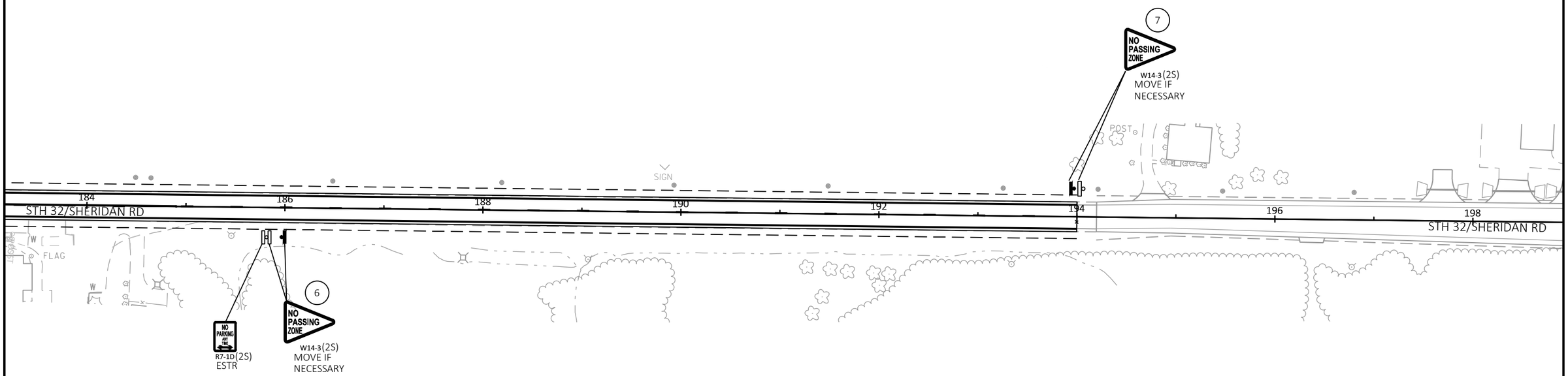

2

SHEET 7 OF 13

PROJECT NO: 3240-16-70	HWY: STH 32	COUNTY: KENOSHA	PERMANENT SIGNING	SHEET 34	E

FILE NAME : N:\PDS\C3D\CAD\32401600\SIGN\023201_PS.DWG
LAYOUT NAME - 07
PLOT DATE : 9/30/2022 3:39 PM
PLOT BY : MARTENS, KAREN L
PLOT NAME :
PLOT SCALE : 1 IN:100 FT
WISDOT/CADDS SHEET 42

2

LEGEND

- EXISTING SIGN MOUNTED ON POST(S)
- EXISTING SIGN MOUNTED ON BRIDGE OR SIGN BRIDGE
- PROPOSED SIGN MOUNTED ON POST(S)
- PROPOSED SIGN MOUNTED ON BRIDGE OR SIGN BRIDGE
- EXISTING LIGHT OR SIGNAL POLE
- CANTILEVER SIGN BRIDGE
- (XXX) DENOTES SIGN NUMBER
- (X) INDICATES SIGN SIZE
- ESTR EXISTING SIGN TO REMAIN

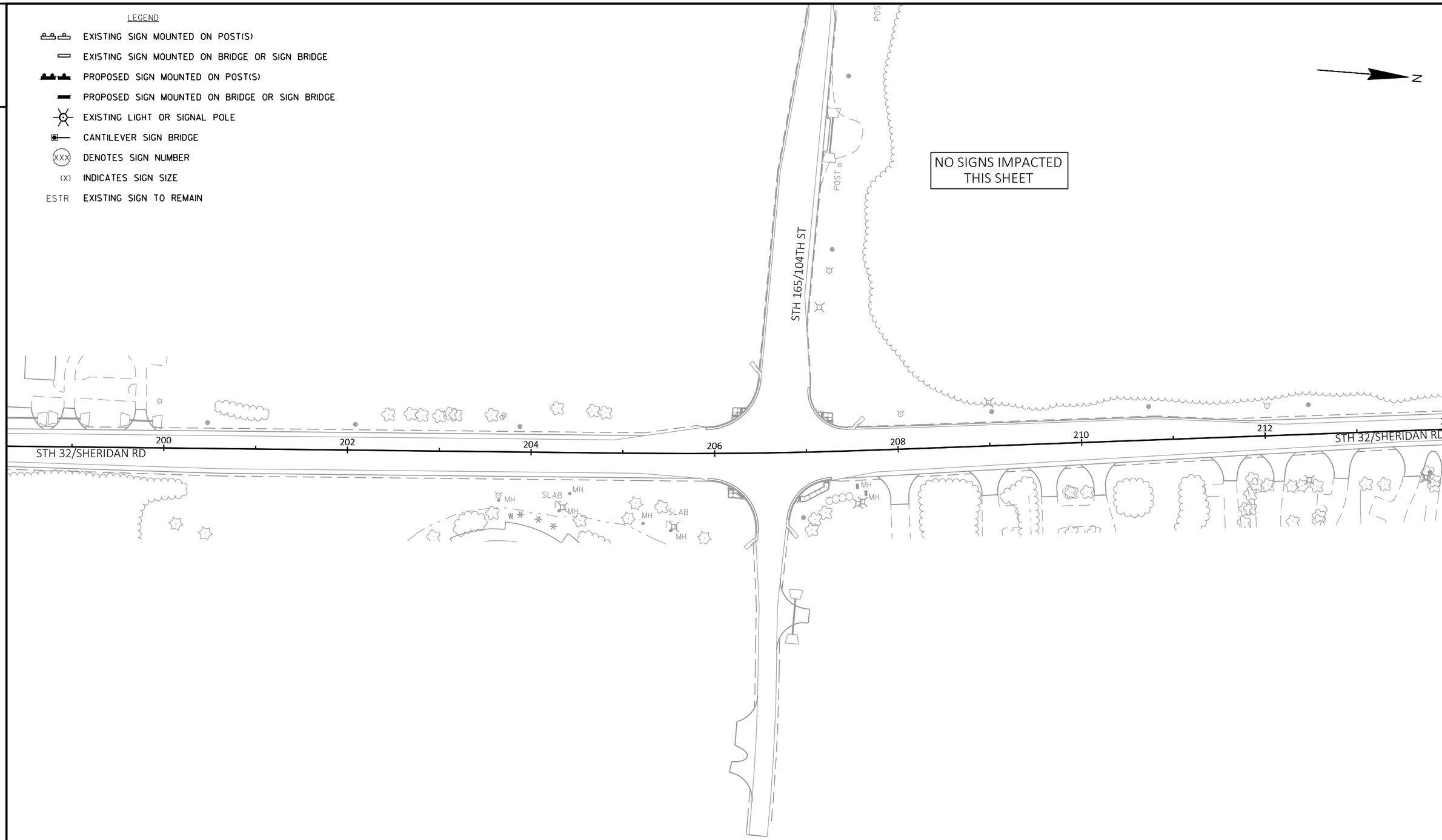

2

SHEET 8 OF 13

PROJECT NO: 3240-16-70	HWY: STH 32	COUNTY: KENOSHA	PERMANENT SIGNING	SHEET 35	E

FILE NAME : N:\PDS\C3D\CAD\32401600\SIGN\023201_PS.DWG
LAYOUT NAME - 08
PLOT DATE : 9/30/2022 3:40 PM PLOT BY : MARTENS, KAREN L PLOT NAME : PLOT SCALE : 1 IN:100 FT

2

LEGEND

- EXISTING SIGN MOUNTED ON POST(S)
- EXISTING SIGN MOUNTED ON BRIDGE OR SIGN BRIDGE
- PROPOSED SIGN MOUNTED ON POST(S)
- PROPOSED SIGN MOUNTED ON BRIDGE OR SIGN BRIDGE
- EXISTING LIGHT OR SIGNAL POLE
- CANTILEVER SIGN BRIDGE
- (XXX) DENOTES SIGN NUMBER
- (X) INDICATES SIGN SIZE
- ESTR EXISTING SIGN TO REMAIN

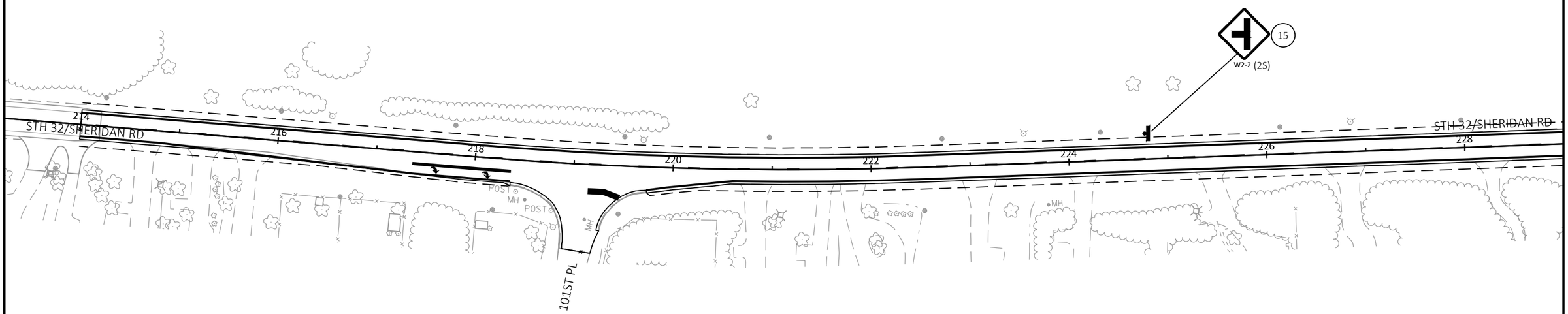

2

SHEET 9 OF 13

PROJECT NO: 3240-16-70	HWY: STH 32	COUNTY: KENOSHA	PERMANENT SIGNING	SHEET 36	E

FILE NAME : N:\PDS\C3D\CAD\32401600\SIGN\023201_PS.DWG
LAYOUT NAME - 09
PLOT DATE : 9/30/2022 3:40 PM
PLOT BY : MARTENS, KAREN L
PLOT NAME :
PLOT SCALE : 1 IN:100 FT
WISDOT/CADDS SHEET 42

2

LEGEND

- EXISTING SIGN MOUNTED ON POST(S)
- EXISTING SIGN MOUNTED ON BRIDGE OR SIGN BRIDGE
- PROPOSED SIGN MOUNTED ON POST(S)
- PROPOSED SIGN MOUNTED ON BRIDGE OR SIGN BRIDGE
- EXISTING LIGHT OR SIGNAL POLE
- CANTILEVER SIGN BRIDGE
- (XXX) DENOTES SIGN NUMBER
- (X) INDICATES SIGN SIZE
- ESTR EXISTING SIGN TO REMAIN

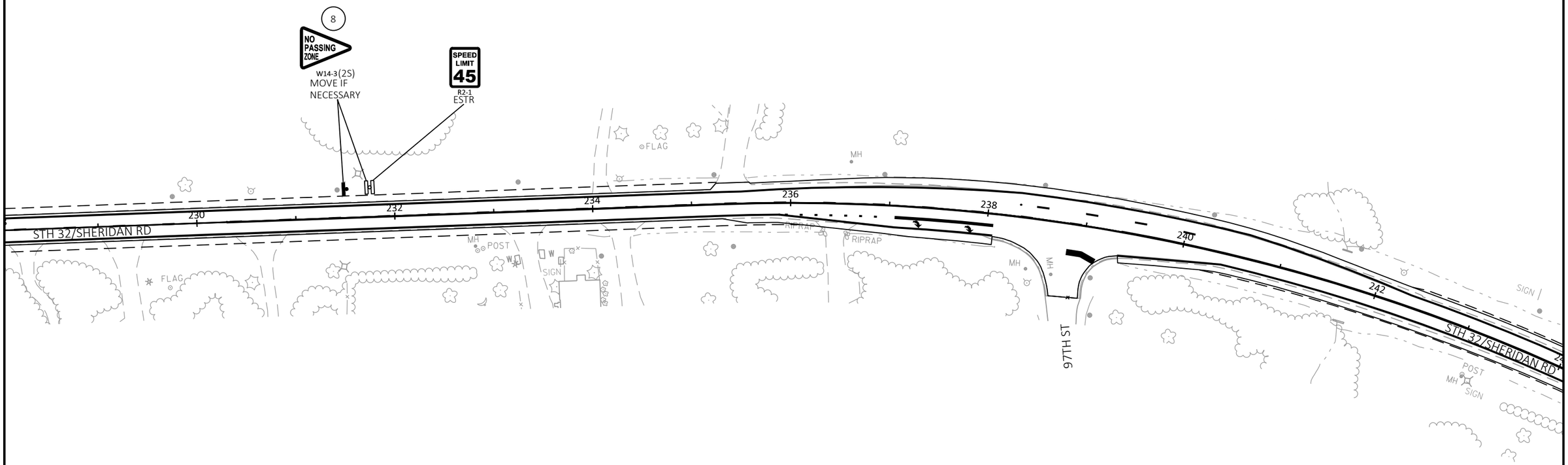

SHEET 10 OF 13

PROJECT NO: 3240-16-70	HWY: STH 32	COUNTY: KENOSHA	PERMANENT SIGNING	SHEET 37	E

FILE NAME : N:\PDS\C3D\CAD\32401600\SIGN\023201_PS.DWG
LAYOUT NAME - 10
PLOT DATE : 9/30/2022 3:40 PM
PLOT BY : MARTENS, KAREN L
PLOT NAME :
PLOT SCALE : 1 IN:100 FT
WISDOT/CADDS SHEET 42

LEGEND

- EXISTING SIGN MOUNTED ON POST(S)
- EXISTING SIGN MOUNTED ON BRIDGE OR SIGN BRIDGE
- PROPOSED SIGN MOUNTED ON POST(S)
- PROPOSED SIGN MOUNTED ON BRIDGE OR SIGN BRIDGE
- EXISTING LIGHT OR SIGNAL POLE
- CANTILEVER SIGN BRIDGE
- (XXX) DENOTES SIGN NUMBER
- (X) INDICATES SIGN SIZE
- ESTR EXISTING SIGN TO REMAIN

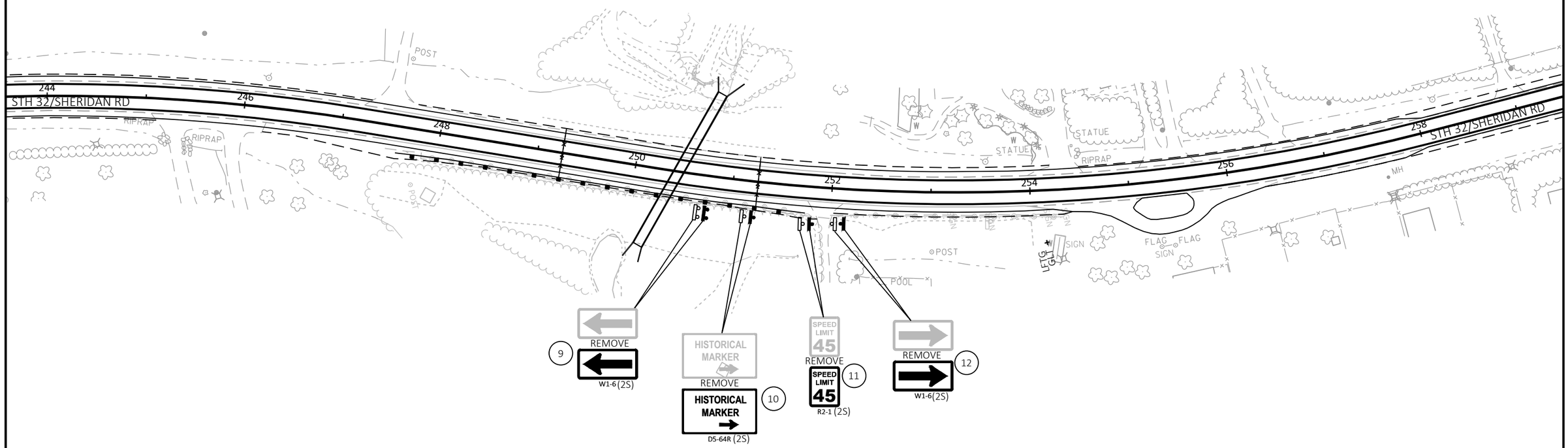

SHEET 11 OF 13

PROJECT NO: 3240-16-70	HWY: STH 32	COUNTY: KENOSHA	PERMANENT SIGNING	SHEET 38	E

FILE NAME : N:\PDS\C3D\CAD\32401600\SIGN\023201_PS.DWG
LAYOUT NAME - 11
PLOT DATE : 9/30/2022 3:40 PM PLOT BY : MARTENS, KAREN L PLOT NAME : PLOT SCALE : 1 IN:100 FT

2

LEGEND

- EXISTING SIGN MOUNTED ON POST(S)
- EXISTING SIGN MOUNTED ON BRIDGE OR SIGN BRIDGE
- PROPOSED SIGN MOUNTED ON POST(S)
- PROPOSED SIGN MOUNTED ON BRIDGE OR SIGN BRIDGE
- EXISTING LIGHT OR SIGNAL POLE
- CANTILEVER SIGN BRIDGE
- (XXX) DENOTES SIGN NUMBER
- (X) INDICATES SIGN SIZE
- ESTR EXISTING SIGN TO REMAIN

N

NO SIGNS IMPACTED
THIS SHEET

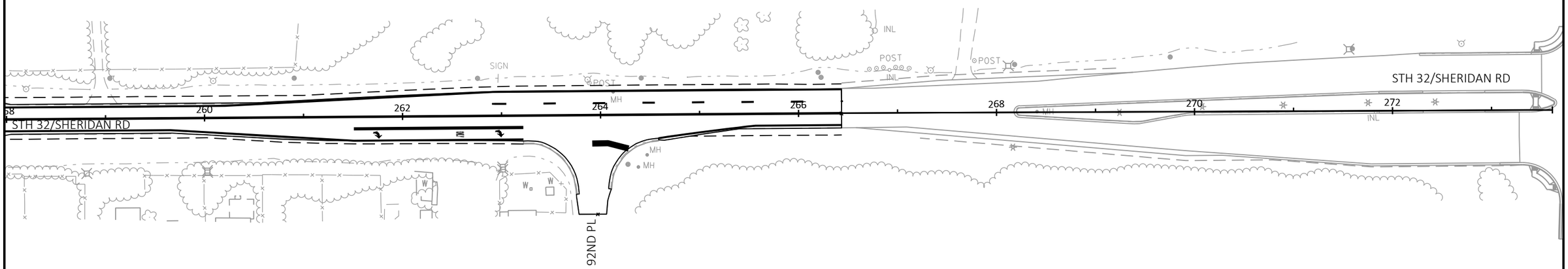

2

SHEET 12 OF 13

PROJECT NO: 3240-16-70	HWY: STH 32	COUNTY: KENOSHA	PERMANENT SIGNING	SHEET 39	E

FILE NAME : N:\PDS\C3D\CAD\32401600\SIGN\023201_PS.DWG
LAYOUT NAME - 12
PLOT DATE : 9/30/2022 3:40 PM
PLOT BY : MARTENS, KAREN L
PLOT NAME :
PLOT SCALE : 1 IN:100 FT
WISDOT/CADDS SHEET 42

2

LEGEND

- EXISTING SIGN MOUNTED ON POST(S)
- EXISTING SIGN MOUNTED ON BRIDGE OR SIGN BRIDGE
- PROPOSED SIGN MOUNTED ON POST(S)
- PROPOSED SIGN MOUNTED ON BRIDGE OR SIGN BRIDGE
- EXISTING LIGHT OR SIGNAL POLE
- CANTILEVER SIGN BRIDGE
- XXX DENOTES SIGN NUMBER
- (X) INDICATES SIGN SIZE
- ESTR EXISTING SIGN TO REMAIN

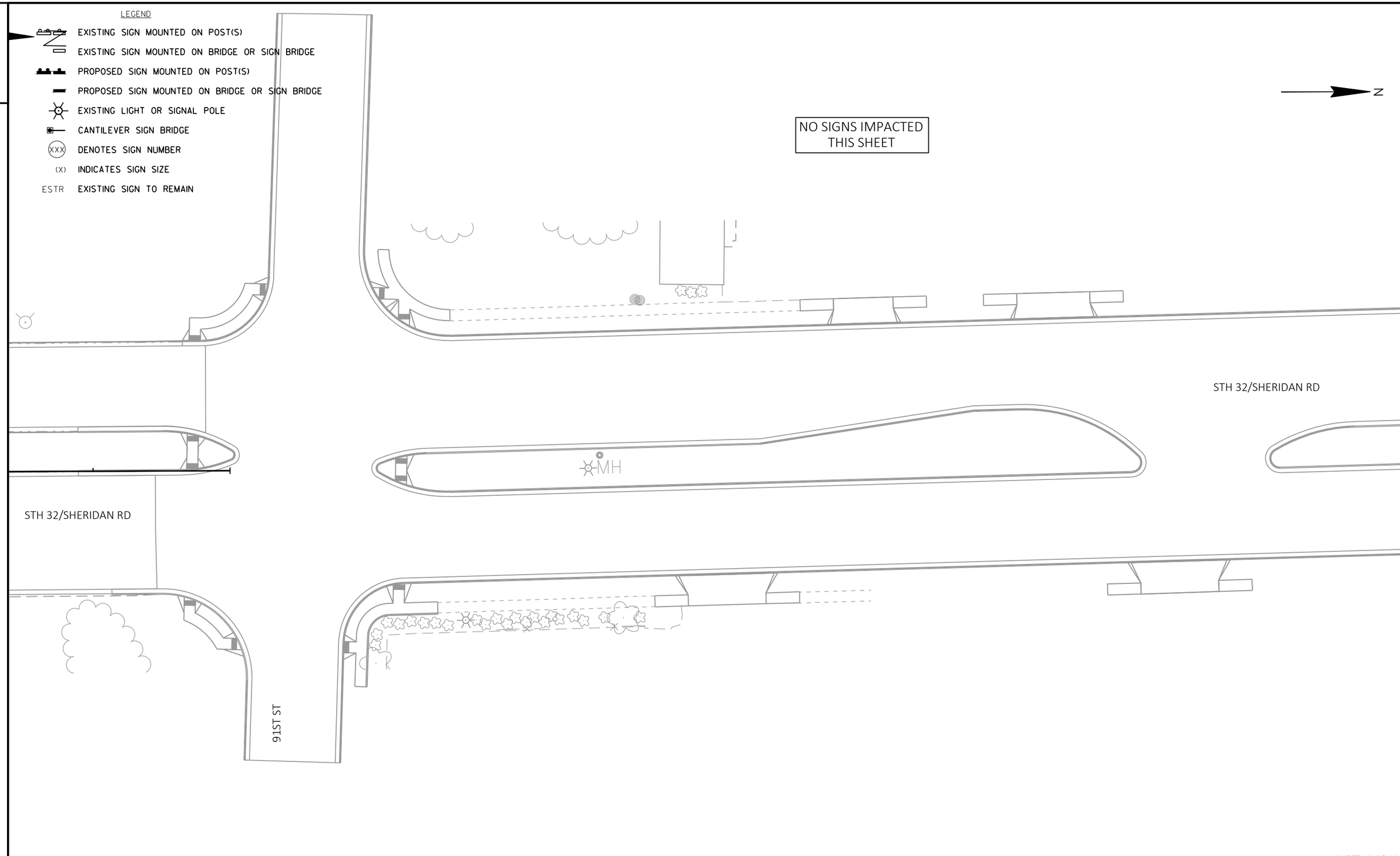

2

SHEET 13 OF 13

PROJECT NO: 3240-16-70	HWY: STH 32	COUNTY: KENOSHA	PERMANENT SIGNING	SHEET 40	E

FILE NAME : N:\PDS\C3D\CAD\32401600\SIGN\023201_PS.DWG
LAYOUT NAME - 13
PLOT DATE : 9/30/2022 3:40 PM
PLOT BY : MARTENS, KAREN L
PLOT NAME :
PLOT SCALE : 1 IN:40 FT
WISDOT/CADDS SHEET 42

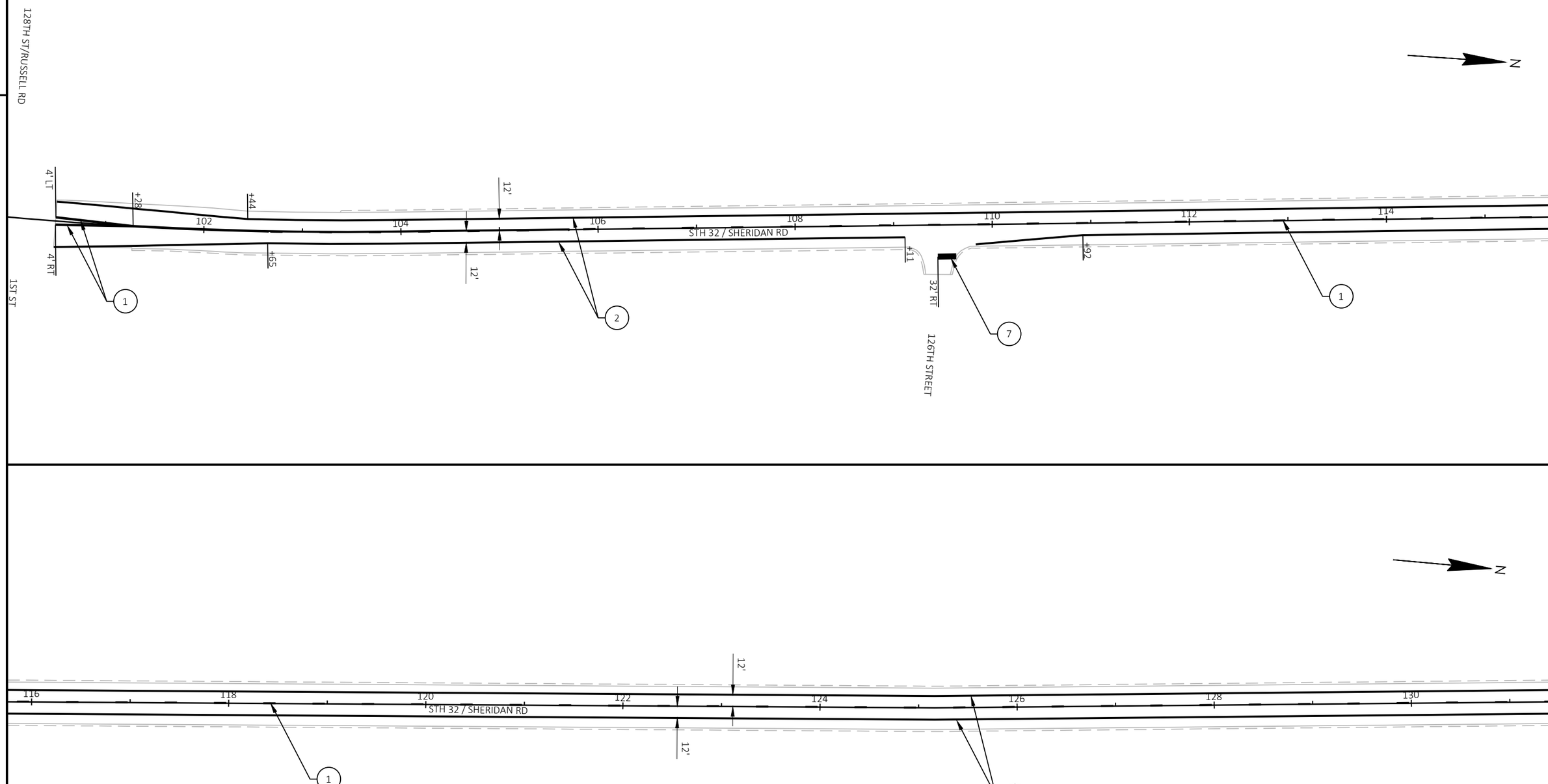

PAVEMENT MARKING LEGEND

1. MARKING LINE EPOXY 4-INCH (YELLOW)
2. MARKING LINE GROOVED WET REF EPOXY 4-INCH (WHITE)
3. MARKING LINE GROOVED WET REF EPOXY 4-INCH (WHITE; 3' LINE, 9' GAP)
4. MARKING LINE EPOXY 4-INCH (WHITE; 12.5' LINE, 37.5' GAP)
5. MARKING LINE EPOXY 8-INCH (WHITE)
6. MARKING LINE EPOXY 8-INCH (WHITE, 3' LINE, 9' GAP)
7. MARKING STOP LINE EPOXY 18-INCH (WHITE)
8. MARKING ARROW EPOXY
9. MARKING WORD EPOXY
10. MARKING DIAGONAL EPOXY 12-INCH

PROJECT	COUNTY:	PAVEMENT MARKING	SHEET
*ESTABLISH NO-PASSING ZONES PER BID ITEM LOCATING NO-PASSING ZONES	KENOSHA		41

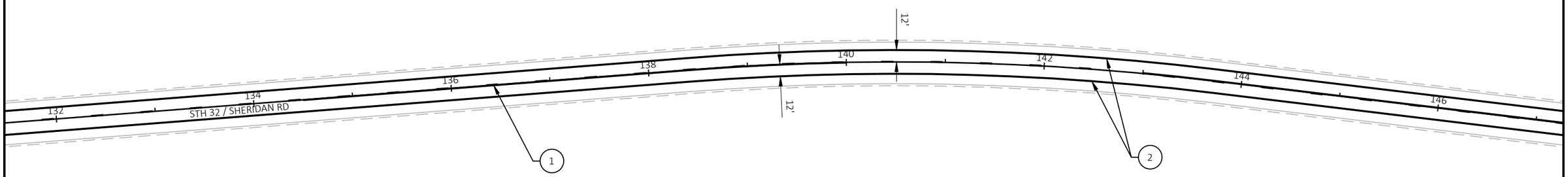

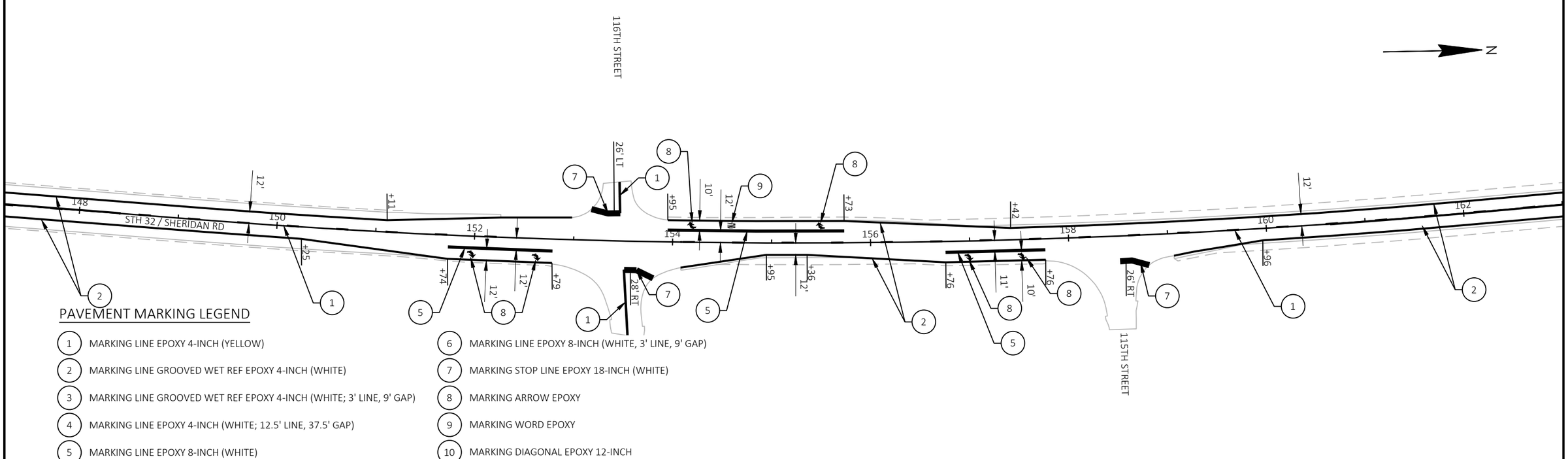

PAVEMENT MARKING LEGEND

1. MARKING LINE EPOXY 4-INCH (YELLOW)
2. MARKING LINE GROOVED WET REF EPOXY 4-INCH (WHITE)
3. MARKING LINE GROOVED WET REF EPOXY 4-INCH (WHITE; 3' LINE, 9' GAP)
4. MARKING LINE EPOXY 4-INCH (WHITE; 12.5' LINE, 37.5' GAP)
5. MARKING LINE EPOXY 8-INCH (WHITE)
6. MARKING LINE EPOXY 8-INCH (WHITE, 3' LINE, 9' GAP)
7. MARKING STOP LINE EPOXY 18-INCH (WHITE)
8. MARKING ARROW EPOXY
9. MARKING WORD EPOXY
10. MARKING DIAGONAL EPOXY 12-INCH

PROJECT	COUNTY: KENOSHA	PAVEMENT MARKING	SHEET 42	E

*ESTABLISH NO-PASSING ZONES PER BID ITEM LOCATING NO-PASSING ZONES

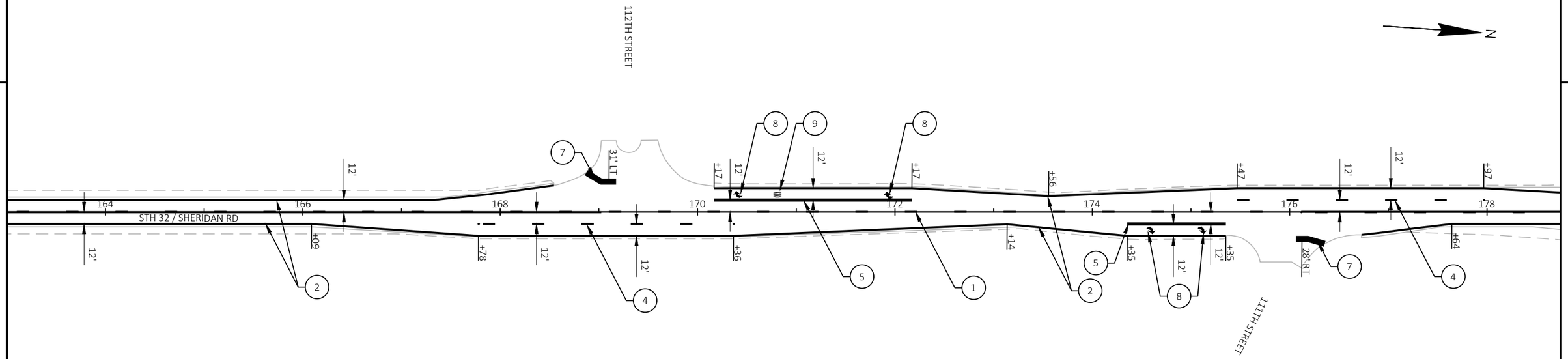

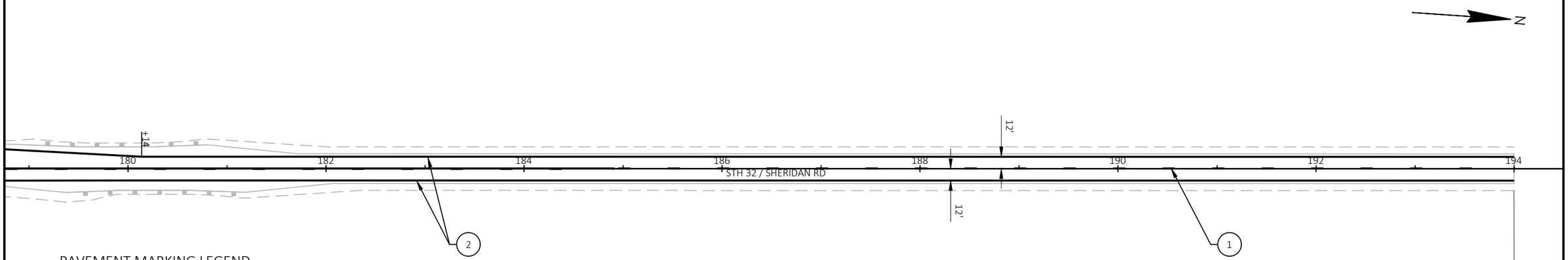

PAVEMENT MARKING LEGEND

1. MARKING LINE EPOXY 4-INCH (YELLOW)
2. MARKING LINE GROOVED WET REF EPOXY 4-INCH (WHITE)
3. MARKING LINE GROOVED WET REF EPOXY 4-INCH (WHITE; 3' LINE, 9' GAP)
4. MARKING LINE EPOXY 4-INCH (WHITE; 12.5' LINE, 37.5' GAP)
5. MARKING LINE EPOXY 8-INCH (WHITE)
6. MARKING LINE EPOXY 8-INCH (WHITE, 3' LINE, 9' GAP)
7. MARKING STOP LINE EPOXY 18-INCH (WHITE)
8. MARKING ARROW EPOXY
9. MARKING WORD EPOXY
10. MARKING DIAGONAL EPOXY 12-INCH

NET EXCEPTION TO CL LENGTH
STA 194+00 - STA 214+00
WORK COMPLETED
UNDER 3240-11-70

PROJECT *ESTABLISH NO-PASSING ZONES PER BID ITEM LOCATING NO-PASSING ZONES	COUNTY: KENOSHA	PAVEMENT MARKING	SHEET 43	E

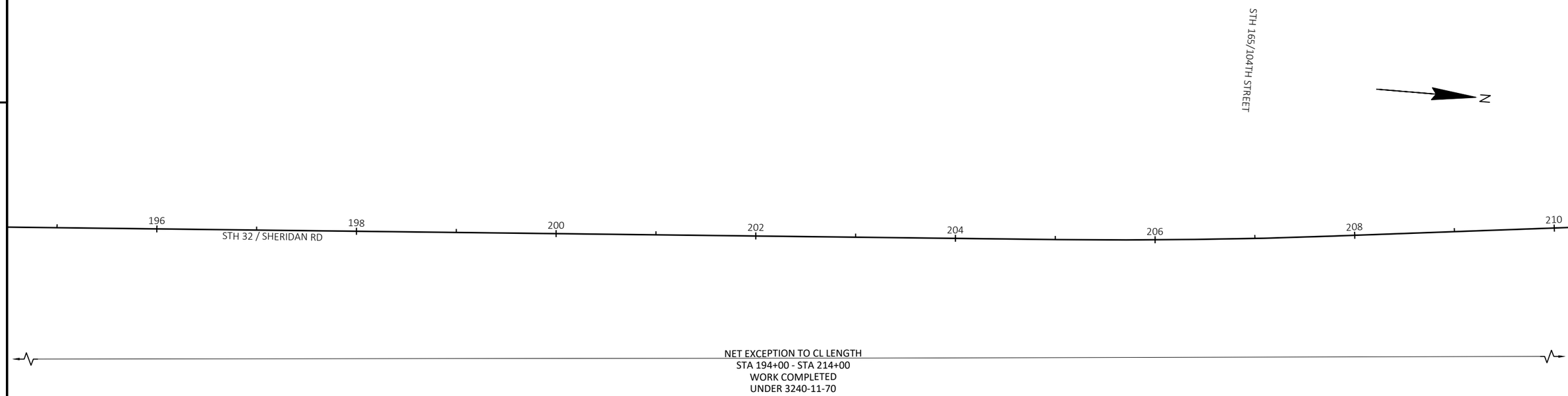

PAVEMENT MARKING LEGEND

1. MARKING LINE EPOXY 4-INCH (YELLOW)
2. MARKING LINE GROOVED WET REF EPOXY 4-INCH (WHITE)
3. MARKING LINE GROOVED WET REF EPOXY 4-INCH (WHITE; 3' LINE, 9' GAP)
4. MARKING LINE EPOXY 4-INCH (WHITE; 12.5' LINE, 37.5' GAP)
5. MARKING LINE EPOXY 8-INCH (WHITE)
6. MARKING LINE EPOXY 8-INCH (WHITE, 3' LINE, 9' GAP)
7. MARKING STOP LINE EPOXY 18-INCH (WHITE)
8. MARKING ARROW EPOXY
9. MARKING WORD EPOXY
10. MARKING DIAGONAL EPOXY 12-INCH

*ESTABLISH NO-PASSING ZONES PER BID ITEM LOCATING NO-PASSING ZONES

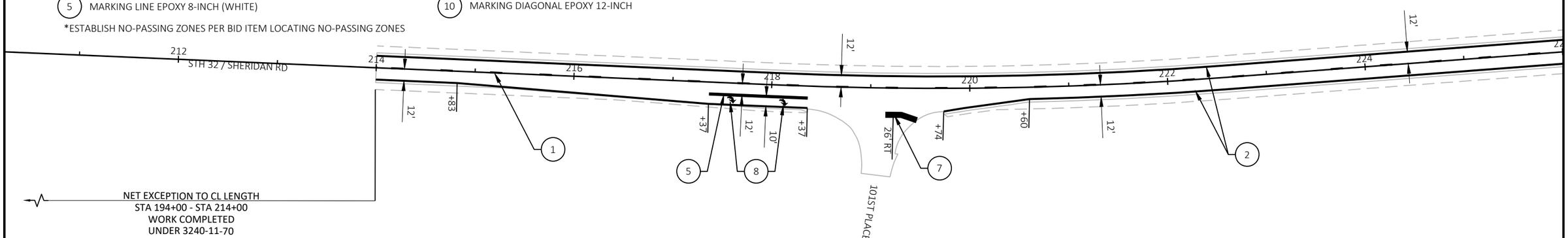

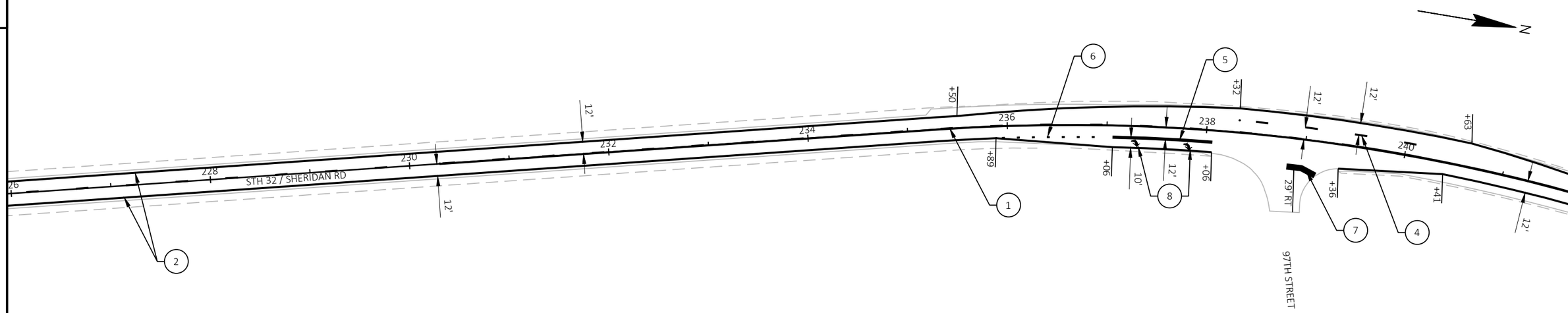

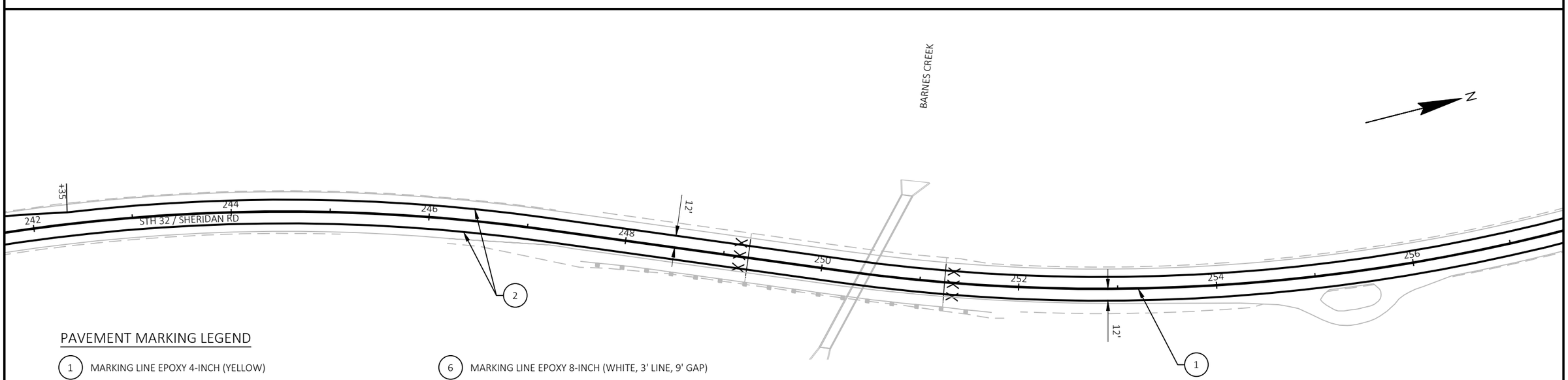

PAVEMENT MARKING LEGEND

1. MARKING LINE EPOXY 4-INCH (YELLOW)
2. MARKING LINE GROOVED WET REF EPOXY 4-INCH (WHITE)
3. MARKING LINE GROOVED WET REF EPOXY 4-INCH (WHITE; 3' LINE, 9' GAP)
4. MARKING LINE EPOXY 4-INCH (WHITE; 12.5' LINE, 37.5' GAP)
5. MARKING LINE EPOXY 8-INCH (WHITE)
6. MARKING LINE EPOXY 8-INCH (WHITE, 3' LINE, 9' GAP)
7. MARKING STOP LINE EPOXY 18-INCH (WHITE)
8. MARKING ARROW EPOXY
9. MARKING WORD EPOXY
10. MARKING DIAGONAL EPOXY 12-INCH

*ESTABLISH NO-PASSING ZONES PER BID ITEM LOCATING NO-PASSING ZONES

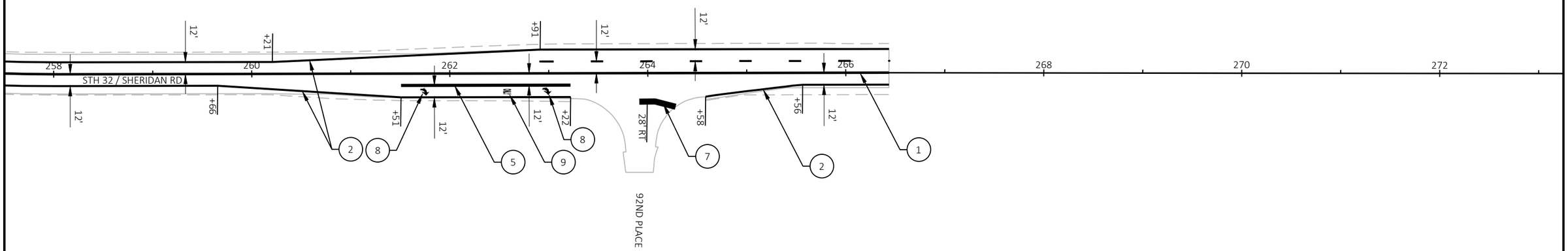

PAVEMENT MARKING LEGEND

1. MARKING LINE EPOXY 4-INCH (YELLOW)
2. MARKING LINE GROOVED WET REF EPOXY 4-INCH (WHITE)
3. MARKING LINE GROOVED WET REF EPOXY 4-INCH (WHITE; 3' LINE, 9' GAP)
4. MARKING LINE EPOXY 4-INCH (WHITE; 12.5' LINE, 37.5' GAP)
5. MARKING LINE EPOXY 8-INCH (WHITE)
6. MARKING LINE EPOXY 8-INCH (WHITE, 3' LINE, 9' GAP)
7. MARKING STOP LINE EPOXY 18-INCH (WHITE)
8. MARKING ARROW EPOXY
9. MARKING WORD EPOXY
10. MARKING DIAGONAL EPOXY 12-INCH

*ESTABLISH NO-PASSING ZONES PER BID ITEM LOCATING NO-PASSING ZONES

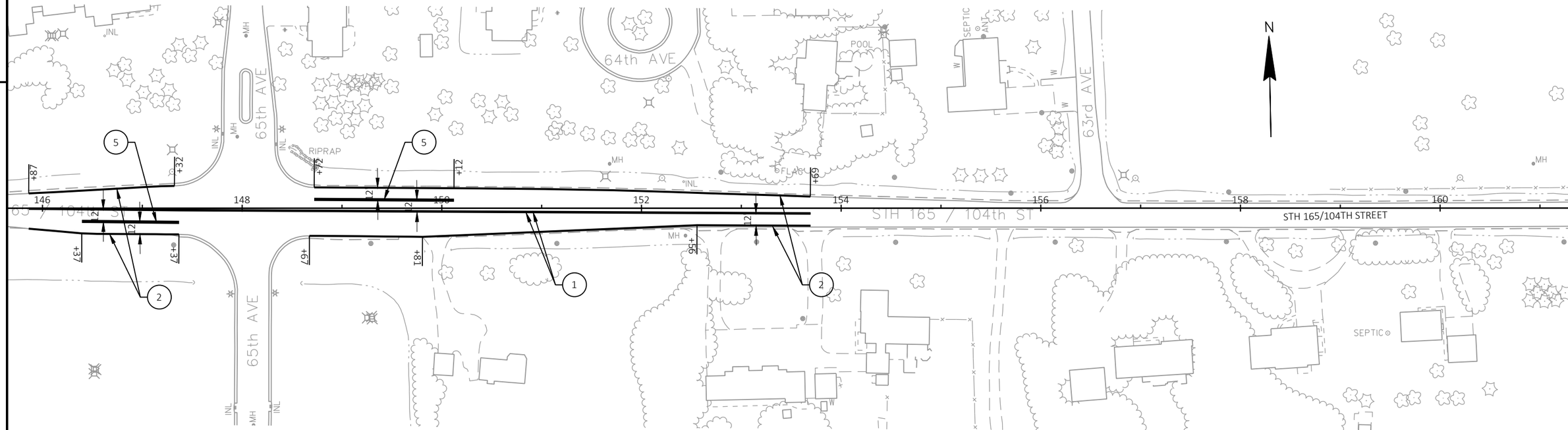

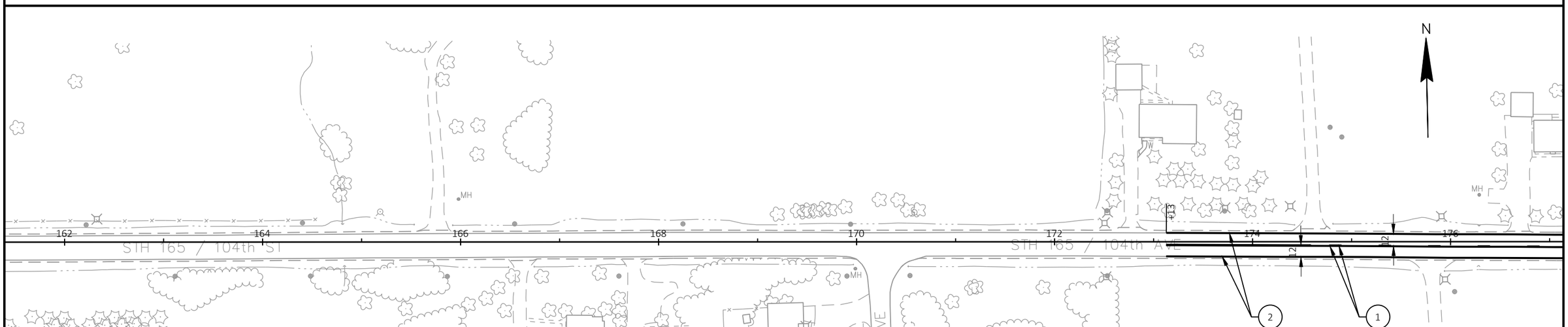

PAVEMENT MARKING LEGEND

1. MARKING LINE EPOXY 4-INCH (YELLOW)
2. MARKING LINE GROOVED WET REF EPOXY 4-INCH (WHITE)
3. MARKING LINE GROOVED WET REF EPOXY 4-INCH (WHITE; 3' LINE, 9' GAP)
4. MARKING LINE EPOXY 4-INCH (WHITE; 12.5' LINE, 37.5' GAP)
5. MARKING LINE EPOXY 8-INCH (WHITE)
6. MARKING LINE EPOXY 8-INCH (WHITE, 3' LINE, 9' GAP)
7. MARKING STOP LINE EPOXY 18-INCH (WHITE)
8. MARKING ARROW EPOXY
9. MARKING WORD EPOXY
10. MARKING DIAGONAL EPOXY 12-INCH

*ESTABLISH NO-PASSING ZONES PER BID ITEM LOCATING NO-PASSING ZONES

: STH 32	COUNTY: KENOSHA	PAVEMENT MARKING	SHEET 47	E

PAVEMENT MARKING LEGEND

1. MARKING LINE EPOXY 4-INCH (YELLOW)
2. MARKING LINE GROOVED WET REF EPOXY 4-INCH (WHITE)
3. MARKING LINE GROOVED WET REF EPOXY 4-INCH (WHITE; 3' LINE, 9' GAP)
4. MARKING LINE EPOXY 4-INCH (WHITE; 12.5' LINE, 37.5' GAP)
5. MARKING LINE EPOXY 8-INCH (WHITE)
6. MARKING LINE EPOXY 8-INCH (WHITE, 3' LINE, 9' GAP)
7. MARKING STOP LINE EPOXY 18-INCH (WHITE)
8. MARKING ARROW EPOXY
9. MARKING WORD EPOXY
10. MARKING DIAGONAL EPOXY 12-INCH

*ESTABLISH NO-PASSING ZONES PER BID ITEM LOCATING NO-PASSING ZONES

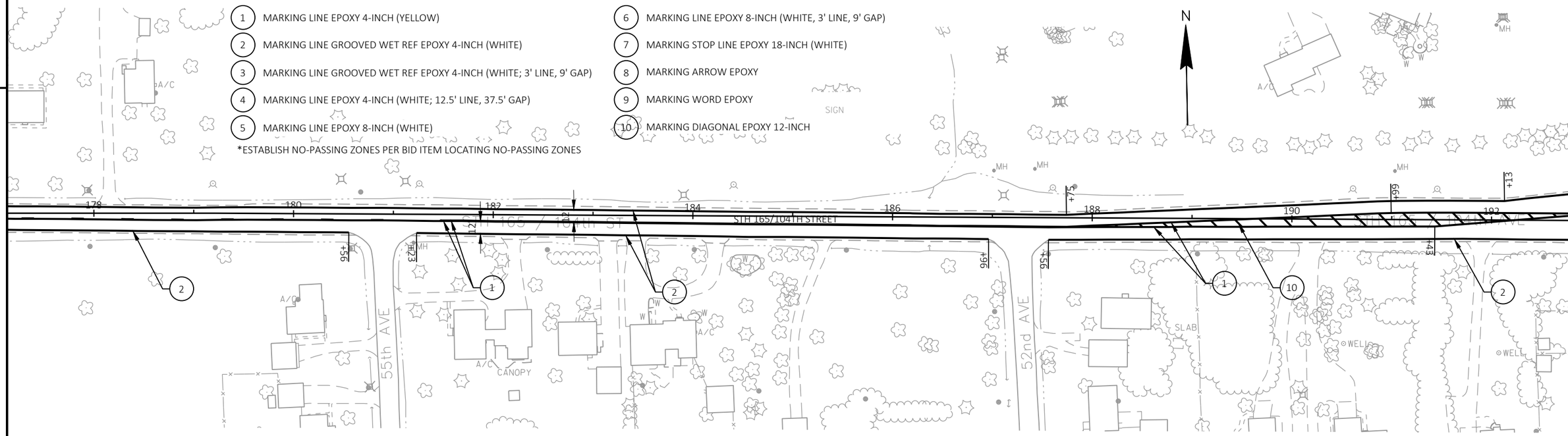

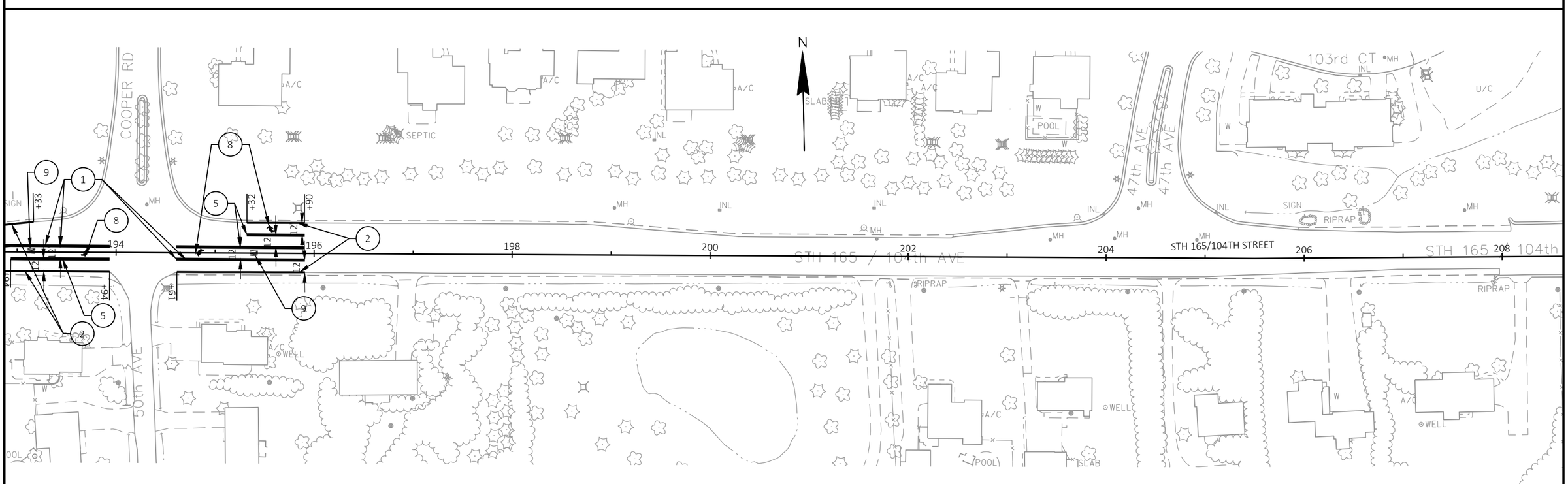

PROJECT NO: 3240-16-70	HWY: STH 32	COUNTY: KENOSHA	PAVEMENT MARKING	SHEET 48	E

FILE NAME : L:\DESIGN PROJECTS\3240-16-00 STH 32\10. ROADWAY\CIVIL 3D\32401600\SHEETSPLAN\024501-PM.DWG
LAYOUT NAME - 024508-pm
PLOT DATE : 10/21/2022 10:46 AM
PLOT BY : REBECCA JONARDI
PLOT NAME :
PLOT SCALE : 1 IN:100 FT

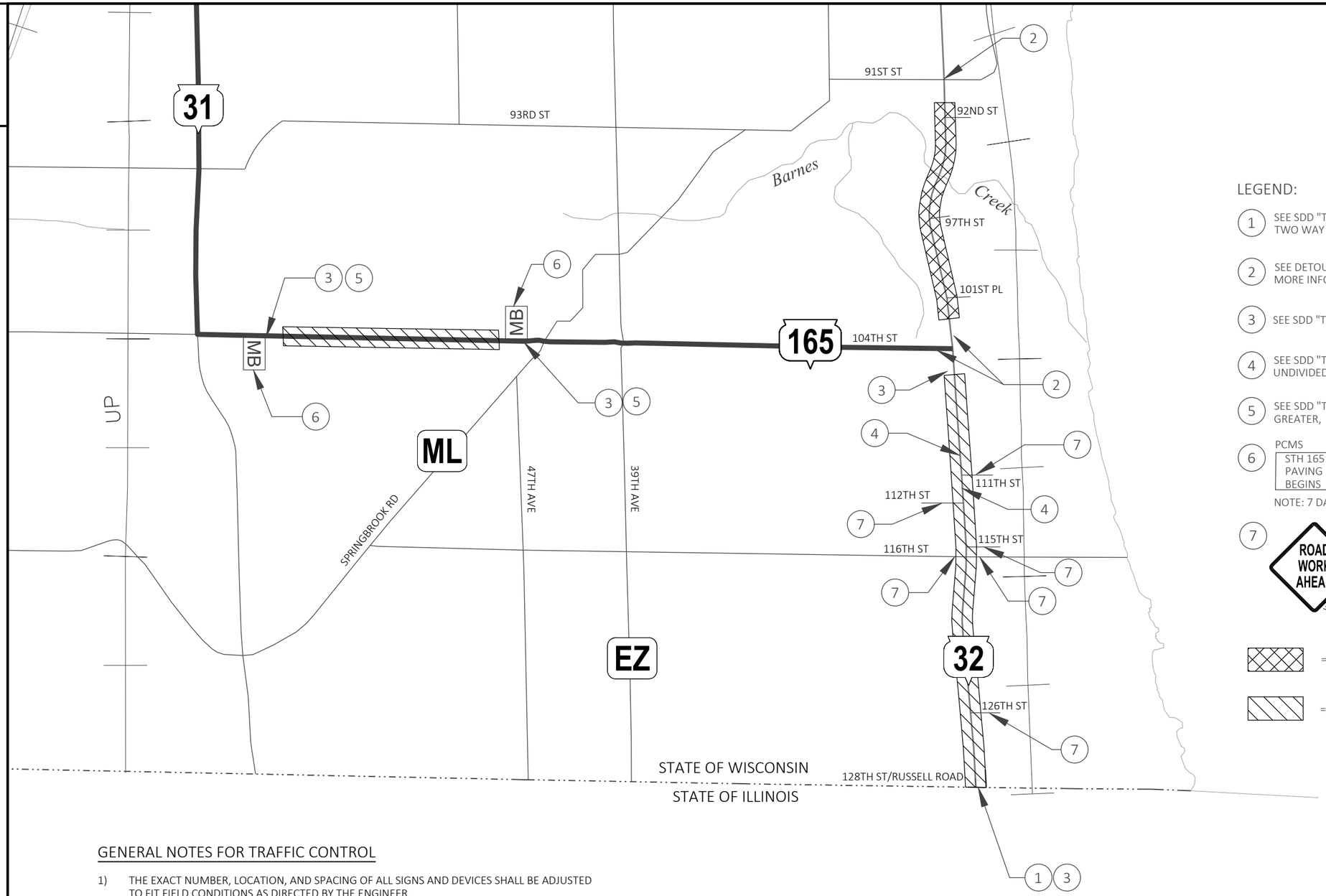

LEGEND:

1. SEE SDD "TRAFFIC CONTROL, ADVANCE WARNING SIGNS 40 M.P.H OR LESS, TWO WAY UNDIVIDED ROAD OPEN TO TRAFFIC"
2. SEE DETOUR PLANS AND TRAFFIC CONTROL FULL CLOSURE C-30-0062 FOR MORE INFORMATION
3. SEE SDD "TRAFFIC CONTROL FOR LANE CLOSURE WITH FLAGGING OPERATION"
4. SEE SDD "TRAFFIC CONTROL, WORK ON SHOULDER OR PARKING LANE, UNDIVIDED HIGHWAY" FOR BEAM GUARD REPLACEMENT
5. SEE SDD "TRAFFIC CONTROL, ADVANCE WARNING SIGNS 45 M.P.H OR GREATER, TWO WAY UNDIVIDED ROAD OPEN TO TRAFFIC"
6. PCMS

STH 165 PAVING BEGINS	DAY TIME

NOTE: 7 DAYS ADVANCE NOTICE

7. ROAD WORK AHEAD (W20-1A) — SEE SDD "TRAFFIC CONTROL, ADVANCE WARNING SIGNS 40 M.P.H OR LESS, TWO WAY UNDIVIDED ROAD OPEN TO TRAFFIC" FOR SIDE ROAD PLACEMENT

END ROAD WORK (G20-2A, 48"X24") — PLACE SIGN ON OTHER SIDE OF SIDE ROAD FROM "ROAD WORK AHEAD" FACING THE DEPARTURE FROM STH 32

= FULL CLOSURE WORK AREA

= WORK AREA WITH FLAGGING

GENERAL NOTES FOR TRAFFIC CONTROL

1) THE EXACT NUMBER, LOCATION, AND SPACING OF ALL SIGNS AND DEVICES SHALL BE ADJUSTED TO FIT FIELD CONDITIONS AS DIRECTED BY THE ENGINEER.
2) ALL SIGNS ARE 48" X 48" UNLESS OTHERWISE NOTED.
3) "WO" SIGNS ARE THE SAME AS "W" SIGNS EXCEPT THE BACKGROUND IS ORANGE.
4) ALL TYPE III BARRICADES SHALL BE 8' WIDE, UNLESS OTHERWISE NOTED, AND EQUIPPED WITH TWO TYPE "A" (LOW INTENSITY FLASHING) LIGHTS.
5) ANY SIGNS TEMPORARY OR EXISTING, WHICH CONFLICT WITH TRAFFIC CONTROL "IN USE" SHALL BE REMOVED OR COVERED AS NEEDED AND AS APPROVED BY THE ENGINEER.
6) DETOUR SIGNS FOR STH 32 CLOSURE ARE SHOWN ON IN THE DETOUR PLANS.

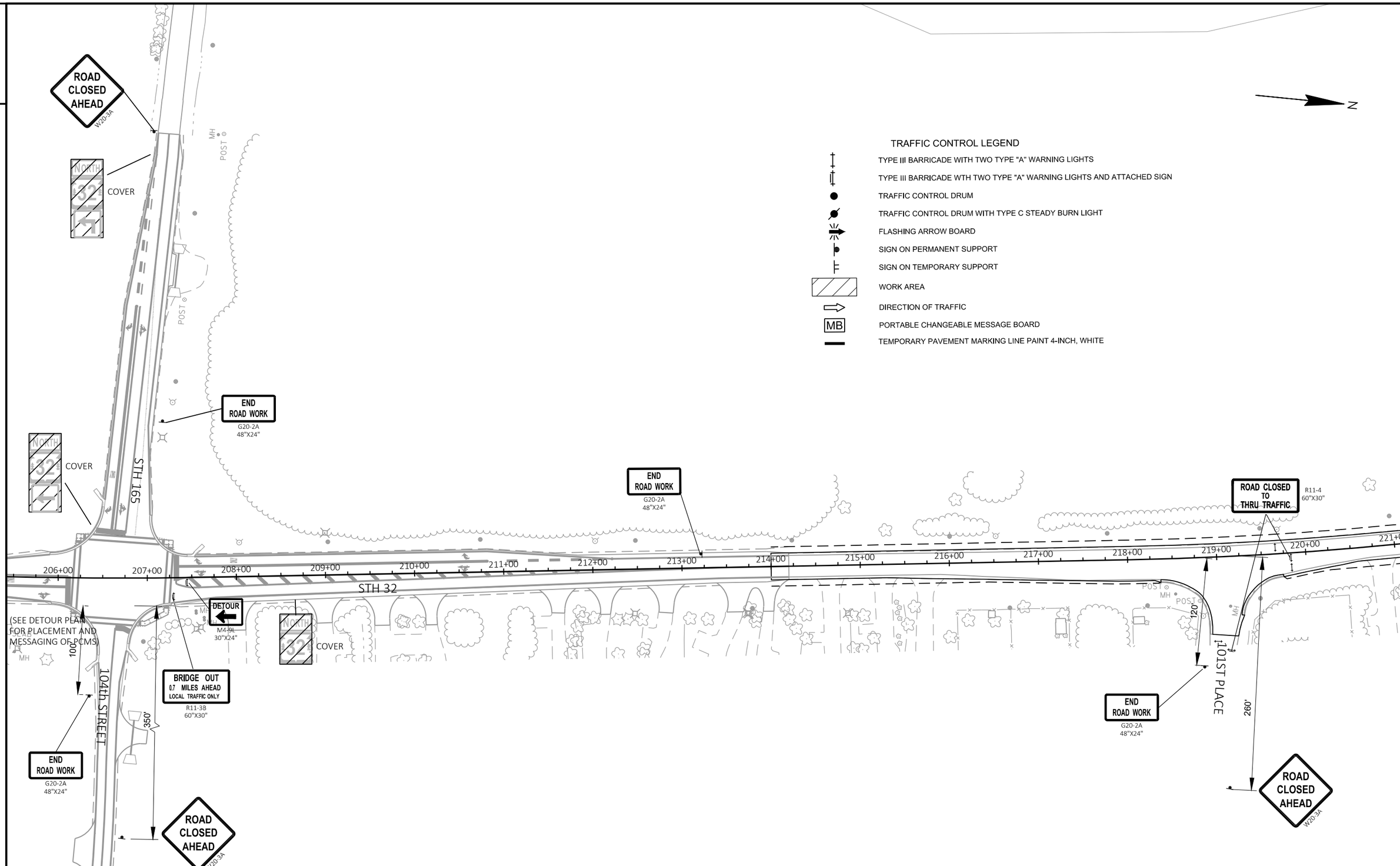

PROJECT NO: 3240-16-70	HWY: STH 32	COUNTY: KENOSHA	TRAFFIC CONTROL FULL CLOSURE C-30-0062	SHEET 50	E

FILE NAME : L:\DESIGN PROJECTS\3240-16-00 STH 32\10. ROADWAY\CIVIL 3D\32401600\SHEETSPLAN\025101-TC.DWG
LAYOUT NAME - 025101-tc
PLOT DATE : 10/9/2022 9:32 PM PLOT BY : REBECCA JONARDI PLOT NAME : PLOT SCALE : 1 IN:100 FT

TRAFFIC CONTROL LEGEND

- TYPE III BARRICADE WITH TWO TYPE "A" WARNING LIGHTS
- TYPE III BARRICADE WTH TWO TYPE "A" WARNING LIGHTS AND ATTACHED SIGN
- TRAFFIC CONTROL DRUM
- TRAFFIC CONTROL DRUM WITH TYPE C STEADY BURN LIGHT
- FLASHING ARROW BOARD
- SIGN ON PERMANENT SUPPORT
- SIGN ON TEMPORARY SUPPORT
- WORK AREA
- DIRECTION OF TRAFFIC
- MB PORTABLE CHANGEABLE MESSAGE BOARD
- TEMPORARY PAVEMENT MARKING LINE PAINT 4-INCH, WHITE

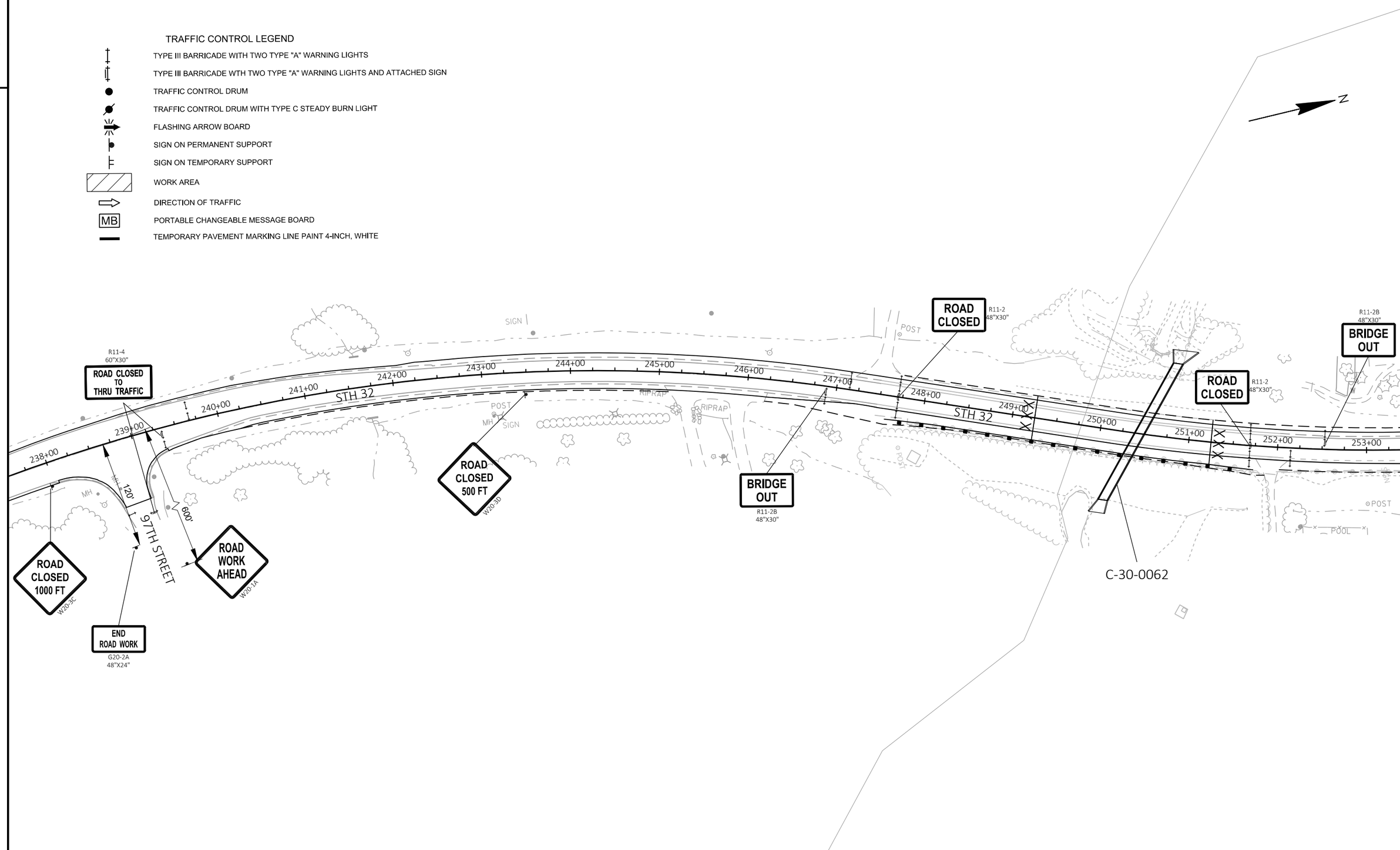

PROJECT NO: 3240-16-70	HWY: STH 32	COUNTY: KENOSHA	TRAFFIC CONTROL FULL CLOSURE C-30-0062	SHEET 51	E

FILE NAME : L:\DESIGN PROJECTS\3240-16-00 STH 32\10. ROADWAY\CIVIL 3D\32401600\SHEETSPLAN\025101-TC.DWG
LAYOUT NAME - 025102-tc
PLOT DATE : 10/9/2022 9:33 PM PLOT BY : REBECCA JONARDI PLOT NAME : PLOT SCALE : 1 IN:100 FT

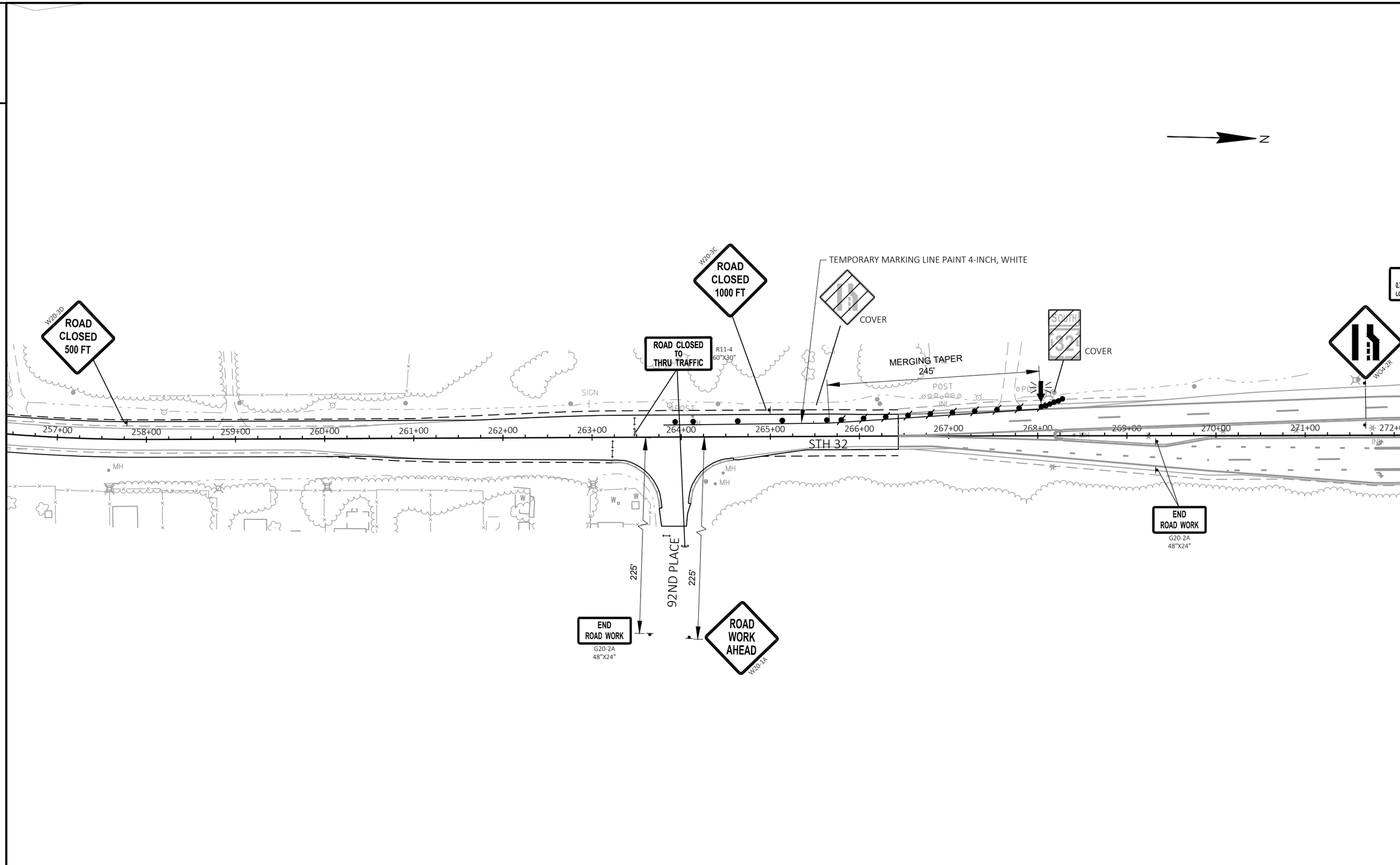

PROJECT NO: 3240-16-70	HWY: STH 32	COUNTY: KENOSHA	TRAFFIC CONTROL FULL CLOSURE C-30-0062	SHEET 52	E

FILE NAME : L:\DESIGN PROJECTS\3240-16-00 STH 32\10. ROADWAY\CIVIL 3D\32401600\SHEETSPLAN\025101-TC.DWG
LAYOUT NAME - 025103-tc
PLOT DATE : 10/9/2022 9:33 PM
PLOT BY : REBECCA JONARDI
PLOT NAME :
PLOT SCALE : 1 IN:100 FT

NOTE: SEE SDD "BARRICADES AND SIGNS FOR MAINLINE CLOSURES"

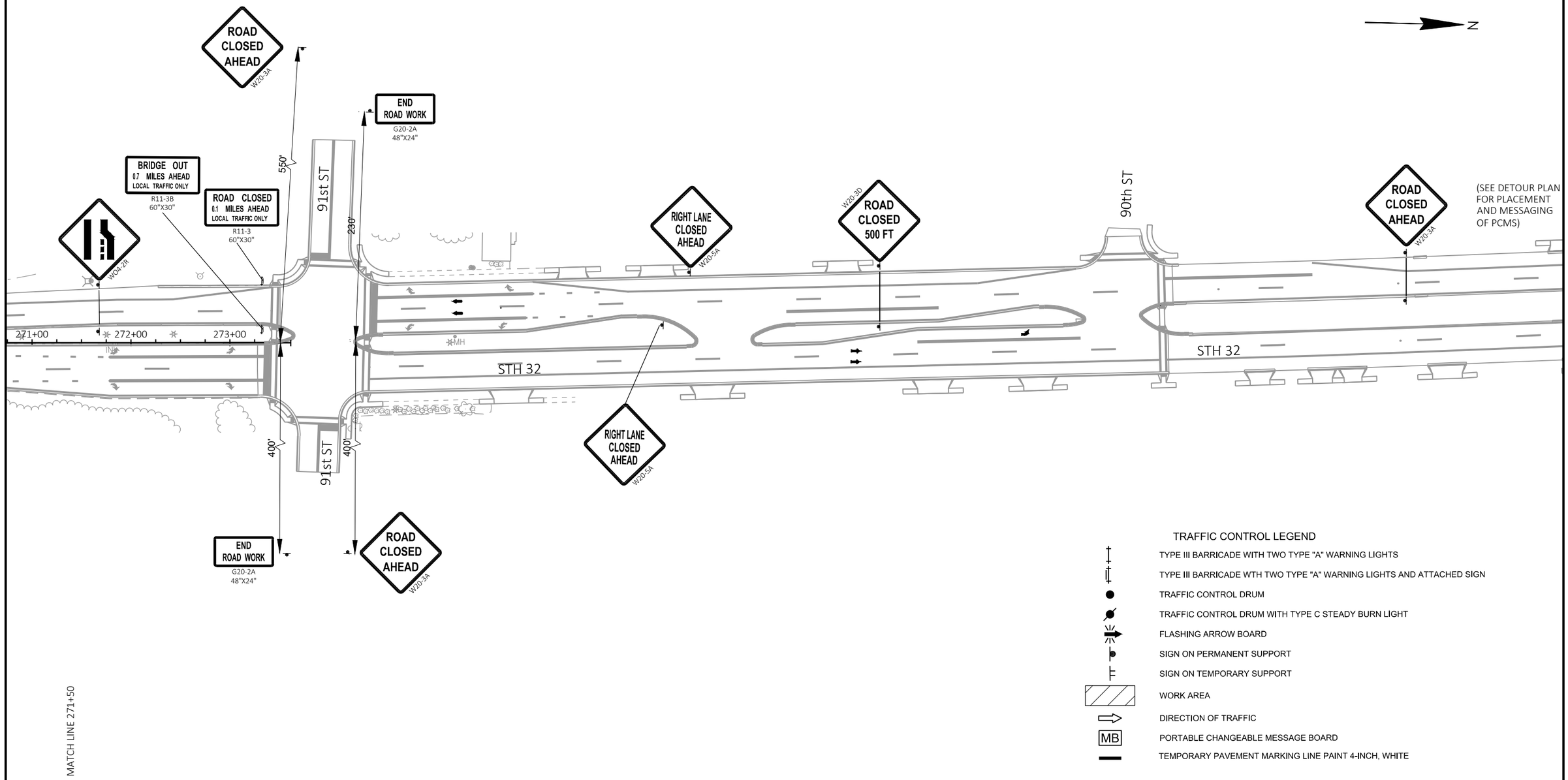

PROJECT NO: 3240-16-70	HWY: STH 32	COUNTY: KENOSHA	TRAFFIC CONTROL FULL CLOSURE C-30-0062	SHEET 53	E

FILE NAME : L:\DESIGN PROJECTS\3240-16-00 STH 32\10. ROADWAY\CIVIL 3D\32401600\SHEETSPLAN\025101-TC.DWG
LAYOUT NAME - 025104-tc
PLOT DATE : 10/9/2022 9:33 PM PLOT BY : REBECCA JONARDI PLOT NAME : PLOT SCALE : 1 IN:100 FT

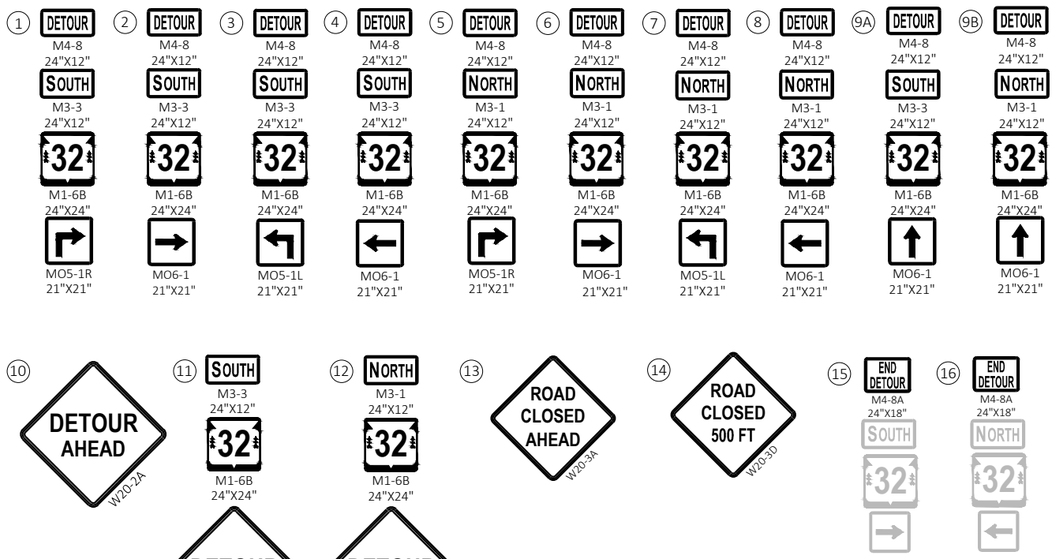

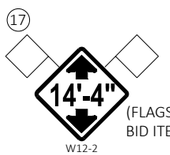

(FLAGS PAID FOR UNDER BID ITEM 637.0620)

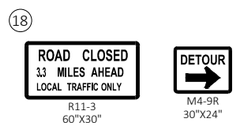

(ADD SIGNS TO BARRICADES PLACED ON THE SOUTH SIDE OF STH 158 ON THE SHOULDERS)

	FMS		FMS		FMS		PCMS		PCMS
A	HWY 32 SOUTH CLOSED AT 91ST ST FOLLOW DETOUR	B	HWY 32 SOUTH CLOSED AHEAD USE ALT ROUTE	C	HWY 32 NORTH CLOSED AHEAD FOLLOW DETOUR	D	HWY 32 TO CLOSE LONGTERM / DAY TIME	E	HWY 32 N TO CLOSE LONGTERM / DAY TIME

NOTE: 7 DAYS ADVANCE NOTICE

NOTE: 7 DAYS ADVANCE NOTICE

** DO NOT PLACE ANY TRAFFIC CONTROL, SIGNS, DRUMS, OR OTHER DEVICES WITHIN 50' OF RAILROAD RIGHT-OF-WAY

NOTES:

1. ALL SIGNS SHALL BE PLACED IN ACCORDANCE WITH THE MANUAL ON UNIFORM TRAFFIC CONTROL DEVICES
2. THE EXACT NUMBER, LOCATION AND SPACING OF ALL SIGNS SHALL BE ADJUSTED TO FIT FIELD CONDITIONS AS APPROVED BY THE ENGINEER
3. IF THERE ARE EXISTING ROUTE MARKER ASSEMBLIES THAT WILL REMAIN IN PLACE, ADJUST THE LOCATION OF THE DETOUR ROUTE SIGNS TO CORRESPOND WITH THE EXISTING ASSEMBLIES
4. THE SPACING BETWEEN TRAFFIC CONTROL AND DETOUR SIGNS SHOULD BE ADJUSTED TO NOT CONFLICT WITH AND TO PROVIDE A DESIRABLE MINIMUM OF 200 FEET CLEARANCE TO EXISTING SIGNS THAT WILL REMAIN IN PLACE
5. DETOUR SIGNS SHALL BE COVERED OR REMOVED WHEN DETOUR IS NOT IN USE OR AS DIRECTED BY THE ENGINEER
6. ALL EXISTING SIGNS THAT NEED TO BE COVERED SHALL BE COVERED WITH A BLANK ORANGE PANEL OR AS DIRECTED BY THE ENGINEER

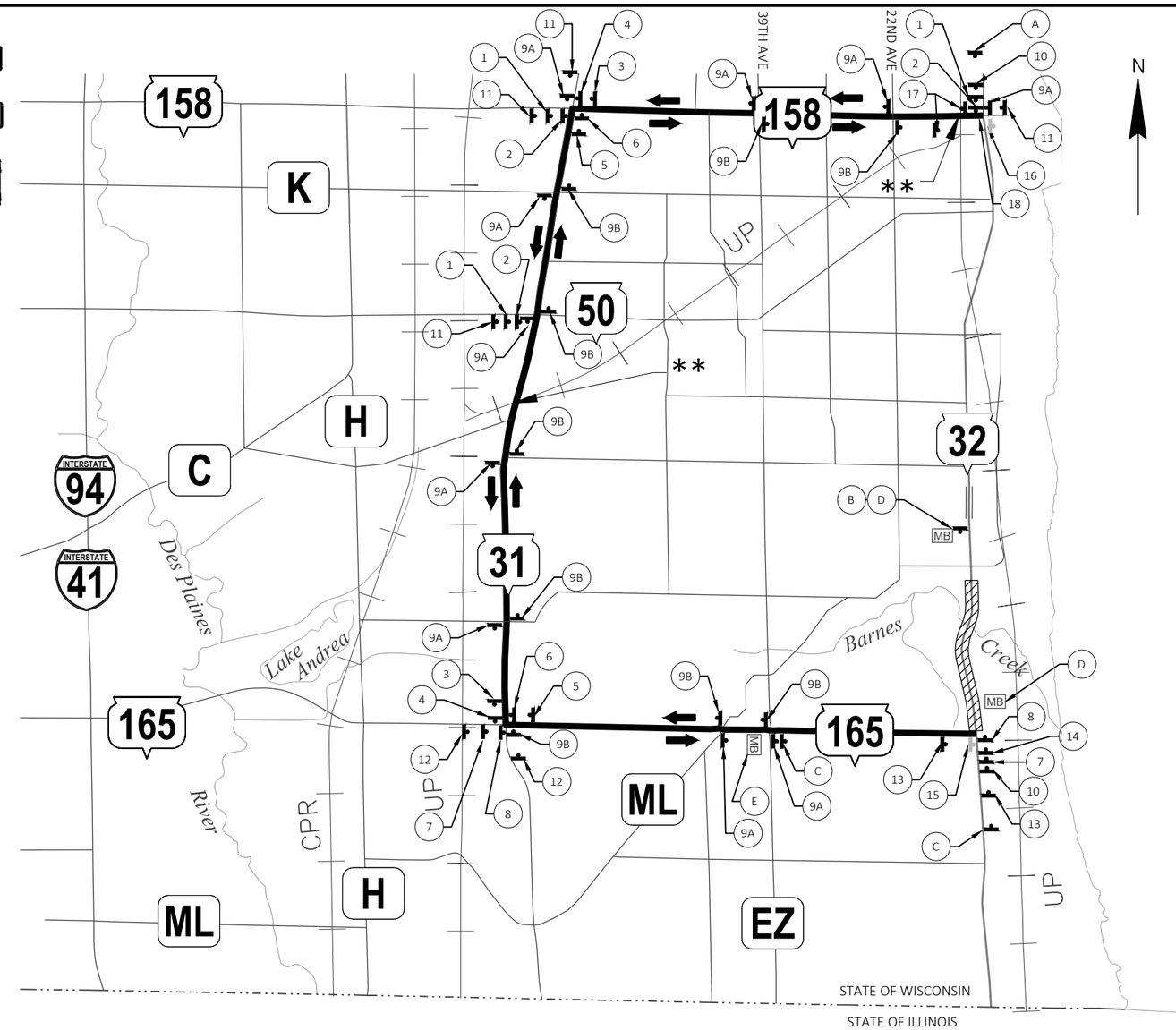

LEGEND:

- DETOUR ROUTE
- WORK ZONE
- PROPOSED SIGN MOUNTED ON POST(S)
- EXISTING SIGN POST(S)
- TRAFFIC FLOW ARROW
- MB PORTABLE CHANGEABLE MESSAGE BOARD

PROJECT NO: 3240-16-70	HWY: STH 32	COUNTY: KENOSHA	DETOUR PLAN	SHEET 54	E

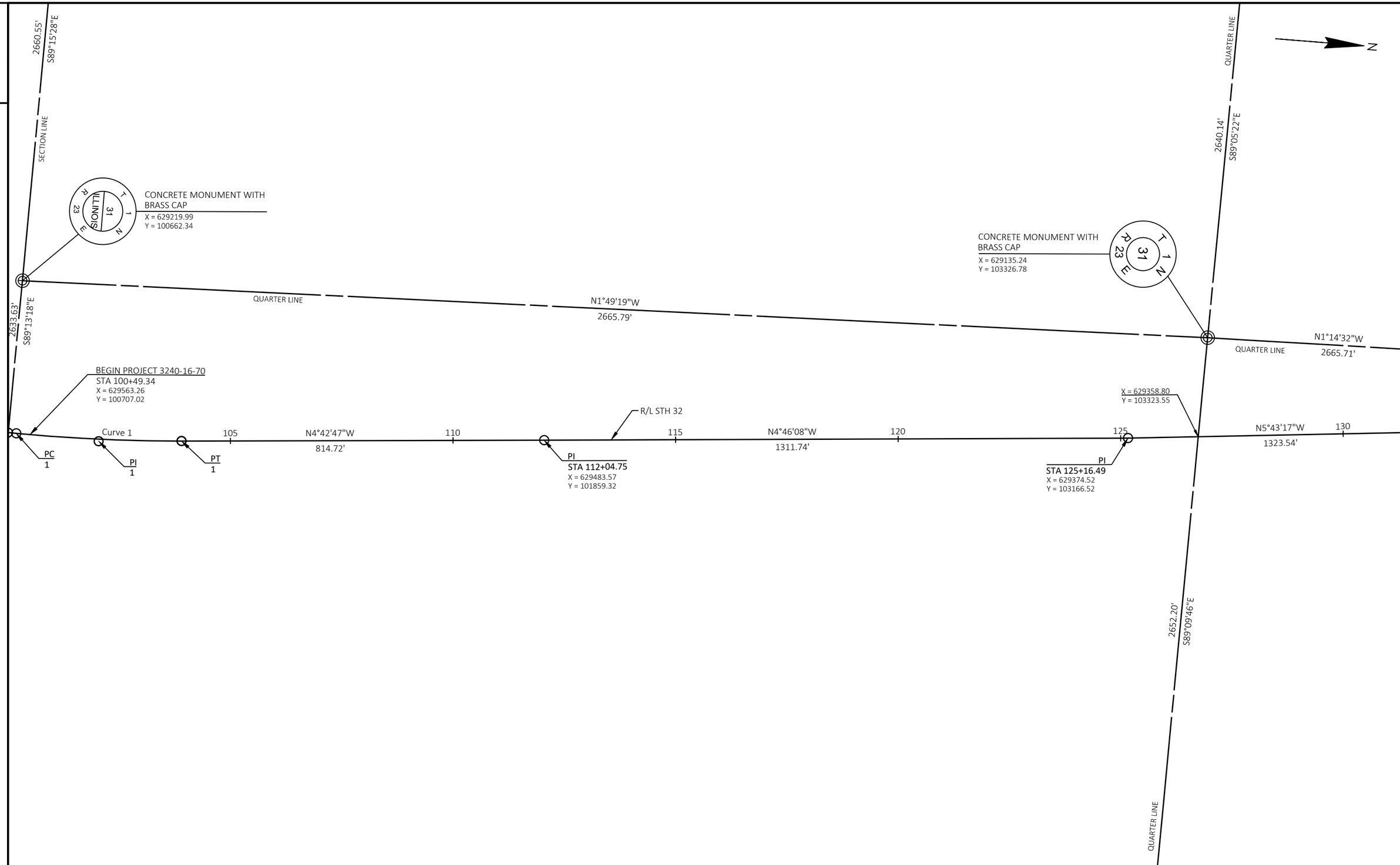
2660.55'
S89°15'28"E
SECTION LINE
CONCRETE MONUMENT WITH
BRASS CAP
X = 629219.99
Y = 100662.34
T 1 N
31
ILLINOIS
R 23 E
QUARTER LINE
N1°49'19"W
2665.79'
2633.63'
S89°13'18"E
CONCRETE MONUMENT WITH
BRASS CAP
X = 629135.24
Y = 103326.78
T 1 N
31
R 23 E
QUARTER LINE
N1°14'32"W
2665.71'
2640.14'
S89°05'22"E
QUARTER LINE
N
BEGIN PROJECT 3240-16-70
STA 100+49.34
X = 629563.26
Y = 100707.02
R/L STH 32
X = 629358.80
Y = 103323.55
Curve 1
105
N4°42'47"W
814.72'
110
115
N4°46'08"W
1311.74'
120
125
N5°43'17"W
1323.54'
130
PC
1
PI
1
PT
1
PI
STA 112+04.75
X = 629483.57
Y = 101859.32
PI
STA 125+16.49
X = 629374.52
Y = 103166.52
2652.20'
S89°09'46"E
QUARTER LINE

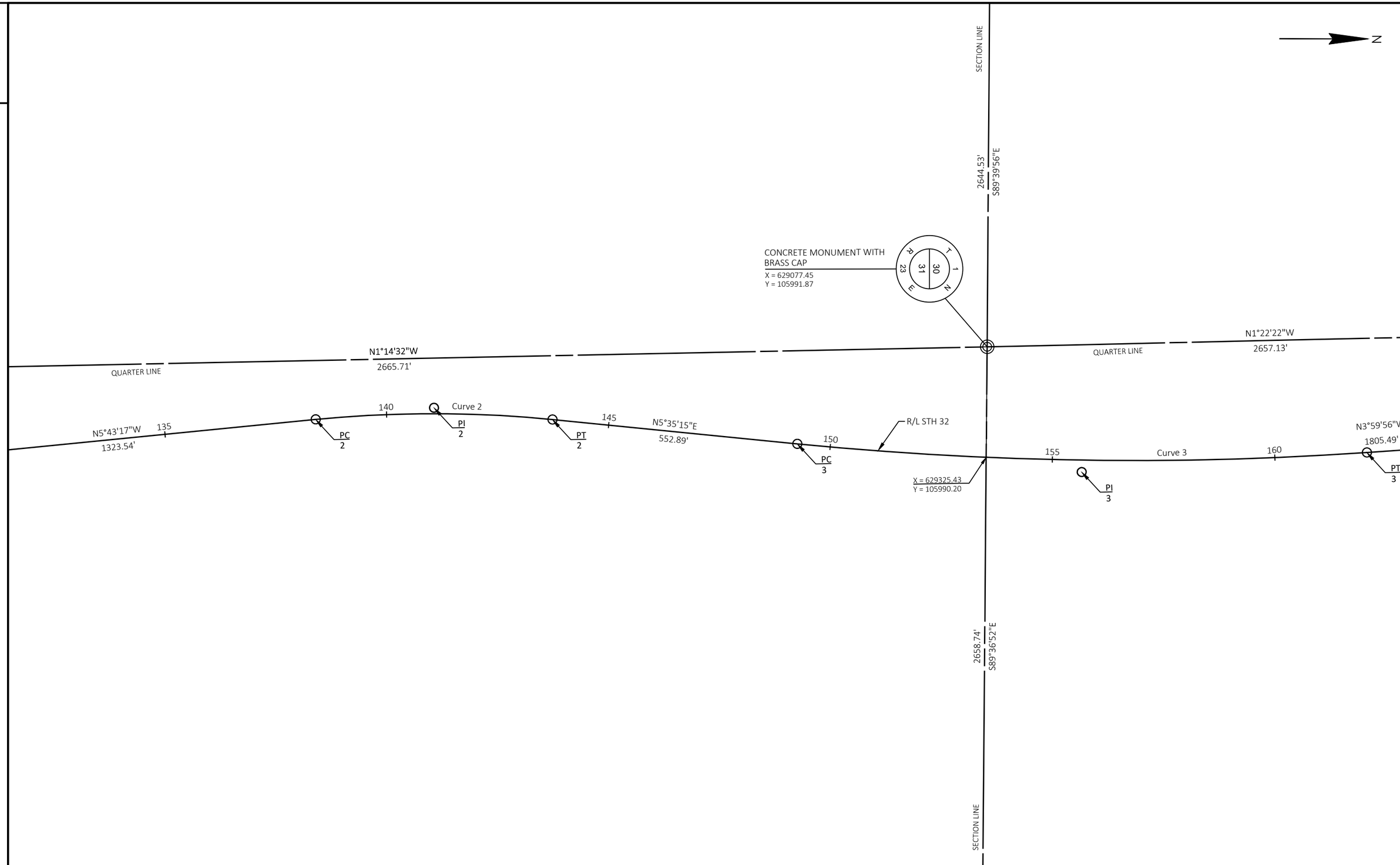

PROJECT NO: 3240-16-70	HWY: STH 32	COUNTY: KENOSHA	ALIGNMENT PLAN	SHEET 56	E

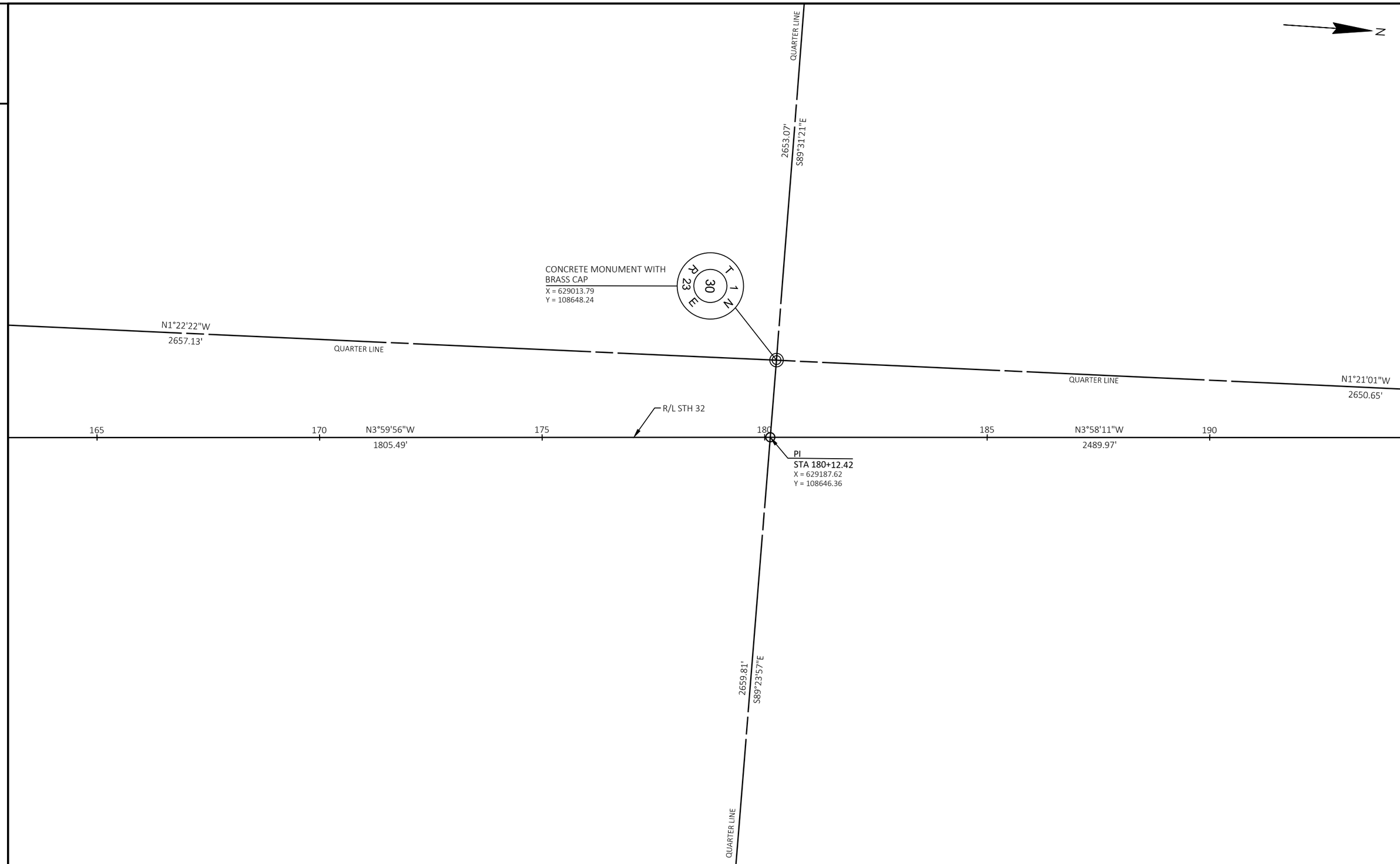
N
QUARTER LINE
2653.07'
S89°31'21"E
CONCRETE MONUMENT WITH
BRASS CAP
X = 629013.79
Y = 108648.24
T 1 N
30
R 23 E
N1°22'22"W
2657.13'
QUARTER LINE
QUARTER LINE
N1°21'01"W
2650.65'
R/L STH 32
165
170
N3°59'56"W
1805.49'
175
180
185
N3°58'11"W
2489.97'
190
PI
STA 180+12.42
X = 629187.62
Y = 108646.36
2659.81'
S89°23'57"E
QUARTER LINE

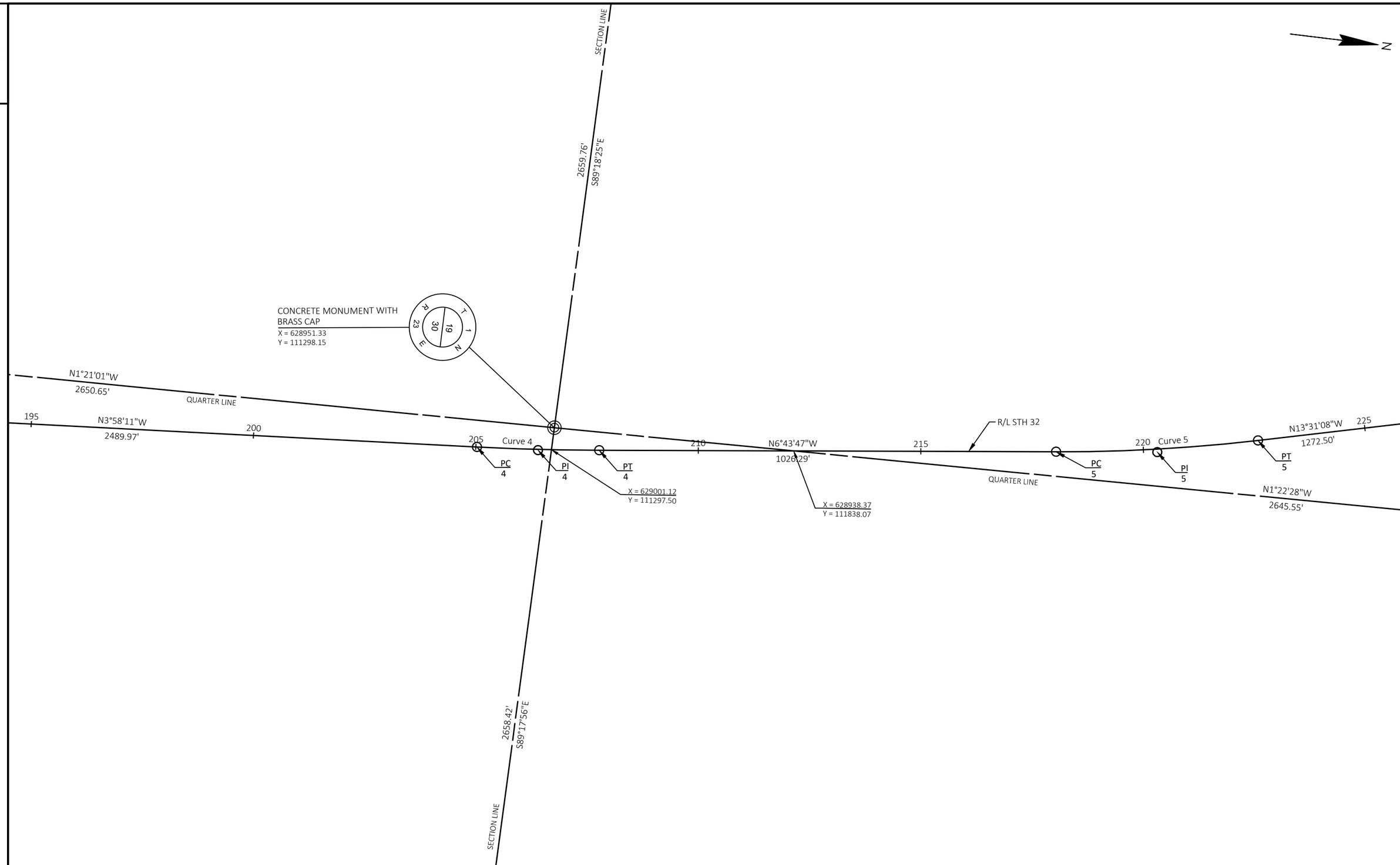

PROJECT NO: 3240-16-70	HWY: STH 32	COUNTY: KENOSHA	ALIGNMENT PLAN	SHEET 58	E

FILE NAME : L:\DESIGN PROJECTS\3240-16-00 STH 32\10. ROADWAY\CIVIL 3D\32401600\SHEETSPLAN\027201-AD.DWG
LAYOUT NAME - 027204-ad
PLOT DATE : 9/27/2022 3:35 PM PLOT BY : REBECCA JONARDI PLOT NAME : PLOT SCALE : 1 IN:200 FT

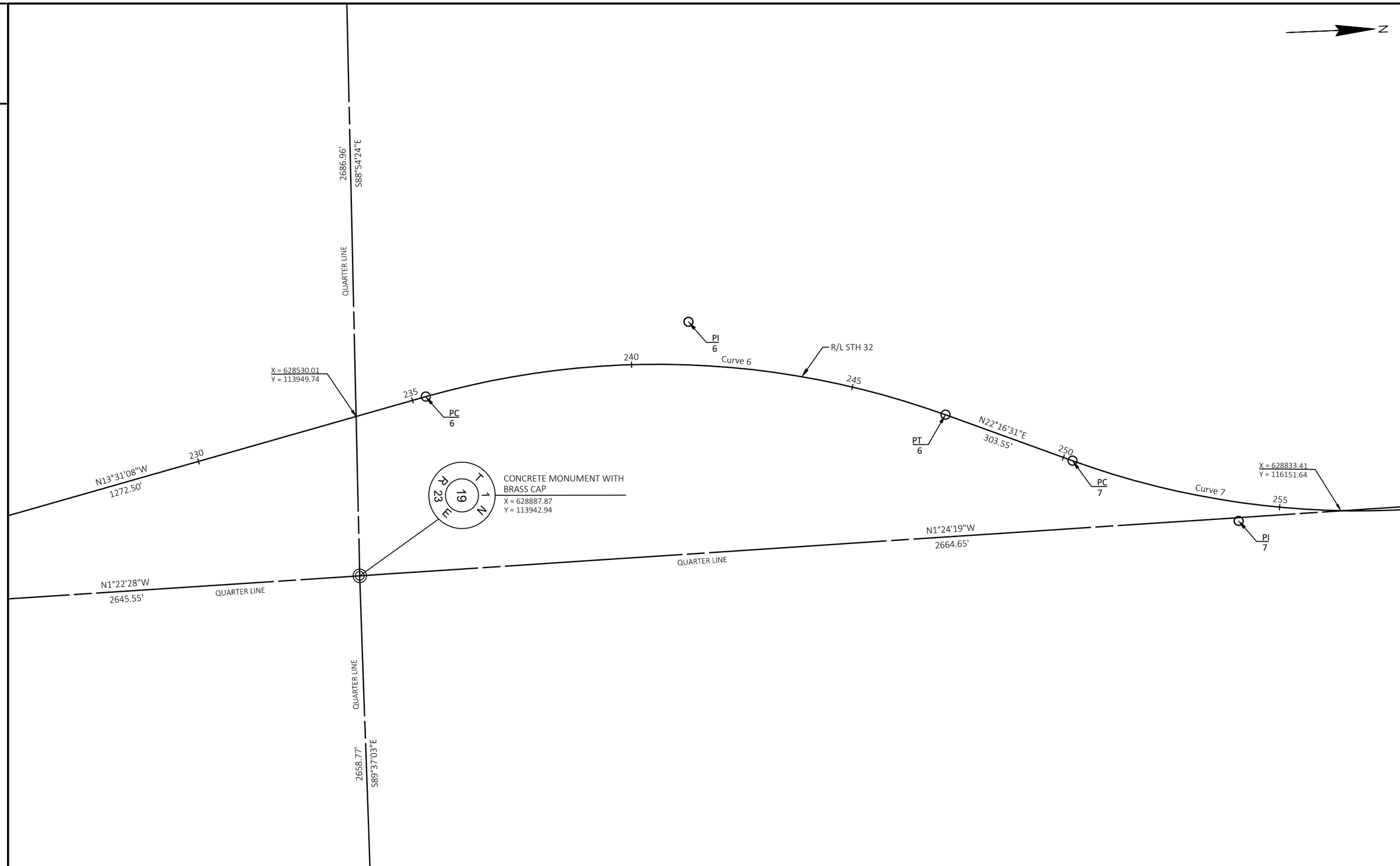

PROJECT NO: 3240-16-70	HWY: STH 32	COUNTY: KENOSHA	ALIGNMENT PLAN	SHEET 59	E

FILE NAME : L:\DESIGN PROJECTS\3240-16-00 STH 32\10. ROADWAY\CIVIL 3D\32401600\SHEETSPLAN\027201-AD.DWG
LAYOUT NAME - 027205-ad
PLOT DATE : 9/27/2022 3:35 PM PLOT BY : REBECCA JONARDI PLOT NAME : PLOT SCALE : 1 IN:200 FT

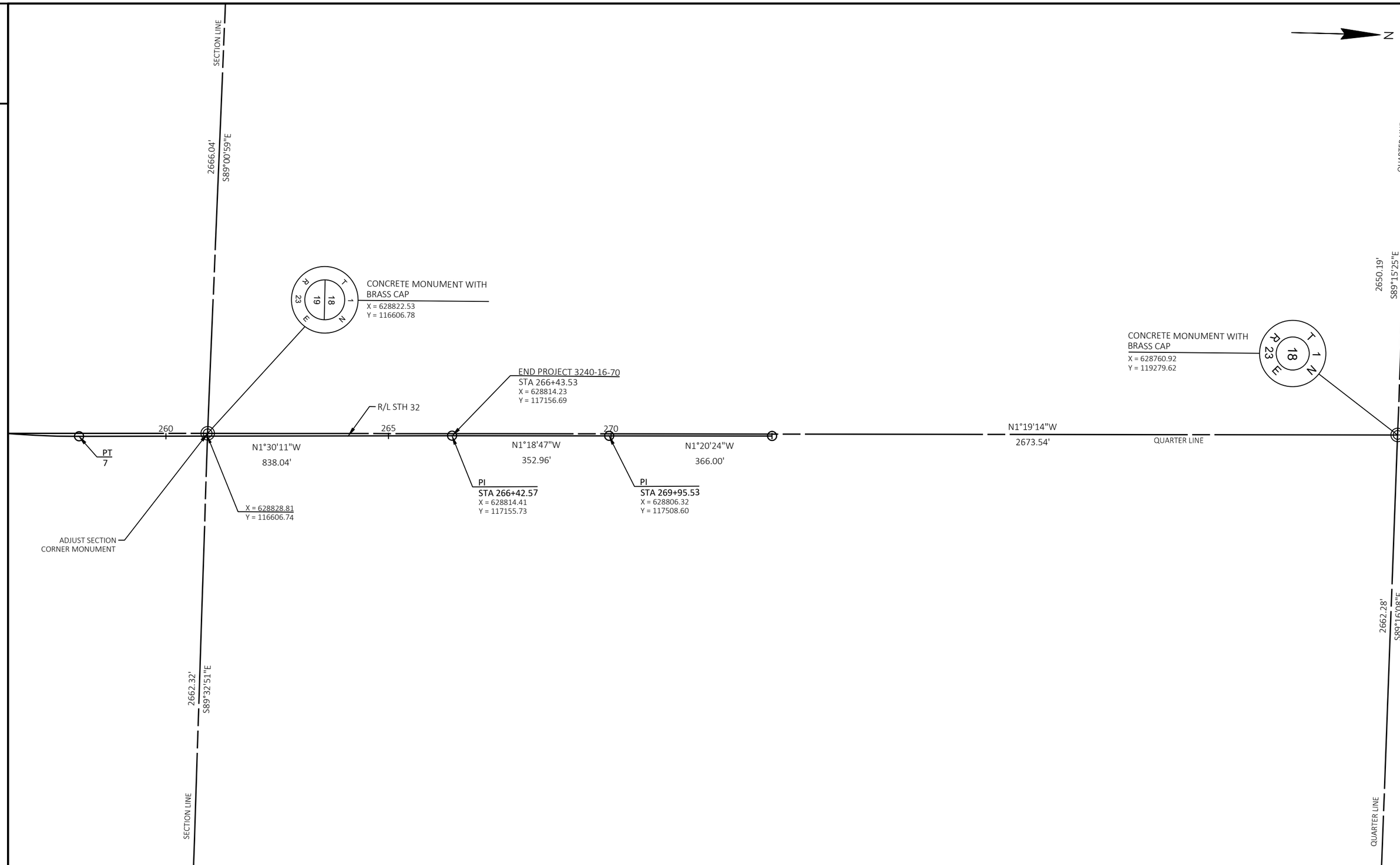

PROJECT NO: 3240-16-70	HWY: STH 32	COUNTY: KENOSHA	ALIGNMENT PLAN	SHEET 60	E

FILE NAME : L:\DESIGN PROJECTS\3240-16-00 STH 32\10. ROADWAY\CIVIL 3D\32401600\SHEETSPLAN\027201-AD.DWG
LAYOUT NAME - 027206-ad
PLOT DATE : 9/27/2022 3:35 PM
PLOT BY : REBECCA JONARDI
PLOT NAME :
PLOT SCALE : 1 IN:200 FT
WISDOT/CADDS SHEET 42

CURVE NUMBER	PI STATION	PI COORDINATES		Δ	D	T	L	E	R	PC STATION	PC COORDINATES		PT STATION	PT COORDINATES	
		X	Y								X	Y		X	Y
1	102+04.22	629565.80	100861.88	05° 36' 27.35"	01° 30' 28.08"	186.10	371.91	4.55	3800.00	100+18.12	629562.90	100675.80	103+90.03	629550.51	101047.36
2	141+07.35	629215.93	104749.46	11° 18' 31.31"	02° 07' 19.56"	267.32	532.91	13.20	2700.00	138+40.03	629242.58	104483.46	143+72.94	629241.96	105015.51
3	155+67.88	629358.30	106204.78	09° 35' 10.67"	00° 44' 53.87"	642.05	1281.10	26.87	7656.97	149+25.83	629295.79	105565.78	162+06.93	629313.53	106845.26
4	206+39.94	629005.72	111267.57	02° 45' 35.64"	01° 00' 12.60"	137.54	275.03	1.66	5709.60	205+02.40	629015.24	111130.36	207+77.43	628989.60	111404.16
5	220+31.22	628842.67	112649.31	06° 47' 21.12"	01° 29' 38.04"	227.50	454.46	6.74	3835.27	218+03.72	628869.33	112423.39	222+58.18	628789.49	112870.51
6	241+44.53	628348.53	114704.59	35° 47' 39.47"	03° 00' 51.12"	613.85	1187.52	96.66	1900.85	235+30.67	628492.03	114107.74	247+18.19	628581.21	115272.63
7	254+18.85	628846.81	115921.00	23° 46' 41.88"	03° 02' 15.35"	397.11	782.79	41.35	1886.20	250+21.74	628696.28	115553.53	258+04.53	628836.39	116317.98

2

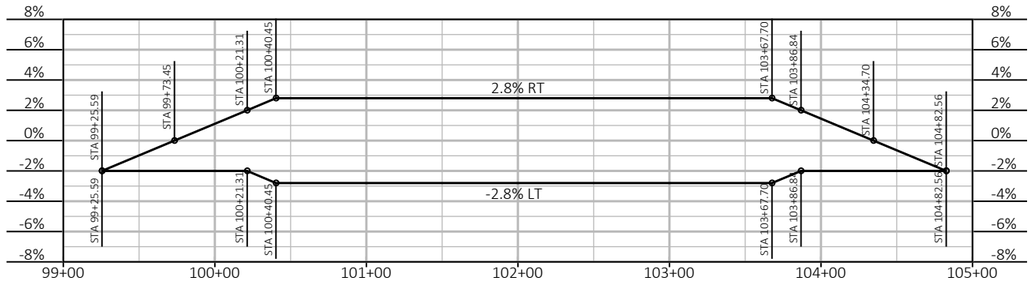

SUPERELEVATION DIAGRAM - CURVE 1

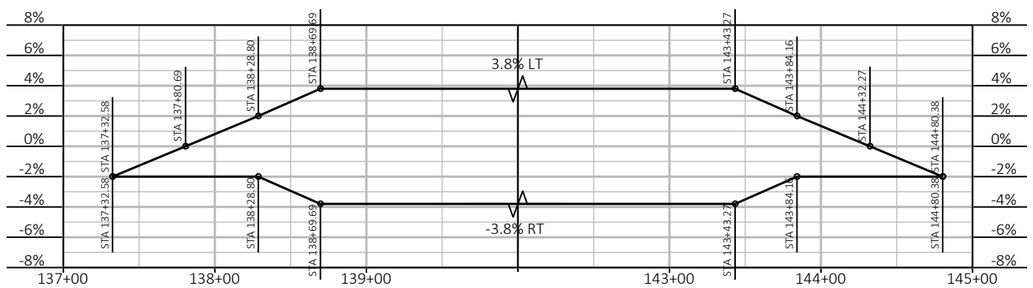

SUPERELEVATION DIAGRAM - CURVE 2

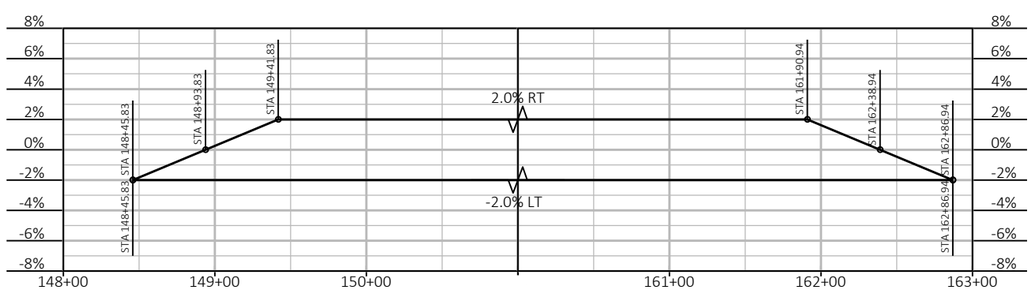

SUPERELEVATION DIAGRAM - CURVE 3

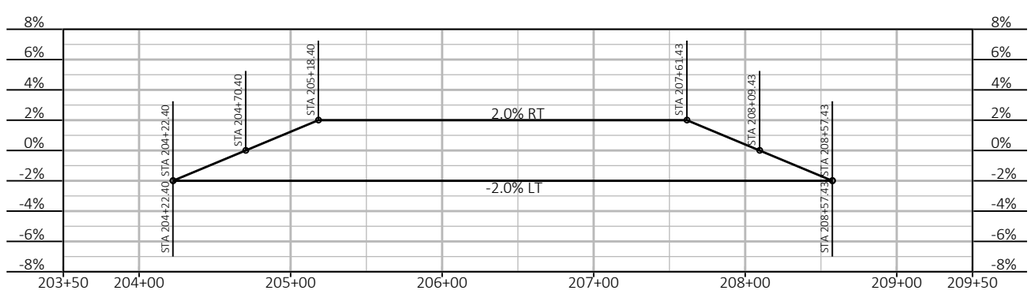

SUPERELEVATION DIAGRAM - CURVE 4

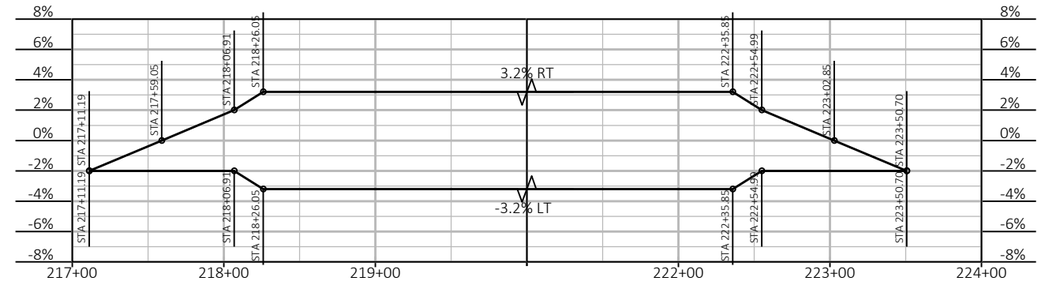

SUPERELEVATION DIAGRAM - CURVE 5

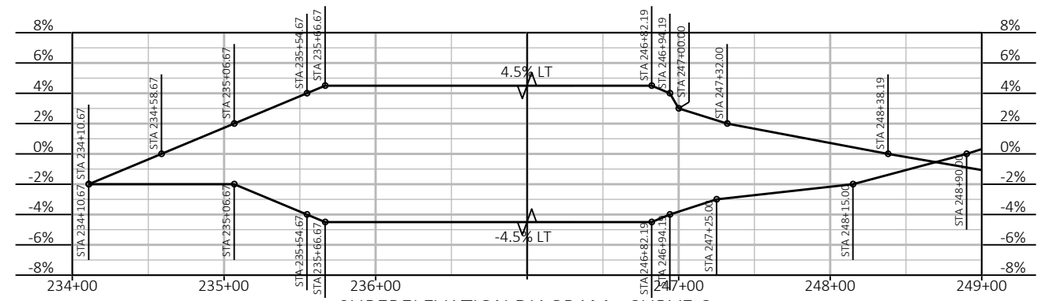

SUPERELEVATION DIAGRAM - CURVE 6

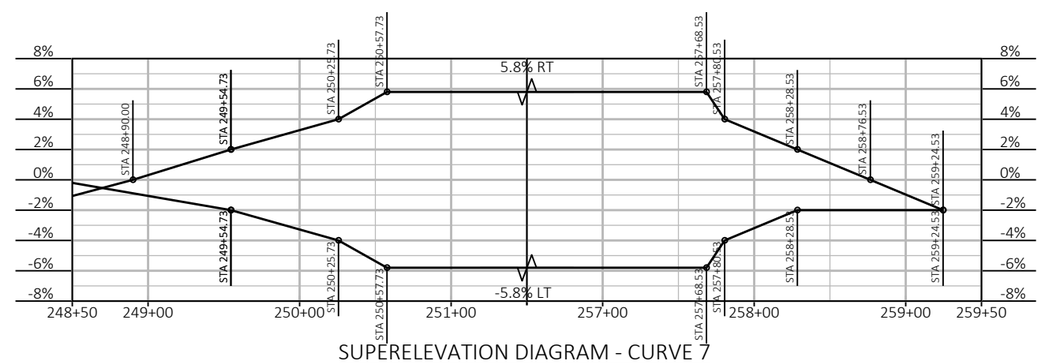

SUPERELEVATION DIAGRAM - CURVE 7

2

PROJECT NO: 3240-16-70	HWY: STH 32	COUNTY: KENOSHA	ALIGNMENT PLAN	SHEET 62	E

FILE NAME : L:\DESIGN PROJECTS\3240-16-00 STH 32\10. ROADWAY\CIVIL 3D\32401600\SHEETSPLAN\027201-AD.DWG
LAYOUT NAME - 027208-ad
PLOT DATE : 9/27/2022 3:35 PM PLOT BY : REBECCA JONARDI PLOT NAME : PLOT SCALE : ###########
WISDOT/CADDS SHEET 42

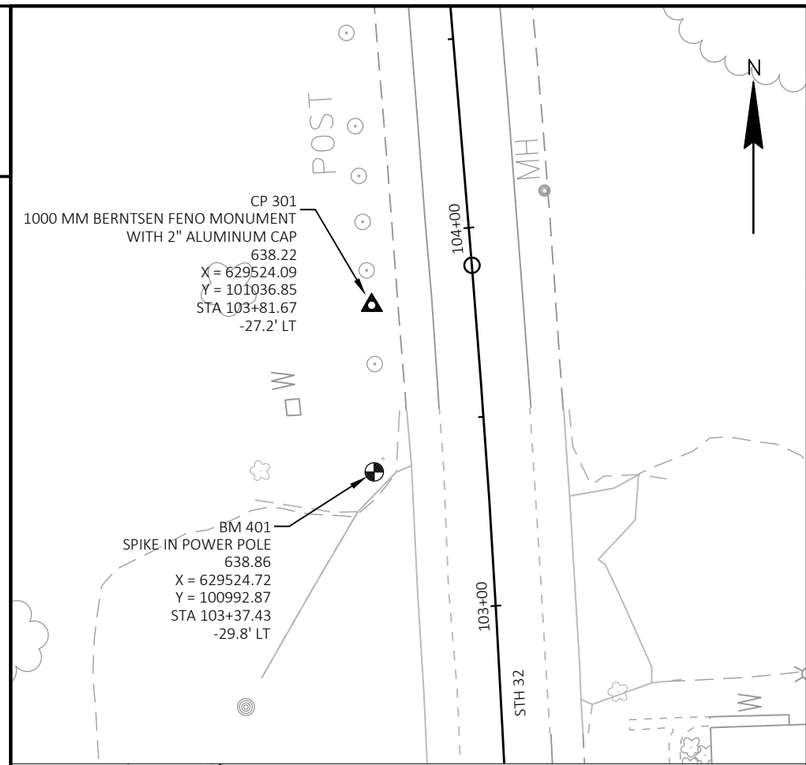

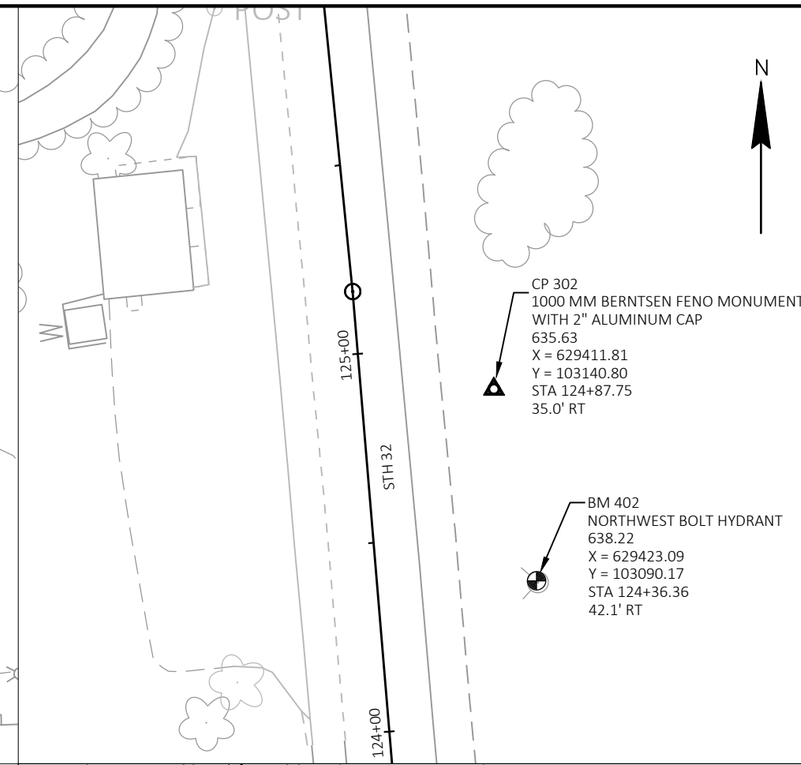

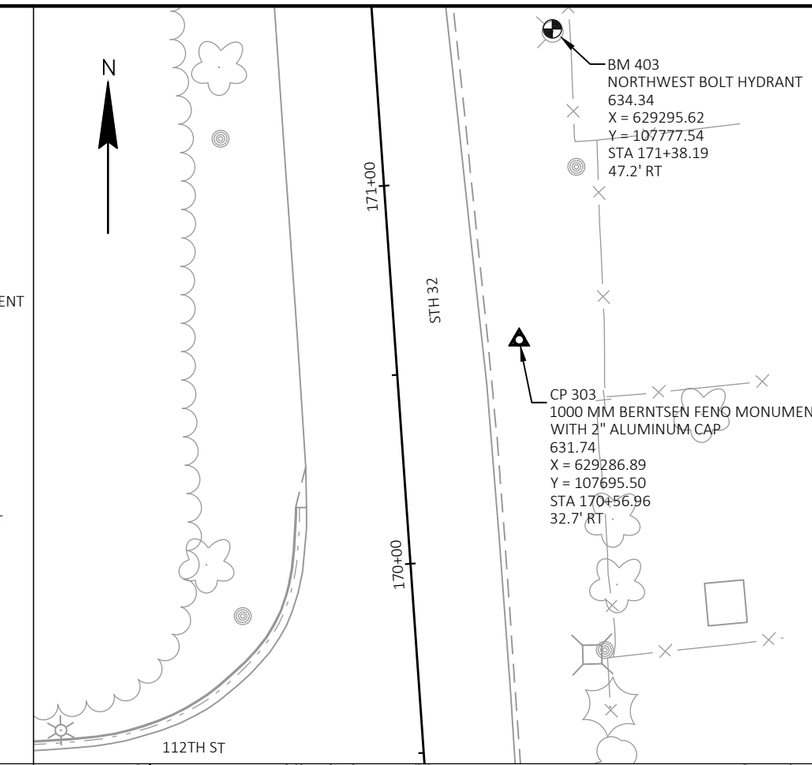

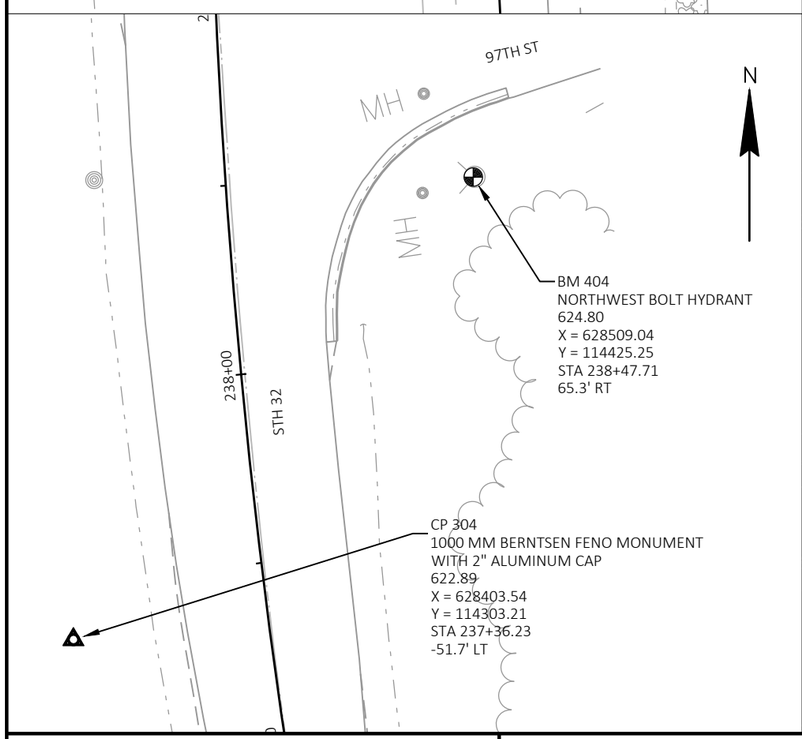

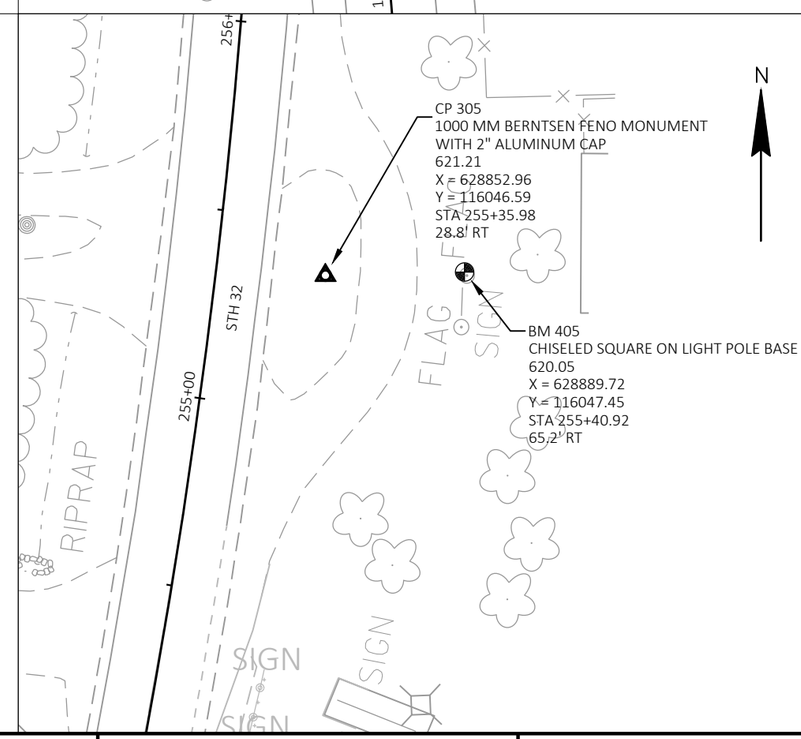

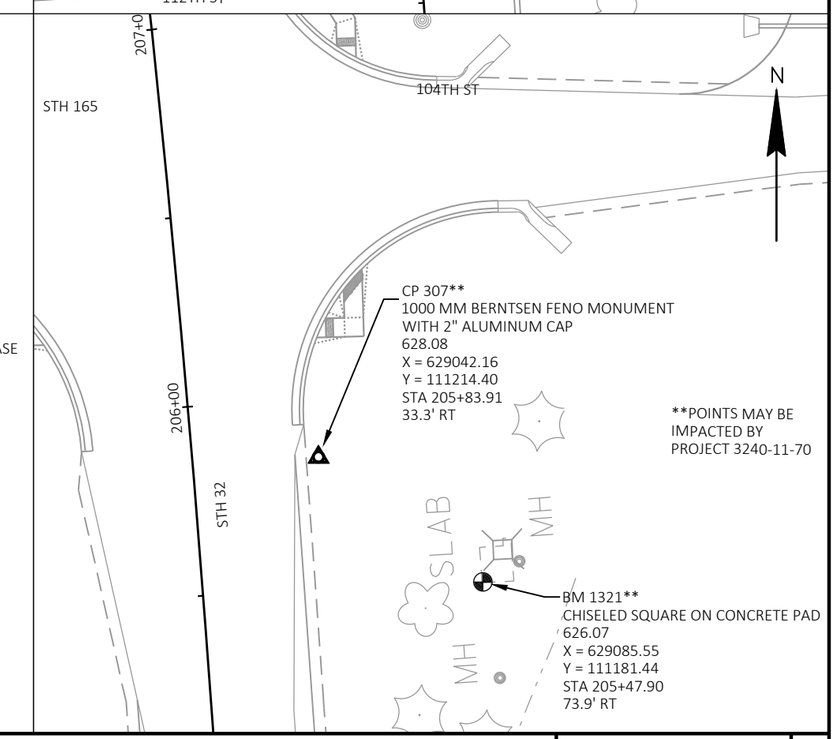

2

PROJECT NO: 3240-16-70	HWY: STH 32	COUNTY: KENOSHA	ALIGNMENT LAYOUT - SURVEY CONTROL	SHEET 63	E

2

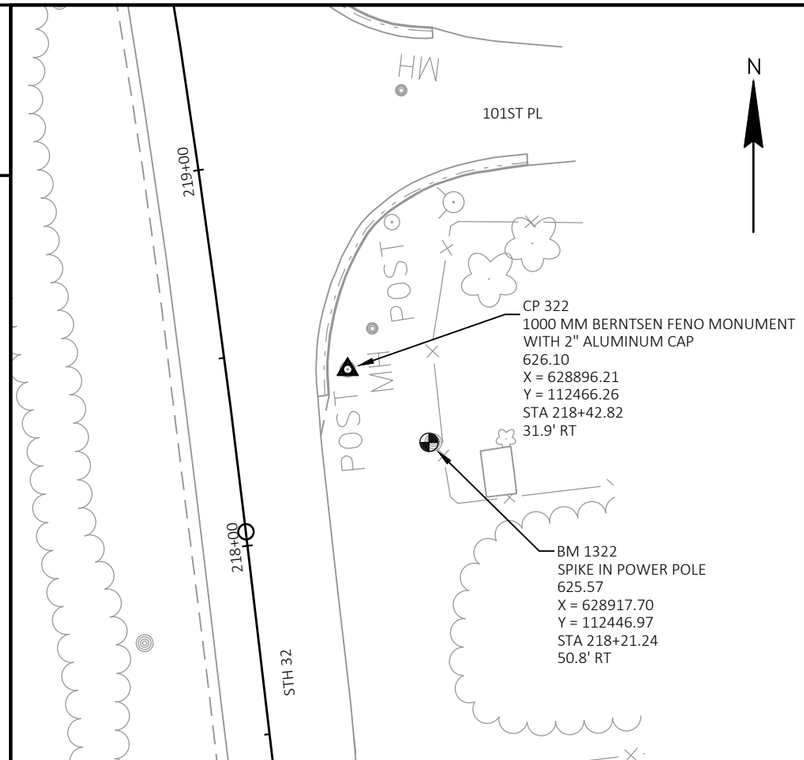

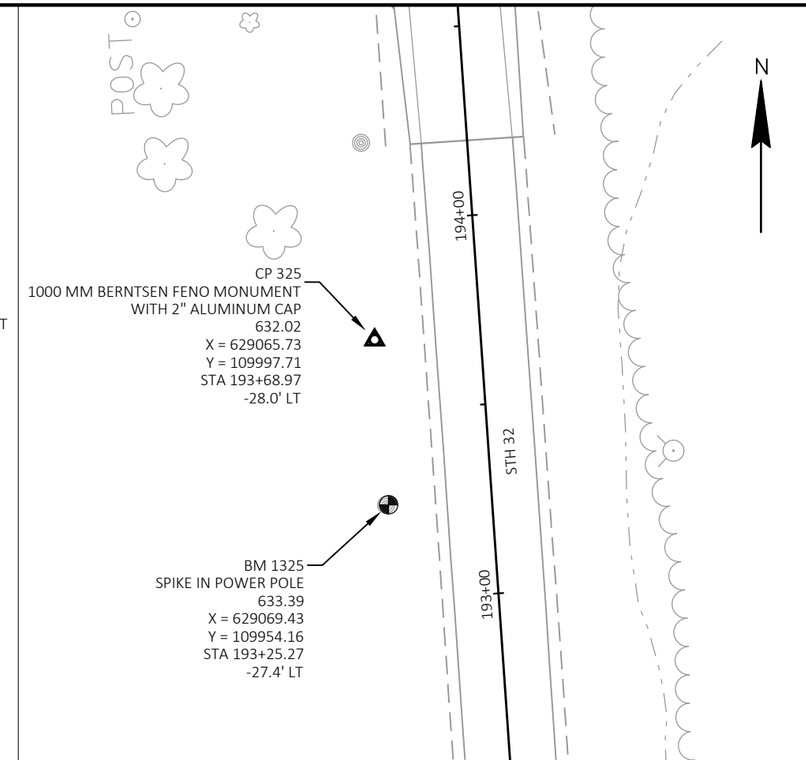

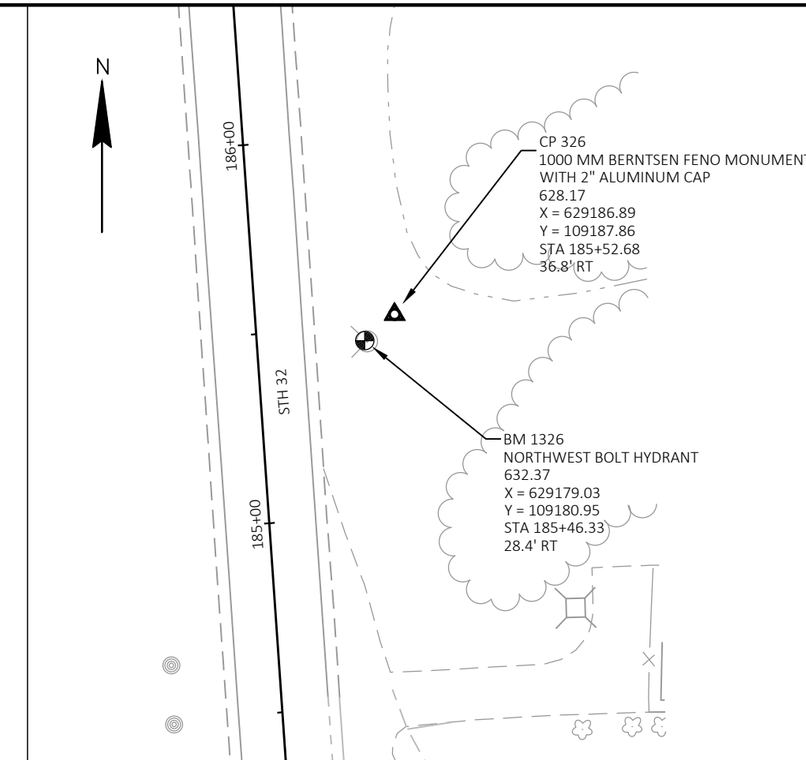

2

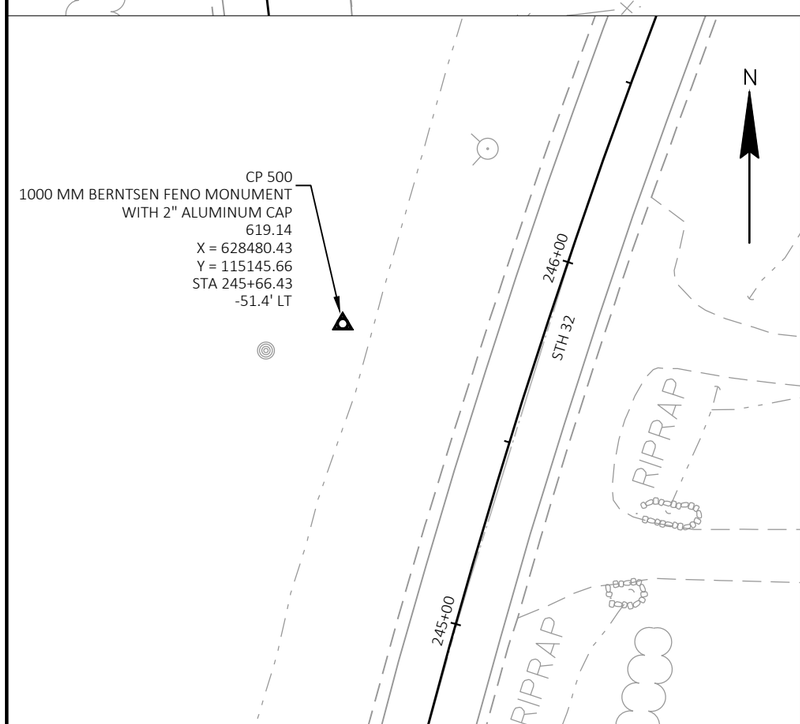

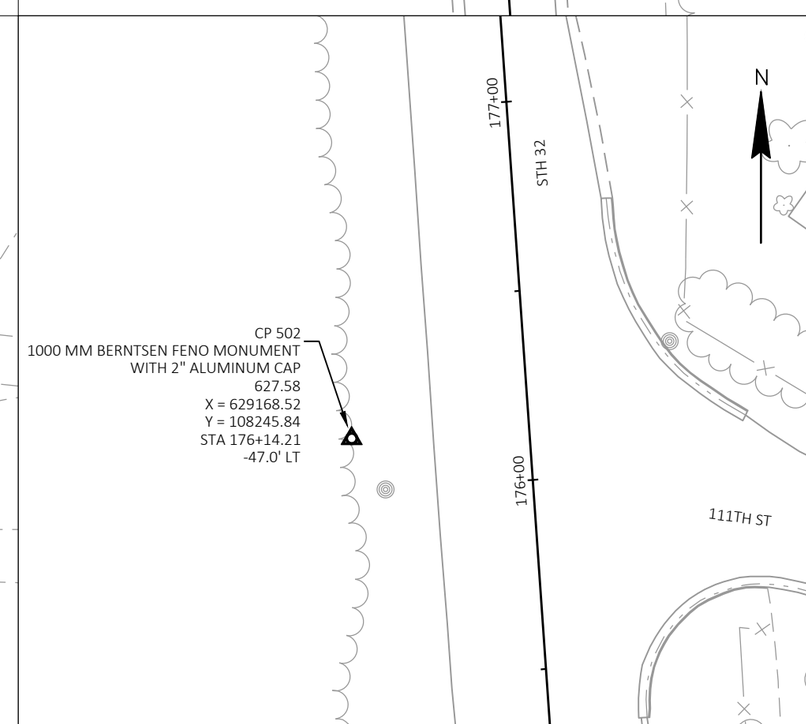

PROJECT NO: 3240-16-70	HWY: STH 32	COUNTY: KENOSHA	ALIGNMENT LAYOUT - SURVEY CONTROL	SHEET 64	E

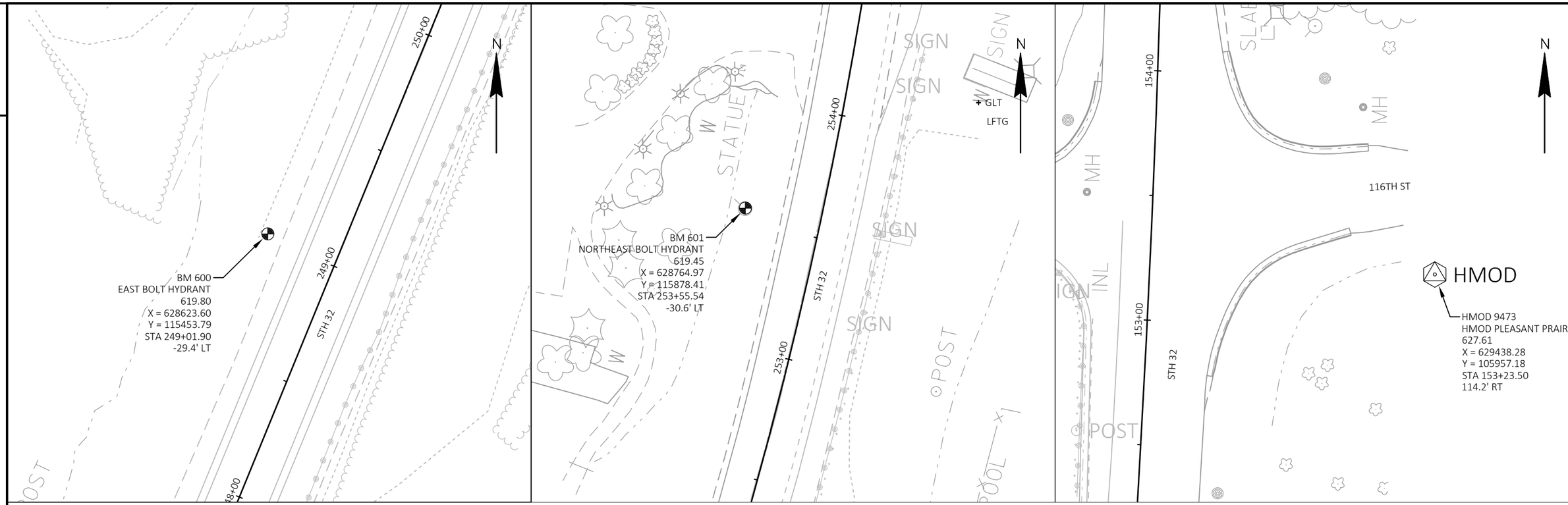

PROJECT NO: 3240-16-70	HWY: STH 32	COUNTY: KENOSHA	ALIGNMENT LAYOUT - SURVEY CONTROL	SHEET 65	E

FILE NAME : L:\DESIGN PROJECTS\3240-16-00 STH 32\10. ROADWAY\CIVIL 3D\32401600\SHEETSPLAN\027301-CP.DWG
LAYOUT NAME - 027303-cp
PLOT DATE : 9/28/2022 10:18 AM PLOT BY : REBECCA JONARDI PLOT NAME : PLOT SCALE : 1 IN:40 FT

WISDOT/CADDS SHEET 42

3240-16-70

Line	Item	Item Description	Unit	Total	Qty
0002	108.4400	CPM Progress Schedule	EACH	1.000	1.000
0004	201.0105	Clearing	STA	6.000	6.000
0006	201.0120	Clearing	ID	36.000	36.000
0008	201.0205	Grubbing	STA	6.000	6.000
0010	201.0220	Grubbing	ID	36.000	36.000
0012	203.0220	Removing Structure (structure) 01. C-30-32	EACH	1.000	1.000
0014	204.0115	Removing Asphaltic Surface Butt Joints	SY	4,878.000	4,878.000
0016	204.0120	Removing Asphaltic Surface Milling	SY	77,771.000	77,771.000
0018	204.0165	Removing Guardrail	LF	662.000	662.000
0020	204.9090.S	Removing (item description) 01. Existing Water Main Pipe	LF	393.000	393.000
0022	205.0100	Excavation Common	CY	16.000	16.000
0024	206.2001	Excavation for Structures Culverts (structure) 01. C-30-62	EACH	1.000	1.000
0026	208.0100	Borrow	CY	3.000	3.000
0028	208.1100	Select Borrow	CY	6,320.000	6,320.000
0030	210.2500	Backfill Structure Type B	TON	2,740.000	2,740.000
0032	211.0101	Prepare Foundation for Asphaltic Paving (project) 01. 3240-16-70	EACH	1.000	1.000
0034	213.0100	Finishing Roadway (project) 01. 3240-16-70	EACH	1.000	1.000
0036	305.0110	Base Aggregate Dense 3/4-Inch	TON	313.000	313.000
0038	305.0120	Base Aggregate Dense 1 1/4-Inch	TON	590.000	590.000
0040	305.0500	Shaping Shoulders	STA	332.000	332.000
0042	311.0115	Breaker Run	CY	150.000	150.000
0044	455.0605	Tack Coat	GAL	8,786.000	8,786.000
0046	460.0105.S	HMA Percent Within Limits (PWL) Test Strip Volumetrics	EACH	1.000	1.000
0048	460.0110.S	HMA Percent Within Limits (PWL) Test Strip Density	EACH	1.000	1.000
0050	460.2000	Incentive Density HMA Pavement	DOL	1,480.000	1,480.000
0052	460.5224	HMA Pavement 4 LT 58-28 S	TON	13,216.000	13,216.000
0054	504.0100	Concrete Masonry Culverts	CY	275.000	275.000
0056	505.0400	Bar Steel Reinforcement HS Structures	LB	34,410.000	34,410.000
0058	505.0600	Bar Steel Reinforcement HS Coated Structures	LB	1,955.000	1,955.000
0060	516.0500	Rubberized Membrane Waterproofing	SY	36.000	36.000
0062	606.0100	Riprap Light	CY	117.000	117.000
0064	606.0300	Riprap Heavy	CY	147.000	147.000
0066	614.0010	Barrier System Grading Shaping Finishing	EACH	2.000	2.000
0068	614.0397	Guardrail Mow Strip Emulsified Asphalt	SY	91.000	91.000
0070	614.2300	MGS Guardrail 3	LF	150.000	150.000
0072	614.2330	MGS Guardrail 3 K	LF	313.000	313.000
0074	614.2610	MGS Guardrail Terminal EAT	EACH	6.000	6.000
0076	618.0100	Maintenance And Repair of Haul Roads (project) 01. 3240-16-70	EACH	1.000	1.000
0078	619.1000	Mobilization	EACH	1.000	1.000
0080	625.0100	Topsoil	SY	2,502.000	2,502.000
0082	625.0500	Salvaged Topsoil	SY	780.000	780.000
0084	628.1504	Silt Fence	LF	523.000	523.000
0086	628.1520	Silt Fence Maintenance	LF	523.000	523.000
0088	628.1530.S	Silt Fence Heavy Duty	LF	725.000	725.000
0090	628.1535.S	Silt Fence Heavy Duty Maintenance	LF	725.000	725.000
0092	628.1905	Mobilizations Erosion Control	EACH	2.000	2.000
0094	628.1910	Mobilizations Emergency Erosion Control	EACH	4.000	4.000
0096	628.2027	Erosion Mat Class II Type C	SY	3,356.000	3,356.000
0098	628.7010	Inlet Protection Type B	EACH	3.000	3.000

3240-16-70

Line	Item	Item Description	Unit	Total	Qty
0100	628.7504	Temporary Ditch Checks	LF	39.000	39.000
0102	628.7570	Rock Bags	EACH	22.000	22.000
0104	630.0160	Seeding Mixture No. 60	LB	45.000	45.000
0106	630.0200	Seeding Temporary	LB	47.000	47.000
0108	630.0500	Seed Water	MGAL	56.000	56.000
0110	632.0201	Shrubs (species) (size) (root) 01. Common Buttonbush, 2 Gal CG	EACH	32.000	32.000
0112	632.0201	Shrubs (species) (size) (root) 02. Gray Dogwood, 2-Gal CG	EACH	32.000	32.000
0114	632.0201	Shrubs (species) (size) (root) 03. Red Twig Dogwood, 2-Gal CG	EACH	31.000	31.000
0116	632.9101	Landscape Planting Surveillance and Care Cycles	EACH	6.000	6.000
0118	633.5100	Markers ROW	EACH	10.000	10.000
0120	633.5200	Markers Culvert End	EACH	4.000	4.000
0122	634.0618	Posts Wood 4x6-Inch X 18-FT	EACH	32.000	32.000
0124	637.0620	Sign Flags Permanent Type II	EACH	2.000	2.000
0126	637.2210	Signs Type II Reflective H	SF	48.000	48.000
0128	637.2220	Signs Type II Reflective SH	SF	20.000	20.000
0130	637.2230	Signs Type II Reflective F	SF	46.250	46.250
0132	638.2102	Moving Signs Type II	EACH	26.000	26.000
0134	638.2602	Removing Signs Type II	EACH	9.000	9.000
0136	638.3000	Removing Small Sign Supports	EACH	26.000	26.000
0138	642.5001	Field Office Type B	EACH	1.000	1.000
0140	643.0300	Traffic Control Drums	DAY	2,920.000	2,920.000
0142	643.0420	Traffic Control Barricades Type III	DAY	4,508.000	4,508.000
0144	643.0705	Traffic Control Warning Lights Type A	DAY	5,060.000	5,060.000
0146	643.0715	Traffic Control Warning Lights Type C	DAY	920.000	920.000
0148	643.0800	Traffic Control Arrow Boards	DAY	92.000	92.000
0150	643.0900	Traffic Control Signs	DAY	24,070.000	24,070.000
0152	643.0920	Traffic Control Covering Signs Type II	EACH	5.000	5.000
0154	643.1000	Traffic Control Signs Fixed Message	SF	65.000	65.000
0156	643.1050	Traffic Control Signs PCMS	DAY	35.000	35.000
0158	643.3105	Temporary Marking Line Paint 4-Inch	LF	18,700.000	18,700.000
0160	643.5000	Traffic Control	EACH	1.000	1.000
0162	645.0105	Geotextile Type C	SY	431.000	431.000
0164	645.0120	Geotextile Type HR	SY	121.000	121.000
0166	646.1020	Marking Line Epoxy 4-Inch	LF	18,817.000	18,817.000
0168	646.1040	Marking Line Grooved Wet Ref Epoxy 4-Inch	LF	32,665.000	32,665.000
0170	646.3020	Marking Line Epoxy 8-Inch	LF	1,612.000	1,612.000
0172	646.5020	Marking Arrow Epoxy	EACH	19.000	19.000
0174	646.5120	Marking Word Epoxy	EACH	5.000	5.000
0176	646.6120	Marking Stop Line Epoxy 18-Inch	LF	274.000	274.000
0178	646.7120	Marking Diagonal Epoxy 12-Inch	LF	222.000	222.000
0180	648.0100	Locating No-Passing Zones	MI	2.920	2.920
0182	650.4500	Construction Staking Subgrade	LF	200.000	200.000
0184	650.5000	Construction Staking Base	LF	200.000	200.000
0186	650.6501	Construction Staking Structure Layout (structure) 01. C-30-062	EACH	1.000	1.000
0188	650.8000	Construction Staking Resurfacing Reference	LF	17,609.000	17,609.000
0190	650.9911	Construction Staking Supplemental Control (project) 01. 3240-16-70	EACH	1.000	1.000
0192	650.9920	Construction Staking Slope Stakes	LF	1,130.000	1,130.000
0194	690.0150	Sawing Asphalt	LF	80.000	80.000
0196	715.0502	Incentive Strength Concrete Structures 01. C-30-0062	DOL	1,650.000	1,650.000

3240-16-70

Line	Item	Item Description	Unit	Total	Qty
0198	740.0440	Incentive IRI Ride	DOL	11,056.000	11,056.000
0200	999.2000.S	Installing and Maintaining Bird Deterrent System (station) 01. 250+45	EACH	1.000	1.000
0202	ASP.1T0A	On-the-Job Training Apprentice at $5.00/HR	HRS	3,000.000	3,000.000
0204	ASP.1T0G	On-the-Job Training Graduate at $5.00/HR	HRS	2,000.000	2,000.000
0206	SPV.0035	Special 01. STREAMBED MATERIAL	CY	170.000	170.000
0208	SPV.0035	Special 02. BACKFILL SLURRY	CY	5.000	5.000
0210	SPV.0055	Special 01. INCENTIVE DENSITY PWL HMA PAVEMENT	DOL	10,907.000	10,907.000
0212	SPV.0055	Special 02. INCENTIVE AIR VOIDS HMA PAVEMENT	DOL	13,216.000	13,216.000
0214	SPV.0055	Special 03. INCENTIVE DENSITY HMA PAVEMENT LONGITUDINAL JOINTS	DOL	8,810.000	8,810.000
0216	SPV.0060	Special 01. TEMPORARY DIVERSION DEVICE	EACH	1.000	1.000
0218	SPV.0060	Special 02. SECTION CORNER MONUMENTS SPECIAL	EACH	1.000	1.000
0220	SPV.0090	Special 01. COIR LOGS	LF	242.000	242.000
0222	SPV.0195	Special 01. ASPHALTIC REPAIR SPECIAL	TON	543.000	543.000

3

CLEARING AND GRUBBING

CATEGORY	ROADWAY	STATION	TO	STATION	OFFSET	201.0105 CLEARING STA	201.0120 CLEARING ID	201.0205 GRUBBING STA	201.0220 GRUBBING ID	COMMENTS
0010	STH 32	152+16	-	152+16	RT	-	36	-	36	-
	STH 32	247+50	-	251+50	LT/RT	4	-	4	-	TREE CUTTING TO BE COMPLETED BY OTHERS (SEE SPECIAL PROVISIONS)
	BARNES CREEK	0+50	-	1+50	LT/RT	1	-	1	-	TREE CUTTING TO BE COMPLETED BY OTHERS (SEE SPECIAL PROVISIONS)
	BARNES CREEK	3+25	-	4+25	LT/RT	1	-	1	-	TREE CUTTING TO BE COMPLETED BY OTHERS (SEE SPECIAL PROVISIONS)
				PROJECT TOTALS		6	36	6	36	

3

REMOVING PAVEMENT BUTT JOINTS

CATEGORY	ROADWAY	STATION	TO	STATION	OFFSET	204.0115 REMOVING ASPHALTIC SURFACE BUTT JOINTS SY
0010	STH 32	100+49		194+00	LT/RT	1761
		214+00		266+43	LT/RT	1161
	STH 165	144+75		153+15	LT/RT	758
		173+75		195+50	LT/RT	1198
				PROJECT TOTALS		4878

REMOVING PAVEMENT

CATEGORY	ROADWAY	STATION	TO	STATION	OFFSET	204.0120 REMOVING ASPHALTIC SURFACE MILLING SY	690.0150 SAWING ASPHALT LF
0010	STH 32	100+49	-	194+00	LT/RT	42065	--
	STH 32	214+00	-	266+43	LT/RT	23730	80
	STH 165	144+75	-	153+15	LT/RT	4153	
	STH 165	173+75	-	195+50	LT/RT	7823	
				PROJECT TOTALS		77771	80

REMOVING GUARDRAIL

CATEGORY	ROADWAY	STATION	TO	STATION	OFFSET	204.0165 REMOVING GUARDRAIL LF	SPV.0035.02 BACKFILL SLURRY CY
0010	STH 32	179+30	-	180+43	LT	117	1
0010	STH 32	179+65	-	181+18	RT	153	1
0010	STH 32	247+83	-	251+75	RT	392	3
				PROJECT TOTALS		662	5

REMOVING WATER MAIN

CATEGORY	STAGE	ROADWAY	STATION	TO	STATION	OFFSET	204.9090.S REMOVING EXISTING WATER MAIN PIPE LF
0010	2	STH 32	249+50	-	250+90	LT/RT	280
		STH 32	249+92	-	251+05	LT/RT	113
					PROJECT TOTALS		393

3

BORROW

CATEGORY	ROADWAY	STATION	TO	STATION	OFFSET	205.0100 EXCAVATION COMMON CY	FILL CY	208.0100 BORROW CY	208.1100 SELECT BORROW CY
0010	STH 32	247+25	-	249+25	RT	2	3	1	--
		249+25	-	251+25	-	--	--	--	6320
		251+25	-	251+75	RT	1	2	2	--
	BARNES CREEK STREAMBED EAST				LT	5	4	--	--
	BARNES CREEK STREAMBED WEST				RT	8	6	--	--
				PROJECT TOTALS		16		3	6320

PREPARE FOUNDATION FOR ASPHALTIC PAVING

CATEGORY	ROADWAY	STATION	TO	STATION	211.0101 PREPARE FOUNDATION FOR ASPHALTIC PAVING 3240-16-70 EACH
0010	STH 32	249+50		251+50	1
				PROJECT TOTALS	1

3

FINISHING ROADWAY

ROADWAY	213.0100 FINISHING ROADWAY 3240-16-70 EACH
PROJECT 3240-16-70	1
PROJECT 3240-16-70 TOTAL	1

BASE AGGREGATE ITEMS

CATEGORY	ROADWAY	STATION	TO	STATION	OFFSET	305.0110 BASE AGGREGATE DENSE 3/4-INCH TON	305.0120 BASE AGGREGATE DENSE 1 1/4-INCH TON	305.0500 SHAPING SHOULDERS STA
0010	STH 32	101+28	-	109+32	RT	5	--	8
		109+60	-	152+78	RT	24	--	43
		154+45	-	157+76	RT	4	--	3
		159+05	-	175+34	RT	19	--	16
		177+18	-	194+00	RT	32	--	17
		214+00	-	218+33	RT	6	--	4
		219+72	-	238+06	RT	32	--	18
		239+34	-	254+40	RT	29	--	15
		256+35	-	263+22	RT	4	--	7
		264+90	-	266+43	RT	3	--	2
		103+39	-	151+27	LT	26	--	48
		153+94	-	168+53	LT	24	--	15
		170+16	-	194+00	LT	33	--	24
		214+00	-	235+26	LT	40	--	21
		235+59	-	266+43	LT	22	--	31
	Barnes Creek Culvert	249+25	-	251+25	LT/RT	--	590	--
	STH 165	144+75		153+15	LT/RT	2	--	17
	STH 165	173+75		195+50	LT/RT	10	--	44
				PROJECT TOTALS		313	590	332

3

ASPHALTIC PAVEMENT

CATEGORY	ROADWAY	STATION	TO	STATION	OFFSET	TACK COAT GAL (455.0605)	HMA PAVEMENT 4 LT 58-28 S TON (460.5224)	ASPHALTIC REPAIR SPECIAL TON (SPV.0195.01)
0010	STH 32 BINDER	100+49		194+00	LT/RT	2078	3065	350
	STH 32 SURFACE	100+49		194+00	LT/RT	3020	4455	--
	STH 32 BINDER	214+00		249+25	LT/RT	765	1128	129
	STH 32 SURFACE	214+00		249+25	LT/RT	1012	1492	--
	STH 32 LOWER	249+25		251+25		55	138	--
	STH 32 MIDDLE	249+25		251+25		55	104	--
	STH 32 UPPER	249+25		251+25		55	81	--
	STH 32 BINDER	251+25		266+43	LT/RT	378	558	64
	STH 32 SURFACE	251+25		266+43	LT/RT	529	780	--
	STH 165 SURFACE	144+75		153+15	LT/RT	291	491	--
	STH 165 SURFACE	173+75		195+50	LT/RT	548	924	--
				PROJECT TOTALS		8786	13216	543

ASPHALTIC PAVEMENT TESTING

CATEGORY	ROADWAY	460.0105.S HMA PERCENT WITHIN LIMITS (PWL) TEST STRIP VOLUMETRICS EACH	460.0110.S HMA PERCENT WITHIN LIMITS (PWL) TEST STRIP DENSITY EACH
0010	STH 32	1	1
		--	--
		1	1

3

MOBILIZATION

ROADWAY	619.1000 MOBILIZATION 3240-16-70 EACH
PROJECT 3240-16-70	1
PROJECT 3240-16-70 TOTAL	1

BEAM GUARD

CATEGORY	ROADWAY	STATION	TO	STATION	OFFSET	BEAM GUARD 614.2300 MGS GUARDRAIL 3 LF	614.2330 MGS GUARDRAIL 3K LF	614.0010 BARRIER SYSTEM GRADING SHAPING FINISHING EACH	614.2610 MGS GUARDRAIL TERMINAL EAT EACH	614.0397 GUARDRAIL MOW STRIP EMULSIFIED ASPHALT SY
0010	STH 32	179+51		180+26	LT	75	--	1	2	15
		179+90		180+65	RT	75	--	1	2	15
	Barnes Creek Culvert	248+10		251+21	RT	--	313	-	2	61
				PROJECT TOTALS		150	313	2	6	91

BARRIER SYSTEM GRADING SHAPING FINISHING (*ITEMS AND QUANTITIES LISTED FOR INFORMATION ONLY)

CATEGORY	ROADWAY	STATION	TO	STATION	OFFSET	EXCAVATION COMMON* CY	BORROW* CY	TOPSOIL* SY	EROSION MAT CLASS II TYPE C* CWT	SEEDING MIXTURE NO. 60* LB	SEED WATER* MGAL
0010	STH 32	179+51		180+26	LT	1	--	8	4	1	1
		179+90		180+65	RT	1	1	24	42	1	1
				PROJECT TOTALS		2	1	32	46	2	2

The following acceptance criteria are applicable for this project:

LOCATION	STATION	MIXTURE USE	UNDERLYING SURFACE	BID TIEM	TONS	THICKNESS	QMP TO BE USED FOR: MIXTURE ACCEPTANCE	QMP TO BE USED FOR: DENSITY ACCEPTANCE
12 FOOT DRIVING LANE	100+49 TO 150+22, 235+56 TO 249+25, 251+25 TO 257+80	LOWER LAYER	MILLED EXISTING HMA SURFACE	HMA PAVEMENT 4 LT 58-28 S	1992	1-3/4"	Incentive Air Voids HMA Pavement SPV.0055.02	Incentive Density PWL HMA Pavement, Item SPV.0055.01
12 FOOT DRIVING LANE	100+49 TO 150+22, 235+56 TO 249+25, 251+25 TO 257+80	UPPER LAYER	HMA PAVEMENT 4 LT 58-28 S	HMA PAVEMENT 4 LT 58-28 S	1992	1-3/4"	Incentive Air Voids HMA Pavement SPV.0055.02	Incentive Density PWL HMA Pavement, Item SPV.0055.01
8 FOOT SHOULDER	100+49 TO 150+22, 235+56 TO 249+25, 251+25 TO 257+80	UPPER LAYER	MILLED EXISTING HMA SURFACE	HMA PAVEMENT 4 LT 58-28 S	1509	1-3/4"	Incentive Air Voids HMA Pavement SPV.0055.02	Acceptance testing by Department, not eligible for incentive or disincentive
12 FOOT DRIVING LANE	150+22 TO 235+56, 257+80 TO 266+43	LOWER LAYER	MILLED EXISTING HMA SURFACE	HMA PAVEMENT 4 LT 58-28 S	2759	1-3/4"	Incentive Air Voids HMA Pavement SPV.0055.02	Incentive Density PWL HMA Pavement, Item SPV.0055.01
12 FOOT DRIVING LANE	150+22 TO 235+56, 257+80 TO 266+43	UPPER LAYER	HMA PAVEMENT 4 LT 58-28 S	HMA PAVEMENT 4 LT 58-28 S	2759	1-3/4"	Incentive Air Voids HMA Pavement SPV.0055.02	Incentive Density PWL HMA Pavement, Item SPV.0055.01
3 FOOT SHOULDER	150+22 TO 235+56, 257+80 TO 266+43	UPPER LAYER	MILLED EXISTING HMA SURFACE	HMA PAVEMENT 4 LT 58-28 S	467	1-3/4"	Incentive Air Voids HMA Pavement SPV.0055.02	Acceptance testing by Department, not eligible for incentive or disincentive
12 FOOT DRIVING LANE	249+25 TO 251+25	LOWER LAYER	BASE AGGREGATE DENSE 1-1/4"	HMA PAVEMENT 4 LT 58-28 S	95	3"	Incentive Air Voids HMA Pavement SPV.0055.02	Incentive Density PWL HMA Pavement, Item SPV.0055.01
12 FOOT DRIVING LANE	249+25 TO 251+25	MIDDLE LAYER	HMA PAVEMENT 4 LT 58-28 S	HMA PAVEMENT 4 LT 58-28 S	71	2-1/4"	Incentive Air Voids HMA Pavement SPV.0055.02	Incentive Density PWL HMA Pavement, Item SPV.0055.01
12 FOOT DRIVING LANE	249+25 TO 251+25	UPPER LAYER	HMA PAVEMENT 3 LT 58-28 S	HMA PAVEMENT 4 LT 58-28 S	56	1-3/4"	Incentive Air Voids HMA Pavement SPV.0055.02	Incentive Density PWL HMA Pavement, Item SPV.0055.01
8 FOOT SHOULDER	249+25 TO 251+25	LOWER LAYER	BASE AGGREGATE DENSE 1-1/4"	HMA PAVEMENT 4 LT 58-28 S	44	3"	Incentive Air Voids HMA Pavement SPV.0055.02	Acceptance testing by Department, not eligible for incentive or disincentive
8 FOOT SHOULDER	249+25 TO 251+25	MIDDLE LAYER	HMA PAVEMENT 4 LT 58-28 S	HMA PAVEMENT 4 LT 58-28 S	32	2-1/4"	Incentive Air Voids HMA Pavement SPV.0055.02	Acceptance testing by Department, not eligible for incentive or disincentive
8 FOOT SHOULDER	249+25 TO 251+25	UPPER LAYER	HMA PAVEMENT 4 LT 58-28 S	HMA PAVEMENT 4 LT 58-28 S	25	1-3/4"	Incentive Air Voids HMA Pavement SPV.0055.02	Acceptance testing by Department, not eligible for incentive or disincentive
11 FOOT DRIVING LANE	STH 165	UPPER LAYER	MILLED EXISTING HMA SURFACE	HMA PAVEMENT 4 LT 58-28 S	1183	2"	Incentive Air Voids HMA Pavement SPV.0055.02	Incentive Density PWL HMA Pavement, Item SPV.0055.01
3 FOOT SHOULDER	STH 165	UPPER LAYER	MILLED EXISTING HMA SURFACE	HMA PAVEMENT 4 LT 58-28 S	232	2"	Incentive Air Voids HMA Pavement SPV.0055.02	Acceptance testing by Department, not eligible for incentive or disincentive

3

EROSION CONTROL

CATEGORY	ROADWAY	STATION	TO	STATION	OFFSET	628.1504 SILT FENCE LF	628.1520 SILT FENCE MAINTENANCE LF	628.1530.S SILT FENCE HEAVY DUTY LF	628.1535.S SILT FENCE HEAVY DUTY MAINTENANCE LF	628.1905 MOBILIZATIONS EROSION CONTROL EACH	628.1910 MOBILIZATIONS EMERGENCY EROSION CONTROL EACH	628.7010 INLET PROTECTION TYPE B EACH	628.7504 TEMPORARY DITCH CHECKS LF	628.7570 ROCK BAGS EACH	630.0200 SEEDING TEMPORARY LB	SPV.0060.01 TEMPORARY DIVERSION DEVICE EACH
	STH 32	100+40		154+00	LT/RT	--	--	--	--	--	--	3	--	--	--	--
0010		179+51		180+26	LT	151	151	--	--	1	1	--	--	10	--	--
		179+90		180+65	RT	162	162	--	--	--	--	--	--	--	--	--
	Barnes Creek Culvert	248+10		251+21	LT	--	--	347	347	1	3	--	15	6	47	1
		248+10		251+21	RT	210	210	378	378	--	--	--	24	6	--	--
				PROJECT TOTALS		523	523	725	725	2	4	3	39	22	47	1

3

EROSION CONTROL RESTORATION

CATEGORY	ROADWAY	STATION	TO	STATION	OFFSET	625.0100 TOPSOIL SY	625.0500 SALVAGED TOPSOIL SY	628.2027 EROSION MAT CLASS II TYPE C SY	630.0160 SEEDING MIXTURE NO. 60 LB	630.0500 SEED WATER MGAL	606.0100 RIPRAP LIGHT CY	606.0300 RIPRAP HEAVY CY	645.0120 GEOTEXTILE TYPE HR SY	SPV.0035.01 STREAMBED MATERIAL CY	SPV.0090.01 COIR LOGS LF
0010	Barnes Creek Culvert	248+10		251+21	LT	804	250	1094	14	18	--	59	42	55	113
		248+10		251+21	RT	1698	530	2262	31	38	--	81	79	69	129
	Inside C-30-0062	250+50			--	--	--	--	--	--	117	8	--	47	--
				PROJECT TOTALS		2502	780	3356	45	56	117	147	121	170	242

PLANTING

SHRUBS
632.0201

COMMON NAME	SCIENTIFIC NAME	AVG. MATURE HEIGHT	MINIMUM SIZE POT SIZE (GAL)	MINIMUM SIZE PLANT HOLE DIAM.	MINIMUM SIZE PLANT HOLE DEPTH	RODENT PROTECT REQ'D	NUMBER OF PLANTS
RED TWIG DOGWOOD	CORNUS SERICEA	9'	2	18"	12"	YES	31
GRAY DOGWOOD	CORNUS RACEMOSA	7'	2	18"	12"	YES	32
COMMON BUTTONBUSH	CEPHALANTHUS OCCIDENTALIS	9'	2	18"	12"	YES	32

PLANT CARE CYCLE

632.9101
LANDSCAPE PLANTING
SURVEILANCE AND CARE
CYCLES

ROADWAY	EACH
STH 32	6
	--
TOTAL	6

3

TRAFFIC CONTROL ITEMS

CATEGORY	ROADWAY	STATION	TO	STATION	EST. SERVICE PERIOD (DAYS)	TRAFFIC CONTROL DRUMS (EACH)	643.0300 TRAFFIC CONTROL DRUMS (DAY)	TRAFFIC CONTROL BARRICADES TYPE III (EACH)	643.0420 TRAFFIC CONTROL BARRICADES TYPE III (DAY)	TRAFFIC CONTROL WARNING LIGHTS TYPE A (EACH)	643.0705 TRAFFIC CONTROL WARNING LIGHTS TYPE A (DAY)	TRAFFIC CONTROL WARNING LIGHTS TYPE C (EACH)	643.0715 TRAFFIC CONTROL WARNING LIGHTS TYPE C (DAY)	TRAFFIC CONTROL ARROW BOARDS (EACH)	643.0800 TRAFFIC CONTROL ARROW BOARDS (DAY)
0010	STH 32	100+49		194+00	45	24	1080	--	--	--	--	--	--	--	--
	STH 32	214+00		266+43	92	20	1840	49	4508	55	5060	10	920	1	92
	STH 165				5	--	--	--	--	--	--	---	--	--	--
	TOTAL				142		2920		4508		5060		920		92

TRAFFIC CONTROL SIGNS

CATEGORY	ROADWAY	STATION	TO	STATION	TRAFFIC CONTROL SIGNS (EACH)	643.0900 TRAFFIC CONTROL SIGNS (DAY)	TRAFFIC CONTROL COVERING SIGNS TYPE II (CYCLES)	643.0920 TRAFFIC CONTROL COVERING SIGNS TYPE II EACH	643.1000 TRAFFIC CONTROL SIGNS FIXED MESSAGE (SF)	637.0620 SIGN FLAGS PERMANENT TYPE II EACH	TRAFFIC CONTROL SIGNS PCMS (EACH)	643.1050 TRAFFIC CONTROL SIGNS PCMS (DAY)	643.5000 TRAFFIC CONTROL (EACH)
0010	STH 32	100+49		194+00	32	1440	--	--	--	--	--	--	1
	STH 32	214+00		266+43	245	22540	1	5	65	2	3	21	--
	STH 165				18	90	--	--	--	--	2	14	--
	TOTAL					24070		5	65	2	5	35	1

FIELD OFFICE

CATEGORY	ROADWAY	642.5001 FIELD OFFICE TYPE B EACH
0010	STH 32	1
		1

MARKERS

CATEGORY	ROADWAY	STATION	633.5100 MARKERS ROW EACH	633.5200 MARKERS CULVERT END EACH
0010	STH 32	180+00	--	2
		251+50	10	2
			10	4

3

PAVEMENT MARKING ITEMS

CATEGORY	ROADWAY	STATION	TO	STATION	O/S	646.0120 MARKING LINE EPOXY 4-INCH YELLOW LF	646.0120 MARKING LINE EPOXY 4-INCH WHITE LF	646.1040 MARKING LINE GROOVED WET REF EPOXY 4-INCH YELLOW LF	646.1040 MARKING LINE GROOVED WET REF EPOXY 4-INCH WHITE LF	646.3020 MARKING LINE EPOXY 8-INCH WHITE LF	646.5020 MARKING ARROW EPOXY EACH	646.5120 MARKING WORD EPOXY EACH	646.6120 MARKING STOP LINE EPOXY 18-INCH LF	646.7120 MARKING DIAGONAL EPOXY 12-INCH YELLOW LF	643.3105 TEMPORARY MARKING LINE PAINT 4-INCH YELLOW LF
0010	STH 32	100+49		194+00	LT/RT	6115	127	--	17879	684	10	2	174	--	18700
		194+00		266+43	LT/RT	6955	146	--	10090	400	6	1	100	--	--
	STH 165					5474	--	--	4696	528	3	2	--	222	--
		PROJECT TOTALS				18817		32665		1612	19	5	274	222	18700

LOCATING NO-PASSING ZONES

CATEGORY	STAGE	ROADWAY	STATION	TO	STATION	648.0100 LOCATING NO-PASSING ZONES MI
0010	1	STH 32	100+49		194+00	1.77
	2	STH 32	214+00		266+43	0.99
	1	STH 165	144+75		153+15	0.16
	1	STH 165	173+75		195+50	0.41
					PROJECT TOTALS	2.92

CONSTRUCTION STAKING

CATEGORY	ROADWAY	STATION	TO	STATION	OFFSET	650.4500 CONSTRUCTION STAKING SUBGRADE LF	650.5000 CONSTRUCTION STAKING BASE LF	650.6501 CONSTRUCTION STAKING STRUCTURE LAYOUT(C-30-062) EACH	650.8000 CONSTRUCTION STAKING RESURFACING REFERENCE LF	650.9911 CONSTRUCTION STAKING SUPPLEMENTAL CONTROL (3240-16-70) EACH	650.9920 CONSTRUCTION STAKING SLOPE STAKES LF
0010	STH 32	179+51		180+26	LT	--	--	--	9351	--	32
		179+90		180+65	RT	--	--	--	--	--	87
	Barnes Creek Culvert	248+10		251+21	LT	200	200	1	5243	1	379
		248+10		251+21	RT	--	--	--	--	--	632
	STH 165					--	--	--	3015	--	--
				PROJECT TOTALS		200	200	1	17609	1	1130

3

MAINTENANCE AND REPAIR OF HAUL ROADS

ROADWAY	618.0100 MAINTENANCE AND REPAIR OF HAUL ROADS 3240-16-70 EACH
PROJECT 3240-16-70	1
PROJECT 3240-16-70 TOTAL	1

BIRD DETERRENT

CATEGORY	ROADWAY	STATION	999.2000.S INSTALLING AND MAINTAINING BIRD DETERRENT SYSTEM (STA 250+45) EACH
0010	STH 32	251+00	1
			1

3

SECTION CORNER

CATEGORY	ROADWAY	STATION	SPV.0060.02 SECTION CORNER MONUMENTS SPECIAL EACH
0010	STH 32	260+93	1
			1

CPM PROGRESS SCHEDULE

CATEGORY	ROADWAY	108.4400 CPM PROGRESS SCHEDULE EACH
0010	STH 32	1
		1

3

SIGN NO.	SIGN CODE & SIZE	SIGN MESSAGE	TYPE II SIGN SIZE W [IN.]	x	H [IN.]	637.2210 SIGNS TYPE II REFLC H [SF]	637.2220 SIGNS TYPE II REFLC SH [SF]	637.2230 SIGNS TYPE II REFLC F [SF]	638.2602 REMOVING SIGNS TYPE II [EA]	638.3000 REMOVING SMALL SIGN SUPPORTS [EA]	634.0618 POSTS WOOD 4"X 6"X18' [EA]	638.2102 MOVING SIGNS TYPE II [EA]	MOUNT ON SAME POST AS SIGN #	REMARKS / NEW SIGN LOCATION
1	W14-3 (2S)	--								--	1	1	--	MOVE IF NECESSARY
2	W14-3 (2S)	--							--	--	1	1	--	MOVE IF NECESSARY / SHT 3
3	W14-3 (2S)	--							--	--	1	1	--	MOVE IF NECESSARY / SHT 4
4	R2-1(2S)	SPEED LIMIT 45	24	x	30	5.000			1	1	1	--	--	SHT 6
5	R7-1D (2S)	--	18	x	24	3.000			1	1	1	--	--	SHT 6
6	W14-3 (2S)	--							--	--	1	1	--	MOVE IF NECESSARY / SHT 7
7	W14-3 (2S)	--							--	--	1	1	--	MOVE IF NECESSARY / SHT 7
8	W14-3 (2S)	--							--	--	1	1	--	MOVE IF NECESSARY / SHT10
9	W1-6(2S)		48	x	24			8.000	1	1	1			SHT 11
10	D5-64R(2S)	--	60	x	36	15.000			1	1	1	--	--	SHT11
11	R2-1(2S)	SPEED LIMIT 45	24	x	30	5.000			1	1	1	--	--	SHT 11
12	W1-6(2S)		48	x	24			8.000	1	1	1	--	--	SHT 11
13	W4-4C(2S)	32	24	x	12			2.000	--	--	--	--	--	MOUNT BELOW EXIST STOP / SHT 4
14	W4-4C(2S)	32	24	x	12			2.000	--	--	--	--	--	MOUNT BELOW EXIST STOP / SHT 4
15	W2-2(2S)		30	x	30			6.250	--	--	--	--	--	SHT 9
		UNDISTRIBUTED				20.000	20.000	20.000	3	20	20	20		
	TOTALS					48.000	20.000	46.250	9	26	32	26		

STATE OF WISCONSIN
DEPARTMENT OF TRANSPORTATION
TRANSPORTATION PROJECT PLAT TITLE SHEET
3240-16-20
SHERIDAN ROAD - VIL PLEASANT PRAIRIE
ILLINOIS STATE LINE TO 91ST STREET
STH 32
KENOSHA COUNTY

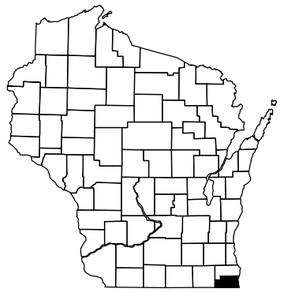

CONVENTIONAL SYMBOLS

SECTION LINE
QUARTER LINE
SIXTEENTH LINE
NEW REFERENCE LINE
NEW R/W LINE
EXISTING R/W OR HE LINE
PROPERTY LINE
LOT, TIE & OTHER MINOR LINES
SLOPE INTERCEPT
CORPORATE LIMITS
UNDERGROUND FACILITY (COMMUNICATIONS, ELECTRIC, ETC)
NEW R/W (FEE OR HE) (HATCHING VARIES BY OWNER)
TEMPORARY LIMITED EASEMENT AREA
EASEMENT AREA (PERMANENT LIMITED OR RESTRICTED DEVELOPMENT)
TRANSMISSION STRUCTURES
BUILDING
TO BE REMOVED
BRIDGE
CULVERT

SECTION CORNER SYMBOL
SECTION CORNER MONUMENT
GEODETIC SURVEY MONUMENT
SIXTEENTH CORNER MONUMENT
SIGN
OFF-PREMISE SIGN
R/W MONUMENT (TO BE SET)
NON-MONUMENTED R/W POINT
FOUND IRON PIN (1-INCH UNLESS NOTED)

	COMPENSABLE	NON-COMPENSABLE
ELECTRIC POLE		
TELEPHONE POLE		
PEDESTAL (LABEL TYPE) (TV, TEL, ELEC, ETC.)		

ACCESS RESTRICTED BY ACQUISITION
NO ACCESS (BY STATUTORY AUTHORITY)
ACCESS RESTRICTED (BY PREVIOUS PROJECT OR CONTROL)
NO ACCESS (NEW HIGHWAY)
PARCEL NUMBER
UTILITY NUMBER
PARALLEL OFFSETS

CONVENTIONAL ABBREVIATIONS

ACCESS RIGHTS	AR	POINT OF INTERSECTION	PI
ACRES	AC	PROPERTY LINE	PL
AHEAD	AH	RECORDED AS	(100')
ALUMINUM	ALUM	REEL / IMAGE	R/I
AND OTHERS	ET AL	REFERENCE LINE	R/L
BACK	BK	REMAINING	REM
BLOCK	BLK	RESTRICTIVE DEVELOPMENT EASEMENT	RDE
CENTERLINE	C/L	RIGHT	RT
CERTIFIED SURVEY MAP	CSM	RIGHT OF WAY	R/W
CONCRETE	CONC	SECTION	SEC
COUNTY	CO	SEPTIC VENT	SEPV
COUNTY TRUNK HIGHWAY	CTH	SQUARE FEET	SF
DISTANCE	DIST	STATE TRUNK HIGHWAY	STH
CORNER	COR	STATION	STA
DOCUMENT NUMBER	DOC	TELEPHONE PEDESTAL	TP
EASEMENT	EASE	TEMPORARY LIMITED EASEMENT	TLE
EXISTING	EX	TRANSPORTATION PROJECT PLAT	TPP
GAS VALVE	GV	UNITED STATES HIGHWAY	USH
GRID NORTH	GN	VOLUME	V
HIGHWAY EASEMENT	HE		
IDENTIFICATION	ID		
LAND CONTRACT	LC		
LEFT	LT		
MONUMENT	MON		
NATIONAL GEODETIC SURVEY	NGS		
NUMBER	NO		
OUTLOT	OL		
PAGE	P		
POINT OF TANGENCY	PT		
PERMANENT LIMITED EASEMENT	PLE		
POINT OF BEGINNING	POB		
POINT OF CURVATURE	PC		
POINT OF COMPOUND CURVE	PCC		

CURVE DATA

LONG CHORD	LCH
LONG CHORD BEARING	LCB
RADIUS	R
DEGREE OF CURVE	D
CENTRAL ANGLE	Δ/DELTA
LENGTH OF CURVE	L
TANGENT	T
DIRECTION AHEAD	DA
DIRECTION BACK	DB

CONVENTIONAL UTILITY SYMBOLS

W	WATER
G	GAS
T	TELEPHONE
OH	OVERHEAD TRANSMISSION LINES
E	ELECTRIC
TV	CABLE TELEVISION
FO	FIBER OPTIC
SAN	SANITARY SEWER
SS	STORM SEWER

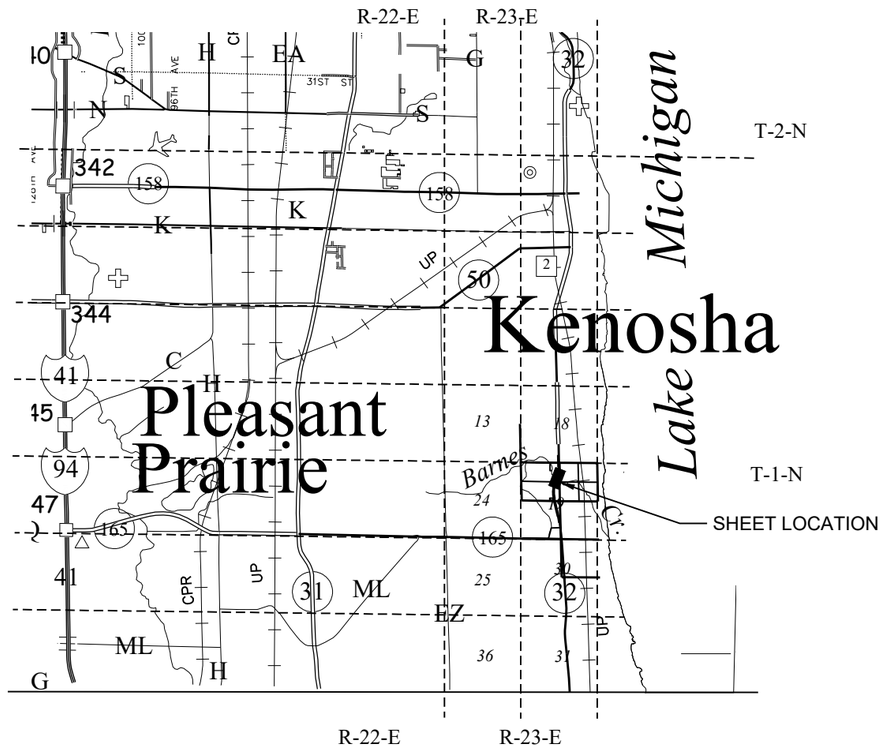

LAYOUT
SCALE 0 1.0 MI.

THE NOTES,CONVENTIONAL SIGNS, AND ABBREVIATIONS ARE ASSOCIATED WITH EACH TRANSPORTATION PROJECT PLAT FOR PROJECT 3240-16-20

NOTES:

POSITIONS SHOWN ON THIS PLAT ARE WISCONSIN COORDINATE REFERENCE SYSTEM (WISCRS), KENOSHA COUNTY, NAD83(2011), IN U.S. SURVEY FEET. VALUES SHOWN ARE GRID COORDINATES, GRID BEARINGS, AND GRID DISTANCES. GRID DISTANCES MAY BE USED AS GROUND DISTANCES.

ALL NEW RIGHT-OF-WAY MONUMENTS WILL BE TYPE 2 (TYPICALLY ¾" X 24" IRON REBARS), UNLESS OTHERWISE NOTED, AND WILL BE PLACED PRIOR TO THE COMPLETION OF THE PROJECT.

ALL RIGHT-OF-WAY LINES DEPICTED IN THE NON-ACQUISITION AREAS ARE INTENDED TO RE-ESTABLISH EXISTING RIGHT-OF-WAY LINES AS DETERMINED FROM PREVIOUS PROJECTS, OTHER RECORDED DOCUMENTS, OR FROM CENTERLINE OF EXISTING PAVEMENTS.

RIGHT-OF-WAY BOUNDARIES ARE DEFINED WITH COURSES OF THE PERIMETER OF THE HIGHWAY LANDS REFERENCED TO THE U.S. PUBLIC LAND SURVEY SYSTEM OR OTHER "SURVEYS" OF PUBLIC RECORD.

DIMENSIONING FOR THE NEW RIGHT-OF-WAY IS MEASURED ALONG AND PERPENDICULAR TO THE NEW REFERENCE LINES.

A TEMPORARY LIMITED EASEMENT (TLE) IS A RIGHT FOR CONSTRUCTION PURPOSES, AS DEFINED HEREIN, INCLUDING THE RIGHT TO OPERATE NECESSARY EQUIPMENT THEREON, THE RIGHT OF INGRESS AND EGRESS, AS LONG AS REQUIRED FOR SUCH PUBLIC PURPOSE, INCLUDING THE RIGHT TO PRESERVE, PROTECT, REMOVE, OR PLANT THEREON ANY VEGETATION THAT THE HIGHWAY AUTHORITIES MAY DEEM DESIRABLE. ALL (TLEs) ON THIS PLAT EXPIRE AT THE COMPLETION OF THE CONSTRUCTION PROJECT FOR WHICH THIS INSTRUMENT IS GIVEN.

PROPERTY LINES SHOWN ON THIS PLAT ARE DRAWN FROM DATA DERIVED FROM MAPS AND DOCUMENTS OF PUBLIC RECORD AND/OR EXISTING OCCUPATIONAL LINES. THIS PLAT MAY NOT BE A TRUE REPRESENTATION OF EXISTING PROPERTY LINES, EXCLUDING RIGHT-OF-WAY, AND SHOULD NOT BE USED AS A SUBSTITUTE FOR AN ACCURATE FIELD SURVEY.

FOR THE CURRENT ACCESS/DRIVEWAY INFORMATION, CONTACT THE PLANNING UNIT OF THE WISCONSIN DEPARTMENT OF TRANSPORTATION OFFICE IN WAUKESHA.

PARCEL IDENTIFICATION NUMBERS MAY NOT POINT TO ALL AREAS OF ACQUISITION, AS NOTED ON THE SCHEDULE OF LANDS & INTERESTS REQUIRED.

INFORMATION FOR THE BASIS OF EXISTING HIGHWAY RIGHT OF WAY POINTS OF REFERENCE AND ACCESS CONTROL ARE LISTED ON DETAIL SHEETS.

PROJECT NUMBER 3240-16-20 - 4. 01
SHEET 2 OF 2
AMENDMENT NO: 74

FILE NAME : T:\DESIGN\01 PROJECTS\WISDOT SE REGION\3240-16-00_STH_32_KENOSHA\04 RIGHT OF WAY\TPPS\3240-16-20 TPP-TITLE.DWG
LAYOUT NAME: 3240-16-20 TPP Title
PLOT DATE : 10/28/2021 11:15 AM PLOT BY : NICK FULTON PLOT NAME : _____ APPRAISAL PLAT DATE : 09/28/21

TRANSPORTATION PROJECT PLAT NO: 3240-16-20 - 4.01

THAT PART OF LOT A CAROL BEACH ESTATES UNIT 6 IN AND INCLUDING THAT PART OF THE NE 1/4 OF THE NW 1/4 AND THE NW 1/4 OF THE NE 1/4, ALL BEING LOCATED IN SECTION 19, T1N, R23E, VILLAGE OF PLEASANT PRAIRIE, KENOSHA COUNTY, WISCONSIN.

RELOCATION ORDER: STH 32, SHERIDAN ROAD - VIL PLEASANT PRAIRIE, (ILLINOIS STATE LINE TO 91ST STREET), KENOSHA COUNTY, WISCONSIN

TO PROPERLY ESTABLISH, LAY OUT, WIDEN, ENLARGE, EXTEND, CONSTRUCT, RECONSTRUCT, IMPROVE, OR MAINTAIN A PORTION OF THE HIGHWAY DESIGNATED ABOVE, THE STATE OF WISCONSIN DEPARTMENT OF TRANSPORTATION DEEMS IT NECESSARY TO RELOCATE OR CHANGE SAID HIGHWAY AND ACQUIRE CERTAIN LANDS AND INTERESTS OR RIGHTS IN LANDS FOR THE ABOVE PROJECT.

TO EFFECT THIS CHANGE, PURSUANT TO AUTHORITY GRANTED UNDER SECTION 84.02 (3), 84.09, AND 84.30, WISCONSIN STATUTES, THE DEPARTMENT OF TRANSPORTATION HEREBY ORDERS THAT:

1. THAT PORTION OF SAID HIGHWAY AS SHOWN ON THIS PLAT IS LAID OUT AND ESTABLISHED TO THE LINES AND WIDTHS AS SO SHOWN FOR THE ABOVE PROJECT.
2. THE LANDS OR INTERESTS OR RIGHTS IN LANDS AS SHOWN ON THIS PLAT ARE REQUIRED BY THE DEPARTMENT FOR THE ABOVE PROJECT AND SHALL BE ACQUIRED IN THE NAME OF THE STATE OF WISCONSIN, PURSUANT TO THE PROVISIONS OF SECTION 84.09 (1) OR (2), WISCONSIN STATUTES.

FOR THE CURRENT ACCESS/DRIVEWAY INFORMATION, CONTACT THE PLANNING UNIT OF THE WISCONSIN DEPARTMENT OF TRANSPORTATION OFFICE IN WAUKESHA.

POSITIONS SHOWN ON THIS PLAT ARE WISCONSIN COORDINATE REFERENCE SYSTEM (WISCRS), KENOSHA COUNTY, NAD83(2011) IN US SURVEY FEET. VALUES SHOWN ARE GRID COORDINATES, GRID BEARINGS, AND GRID DISTANCES,. GRID DISTANCES MAY BE USED AS GROUND DISTANCES.

ALL NEW RIGHT OF WAY MONUMENTS WILL BE TYPE 2 (TYPICALLY 3/4"X24" IRON REBARS) UNLESS OTHERWISE NOTED, AND WILL BE PLACED PRIOR TO THE COMPLETION OF THE PROJECT.

FOR ADDITIONAL INFORMATION REFER TO THE TITLE SHEET, RECORDED IN THE OFFICE OF REGISTER DEEDS, IN KENOSHA COUNTY, AS SHEET 2 OF 2 OF THIS DOCUMENT.

4

RW POINT	STATION	OFFSET	Y	X
100	249+69.00	75.11' LT	115533.197	628606.781
101	250+45.00	130.00' LT	115622.898	628584.064
102	251+10.00	115.00' LT	115674.523	628619.470
103	251+20.00	72.51' LT	115669.340	628662.702
104	251+00.00	85.26' RT	115597.526	628804.602
105	250+50.00	90.00' RT	115546.897	628790.579
106	250+41.00	120.00' RT	115527.039	628814.990
107	249+57.00	112.00' RT	115451.167	628775.379
108	249+50.00	85.00' RT	115454.924	628747.740
109	248+00.00	58.56' RT	115326.141	628666.414
110	247+47.75	56.60' RT	115278.529	628644.793
111	246+80.86	121.67' LT	115281.857	628453.930
112	247+28.22	139.12' LT	115334.647	628456.275
113	247+48.80	76.08' LT	115329.797	628522.415

TLE POINT	STATION	OFFSET
T1	250+50	165.00' LT
T2	251+00	165.00' LT
T3	250+25	180.00' RT
T4	249+75	190.00' RT

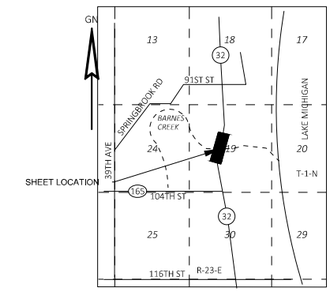

PROJECT LOCATION (NOT TO SCALE)

Document #: 1918681
Date: 2021-12-20 Time: 3:30 PM Pages: 2
Fee: $25.00 County: KENOSHA State: WI
REGISTER OF DEEDS: JOELLYN M. STORZ

Plat # 20185 Pg 1

RESERVED FOR REGISTER OF DEEDS
PROJECT NUMBER 3240-16-20 - 4.01
AMENDMENT NO:___
SHEET 1 OF 2

This is a copy.
The original is at the register of deeds office.

GN

SCALE, FEET 0 50 100

UTILITY INTERESTS REQUIRED

UTILITY NUMBER	OWNER(S)	PARCEL AFFECTED	INTEREST REQUIRED	EASEMENT AFFECTING
81	WE ENERGIES-ELECTRIC	1	RELEASE OF RIGHTS	DOC.#326967 V.348 P.276-277
81	WE ENERGIES-ELECTRIC	1	RELEASE OF RIGHTS	DOC.#739510 V.1195 P.559-561
82	VILLAGE OF PLEASANT PRAIRIE (SANITARY SEWER)	2	RELEASE OF RIGHTS	DOC.#800076 V.1310 P.87

HWY	BASIS OF EXISTING R/W	R/W WIDTH	YEAR
STH 32	R/W PROJECT T01-1(4)	VARIES	1955
STH 32	LOT A CAROL BEACH ESTATES UNIT 6	50'	1953
STH 32	CAROL BEACH ESTATES UNIT 6	50'	1953
STH 32	D.J. 2181	VARIES	1933
STH 32	DOC. 739510 V.1195 P.559-561	VARIES	1985

MONUMENT	STATION	OFFSET	TYPE
5021	247+48.80	76.08' LT	1 3/4 " IRON PIPE
5132	247+78.16	49.62' RT	1 " IRON PIPE
5133	252+30.93	86.63' RT	1 1/4 " IRON PIPE
5020	252+76.22	40.48' LT	3/4 " REBAR
5134	253+01.83	107.25' RT	1 1/4 " IRON PIPE

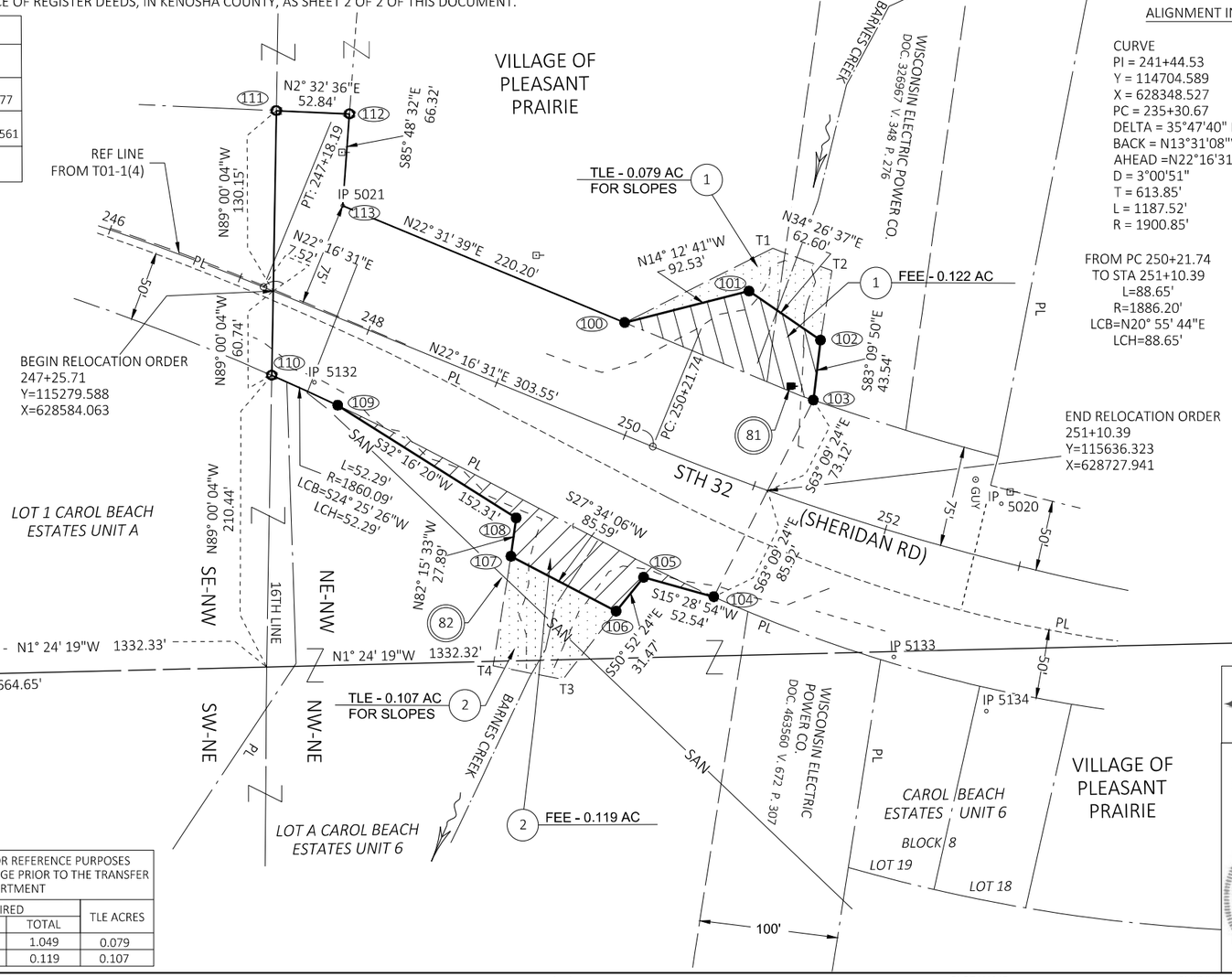

ALIGNMENT INFORMATION

CURVE	CURVE
PI = 241+44.53	PI = 254+18.85
Y = 114704.589	Y = 115921.004
X = 628348.527	X = 628846.805
PC = 235+30.67	PT = 258+04.53
DELTA = 35°47'40" RT	DELTA = 23°46'42" LT
BACK = N13°31'08"W	BACK = N22°16'31"E
AHEAD =N22°16'31"E	AHEAD =N01°30'11"W
D = 3°00'51"	D = 3°02'15"
T = 613.85'	T = 397.11'
L = 1187.52'	L = 782.79'
R = 1900.85'	R = 1886.20'
FROM PC 250+21.74	FROM STA 251+10.39
TO STA 251+10.39	TO PT 258+04.53
L=88.65'	L=694.14'
R=1886.20'	R=1886.20'
LCB=N20° 55' 44"E	LCB=N09° 02' 23"E
LCH=88.65'	LCH=690.23'

SCHEDULE OF LANDS & INTERESTS REQUIRED

OWNER'S NAMES ARE SHOWN FOR REFERENCE PURPOSES ONLY AND ARE SUBJECT TO CHANGE PRIOR TO THE TRANSFER OF LAND INTERESTS TO THE DEPARTMENT

PARCEL NUMBER	OWNER(S)	INTERESTS REQUIRED	R/W ACRES REQUIRED			TLE ACRES
			NEW	EXISTING	TOTAL	
1	MILLS HOLDINGS, LLC	FEE, TLE	0.122	0.927	1.049	0.079
2	ALAN R. & SUSAN L. JOHNSON	FEE, TLE	0.119	--	0.119	0.107

DAAR ENGINEERING, INC.
www.daarcorp.com
Milwaukee, WI 53202
414-225-9817

I,JEFFREY B. JOHNSON PROFESSIONAL LAND SURVEYOR, HEREBY CERTIFY THAT IN FULL COMPLIANCE WITH THE PROVISIONS OF SECTION 84.095 OF THE WISCONSIN STATUTES AND UNDER THE DIRECTION OF THE WI DEPT. OF TRANSPORTATION I HAVE SURVEYED AND MAPPED THIS TRANSPORTATION PROJECT PLAT AND SUCH PLAT CORRECTLY REPRESENTS ALL EXTERIOR BOUNDARIES OF THE SURVEYED LAND.

WISCONSIN JEFFREY B. JOHNSON S-1734 SPRING GREEN WI LAND SURVEYOR

SIGNATURE: Jeffrey B. Johnson 12-14-21 DATE: 12/14/21
PRINT NAME: JEFFREY B. JOHNSON
REGISTRATION NUMBER: S-1734

THIS PLAT AND RELOCATION ORDER ARE APPROVED FOR THE WISCONSIN DEPARTMENT OF TRANSPORTATION

SIGNATURE: Robert L. Duffeck DATE: 12/14/21
PRINT NAME: ROBERT L. DUFFECK

FILE NAME : T:\DESIGN\01 PROJECTS\WISDOT SE REGION\3240-16-00_STH_32_KENOSHA\04 RIGHT OF WAY\TPPS\3240-16-20 TPP-4.01.DWG
PLOT DATE : 12/14/2021 11:06 AM PLOT BY : NICK FULTON PLOT NAME : PLOT SCALE : 1 IN:100 FT
APPRAISAL PLAT DATE : 9/28/2021
CONSTRUCTION ID 3240-16-70 3240-16-20 4.01

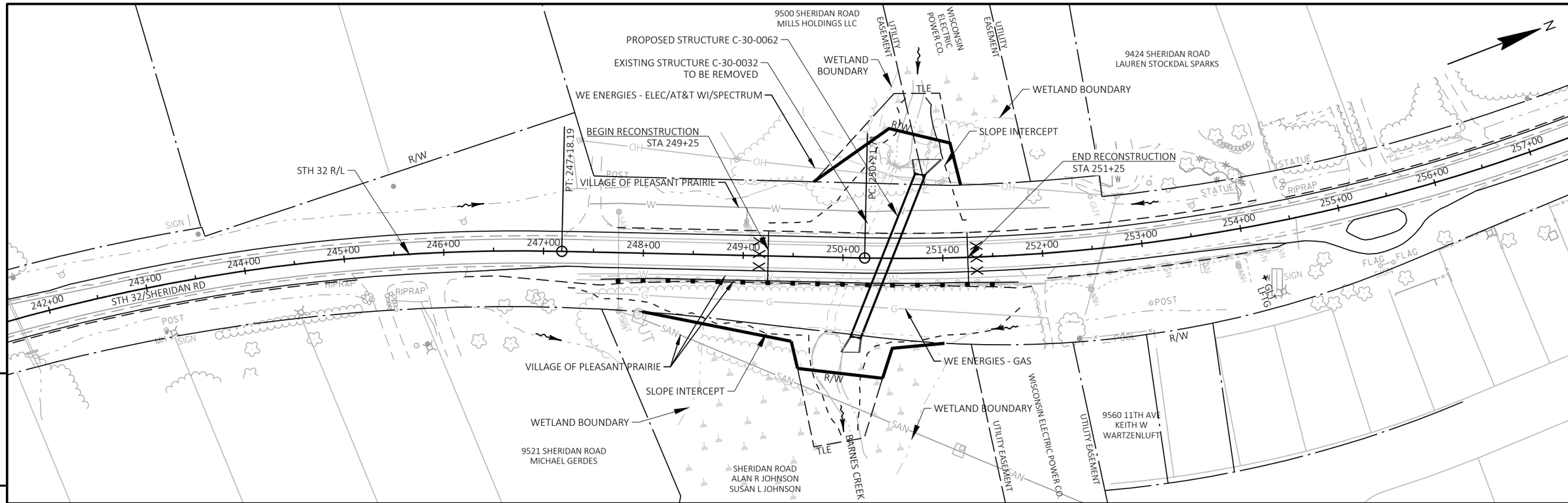

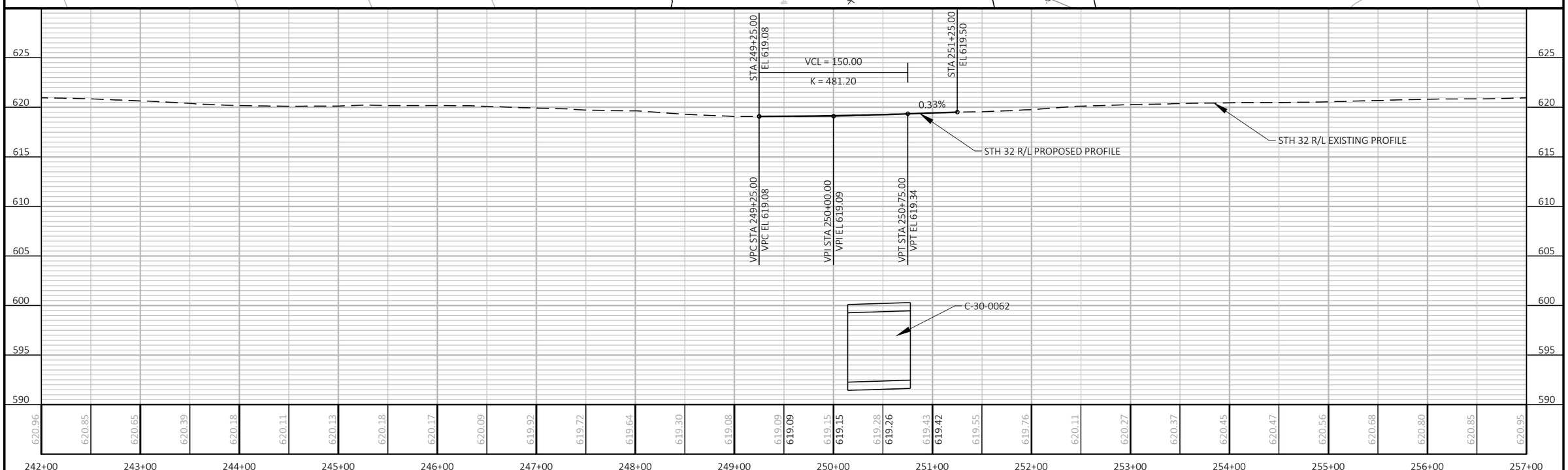

PROJECT NO: 3240-16-70	HWY: STH 32	COUNTY: KENOSHA	PLAN AND PROFILE: BARNES CREEK BOX CULVERT C-30-0062	SHEET 80	E

FILE NAME : L:\DESIGN PROJECTS\3240-16-00 STH 32\10. ROADWAY\CIVIL 3D\32401600\SHEETSPLAN\050101-PP.DWG
LAYOUT NAME - 050101-pp
PLOT DATE : 10/4/2022 9:18 PM
PLOT BY : REBECCA JONARDI
PLOT NAME :
PLOT SCALE : 1 IN:100 FT

Standard Detail Drawing List

08E08-03	TYPICAL INSTALLATIONS OF EROSION BALES / TEMPORARY DITCH CHECKS
08E09-06	SILT FENCE
08E10-02	INLET PROTECTION TYPE A, B, C AND D
12A03-10	NAME PLATE (STRUCTURES)
13C19-03	HMA LONGITUDINAL JOINTS
14A02-01	TREE PLANTING DETAIL
14B28-04A	GUARDRAIL MOW STRIP
14B28-04B	GUARDRAIL MOW STRIP
14B42-07A	MIDWEST GUARDRAIL SYSTEM (MGS) GUARDRAIL
14B42-07B	MIDWEST GUARDRAIL SYSTEM (MGS) GUARDRAIL
14B42-07C	MIDWEST GUARDRAIL SYSTEM (MGS) GUARDRAIL
14B42-07D	MIDWEST GUARDRAIL SYSTEM (MGS) GUARDRAIL
14B44-04A	MIDWEST GUARDRAIL SYSTEM ENERGY ABSORBING TERMINAL (MGS)
14B44-04B	MIDWEST GUARDRAIL SYSTEM ENERGY ABSORBING TERMINAL (MGS)
14B44-04C	MIDWEST GUARDRAIL SYSTEM ENERGY ABSORBING TERMINAL (MGS)
15A01-13A	MARKER POST FOR RIGHT-OF-WAY
15A01-13B	FLEXIBLE MARKER POST FOR RIGHT-OF-WAY
15A03-02A	FLEXIBLE MARKER POST FOR CULVERT END
15A03-02B	FLEXIBLE MARKER POST FOR CULVERT END
15C02-08A	BARRICADES AND SIGNS FOR MAINLINE CLOSURES
15C02-08B	BARRICADES AND SIGNS FOR VARIOUS CLOSURES
15C02-08C	DETOUR SIGNING FOR MAINLINE CLOSURES
15C02-08F	ADVANCED WIDTH RESTRICTION SIGNING
15C03-05	BARRICADES AND SIGNS FOR SIDEROAD CLOSURES
15C04-05	TRAFFIC CONTROL, ADVANCE WARNING SIGNS 45 M.P.H. OR GREATER TWO-WAY UNDIVIDED ROAD OPEN TO TRAFFIC
15C05-05	TRAFFIC CONTROL, ADVANCE WARNING SIGNS 40 M.P.H. OR LESS
15C07-15B	PAVEMENT MARKING WORDS
15C07-15C	PAVEMENT MARKING ARROWS
15C08-21A	LONGITUDINAL MARKING (MAINLINE)
15C08-21B	TEMPORARY LONGITUDINAL PAVEMENT MARKING
15C08-21D	PAVEMENT MARKING (TURN LANES)
15C11-09B	CHANNELIZING DEVICES DRUMS, CONES, BARRICADES AND VERTICAL PANELS
15C12-09A	TRAFFIC CONTROL FOR LANE CLOSURE WITH FLAGGING OPERATION
15C12-09B	TRAFFIC CONTROL, LANE CLOSURE WITH AUTOMATED FLAGGER ASSISTANCE DEVICE
15C19-07A	MOVING PAVEMENT MARKING OPERATION TWO-LANE TWO-WAY ROADWAY
15C33-04	STOP LINE AND CROSSWALK PAVEMENT MARKING
15C35-05A	PAVEMENT MARKING (INTERSECTIONS)
15D12-10A	TRAFFIC CONTROL, LANE CLOSURE
15D28-04	TRAFFIC CONTROL, WORK ON SHOULDER OR PARKING LANE, UNDIVIDED ROADWAY
15D44-02	TRAFFIC CONTROL, SIGNING ON ROADWAYS WITH MILLED SURFACES

6

6

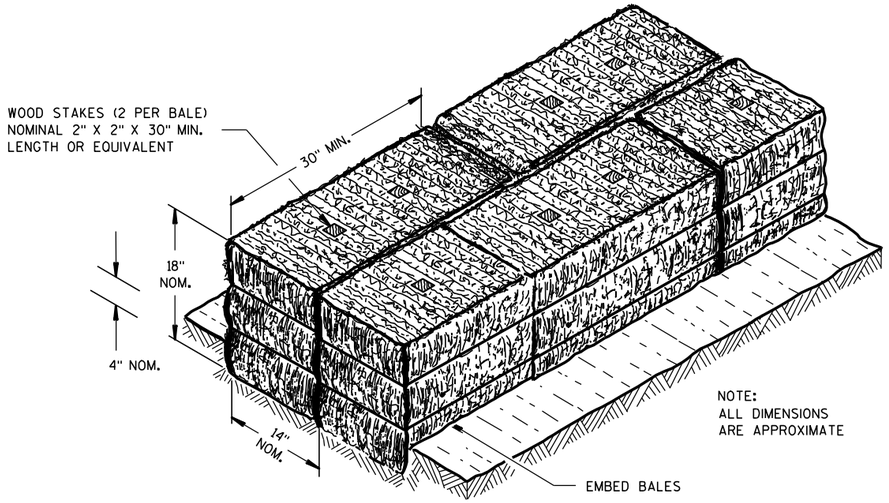

SECTION A-A

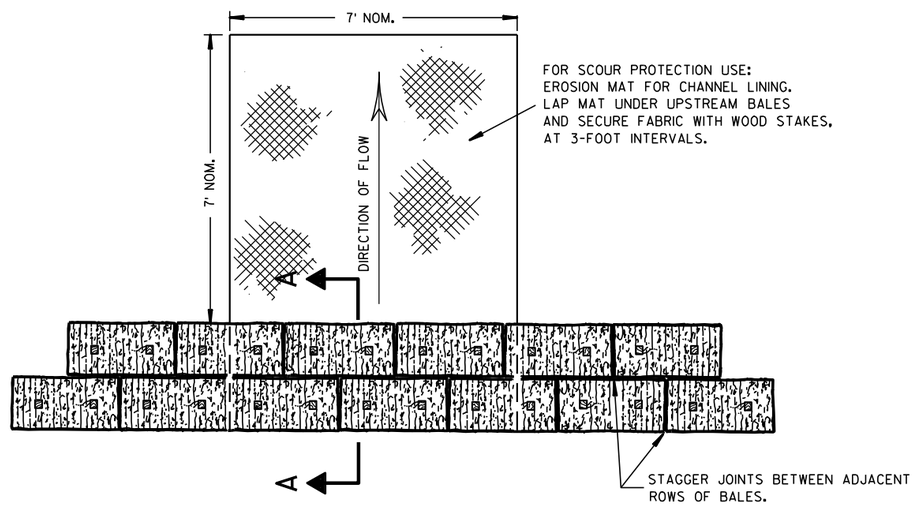

PLAN VIEW

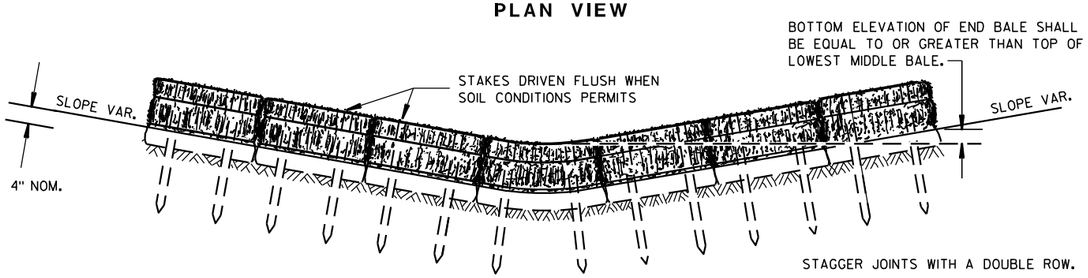

FRONT ELEVATION

TEMPORARY DITCH CHECK USING EROSION BALES ①

GENERAL NOTES

DETAILS OF CONSTRUCTION, MATERIALS AND WORKMANSHIP NOT SHOWN ON THIS DRAWING SHALL CONFORM TO THE PERTINENT REQUIREMENTS OF THE STANDARD SPECIFICATIONS AND THE APPLICABLE SPECIAL PROVISIONS.

① TEMPORARY DITCH CHECKS EITHER EROSION BALES OR MANUFACTURED SHALL BE PAID FOR UNDER THE BID ITEM OF TEMPORARY DITCH CHECK. THE DEPARTMENT WILL NOT PAY FOR TEMPORARY DITCH CHECKS CONSTRUCTED OF A SINGLE ROW OF EROSION BALES.

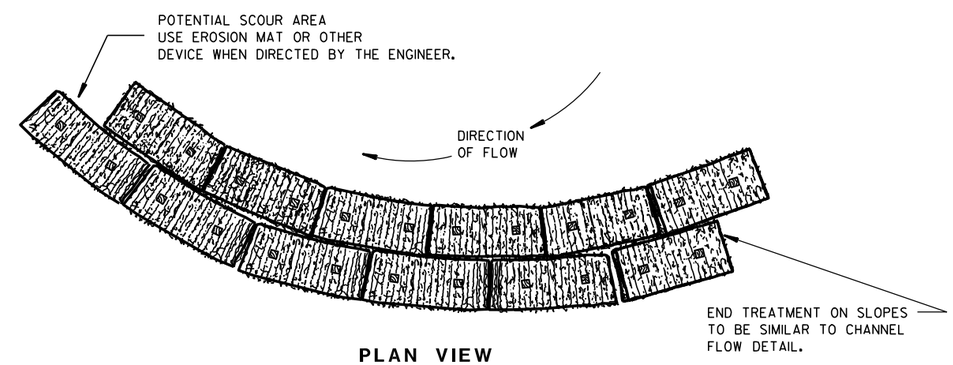

PLAN VIEW

WHEN ALTERING THE DIRECTION OF FLOW

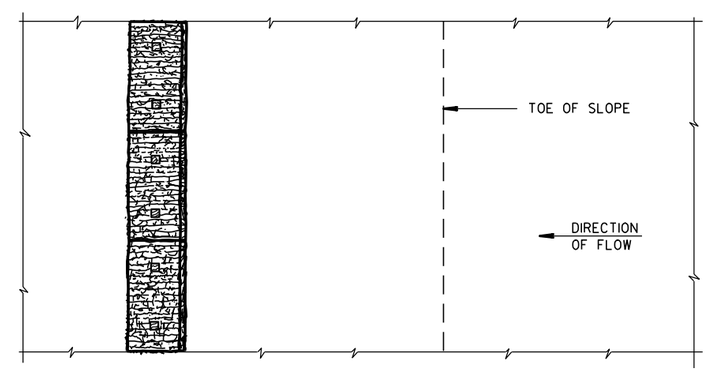

PLAN VIEW

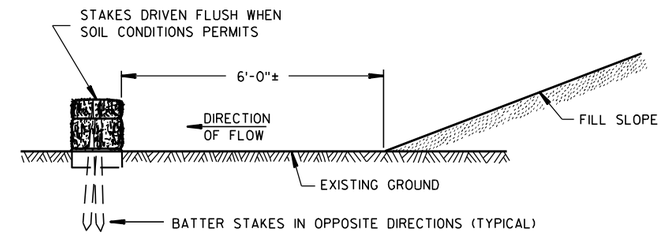

FRONT ELEVATION

WHEN EXISTING GROUND SLOPES AWAY FROM FILL SLOPE

EROSION BALES FOR SHEET FLOW

TYPICAL INSTALLATIONS OF EROSION BALES / TEMPORARY DITCH CHECKS

STATE OF WISCONSIN
DEPARTMENT OF TRANSPORTATION

APPROVED
6/04/02 — DATE
/S/ Beth Cann — CHIEF ROADWAY DEVELOPMENT ENGINEER
FHWA

6

6

S.D.D. 8 E 8-3

S.D.D. 8 E 8-3

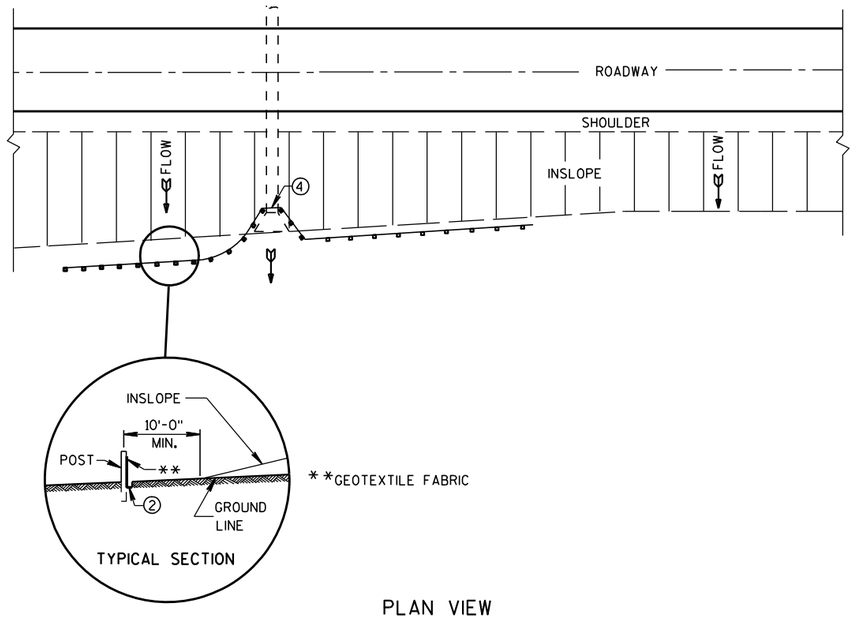

PLAN VIEW

TYPICAL APPLICATION OF SILT FENCE

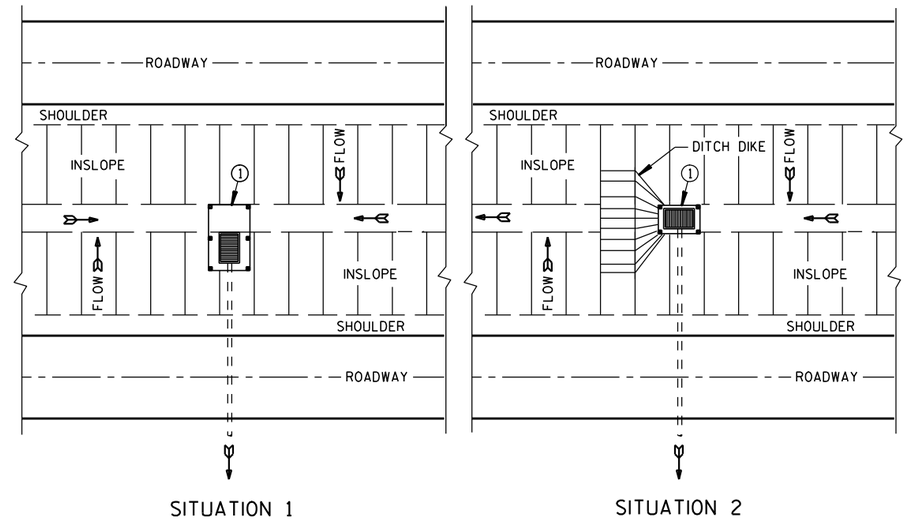

PLAN VIEW

SILT FENCE AT MEDIAN SURFACE DRAINS

GENERAL NOTES

DETAILS OF CONSTRUCTION NOT SHOWN ON THIS DRAWING SHALL CONFORM TO THE PERTINENT REQUIREMENTS OF THE STANDARD SPECIFICATIONS AND APPLICABLE SPECIAL PROVISIONS.

① HORIZONTAL BRACE REQUIRED WITH 2" X 4" WOODEN FRAME OR EQUIVALENT AT TOP OF POSTS.

② FOR MANUAL INSTALLATIONS THE TRENCH SHALL BE A MINIMUM OF 4" WIDE & 6" DEEP TO BURY AND ANCHOR THE GEOTEXTILE FABRIC. FOLD MATERIAL TO FIT TRENCH AND BACKFILL & COMPACT TRENCH WITH EXCAVATED SOIL.

③ WOOD POSTS SHALL BE A MINIMUM SIZE OF 1⅛" X 1⅛" OF OAK OR HICKORY.

④ SILT FENCE TO EXTEND ACROSS THE TOP OF THE PIPE.

⑤ CONSTRUCT SILT FENCE FROM A CONTINUOUS ROLL IF POSSIBLE BY CUTTING LENGTHS TO AVOID JOINTS. IF A JOINT IS NECESSARY USE ONE OF THE FOLLOWING TWO METHODS; A) OVERLAP THE END POSTS AND TWIST, OR ROTATE, AT LEAST 180 DEGREES. B) HOOK THE END OF EACH SILT FENCE LENGTH.

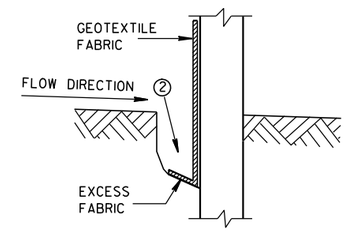

TRENCH DETAIL

NOTE: ADDITIONAL POST DEPTH OR TIE BACKS MAY BE REQUIRED IN UNSTABLE SOILS

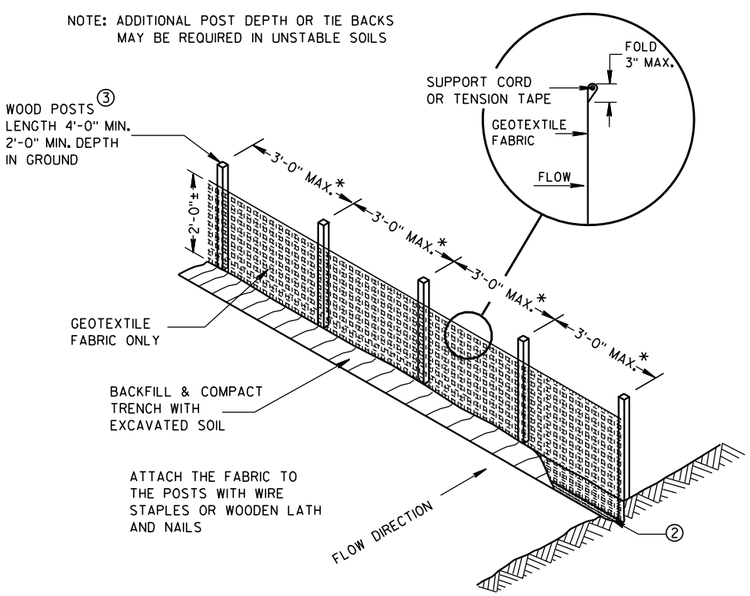

*NOTE: 8'-0" POST SPACING ALLOWED IF A WOVEN GEOTEXTILE FABRIC IS USED.

SILT FENCE

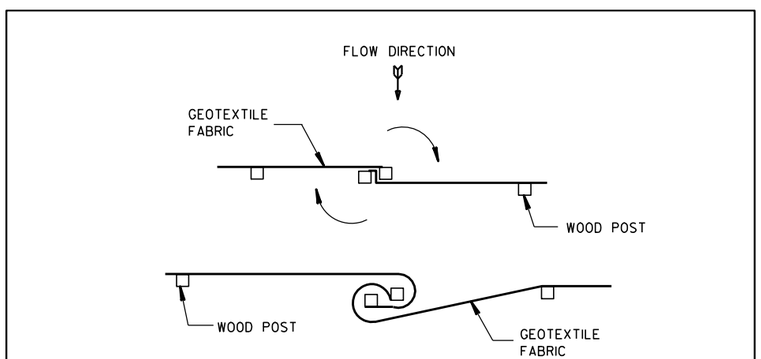

TWIST METHOD

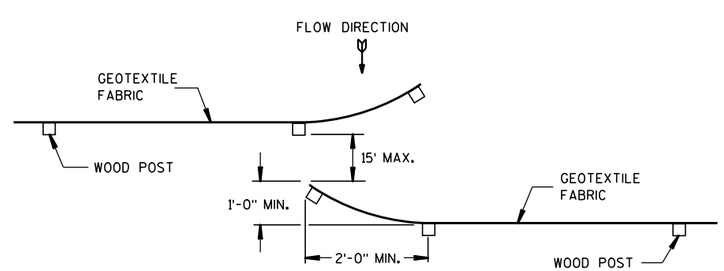

HOOK METHOD

JOINING TWO LENGTHS OF SILT FENCE ⑤

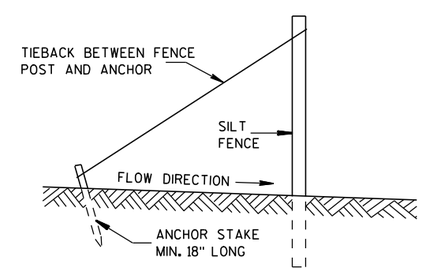

SILT FENCE TIE BACK

(WHEN REQUIRED BY THE ENGINEER)

SILT FENCE
STATE OF WISCONSIN DEPARTMENT OF TRANSPORTATION
APPROVED 4-29-05 DATE — /S/ Beth Cann-- CHIEF ROADWAY DEVELOP ENGINEER FHWA

6

6

S.D.D. 8 E 9-6

S.D.D. 8 E 9-6

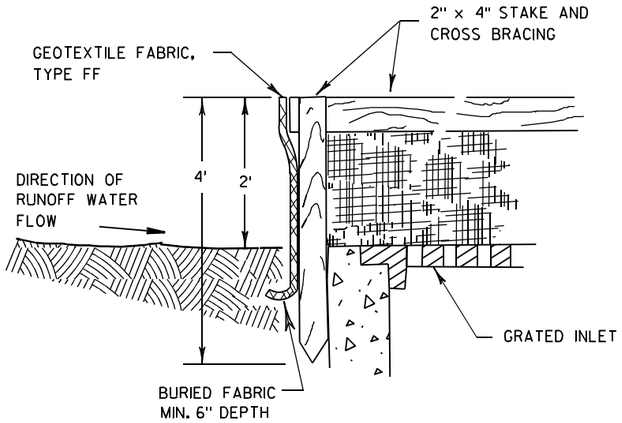

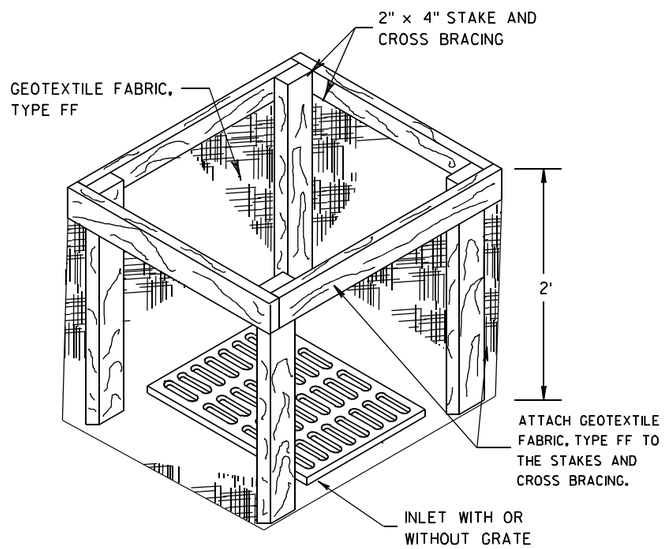

INLET PROTECTION, TYPE A

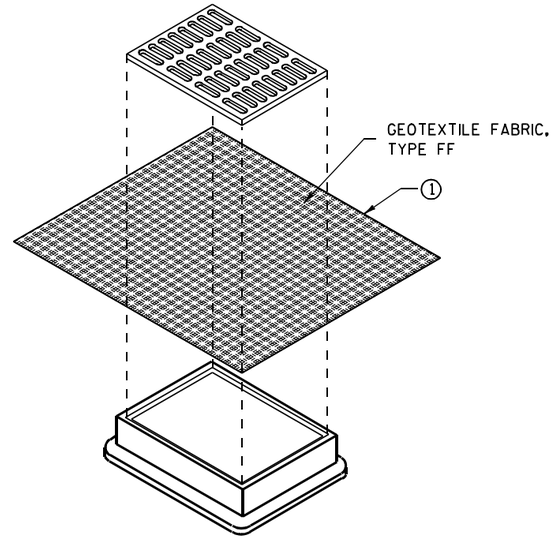

INLET PROTECTION, TYPE B (WITHOUT CURB BOX)

(CAN BE INSTALLED IN ANY INLET WITHOUT A CURB BOX)

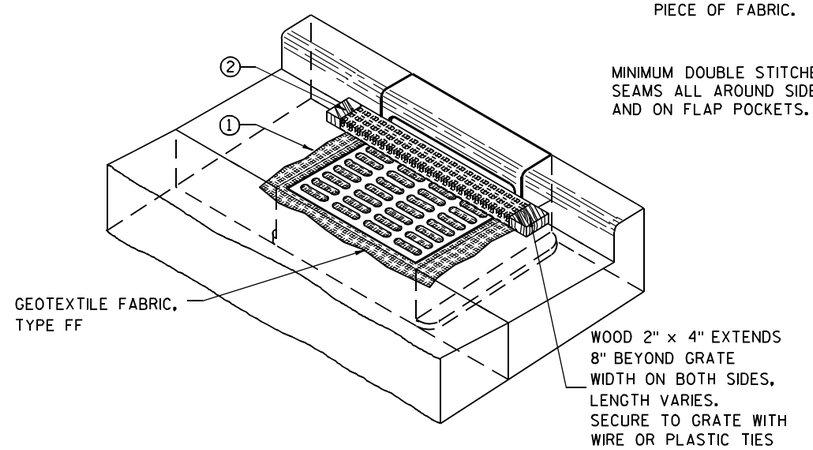

INLET PROTECTION, TYPE C (WITH CURB BOX)

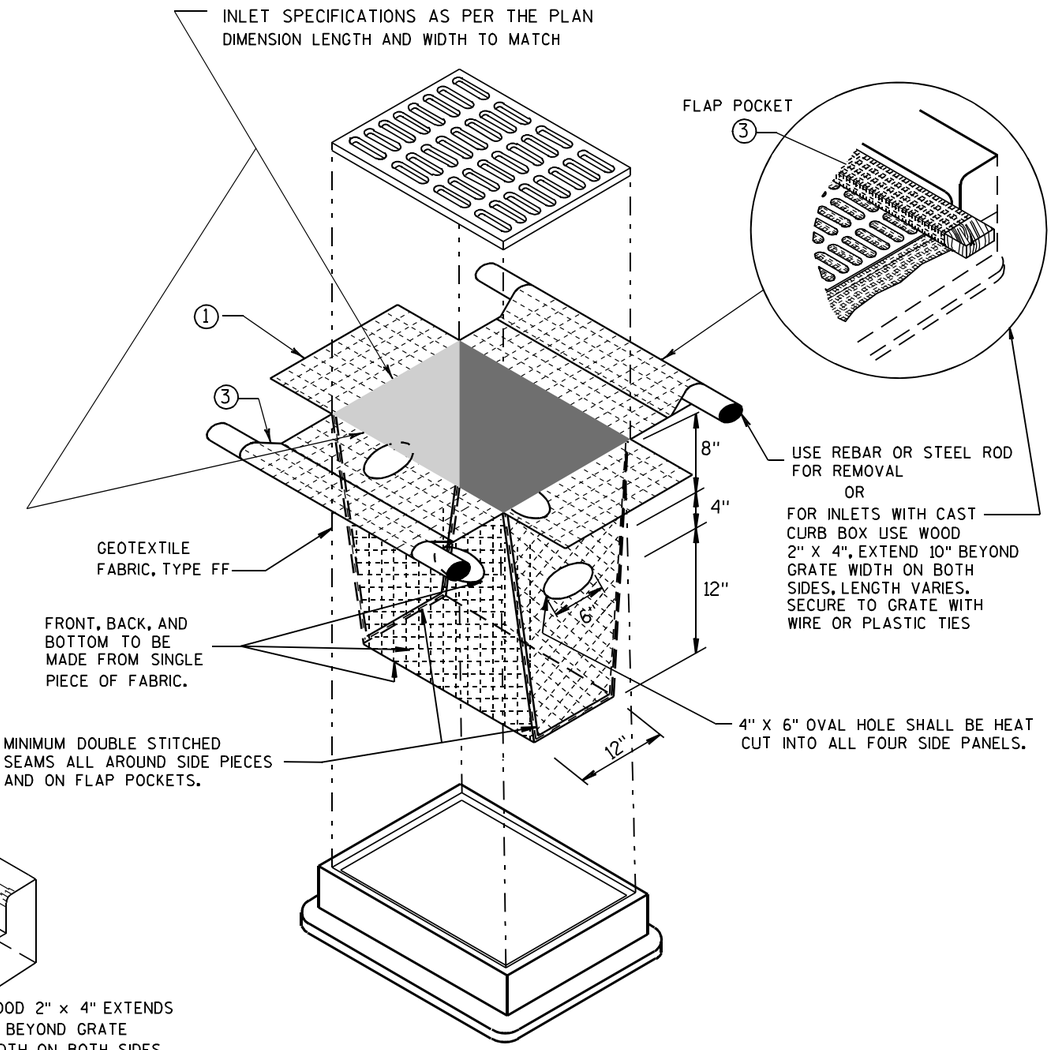

INLET PROTECTION, TYPE D

(CAN BE INSTALLED IN ANY INLET TYPE WITH OR WITHOUT A CURB BOX AS PER NOTE 2)

GENERAL NOTES

INLET PROTECTION DEVICES SHALL BE MAINTAINED OR REPLACED AT THE DIRECTION OF THE ENGINEER.

MANUFACTURED ALTERNATIVES APPROVED AND LISTED ON THE DEPARTMENT'S EROSION CONTROL PRODUCT ACCEPTABILITY LIST MAY BE SUBSTITUTED.

WHEN REMOVING OR MAINTAINING INLET PROTECTION, CARE SHALL BE TAKEN SO THAT THE SEDIMENT TRAPPED ON THE GEOTEXTILE FABRIC DOES NOT FALL INTO THE INLET. ANY MATERIAL FALLING INTO THE INLET SHALL BE REMOVED IMMEDIATELY.

1 FINISHED SIZE, INCLUDING FLAP POCKETS WHERE REQUIRED, SHALL EXTEND A MINIMUM OF 10" AROUND THE PERIMETER TO FACILITATE MAINTENANCE OR REMOVAL.

2 FOR INLET PROTECTION, TYPE C (WITH CURB BOX), AN ADDITIONAL 18" OF FABRIC IS WRAPPED AROUND THE WOOD AND SECURED WITH STAPLES. THE WOOD SHALL NOT BLOCK THE ENTIRE HEIGHT OF THE CURB BOX OPENING.

3 FLAP POCKETS SHALL BE LARGE ENOUGH TO ACCEPT WOOD 2X4.

INSTALLATION NOTES

TYPE B & C

TRIM EXCESS FABRIC IN THE FLOW LINE TO WITHIN 3" OF THE GRATE.

THE CONTRACTOR SHALL DEMONSTRATE A METHOD OF MAINTENANCE, USING A SEWN FLAP, HAND HOLDS OR OTHER METHOD TO PREVENT ACCUMULATED SEDIMENT FROM ENTERING THE INLET.

TYPE D

DO NOT INSTALL INLET PROTECTION TYPE D IN INLETS SHALLOWER THAN 30", MEASURED FROM THE BOTTOM OF THE INLET TO THE TOP OF THE GRATE.

TRIM EXCESS FABRIC IN THE FLOW LINE TO WITHIN 3" OF THE GRATE.

THE INSTALLED BAG SHALL HAVE A MINIMUM SIDE CLEARANCE, BETWEEN THE INLET WALLS AND THE BAG, MEASURED AT THE BOTTOM OF THE OVERFLOW HOLES, OF 3". WHERE NECESSARY THE CONTRACTOR SHALL CINCH THE BAG, USING PLASTIC ZIP TIES, TO ACHIEVE THE 3" CLEARANCE. THE TIES SHALL BE PLACED AT A MAXIMUM OF 4" FROM THE BOTTOM OF THE BAG.

INLET PROTECTION TYPE A, B, C, AND D

STATE OF WISCONSIN
DEPARTMENT OF TRANSPORTATION

APPROVED
10/16/02 — DATE
/S/ Beth Cannon — CHIEF ROADWAY DEVELOPMENT ENGINEER
FHWA

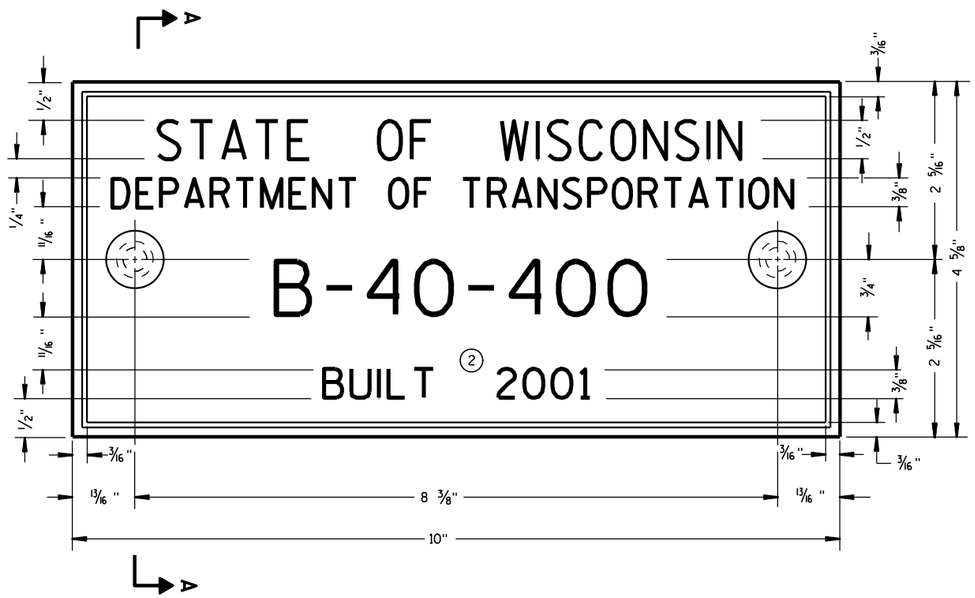

TYPICAL NAME PLATE

(BRIDGES, CULVERTS, AND RETAINING WALLS)

GENERAL NOTES

NAME PLATES TO BE INSTALLED ON BRIDGES, CULVERTS, AND RETAINING WALLS SHALL CONFORM TO THE REQUIREMENTS OF SECTION 502.3.11 OF THE STANDARD SPECIFICATIONS.

THE BRIDGE NUMBER AND YEAR BUILT SHOWN ON THIS DRAWING ARE EXAMPLES ONLY. SEE CONSTRUCTION PLANS FOR INDIVIDUAL NUMBERING AND YEAR BUILT.

① EPOXY RESIN SHALL BE FROM AN APPROVED MANUFACTURER AND USED IN ACCORDANCE WITH MANUFACTURER'S RECOMMENDATIONS.

② REHABILITATION OF AN EXISTING STRUCTURE SHOULD USE THE DATE OF ORIGINAL STRUCTURE CONSTRUCTION.

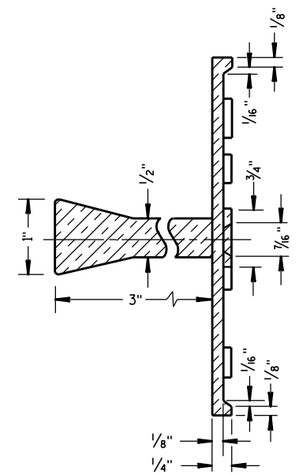

SECTION A-A

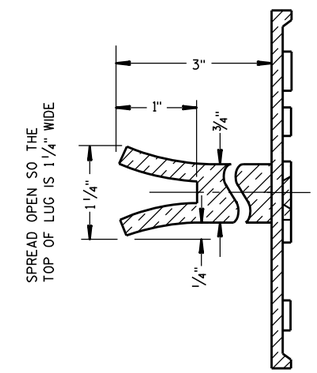

ALTERNATE LUG

6

FOR MULTI-UNIT STRUCTURES
LINE 3 ABOVE SHALL READ

B = BRIDGE
C = CULVERT
R = RETAINING WALL

COUNTY NO.

BRIDGE NO.

UNIT NO. FOR MULTIPLE
UNIT BRIDGE

B-40-400-1A

NUMBERING DESIGNATION
MULTI-UNIT STRUCTURES

① ADHERE ANCHOR LUG TO PRECAST RETAINING WALL WITH EPOXY RESIN.

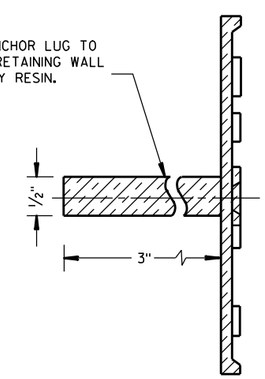

ALTERNATE LUG

(FOR ATTACHMENT TO PRECAST STRUCTURES)

6

NAME PLATE (STRUCTURES)		
STATE OF WISCONSIN DEPARTMENT OF TRANSPORTATION		
APPROVED		
3/26/10 DATE	/S/ Scot Beck CHIEF STRUCTURAL DEVELOPER	
FHWA		

S.D.D. 12 A 3-10

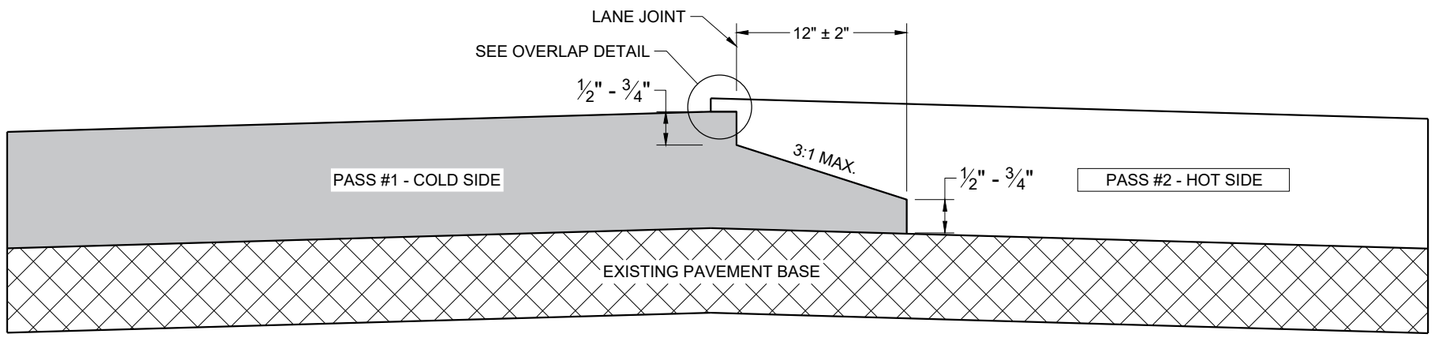

TYPICAL PAVEMENT CROSS SECTION
NOTCHED WEDGE JOINT

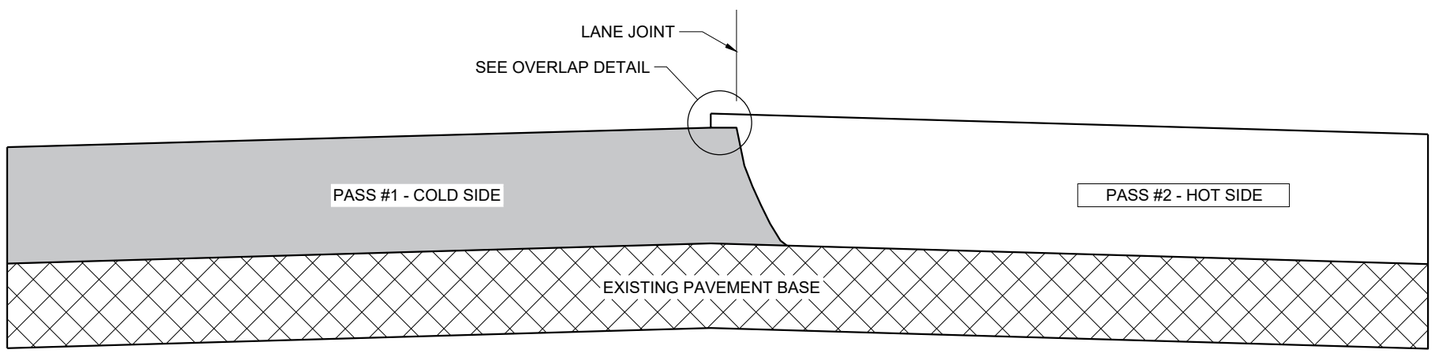

TYPICAL PAVEMENT CROSS SECTION
VERTICAL JOINT

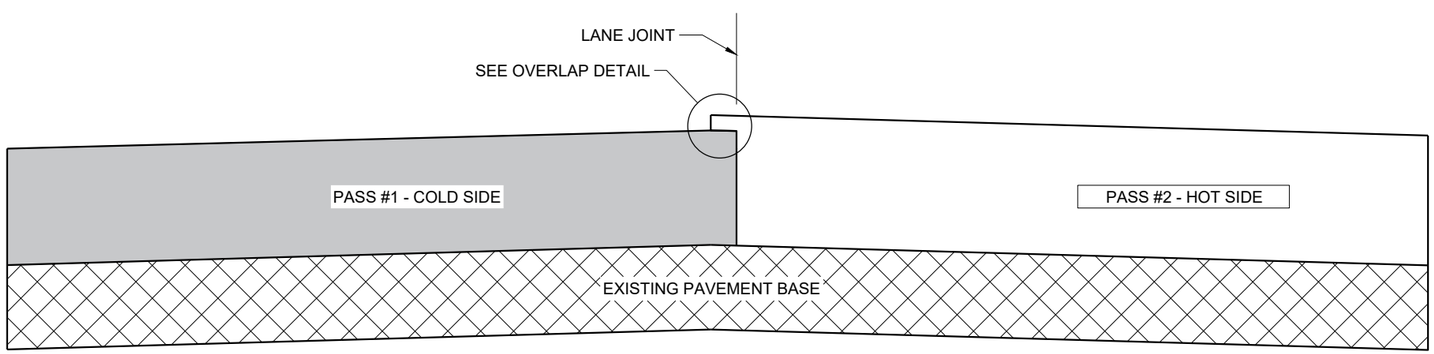

TYPICAL PAVEMENT CROSS SECTION
VERTICAL JOINT (MILLED)

GENERAL NOTES

IN ADDITION TO THE DETAILS PROVIDED IN THIS DRAWING, CONFORM TO STANDARD SPECIFICATION 450.3.2.8 FOR WHEN A NOTCHED WEDGE JOINT IS REQUIRED AND FOR GENERAL JOINT CONSTRUCTION REQUIREMENTS.

FOR ALL LONGITUDINAL JOINTS, ENSURE THE PAVER SCREED OVERLAPS THE PREVIOUSLY PLACED PAVEMENT BY 1" ± 0.5" AND THE HOT SIDE OF THE JOINT REMAINS HIGHER THAN THE COLD SIDE BY APPROXIMATELY 0.1" AFTER FINAL COMPACTION. (IT WILL BE FLUSH WHEN PAVING IN ECHELON.)

ONLY REMOVE THE LONGITUDINAL NOTCHED WEDGE JOINT FOR SMA PAVEMENT OR AS DIRECTED BY THE ENGINEER TO ADDRESS SPECIFIC LENGTHS OF JOINT DAMAGED BY TRAFFIC.

WHEN MILLING BACK OR REMOVING ANY LONGITUDINAL JOINT, LIMIT THE MATERIAL REMOVED TO 2" FROM THE TOP NOTCH OR FROM THE VERTICAL JOINT EDGE ON THE COLD SIDE OF THE JOINT.

USE LONGITUDINAL MILLED JOINT AS PLANS SHOW OR THE AS THE ENGINEER DIRECTS.

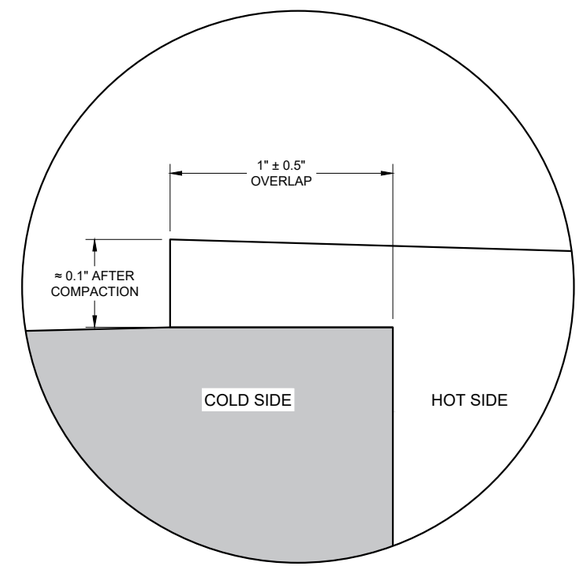

OVERLAP DETAIL (TYPICAL)

6

6

SDD 13C19 - 03

SDD 13C19 - 03

HMA LONGITUDINAL JOINTS

STATE OF WISCONSIN
DEPARTMENT OF TRANSPORTATION

APPROVED
November 2020 /S/ Steven Hefel
DATE HMA PAVEMENT ENGIN
FHWA

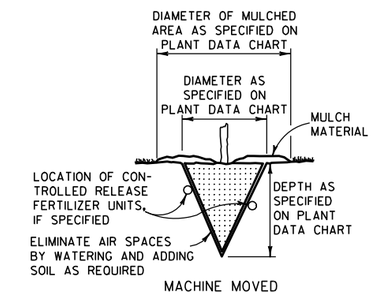

MACHINE MOVED

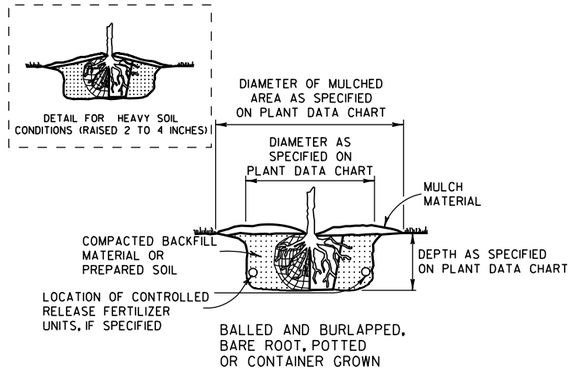

BALLED AND BURLAPPED, BARE ROOT, POTTED OR CONTAINER GROWN

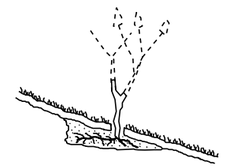

ACCOMMODATE ROOTS (SMOOTH AND STAGHORN SUMAC)

NOTE:
1) ENGINEER SHALL REQUIRE 3 SLITS IN POT TO SPEED DETERIORATION
2) METAL, PLASTIC OR OTHER NONDEGRADABLE POTS SHALL BE REMOVED PRIOR TO PLANTING

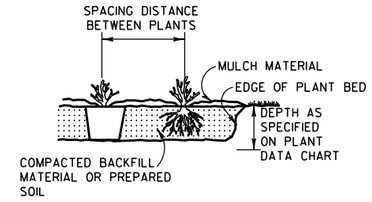

PREPARED BED (BARE ROOT AND POTTED)

PLANTING

TOP VIEW

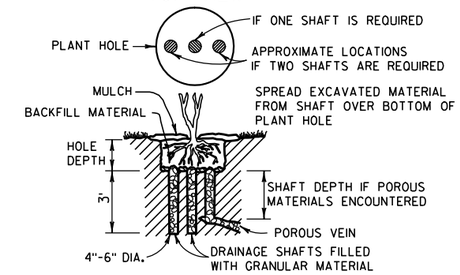

NOTE:
DRAINAGE SHAFT AS SPECIFIED ON PLANT DATA CHART

DRAINING

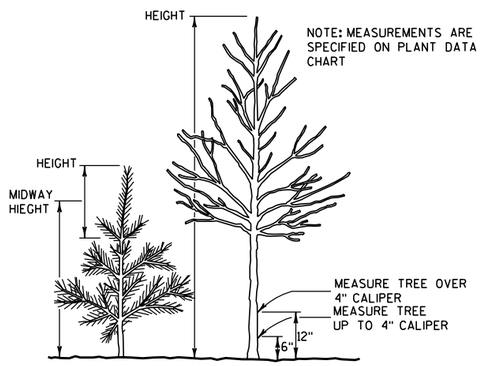

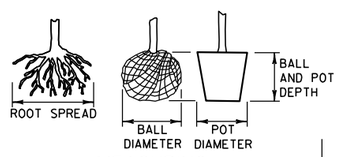

MEASURING

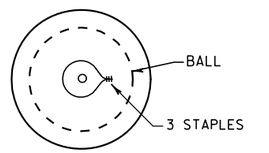

TOP VIEW

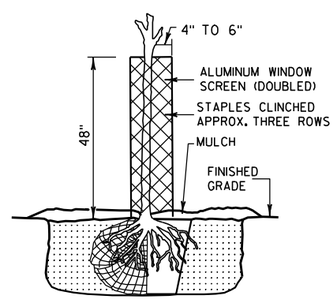

RODENT PROTECTION

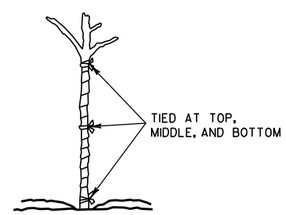

WRAPPING

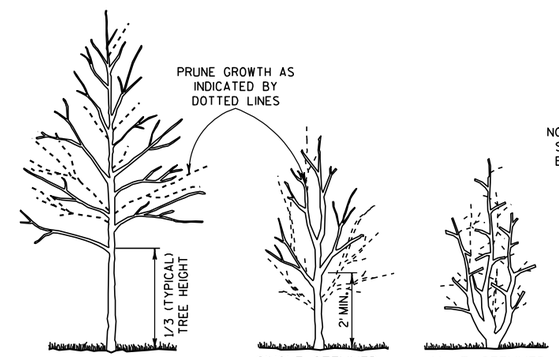

TALL DECIDUOUS TREES (ASH, MAPLE, LINDEN, OAK)

SINGLE STEMMED LOW DECIDUOUS TREES (CRABS AND OTHER SINGLE STEM TYPE)

MULTI-STEMMED LOW DECIDUOUS TREES OR LARGE SHRUBS (HAWTHORN, SERVICEBERRY)

NOTE: WHEN PRUNING, PRESERVE CHARACTER AND SHAPE OF TREE. AVOID LEAVING STUBS - REMOVE BRANCH OR TWIG BACK TO THE NEAREST CROTCH
1) PRUNE TO REMOVE DEAD AND BROKEN BRANCHES
2) PRUNE TO REMOVE BRANCHES THAT TOUCH OR ARE TOO CLOSE TO OTHER BRANCHES

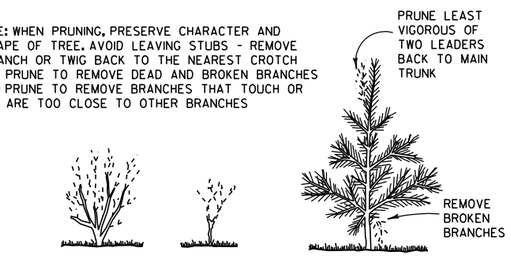

SHRUBS (GRAY DOGWOOD ARROWWOOD VIBURNUM)

SUMAC

TREE TYPE EVERGREENS (PINE, SPRUCE, FIR) EVERGREENS USUALLY ARE NOT PRUNED

PRUNING

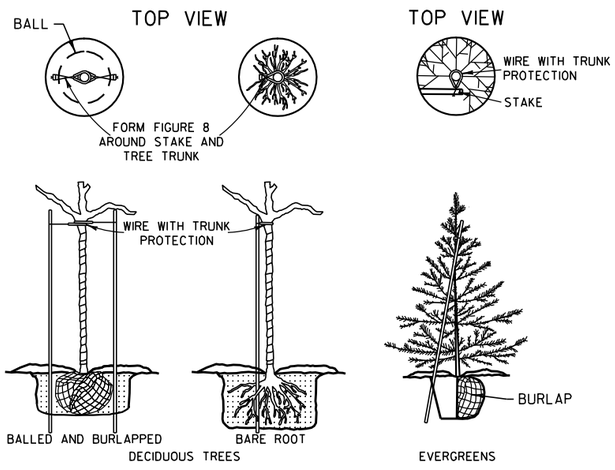

NOTE: BRACING STAKE
1) SHALL BE DRIVEN INTO THE GROUND AS CLOSE TO THE TREE AS POSSIBLE WITHOUT DAMAGING THE BRANCHES.
2) MAY BE DRIVEN AT SUCH AN ANGLE THAT IT DOES NOT PENETRATE THE BALL OR POT.
3) SHALL NOT PROTRUDE ABOVE THE TOP OF THE TREE; AND
4) SHALL HAVE A HOLE NEAR THE TOP TO HOLD THE WIRE IN PLACE.

BRACING

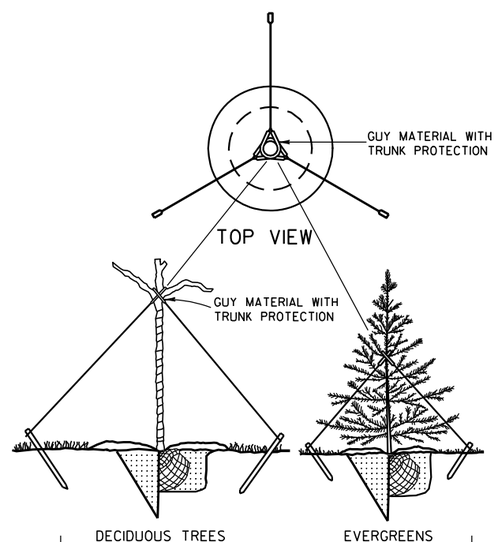

GUYING

PRUNE LARGER SHRUBS BY REMOVING FROM ONE-THIRD TO ONE-HALF TOP GROWTH AS INDICATED BY DOTTED LINE

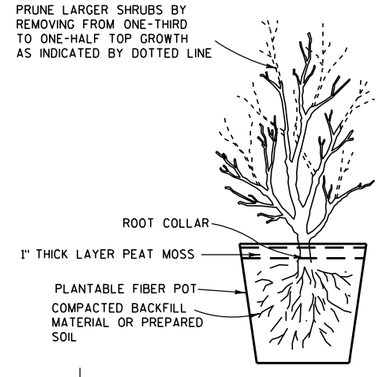

POTTING

NOTES

DETAILS OF CONSTRUCTION NOT SHOWN ON THIS DRAWING SHALL CONFORM TO THE PERTINENT REQUIREMENTS OF THE STANDARD SPECIFICATIONS AND THE APPLICABLE SPECIAL PROVISIONS.

BRACING, WRAPPING, GUYING, RODENT PROTECTION, FERTILIZER AND MULCH SHALL BE USED ONLY WHEN SPECIFIED ON THE PLANT DATA CHART (PART OF PLAN) OR SPECIAL PROVISIONS.

TREE PLANTING DETAIL

STATE OF WISCONSIN
DEPARTMENT OF TRANSPORTATION

APPROVED
4/11/94 — DATE
/S/ Rory L. Rhinesmith — CHIEF METHODS DEVELOPMENT ENGINEER
FHWA

6

S.D.D. 14 A 2-1

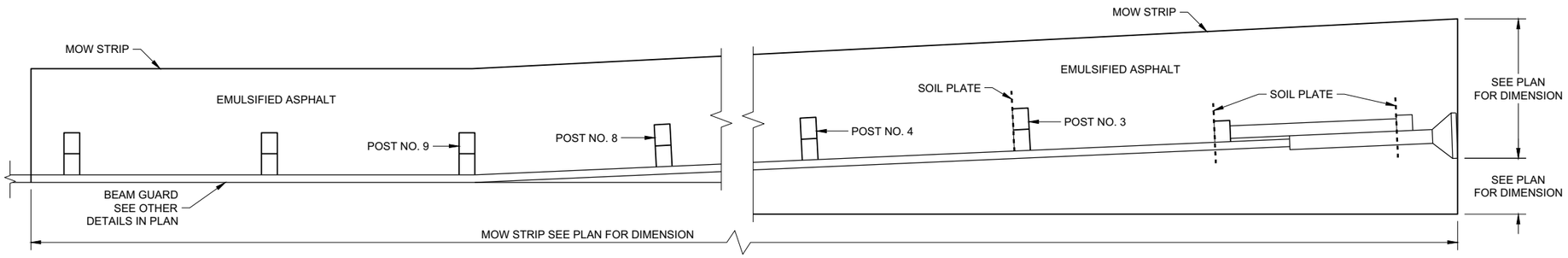

PLAN VIEW
MOW STRIP LAYOUT FOR ENERGY ABSORBING TERMINAL

GENERAL NOTES

ONLY USE STEEL POSTS IN CONCRETE AND ASPHALT MOW STRIPS.

1. CONTROLLED LOW-STRENGTH BACKFILL OR EMULSIFIED ASPHALT.
2. DEPTH OF MOW STRIP:
   ASPHALT - 4"
   CONCRETE - 4"
   EMULSIFIED ASPHALT - 1" OR LESS
3. FOR EMULSIFIED ASPHALT, MOW STRIP STRIP LEAVE OUTS NOT REQUIRED. (TYPICAL FOR ALL POSTS)

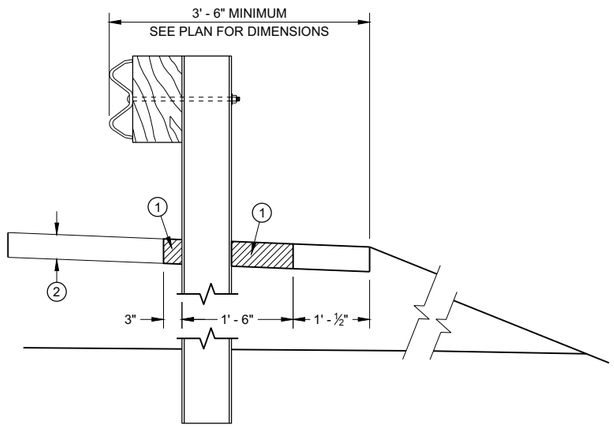

SECTION A - A

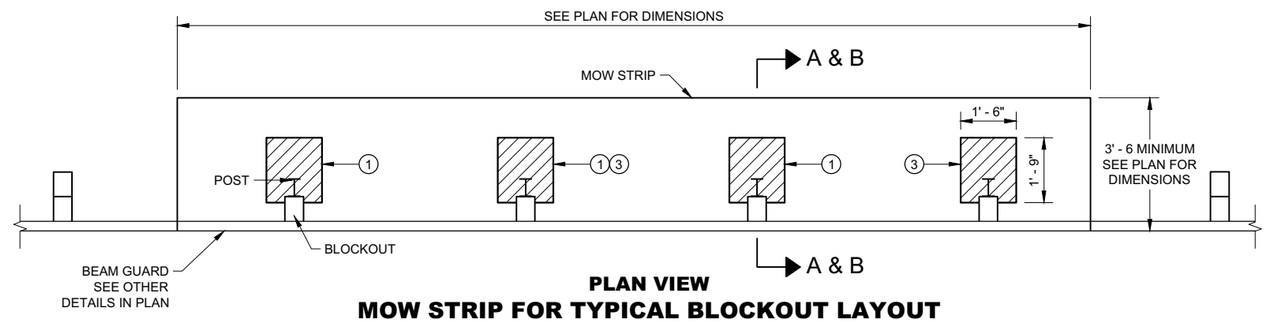

PLAN VIEW
MOW STRIP FOR TYPICAL BLOCKOUT LAYOUT

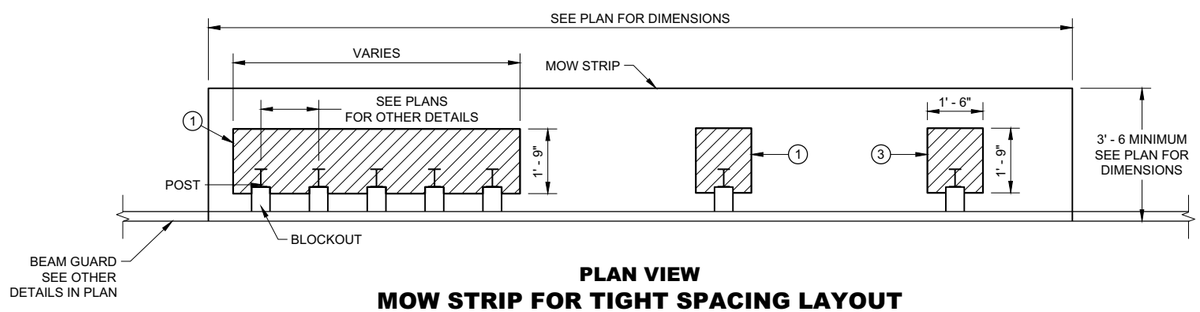

PLAN VIEW
MOW STRIP FOR TIGHT SPACING LAYOUT

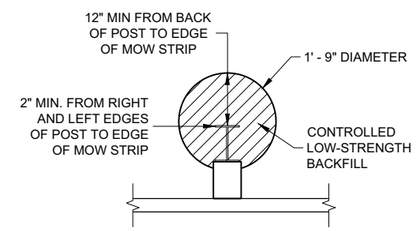

ALTERNATIVE HMA
MOW STRIP DESIGN

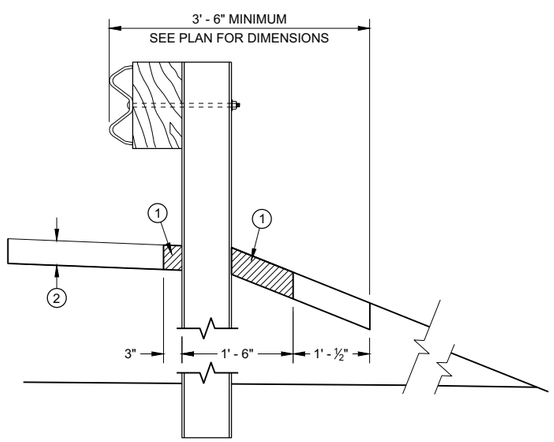

SECTION B - B

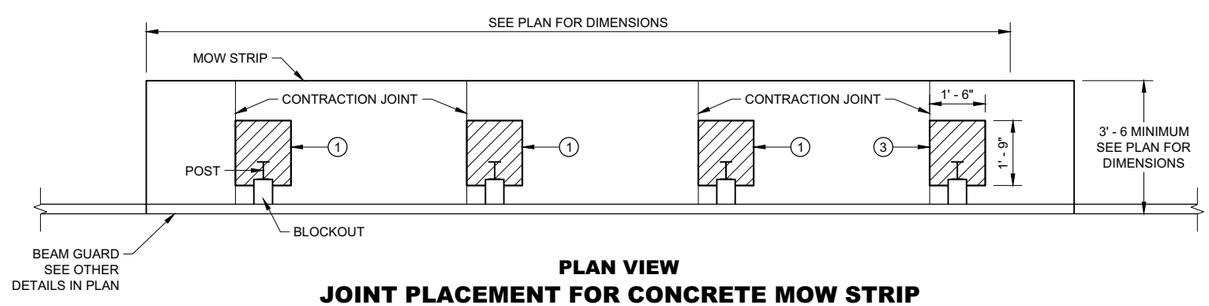

PLAN VIEW
JOINT PLACEMENT FOR CONCRETE MOW STRIP

GUARDRAIL MOW STRIP

STATE OF WISCONSIN
DEPARTMENT OF TRANSPORTA

6

SDD 14B28 - 04a

LEGEND

CONCRETE, ASPHALT, OR EMULSIFIED ASPHALT MOW STRIP (SEE OTHER DETAILS)

EMULSIFIED ASPHALT MOW STRIP (SEE OTHER DETAILS)

GENERAL NOTES

EXISTING THRIE BEAM BULLNOSES MAY HAVE WOOD POSTS. NEW THRIE BEAM BULLNOSE WILL HAVE STEEL POSTS.

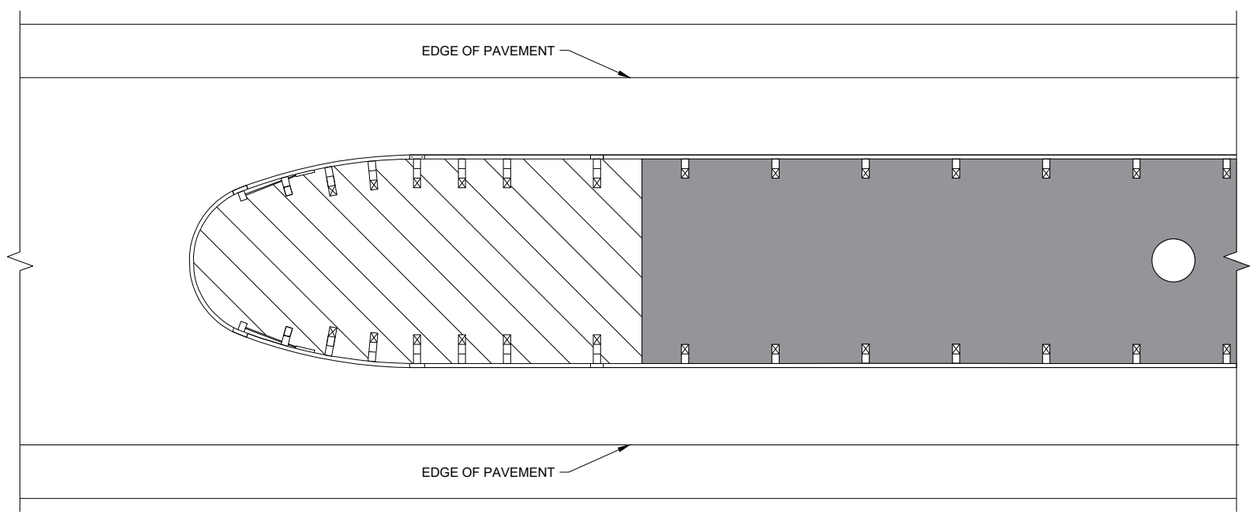

THRIE BEAM BULLNOSE

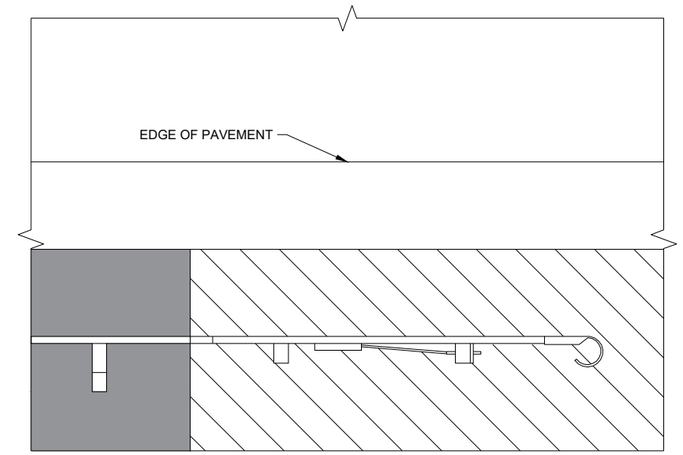

TYPE 2 TERMINAL

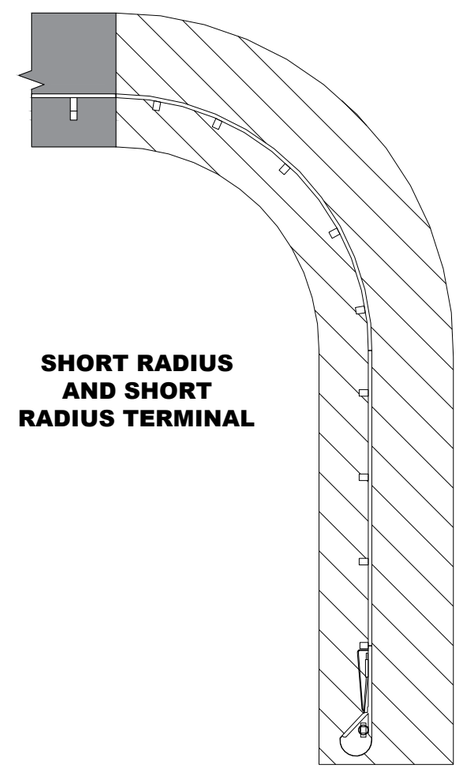

SHORT RADIUS AND SHORT RADIUS TERMINAL

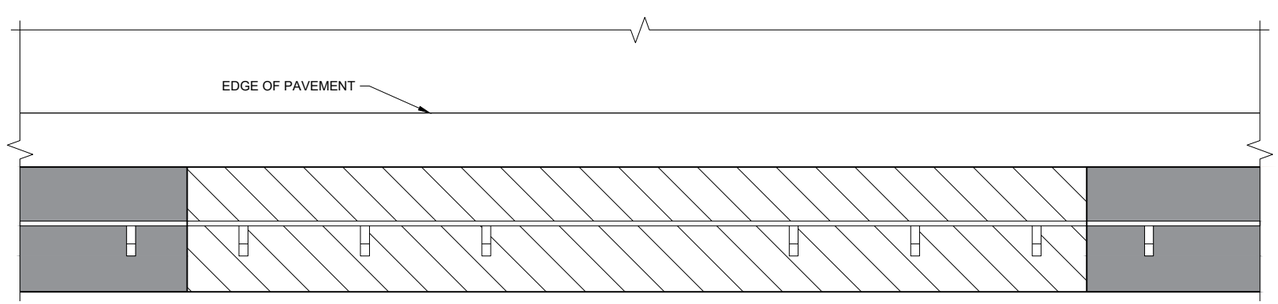

LONG - SPAN

6

6

SDD 14B28 - 04b

SDD 14B28 - 04b

GUARDRAIL MOW STRIP

STATE OF WISCONSIN
DEPARTMENT OF TRANSPORTATION

APPROVED
August 2020 — DATE
/S/ Rodney Taylor — ROADWAY STANDARDS DEVE ENGINEER
FHWA

1. WOOD OR STEEL POSTS (w6X9 OR w6X8.5) MAY BE USED. DO NOT INTERMIX WOOD AND STEEL POSTS. INSTALL STEEL POSTS WITH HOLES ON APPROACHING TRAFFIC SIDE.
2. USE WOOD OR APPROVED PLASTIC BLOCKOUTS. WOOD BLOCKOUTS MAY BE CONSTRUCTED OUT OF TWO OR MORE WOOD BLOCKOUTS. SEE ALTERNATE WOOD BLOCKOUT DETAIL. DIMENSIONS OF APPROVED PLASTIC BLOCKOUTS MAY VARY.
3. IF ROCK IS ENCOUNTERED DURING EXCAVATION, PROVIDE A HOLE 12 INCHES IN DIAMETER EXTENDING 20 INCHES DEEP INTO THE ROCK. PLACE APPROXIMATELY 2 1/2" INCHES OF GRANULAR MATERIAL IN THE BOTTOM OF THE HOLE. CUT THE POSTS THE TO LENGTH AMD INSTALL. BACKFILL WITH EXCAVATED MATERIAL AND COMPACT. BACKFILL IS TO BE FREE OF LARGE ROCKS.
4. WHEN THE DISTANCE FROM BACK OF POST TO SHOULDER HINGE POINT IS LESS THAN 2 FEET INSTALL LONGER POST AT HALF POST SPACING (K).
5. FOR NEW MGS INSTALLATION TOP OF W-BEAM RAIL TOLERANCE IS ±1". FOR EXISTING MGS INSTALLATION TOP OF W-BEAM IS BETWEEN 27 ¾" TO 32".
6. WHEN USING STEEL POST AND WOOD BLOCKOUTS INSTALL FOUR 16D GALVANIZED NAILS. INSTALL NAILS AT THE BACK CORNERS OF THE BLOCK AND BEND THE NAILS OVER THE FLANGE OF THE STEEL POST.
7. TOTAL POST LENGTH FOR TYPE K IS 7' - 0". TOTAL POST LENGTH FOR OTHER MGS TYPES IS 6' - 0".

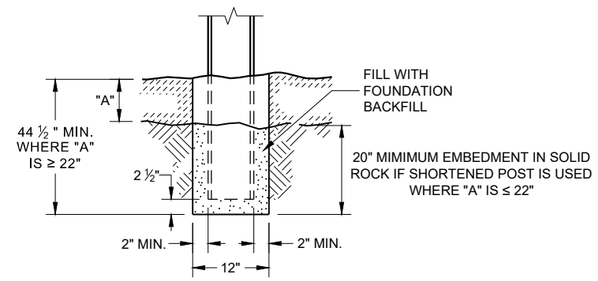

END VIEW
SETTING STEEL OR WOOD POST IN ROCK (3)

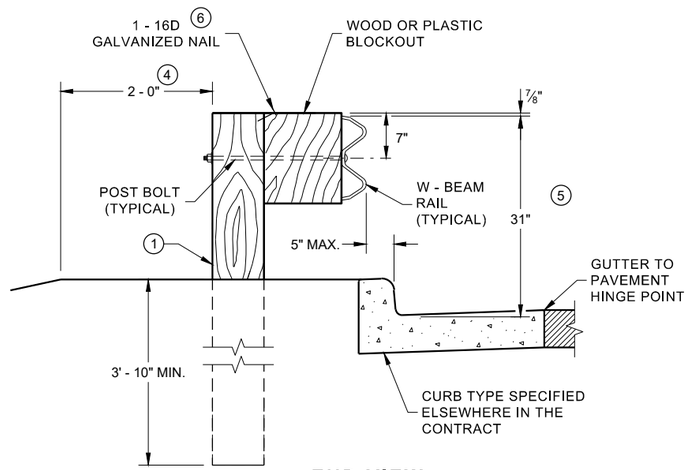

END VIEW
LOCATED ALONG A CURBED ROADWAY

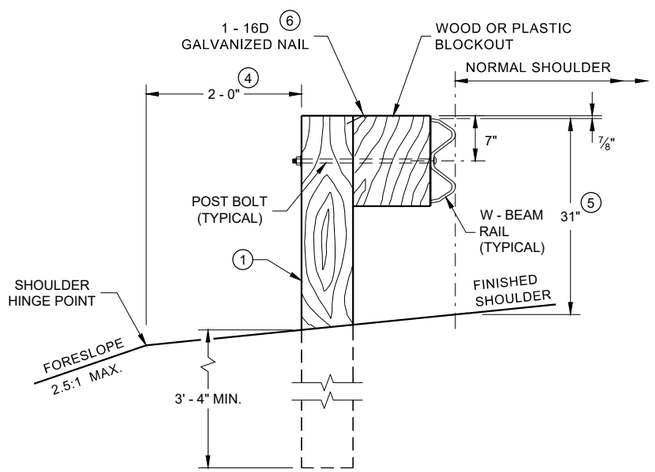

END VIEW
LOCATED ALONG A ROADWAY SHOULDER STANDARD INSTALLATION

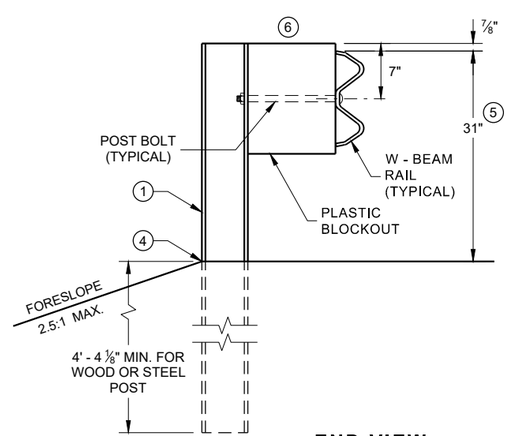

END VIEW
MGS LONGER POST AT HALFPOST SPACING W BEAM (K)

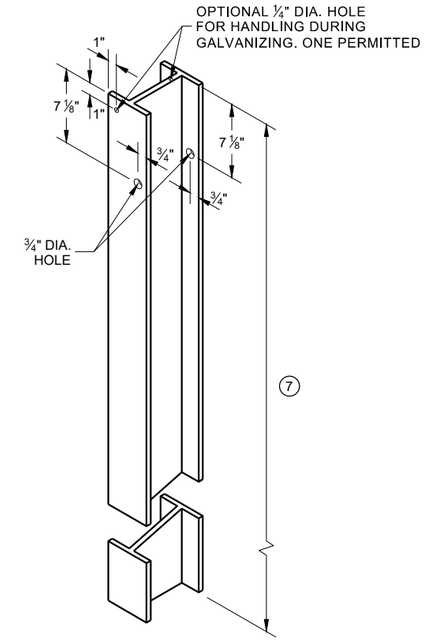

STEEL POST & HOLE PUNCHING DETAIL (W 6 X 9) (1)

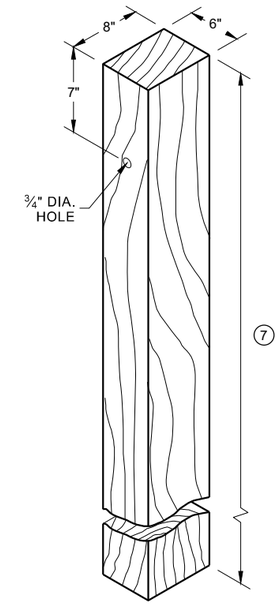

WOOD POST (6" X 8") NOMINAL (1)

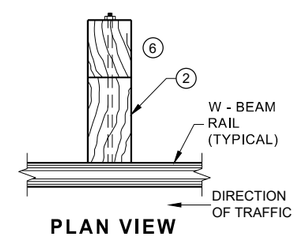

PLAN VIEW WOOD POST, BLOCKOUT & BEAM

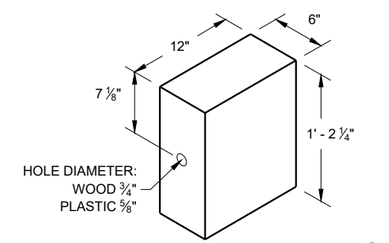

WOOD OR PLASTIC BLOCKOUT (2)

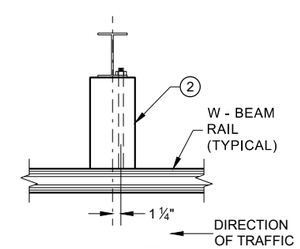

PLAN VIEW STEEL POST, PLASTIC BLOCKOUT & BEAM

MIDWEST GUARDRAIL SYSTEM (MGS) GUARDRAIL

STATE OF WISCONSIN
DEPARTMENT OF TRANSPORTATION

6

SDD 14B42 - 07a

6

SDD 14B42 - 07a

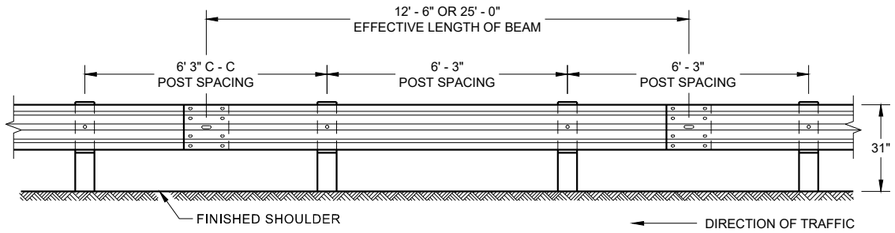

FRONT VIEW
POST SPACING STANDARD INSTALLATION

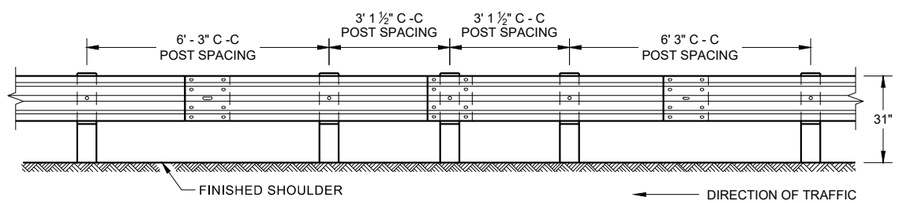

FRONT VIEW
HALF POST SPACING (HS) AND HALF POST SPACING WITH LONGER POSTS (K)

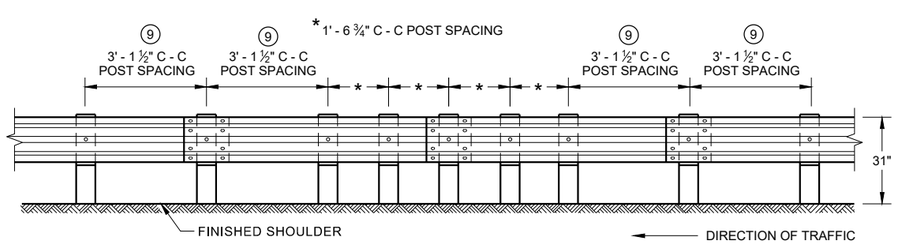

FRONT VIEW
QUARTER POST SPACING (QS)

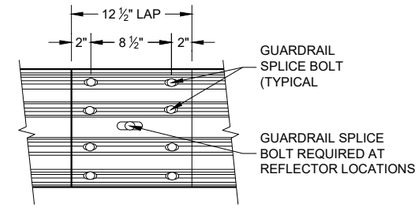

FRONT VIEW
MID-SPAN BEAM SPLICE

GENERAL NOTES

(8) DO NOT INSTALL REFLECTORS ON THE FIRST 50 FEET OF THE APPROACH END OF THE ENERGY ABSORBING TERMINAL.

(9) 25 FEET OF HALF POST SPACING IS REQUIRED ON APPROACH AND DEPARTURE ENDS OF QUARTER POST SPACING.

POST BOLTS ARE A ⅝" DIAMETER ASTM A307 GUARDRAIL BOLT. A POST BOLT REQUIRES ⅝" DIAMETER A563A DOUBLE RECESSED (DR) HEAVY HEX NUT AND ⅝" DIAMETER F844 FLAT WASHER. POST BOLTS MAY BE LONGER IF MULTIPLE BLOCKOUTS ARE BEING USED.

GUARD RAIL SPLICE BOLTS ARE A ⅝" DIAMETER ASTM A307 GUARDRAIL HEAD BOLT. A GUARDRAIL SPLICE BOLT REQUIRES ⅝" DIAMETER A563A DOUBLE RECESSED (DR) HEAVY HEX NUT.

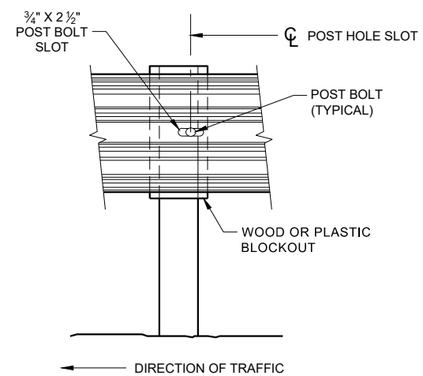

FRONT VIEW AT STEEL POST

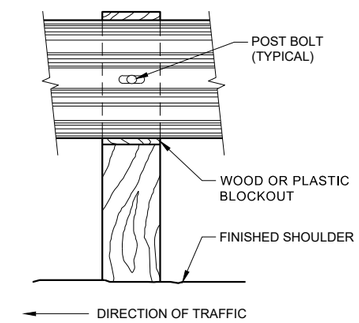

FRONT VIEW AT WOOD POST

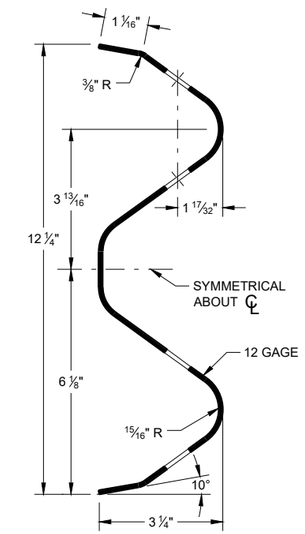

SECTION THRU W-BEAM RAIL

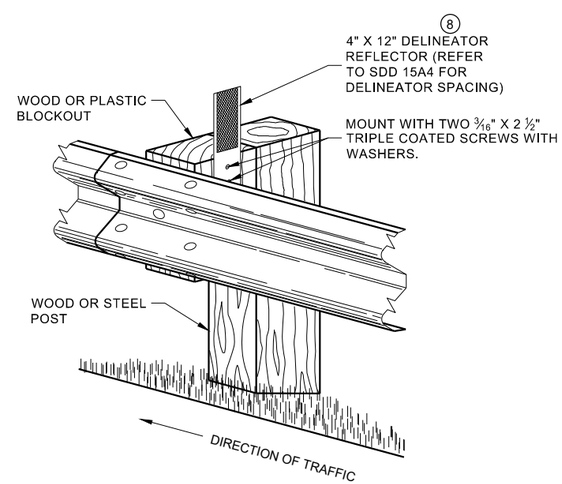

ONE SIDED REFLECTOR DETAIL AND TYPICAL INSTALLATION

MIDWEST GUARDRAIL SYSTEM (MGS) GUARDRAIL

STATE OF WISCONSIN
DEPARTMENT OF TRANSPORTAT

6

6

SDD 14B42 - 07b

SDD 14B42 - 07b

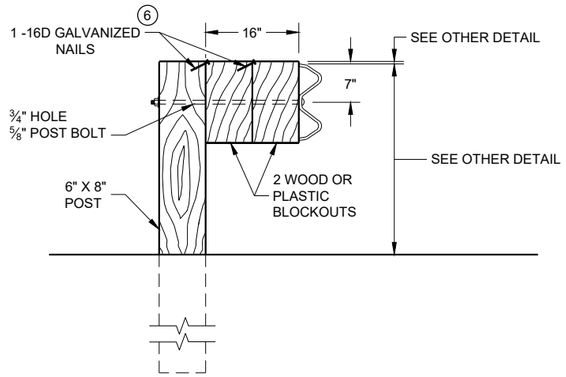

DETAIL FOR 16" BLOCKOUT DEPTH

IT IS ACCEPTABLE TO USE BLOCKOUTS UP TO 16" DEEP TO INCREASE THE POST OFFSET TO AVOID UNDERGROUND OBSTACLES. THERE IS NO LIMIT TO THE NUMBER OF POSTS THAT CAN HAVE ADDITIONAL BLOCKOUTS UP TO 16" DEEP.

NOTE:

1. ALL FILLETS SHALL HAVE A MINIMUM RADIUS OF 3/16".
2. IF THE BOLT EXTENDS MORE THAN ¼" FROM THE NUT THE BOLT SHOULD BE TRIMMED BACK.

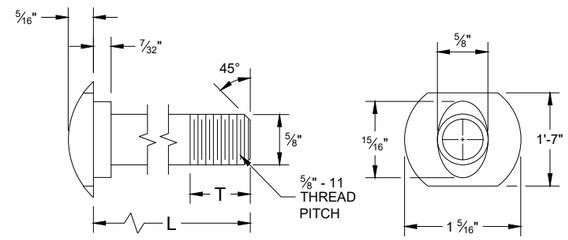

POST BOLT TABLE

L	T (MIN.)
1 ¼"	1 ⅛"
2"	1 ¾"
10"	4"
14"	4 1/16"
18"	4"
21"	4 1/16"
25"	4"

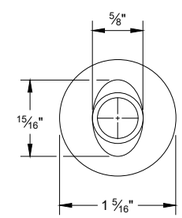

ALTERNATE BOLT HEAD

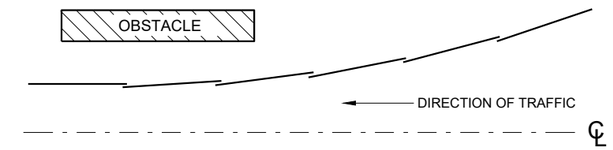

PLAN VIEW
BEAM LAPPING DETAIL

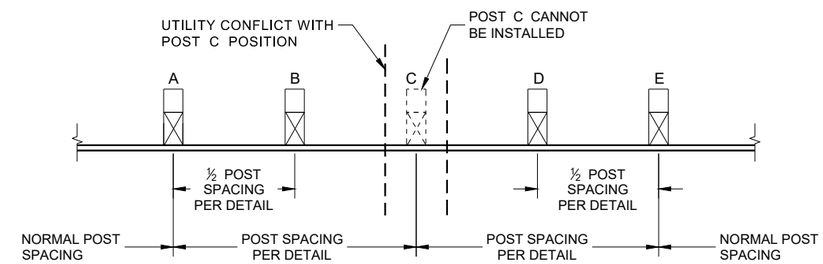

POST DRIVING FOR CONTINUOUS UNDERGROUND OBSTRUCTION

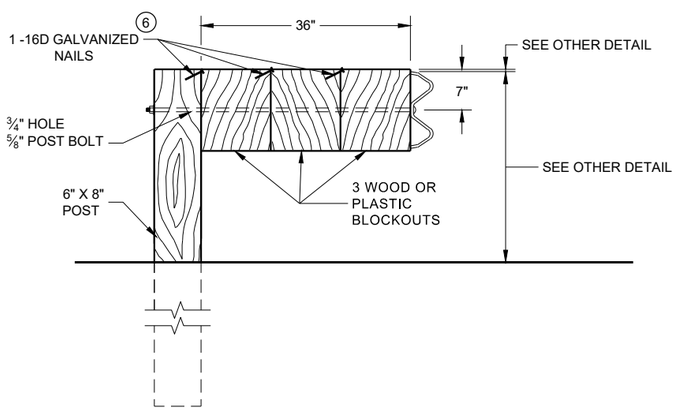

DETAIL FOR 36" BLOCKOUT DEPTH

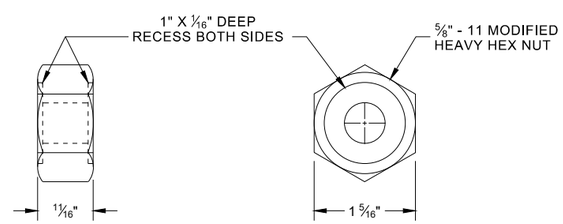

POST BOLT, SPLICE BOLT AND RECESS NUT

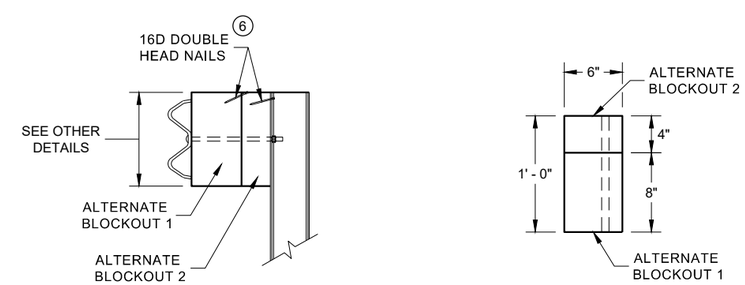

SIDE VIEW

PLAN VIEW

ALTERNATE WOOD BLOCKOUT DETAIL

NOTES: UNDER SPECIAL CIRCUMSTANCES, SUCH AS AVOIDING OBSTACLES THAT ARE NOT RELOCATED, IT IS ACCEPTABLE TO INSTALL ADDITIONAL BLOCKOUTS TO OBTAIN UP TO 36" DEPTH FOR ONE OR TWO POSTS IN A SECTION OF GUARDRAIL.

DO NOT USE 16" OR 36" BLOCKOUTS IF IT CAUSES THE POST TO BE DRIVEN BEYOND SHOULDER HINGE POINT OR CAUSES A FIXED OBJECT TO BE WITHIN THE DEFLECTION DISTANCE OF THE BARRIER.

(6) WHEN USING STEEL POST AD WOOD BLOCKOUTS, INSTALL FOUR 16D GALVANIZED NAILS. INSTALL NAILS AT THE BACK CORNERS OF THE BLOCK AND BEND THE NAILS OVER THE FLANGE OF THE STEEL POST.

MIDWEST GUARDRAIL SYSTEM (MGS) GUARDRAIL

STATE OF WISCONSIN
DEPARTMENT OF TRANSPORTA

6

SDD 14B42 - 07c

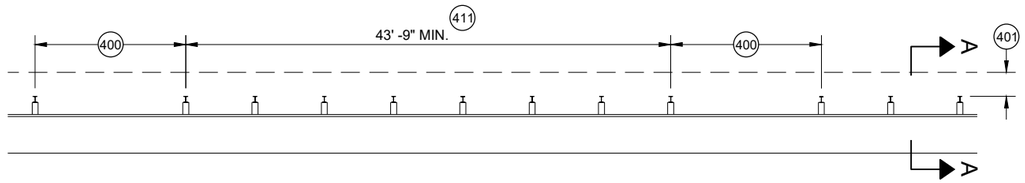

MISSING POST IN MGS GUARDRAIL

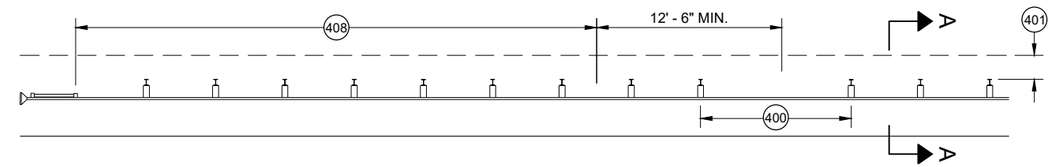

MISSING POST IN MGS GUARDRAIL NEAR EAT

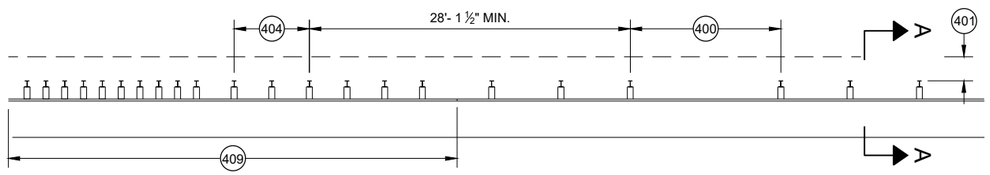

MISSING POST IN MGS GUARDRAIL NEAR AN APPROACH TRANSITION

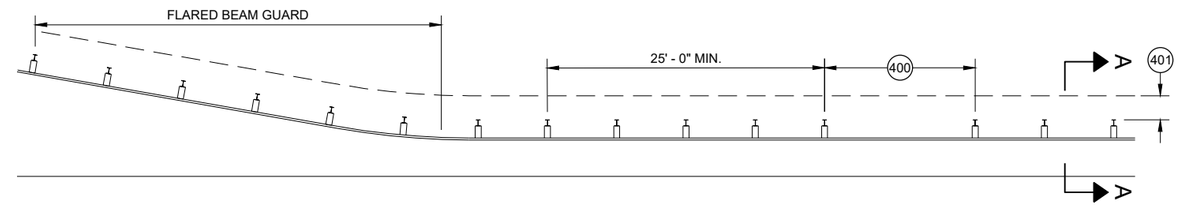

MISSING POST IN MGS GUARDRAIL NEAR FLARED BEAM GUARD

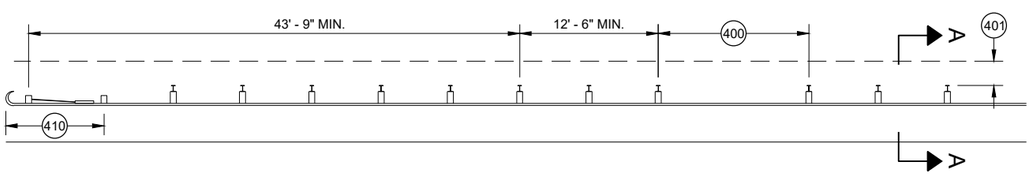

MISSING POST IN MGS GUARDRAIL NEAR A TYPE 2 END TERMINAL

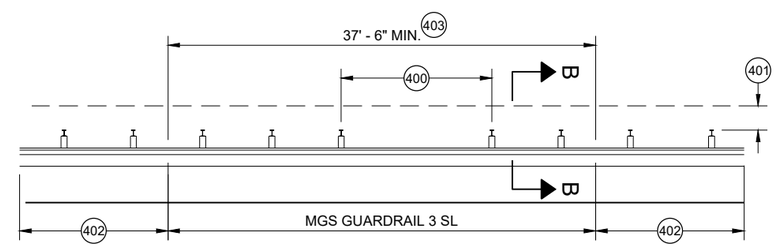

MISSING POST IN SHORT SPAN MGS GUARDRAIL NEAR CURB (SL) 407

400 MAX SPAN 12' - 6"
401 2' MIN.
402 MGS GUARDRAIL 3
403 NESTING BEAM GUARD
404 ASYMMETRIC TRANSITION
405 SOIL WELL DRAINED AND COMPACTED
406 SEE OTHER DRAWINGS IN THIS SDD
407 SEE OTHER DRAWINGS FOR MIN. SPACING BETWEEN SPANS
408 SEE SDD 14B44
409 SEE SDD 14B45
410 SEE SDD 14B47
411 MINIMUM DISTANCE BETWEEN MISSING POST SPANS.

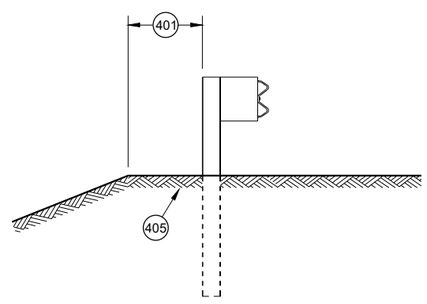

SECTION A - A 406

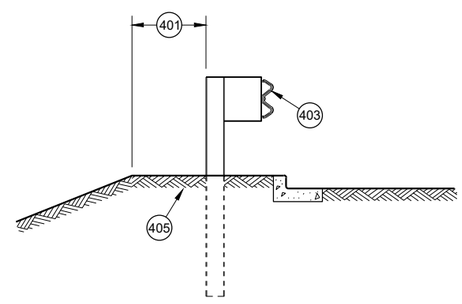

SECTION B - B 406

MIDWEST GUARDRAIL SYSTEM (MGS) GUARDRAIL

STATE OF WISCONSIN
DEPARTMENT OF TRANSPORTATION

APPROVED
May 2021 — DATE
/S/ Rodney Taylor — ROADWAY STANDARDS DEVE UNIT SUPERVISOR
FHWA

6

SDD 14B42 - 07d

GENERAL NOTES

(A) THE SLOPE IN THE AREA BOUNDED BY THE GRADELINE, THE HINGE POINT LINE (HPL) AND THE CLEAR ZONE LIMITS (CZL) SHALL BE 4:1 OR FLATTER.

(B) AFTER FINAL ASSEMBLY, RECHECK CABLE TO BE SURE IT IS TAUT AND HAS NOT RELAXED

(C) DIFFERENT MANUFACTURERS REQUIRE DIFFERENT PERFORATED W - BEAM RAIL END PANELS. SEE MANUFACTURER'S INFORMATION.

(D) ATTACH ALUMINUM SHEET TO E.A.T. HEAD USING 4 STAINLESS STEEL SELF - TAPPING SCREWS. ONE SCREW PER CORNER.

(E) HARDWARE MAY VARY BETWEEN MANUFACTURER. SEE MANUFACTURER'S DRAWING FOR INFORMATION.

DIMENSIONS MAY VARY, MANUFACTURER'S INFORMATION.

SEE SDD 14B42 FOR MORE INFORMATION.

* DO NOT ATTACH BLOCKOUTS TO POST 1 AND 2.

DO NOT INSTALL REFLECTORS ON THE FIRST 50 FEET OF THE APPROACH END OF THE ENERGY ABSORBING TERMINAL.

SEE MANUFACTURER'S DRAWING FOR SPLICE LOCATION, HARDWARE DIMENSIONS AND INSTALLATION INSTRUCTIONS.

THE CENTER OF THE UPPER 3 ½" DIAMETER HOLE ON POST NUMBER 3 THROUGH POST 9 IS TO BE FLUSH WITH THE GROUND LINE UP TO A MAXIMUM OF 2" ABOVE GROUND LINE. WOOD BLOCKS ON POSTS NUMBERED 3 THROUGH 9 MAY BE ADJUSTED UP TO 3" ABOVE THE TOP OF POST.

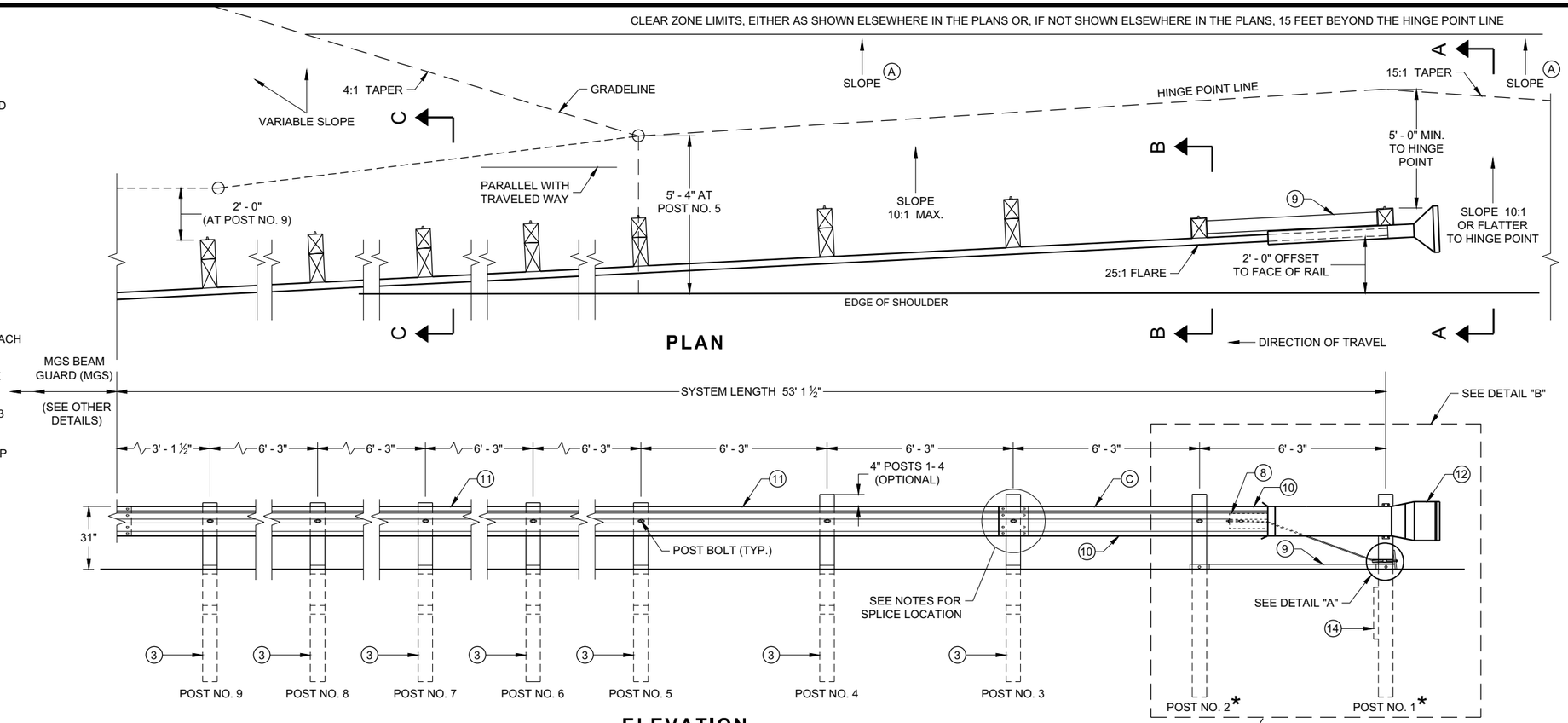

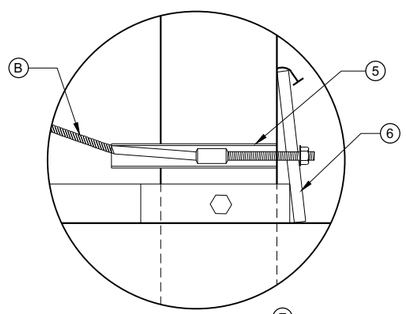

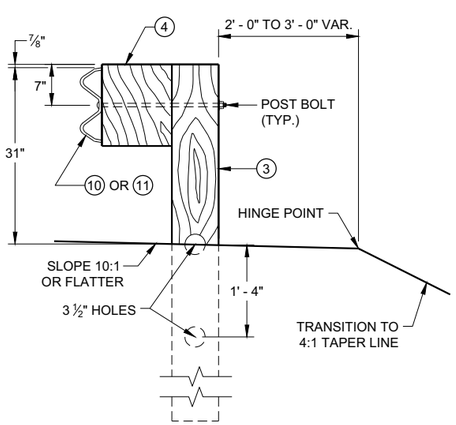

SECTION C - C
TYPICAL AT POST NOS. 3 - 9

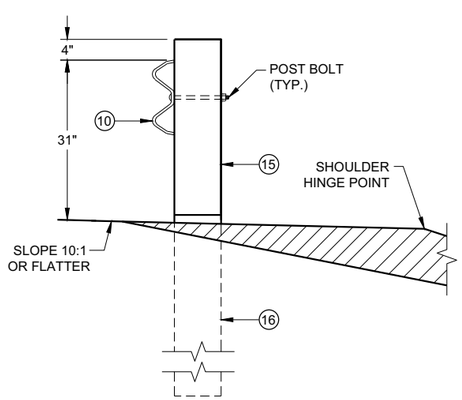

SECTION B - B
TYPICAL AT POST NO. 2*

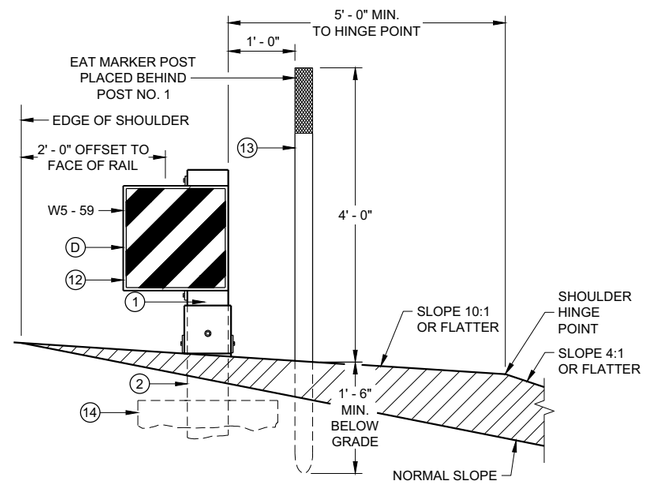

SECTION A - A
TYPICAL AT POST NO. 1*

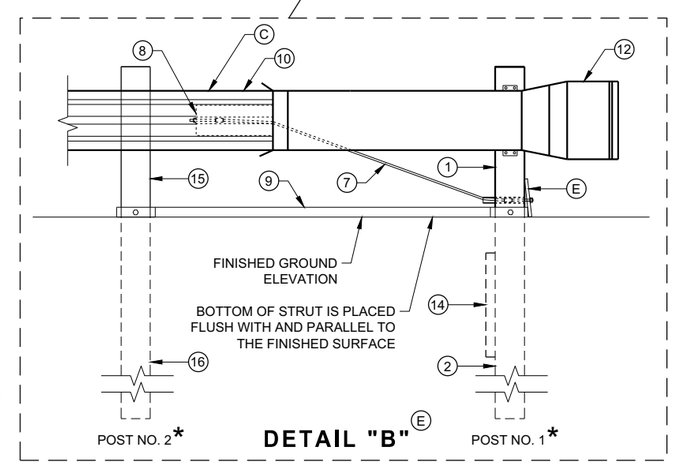

MIDWEST GUARDRAIL SYSTEM ENERGY ABSORBING TERMINAL (MGS)

STATE OF WISCONSIN
DEPARTMENT OF TRANSPORTAT

6

SDD 14B44 - 04a

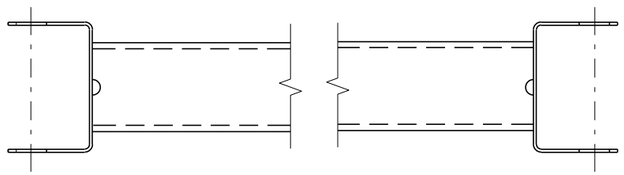

GENERIC GROUND STRUT 9 E

BILL OF MATERIALS

PART NO.	DESCRIPTION MATERIALS PROVIDED BY MGS EAT MANUFACTURER. SEE MANUGACTURER'S DETAILS FOR MORE INFORMATION.
1	UPPER POST NO. 1 6" X 6" TUBE
2	LOWER POST NO. 1
3	WOOD CRT
4	WOOD BLOCKOUT
5	PIPE SLEEVE
6	BEARING PLATE
7	BCT CABLE ASSEMBLY
8	ANCHOR CABLE BOX
9	GROUND STRUT
10	PERFORATED W-BEAM RAIL END PANEL, 12'-6" LONG.
11	STANDARD W-BEAM RAIL. MULTIPLE SECTIONS REQUIRED. SECTIONS VARY IN LENGTH.
12	IMPACT HEAD
13	EAT MARKER POST - YELLOW (SEE APPROVED PRODUCTS LIST)
14	SOIL PLATE
15	UPPER POST NO. 2
16	LOWER POST NO. 2

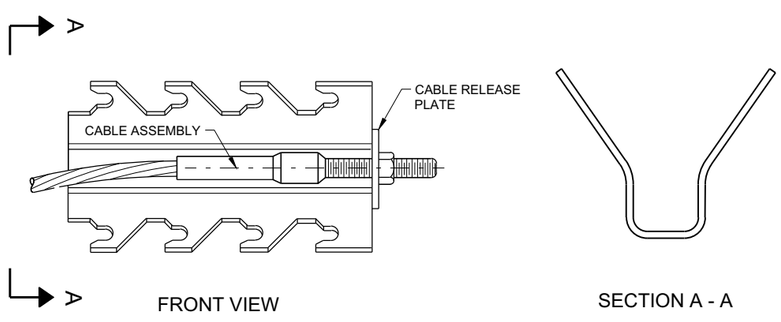

GENERIC ANCHOR CABLE BOX 9 E

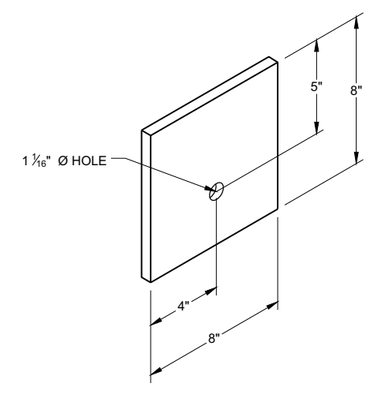

BEARING PLATE 6 E

6

6

SDD 14B44 - 04b

SDD 14B44 - 04b

MIDWEST GUARDRAIL SYSTEM ENERGY ABSORBING TERMINAL (MGS)

STATE OF WISCONSIN
DEPARTMENT OF TRANSPORTAT

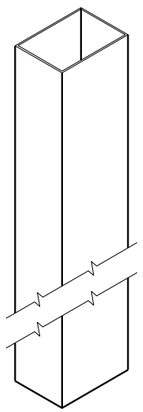

UPPER POST NO. 1 (1) (E)

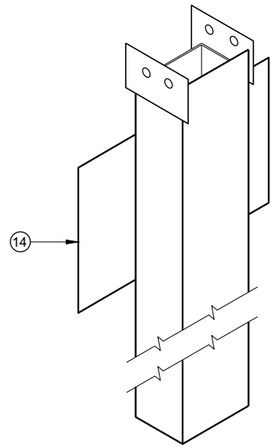

LOWER POST NO. 1 (2) (E)

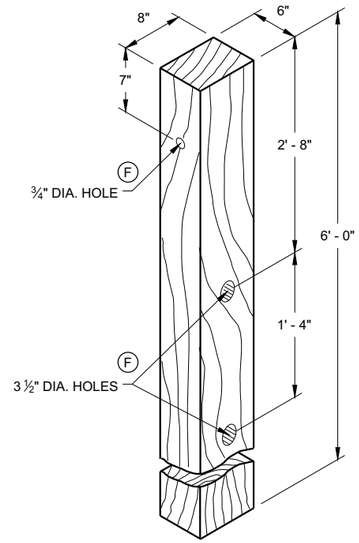

WOOD CRT POST (3) (E)
POSTS NUMBER 3-9

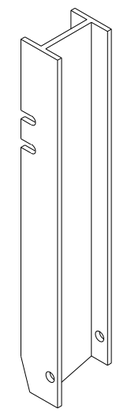

UPPER POST NO. 2 (15) (E)

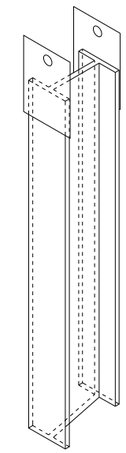

LOWER POST NO. 2 (16) (E)

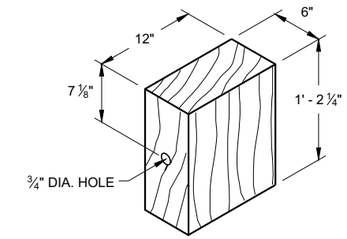

WOOD BLOCKOUT (4)
REQ'D. AT ALL POSTS EXCEPT POST NO'S 1 & 2

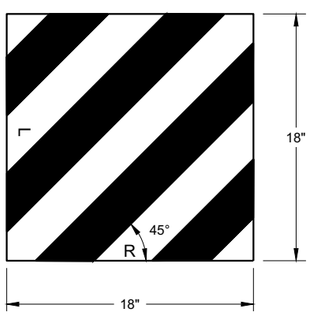

W5 - 59

REFLECTIVE SHEETING DETAIL (E)

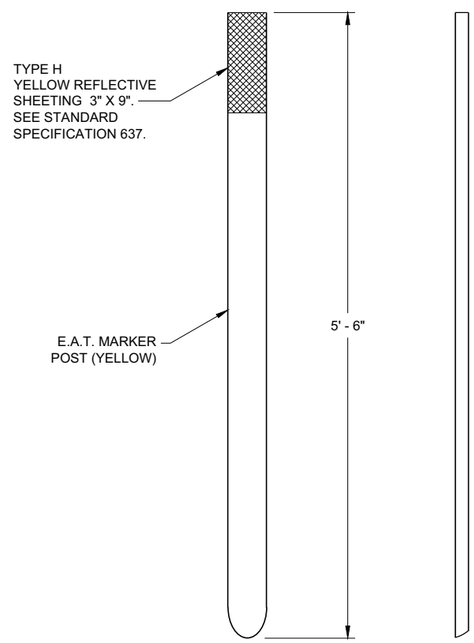

FRONT VIEW SIDE VIEW

E.A.T. MARKER POST (13)

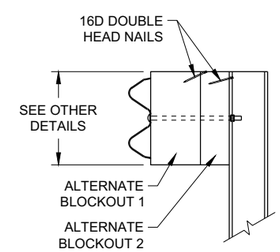

SIDE VIEW

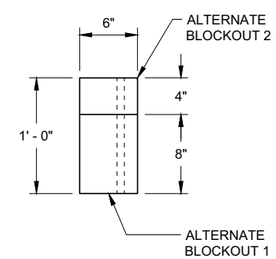

TOP VIEW

ALTERNATE WOOD BLOCKOUT DETAIL

MIDWEST GUARDRAIL SYSTEM ENERGY ABSORBING TERMINAL (MGS)

STATE OF WISCONSIN
DEPARTMENT OF TRANSPORTATION

APPROVED
7/2018 — DATE
/S/ Rodney Taylor — ROADWAY STANDARDS DEVE UNIT SUPERVISOR
FHWA

6

SDD 14B44 - 04c

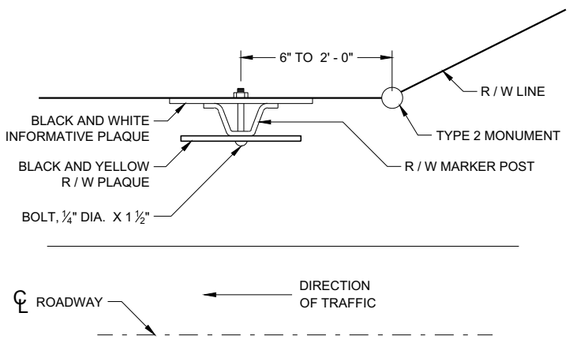

PLAN VIEW
STEEL MARKER POST

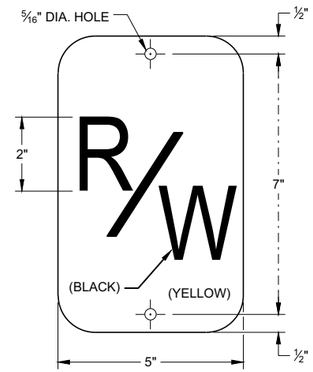

R / W PLAQUE

THE RIGHT-OF-WAY PLAQUE AND INFORMATIVE PLAQUE WILL BE FURNISHED BY THE WISCONSIN DEPARTMENT OF TRANSPORTATION.

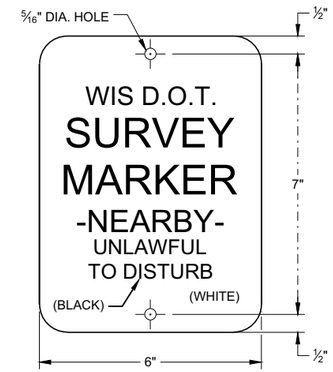

INFORMATIVE PLAQUE

GENERAL NOTES

DETAILS OF CONSTRUCTION NOT SHOWN ON THIS DRAWING SHALL CONFORM TO THE PERTINENT REQUIREMENTS OF THE STANDARD SPECIFICATIONS AND THE APPLICABLE SPECIAL PROVISIONS.

A STEEL MARKER POST FOR RIGHT -OF-WAY SHALL BE PLACED IN THE RIGHT-OF-WAY WITH THE BACK OF THE POST ON THE LONGER RIGHT-OF-WAY TANGENT, 6 INCHES TO 24 INCHES FROM EACH TYPE 2 MONUMENT TO SERVE AS A GUARD POST, AND AT OTHER LOCATIONS AS SHOWN ON THE PLANS OR AS DIRECTED BY THE ENGINEER.

THE "R/W" PLAQUE SHALL FACE THE ROADWAY AND THE INFROMATIVE PLAQUE SHALL FACE AWAY FROM THE ROADWAY. "R/W" AND INFORMATIVE PLAQUES WILL BE FURNISHED BY THE WISCONSIN DEPARTMENT OF TRANSPORTATION.

STEEL MARKER POSTS SHALL MEET THE MINIMUM MATERIAL REQUIREMENTS FOR STEEL DELINEATOR POSTS; EXCEPT POSTS PAINTED WITH FEDERAL YELLOW ENAMEL NEED NOT BE ZINC COATED.

(1) IN AREAS OF SOLID ROCK, DRILL A BORE HOLE 2" GREATER THAN THE WIDEST DIMENSION OF THE POST CROSS SECTION INTO THE ROCK A MINIMUM DEPTH OF 12 INCHES. CUT OR SPLICE THE POST SO THAT A MINIMUM LENGTH OF 3' - 10" PROTRUDES ABOVE THE GROUND. BLOW OUT THE BORE HOLE IN THE ROCK USING COMPRESSED AIR. FILL THE BORE HOLE WITH CEMENT GROUT OR EQUIVALENT, DEPENDING ON THE STABILITY OF THE ROCK.

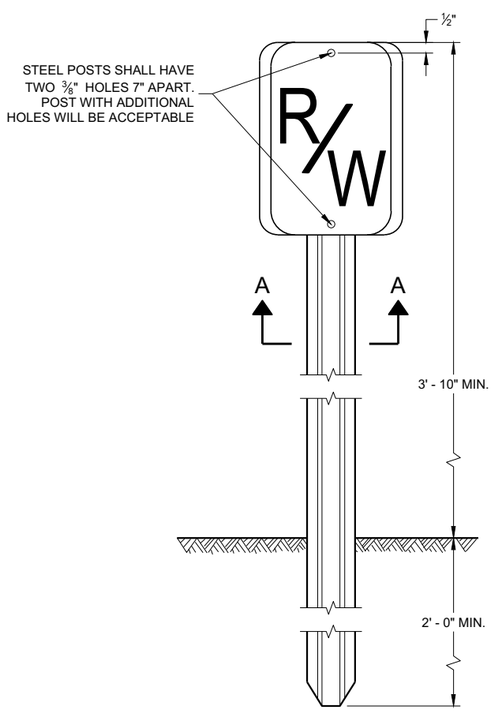

FRONT VIEW
STEEL MARKER POST

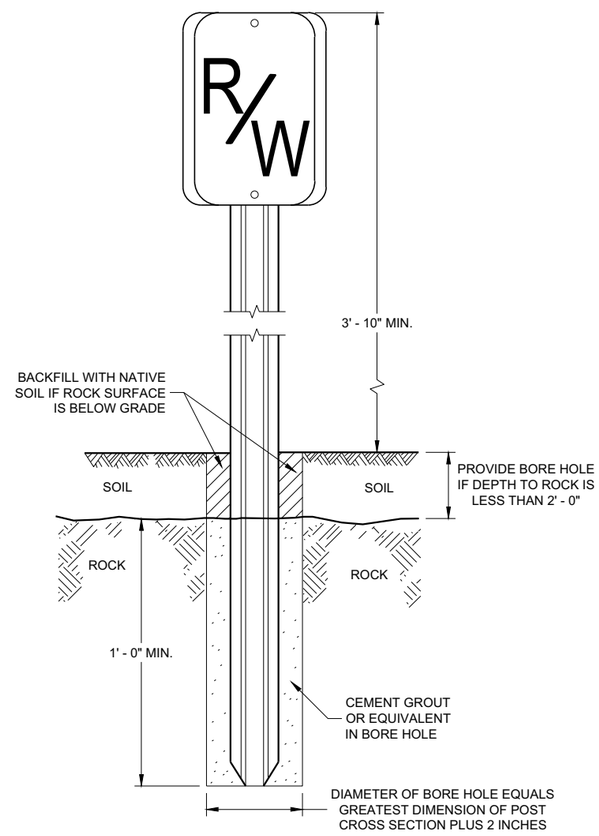

FRONT VIEW
ROCK INSTALLATION (1)

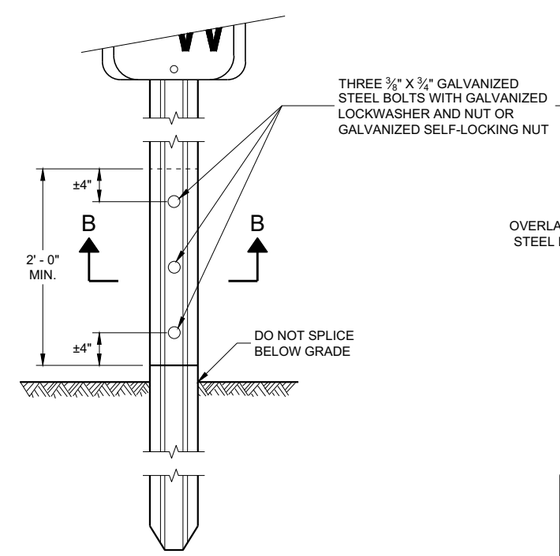

FRONT VIEW
SPLICE DETAIL

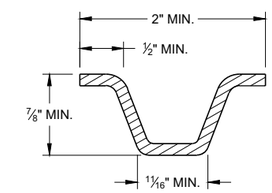

MIN. WEIGHT 1.12 LB./FT.
SECTION A - A

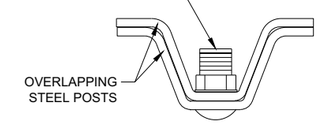

SECTION B - B

MARKER POST
FOR RIGHT - OF - WAY

STATE OF WISCONSIN
DEPARTMENT OF TRANSPORTATION

APPROVED
2/18/2016 — DATE
/S/ Ray Kumapayi — CHIEF SURVEYING AND MA ENGINEER
FHWA

6

6

SDD 15A01 - 13a

SDD 15A01 - 13a

GENERAL NOTES

DETAILS OF CONSTRUCTION NOT SHOWN ON THIS DRAWING SHALL CONFORM TO THE PERTINENT REQUIREMENTS OF THE STANDARD SPECIFICATIONS AND THE APPLICABLE SPECIAL PROVISIONS.

A FLEXIBLE MARKER POST FOR RIGHT -OF-WAY SHALL BE PLACED IN THE RIGHT-OF-WAY WITH THE BACK OF THE POST ON THE LONGER RIGHT-OF-WAY TANGENT, 6 INCHES TO 24 INCHES FROM EACH TYPE 2 MONUMENT TO SERVE AS A GUARD POST, AND AT OTHER LOCATIONS AS SHOWN ON THE PLANS OR AS DIRECTED BY THE ENGINEER.

THE RIGHT-OF-WAY STICKER DIMENSIONS SHALL BE 2 ¼" X 17" AND THE STICKER SHALL BE MADE OF A NON-RELECTIVE VINYL MATERIAL. THE RIGHT-OF-WAY STICKER SHALL FACE THE ROADWAY.

INSTALL PER DEPTH OF MANUFACTURER'S RECOMMENDATION BUT NOT LESS THAN 18 INCHES BELOW GRADE FROM THE BOTTOM OF THE METAL U-CHANNEL ANCHOR.

1. FLEXIBLE MARKER POSTS SHALL BE INCLUDED IN THE APPROVED PRODUCTS LIST FOR MARKER POSTS AND SHALL BE FEDERAL YELLOW IN COLOR.
2. IN AREAS OF SOLID ROCK, DRILL A BORE HOLE 2" GREATER THAN THE WIDEST DIMENSION OF THE POST CROSS SECTION INTO THE ROCK A MINIMUM DEPTH OF 12 INCHES. CUT OR SPLICE THE POST SO THAT A MINIMUM LENGTH OF 4' - 0" PROTRUDES ABOVE THE GROUND. BLOW OUT THE BORE HOLE IN THE ROCK USING COMPRESSED AIR.

   FILL THE BORE HOLE WITH CEMENT GROUT OR EQUIVALENT, DEPENDING ON THE STABILITY OF THE ROCK.

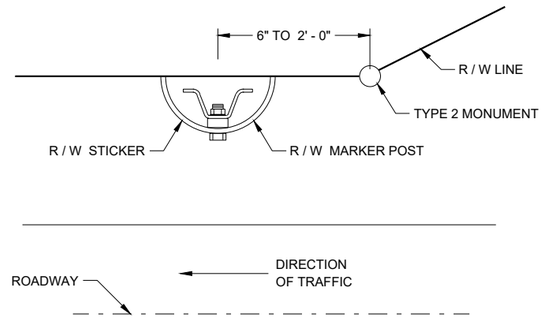

PLAN VIEW

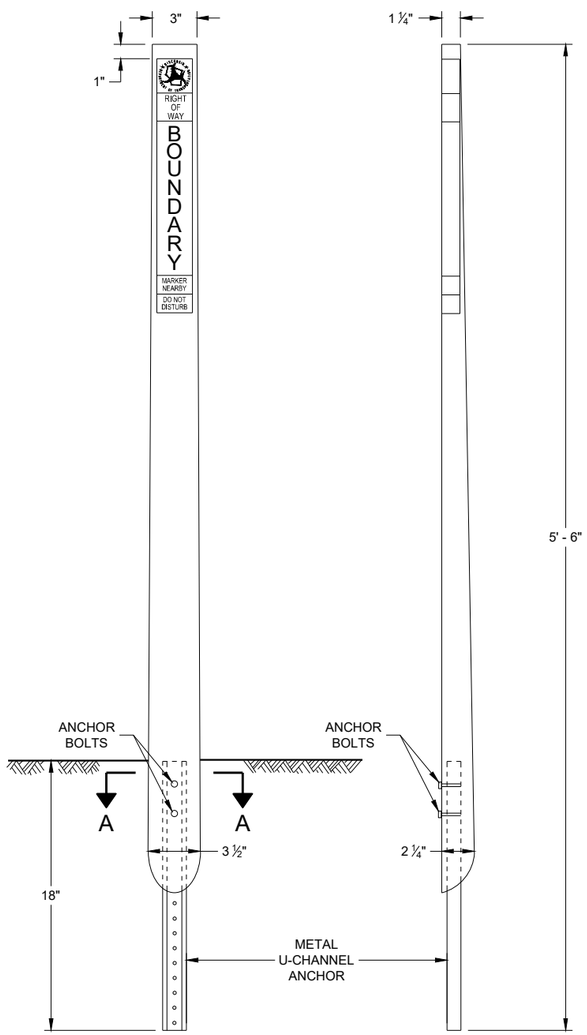

FRONT VIEW **SIDE VIEW**

FLEXIBLE MARKER POST FOR (1) RIGHT-OF-WAY

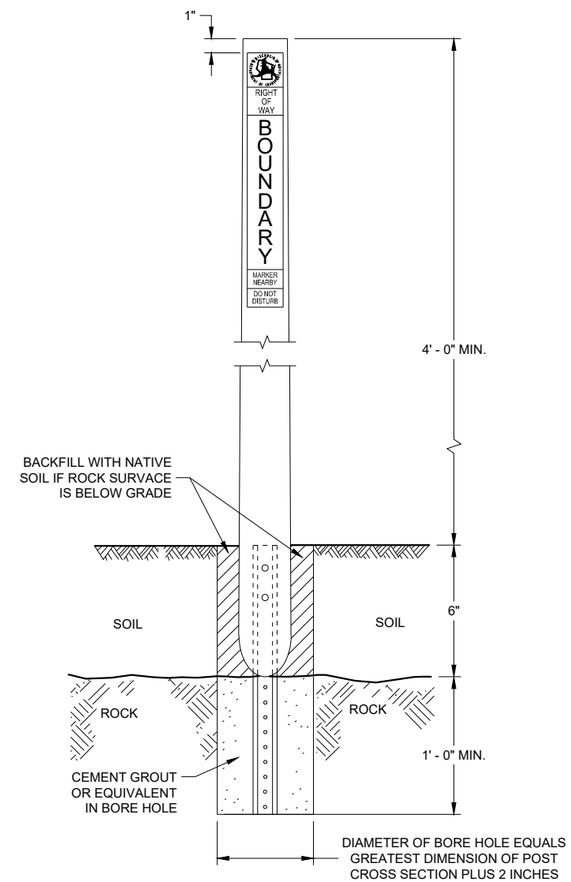

FRONT VIEW (1)(2)
ROCK INSTALLATION

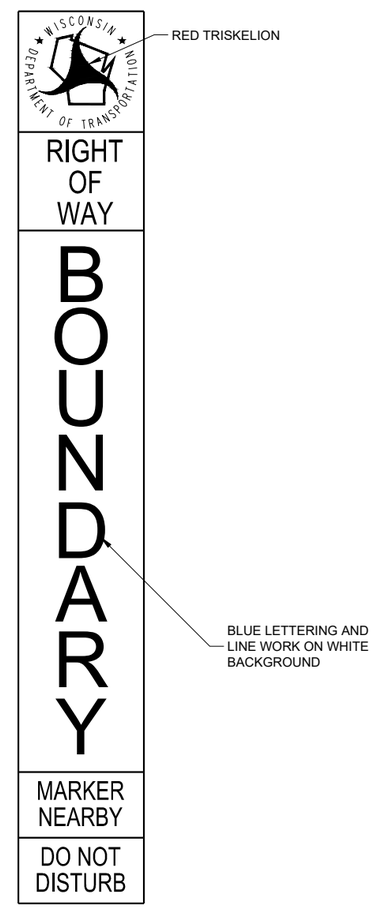

RIGHT-OF-WAY STICKER

THE RIGHT-OF-WAY STICKER SHALL BE ATTACHED 1" FROM THE TOP OF THE RIGHT-OF-WAY POST PRIOR TO DELIVERY.

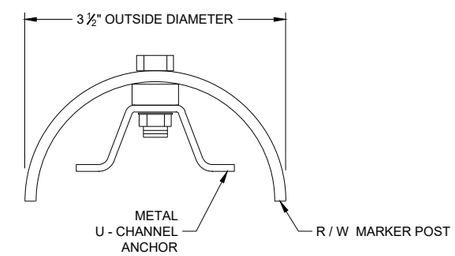

SECTION A - A

FLEXIBLE MARKER POST FOR RIGHT - OF - WAY

STATE OF WISCONSIN
DEPARTMENT OF TRANSPORTATION

APPROVED
2/16/2016 — DATE
/S/ Ray Kumapayii — CHIEF SURVEYING AND MAPPING ENGINEER
FHWA

6

6

SDD 15A01 - 13b

SDD 15A01 - 13b

GENERAL NOTES

DETAILS OF CONSTRUCTION, MATERIALS AND WORKMANSHIP NOT SHOWN ON THIS DRAWING SHALL CONFORM TO THE PERTINENT REQUIREMENTS OF THE STANDARD SPECIFICATIONS AND THE APPLICABLE SPECIAL PROVISIONS.

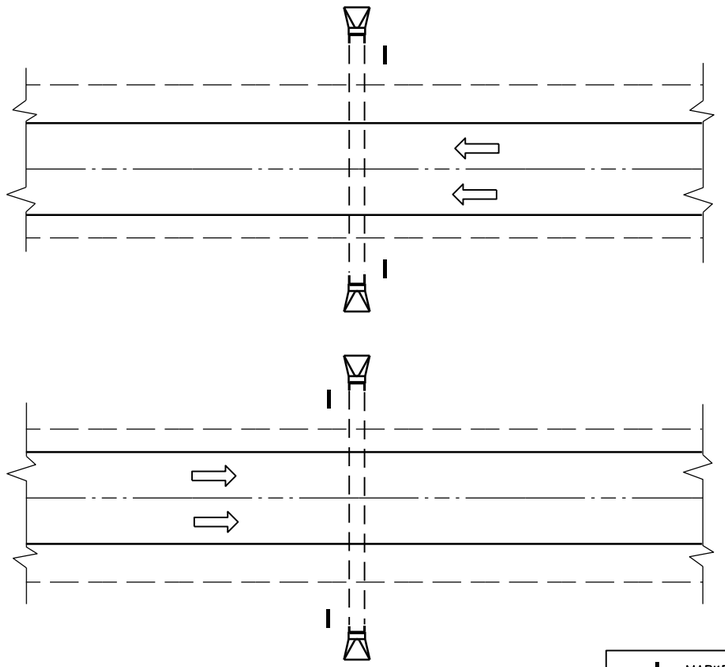

PLAN VIEW

DIVIDED HIGHWAY

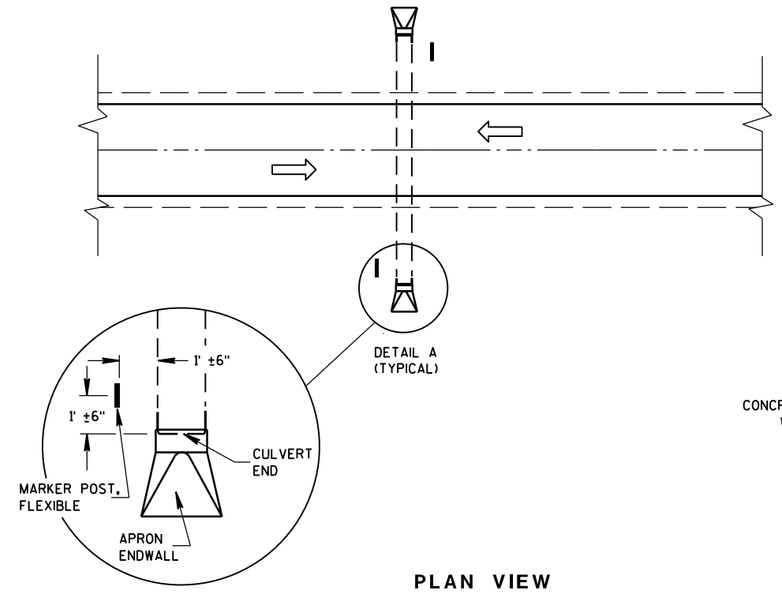

DETAIL A
(TYPICAL)

PLAN VIEW

UNDIVIDED HIGHWAY

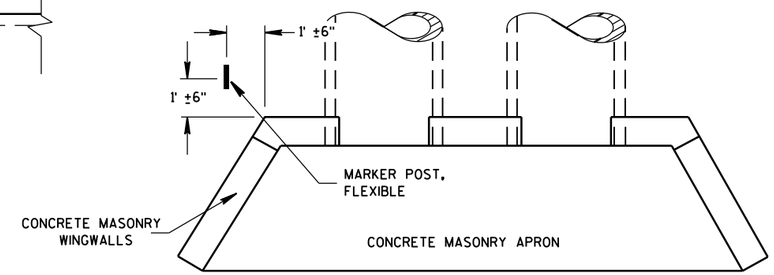

PLAN VIEW

CONCRETE MASONRY ENDWALLS FOR CULVERT PIPE AND PIPE ARCH

MARKER POST, FLEXIBLE

DIRECTION OF TRAFFIC FLOW

FLEXIBLE MARKER POST LOCATION

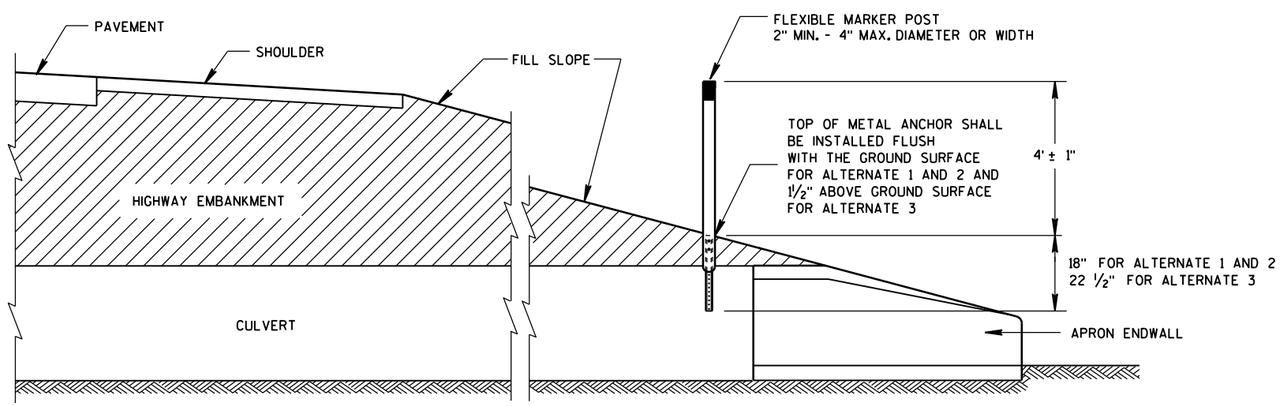

CROSS SECTION

FLEXIBLE MARKER POST

FLEXIBLE MARKER POST FOR CULVERT END

STATE OF WISCONSIN
DEPARTMENT OF TRANSPOR

6

S.D.D. 15 A 3-2a

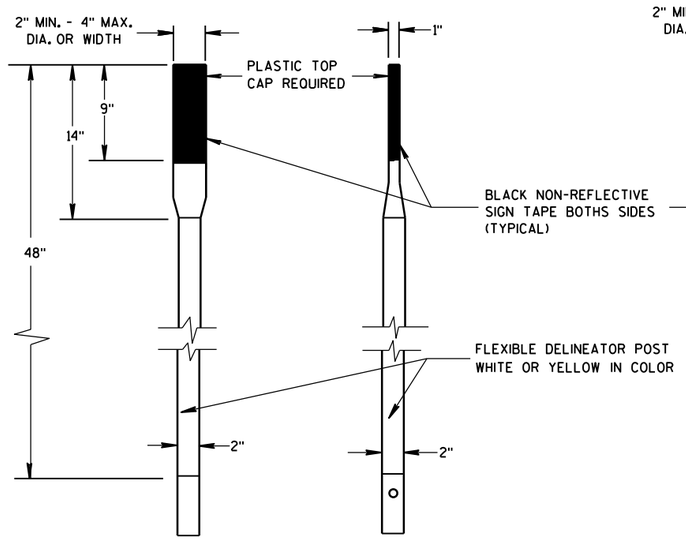

FRONT VIEW SIDE VIEW

ALTERNATE 1

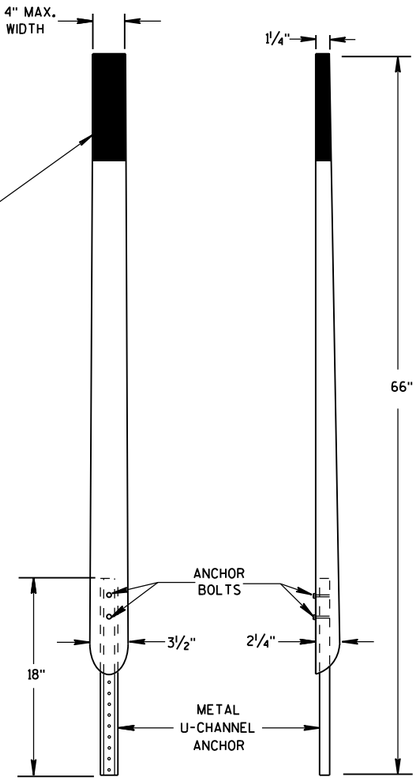

FRONT VIEW SIDE VIEW

ALTERNATE 2

FLEXIBLE MARKER POSTS

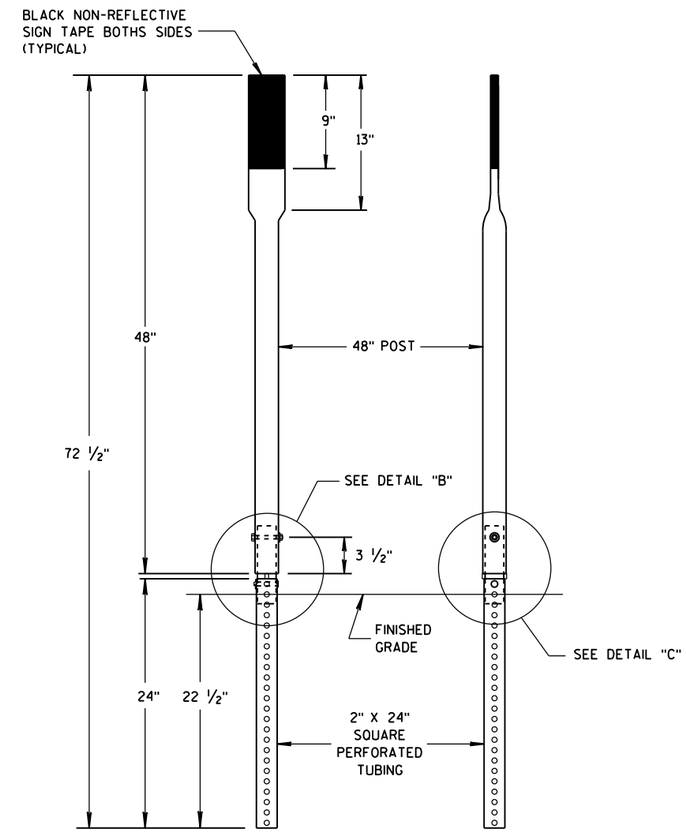

FRONT VIEW SIDE VIEW

ALTERNATE 3

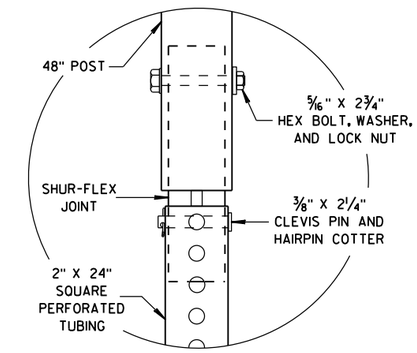

DETAIL B

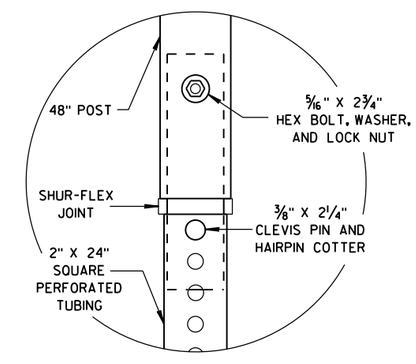

DETAIL C

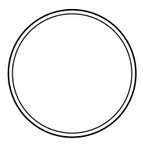

SECTION A-A

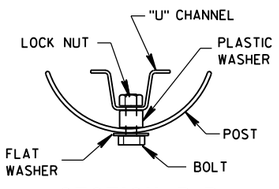

SECTION B-B

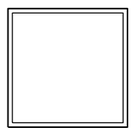

SECTION C-C

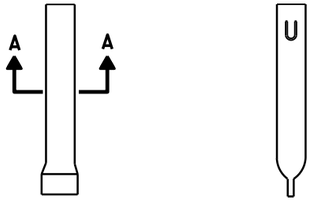

FRONT VIEW SIDE VIEW

ALTERNATE 1

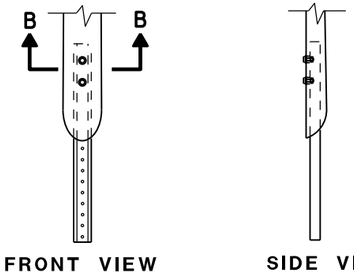

FRONT VIEW SIDE VIEW

ALTERNATE 2

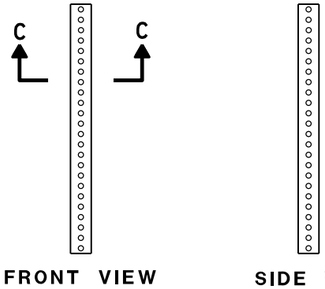

FRONT VIEW SIDE VIEW

ALTERNATE 3

FLEXIBLE MARKER POST ANCHORS

FLEXIBLE MARKER POST
FOR CULVERT END

STATE OF WISCONSIN
DEPARTMENT OF TRANSPORTATION

APPROVED
10/1/2012 /S/ Travis Feltes
DATE STATE TRAFFIC ENGINEER
FHWA

6

6

S.D.D. 15 A 3-2b

S.D.D. 15 A 3-2b

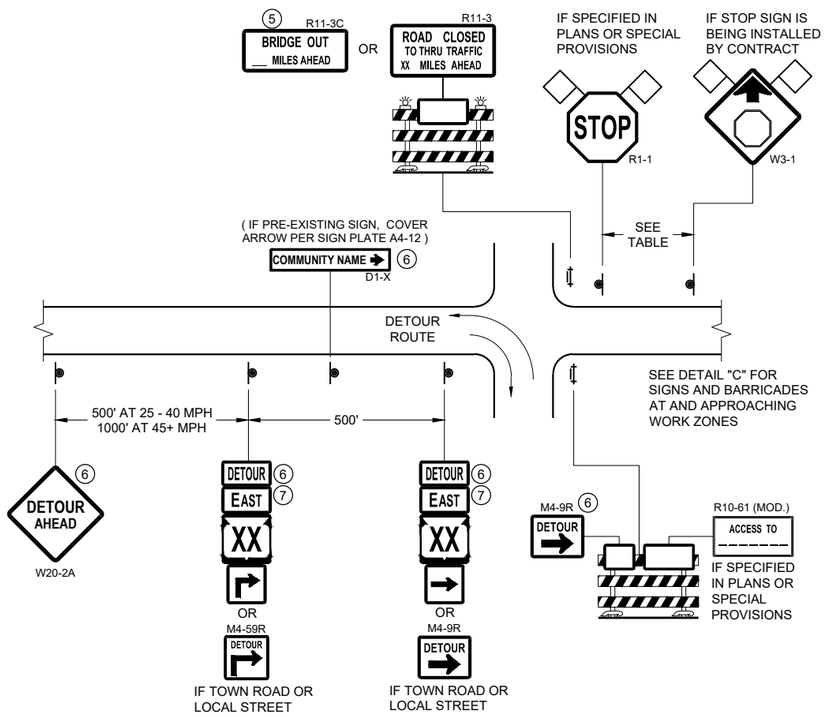

DETAIL A
MAINLINE CLOSURE WITH POSTED DETOUR
WORK ZONE GREATER THAN OR EQUAL TO ½ MILE FROM DETOUR ROUTE (1000 FEET IF URBAN)

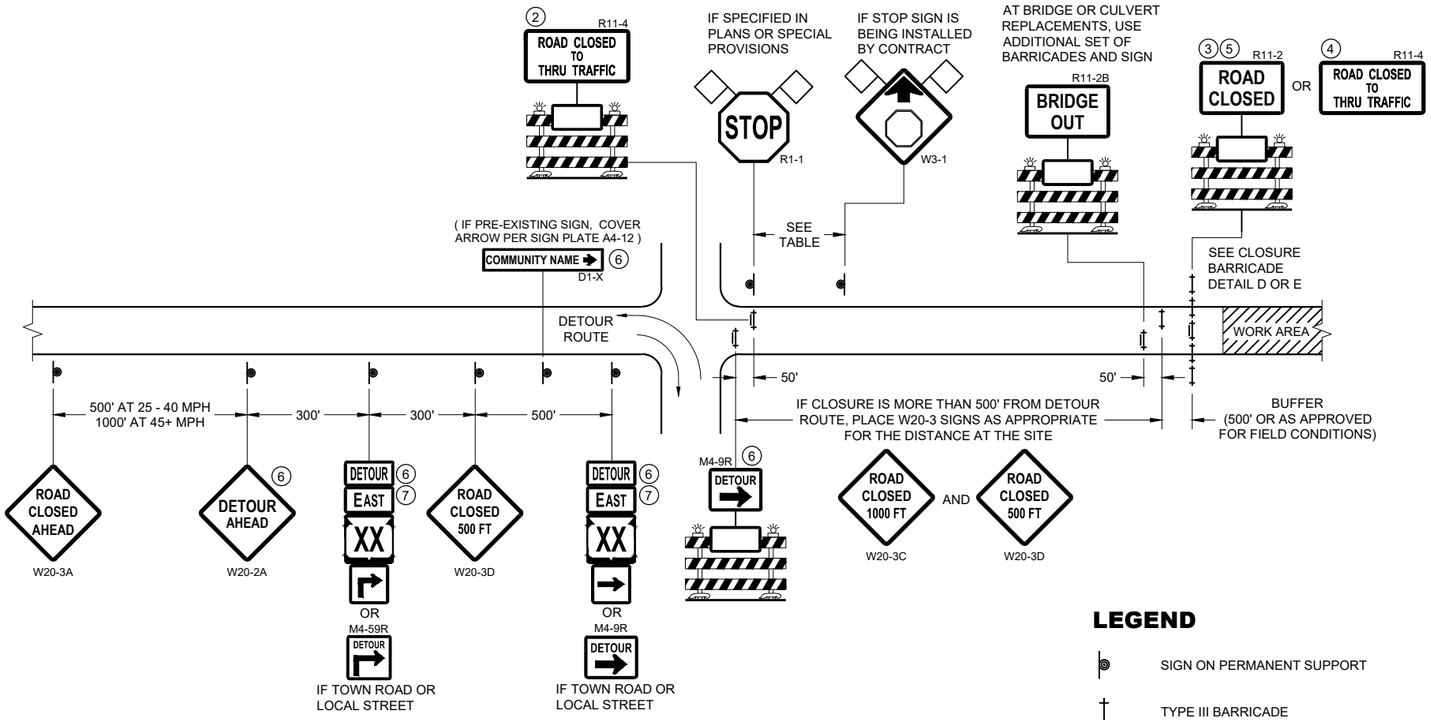

DETAIL B
MAINLINE CLOSURE WITH POSTED DETOUR
WORK ZONE LESS THAN ½ MILE FROM DETOUR ROUTE (1000 FEET IF URBAN)

LEGEND

- SIGN ON PERMANENT SUPPORT
- TYPE III BARRICADE
- TYPE III BARRICADE WITH ATTACHED SIGN
- TYPE "A" WARNING LIGHT (FLASHING)
- WORK AREA
- FLAGS, 16" X 16" MIN. (ORANGE)
- DETOUR — M4 - 8
- EAST — M3 - X
- XX (M1 - 4) OR XX (M1 - 6) OR COUNTY X (M1 - 5A)
- M05 - 1 OR M06 - 1

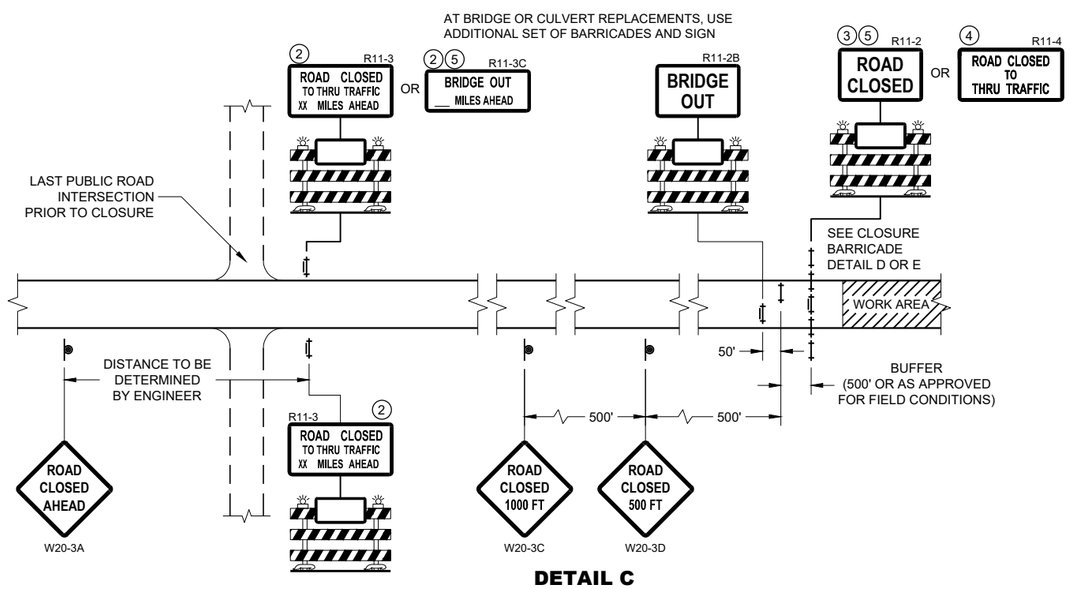

DETAIL C
MAINLINE CLOSURE, NO POSTED DETOUR

SPEED LIMIT (MPH)	"STOP AHEAD" ADVANCE WARNING DISTANCE (FT)
25	200
30	200
35	350
40	350
45	500
50	550
55	750

SEE SDD 15C2-SHEET "b" FOR GENERAL NOTES AND FOOTNOTES ① THROUGH ⑦

BARRICADES AND SIGNS FOR MAINLINE CLOSURES

STATE OF WISCONSIN
DEPARTMENT OF TRANSPORTATION

APPROVED
February 2020 — DATE
/S/ Andrew Heidtke — WORK ZONE ENGINEER
FHWA

6

SDD 15C02 - 08a

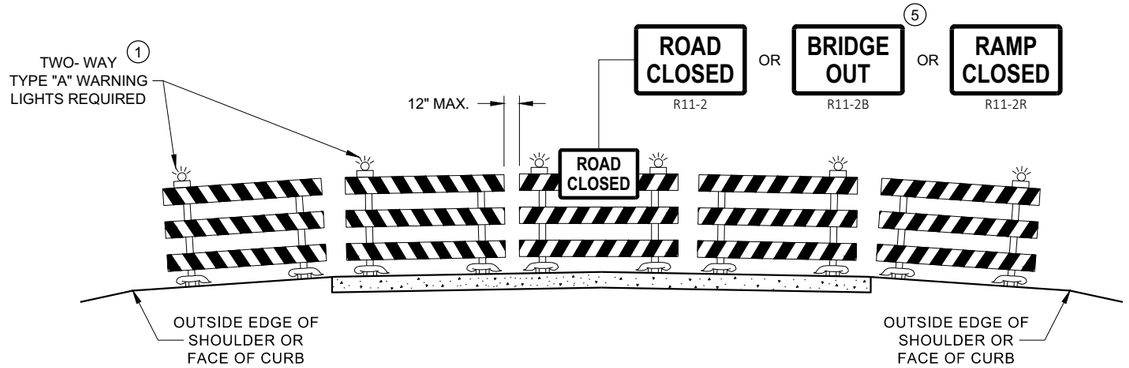

DETAIL D
ROAD CLOSURE BARRICADE DETAIL
APPROACH VIEW

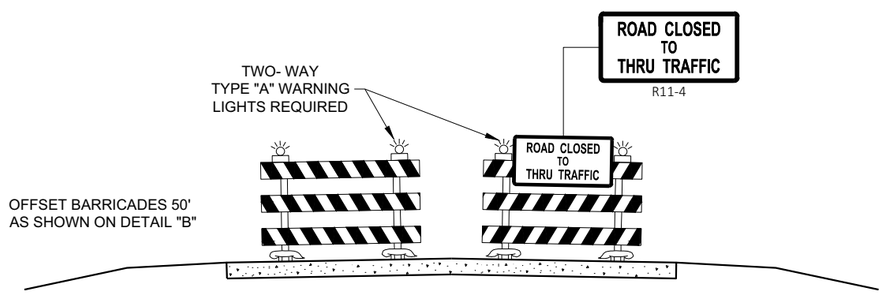

DETAIL E
LANE CLOSURE BARRICADE DETAIL
APPROACH VIEW

SEE SDD 15C2 - SHEET "a" FOR LEGEND

GENERAL NOTES

THE EXACT NUMBER, LOCATION, AND SPACING OF ALL SIGNS AND BARRICADES SHALL BE ADJUSTED TO FIT FIELD CONDITIONS AS APPROVED BY THE ENGINEER.

ANY SIGNS TEMPORARY OR EXISTING, WHICH CONFLICT WITH TRAFFIC CONTROL "IN USE", SHALL BE REMOVED OR COVERED AS NEEDED AND AS APPROVED BY THE ENGINEER.

THE SPACING BETWEEN TRAFFIC CONTROL SIGNS SHOULD BE ADJUSTED TO NOT CONFLICT WITH AND SHOULD PROVIDE A DESIRABLE MINIMUM OF 200 FEET CLEARANCE TO EXISTING SIGNS THAT WILL REMAIN IN PLACE.

BARRICADES THAT MUST BE MOVED FOR A WORK OPERATION SHALL BE IMMEDIATELY RE-ESTABLISHED UPON COMPLETION OF THE OPERATION, OR FOR CONTINUING OPERATIONS, AT THE END OF EACH WORKING DAY.

SIGNS THAT WILL BE IN PLACE LESS THAN 7 CONTINUOUS DAYS AND NIGHTS MAY BE MOUNTED ON PORTABLE SUPPORTS.

ALL TYPE III BARRICADES SHALL HAVE RAILS REFLECTORIZED ON BOTH FACES. STRIPES SHALL BE PROPERLY SLOPED DOWN TOWARD THE TRAFFIC SIDE OR AS SHOWN IN THE ROAD CLOSURE BARRICADE DETAIL "D" FOR FULL ROAD CLOSURES.

TYPE "A" LOW - INTENSITY FLASHING WARNING LIGHTS SHALL BE VISIBLE ON BOTH SIDES OF THE BARRICADE.

THE R11 - 2, R11 - 3, M4 - 9, R11 - 4, AND R10 - 61 SIGNS PLACED ON THE BARRICADES SHALL COVER NO MORE THAN THE TOP RAIL. THE SIGNS SHALL NOT COVER ANY PORTION OF THE MIDDLE RAIL OR BOTTOM RAILS.

"WO" AND "MO" SIGNS ARE THE SAME AS "W" AND "M" SIGNS EXCEPT THE BACKGROUND IS ORANGE.

ALL SIGNS SHALL BE 48" X 48" UNLESS OTHERWISE NOTED BELOW:
- R11 - 2 SHALL BE 48" X 30"
- R11 - 3 SHALL, R11 - 4 AND R10 - 61 SHALL BE 60 " X 30"
- M4 - 9 SHALL BE 30" X 24"
- M3 - X SHALL BE 24" X 12" (36" X 18" IF NEEDED TO MATCH EXISTING SIGNS)
- M4 - 8 SHALL BE 24" X 12" (36" X 18" IF NEEDED TO MATCH EXISTING SIGNS)
- M1 - 4, M1 - 5A AND M1 - 6 SHALL BE 24" X 24" (36" X 36" IF NEEDED TO MATCH EXISTING SIGNS)
- MO5 - 1 AND MO6 - 1 SHALL BE 21" X 21" (30" X 30" IF NEEDED TO MATCH EXISTING SIGNS)
- D1 - X SHALL BE AS SHOWN ON SPECIFIC PROJECT SIGNING DETAIL SHEETS.
- R1 - 1 SHALL BE 36" X 36"

1. TWO WARNING LIGHTS SHALL BE PROVIDED ON THE CENTER BARRICADE AND A MINIMUM OF ONE WARNING LIGHT SHALL BE PROVIDED ON EACH OF THE OTHER BARRICADES WITHIN THE ROADWAY LIMITS. SPACING OF THE WARNING LIGHTS SHALL BE UNIFORM TO THE EDGE OF ROADWAY AS SHOWN (APPROX. 8 FOOT LIGHT SPACING.
2. THESE SIGNS AND BARRICADES ARE NOT REQUIRED IF ROAD CLOSURE BEGINS AT AN INTERSECTION.
3. FOR ROAD CLOSURE WITHOUT LOCAL ACCESS TO PROJECT, SEE ROAD CLOSURE BARRICADE DETAIL "D".
4. FOR ROAD CLOSURE WITH LOCAL ACCESS TO PROJECT, SEE ROAD CLOSURE BARRICADE DETAIL "E".
5. FOR BRIDGE OR CULVERT REPLACEMENTS, SUBSTITUTE "BRIDGE OUT" INSTEAD OF "ROAD CLOSED" ON R11 - 2 AND R11 - 3 SIGNS.
6. INSTALL DETOUR AND COMMUNITY GUIDE SIGNS AND ARROWS ONLY IF SPECIFIED IN THE CONTRACT. IF THERE ARE EXISTING ROUTE MARKER ASSEMBLIES THAT WILL REMAIN IN PLACE, ADJUST THE LOCATION OF THE DETOUR ROUTE SIGNS TO CORRESPOND WITH THE EXISTING ASSEMBLIES. MODIFY EXISTING SIGNS WHERE POSSIBLE. SEE SPECIFIC PROJECT DETOUR SIGNING DETAIL SHEETS. IF DETOUR SIGNS ARE BEING INSTALLED BY OTHERS, PLACE THE CONTRACTED TRAFFIC CONTROL SIGNS TO ALLOW FOR PLACEMENT OF ALL WARNING, DETOUR AND GUIDE SIGNS AS SHOWN.
7. "EAST" CARDINAL DIRECTION MARKERS AND RIGHT TURN ARROWS ARE SHOWN. USE OTHER CARDINAL DIRECTIONS AND ARROWS AS APPROPRIATE.

BARRICADES AND SIGNS FOR VARIOUS CLOSURES

STATE OF WISCONSIN
DEPARTMENT OF TRANSPORTATION

APPROVED
February 2020 — DATE
/S/ Andrew Heidtke — WORK ZONE ENGINEE
FHWA

THIS DRAWING PROVIDES GENERAL GUIDANCE ON TYPICAL DETOUR SIGN LAYOUT AND SPACING. SEE PROJECT DETOUR SIGNING SHEETS FOR SPECIFIC DETAILS FOR EACH PROJECT.

LEGEND

- SIGN ON PERMANENT SUPPORT
- WORK AREA
- DETOUR M4 - 8
- EAST M3 - X
- XX M1 - 4 OR XX M1 - 6 OR COUNTY X M1 - 5A
- M05 - 1 OR M06 - 1 OR M06 - 1

GENERAL NOTES

THE EXACT NUMBER, LOCATION AND SPACING OF ALL SIGNS SHALL BE ADJUSTED TO FIT FIELD CONDITIONS AS APPROVED BY THE ENGINEER.

IF THERE ARE EXISTING ROUTE MARKER ASSEMBLIES THAT WILL REMAIN IN PLACE, ADJUST THE LOCATION OF THE DETOUR ROUTE SIGNS TO CORRESPOND WITH THE EXISTING ASSEMBLIES. SEE SPECIFIC PROJECT DETOUR SIGNING DETAIL SHEETS. MODIFY EXISTING SIGNS WHERE POSSIBLE.

THE SPACING BETWEEN TRAFFIC CONTROL AND DETOUR SIGNS SHOULD BE ADJUSTED TO NOT CONFLICT WITH AND TO PROVIDE A DESIRABLE MINIMUM OF 200 FEET CLEARANCE TO EXISTING SIGNS THAT WILL REMAIN IN PLACE.

ANY SIGNS TEMPORARY OR EXISTING, WHICH CONFLICT WITH TRAFFIC CONTROL "IN USE" SHALL BE REMOVED OR COVERED AS NEEDED AND AS APPROVED BY THE ENGINEER.

SIGNS THAT WILL BE IN PLACE LESS THAN 7 CONTINUOUS DAYS AND NIGHTS MAY BE MOUNTED ON PORTABLE SUPPORTS.

"MO" SIGNS ARE THE SAME AS "M" SIGNS EXCEPT THE BACKGROUND IS ORANGE.

SIGN SIZES SHALL BE AS FOLLOWS:

M3-X SHALL BE 24" X 12" (36" X 18" IF NEEDED TO MATCH EXISTING SIGNS)
M4-8 SHALL BE 24" X 12" (36" X 18" IF NEEDED TO MATCH EXISTING SIGNS)
M1-4, M1-5A AND M1-6 SHALL BE 24" X 24" (36" X 36" IF NEEDED TO MATCH EXISTING SIGNS)
M05-1 AND M06-1 SHALL BE 21" X 21" (30" X 30" IF NEEDED TO MATCH EXISTING SIGNS)
M4-9 AND M4-59 SHALL BE 30" X 24"
M4-8a SHALL BE 24" X 18"
G20-51 SHALL BE 60" X 24"
W20-2A SHALL BE 48" X 48"
D1-X SHALL BE AS SHOWN ON SPECIFIC PROJECT SIGNING DETAIL SHEETS.

* OPTIONAL SIGNS. SEE SPECIFIC PROJECT DETOUR SIGNING DETAIL SHEETS.

** FOR A TOWN ROAD OR LOCAL STREET DETOURED ONTO A STATE TRUNK HIGHWAY, PLACE A ROAD NAME PLAQUE ABOVE THE M4-9 SIGN AS SPECIFIED IN THE CONTRACT.

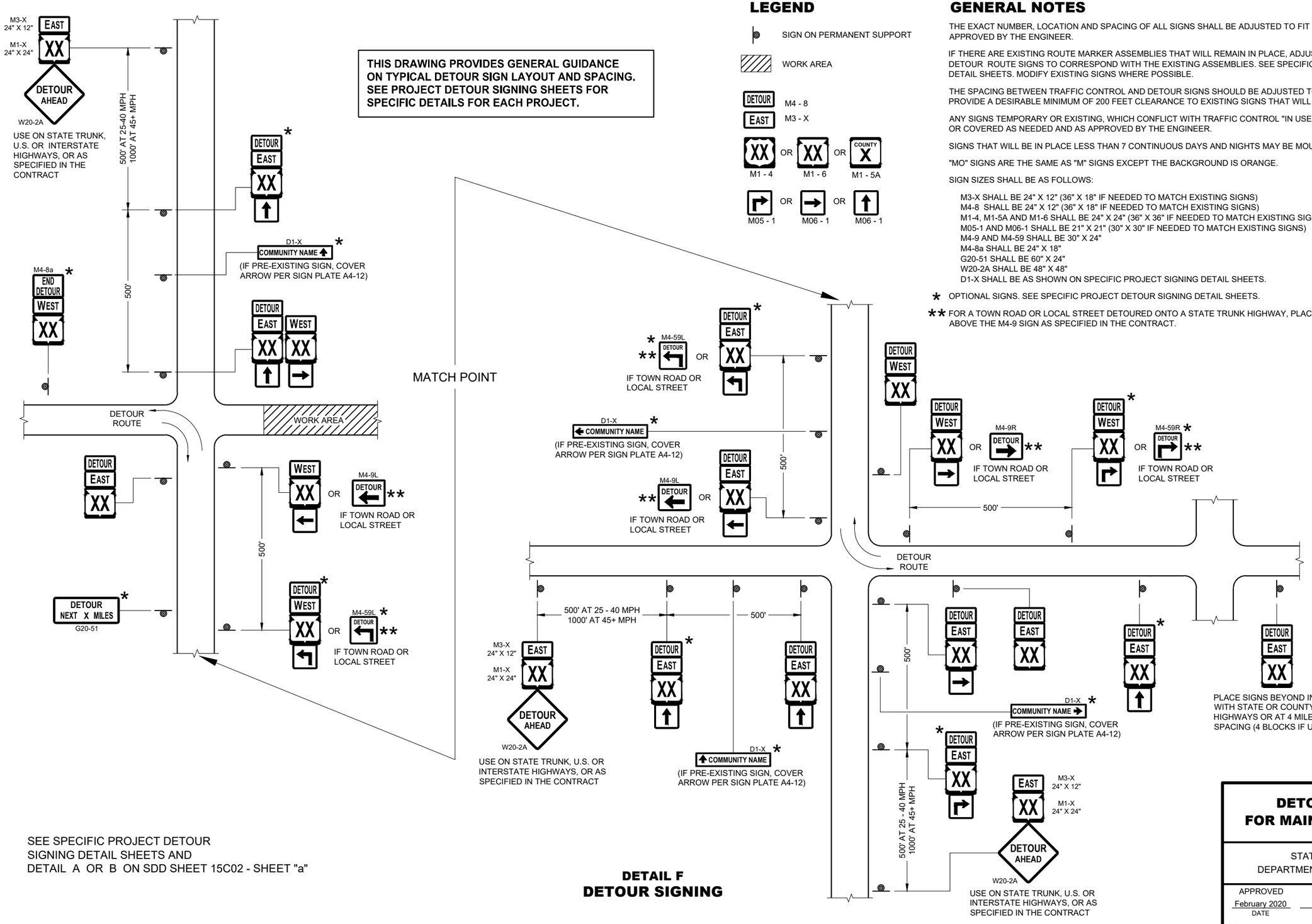

SEE SPECIFIC PROJECT DETOUR SIGNING DETAIL SHEETS AND DETAIL A OR B ON SDD SHEET 15C02 - SHEET "a"

DETAIL F
DETOUR SIGNING

DETOUR SIGNING FOR MAINLINE CLOSURES

STATE OF WISCONSIN
DEPARTMENT OF TRANSPORTATION

APPROVED
February 2020 /S/ Andrew Heidtke
DATE WORK ZONE ENGINEER
FHWA

6
SDD 15C02 - 08c

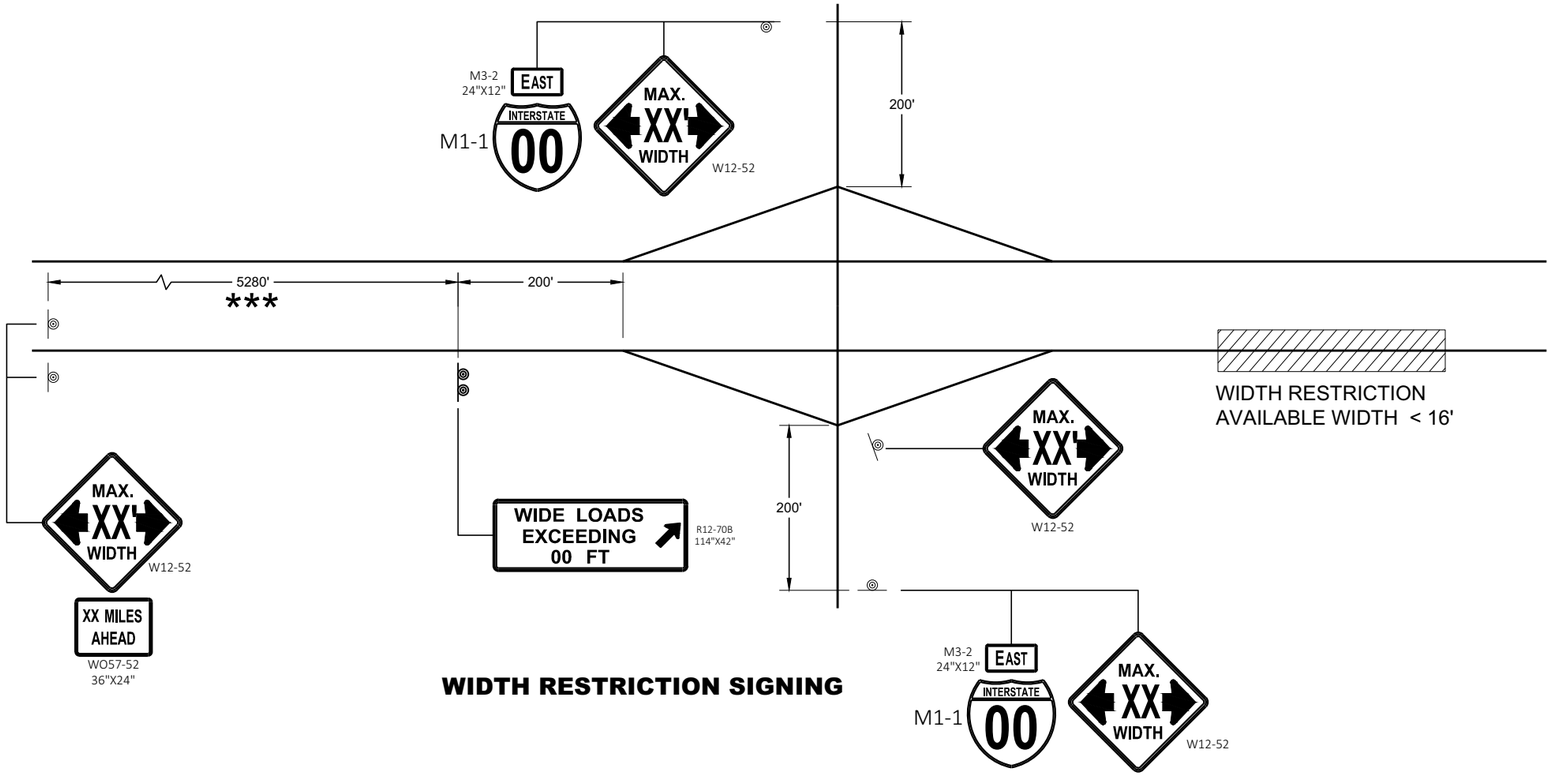

WIDTH RESTRICTION SIGNING

LEGEND

◎ SIGN ON PERMANENT SUPPORT

GENERAL NOTES

THE EXACT NUMBER, LOCATION AND SPACING OF ALL SIGNS SHALL BE ADJUSTED TO FIT FIELD CONDITIONS AS APPROVED BY THE ENGINEER.

THE SPACING BETWEEN SIGNS SHOULD BE ADJUSTED TO NOT CONFLICT WITH AND TO PROVIDE A DESIRABLE MINIMUM OF 200 FEET CLEARANCE TO EXISTING SIGNS THAT WILL REMAIN IN PLACE.

ANY SIGNS TEMPORARY OR EXISTING, WHICH CONFLICT WITH TRAFFIC CONTROL " IN USE" SHALL BE REMOVED OR COVERED AS NEEDED AND AS APPROVED BY THE ENGINEER.

ALL SIGNS ARE 48" X 48" UNLESS OTHERWISE NOTED.

"WO" SIGNS ARE THE SAME AS "W" SIGNS EXCEPT THE BACKGROUND IS ORANGE.

WIDTH ON SIGN TO BE APPROXIMATELY ONE FOOT LESS THAN AVAILABLE WIDTH.

* PLACE 500 FEET AFTER THE W20 - 1A AND 500 FEET BEFORE ADDITIONAL SIGNS FOR ROADWAYS WITH A PRE - CONSTRUCTION SPEED LIMIT OF 45 MPH OR MORE. FOR 35-40 MPH, USE 350 FOOT TYPICAL SPACING. FOR 25-30 MPH, USE 200 FOOT TYPICAL SPACING.

** SIGN SHALL BE VISIBLE FROM ROADWAY.

*** ADDITIONAL SIGNS NEEDED IF THERE IS AN ON RAMP BETWEEN SIGNS.

WIDTH ON SIGN TO BE APPROX. 1 - FOOT LESS THAN AVAILABLE WIDTH

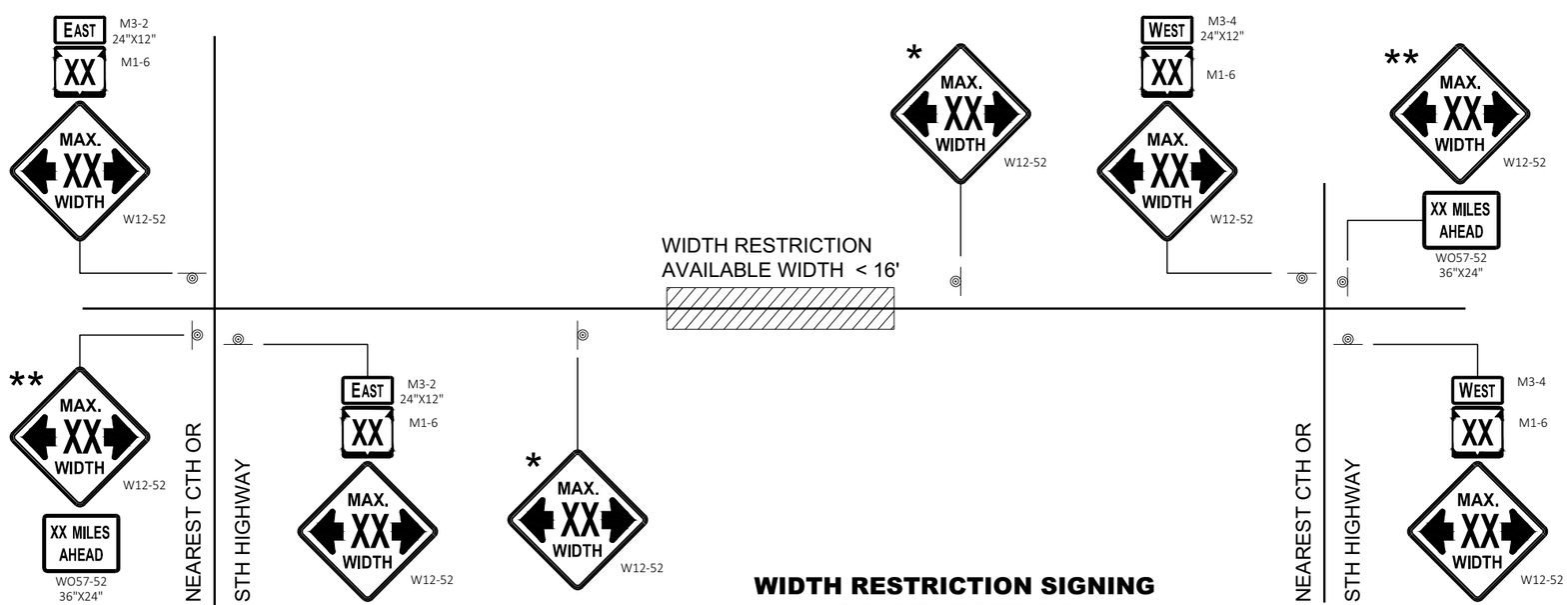

WIDTH RESTRICTION SIGNING
2 LANE HIGHWAY

ADVANCED WIDTH RESTRICTION SIGNING

STATE OF WISCONSIN
DEPARTMENT OF TRANSPORTATION

APPROVED
February 2020 — DATE
/S/ Andrew Heidtke — WORK ZONE ENGINEER
FHWA

6

SDD 15C02 - 08f

6

SDD 15C02 - 08f

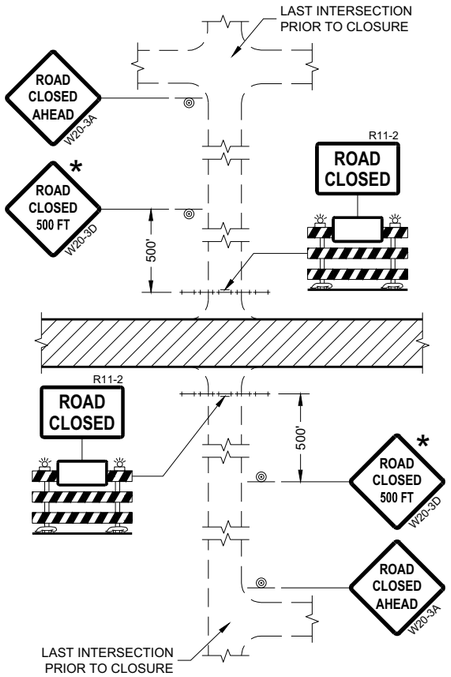

DETAIL 1
(NO ACCESS TO PROJECT)

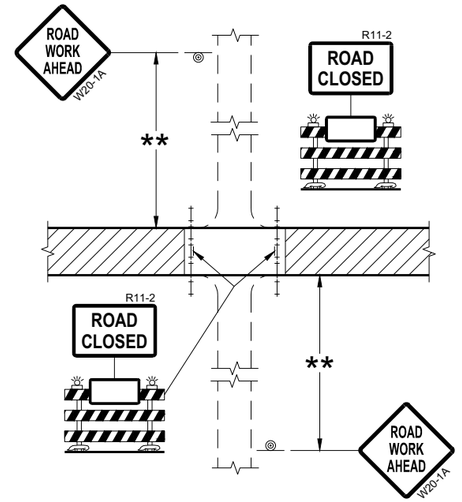

DETAIL 2
(PUBLIC CROSS-TRAFFIC MAINTAINED.
NO ACCESS TO PROJECT)

GENERAL NOTES

THE EXACT NUMBER, LOCATION, AND SPACING OF ALL SIGNS AND BARRICADES SHALL BE ADJUSTED TO FIT FIELD CONDITIONS AS APPROVED BY THE ENGINEER.

ANY SIGNS TEMPORARY OR EXISTING, WHICH CONFLICT WITH TRAFFIC CONTROL "IN USE" SHALL BE REMOVED OR COVERED AS NEEDED AND AS APPROVED BY THE ENGINEER.

THE SPACING BETWEEN TRAFFIC CONTROL SIGNS SHOULD BE ADJUSTED TO NOT CONFLICT WITH AND SHOULD PROVIDE A DESIRABLE MINIMUM OF 200 FEET CLEARANCE (500 FEET DESIRABLE) TO EXISTING SIGNS THAT WILL REMAIN IN PLACE.

IF A "STOP" SIGN MUST BE REMOVED FOR A WORK OPERATION, A TEMPORARY "STOP" SIGN SHALL BE PLACED PRIOR TO THE SIGN REMOVAL, OR A FLAGGER SHALL BE PROVIDED UNTIL THE SIGN IS REESTABLISHED.

BARRICADES THAT MUST BE MOVED FOR A WORK OPERATION SHALL BE IMMEDIATELY REESTABLISHED UPON COMPLETION OF THE OPERATION OR FOR CONTINUING OPERATIONS, AT THE END OF EACH WORKING DAY.

SIGNS THAT WILL BE IN PLACE LESS THAN SEVEN CONTINUOUS DAYS AND NIGHTS MAY BE MOUNTED ON PORTABLE SUPPORTS.

ALL TYPE III BARRICADES SHALL HAVE RAILS REFLECTORIZED ON BOTH FACES. STRIPES SHALL BE PROPERLY SLOPED DOWN TOWARD THE TRAFFIC SIDE OR AS SHOWN IN THE ROAD CLOSURE BARRICADE DETAIL "D" FOR FULL ROAD CLOSURES.

TYPE "A" LOW-INTENSITY FLASHING WARNING LIGHTS SHALL BE VISIBLE ON BOTH SIDES OF THE BARRICADE.

THE R11-2, R11-3, AND R11-4 SIGNS PLACED ON BARRICADES SHALL COVER NO MORE THAN THE TOP RAIL. THE SIGNS SHALL NOT COVER ANY PORTION OF THE MIDDLE OR BOTTOM RAILS.

ALL SIGNS SHALL BE 48" X 48" UNLESS OTHERWISE NOTED BELOW:
R11-2 SHALL BE 48" X 30".
R11-4 AND R11-3 SHALL BE 60" X 30".

* OMIT THE "ROAD CLOSED 500 FT." SIGN IF THE LAST INTERSECTION IS 500 FEET OR LESS FROM THE WORK ZONE.

** 500' MAX. OR AT LAST INTERSECTION, WHICHEVER IS CLOSEST.

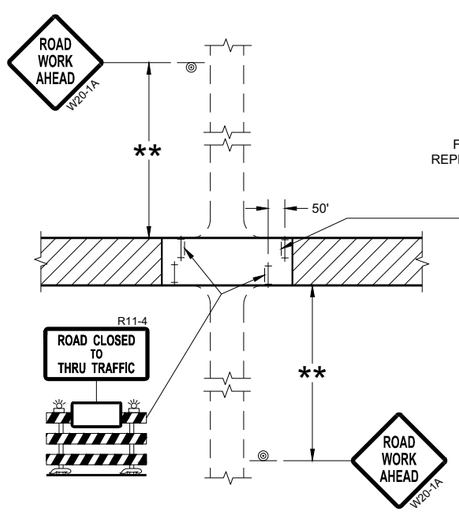

DETAIL 3
(PUBLIC CROSS-TRAFFIC MAINTAINED.
CONTRACTOR, LOCAL BUSINESS AND
RESIDENT ACCESS TO PROJECT)

FOR BRIDGE OR CULVERT
REPLACEMENT, USE ADDITIONAL
SIGN ON BARRICADE

BRIDGE OUT
XX MILES AHEAD
R11-3C

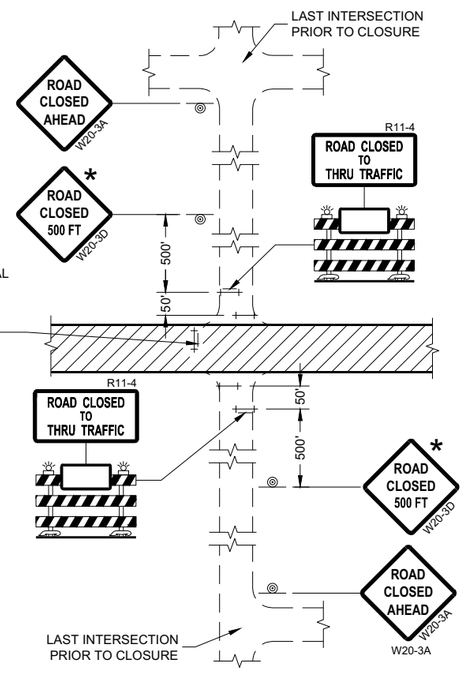

DETAIL 4
(CONTRACTOR, LOCAL BUSINESS AND
RESIDENT ACCESS TO PROJECT)

LEGEND

- SIGN ON PERMANENT SUPPORT
- TYPE III BARRICADE
- TYPE III BARRICADE WITH ATTACHED SIGN
- TYPE "A" WARNING LIGHT (FLASHING)
- WORK AREA

BARRICADES AND SIGNS FOR SIDEROAD CLOSURES

STATE OF WISCONSIN
DEPARTMENT OF TRANSPORTATION

APPROVED
July 2018 — DATE
/S/ Andrew Heidtke — WORK ZONE ENGINEE
FHWA

6

SDD 15C03 - 05

GENERAL NOTES

THE EXACT NUMBER, LOCATION, AND SPACING OF ALL SIGNS AND DEVICES SHALL BE ADJUSTED TO FIT FIELD CONDITIONS.

THE SPACING BETWEEN TRAFFIC CONTROL SIGNS SHOULD BE ADJUSTED TO NOT CONFLICT WITH AND SHOULD PROVIDE A MINIMUM OF 200 FEET (500 FEET DESIRABLE) CLEARANCE TO EXISTING SIGNS THAT WILL REMAIN IN PLACE.

ALL SIGNS ARE 48" X 48" UNLESS OTHERWISE NOTED.

SIGNS THAT WILL BE IN PLACE LESS THAN SEVEN CONTINUOUS DAYS AND NIGHTS MAY BE MOUNTED ON PORTABLE SUPPORTS.

IF A "STOP" SIGN MUST BE REMOVED FOR A WORK OPERATION, A TEMPORARY "STOP" SIGN SHALL BE PLACED PRIOR TO THE SIGN REMOVAL, OR A FLAGGER SHALL BE PROVIDED UNTIL THE SIGN IS REESTABLISHED.

* OMIT G20-1 SIGNS IF LENGTH OF WORK AREA IS 2 MILES OR LESS

** PLACE AN ADDITIONAL W20-1A "ROAD WORK AHEAD" SIGN IF WORK AREA WITHIN THE PROJECT IS SEPARATED BY MORE THAN 2 MILES FROM PREVIOUS WORK AREA.

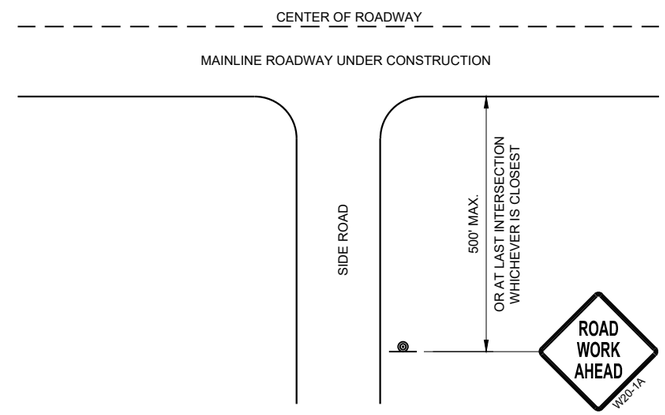

TYPICAL SIDE ROAD APPROACH WARNING SIGN DETAIL

LEGEND

- SIGN ON PERMANENT SUPPORT
- DIRECTION OF TRAFFIC
- WORK AREA

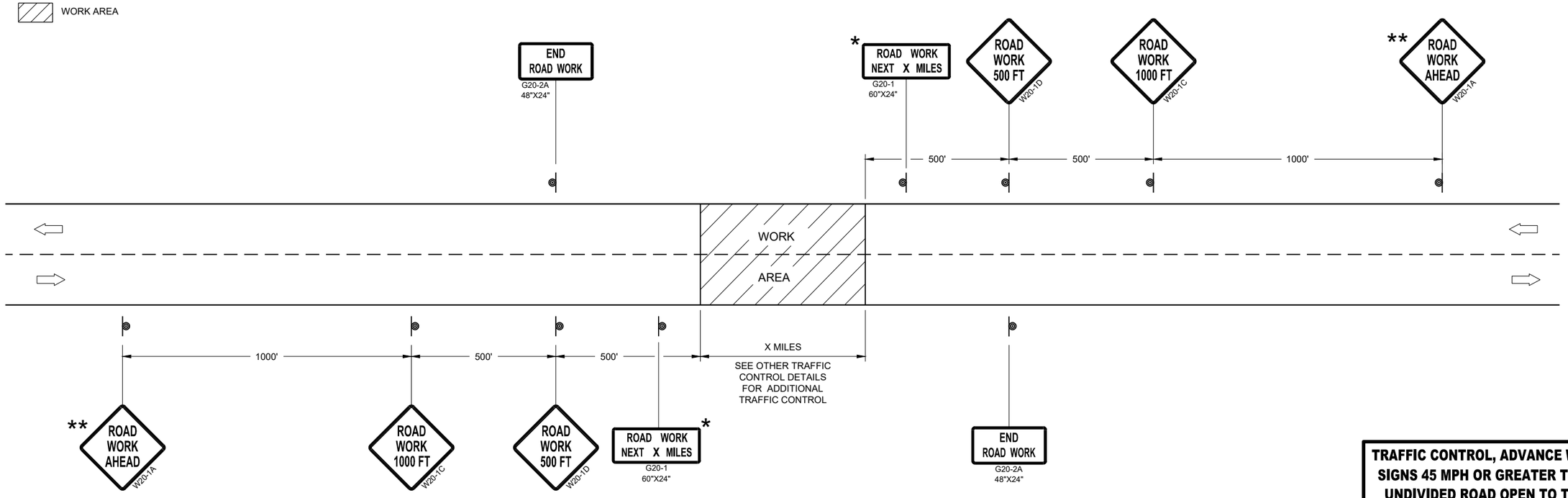

TRAFFIC CONTROL, ADVANCE WARNING SIGNS 45MPH OR GREATER

TRAFFIC CONTROL, ADVANCE WARNING SIGNS 45 MPH OR GREATER TWO-WAY UNDIVIDED ROAD OPEN TO TRAFFIC

STATE OF WISCONSIN
DEPARTMENT OF TRANSPORTATION

APPROVED
July 2018 — DATE
/S/ Andrew Heidtke — WORK ZONE ENGINEE
FHWA

6
SDD 15C04 - 05

GENERAL NOTES

THE EXACT NUMBER, LOCATION, AND SPACING OF ALL SIGNS AND DEVICES SHALL BE ADJUSTED TO FIT FIELD CONDITIONS.

THE SPACING BETWEEN TRAFFIC CONTROL SIGNS SHOULD BE ADJUSTED TO NOT CONFLICT WITH AND SHOULD PROVIDE A MINIMUM OF 200 FEET (500 FEET DESIRABLE) CLEARANCE TO EXISTING SIGNS THAT WILL REMAIN IN PLACE.

ALL SIGNS ARE 48" X 48" UNLESS OTHERWISE NOTED. IF NECESSARY DUE TO SPACE CONSTRAINTS, 36"X36" SIGNS MAY BE USED INSTEAD OF 48" X 48" SIGNS.

SIGNS THAT WILL BE IN PLACE LESS THAN SEVEN CONTINUOUS DAYS AND NIGHTS MAY BE MOUNTED ON PORTABLE SUPPORTS.

IF A "STOP" SIGN MUST BE REMOVED FOR A WORK OPERATION, A TEMPORARY "STOP" SIGN SHALL BE PLACED PRIOR TO THE SIGN REMOVAL, OR A FLAGGER SHALL BE PROVIDED UNTIL THE SIGN IS REESTABLISHED.

* THE THIRD W20-1 SIGN IS REQUIRED ONLY IF THERE IS AN INTERSECTION BETWEEN THE "ROAD WORK 500 FEET" SIGN AND THE WORK ZONE. ADJUST THE PLACEMENT OF THIS SIGN BASED ON INTERSECTION LOCATION AND OTHER FIELD CONDITIONS.

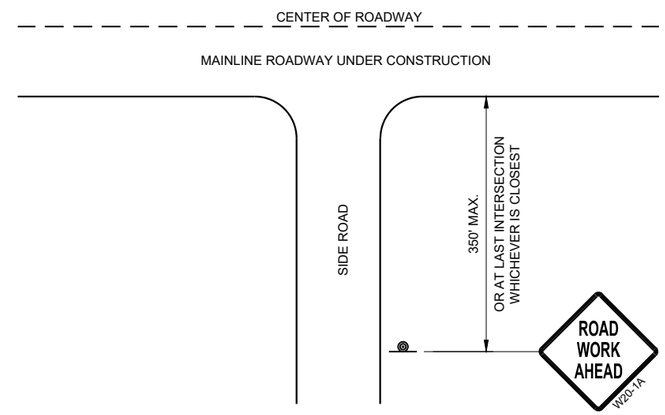

TYPICAL SIDE ROAD APPROACH WARNING SIGN DETAIL

LEGEND

- SIGN ON PERMANENT SUPPORT
- DIRECTION OF TRAFFIC
- WORK AREA

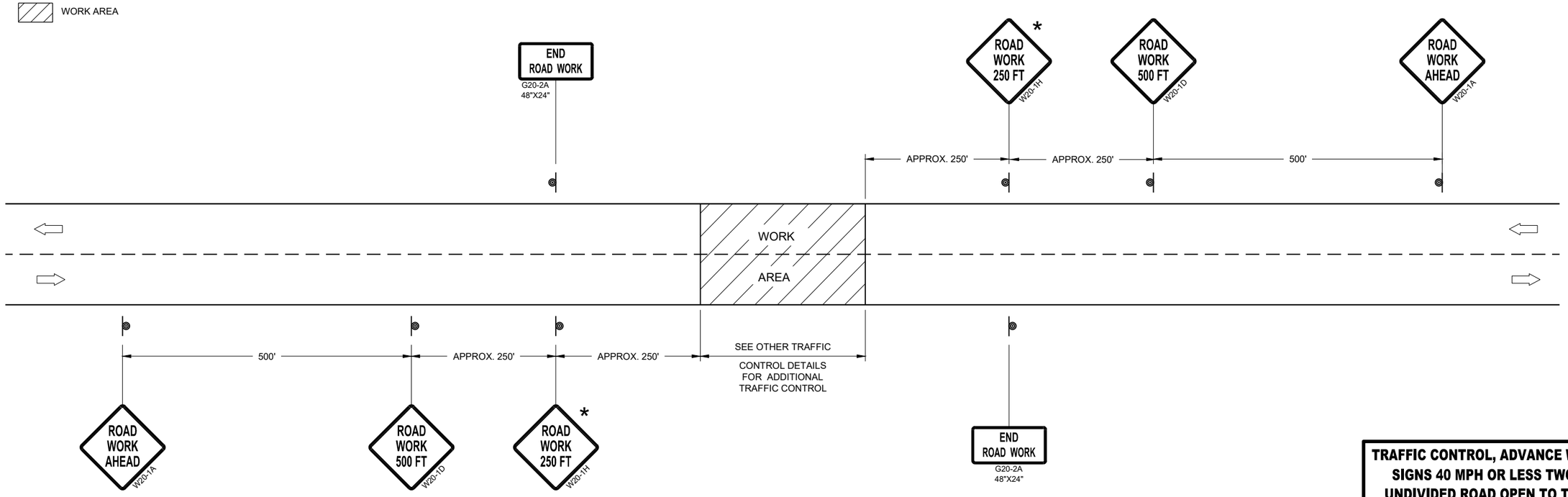

TRAFFIC CONTROL, ADVANCE WARNING SIGNS 40MPH OR LESS

TRAFFIC CONTROL, ADVANCE WARNING SIGNS 40 MPH OR LESS TWO-WAY UNDIVIDED ROAD OPEN TO TRAFFIC

STATE OF WISCONSIN
DEPARTMENT OF TRANSPORTATION

APPROVED
July 2018 — DATE
/S/ Andrew Heidtke — WORK ZONE ENGINEE
FHWA

6

SDD 15C05 - 05

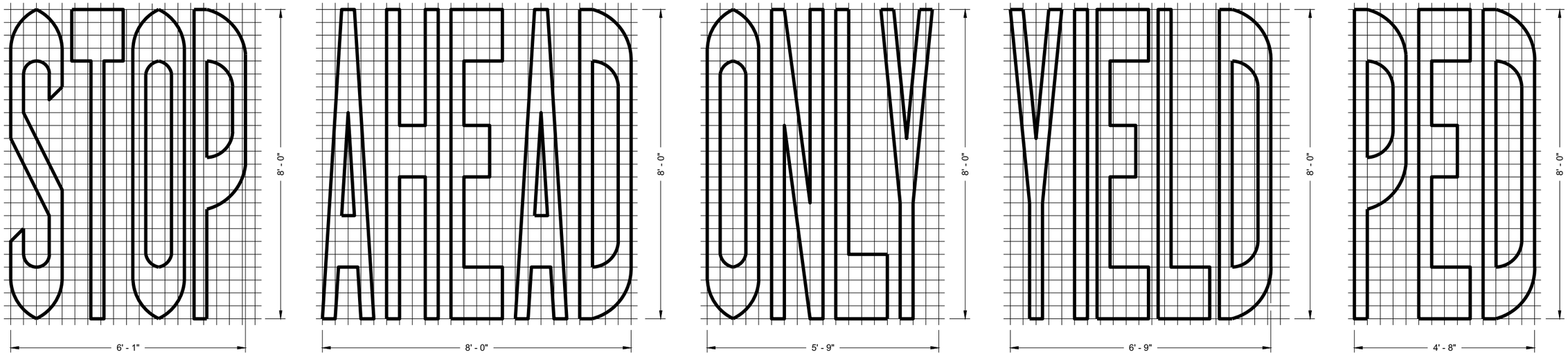

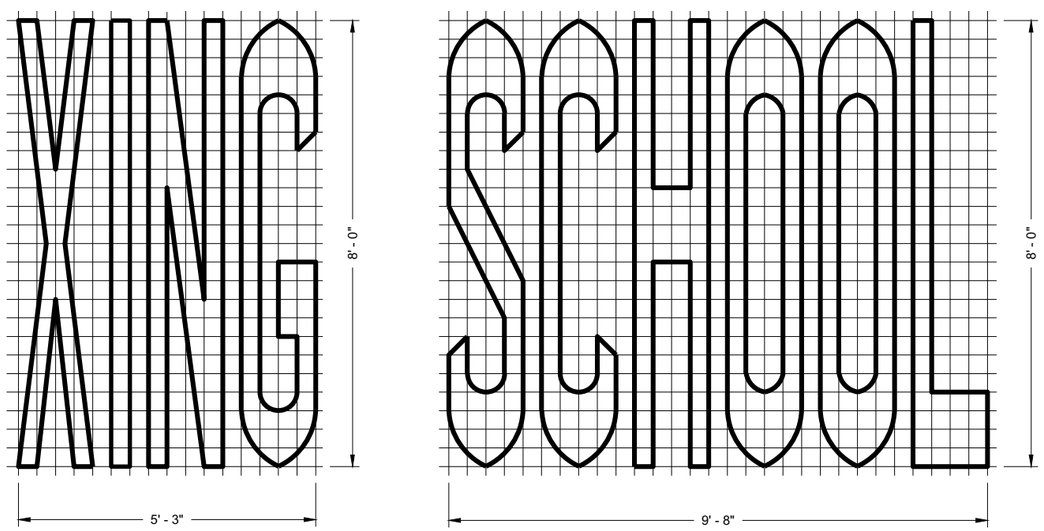

SINGLE LANE

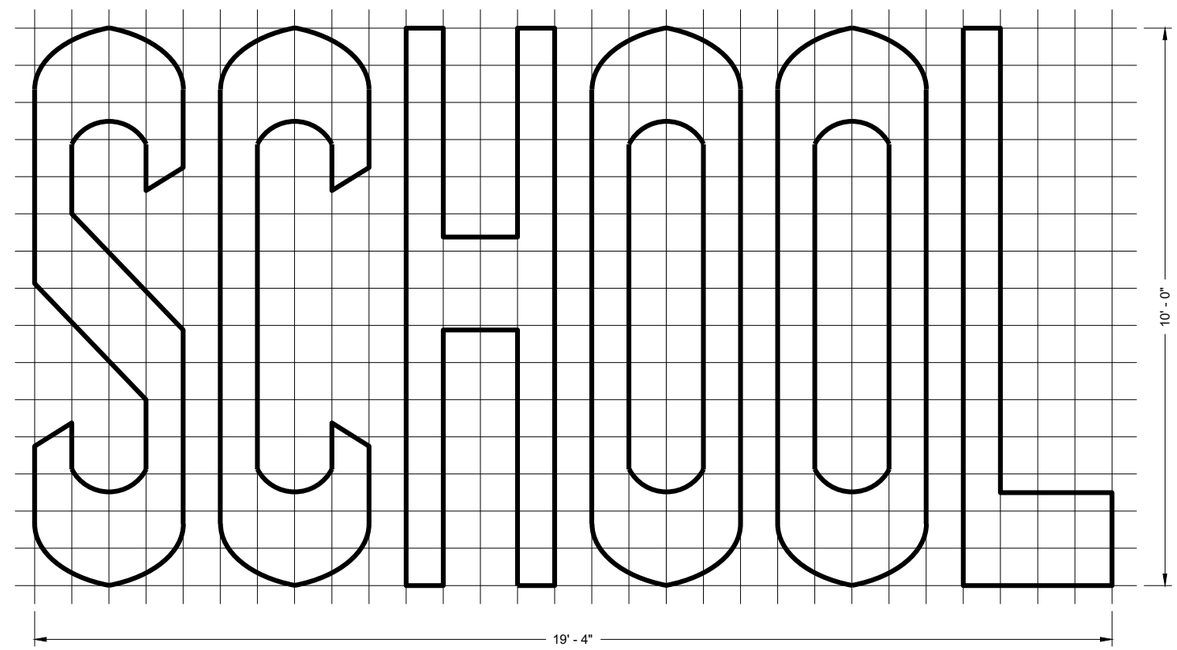

TWO - LANE

6

6

GENERAL NOTES

DETAILS OF INSTALLATION, MATERIALS AND WORKMANSHIP NOT SHOWN ON THIS DRAWING SHALL CONFORM TO THE PERTINENT REQUIREMENTS OF THE STANDARD SPECIFICATIONS AND APPLICABLE SPECIAL PROVISIONS.

PAVEMENT MARKING WORDS

STATE OF WISCONSIN
DEPARTMENT OF TRANSPORTATION

APPROVED

November 2019 — DATE

/S/ Matthew Rauch — STATE SIGNING AND MAF ENGINEER

FHWA

SDD 15C07 - 15b

SDD 15C07 - 15b

GENERAL NOTES

DETAILS OF INSTALLATION, MATERIALS AND WORKMANSHIP NOT SHOWN ON THIS DRAWING SHALL CONFORM TO THE PERTINENT REQUIREMENTS OF THE STANDARD SPECIFICATIONS AND APPLICABLE SPECIAL PROVISIONS.

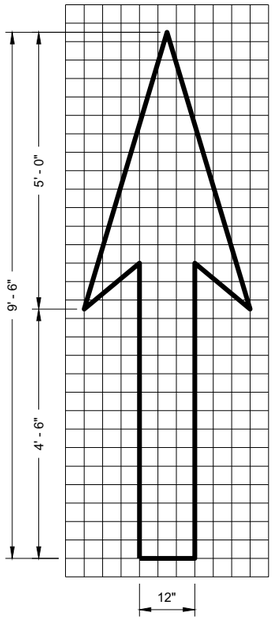

TYPE 1

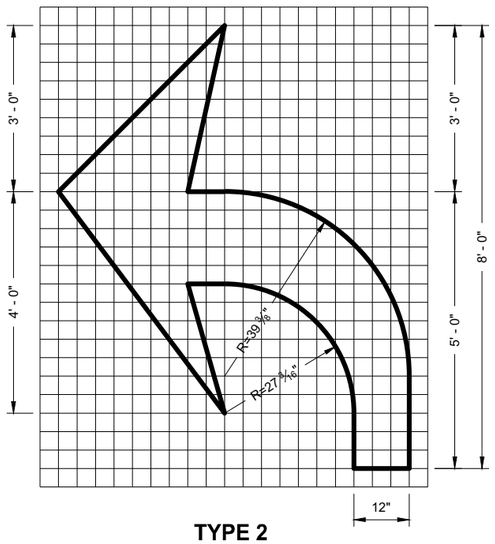

TYPE 2

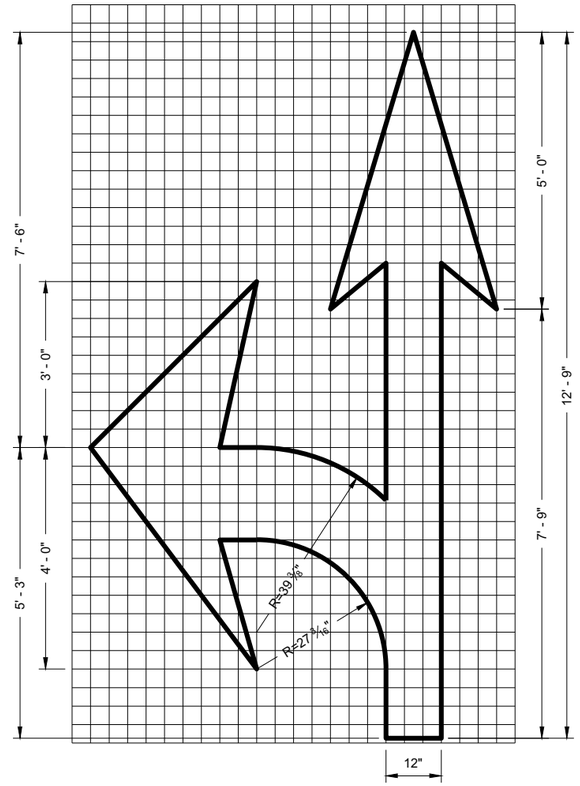

TYPE 3

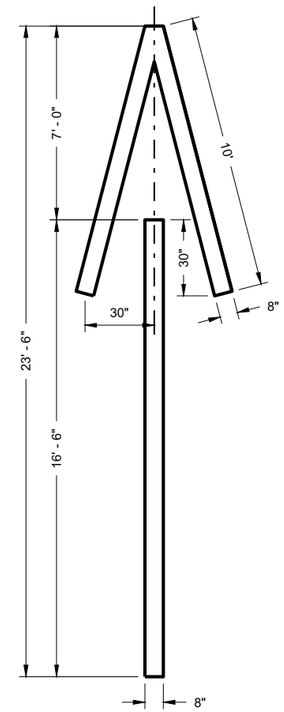

TYPE 4

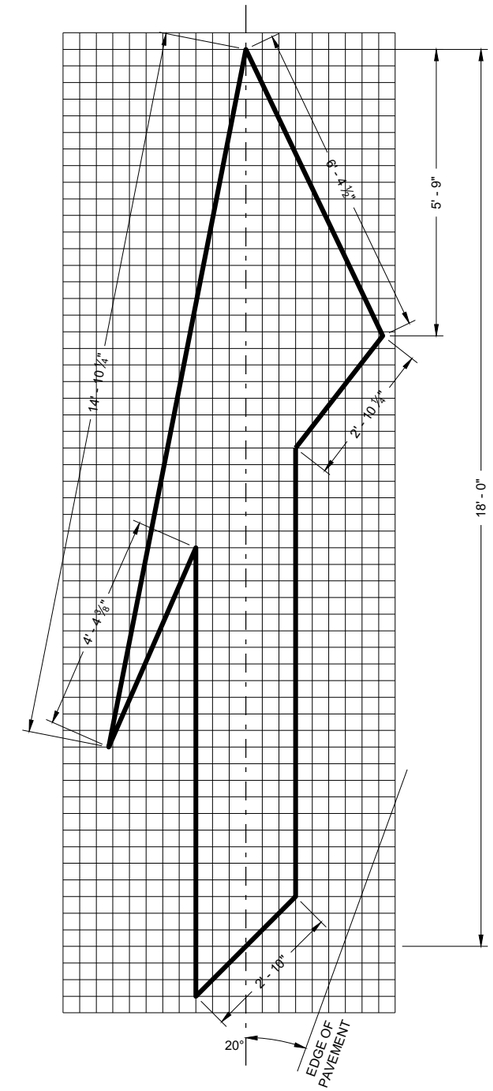

TYPE 5 LANE DROP ARROW

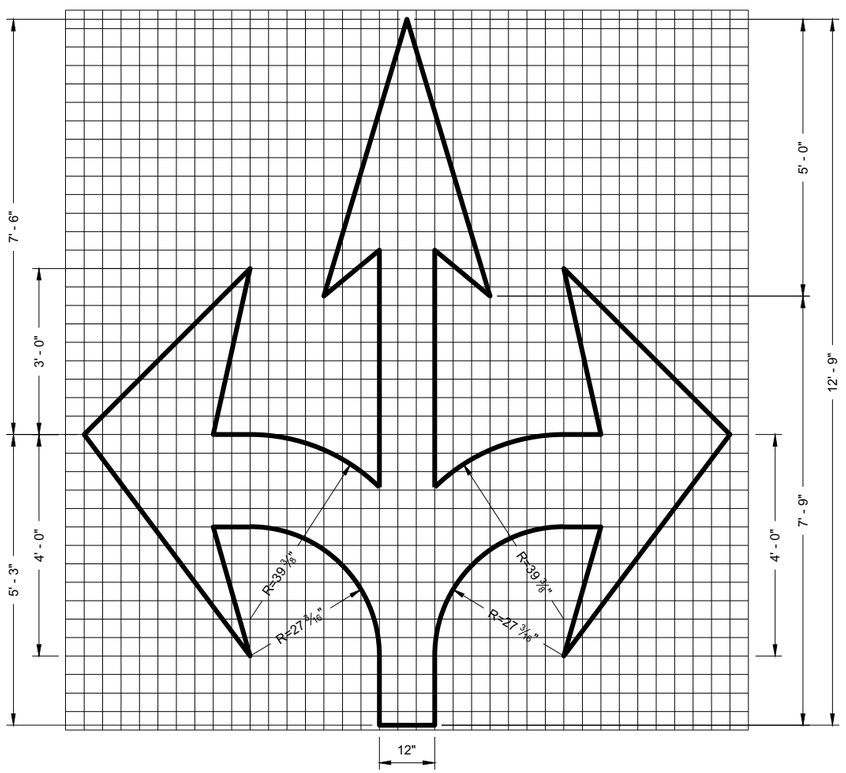

TYPE 6

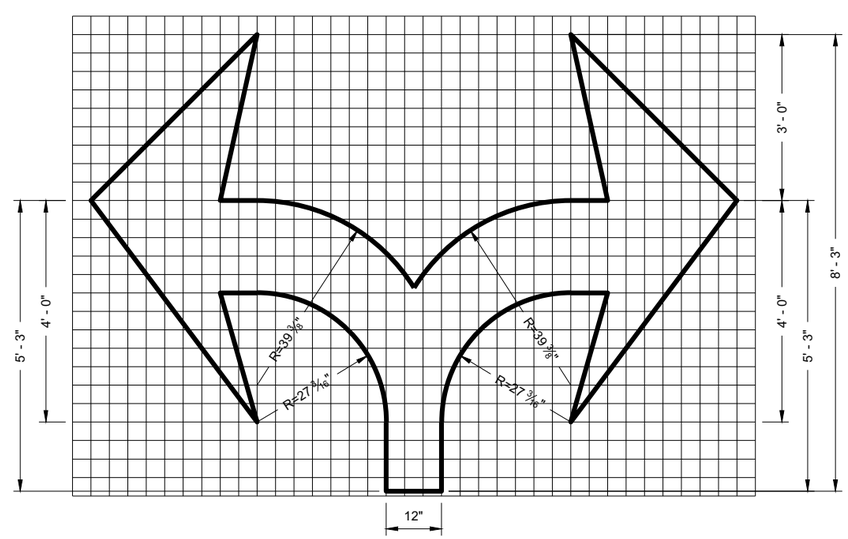

TYPE 7

6

6

PAVEMENT MARKING ARROWS

STATE OF WISCONSIN
DEPARTMENT OF TRANSPORTATION

APPROVED
November 2019 — DATE
/S/ Matthew Rauch — STATE SIGNING AND MAR ENGINEER
FHWA

SDD 15C07 - 15c

SDD 15C07 - 15c

GENERAL NOTES

DETAILS OF CONSTRUCTION NOT SHOWN ON THIS DRAWING SHALL CONFORM TO STANDARD SPECIFICATIONS AND SPECIAL PROVISIONS.

1. LOCATE THE NO PASSING ZONE W14-3 SIGN WITHIN 50 FEET OF THE "T" MARKING
2. MEASURE FROM EDGE OF MARKING TO JOINT LINE. THIS DOES NOT INCLUDE SPACE NEEDED FOR GROOVING OPERATIONS.

LEGEND

"T" MARKING

SIGN ON PERMANENT SUPPORT

DIRECTION OF TRAFFIC

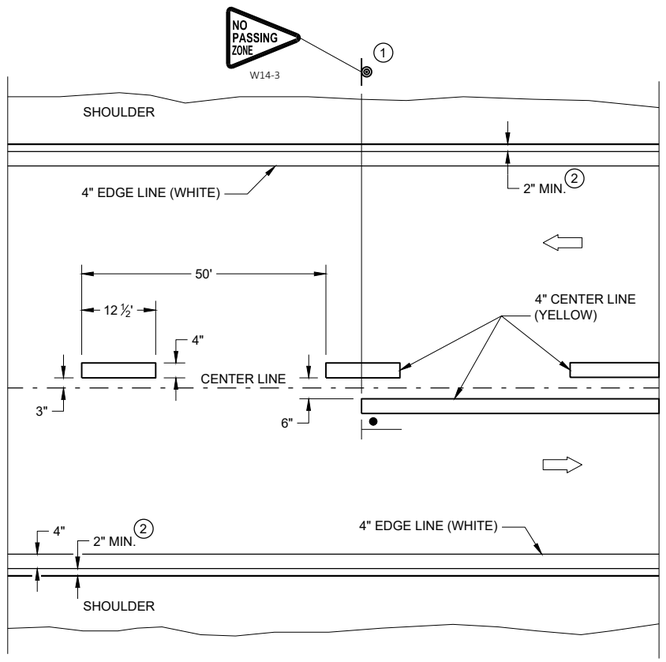

TWO WAY TRAFFIC

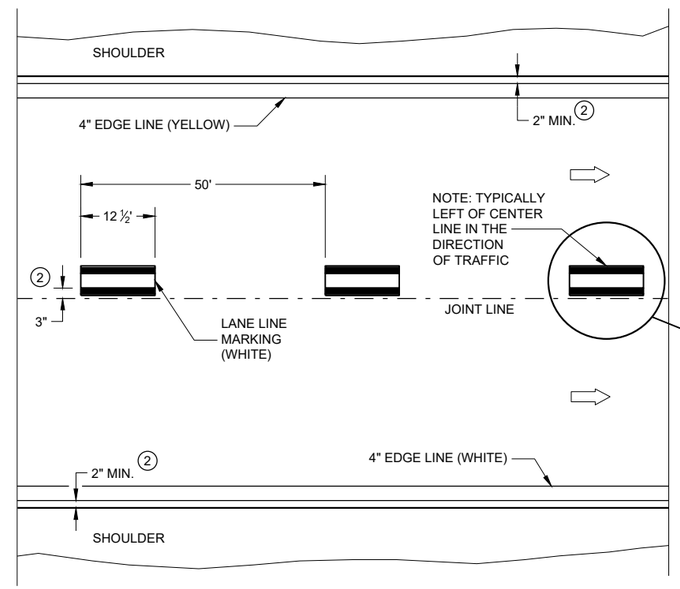

ONE WAY TRAFFIC

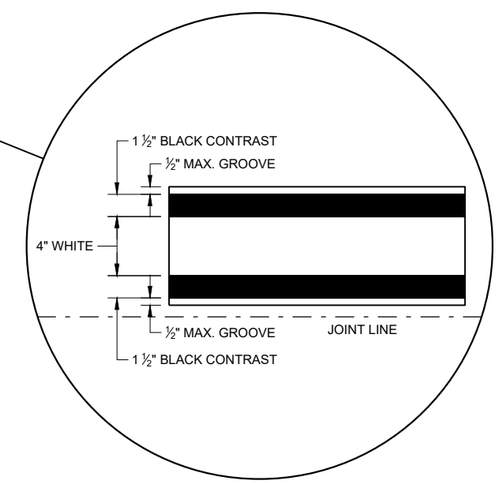

PERMANENT PAVEMENT MARKING

6

6

SDD 15C08 - 21a

SDD 15C08 - 21a

PERMANENT LONGITUDINAL PAVEMENT MARKINGS

STATE OF WISCONSIN
DEPARTMENT OF TRANSPORTATION

APPROVED
May 2022 — DATE
/S/ Jeannie Silver — STATEWIDE SIGNING AND M ENGINEER

FHWA

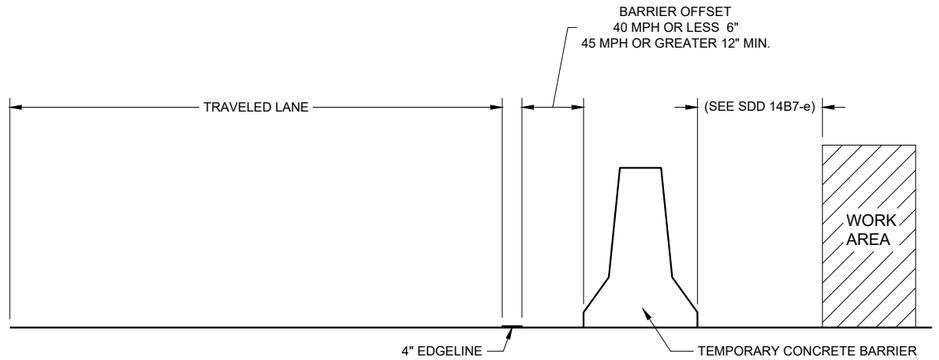

TEMPORARY BARRIER OFFSET FROM EDGELINE

GENERAL NOTES

DETAILS OF CONSTRUCTION NOT SHOWN ON THIS DRAWING SHALL CONFORM TO STANDARD SPECIFICATIONS AND SPECIAL PROVISIONS.

LEGEND

⇨ DIRECTION OF TRAFFIC

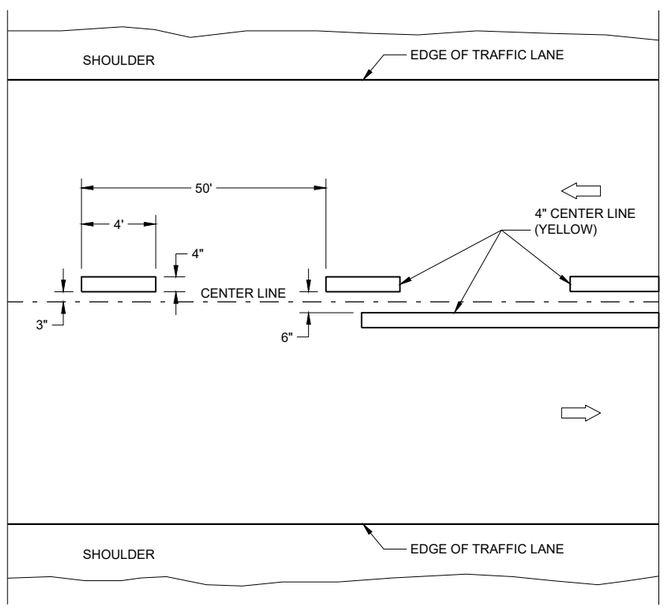

TWO WAY TRAFFIC

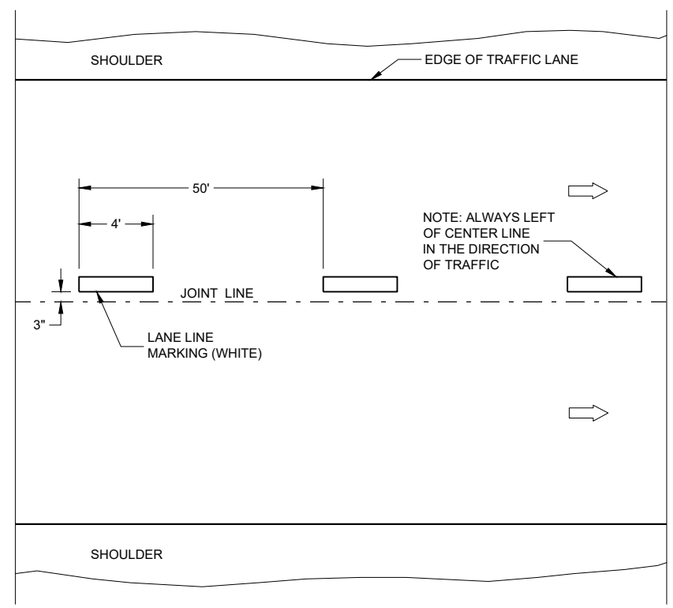

ONE WAY TRAFFIC

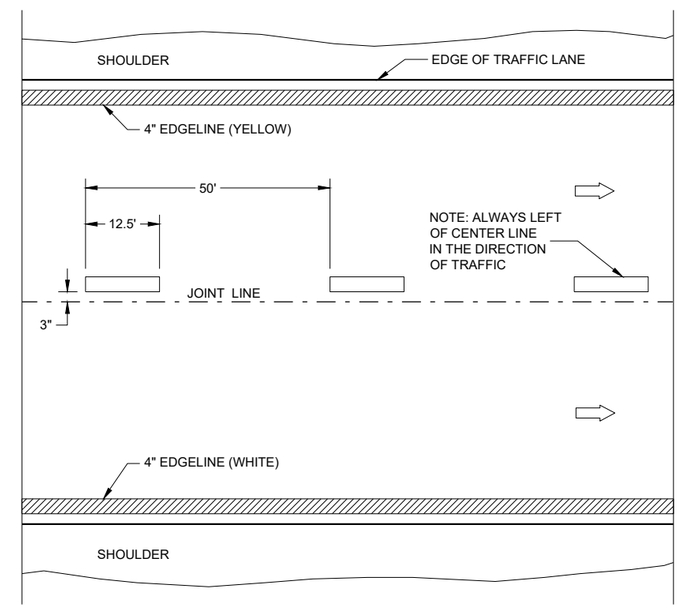

FREEWAYS AND EXPRESSWAYS

TEMPORARY PAVEMENT MARKING

6

SDD 15C08 - 21b

TEMPORARY LONGITUDINAL PAVEMENT MARKING

STATE OF WISCONSIN
DEPARTMENT OF TRANSPORTATION

APPROVED
May 2022 — DATE
/S/ Jeannie Silver — STATEWIDE SIGNING AND M ENGINEER
FHWA

6

SDD 15C08 - 21b

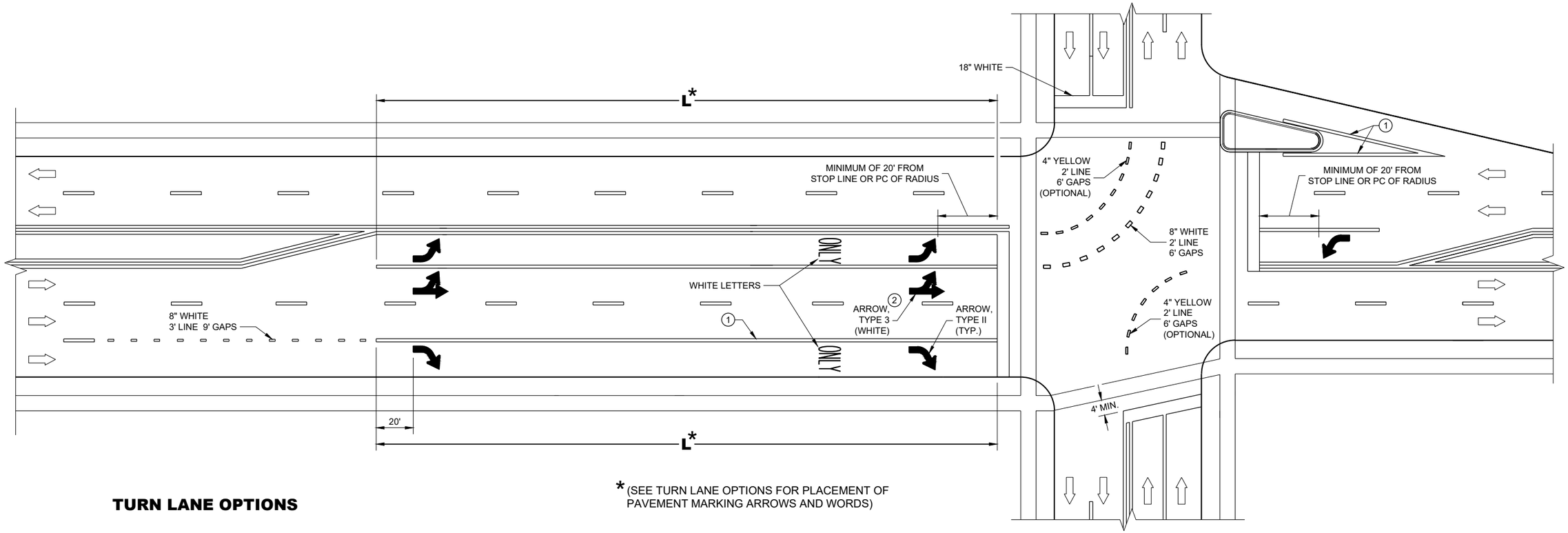

*(SEE TURN LANE OPTIONS FOR PLACEMENT OF PAVEMENT MARKING ARROWS AND WORDS)

TURN LANE OPTIONS

LENGTH OF TURN BAY (L) OF 0 - 47' DOES NOT REQUIRE PAVEMENT MARKING ARROWS OR WORDS

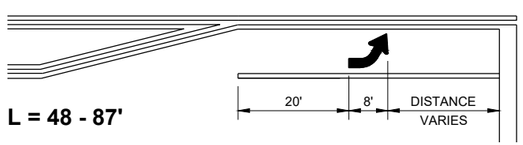

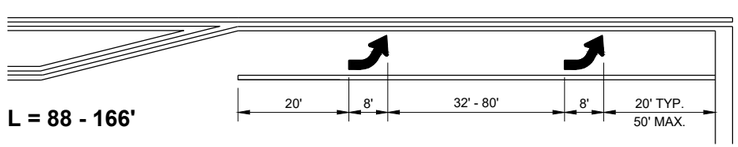

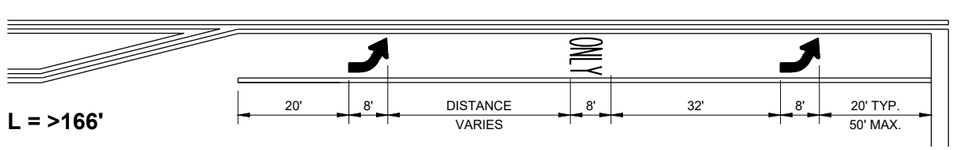

GENERAL NOTES

1. 8" WHITE
2. QUANTITY AND LOCATION OF TYPE 3 ARROWS ARE THE SAME AS THE TYPE II ARROWS IN THE ADJACENT TURN LANE. FOR TURN LANES WITH A PHYSICAL SEPARATION IN THE SAME DIRECTION OF TRAVEL, THE ARROWS AND "ONLY" MARKING MAY BE ELIMINATED.

⇨ DIRECTION OF TRAFFIC

L = LENGTH OF TURN BAY

PAVEMENT MARKING (TURN LANES)

STATE OF WISCONSIN
DEPARTMENT OF TRANSPORTA

6

SDD 15C08 - 21d

GENERAL NOTES

1. REFLECTIVE SHEETING SHALL FOLLOW THE REQUIREMENTS IN THE APPROVED PRODUCTS LISTING FOR SIGN SHEETING.
2. LOCATION OF WARNING LIGHTS WHEN SHOWN ON THE PLAN.

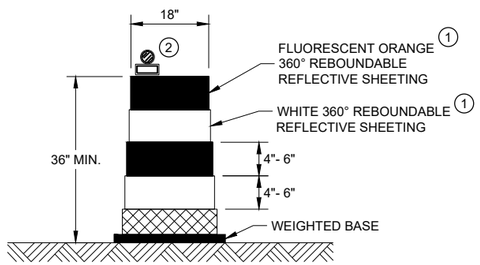

DRUM

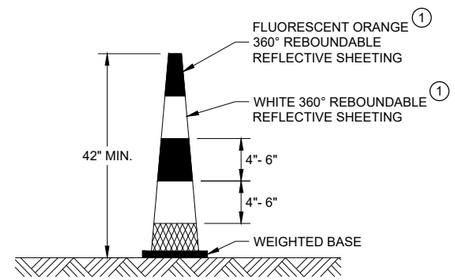

42" CONE

DO NOT USE IN TAPERS
½ SPACING OF DRUMS

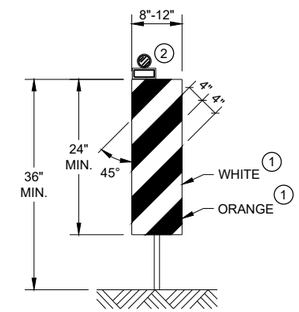

VERTICAL PANEL

THE STRIPES SHALL SLOPE DOWNWARD TO
THE TRAFFIC SIDE FOR CHANNELIZATION.

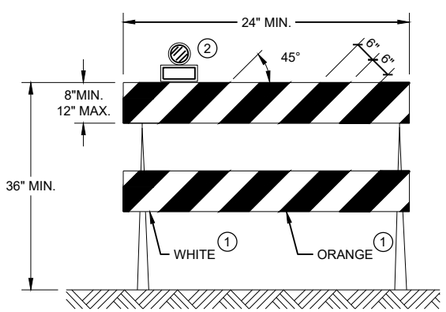

TYPE II BARRICADE

FOR RAILS LESS THAN 36" LONG, 4" WIDE STRIPES
MAY BE USED. ALL STRIPES SHALL SLOPE DOWNWARD
TO THE TRAFFIC SIDE FOR CHANNELIZATION.

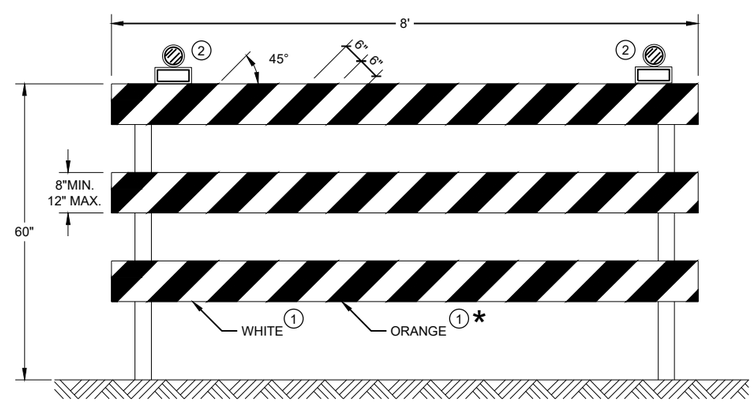

TYPE III BARRICADE

IF SIGN MOUNTED, DO NOT COVER MORE THAN 50% OF THE TOP
TWO RAILS OR 33% OF THE TOTAL AREA OF THE THREE RAILS.

* IF USED FOR A PERMANENT APPLICATION USE RED SHEETING.

CHANNELIZING DEVICES DRUMS, CONES, BARRICADES AND VERTICAL PANELS

STATE OF WISCONSIN
DEPARTMENT OF TRANSPORTATION

APPROVED
May 2021 — DATE
/S/ Andrew Heidtke — WORK ZONE ENGINEE
FHWA

6

6

SDD 15C11 - 09b

SDD 15C11 - 09b

LEGEND

SIGN ON PORTABLE OR PERMANENT SUPPORT

TEMPORARY PORTABLE RUMBLE STRIP ARRAY

DIRECTION OF TRAFFIC

WORK AREA

FLAGGER, EQUIPPED WITH STOP/SLOW PADDLE FASTENED ON SUPPORT STAFF

GENERAL NOTES

DETAILS OF TRAFFIC CONTROL DEVICES AND INSTALLATION NOT SHOWN ON THIS DRAWING SHALL CONFORM TO THE PERTINENT REQUIREMENTS OF THE STANDARD SPECIFICATIONS, THE SPECIAL PROVISIONS, AND THE MANUAL ON UNIFORM TRAFFIC CONTROL DEVICES.

ALL SIGNS ARE 48" X 48" UNLESS OTHERWISE NOTED.

"WO" SIGNS ARE THE SAME AS "W" SIGNS EXCEPT THE BACKGROUND IS ORANGE.

THE EXACT NUMBER, LOCATION AND SPACING OF ALL SIGNS, DEVICES, AND LOCATION OF ALL FLAGGERS SHALL BE ADJUSTED TO FIT FIELD CONDITIONS AS APPROVED BY THE ENGINEER.

THE FIRST ADVANCE WARNING SIGN SHOULD TYPICALLY BE LOCATED IN ADVANCE OF THE ANTICIPATED TRAFFIC BACKUP OR QUEUE.

WHEN A SIDE ROAD OR RAMP INTERSECTS THE FACILITY ON WHICH THE WORK IS BEING PERFORMED, ADDITIONAL TRAFFIC CONTROLS SHALL BE PROVIDED AS SPECIFIED IN THE PLANS AND/OR THE SPECIAL PROVISIONS OR AS APPROVED BY THE ENGINEER.

FLAGGING

FLAGGERS SHALL BE IN SIGHT OF EACH OTHER OR IN DIRECT COMMUNICATION AT ALL TIMES. THEY SHALL BE EQUIPPED WITH STOP/SLOW PADDLES FASTENED ON SUPPORT STAFFS. WHEN THE FLAGGING OPERATION IS NOT IN EFFECT REMOVE TEMPORARY PORTABLE RUMBLE STRIPS PRIOR TO COVERING OR REMOVING ALL ADVANCE SIGNING.

(1) FOR MOVING WORK OPERATIONS, POST ADDITIONAL W20-7A FLAGGER SIGNS AT APPROXIMATELY 3,500' INTERVALS IN THE MOVING WORK OPERATION OR AS APPROVED BY THE ENGINEER.

(2) SIGN NOT REQUIRED IF FLAGGING OPERATION OCCURS WITHIN A SIGNED ROAD WORK ZONE AREA.

WHEN THE DISTANCE BETWEEN FLAGGERS EXCEEDS 2 MILES, A PILOT CAR IS REQUIRED. WHEN CURVES REDUCE SIGHT DISTANCE BELOW 400', A PILOT CAR IS REQUIRED.

TEMPORARY PORTABLE RUMBLE STRIPS

UTILIZE TEMPORARY PORTABLE RUMBLE STRIPS ON ALL FLAGGING OPERATIONS.

(3) EACH TEMPORARY PORTABLE RUMBLE STRIP ARRAY CONSISTS OF THREE RUMBLE STRIPS PLACED TRANSVERSE ACROSS THE LANE AT THE LOCATIONS SHOWN. WITHIN EACH ARRAY, SPACING BETWEEN RUMBLE STRIPS SHALL BE 15 FEET ON CENTER

ONLY USE TEMPORARY PORTABLE RUMBLE STRIPS FROM THE APPROVED PRODUCTS LIST.

INSTALL TEMPORARY RUMBLE STRIPS PER MANUFACTURER'S RECOMMENDATIONS.

PLACE ADVANCE SIGNING PRIOR TO INSTALLING TEMPORARY RUMBLE STRIPS.

DO NOT INSTALL TEMPORARY PORTABLE RUMBLE STRIPS ON GRAVEL, MILLED SURFACES, OR ASPHALT THAT HAS BEEN PAVED LESS THAN 12 HOURS.

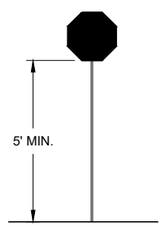

STOP/SLOW PADDLE ON SUPPORT STAFF

SIGN AND TEMPORARY RUMBLE STRIP ARRAY SPACING TABLE

SPEED LIMIT	SPACING "A"
25-30 MPH	200'
35-40 MPH	350'
45-55 MPH	500'

USE OF WO3-4 SIGN IS OPTIONAL. WHEN USED, THIS SIGN SHALL BE LOCATED BETWEEN THE W20-7A AND W20-4A SIGNS, USING SPACING "A".

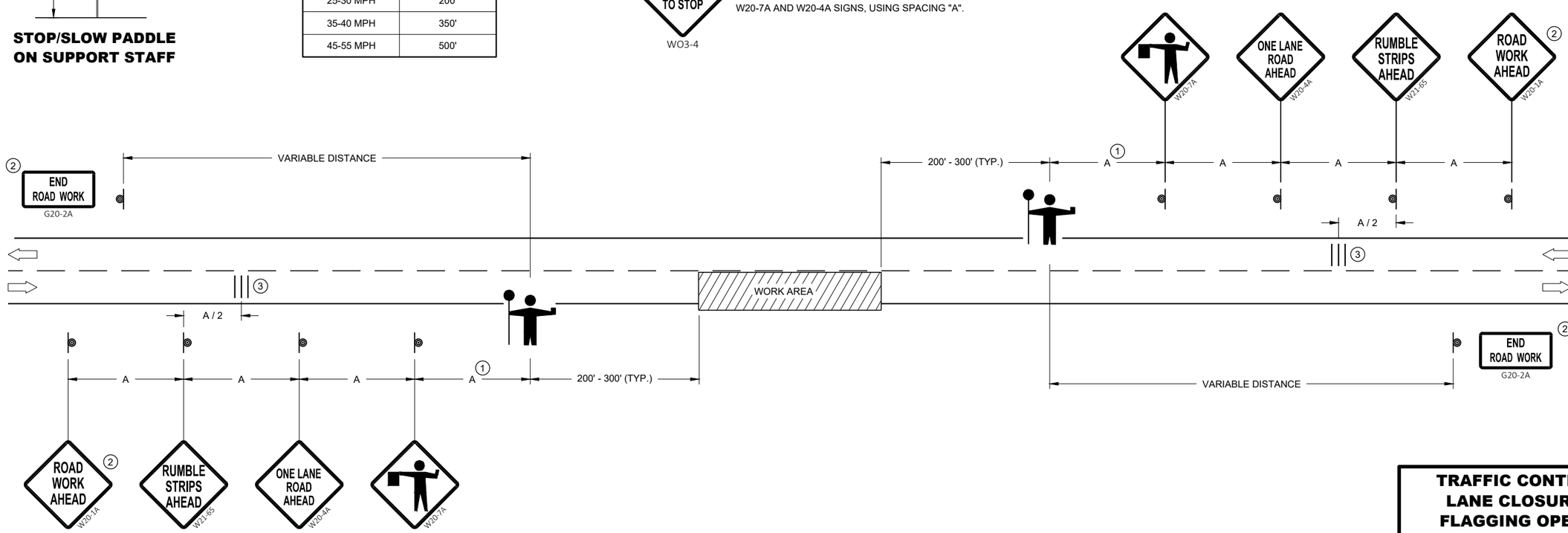

TRAFFIC CONTROL FOR LANE CLOSURE WITH FLAGGING OPERATION

STATE OF WISCONSIN
DEPARTMENT OF TRANSPORTATION

APPROVED
May 2022 — DATE
/S/ Andrew Heidtke — WORK ZONE ENGINEE
FHWA

6

SDD 15C12 - 09a

GENERAL NOTES

- SIGN ON PERMANENT SUPPORT
- TRAFFIC CONTROL CONE 42-INCH
- TRAFFIC CONTROL DRUM
- TEMPORARY PORTABLE RUMBLE STRIP ARRAY
- DIRECTION OF TRAFFIC
- WORK AREA
- AFAD — AUTOMATED FLAGGER ASSISTANCE DEVICE (AFAD)

GENERAL NOTES

DETAILS OF TRAFFIC CONTROL DEVICES AND INSTALLATION NOT SHOWN ON THIS DRAWING SHALL CONFORM TO THE PERTINENT REQUIREMENTS OF THE STANDARD SPECIFICATIONS, THE SPECIAL PROVISIONS, AND THE MANUAL ON UNIFORM TRAFFIC CONTROL DEVICES.

ALL SIGNS ARE 48" X 48" UNLESS OTHERWISE NOTED.

"WO" SIGNS ARE THE SAME AS "W" SIGNS EXCEPT THE BACKGROUND IS ORANGE.

THE EXACT NUMBER, LOCATION AND SPACING OF ALL SIGNS, DEVICES, AND LOCATION OF ALL FLAGGERS SHALL BE ADJUSTED TO FIT FIELD CONDITIONS AS APPROVED BY THE ENGINEER.

THE FIRST ADVANCE WARNING SIGN SHOULD TYPICALLY BE LOCATED IN ADVANCE OF THE ANTICIPATED TRAFFIC BACKUP OR QUEUE.

WHEN A SIDE ROAD OR RAMP INTERSECTS THE FACILITY ON WHICH THE WORK IS BEING PERFORMED, ADDITIONAL TRAFFIC CONTROLS SHALL BE PROVIDED AS SPECIFIED IN THE PLANS AND/OR THE SPECIAL PROVISIONS OR AS APPROVED BY THE ENGINEER.

FLAGGING

IF THE AUTOMATED FLAGGER ASSISTANCE DEVICE (AFAD) STOPS WORKING, FLAGGERS SHALL BE IN SIGHT OF EACH OTHER OR IN DIRECT COMMUNICATION AT ALL TIMES. THEY SHALL BE EQUIPPED WITH STOP/SLOW PADDLES FASTENED ON SUPPORT STAFFS. WHEN THE FLAGGING OPERATION IS NOT IN EFFECT REMOVE TEMPORARY PORTABLE RUMBLE STRIPS PRIOR TO COVERING OR REMOVING ALL ADVANCE SIGNING.

WHEN THE DISTANCE BETWEEN FLAGGERS EXCEEDS 2 MILES, A PILOT CAR IS REQUIRED. WHEN CURVES REDUCE SIGHT DISTANCE BELOW 400', A PILOT CAR IS REQUIRED.

(1) SIGN NOT REQUIRED IF FLAGGING OPERATION OCCURS WITHIN A SIGNED ROAD WORK ZONE AREA.

(2) IF FLAGGERS ARE PHYSICALLY NEEDED TO FLAG, REPLACE WO3-4 SIGNS WITH W20-7A SIGNS.

TEMPORARY PORTABLE RUMBLE STRIPS

UTILIZE TEMPORARY PORTABLE RUMBLE STRIPS ON ALL FLAGGING OPERATIONS.

ONLY USE TEMPORARY PORTABLE RUMBLE STRIPS FROM THE APPROVED PRODUCTS LIST.

PLACE ADVANCE SIGNING PRIOR TO INSTALLING TEMPORARY RUMBLE STRIPS.

DO NOT INSTALL TEMPORARY PORTABLE RUMBLE STRIPS ON GRAVEL, MILLED SURFACES, OR ASPHALT THAT HAS BEEN PAVED LESS THAN 12 HOURS.

(3) EACH TEMPORARY PORTABLE RUMBLE STRIP ARRAY CONSISTS OF THREE RUMBLE STRIPS PLACED TRANSVERSELY AT THE LOCATIONS SHOWN. WITHIN EACH ARRAY, SPACING BETWEEN RUMBLE STRIPS SHALL BE 15 FEET ON CENTER.

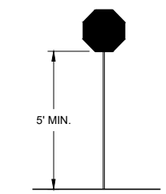

STOP/SLOW PADDLE ON SUPPORT STAFF

SIGN AND TEMPORARY RUMBLE STRIP ARRAY SPACING TABLE

SPEED LIMIT	SPACING "A"
25-30 MPH	200'
35-40 MPH	350'
45-55 MPH	500'

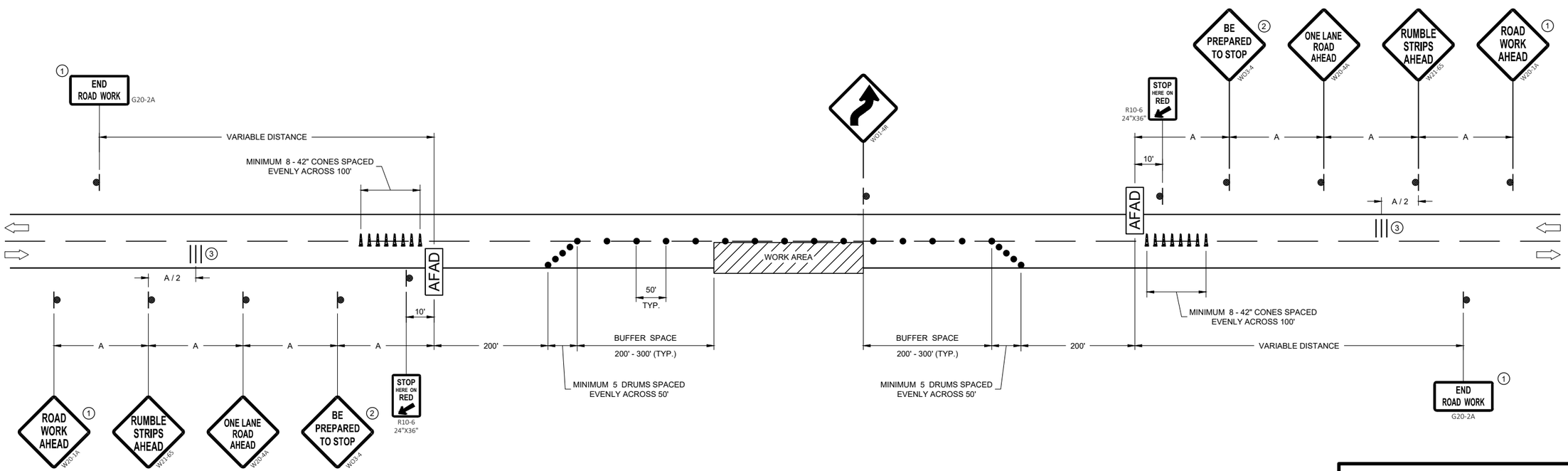

TRAFFIC CONTROL, LANE CLOSURE WITH AUTOMATED FLAGGER ASSISTANCE DEVICE

STATE OF WISCONSIN
DEPARTMENT OF TRANSPORTATION

APPROVED
May 2022 — DATE
/S/ Andrew Heidtke — WORK ZONE ENGINEER
FHWA

6

SDD 15D12 - 09b

LEGEND

V1 LEAD VEHICLE

V2 MARKING VEHICLE

V3 SHADOW VEHICLE

TRUCK MOUNTED ATTENUATOR (TMA)

SIGN ON TEMPORARY SUPPORT

DIRECTION OF TRAFFIC

FLASHING ARROW PANEL (CAUTION)

GENERAL NOTES

ALL VEHICLES SHALL BE EQUIPPED WITH TWO 360 DEGREE HIGH INTENSITY YELLOW FLASHING LIGHTS OR STROBE LIGHTS AND OPERATED WITH HEADLIGHTS TURNED ON.

ALL VEHICLES SHALL BE EQUIPPED WITH REAR FACING TYPE B OR C FLASHING ARROW PANEL OPERATING IN CAUTION MODE. SIGNS PLACED ON VEHICLES MUST NOT OBSCURE THE ARROW PANEL.

ALL SIGNS ARE 48" X 48" UNLESS OTHERWISE SPECIFIED.

DISTANCE BETWEEN VEHICLES MAY VARY ACCORDING TO TERRAIN, SIGHT DISTANCE, PAINT DRYING TIME, AND OTHER FACTORS. WHENEVER ADEQUATE STOPPING SIGHT DISTANCE EXISTS TO THE REAR, SHADOW VEHICLES SHOULD MAINTAIN THE MINIMUM DISTANCE FROM THE WORK VEHICLE AND PROCEED AT THE SAME SPEED AS THE WORK VEHICLE. SHADOW VEHICLES SHOULD SLOW DOWN IN ADVANCE OF VERTICAL AND HORIZONTAL CURVES THAT RESTRICT SIGHT DISTANCE.

THE WORK AND SHADOW VEHICLES SHOULD PULL OVER PERIODICALLY TO ALLOW TRAFFIC TO PASS.

WHEN NO WORK ACTIVITY IS TAKING PLACE, REMOVE OR LAY STATIONARY SIGNS AND SUPPORTS FLAT ON THE GRADE WITH UPRIGHTS ORIENTED PARALLEL TO AND DOWNSTREAM FROM TRAFFIC.

CONES SHOULD BE USED BETWEEN THE MARKING AND SHADOW VEHICLE AT 100 FOOT SPACING. CONES MAY BE OMITTED ON PAINTED LINE IF APPROVED BY THE ENGINEER. CONSIDER PAVEMENT MARKING DRY OR CURE TIMES AND TRAFFIC VOLUME.

CONES SHALL BE A MINIMUM OF 28" FOR WET PAVEMENT MARKING .

1. SIGNS SHALL BE REPEATED APPROXIMATELY EVERY THREE MILES.
2. IF CONSTRUCTION WORK ZONE SIGNS ARE IN PLACE, W20-1A OR W21-63 ARE NOT REQUIRED.
3. V1 AND V2 CAN BE SWITCHED SO THAT THE MARKER IS THE LEAD VEHICLE.

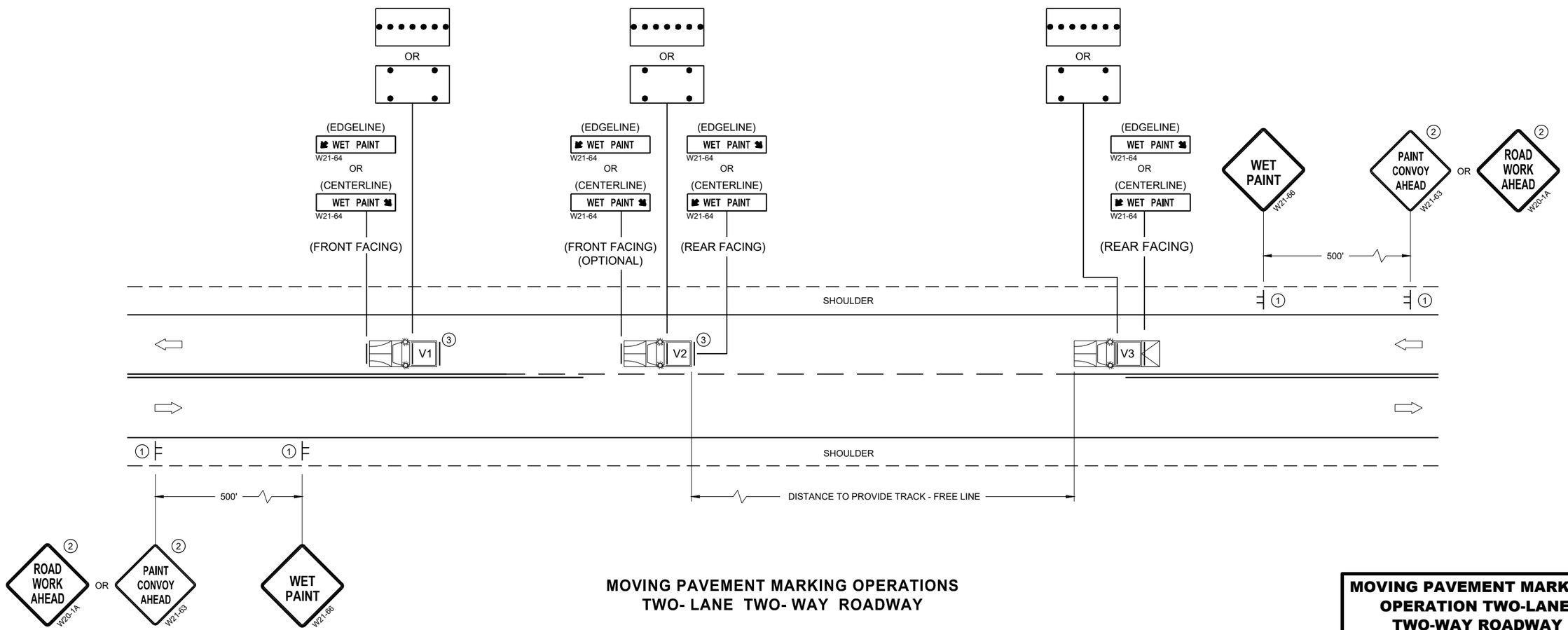

MOVING PAVEMENT MARKING OPERATIONS
TWO- LANE TWO- WAY ROADWAY

MOVING PAVEMENT MARKING OPERATION TWO-LANE TWO-WAY ROADWAY

STATE OF WISCONSIN
DEPARTMENT OF TRANSPORTATION

APPROVED
May 2022 — DATE
/S/ Andrew Heidtke — WORK ZONE ENGINEE
FHWA

6

SDD 15C19 - 07a

GENERAL NOTES

STOP SIGN SHALL BE PLACED A MINIMUM OF 6 FEET TO A MAXIMUM OF 50 FEET FROM THE EDGELINE LOCATION.

1. 18-INCH STOP LINES MAY BE DELETED OR ADDED BY THE REGION MARKING ENGINEER BASED ON VISIBILITY AND SIGHT LINES.
2. NO STOP LINE IS REQUIRED IF STOP SIGN IS LESS THAN OR EQUAL TO 40 FEET FROM THE EDGELINE.
3. NO STOP LINE IS REQUIRED IF STOP SIGN IS LESS THAN OR EQUAL TO 30 FEET FROM THE FLANGELINE EXTENSION.
4. MOVE CLOSER TO THE EDGE OF TRAVEL LINE AS NEEDED FOR VISIBILITY AND SIGHT LINES (NO CLOSER THAN 4 FEET).
5. LADDER BAR CROSSWALKS SHOULD ONLY BE USED FOR MID BLOCK CROSSINGS. USE 2 - 6" TRANSVERSE LINES INSTEAD.

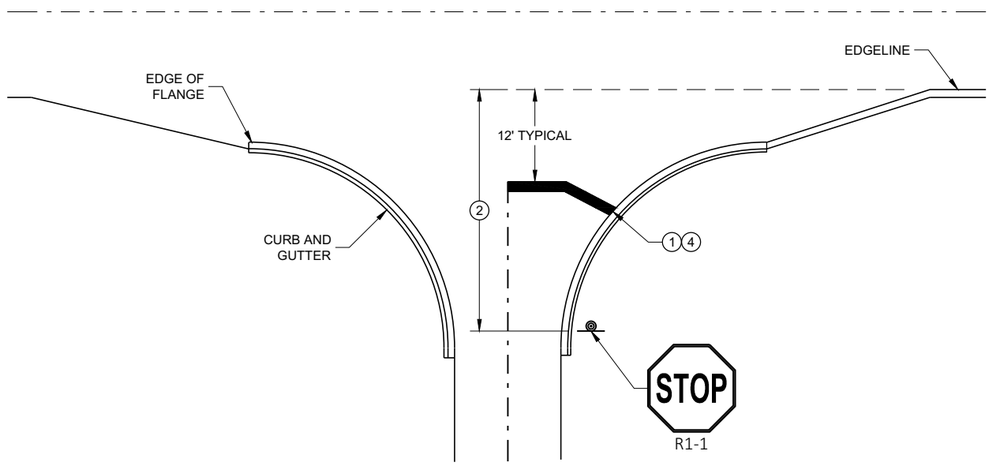

TYPICAL STOP LINE PAVEMENT MARKING WITH CURB AND GUTTER

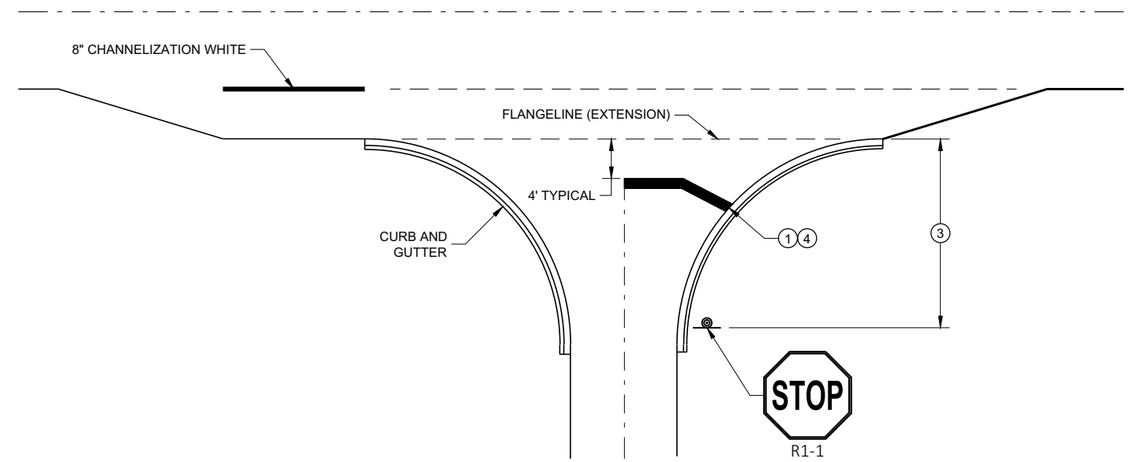

TYPICAL STOP LINE PAVEMENT MARKING FOR SIDEROADS WITH RIGHT TURN LANE

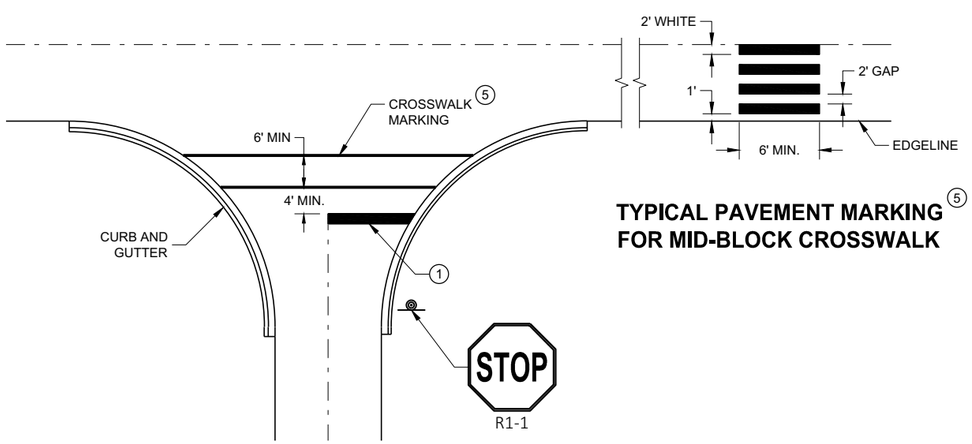

TYPICAL STOP LINE PAVEMENT MARKING FOR SIDEROADS WITH CROSSWALK MARKING

TYPICAL PAVEMENT MARKING 5 FOR MID-BLOCK CROSSWALK

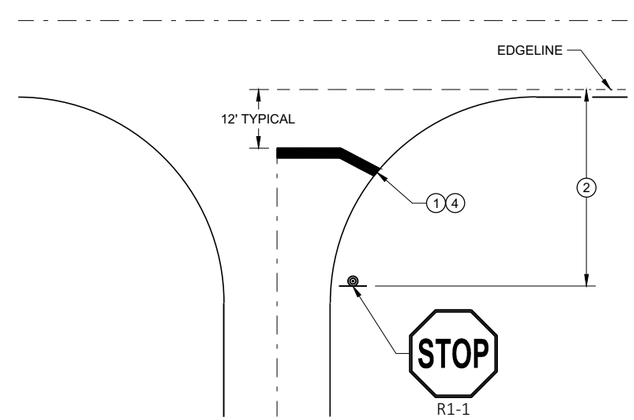

TYPICAL STOP LINE PAVEMENT MARKING WITHOUT CURB AND GUTTER

STOP LINE AND CROSSWALK PAVEMENT MARKING

STATE OF WISCONSIN
DEPARTMENT OF TRANSPORTATION

APPROVED
November 2019 — DATE
/S/ Matthew Rauch — STATE SIGNING AND MAF ENGINEER
FHWA

6

SDD 15C33 - 04

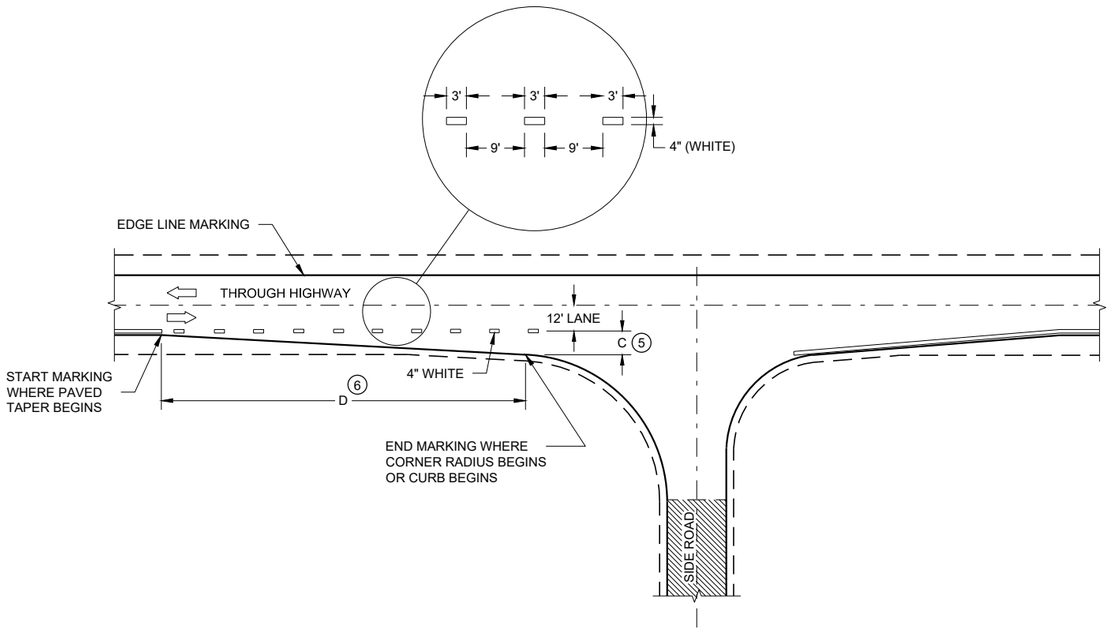

MINOR INTERSECTION

GENERAL NOTES

OMIT EDGE LINES THROUGH INTERSECTIONS. CONTINUE EDGE LINES THROUGH DRIVEWAYS.

1. WHEN DISTANCE "A" IS LESS THAN 250 FEET, OMIT LANE LINE.
2. WHEN DISTANCE "B" IS LESS THAN 100 FEET, OMIT CHANNELIZING LANE LINE.
3. BARRIER LINE ENDS AT SIDE ROAD PAVEMENT / SURFACE EDGE EXTENSION.
4. BARRIER LINE STARTS 500 FEET PRIOR TO THE BYPASS TAPER.
5. WHEN DISTANCE "C" IS LESS THAN 4 FEET, OMIT DOTTED EXTENSION.
6. WHEN DISTANCE "D" IS LESS THAN 50 FEET, OMIT DOTTED EXTENSION.

LEGEND

DIRECTION OF TRAVEL

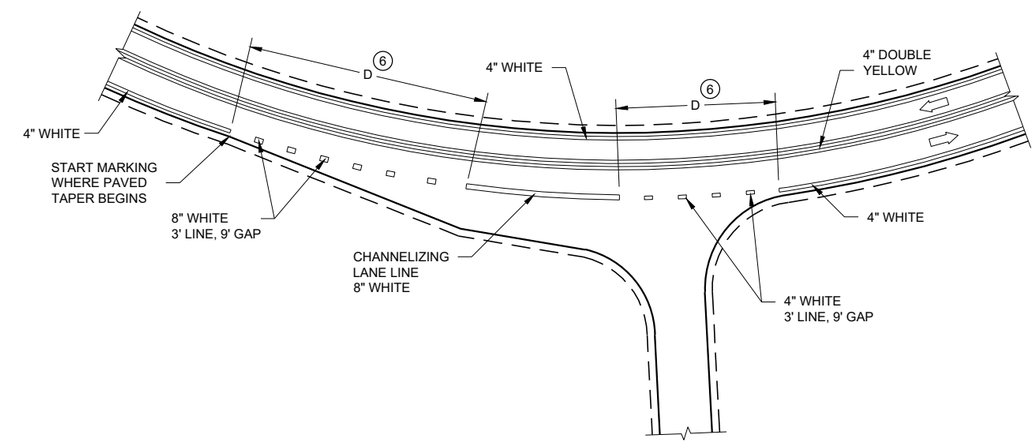

INTERSECTION ON OUTSIDE OF CURVE

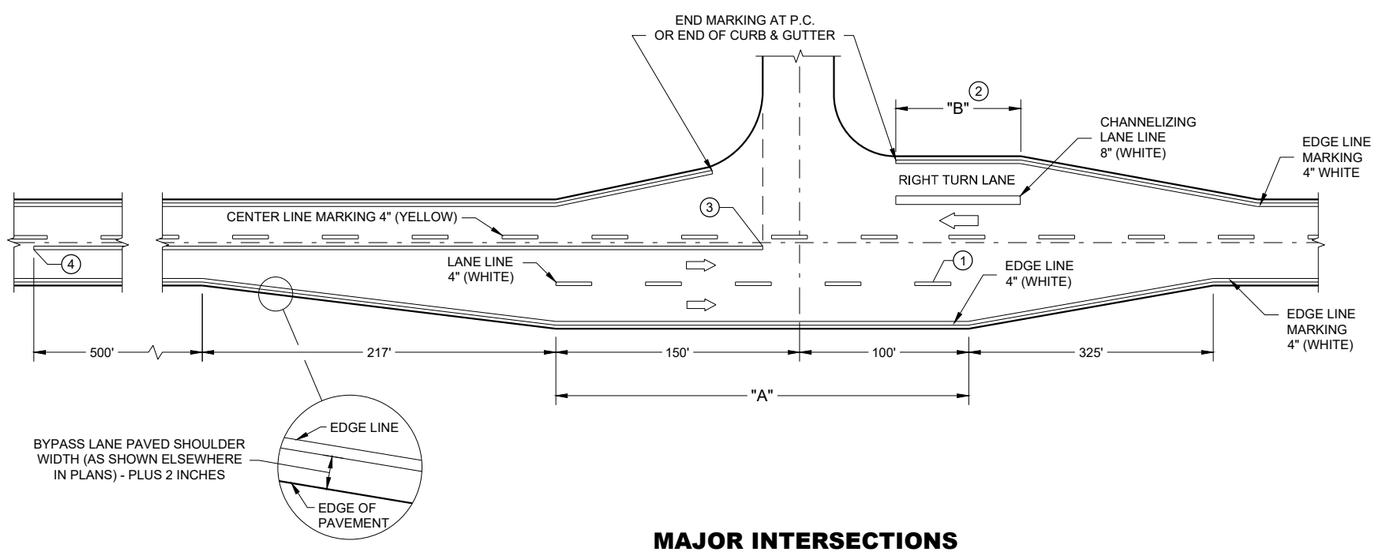

MAJOR INTERSECTIONS

(INTERSECTION WITH FULL RIGHT TURN LANE OR BYPASS LANE)

PAVEMENT MARKING (INTERSECTIONS)

STATE OF WISCONSIN
DEPARTMENT OF TRANSPORTA

6

SDD 15C35 - 05a

GENERAL NOTES

THE EXACT NUMBER, LOCATION, AND SPACING OF ALL SIGNS AND DEVICES SHALL BE ADJUSTED TO FIT FIELD CONDITIONS AS APPROVED BY THE ENGINEER.

THE SPACING BETWEEN SIGNS SHOULD BE ADJUSTED TO NOT CONFLICT WITH AND TO PROVIDE A MINIMUM OF 200 FEET (500 FEET DESIRABLE) CLEARANCE TO EXISTING SIGNS.

THIS LANE CLOSURE IS TYPICAL FOR CLOSING RIGHT LANE - REVERSE FOR CLOSING LEFT LANE.

ALL SIGNS ARE 48" x 48" UNLESS OTHERWISE NOTED.

"WO" IS THE SAME AS "W" EXCEPT THE BACKGROUND IS ORANGE.

ANY SIGNS TEMPORARY OR EXISTING, WHICH CONFLICT WITH TRAFFIC CONTROL "IN USE" SHALL BE REMOVED OR COVERED AS NEEDED OR AS APPROVED BY THE ENGINEER.

FOR A LANE CLOSURE THAT IS IN PLACE LESS THAN 7 CONTINUOUS DAYS AND NIGHTS, THE ADVANCED WARNING SIGNS MAY BE MOUNTED ON PORTABLE SUPPORTS.

REMOVE PAVEMENT MARKINGS AND PLACE TEMPORARY PAVEMENT MARKING LINE IF LANE CLOSURE IS TO BE IN PLACE 4 OR MORE CONTINUOUS DAYS AND NIGHTS.

IF THE HORIZONTAL ALIGNMENT IS SUCH THAT A CURVE MAY REQUIRE ADDITIONAL DELINEATION, THE DEVICE SPACING MAY BE DECREASED TO 50 FEET.

WARNING LIGHTS ARE NOT REQUIRED IF THE LANE CLOSURE IS A DAYTIME ONLY OPERATION.

ADJUSTMENTS IN BUFFER SPACE NEED TO BE INCORPORATED WHEN THE LANE CLOSURE OCCURS NEAR AN INTERCHANGE EXIT OR ENTRANCE RAMP OR INTERSECTION. THE LANE CLOSURE MUST TAKE PLACE FAR ENOUGH IN ADVANCE OF AN EXIT OR ENTRANCE RAMP TO STILL ALLOW FOR ADEQUATE BUFFER SPACE. THE MINIMUM LENGTH OF THE BUFFER SPACE BEFORE AN EXIT RAMP SHOULD BE ONE HALF THE LENGTH OF THE TRANSITION AREA. THE ENTRANCE RAMP SHOULD BE FOLLOWED BY THE ORIGINAL BUFFER SPACE LENGTH OF 800 FEET DESIRABLE PRIOR TO ANOTHER TRAFFIC CONTROL CHANGE SUCH AS A CROSSOVER MANEUVER.

CONSIDER ROADWAY GEOMETRICS WHEN LOCATING SIGNS AND ARROW BOARD SO THE DRIVER HAS A CLEAR VIEW OF THE ARROW BOARD AND LANE CLOSURE DRUMS.

LEGEND

- SIGN ON PERMANENT SUPPORT
- TRAFFIC CONTROL DRUM
- TRAFFIC CONTROL DRUM WITH TYPE "C" STEADY BURN LIGHT
- TYPE III BARRICADE WITH ATTACHED SIGN
- TYPE "A" WARNING LIGHT (FLASHING)
- REMOVING PAVEMENT MARKINGS
- DIRECTION OF TRAFFIC
- WORK AREA
- FLASHING ARROW BOARD

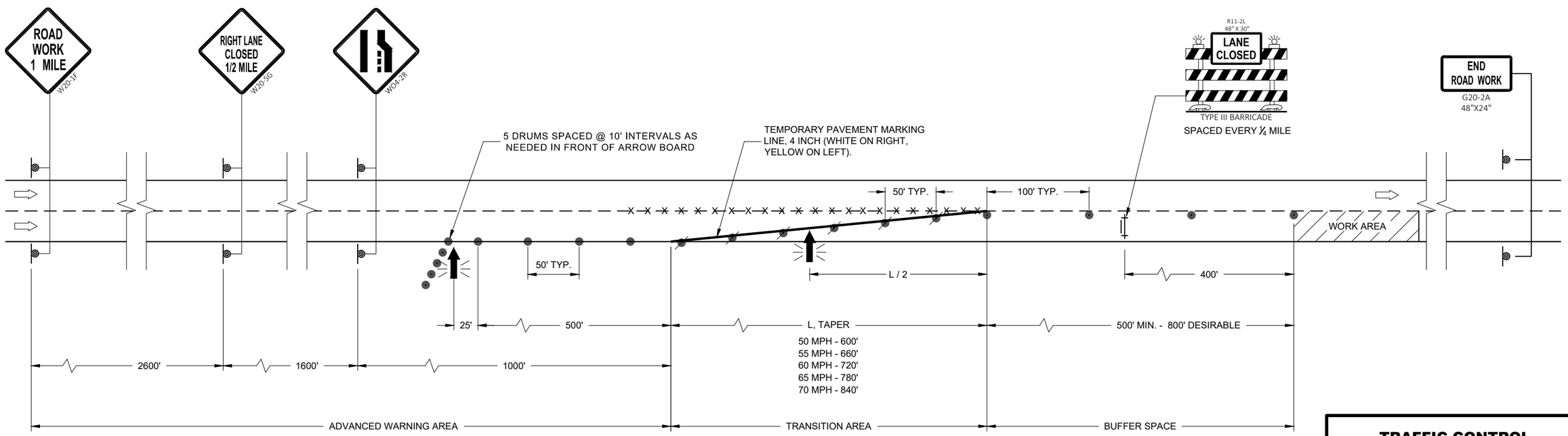

TRAFFIC CONTROL LANE CLOSURE

STATE OF WISCONSIN
DEPARTMENT OF TRANSPORTATION

APPROVED
February 2022 — DATE
/S/ Andrew Heidtke — WORK ZONE ENGINEE
FHWA

6

SDD 15D12 - 10a

6

SDD 15D12 - 10a

LEGEND

SIGN ON PERMANENT SUPPORT

TRAFFIC CONTROL DRUM

DIRECTION OF TRAFFIC

WORK ZONE

GENERAL NOTES

ALL SIGNS ARE 48"X48" UNLESS OTHERWISE NOTED. IF NECESSARY DUE TO SPACE CONSTRAINTS IN URBAN AREAS, 36" X 36" SIGNS MAY BE USED IF APPROVED BY THE REGIONAL TRAFFIC UNIT.

"WO" SIGN IS THE SAME AS "W" SIGN EXCEPT THE BACKGROUND IS ORANGE.

ANY SIGNS TEMPORARY OR EXISTING, WHICH CONFLICT WITH THE TRAFFIC CONTROL "IN USE" SHALL BE REMOVED OR COVERED AS NEEDED AND AS APPROVED BY THE ENGINEER.

THE EXACT NUMBER, LOCATION, AND SPACING OF ALL SIGNS AND DEVICES SHALL BE ADJUSTED TO FIT FIELD CONDITIONS AS APPROVED BY THE ENGINEER.

CHANNELIZING DEVICES PLACED ADJACENT TO WORK AREA SHALL BE PULLED BACK FROM THE TRAVEL LANE WHEN WORK IS NOT IN PROGRESS.

SIGNS THAT WILL BE IN PLACE LESS THAN 7 CONTINUOUS DAYS AND NIGHTS MAY BE MOUNTED ON PORTABLE SUPPORTS.

W20-1A AND G20-2A SIGNS ARE NOT REQUIRED IF THE WORK AREA IS WITHIN A LARGER WORK ZONE WHERE THESE SIGNS ARE ALREADY PRESENT. G20-2A SIGNS MAY ALSO BE OMITTED IF DURATION OF WORK IS LESS THAN 7 CONTINUOUS DAYS AND NIGHTS.

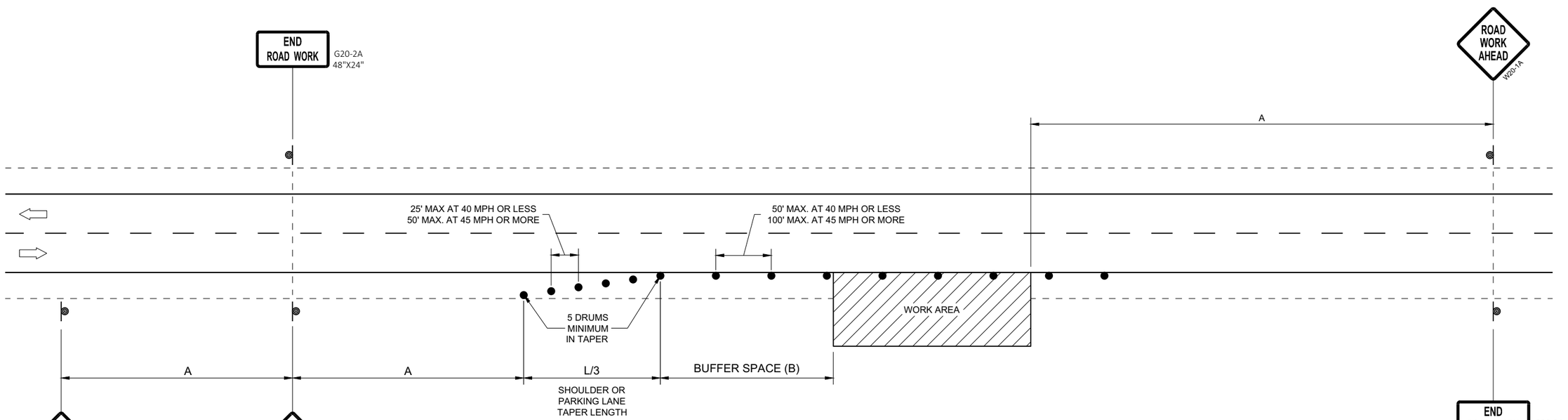

OR
IF TRAFFIC CONTROL DEVICES
ENCROACH ONTO TRAVELED WAY, USE

POSTED SPEED LIMIT PRIOR TO WORK STARTING (MPH)	ADVANCE WARNING SIGN SPACING (A) FEET	SHOULDER TAPER L / 3 W, LATERAL OFFSET (FT)						BUFFER SPACE (B) FEET
		3	4	5	6	7	8	
25	200'	10	14	17	21	24	28	55
30	200'	15	20	25	30	35	40	85
35	350'	20	27	34	40	47	54	120
40	350'	26	35	44	53	62	70	170
45	500'	45	59	74	89	104	119	220
50	500'	50	66	83	99	116	132	280
55	500'	54	73	91	109	127	145	335'

TRAFFIC CONTROL, WORK ON SHOULDER OR PARKING LANE, UNDIVIDED ROADWAY

STATE OF WISCONSIN
DEPARTMENT OF TRANSPORTATION

APPROVED
May 2020 — DATE
/S/ Andrew Heidtke — STATEWIDE WORK ZONE T SAFETY ENGINEER
FHWA

6

SDD 15D28 - 04

GENERAL NOTES

DRAWING NOT TO SCALE. ALL SIGNS AND POSTS ON THIS SHEET SHALL BE PAID FOR WITH 'TRAFFIC CONTROL SIGNS' BID ITEM. ALL SIDE ROADS WHICH ARE UNDER CONSTRUCTION OF CURB AND GUTTER AND/OR GRADING SHALL BE ADEQUATELY SIGNED.

ALL SIGNS AND DEVICES SHALL BE IN CONFORMANCE WITH THE WISCONSIN MANUAL OF UNIFORM TRAFFIC CONTROL DEVICES (WMUTCD). SIGN LAYOUTS SHALL BE IN ACCORDANCE WITH THE WISDOT STANDARD SIGN PLATES.

"WO" SIGNS ARE THE SAME AS "W" SIGNS EXCEPT THAT THE BACKGROUND IS ORANGE.

ALL SIGNS ARE 48" X 48" UNLESS OTHERWISE NOTED.

THE EXACT NUMBER, LOCATION AND SPACING OF ALL SIGNS AND DEVICES SHALL BE ADJUSTED TO FIT FIELD CONDITIONS AS DIRECTED BY THE ENGINEER.

ALL SIGNS INAPPROPRIATE TO THE STATUS OF THE CONTROL ZONE, INCLUDING PRE-EXISTING SIGNS IN THE VICINITY, SHALL BE COVERED OR REMOVED AS DIRECTED BY THE ENGINEER.

SEE 15C34 FOR ADDITIONAL TRAFFIC CONTROL SIGNING WHEN CENTERLINE PAVEMENT MAKINGS ARE MISSING. 'DO NOT PASS' SIGNS MUST BE INSTALLED ON THE SAME DAY AS MILLING OPERATIONS.

(1) PLACE SIGNS 350' IN ADVANCE OF MILLED SURFACES AND AT 1 MILE INTERVALS, OR AS DIRECTED BY THE ENGINEER.

(2) PLACE SIGN 200' MIN. FROM INTERSECTION AND 200' MIN. AFTER ADVANCE WARNING SIGN SHOWN IN SDD 15C04.

LEGEND

SIGN ON TEMPORARY SUPPORT

DIRECTION OF TRAFFIC

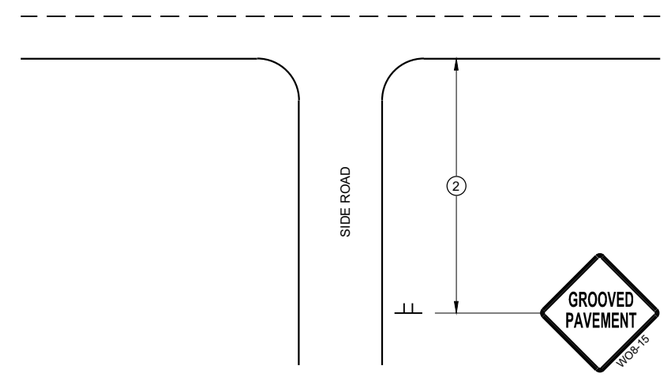

TYPICAL SIDE ROAD APPROACH SIGN DETAIL

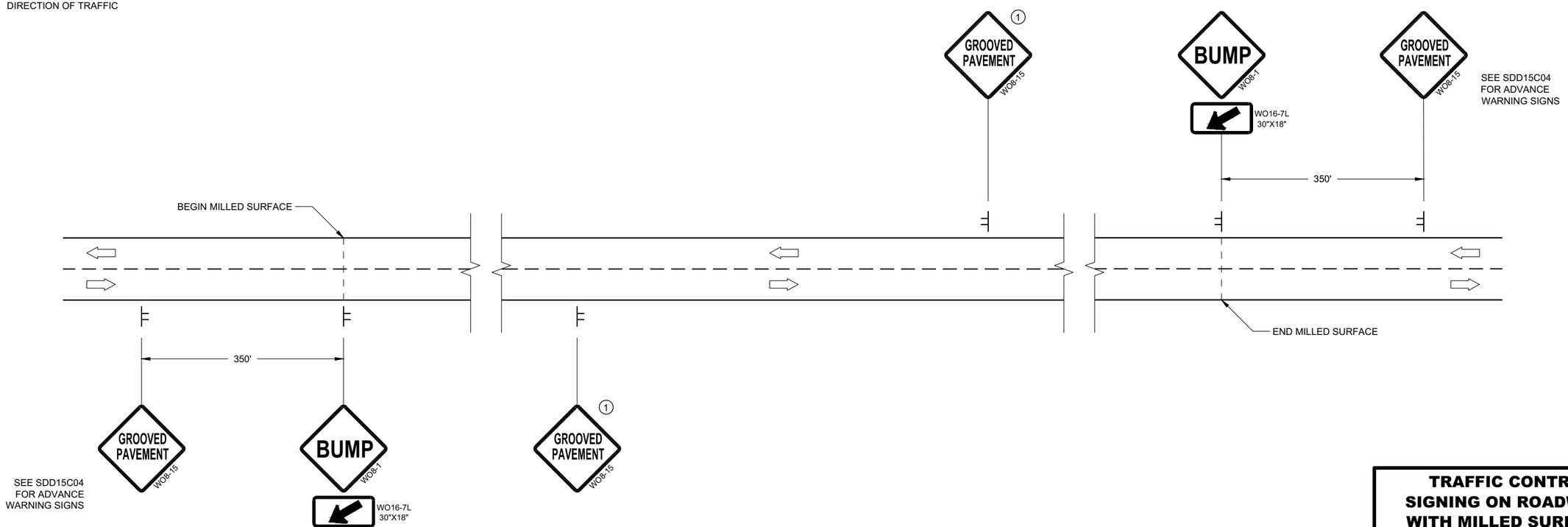

DETAIL FOR SIGNING ON MILLED SURFACES

TRAFFIC CONTROL, SIGNING ON ROADWAYS WITH MILLED SURFACES

STATE OF WISCONSIN
DEPARTMENT OF TRANSPORTATION

APPROVED
February 2020 /S/ Andrew Heidtke
DATE WORK ZONE ENGINEE
FHWA

6

SDD 15D44 - 02

6

SDD 15D44 - 02

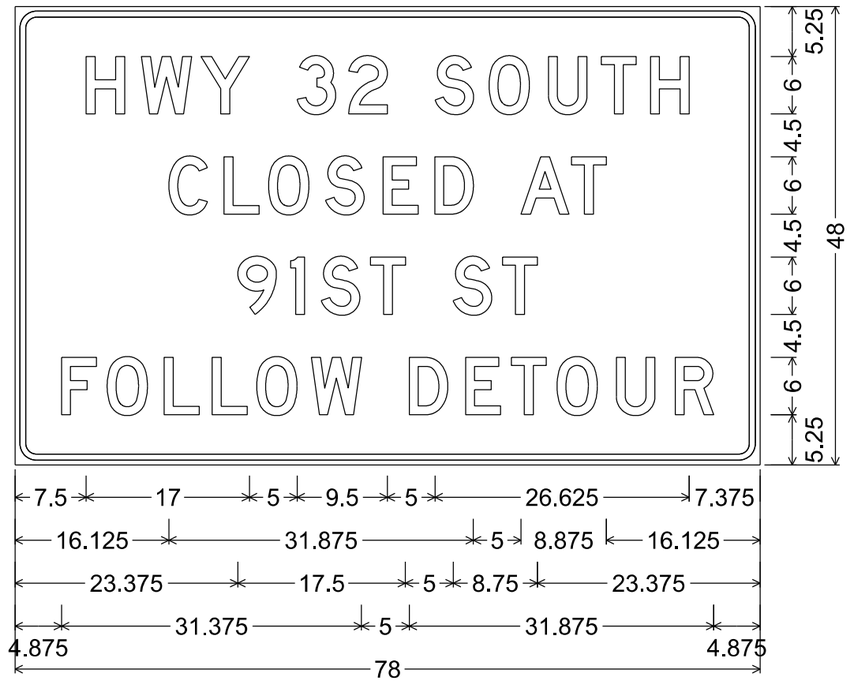

2.250" Radius, 0.625" Border, 0.500" Indent

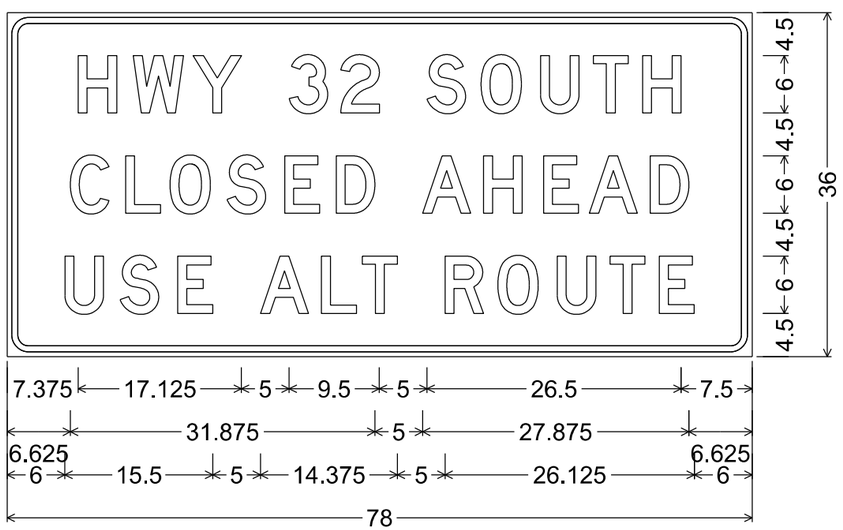

2.250" Radius, 0.625" Border, 0.500" Indent

NOTES

1. Fixed Message Signs Type II - Type F Reflective
2. Color:
   Background - Orange
   Message - Black
3. Message Series - D

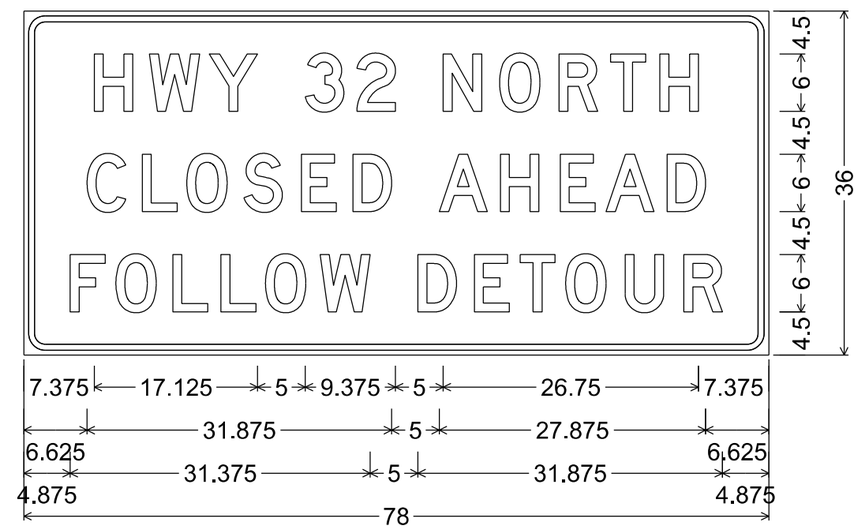

2.250" Radius, 0.625" Border, 0.500" Indent

7

7

URBAN AREA

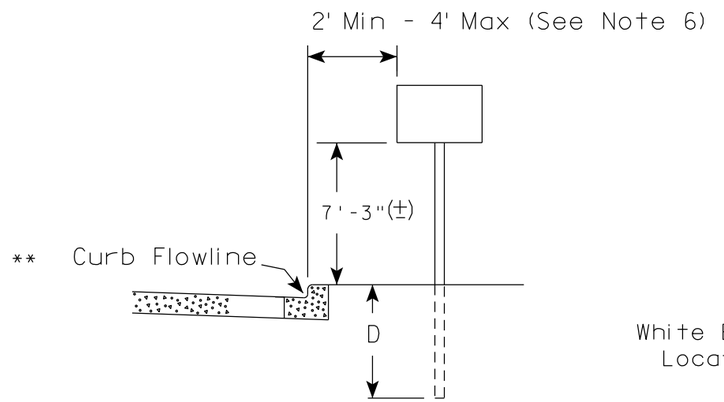

RURAL AREA (See Note 2)

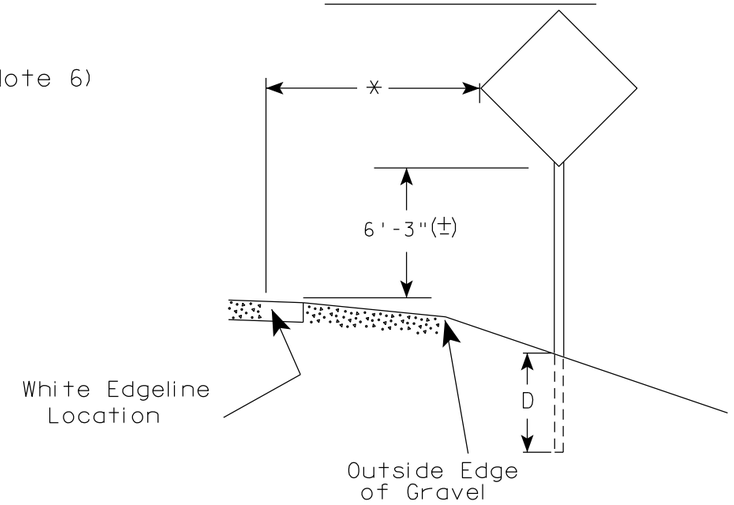

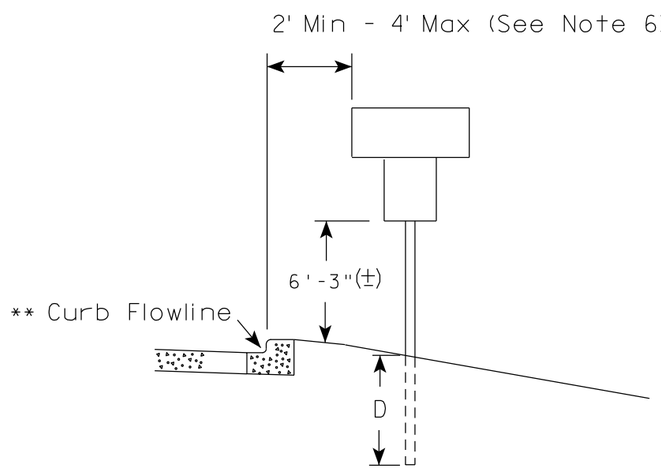

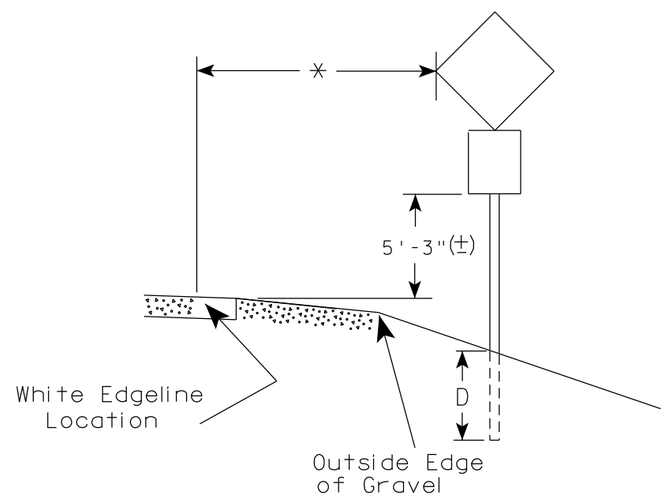

** The existence of curb and gutter does not in itself mandate the vertical clearance illustrated. That height is typically measured where there is sidewalk adjacent to the roadway or parking is permitted. In the absence of sidewalk vertical clearance is measured from the top of the curb. Offset of signs is measured from the flow line.

* 6 feet from edge of a paved shoulder or 12 feet from the edge of pavement (edge line location) or 2 feet from outside edge of gravel, whichever is greater unless directed by project engineer.

GENERAL NOTES

1. Signs wider than 4 feet or 20 sq.ft or larger, shall be mounted on multiple posts. Refer to plate A4-4.
2. If signs are mounted on or behind barrier wall, see A4-10 sign plate.
   The Double Arrow sign (W12-1D) shall be mounted at a height of 2'-3" (±). The Chevron sign (W1-8), Roundabout Chevron panel (R6-4B), Enhanced Reference Markers, Clearance Markers (W5-52), Mile Markers (D10 series), In Road Object Markers (W5-54) & End of Road Markers (W5-56) shall be mounted at a height of 4'-3" (±).
3. For expressways and freeways, mounting height is 7'- 3" (±) or 6'-3" (±) depending upon existence of a sub-sign.
4. Minimum mounting height for signs mounted on traffic signal poles is 5'- 3" (±).
5. Offset distance shall be consistent with existing signs or consistent throughout length of project.
6. The (±) tolerance for mounting height is 3 inches.
7. Folding signs shall be mounted at a height of 5'-3" (±) or as directd by the Engineer.

POST EMBEDMENT DEPTH

Area of Sign Installation (Sq.Ft.)	D (Min)
20 or Less	4'
Greater than 20	5'

TYPICAL INSTALLATION OF PERMANENT TYPE II SIGNS ON SINGLE POSTS

WISCONSIN DEPT OF TRANSPORTATION

APPROVED Matthew R Rauch for State Traffic Engineer

DATE 5/13/2020 PLATE NO. A4-3.22

7

7

PROJECT NO:	HWY:	COUNTY:		SHEET NO: 123	E

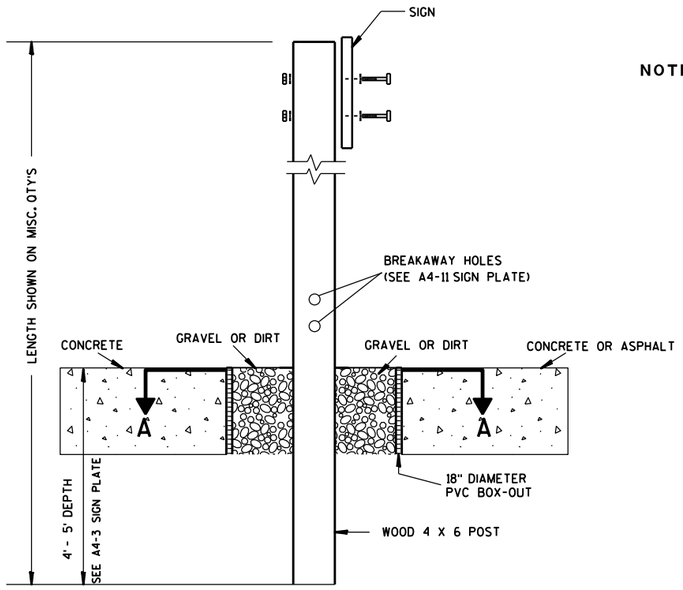

ELEVATION VIEW

DETAIL OF WOOD 4 X 6 SIGN POST IN BOX-OUT

NOTES:
1. ALL MATERIAL TO BE APPROVED BY ENGINEER PRIOR TO INSTALLATION
2. SEE SIGN PLATE A4-8 FOR SIGN HARDWARE REQUIREMENTS
3. 18 INCH X 18 INCH SQUARE BOX-OUTS MAY BE USED FOR INSTALLATIONS IN EXISTING CONCRETE OR ASPHALT LOCATIONS.

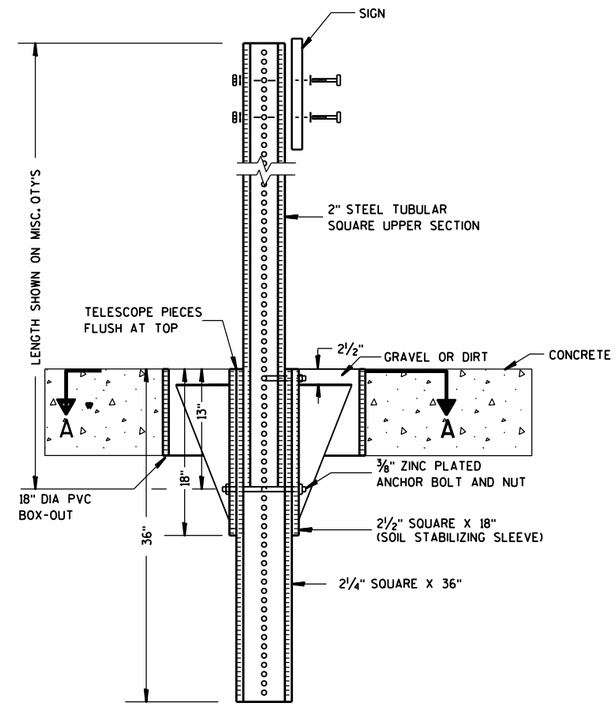

ELEVATION VIEW

DETAIL OF STEEL 2 X 2 SIGN POST IN BOX-OUT

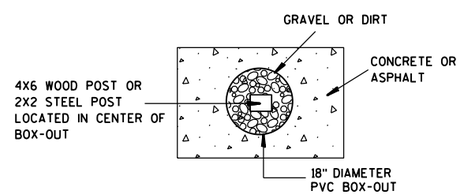

PLAN VIEW

FOR NEW CONCRETE/ASPHALT INSTALLATIONS

SIGN POST
BOX-OUTS
A4-3B

WISCONSIN DEPT OF TRANSPORTATION

APPROVED Matthew R Rauch
for State Traffic Engineer

DATE 1/27/14 PLATE NO. A4-3B.1

PROJECT NO:	HWY:	COUNTY:		SHEET NO:	E

URBAN AREA

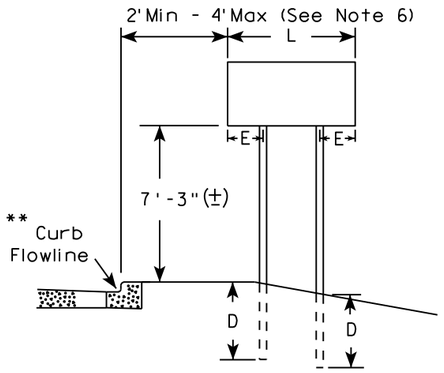

RURAL AREA (See Note 3)

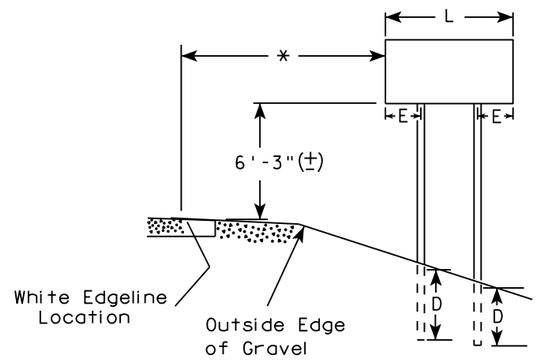

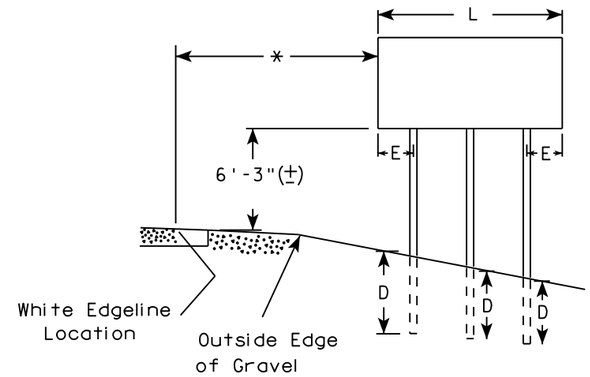

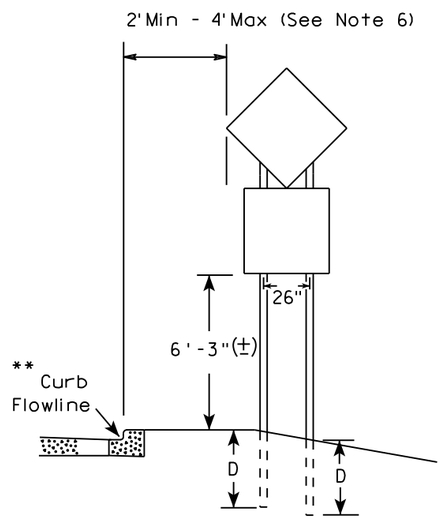

48" DIAMOND WARNING SIGN

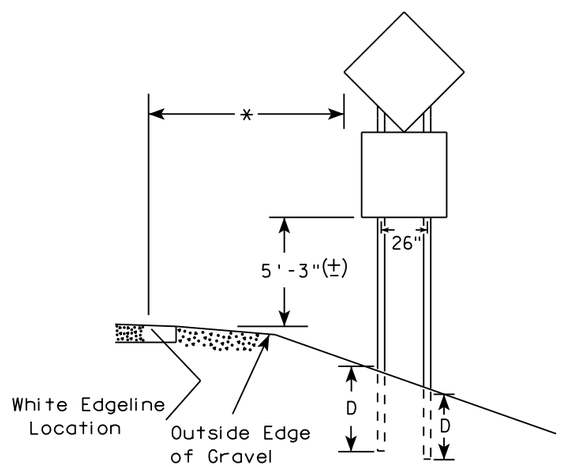

48" DIAMOND WARNING SIGN

GENERAL NOTES

1. For 3 or 4 post installations, individual post spacing shall be greater than 3'-6".
2. See tables below for required number of posts.
3. For expressways and freeways, mounting height is 7'-3" (±) or 6'-3" (±) depending upon existence of sub-sign.
4. The (±) tolerance for mounting height is 3 inches.
5. J-Assemblies are considered to be one sign for mounting height.
6. Offset distance shall be consistent with existing signs or consistent throughout length of project.
7. Folding signs shall be mounted at a height of 5'-3" (±) or as directed by the engineer.
8. The Double Arrow sign (W12-1) shall be mounted at a height of 2'-3" (±). The Chevron sign (W1-8), Roundabout Chevron panel (R6-4B), Clearance Markers (W5-52), Mile Markers (D10 series), In Road Object Markers (W5-54) & End of Road Markers (W5-56) shall be mounted at a height of 4"-3" (±).

* 6 feet from edge of a paved shoulder or 12 feet from the edge of pavement (edge line location) or 2 feet from outside edge of gravel, whichever is greater unless directed by project engineer.

** The existence of curb and gutter does not in itself mandate the vertical clearance illustrated. That height is typically measured where there is sidewalk adjacent to the roadway or parking is permitted. In the absence of sidewalk vertical clearance is measured from the top of the curb. Offset of signs is measured from the flow line.

*** See A4-3 sign plate for signs 4' or less in width and less than 20 S.F. in area.

SIGN SHAPE OTHER THAN DIAMOND (TWO POSTS REQUIRED)	
L	E
*** Greater than 48" Less than 60"	12"
60" to 108"	L/5

SIGN SHAPE OTHER THAN DIAMOND (THREE POSTS REQUIRED)	
L	E
Greater than 108" to 144"	12"

POST EMBEDMENT DEPTH

Area of Sign Installation (Sq. Ft.)	D (Min)
20 or Less	4'
Greater than 20	5'

TYPICAL INSTALLATION OF TYPE II SIGNS ON MULTIPLE POSTS

WISCONSIN DEPT OF TRANSPORTATION

APPROVED Matthew R Rauch
For State Traffic Engineer

DATE 8/21/17 PLATE NO. A4-4.15

7

7

PROJECT NO:	HWY:	COUNTY:		SHEET NO: 125	E

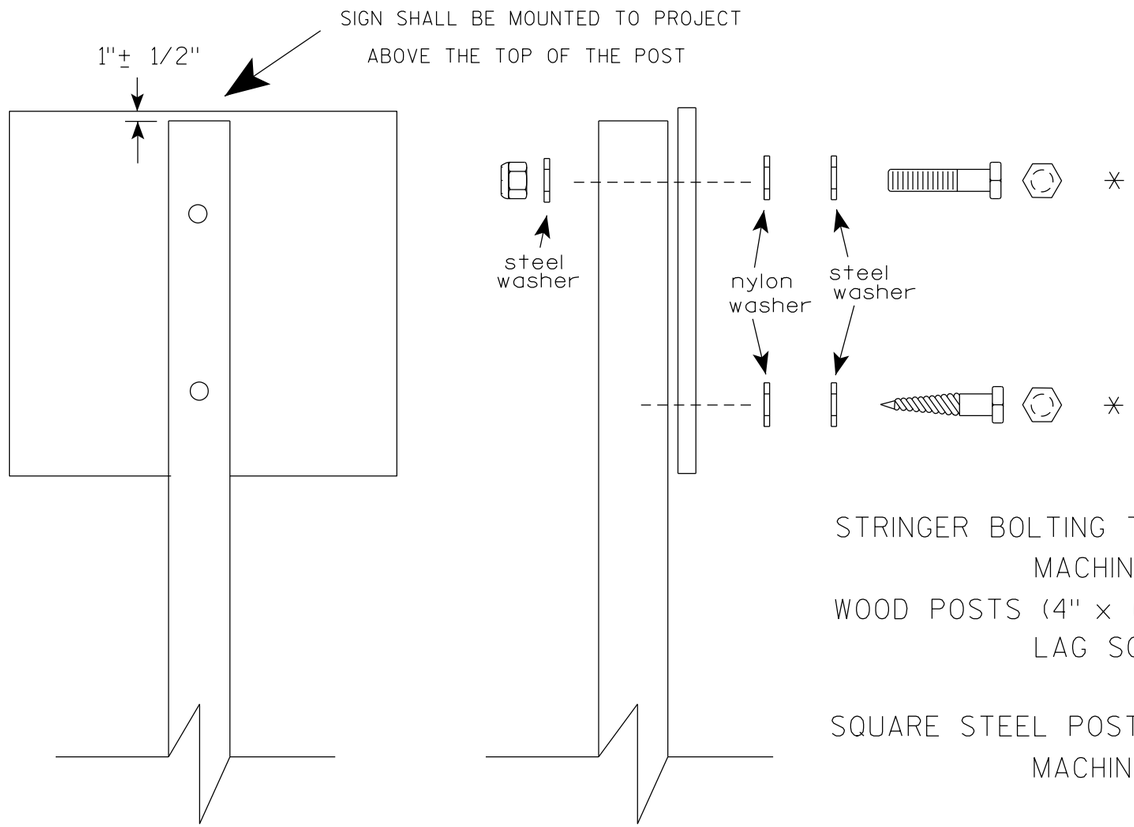

Nuts, bolts and lags used for mounting signs shall have hexagonal heads and shall be either :

a. Hot dip galvanized in accordance with ASTM Designation: A 153, Class D, or SC 3

b. Electro-galvanized in accordance with ASTM Designation : B 633, TYPE III, SC 3.

Threads on bolts and nuts shall be manufactured with sufficient allowance for the cadmium plate or galvanized coating to permit the nuts to run freely on the bolts.

STRINGER BOLTING TO ALUMINUM SIGNS (SEE SIGN PLATE A4-18)

MACHINE BOLTS - 5/16" X 1-3/4" Length w/ lock nuts

WOOD POSTS (4" x 6")

LAG SCREWS - 3/8" X 3" (NO STRINGERS ON BACK OF SIGN)

3/8" X 4" (STRINGERS ON BACK OF SIGN)

SQUARE STEEL POSTS (2" x 2")

MACHINE BOLTS - 3/8" X 3-1/4" Length w/ nuts (NO STRINGER ON BACK OF SIGN)

3/8" X 5" Length w/ nuts (STRINGERS ON BACK OF SIGN)

RIVETS - 9/32" (6605-9-6) BULB-TITE, TRI-FOLD, ALUMINUM BODY/MANDREL

O.D. FLANGE .720-.765 INCH, GRIP RANGE .042-.375 INCH

WASHERS (ALL POSTS) -

1-1/4" O.D. X 3/8" I.D. X 1/16" STEEL

1-1/4" O.D. X 3/8" I.D. X .080 NYLON

* Two different fastening systems are shown for illustration purposes. On any individual sign, either one or the other system shall be used. Actual number of fasteners per sign varies with the sign area, but normally there are two. For a single post installation, all signs greater than 9 sq. ft. require the use of 3 fasteners.

ATTACHMENT OF SIGNS TO POSTS

WISCONSIN DEPT OF TRANSPORTATION

APPROVED Matthew R Rauch
for State Traffic Engineer

DATE 4/1/2020 PLATE NO. A4-8.9

TELESCOPIC TUBING ANCHORS
TWO PIECE SYSTEM

2 1/4 " SQUARE
12 GAUGE
PERFORATED
GALVANIZED FINISH

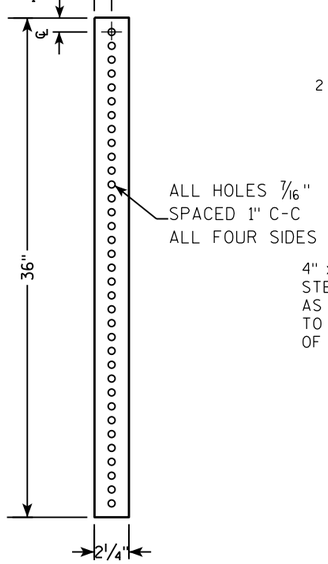

2 1/2 " SQUARE
12 GAUGE
OMNI-DIRECTIONAL
PERFORATED
SOIL STABILIZING SLEEVE
GALVANIZED FINISH

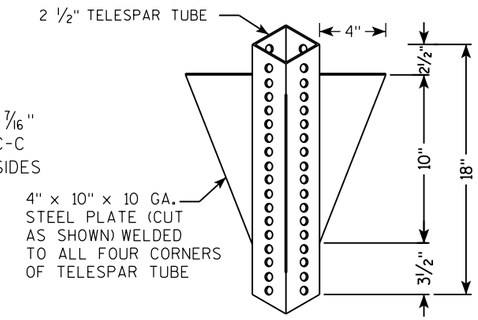

DETAIL OF TUBULAR STEEL SIGN POST
(IN POURED CONCRETE OR ASPHALT)

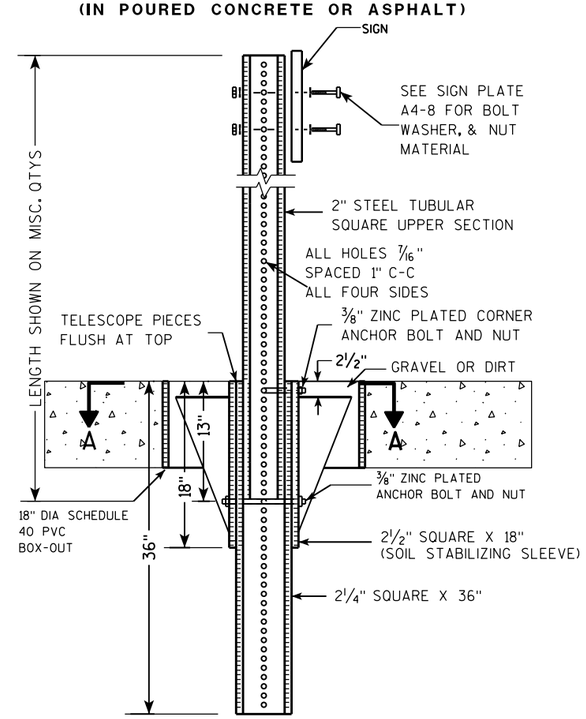

DETAIL OF TUBULAR STEEL SIGN POST
(IN LOCATIONS OTHER THAN POURED CONCRETE OR ASPHALT)

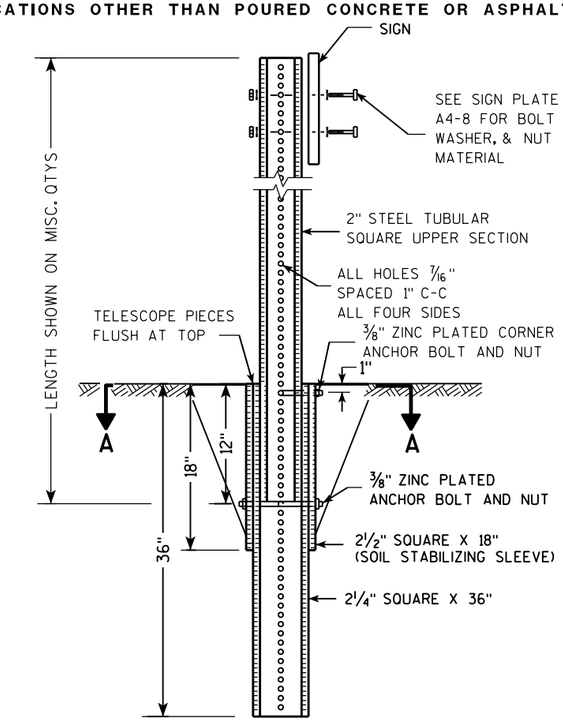

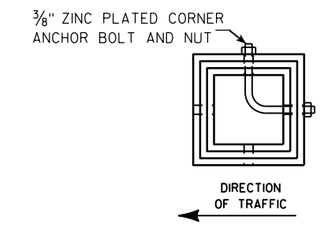

SECTION A-A

Area of Sign Installation (Sq. Ft.)	Number of Required Posts
9 or less	1
Greater than 9 less than or equal to 18	2
Greater than 18 less than or equal to 27	3

Signs wider than 3 feet or larger than 9 sq. ft shall be mounted on multiple posts (see above table).

TUBULAR STEEL
SIGN POST
A4-9

WISCONSIN DEPT OF TRANSPORTATION

APPROVED Matthew R Rauch
for State Traffic Engineer

DATE 2/05/15 PLATE A4-9.9

PROJECT NO:	HWY:	COUNTY:		SHEET NO:	E

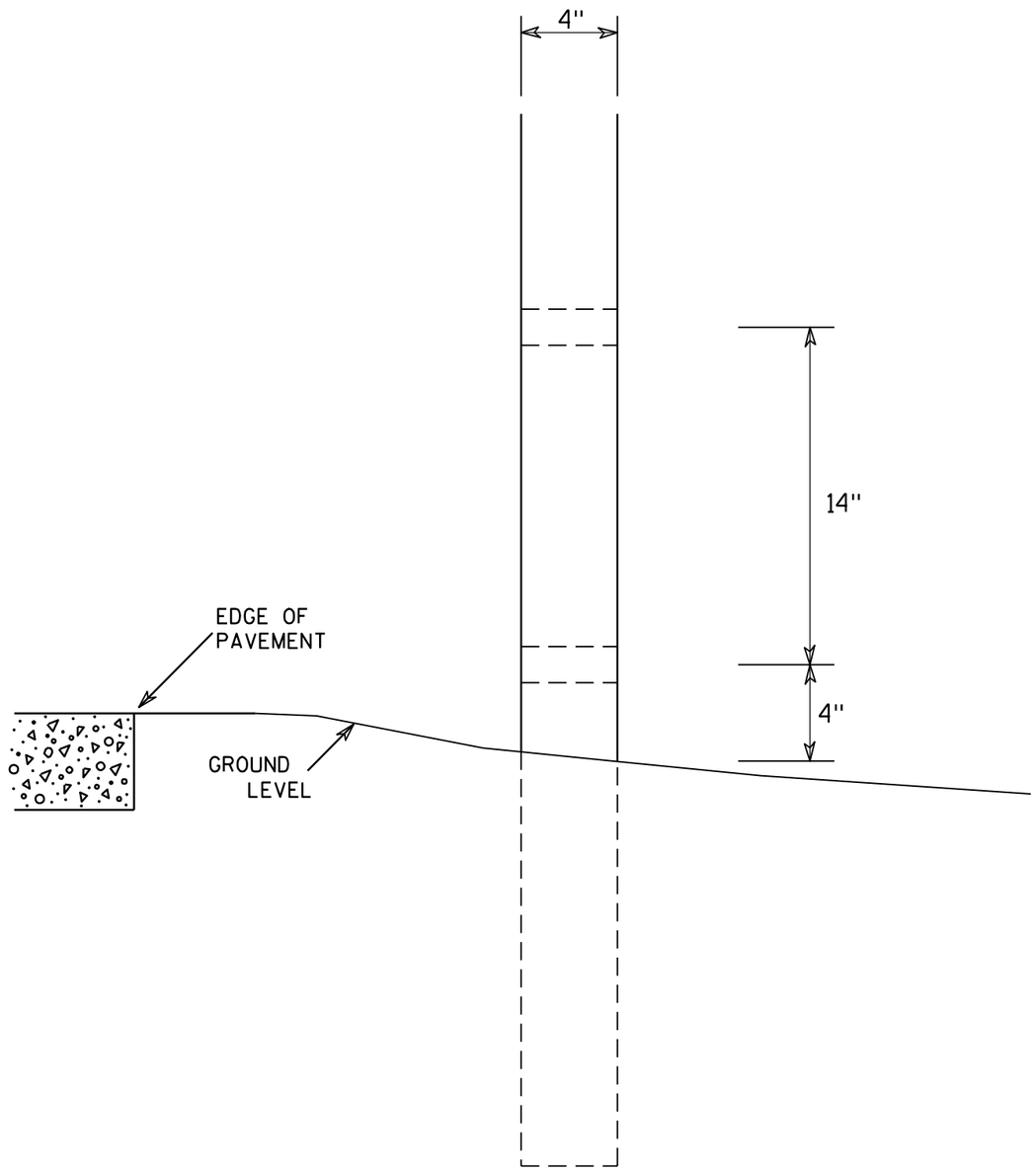

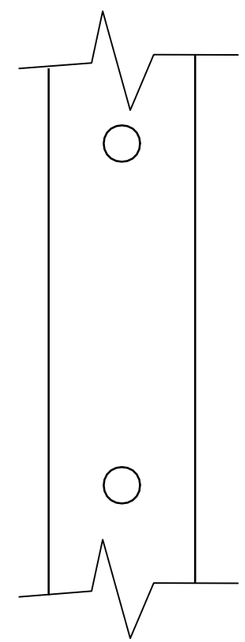

SIDE VIEW

GENERAL NOTES

1. All 4 x 6 Wood Posts shall be modified by having two 1½" diameter holes drilled perpendicular to the roadway centerline.

7

7

4 X 6 WOOD POST MODIFICATIONS

WISCONSIN DEPT OF TRANSPORTATION

APPROVED Chester J Spang for State Traffic Engineer

DATE 3/27/97 PLATE NO. A4-11.2

PROJECT NO:	HWY:	COUNTY:		SHEET NO: 128	E

BANDING

SINGLE SIGN

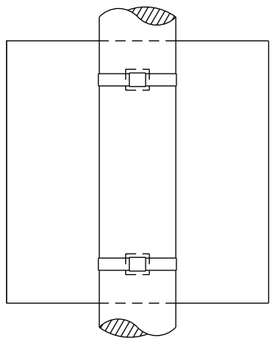

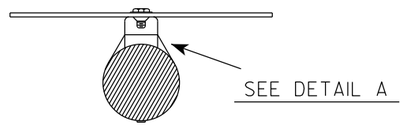

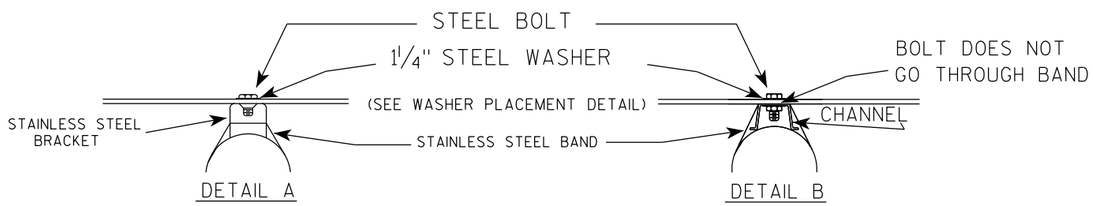

WASHER PLACEMENT

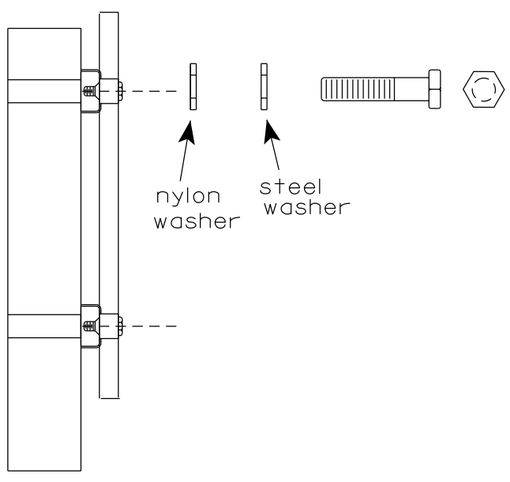

WASHERS (ALL POSTS) -
1-1/4" O.D. X 3/8" I.D. X 1/16" STEEL
1-1/4" O.D. X 3/8" I.D. X .080 NYLON
FOR ALL TYPE H SIGNS

GENERAL NOTES

1. Any sign over 3 feet in width shall use the V-Block banding method. See A5-10 standard plate.
2. Signs 3 feet or greater in height shall have three bracket bands installed. Signs less than 3 feet in height shall have two bracket bands installed.
3. Banding and assembly bracket shall be stainless steel. All bands shall be ¾" in width and 0.025" thickness.
4. ALL SIGN MOUNTING BOLTS AND WASHERS SHALL BE EITHER:
   a. Hot dip or mechanically galvanized in accordance with ASTM Designation: A 153, Class D
   b. Electro-galvanized in accordance with ASTM designation: B 633, Type III, SC 3

"J" ASSEMBLY

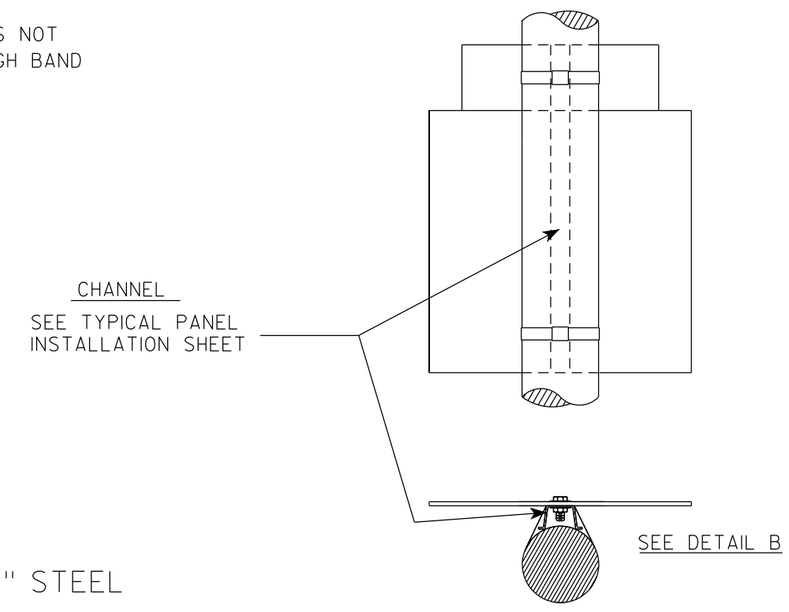

STANDARD SIGN
SIGN BANDING DETAILS

WISCONSIN DEPT OF TRANSPORTATION

APPROVED Matthew R Rauch for State Traffic Engineer

DATE 6/10/19 PLATE NO. A5-9.4

PROJECT NO:	HWY:	COUNTY:		SHEET NO: 129	E

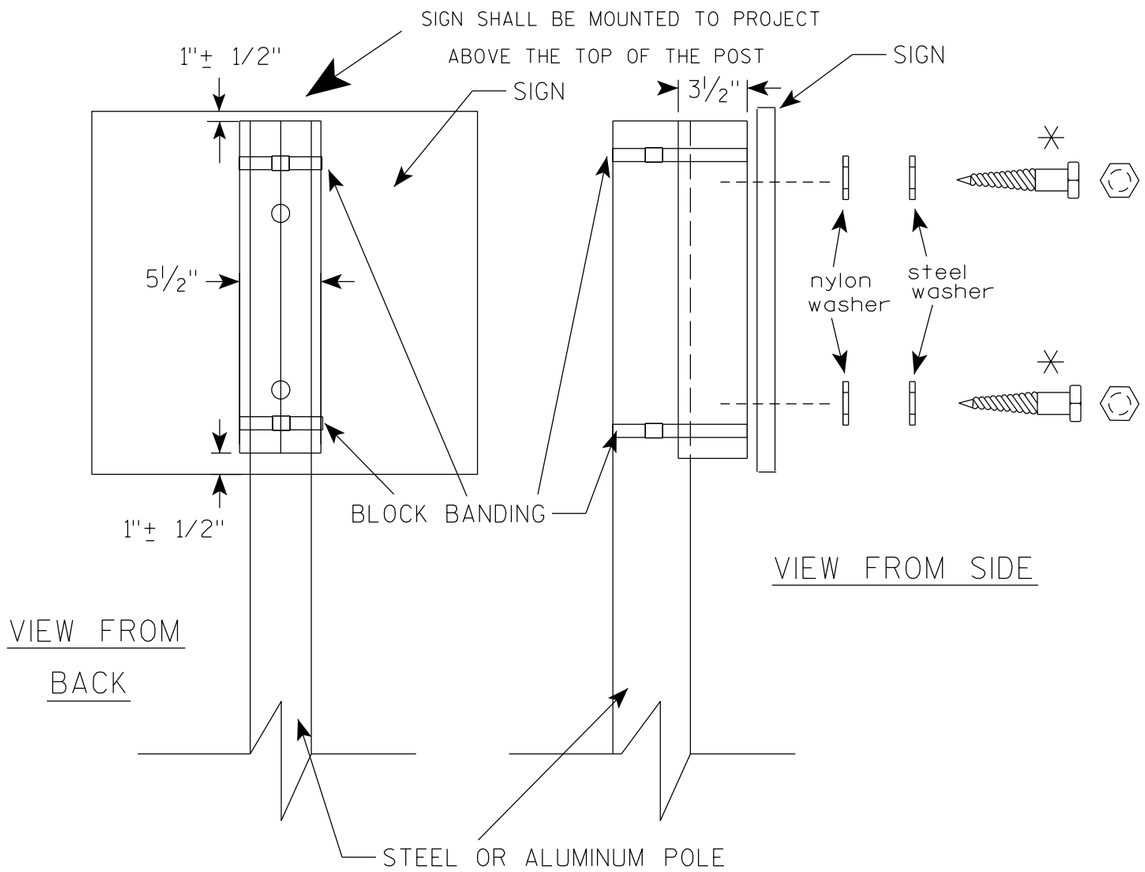

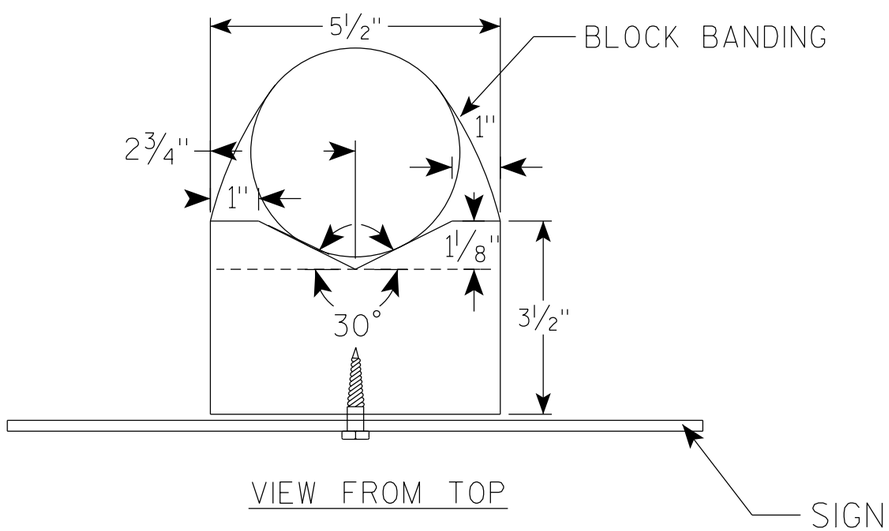

GENERAL NOTES

1. WOOD 4"X6" POST MATERIAL SHALL CONFORM TO 507.2.2 OF THE WisDOT STANDARD SPECIFICATIONS
2. BLOCK BANDING AND CLIPS SHALL BE STAINLESS STEEL, 3/4" WIDTH AND 0.025" THICKNESS
3. SIGNS 3' OR GREATER IN HEIGHT SHALL UTILIZE 3 BLOCK BANDS. SIGNS UNDER 3' IN HEIGHT SHALL UTILIZE 2 BLOCK BANDS
4. ACTUAL NUMBER OF FASTENERS PER SIGN VARIES WITH THE SIGN AREA, BUT NORNALLY THERE ARE TWO. FOR SIGNS GREATER THAN 9 S.F. 3 FASTENERS SHALL BE USED.
5. ALL SIGN MOUNTING BOLTS AND WASHERS SHALL BE EITHER:
   a. Hot dip or mechanically galvanized in accordance with ASTM Designation: A 153, Class D
   b. Electro-galvanized in accordance with ASTM Designation : B 633, TYPE III, SC 3
6. ALL BOLTS SHALL HAVE HEXAGONAL HEADS.
7. STEEL WASHERS SHALL BE 1 1/4" O.D. X 3/8" I.D. X 1/16"
8. NYLON WASHERS SHALL BE 1 1/4" O.D. X 3/8" I.D. X .080 FOR TYPE H OR TYPE F FACE SIGN

✳ LAG BOLTS SHALL BE 3/8" X 2 1/2"

7

7

BLOCK BANDING DETAIL
(V-BLOCK OPTION)

WISCONSIN DEPT OF TRANSPORTATION

APPROVED Matthew R Rauch
for State Traffic Engineer

DATE 4/19/2022 PLATE NO. A5-10.3

PROJECT NO:				SHEET NO: 130	E

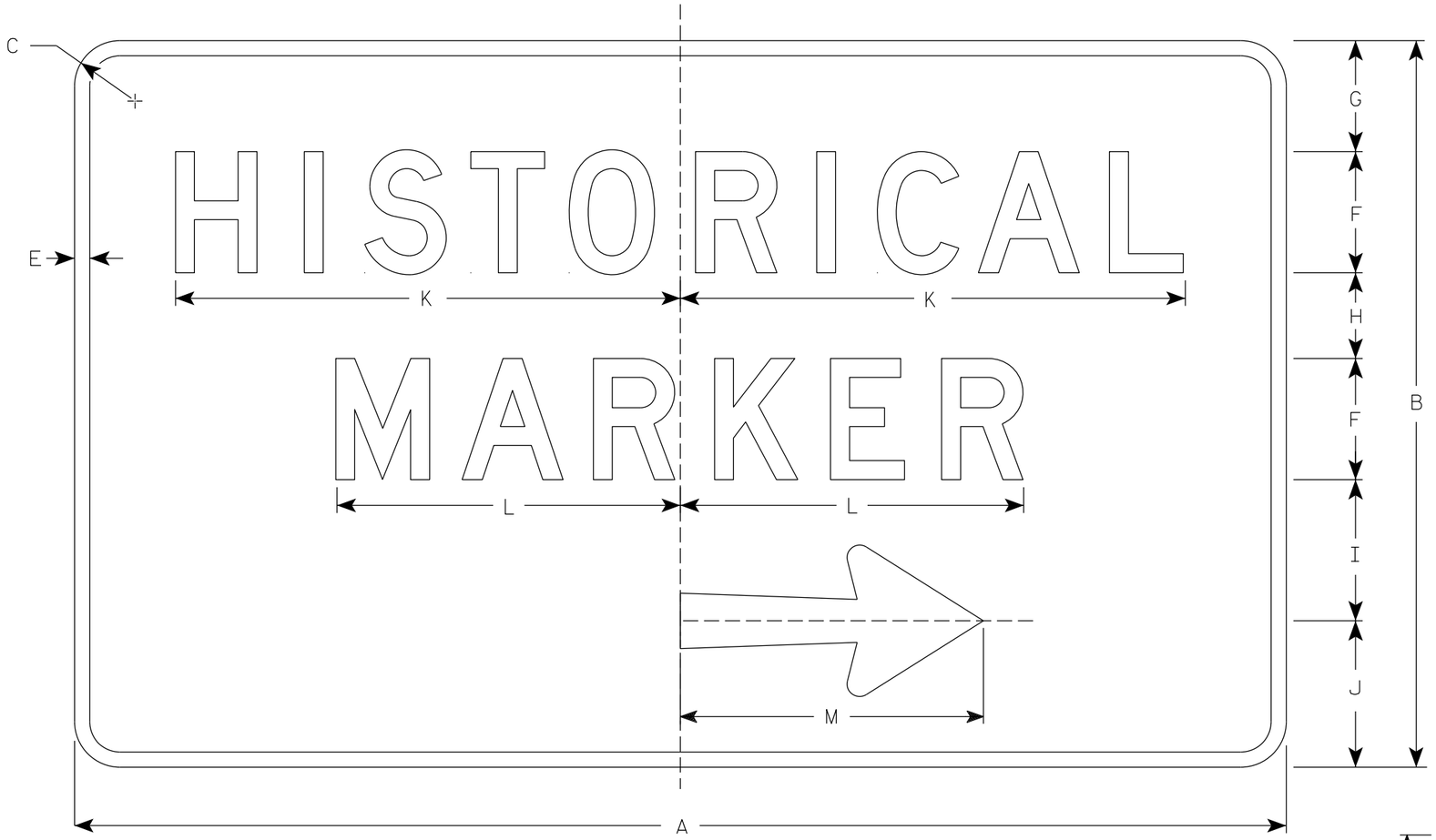

D5-64R

NOTES

1. Sign is Type II - Type H Reflective - reference
2. Color:
   Background - Brown
   Message - White
3. Message Series - D
4. D5-64L is the same as D5-64R except the arrow is reversed.

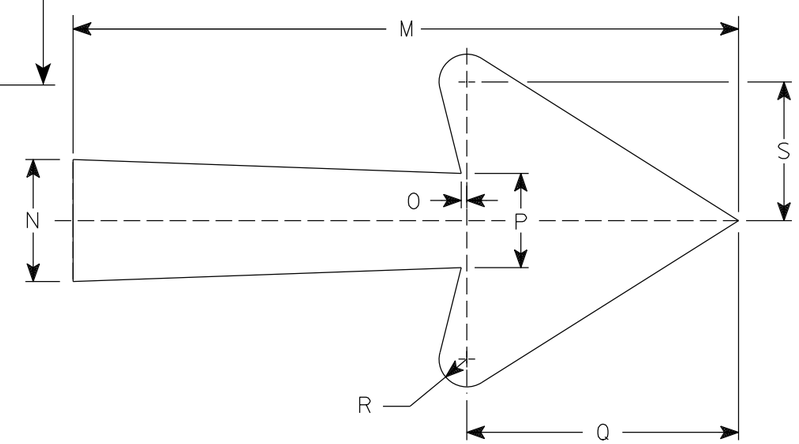

Arrow Detail

SIZE	A	B	C	D	E	F	G	H	I	J	K	L	M	N	O	P	Q	R	S	T	U	V	W	X	Y	Z	Area sq. ft.
1																											
2	60	36	2 1/4		3/4	6	4 5/8	4 1/2	7 1/8	7 3/4	25	17	15	2 3/4	1/8	2 1/8	6 1/8	5/8	3 1/8								15.0
3	78	48	3		1	8	6	6	10	10	32 3/4	22 3/8	21	4 1/4	1/4	2 3/4	7 7/8	3/4	4								26.0
4																											
5																											

STANDARD SIGN
D5-64

WISCONSIN DEPT OF TRANSPORTATION

APPROVED Matthew R Rauch
for State Traffic Engineer

DATE 5/21/19 PLATE NO. D5-64.6

PROJECT NO:

SHEET NO: 131 E

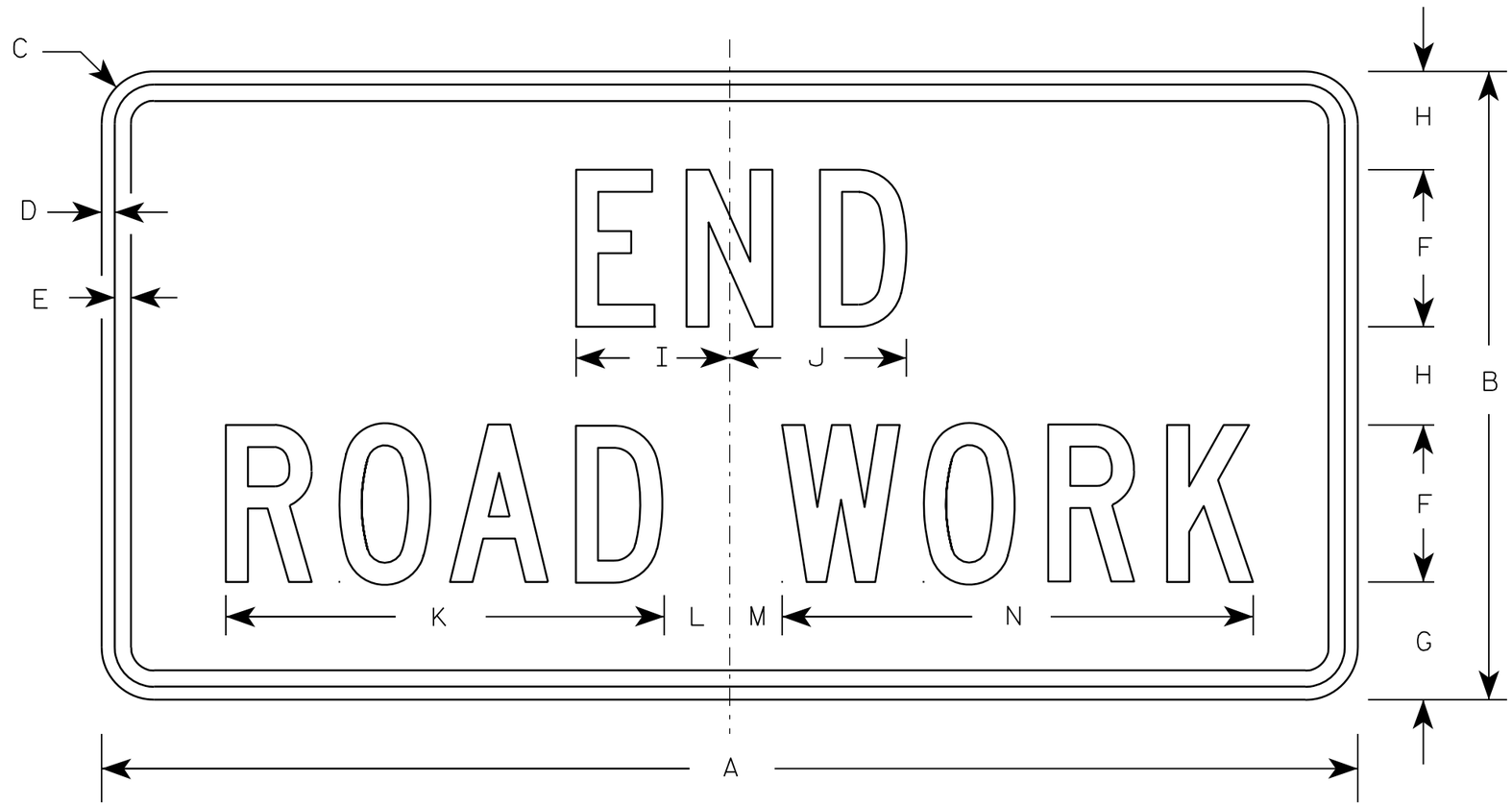

G20-2A

NOTES

1. Sign is Type II - Type F Reflective - reference WIS DOT Standard Specification for HIGHWAY and STRUCTURE CONSTRUCTION latest edition.
2. Color:
   Background - Orange
   Message - Black
3. Message Series - C
4. Corners may be square or rounded when base material is plywood but borders shall be rounded as shown. When base material is metal, the corners and borders shall be rounded.

Metric equivalent for this sign is:

SIZE	
1	900 mm X 450 mm
2	1200 mm X 600 mm
3	1200 mm X 600 mm
4	1200 mm X 600 mm
5	1200 mm X 600 mm

SIZE	A	B	C	D	E	F	G	H	I	J	K	L	M	N	O	P	Q	R	S	T	U	V	W	X	Y	Z	Area sq. ft.	Area m2
1	36	18	1 1/8	3/8	1/2	4	3 3/4	2 1/2	4 1/8	4 1/8	11 1/8	2	1	12 1/8													4.5	0.41
2	48	24	1 1/2	1/2	5/8	6	4 1/2	3 3/4	5 7/8	6 3/4	16 3/4	2 1/2	1 3/4	18 1/2													8.0	0.72
3	48	24	1 1/2	1/2	5/8	6	4 1/2	3 3/4	5 7/8	6 3/4	16 3/4	2 1/2	1 3/4	18 1/2													8.0	0.72
4	48	24	1 1/2	1/2	5/8	6	4 1/2	3 3/4	5 7/8	6 3/4	16 3/4	2 1/2	1 3/4	18 1/2													8.0	0.72
5	48	24	1 1/2	1/2	5/8	6	4 1/2	3 3/4	5 7/8	6 3/4	16 3/4	2 1/2	1 3/4	18 1/2													8.0	0.72

STANDARD SIGN

G20-2A

WISCONSIN DEPT OF TRANSPORTATION

APPROVED Matthew R Rauch
for State Traffic Engineer

DATE 9/30/09 PLATE NO. G20-2A.8

PROJECT NO:	HWY:	COUNTY:		SHEET NO: 132	E

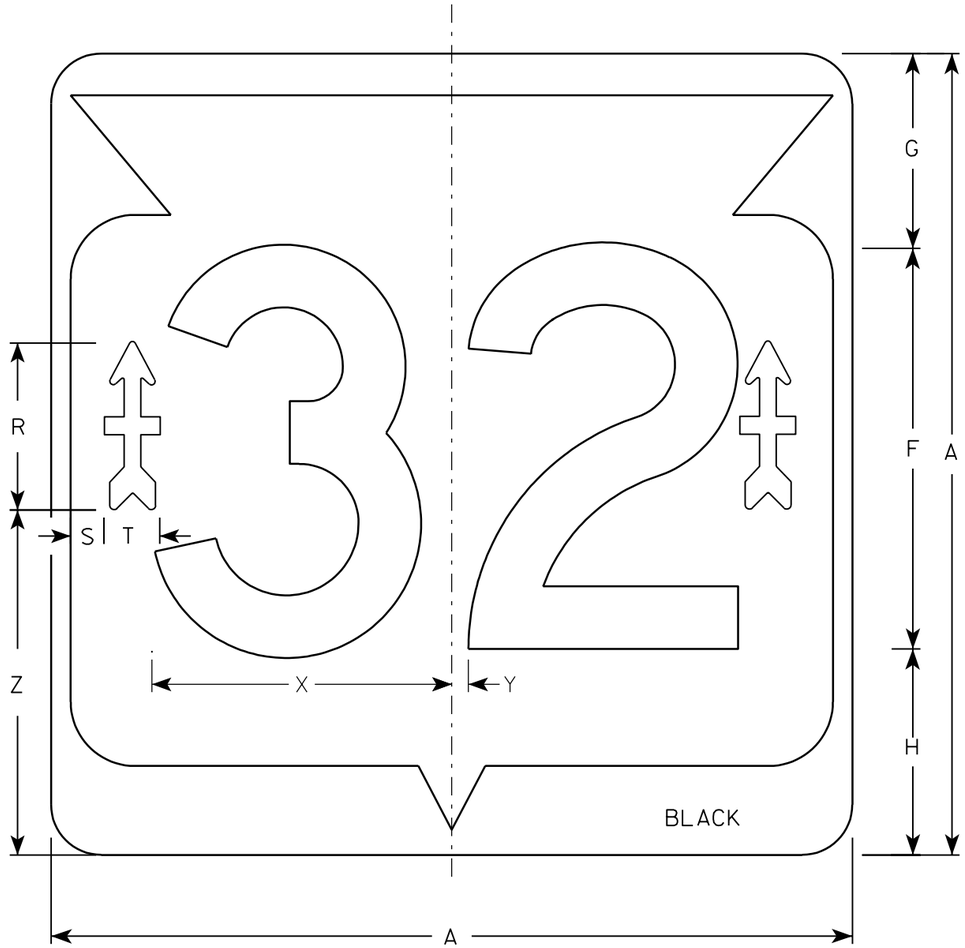

M1-6B

NOTES

1. Sign is Type II - Type H - reference WIS DOT Standard Specification for HIGHWAY and STRUCTURE CONSTRUCTION latest edition.
2. Color:
   Background - White & Black
   Message - Black
   Arrow - Type H Reflective Red
3. Message Series - D
4. Corners may be square or rounded when base material is plywood but borders shall be rounded as shown. When base material is metal, the corners and borders shall be rounded.

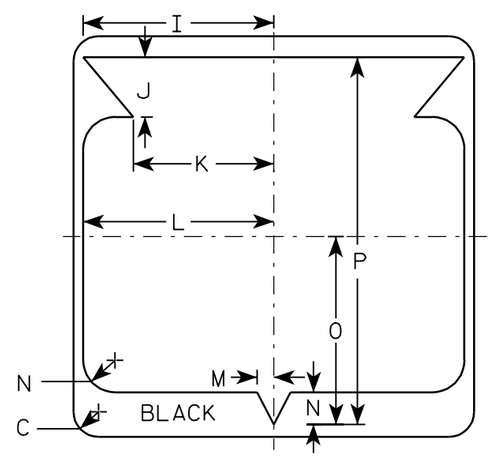

32nd DIVISION ARROW
ACTUAL SIZE

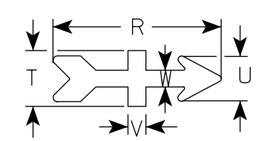

Metric equivalent for this sign is:

SIZE	
1	
2	600 mm X 600 mm
3	900 mm X 900 mm
4	900 mm X 900 mm
5	900 mm X 900 mm

SIZE	A	B	C	D	E	F	G	H	I	J	K	L	M	N	O	P	Q	R	S	T	U	V	W	X	Y	Z	Area sq. ft.	Area m2
1																												
2	24		1 1/2			12	5 1/2	6 1/2	10 1/4	2 1/2	8 7/8	11 1/2	1	1 7/8	11 1/4	21 7/8		5 1/8	3/4	1 7/8	1 1/2	5/8	5/8	9	1/2	10 1/2	4.0	.36
3	36		2 1/4			18	8 3/4	9 1/4	15 3/8	5 3/8	12 5/8	17 1/8	1 1/2	2 7/8	16 7/8	33		7 1/2	1 1/2	2 1/2	2	7/8	3/4	13 1/2	3/4	15 1/2	9.0	.81
4	36		2 1/4			18	8 3/4	9 1/4	15 3/8	5 3/8	12 5/8	17 1/8	1 1/2	2 7/8	16 7/8	33		7 1/2	1 1/2	2 1/2	2	7/8	3/4	13 1/2	3/4	15 1/2	9.0	.81
5	36		2 1/4			18	8 3/4	9 1/4	15 3/8	5 3/8	12 5/8	17 1/8	1 1/2	2 7/8	16 7/8	33		7 1/2	1 1/2	2 1/2	2	7/8	3/4	13 1/2	3/4	15 1/2	9.0	.81

STATE ROUTE MARKER "32"
M1-6B FOR ASSEMBLIES

WISCONSIN DEPT OF TRANSPORTATION

APPROVED Matthew R Rauch
for State Traffic Engineer

DATE 12/5/05 PLATE NO. M1-6B.2

PROJECT NO:	HWY:	COUNTY:		SHEET NO: 133	E

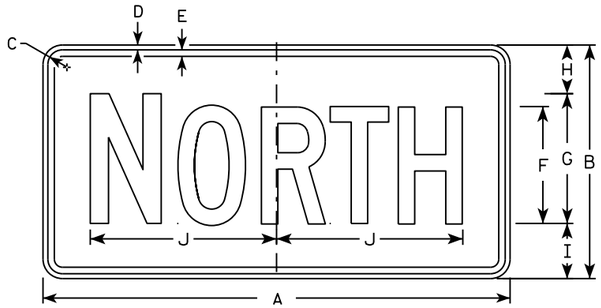

M3-1
MM3-1
MP3-1

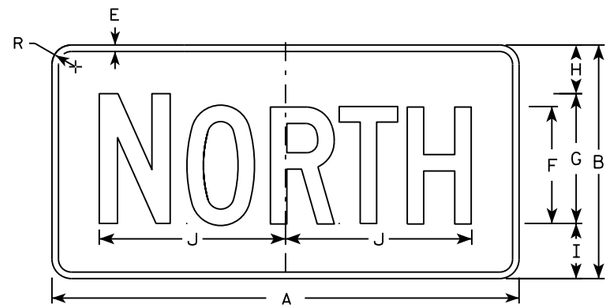

MB3-1
MK3-1
MN3-1

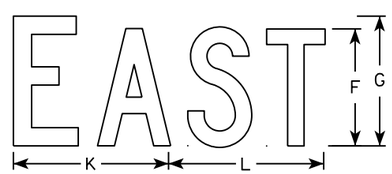

M3-2
MM3-2
MP3-2

MB3-2
MK3-2
MN3-2

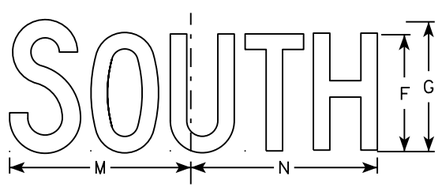

M3-3
MM3-3
MP3-3

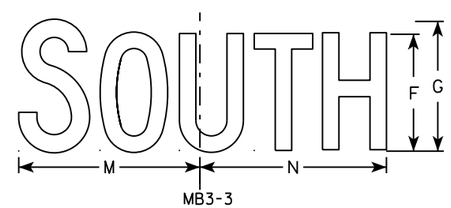

MB3-3
MK3-3
MN3-3

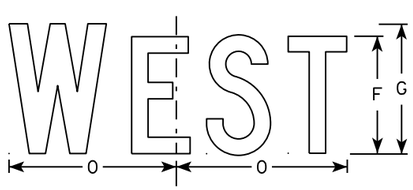

M3-4
MM3-4
MP3-4

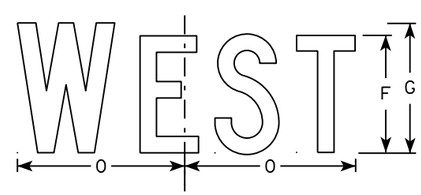

MB3-4
MK3-4
MN3-4

NOTES

1. All Signs Type II - Type H
2. Color:
   Background - See note 5
   Message - See note 5
3. Message Series - C
4. Corners may be square or rounded when base material is plywood but borders shall be rounded as shown. When base material is metal, the corners and borders shall be rounded.
5. M3-1 thru M3-4 Background - White
   Message - Black
   MB3-1 thru MB3-4 Background - Blue
   Message - White
   MK3-1 thru MK3-4 Background - Green
   Message - White
   MM3-1 thru MM3-4 Background - White
   Message - Green
   MN3-1 thru MN3-4 Background - Brown
   Message - White
   MP3-1 thru MP3-4 Background - White
   Message - Blue
6. Note the first letter of each direction is larger than the remainder of the message.

SIZE	A	B	C	D	E	F	G	H	I	J	K	L	M	N	O	P	Q	R	S	T	U	V	W	X	Y	Z	Area sq. ft.
1																											
2	24	12	1 1/8	3/8	3/8	6	7	2 1/4	2 3/4	10 1/4	7 7/8	8 3/8	10 1/4	9 3/4	8 3/4			1 1/2									2.00
3	36	18	1 1/8	3/8	1/2	9	10	3 3/4	4 1/4	14 3/8	12	12 1/8	14	14 1/8	13			1 1/2									4.5
4	36	18	1 1/8	3/8	1/2	9	10	3 3/4	4 1/4	14 3/8	12	12 1/8	14	14 1/8	13			1 1/2									4.5
5	36	18	1 1/8	3/8	1/2	9	10	3 3/4	4 1/4	14 3/8	12	12 1/8	14	14 1/8	13			1 1/2									4.5

STANDARD SIGNS
M3-1 thur M3-4
SERIES

WISCONSIN DEPT OF TRANSPORTATION

APPROVED Matthew R Rauch
for State Traffic Engineer

DATE 10/15/15 PLATE NO M3-1.14

PROJECT NO: | HWY: | COUNTY: | SHEET NO: | E

FILE NAME : C:\CAEfiles\Projects\tr_stdplate\M31.DGN PLOT DATE : 01-DEC-2015 17:54 PLOT BY : $$ plotuser $$ PLOT NAME : PLOT SCALE : 11.675051:1.000000

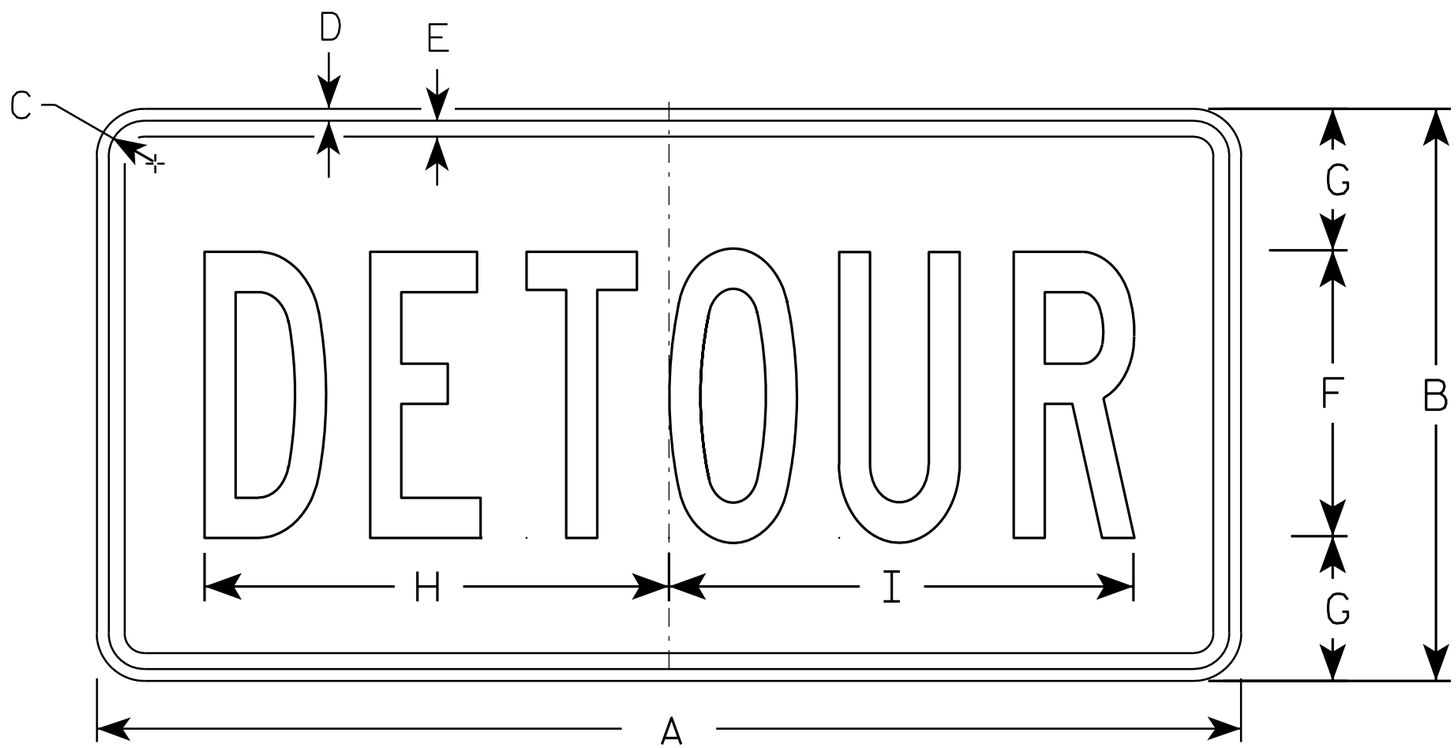

M4-8

NOTES

1. Sign is Type II - Type F Reflective - reference WIS DOT Standard Specification for HIGHWAY and STRUCTURE CONSTRUCTION latest edition.
2. Color:
   Background - Orange
   Message - Black
3. Message Series - B
4. Corners may be square or rounded when base material is plywood but borders shall be rounded as shown. When base material is metal, the corners and borders shall be rounded.

SIZE	A	B	C	D	E	F	G	H	I	J	K	L	M	N	O	P	Q	R	S	T	U	V	W	X	Y	Z	Area sq. ft.
1																											
2	24	12	1 1/8	3/8	3/8	6	3	10	10 1/4																		2.0
3	36	18	1 1/8	3/8	1/2	9	4 1/2	14 5/8	14 1/2																		4.5
4																											
5																											

STANDARD SIGN
M4-8

WISCONSIN DEPT OF TRANSPORTATION

APPROVED Matthew R Rauch
for State Traffic Engineer

DATE 11/10/10 PLATE NO. M4-8.2

PROJECT NO: | HWY: | COUNTY: | SHEET NO: 135 | E

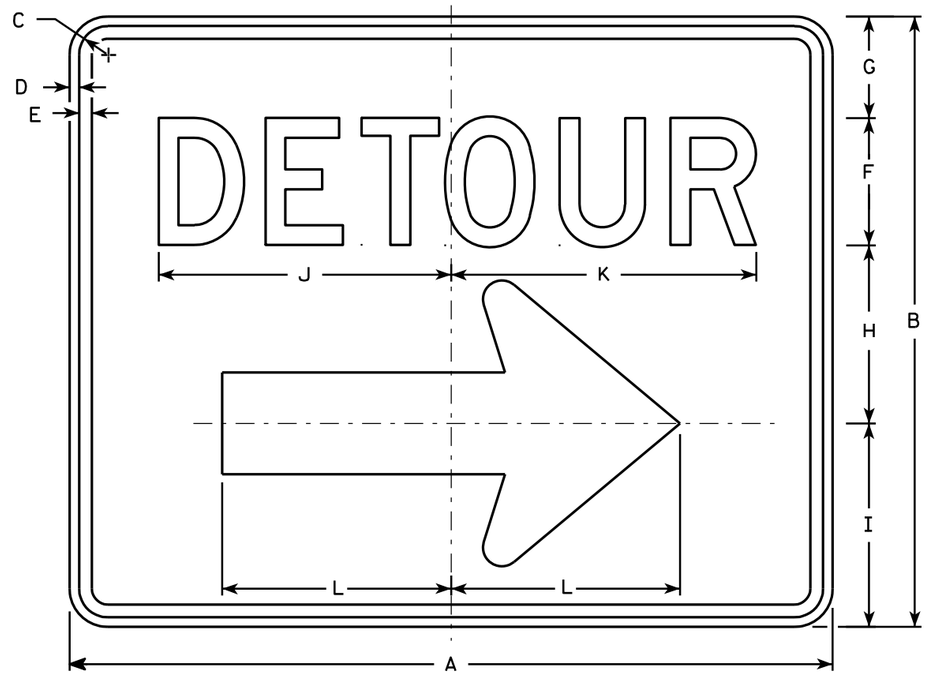

M4-9R

NOTES

1. Sign is Type II - Type F Reflective - reference WIS DOT Standard Specification for HIGHWAY and STRUCTURE CONSTRUCTION latest edition.
2. Color:
   Background - Orange
   Message - Black
3. Message Series - D
4. Corners may be square or rounded when base material is plywood but borders shall be rounded as shown. When base material is metal, the corners and borders shall be rounded.
5. M4-9L is the same as M4-9R except the arrow is reversed.

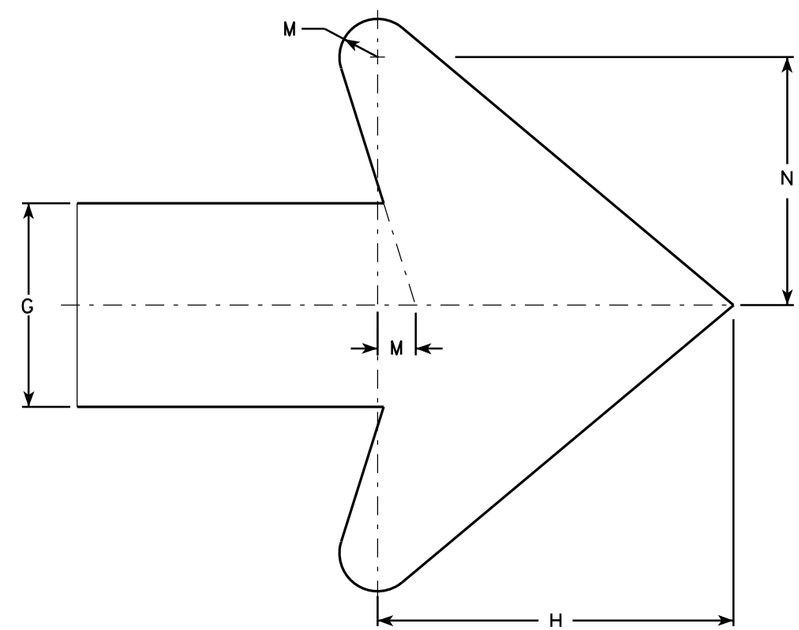

Arrow Detail

SIZE	A	B	C	D	E	F	G	H	I	J	K	L	M	N	O	P	Q	R	S	T	U	V	W	X	Y	Z	Area sq. ft.
1																											
2	30	24	1 1/8	3/8	1/2	5	4	7	8	11 1/2	12	9	3/4	4 7/8													5.00
3	30	24	1 1/8	3/8	1/2	5	4	7	8	11 1/2	12	9	3/4	4 7/8													5.00
4	48	36	1 3/8	1/2	5/8	8	6	10 1/2	11 5/8	20 5/8	20 1/2	13 1/4	1 1/8	6 7/8													12.0
5	48	36	1 3/8	1/2	5/8	8	6	10 1/2	11 5/8	20 5/8	20 1/2	13 1/4	1 1/8	6 7/8													12.0

STANDARD SIGN
M4-9 R & L

WISCONSIN DEPT OF TRANSPORTATION

APPROVED Matthew R Rauch
for State Traffic Engineer

DATE 3/9/11 PLATE NO. M4-9R.4

PROJECT NO: | HWY: | COUNTY: | SHEET NO: 136 | E

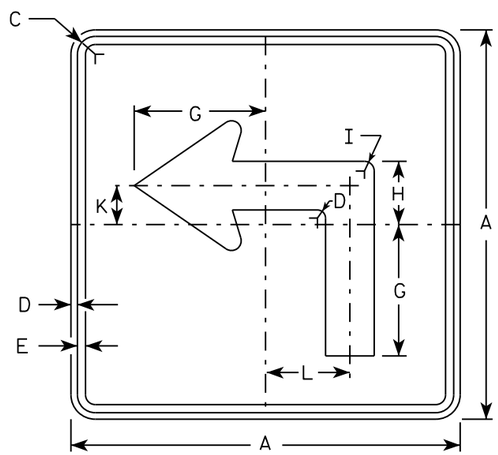

M5-1L
MM5-1L
MO5-1L
MP5-1L

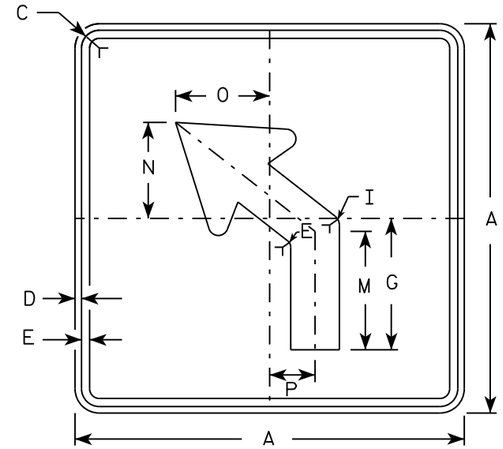

M5-2L
MM5-2L
MO5-2L
MP5-2L

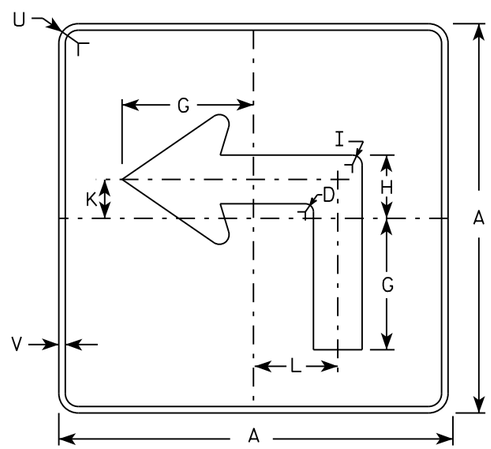

MB5-1L
MK5-1L
MN5-1L
MR5-1L

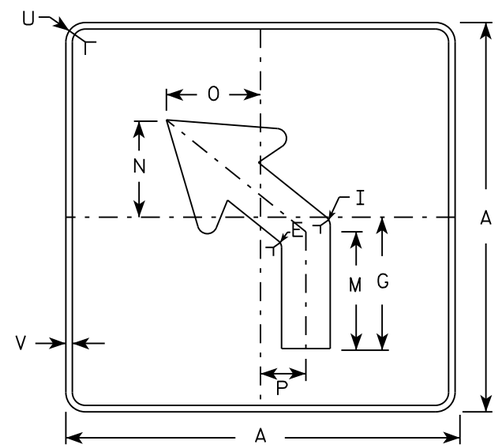

MB5-2L
MK5-2L
MN5-2L
MR5-2L

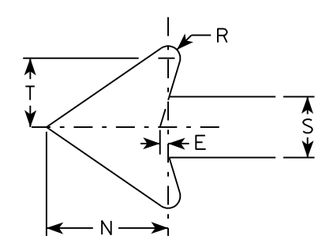

NOTES

1. Signs are Type II - Type H reflective except as shown
2. Color:
   Background - See note 4
   Message - See note 4
3. Corners may be square or rounded when base material is plywood but borders shall be rounded as shown. When base material is metal, the corners and borders shall be rounded.
4. M5-1 and M5-2 Background - White
   Message - Black
   MB5-1 and MB5-2 Background - Blue
   Message - White
   MK5-1 and MK5-2 Background - Green
   Message - White
   MM5-1 and MM5-2 Background - White
   Message - Green
   MN5-1 and MN5-2 Background - Brown
   Message - White
   MO5-1 and MO5-2 Background - Orange - Type F Reflective
   Message - Black
   MP5-1 and MP5-2 Background - White - Type H Reflective
   Message - Blue
   MR5-1 and MR5-2 Background - Brown
   Message - Yellow
5. M5-1R same as M5-1L except arrow points right.
6. M5-2R same as M5-2L except arrow tilts right.

SIZE	A	B	C	D	E	F	G	H	I	J	K	L	M	N	O	P	Q	R	S	T	U	V	W	X	Y	Z	Area sq. ft.
1																											
2	21		1 1/8	3/8	3/8		7	3 3/8	5/8		2 1/8	4 1/2	6 3/8	5 1/4	5	2 1/2		1/2	2 5/8	3	1 1/2	1/2					3.06
3	30		1 3/8	1/2	5/8		10 1/8	4 7/8	7/8		3	6 1/2	9 1/8	7 1/2	7 1/4	3 1/2		3/4	3 3/4	4 1/4	1 7/8	1/2					6.25
4	30		1 3/8	1/2	5/8		10 1/8	4 7/8	7/8		3	6 1/2	9 1/8	7 1/2	7 1/4	3 1/2		3/4	3 3/4	4 1/4	1 7/8	1/2					6.25
5	30		1 3/8	1/2	5/8		10 1/8	4 7/8	7/8		3	6 1/2	9 1/8	7 1/2	7 1/4	3 1/2		3/4	3 3/4	4 1/4	1 7/8	1/2					6.25

STANDARD SIGN
M5-1 & M5-2

WISCONSIN DEPT OF TRANSPORTATION

APPROVED Matthew R Rauch
for State Traffic Engineer

DATE 10/15/15 PLATE NO. M5-1.13

PROJECT NO: | HWY: | COUNTY: | SHEET NO: E

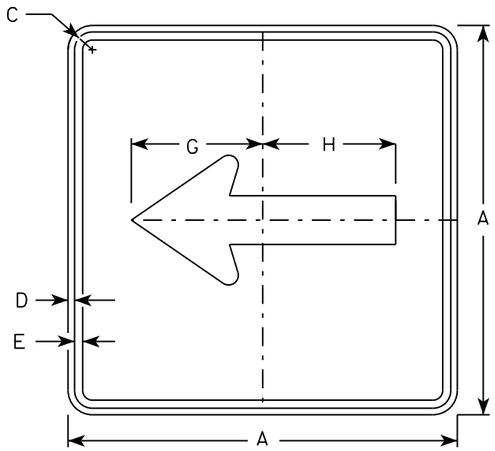

M6-1
MM6-1
MO6-1
MP6-1

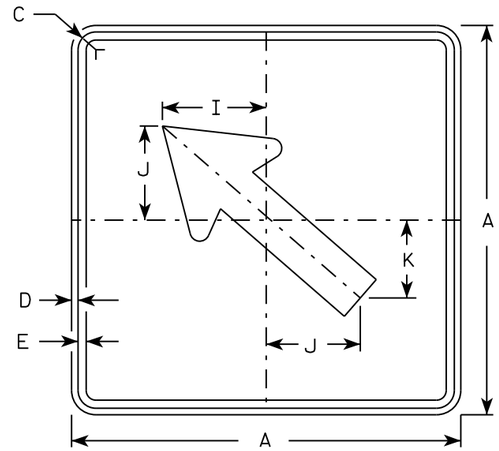

M6-2
MM6-2
MO6-2
MP6-2

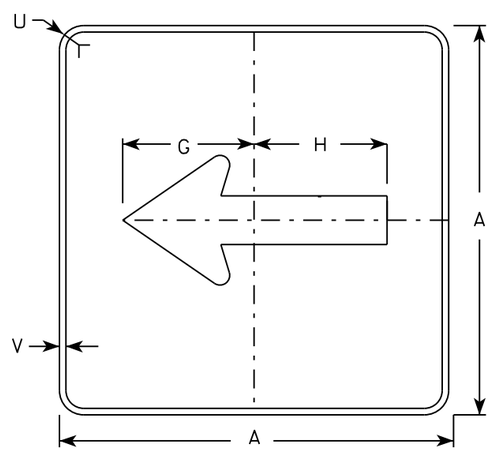

MB6-1
MK6-1
MN6-1
MR6-1

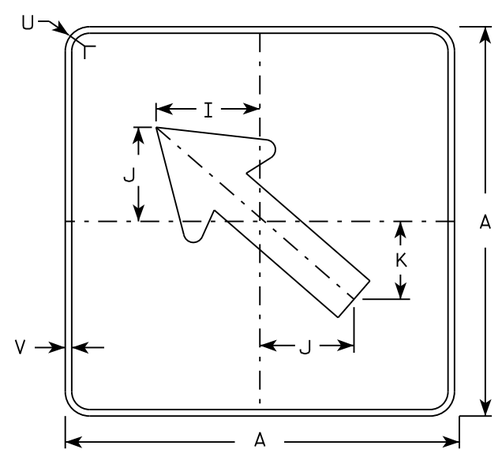

MB6-2
MK6-2
MN6-2
MR6-2

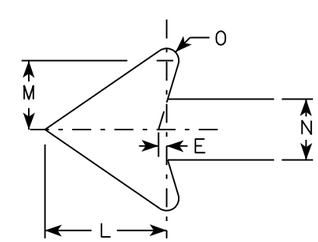

NOTES

1. Signs are Type II - Type H except as Shown
2. Color:
   Background - See note 4
   Message - See note 4
3. Corners may be square or rounded when base material is plywood but borders shall be rounded as shown. When base material is metal, the corners and borders shall be rounded.
4. M6-1 and M6-2 Background - White
   Message - Black
   MB6-1 and MB6-2 Background - Blue
   Message - White
   MK6-1 and MK6-2 Background - Green
   Message - White
   MM6-1 and MM6-2 Background - White
   Message - Green
   MN6-1 and MN6-2 Background - Brown
   Message - White
   MO6-1 and MO6-2 Background - Orange - Type F Reflective
   Message - Black
   MP6-1 and MP6-2 Background - White
   Message - Blue
   MR6-1 and MR6-2 Background - Brown
   Message - Yellow

SIZE	A	B	C	D	E	F	G	H	I	J	K	L	M	N	O	P	Q	R	S	T	U	V	W	X	Y	Z	Area sq. ft.
1																											
2	21		1 1/8	3/8	3/8		7 1/2	7 1/8	5 5/8	5	4 1/4	5 1/4	3	2 5/8	1/2						1 1/2	1/2					3.06
3	30		1 3/8	1/2	5/8		10 3/4	10 1/4	8	7 1/4	6	7 1/2	4 1/4	3 3/4	3/4						1 7/8	1/2					6.25
4	30		1 3/8	1/2	5/8		10 3/4	10 1/4	8	7 1/4	6	7 1/2	4 1/4	3 3/4	3/4						1 7/8	1/2					6.25
5	30		1 3/8	1/2	5/8		10 3/4	10 1/4	8	7 1/4	6	7 1/2	4 1/4	3 3/4	3/4						1 7/8	1/2					6.25

STANDARD SIGN
M6-1 & M6-2
SERIES

WISCONSIN DEPT OF TRANSPORTATION

APPROVED Matthew R Rauch
for State Traffic Engineer

DATE 10/15/15 PLATE 138 M6-1.15

PROJECT NO: | HWY: | COUNTY: | SHEET NO: | E

FILE NAME : C:\CAEfiles\Projects\tr stdplate\M61.DGN PLOT DATE : 01-DEC-2015 17:57 PLOT BY : $$ plotuser $$ PLOT NAME : PLOT SCALE : 11.675051:1.000000

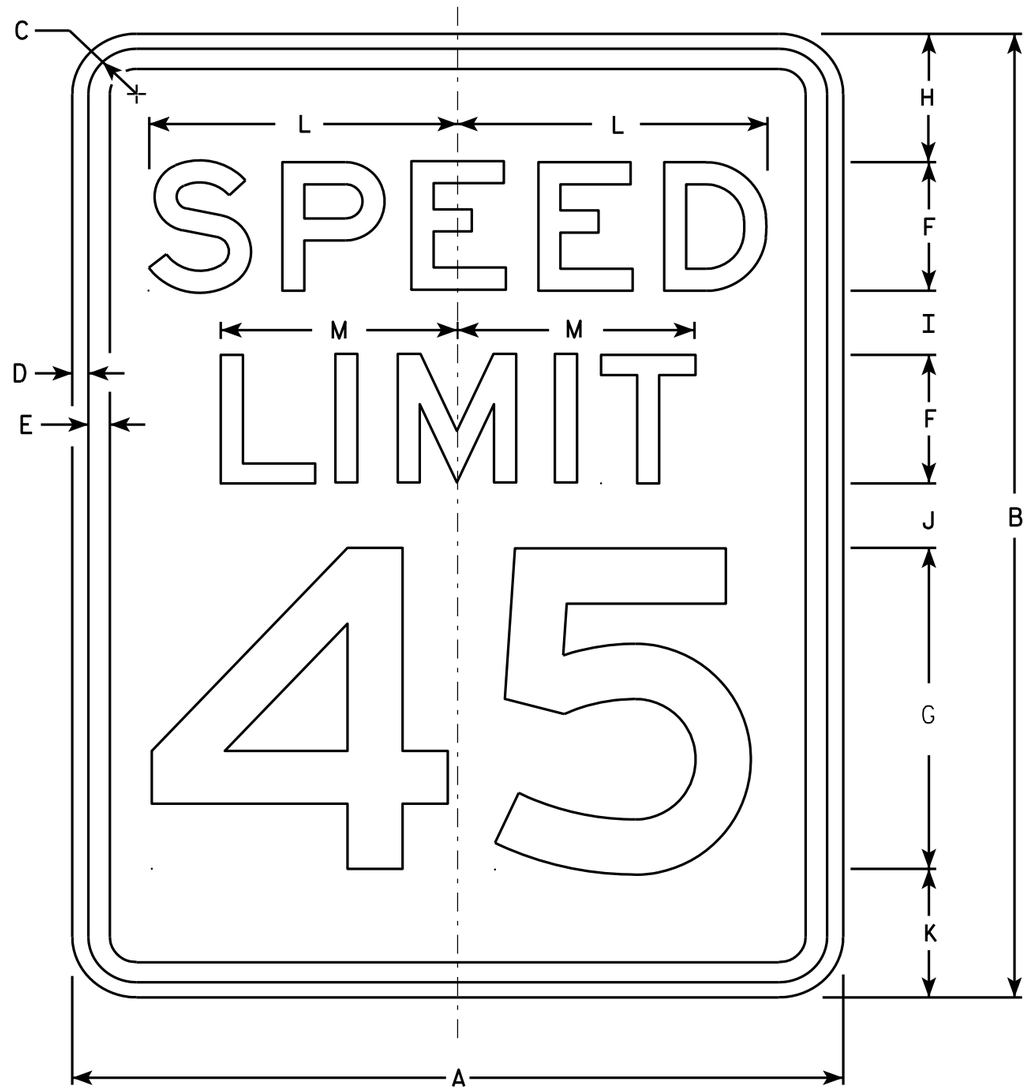

R2-1

NOTES

1. Sign is Type II - Type H Reflective - reference WIS DOT Standard Specification for HIGHWAY and STRUCTURE CONSTRUCTION latest edition.
2. Color:
   Background - White
   Message - Black
3. Message Series - E
4. Corners may be square or rounded when base material is plywood but borders shall be rounded as shown. When base material is metal, the corners and borders shall be rounded.
5. Substitute appropriate numerals and optically adjust spacing to achieve proper balance.

SIZE	A	B	C	D	E	F	G	H	I	J	K	L	M	N	O	P	Q	R	S	T	U	V	W	X	Y	Z	Area sq. ft.
1	18	24	1 1/8	3/8	1/2	3	8	3	2	2	3	7 1/4	5 1/2														3.0
2S	24	30	1 1/8	3/8	1/2	4	10	3	2 1/4	3 3/8	3 3/8	9 5/8	7 3/8														5.0
2M	30	36	1 3/8	1/2	5/8	5	12	5	2 1/2	2 1/2	4	12	9 1/4														7.5
3	36	48	1 3/8	1/2	5/8	6	14	6	5	5	6	14 3/8	11														12.0
4	36	48	1 3/8	1/2	5/8	6	14	6	5	5	6	14 3/8	11														12.0
5	48	60	2 1/4	3/4	1	8	20	6	4 1/2	6 3/4	6 3/4	19 1/4	14 5/8														20.0

STANDARD SIGN
R2-1

WISCONSIN DEPT OF TRANSPORTATION

APPROVED Matthew R Rauch
for State Traffic Engineer

DATE 5/26/10 PLATE NO. R2-1.13

PROJECT NO: | HWY: | COUNTY: | SHEET NO: 139 | E

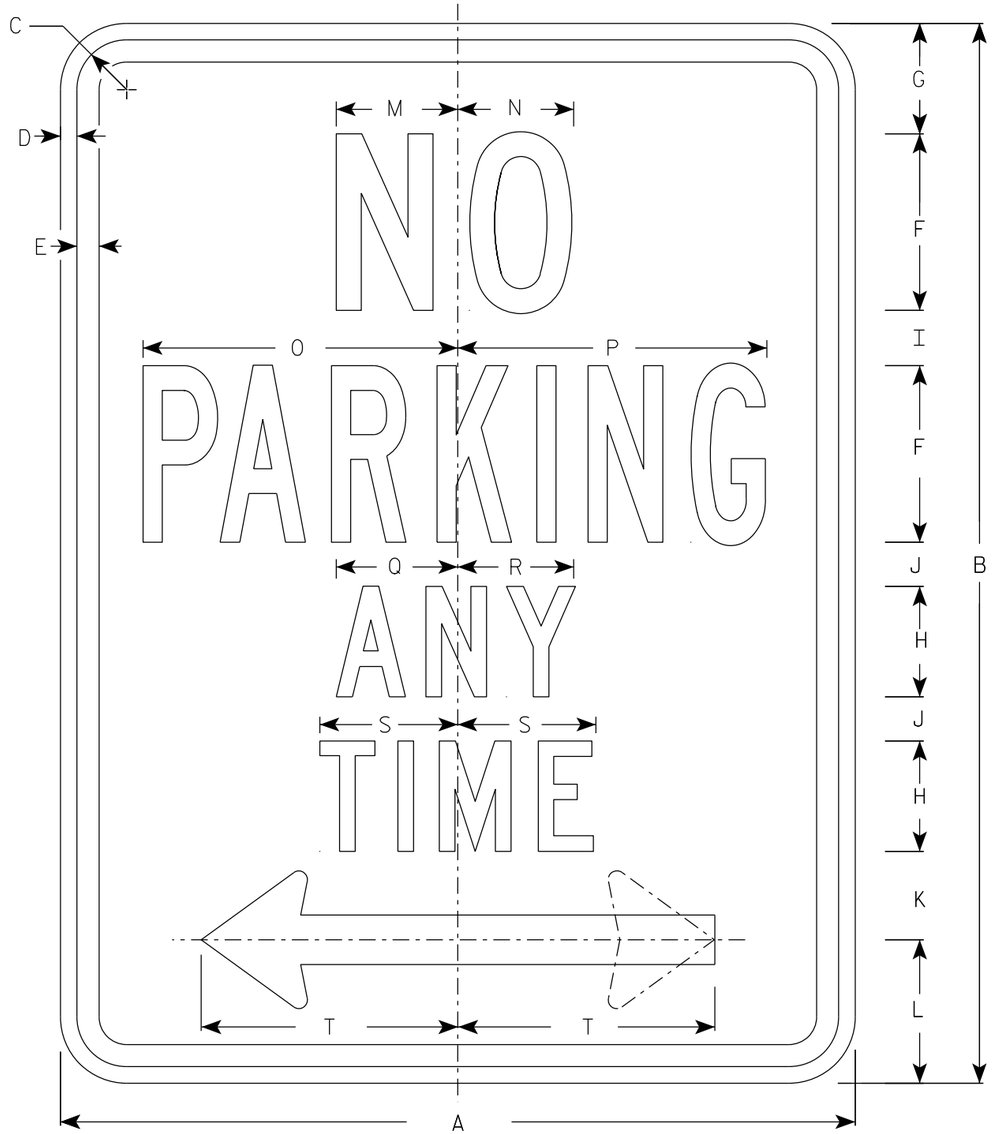

R7-1

NOTES

1. Sign is Type II - Type H Reflective
2. Color:
   Background - White
   Message - Red
3. Message Series - See Note 5
4. Lines 1, 3 and 4 are series C, line 2 is series B.
5. R7-1D (double arrow)
   R7-1L (left arrow)
   R7-1R (right arrow)

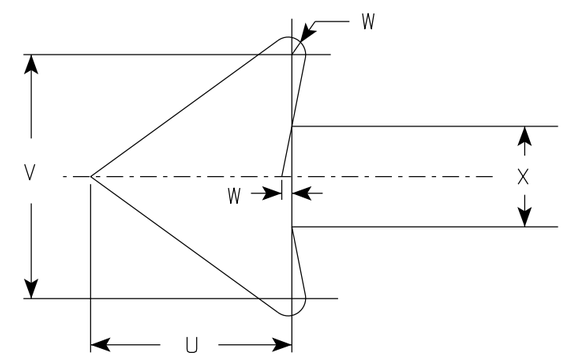

SIZE	A	B	C	D	E	F	G	H	I	J	K	L	M	N	O	P	Q	R	S	T	U	V	W	X	Y	Z	Area sq. ft.
1	12	18	1 1/8	3/8	3/8	3	1 7/8	2	7/8	5/8	1 1/2	2 1/2	2	2	4 7/8	4 7/8	2 1/4	2 1/8	2 1/2	3 7/8	1 1/2	1 3/4	1/8	3/4			1.5
2S	18	24	1 1/8	3/8	1/2	4	2 1/2	2 1/2	1 1/4	1	2	3 1/4	2 3/4	2 5/8	7 1/8	7	2 3/4	2 5/8	3 1/8	5 7/8	2 1/4	2 5/8	1/4	1 1/8			3.0
2M	24	30	1 1/8	3/8	1/2	5	3	3	2	1 1/4	2 1/2	4	3 1/4	3 3/8	9 1/4	9 1/4	3 1/4	3 1/4	3 3/4	7 3/4	3	3 1/2	1/4	1 1/2			5.0
3	24	30	1 1/8	3/8	1/2	5	3	3	2	1 1/4	2 1/2	4	3 1/4	3 3/8	9 1/4	9 1/4	3 1/4	3 1/4	3 3/4	7 3/4	3	3 1/2	1/4	1 1/2			5.0
4																											
5																											

STANDARD SIGN
R7-1

WISCONSIN DEPT OF TRANSPORTATION

APPROVED Matthew R Rauch
For State Traffic Engineer

DATE 3/31/2021 PLATE NO. R7-1.10

PROJECT NO:	HWY:	COUNTY:		SHEET NO: 140	E

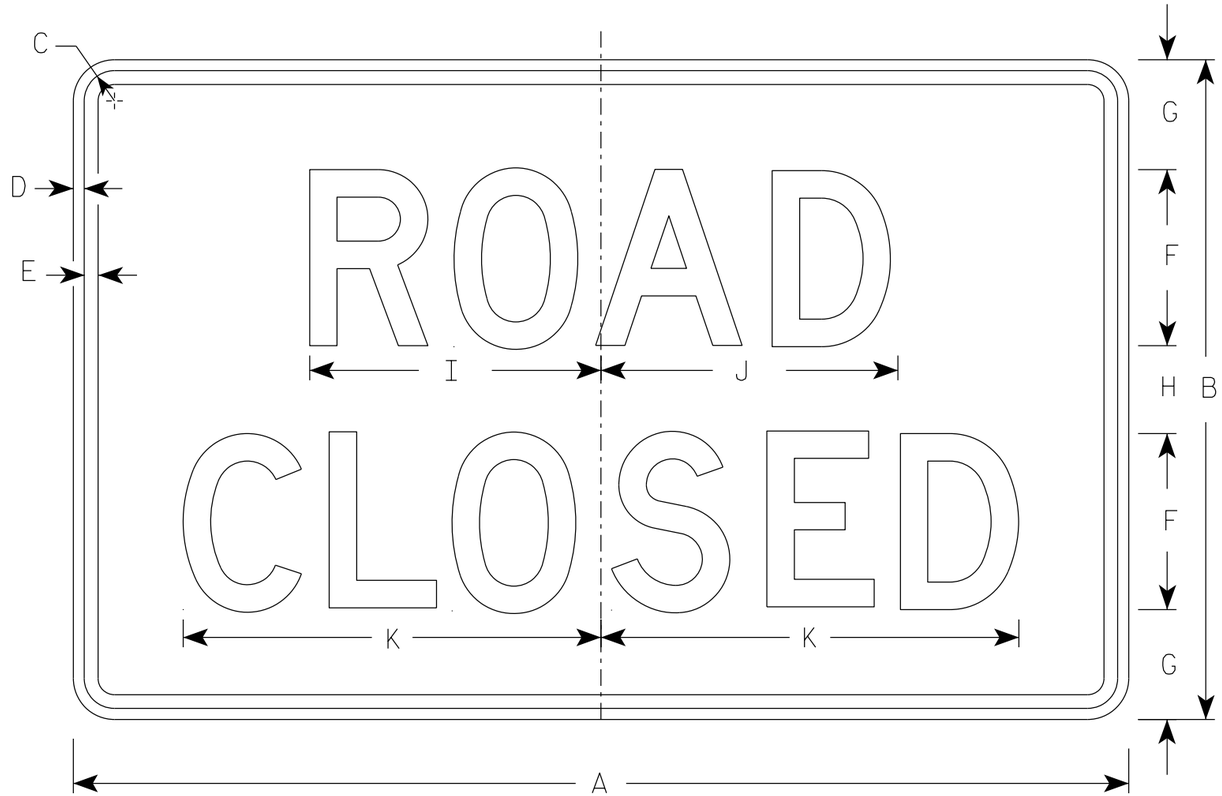

R11-2

NOTES

1. Sign is Type II - Type H Reflective
2. Color:
   Background - White
   Message - Black
3. Message Series - D
4. Corners may be square or rounded when base material is plywood but borders shall be rounded as shown. When base material is metal, the corners and borders shall be rounded.
5. Modify the message as required.

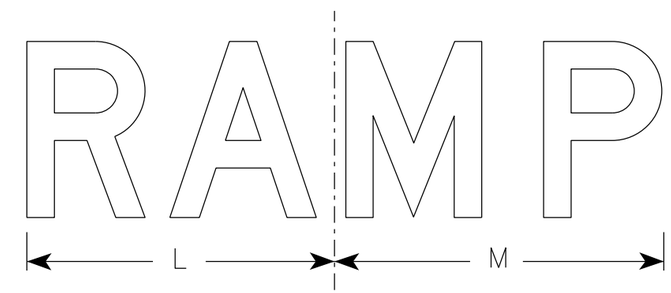

R11-2R

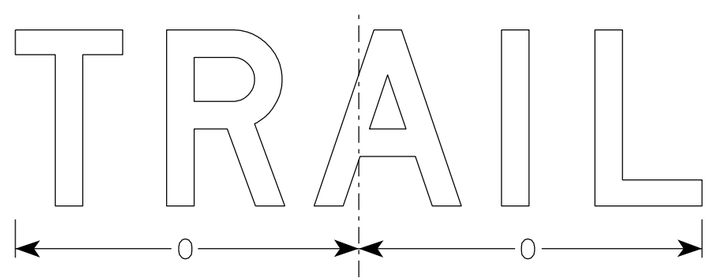

R11-2T

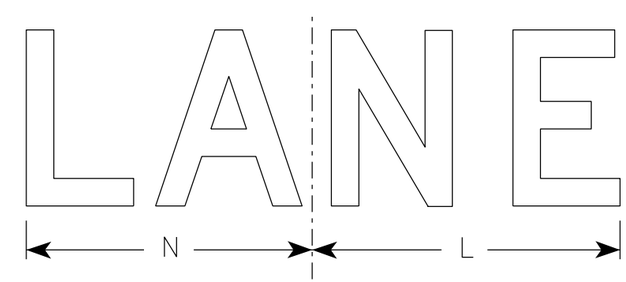

R11-2L

SIZE	A	B	C	D	E	F	G	H	I	J	K	L	M	N	O	P	Q	R	S	T	U	V	W	X	Y	Z	Area sq. ft.
1																											
2S	48	30	1 3/8	1/2	5/8	8	5	4	13 1/4	13 1/2	19	14	15	13	15 5/8												10.0
2M	48	30	1 3/8	1/2	5/8	8	5	4	13 1/4	13 1/2	19	14	15	13	15 5/8												10.0
3	48	30	1 3/8	1/2	5/8	8	5	4	13 1/4	13 1/2	19	14	15	13	15 5/8												10.0
4	48	30	1 3/8	1/2	5/8	8	5	4	13 1/4	13 1/2	19	14	15	13	15 5/8												10.0
5	48	30	1 3/8	1/2	5/8	8	5	4	13 1/4	13 1/2	19	14	15	13	15 5/8												10.0

STANDARD SIGN
R11-2

WISCONSIN DEPT OF TRANSPORTATION

APPROVED Matthew R Rauch
for State Traffic Engineer

DATE 3/29/2021 PLATE NO. R11-2.11

PROJECT NO: | HWY: | COUNTY: | SHEET NO: E

7

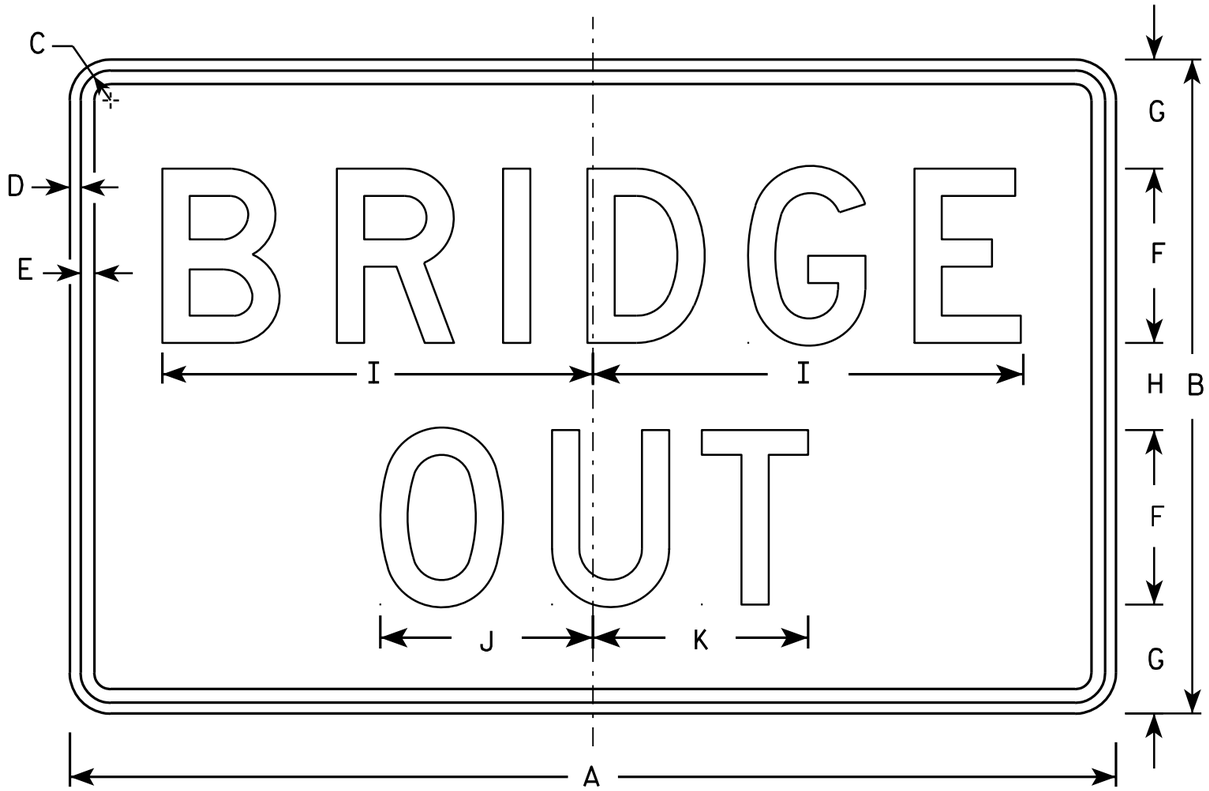

R11-2B

NOTES

1. Sign is Type II - Type H Reflective - reference WIS DOT Standard Specification for HIGHWAY and STRUCTURE CONSTRUCTION latest edition.
2. Color:
   Background - White
   Message - Black
3. Message Series - D
4. Corners may be square or rounded when base material is plywood but borders shall be rounded as shown. When base material is metal, the corners and borders shall be rounded.

SIZE	A	B	C	D	E	F	G	H	I	J	K	L	M	N	O	P	Q	R	S	T	U	V	W	X	Y	Z	Area sq. ft.
1																											
2S	48	30	1 3/8	1/2	5/8	8	5	4	19 3/4	9 3/4	9 7/8																10.0
2M	48	30	1 3/8	1/2	5/8	8	5	4	19 3/4	9 3/4	9 7/8																10.0
3	48	30	1 3/8	1/2	5/8	8	5	4	19 3/4	9 3/4	9 7/8																10.0
4	48	30	1 3/8	1/2	5/8	8	5	4	19 3/4	9 3/4	9 7/8																10.0
5	48	30	1 3/8	1/2	5/8	8	5	4	19 3/4	9 3/4	9 7/8																10.0

STANDARD SIGN
R11-2B

WISCONSIN DEPT OF TRANSPORTATION

APPROVED Matthew R Rauch
For State Traffic Engineer
DATE 4/1/11 PLATE NO. R11-2B.2

PROJECT NO:

SHEET NO: 142 E

NOTES

1. Sign is Type II - Type H Reflective
2. Color:
   Background - White
   Message - Black
3. Message Series - C
4. Corners may be square or rounded when base material is plywood but borders shall be rounded as shown. When base material is metal, the corners and borders shall be rounded.
5. Substitute appropriate numerals to nearest quarter mile and optically adjust spacing to achieve proper balance.

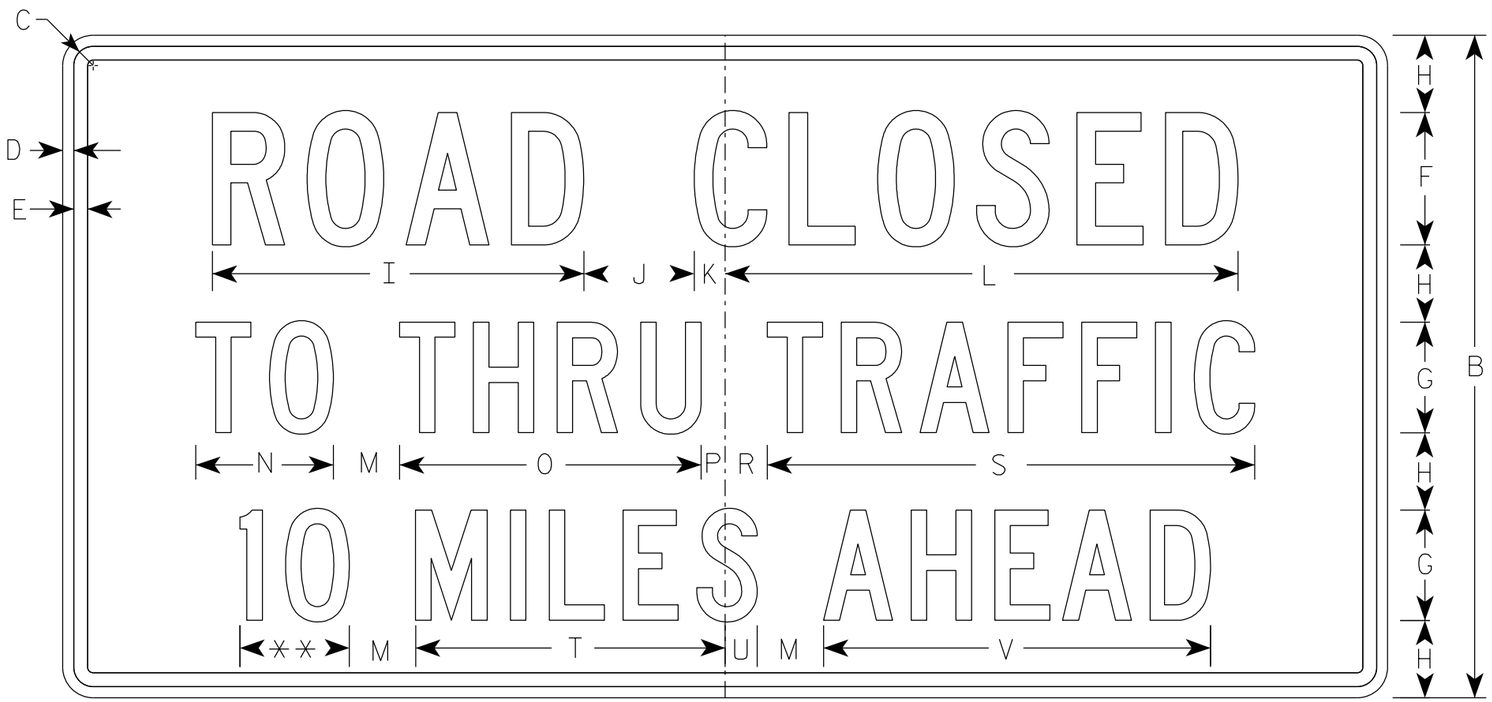

R11-3

** See Note 5

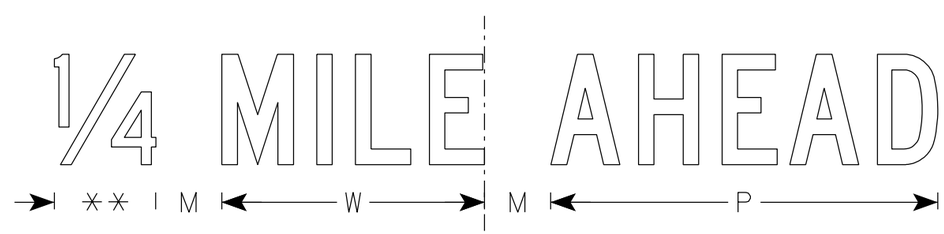

SIZE	A	B	C	D	E	F	G	H	I	J	K	L	M	N	O	P	Q	R	S	T	U	V	W	X	Y	Z	Area sq. ft.
1	36	18	1 1/4	3/8	3/8	4	3	2	11 1/4	3	1 1/8	15 3/8	2	3 3/4	8 1/4	5/8		1 3/8	13 1/4	8 3/8	7/8	10 1/2	7 1/8				4.5
2S	60	30	1 3/8	1/2	5/8	6	5	3 1/2	16 7/8	5	1 3/8	23 1/4	3	6 1/4	13 5/8	1 1/8		1 7/8	22 1/8	14	1 1/2	17 1/2	11 7/8				12.5
2M	60	30	1 3/8	1/2	5/8	6	5	3 1/2	16 7/8	5	1 3/8	23 1/4	3	6 1/4	13 5/8	1 1/8		1 7/8	22 1/8	14	1 1/2	17 1/2	11 7/8				12.5
3																											
4																											
5																											

STANDARD SIGN
R11-3

WISCONSIN DEPT OF TRANSPORTATION

APPROVED Matthew R Rauch
for State Traffic Engineer

DATE 6/14/2021 PLATE NO. R11-3.9

PROJECT NO: | HWY: | COUNTY: | SHEET NO: 143 | E

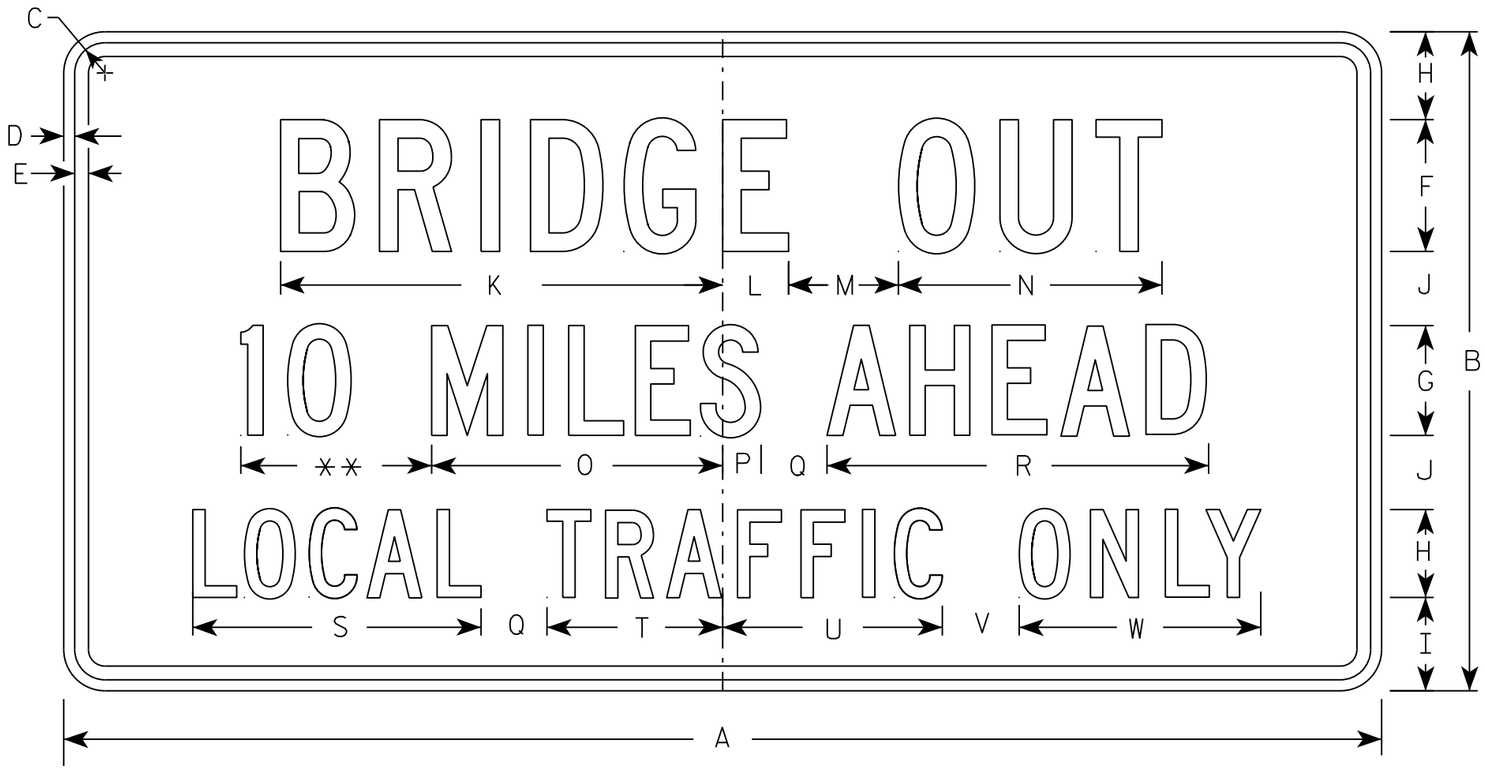

R11-3B

** See Note 5

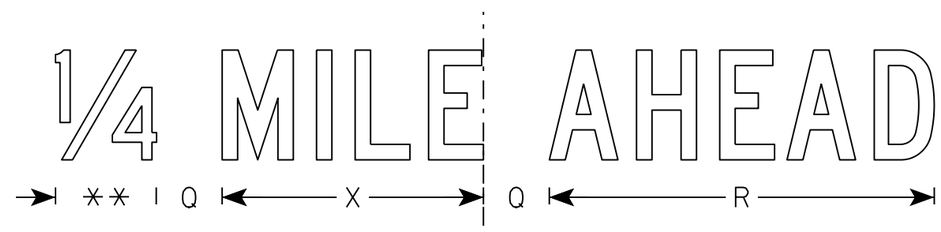

NOTES

1. Sign is Type II - Type H Reflective
2. Color:
   Background - White
   Message - Black
3. Message Series - C
4. Corners may be square or rounded when base material is plywood but borders shall be rounded as shown. When base material is metal, the corners and borders shall be rounded.
5. Substitute appropriate numerals to nearest quarter mile and optically adjust spacing to achieve proper balance.

SIZE	A	B	C	D	E	F	G	H	I	J	K	L	M	N	O	P	Q	R	S	T	U	V	W	X	Y	Z	Area sq. ft.
1	36	18	1 3/8	1/2	5/8	4	3	2 1/2	2	2	13 1/4	2 1/4	3	8	8	1 1/2	2	10 3/4	8 3/8	4 3/4	6 1/2	2	6 3/4	7 1/8			4.5
2S	60	30	1 3/8	1/2	5/8	6	5	4	4 1/4	3 3/8	20 1/8	3	5	12	13 1/4	1 3/4	3	17 3/8	13 1/8	8	10	3 1/2	11	11 7/8			12.5
2M	60	30	1 3/8	1/2	5/8	6	5	4	4 1/4	3 3/8	20 1/8	3	5	12	13 1/4	1 3/4	3	17 3/8	13 1/8	8	10	3 1/2	11	11 7/8			12.5
3																											
4																											
5																											

STANDARD SIGN
R11-3B

WISCONSIN DEPT OF TRANSPORTATION

APPROVED Matthew R Rauch
for State Traffic Engineer

DATE 3/21/17 PLATE NO. R11-3B.3

PROJECT NO: | HWY: | COUNTY: | SHEET NO: 144 | E

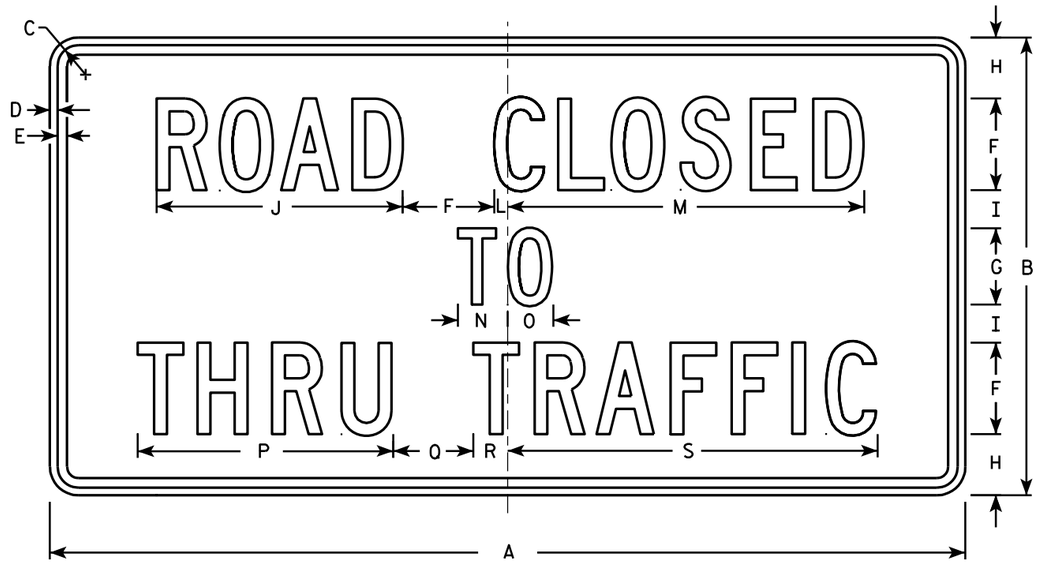

R11-4

NOTES

1. Sign is Type II - Type H Reflective - reference WIS DOT Standard Specification for HIGHWAY and STRUCTURE CONSTRUCTION latest edition.
2. Color:
   Background - White
   Message - Black
3. Message Series - C
4. Corners may be square or rounded when base material is plywood but borders shall be rounded as shown. When base material is metal, the corners and borders shall be rounded.

SIZE	A	B	C	D	E	F	G	H	I	J	K	L	M	N	O	P	Q	R	S	T	U	V	W	X	Y	Z	Area sq. ft.
1																											
2S	60	30	1 3/8	1/2	5/8	6	5	4	2 1/2	16 1/8		7/8	23 3/8	3 1/4	3	16 3/4	5 1/4	2 1/4	24 1/4								12.5
2M	60	30	1 3/8	1/2	5/8	6	5	4	2 1/2	16 1/8		7/8	23 3/8	3 1/4	3	16 3/4	5 1/4	2 1/4	24 1/4								12.5
3																											
4																											
5																											

STANDARD SIGN
R11 - 4

WISCONSIN DEPT OF TRANSPORTATION

APPROVED Matthew R Rauch
for State Traffic Engineer

DATE 4/1/11 PLATE NO. R11-4.3

PROJECT NO: | HWY: | COUNTY: | SHEET NO: 145 | E

NOTES

1. Sign is Type II - Type F Reflective - reference WIS DOT Standard Specification for HIGHWAY and STRUCTURE CONSTRUCTION latest edition.
2. Color:
   Background - Yellow
   Message - Black
3. Corners may be square or rounded when base material is plywood but borders shall be rounded as shown. When base material is metal, the corners and borders shall be rounded.

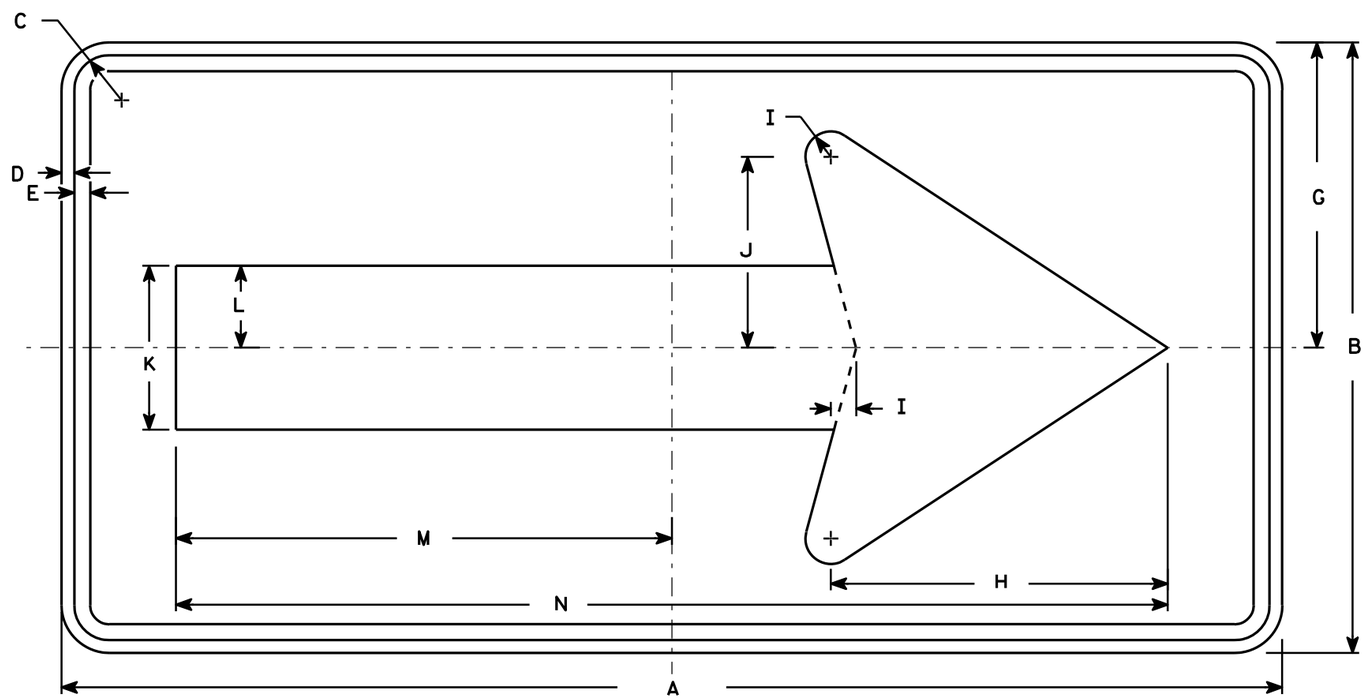

W1-6

SIZE	A	B	C	D	E	F	G	H	I	J	K	L	M	N	O	P	Q	R	S	T	U	V	W	X	Y	Z	Area sq. ft.
1	36	18	1 1/8	3/8	3/8		9	10	3/4	5 5/8	4 3/4	2 3/8	14 5/8	29 1/4													4.5
2S	48	24	1 3/8	1/2	5/8		12	13 1/4	1	7 1/2	6 1/2	3 1/4	19 1/2	39													8.0
2M	48	24	1 3/8	1/2	5/8		12	13 1/4	1	7 1/2	6 1/2	3 1/4	19 1/2	39													8.0
3	60	30	1 3/8	1/2	5/8		15	16 1/4	1 1/4	9 1/4	8	4	24 3/8	48 3/4													12.5
4	60	30	1 3/8	1/2	5/8		15	16 1/4	1 1/4	9 1/4	8	4	24 3/8	48 3/4													12.5
5	96	48	2 1/4	3/4	1		24	26 1/2	2	15	13	6 1/2	39	78													32.0

STANDARD SIGN
W1-6

WISCONSIN DEPT OF TRANSPORTATION

APPROVED Matthew R Rauch
for State Traffic Engineer

DATE 6/7/10 PLATE NO. W1-6.8

PROJECT NO: | HWY: | COUNTY: | SHEET NO: 146 | E

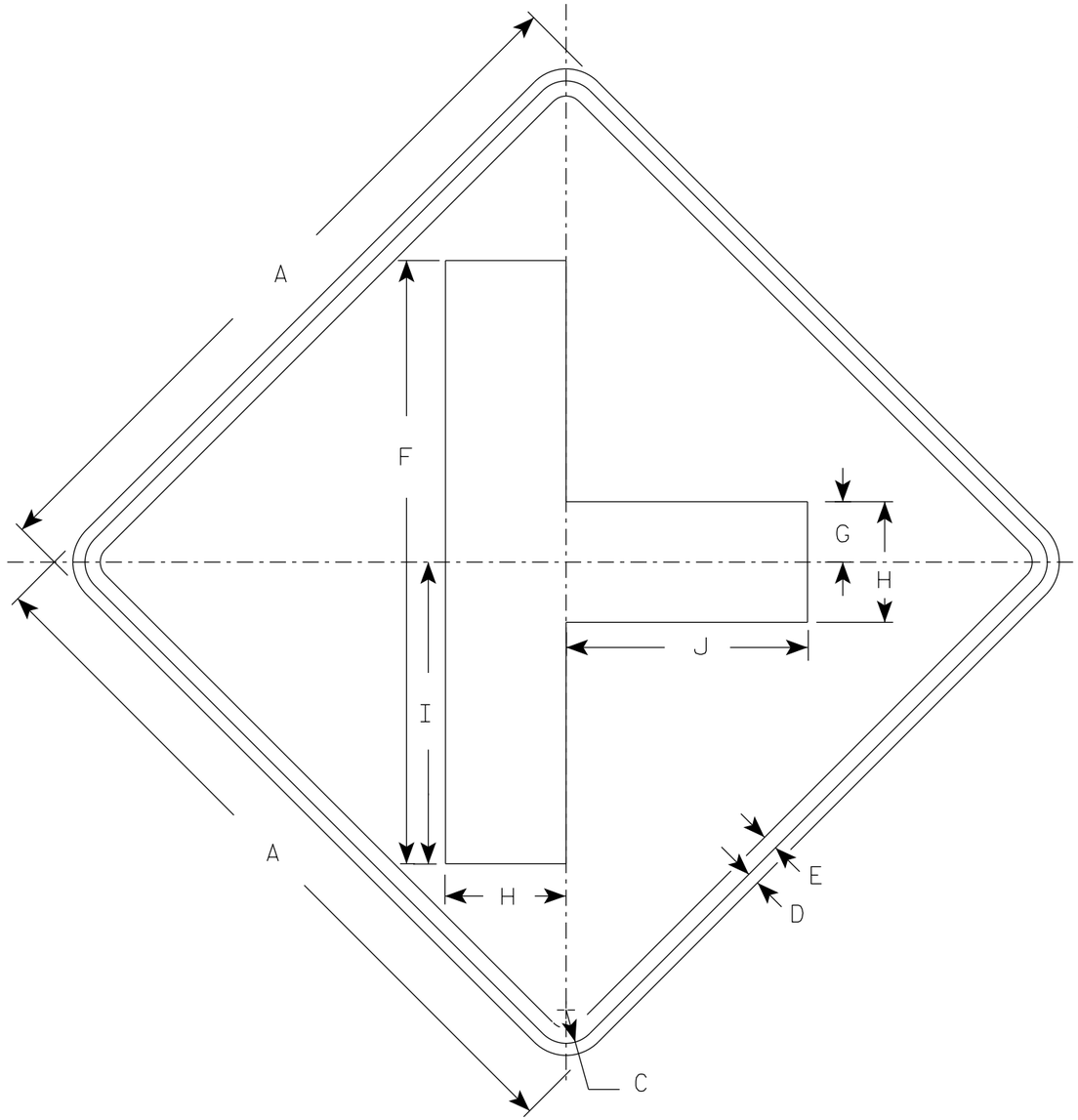

W2-2R

NOTES

1. Sign is Type II - Type F Reflective
2. Color:
   Background - Yellow
   Message - Black
3. W2-2L same as W2-2R but is rotated 180° when mounted.

SIZE	A	B	C	D	E	F	G	H	I	J	K	L	M	N	O	P	Q	R	S	T	U	V	W	X	Y	Z	Area sq. ft.
1	24		1 1/8	3/8	1/2	20	2	4	10	8																	4.0
2S	30		1 3/8	1/2	5/8	25	2 1/2	5	12 1/2	10																	6.25
2M	30		1 3/8	1/2	5/8	25	2 1/2	5	12 1/2	10																	6.25
3	36		1 5/8	5/8	3/4	30	3	6	15	12																	9.0
4	48		2 1/4	3/4	1	40	4	8	20	16																	16.0
5																											

STANDARD SIGN

W2-2 L&R

WISCONSIN DEPT OF TRANSPORTATION

APPROVED Matthew R Rauch
For State Traffic Engineer

DATE 11/18/2021 PLATE NO. W2-2.7

PROJECT NO: | HWY: | COUNTY: | SHEET NO: 147 | E

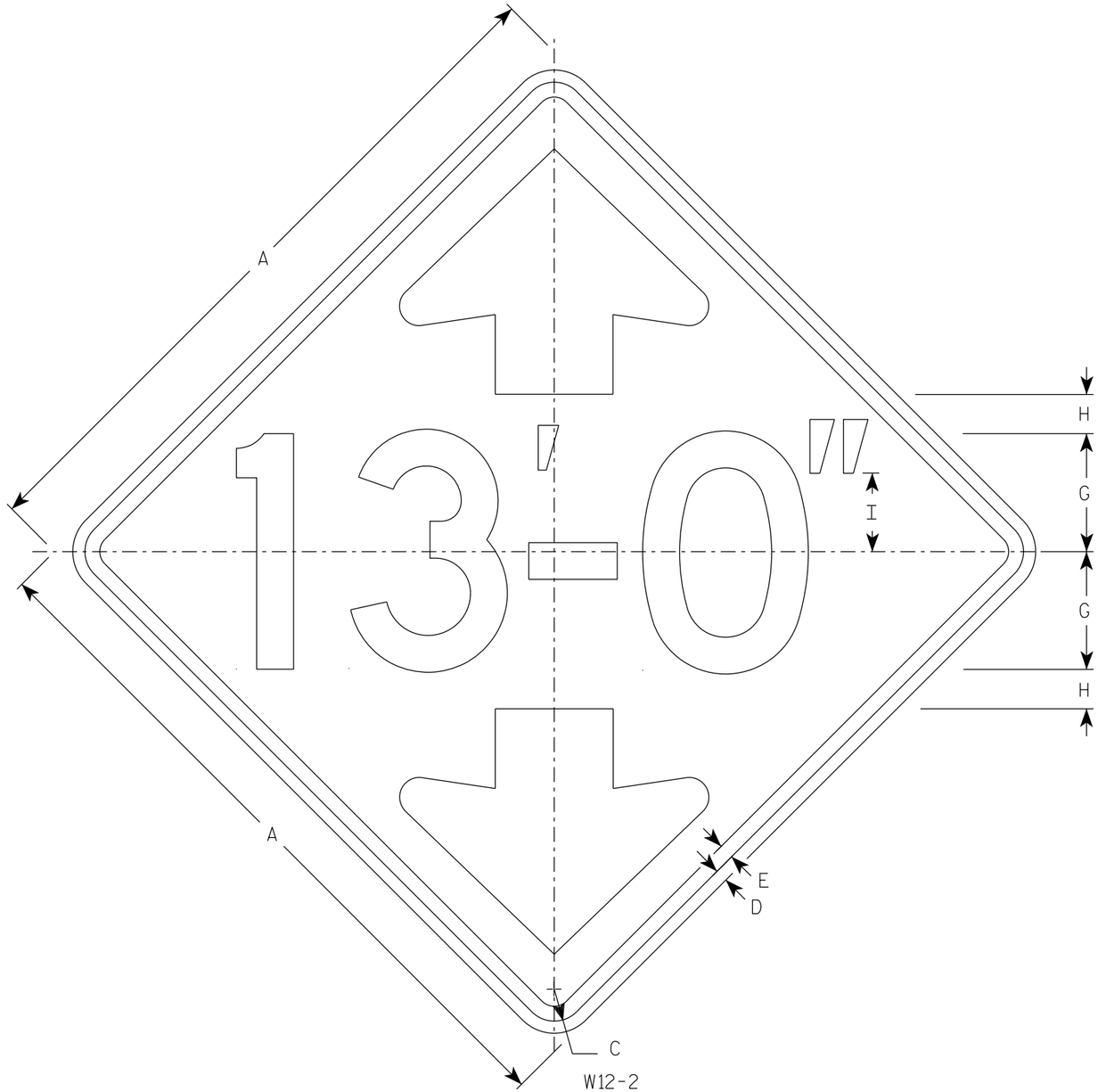

W12-2

NOTES

1. Sign is Type II - Type F Reflective
2. Color:
   Background - Yellow
   Message - Black
3. Message Series - D
4. Substitute appropriate numerals and optically adjust spacing of numerals, hyphen, foot & inch marks to achieve proper balance.

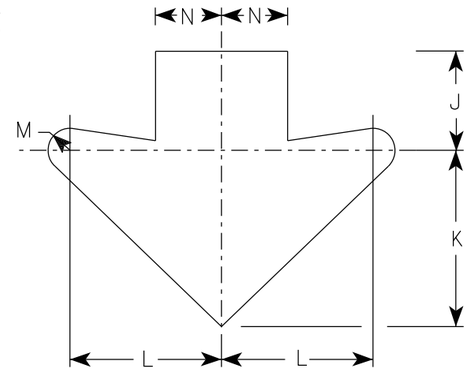

Arrow Detail

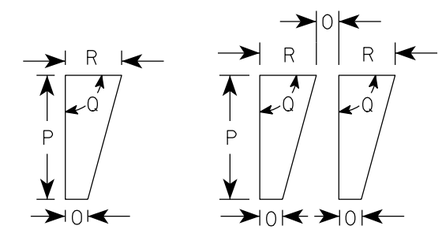

Foot Mark & Inch Mark Detail

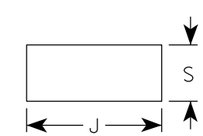

Hyphen Detail

SIZE	A	B	C	D	E	F	G	H	I	J	K	L	M	N	O	P	Q	R	S	T	U	V	W	X	Y	Z	Area sq. ft.
1	30		1 3/8	1/2	5/8		5	1 5/8	3 3/8	3 3/4	6 5/8	5 3/4	3/4	2 1/2	1/2	2 1/4	90°	1	1 5/8								6.25
2S	36		1 5/8	5/8	3/4		6	2	4	4 1/2	8	6 7/8	1	3	1/2	2 3/4	90°	1 1/4	1 7/8								9.00
2M	36		1 5/8	5/8	3/4		6	2	4	4 1/2	8	6 7/8	1	3	1/2	2 3/4	90°	1 1/4	1 7/8								9.00
3	36		1 5/8	5/8	3/4		6	2	4	4 1/2	8	6 7/8	1	3	1/2	2 3/4	90°	1 1/4	1 7/8								9.00
4	36		1 5/8	5/8	3/4		6	2	4	4 1/2	8	6 7/8	1	3	1/2	2 3/4	90°	1 1/4	1 7/8								9.00
5	48		2 1/4	3/4	1		8	2 5/8	5 1/2	5 7/8	10 5/8	9 1/4	1 3/8	4	5/8	3 5/8	90°	1 5/8	2 1/2								16.00

STANDARD SIGN
W12-2

WISCONSIN DEPT OF TRANSPORTATION

APPROVED Matthew R Rauch
for State Traffic Engineer

DATE 12/06/2021 PLATE NO. W12-2.10

PROJECT NO: | HWY: | COUNTY: | SHEET NO: E

NOTES

1. Sign is Type II - Type F Reflective
2. Color:
   Background - Orange
   Message - Black
3. Message Series - C
4. Corners may be square or rounded when base material is plywood but borders shall be rounded as shown. When base material is metal, the corners and borders shall be rounded.

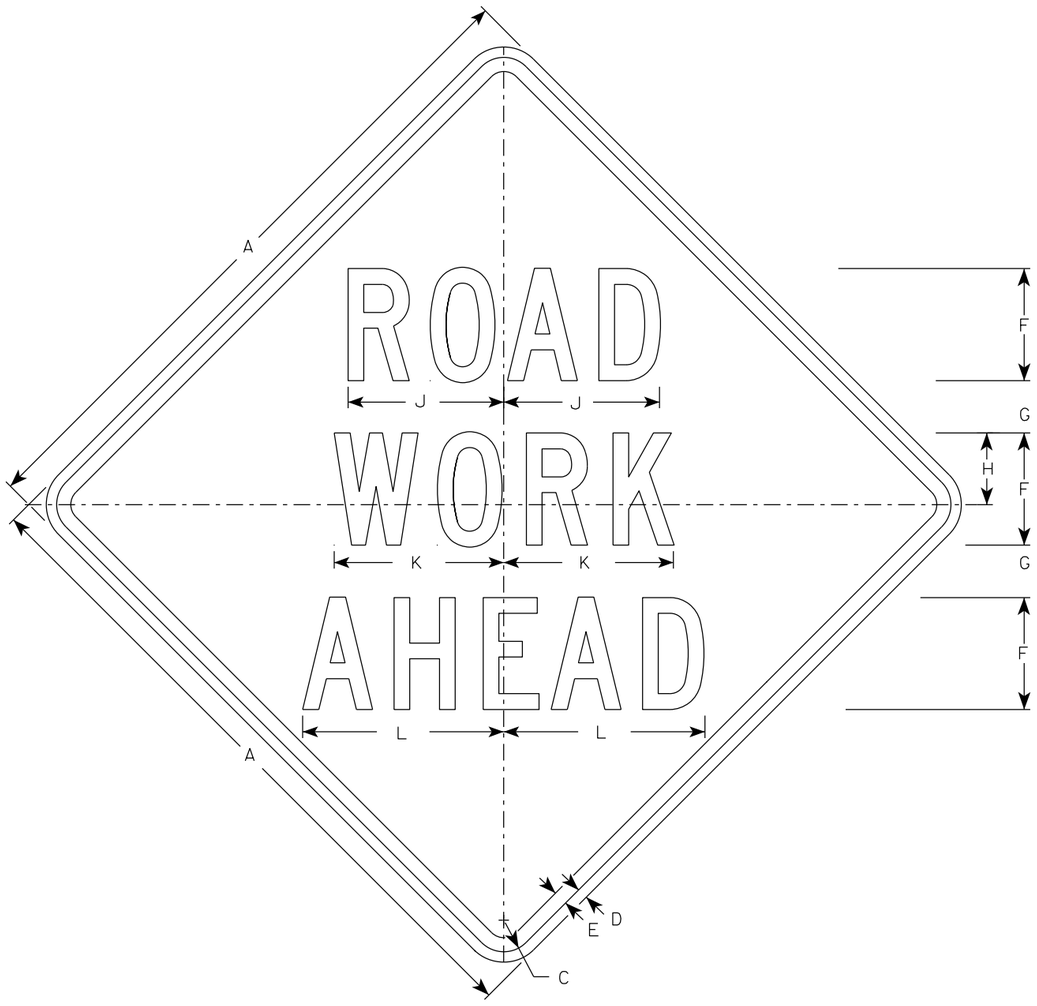

W20-1A

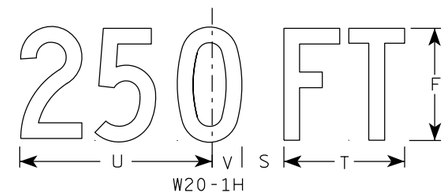

W20-1H

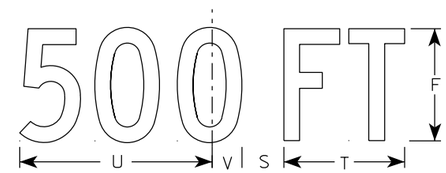

W20-1D

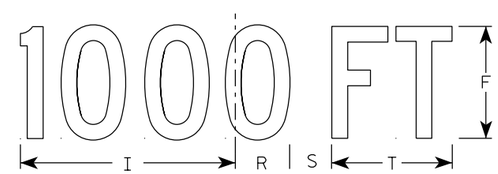

W20-1C

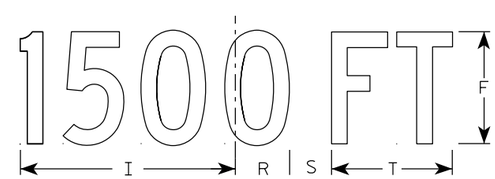

W20-1B

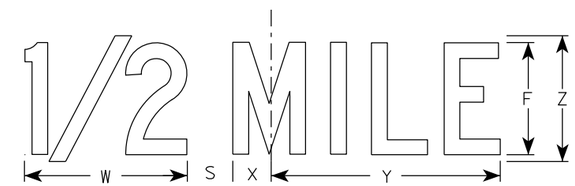

W20-1G

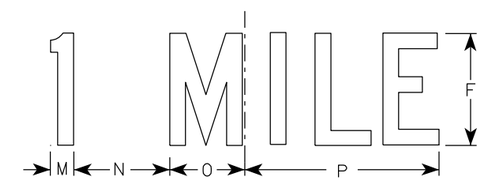

W20-1F

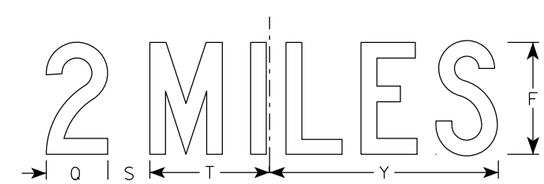

W20-1E

SIZE	A	B	C	D	E	F	G	H	I	J	K	L	M	N	O	P	Q	R	S	T	U	V	W	X	Y	Z	Area sq. ft.
1	36		1 5/8	5/8	3/4	5	2 5/8	3 1/4	10 1/8	7	7 5/8	8 7/8	1 1/8	4 1/2	3 1/2	9	3 1/4	2 1/2	2 1/4	5 5/8	9	1 3/8	8	1 3/4	10 3/4	6	9.0
2S	48		2 1/4	3/4	1	8	3 3/4	5 1/8	15 3/8	11 1/8	12 1/8	14 3/8	1 5/8	6 7/8	5 3/8	13 7/8	4 3/8	3 7/8	3	8 5/8	13 3/4	2 1/8	11 7/8	2 3/4	16 3/8	9	16.0
2M	48		2 1/4	3/4	1	8	3 3/4	5 1/8	15 3/8	11 1/8	12 1/8	14 3/8	1 5/8	6 7/8	5 3/8	13 7/8	4 3/8	3 7/8	3	8 5/8	13 3/4	2 1/8	11 7/8	2 3/4	16 3/8	9	16.0
3	48		2 1/4	3/4	1	8	3 3/4	5 1/8	15 3/8	11 1/8	12 1/8	14 3/8	1 5/8	6 7/8	5 3/8	13 7/8	4 3/8	3 7/8	3	8 5/8	13 3/4	2 1/8	11 7/8	2 3/4	16 3/8	9	16.0
4	48		2 1/4	3/4	1	8	3 3/4	5 1/8	15 3/8	11 1/8	12 1/8	14 3/8	1 5/8	6 7/8	5 3/8	13 7/8	4 3/8	3 7/8	3	8 5/8	13 3/4	2 1/8	11 7/8	2 3/4	16 3/8	9	16.0
5	48		2 1/4	3/4	1	8	3 3/4	5 1/8	15 3/8	11 1/8	12 1/8	14 3/8	1 5/8	6 7/8	5 3/8	13 7/8	4 3/8	3 7/8	3	8 5/8	13 3/4	2 1/8	11 7/8	2 3/4	16 3/8	9	16.0

STANDARD SIGN
W20-1A, B, C, D, E, F, G & H

WISCONSIN DEPT OF TRANSPORTATION

APPROVED Matthew R Rauch
For State Traffic Engineer
DATE 3/25/2020 PLATE NO. W20-1.11

PROJECT NO:

SHEET NO: E

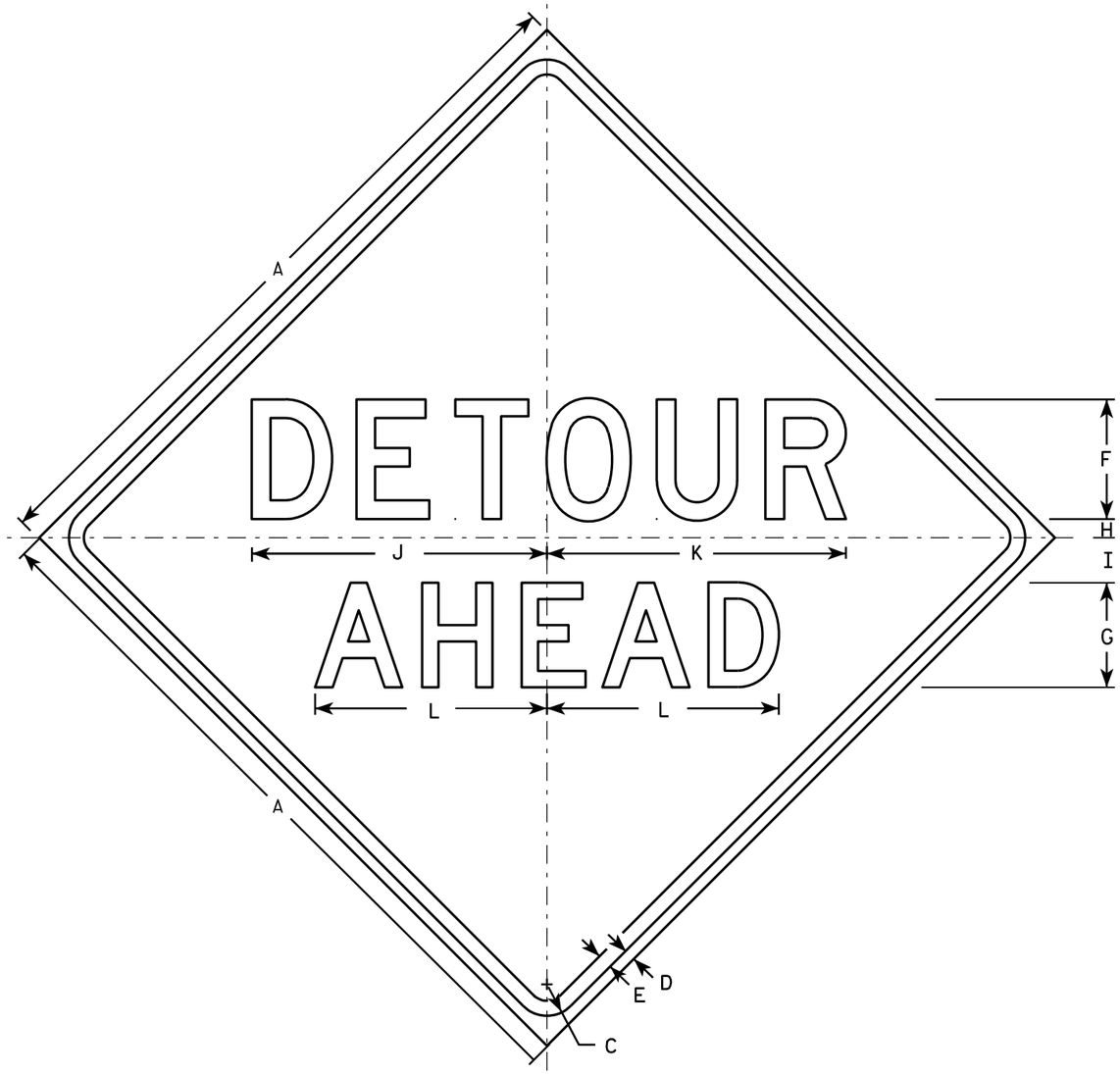

W20-2A

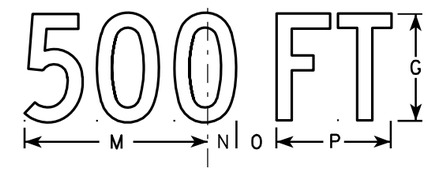

W20-2D

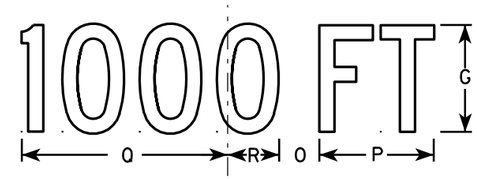

W20-2C

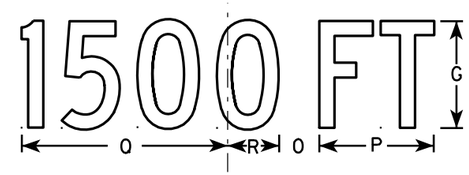

W20-2B

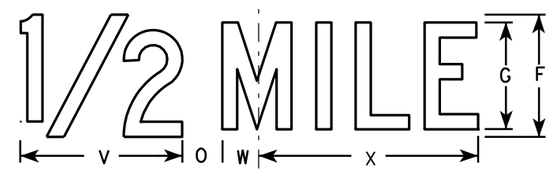

W20-2G

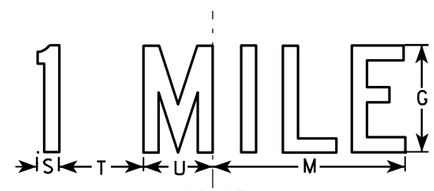

W20-2F

NOTES

1. Sign is Type II - Type F Reflective - reference WIS DOT Standard Specification for HIGHWAY and STRUCTURE CONSTRUCTION latest edition.
2. Color:
   Background - Orange
   Message - Black
3. Message Series - See note 5
4. Corners may be square or rounded when base material is plywood but borders shall be rounded as shown. When base material is metal, the corners and borders shall be rounded.
5. Line 1 is Series D.
   Line 2 is Series D for AHEAD and Series C for all other distances.

SIZE	A	B	C	D	E	F	G	H	I	J	K	L	M	N	O	P	Q	R	S	T	U	V	W	X	Y	Z	Area sq. ft.
1	36		1 5/8	5/8	3/4	6	5	1	2 1/4	14 3/4	15	11 5/8	9	1 3/8	1 7/8	5 5/8	10 1/8	2 1/2	1 1/8	4 1/2	3 1/2	8	1 3/4	10 3/4			9.0
2S	48		2 1/4	3/4	1	8	7	1 1/4	3	19 3/4	20	15 1/2	12	1 7/8	2 5/8	7 1/2	13 1/2	3 3/8	1 1/2	6	4 5/8	10 5/8	2 3/8	14 3/8			16.0
2M	48		2 1/4	3/4	1	8	7	1 1/4	3	19 3/4	20	15 1/2	12	1 7/8	2 5/8	7 1/2	13 1/2	3 3/8	1 1/2	6	4 5/8	10 5/8	2 3/8	14 3/8			16.0
3	48		2 1/4	3/4	1	8	7	1 1/4	3	19 3/4	20	15 1/2	12	1 7/8	2 5/8	7 1/2	13 1/2	3 3/8	1 1/2	6	4 5/8	10 5/8	2 3/8	14 3/8			16.0
4	48		2 1/4	3/4	1	8	7	1 1/4	3	19 3/4	20	15 1/2	12	1 7/8	2 5/8	7 1/2	13 1/2	3 3/8	1 1/2	6	4 5/8	10 5/8	2 3/8	14 3/8			16.0
5	48		2 1/4	3/4	1	8	7	1 1/4	3	19 3/4	20	15 1/2	12	1 7/8	2 5/8	7 1/2	13 1/2	3 3/8	1 1/2	6	4 5/8	10 5/8	2 3/8	14 3/8			16.0

STANDARD SIGN
W20-2A,B,C,D,F & G

WISCONSIN DEPT OF TRANSPORTATION

APPROVED Matthew R Rauch
for State Traffic Engineer
DATE 3/18/11 PLATE NO. W20-2.6

7

7

PROJECT NO: | HWY: | COUNTY: | SHEET NO: 150 | E

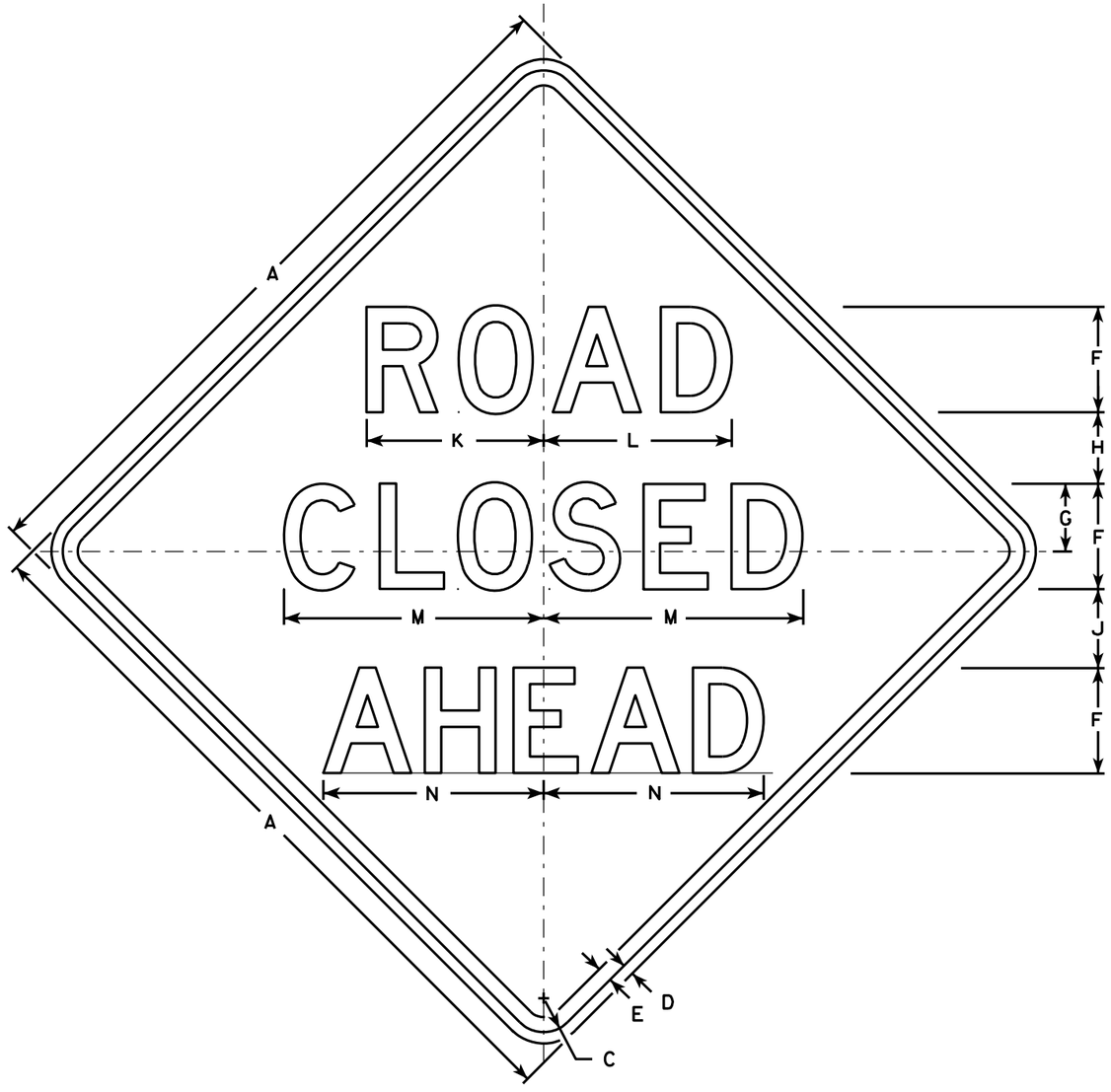

W20-3A

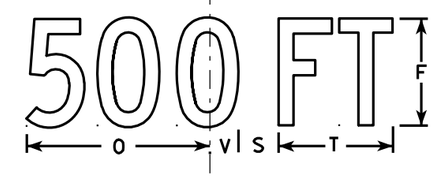

W20-3D

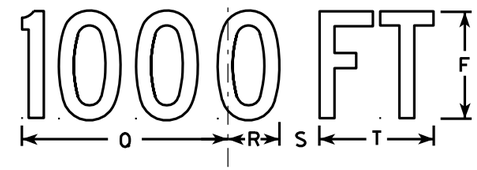

W20-3C

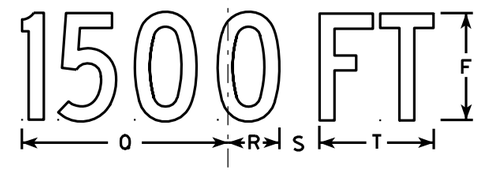

W20-3B

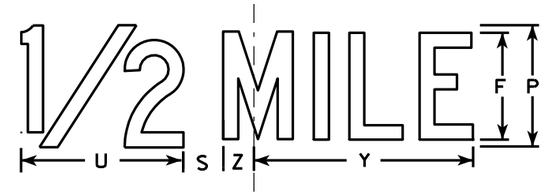

W20-3G

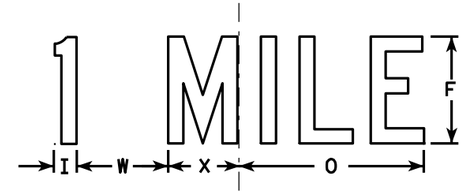

W20-3F

NOTES

1. Sign is Type II - Type F Reflective - reference WIS DOT Standard Specification for HIGHWAY and STRUCTURE CONSTRUCTION latest edition.
2. Color:
   Background - Orange
   Message - Black
3. Message Series - see note 5
4. Corners may be square or rounded when base material is plywood but borders shall be rounded as shown. When base material is metal, the corners and borders shall be rounded.
5. Lines 1 and 2 are Series D.
   Line 3 is Series D for AHEAD and Series C for all other distances.

SIZE	A	B	C	D	E	F	G	H	I	J	K	L	M	N	O	P	Q	R	S	T	U	V	W	X	Y	Z	Area sq. ft.
1	36		1 5/8	5/8	3/4	5	3 3/8	3 1/2	1 1/8	4	8 3/8	8 7/8	12 1/2	11	9	6	10 1/8	2 1/2	1 7/8	5 5/8	8	1 3/8	4 1/2	3 1/2	10 3/4	1 3/4	9.0
2S	48		2 1/4	3/4	1	7	4 1/2	4 3/4	1 1/2	5 1/4	11 3/4	12 1/2	17 1/4	14 5/8	12	8	13 1/2	3 3/8	2 5/8	7 1/2	10 5/8	1 7/8	6	4 5/8	14 3/8	2 3/8	16.0
2M	48		2 1/4	3/4	1	7	4 1/2	4 3/4	1 1/2	5 1/4	11 3/4	12 1/2	17 1/4	14 5/8	12	8	13 1/2	3 3/8	2 5/8	7 1/2	10 5/8	1 7/8	6	4 5/8	14 3/8	2 3/8	16.0
3	48		2 1/4	3/4	1	7	4 1/2	4 3/4	1 1/2	5 1/4	11 3/4	12 1/2	17 1/4	14 5/8	12	8	13 1/2	3 3/8	2 5/8	7 1/2	10 5/8	1 7/8	6	4 5/8	14 3/8	2 3/8	16.0
4	48		2 1/4	3/4	1	7	4 1/2	4 3/4	1 1/2	5 1/4	11 3/4	12 1/2	17 1/4	14 5/8	12	8	13 1/2	3 3/8	2 5/8	7 1/2	10 5/8	1 7/8	6	4 5/8	14 3/8	2 3/8	16.0
5	48		2 1/4	3/4	1	7	4 1/2	4 3/4	1 1/2	5 1/4	11 3/4	12 1/2	17 1/4	14 5/8	12	8	13 1/2	3 3/8	2 5/8	7 1/2	10 5/8	1 7/8	6	4 5/8	14 3/8	2 3/8	16.0

STANDARD SIGN
W20-3A, B, C, D, F & G

WISCONSIN DEPT OF TRANSPORTATION

APPROVED Matthew R Rauch
for State Traffic Engineer
DATE 3/18/11 PLATE NO. W20-3.7

PROJECT NO: | HWY: | COUNTY: | SHEET NO: 151 | E

W20-56A

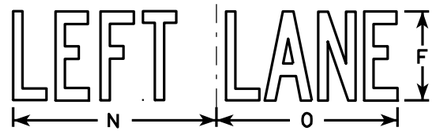

W20-55A

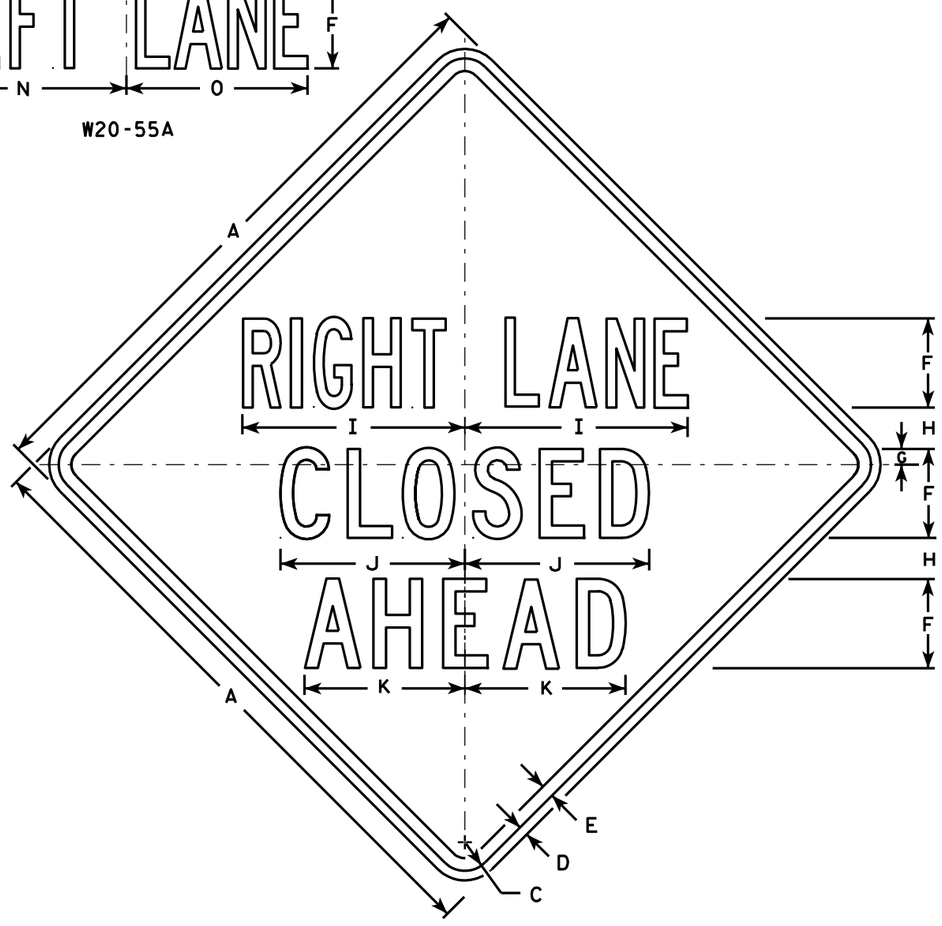

W20-5A

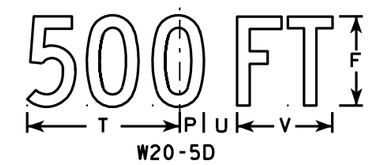

W20-5D

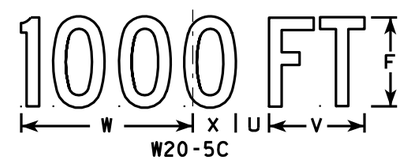

W20-5C

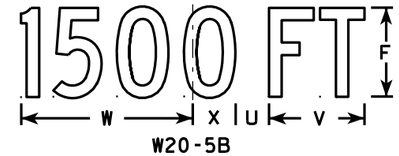

W20-5B

W20-5G

W20-5F

NOTES

1. Sign is Type II - Type F Reflective - reference WIS DOT Standard Specification for HIGHWAY and STRUCTURE CONSTRUCTION latest edition.
2. Color:
   Background - Orange
   Message - Black
3. Message Series - See Note 5
4. Corners may be square or rounded when base material is plywood but borders shall be rounded as shown. When base material is metal, the corners and borders shall be rounded.
5. " ------- LANE" is Series B.
   All other copy is Series C.

SIZE	A	B	C	D	E	F	G	H	I	J	K	L	M	N	O	P	Q	R	S	T	U	V	W	X	Y	Z	Area sq. ft.
1	36	6	1 5/8	5/8	3/4	5	7/8	2 1/2	13 1/8	10 3/4	9 1/2	14 1/4	13 5/8	12	12	1 3/8	1 1/8	4 1/2	3 1/2	9	1 7/8	5 5/8	10 1/8	2 1/2	1 3/4	8	9.0
2S	48	8	2 1/4	3/4	1	7	1 1/4	3 1/4	17 1/2	14 3/8	12 5/8	19	18 3/8	16	14 1/4	1 7/8	1 1/2	6	4 5/8	12	2 5/8	7 1/2	13 1/2	3 3/8	2 3/8	10 5/8	16.0
2M	48	8	2 1/4	3/4	1	7	1 1/4	3 1/4	17 1/2	14 3/8	12 5/8	19	18 3/8	16	14 1/4	1 7/8	1 1/2	6	4 5/8	12	2 5/8	7 1/2	13 1/2	3 3/8	2 3/8	10 5/8	16.0
3	48	8	2 1/4	3/4	1	7	1 1/4	3 1/4	17 1/2	14 3/8	12 5/8	19	18 3/8	16	14 1/4	1 7/8	1 1/2	6	4 5/8	12	2 5/8	7 1/2	13 1/2	3 3/8	2 3/8	10 5/8	16.0
4	48	8	2 1/4	3/4	1	7	1 1/4	3 1/4	17 1/2	14 3/8	12 5/8	19	18 3/8	16	14 1/4	1 7/8	1 1/2	6	4 5/8	12	2 5/8	7 1/2	13 1/2	3 3/8	2 3/8	10 5/8	16.0
5	48	8	2 1/4	3/4	1	7	1 1/4	3 1/4	17 1/2	14 3/8	12 5/8	19	18 3/8	16	14 1/4	1 7/8	1 1/2	6	4 5/8	12	2 5/8	7 1/2	13 1/2	3 3/8	2 3/8	10 5/8	16.0

STANDARD SIGN
W20-5A, B, C, D, F & G

WISCONSIN DEPT OF TRANSPORTATION

APPROVED Matthew R Rauch
for State Traffic Engineer

DATE 3/18/11 PLATE NO. W20-5.11

PROJECT NO:	HWY:	COUNTY:		SHEET NO: 152	E

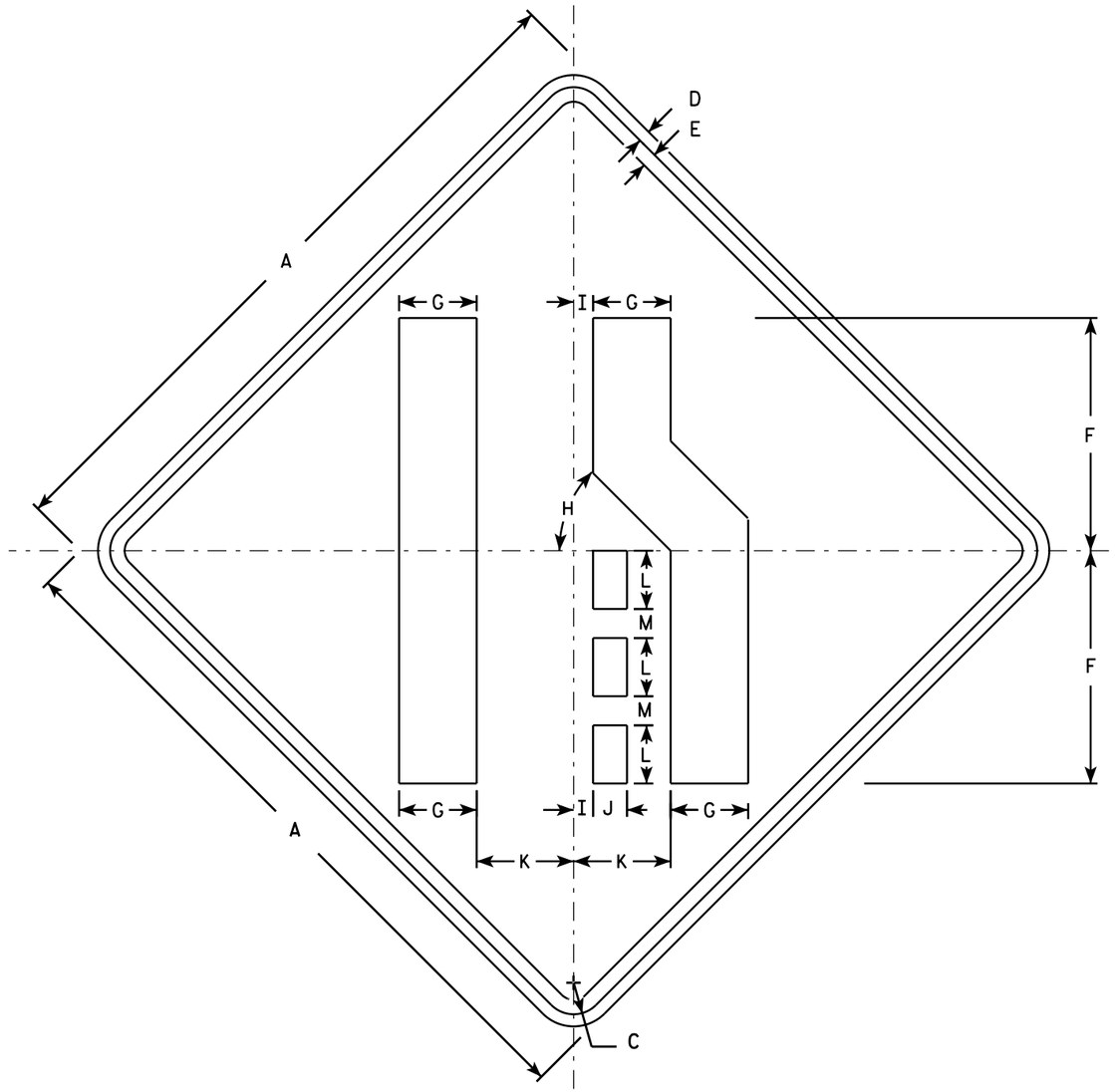

W04-2R

NOTES

1. Sign is Type II - Type F Reflective - reference WIS DOT Standard Specification for HIGHWAY and STRUCTURE CONSTRUCTION latest edition.
2. Color:
   Background - Orange
   Message - Black
3. Corners may be square or rounded when base material is plywood but borders shall be rounded as shown. When base material is metal, the corners and borders shall be rounded.
4. W04-2L is the same as W04-2R except the symbol is reversed along the vertical centerline.

SIZE	A	B	C	D	E	F	G	H	I	J	K	L	M	N	O	P	Q	R	S	T	U	V	W	X	Y	Z	Area sq. ft.
1	36		1 5/8	5/8	3/4	12	4	45°	1	1 3/4	5	3	1 1/2														9.0
2S	48		2 1/4	3/4	1	16	5 3/8	45°	1 1/4	2 3/8	6 3/4	4	2														16.0
2M	48		2 1/4	3/4	1	16	5 3/8	45°	1 1/4	2 3/8	6 3/4	4	2														16.0
3	48		2 1/4	3/4	1	16	5 3/8	45°	1 1/4	2 3/8	6 3/4	4	2														16.0
4	48		2 1/4	3/4	1	16	5 3/8	45°	1 1/4	2 3/8	6 3/4	4	2														16.0
5	48		2 1/4	3/4	1	16	5 3/8	45°	1 1/4	2 3/8	6 3/4	4	2														16.0

STANDARD SIGN
W04-2

WISCONSIN DEPT OF TRANSPORTATION

APPROVED Matthew R Rauch
for State Traffic Engineer

DATE 11/20/13 PLATE W04-2.1

PROJECT NO: | SHEET NO: E

STATE PROJECT NUMBER
3240-16-70

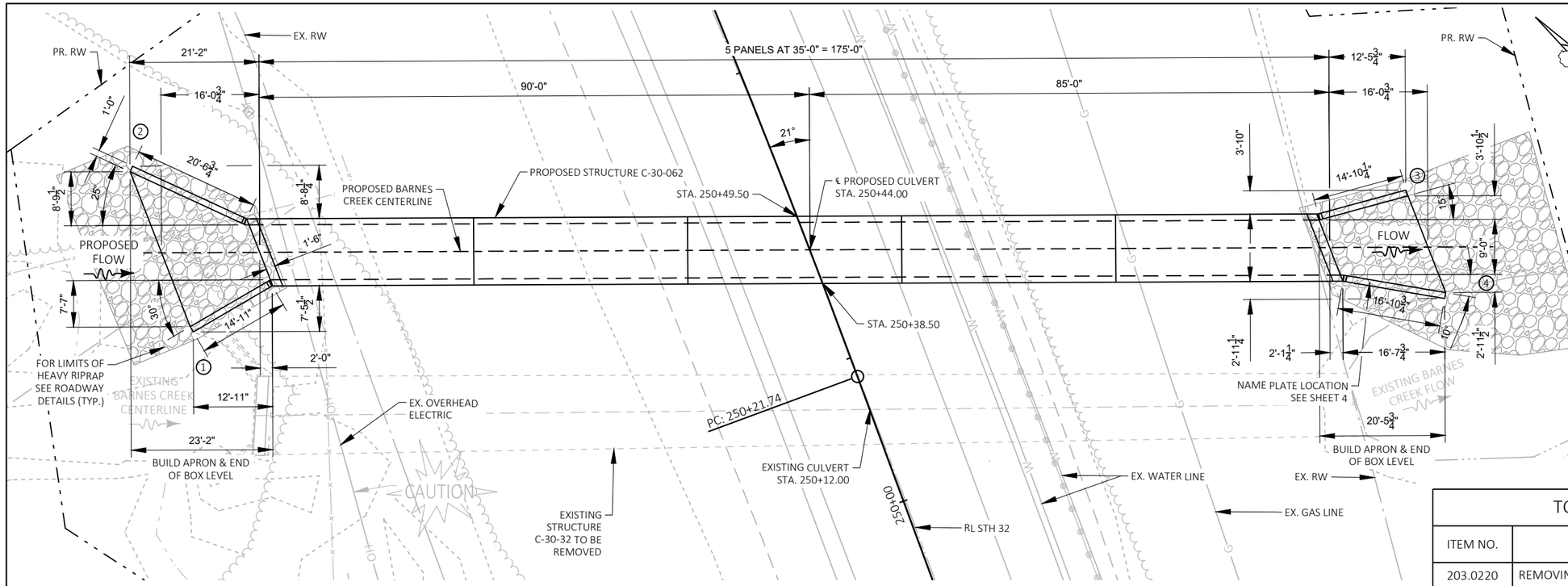

SITE PLAN

SINGLE CELL BOX CULVERT

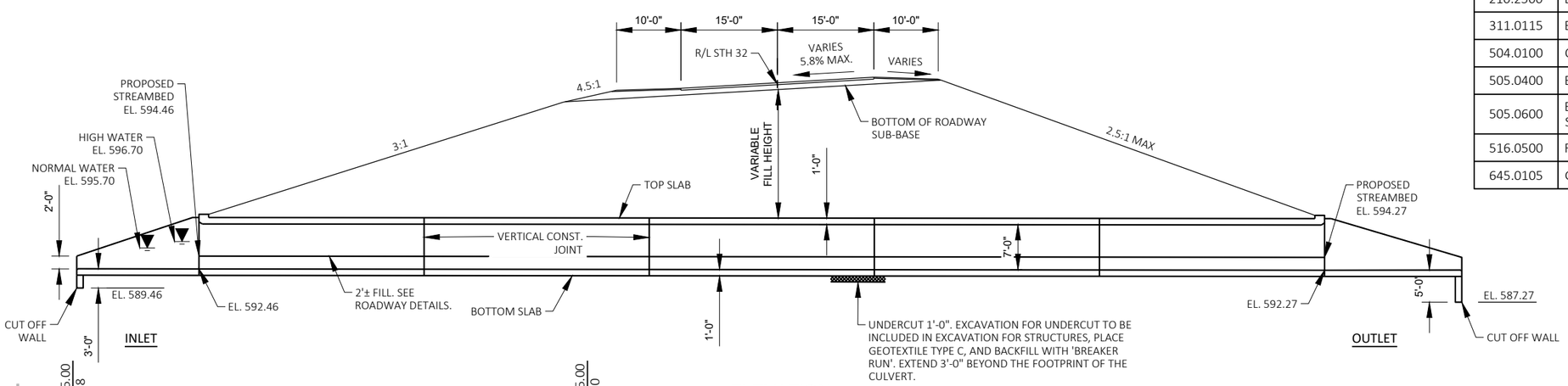

ELEVATION

LOOKING UPSTATION

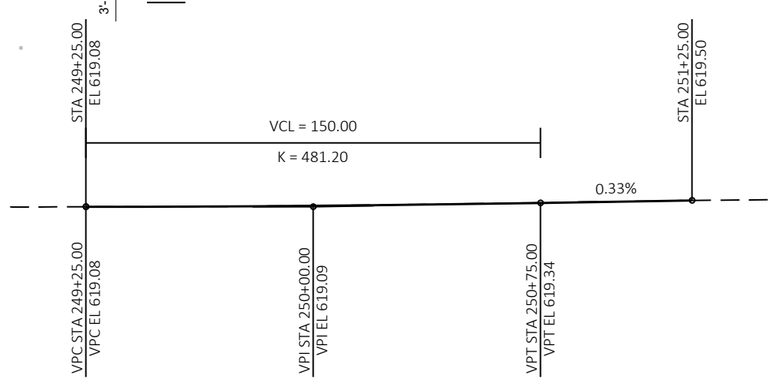

R/L OF STH 32 PROFILE GRADE LINE

DESIGN DATA

FOUNDATION DATA

ALLOWABLE SOIL BEARING = 3,000 PSF

LIVE LOAD

DESIGN LOADING: HL-93
INVENTORY RATING FACTOR: RF = 1.05
OPERATING RATING FACTOR: RF = 1.35
WISCONSIN STANDARD PERMIT VEHICLE (WIS-SPV)= 255 KIPS
DESIGNED FOR FILL HEIGHT RANGE OF 19 TO 20 FEET

MATERIAL PROPERTIES

CONCRETE MASONRY (CULVERT)	f'c = 3,500 PSI
BAR STEEL REINFORCEMENT	fy = 60,000 PSI

TOTAL ESTIMATED QUANTITIES

ITEM NO.	BID ITEM	UNIT	TOTAL
203.0220	REMOVING STRUCTURE (C-30-32)	EACH	1
206.2001	EXCAVATION FOR STRUCTURES CULVERTS (C-30-62)	EACH	1
210.2500	BACKFILL STRUCTURE TYPE B	TON	2740
311.0115	BREAKER RUN	CY	150
504.0100	CONCRETE MASONRY CULVERTS	CY	275
505.0400	BAR STEEL REINFORCEMENT HS STRUCTURES	LB	34410
505.0600	BAR STEEL REINFORCEMENT HS COATED STRUCTURES	LB	1955
516.0500	RUBBERIZED MEMBRANE WATERPROOFING	SY	36
645.0105	GEOTEXTILE TYPE C	SY	431

LIST OF DRAWINGS

1. SITE PLAN & QUANTITIES
2. CULVERT DETAILS
3. APRON & WING DETAILS
4. APRON & WING DETAILS
5. SUBSURFACE EXPLORATION

TRAFFIC VOLUME

ADT (2017) = 10,500
ADT (2042) = 13,100
R.D.S. = 50 MPH

HYDRAULIC DATA

100 YEAR FREQUENCY

Q = 582 C.F.S
VEL. = 12.9 F.P.S.
HW_100 = EL. 606.38
WATERWAY AREA = 45 SQ. FT.
DRAINAGE AREA = 4.1 SQ. MI.
ROADWAY OVERTOPPING = NA
SCOUR CRITICAL CODE = 8

2 YEAR FREQUENCY

Q = 110 C.F.S
VEL. = 4.5 F.P.S.
HW_2 = EL. 597.91

WISCONSIN MARK J. MUTZIGER E-37119 MILWAUKEE WISCONSIN PROFESSIONAL ENGINEER
10/18/22

BUREAU OF STRUCTURES CONTACT:
AARON BONK (608) 261-0261

CONSULTANT CONTACT:
MARK MUTZIGER (414) 930-4534

NO.	DATE	REVISION	BY

COLLINS ENGINEERS INC

STATE OF WISCONSIN
DEPARTMENT OF TRANSPORTATION

ACCEPTED SDR 11/21/22
CHIEF STRUCTURES DESIGN ENGINEER DATE

STRUCTURE C-30-62

STH 32 OVER BARNES CREEK

COUNTY	~~TOWN/CITY~~/VILLAGE
KENOSHA	PLEASANT PRAIRIE

DESIGN SPEC. AASHTO LRFD BRIDGE DESIGN SPECIFICATIONS

DESIGNED BY	DESIGN CK'D.	DRAWN BY	PLANS CK'D.
MH	MJM	MDG	MH

SITE PLAN & QUANTITIES

SHEET 1 OF 5
154

8

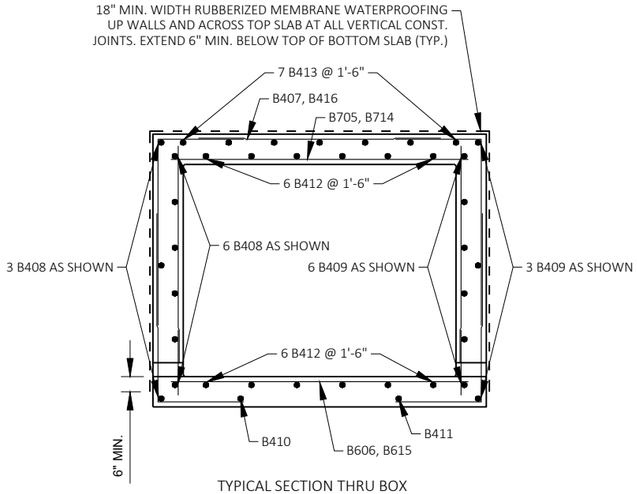

TYPICAL SECTION THRU BOX
EXTERIOR PANEL

BAR LABELS AND DIMENSIONS NOT SHOWN ARE IDENTICAL TO THOSE SHOWN IN THE INTERIOR PANEL SECTION.

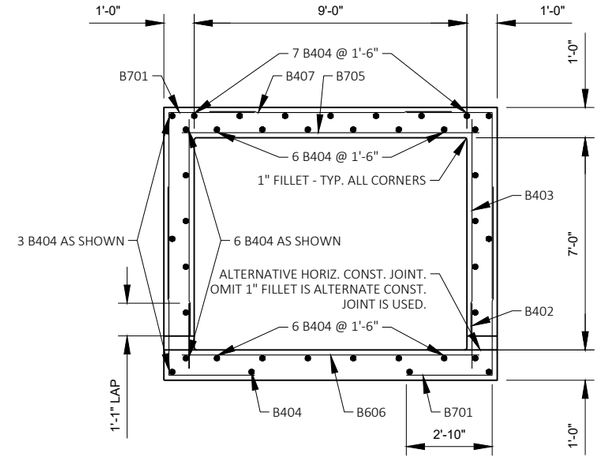

TYPICAL SECTION THRU BOX
INTERIOR PANEL

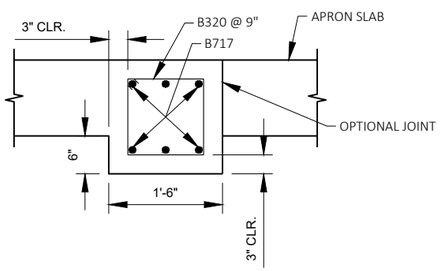

SECTION THRU BOTTOM
SLAB HEADER

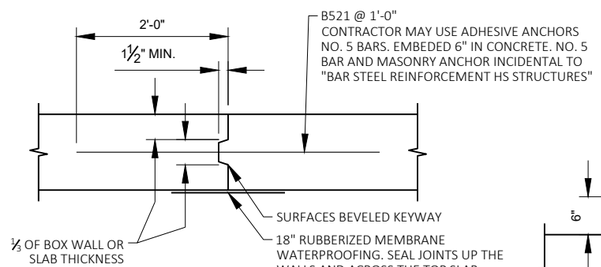

VERTICAL CONSTRUCTION JOINT

2" DEEP SAW CUT WITHIN 12 HOURS AFTER POURING MAY BE USED IN LIEU OF CONST. JT. IN BOTTOM SLAB.

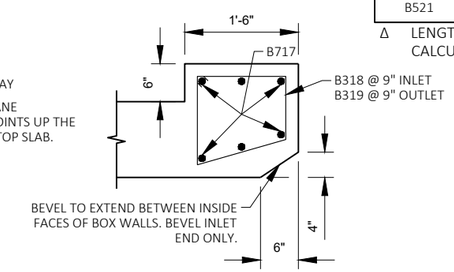

SECTION THRU
TOP SLAB HEADER

BILL OF BARS

BAR MARK	# REQ'D	LENGTH	BENT	BAR SERIES	COAT	LOCATION
B701	960	8'-4"	X			CORNERS
B402	240	2'-4"				WALLS - DOWELS VERT.
B403	240	7'-4"				WALLS - VERT.
B404	117	34'-8"				INTERIOR PANEL LONGITUDINAL
B705	234	10'-8"				TOP SLAB TRANSVERSE BOTTOM
B606	234	10'-8"				BOT. SLAB TRANSVERSE
B407	118	7'-10"				TOP SLAB TRANSVERSE TOP
B408	18	36'-9"				EXT. PANEL WALL LONGITUDINAL
B409	18	32'-6"				EXT. PANEL WALL LONGITUDINAL
B410	2	35'-7"				EXT. PANEL BOT. SLAB LONGITUDINAL
B411	2	33'-8"				EXT. PANEL BOT. SLAB LONGITUDINAL
B412	24	34'-8"		Δ		EXT. PANEL SLABS LONGITUDINAL
B413	14	34'-8"		Δ		EXT. PANEL SLABS LONGITUDINAL TOP
B714	10	6'-4"		Δ		EXT. PANEL TOP SLAB TRANSVERSE BOTTOM
B615	10	6'-4"		Δ		EXT. PANEL BOT. SLAB TRANSVERSE
B416	10	4'-10"		Δ		EXT. PANEL TOP SLAB TRANSVERSE TOP
B717	24	11'-5"				HEADERS HORIZONTAL
B318	16	4'-10"	X			INLET TOP HEADER STIRRUPS
B319	16	5'-1"	X			OUTLET TOP HEADER STIRRUPS
B320	32	4'-5"	X			BOTTOM HEADER STIRRUPS
B521	144	4'-0"				VERT. CONST. JOINT

Δ LENGTH SHOWN FOR BAR IS AN AVERAGE LENGTH AND SHOULD ONLY BE USED FOR BAR WEIGHT CALCULATIONS. SEE BAR SERIES TABLE FOR ACTUAL LENGTHS.

BAR SERIES TABLE

BAR MARK	# OF SERIES	# BARS PER SERIES	LENGTH 1	LENGTH 2
B412	4	6	33'-4"	35''-11"
B413	2	7	33'-1"	36'-2"
B714	2	5	10'-2"	2'-5"
B615	2	5	10'-2"	2'-5"
B416	2	5	8'-7"	0'-10"

STATE PROJECT NUMBER

3240-16-70

GENERAL NOTES

DRAWINGS SHALL NOT BE SCALED.

STATIONS & ELEVATIONS ARE IN FEET.

BAR STEEL REINFORCEMENT SHALL BE EMBEDDED 2" CLEAR UNLESS OTHERWISE SHOWN OR NOTED.

THE FIRST OR FIRST TWO DIGITS OF THE BAR MARK SIGNIFIES THE BAR SIZE.

BENDING DIMENSIONS FOR REINFORCING BARS ARE OUT TO OUT.

THE EXISTING GROUND LINE SHALL BE USED AS THE UPPER LIMITS OF EXCAVATION.

UNDERCUT TO BE INCLUDED IN EXCAVATION FOR STRUCTURES. PLACE GEOTEXTILE TYPE C, AND BACKFILL WITH BREAKER RUN.

BACKFILL STRUCTURE TYPE B REQUIRED ON THE BOX CULVERT SIDES AND BEHIND WINGS. SEE SHEET 4 FOR STRUCTURE AND WINGWALL BACKFILL LIMITS.

WITHIN THE LENGTH OF THE BOX ALL SPACES EXCAVATED AND NOT OCCUPIED BY THE NEW STRUCTURE SHALL BE BACKFILLED WITH STRUCTURAL BACKFILL TO THE TOP OF THE BOX.

LOCATIONS OF EXISTING & PROPOSED UTILITY INSTALLATIONS AS SHOWN ON PLANS ARE APPROXIMATE. THERE MAY BE OTHER UTILITY INSTALLATIONS WITHIN PROJECT AREA THAT ARE NOT SHOWN.

SEE ROADWAY PLANS FOR EXISTING & PROPOSED UTILITY LOCATION.

THE CONTRACTOR MAY FURNISH A PRECAST CONCRETE BOX CULVERT IN LIEU OF THE CAST-IN-PLACE BOX CULVERT WITH THE ACCEPTANCE OF THE SHOP DRAWINGS BY THE STRUCTURES DESIGN SECTION. THE PRECAST CONCRETE BOX CULVERT SHALL CONFORM TO PRECAST DETAILS IN CHAPTER 36 STANDARDS OF THE CURRENT WISCONSIN DOT BRIDGE MANUAL. PAYMENT FOR THE PRECAST CULVERT SHALL BE BASED ON THE QUANTITIES AND PRICES BID FOR THE ITEMS LISTED IN THE TOTAL ESTIMATED QUANTITIES.

SEE ROADWAY PLANS FOR LIMITS OF HEAVY RIPRAP AND STREAM BED MATERIAL DETAILS.

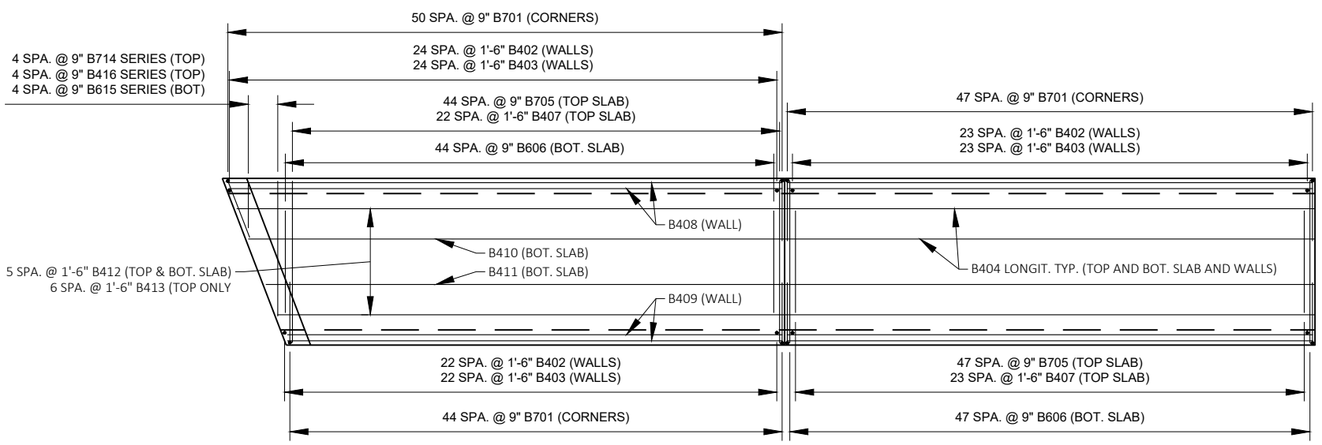

PLAN VIEW OF EXTERIOR PANEL

INLET PANEL SHOWN, OUTLET SIMILAR HEADER BARS NOT SHOWN

PLAN VIEW OF INTERIOR PANEL

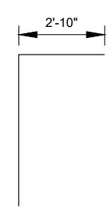

B701

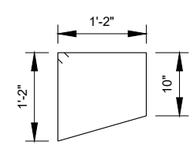

B318

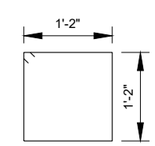

B319

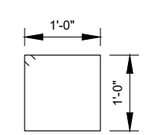

B320

NO.	DATE	REVISION	BY

STATE OF WISCONSIN
DEPARTMENT OF TRANSPORTATION
STRUCTURES DESIGN SECTION

STRUCTURE C-30-62

DRAWN BY MDG | PLANS CK'D. MH

CULVERT DETAILS

SHEET 2 OF 5
155

8

8

STATE PROJECT NUMBER

3240-16-70

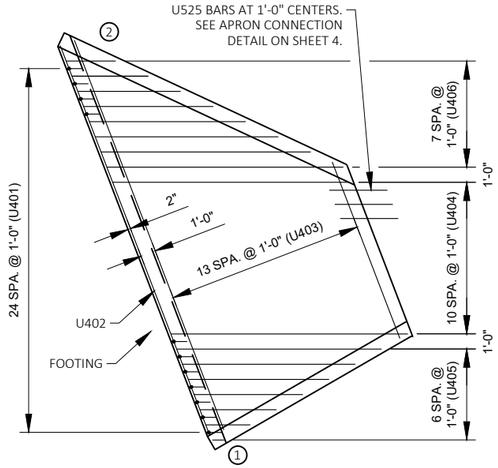

INLET APRON PLAN

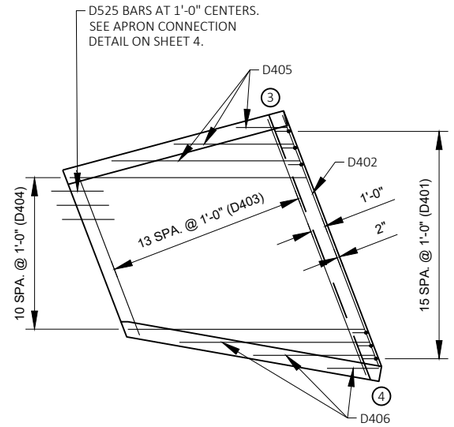

OUTLET APRON PLAN

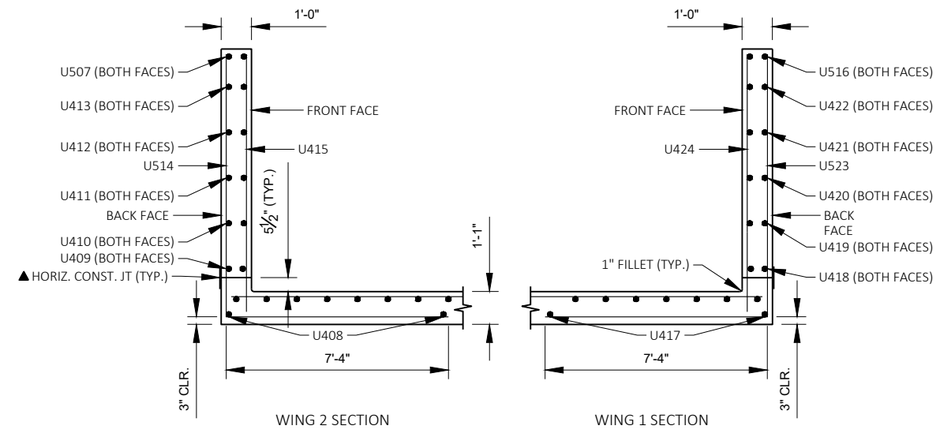

WING 2 SECTION

WING 1 SECTION

▲ 18" RUBBERIZED MEMBRANE WATERPROOFING, PLACE ALONG HORIZ. CONST. JT FOR ENTIRE WING LENGTH (TYP.)

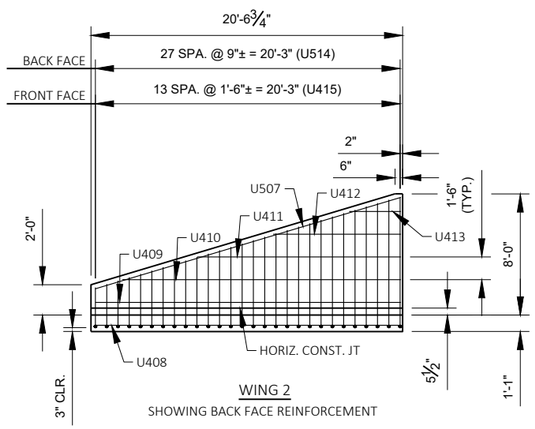

WING 2
SHOWING BACK FACE REINFORCEMENT

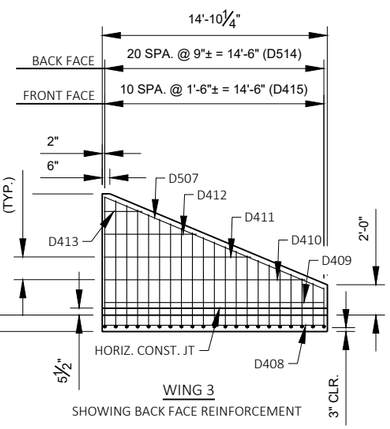

WING 3
SHOWING BACK FACE REINFORCEMENT

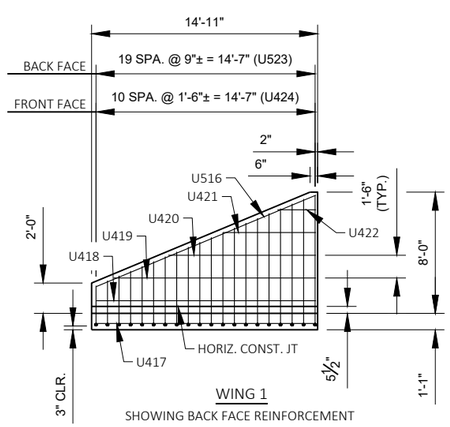

WING 1
SHOWING BACK FACE REINFORCEMENT

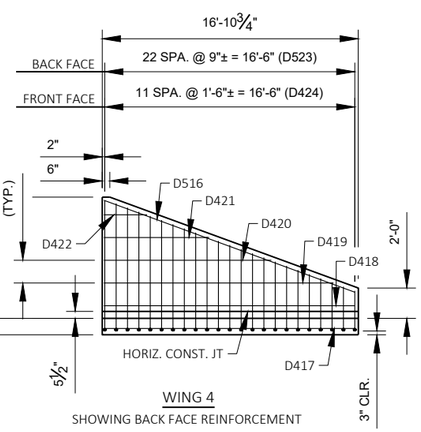

WING 4
SHOWING BACK FACE REINFORCEMENT

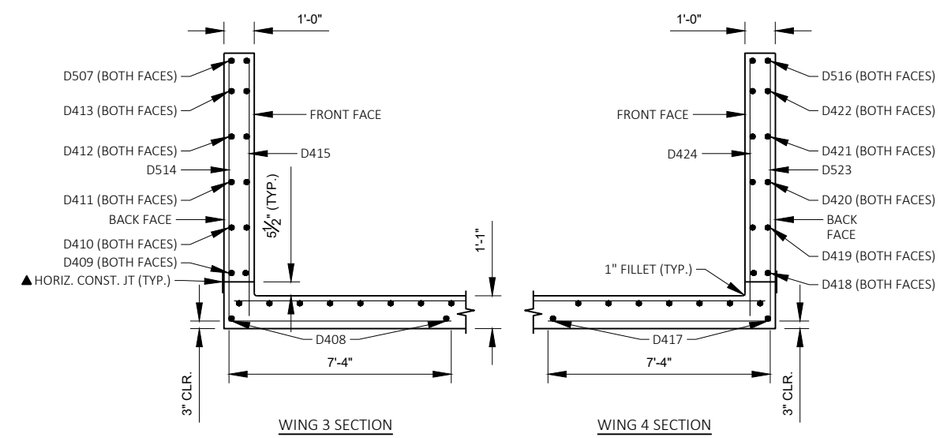

WING 3 SECTION

WING 4 SECTION

8

8

NO.	DATE	REVISION	BY

STATE OF WISCONSIN
DEPARTMENT OF TRANSPORTATION
STRUCTURES DESIGN SECTION

STRUCTURE C-30-62

DRAWN BY MDG | PLANS CK'D. MH

APRON & WING DETAILS

SHEET 3 OF 5
156

FILE NAME : G:\12486 - LAKESIDE-WISDOT STH 32 SHERIDAN RD\CAD\SHEET DRAWINGS\2_CULVERT DETAILS.DWG
PLOT DATE : 10/13/2022 11:12 AM PLOT BY : MORGAN GRUBER

STATE PROJECT NUMBER
3240-16-70

BILL OF BARS

BAR MARK	COAT	NO. REQ'D	LENGTH	BENT	BAR SERIES	LOCATION
U401		25	3'-6"	X		INLET APRON AND CUTOFF WALL VERT.
U402		3	27'-2"			INLET APRON AN CUTOFF WALL HORIZ.
U403		14	20'-6"		Δ	INLET APRON SLAB HORIZ.
U404		11	15'-8"			INLET APRON AND BOX SLAB HORIZ.
U405		7	8'-10"		Δ	INLET APRON SLAB HORIZ.
U406		8	8'-6"		Δ	INLET APRON SLAB HORIZ.
U507	X	2	21'-1"			WING 2 HORIZ. TOP BOTH FACES
U408	X	2	20'-2"			WING 2 HORIZ. APRON SLAB
U409	X	2	20'-2"			WING 2 HORIZ.
U410	X	2	19'-9"			WING 2 HORIZ.
U411	X	2	14'-9"			WING 2 HORIZ.
U412	X	2	9'-9"			WING 2 HORIZ.
U413	X	2	4'-9"			WING 2 HORIZ.
U514	X	28	12'-11"	X	Δ	WING 2 VERTICAL BACK FACE
U415	X	14	5'-8"		Δ	WING 2 VERTICAL FRONT FACE
U516	X	2	15'-9"			WING 1 HORIZ. TOP BOTH FACES
U417	X	2	14'-7"			WING 1 HORIZ. APRON SLAB
U418	X	2	14'-7"			WING 1 HORIZ.
U419	X	2	14'-3"			WING 1 HORIZ.
U420	X	2	10'-8"			WING 1 HORIZ.
U421	X	2	7'-0"			WING 1 HORIZ.
U422	X	2	3'-5"			WING 1 HORIZ.
U523	X	20	12'-11"	X	Δ	WING 1 VERTICAL BACK FACE
U424	X	11	5'-8"		Δ	WING 1 VERTICAL FRONT FACE
U525		10	4'-0"			INLET APRON CONNECTION
D401		16	5'-6"	X		OUTLET APRON AND CUTOFF WALL VERT.
D402		5	16'-8"			OUTLET APRON AND CUTOFF WALL HORIZ.
D403		14	15'-0"		Δ	OUTLET APRON SLAB HORIZ.
D404		11	15'-8"			OUTLET APRON AND BOX SLAB HORIZ.
D405		3	7'-8"		Δ	OUTLET APRON SLAB HORIZ.
D406		3	8'-8"		Δ	OUTLET APRON SLAB HORIZ.
D507	X	2	15'-8"			WING 3 HORIZ. TOP BOTH FACES
D408	X	2	14'-6"			WING 3 HORIZ. APRON SLAB
D409	X	2	14'-6"			WING 3 HORIZ.
D410	X	2	14'-2"			WING 3 HORIZ.
D411	X	2	10'-7"			WING 3 HORIZ.
D412	X	2	7'-0"			WING 3 HORIZ.
D413	X	2	3'-5"			WING 3 HORIZ.
D514	X	21	12'-11"	X	Δ	WING 3 VERTICAL BACK FACE
D415	X	11	5'-8"		Δ	WING 3 VERTICAL FRONT FACE
D516	X	2	17'-7"			WING 4 HORIZ. TOP BOTH FACES
D417	X	2	16'-6"			WING 4 HORIZ. APRON SLAB
D418		2	16'-6"			WING 4 HORIZ.
D419		2	16'-2"			WING 4 HORIZ.
D420		2	12'-1"			WING 4 HORIZ.
D421		2	8'-0"			WING 4 HORIZ.
D422		2	3'-11"			WING 4 HORIZ.
D523	X	23	12'-11"	X	Δ	WING 4 VERTICAL BACK FACE
D424	X	12	5'-8"		Δ	WING 4 VERTICAL FRONT FACE
D525		10	4'-0"			OUTLET APRON CONNECTION

8

BAR SERIES TABLE

BAR MARK	NO. REQ'D	LENGTH
U403	1 SERIES OF 14 BARS	12'-8" TO 28'-2"
U405	1 SERIES OF 7 BARS	2'-4" TO 15'-1"
U406	1 SERIES OF 8 BARS	2'-3" TO 14'-7"
U514	1 SERIES OF 28 BARS	9'-10" TO 15'-10"
U415	1 SERIES OF 14 BARS	2'-8" TO 8'-8"
U523	1 SERIES OF 16 BARS	9'-10" TO 15'-10"
U424	1 SERIES OF 11 BARS	2'-8" TO 8'-8"
D403	1 SERIES OF 14 BARS	11'-9" TO 18'-3"
D405	1 SERIES OF 3 BARS	3'-6" TO 11'-9"
D406	1 SERIES OF 3 BARS	3'-4" TO 14'-0"
D514	1 SERIES OF 21 BARS	9'-10" TO 15'-10"
D415	1 SERIES OF 11 BARS	2'-8" TO 8'-8"
D523	1 SERIES OF 23 BARS	9'-10" TO 15'-10"
D424	1 SERIES OF 12 BARS	2'-8" TO 8'-8"

NOTES:
THE FIRST OR FIRST TWO DIGITS OF THE BAR MARK SIGNIFIES THE BAR SIZE.

BUNDLE AND TAG EACH BAR SERIES SEPARATELY.

Δ LENGTH SHOWN FOR BAR IS AN AVERAGE LENGTH AND SHOULD ONLY BE USED FOR BAR WEIGHT CALCULATIONS. SEE BAR SERIES TABLE FOR ACTUAL LENGTHS.

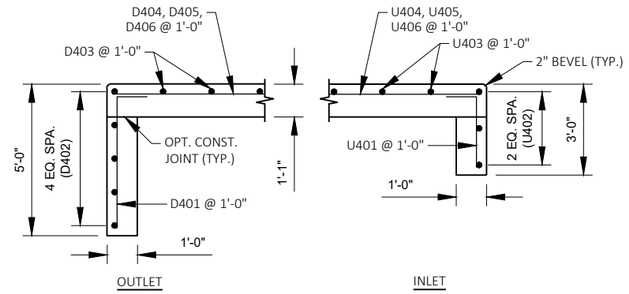

CUT-OFF WALLS

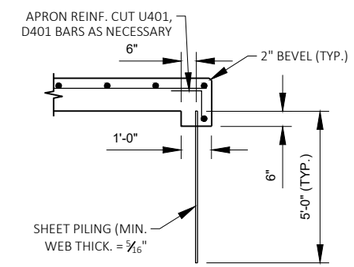

ALTERNATE CUT-OFF WALLS

THE ABOVE ALTERNATIVE MAY BE USED IN LIEU OF CAST-IN-PLACE CONCRETE CUT-OFF WALLS. PAYMENT WILL BE BASED ON THE CONCRETE CUT-OFF WALLS.

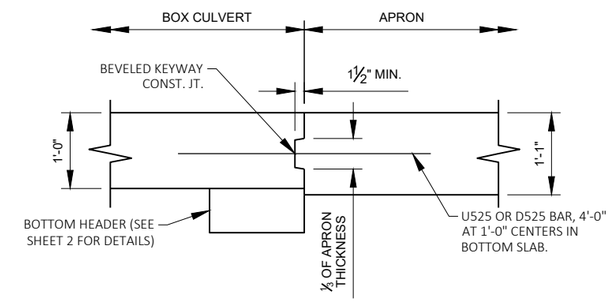

APRON CONNECTION DETAIL

2" DEEP SAW CUT WITHIN 12 HOURS AFTER POURING MAY BE USED IN LIEU OF CONST. JT. IN BOTTOM SLAB.

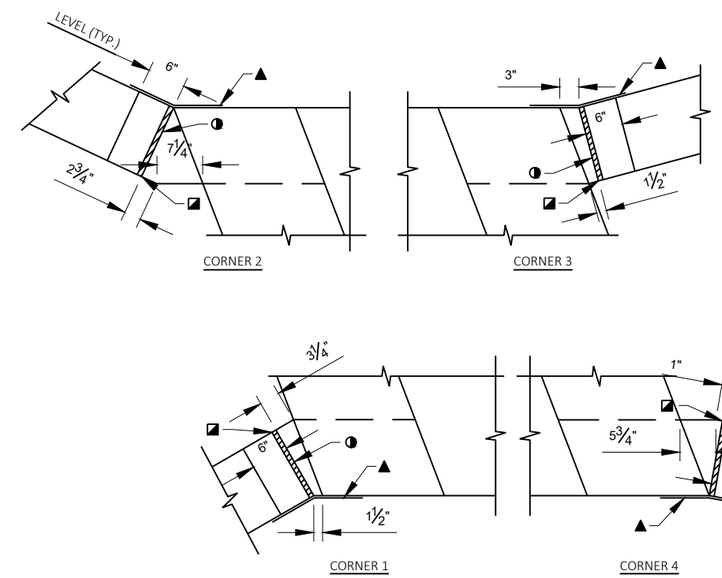

CORNER DETAILS

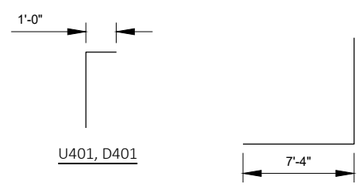

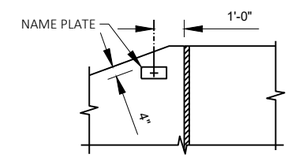

NAME PLATE LOCATION
WING 4

◐ ¾" FILLER TO EXTEND FROM HORIZ. CONST. JT. TO TOP OF WING.

◪ 1" BEVEL, TYP.

▲ 18" RUBBERIZED MEMBRANE WATERPROOFING. EXTEND FROM HORIZ. CONST. JT. TO TOP OF WALL.

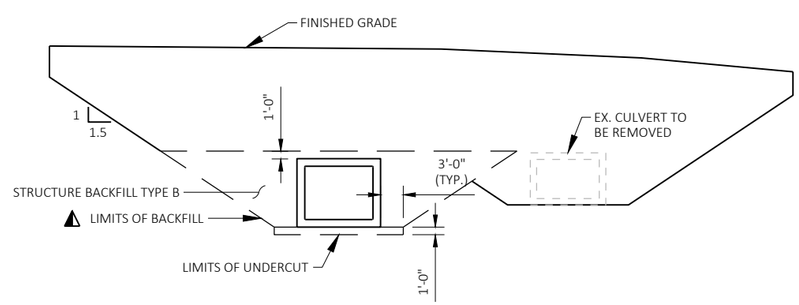

STRUCTURE BACKFILL LIMITS

◭ BACKFILL PAY LIMITS. BACKFILL BEYOND BACKFILL PAY LIMITS SHALL BE INCIDENTAL TO EXCAVATION FOR STRUCTURES. LIMITS OF EXCAVATION SHALL BE DETERMINED BY THE CONTRACTOR.

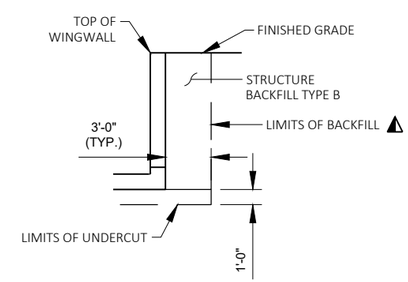

TYPICAL SECTION THRU BOX CULVERT WINGWALL

8

NO.	DATE	REVISION	BY

STATE OF WISCONSIN
DEPARTMENT OF TRANSPORTATION
STRUCTURES DESIGN SECTION

STRUCTURE C-30-62

DRAWN BY MDG | PLANS CK'D. MH

APRON & WING DETAILS

SHEET 4 OF 5
157

STATE PROJECT NUMBER
3240-16-70

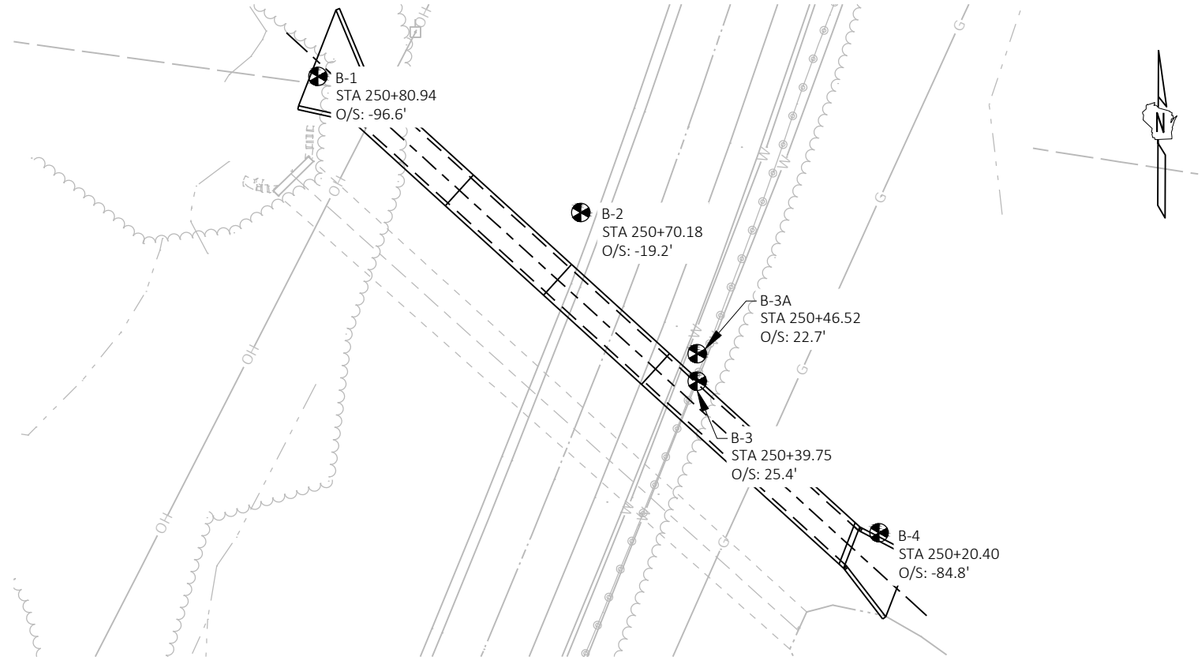

PLAN VIEW

NOTE:

DENOTES SOIL BORING LOCATION

THE SUBSURFACE INFORMATION PRESENTED HEREIN IS AN ABBREVIATED VERSION OF THE GEOTECHNICAL ENGINEERING REPORT DATED 11/02/2020. REVIEW APPROPRIATE GEOTECHNICAL REPORT AND SOIL BORING LOGS FOR ADDITIONAL SUBSURFACE INFORMATION.

SOIL BORINGS COMPLETED BY GESTRA ENGINEERING, INC. SOIL BORINGS TAKEN 09/29/2020.

MATERIAL SYMBOLS

ASPHALT, TOPSOIL, PEAT, CONCRETE, FILL, GRAVEL, SAND, CLAY, SILT, boulders or cobbles, LIMESTONE, BEDROCK (unknown), shale, SANDSTONE, IGNEOUS/meta

LEGEND OF BORING

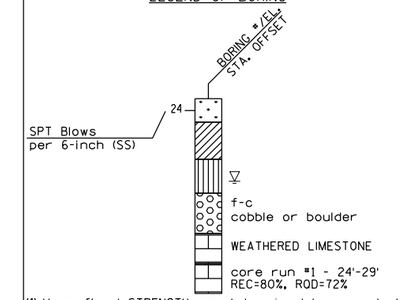

(1) Unconfined STRENGTH, as determined by a pocket penetrometer (tsf)

(2) UNLESS OTHERWISE, SPECIFIED THE SPT 'n' VALUE IS BASED ON AASHTO T-206, STANDARD PENETRATION TEST. THE SPT 'n' VALUE PRESENTED HAS NOT BEEN CORRECTED FOR OVERBURDEN PRESSURE OR HAMMER EFFICIENCY.

ground water elevation

at time of drilling

end of drilling

after drilling

ABBREVIATIONS

F-Fine M-Medium C-Coarse st-shelby tube

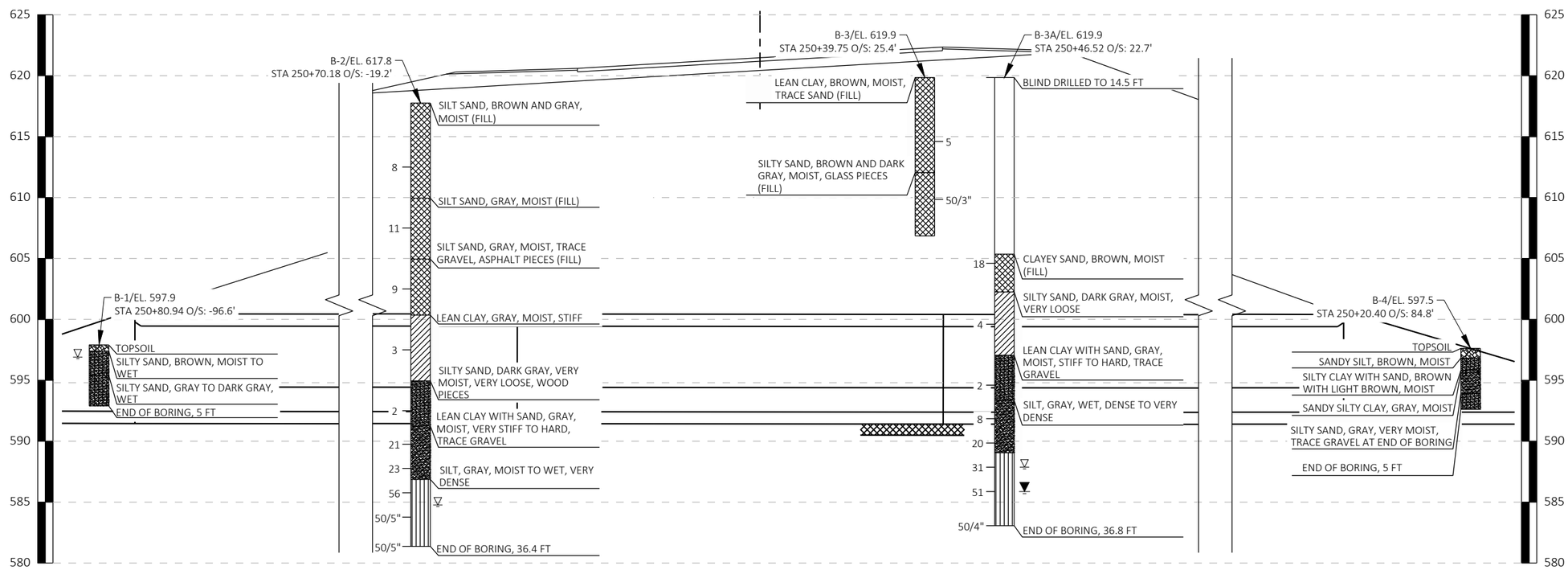

SOIL BORING LOG

SUBSURFACE EXPLORATION FOR FOUNDATION DESIGN AND BIDDERS INFORMATION

Borings were completed at points approximately as indicated on this drawing to obtain information concerning the character of subsurface materials found at the site. Because the investigated depths are limited and the area of the borings is very small in relation to the entire site, the Wisconsin Department of Transportation does not warrant similar subsurface conditions below, between, or beyond these borings. Variations in soil conditions should be expected and fluctuations in groundwater levels may occur.

NO.	DATE	REVISION	BY

STATE OF WISCONSIN
DEPARTMENT OF TRANSPORTATION
STRUCTURES DESIGN SECTION

STRUCTURE C-30-62

DRAWN BY MDG PLANS CK'D. MH

SUBSURFACE EXPLORATION

SHEET 5 OF 5

FILE NAME : G:\12486 - LAKESIDE-WISDOT STH 32 SHERIDAN RD\CAD\SHEET DRAWINGS\3_SUBSURFACE EXPLORATION.DWG
PLOT DATE : 9/22/2022 11:42 AM PLOT BY : MORGAN GRUBER

9

9

PROJECT NO: 3240-16-70	HWY: STH 32	COUNTY: KENOSHA	CROSS SECTIONS: STH 32	SHEET 159	E

FILE NAME : L:\DESIGN PROJECTS\3240-16-00 STH 32\10. ROADWAY\CIVIL 3D\32401600\SHEETSPLAN\090201-XS.DWG
LAYOUT NAME - 090201-xs
PLOT DATE : 10/14/2022 9:57 AM
PLOT BY : REBECCA JONARDI
PLOT NAME :
PLOT SCALE : 1 IN:20 FT HORZ. / 1 IN:10 FT VERT.
WISDOT/CADDS SHEET 49

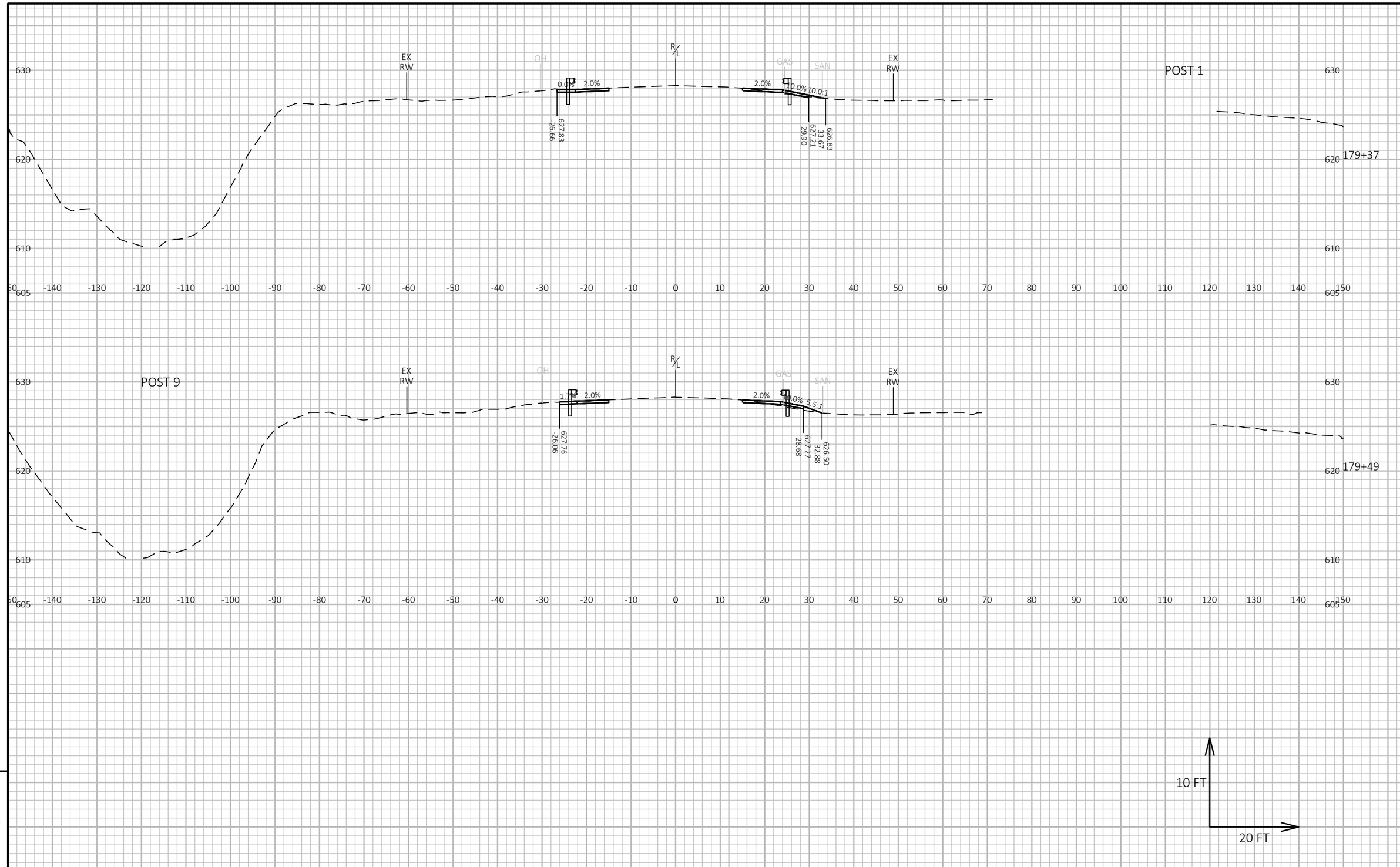

9

9

PROJECT NO: 3240-16-70	HWY: STH 32	COUNTY: KENOSHA	CROSS SECTIONS: STH 32	SHEET 160	E

FILE NAME : L:\DESIGN PROJECTS\3240-16-00 STH 32\10. ROADWAY\CIVIL 3D\32401600\SHEETSPLAN\090201-XS.DWG
LAYOUT NAME - 090202-xs
PLOT DATE : 10/14/2022 9:57 AM
PLOT BY : REBECCA JONARDI
PLOT NAME :
PLOT SCALE : 1 IN:20 FT HORZ. / 1 IN:10 FT VERT.
WISDOT/CADDS SHEET 49

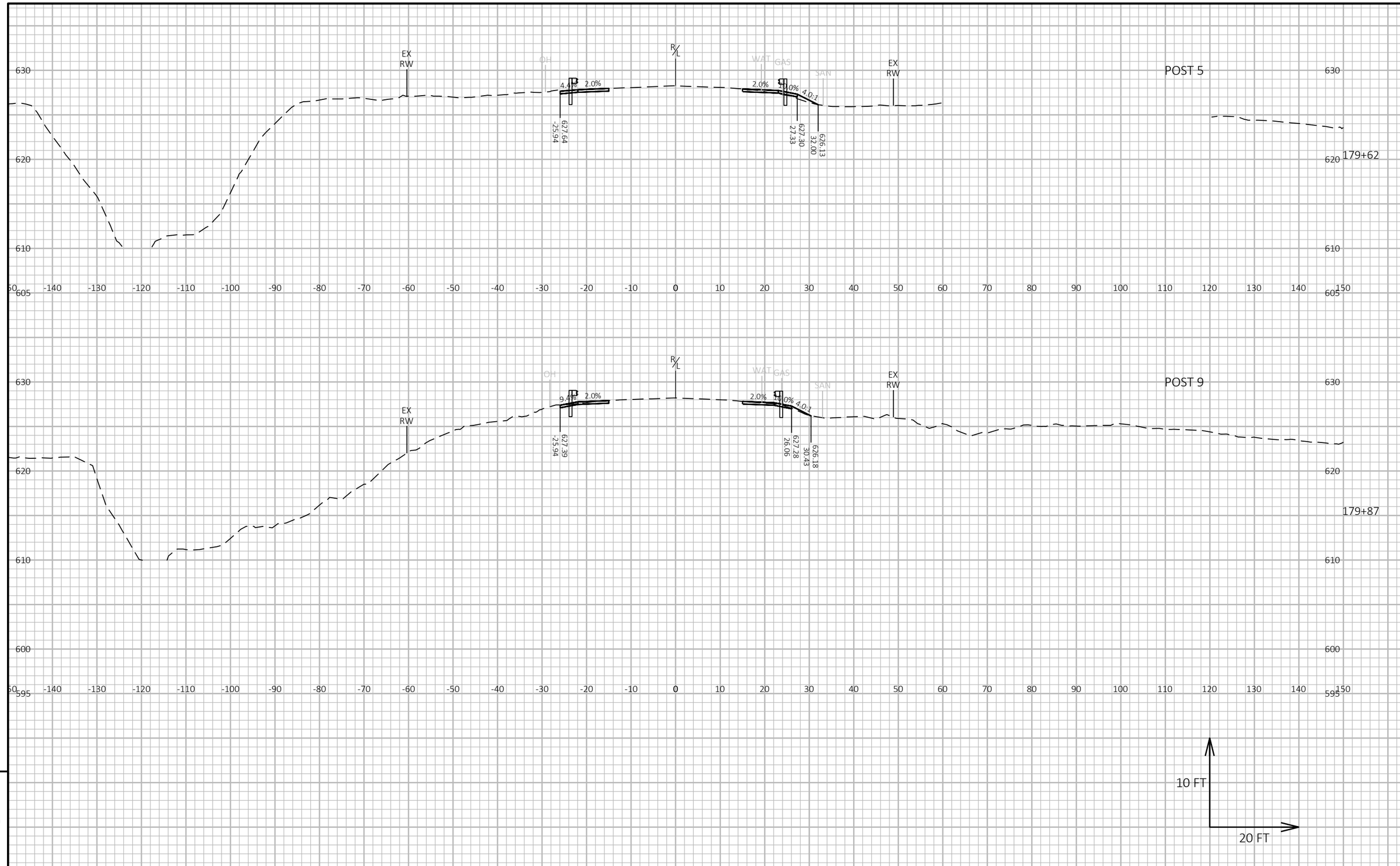

9

9

PROJECT NO: 3240-16-70	HWY: STH 32	COUNTY: KENOSHA	CROSS SECTIONS: STH 32	SHEET 161	E

FILE NAME : L:\DESIGN PROJECTS\3240-16-00 STH 32\10. ROADWAY\CIVIL 3D\32401600\SHEETSPLAN\090201-XS.DWG
LAYOUT NAME - 090203-xs

PLOT DATE : 10/14/2022 9:57 AM PLOT BY : REBECCA JONARDI PLOT NAME : PLOT SCALE : 1 IN:20 FT HORZ. / 1 IN:10 FT VERT.

WISDOT/CADDS SHEET 49

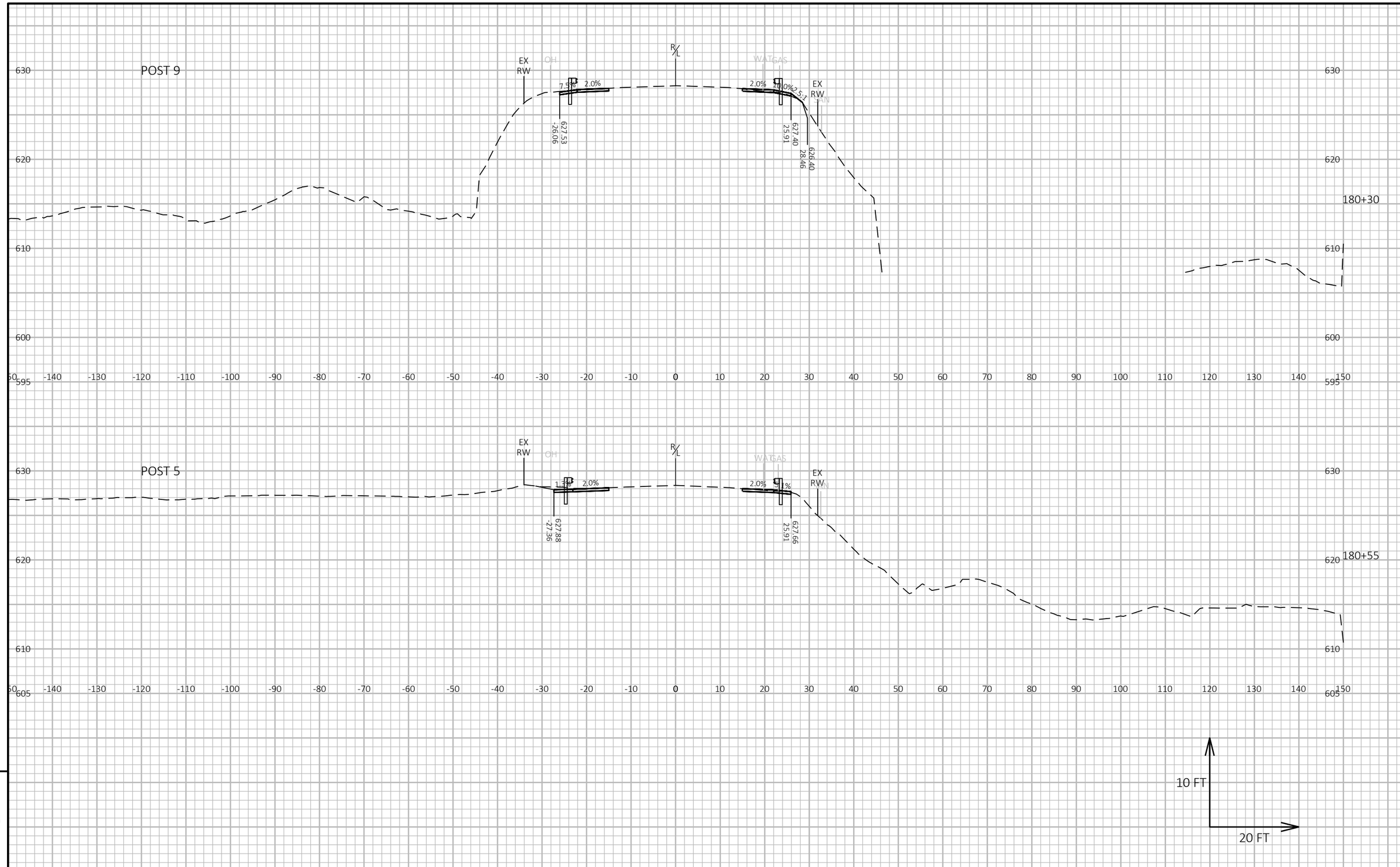

9

9

PROJECT NO: 3240-16-70	HWY: STH 32	COUNTY: KENOSHA	CROSS SECTIONS: STH 32	SHEET 162	E

FILE NAME : L:\DESIGN PROJECTS\3240-16-00 STH 32\10. ROADWAY\CIVIL 3D\32401600\SHEETSPLAN\090201-XS.DWG
LAYOUT NAME - 090204-xs

PLOT DATE : 10/14/2022 9:57 AM PLOT BY : REBECCA JONARDI PLOT NAME : PLOT SCALE : 1 IN:20 FT HORZ. / 1 IN:10 FT VERT.

WISDOT/CADDS SHEET 49

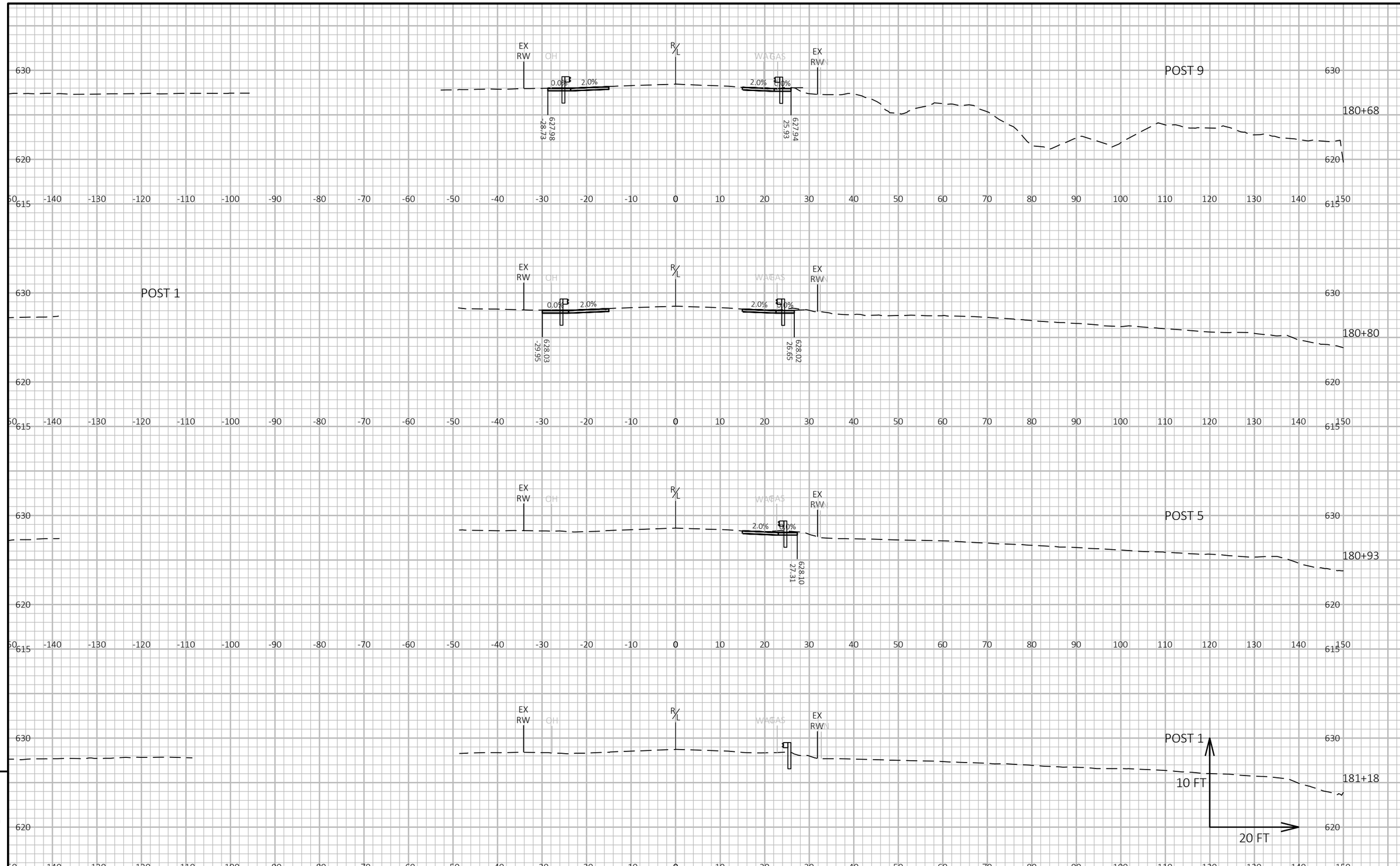

9

9

PROJECT NO: 3240-16-70	HWY: STH 32	COUNTY: KENOSHA	CROSS SECTIONS: STH 32	SHEET 163	E

FILE NAME : L:\DESIGN PROJECTS\3240-16-00 STH 32\10. ROADWAY\CIVIL 3D\32401600\SHEETSPLAN\090201-XS.DWG
LAYOUT NAME - 090205-xs
PLOT DATE : 10/14/2022 9:57 AM
PLOT BY : REBECCA JONARDI
PLOT NAME :
PLOT SCALE : 1 IN:20 FT HORZ. / 1 IN:10 FT VERT.
WISDOT/CADDS SHEET 49

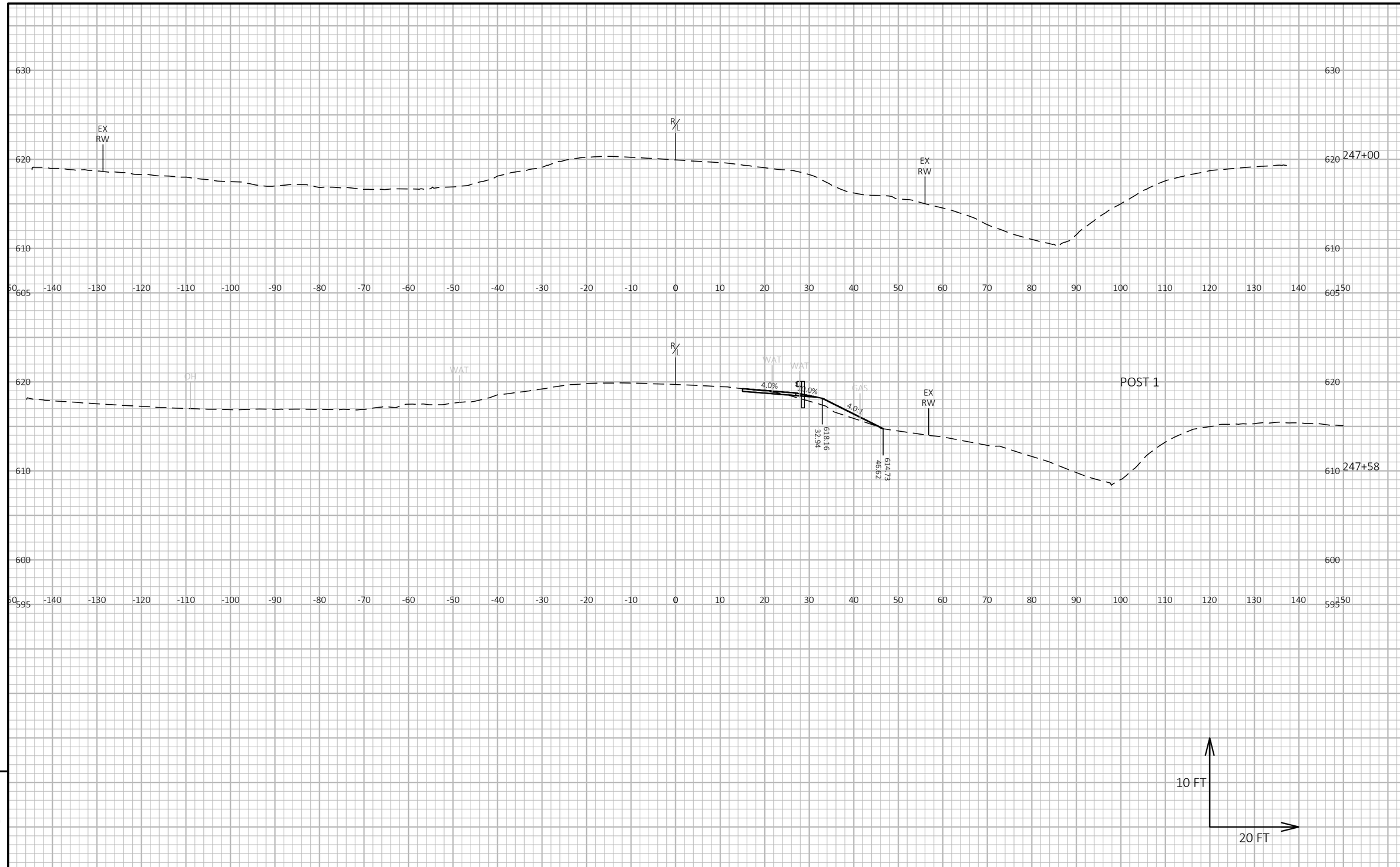

9

PROJECT NO: 3240-16-70	HWY: STH 32	COUNTY: KENOSHA	CROSS SECTIONS: STH 32	SHEET 164	E

FILE NAME : L:\DESIGN PROJECTS\3240-16-00 STH 32\10. ROADWAY\CIVIL 3D\32401600\SHEETSPLAN\090202-XS.DWG
LAYOUT NAME - 090208-xs
PLOT DATE : 10/14/2022 9:57 AM
PLOT BY : REBECCA JONARDI
PLOT NAME :
PLOT SCALE : 1 IN:20 FT HORZ. / 1 IN:10 FT VERT.
WISDOT/CADDS SHEET 49

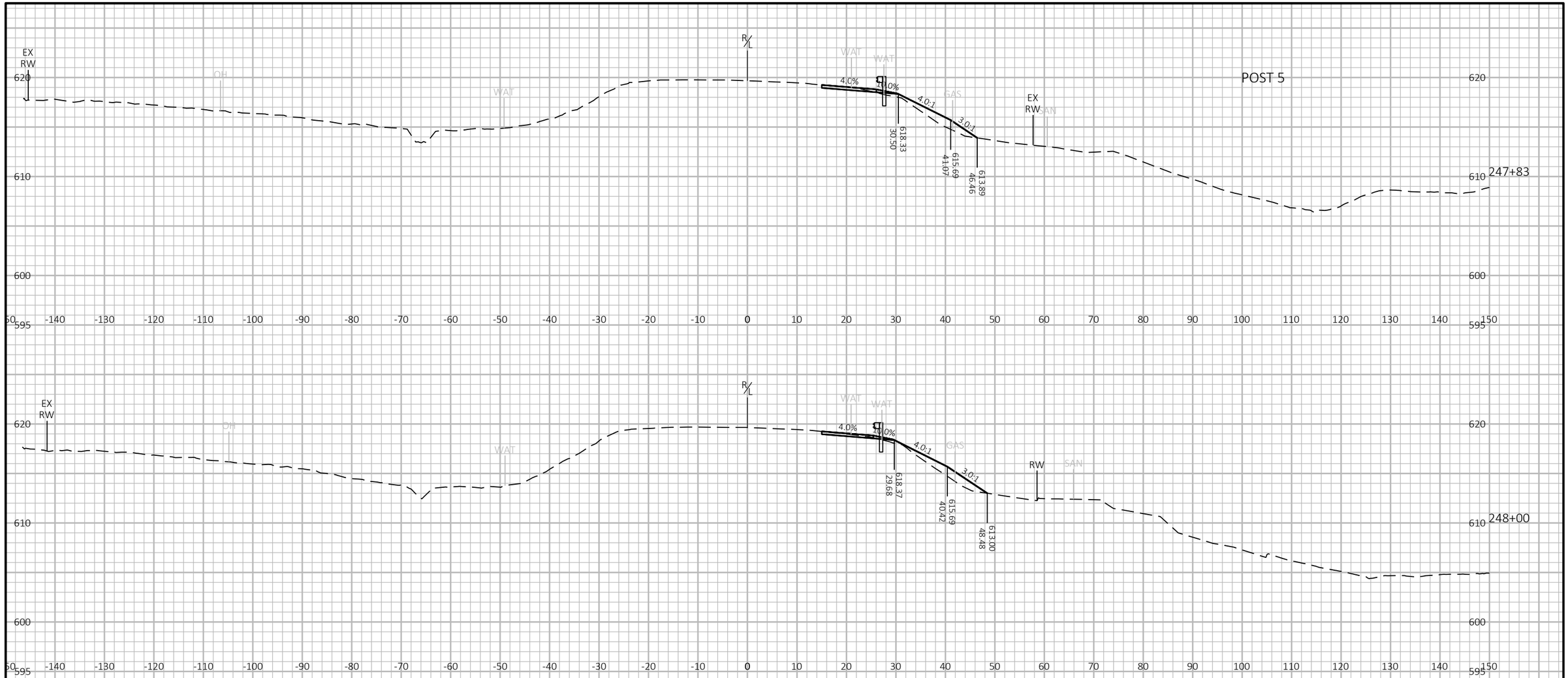

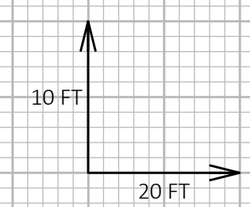

9

9

PROJECT NO: 3240-16-70	HWY: STH 32	COUNTY: KENOSHA	CROSS SECTIONS: STH 32	SHEET 165	E

FILE NAME : L:\DESIGN PROJECTS\3240-16-00 STH 32\10. ROADWAY\CIVIL 3D\32401600\SHEETSPLAN\090202-XS.DWG
LAYOUT NAME - 090209-xs
PLOT DATE : 10/14/2022 9:57 AM PLOT BY : REBECCA JONARDI PLOT NAME : PLOT SCALE : 1 IN:20 FT HORZ. / 1 IN:10 FT VERT.
WISDOT/CADDS SHEET 49

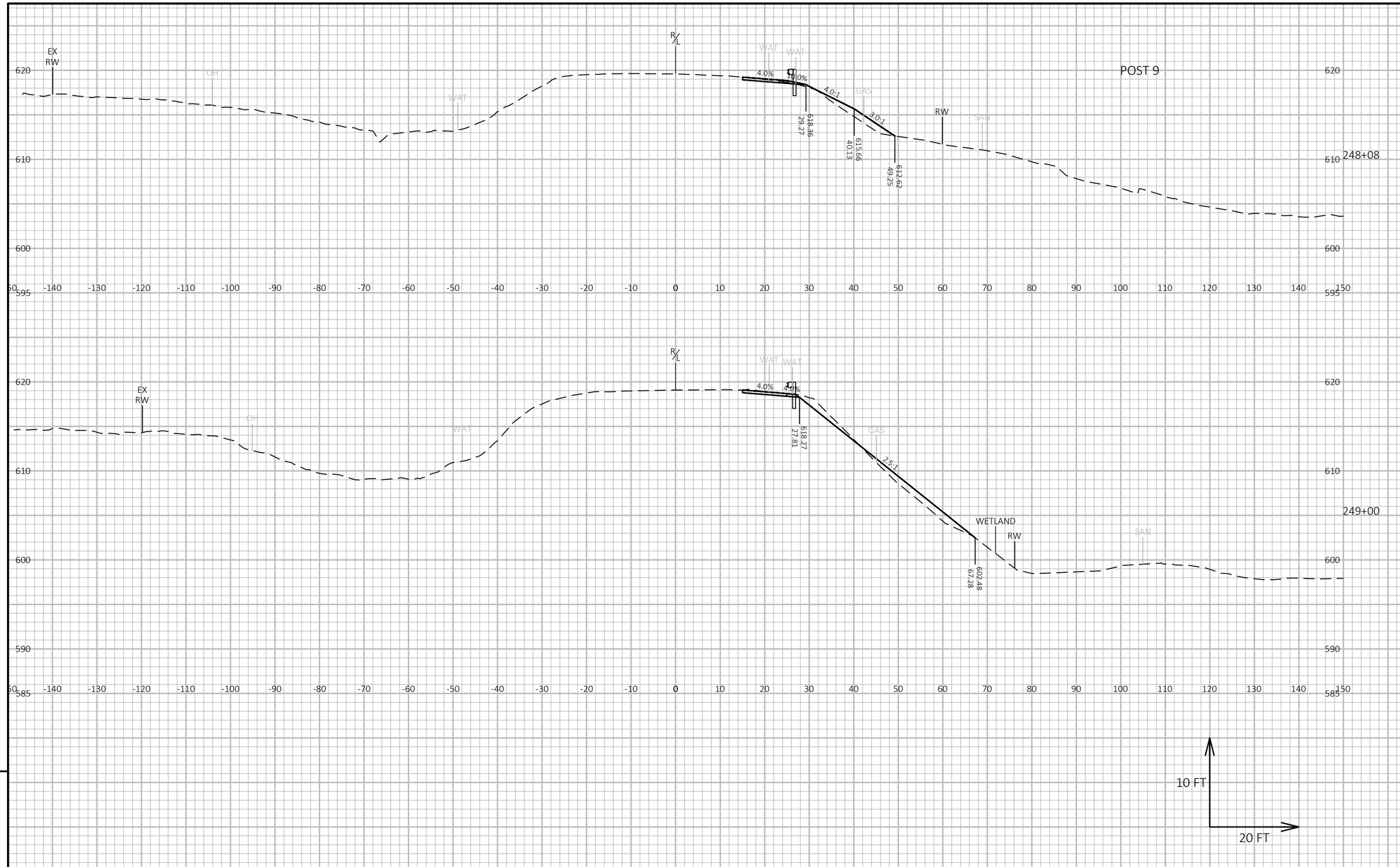

9

9

PROJECT NO: 3240-16-70	HWY: STH 32	COUNTY: KENOSHA	CROSS SECTIONS: STH 32	SHEET 166	E

FILE NAME : L:\DESIGN PROJECTS\3240-16-00 STH 32\10. ROADWAY\CIVIL 3D\32401600\SHEETSPLAN\090202-XS.DWG
LAYOUT NAME - 090210-xs
PLOT DATE : 10/14/2022 9:57 AM
PLOT BY : REBECCA JONARDI
PLOT NAME :
PLOT SCALE : 1 IN:20 FT HORZ. / 1 IN:10 FT VERT.
WISDOT/CADDS SHEET 49

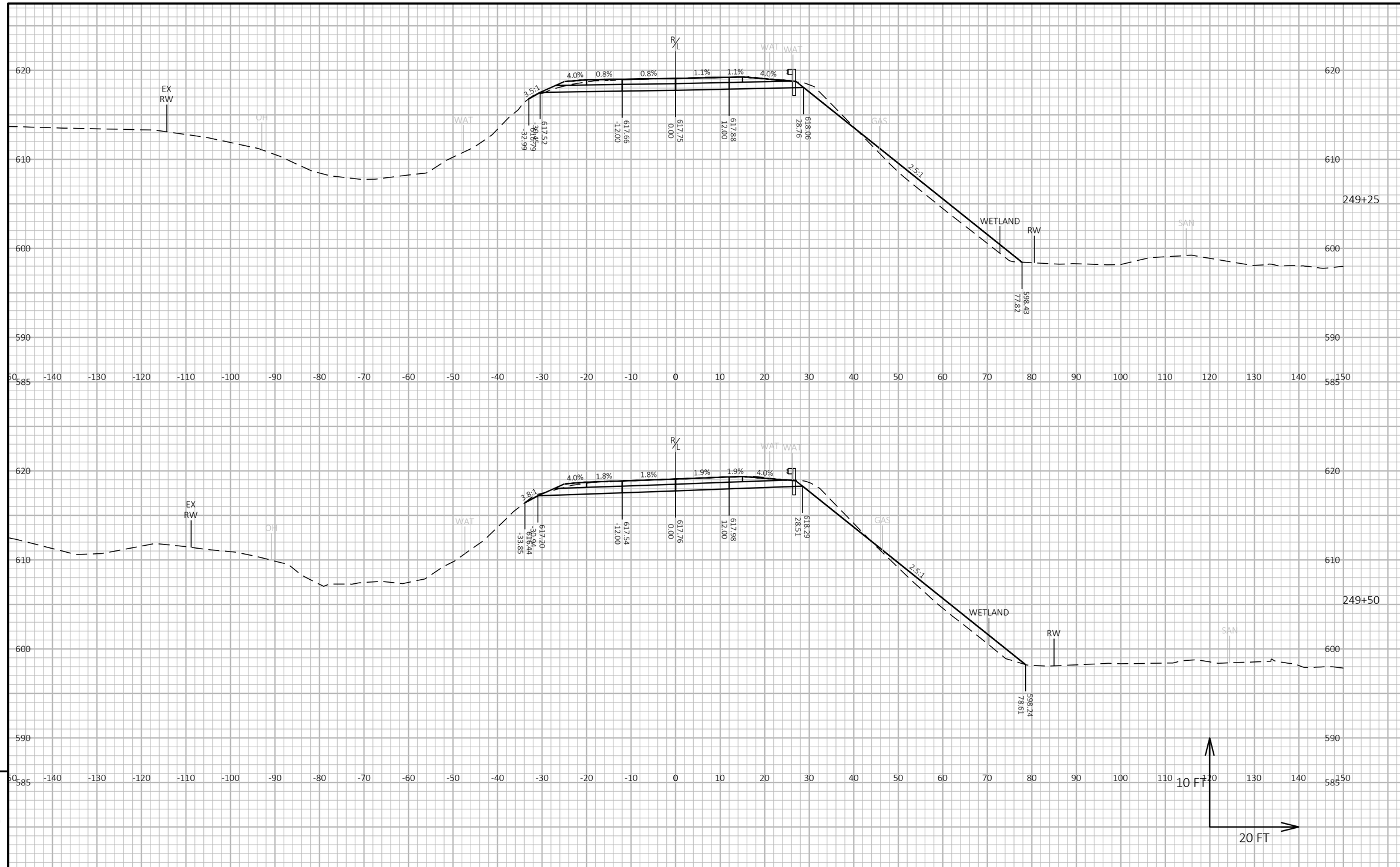

PROJECT NO: 3240-16-70	HWY: STH 32	COUNTY: KENOSHA	CROSS SECTIONS: STH 32	SHEET 167	E

FILE NAME : L:\DESIGN PROJECTS\3240-16-00 STH 32\10. ROADWAY\CIVIL 3D\32401600\SHEETSPLAN\090202-XS.DWG
LAYOUT NAME - 090211-xs
PLOT DATE : 11/15/2022 8:47 AM
PLOT BY : JOE MAAS
PLOT NAME :
PLOT SCALE : 1 IN:20 FT HORZ. / 1 IN:10 FT VERT.

WISDOT/CADDS SHEET 49

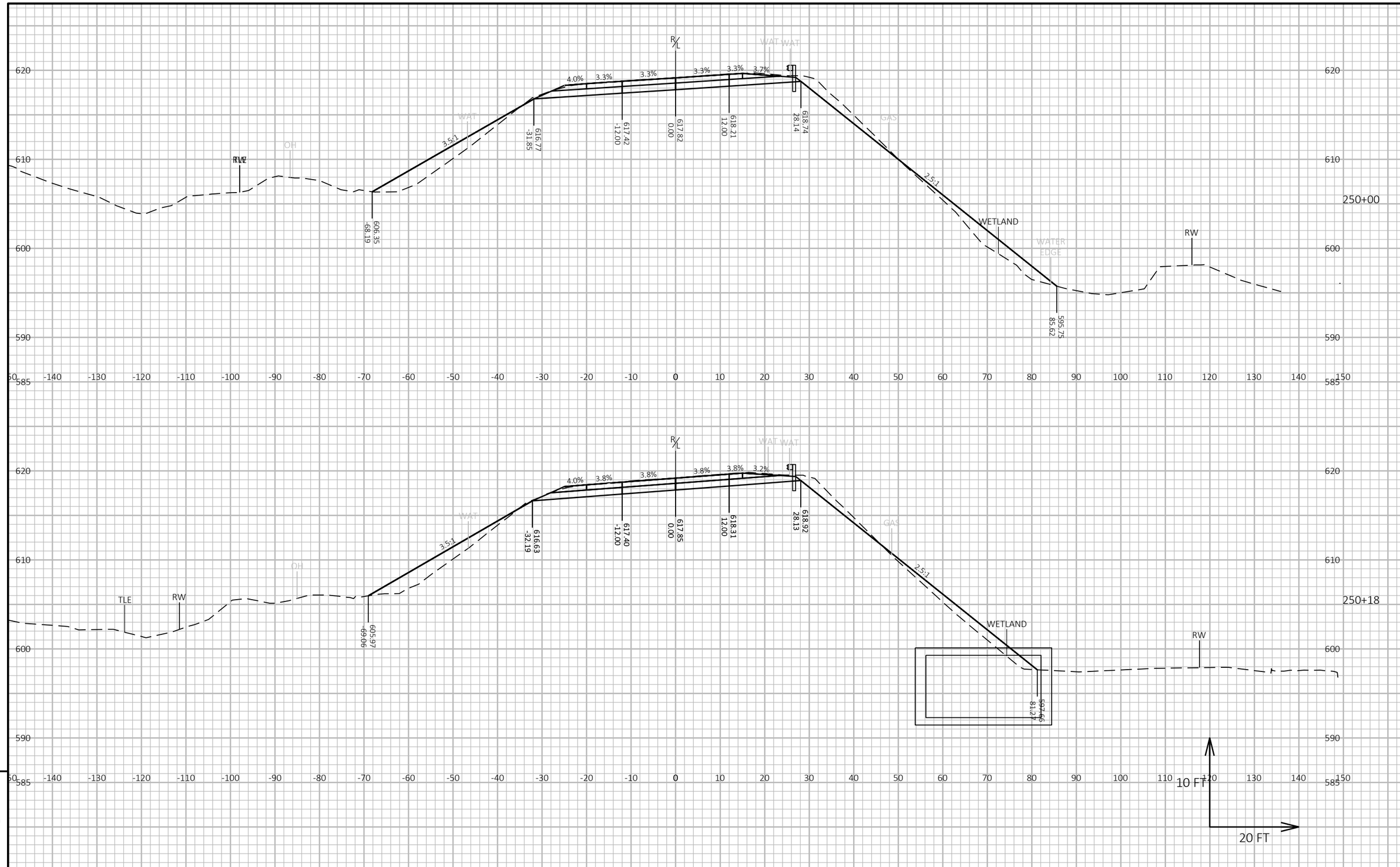

PROJECT NO: 3240-16-70	HWY: STH 32	COUNTY: KENOSHA	CROSS SECTIONS: STH 32	SHEET 168	E

FILE NAME : L:\DESIGN PROJECTS\3240-16-00 STH 32\10. ROADWAY\CIVIL 3D\32401600\SHEETSPLAN\090202-XS.DWG
LAYOUT NAME - 090212-xs
PLOT DATE : 11/15/2022 8:47 AM
PLOT BY : JOE MAAS
PLOT NAME :
PLOT SCALE : 1 IN:20 FT HORZ. / 1 IN:10 FT VERT.

WISDOT/CADDS SHEET 49

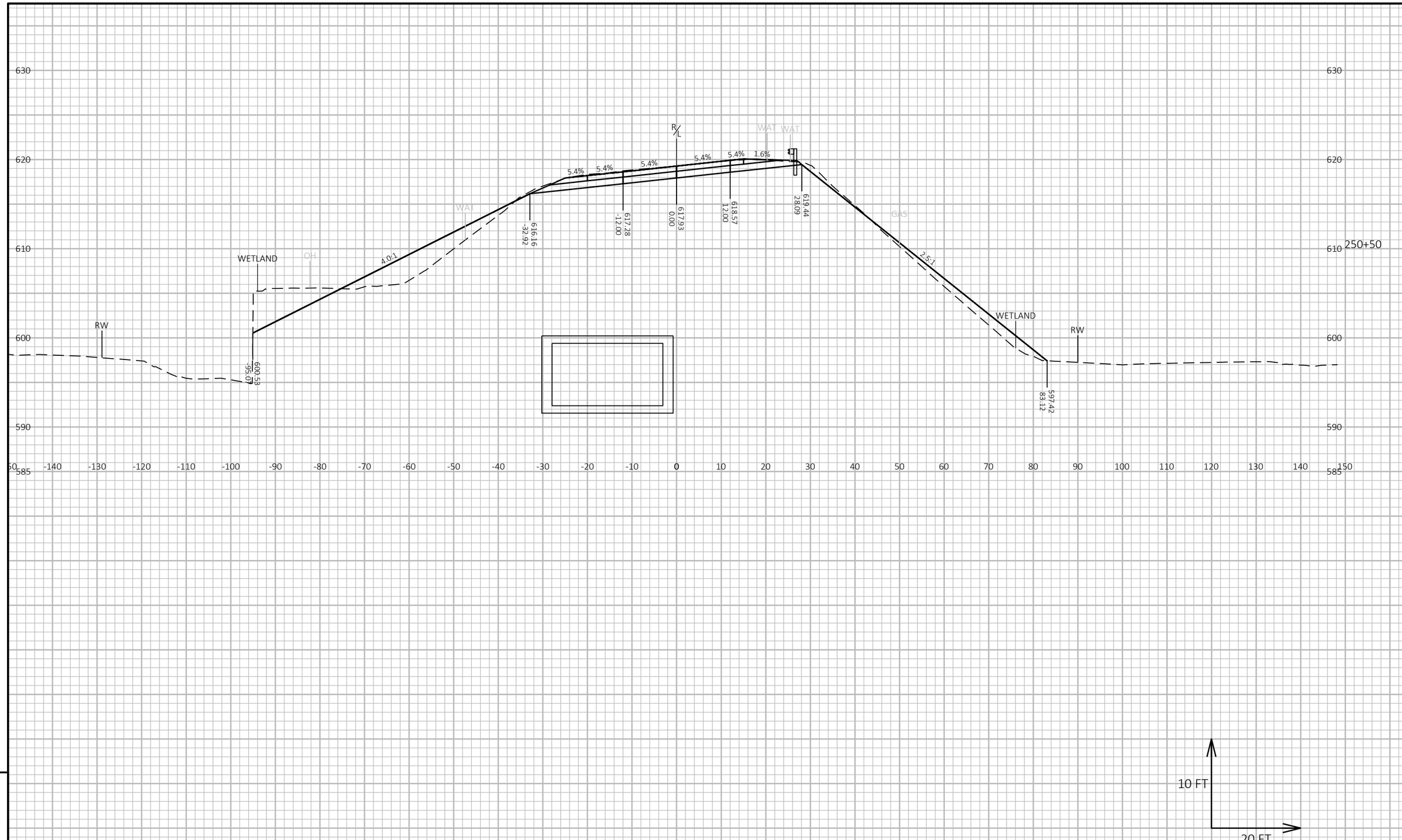

9

9

PROJECT NO: 3240-16-70	HWY: STH 32	COUNTY: KENOSHA	CROSS SECTIONS: STH 32	SHEET 169	E

FILE NAME : L:\DESIGN PROJECTS\3240-16-00 STH 32\10. ROADWAY\CIVIL 3D\32401600\SHEETSPLAN\090202-XS.DWG
LAYOUT NAME - 090213-xs
PLOT DATE : 11/15/2022 8:47 AM
PLOT BY : JOE MAAS
PLOT NAME :
PLOT SCALE : 1 IN:20 FT HORZ. / 1 IN:10 FT VERT.
WISDOT/CADDS SHEET 49

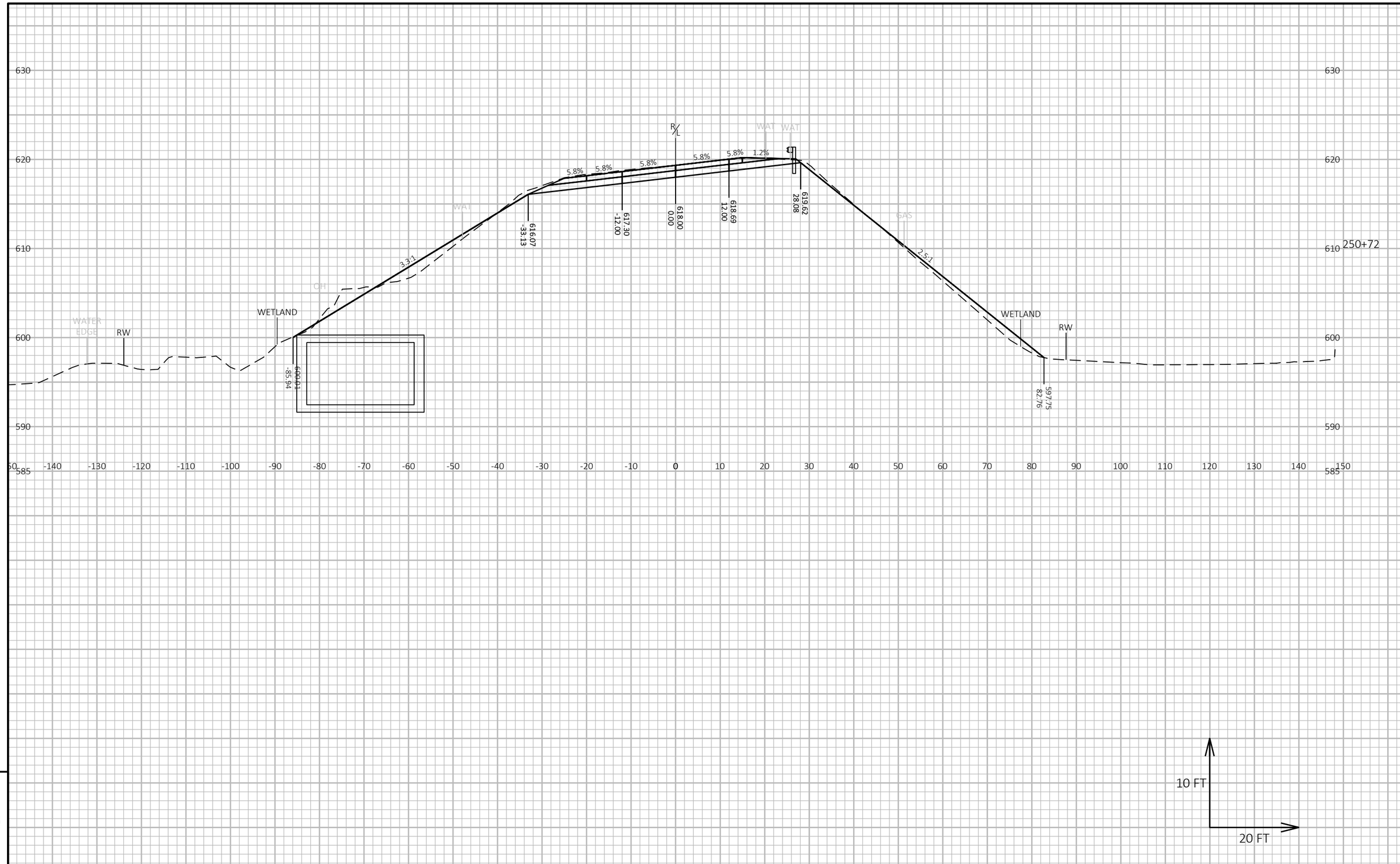

9

9

PROJECT NO: 3240-16-70	HWY: STH 32	COUNTY: KENOSHA	CROSS SECTIONS: STH 32	SHEET 170	E

FILE NAME : L:\DESIGN PROJECTS\3240-16-00 STH 32\10. ROADWAY\CIVIL 3D\32401600\SHEETSPLAN\090202-XS.DWG
LAYOUT NAME - 090214-xs
PLOT DATE : 11/15/2022 8:47 AM
PLOT BY : JOE MAAS
PLOT NAME :
PLOT SCALE : 1 IN:20 FT HORZ. / 1 IN:10 FT VERT.
WISDOT/CADDS SHEET 49

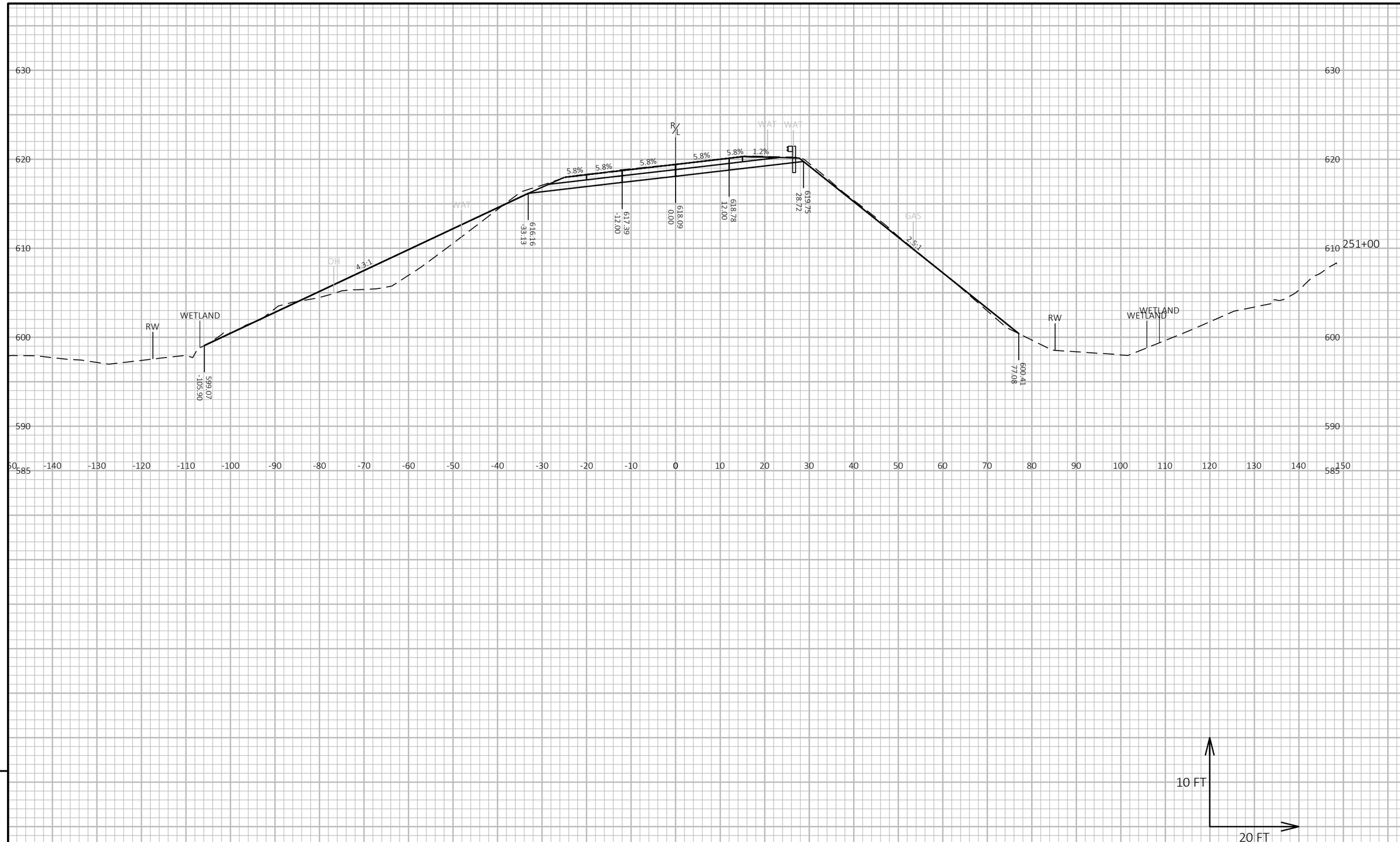

9

9

PROJECT NO: 3240-16-70	HWY: STH 32	COUNTY: KENOSHA	CROSS SECTIONS: STH 32	SHEET 171	E

FILE NAME : L:\DESIGN PROJECTS\3240-16-00 STH 32\10. ROADWAY\CIVIL 3D\32401600\SHEETSPLAN\090202-XS.DWG
LAYOUT NAME - 090215-xs
PLOT DATE : 11/15/2022 8:47 AM
PLOT BY : JOE MAAS
PLOT NAME :
PLOT SCALE : 1 IN:20 FT HORZ. / 1 IN:10 FT VERT.
WISDOT/CADDS SHEET 49

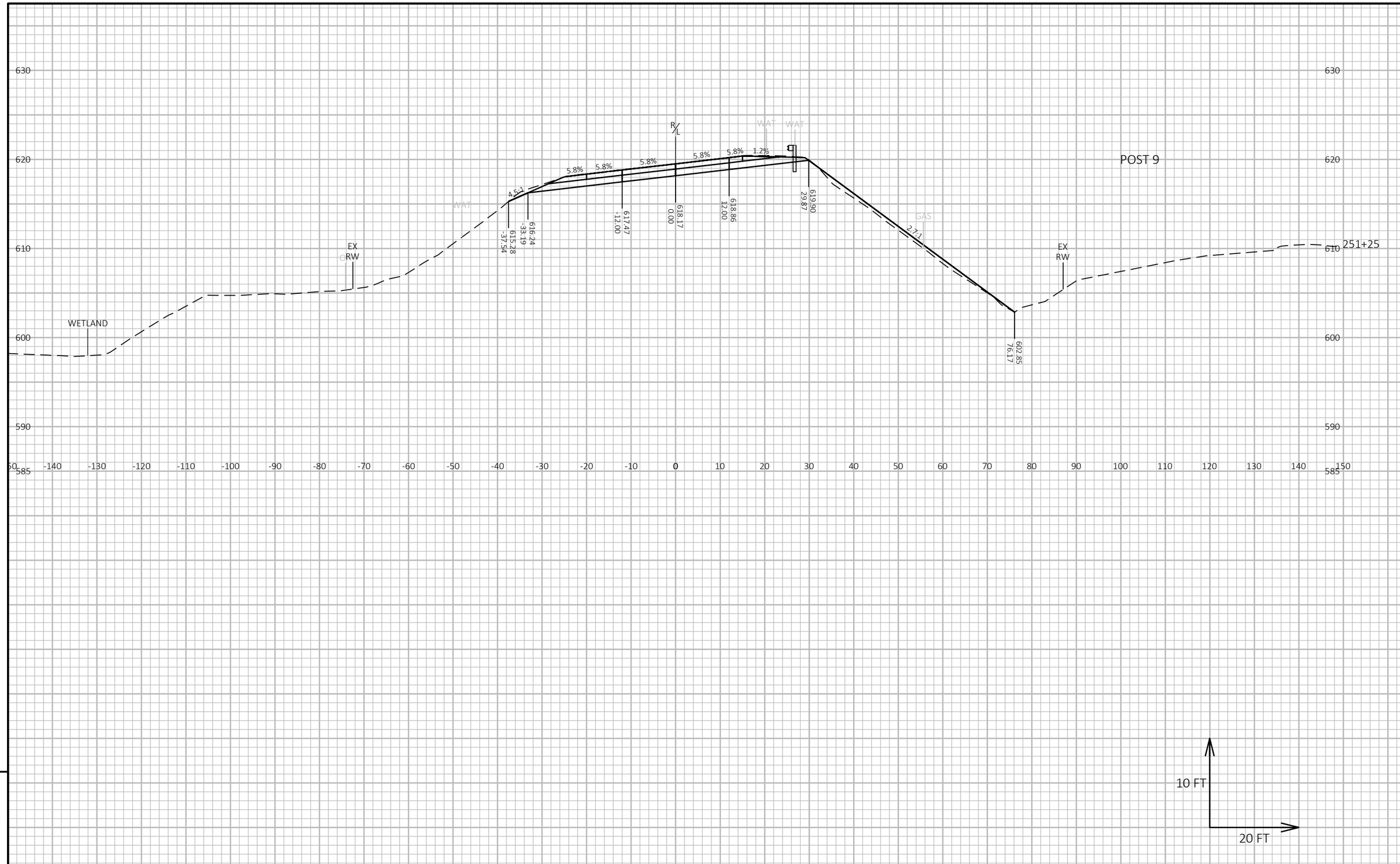

PROJECT NO: 3240-16-70	HWY: STH 32	COUNTY: KENOSHA	CROSS SECTIONS: STH 32	SHEET 172	E

FILE NAME : L:\DESIGN PROJECTS\3240-16-00 STH 32\10. ROADWAY\CIVIL 3D\32401600\SHEETSPLAN\090202-XS.DWG
LAYOUT NAME - 090216-xs
PLOT DATE : 11/15/2022 8:47 AM
PLOT BY : JOE MAAS
PLOT NAME :
PLOT SCALE : 1 IN:20 FT HORZ. / 1 IN:10 FT VERT.
WISDOT/CADDS SHEET 49

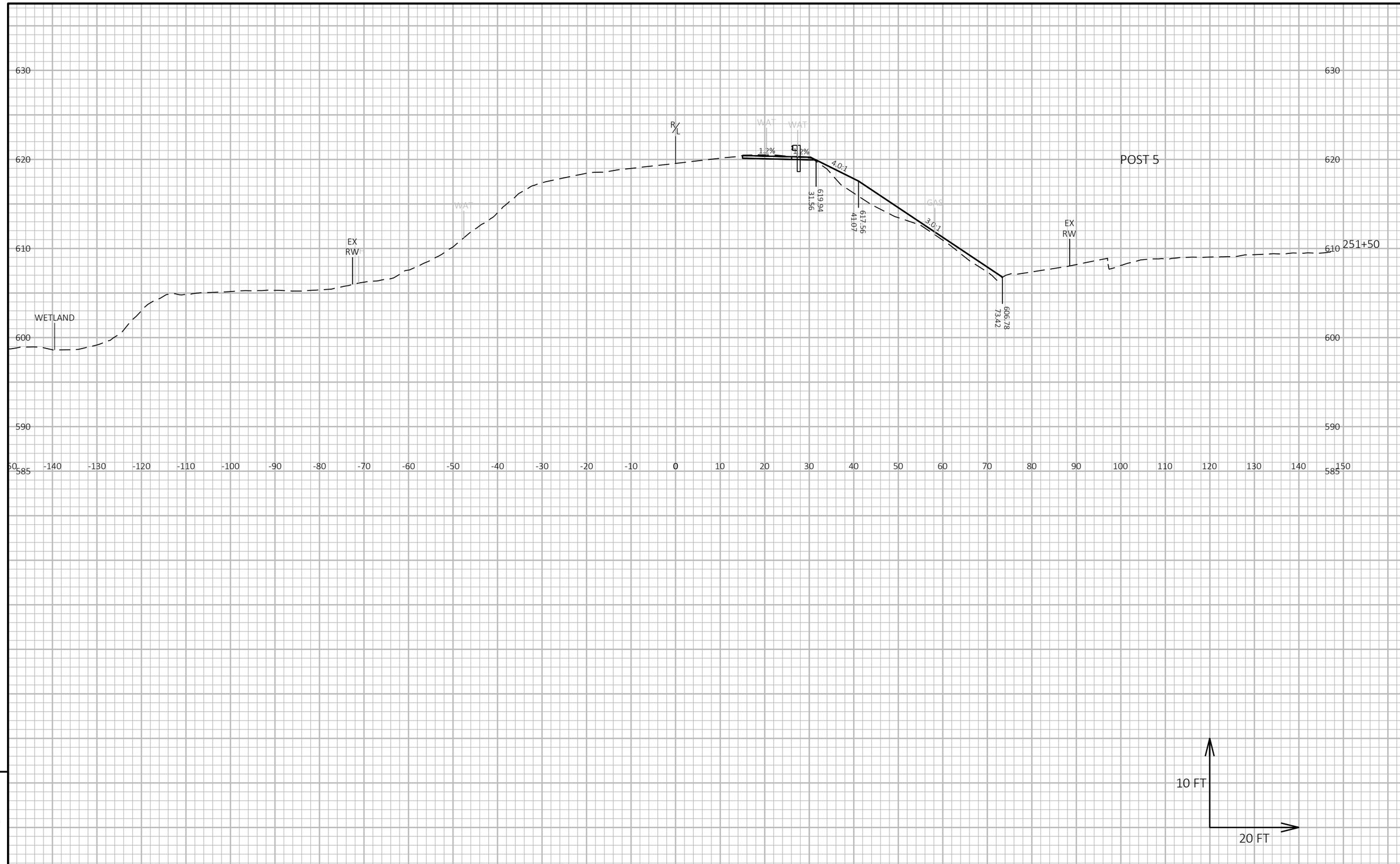

9

9

PROJECT NO: 3240-16-70	HWY: STH 32	COUNTY: KENOSHA	CROSS SECTIONS: STH 32	SHEET 173	E

FILE NAME : L:\DESIGN PROJECTS\3240-16-00 STH 32\10. ROADWAY\CIVIL 3D\32401600\SHEETSPLAN\090202-XS.DWG
LAYOUT NAME - 090217-xs
PLOT DATE : 10/14/2022 9:57 AM
PLOT BY : REBECCA JONARDI
PLOT NAME :
PLOT SCALE : 1 IN:20 FT HORZ. / 1 IN:10 FT VERT.
WISDOT/CADDS SHEET 49

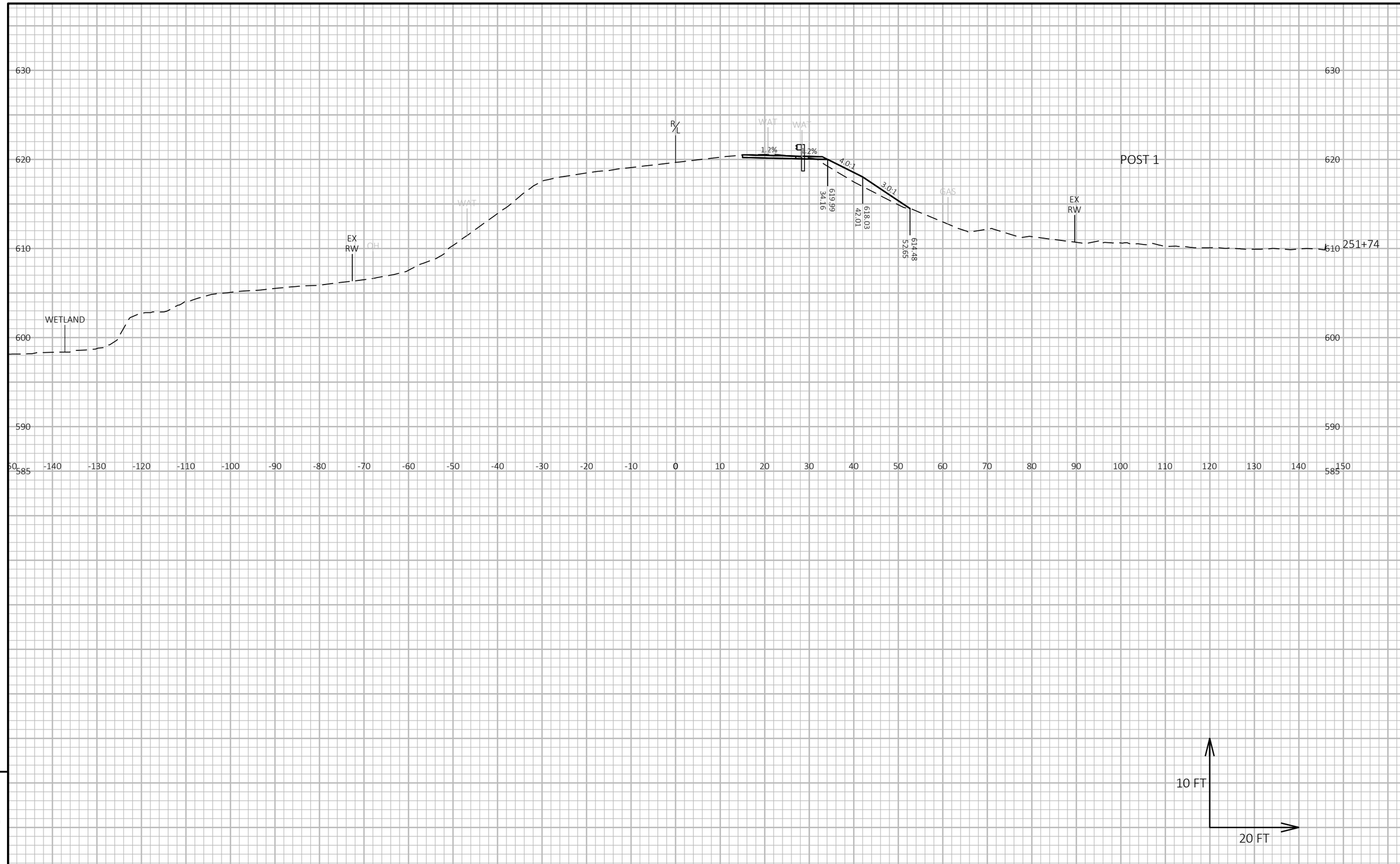

9

9

PROJECT NO: 3240-16-70	HWY: STH 32	COUNTY: KENOSHA	CROSS SECTIONS: STH 32	SHEET 174	E

FILE NAME : L:\DESIGN PROJECTS\3240-16-00 STH 32\10. ROADWAY\CIVIL 3D\32401600\SHEETSPLAN\090202-XS.DWG
LAYOUT NAME - 090218-xs
PLOT DATE : 10/14/2022 9:57 AM
PLOT BY : REBECCA JONARDI
PLOT NAME :
PLOT SCALE : 1 IN:20 FT HORZ. / 1 IN:10 FT VERT.
WISDOT/CADDS SHEET 49

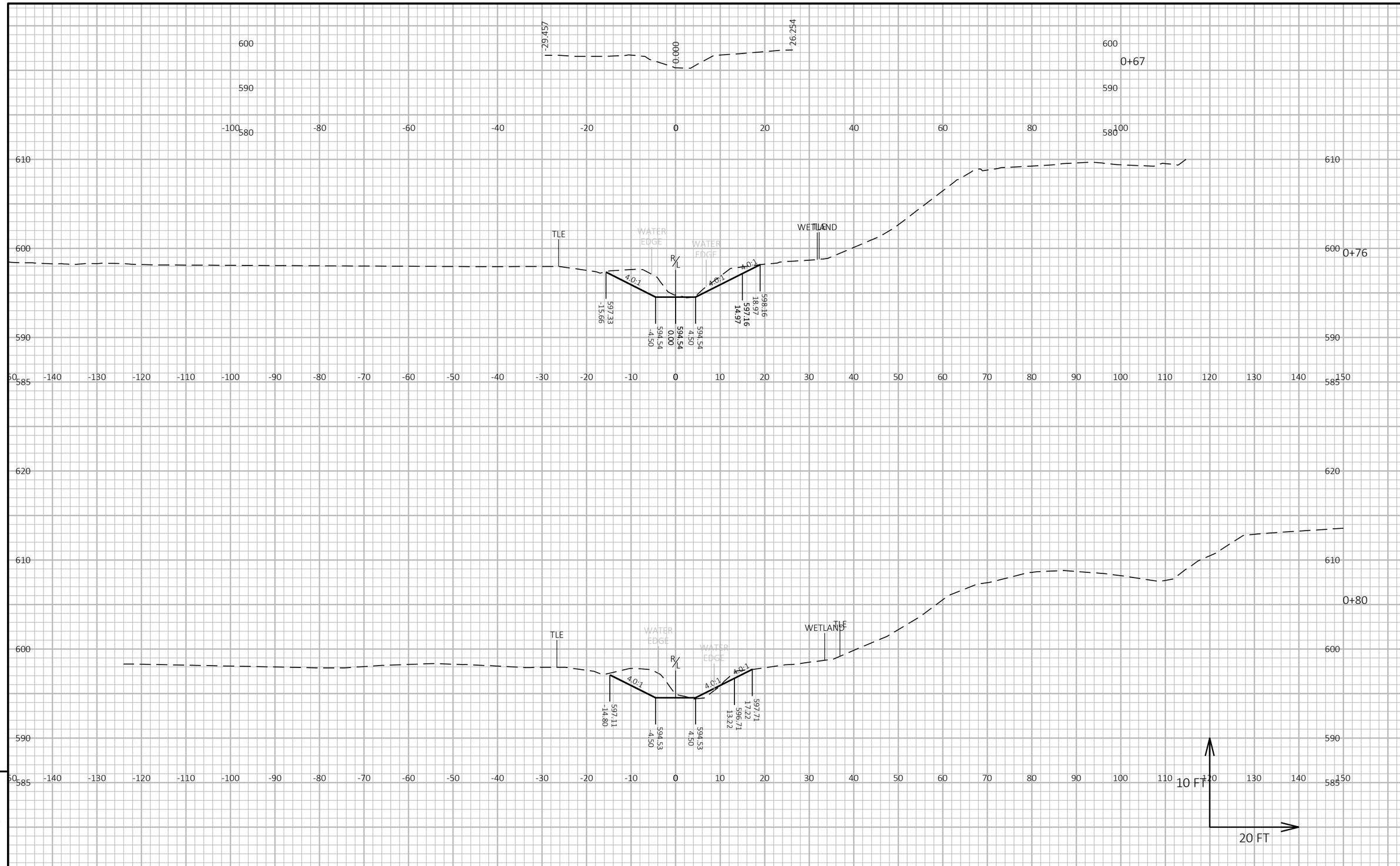

9

9

PROJECT NO: 3240-16-70	HWY: STH 32	COUNTY: KENOSHA	CROSS SECTIONS: BARNES CREEK	SHEET 175	E

FILE NAME : L:\DESIGN PROJECTS\3240-16-00 STH 32\10. ROADWAY\CIVIL 3D\32401600\SHEETSPLAN\090202-XS.DWG
LAYOUT NAME - 090219-xs
PLOT DATE : 10/21/2022 10:59 AM
PLOT BY : REBECCA JONARDI
PLOT NAME :
PLOT SCALE : 1 IN:20 FT HORZ. / 1 IN:10 FT VERT.

WISDOT/CADDS SHEET 49

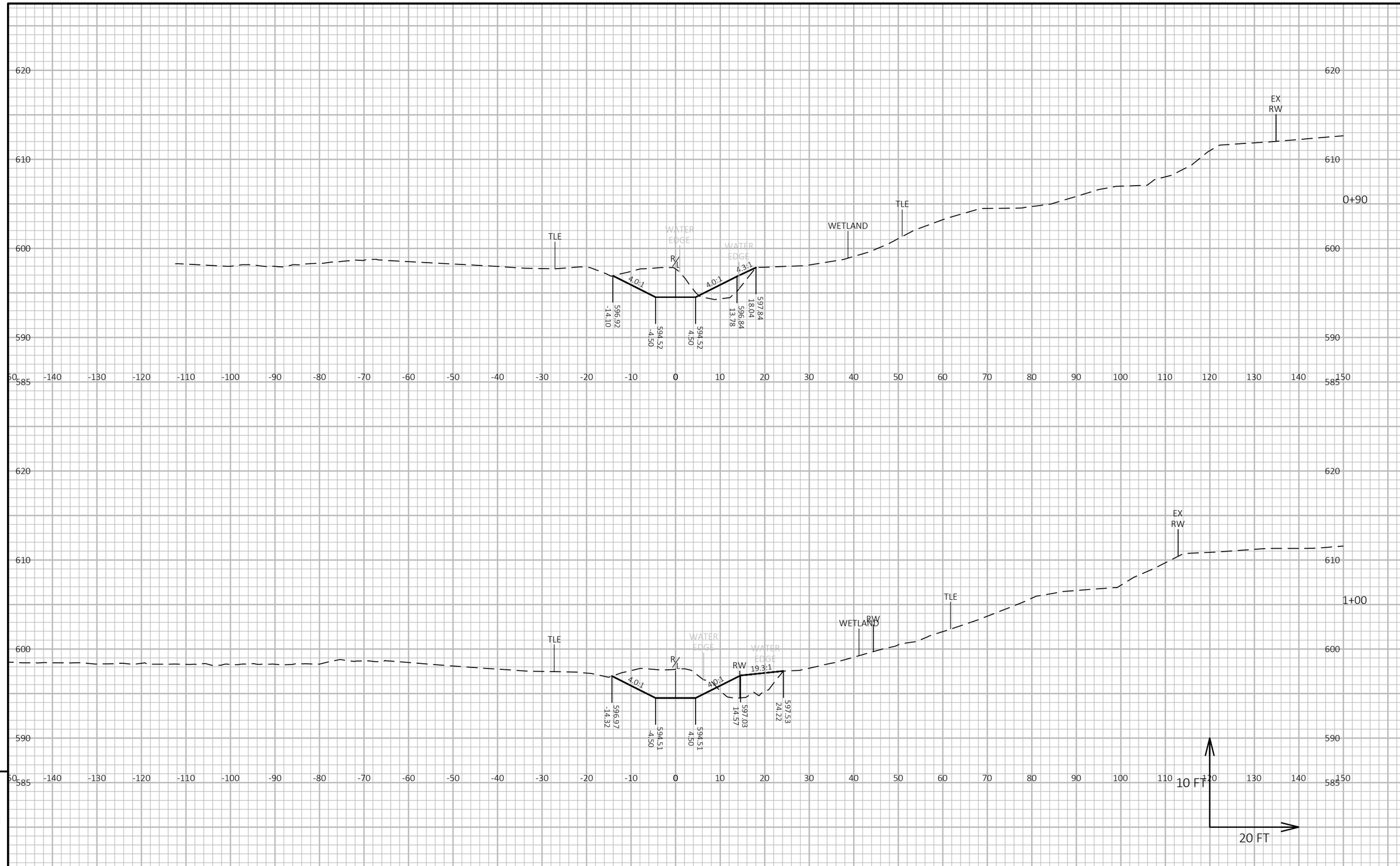

PROJECT NO: 3240-16-70	HWY: STH 32	COUNTY: KENOSHA	CROSS SECTIONS: BARNES CREEK	SHEET 176	E

FILE NAME : L:\DESIGN PROJECTS\3240-16-00 STH 32\10. ROADWAY\CIVIL 3D\32401600\SHEETSPLAN\090202-XS.DWG
LAYOUT NAME - 090220-xs
PLOT DATE : 10/21/2022 10:59 AM PLOT BY : REBECCA JONARDI PLOT NAME : PLOT SCALE : 1 IN:20 FT HORZ. / 1 IN:10 FT VERT.

WISDOT/CADDS SHEET 49

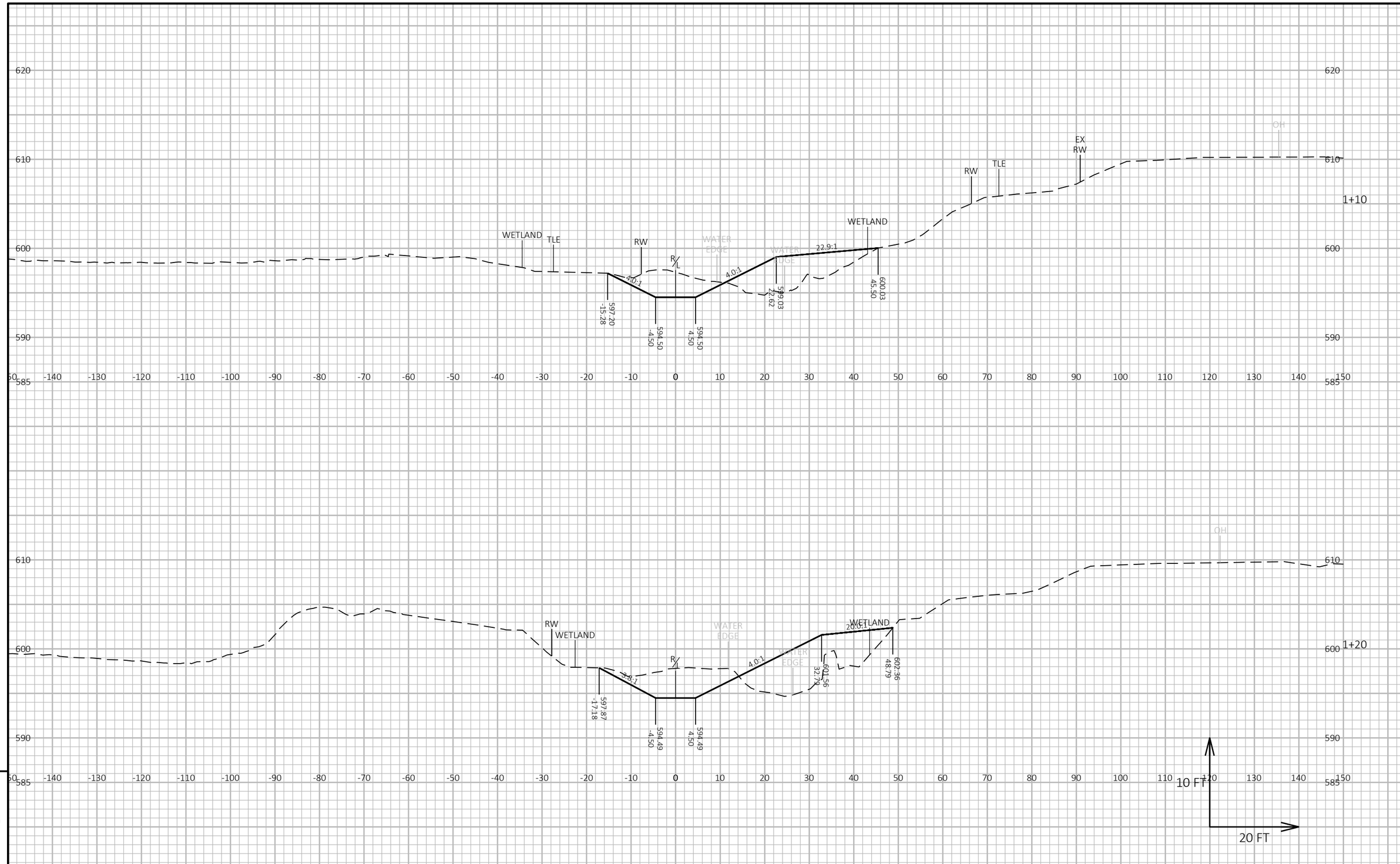

PROJECT NO: 3240-16-70	HWY: STH 32	COUNTY: KENOSHA	CROSS SECTIONS: BARNES CREEK	SHEET 177	E

FILE NAME : L:\DESIGN PROJECTS\3240-16-00 STH 32\10. ROADWAY\CIVIL 3D\32401600\SHEETSPLAN\090202-XS.DWG
LAYOUT NAME - 090221-xs
PLOT DATE : 10/21/2022 10:59 AM PLOT BY : REBECCA JONARDI PLOT NAME : PLOT SCALE : 1 IN:20 FT HORZ. / 1 IN:10 FT VERT.

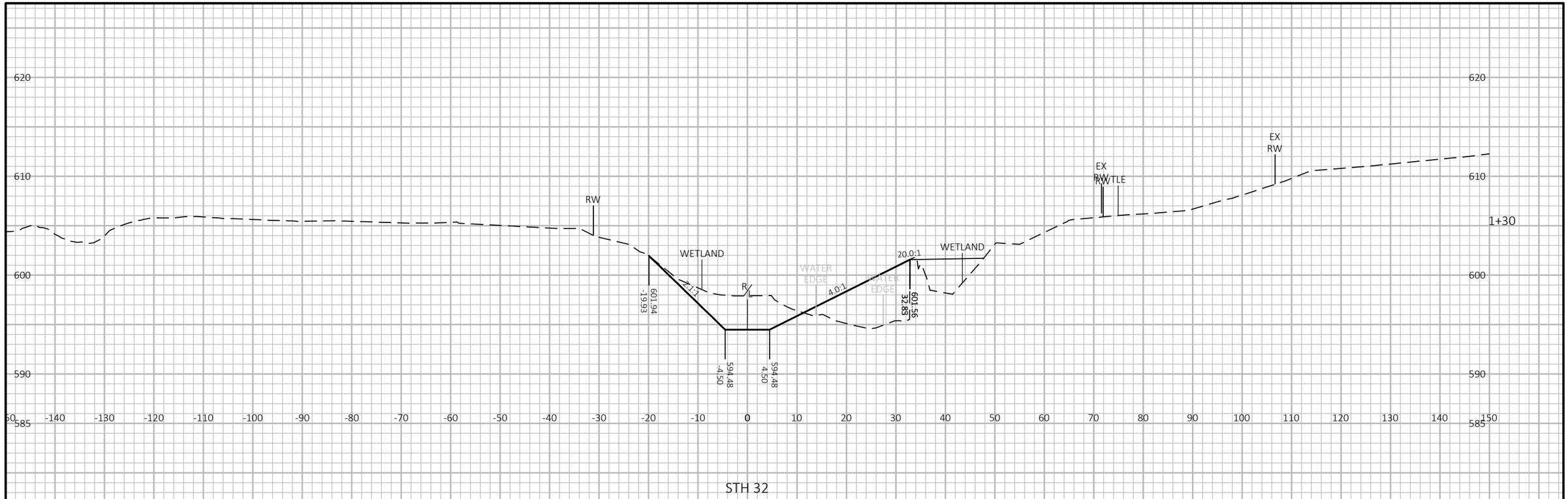

STH 32

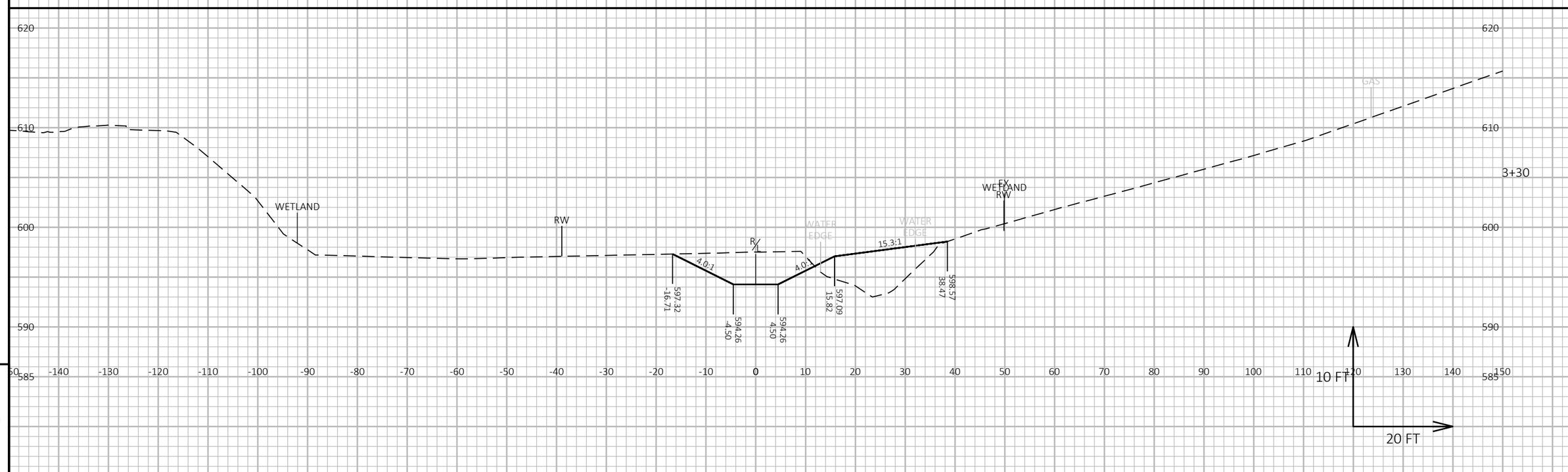

9

9

PROJECT NO: 3240-16-70	HWY: STH 32	COUNTY: KENOSHA	CROSS SECTIONS: BARNES CREEK	SHEET 178	E

FILE NAME : L:\DESIGN PROJECTS\3240-16-00 STH 32\10. ROADWAY\CIVIL 3D\32401600\SHEETSPLAN\090202-XS.DWG
LAYOUT NAME - 090222-xs
PLOT DATE : 10/21/2022 10:59 AM PLOT BY : REBECCA JONARDI PLOT NAME : PLOT SCALE : 1 IN:20 FT HORZ. / 1 IN:10 FT VERT.

WISDOT/CADDS SHEET 49

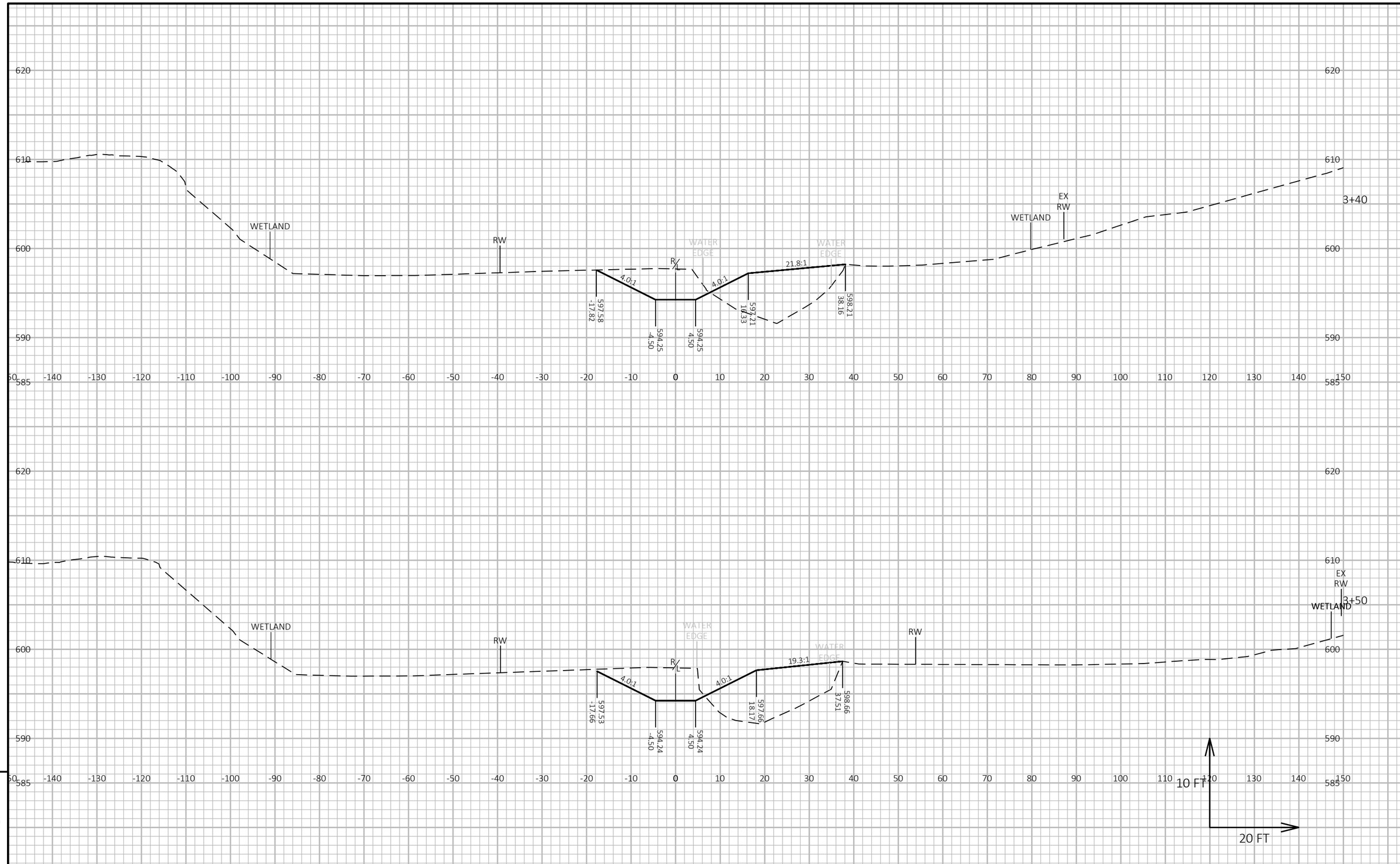

9

9

PROJECT NO: 3240-16-70	HWY: STH 32	COUNTY: KENOSHA	CROSS SECTIONS: BARNES CREEK	SHEET 179	E

FILE NAME : L:\DESIGN PROJECTS\3240-16-00 STH 32\10. ROADWAY\CIVIL 3D\32401600\SHEETSPLAN\090202-XS.DWG
LAYOUT NAME - 090223-xs
PLOT DATE : 10/21/2022 10:59 AM
PLOT BY : REBECCA JONARDI
PLOT NAME :
PLOT SCALE : 1 IN:20 FT HORZ. / 1 IN:10 FT VERT.
WISDOT/CADDS SHEET 49

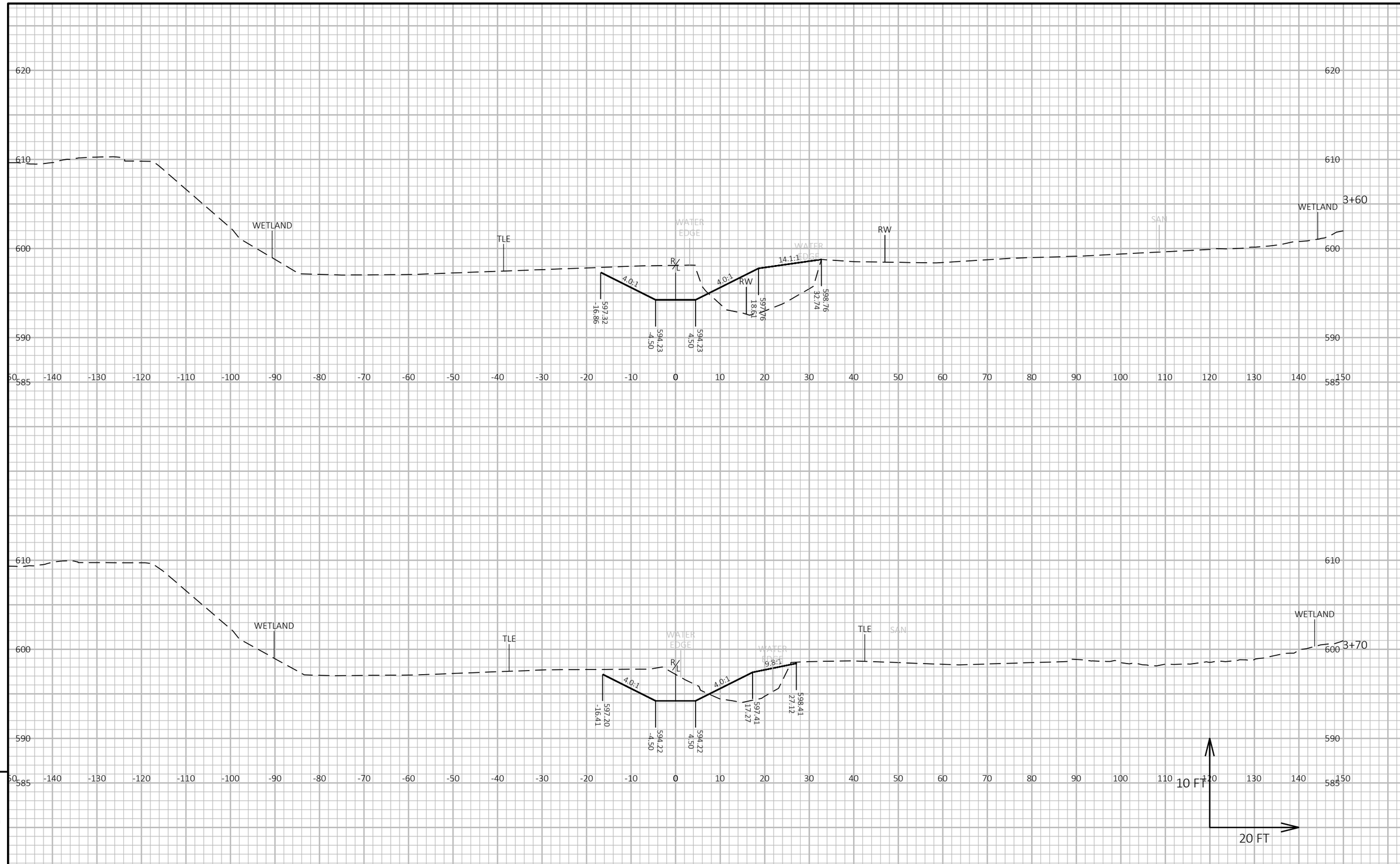

PROJECT NO: 3240-16-70	HWY: STH 32	COUNTY: KENOSHA	CROSS SECTIONS: BARNES CREEK	SHEET 180	E

FILE NAME : L:\DESIGN PROJECTS\3240-16-00 STH 32\10. ROADWAY\CIVIL 3D\32401600\SHEETSPLAN\090202-XS.DWG
LAYOUT NAME - 090224-xs
PLOT DATE : 10/21/2022 10:59 AM PLOT BY : REBECCA JONARDI PLOT NAME : PLOT SCALE : 1 IN:20 FT HORZ. / 1 IN:10 FT VERT.

WISDOT/CADDS SHEET 49

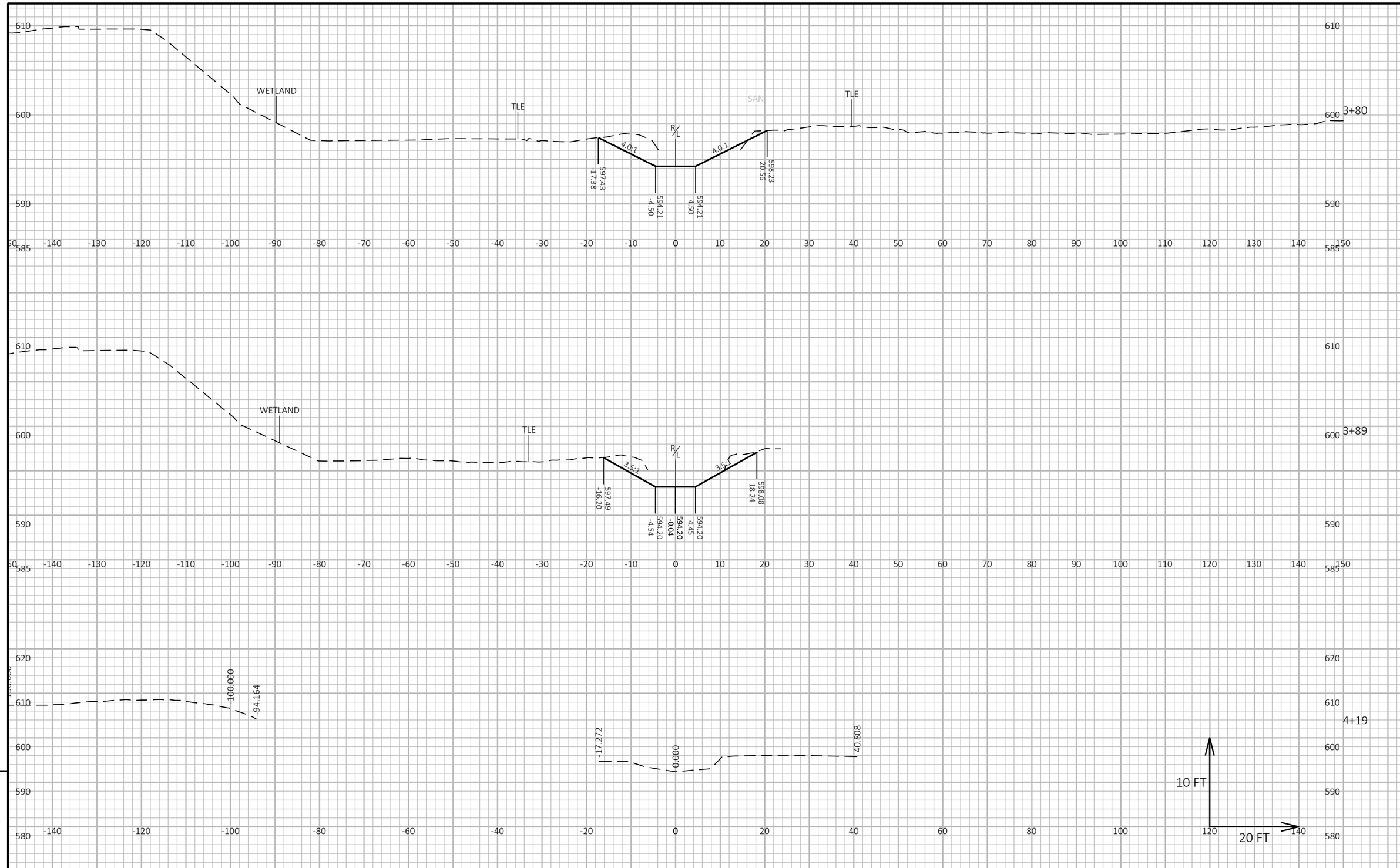

PROJECT NO: 3240-16-70	HWY: STH 32	COUNTY: KENOSHA	CROSS SECTIONS: BARNES CREEK	SHEET 181	E

FILE NAME : L:\DESIGN PROJECTS\3240-16-00 STH 32\10. ROADWAY\CIVIL 3D\32401600\SHEETSPLAN\090202-XS.DWG
LAYOUT NAME - 090225-xs
PLOT DATE : 10/21/2022 10:59 AM PLOT BY : REBECCA JONARDI PLOT NAME : PLOT SCALE : 1 IN:20 FT HORZ. / 1 IN:10 FT VERT.

WISDOT/CADDS SHEET 49

Wisconsin Department of Transportation

Dedicated people creating transportation solutions through innovation and exceptional service.

http://www.dot.wisconsin.gov