RHI

JANUARY 2023

PROJECT ID: 9491-06-70 / 9491-06-71

WITH: N/A

COUNTY: MARATHON

29

ORDER OF SHEETS

TOTAL SHEETS = 200

STATE OF WISCONSIN
DEPARTMENT OF TRANSPORTATION

PLAN OF PROPOSED IMPROVEMENT

STATE PROJECT	FEDERAL PROJECT	
	PROJECT	CONTRACT
9491-06-70	WISC 2023165	1
9491-06-71	WISC 2023166	1

WAUSAU - MERRILL
DECATOR DRIVE TO LINCOLN COUNTY LINE
CTH K
MARATHON COUNTY

STATE PROJECT NUMBER
9491-06-70

WAUSAU - MERRILL
FALCON DRIVE TO LINCOLN COUNTY LINE
CTH K
MARATHON COUNTY

STATE PROJECT NUMBER
9491-06-71

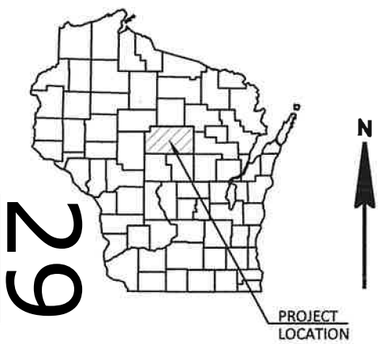

N

END PROJECT 9491-06-70
END PROJECT 9491-06-71
STA 544+74

B-37-022
EXCEPTION TO NET CL LENGTH
STA S38+89 - STA S40+60

B-37-021
EXCEPTION TO NET CL LENGTH
STA S26+18 - STA S28+23

B-37-425
EXCEPTION TO NET CL LENGTH
STA 300+72 - STA 302+30

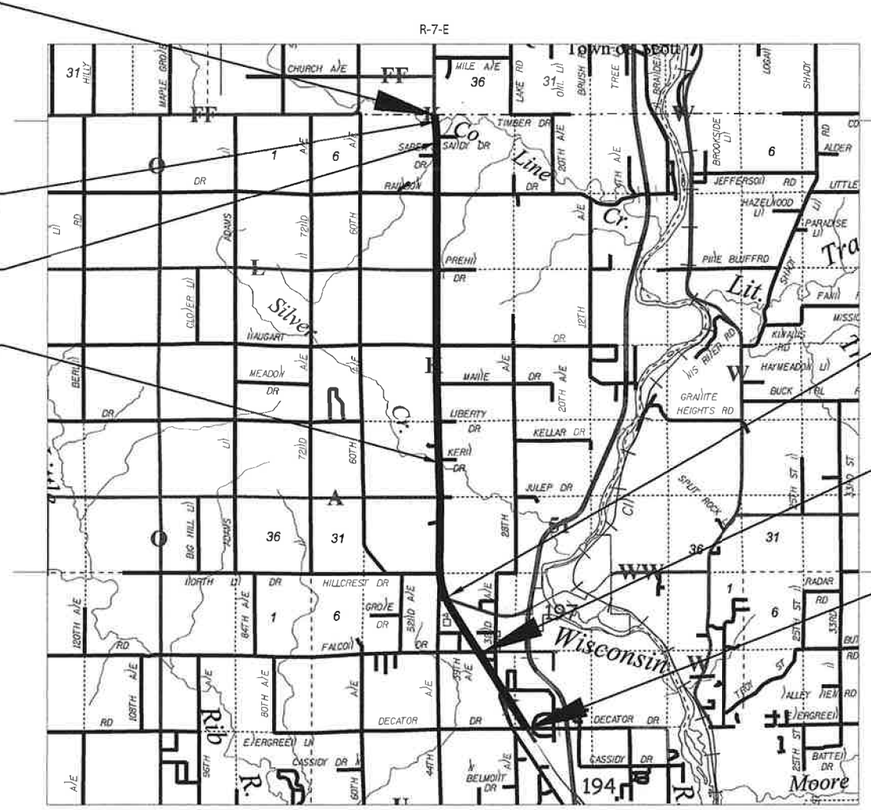

CTH WW
EXCEPTION TO NET CL LENGTH
STA 198+13 - STA 217+01

BEGIN PROJECT 9491-06-71
STA 163+50

BEGIN PROJECT 9491-06-70
STA 101+55
X= 271059.61
Y= 217779.25

DESIGN DESIGNATION (DECATOR RD. TO CTH F)

A.A.D.T.	2023	=	6,500
A.A.D.T.	2043	=	7,500
D.H.V.		=	700
D.D.		=	60/40
T.		=	8.9%
DESIGN SPEED		=	60 MPH
ESALS		=	1,300,000

DESIGN DESIGNATION (CTH F TO CO. LINE)

A.A.D.T.	2023	=	4,500
A.A.D.T.	2040	=	5,300
D.H.V.		=	500
D.D.		=	60/40
T.		=	8.9%
DESIGN SPEED		=	60 MPH
ESALS		=	930,020

CONVENTIONAL SYMBOLS

PLAN
- CORPORATE LIMITS
- PROPERTY LINE
- LOT LINE
- LIMITED HIGHWAY EASEMENT
- EXISTING RIGHT OF WAY
- PROPOSED OR NEW R/W LINE
- SLOPE INTERCEPT
- REFERENCE LINE (200'EB')
- EXISTING CULVERT
- PROPOSED CULVERT (Box or Pipe)
- COMBUSTIBLE FLUIDS (CAUTION)
- MARSH AREA
- WOODED OR SHRUB AREA

PROFILE
- GRADE LINE
- ORIGINAL GROUND
- MARSH OR ROCK PROFILE (To be noted as such) (ROCK)
- SPECIAL DITCH (LABEL)
- GRADE ELEVATION (95.36)
- CULVERT (Profile View)

UTILITIES
- ELECTRIC (E)
- FIBER OPTIC (FO)
- GAS (G)
- SANITARY SEWER (SAN)
- STORM SEWER (SS)
- TELEPHONE (T)
- WATER (W)
- UTILITY PEDESTAL
- POWER POLE
- TELEPHONE POLE

LAYOUT
SCALE 0 — 2 MI

TOTAL NET LENGTH OF CENTERLINE = 7.935 MILES

HORIZONTAL POSITIONS SHOWN ON THIS PLAN ARE WISCONSIN COORDINATE REFERENCE SYSTEM (WISCRS), MARATHON COUNTY, NAD83 (1991), IN U.S. SURVEY FEET. POSITIONS SHOWN ARE GRID COORDINATES, GRID BEARINGS, AND GRID DISTANCES. GRID DISTANCES ARE THE SAME AS GROUND DISTANCES. ELEVATIONS ARE REFERENCED TO NAVD 88. GPS DERIVED ELEVATIONS ARE BASED ON GEOID 12A.

ACCEPTED FOR
MARATHON COUNTY
Date 7/20/22 James M. Griesbach
(Signature and Title of Official)

ORIGINAL PLANS PREPARED BY

Robert E. Lee & Associates, Inc.
ENGINEERING · SURVEYING · ENVIRONMENTAL SERVICES
1250 DEPOT DRIVE, CENTRE 500 BUILDING, DE PERE, WI 54115
920-562-9641 www.relinc.com

WISCONSIN RYAN H. TRZINSKI E-42371 GREEN BAY WI PROFESSIONAL ENGINEER

DATE 7-20-22 (Professional Engineer Signature)

STATE OF WISCONSIN
DEPARTMENT OF TRANSPORTATION

PREPARED BY

Surveyor	ROBERT E. LEE & ASSOCIATES
Designer	ROBERT E. LEE & ASSOCIATES
Project Manager	MICHAEL GRAGE
Regional Supervisor	DAN ERVA

APPROVED FOR THE DEPARTMENT
DATE: 7/20/2022

E

DIGGERS HOTLINE

Dial 811 or (800) 242-8511

www.DiggersHotline.com

TO OBTAIN LOCATION OF PARTICIPANTS UNDERGROUND FACILITIES BEFORE YOU DIG IN WISCONSIN

WIS. STATUTE 182.0175 (1974) REQUIRES MIN. OF 3 WORK DAYS NOTICE BEFORE YOU EXCAVATE.

UTILITIES

WPS (GAS)
LORI BUTRY
1700 SHERMAN STREET
WAUSAU, WI 54401
(800) 450-7260
UTILITIESRELOCATION@WISCONSINPUBLICSERVICE.COM

WCAN UTILITY
GERARD KLEIN
407 GRANT STREET
WAUSAU, WI 54403
(715) 261-6707
GERARD.KLEIN@CO.MARTHON.WI.US

FRONTIER COMMUNICATIONS
RUSSEL RYAN
315 OAK STREET
OAKFIELD, WI 53065
(920) 737-9662
RUSSEL.W.RYAN@FTR.COM

CHARTER COMMUNICATIONS
SCOTT GOHDES
350 E. DESTINATION DRIVE
APPLETON, WI 54915
(920) 831-9249
SCOTT.GOHDES@CHARTER.COM

CONTACTS

ROBERT E. LEE & ASSOCIATES, INC.
RYAN TRZINSKI
1250 CENTENNIAL CENTRE BOULEVARD
HOBART, WI. 54155
(920) 662-9641
RTRZINSKI@RELEEINC.COM

WDNR CONTACT
CASEY JONES
473 GRIFFITH AVENUE
WISCONSIN RAPIDS, WI 54494
(715) 213-6571
CASEY.JONES@WISCONSIN.GOV

MARATHON COUNTY HIGHWAY DEPARTMENT
JAMES GRIESBACH, COMMISSIONER
1430 WEST STREET
WAUSAU, WI 54401
(715) 261-1800
JAMES.GRIESBACH@CO.MARATHON.WI.US

GENERAL NOTES

1. THE LOCATIONS OF EXISTING AND PROPOSED UTILITY INSTALLATIONS AS SHOWN ON THE PLANS ARE APPROXIMATE. THERE MAY BE OTHER UTILITY INSTALLATIONS WITHIN THE PROJECT AREA THAT ARE NOT SHOWN.
2. NO TREES OR SHRUBS SHALL BE REMOVED WITHOUT THE APPROVAL OF THE ENGINEER.
3. ALL DISTURBED AREAS SHALL BE SALVAGE TOPSOILED, FERTILIZED, SEEDED AND COVERED WITH EROSION MAT AS NOTED ON THE PLAN OR AS DETERMINED BY THE ENGINEER.
4. EROSION CONTROL ITEMS SHOWN ON THE PLAN ARE AT SUGGESTED LOCATIONS. THE EXACT LOCATIONS AND DIMENSIONS WILL BE DETERMINED IN THE FIELD BY THE ENGINEER. ALL EROSION CONTROL MEASURES SHALL BE MAINTAINED IN PLACE UNTIL SUCH TIME AS THE ENGINEER DETERMINES THAT THEY ARE NO LONGER REQUIRED.
5. TRAFFIC CONTROL SHALL BE IN ACCORDANCE WITH THE LATEST M.U.T.C.D MANUAL.
6. PROPERTY LINES AS SHOWN AS APPROXIMATE.
7. ALL CURB RADII DIMENSIONS ON THE PLAN ARE MEASURED TO FLANGE LINE.
8. CONTRACTOR RESPONSIBLE FOR CONTACTING UTILITIES.
9. ACCESS TO THE FIRE DEPARTMENT AT THE INTERSECTION OF CTH K AND CTH WW/TOWN HALL ROAD SHALL BE MAINTAINED AT ALL TIMES.
10. ALL EXISTING TRAFFIC CONTROL SIGNING AND SUPPORTS WILL BE REMOVED BY MARATHON COUNTY AND REINSTALLED BY MARATHON COUNTY FORCES DURING CONSTRUCTION.
11. SAFETY EDGE SHALL BE INSTALLED ON ALL ASPHALT PAVEMENT PER STANDARD SPECIFICATIONS.

RUNOFF COEFFICIENT TABLE

	HYDROLOGIC SOIL GROUP											
	A			B			C			D		
	SLOPE RANGE (PERCENT)			SLOPE RANGE (PERCENT)			SLOPE RANGE (PERCENT)			SLOPE RANGE (PERCENT)		
LAND USE:	0-2	2-6	6 & OVER	0-2	2-6	6 & OVER	0-2	2-6	6 & OVER	0-2	2-6	6 & OVER
ROW CROPS	.08 .22	.16 .30	.22 .38	.12 .26	.20 .34	.27 .44	.15 .30	.24 .37	.33 .50	.19 .34	.28 .41	.38 .56
MEDIAN STRIP-TURF	.19 .24	.20 .26	.24 .30	.19 .25	.22 .28	.26 .33	.20 .26	.23 .30	.30 .37	.20 .27	.25 .32	.30 .40
SIDE SLOPE-TURF			.25 .32			.27 .34			.28 .36			.30 .38
PAVEMENT:												
ASPHALT	.70 - .95											
CONCRETE	.80 - .95											
BRICK	.70 - .80											
DRIVES, WALKS	.75 - .85											
ROOFS	.75 - .95											
GRAVEL ROADS, SHOULDERS	.40 - .60											

TOTAL PROJECT AREA = 43.56 ACRES
TOTAL AREA EXPECTED TO BE DISTURBED BY CONSTRUCTION ACTIVITIES = 9.91 ACRES

STANDARD ABBREVIATIONS

GR	GRAVEL	WM	WATERMAIN	VPC	VERTICAL POINT OF CURVATURE	R/W	RIGHT OF WAY
BIT	BITUMINOUS	HYD	HYDRANT	VPI	VERTICAL POINT OF INTERSECTION	T/C	TOP OF CURB
ASPH	ASPHALT PAVEMENT	WV	WATER VALVE	VPT	VERTICAL POINT OF TANGENCY	F/L	FLOW LINE
CONC	CONCRETE	SAN	SANITARY SEWER	PC	POINT OF CURVATURE	C/L	CENTERLINE
SW	SIDEWALK	MH	MANHOLE	PI	POINT OF INTERSECTION	P/L	PROPERTY LINE
BLDG	BUILDING	ST	STORM SEWER	PT	POINT OF TANGENCY	R/L	REFERENCE LINE
HSE	HOUSE	CB	CATCH BASIN	R	RADIUS	INV	INVERT
PED	PEDESTAL	TELE	TELEPHONE	EX	EXISTING	CMP	CORRUGATED METAL PIPE
PP	POWER POLE	ELEC	ELECTRIC	PR	PROPOSED	RCP	REINFORCED CONCRETE PIPE
LP	LIGHT POLE	TV	TELEVISION	EOR	END OF RADIUS	CULV	CULVERT
BM	BENCH MARK	STA	STATION	B-B	BACK TO BACK (OF CURB)	PE	PERSONAL ENTRANCE
CE	COMMERCIAL ENTRANCE	FE	FIELD ENTRANCE	E.O.P.	EDGE OF PAVEMENT		

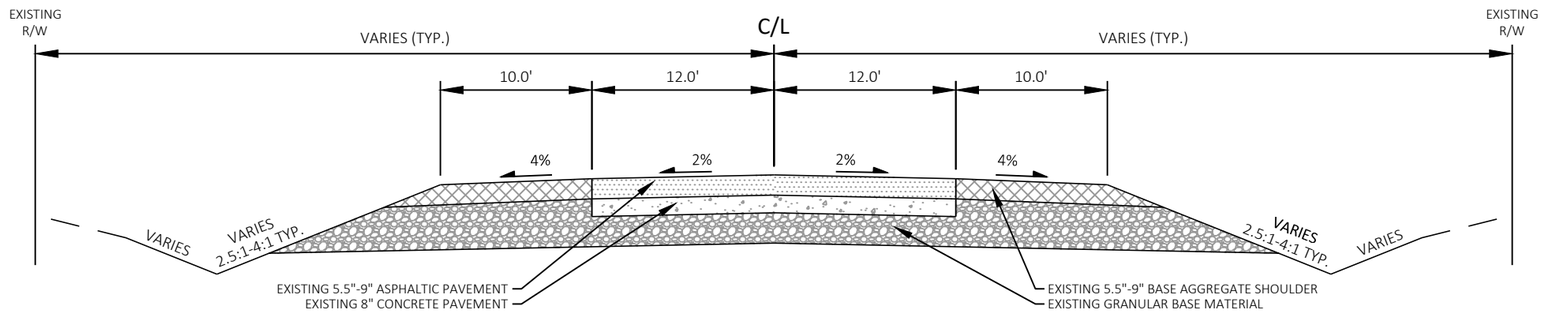

TYPICAL EXISTING SECTION CTH K - 2 LANE

STA 101+55 TO STA. 132+00
STA. 143+50 TO STA. 198+13

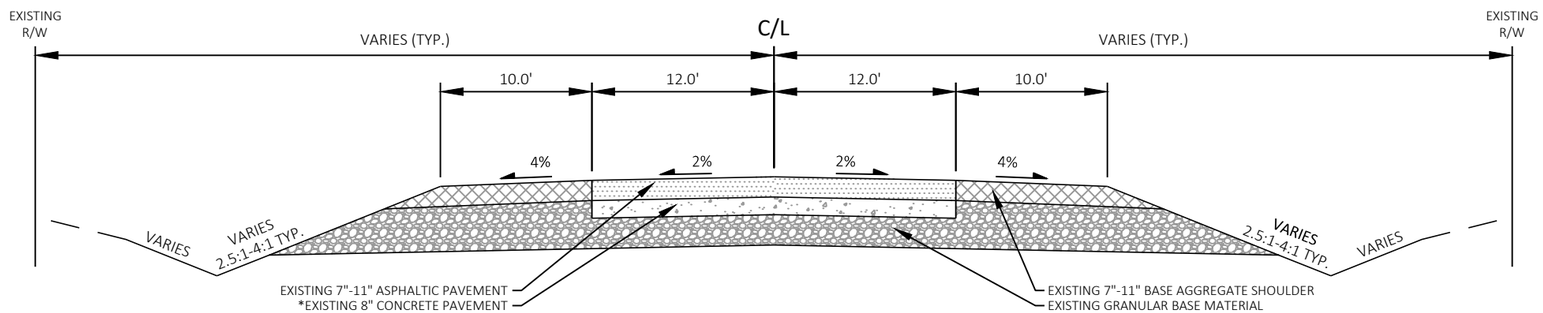

TYPICAL EXISTING SECTION CTH K - 2 LANE

STA 241+00 TO STA. 257+00
STA. 297+50 TO STA. 304+50
STA. 330+50 TO STA. 407+50
STA. 432+00 TO STA. 436+50

*IN SOME LOCATIONS THERE IS A LAYER OF GRANULAR BASE BETWEEN THE EXISTING CONCRETE PAVEMENT AND THE EXISTING ASPHALT PAVEMENT

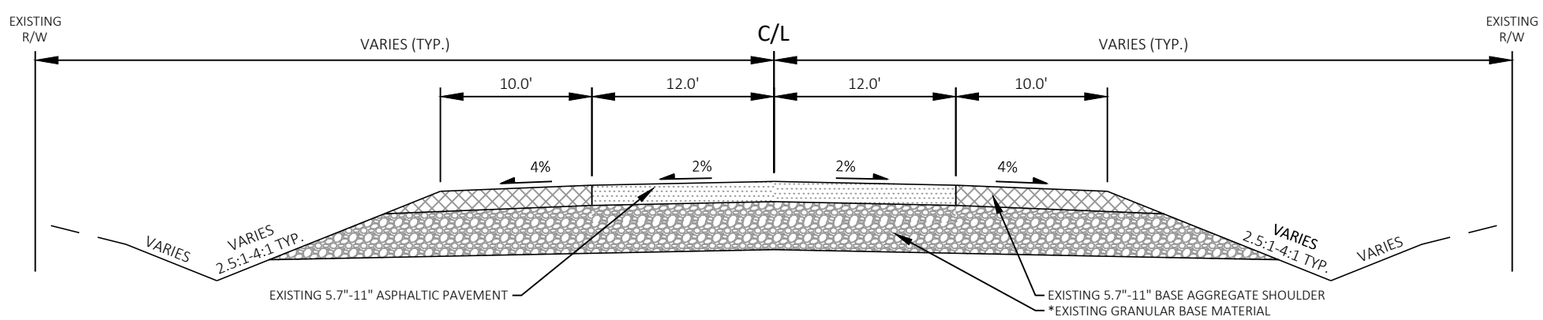

TYPICAL EXISTING SECTION CTH K - 2 LANE

STA 436+50 TO STA. 544+74

*IN SOME LOCATIONS THERE IS A CONCRETE PAVEMENT LAYER BELOW THE GRANULAR BASE LAYER

2

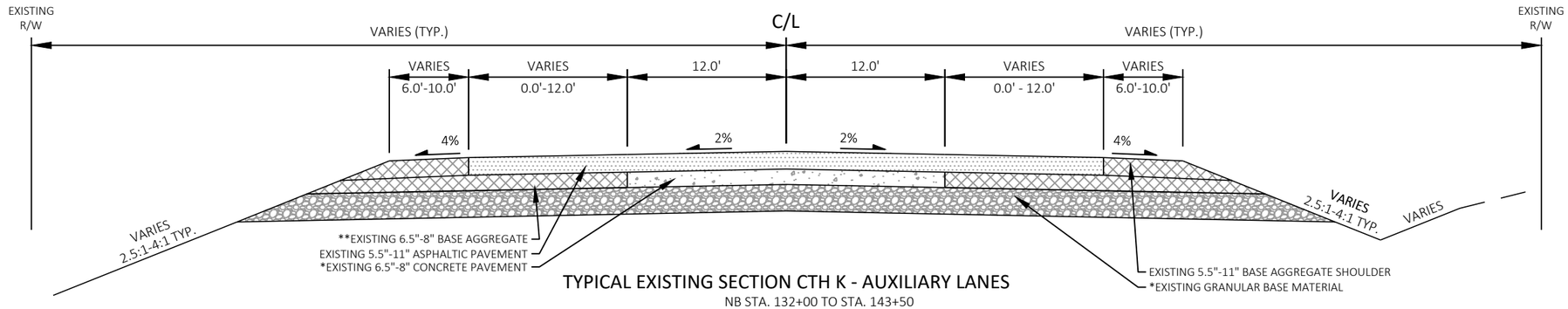

TYPICAL EXISTING SECTION CTH K - AUXILIARY LANES

NB STA. 132+00 TO STA. 143+50
SB STA. 198+00 TO STA. 241+00
NB STA. 257+00 TO STA. 288+00
SB STA. 268+00 TO STA. 297+50
NB STA. 304+50 TO STA. 330+50
SB STA. 407+50 TO STA. 432+00

*IN SOME INSTANCES THE CONCRETE PAVEMENT LAYER IS BELOW THE GRANULAR BASE LAYER
** IN SOME LOCATIONS A 6"-7" CONCRETE LAYER IS BELOW THE ASPHALT IN THE SOUTH BOUND AUXILIARY LANES

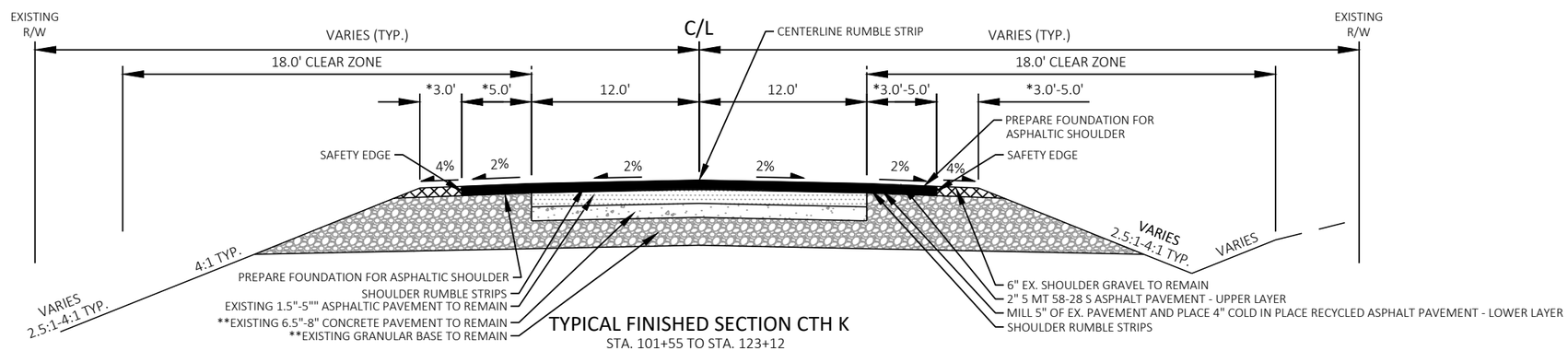

TYPICAL FINISHED SECTION CTH K

STA. 101+55 TO STA. 123+12
STA. 143+11 TO STA. 198+13
STA. 237+10 TO STA. 246+03
STA. 253+47 TO STA. 267+02
STA. 288+76 TO STA. 300+72
STA. 302+30 TO STA. 378+32
STA. 388+72 TO STA. 436+50

*SHOULDERS FROM DECATOR DR TO HILLCREST DR ARE 5' PAVED AND 3' AGGREGATE. SHOULDERS FROM HILLCREST DR TO THE LINCOLN COUNTY LINE ARE 3' PAVED AND 5' AGGREGATE
**IN SOME INSTANCES THE CONCRETE PAVEMENT LAYER IS BELOW THE GRANULAR BASE LAYER

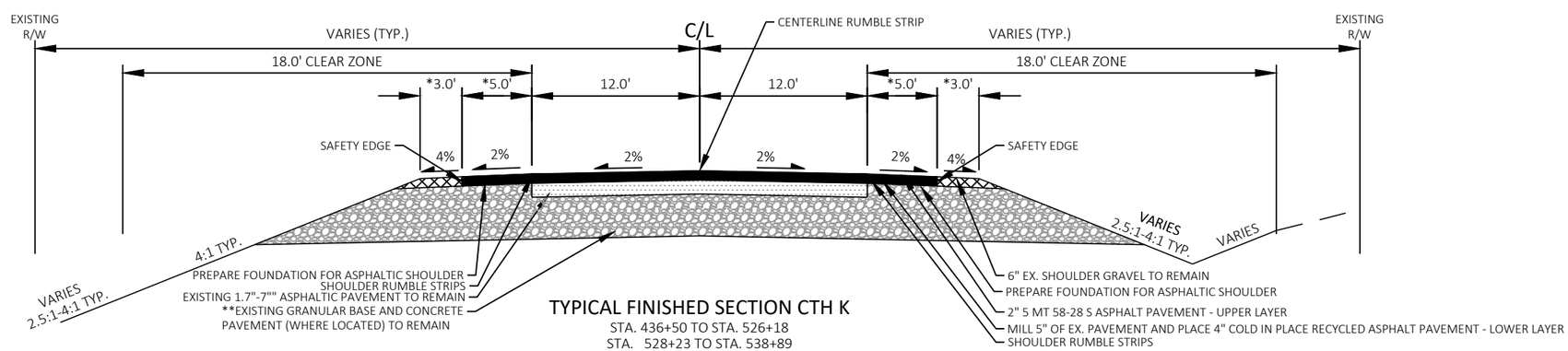

TYPICAL FINISHED SECTION CTH K

STA. 436+50 TO STA. 526+18
STA. 528+23 TO STA. 538+89
STA. 540+60 TO STA. 544+74

**IN SOME INSTANCES THE CONCRETE PAVEMENT LAYER IS BELOW THE GRANULAR BASE LAYER

PROJECT NO: 9491-06-70/9491-06-71	HWY: CTH K	COUNTY: MARATHON	PLAN: TYPICAL SECTIONS	SHEET 4	E

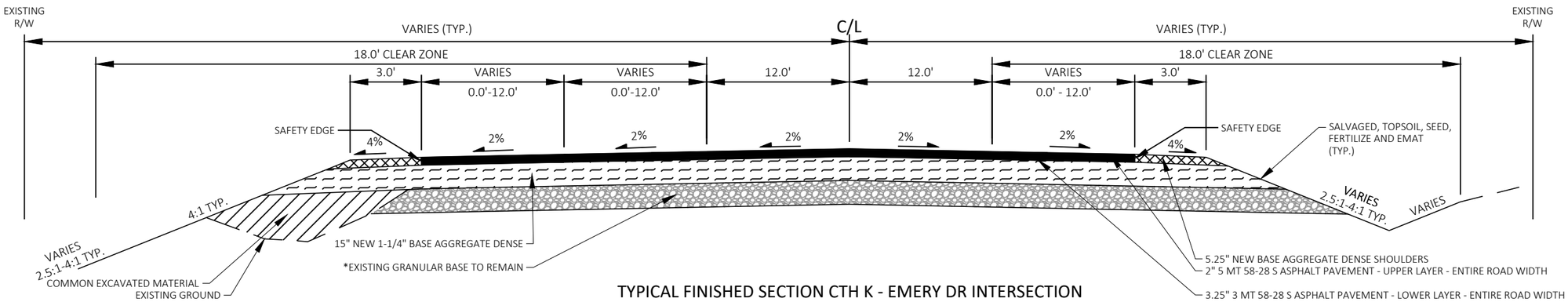

TYPICAL FINISHED SECTION CTH K - EMERY DR INTERSECTION

STA. 123+12 TO STA. 138+00

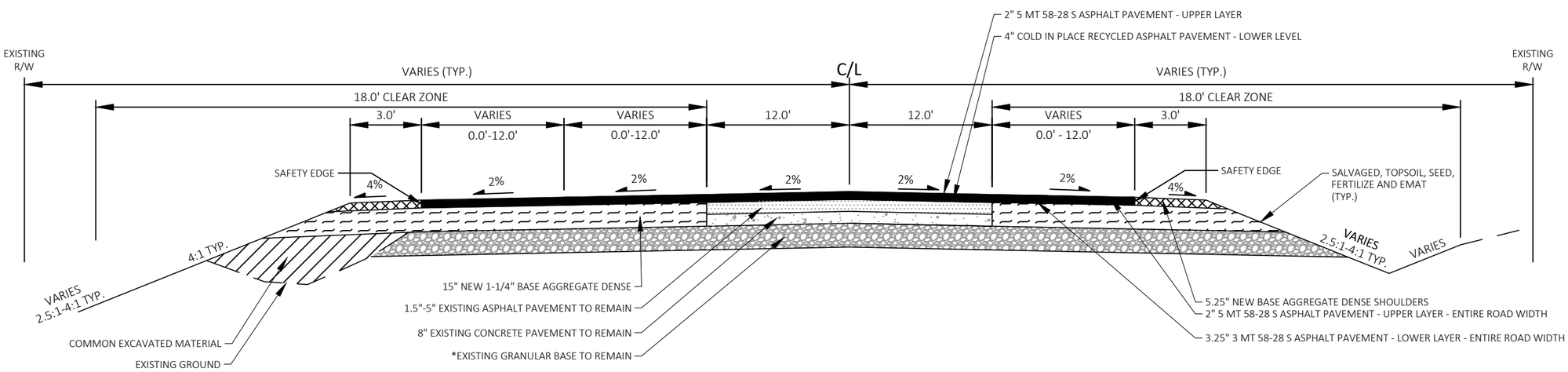

TYPICAL FINISHED SECTION CTH K - EMERY DR INTERSECTION

STA 138+00 TO STA. 140+00

*IN SOME INSTANCES THE CONCRETE PAVEMENT LAYER IS BELOW THE GRANULAR BASE LAYER

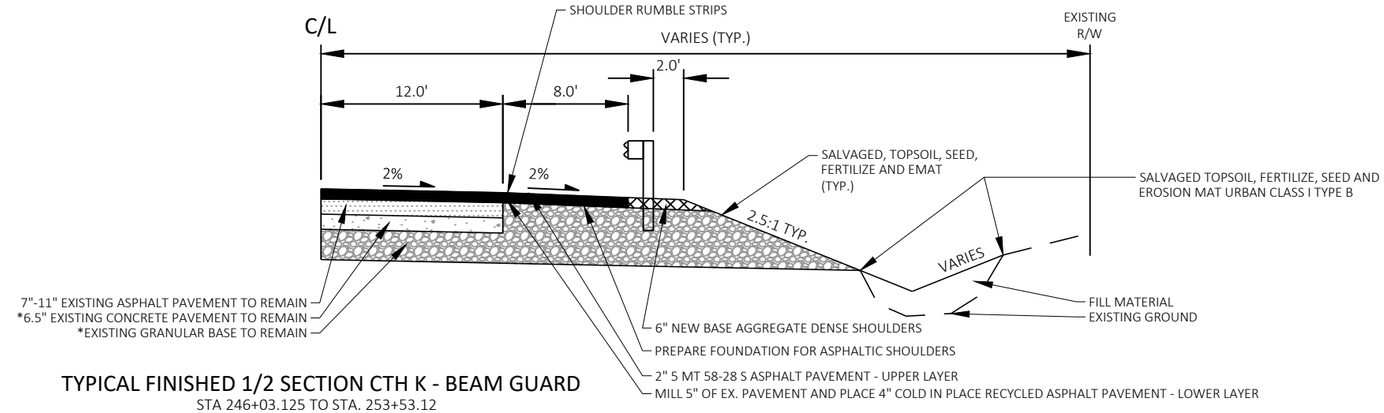

TYPICAL FINISHED 1/2 SECTION CTH K - BEAM GUARD

STA 246+03.125 TO STA. 253+53.12

*IN SOME INSTANCES THE CONCRETE PAVEMENT LAYER IS BELOW THE GRANULAR BASE LAYER

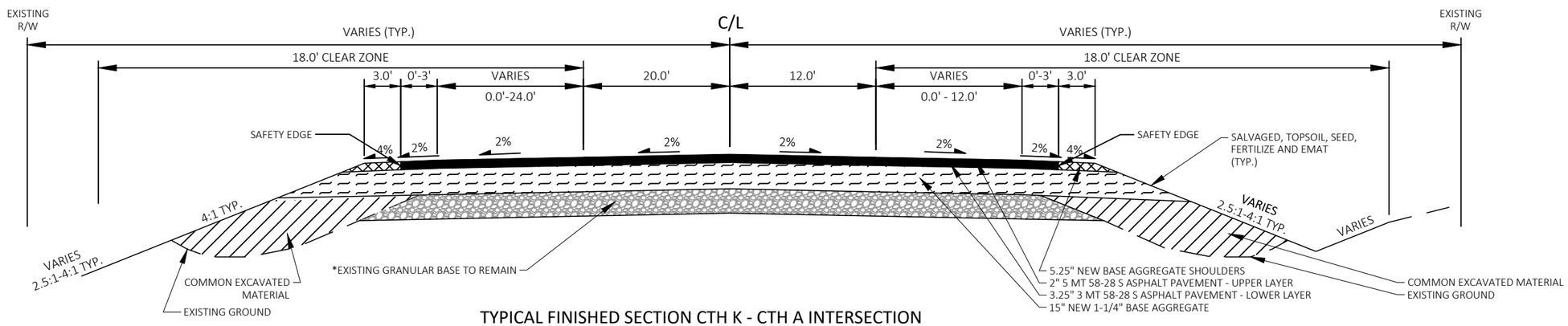

TYPICAL FINISHED SECTION CTH K - CTH A INTERSECTION

STA 267+02 TO 288+76

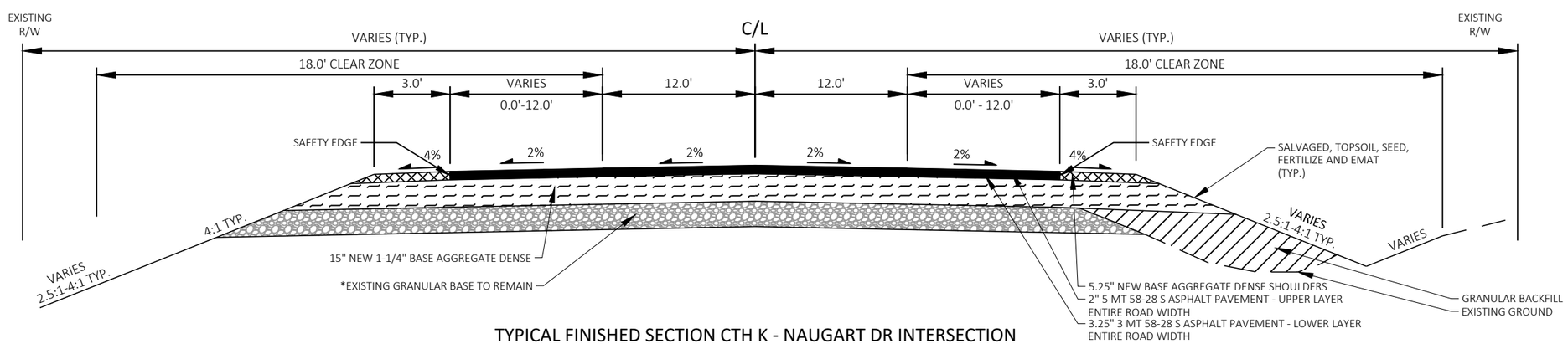

TYPICAL FINISHED SECTION CTH K - NAUGART DR INTERSECTION

STA 378+32 TO 388+72

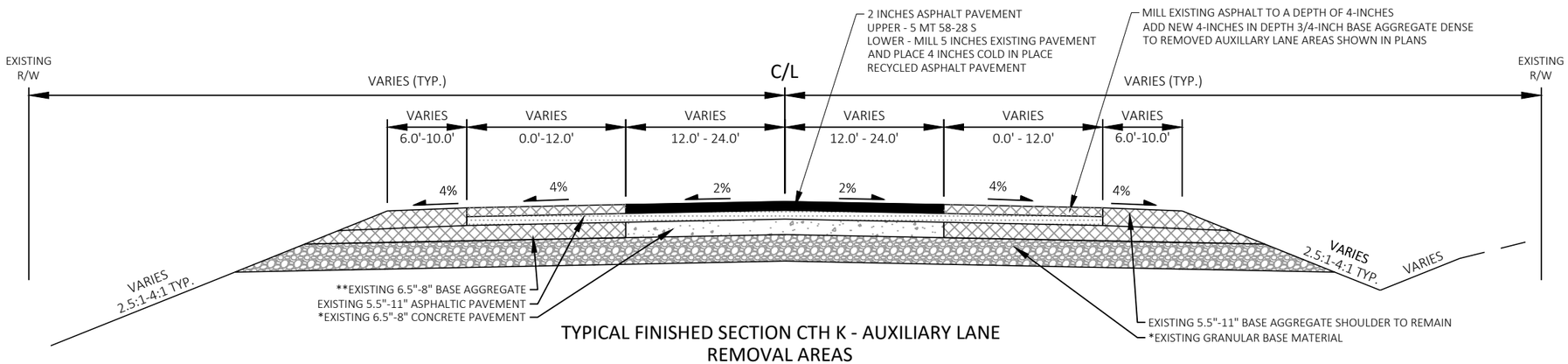

TYPICAL FINISHED SECTION CTH K - AUXILIARY LANE REMOVAL AREAS

NB STA. 132+00 TO STA. 143+50
SB STA. 198+00 TO STA. 241+00
NB STA. 257+00 TO STA. 288+00
SB STA. 268+00 TO STA. 297+50
NB STA. 304+50 TO STA. 330+50
SB STA. 407+50 TO STA. 432+00

*IN SOME INSTANCES THE CONCRETE PAVEMENT LAYER IS BELOW THE GRANULAR BASE LAYER
** IN SOME LOCATIONS A 6"-7" CONCRETE LAYER IS BELOW THE ASPHALT IN THE SOUTH BOUND AUXILIARY LANES

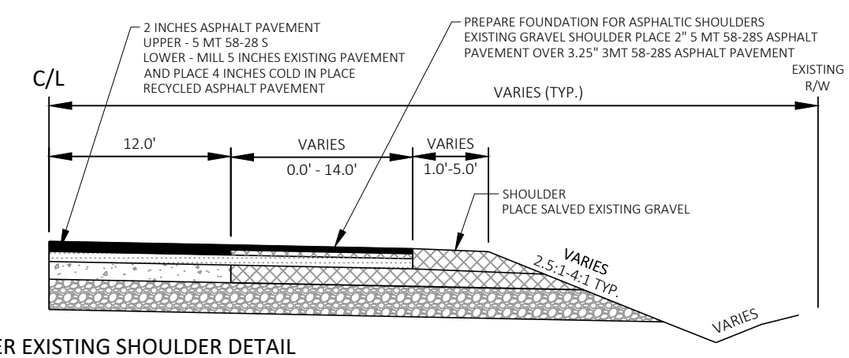

NEW TURN LANE OVER EXISTING SHOULDER DETAIL

NB STA. 353+80 TO STA. 356+44
SB STA. 437+19 TO STA. 440+69
NB STA. 484+99 TO STA. 488+49

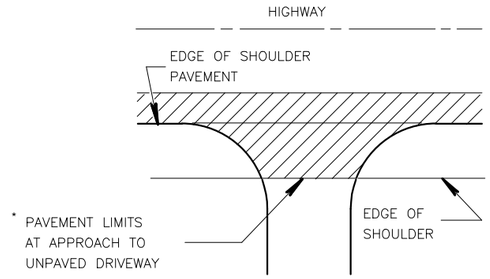

*WHERE DRIVEWAY IS PAVED, APPROACH PAVEMENT SHOULD BE EXTENDED TO MATCH DRIVEWAY PAVEMENT. SIDEROADS SHALL BE MILLED AND PAVED TO END OF RADIUS OR AS SHOWN ON PLANS.

PLAN VIEW
(PAVED SHOULDER ON HIGHWAY)

RURAL DRIVEWAY AND SIDE ROAD INTERSECTION DETAIL

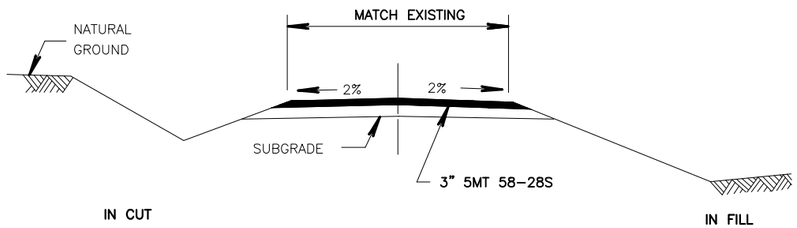

TYPICAL CROSS SECTION FOR PRIVATE DRIVE OR FIELD ENTRANCE

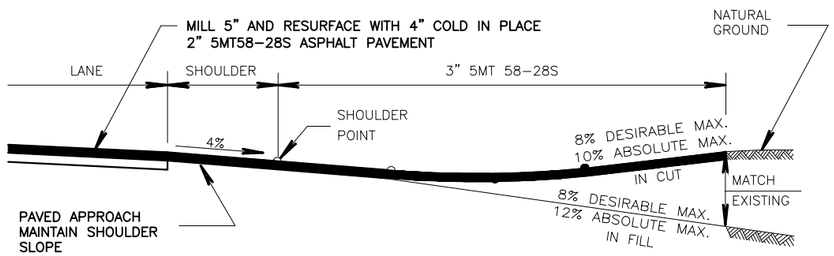

TYPICAL DRIVEWAY PROFILES

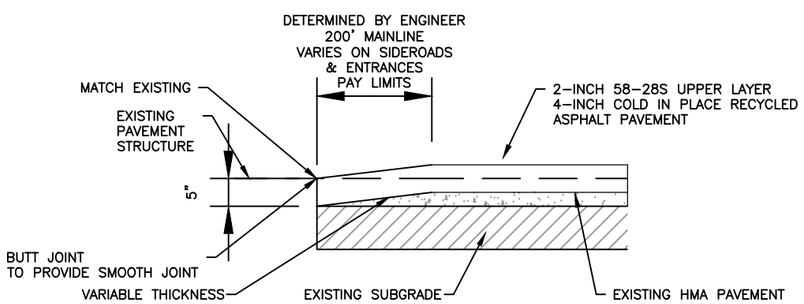

BUTT JOINT DETAIL

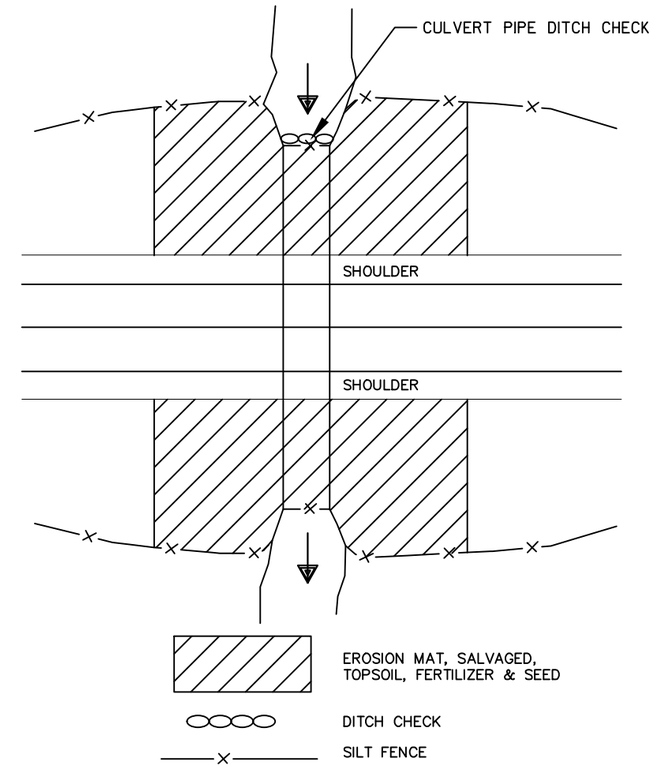

DETAIL FOR EROSION CONTROL AT PIPE REPLACEMENTS

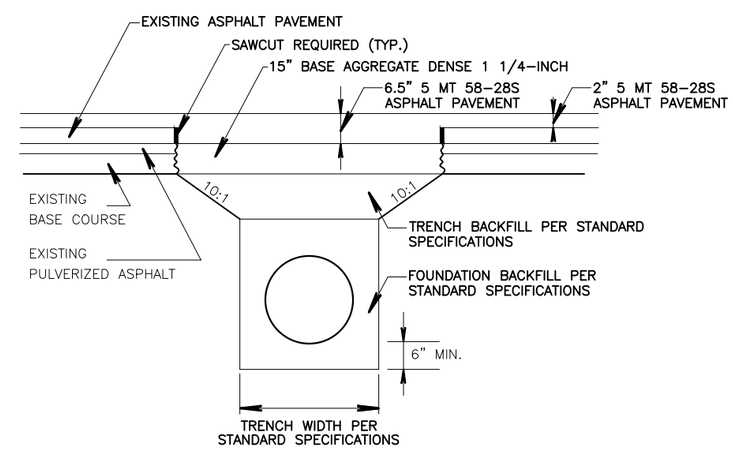

CROSS CULVERT BEDDING DETAIL

ROGER MARKS
14629071520986

GEORGE WALDVOGEL
14629071030994

N

MARKING LINE EPOXY
8-INCH: WHITE

MARKING ARROWS (TYP.)

MARKING LINE EPOXY
8-INCH: WHITE SKIP

BEGIN PROJECT
STA. 101+55
X= 271059.61
Y= 217779.25

CTH K

+54.85
24.00' LT

+44.24
26.00' LT

+44.16
12.00' LT

+56.74
17.00' LT

+94.16
12.00' LT

MARKING
WORD EPOXY
(TYP.)

CONSTRUCTION LIMITS

110

105

100

95

MARKING LINE EPOXY
4-INCH: DOUBLE YELLOW

+54.85
18.39' RT

+64.62
17.00' RT

MARKING LINE EPOXY
4-INCH: WHITE

DECATOR DRIVE

ROGER MARKS
14629071520986

ROGER MARKS
14629071030965

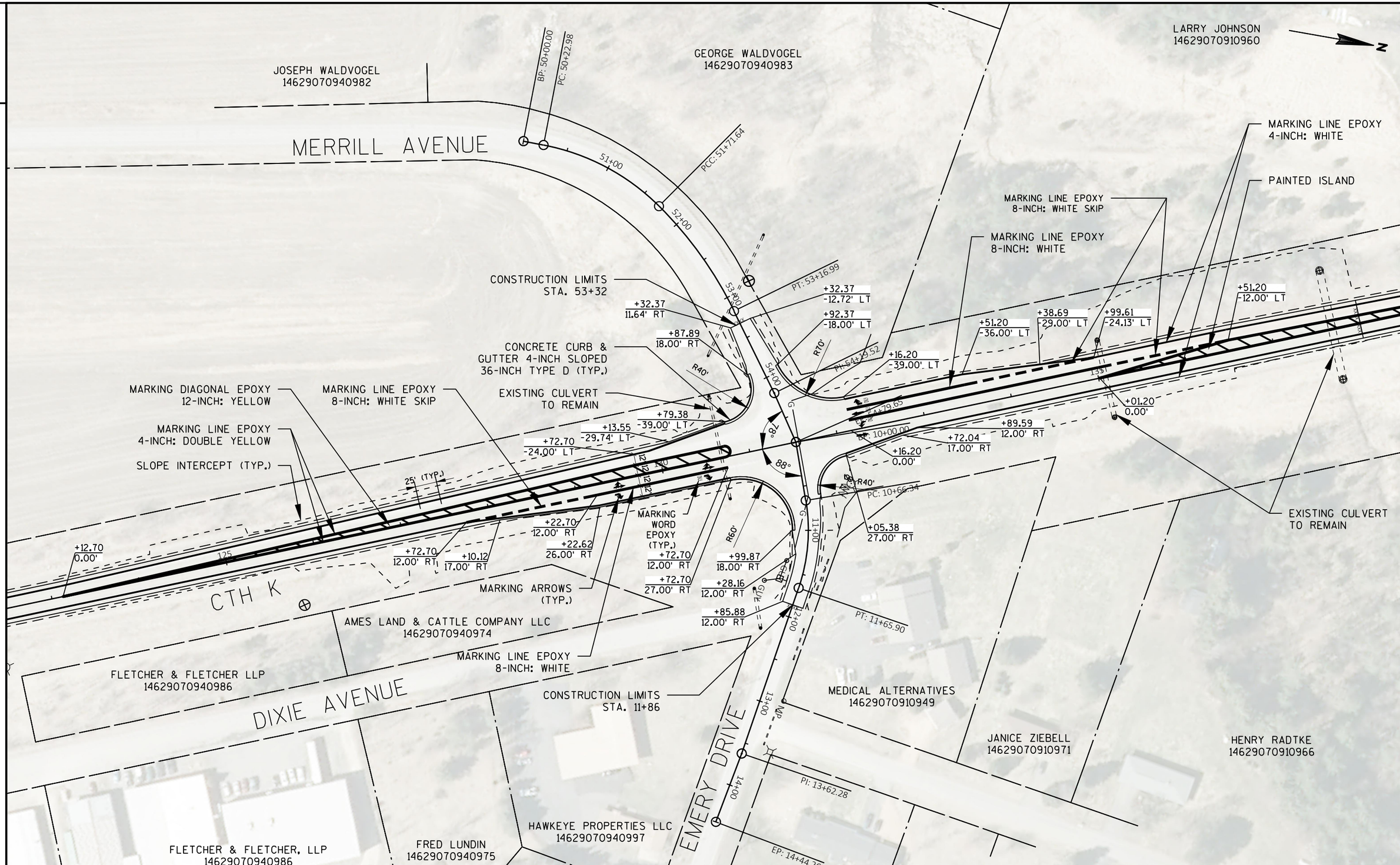

PROJECT NO: 9491-06-70/9491-06-71	HWY: CTH K	COUNTY: MARATHON	CONSTRUCTION DETAIL: MERRILL AVENUE / EMERY DRIVE	SHEET 10	E

FILE NAME : R:\5500\5539\5539002\DWG(2018)\021001-CD01.DWG
LAYOUT NAME - STA 125-139
PLOT DATE : 11/15/2022 9:12 AM
PLOT BY : RYAN H. TRZINSKI
PLOT NAME :
PLOT SCALE : 1 IN:100 FT
WISDOT/CADDS SHEET 42

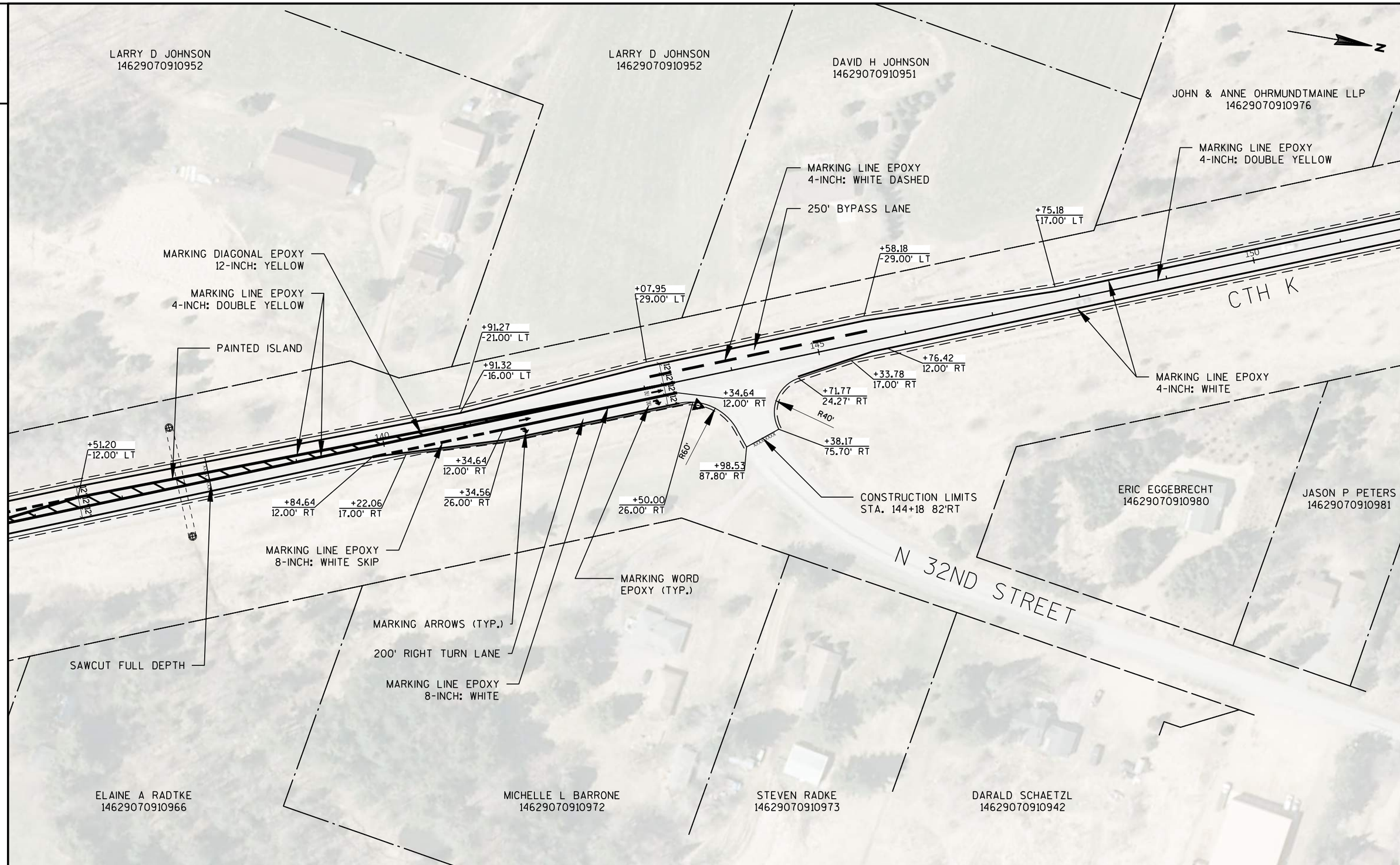

PROJECT NO: 9491-06-70/9491-06-71	HWY: CTH K	COUNTY: MARATHON	CONSTRUCTION DETAIL: N 32ND STREET	SHEET 11	E

FILE NAME : R:\5500\5539\5539002\DWG(2018)\021001-CD01.DWG
LAYOUT NAME - STA 136-151
PLOT DATE : 11/10/2022 10:37 AM PLOT BY : ROCHELLE L. BURSA PLOT NAME : PLOT SCALE : 1 IN:100 FT
WISDOT/CADDS SHEET 42

2

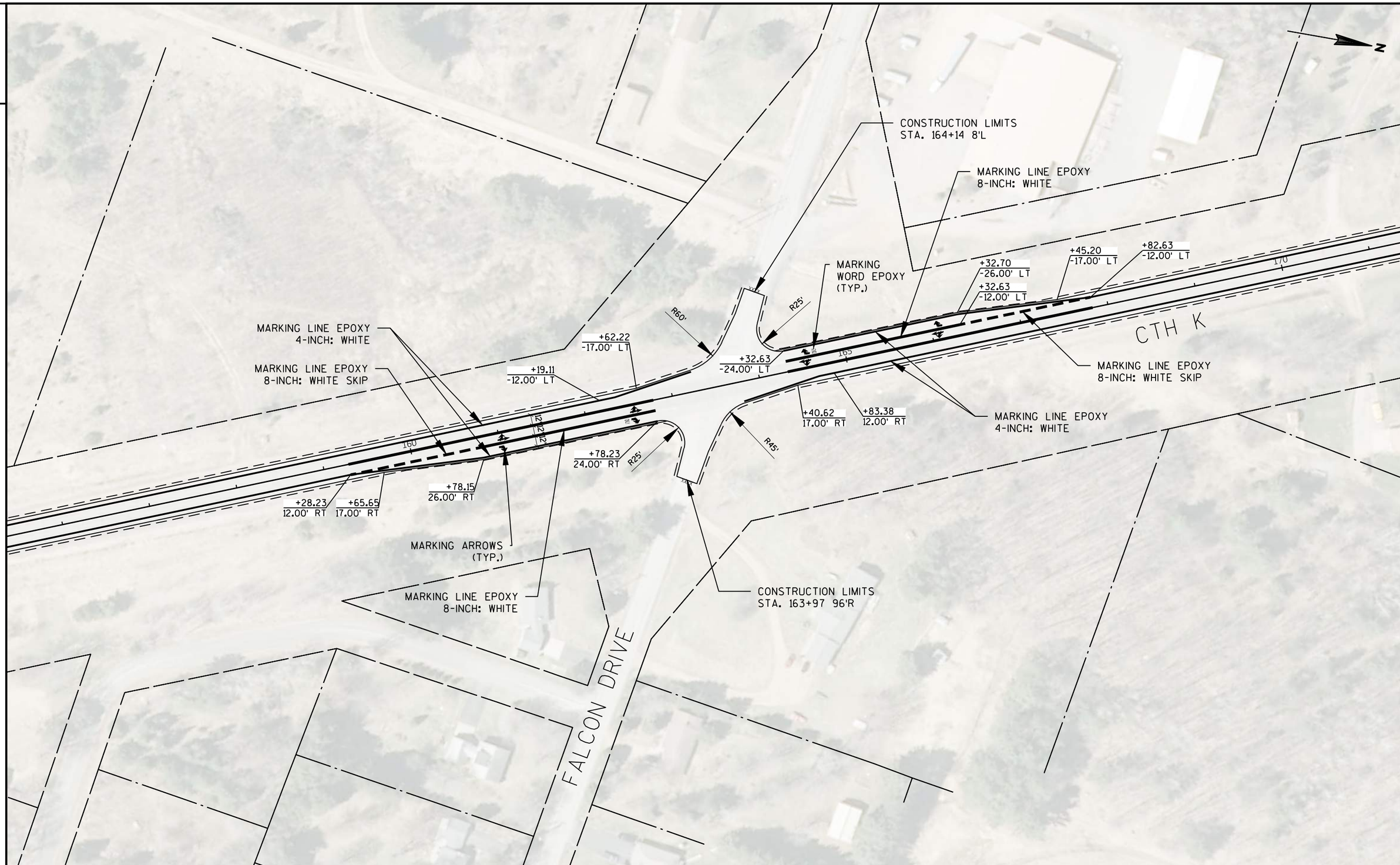

PROJECT NO: 9491-06-70/9491-06-71	HWY: CTH K	COUNTY: MARATHON	CONSTRUCTION DETAIL: FALCON DRIVE	SHEET 12	E

FILE NAME : R:\5500\5539\5539002\DWG(2018)\021001-CD01.DWG
LAYOUT NAME - STA 156-171
PLOT DATE : 11/10/2022 11:08 AM PLOT BY : ROCHELLE L. BURSA PLOT NAME : PLOT SCALE : 1 IN:100 FT

WISDOT/CADDS SHEET 42

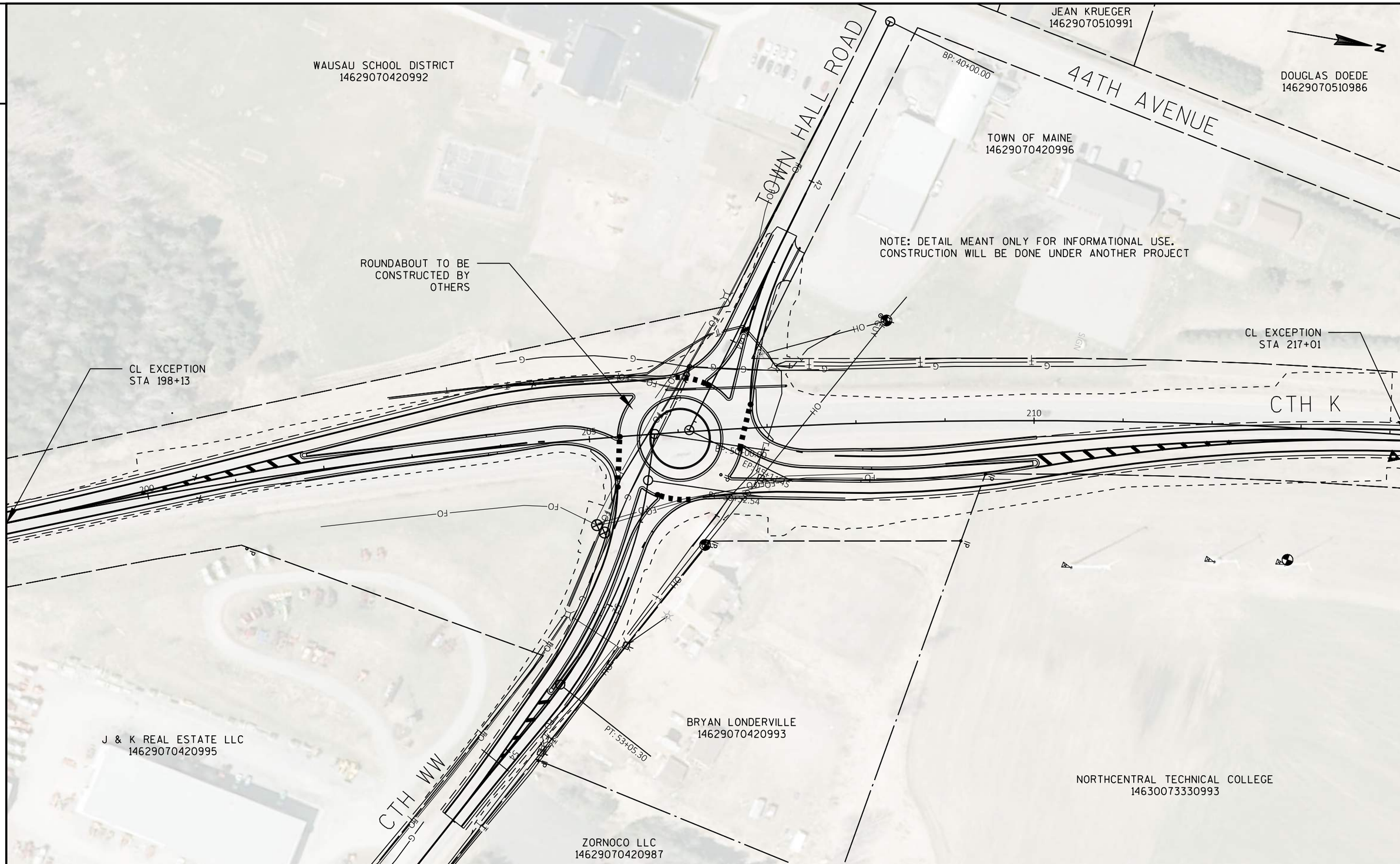

PROJECT NO: 9491-06-70/9491-06-71	HWY: CTH K	COUNTY: MARATHON	CONSTRUCTION DETAIL: CTH WW / CTH K ROUNDABOUT	SHEET 13	E

FILE NAME : R:\5500\5539\5539002\DWG(2018)\021001-CD01.DWG
LAYOUT NAME - STA 199-214
PLOT DATE : 7/26/2022 2:32 PM
PLOT BY : ROCHELLE L. BURSA
PLOT NAME :
PLOT SCALE : 1 IN:100 FT
WISDOT/CADDS SHEET 42

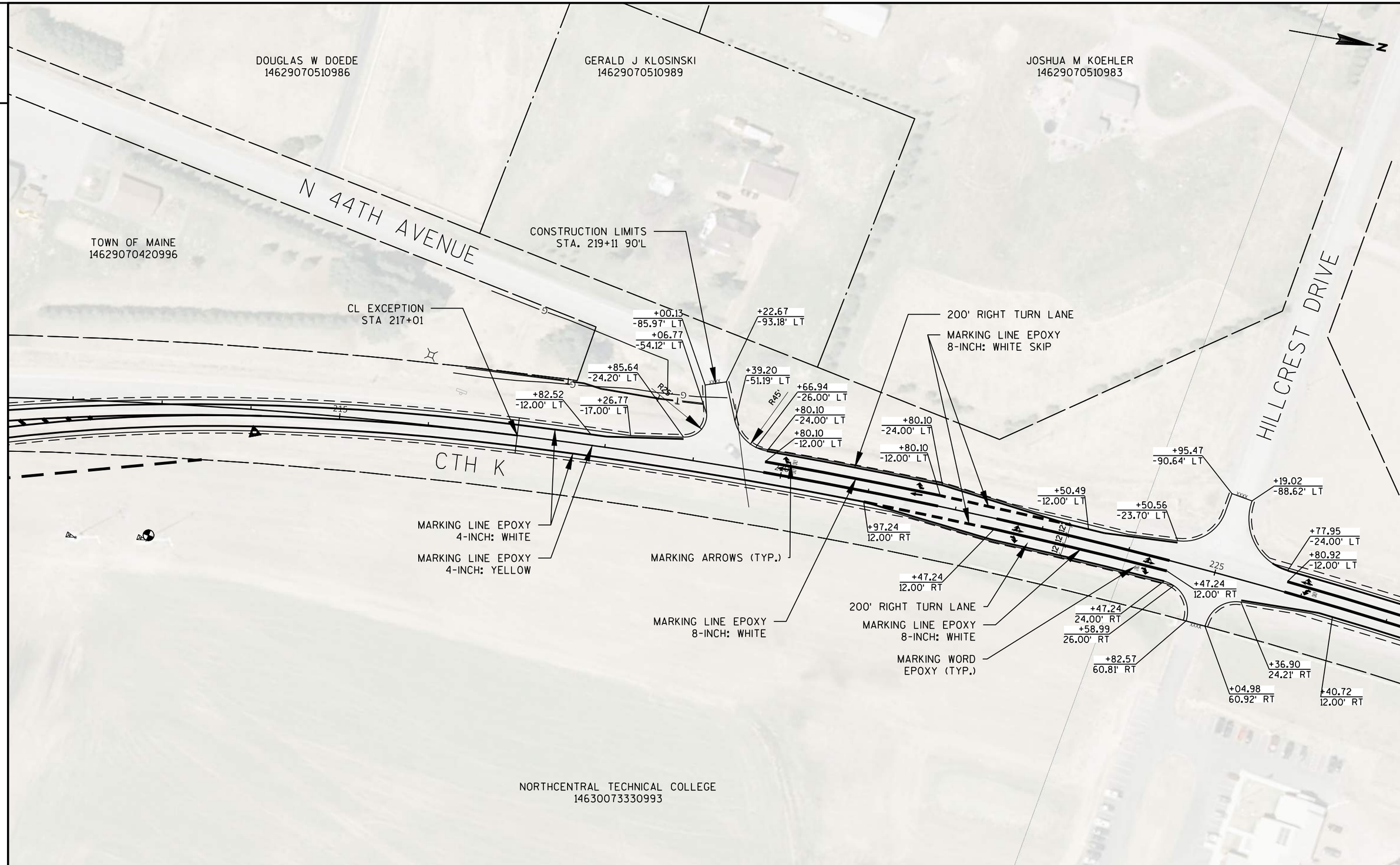

PROJECT NO: 9491-06-70/9491-06-71	HWY: CTH K	COUNTY: MARATHON	CONSTRUCTION DETAIL: N 44TH AVENUE	SHEET 14	E

FILE NAME : R:\5500\5539\5539002\DWG(2018)\021001-CD01.DWG
LAYOUT NAME - STA 212-227
PLOT DATE : 11/10/2022 11:11 AM PLOT BY : ROCHELLE L. BURSA PLOT NAME : PLOT SCALE : 1 IN:100 FT
WISDOT/CADDS SHEET 42

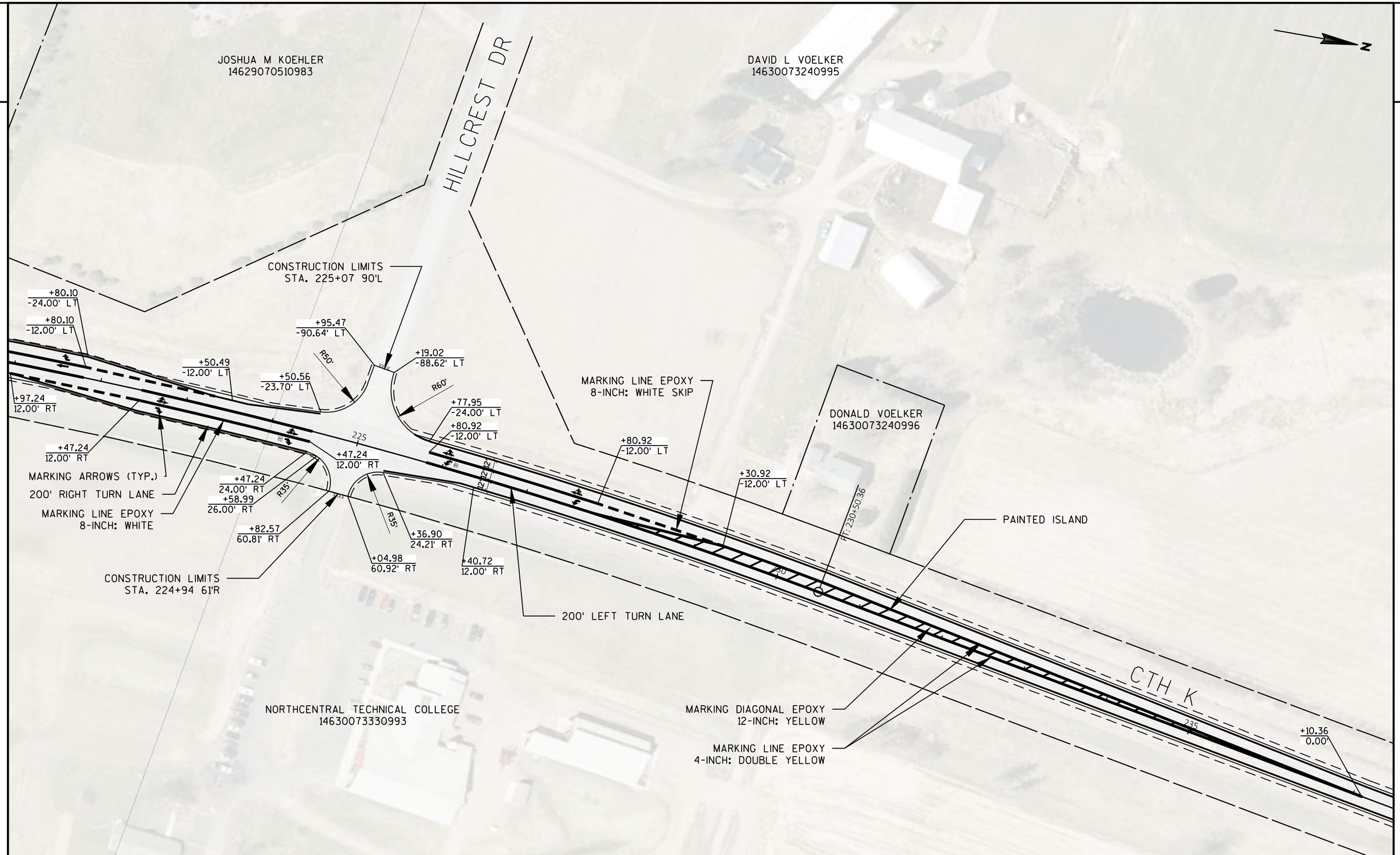

PROJECT NO: 9491-06-70/9491-06-71	HWY: CTH K	COUNTY: MARATHON	CONSTRUCTION DETAIL: HILLCREST DRIVE	SHEET 15	E

FILE NAME : R:\5500\5539\5539002\DWG(2018)\021001-CD01.DWG
LAYOUT NAME - STA 217-233
PLOT DATE : 11/10/2022 11:14 AM
PLOT BY : ROCHELLE L. BURSA
PLOT NAME :
PLOT SCALE : 1 IN:100 FT
WISDOT/CADDS SHEET 42

2

LACTALIS USA INC
14630073210999

VANDERGEEST
& SONS INC
14630072940990

VANDERGEEST MAINE
DAIRY LLC
14630072940991

KRISTOPHER
OTTMAN
14630073210998

MARKING DIAGONAL EPOXY
12-INCH: YELLOW

MARKING LINE EPOXY
4-INCH: DOUBLE YELLOW

MARKING LINE EPOXY
4-INCH: WHITE

CONSTRUCTION LIMITS
STA. 73+52

12' ACCELERATION LANE W/ 3'
PAVED AND 3' GRAVEL SHOULDER

PAINTED ISLAND

MARKING LINE EPOXY
4-INCH: WHITE DASHED

150' TAPER

PC: 272+76.96

PI: 73+36.88

EP: 63+61.98

CTH A

CTH K

JULIAN DRIVE

SAWCUT FULL DEPTH

SLOPE INTERCEPT
(TYP.)

MARKING LINE EPOXY
8-INCH: WHITE SKIP

MARKING LINE EPOXY
8-INCH: WHITE

MARKING WORD
EPOXY (TYP.)

CONCRETE CURB AND GUTTER
4-INCH SLOPED 36-INCH TYPE D
(TYP.)

CONSTRUCTION LIMITS
STA. 61+39

JOHN JORGENSEN
1460073320996

BRITTANY THEILMAN
14630073320995

DOLORES
LONSDORF
14630073320978

DOLORES
LONSDORF
14630073320989

JANISCH TRUCKING
INC
14630073320991

CHRISTOPHE
LONSDORF
14630073320988

PEGGY GRIFFIN
14630073320982

PROJECT NO: 9491-06-70/9491-06-71	HWY: CTH K	COUNTY: MARATHON	CONSTRUCTION DETAIL: CTH A / JULIAN DRIVE	SHEET 16 E

FILE NAME : R:\5500\5539\5539002\DWG(2018)\021001-CD01.DWG
LAYOUT NAME - STA 265-279
PLOT DATE : 11/10/2022 11:20 AM
PLOT BY : ROCHELLE L. BURSA
PLOT NAME :
PLOT SCALE : 1 IN:100 FT
WISDOT/CADDS SHEET 42

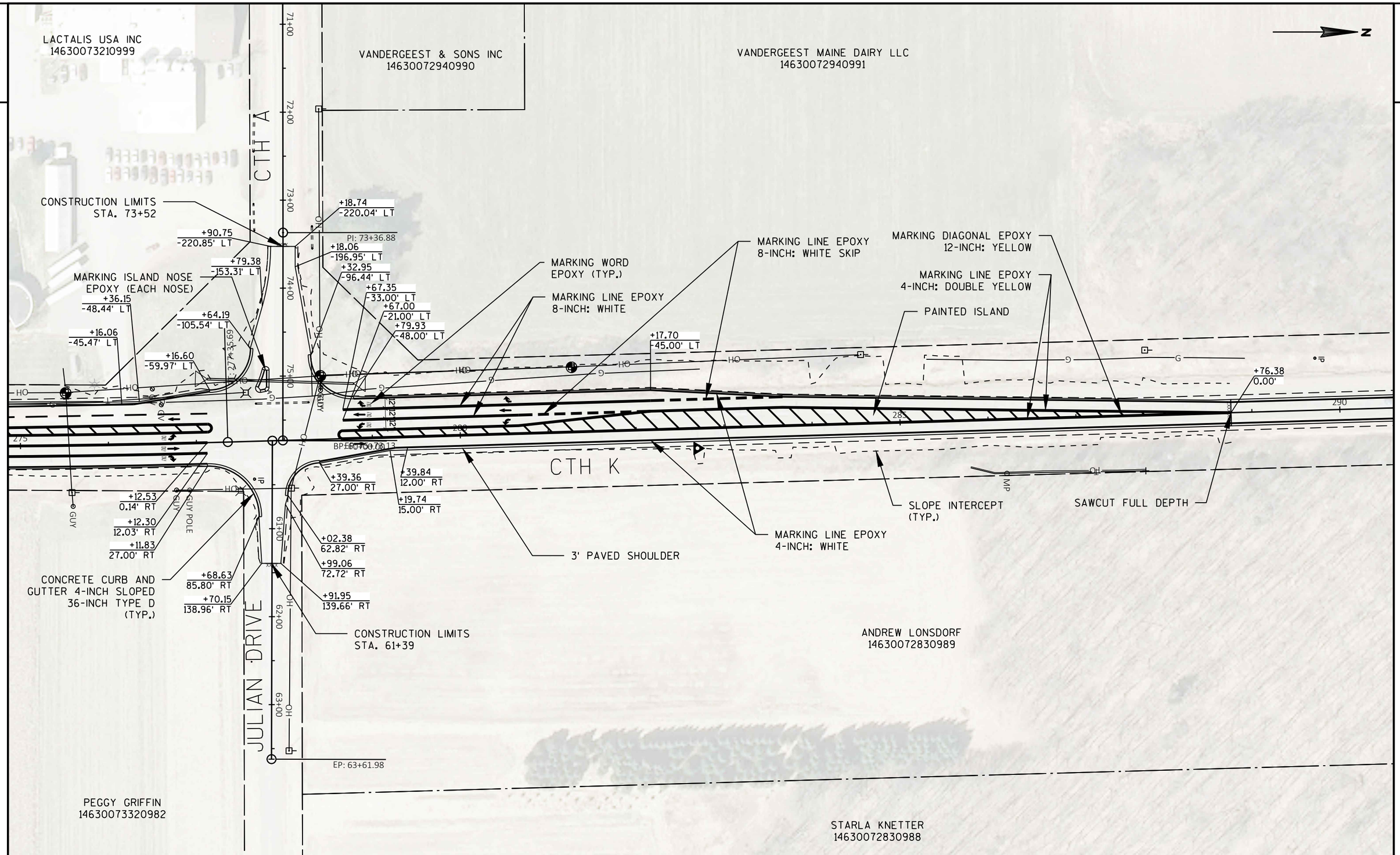

PROJECT NO: 9491-06-70/9491-06-71	HWY: CTH K	COUNTY: MARATHON	CONSTRUCTION DETAIL: CTH A / JULIAN DRIVE	SHEET 17	E

FILE NAME : R:\5500\5539\5539002\DWG(2018)\021001-CD01.DWG
LAYOUT NAME - STA 275-290
PLOT DATE : 11/15/2022 9:24 AM
PLOT BY : RYAN H. TRZINSKI
PLOT NAME :
PLOT SCALE : 1 IN:100 FT
WISDOT/CADDS SHEET 42

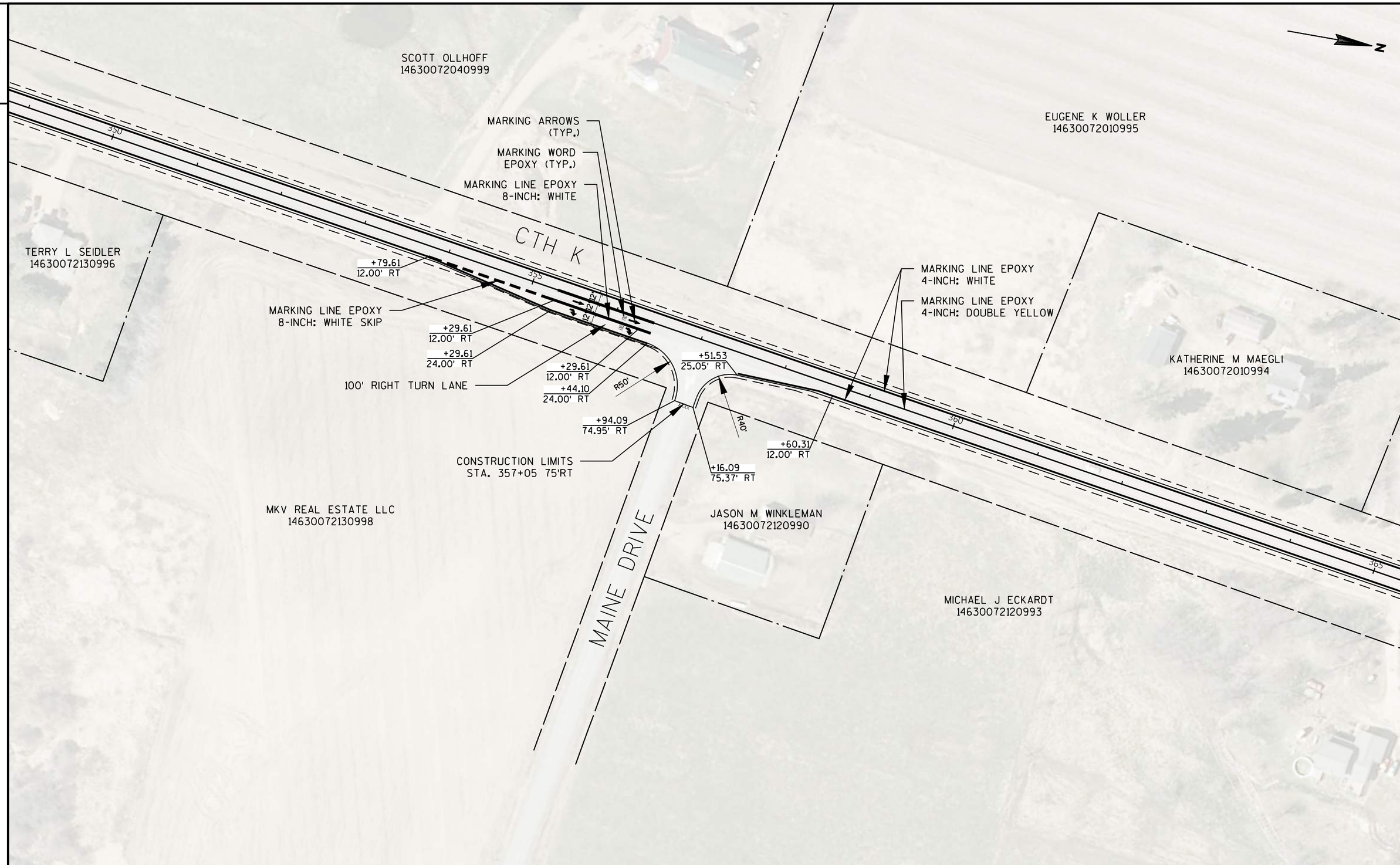

PROJECT NO: 9491-06-70/9491-06-71	HWY: CTH K	COUNTY: MARATHON	CONSTRUCTION DETAIL: MAINE DRIVE	SHEET 18	E

FILE NAME : R:\5500\5539\5539002\DWG(2018)\021001-CD01.DWG
LAYOUT NAME - STA 349-365
PLOT DATE : 11/10/2022 11:25 AM PLOT BY : ROCHELLE L. BURSA PLOT NAME : PLOT SCALE : 1 IN:100 FT
WISDOT/CADDS SHEET 42

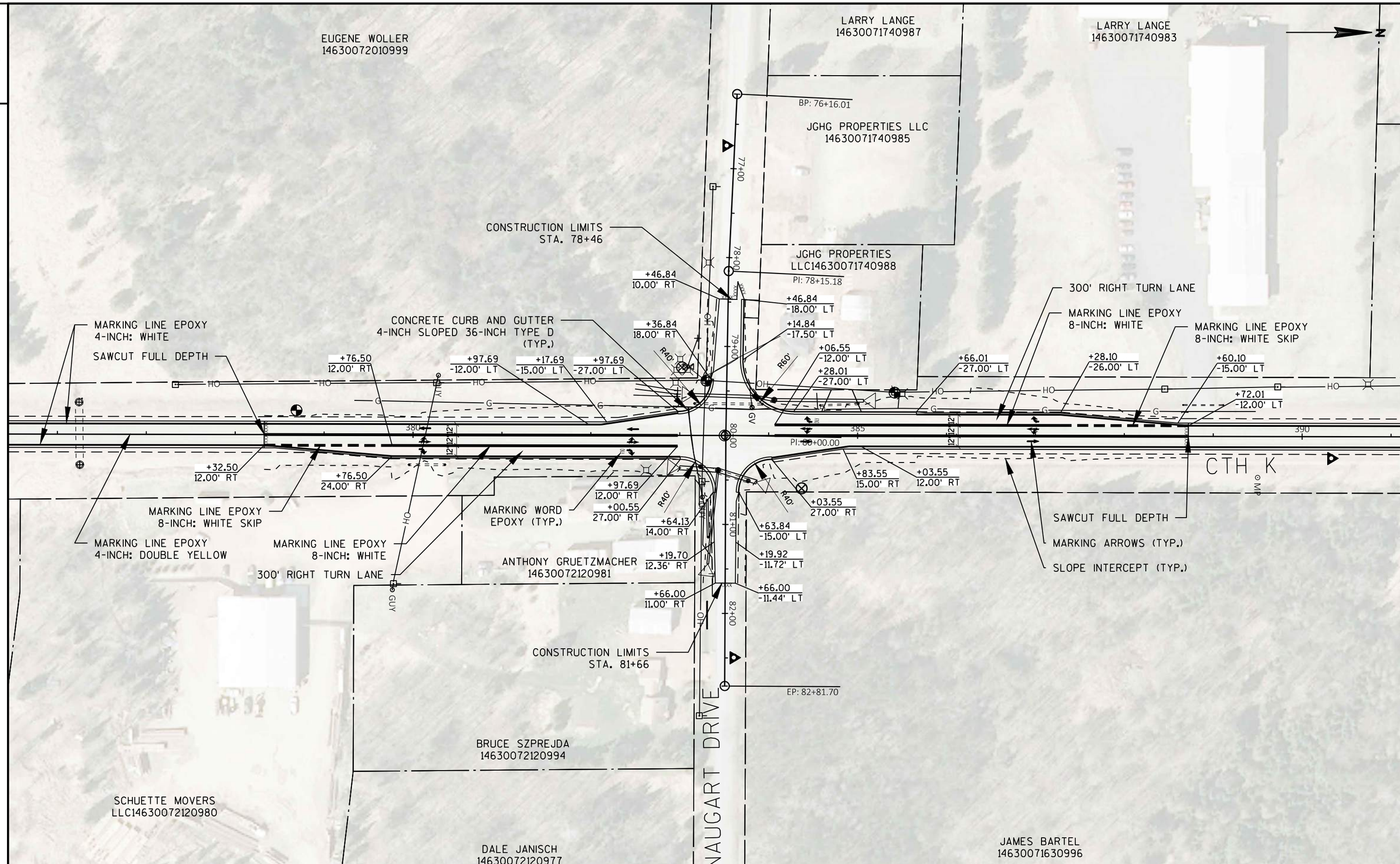

PROJECT NO: 9491-06-70/9491-06-71	HWY: CTH K	COUNTY: MARATHON	CONSTRUCTION DETAIL: NAUGART ROAD	SHEET 19	E

FILE NAME : R:\5500\5539\5539002\DWG(2018)\021001-CD01.DWG
LAYOUT NAME - STA 376-390
PLOT DATE : 11/10/2022 11:30 AM PLOT BY : ROCHELLE L. BURSA PLOT NAME : PLOT SCALE : 1 IN:100 FT
WISDOT/CADDS SHEET 42

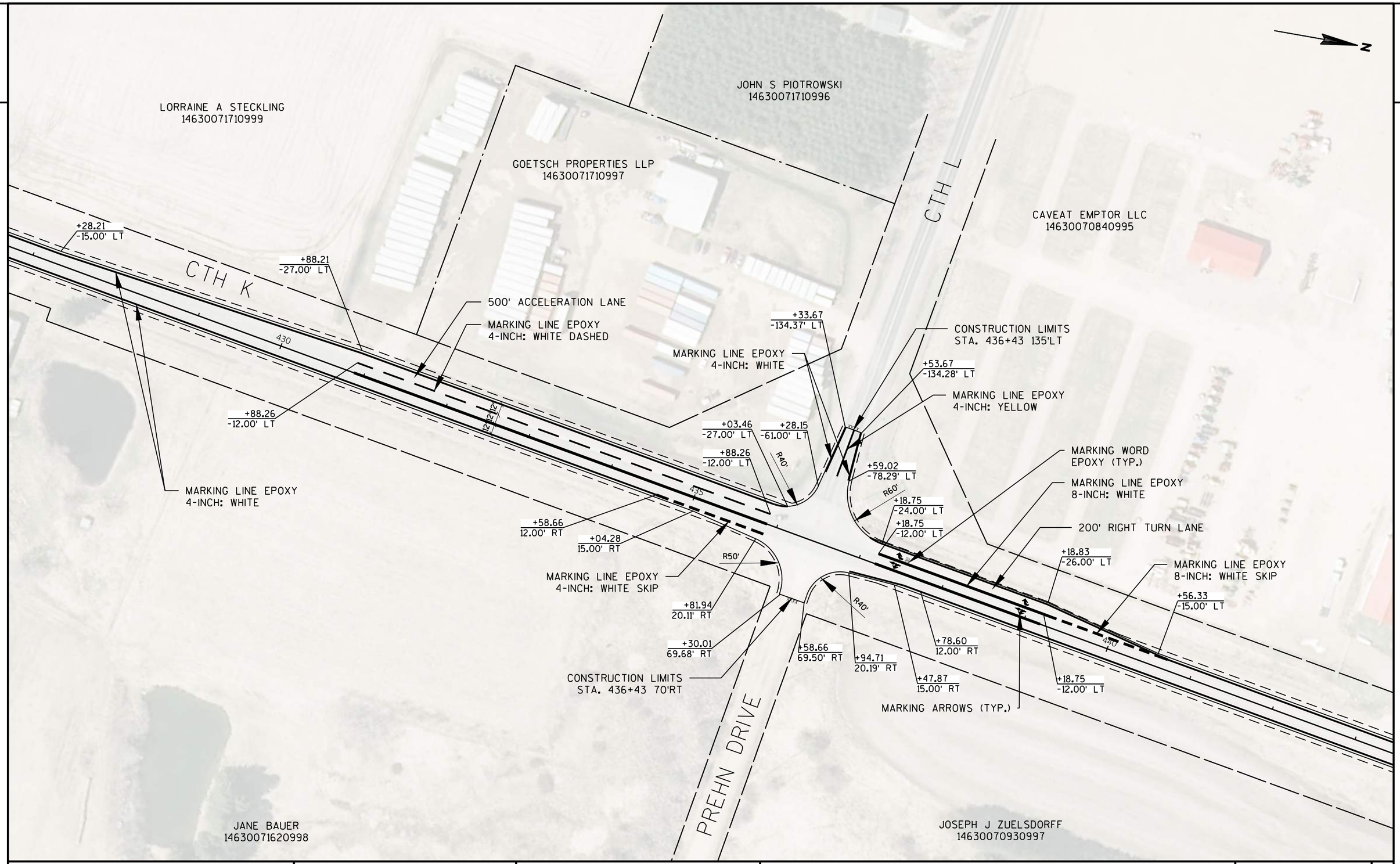

PROJECT NO: 9491-06-70/9491-06-71	HWY: CTH K	COUNTY: MARATHON	CONSTRUCTION DETAIL: PREHN DRIVE / CTH L	SHEET 20	E

FILE NAME : R:\5500\5539\5539002\DWG(2018)\021001-CD01.DWG
LAYOUT NAME - STA 425-440
PLOT DATE : 11/10/2022 11:37 AM PLOT BY : ROCHELLE L. BURSA PLOT NAME : PLOT SCALE : 1 IN:100 FT
WISDOT/CADDS SHEET 42

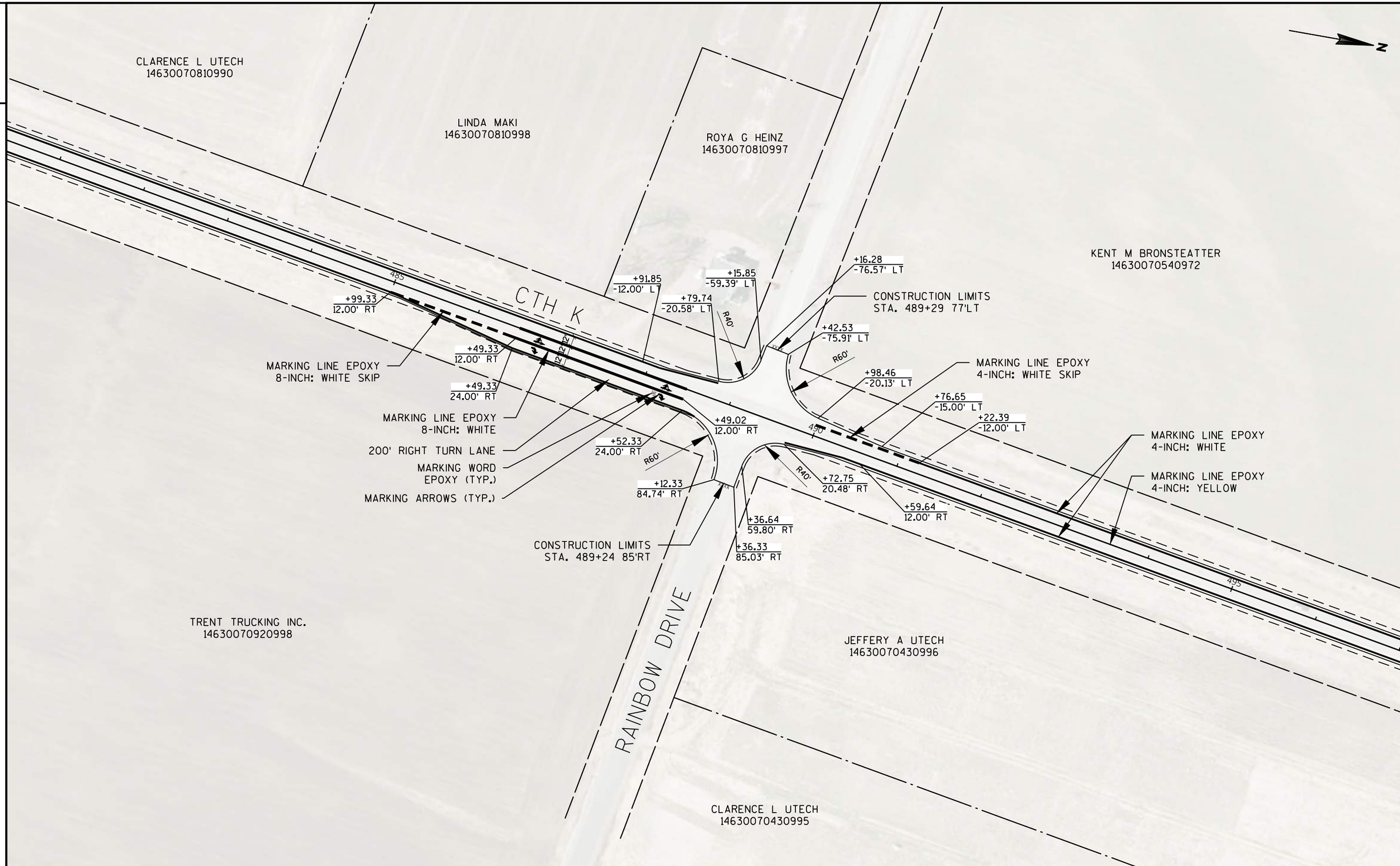

PROJECT NO: 9491-06-70/9491-06-71	HWY: CTH K	COUNTY: MARATHON	CONSTRUCTION DETAIL: RAINBOW DRIVE	SHEET 21	E

FILE NAME : R:\5500\5539\5539002\DWG(2018)\021001-CD01.DWG
LAYOUT NAME - STA 481-497
PLOT DATE : 11/10/2022 11:42 AM
PLOT BY : ROCHELLE L. BURSA
PLOT NAME :
PLOT SCALE : 1 IN:100 FT
WISDOT/CADDS SHEET 42

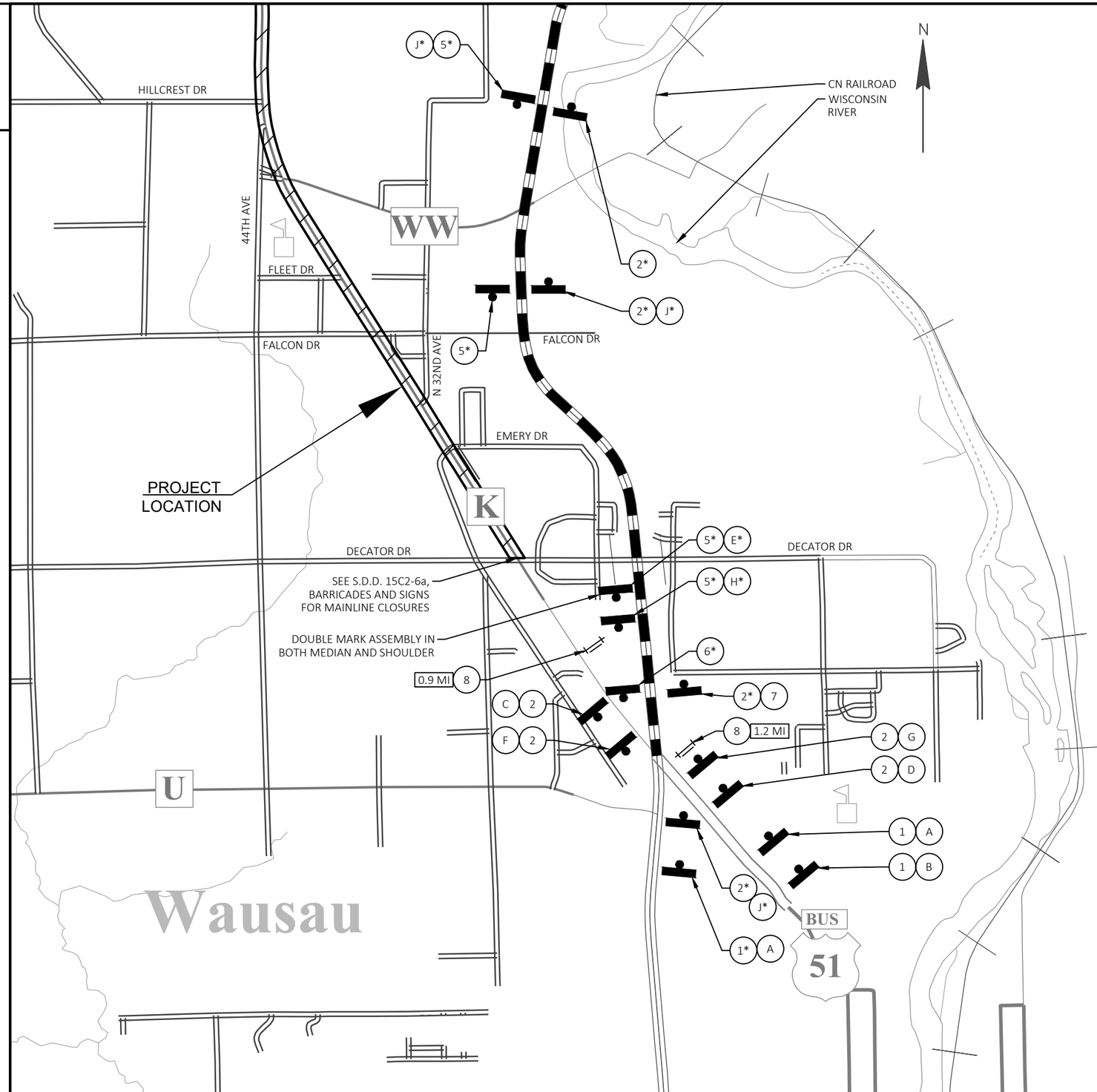

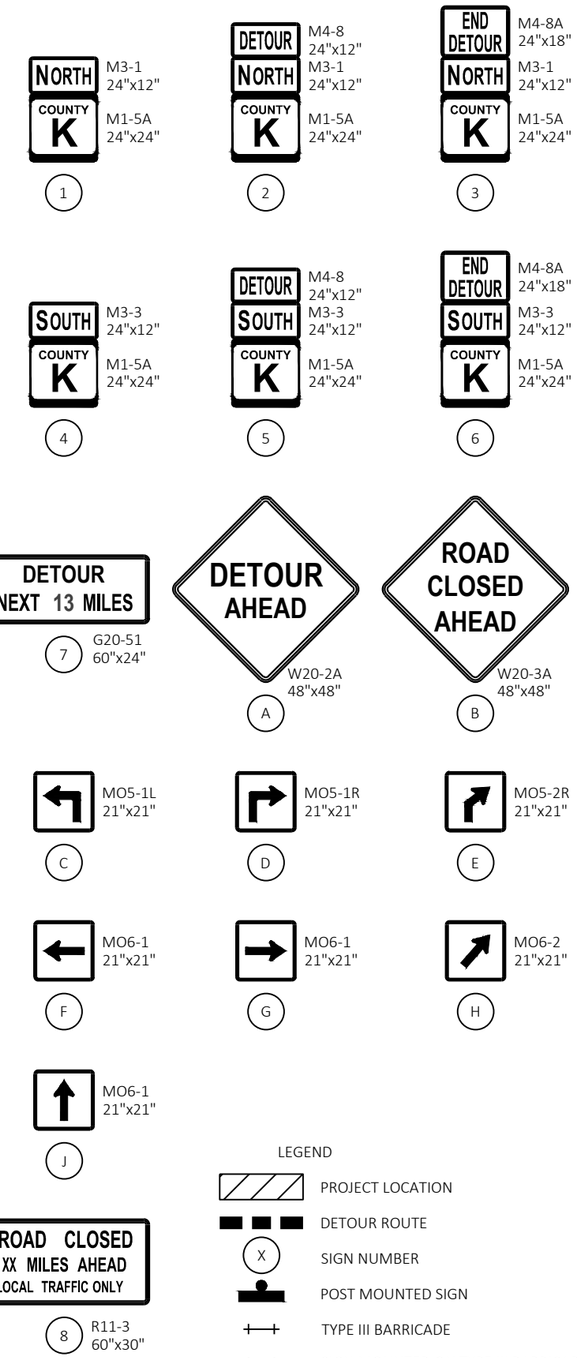

*NOTE: ALL SIGNS ALONG USH51 WILL BE SIZE 5:
M3-1/M3-3: 36"x18"
M1-5A: 36"x36"
M4-8: 36"x18"
M4-8A: 30"x24"
MO5/MO6: 30"x30"

PROJECT NO: 9491-06-70 / 9491-06-71	HWY: CTH K	COUNTY: MARATHON	DETOUR PLAN	SHEET 22	E

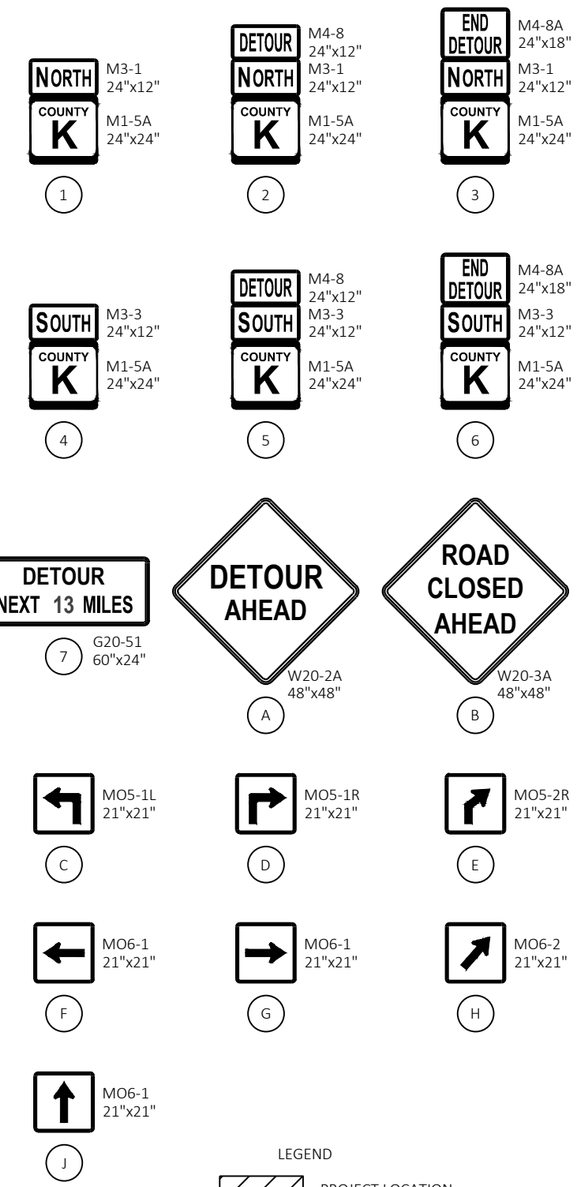

*NOTE: ALL SIGNS ALONG USH51 WILL BE SIZE 5:
M3-1/M3-3: 36"x18"
M1-5A: 36"x36"
M4-8: 36"x18"
M4-8A: 30"x24"
MO5/MO6: 30"x30"

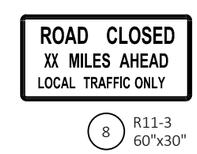

LEGEND

- PROJECT LOCATION
- DETOUR ROUTE
- (X) SIGN NUMBER
- POST MOUNTED SIGN
- TYPE III BARRICADE
- SIGN MOUNTED ON TYPE III BARRICADE

PROJECT NO: 9491-06-70 / 9491-06-71	HWY: CTH K	COUNTY: MARATHON	DETOUR PLAN	SHEET 23	E

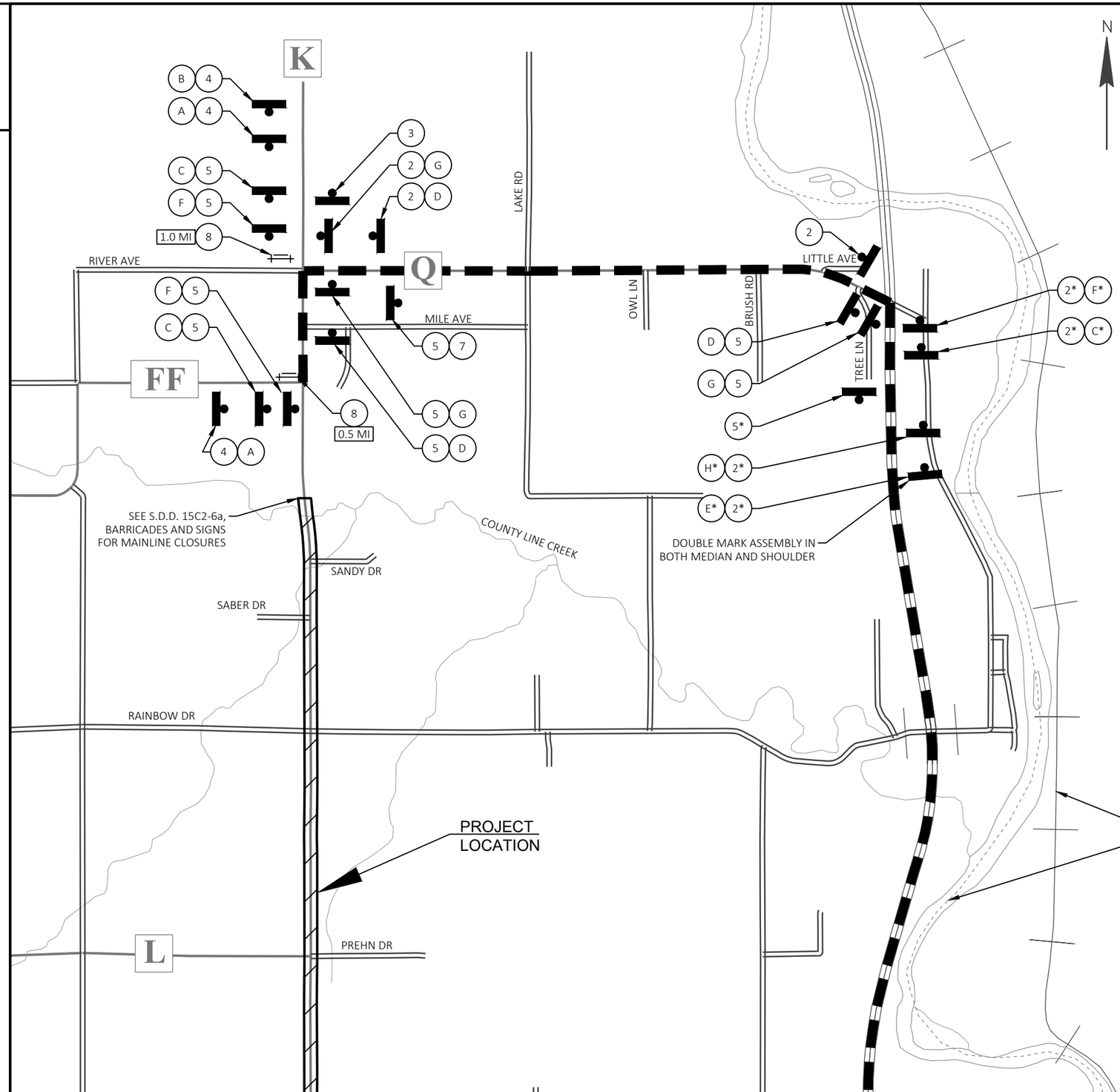

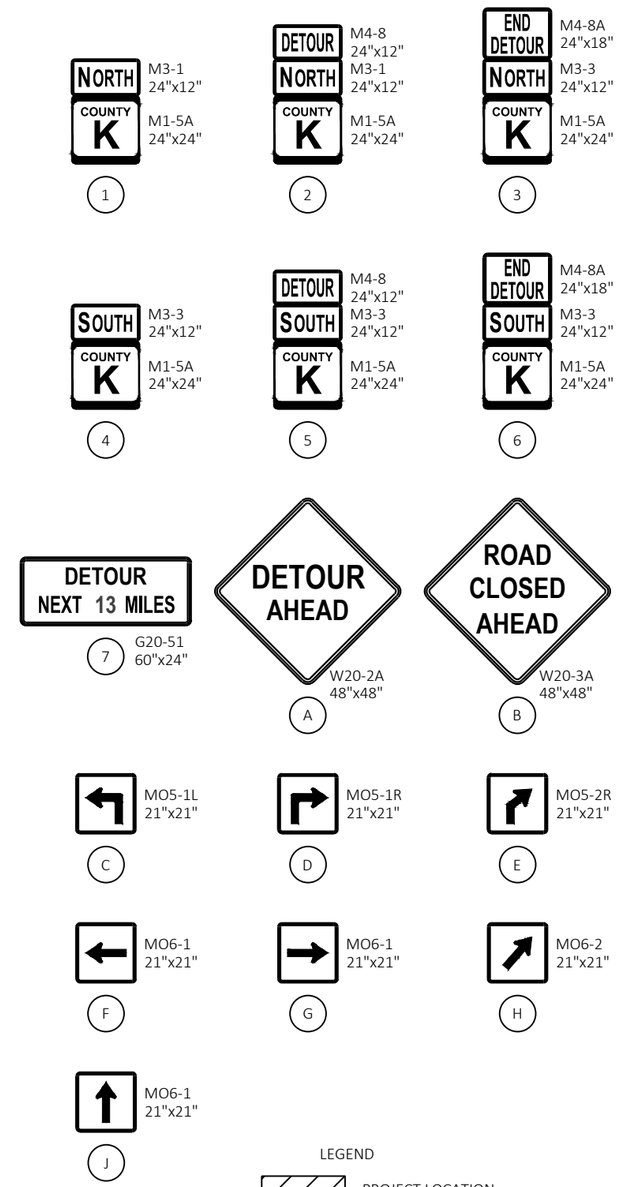

*NOTE: ALL SIGNS ALONG USH51 WILL BE SIZE 5:
M3-1/M3-3: 36"x18"
M1-5A: 36"x36"
M4-8: 36"x18"
M4-8A: 30"x24"
MO5/MO6: 30"x30"

LEGEND

- PROJECT LOCATION
- DETOUR ROUTE
- X SIGN NUMBER
- POST MOUNTED SIGN
- TYPE III BARRICADE
- SIGN MOUNTED ON TYPE III BARRICADE

PROJECT NO: 9491-06-70 / 9491-06-71	HWY: CTH K	COUNTY: MARATHON	DETOUR PLAN	SHEET 24	E

FILE NAME : R:\5500\5539\5539002\DWG(2018)\027001-DT.DWG
LAYOUT NAME - 03
PLOT DATE : 6/14/2022 6:46 PM
PLOT BY : ROCHELLE L. BURSA
PLOT NAME :
PLOT SCALE : 1 IN:0.5 MI
WISDOT/CADDS SHEET 42

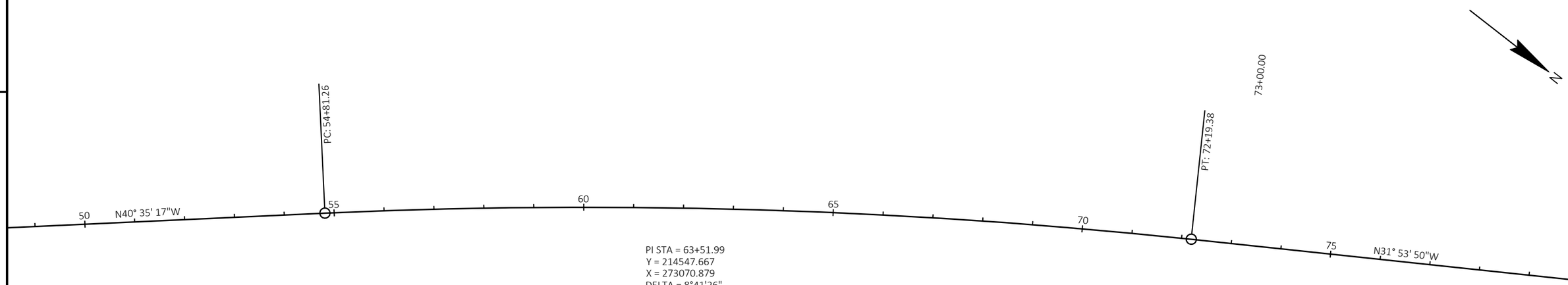

PI STA = 63+51.99
Y = 214547.667
X = 273070.879
DELTA = 8°41'26"
D = 0°30'00"
T = 870.73'
L = 1738.12'
R = 11459.16'
PC STA = 54+81.26
Y = 213886.427
X = 273637.389
PT STA = 72+19.38
Y = 215286.915
X = 272610.785
BK = N40°35'16.6"W
AH = N31°53'50.4"W

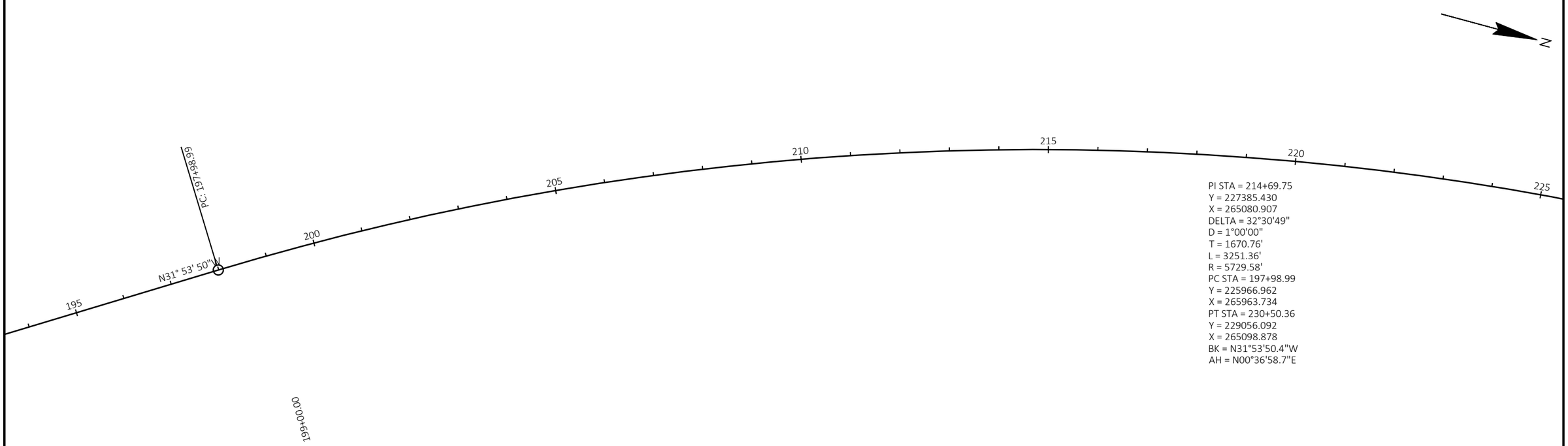

PI STA = 214+69.75
Y = 227385.430
X = 265080.907
DELTA = 32°30'49"
D = 1°00'00"
T = 1670.76'
L = 3251.36'
R = 5729.58'
PC STA = 197+98.99
Y = 225966.962
X = 265963.734
PT STA = 230+50.36
Y = 229056.092
X = 265098.878
BK = N31°53'50.4"W
AH = N00°36'58.7"E

PROJECT NO: 9491-06-70 / 9491-06-71	HWY: CTH K	COUNTY: MARATHON	ALIGNMENT DETAILS: CTH K	SHEET 25	E

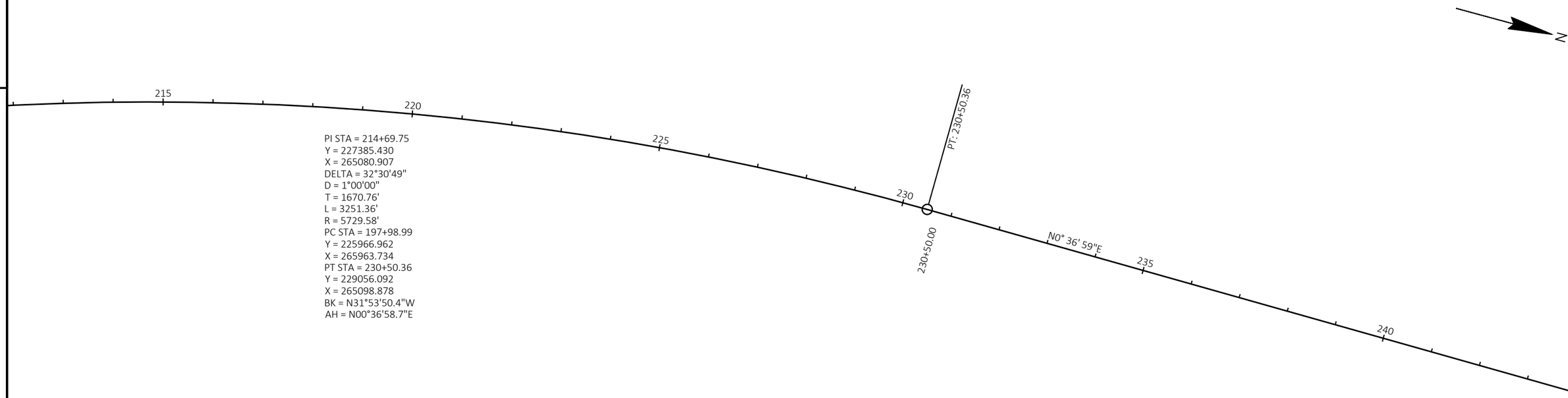

PI STA = 214+69.75
Y = 227385.430
X = 265080.907
DELTA = 32°30'49"
D = 1°00'00"
T = 1670.76'
L = 3251.36'
R = 5729.58'
PC STA = 197+98.99
Y = 225966.962
X = 265963.734
PT STA = 230+50.36
Y = 229056.092
X = 265098.878
BK = N31°53'50.4"W
AH = N00°36'58.7"E

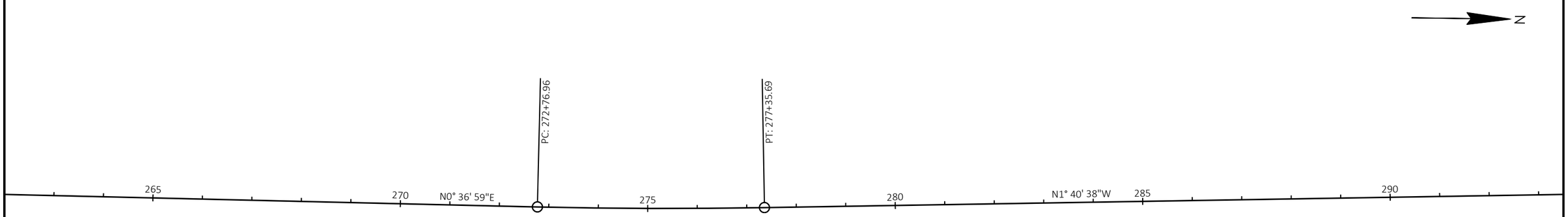

PI STA = 275+06.36
Y = 233511.834
X = 265146.807
DELTA = 2°17'37"
D = 0°30'00"
T = 229.40'
L = 458.73'
R = 11459.16'
PC STA = 272+76.96
Y = 233282.452
X = 265144.340
PT STA = 277+35.69
Y = 233741.132
X = 265140.093
BK = N00°36'58.7"E
AH = N01°40'38.5"W

2

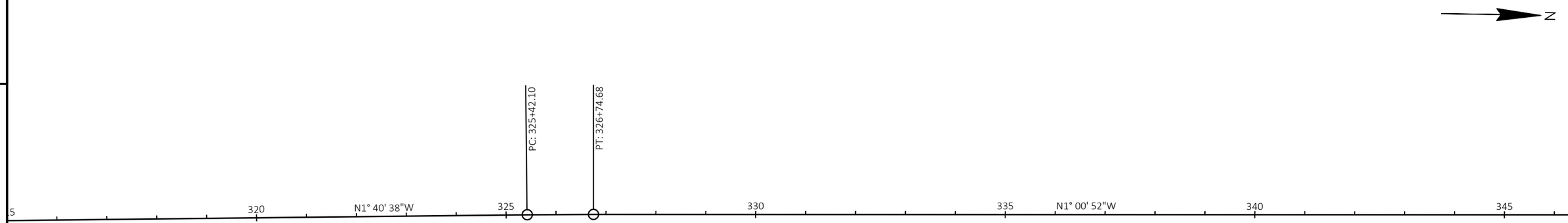

PI STA = 326+08.39
Y = 238611.744
X = 264997.463
DELTA = 0°39'46"
D = 0°30'00"
T = 66.29'
L = 132.58'
R = 11459.16'
PC STA = 325+42.10
Y = 238545.482
X = 264999.403
PT STA = 326+74.68
Y = 238678.025
X = 264996.289
BK = N01°40'38.5"W
AH = N01°00'52.0"W

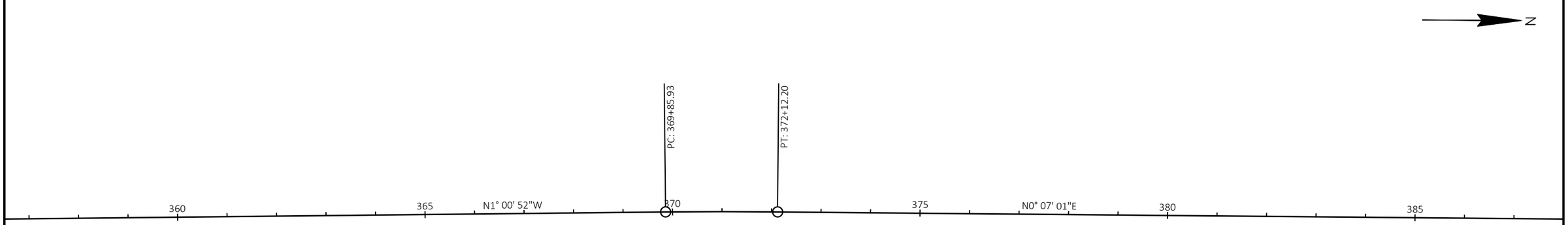

PI STA = 370+99.07
Y = 243101.721
X = 264917.957
DELTA = 1°07'53"
D = 0°30'00"
T = 113.14'
L = 226.28'
R = 11459.16'
PC STA = 369+85.93
Y = 242988.597
X = 264919.960
PT STA = 372+12.20
Y = 243214.863
X = 264918.188
BK = N01°00'52.0"W
AH = N00°07'00.9"E

PROJECT NO: 9491-06-70 / 9491-06-71	HWY: CTH K	COUNTY: MARATHON	ALIGNMENT DETAILS: CTH K	SHEET 27	E

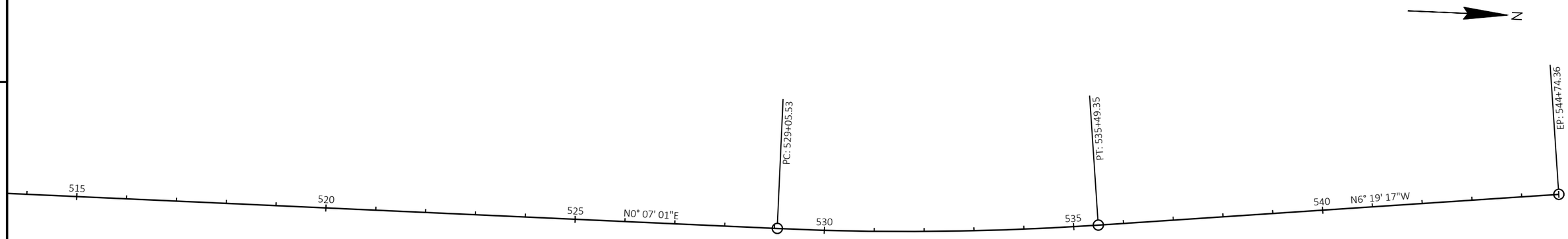

PI STA = 532+27.77
Y = 259230.399
X = 264950.871
DELTA = 6°26'17"
D = 1°00'00"
T = 322.25'
L = 643.82'
R = 5729.58'
PC STA = 529+05.53
Y = 258908.151
X = 264950.213
PT STA = 535+49.35
Y = 259550.689
X = 264915.390
BK = N00°07'00.9"E
AH = N06°19'16.6"W

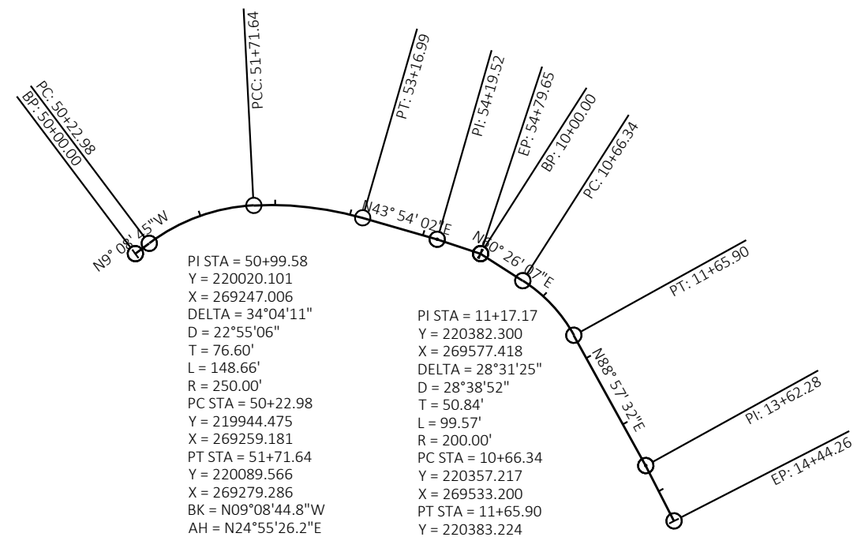
PC: 50+22.98
BP: 50+00.00
PCC: 51+71.64
PT: 53+16.99
PI: 54+19.52
EP: 54+79.65
BP: 10+00.00
PC: 10+66.34
PT: 11+65.90
PI: 13+62.28
EP: 14+44.26
N9° 08' 45"W
N43° 54' 02"E
N60° 26' 07"E
N88° 57' 32"E
PI STA = 50+99.58
Y = 220020.101
X = 269247.006
DELTA = 34°04'11"
D = 22°55'06"
T = 76.60'
L = 148.66'
R = 250.00'
PC STA = 50+22.98
Y = 219944.475
X = 269259.181
PT STA = 51+71.64
Y = 220089.566
X = 269279.286
BK = N09°08'44.8"W
AH = N24°55'26.2"E
PI STA = 11+17.17
Y = 220382.300
X = 269577.418
DELTA = 28°31'25"
D = 28°38'52"
T = 50.84'
L = 99.57'
R = 200.00'
PC STA = 10+66.34
Y = 220357.217
X = 269533.200
PT STA = 11+65.90
Y = 220383.224
X = 269628.247
BK = N60°26'07.5"E
AH = N88°57'32.0"E

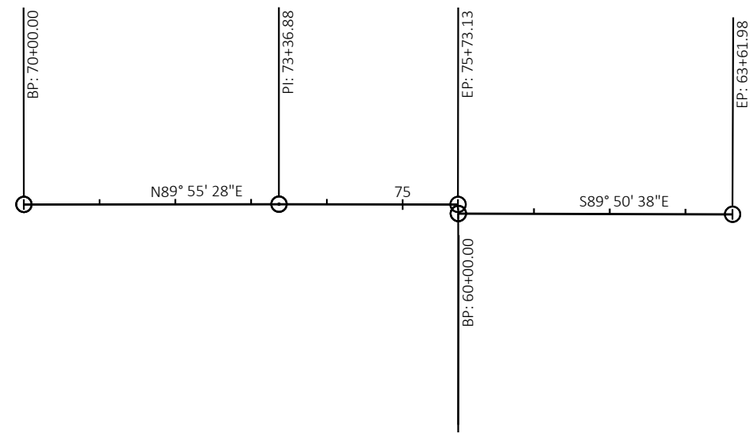

N

2

PROJECT NO: 9491-06-70 / 9491-06-71	HWY: CTH K	COUNTY: MARATHON	ALIGNMENT DETAILS: CTH A / JULIAN DRIVE	SHEET 30	E

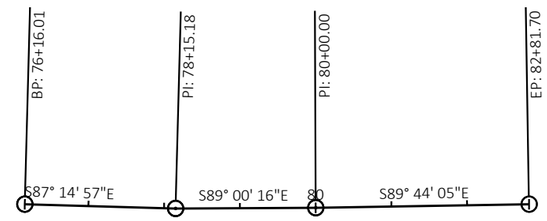

2

PROJECT NO: 9491-06-70 / 9491-06-71	HWY: CTH K	COUNTY: MARATHON	ALIGNMENT DETAILS: NAUGART DRIVE	SHEET 31	E

Line	Item	Item Description	Unit	Total	9491-06-70 Qty	9491-06-71 Qty
0002	203.0100	Removing Small Pipe Culverts	EACH	3.000	3.000	
0004	204.0100	Removing Concrete Pavement	SY	12,550.000	12,550.000	
0006	204.0110	Removing Asphaltic Surface	SY	10,850.000	10,850.000	
0008	204.0115	Removing Asphaltic Surface Butt Joints	SY	3,920.000	1,085.000	2,835.000
0010	204.0120	Removing Asphaltic Surface Milling	SY	8,400.000	8,400.000	
0012	204.0165	Removing Guardrail	LF	1,532.000	1,532.000	
0014	205.0100	Excavation Common	CY	9,610.000	9,610.000	
0016	208.0100	Borrow	CY	4,210.000	4,210.000	
0018	211.0400	Prepare Foundation for Asphaltic Shoulders	STA	350.000	350.000	
0020	213.0100	Finishing Roadway (project) 01. 9491-06-70	EACH	1.000	1.000	
0022	213.0100	Finishing Roadway (project) 02. 9491-06-71	EACH	1.000		1.000
0024	305.0110	Base Aggregate Dense 3/4-Inch	TON	6,870.000	2,265.000	4,605.000
0026	305.0120	Base Aggregate Dense 1 1/4-Inch	TON	28,770.000	28,770.000	
0028	327.1000.S	CIR Asphaltic Base Layer	SY	141,300.000	44,300.000	97,000.000
0030	455.0605	Tack Coat	GAL	10,570.000	4,560.000	6,010.000
0032	455.0770.S	Asphalt Stabilizing Agent	TON	640.000	203.000	437.000
0034	460.0105.S	HMA Percent Within Limits (PWL) Test Strip Volumetrics	EACH	2.000	1.000	1.000
0036	460.0110.S	HMA Percent Within Limits (PWL) Test Strip Density	EACH	1.000		1.000
0038	460.2000	Incentive Density HMA Pavement	DOL	8,950.000	7,340.000	1,610.000
0040	460.2005	Incentive Density PWL HMA Pavement	DOL	12,300.000	3,200.000	9,100.000
0042	460.2007	Incentive Density HMA Pavement Longitudinal Joints	DOL	20,960.000	5,460.000	15,500.000
0044	460.2010	Incentive Air Voids HMA Pavement	DOL	20,800.000	9,200.000	11,600.000
0046	460.6223	HMA Pavement 3 MT 58-28 S	TON	5,460.000	5,460.000	
0048	460.6225	HMA Pavement 5 MT 58-28 S	TON	20,800.000	9,200.000	11,600.000
0050	465.0425	Asphaltic Shoulder Rumble Strips 2-Lane Rural	LF	65,500.000	65,500.000	
0052	465.0475	Asphalt Centerline Rumble Strips 2-Lane Rural	LF	29,100.000	29,100.000	
0054	522.0118	Culvert Pipe Reinforced Concrete Class III 18-Inch	LF	166.000	166.000	
0056	522.1018	Apron Endwalls for Culvert Pipe Reinforced Concrete 18-Inch	EACH	3.000	3.000	
0058	522.2619	Apron Endwalls for Culvert Pipe Reinforced Concrete Horizontal Elliptical 19x30-Inch	EACH	2.000	2.000	
0060	522.2629	Apron Endwalls for Culvert Pipe Reinforced Concrete Horizontal Elliptical 29x45-Inch	EACH	2.000	2.000	
0062	601.0553	Concrete Curb & Gutter 4-Inch Sloped 36-Inch Type D	LF	1,460.000	1,460.000	
0064	602.0405	Concrete Sidewalk 4-Inch	SF	120.000	120.000	
0066	608.0418	Storm Sewer Pipe Reinforced Concrete Class IV 18-Inch	LF	106.000	106.000	
0068	608.2419	Storm Sewer Pipe Reinforced Concrete Horizontal Elliptical Class HE-IV 19x30-Inch	LF	192.000	192.000	
0070	608.2429	Storm Sewer Pipe Reinforced Concrete Horizontal Elliptical Class HE-IV 29x45-Inch	LF	89.000	89.000	
0072	611.0545	Manhole Covers Type L	EACH	1.000	1.000	
0074	611.0612	Inlet Covers Type C	EACH	1.000	1.000	
0076	611.0652	Inlet Covers Type T	EACH	1.000	1.000	
0078	611.2005	Manholes 5-FT Diameter	EACH	2.000	2.000	
0080	611.2007	Manholes 7-FT Diameter	EACH	1.000	1.000	
0082	614.2300	MGS Guardrail 3	LF	1,488.000	1,488.000	
0084	614.2610	MGS Guardrail Terminal EAT	EACH	4.000	4.000	
0086	618.0100	Maintenance And Repair of Haul Roads (project) 01. 9491-06-71	EACH	1.000		1.000
0088	619.1000	Mobilization	EACH	1.000	0.600	0.400
0090	620.0300	Concrete Median Sloped Nose	SF	60.000	60.000	
0092	624.0100	Water	MGAL	343.000	297.000	46.000
0094	625.0500	Salvaged Topsoil	SY	18,907.000	18,907.000	
0096	628.1504	Silt Fence	LF	13,335.000	13,335.000	
0098	628.1520	Silt Fence Maintenance	LF	13,335.000	13,335.000	

Line	Item	Item Description	Unit	Total	9491-06-70 Qty	9491-06-71 Qty
0100	628.1905	Mobilizations Erosion Control	EACH	8.000	8.000	
0102	628.1910	Mobilizations Emergency Erosion Control	EACH	4.000	4.000	
0104	628.2008	Erosion Mat Urban Class I Type B	SY	19,088.000	19,088.000	
0106	628.7010	Inlet Protection Type B	EACH	1.000	1.000	
0108	628.7504	Temporary Ditch Checks	LF	560.000	560.000	
0110	628.7555	Culvert Pipe Checks	EACH	15.000	15.000	
0112	628.7570	Rock Bags	EACH	40.000	40.000	
0114	629.0210	Fertilizer Type B	CWT	16.000	16.000	
0116	630.0120	Seeding Mixture No. 20	LB	560.000	560.000	
0118	630.0200	Seeding Temporary	LB	560.000	560.000	
0120	630.0500	Seed Water	MGAL	450.000	450.000	
0122	642.5001	Field Office Type B	EACH	1.000	0.600	0.400
0124	643.0300	Traffic Control Drums	DAY	40,560.000	20,280.000	20,280.000
0126	643.0420	Traffic Control Barricades Type III	DAY	11,024.000	5,512.000	5,512.000
0128	643.0705	Traffic Control Warning Lights Type A	DAY	22,048.000	11,024.000	11,024.000
0130	643.0900	Traffic Control Signs	DAY	30,992.000	15,496.000	15,496.000
0132	643.1050	Traffic Control Signs PCMS	DAY	14.000	7.000	7.000
0134	643.3120	Temporary Marking Line Epoxy 4-Inch	LF	41,200.000	20,190.000	21,010.000
0136	643.5000	Traffic Control	EACH	1.000	0.600	0.400
0138	646.1020	Marking Line Epoxy 4-Inch	LF	202,260.000	43,090.000	159,170.000
0140	646.3020	Marking Line Epoxy 8-Inch	LF	5,300.000	3,610.000	1,690.000
0142	646.5020	Marking Arrow Epoxy	EACH	65.000	40.000	25.000
0144	646.5120	Marking Word Epoxy	EACH	17.000	10.000	7.000
0146	646.7120	Marking Diagonal Epoxy 12-Inch	LF	2,400.000	1,946.000	454.000
0148	646.8220	Marking Island Nose Epoxy	EACH	3.000	3.000	
0150	648.0100	Locating No-Passing Zones	MI	7.930	1.170	6.760
0152	650.4000	Construction Staking Storm Sewer	EACH	2.000	2.000	
0154	650.4500	Construction Staking Subgrade	LF	5,498.000	5,498.000	
0156	650.5000	Construction Staking Base	LF	5,498.000	5,498.000	
0158	650.5500	Construction Staking Curb Gutter and Curb & Gutter	LF	1,460.000	1,460.000	
0160	650.6000	Construction Staking Pipe Culverts	EACH	1.000	1.000	
0162	650.8000	Construction Staking Resurfacing Reference	LF	41,897.000	6,200.000	35,697.000
0164	650.9500	Construction Staking Sidewalk (project) 01. 9491-06-70	EACH	1.000	1.000	
0166	650.9911	Construction Staking Supplemental Control (project) 01. 9491-06-70	EACH	1.000	1.000	
0168	650.9911	Construction Staking Supplemental Control (project) 02. 9491-06-71	EACH	1.000		1.000
0170	650.9920	Construction Staking Slope Stakes	LF	6,212.000	6,212.000	
0172	690.0150	Sawing Asphalt	LF	494.000	494.000	
0174	690.0250	Sawing Concrete	LF	281.000	281.000	
0176	740.0440	Incentive IRI Ride	DOL	15,880.000	4,130.000	11,750.000
0178	ASP.1T0A	On-the-Job Training Apprentice at $5.00/HR	HRS	2,400.000	2,400.000	
0180	ASP.1T0G	On-the-Job Training Graduate at $5.00/HR	HRS	1,980.000	1,980.000	

3

REMOVING SMALL PIPE CULVERTS

CATEGORY	PROJECT	STA	LOCATION	203.0100 REMOVING SMALL PIPE CULVERTS EACH	SIZE & MATERIAL
0010	9491-06-70	75+30	CTH A	1	(18" PLASTIC)
0010	9491-06-70	79+64	NAUGART DRIVE	1	(24" CMP)
0010	9491-06-70	80+44	NAUGART DRIVE	1	(30"X48" CMP)
			PROJECT 9491-06-70 TOTAL	**3**	

REMOVING PAVEMENT

CATEGORY	PROJECT	STA	TO	STA	LOCATION	204.0100 REMOVING CONCRETE PAVEMENT SY	204.0110 REMOVING ASPHALTIC SURFACE SY
0010	9491-06-70	123+12	-	138+00	EMERY DRIVE	3,970	3,290
0010	9491-06-70	267+02	-	288+76	CTH A	5,800	5,700
0010	9491-06-70	378+32	-	388+72	NAUGART DRIVE	2,780	1,860
					PROJECT 9491-06-70 TOTALS	**12,550**	**10,850**

3

REMOVING ASPHALTIC SURFACE BUTT JOINTS

CATEGORY	PROJECT	5TA	TO	5TA	LOCATION	204.0115 REMOVING A5PHALTIC 5URFACE BUTT JOINTS 5Y
0010	9491-06-70	101+55	-	103+55	CTH K	850
0010	9491-06-70				N 32ND 5TREET	235
0010	9491-06-71				FACLCON DRIVE	270
0010	9491-06-71				FLEET DRIVE	135
0010	9491-06-71				44TH AVE	135
0010	9491-06-71				HILLCRE5T DRIVE	170
0010	9491-06-71				HONEY BEE LANE	125
0010	9491-06-71				KERN DRIVE	125
0010	9491-06-71				LAREDO LANE	135
0010	9491-06-71				LIBERTY DRIVE	125
0010	9491-06-71				MAINE DRIVE`	125
0010	9491-06-71				CTH L	155
0010	9491-06-71				PREHN DRIVE	125
0010	9491-06-71				RAINBOW DRIVE	245
0010	9491-06-71				SABER DRIVE	125
0010	9491-06-71				5ANDY DRIVE	125
0010	9491-06-71	542+74	-	544+74	CTH K	550
0010		UNDISTRIBUTED				165
					PROJECT 9491-06-70 TOTAL	1,085
					PROJECT 9491-06-71 TOTAL	2,835
					PROJECT TOTAL	3,920

PREPARE FOUNDATION FOR ASPHALTIC SHOULDERS

CATEGORY	PROJECT	STA	TO	STA	LOCATION	211.0400 PREPARE FOUNDATIO N FOR ASPHALTIC SHOULDERS STA
0010	9491-06-70	101+55	-	123+12	CTH K	22
0010	9491-06-70	143+11	-	198+13	CTH K	55
0010	9491-06-70	237+10	-	246+03	CTH K	9
0010	9491-06-70	246+03	-	253+47	CTH K	8
0010	9491-06-70	253+47	-	267+02	CTH K	15
0100	9491-06-70	288+76	-	300+72	CTH K	12
0010	9491-06-70	302+30	-	378+32	CTH K	76
0010	9491-06-70	388+72	-	436+50	CTH K	48
0010	9491-06-70	436+50	-	526+18	CTH K	90
0010	9491-06-70	528+23	-	538+89	CTH K	11
0010	9491-06-70	540+60	-	544+74	CTH K	4
					PROJECT 9491-06-70 TOTAL	**350**

REMOVING ASPHALTIC SURFACE MILLING

CATEGORY	PROJECT	STA	TO	STA	LOCATION	204.0120 REMOVING ASPHALTIC SURFACE MILLING SY	REMARKS
0010	9491-06-70	132+00	-	139+8S	CTH K	980	NB AUX
0010	9491-06-70	230+50	-	241+00	CTH K	817	SB AUX
0010	9491-06-70	2S7+00	-	266+S0	CTH K	1,267	NB AUX
0010	9491-06-70	289+S0	-	297+S0	CTH K	623	SB AUX
0100	9491-06-70	304+S0	-	330+S0	CTH K	2,473	NB AUX
0010	9491-06-70	407+S0	-	427+40	CTH K	1,SS0	SB AUX
0010		UNDISTRIBUTED				690	
					PROJECT 9491-06-70 TOTAL	**8,400**	

3

EARTHWORK

CATEGORY	From/To Station	Location	Common Excavation Cut (1)	(Item # 205.0100) EBS Excavation	Salvaged/Unusable Pavement Material	Available Material (2)	Unexpanded Fill	Expanded Fill (3) Factor 1.25	Mass Ordinate +/- (4)	Waste	Borrow (Item #208.0100)	Comment:
0010	123+12 - 138+14	CTH K & EMERY	4313	0	856	3457	2639	3299	158	0	-158	
0010	284+85 - 255+00	CTH K BEAMGUARD	132	0	0	132	2594	3243	-3111	0	3111	
0010	267+02 - 288+76	CTH K & CTH A	3095	0	1266	1829	2238	2797	-969	0	969	
0010	378+32 - 388+72	CTH K & NAUGART	877	0	604	273	580	725	-452	0	452	
0010	10+62 - 81+66	SIDEROADS	1093	0	0	1093	666	833	260	0	-260	
0010	UNDISTRIBUTED		100								96	
Division 0010 Subtotal			9610	0	2727	6783	8718	10897	-4114			
Grand Total			9610	0	2727	6783	8718	10897	-4114	0	4210	
			Total Common Exc	9610								
			PROJECT 9491-06-70 TOTAL	9610							4210	
			PROJECT 9491-06-71 TOTAL	0							0	
			PROJECT TOTAL	**9610**							**4210**	

3

REMOVING GUARDRAIL

CATEGORY	PROJECT	STA	TO	STA	LOCATION	204.0165 REMOVING GUARDRAIL LF
0010	9491-06-70	246+17	-	253+83	LT	766
0010	9491-06-70	246+17	-	253+83	RT	766
					PROJECT 9491-06-70 TOTAL	**1,532**

FINISHING ROADWAY

CATEGORY	PROJECT	213.0100 FINISHING ROADWAY EACH
0010	9491-06-70	1
0010	9491-06-71	1
	TOTAL	**2**

BASE AGGREGATE DENSE

CATEGORY	PROJECT	STA	TO	STA	LOCATION	305.0110 BASE AGGREGATE DENSE 3/4-INCH TON	305.0120 BASE AGGREGATE DENSE 1 1/4-INCH TON	624.0100 WATER MGAL	REMARKS
0010	9491-06-70	101+55	-	163+55	LT	260	--	3	SUPPLEMENTAL
0010	9491-06-70	101+55	-	163+55	RT	260	--	3	FOR SHOULDERS
0010	9491-06-70	123+12	-	138+00	EMERY DRIVE	348	8,618	87	
0010	9491-06-70	267+02	-	288+76	CTH A	846	14,128	142	
0010	9491-06-70	378+32	-	388+72	NAUGART	405	5,708	58	
0010	9491-06-70			UNDISTRIBUTED		146	316	4	
0010	9491-06-71	163+55	-	544+74	LT	2,240	--	23	SUPPLEMENTAL
0010	9491-06-71	163+55	-	544+74	RT	2,240	--	23	FOR SHOULDERS
0010	9491-06-71			UNDISTRIBUTED		125	--	--	
					PROJECT 9491-06-70 TOTALS	2,265	28,770	297	
					PROJECT 9491-06-71 TOTALS	4,605	--	46	
					PROJECT TOTALS	**6,870**	**28,770**	**343**	

3

COLD IN-PLACE RECYCLING (CIR) ASPHALT BASE LAYER

CATEGORY	PROJECT	STA	TO	STA	LOCATION	327.1000.S COLD IN-PLACE RECYCLING (CIR) ASPHALT BASE LAYER 5Y	4SS.0770.S ASPHALT STABILIZING AGENT TON	REMARKS
0010	9491-06-70	101+SS	-	123+12	CTH K	8,S00	39	FULL PAVEMENT WIDTH
0010	9491-06-70	138+00	-	163+S5	CTH K	11,300	S1	FULL PAVEMENT WIDTH
0010	9491-06-70	163+SS	-	198+13	CTH K	3,900	18	SHOULDERS ONLY
0010	9491-06-70	217+01	-	224+99	CTH K	900	S	SHOULDERS ONLY
0010	9491-06-70	224+99	-	267+02	CTH K	2,900	13	SHOULDERS ONLY
0010	9491-06-70	288+76	-	378+32	CTH K	6,000	27	SHOULDERS ONLY
0010	9491-06-70	388+72	-	S44+74	CTH K	10,S00	48	SHOULDERS ONLY
0010	UNDISTRIBUTED					300	2	
0010	9491-06-71	163+5S	-	198+13	CTH K	10,100	46	MAINLINE ONLY
0010	9491-06-71	217+01	-	224+99	CTH K	2,800	13	MAINLINE ONLY
0010	9491-06-71	224+99	-	267+02	CTH K	14,S00	6S	MAINLINE ONLY
0010	9491-06-71	288+76	-	378+32	CTH K	2S,100	113	MAINLINE ONLY
0010	9491-06-71	388+72	-	S44+74	CTH K	44,100	198	MAINLINE ONLY
0010	UNDISTRIBUTED					400	2	
					PROJECT 9491-06-70 TOTAL	44,300	203	
					PROJECT 9491-06-71 TOTAL	97,000	437	
					PROJECT TOTAL	**141,300**	**640**	

HMA PAVEMENT

CATEGORY	PROJECT	5TA	TO	5TA	LOCATION	455.0605 TACK COAT GAL	460.6223 HMA PAVEMENT 3 MT 58-285 TON	460.6225 HMA PAVEMENT 5 MT 58-285 TON	HMA PAVEMENT 5 MT 58-285 PWL DEN5ITY INCENTIVE TON *	HMA PAVEMENT 5 MT 58-285 PWL AIR VOID5 TON5 **	460.0105.5 HMA PAVEMENT PWL TE5T 5TRIP VOLUMETRIC5 EACH	460.0110.5 HMA PAVEMENT PWL TE5T 5TRIP DEN5ITY EACH	REMARK5
0010	9491-06-70	101+SS	-	123+12	CTH K	510	--	1,000	667	333	--	--	ENTIRE PAVEMENT WIDTH
0010	9491-06-70	123+12	-	138+00	CTH K	480	1,440	900	600	300	--	--	EMERY INTER5ECTION
0010	9491-06-70	138+00	-	163+55	CTH K	680	--	1,300	867	433	--	--	ENTIRE PAVEMENT WIDTH
0010	9491-06-70	163+55	-	198+13	CTH K	230	--	500	--	500	--	--	5HOULDER5
0011	9491-06-70	217+01	-	224+99	CTH K	50	--	100	--	100	--	--	5HOULDER5
0010	9491-06-70	224+99	-	267+02	CTH K	170	--	400	--	400	--	--	SHOULDER5
0010	9491-06-70	267+02	-	288+76	CTH K	890	2,650	1,700	1,140	560	--	--	CTH A INTER5ECTION
0010	9491-06-70	288+76	-	378+32	CTH K	360	--	700	--	700	--	--	5HOULDER5
0010	9491-06-70	378+32	-	388+72	CTH K	340	1,030	700	500	200	--	--	NAUGART INTER5ECTION
0010	9491-06-70	388+72	-	544+74	CTH K	620	--	1,200	--	1,200	--	--	5HOULDER5
0010	9491-06-70	101+SS	-	544+74	CTH K	200	290	600	--	600	--	--	WEDGE / SUPPLEMENTAL
0010	UNDI5TRIBUTED					30	50	100	67	33	--	--	
0010	9491-06-71	163+55	-	198+13	CTH K	610	--	1,200	1,200	--	--	--	MAINLINE
0010	9491-06-71	217+01	-	224+99	CTH K	160	--	400	400	--	--	--	MAINLINE
0010	9491-06-71	224+99	-	267+02	CTH K	870	--	1,600	1,600	--	--	--	MAINLINE
0010	9491-06-71	288+76	-	378+32	CTH K	1,500	--	2,800	2,800	--	--	--	MAINLINE
0010	9491-06-71	388+72	-	544+74	CTH K	2,640	--	4,900	4,900	--	--	--	MAINLINE
0010	9491-06-71	163+55	-	544+74	CTH K	200	--	600	--	600	--	--	WEDGE / 5UPPLEMENTAL
0010	UNDI5TRIBUTED					30	--	100	67	33	--	--	
					PROJECT 9491-06-70 TOTAL5	4,560	5,460	9,200	3,841	5,359	1	--	
					PROJECT 9491-06-71 TOTAL5	6,010	--	11,600	10,967	633	1	1	
					PROJECT TOTALS	**10,570**	**5,460**	**20,800**	**14,808**	**5,992**	**2**	**1**	

* TONNAGE I5 ELIGIBLE FOR INCENTIVE DENSITY PWL 460.2005 AND INCENTIVE AIR VOIDS 460.2010

** TONNAGE I5 ELIGIBLE FOR INCENTIVE AIR VOIDE5 460.2010 ADM DEN5ITY I5 TE5TED FOR ACCEPTANCE IN THO5E AREA5.

3

RUMBLE STRIPS

CATEGORY	PROJECT	STA	TO	STA	LOCATION	465.0425 ASPHALTIC SHOULDER RUMBLE STRIPS 2-LANE RURAL LF	465.0475 ASPHALTIC CENTERLINE RUMBLE STRIPS 2-LANE RURAL LF	REMARKS
0010	9491-06-70	101+55	-	163+55	LT	4,965	--	
0010	9491-06-70	101+55	-	163+55	RT	4,489	--	DECATOR - FALCON
0010	9491-06-70	101+55	-	163+55	CL	--	3,657	
0010	9491-06-70	163+55	-	198+13	LT	2,600	--	
0010	9491-06-70	163+55	-	198+13	RT	3,082	--	FALCON - CTH WW
0010	9491-06-70	163+55	-	198+13	CL	--	2,858	
0010	9491-06-70	217+01	-	277+98	LT	3,959	--	
0010	9491-06-70	217+01	-	277+98	RT	4,192	--	CTH WW - CTH A
0010	9491-06-70	217+01	-	277+98	CL	--	2,295	
0010	9491-06-70	277+98	-	357+05	LT	5,614	--	
0010	9491-06-70	277+98	-	357+05	RT	6,091	--	CTH A - MAINE
0010	9491-06-70	277+98	-	357+05	CL	--	4,881	
0010	9491-06-70	357+05	-	436+44	LT	6,307	--	
0010	9491-06-70	357+05	-	436+44	RT	6,564	--	MAINE - CTH L
0010	9491-06-70	357+05	-	436+44	CL	--	6,539	
0010	9491-06-70	436+44	-	544+74	LT	8,374	--	
0010	9491-06-70	436+44	-	544+74	RT	8,738	--	CTH L - LINCOLN CO LINE
0010	9491-06-70	436+44	-	544+74	CL	--	8,570	
0010	9491-06-70	UNDISTRIBUTED				525	300	
		PROJECT 9491-06-70 TOTALS				65,500	29,100	

CULVERT PIPES

CATEGORY	PROJECT	LOCATION	OUTLET STATION	OUTLET OFFSET TO END OF PIPE LF	OUTLET OFFSET	OUTLET INVERT ELEVATION	INLET STATION	INLET OFFSET TO END OF PIPE LF	INLET	INLET INVERT ELEVATION	522.0118 CULVERT PIPE REINFORCED CONCRETE CLASS III 18-INCH LF	** 522.1018 APRON ENDWALLS FOR CULVERT PIPE REINFORCED CONRETE 18-INCH EACH	628.7555 CULVERT PIPE CHECKS EACH
0010	9491-06-70	CTH A	278+83	62	LT	1401.95	277+14	71	LT	1398.59	166	2	5
0010	9491-06-70	NAUGART	384+06								-	-	10
		PROJECT TOTAL									166	2	15

* OFFSET TO END OF PIPE IS FROM CENTER LINE OF ROADWAY.
** ALSO SHOWN BELOW

STORM SEWER ITEMS

STRUCTURE NO.	PROJECT	LOCATION	RIM / FLANGE ELEVATION	TOP OF STRUCTURE ELEVATION	STRUCTURE INVERT ELEVATION	STRUCTURE DEPTH	FROM STRUCTURE NO.	TO STRUCTURE NO.	INVERT IN ELEVATION	INVERT OUT ELEVATION	APRON ENDWALLS FOR CULVERT PIPE REINFORCED CONCRETE 18-INCH 522.1018 EACH	APRON ENDWALLS FOR CULVERT PIPE REINFORCED CONCRETE HORIZONTAL ELLIPTICAL 19X30-INCH 522.2619 EACH	APRON ENDWALLS FOR CULVERT PIPE REINFORCED CONCRETE HORIZONTAL ELLIPTICAL 29X4S-INCH 522.2629 EACH	STORM SEWER PIPE REINFORCED CONCRETE CLASS IV 18-INCH 608.0418 LF	STORM SEWER PIPE REINFORCED CONCRETE HORIZONTAL ELLIPTICAL CLASS HE-IV 19X30-INCH 608.2419 LF	STORM SEWER PIPE REINFORCED CONCRETE HORIZONTAL ELLIPTICAL CLASS HE-IV 29X4S-INCH 608.2429 LF	MANHOLE COVERS TYPE L 611.0545 EACH	INLET COVERS TYPE C 611.0612 EACH	INLET COVERS TYPE T 611.0652 EACH	MANHOLES 5-FT DIAMETER 611.2005 EACH	MANHOLES 7-FT DIAMETER 611.2007 EACH
MH1	9491-06-70	383+43	1498.80	1497.80	1493.80	4.00	AEW3	MH1	1497.23	1493.80	1.0	-	-	106.0	-	-	1.0	-	-	-	1.0
-	9491-06-70	383+43	-	-	-	-	AEW4	MH1	1496.17	1493.80	-	-	1	-	-	46.0	-	-	-	-	-
-	9491-06-70	383+43	-	-	-	-	MH1	AEWS	1493.80	1493.60	-	-	1	-	-	43.0	-	-	-	-	-
MH2	9491-06-70	383+86	1497.34	1496.80	1493.60	3.20	MH2	AEW6	1494.24	1493.60	-	1	-	-	70.0	-	-	-	1	1.0	-
MH3	9491-06-70	384+06	1499.20	1498.66	1494.96	3.70	MH3	MH2	1494.96	1494.24	-	-	-	-	21.0	-	-	1	-	1.0	-
-	9491-06-70	384+06	-	-	-	-	AEW7	MH3	1S00.2S	1494.96	-	1	-	-	101.0	-	-	-	-	-	-
PROJECT TOTAL											1	2	2	106	192	89	1	1	1	2	1

(A) STATION AND OFFSET MEASURED TO CENTER OF STRUCTURE UNLESS OTHERWISE NOTED.
(B) TOP OF STRUCTURE ELEVATION MEASURED AS FOLLOWS:
(C) STRUCTURE DEPTH MEASURED AS TOP OF STRUCTURE ELEVATION - STRUCTURE INVERT ELEVATION.
(D) RIM / FLANGE ELEVATION TAKEN FROM FLANG LINE OR CENTER OF MANHOLE COVER
(E) ENDWALL STATION AND OFFSET MEASURED TO END OF SLOPED SECTION OF STRUCTURE UNLESS OTHERWISE NOTED.

3

CONCRETE ITEMS

CATEGORY	PROJECT	LOCATION	STATION			601.0553 CONCRETE CURB & GUTTER 4-INCH SLOPED 36-INCH TYPE D LF	602.0405 CONCRETE SIDWALK 4-INCH SF	620.0300 CONCRETE MEDIAN SLOPED NOSE TYPE 2 SF	646.822 MARKING ISLAND NOSE EPOXY EA
0010	9491-06-70	CTH K & EMERY	130+72	-	132+16	320	-	-	-
0010	9491-06-70	CTH K & CTH A	277+10	-	278+80	660	120	60	3
0010	9491-06-70	CTH K & NUAGART	382+92	-	385+66	480	-	-	-
			PROJECT 9491-06-70 TOTALS			**1460**	**120**	**60**	**3**

MGS GUARDRAIL

CATEGORY	PROJECT	STA	TO	STA	LOCATION	614.2300 MGS GUARDRAIL 3 LF	614.2610 MGS GUARDRAIL TERMINAL EAT EA
0010	9491-06-70	245+50	-	254+00	LT	744	2
0010	9491-06-70	245+50	-	254+00	RT	744	2
		PROJECT 9491-06-70 TOTAL				**1,488**	**4**

3

MAINTENANCE AND REPAIR OF HAUL ROADS

CATEGORY	PROJECT	618.0100 MAINTENANCE AND REPAIR OF HAUL ROADS EACH
0020	9491-06-71	1
	TOTAL	**1**

MOBILIZATION

CATEGORY	PROJECT	619.1000 MOBILIZATION EACH
0010	9491-06-70	0.6
0010	9491-06-71	0.4
	TOTAL	**1**

EROSION CONTROL DEVICES

CATEGORY	PROJECT	STA	TO	STA	62S.0S00 SALVAGED TOPSOIL SY	628.1S04 SILT FENCE LF	628.1520 SILT FENCE MAINTENANCE LF	628.2008 EROSION MAT URBAN CLASS I TYPE B SY	628.7010 INLET PROTECTION TYPE B EA	628.7S04 TEMPORARY DITCH CHECKS LF	628.7S70 ROCK BAGS EA	630.0S00 SEED WATER *	629.0210 FERTILIZER TYPE B CWT	630.0120 SEEDING MIXTURE NO. 20 LBS	630.0200 SEEDING TEMPORARY LBS	REMARKS
0010	9491-06-70	123+12	-	138+00	S,840	3,610	3,610	S,840	-	100	10	13S	4	1S8	1S8	EMERY
0010	9491-06-70	24S+S0	-	2S4+00	3,154	2,160	2,160	3,154	-	100	--	71	2	86	86	BEAMGUARD REPLACEMENT
0010	9491-06-70	267+02	-	288+76	7,342	S,22S	S,22S	7,342	-	100	10	16S	S	199	199	CTH A
0010	9491-06-70	378+32	-	388+72	2,S71	2,340	2,340	2,S71	1	100	10	S8	2	70	70	NAUGART
0010	9491-06-70	UNDISTRIBUTED			--	--	--	181	-	160	10	21	3	47	47	
		PROJECT 9491-06-70 TOTALS			**18,907**	**13,335**	**13,335**	**19,088**	**1**	**560**	**40**	**450**	**16**	**560**	**560**	

* ROCK BAGS ARE TO BE PLACED IN DITCH BOTTOMS AS DIRECTED BY ENGINEER

3

EROSION CONTROL MOBILIZATIONS

CATEGORY	PROJECT	628.1905 MOBILIZATIONS EROSION CONTROL EACH	628.1910 MOBILIZATIONS EMERGENCY EROSION CONTROL EACH
0010	9491-06-70	8	4
	TOTALS	**8**	**4**

FIELD OFFICE TYPE B

CATEGORY	LOCATION	642.5001 FIELD OFFICE TYPE B EACH
0010	9491-06-70	0.6
0010	9491-06-71	0.4
	TOTAL	**1**

TRAFFIC CONTROL

CATEGORY	LOCATION	643.5000 TRAFFIC CONTROL EACH
0010	9491-06-70	0.6
0010	9491-06-71	0.4
	TOTAL	**1**

3

TRAFFIC CONTROL ITEMS

CATEGORY	LOCATION	PROJECT DURATION DAYS	643.0300 TRAFFIC CONTROL DRUMS EACH	643.0300 TRAFFIC CONTROL DRUMS DAYS	643.0420 TRAFFIC CONTROL BARRICADES TYPE III EACH	643.0420 TRAFFIC CONTROL BARRICADES TYPE III DAYS	643.0705 TRAFFIC CONTROL WARNING LIGHTS TYPE A EACH	643.0705 TRAFFIC CONTROL WARNING LIGHTS TYPE A DAYS	643.0900 TRAFFIC CONTROL SIGNS EACH	643.0900 TRAFFIC CONTROL SIGNS DAYS	643.1050 TRAFFIC CONTROL SIGNS PCMS EACH	643.1050 TRAFFIC CONTROL SIGNS PCMS DAYS
0010	PROJECT WORK AREA	104	300	31,200	102	10,608	204	21,216	140	14,560	2	14
0010	PROJECT DETOUR	104	--	--	4	416	8	832	158	16,432	--	--
0010	UNDISTRIBUTED	104	90	9,360	–	--	--	--	--	--	--	--
	PROJECT 9491-06-70 TOTALS			20,280		5,512		11,024		15,496		7
	PROJECT 9491-06-71 TOTALS			20,280		5,512		11,024		15,496		7
	PROJECT TOTALS			**40,560**		**11,024**		**22,048**		**30,992**		**14**

3

PAVEMENT MARKING

CATEGORY	PROJECT	STA	TO	STA	LOCATION	646.1020 MARKING LINE EPOXY 4-INCH WHITE LF	646.1020 MARKING LINE EPOXY 4-INCH YELLOW LF	646.3020 MARKING LINE EPOXY 8-INCH LF	646.5020 MARKING ARROW EPOXY EA	646.5120 MARKING WORD EPOXY EA	646.7120 MARKING DIAGONAL EPOXY 12-INCH LF	643.3120 TEMPORARY MARKING LINE EPOXY 4-INCH LF	REMARKS
0010	9491-06-70	101+55	-	163+55	LT	2,972	--	--	--	--	--	--	
0010	9491-06-70	101+55	-	163+55	RT	2,972	--	--	--	--	--	--	PROJECT MAINLINE
0010	9491-06-70	101+55	-	163+55	CL	--	5,190	--	--	--	--	7,100	
0010	9491-06-70	101+55	-	104+94	DECATOR DRIVE	678	424	229	4	1	--	678	
0010	9491-06-70	123+13	-	139+85	EMERY DRIVE	3,079	5,606	692	7	--	515	3,344	
0010	9491-06-70	139+85	-	147+75	N 32ND AVENUE	1,509	2,236	239	4	1	56	1,580	
0010	9491-06-70	159+28	-	167+83	FALCON DRIVE	754	855	239	4	1	--	855	
0010	9491-06-70	267+03	-	288+76	CTH A	4,187	8,340	1,406	12	4	1,207	4,346	
0010	9491-06-70	378+33	-	388+72	NAUGART DRIVE	1,850	2,078	722	8	2	--	2,078	
0010	9491-06-70				UNDISTRIBUTED	177	183	83	1	1	168	209	
0010	9491-06-71	163+55	-	544+74	LT	51,270	--	--	--	--	--	--	
0010	9491-06-71	163+55	-	544+74	RT	51,270	--	--	--	--	--	--	PROJECT MAINLINE
0010	9491-06-71	163+55	-	544+74	CL	--	28,088	--	--	--	--	7,100	
0010	9491-06-71	159+28	-	167+83	FALCON DRIVE	754	855	239	4	1	--	855	
0010	9491-06-71	177+91	-	181+05	FLEET DRIVE	562	628	--	--	--	--	628	
0010	9491-06-71	217+83	-	237+10	44TH AVE / HILLCREST DRIVE	3,551	5,716	717	12	3	316	3,854	
0010	9491-06-71	259+26	-	262+36	HONEY BEE LANE	557	620	--	--	--	--	620	
0010	9491-06-71	302+30	-	305+50	KERN DRIVE	568	640	--	--	--	--	640	
0010	9491-06-71	312+55	-	315+35	LAREDO LANE	524	560	--	--	--	--	560	
0010	9491-06-71	328+80	-	331+80	LIBERTY DRIVE	546	600	--	--	--	--	600	
0010	9491-06-71	353+80	-	358+60	MAINE DRIVE	855	960	159	2	--	--	960	
0010	9491-06-71	427+28	-	440+69	CTH L	2,737	2,682	239	2	1	--	2,682	
0010	9491-06-71	484+99	-	491+22	RAINBOW DRIVE	1,050	1,246	239	4	1	--	1,246	
0010	9491-06-71	514+46	-	517+56	SABER DRIVE	557	620	--	--	--	--	620	
0010	9491-06-71	528+23	-	530+40	SANDY DRIVE	388	434	--	--	--	--	434	
0010	9491-06-71				UNDISTRIBUTED	193	139	97	1	1	138	211	
					PROJECT 9491-06-70 TOTALS	18,178	24,912	3,610	40	10	1,946	20,190	
					PROJECT 9491-06-71 TOTALS	115,382	43,788	1,690	25	7	454	21,010	
					PROJECT TOTALS	**133,560**	**68,700**	**5,300**	**65**	**17**	**2,400**	**41,200**	

3

LOCATING NO PASSING ZONES

CATEGORY	LOCATION	STA	TO	STA	648.0100 LOCATING NO PASSING ZONES MI
0010	9491-06-70	101+55	-	163+55	1.17
0010	9491-06-71	163+55	-	544+74	6.76
				TOTAL	**7.93**

3

CONSTRUCTION STAKING

CATEGORY	PROJECT	STATION	TO	STATION	650.4000 CONSTRUCTION STAKING STORM SEWER EACH	650.4500 CONSTRUCTION STAKING SUBGRADE LF	650.5000 CONSTRUCTION STAKING BASE LF	650.5500 CONSTRUCTION STAKING CURB GUTTER AND CURB & GUTTER LF	650.6000 CONSTRUCTION STAKING PIPE CULVERTS EACH	650.8000 CONSTRUCTION STAKING RESURFACING REFERENCE LF	650.9500 CONSTRUCTION STAKING SIDEWALK EA	650.9911 SUPPLEMENTAL CONTROL (Project) LS	651.9920 CONSTRUCTION STAKING SLOPE STAKES LF
0010	9491-06-70	101+55	-	544+74	2	5,498	5,498	1,460	1	6,200	1	1	6,212
0010	9491-06-71	163+55	-	544+74	--	--	--	--	--	35,697	-	1	--
				TOTALS	**2**	**5,498**	**5,498**	**1,460**	**1**	**41,897**	**1**	**2**	**6,212**

SAWING PAVEMENT

CATEGORY	PROJECT	STA	TO	STA	690.0105 SAWING ASPHALT LF	690.0250 SAWING CONCRETE LF	REMARKS
0010	9491-06-70	101+55	-	163+55	268	149	DECATOR TO FALCON
0010	9491-06-70	217+01	-	277+98	124	72	CTH A
0010	9491-06-70	277+98	-	357+05	102	60	NAUGART
				PROJECT 9491-06-70 TOTAL	494	281	
				PROJECT TOTAL	**494**	**281**	

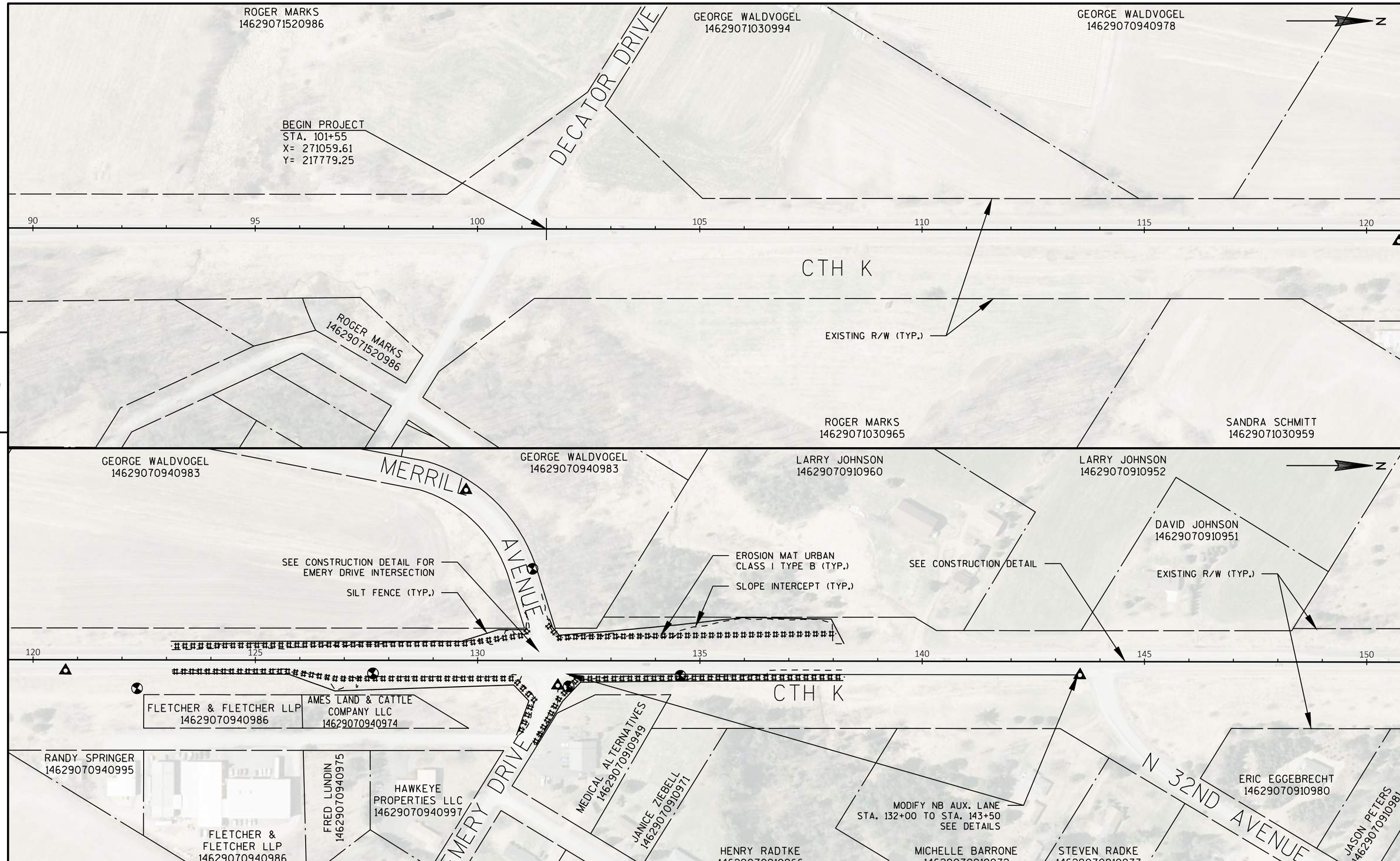

PROJECT NO: 9491-06-70/9491-06-71	HWY: CTH K	COUNTY: MARATHON	PLAN / PLAN: CTH K	SHEET 43	E

FILE NAME : R:\5500\5539\5539002\DWG(2018)\050101_PP.DWG PLOT DATE : 7/14/2022 11:23 AM PLOT BY : ROCHELLE L. BURSA PLOT NAME : PLOT SCALE : 1:200 FT

WISDOT/CADDS SHEET 44

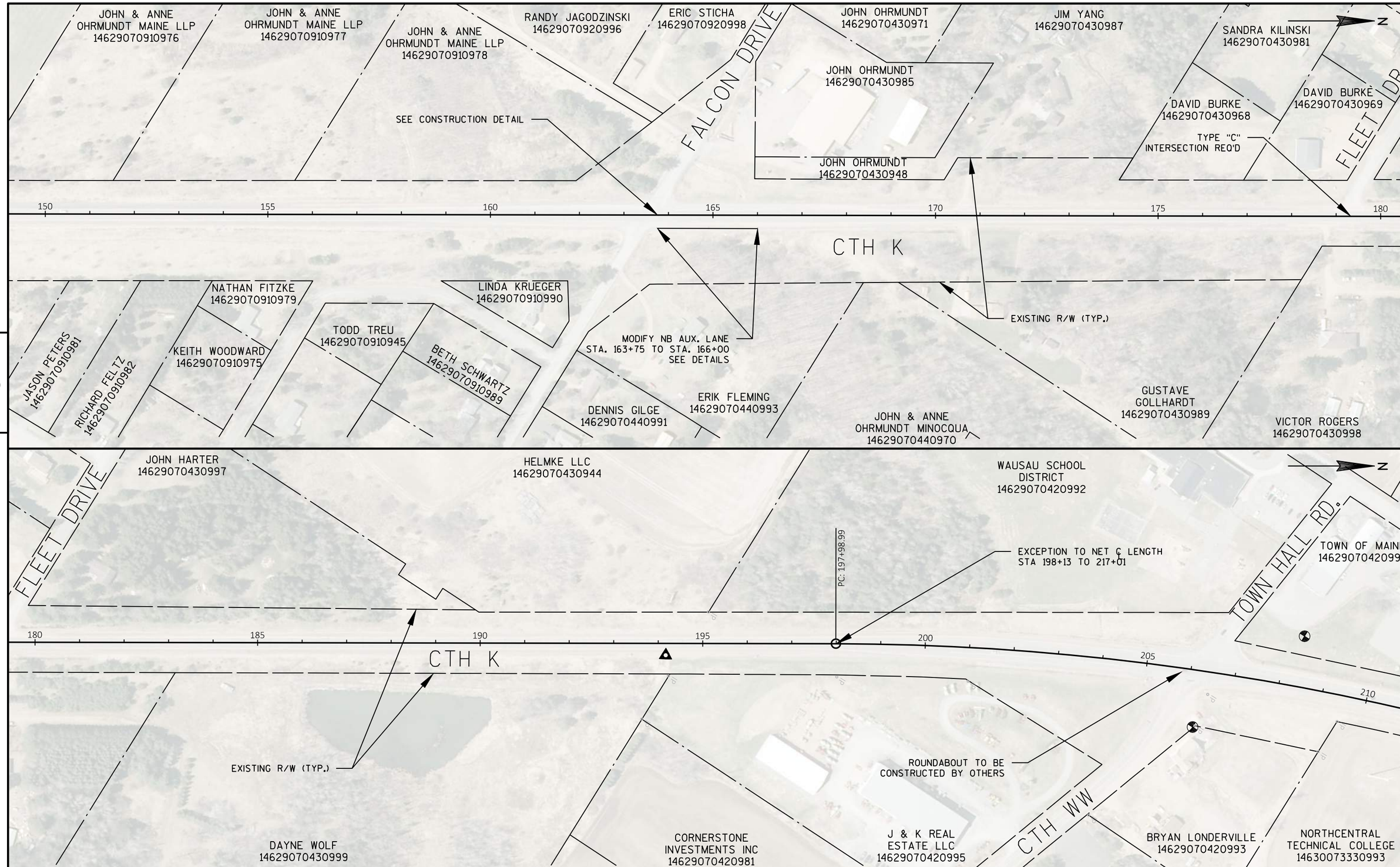

PROJECT NO: 9491-06-70/9491-06-71	HWY: CTH K	COUNTY: MARATHON	PLAN / PLAN: CTH K	SHEET 44	E

FILE NAME : R:\5500\5539\5539002\DWG(2018)\050101_PP.DWG PLOT DATE : 7/14/2022 11:23 AM PLOT BY : ROCHELLE L. BURSA PLOT NAME : PLOT SCALE : 1:200 FT

WISDOT/CADDS SHEET 44

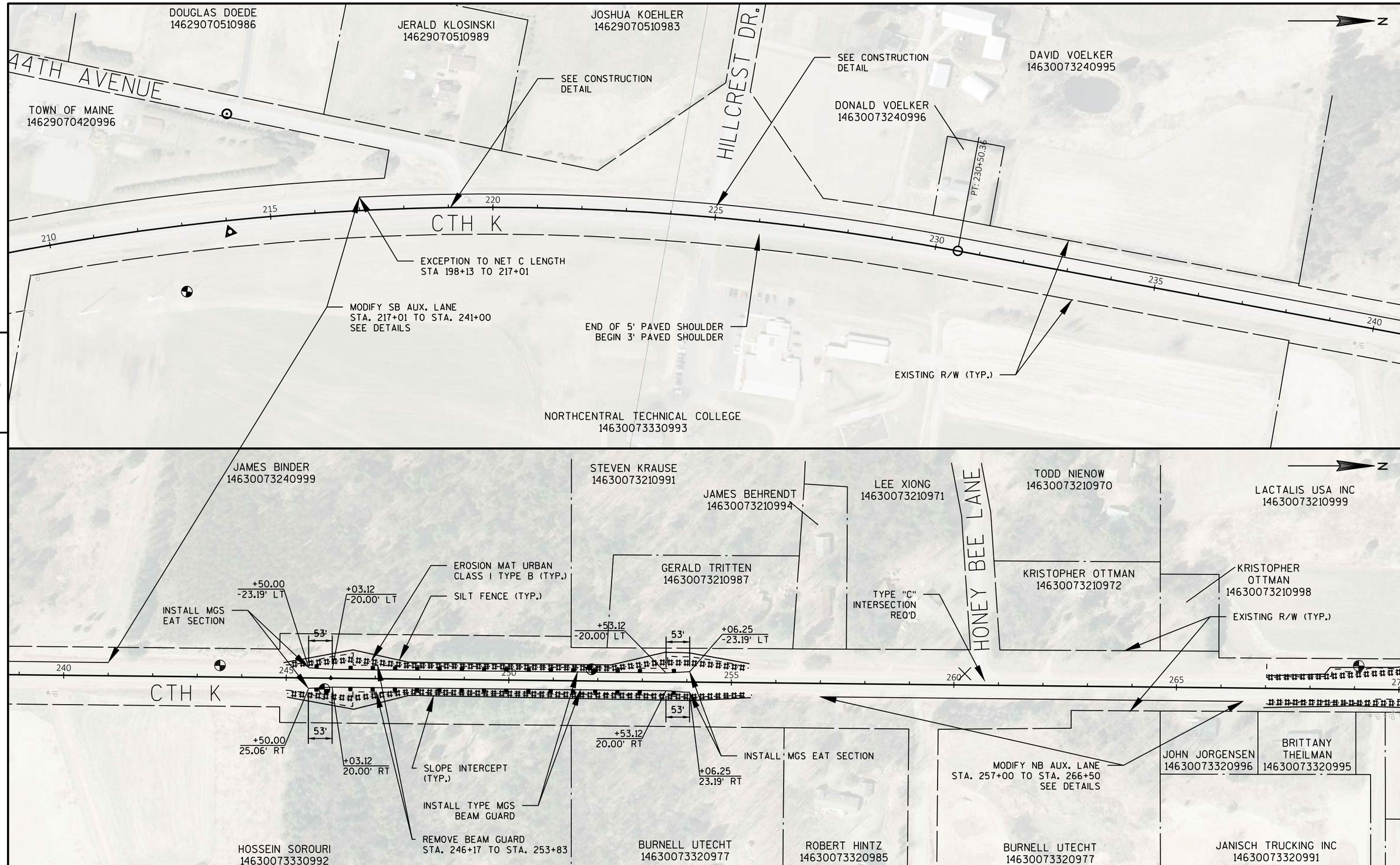

PROJECT NO: 9491-06-70/9491-06-71	HWY: CTH K	COUNTY: MARATHON	PLAN / PLAN: CTH K	SHEET 45	E

FILE NAME : R:\5500\5539\5539002\DWG(2018)\050101_PP.DWG PLOT DATE : 7/14/2022 11:24 AM PLOT BY : ROCHELLE L. BURSA PLOT NAME : PLOT SCALE : 1:200 FT

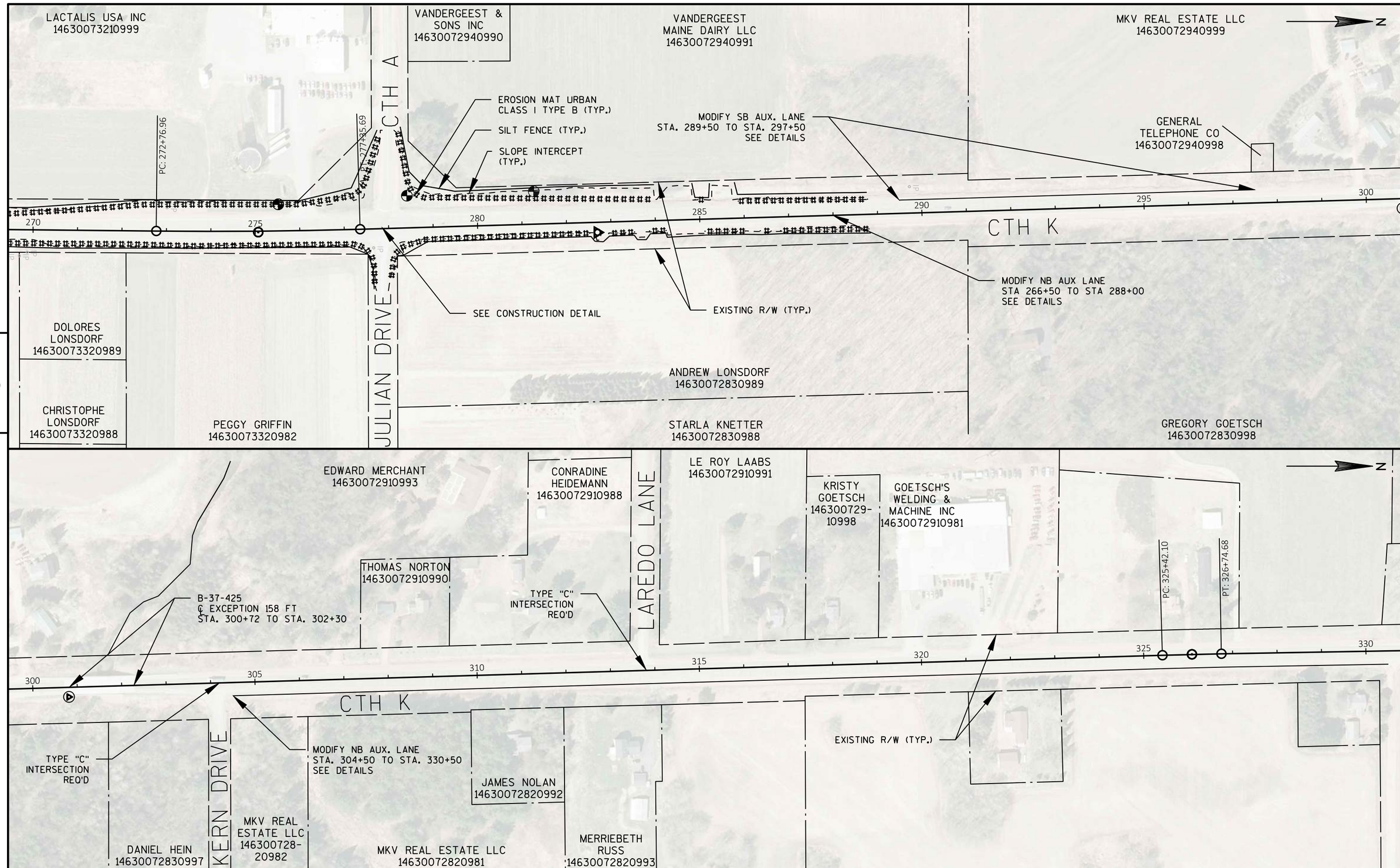

PROJECT NO: 9491-06-70/9491-06-71	HWY: CTH K	COUNTY: MARATHON	PLAN / PLAN: CTH K	SHEET 46	E

FILE NAME : R:\5500\5539\5539002\DWG(2018)\050101_PP.DWG PLOT DATE : 7/14/2022 11:24 AM PLOT BY : ROCHELLE L. BURSA PLOT NAME : PLOT SCALE : 1:200 FT

WISDOT/CADDS SHEET 44

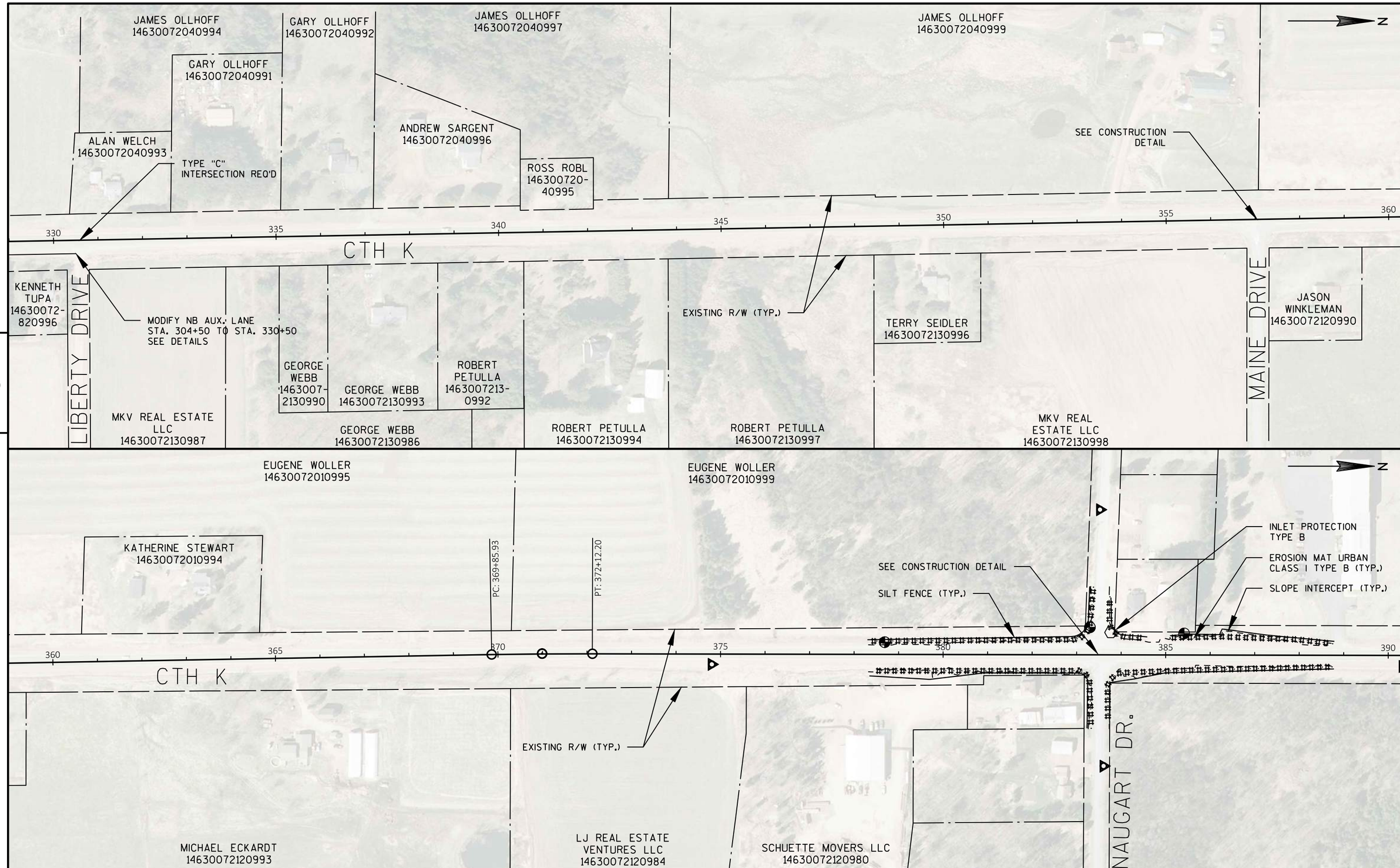

PROJECT NO: 9491-06-70/9491-06-71	HWY: CTH K	COUNTY: MARATHON	PLAN / PLAN: CTH K	SHEET 47	E

FILE NAME : R:\5500\5539\5539002\DWG(2018)\050101_PP.DWG PLOT DATE : 11/10/2022 5:05 PM PLOT BY : ROCHELLE L. BURSA PLOT NAME : PLOT SCALE : 1:200 FT

WISDOT/CADDS SHEET 44

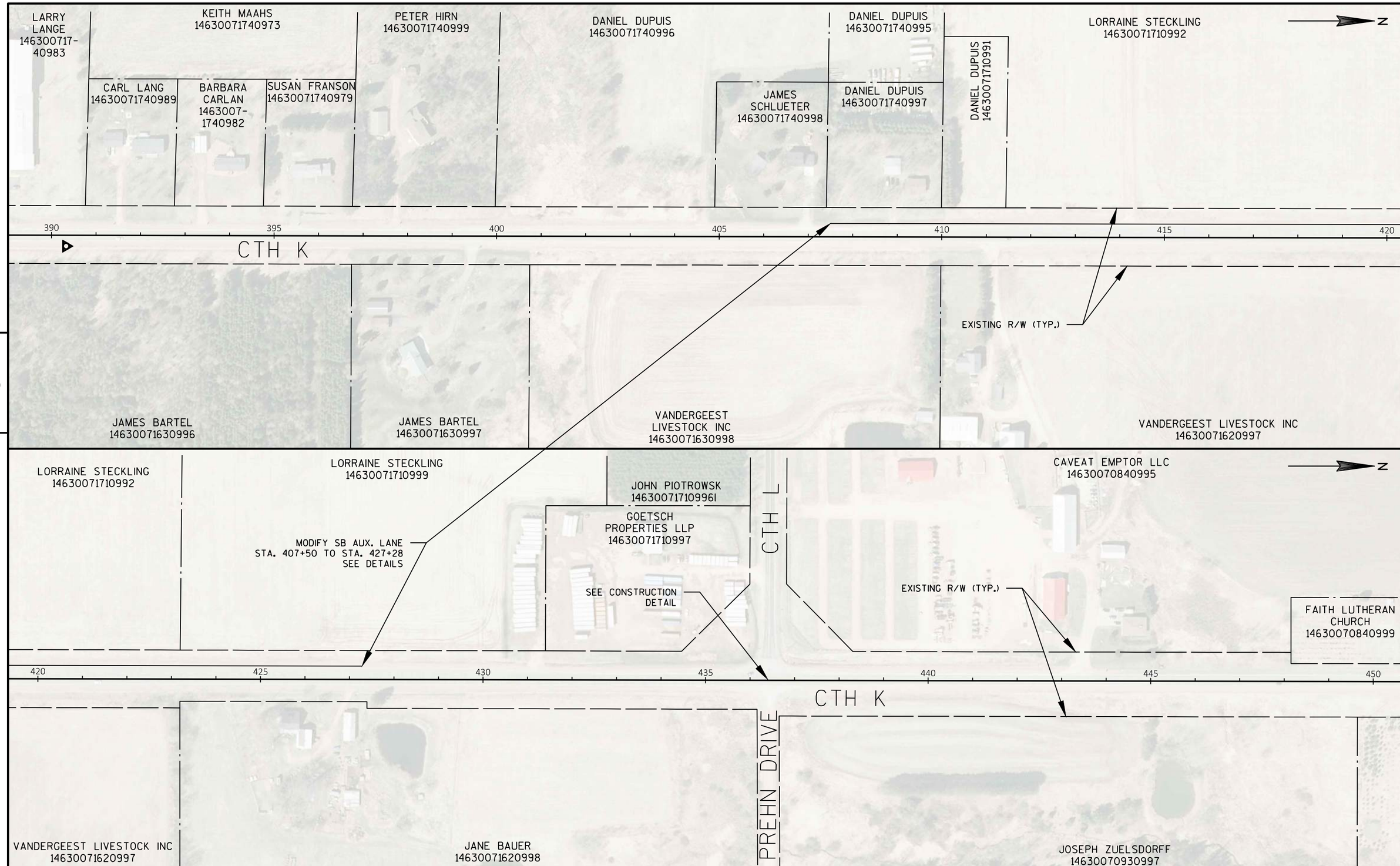

5

5

PROJECT NO: 9491-06-70/9491-06-71	HWY: CTH K	COUNTY: MARATHON	PLAN / PLAN: CTH K	SHEET 48	E

FILE NAME : R:\5500\5539\5539002\DWG(2018)\050101_PP.DWG PLOT DATE : 7/14/2022 11:25 AM PLOT BY : ROCHELLE L. BURSA PLOT NAME : PLOT SCALE : 1:200 FT

WISDOT/CADDS SHEET 44

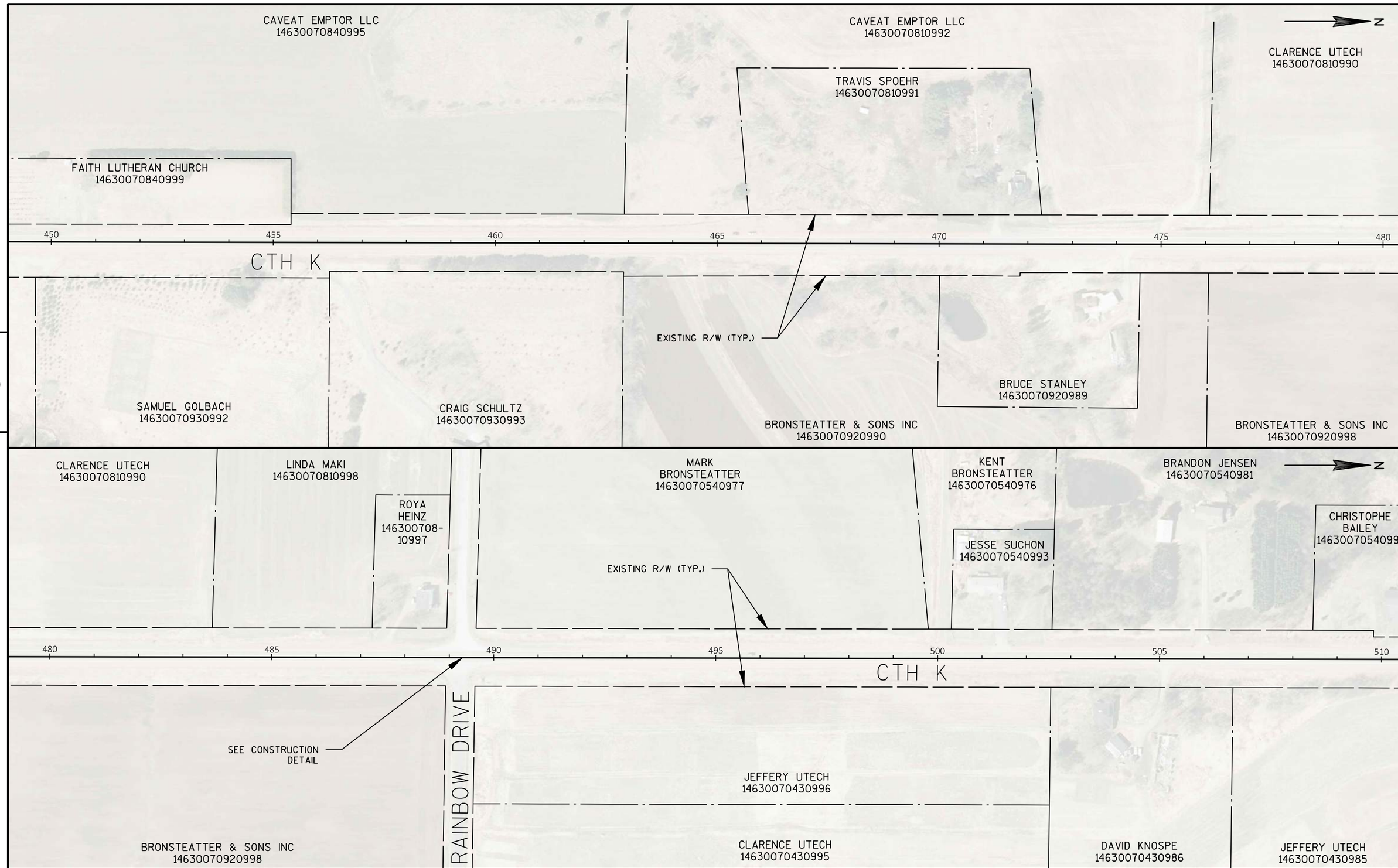

PROJECT NO: 9491-06-70/9491-06-71	HWY: CTH K	COUNTY: MARATHON	PLAN / PLAN: CTH K	SHEET 49	E

FILE NAME : R:\5500\5539\5539002\DWG(2018)\050101_PP.DWG PLOT DATE : 7/14/2022 11:25 AM PLOT BY : ROCHELLE L. BURSA PLOT NAME : PLOT SCALE : 1:200 FT

WISDOT/CADDS SHEET 44

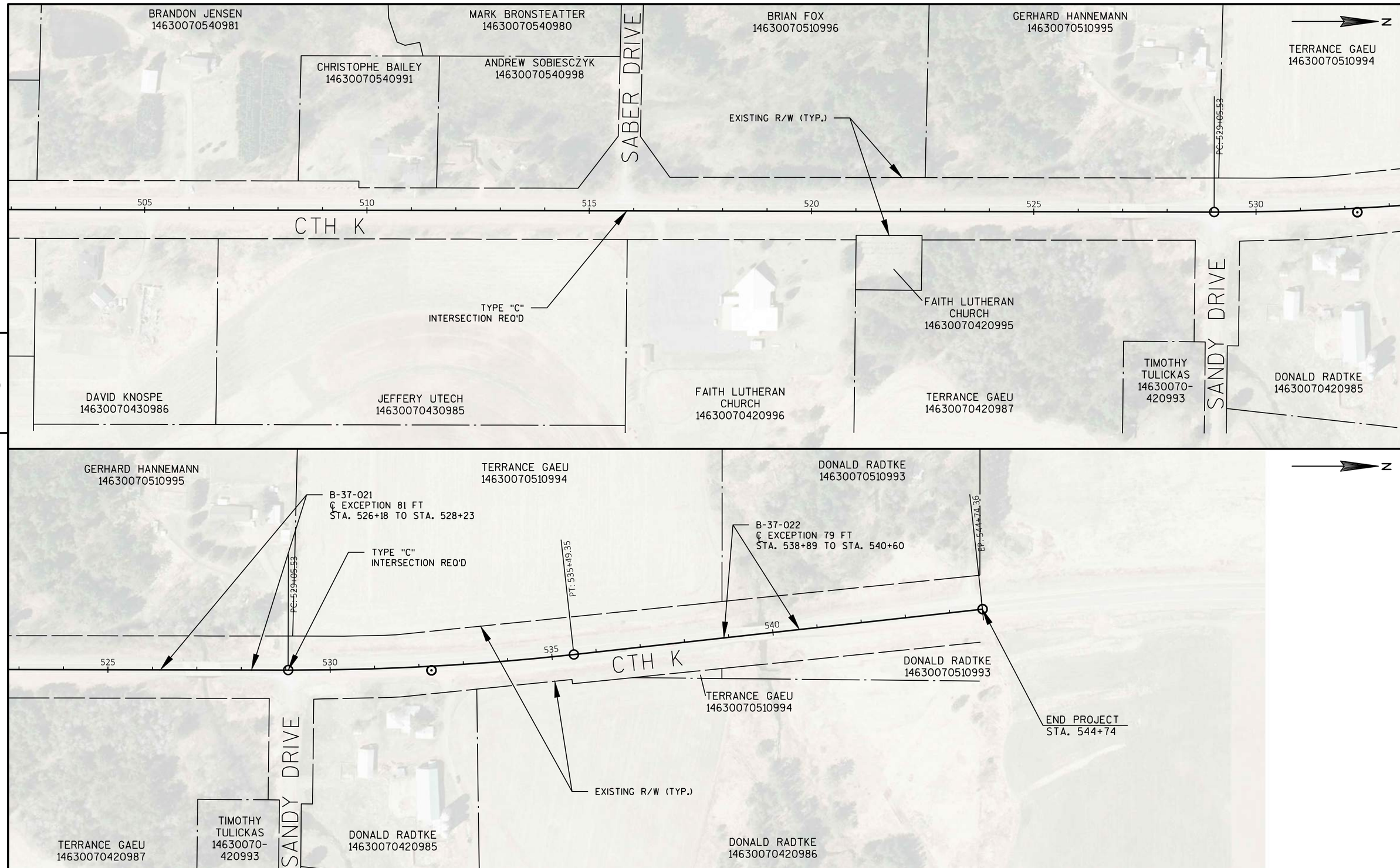

PROJECT NO: 9491-06-70/9491-06-71	HWY: CTH K	COUNTY: MARATHON	PLAN / PLAN: CTH K	SHEET 50	E

FILE NAME : R:\5500\5539\5539002\DWG(2018)\050101_PP.DWG PLOT DATE : 7/14/2022 11:25 AM PLOT BY : ROCHELLE L. BURSA PLOT NAME : PLOT SCALE : 1:200 FT

WISDOT/CADDS SHEET 44

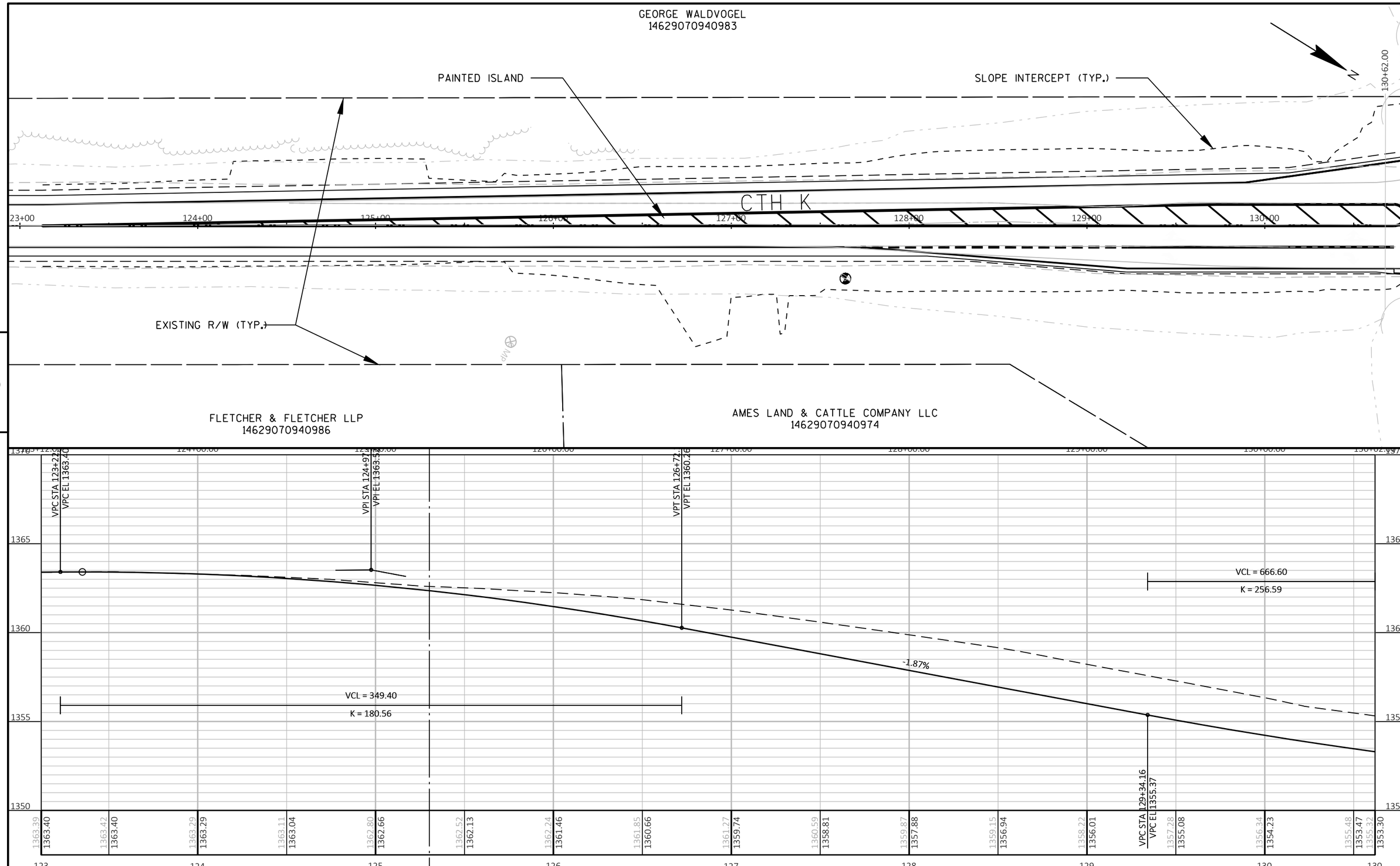

PROJECT NO: 9491-06-70/9491-06-71	HWY: CTH K	COUNTY: MARATHON	PLAN AND PROFILE: CTH K	SHEET 51	E

FILE NAME : R:\5500\5539\5539002\DWG(2018)\050106_PP.DWG
LAYOUT NAME - Sheet - (1)
PLOT DATE : 7/14/2022 11:30 AM
PLOT BY : ROCHELLE L. BURSA
PLOT NAME :
PLOT SCALE : 1 IN:50 FT

WISDOT/CADDS SHEET 44

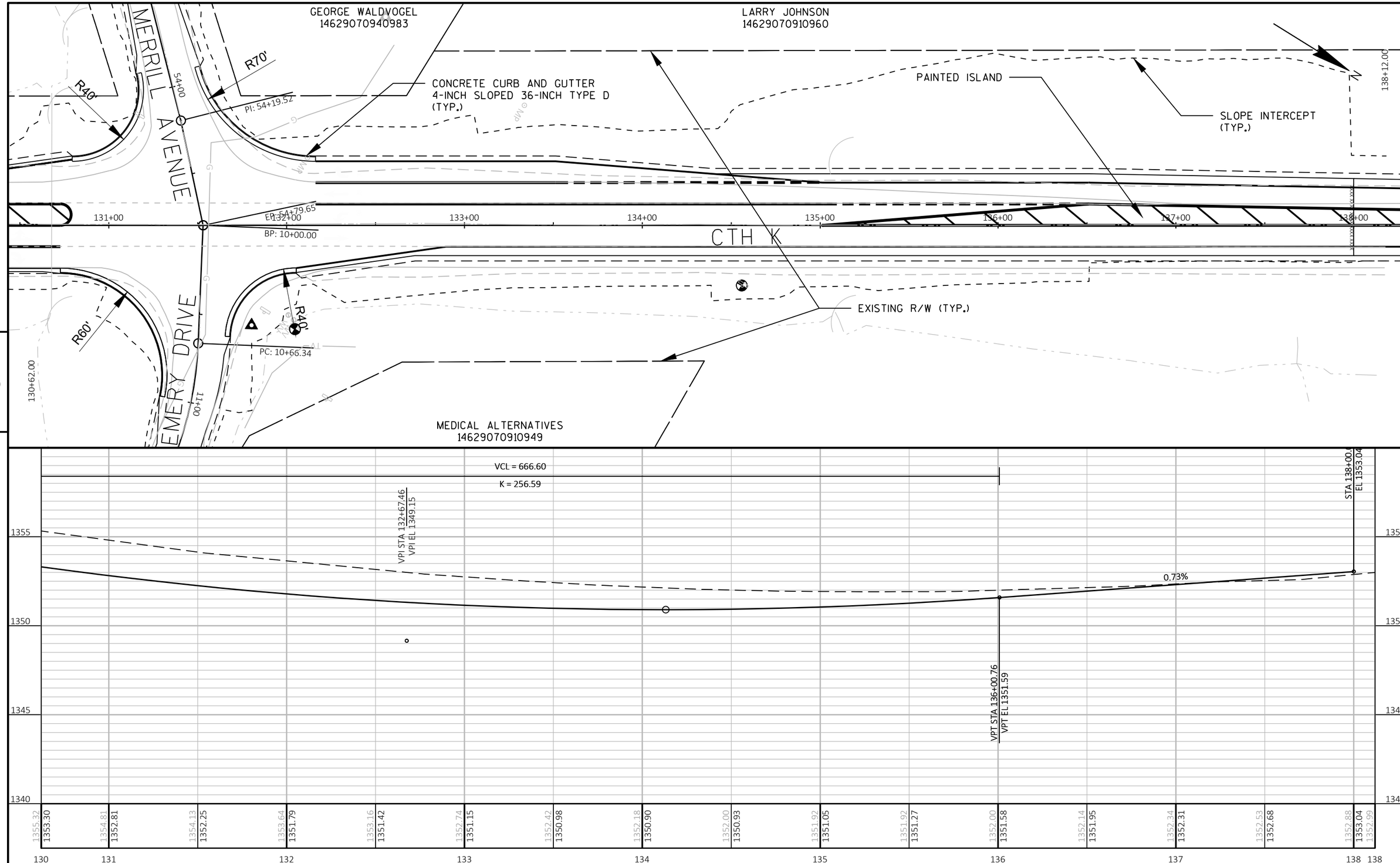

PROJECT NO: 9491-06-70/9491-06-71	HWY: CTH K	COUNTY: MARATHON	PLAN AND PROFILE: CTH K	SHEET 52	E

FILE NAME : R:\5500\5539\5539002\DWG(2018)\050106_PP.DWG
LAYOUT NAME - Sheet - (2)
PLOT DATE : 7/14/2022 11:31 AM
PLOT BY : ROCHELLE L. BURSA
PLOT NAME :
PLOT SCALE : 1 IN:50 FT

WISDOT/CADDS SHEET 44

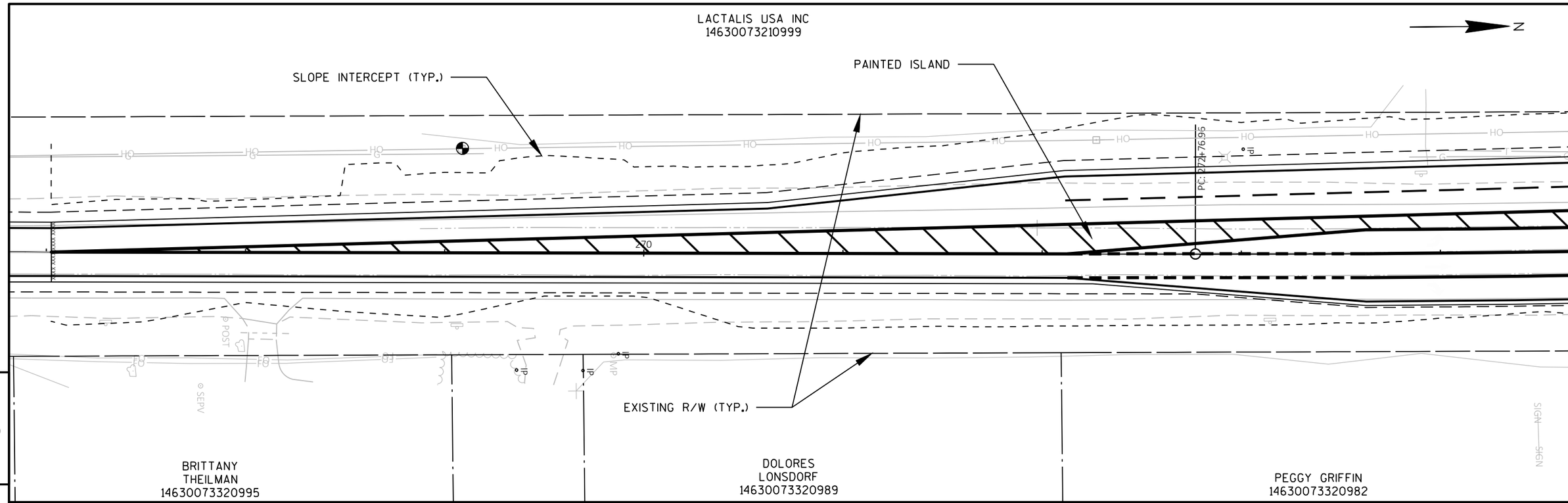

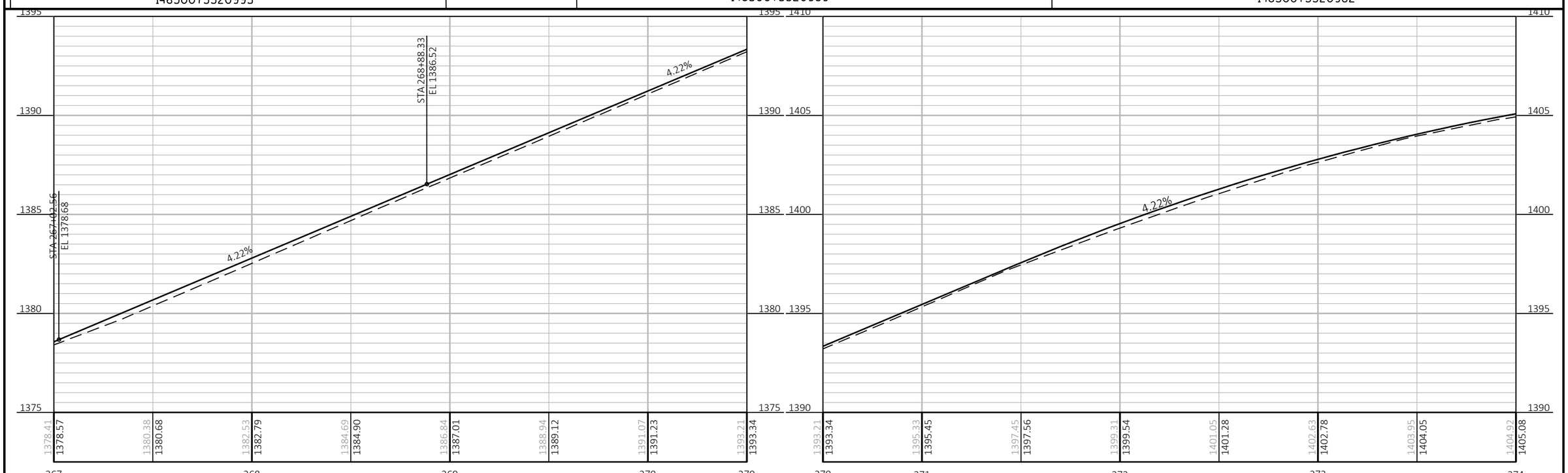

PROJECT NO: 9491-06-70/9491-06-71	HWY: CTH K	COUNTY: MARATHON	PLAN AND PROFILE: CTH K	SHEET 53	E

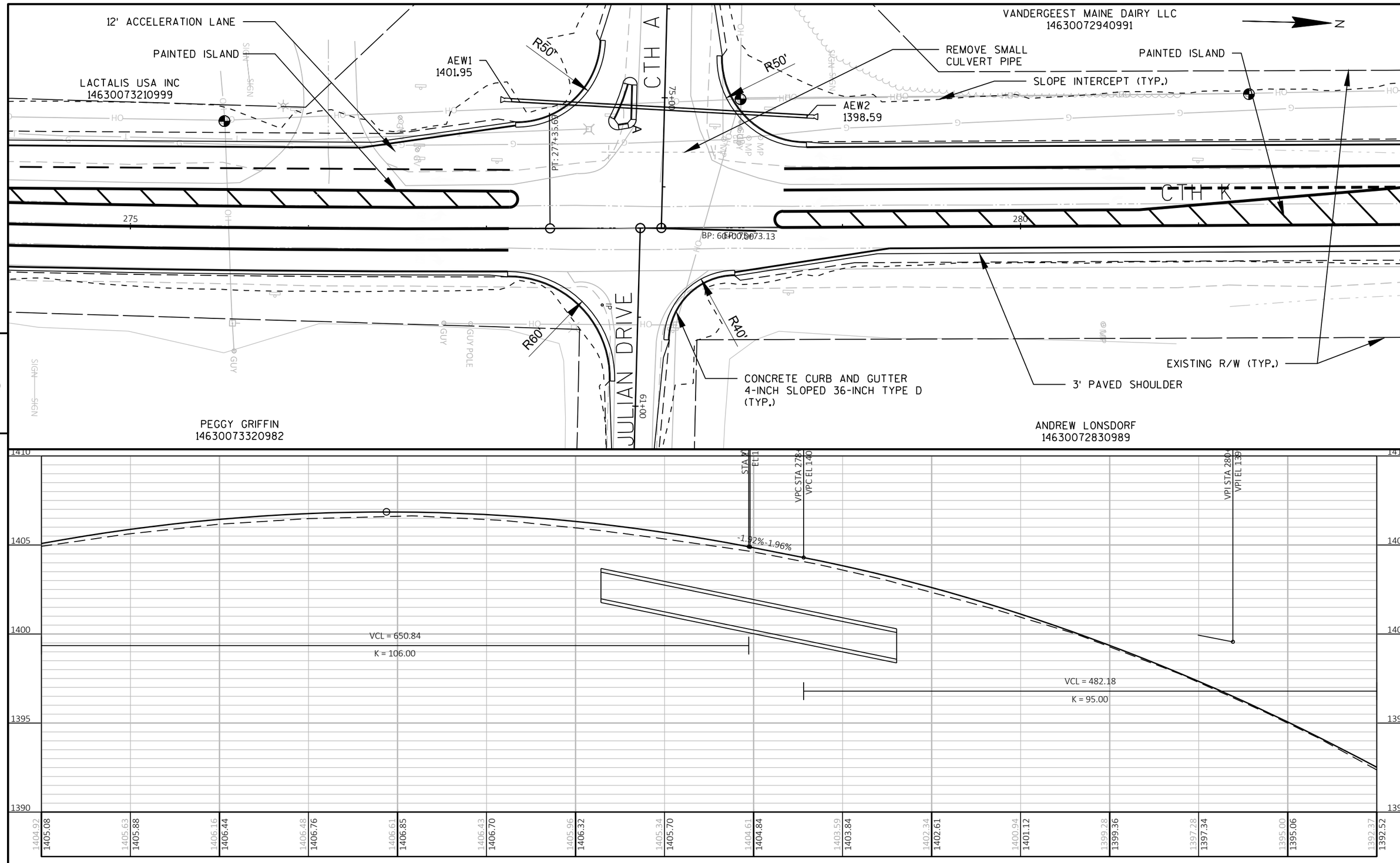

PROJECT NO: 9491-06-70/9491-06-71	HWY: CTH K	COUNTY: MARATHON	PLAN AND PROFILE: CTH K	SHEET 54	E

FILE NAME : R:\5500\5539\5539002\DWG(2018)\050107_PP.DWG
LAYOUT NAME - Sheet - (2)
PLOT DATE : 7/27/2022 1:28 PM
PLOT BY : ROCHELLE L. BURSA
PLOT NAME :
PLOT SCALE : 1 IN:50 FT

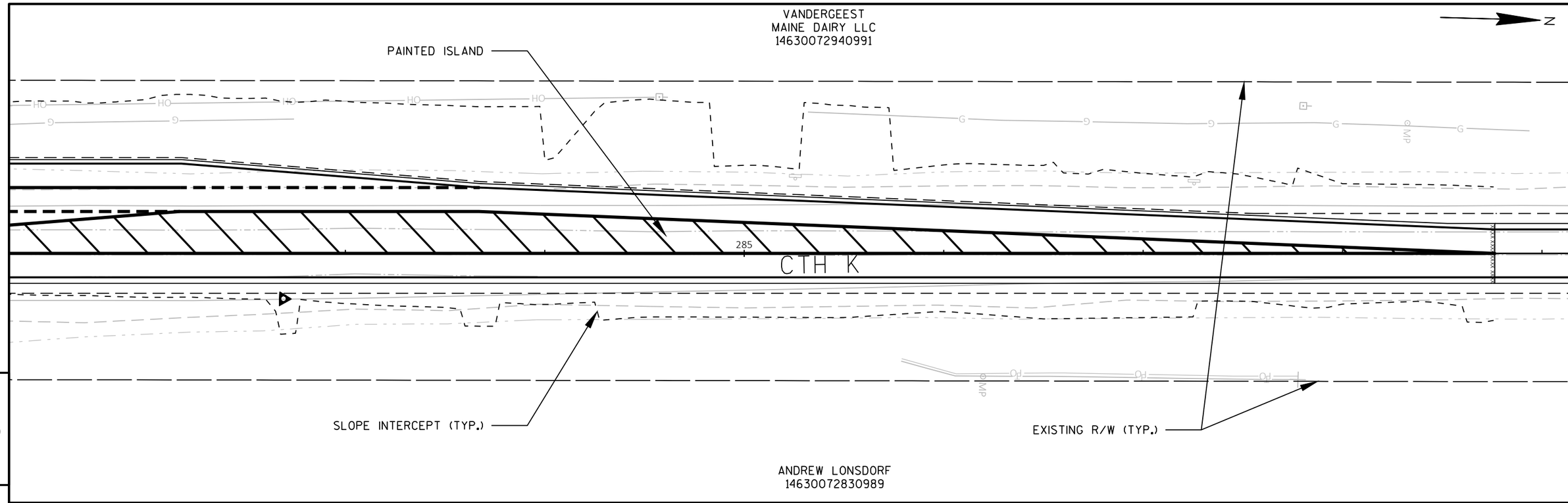

5

5

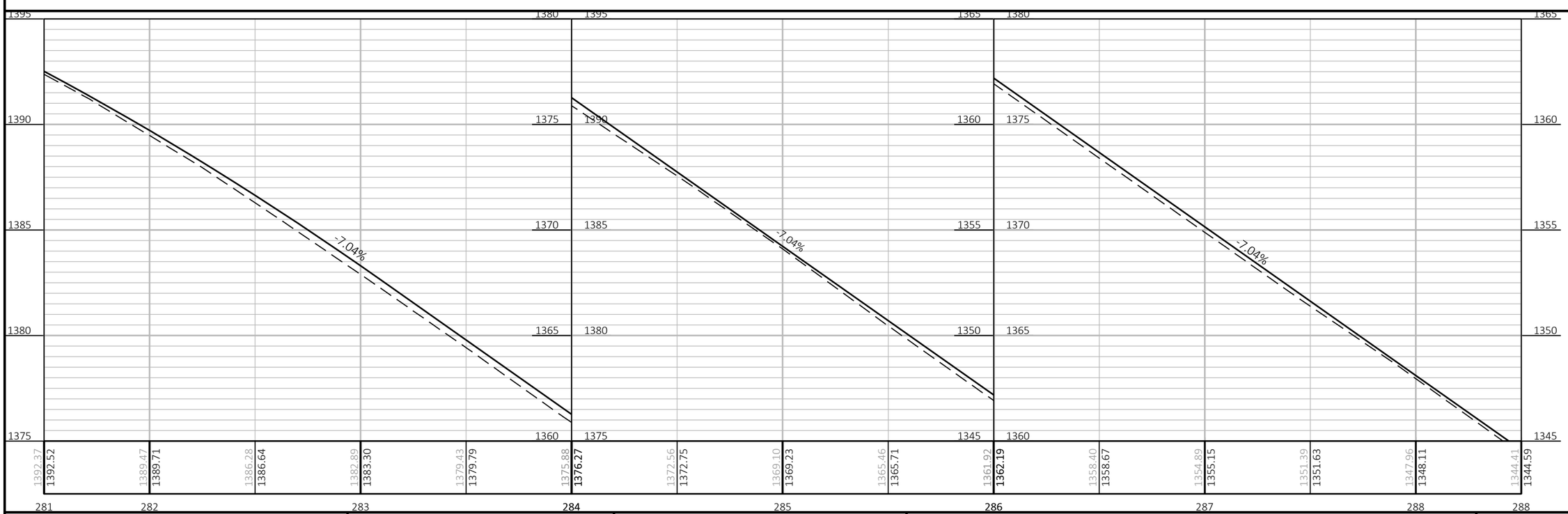

PROJECT NO: 9491-06-70/9491-06-71	HWY: CTH K	COUNTY: MARATHON	PLAN AND PROFILE: CTH K	SHEET 55	E

FILE NAME : R:\5500\5539\5539002\DWG(2018)\050107_PP.DWG
LAYOUT NAME - Sheet - (3)
PLOT DATE : 7/14/2022 11:44 AM
PLOT BY : ROCHELLE L. BURSA
PLOT NAME :
PLOT SCALE : 1 IN:50 FT

EUGENE WOLLER
14630072010999

AEW6
1493.60

CONCRETE CURB AND GUTTER
4-INCH SLOPED 36-INCH TYPE D
(TYP.)

R40'

JGHG PROPERTIES
LLC14630071740988

N

MH 02 STA 383+86, 43.4' LT
MANHOLES 5-T

MH 03 STA 384+06, 40.0' LT
MANHOLES 5-C

R60'

AEW7
1500.25

79+00

379+00 380+00 381+00 382+00 383+00 384+00 385+00

80+00

PI: 80+00.00

CTH K

AEW5
1493.60

R40'

R40'

AEW4
1496.17

SLOPE INTERCEPT (TYP.)

MH 01 STA 383+43, 39.1' RT
MANHOLES 7-L

81+00

EXISTING R/W (TYP.)

SCHUETTE MOVERS
LLC14630072120980

ANTHONY GRUETZMACHER
14630072120981

NAUGART DRIVE

JAMES BARTEL
14630071630996

5

5

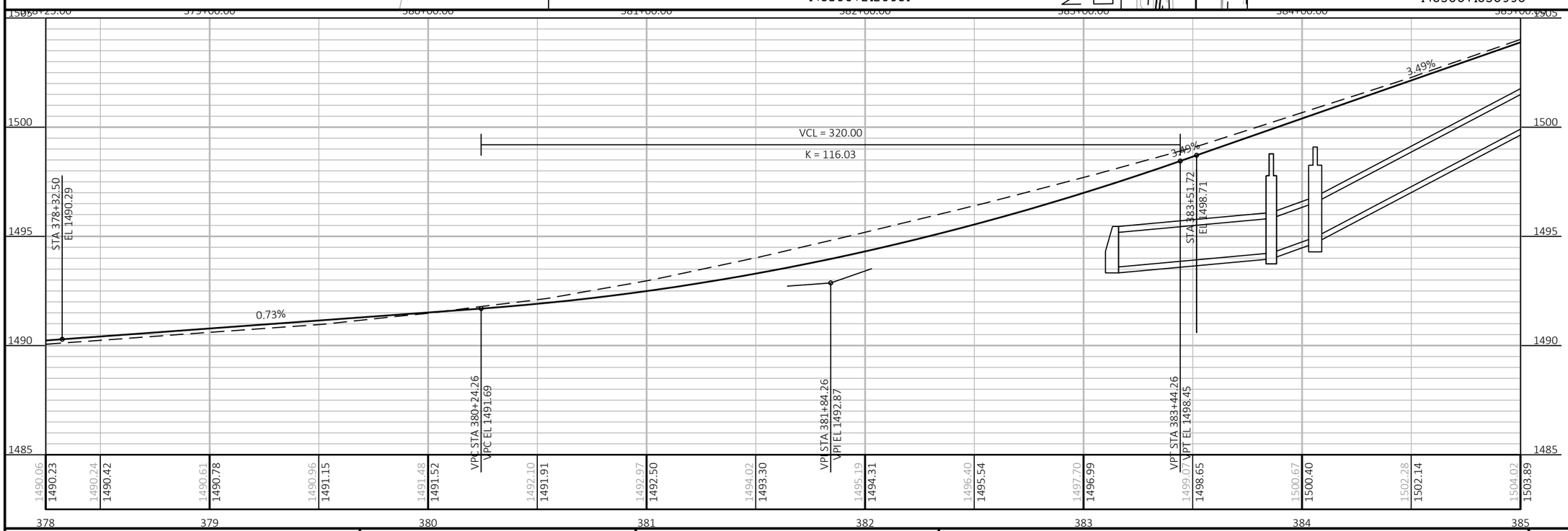

PROJECT NO: 9491-06-70/9491-06-71	HWY: CTH K	COUNTY: MARATHON	PLAN AND PROFILE: CTH K	SHEET 56	E

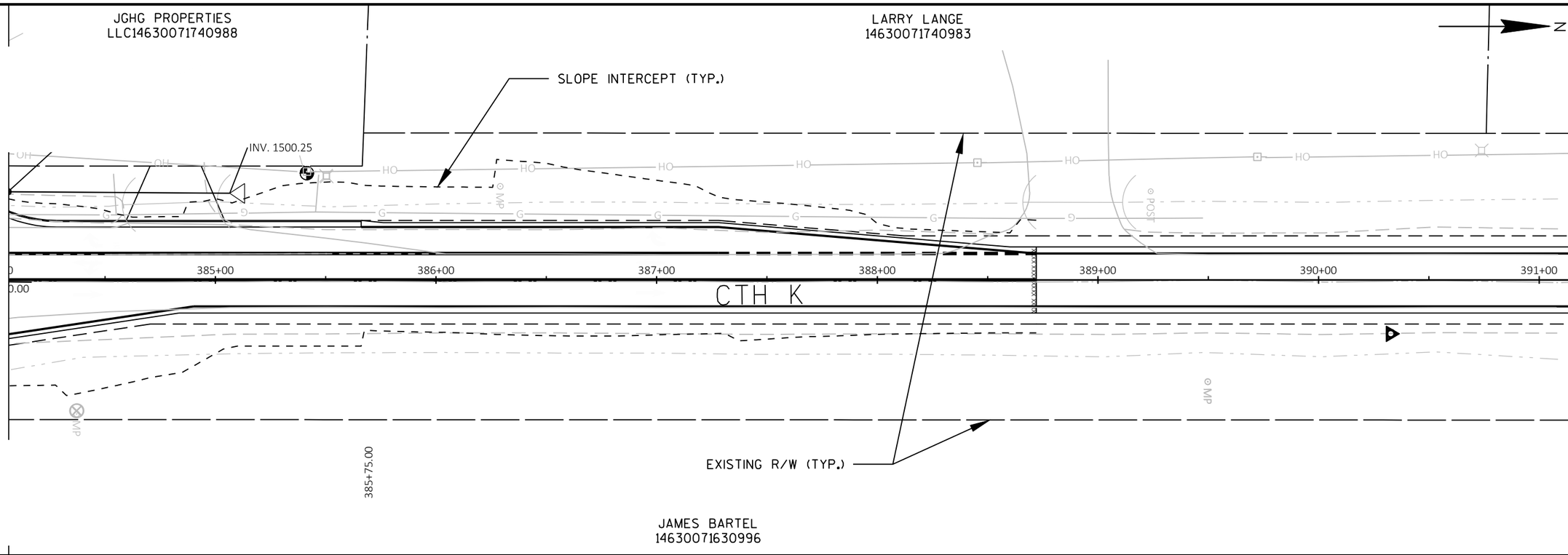

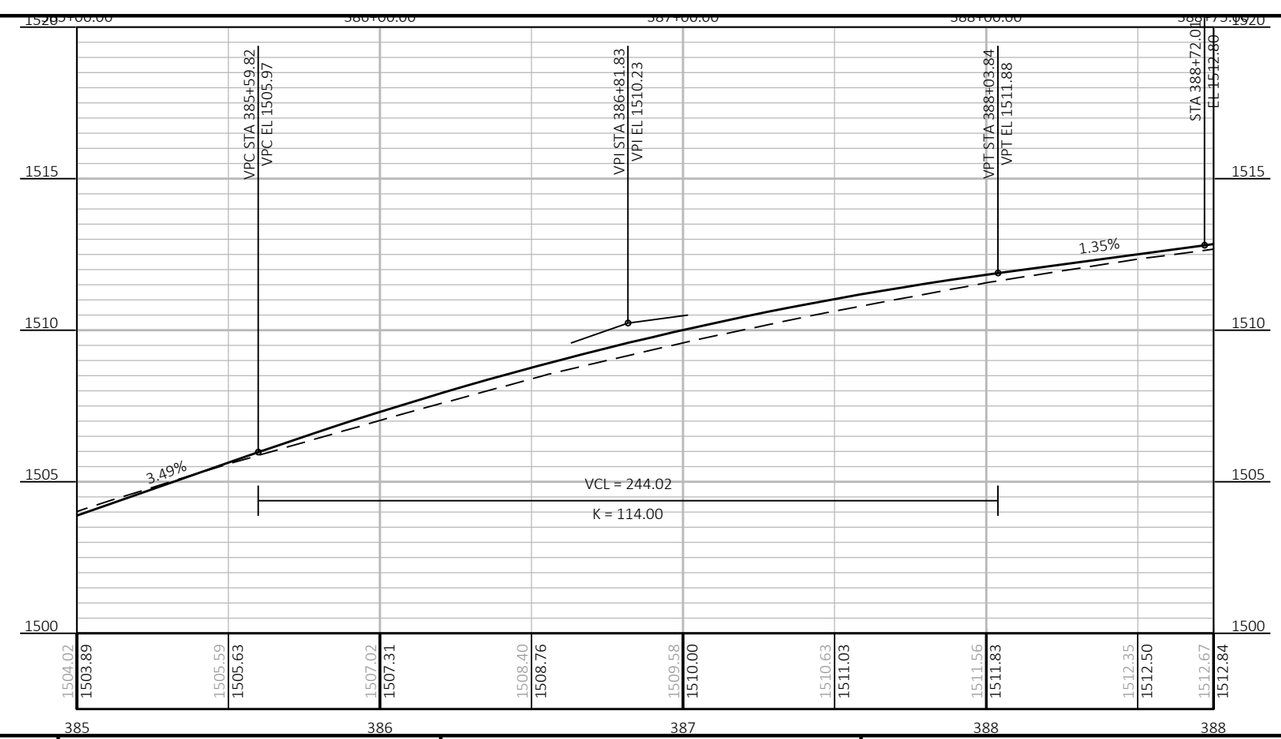

PROJECT NO: 9491-06-70/9491-06-71	HWY: CTH K	COUNTY: MARATHON	PLAN AND PROFILE: CTH K	SHEET 57	E

FILE NAME : R:\5500\5539\5539002\DWG(2018)\050108_PP.DWG
LAYOUT NAME - Sheet - (2)
PLOT DATE : 7/14/2022 11:52 AM
PLOT BY : ROCHELLE L. BURSA
PLOT NAME :
PLOT SCALE : 1 IN:50 FT
WISDOT/CADDS SHEET 44

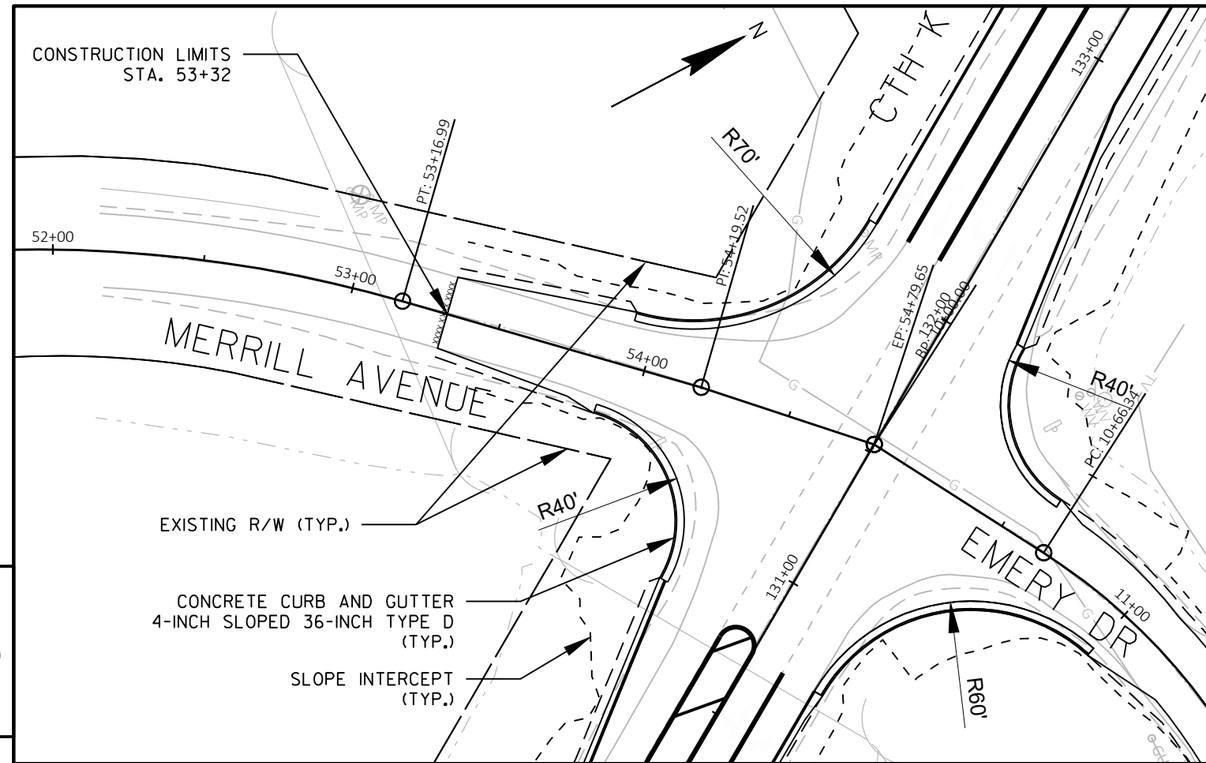

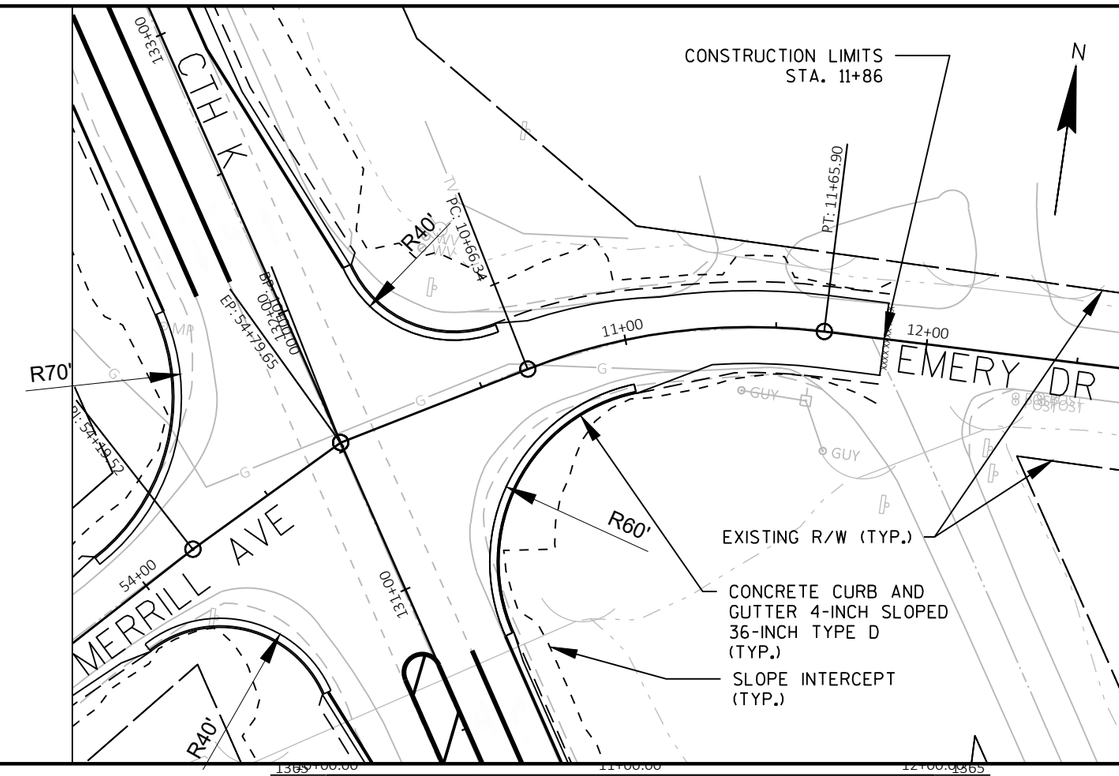

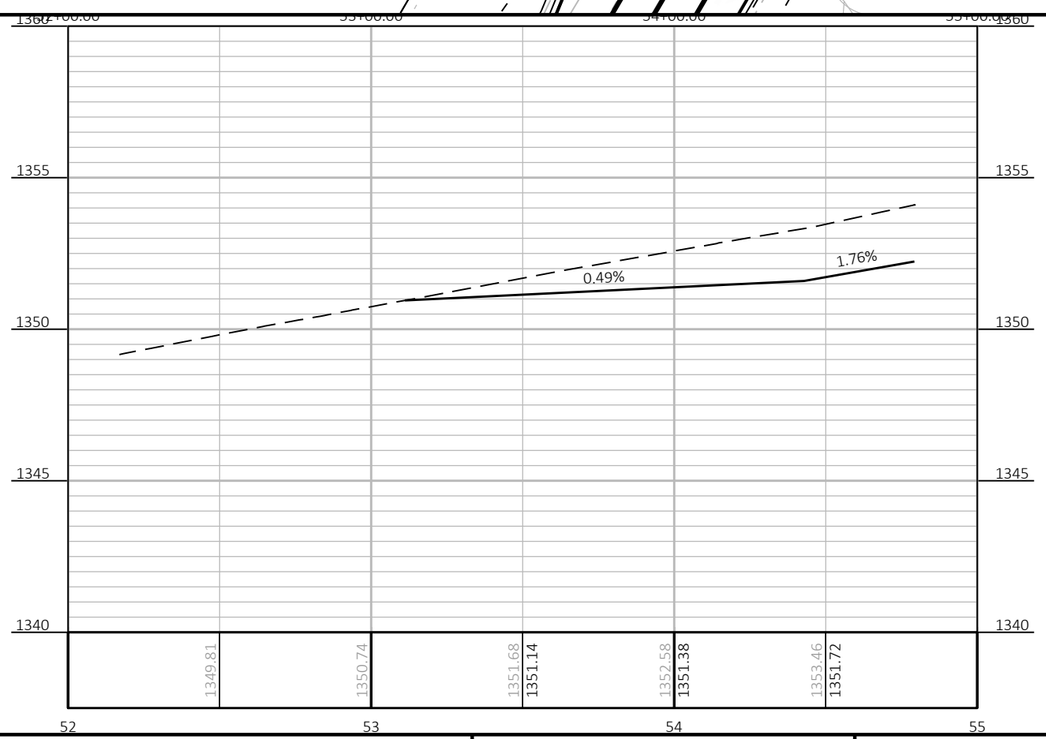

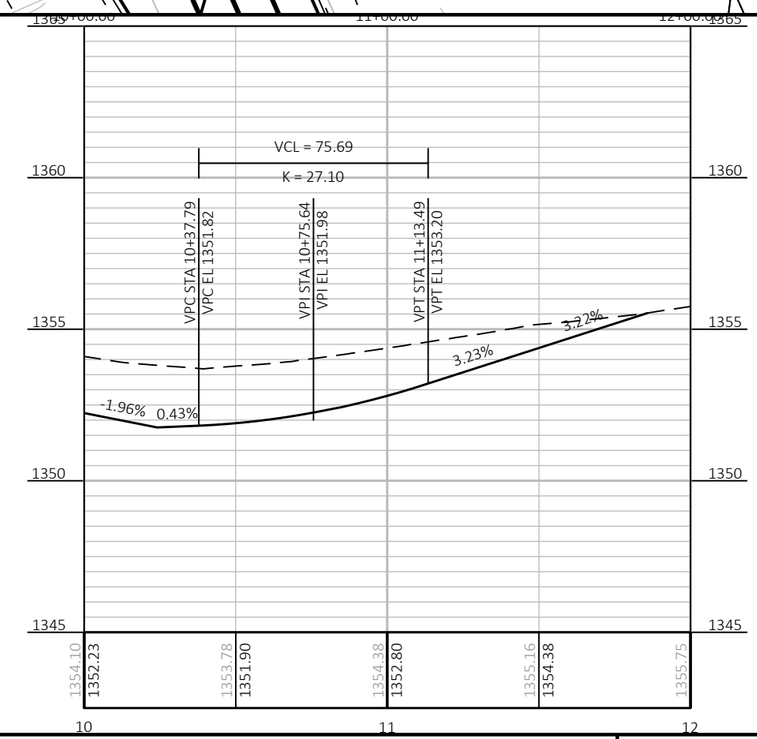

PROJECT NO: 9491-06-70/9491-06-71	HWY: CTH K	COUNTY: MARATHON	PLAN AND PROFILE: MERRILL AVENUE / EMERY DRIVE	SHEET 58	E

FILE NAME : R:\5500\5539\5539002\DWG(2018)\050103_PP.DWG
LAYOUT NAME - 01
PLOT DATE : 7/14/2022 12:20 PM
PLOT BY : ROCHELLE L. BURSA
PLOT NAME :
PLOT SCALE : 1 IN:50 FT

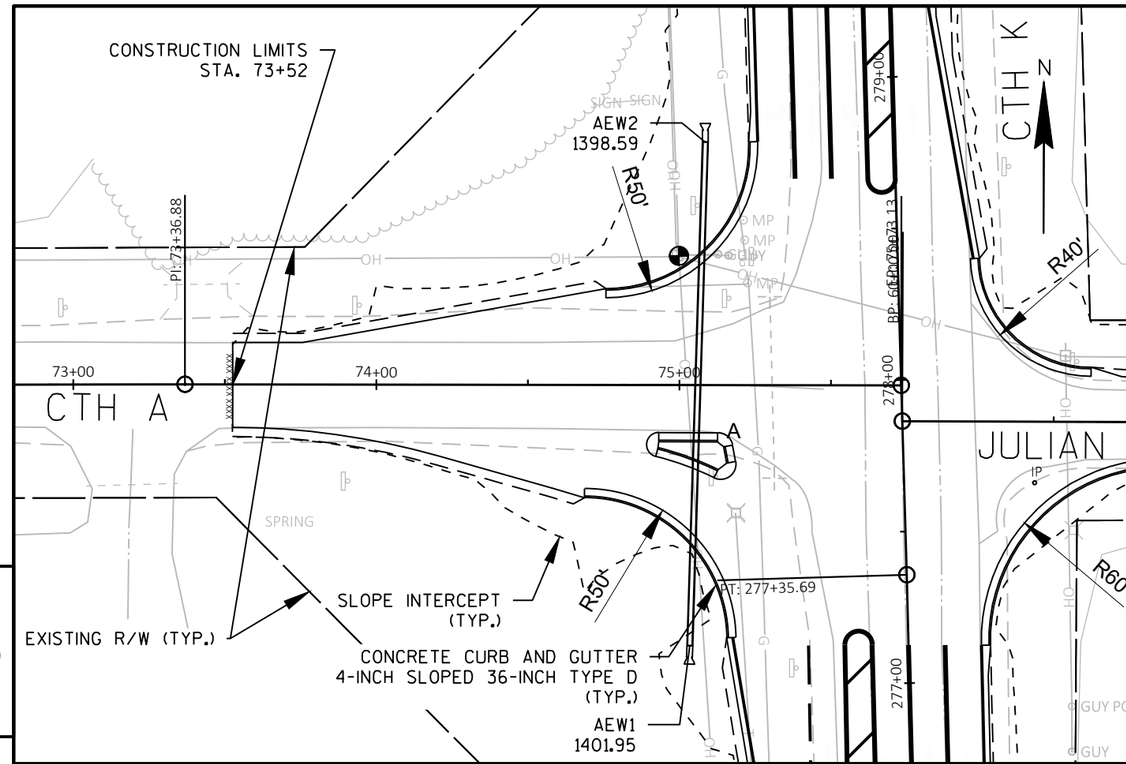

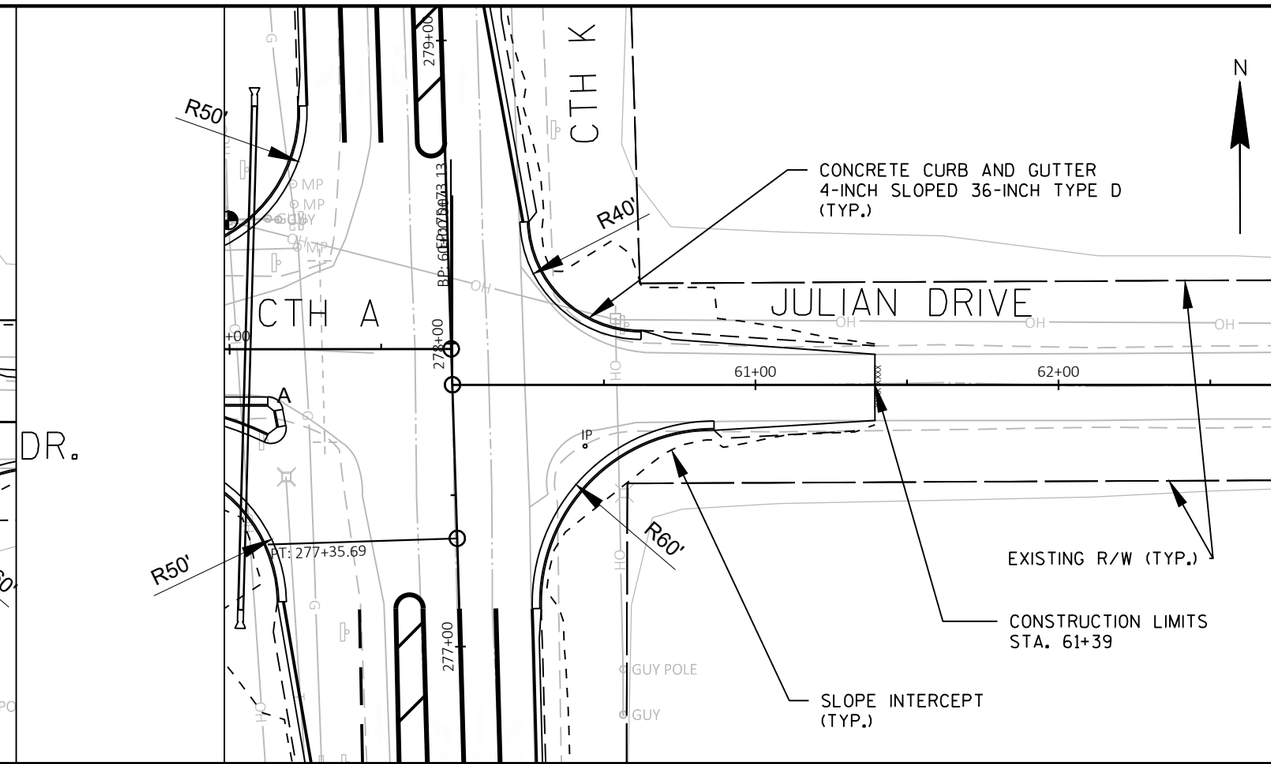

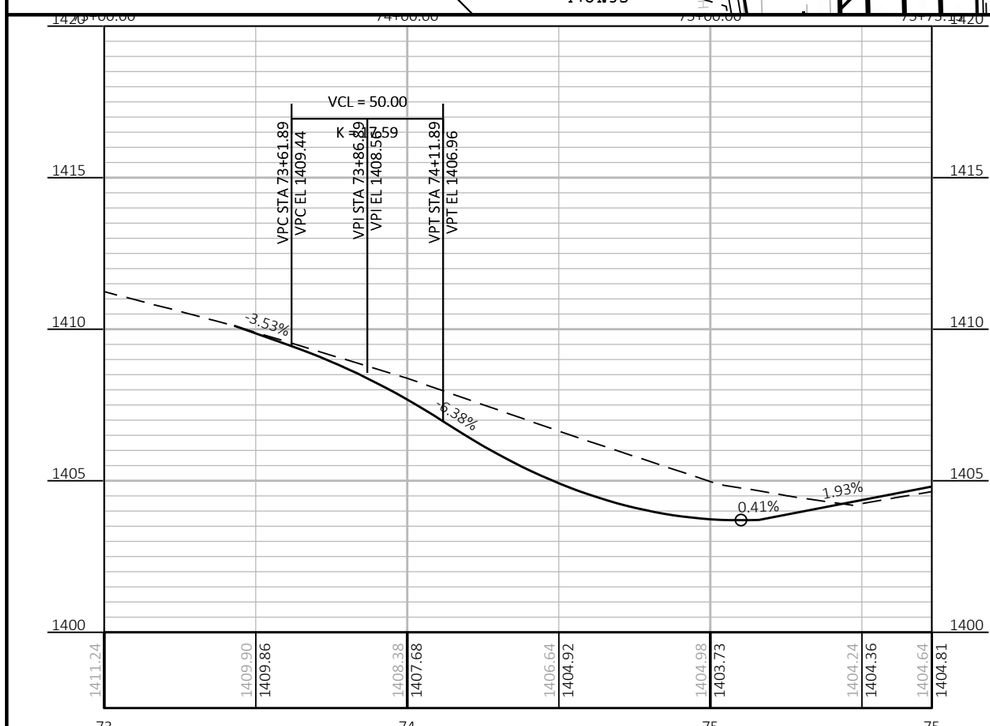

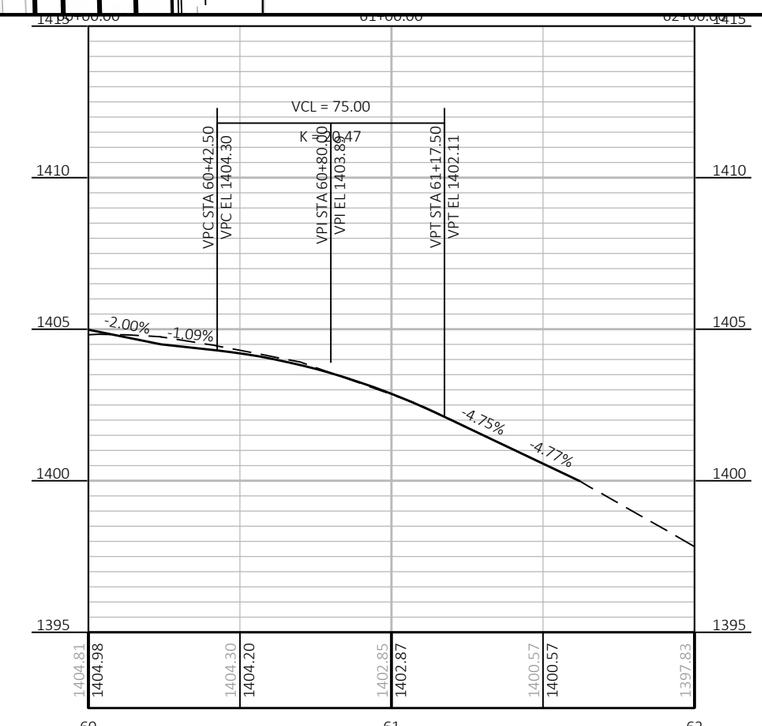

PROJECT NO: 9491-06-70/9491-06-71	HWY: CTH K	COUNTY: MARATHON	PLAN AND PROFILE: CTH A / JULIAN DRIVE	SHEET 59	E

FILE NAME : R:\5500\5539\5539002\DWG(2018)\050104_PP.DWG
LAYOUT NAME - 01
PLOT DATE : 7/27/2022 1:16 PM
PLOT BY : ROCHELLE L. BURSA
PLOT NAME :
PLOT SCALE : 1 IN:50 FT
WISDOT/CADDS SHEET 44

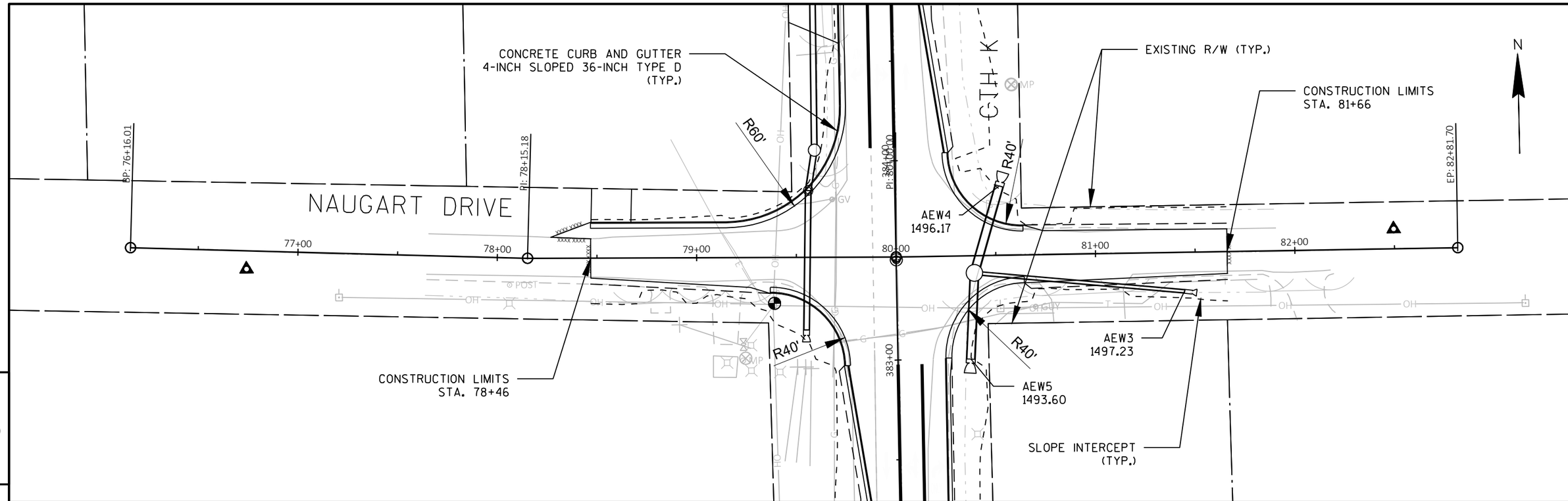

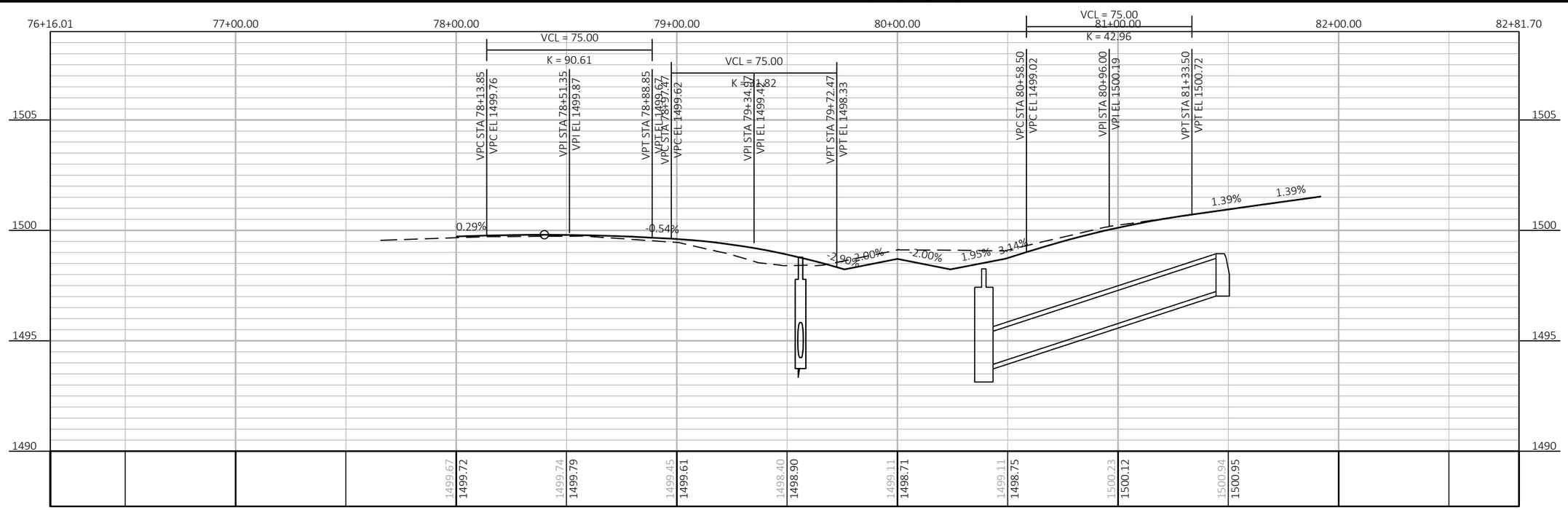

PROJECT NO: 9491-06-70/9491-06-71	HWY: CTH K	COUNTY: MARATHON	PLAN AND PROFILE: NAUGART DRIVE	SHEET 60	E

FILE NAME : R:\5500\5539\5539002\DWG(2018)\050105_PP.DWG
LAYOUT NAME - 06
PLOT DATE : 7/27/2022 1:12 PM
PLOT BY : ROCHELLE L. BURSA
PLOT NAME :
PLOT SCALE : 1 IN:50 FT
WISDOT/CADDS SHEET 44

Standard Detail Drawing List

08A05-19B	INLET COVERS TYPE B, B-A, C, MS, MS-A, & WM
08A05-19C	INLET COVERS TYPE F, HM, HM-S, S, T, V, HM-GJ, & HM-GJ-S
08A05-19D	INLET COVER TYPE BW, MANHOLE COVERS, TYPE K, J, J-S, L & M
08B09-03	MANHOLES 3-FT, 4-FT, 5-FT, 6-FT, 7-FT, 8-FT, 9-FT, 10-FT DIAMETER
08D01-22A	CONCRETE CURB & GUTTER
08D01-22B	CONCRETE CURB, TIES AND CURB AND GUTTER APPLICATIONS
08D21-01	DRIVEWAYS WITHOUT CURB & GUTTER
08D22-01	DRIVEWAYS WITHOUT CURB & GUTTER RESURFACING PROJECTS RURAL
08E08-03	TYPICAL INSTALLATIONS OF EROSION BALES / TEMPORARY DITCH CHECKS
08E09-06	SILT FENCE
08E10-02	INLET PROTECTION TYPE A, B, C AND D
08E15-01	CULVERT PIPE CHECK
08F01-11	APRON ENDWALLS FOR CULVERT PIPE
08F02-01	APRON ENDWALLS FOR PIPE ARCH AND ELLIPTICAL PIPE
08F04-08	JOINT TIES FOR CONCRETE PIPE AND CONCRETE COLLAR DETAIL
09A01-13A	AT-GRADE SIDE ROAD INTERSECTION, TYPES "B1", "B2", "C" AND D AND TEE INTERSECTION BYPASS LANE
11B02-02	CONCRETE MEDIAN NOSE
13A10-02A	2-LANE RURAL SHOULDER RUMBLE STRIP, MILLING
13A10-02B	2-LANE RURAL SHOULDER RUMBLE STRIP, MILLING
13A10-02C	2-LANE RURAL SHOULDER RUMBLE STRIP, MILLING
13A10-02D	2-LANE RURAL SHOULDER RUMBLE STRIP, MILLING
13A11-03A	2-LANE RURAL CENTER LINE RUMBLE STRIP, MILLING
13A11-03B	2-LANE RURAL CENTER LINE RUMBLE STRIP, MILLING
13C19-03	HMA LONGITUDINAL JOINTS
14B29-01	SAFETY EDGE
14B42-07A	MIDWEST GUARDRAIL SYSTEM (MGS) GUARDRAIL
14B42-07B	MIDWEST GUARDRAIL SYSTEM (MGS) GUARDRAIL
14B42-07C	MIDWEST GUARDRAIL SYSTEM (MGS) GUARDRAIL
14B42-07D	MIDWEST GUARDRAIL SYSTEM (MGS) GUARDRAIL
14B44-04A	MIDWEST GUARDRAIL SYSTEM ENERGY ABSORBING TERMINAL (MGS)
14B44-04B	MIDWEST GUARDRAIL SYSTEM ENERGY ABSORBING TERMINAL (MGS)
14B44-04C	MIDWEST GUARDRAIL SYSTEM ENERGY ABSORBING TERMINAL (MGS)
15C02-08A	BARRICADES AND SIGNS FOR MAINLINE CLOSURES
15C02-08C	DETOUR SIGNING FOR MAINLINE CLOSURES
15C03-05	BARRICADES AND SIGNS FOR SIDEROAD CLOSURES
15C04-05	TRAFFIC CONTROL, ADVANCE WARNING SIGNS 45 M.P.H. OR GREATER TWO-WAY UNDIVIDED ROAD OPEN TO TRAFFIC
15C07-15B	PAVEMENT MARKING WORDS
15C07-15C	PAVEMENT MARKING ARROWS
15C08-21A	LONGITUDINAL MARKING (MAINLINE)
15C08-21B	TEMPORARY LONGITUDINAL PAVEMENT MARKING
15C08-21C	PAVEMENT MARKING (TURN LANES)
15C08-21D	PAVEMENT MARKING (TURN LANES)
15C11-09B	CHANNELIZING DEVICES DRUMS, CONES, BARRICADES AND VERTICAL PANELS
15C12-09A	TRAFFIC CONTROL FOR LANE CLOSURE WITH FLAGGING OPERATION
15C18-06A	MEDIAN ISLAND MARKING PAVEMENT MARKINGS
15C18-06B	MEDIAN ISLAND MARKING MEDIAN ISLAND NOSE
15C35-05A	PAVEMENT MARKING (INTERSECTIONS)
15D21-07A	TRAFFIC CONTROL, INTERSECTION WITHIN SINGLE LANE CLOSURE
15D21-07B	TRAFFIC CONTROL, INTERSECTION WITHIN SINGLE LANE CLOSURE

6

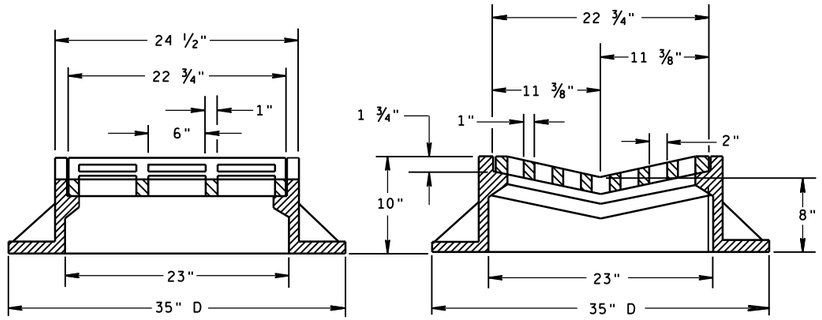

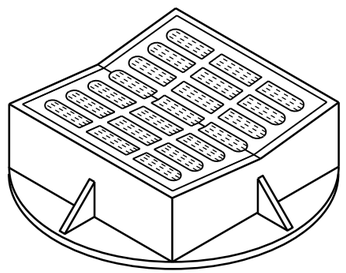

TYPE "B"

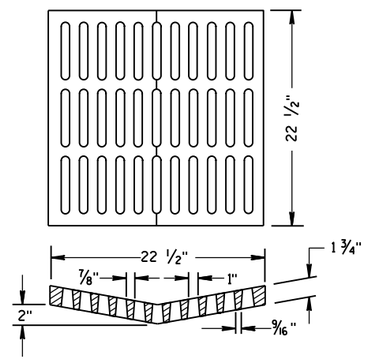

ALTERNATIVE GRATE FOR TYPE "B" COVER

USE WHERE PEDESTRIAN OR BICYCLE TRAFFIC IS POSSIBLE.

NOTED AS TYPE B-A ON THE DRAINAGE TABLE

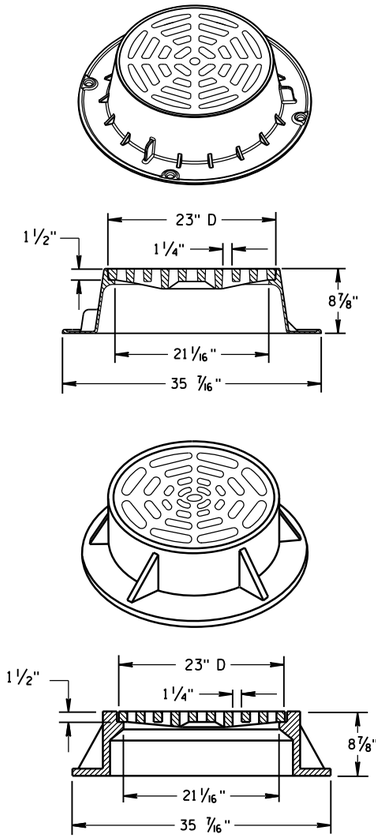

TYPE "C"

NOTE: EITHER CASTING IS ACCEPTABLE

GENERAL NOTES

DETAILS OF CONSTRUCTION, MATERIALS AND WORKMANSHIP NOT SHOWN ON THIS DRAWING SHALL CONFORM TO THE PERTINENT REQUIREMENTS OF THE STANDARD SPECIFICATIONS AND THE APPLICABLE SPECIAL PROVISIONS.

DETAIL DRAWINGS FOR PROPOSED ALTERNATE DESIGNS FOR CATCH BASIN, MANHOLE AND INLET COVERS SHALL BE SUBMITTED TO THE ENGINEER FOR APPROVAL PROVIDING THAT SUCH ALTERNATE DESIGNS MAKE PROVISION FOR EQUIVALENT CAPACITY AND STRENGTH.

ROUND FRAMES AND COVERS SHALL HAVE CONTINUOUSLY MACHINED BEARING SURFACES TO PREVENT ROCKING AND RATTLING.

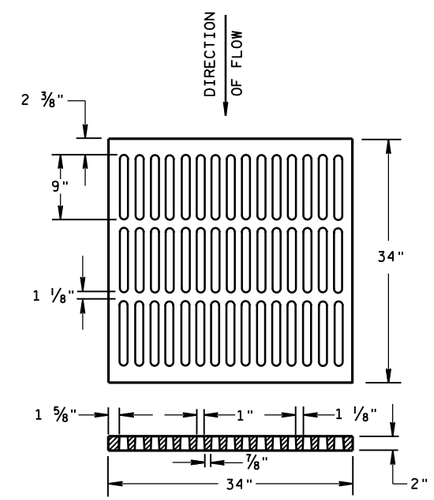

ALTERNATIVE TYPE "MS"

USE WHERE PEDESTRIAN OR BICYCLE TRAFFIC IS PERMITTED

NOTED AS TYPE MS-A ON THE DRAINAGE TABLE

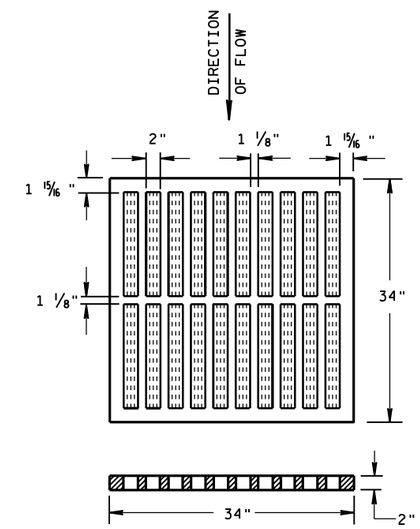

TYPE "MS"

USE ON FREEWAYS AND EXPRESSWAYS

NOTED AS TYPE MS ON DRAINAGE TABLE

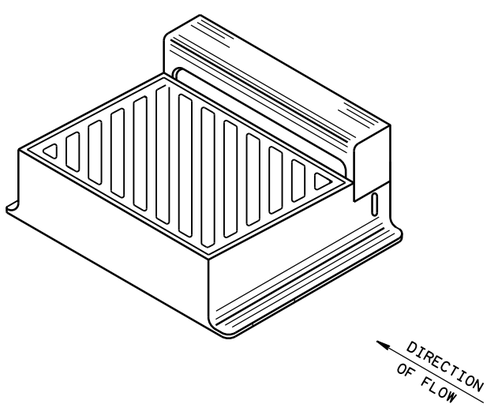

DIAGONAL SLOTS, SHALL BE ORIENTED TO THE DIRECTION OF FLOW AS ILLUSTRATED. GRATES ARE MANUFACTURED TO BE REVERSIBLE.

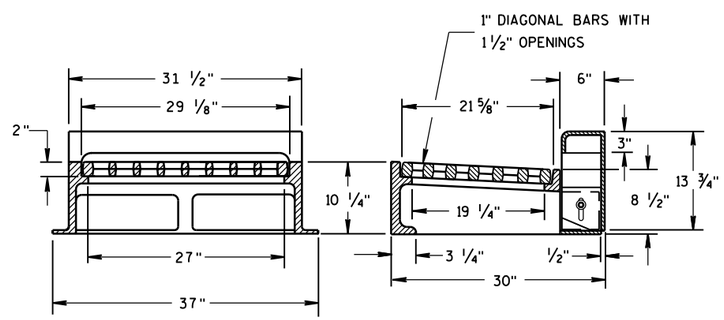

NOTE: CURB BOX HEIGHT ADJUSTABLE 6" TO 9"

TYPE "WM"

INLET COVERS
TYPE B, B-A, C, MS, MS-A, & WM

STATE OF WISCONSIN
DEPARTMENT OF TRANSPORTATION

APPROVED

11/27/2013	/S/ Jerry H. Zogg	
DATE	ROADWAY STANDARDS DEVELOPMENT ENGINEER	
FHWA		

6

6

S.D.D. 8 A 5-19b

S.D.D. 8 A 5-19b

GENERAL NOTES

DETAILS OF CONSTRUCTION, MATERIALS AND WORKMANSHIP NOT SHOWN ON THIS DRAWING SHALL CONFORM TO THE PERTINENT REQUIREMENTS OF THE STANDARD SPECIFICATIONS AND THE APPLICABLE SPECIAL PROVISIONS.

DETAIL DRAWINGS FOR PROPOSED ALTERNATE DESIGNS FOR INLET COVERS SHALL BE SUBMITTED TO THE ENGINEER FOR APPROVAL PROVIDING THAT SUCH ALTERNATE DESIGNS MAKE PROVISION FOR EQUIVALENT CAPACITY AND STRENGTH.

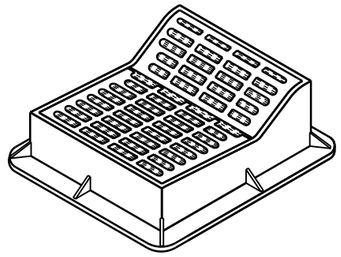

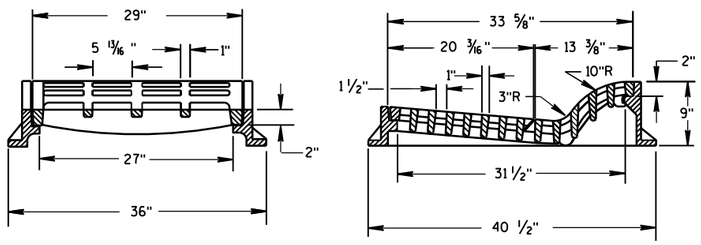

TYPE "F"

USE WITH TYPES A & D CONCRETE CURB & GUTTER, 36 INCH.

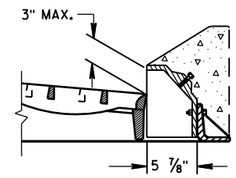

ALTERNATIVE CURB BOX FOR TYPE "HM" COVER

USE WITH TYPES G & J CONCRETE CURB & GUTTER, 30 INCH
NOTED AS TYPE HM-GJ ON DRAINAGE TABLE

NOTE:
SPECIAL GRATE FOR THE
TYPE "H" COVER MAY ALSO BE
USED FOR THE TYPE "HM-GJ" COVER
NOTED AS TYPE HM-GJ-S ON DRAINAGE TABLE

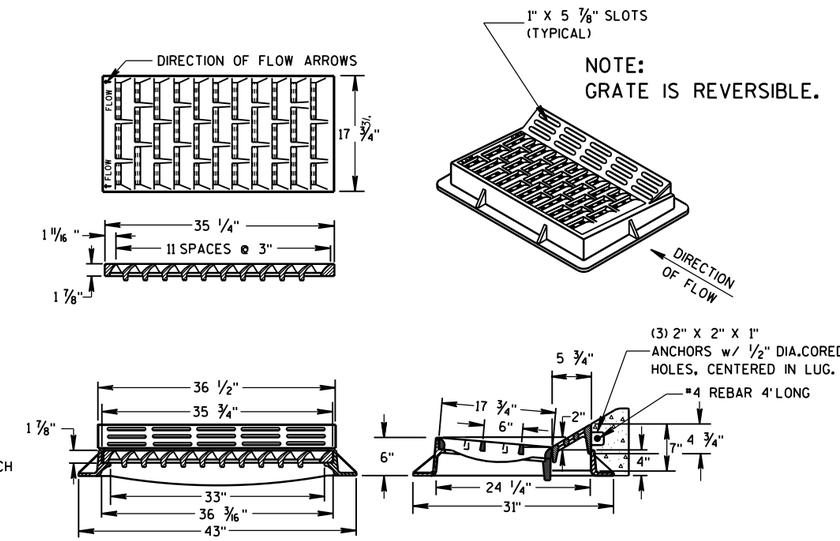

TYPE "HM"

USE WITH TYPES A & D CONCRETE CURB & GUTTER, 36 INCH.

NOTE:
SPECIAL GRATE FOR THE
TYPE "H" COVER MAY ALSO BE
USED FOR THE TYPE "HM" COVER
NOTED AS TYPE HM-S ON DRAINAGE TABLE

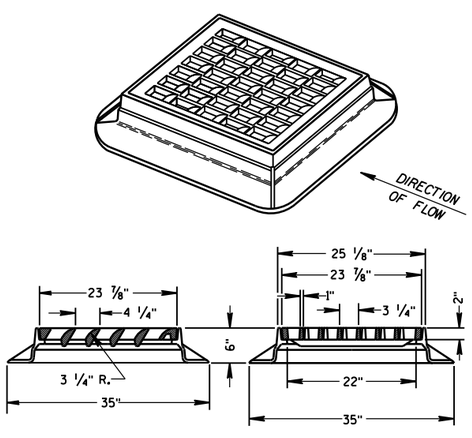

TYPE "S"

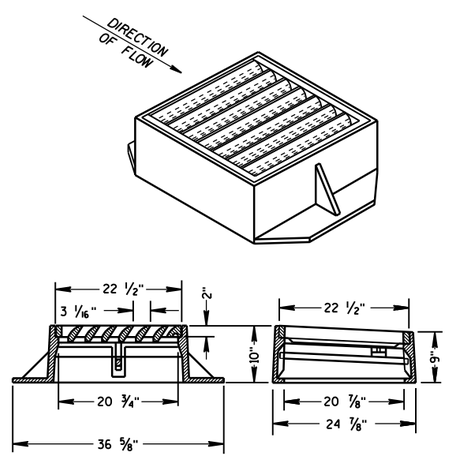

TYPE "V"

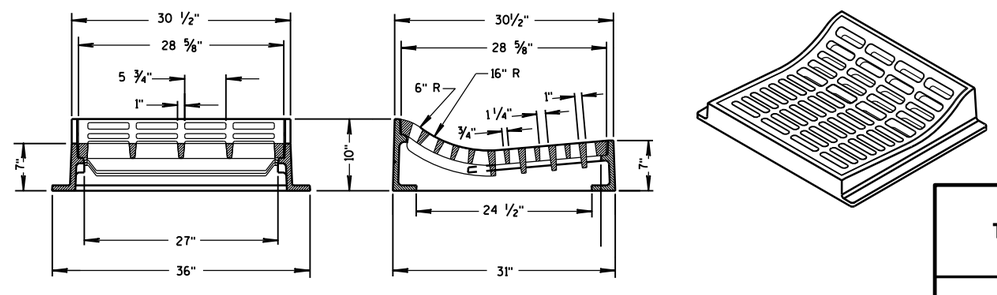

TYPE "T"

USE WITH TYPES R & T CONCRETE CURB & GUTTER, 36 INCH.

INLET COVERS
TYPE F, HM, HM-S, S, T, V, HM-GJ, & HM-GJ-S

STATE OF WISCONSIN
DEPARTMENT OF TRANSPORTATION

APPROVED
11/27/2013 — DATE
/S/ Jerry H. Zogg — ROADWAY STANDARDS DEVELOPMENT ENGINEER
FHWA

6

S.D.D. 8 A 5-19c

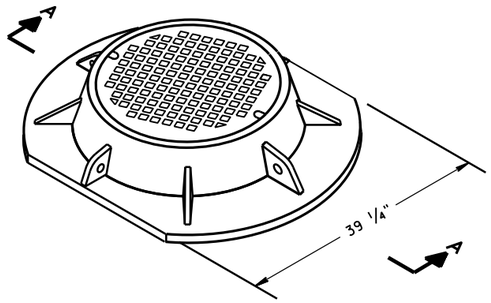

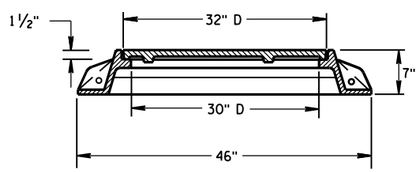

SECTION A-A
TYPE "K"

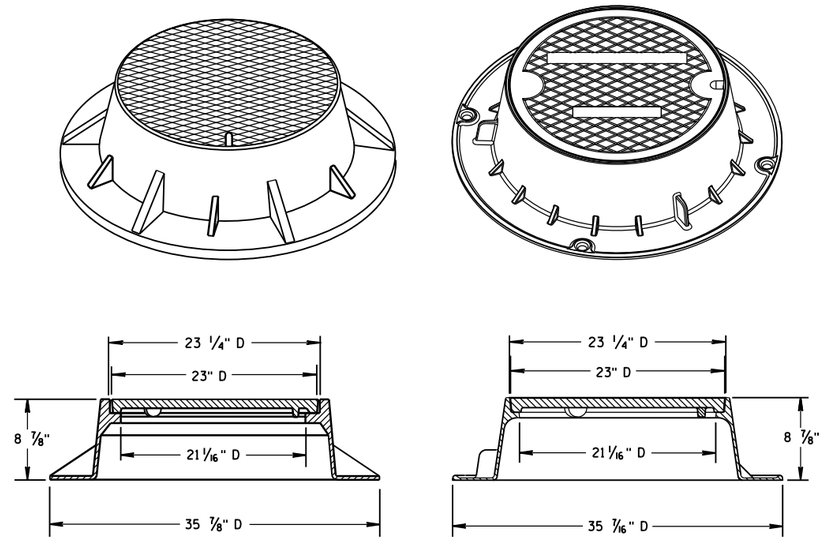

TYPE "J"
NOTE: EITHER CASTING IS ACCEPTABLE

GENERAL NOTES

DETAILS OF CONSTRUCTION, MATERIALS AND WORKMANSHIP NOT SHOWN ON THIS DRAWING SHALL CONFORM TO THE PERTINENT REQUIREMENTS OF THE STANDARD SPECIFICATIONS AND THE APPLICABLE SPECIAL PROVISIONS.

DETAIL DRAWINGS FOR PROPOSED ALTERNATE DESIGNS FOR MANHOLE COVERS SHALL BE SUBMITTED TO THE ENGINEER FOR APPROVAL PROVIDING THAT SUCH ALTERNATE DESIGNS MAKE PROVISION FOR EQUIVALENT CAPACITY AND STRENGTH.

ROUND FRAMES AND COVERS SHALL HAVE CONTINUOUSLY MACHINED BEARING SURFACES TO PREVENT ROCKING AND RATTLING.

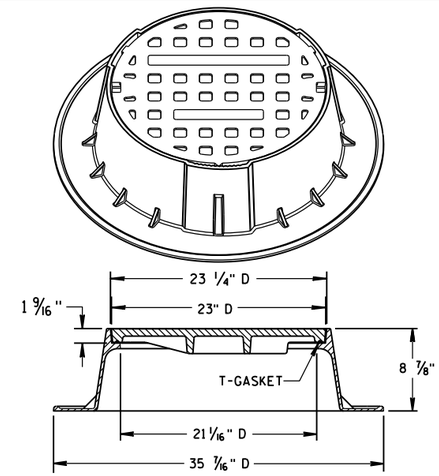

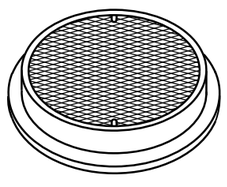

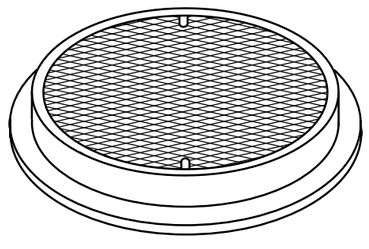

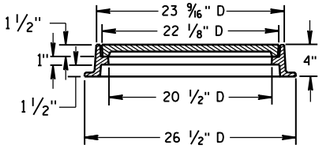

TYPE "L"

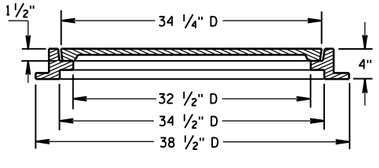

TYPE "M"

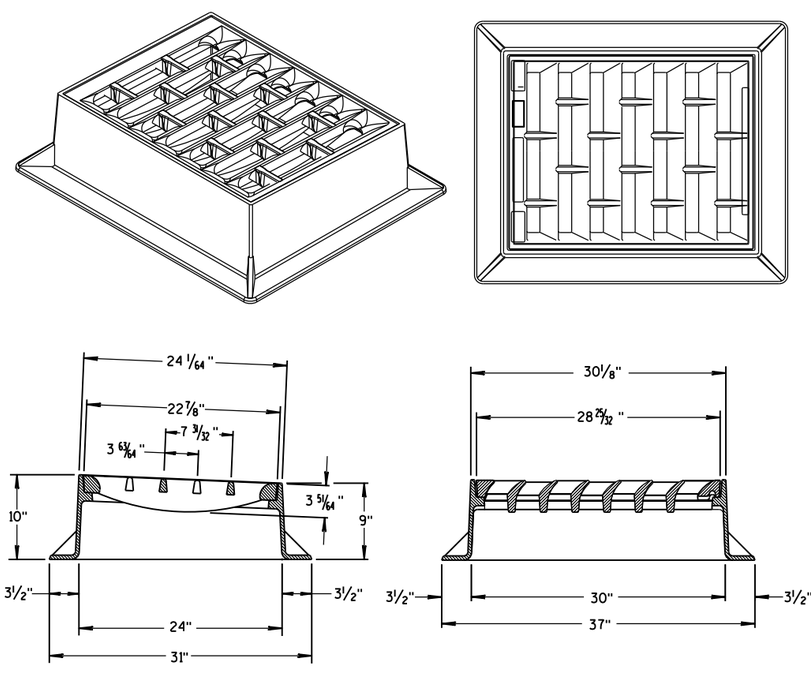

INLET COVER TYPE "BW"

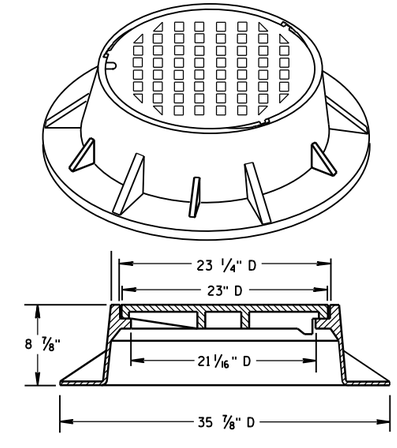

TYPE "J" SPECIAL
TYPE "B" NON-ROCKING SELF-SEAL LID
(NOTED AS TYPE J-S ON THE DRAINAGE TABLE)
NOTE: EITHER CASTING IS ACCEPTABLE

INLET COVER TYPE BW MANHOLE COVERS, TYPE K, J, J-S, L & M	
STATE OF WISCONSIN DEPARTMENT OF TRANSPORTATION	
APPROVED 11/27/2013 DATE FHWA	/S/ Jerry H. Zogg ROADWAY STANDARDS DEVELOPMENT ENGINEER

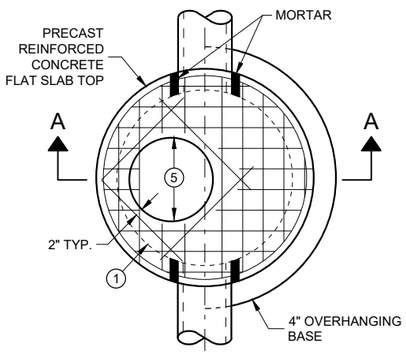

PLAN VIEW
CIRCULAR OPENING

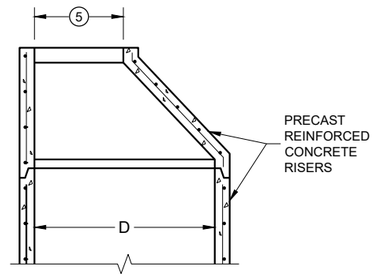

OPTIONAL PRECAST REINFORCED CONCRETE ECCENTRIC TOP

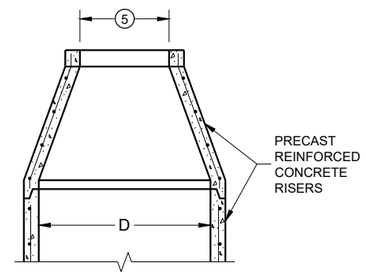

OPTIONAL PRECAST REINFORCED CONCRETE CONCENTRIC TOP

MANHOLE COVER OPENING MATRIX

OPENING SIZE (FT.) \ MANHOLE COVER TYPE	C	ALL J'S	K	L	M
2 DIA.	X	X		X	
3 DIA.			X		X

PIPE MATRIX

MANHOLE SIZE (DIA.)	MAXIMUM INSIDE PIPE DIAMETER FOR TWO PIPES		MINIMUM WALL THICKNESS (IN)	MINIMUM PRECAST FLAT SLAB TOP AND BASE THICKNESS
	180° SEPARATION (IN)	90° SEPARATION (IN)		
3-FT	15	12	4	6
4-FT	24	18	4	6
5-FT	36	24	5	8
6-FT	42	36	6	8
7-FT	48	36/42*	7	8
8-FT	60	42	8	8
9-FT	66	54	9	10
10-FT	72	60	10	10

*A 36" PIPE AND A 42" PIPE CAN BE PLACED WITHIN 90 DEGREES. SEE MINIMUM HORIZONTAL PIPE SEPARATION DETAIL.

GENERAL NOTES

DETAILS OF CONSTRUCTION, MATERIALS AND WORKMANSHIP NOT SHOWN ON THIS DRAWING SHALL CONFORM TO THE PERTINENT REQUIREMENTS OF THE STANDARD SPECIFICATIONS AND THE APPLICABLE SPECIAL PROVISIONS.

UNLESS OTHERWISE AUTHORIZED IN WRITING BY THE ENGINEER, THE CONTRACTOR SHALL NOT ORDER AND DELIVER PRECAST MANHOLE UNITS REQUIRED FOR THE PROJECT UNTIL A LIST OF SIZES IS FURNISHED BY THE ENGINEER.

DETAILED DRAWINGS FOR PROPOSED ALTERNATE DESIGNS FOR UNDERGROUND DRAINAGE STRUCTURES SHALL BE SUBMITTED TO THE ENGINEER FOR APPROVAL PROVIDING THAT SUCH ALTERNATE DESIGNS MAKE PROVISION FOR EQUIVALENT CAPACITY AND STRENGTH.

ALL DRAINAGE STRUCTURES ARE DESIGNATED ON THE PLANS AS "MANHOLES 3X3-L", "CATCH BASINS 4-B", "INLETS 2X3-H", ETC. THE FIRST NUMBERS DESIGNATE THE SIZE OF THE STRUCTURE, AND THE FOLLOWING LETTER DESIGNATES THE TYPE OF COVER TO BE USED TO COMPRISE THE COMPLETE UNIT.

BASES SHALL BE PLACED ON A BED OF MATERIAL AT LEAST 6 INCHES IN DEPTH, WHICH MEETS THE REQUIREMENTS OF FOUNDATION BACKFILL. THIS BEDDING SHALL BE COMPACTED AND PROVIDE UNIFORM SUPPORT FOR THE ENTIRE AREA OF THE BASE.

PRECAST REINFORCED CONCRETE CONE TOPS (ECCENTRIC OR CONCENTRIC) OR PRECAST REINFORCED CONCRETE FLAT SLAB TOPS MAY BE USED ON CONCRETE BLOCK STRUCTURES.

ECCENTRIC CONE TOPS MAY BE USED ON ALL STRUCTURES. CONCENTRIC CONE TOPS SHALL BE USED ONLY ON STRUCTURES 5 FEET OR LESS IN DEPTH UNLESS OTHERWISE DIRECTED BY THE ENGINEER.

STEPS MEETING AASHTO M199 AND THE FOLLOWING REQUIREMENTS SHALL BE INSTALLED IN ALL STRUCTURES OVER 5 FEET IN DEPTH: 16 INCH C-C MAXIMUM SPACING; PROJECT A MINIMUM CLEAR DISTANCE OF 4 INCHES FROM THE WALL AT THE POINT OF EMBEDMENT; MINIMUM LENGTH OF 10 INCHES; MINIMUM WALL EMBEDMENT OF 3 INCHES. FERROUS METAL STEPS NOT PAINTED OR TREATED TO RESIST CORROSION SHALL HAVE A MINIMUM CROSS SECTIONAL DIMENSION OF 1 INCH.

STEPS OF APPROVED POLYPROPYLENE PLASTIC COATED REINFORCEMENT BAR ARE ACCEPTABLE. REINFORCING BAR MUST BE A MINIMUM OF ½ INCH AND MEET THE REQUIREMENTS OF ASTM A615.

CERTIFICATION SHALL BE PROVIDED THAT INSTALLED STEPS WHEN TESTED IN ACCORDANCE WITH SECTION 10 OF AASHTO T280 CAN WITHSTAND A VERTICAL LOAD OF 800 LBS. AND A HORIZONTAL LOAD OF 400 LBS.

ALL BAR STEEL REINFORCEMENT SHALL BE EMBEDDED 2 INCHES CLEAR UNLESS OTHERWISE SHOWN OR NOTED.

ALL PRECAST MANHOLE UNITS SHALL CONFORM TO THE PERTINENT REQUIREMENTS OF AASHTO DESIGNATION M199.

PRECAST REINFORCED RISERS SHALL HAVE A TONGUE AND GROOVE JOINT WITH TONGUE UP OR DOWN.

CONCRETE BLOCK WILL NOT BE PERMITTED FOR STRUCTURES GREATER THAN 4 FEET IN DIAMETER.

4" OVERHANGING BASES ARE REQUIRED FOR ALL CONCRETE BLOCK INSTALLATIONS. 4" OVERHANG IS REQUIRED WHEN SEPARATE PRECAST BASE IS PROVIDED. OVERHANG IS NOT REQUIRED ON PRECAST STRUCTURES WITH AN INTEGRAL OR MONOLITHIC BASE.

FOR ADDITIONAL CONFIGURATIONS, MAINTAIN A MINIMUM OF 12 INCHES AS MEASURED FROM THE INSIDE OF THE STRUCTURE WALL BETWEEN THE OUTSIDE PIPE WALLS OF ADJACENT PIPES. SEE DETAIL "D".

1. FOR PRECAST MANHOLES PROVIDE REINFORCING STEEL IN ACCORDANCE TO AASHTO M199.
2. SEE PIPE MATRIX TABLE FOR MINIMUM WALL THICKNESS FOR PRECAST MANHOLES
3. SEE PIPE MATRIX TABLE FOR MINIMUM THICKNESS OF PRECAST FLAT SLAB TOPS AND BASES.
4. JOINTS TO BE SEALED WITH A BUTYL RUBBER SEAL PER SEALANT MANUFACTURERS RECOMMENDATIONS CONFORMING TO ASTM C 990 (TYP.).
5. SEE MANHOLE COVER OPENING MATRIX.

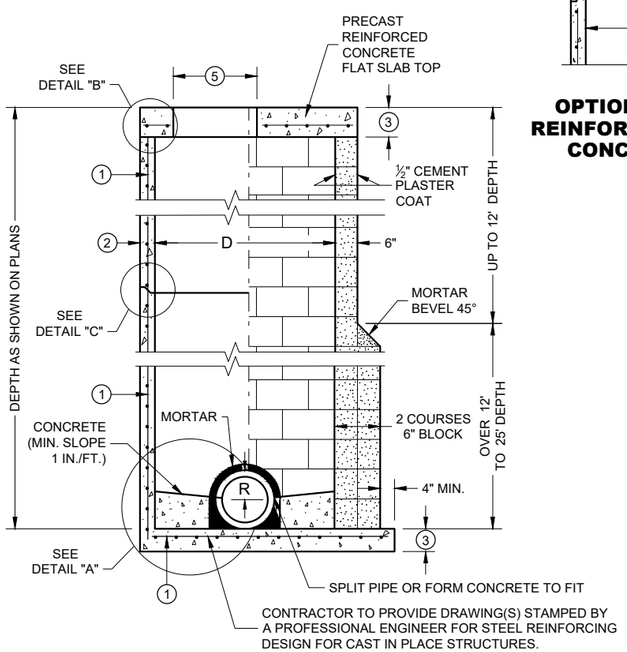

SECTION A - A

PRECAST REINFORCED CONCRETE WITH MONOLITHIC BASE

CONCRETE BLOCK WITH CAST IN PLACE OR PRECAST REINFORCED CONCRETE BASE (1)

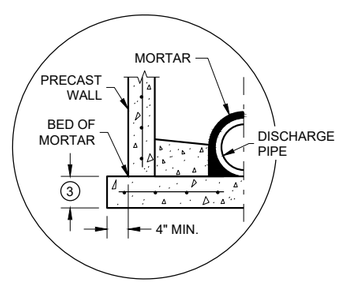

SEPARATE PRECAST REINFORCED CONCRETE BASE OPTION

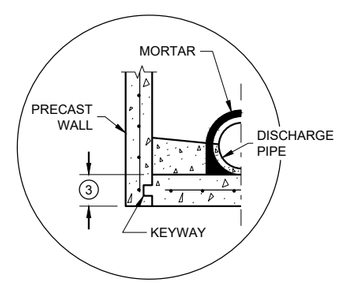

PRECAST REINFORCED CONCRETE WITH INTEGRAL BASE OPTION

DETAIL "A"

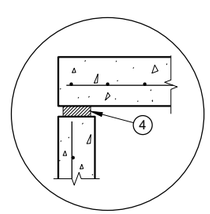

TOP WITH PLAIN END JOINT

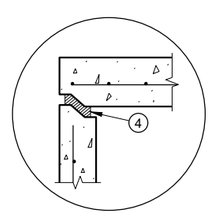

TOP WITH TONGUE AND GROOVE JOINT

DETAIL "B"

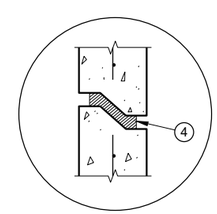

RISER WITH TONGUE AND GROOVE JOINT

DETAIL "C"

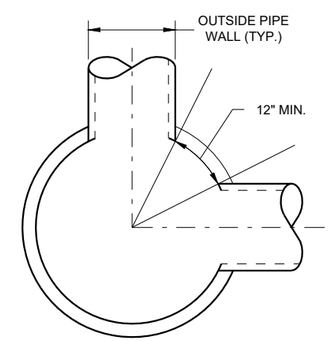

MINIMUM HORIZONTAL PIPE SEPARATION

MANHOLES 3-FT, 4-FT, 5-FT, 6-FT, 7-FT, 8-FT, 9-FT AND 10-FT DIAMETER

MANHOLES, 3-FT, 4-FT 5-FT, 6-FT, 7-FT, 8-FT, 9-FT AND 10-FT DIAMETER

STATE OF WISCONSIN
DEPARTMENT OF TRANSPORTATION

APPROVED
November 2021 — DATE
/S/ Rodney Taylor — ROADWAY STANDARDS DEVE ENGINEER
FHWA

6

SDD 08B09 - 03

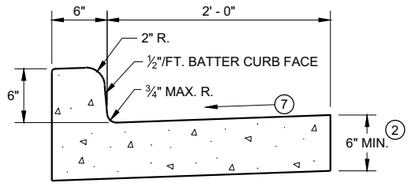

TYPES A[1] & D

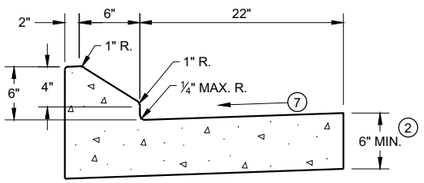

6" SLOPED CURB TYPES G[1] & J

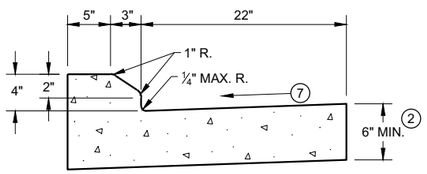

4" SLOPED CURB TYPES G[1] & J

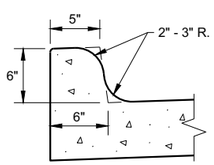

TYPES K[1] & L
(OPTIONAL CURB SHAPE)

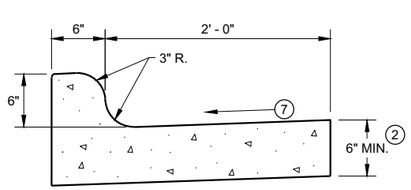

TYPES K[1] & L

CONCRETE CURB AND GUTTER 30"

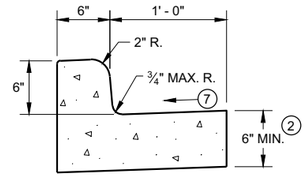

TYPES A[1] & D

CONCRETE CURB AND GUTTER 18"

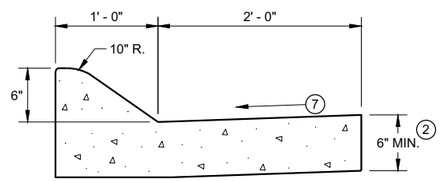

6" SLOPED CURB TYPES A[1] & D

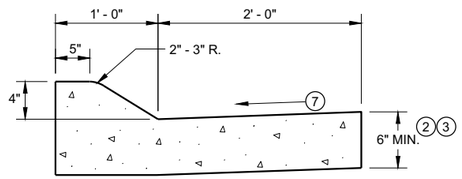

4" SLOPED CURB TYPES A[1] & D

CONCRETE CURB AND GUTTER 36"

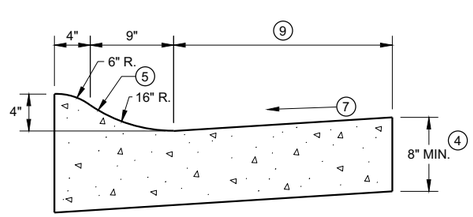

4" SLOPED CURB TYPES R[1] & T

TBT & TBTT	X
30"	22"
36"	28"

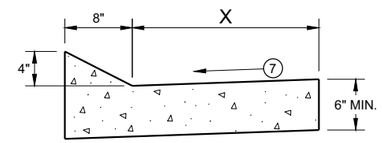

TYPES TBT & TBTT[1]

CONCRETE CURB AND GUTTER

GENERAL NOTES

DETAILS OF CONSTRUCTION AND WORKMANSHIP NOT SHOWN ON THIS DRAWING SHALL CONFORM TO THE PERTINENT REQUIREMENTS OF THE CONTRACT.

PAVEMENT TIES AND TIE BARS SHALL BE EPOXY COATED IN CONFORMANCE WITH SUBSECTION 505.2.6.2 OF THE STANDARD SPECIFICATIONS.

INTEGRAL CURB AND GUTTER SHALL CONFORM TO THE DETAILS SHOWN FOR CONCRETE CURB AND GUTTER INCLUDING THE TRANSVERSE GUTTER SLOPE.

UNLESS OTHERWISE SHOWN ON THE TYPICAL CROSS SECTIONS, THE BASE AGGREGATE AND COMMON EXCAVATION LIMITS ARE 2' - 0" BEHIND THE BACK OF CURBS.

1. TIE BARS ARE REQUIRED FOR CURB AND GUTTERS TYPES A, G, K, R, AND TBTT.
2. THE BOTTOM OF CURB AND GUTTER MAY BE CONSTRUCTED EITHER LEVEL OR PARALLEL TO THE SLOPE OF THE SUBGRADE OR BASE AGGREGATE PROVIDED A 6" MINIMUM GUTTER THICKNESS IS MAINTAINED.
3. USE 8" MINIMUM GUTTER THICKNESS WHEN USED WITH AN ADJACENT CONCRETE TRUCK APRON PLACED BEHIND BACK OF CURB.
4. THE BOTTOM OF CURB AND GUTTER MAY BE CONSTRUCTED EITHER LEVEL OR PARALLEL TO THE SLOPE OF THE SUBGRADE OR BASE AGGREGATE PROVIDED A 8" MINIMUM GUTTER THICKNESS IS MAINTAINED.
5. UNLESS OTHERWISE NOTED, FOR STAKING PURPOSES THE FACE OF CURB IS 6" FROM THE BACK OF CURB.
6. WHEN REVERSE SLOPE GUTTER IS REQUIRED, THE LOCATION(S) WILL BE SHOWN ELSEWHERE IN THE PLAN.
7. USE 4% GUTTER CROSS SLOPE UNLESS OTHERWISE NOTED IN THE PLANS.
8. INCLUDE LONGITUDINAL JOINT AND TIE BARS ALONG LANE EDGE WHEN CONCRETE PANEL WIDTH EXCEEDS THE MAXIMUM WIDTH PER TABLE BELOW. LONGITUDINAL JOINT(S) ARE NOT ALLOWED WITHIN TRAFFIC LANES AND BIKE LANES. LONGITUDINAL JOINT MAY BE SAWED.
9. CONCRETE CURB AND GUTTER 4-INCH SLOPED 30-INCH TYPE "R" AND "T" = 17 INCHES
   CONCRETE CURB AND GUTTER 4-INCH SLOPED 36-INCH TYPE "R" AND "T" = 23 INCHES

PAVEMENT THICKNESS AND MAXIMUM CONCRETE PANEL WIDTH TABLE

PAVEMENT THICKNESS	MAXIMUM PANEL WIDTH
LESS THAN 10"	12'
10" & ABOVE	15'

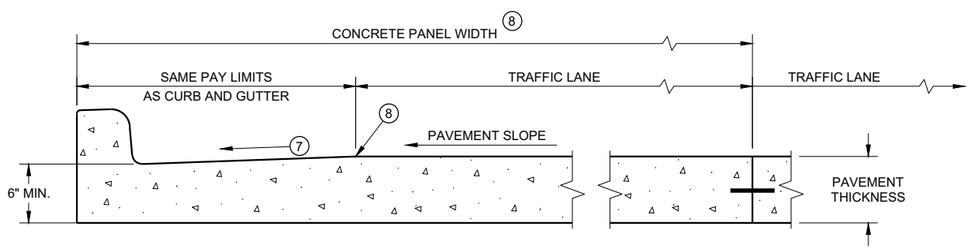

PARTIAL SECTION OF PAVEMENT *
WITH INTEGRAL CURB AND GUTTER

* BIKE LANE IS NOT SHOWN

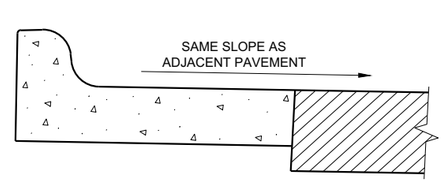

REVERSE SLOPE GUTTER[6]
(TYPICAL FOR ALL CURB & GUTTER TYPES)

CONCRETE CURB AND GUTTER

STATE OF WISCONSIN
DEPARTMENT OF TRANSPORTATION

6

SDD 08D01 - 22a

GENERAL NOTES

DETAILS OF CONSTRUCTION AND WORKMANSHIP NOT SHOWN ON THIS DRAWING SHALL CONFORM TO THE PERTINENT REQUIREMENTS OF THE CONTRACT.

PAVEMENT TIES AND TIE BARS SHALL BE EPOXY COATED IN CONFORMANCE WITH SUBSECTION 505.2.6.2 OF THE STANDARD SPECIFICATIONS.

UNLESS OTHERWISE SHOWN ON THE TYPICAL CROSS SECTIONS, THE BASE AGGREGATE AND COMMON EXCAVATION LIMITS ARE 2' - 0" BEHIND THE BACK OF CURBS.

(1) TIE BARS ARE REQUIRED FOR CURB AND GUTTERS TYPES A, G, K, R, AND TBTT.

(2) THE BOTTOM OF CURB AND GUTTER MAY BE CONSTRUCTED EITHER LEVEL OR PARALLEL TO THE SLOPE OF THE SUBGRADE OR BASE AGGREGATE PROVIDED A 6" MINIMUM GUTTER THICKNESS IS MAINTAINED.

(9) REFER TO SDD 08D18 AND 08D19 FOR ADDITIONAL DRIVEWAY ENTRANCE CURB DETAILS.

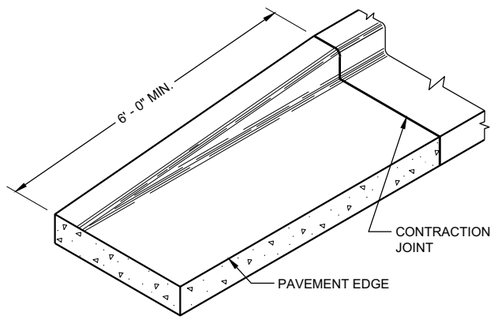

END SECTIONCURB AND GUTTER

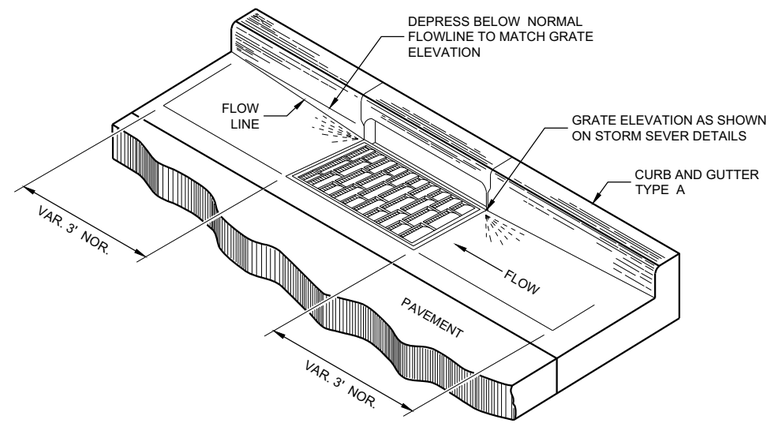

DETAIL OF CURB AND GUTTER AT INLETS
(TYPICAL H INLET COVER SHOWN)

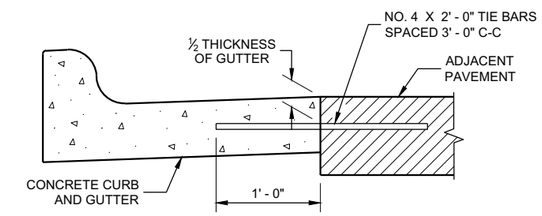

TYPICAL TIE BAR LOCATION (1)

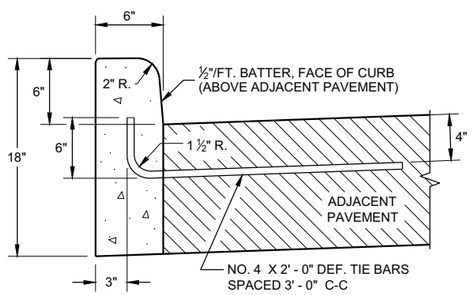

TYPES A (1) & D

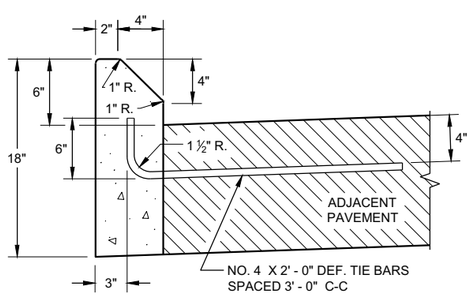

TYPES G (1) & J

CONCRETE CURB

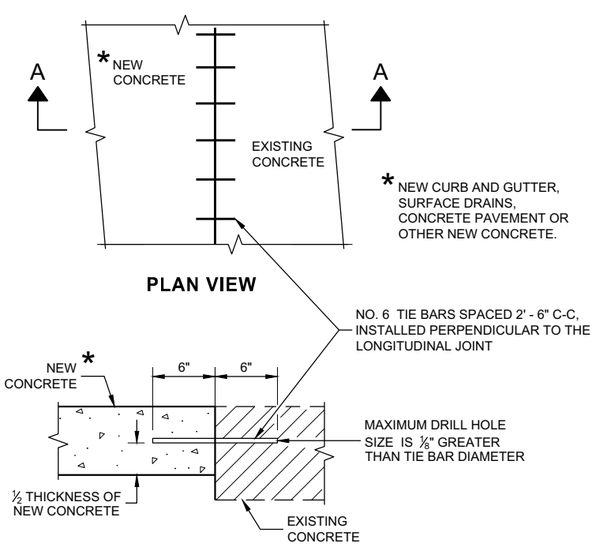

PLAN VIEW

SECTION A - A

TIE BARS DRILLED INTO EXISTING PAVEMENT

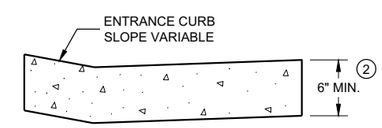

DRIVEWAY ENTRANCE CURB (9)
(WHEN DIRECTED BY THE ENGINEER)

CONCRETE CURB, TIES AND CURB AND GUTTER APPLICATIONS

STATE OF WISCONSIN
DEPARTMENT OF TRANSPORTATION

APPROVED
February 2021 — DATE
/S/ Rodnery Taylor — ROADWAY STANDARDS DEVE ENGINEER
FHWA

6

SDD 08D01 - 22b

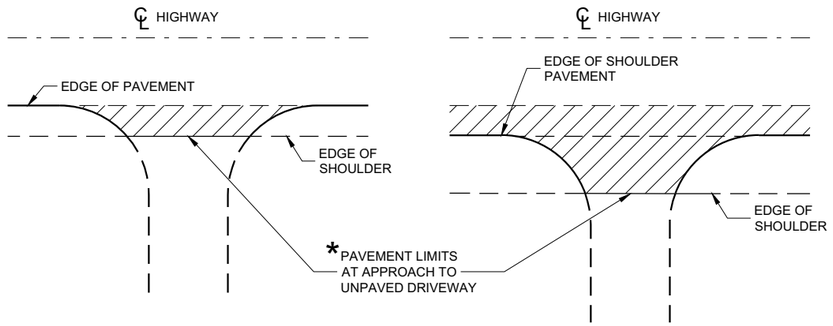

* WHERE DRIVEWAY IS PAVED, APPROACH PAVEMENT SHOULD BE EXTENDED TO MATCH DRIVEWAY PAVEMENT.

PLAN VIEW
(UNPAVED SHOULDER ON HIGHWAY)

PLAN VIEW
(PAVED SHOULDER ON HIGHWAY)

RURAL DRIVEWAY INTERSECTION DETAIL
(NO CURB AND GUTTER OR SIDEWALK)

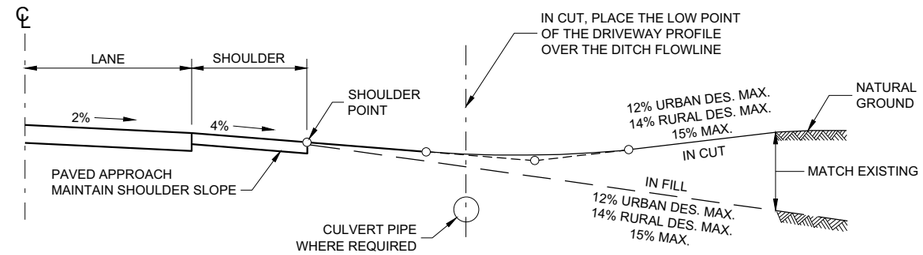

TYPICAL DRIVEWAY PROFILES

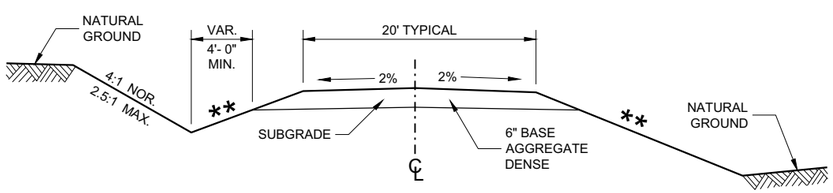

IN CUT **IN FILL**

TYPICAL CROSS SECTION FOR PRIVATE DRIVE OR FIELD ENTRANCE AGGREGATE SURFACE

** SLOPE CAN VARY WITH SPEED. SEE 11-45-30.6.2

POSTED SPEED MPH	MAX. SLOPE
<35	4:1
≥ 35 TO < 60	6:1
≥60	10:1

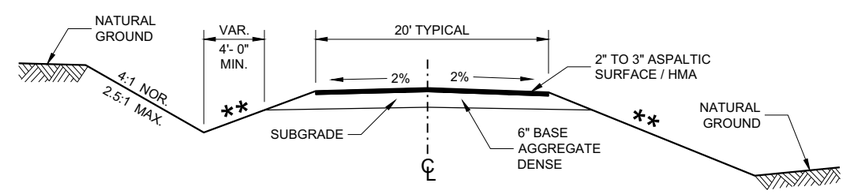

IN CUT **IN FILL**

TYPICAL CROSS SECTION FOR PRIVATE DRIVE OR FIELD ENTRANCE ASPHALTIC SURFACE

DRIVEWAYS WITHOUT CURB AND GUTTER

STATE OF WISCONSIN
DEPARTMENT OF TRANSPORTATION

APPROVED
December 2017 — DATE
/S/ Rodney Taylor — ROADWAY STANDARDS DEVE UNIT SUPERVISOR
FHWA

6

SDD 08D21 - 01

GENERAL NOTES

1. DESIGN WILL DETERMINE FINAL DRIVEWAY ASPHALTIC THICKNESS BASED ON TYPE OF USAGE AND LOADINGS.

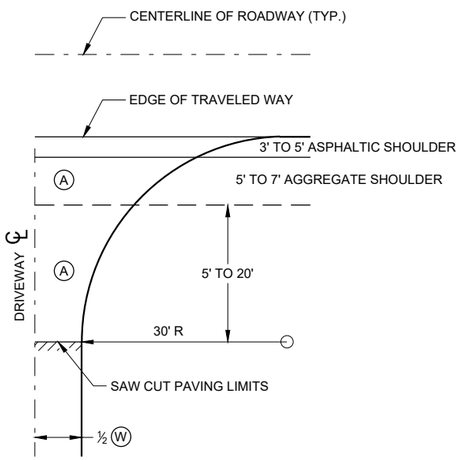

PLAN VIEW

A : PAID FOR AS ASPHALTIC SURFACE DRIVEWAYS AND FIELD ENTRANCES. (TON)

B : PAID FOR AS BASE AGGREGATE DENSE 1 ¼" (TON)

W : DRIVEWAY WIDTH 16' MIN. - 24' MAX.

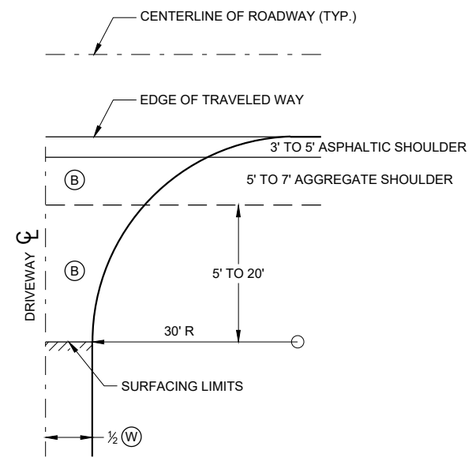

PLAN VIEW

HALF SECTION

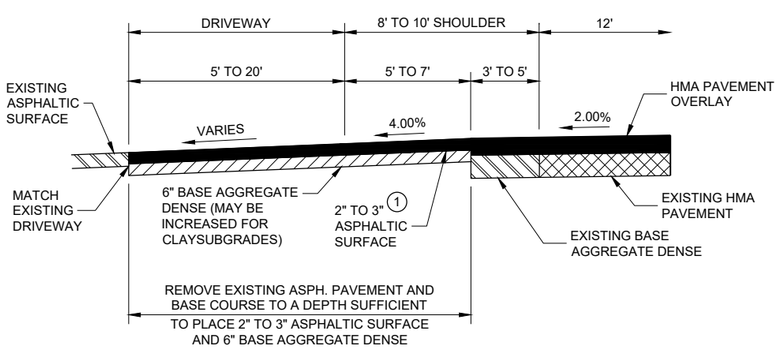

PROFILE VIEW

RURAL ENTRANCE WITH ASPHALTIC SURFACE

RESURFACING PROJECTS

PLAN VIEW

HALF SECTION

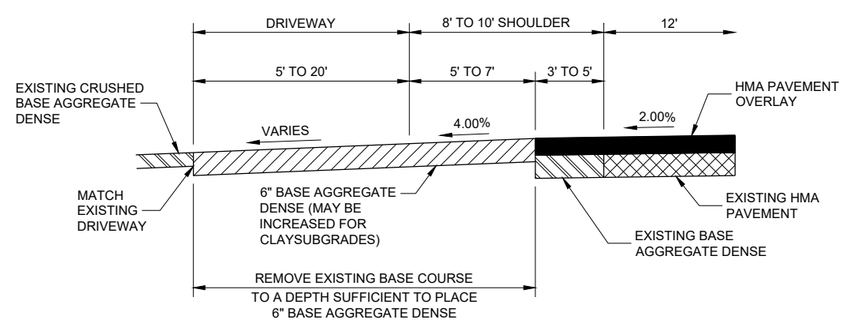

PROFILE VIEW

RURAL ENTRANCE WITH AGGREGATE SURFACE

6" BASE AGGREGATE DENSE RESURFACING PROJECTS

DRIVEWAYS WITHOUT CURB AND GUTTER RESURFACING PROJECTS RURAL

STATE OF WISCONSIN
DEPARTMENT OF TRANSPORTATION

APPROVED
December 2016 — DATE
/S/ Rodney Taylor — ROADWAY STANDARDS DEVE ENGINEER

FHWA

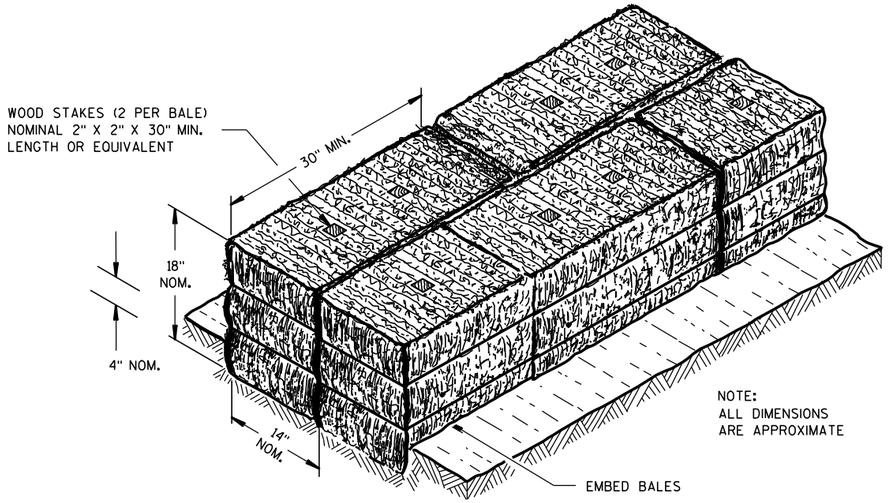

SECTION A-A

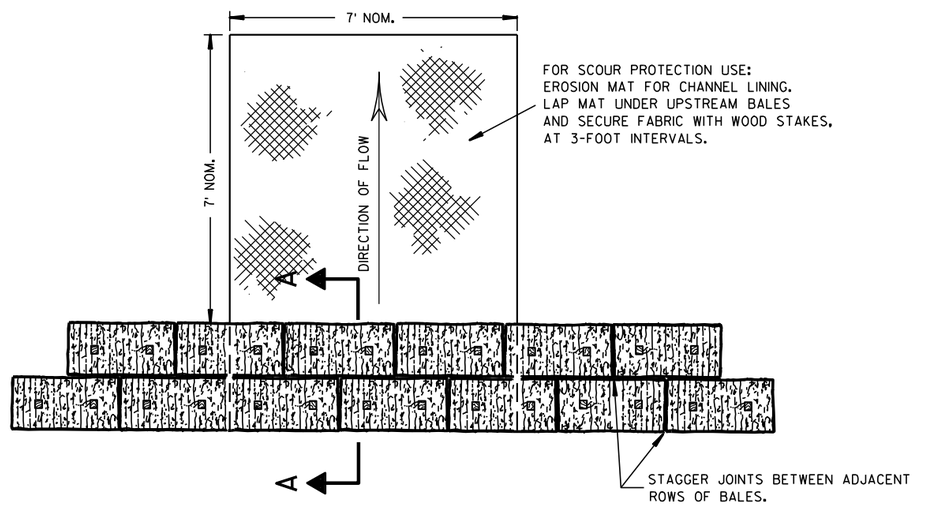

PLAN VIEW

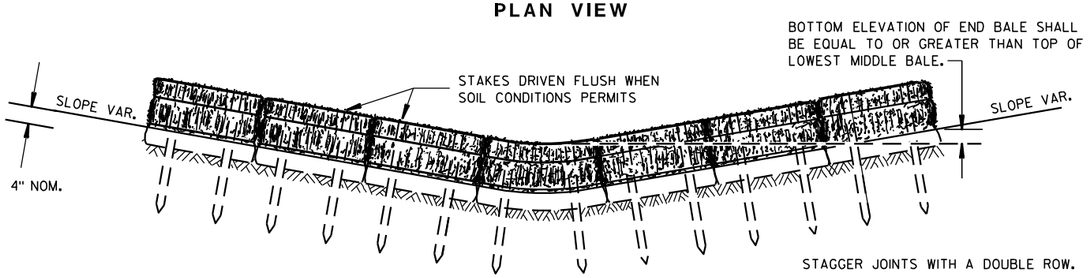

FRONT ELEVATION

TEMPORARY DITCH CHECK USING EROSION BALES ①

GENERAL NOTES

DETAILS OF CONSTRUCTION, MATERIALS AND WORKMANSHIP NOT SHOWN ON THIS DRAWING SHALL CONFORM TO THE PERTINENT REQUIREMENTS OF THE STANDARD SPECIFICATIONS AND THE APPLICABLE SPECIAL PROVISIONS.

① TEMPORARY DITCH CHECKS EITHER EROSION BALES OR MANUFACTURED SHALL BE PAID FOR UNDER THE BID ITEM OF TEMPORARY DITCH CHECK. THE DEPARTMENT WILL NOT PAY FOR TEMPORARY DITCH CHECKS CONSTRUCTED OF A SINGLE ROW OF EROSION BALES.

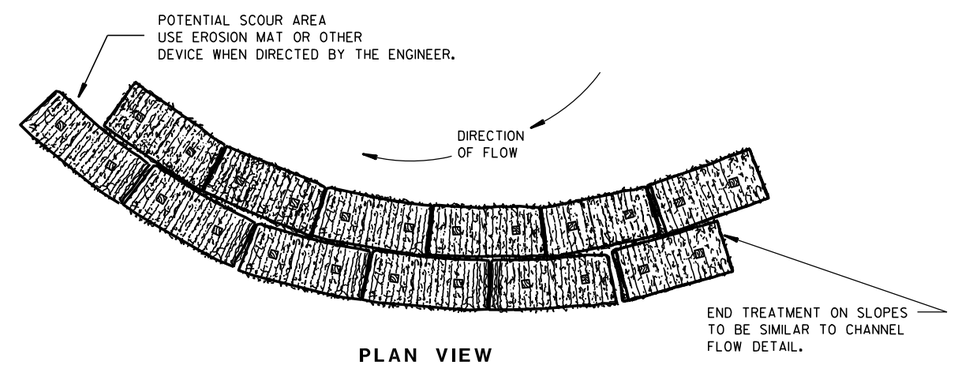

PLAN VIEW

WHEN ALTERING THE DIRECTION OF FLOW

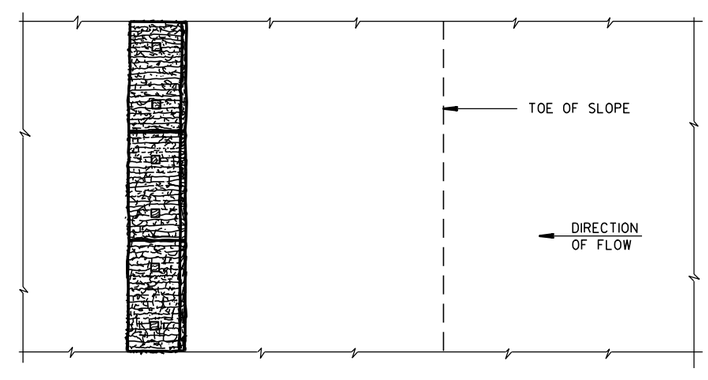

PLAN VIEW

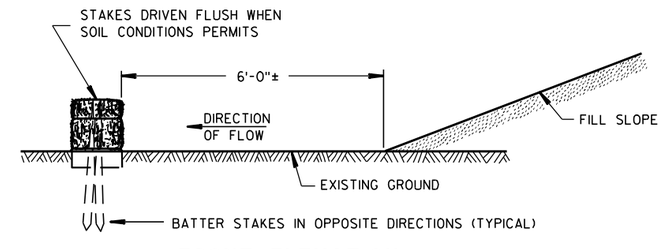

FRONT ELEVATION

WHEN EXISTING GROUND SLOPES AWAY FROM FILL SLOPE

EROSION BALES FOR SHEET FLOW

TYPICAL INSTALLATIONS OF EROSION BALES / TEMPORARY DITCH CHECKS

STATE OF WISCONSIN
DEPARTMENT OF TRANSPORTATION

APPROVED
6/04/02 — DATE
/S/ Beth Cann... — CHIEF ROADWAY DEVELOPMENT ENGINEER
FHWA

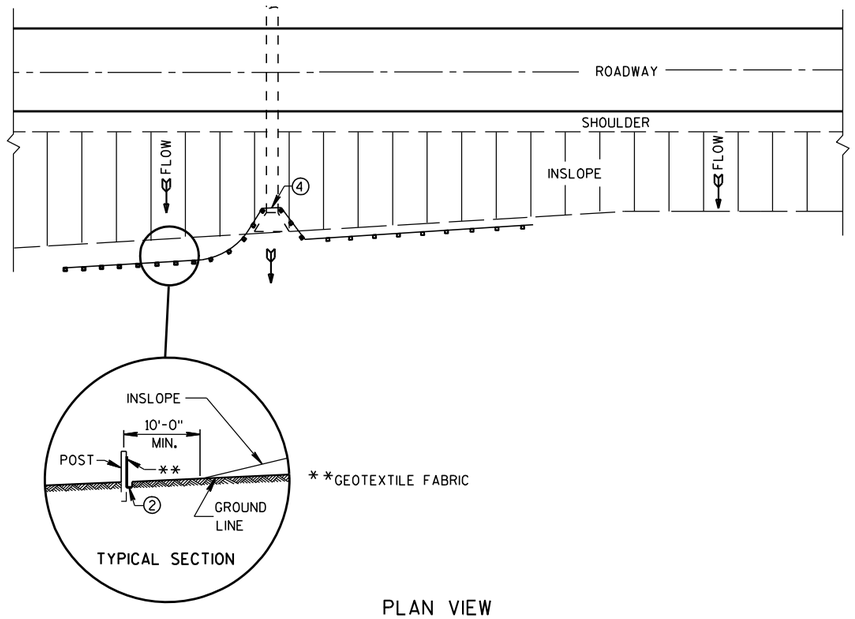

PLAN VIEW

TYPICAL APPLICATION OF SILT FENCE

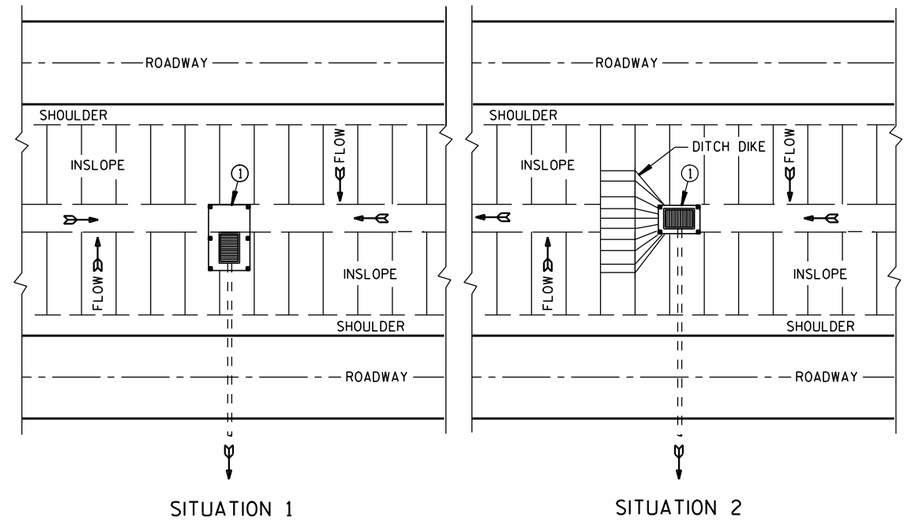

PLAN VIEW

SILT FENCE AT MEDIAN SURFACE DRAINS

GENERAL NOTES

DETAILS OF CONSTRUCTION NOT SHOWN ON THIS DRAWING SHALL CONFORM TO THE PERTINENT REQUIREMENTS OF THE STANDARD SPECIFICATIONS AND APPLICABLE SPECIAL PROVISIONS.

① HORIZONTAL BRACE REQUIRED WITH 2" X 4" WOODEN FRAME OR EQUIVALENT AT TOP OF POSTS.

② FOR MANUAL INSTALLATIONS THE TRENCH SHALL BE A MINIMUM OF 4" WIDE & 6" DEEP TO BURY AND ANCHOR THE GEOTEXTILE FABRIC. FOLD MATERIAL TO FIT TRENCH AND BACKFILL & COMPACT TRENCH WITH EXCAVATED SOIL.

③ WOOD POSTS SHALL BE A MINIMUM SIZE OF 1⅛" X 1⅛" OF OAK OR HICKORY.

④ SILT FENCE TO EXTEND ACROSS THE TOP OF THE PIPE.

⑤ CONSTRUCT SILT FENCE FROM A CONTINUOUS ROLL IF POSSIBLE BY CUTTING LENGTHS TO AVOID JOINTS. IF A JOINT IS NECESSARY USE ONE OF THE FOLLOWING TWO METHODS; A) OVERLAP THE END POSTS AND TWIST, OR ROTATE, AT LEAST 180 DEGREES. B) HOOK THE END OF EACH SILT FENCE LENGTH.

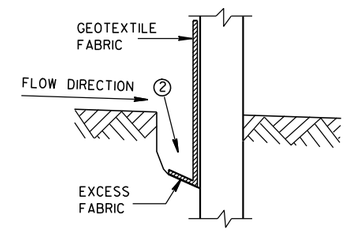

TRENCH DETAIL

NOTE: ADDITIONAL POST DEPTH OR TIE BACKS MAY BE REQUIRED IN UNSTABLE SOILS

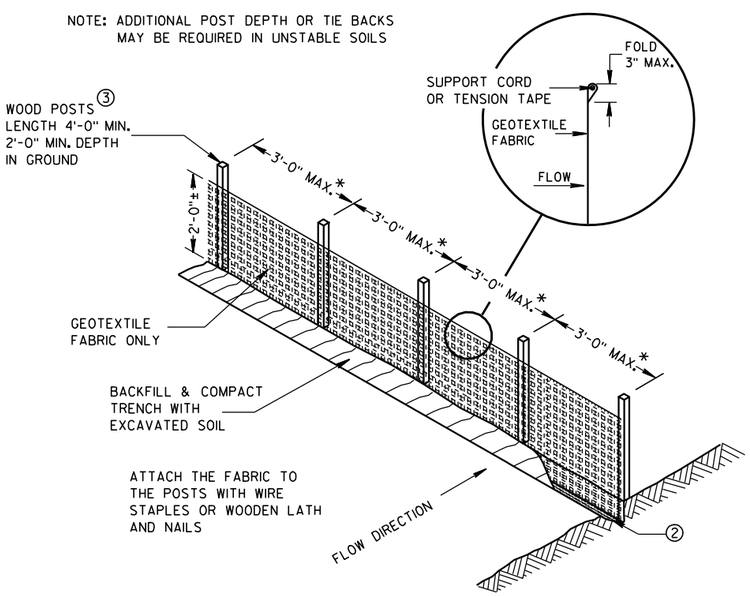

*NOTE: 8'-0" POST SPACING ALLOWED IF A WOVEN GEOTEXTILE FABRIC IS USED.

SILT FENCE

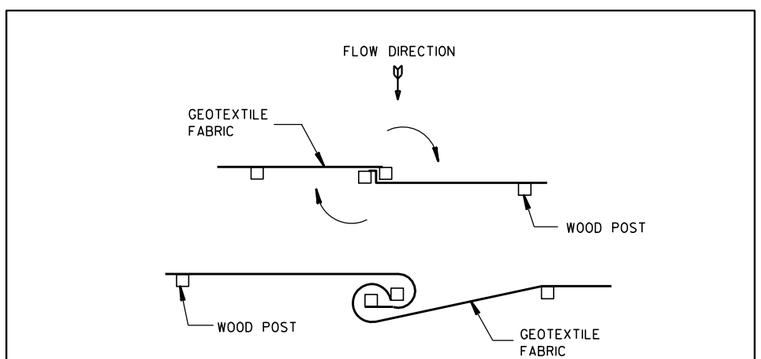

TWIST METHOD

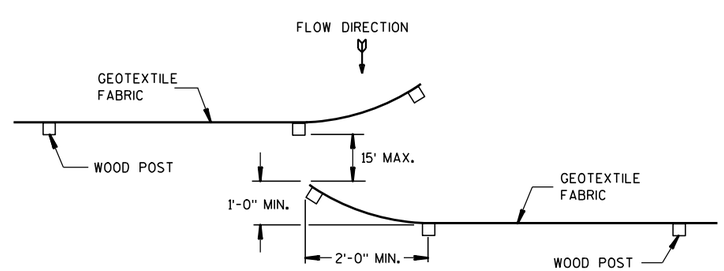

HOOK METHOD

JOINING TWO LENGTHS OF SILT FENCE ⑤

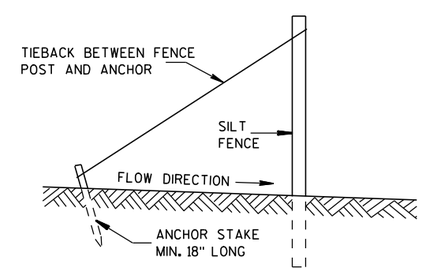

SILT FENCE TIE BACK

(WHEN REQUIRED BY THE ENGINEER)

SILT FENCE
STATE OF WISCONSIN DEPARTMENT OF TRANSPORTATION
APPROVED 4-29-05 DATE — /S/ Beth Cann... CHIEF ROADWAY DEVELOPMENT ENGINEER FHWA

6

6

S.D.D. 8 E 9-6

S.D.D. 8 E 9-6

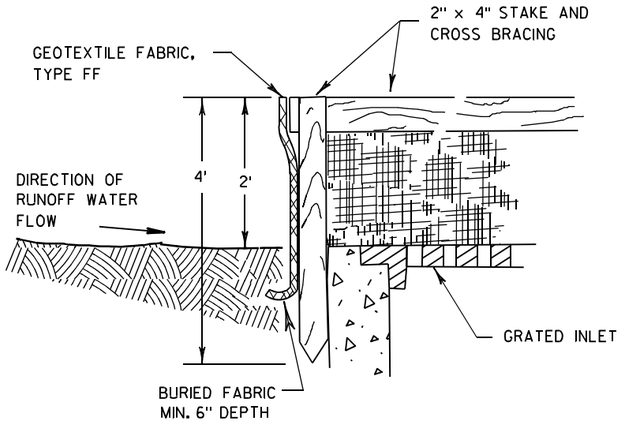

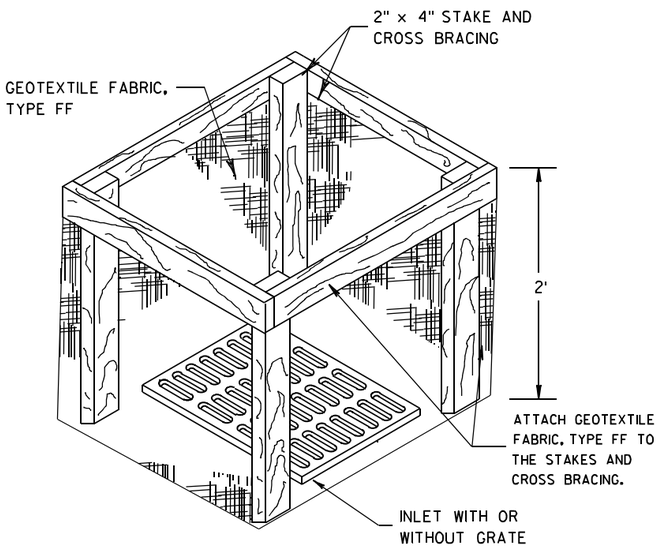

INLET PROTECTION, TYPE A

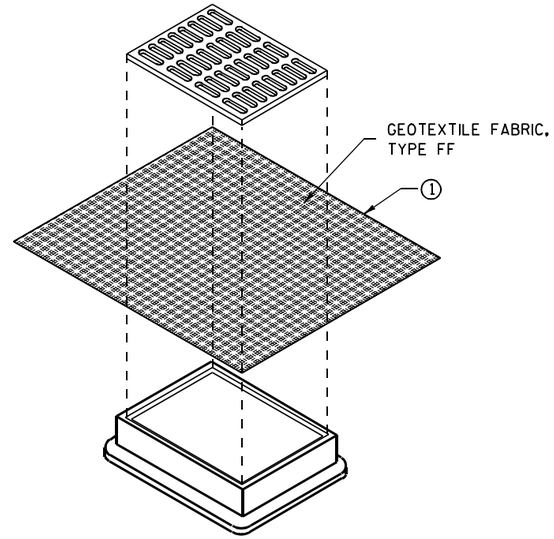

INLET PROTECTION, TYPE B
(WITHOUT CURB BOX)

(CAN BE INSTALLED IN ANY INLET WITHOUT A CURB BOX)

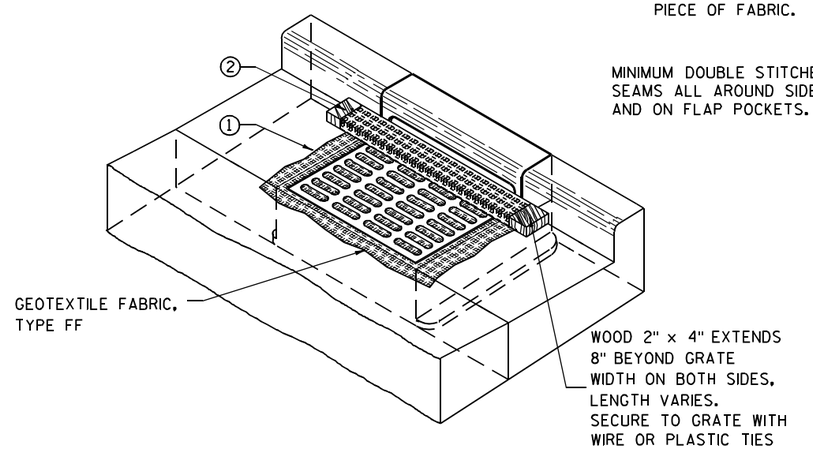

INLET PROTECTION, TYPE C (WITH CURB BOX)

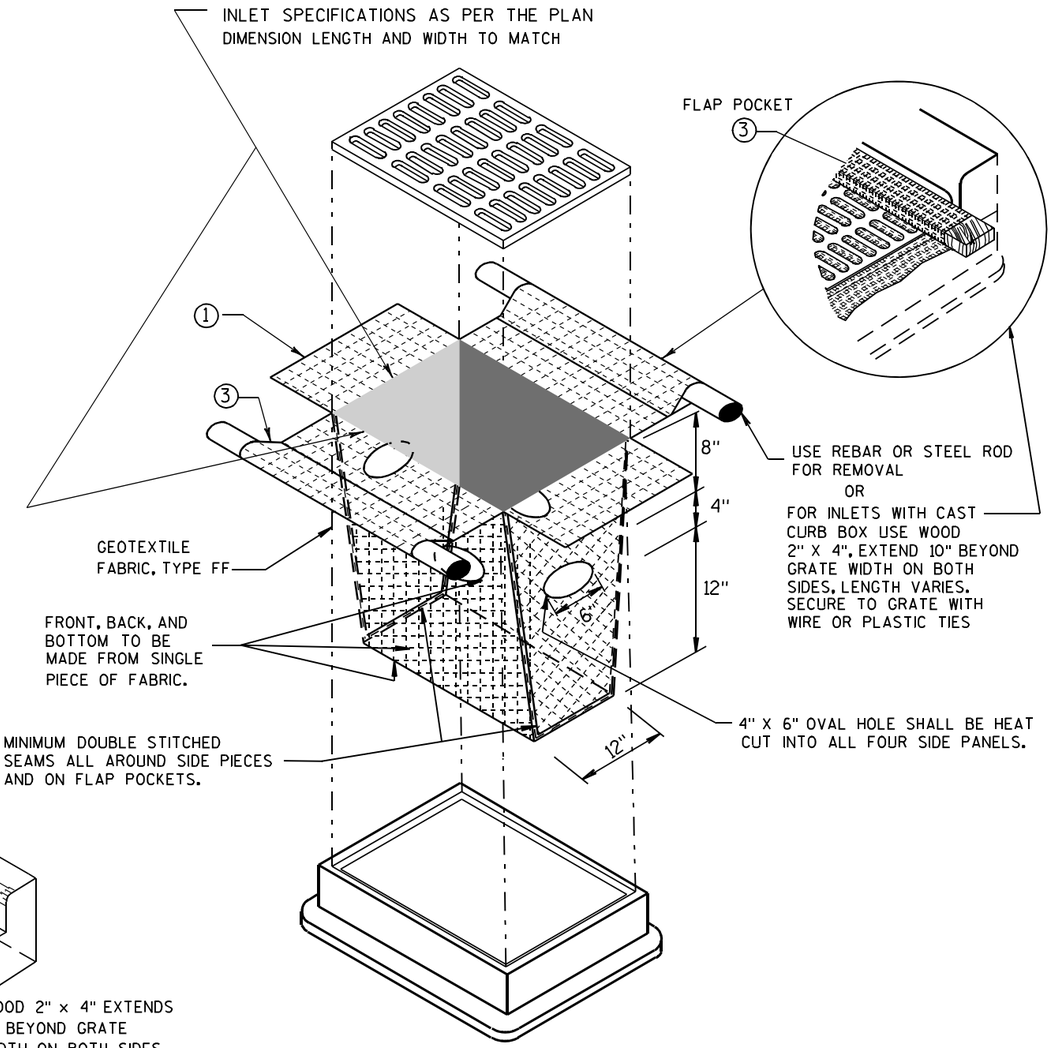

INLET PROTECTION, TYPE D

(CAN BE INSTALLED IN ANY INLET TYPE WITH
OR WITHOUT A CURB BOX AS PER NOTE ②)

GENERAL NOTES

INLET PROTECTION DEVICES SHALL BE MAINTAINED OR REPLACED AT THE DIRECTION OF THE ENGINEER.

MANUFACTURED ALTERNATIVES APPROVED AND LISTED ON THE DEPARTMENT'S EROSION CONTROL PRODUCT ACCEPTABILITY LIST MAY BE SUBSTITUTED.

WHEN REMOVING OR MAINTAINING INLET PROTECTION, CARE SHALL BE TAKEN SO THAT THE SEDIMENT TRAPPED ON THE GEOTEXTILE FABRIC DOES NOT FALL INTO THE INLET. ANY MATERIAL FALLING INTO THE INLET SHALL BE REMOVED IMMEDIATELY.

① FINISHED SIZE, INCLUDING FLAP POCKETS WHERE REQUIRED, SHALL EXTEND A MINIMUM OF 10" AROUND THE PERIMETER TO FACILITATE MAINTENANCE OR REMOVAL.

② FOR INLET PROTECTION, TYPE C (WITH CURB BOX), AN ADDITIONAL 18" OF FABRIC IS WRAPPED AROUND THE WOOD AND SECURED WITH STAPLES. THE WOOD SHALL NOT BLOCK THE ENTIRE HEIGHT OF THE CURB BOX OPENING.

③ FLAP POCKETS SHALL BE LARGE ENOUGH TO ACCEPT WOOD 2X4.

INSTALLATION NOTES

TYPE B & C

TRIM EXCESS FABRIC IN THE FLOW LINE TO WITHIN 3" OF THE GRATE.

THE CONTRACTOR SHALL DEMONSTRATE A METHOD OF MAINTENANCE, USING A SEWN FLAP, HAND HOLDS OR OTHER METHOD TO PREVENT ACCUMULATED SEDIMENT FROM ENTERING THE INLET.

TYPE D

DO NOT INSTALL INLET PROTECTION TYPE D IN INLETS SHALLOWER THAN 30", MEASURED FROM THE BOTTOM OF THE INLET TO THE TOP OF THE GRATE.

TRIM EXCESS FABRIC IN THE FLOW LINE TO WITHIN 3" OF THE GRATE.

THE INSTALLED BAG SHALL HAVE A MINIMUM SIDE CLEARANCE, BETWEEN THE INLET WALLS AND THE BAG, MEASURED AT THE BOTTOM OF THE OVERFLOW HOLES, OF 3". WHERE NECESSARY THE CONTRACTOR SHALL CINCH THE BAG, USING PLASTIC ZIP TIES, TO ACHIEVE THE 3" CLEARANCE. THE TIES SHALL BE PLACED AT A MAXIMUM OF 4" FROM THE BOTTOM OF THE BAG.

INLET PROTECTION
TYPE A, B, C, AND D

STATE OF WISCONSIN
DEPARTMENT OF TRANSPORTATION

APPROVED
10/16/02 — DATE
/S/ Beth Cann[illegible] — CHIEF ROADWAY DEVELOPM[illegible] ENGINEER
FHWA

6

S.D.D. 8 E 10-2

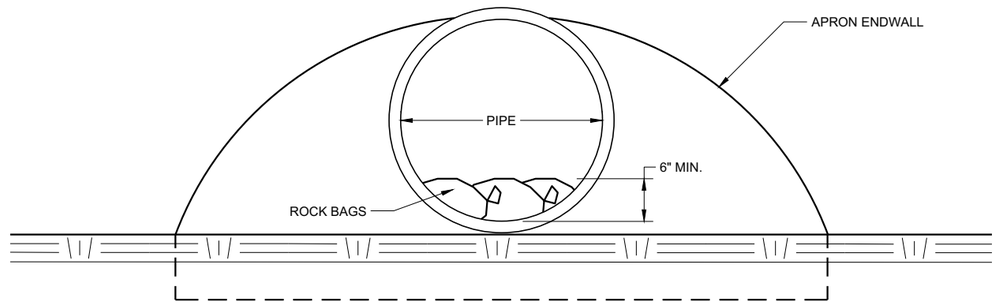

END VIEW

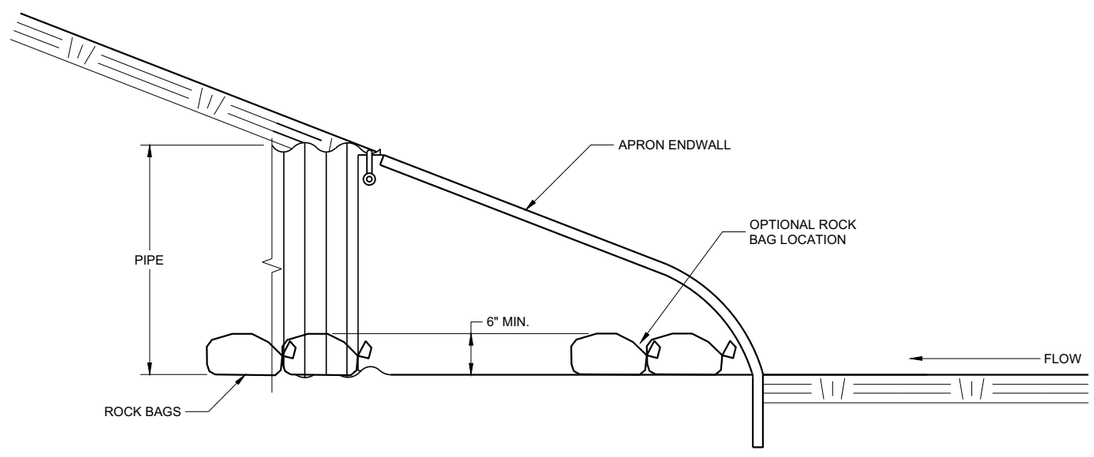

SIDE VIEW

CULVERT PIPE CHECK

(INSTALL ON INLET END ONLY)

CULVERT PIPE CHECK

STATE OF WISCONSIN
DEPARTMENT OF TRANSPORTATION

APPROVED
May 2019 — DATE
/S/ Daniel Schave — EROSION CONTROL ENGI
FHWA

6

6

SDD 08E15 - 01

SDD 08E15 - 01

METAL APRON ENDWALLS

PIPE DIA. (IN.)	MIN. THICK. (Inches) STEEL	MIN. THICK. (Inches) ALUM.	DIMENSIONS (Inches) A (±1")	B (MAX.)	H (±1")	L (±1 1/2")	L1 ①	L2 ①	W (±2")	APPROX. SLOPE	BODY
12	.064	.060	6	6	6	21	12	17 1/2	24	2 1/2 to 1	1 Pc.
15	.064	.060	7	8	6	26	14	21 3/4	30	2 1/2 to 1	1 Pc.
18	.064	.060	8	10	6	31	15	28 1/4	36	2 1/2 to 1	1 Pc.
21	.064	.060	9	12	6	36	18	29 5/8	42	2 1/2 to 1	1 Pc.
24	.064	.075	10	13	6	41	18	37 1/4	48	2 1/2 to 1	1 Pc.
30	.079	.075	12	16	8	51	18	52 1/4	60	2 1/2 to 1	1 Pc.
36	.079	.105	14	19	9	60	24	59 3/4	72	2 1/2 to 1	2 Pc.
42	.109	.105	16	22	11	69	24	75 5/8	84	2 1/2 to 1	2 Pc.
48	.109	.105	18	27	12	78	24	81	90	2 1/4 to 1	3 Pc.
54	.109	.105	18	30	12	84	30	85 1/2	102	2 1/4 to 1	3 Pc.
60	.109×	.105×	18	33	12	87	—	—	114	2 to 1	3 Pc.
66	.109×	.105×	18	36	12	87	—	—	120	2 to 1	3 Pc.
72	.109×	.105×	18	39	12	87	—	—	126	2 to 1	3 Pc.
78	.109×	.105×	18	42	12	87	—	—	132	1 1/2 to 1	3 Pc.
84	.109×	.105×	18	45	12	87	—	—	138	1 1/2 to 1	3 Pc.
90	.109×	.105×	18	37	12	87	—	—	144	1 1/2 to 1	3 Pc.
96	.109×	.105×	18	35	12	87	—	—	150	1 1/2 to 1	3 Pc.

× EXCEPT CENTER PANEL
SEE GENERAL NOTES

REINFORCED CONCRETE APRON ENDWALLS

PIPE DIA. (IN.)	DIMENSIONS (Inches) T	A	B	C	D	E	G	APPROX. SLOPE
12	2	4	24	48 7/8	72 7/8	24	2	3 to 1
15	2 1/4	6	27	46	73	30	2 1/4	3 to 1
18	2 1/2	9	27	46	73	36	2 1/2	3 to 1
21	2 3/4	9	36	37 1/2	73 1/2	42	2 3/4	3 to 1
24	3	9 1/2	43 1/2	30	73 1/2	48	3	3 to 1
27	3 1/4	10 1/2	49 1/2	24	73 1/2	54	3 1/4	3 to 1
30	3 1/2	12	54	19 3/4	73 1/2	60	3 1/2	3 to 1
36	4	15	63	34 3/4	97 3/4	72	4	3 to 1
42	4 1/2	21	63	35	98	78	4 1/2	3 to 1
48	5	24	72	26	98	84	5	3 to 1
54	5 1/2	27	65	*33 1/4-**35	*98 1/4-**100	90	5 1/2	2 2/5 to 1
60	6	*30-**35	60	39	99	96	5	2 to 1
66	6 1/2	*24-**30	*72-**78	*21-**27	99	102	5 1/2	2 to 1
72	7	*24-**36	78	21	99	108	6	2 to 1
78	7 1/2	*24-**36	78	21	99	114	6 1/2	2 to 1
84	8	36	90 1/2	21	111 1/2	120	6 1/2	1 1/2 to 1
90	8 1/2	41	87 1/2	24	111 1/2	132	6 1/2	1 1/2 to 1

*MINIMUM
**MAXIMUM

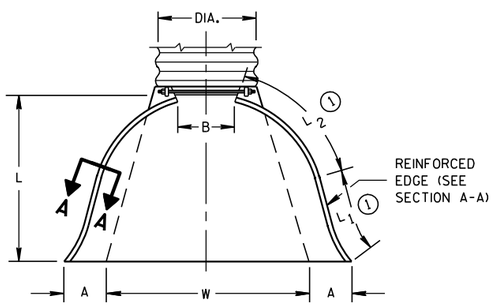

PLAN VIEW

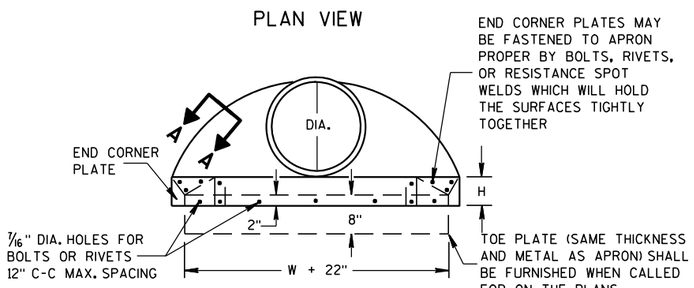

END VIEW

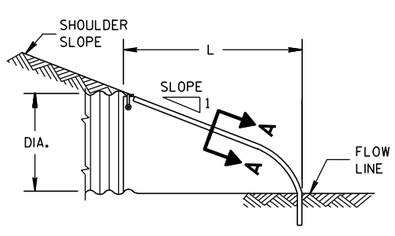

SIDE ELEVATION

METAL ENDWALLS

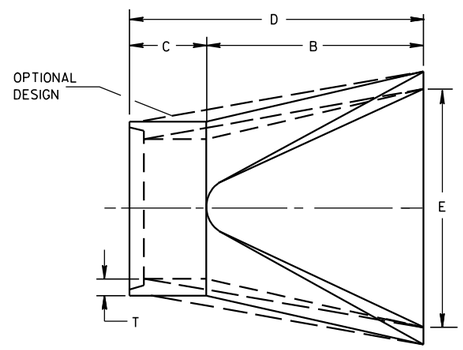

PLAN

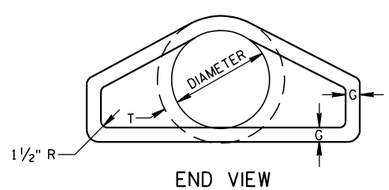

END VIEW

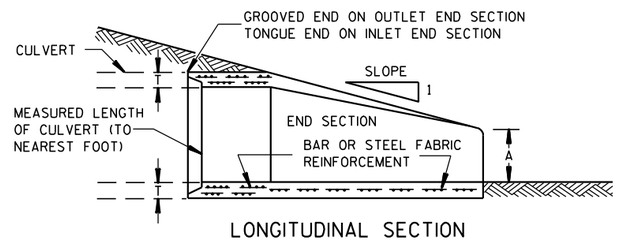

LONGITUDINAL SECTION

CONCRETE ENDWALLS

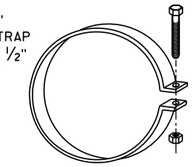

ALTERNATE FOR TYPE 1 CONNECTION

END SECTION CONNECTOR STRAP

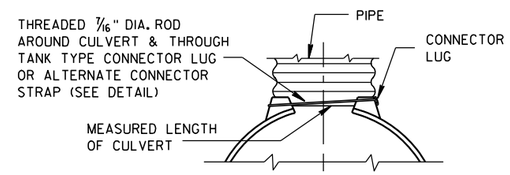

TYPE 1
FOR 12" THRU 24" CORR. PIPE

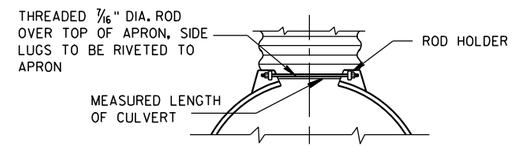

TYPE 2
FOR 30" THRU 96" CORR. PIPE

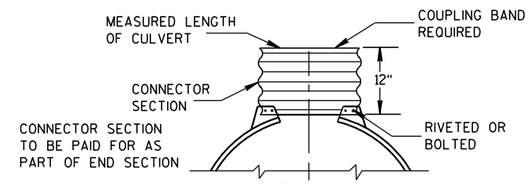

TYPE 3
FOR 42" THRU 96" CORR. PIPE

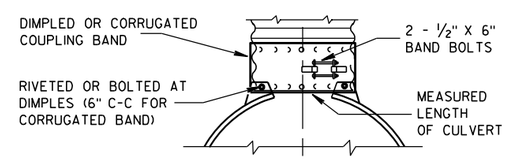

TYPE 5
ALTERNATE FOR:
ALL SIZES CORRUGATED CIRCULAR PIPE

NOTE: DIMPLED BAND FITS OVER OUTSIDE OF ENDWALL, AND CORRUGATED BAND FITS INSIDE ENDWALL. DIMPLED BAND MAY BE USED WITH HELICALLY CORRUGATED PIPE.

FOR CIRCUMFERENTIALLY CORRUGATED PIPE USE ENDWALL CONNECTION DETAILS 1, 2, 3 OR 5 AS APPLICABLE.

FOR HELICALLY CORRUGATED PIPE USE ENDWALL CONNECTION DETAILS 1, 2 OR 5.

FOR HELICALLY CORRUGATED PIPES WITH TWO CIRCUMFERENTIAL CORRUGATIONS AT EACH END USE ENDWALL CONNECTION DETAILS 1, 2 OR 3.

CONNECTION DETAILS

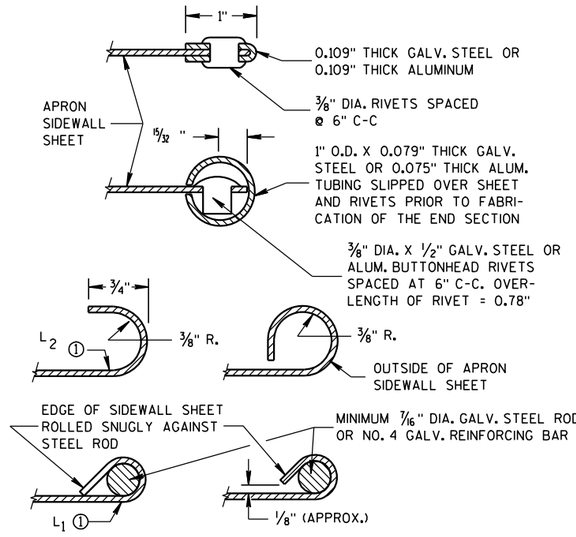

SECTION A-A

GENERAL NOTES

DETAILS OF CONSTRUCTION, MATERIALS AND WORKMANSHIP NOT SHOWN ON THIS DRAWING SHALL CONFORM TO THE PERTINENT REQUIREMENTS OF THE STANDARD SPECIFICATIONS AND THE APPLICABLE SPECIAL PROVISIONS.

CONCRETE CULVERT ENDWALLS MAY NOT BE USED WITH GALVANIZED STEEL OR ALUMINUM CULVERT PIPE OR VISE VERSA. GALVANIZED STEEL OR ALUMINUM ENDWALLS SHALL NORMALLY BE INSTALLED ON CULVERT PIPE OF THE SAME METAL.

ALL THREE PIECE STEEL APRON ENDWALLS FOR 60" DIAMETER PIPE AND LARGER SHALL HAVE 0.109" SIDES AND 0.138" CENTER PANELS. ALL THREE PIECE ALUMINUM APRON ENDWALLS FOR 60" DIAMETER PIPE AND LARGER SHALL HAVE 0.105" SIDES AND 0.134" CENTER PANELS. THE WIDTH OF CENTER PANELS SHALL BE GREATER THAN 20 PERCENT OF THE PIPE PERIMETER.

LAP SEAMS SHALL BE TIGHTLY JOINED BY GALVANIZED RIVETS OR BOLTS FOR STEEL UNITS AND ALUMINUM RIVETS AND BOLTS FOR ALUMINUM UNITS. FOR THE 60" THROUGH 96" DIAMETER APRON ENDWALL SIZES, THE REINFORCED EDGES AND CENTER PANEL SEAMS SHALL BE FURTHER REINFORCED WITH GALVANIZED STEEL OR ALUMINUM STIFFENER ANGLES. THE ANGLES SHALL BE ATTACHED BY GALVANIZED NUTS AND BOLTS FOR STEEL UNITS AND ALUMINUM NUTS AND BOLTS FOR ALUMINUM UNITS.

WHERE TWO OR MORE PIPES WITH APRON ENDWALLS ARE LAID ADJACENT TO EACH OTHER, THEY SHALL BE SEPARATED BY A DISTANCE SUFFICIENT TO PROVIDE A MINIMUM CLEARANCE OF 6 INCHES BETWEEN APRON ENDWALLS.

① FOR PIPE SIZES UP TO 60" DIAMETER, A 180° ROLLED EDGE MAY BE USED INSTEAD OF STEEL ROD REINFORCEMENT. SEE SECTION A-A.

APRON ENDWALLS FOR CULVERT PIPE

STATE OF WISCONSIN
DEPARTMENT OF TRANSPORTATION

APPROVED
11/30/94 — DATE
/S/ Rory L. Rhinesmith — CHIEF ROADWAY DEVELOPMENT ENGINEER
FHWA

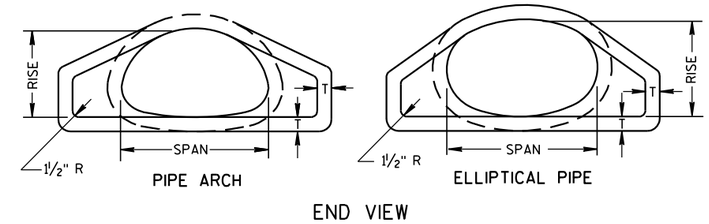

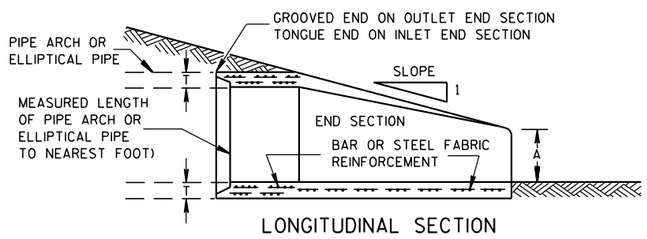

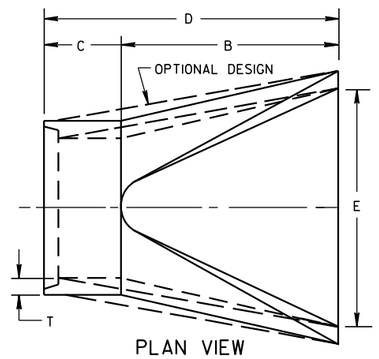

CONCRETE ENDWALLS

2- ⅔" X ½" CORRUGATIONS														
EQUIV. DIA. (Inches)	(Inches)		MIN. THICK. (Inches)		DIMENSIONS (Inches)							APPROX. SLOPE	BODY
	SPAN	RISE	STEEL	ALUM.	A (±1")	B (MAX.)	H (±1")	L (±1½")	L1 ①	L2 ①	W (±2")		
15	17	13	.064	.060	7	9	6	19	14	16	30	2½ to 1	1 Pc.
18	21	15	.064	.060	7	10	6	23	14	19⅜	36	2½ to 1	1 Pc.
21	24	18	.064	.060	8	12	6	28	18	21¾	42	2½ to 1	1 Pc.
24	28	20	.064	.060	9	14	6	32	18	27½	48	2½ to 1	1 Pc.
30	35	24	.079	.075	10	16	6	39	18	37⅝	60	2½ to 1	1 Pc.
36	42	29	.079	.075	12	18	8	46	24	45⅜	75	2½ to 1	1 Pc.
42	49	33	.109	.105	13	21	9	53	24	54¾	85	2½ to 1	2 Pc.
48	57	38	.109	.105	18	26	12	63	24	68	90	2½ to 1	3 Pc.
54	64	43	.109	.105	18	30	12	70	24	72¾	102	2¼ to 1	3 Pc.
60	71	47	.109*	.105*	18	33	12	77	30	82¼	114	2¼ to 1	3 Pc.
66	77	52	.109*	.105*	18	36	12	77	—	—	126	2 to 1	3 Pc.
72	83	57	.109*	.105*	18	39	12	77	—	—	138	2 to 1	3 Pc.

3" X 1" CORRUGATIONS														
EQUIV. DIA. (Inches)	(Inches)		MIN. THICK. (Inches)		DIMENSIONS (Inches)							APPROX. SLOPE	BODY
	SPAN	RISE	STEEL	ALUM.	A (±1")	B (MAX.)	H (±1")	L (±1½")	L1 ①	L2 ①	W (±2")		
48	53	41	.109	.105	18	26	12	63	24	72¾	90	2½ to 1	2 Pc.
54	60	46	.109	.105	18	30	12	70	30	82¼	102	2 to 1	2 Pc.
60	66	51	.109*	.105*	18	33	12	77	—	—	114	1½ to 1	3 Pc.
66	73	55	.109*	.105*	18	36	12	77	—	—	126	1½ to 1	3 Pc.
72	81	59	.109*	.105*	18	39	12	77	—	—	138	2 to 1	3 Pc.
78	87	63	.109*	.105*	22	38	12	77	—	—	148	1½ to 1	3 Pc.
84	95	67	.109*	.105*	22	34	12	77	—	—	162	1½ to 1	3 Pc.
90	103	71	.109*	.105*	22	38	12	77	—	—	174	1½ to 1	3 Pc.
96	112	75	.109*	.105*	24	40	12	77	—	—	174	1½ to 1	3 Pc.

NOTE: ALL SPLICES TO BE LAP RIVETED OR BOLTED.

* EXCEPT CENTER PANEL SEE GENERAL NOTES

REINFORCED CONCRETE PIPE ARCH									
EQUIV. DIA. (Inches)	DIMENSIONS (Inches)								APPROX. SLOPE
	** SPAN	** RISE	T	A	B	C	D	E	
24	29	18	3	8½	39	33	72	48	3 to 1
30	36	22	3½	9½	50	46	96	60	3 to 1
36	44	27	4	11⅛	60	36	96	72	3 to 1
42	51	31	4½	15 13/16	60	36	96	78	3 to 1
48	58	36	5	21	60	36	96	84	3 to 1
54	65	40	5½	25½	60	36	96	90	3 to 1
60	73	45	6	31	60	36	96	96	3 to 1
72	88	54	7	31	60	39	99	120	2 to 1
84	102	62	8	28½	83	19	102	144	2 to 1

REINFORCED CONCRETE ELLIPTICAL PIPE									
EQUIV. DIA. (Inches)	DIMENSIONS (Inches)								APPROX. SLOPE
	** SPAN	** RISE	T	A	B	C	D	E	
24	30	19	3¼	8½	39	33	72	48	3 to 1
30	38	24	3¾	9½	54	18	72	60	3 to 1
36	45	29	4½	11⅛	60	24	84	72	2½ to 1
42	53	34	5	15¾	60	36	96	78	2½ to 1
48	60	38	5½	21	60	36	96	84	2½ to 1
54	68	43	6	25½	60	36	96	90	2½ to 1
60	76	48	6½	30	60	36	96	96	2½ to 1

**NOMINAL SIZE

GENERAL NOTES

DETAILS OF CONSTRUCTION, MATERIALS AND WORKMANSHIP NOT SHOWN ON THIS DRAWING SHALL CONFORM TO THE PERTINENT REQUIREMENTS OF THE STANDARD SPECIFICATIONS AND THE APPLICABLE SPECIAL PROVISIONS.

CONCRETE APRON ENDWALLS MAY NOT BE USED WITH GALVANIZED STEEL OR ALUMINUM CULVERT PIPE OR VISE VERSA. GALVANIZED STEEL OR ALUMINUM APRON ENDWALLS SHALL NORMALLY BE INSTALLED ON CULVERT PIPE OF THE SAME METAL.

ALL THREE PIECE STEEL APRON ENDWALLS FOR 66" X 51" PIPE ARCH AND LARGER SHALL HAVE 0.109" SIDES AND 0.138" CENTER PANELS. ALL THREE PIECE ALUMINUM APRON ENDWALLS FOR 66" X 51" PIPE ARCH AND LARGER SHALL HAVE 0.105" SIDES AND 0.134" CENTER PANELS. THE WIDTH OF CENTER PANELS SHALL BE GREATER THAN 20 PERCENT OF THE PIPE ARCH PERIMETER.

LAP SEAMS SHALL BE TIGHTLY JOINED BY GALVANIZED RIVETS OR BOLTS FOR STEEL UNITS AND ALUMINUM RIVETS AND BOLTS FOR ALUMINUM UNITS. FOR THE 77" X 52" THROUGH 112" X 75" APRON ENDWALL SIZES, THE REINFORCED EDGES AND CENTER PANEL SEAMS SHALL BE FURTHER REINFORCED WITH GALVANIZED STEEL OR ALUMINUM STIFFENER ANGLES. THE ANGLES SHALL BE ATTACHED BY GALVANIZED NUTS AND BOLTS FOR STEEL UNITS AND ALUMINUM NUTS AND BOLTS FOR ALUMINUM UNITS.

WHERE TWO OR MORE PIPES WITH APRON ENDWALLS ARE LAID ADJACENT TO EACH OTHER, THEY SHALL BE SEPARATED BY A DISTANCE SUFFICIENT TO PROVIDE A MINIMUM CLEARANCE OF 6 INCHES BETWEEN APRON ENDWALLS.

① FOR PIPE ARCH SIZES UP TO 73" X 55" A 180° ROLLED EDGE MAY BE USED INSTEAD OF STEEL ROD REINFORCEMENT. SEE SECTION A-A.

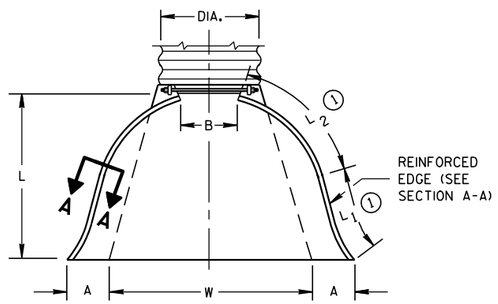

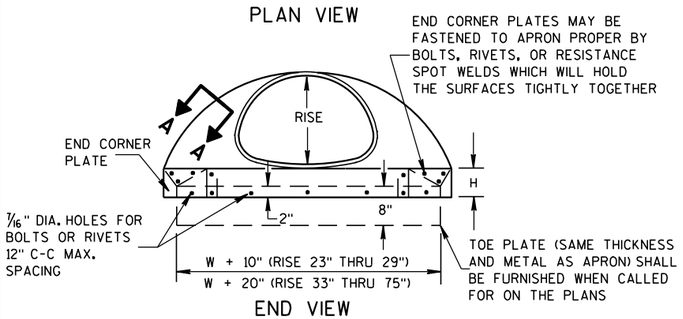

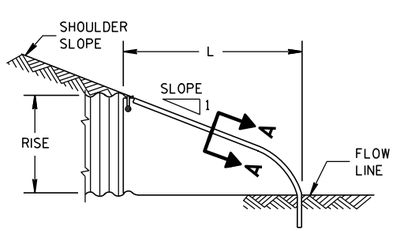

SIDE ELEVATION

METAL ENDWALLS

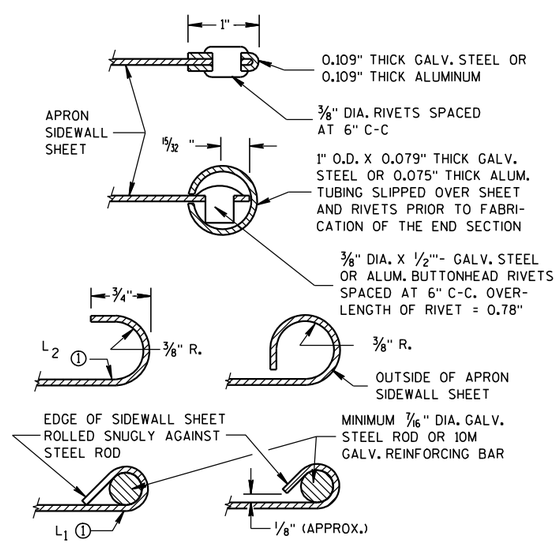

SECTION A-A

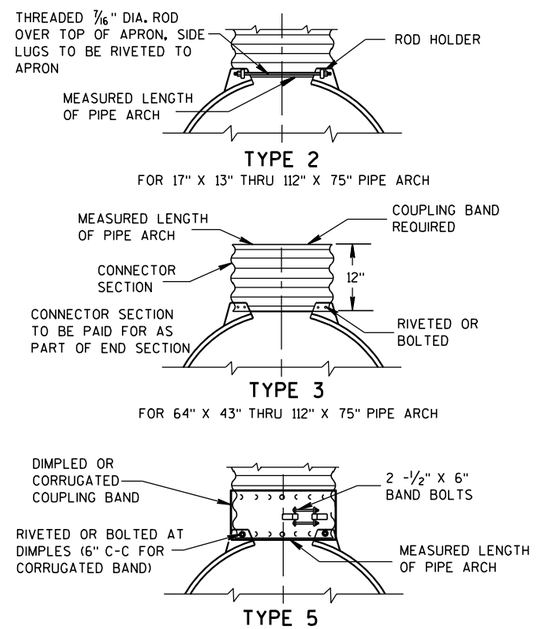

NOTE: DIMPLED BAND FITS OVER OUTSIDE OF ENDWALL, AND CORRUGATED BAND FITS INSIDE ENDWALL.

CONNECTION DETAILS

APRON ENDWALLS FOR PIPE ARCH AND ELLIPTICAL PIPE

STATE OF WISCONSIN
DEPARTMENT OF TRANSPORTATION

APPROVED

11/30/94 — DATE

/S/ Rory L. Rhinesmith — CHIEF ROADWAY DEVELOPMENT ENGINEER

FHWA

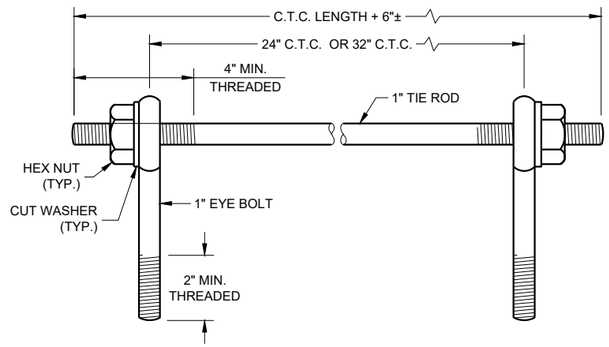

EYE BOLTS AND TIE ROD

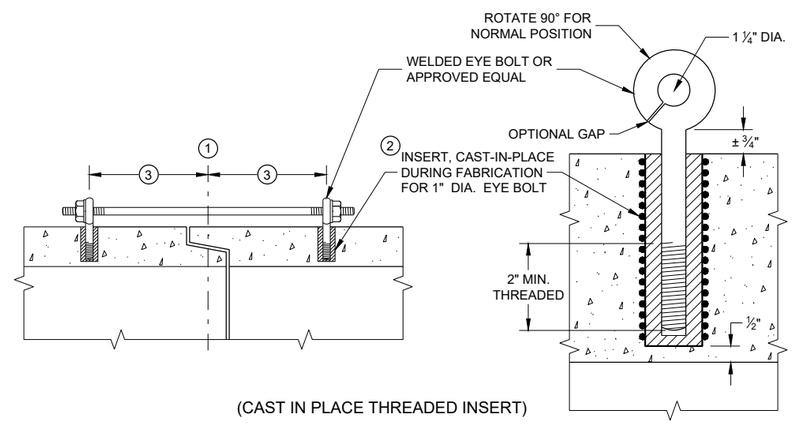

(CAST IN PLACE THREADED INSERT)

LONGITUDINAL SECTIONS

EYE BOLT AND TIE ROD ASSEMBLY (ALTERNATE NO. 1)

GENERAL NOTES

DETAILS OF CONSTRUCTION, MATERIALS, AND WORKMANSHIP NOT SHOWN ON THIS DRAWING SHALL CONFORM TO THE PERTINENT REQUIREMENTS OF THE STANDARD SPECIFICATIONS AND APPLICABLE SPECIAL PROVISIONS.

CONCRETE CULVERT AND STORM SEWER PIPE SHALL BE TIED TOGETHER IN THE MANNER ILLUSTRATED BY THIS DETAIL AT LOCATIONS DESIGNATED IN THE STANDARD SPECIFICATIONS AND THE PLAN. THE CONTRACTOR MAY USE EITHER ALTERNATE 1, 2 OR 3 FOR DRAINAGE STRUCTURES. ONLY ALTERNATE 1 AND 3 MAY BE USED FOR CATTLE PASSES, UNLESS OTHERWISE STATED IN THE CONTRACT. THE MATERIALS, FABRICATION AND WORK NECESSARY TO TIE THE PIPE BY THIS DETAIL WILL BE CONSIDERED INCIDENTAL TO THE PIPE AND APRON ENDWALLS IF REQUIRED.

DETAILED DRAWINGS FOR PROPOSED ALTERNATE DESIGNS FOR JOINT TIES SHALL BE SUBMITTED TO THE ENGINEER FOR APPROVAL.

JOINT TIES TO BE HOT-DIP GALVANIZED PER ASTM A 153.

1. CENTER LINE OF TONGUE AND GROOVE OR BELL AND SPIGOT JOINTS.
2. THE INSIDE OF THE THREADED INSERTS SHALL BE CLEAN TO ALLOW THE INSERTION OF THREADED EYE BOLTS.
3. HOLES SHALL BE CAST-IN-PLACE OR DRILLED PER THE APPLICABLE DETAIL, AND EQUAL DISTANCE FROM THE CENTERLINE OF THE JOINT.
4. BOLT PROJECTION INSIDE OF PIPE SHALL NOT EXCEED 2 INCHES.
5. OPENING TO BE ROD DIAMETER PLUS 1 INCH.
6. LENGTH ADEQUATE TO EXTEND TO WITHIN ½ INCH OF THE INNER SURFACE OF THE PIPE.
7. EYE BOLT LENGTH DETERMINED BY WALL THICKNESS, BELL THICKNESS AND BOLT PROJECTION INSIDE PIPE.

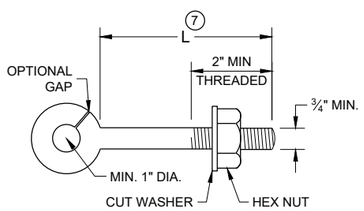

EYE BOLT 7

NOTE: TWO EYE BOLTS MAY BE USED WITH A 30" OR 38" LONG THREADED ROD IN LIEU OF THE 90° BENT TIE ROD.

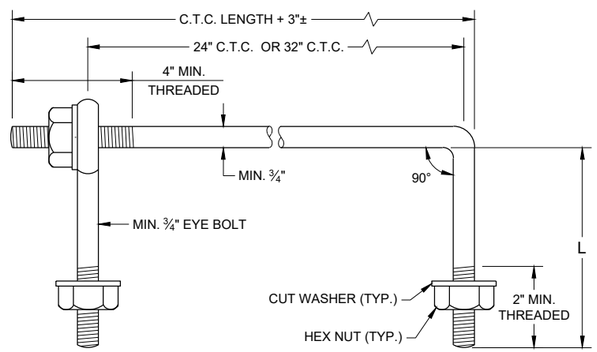

EYE BOLT AND TIE ROD

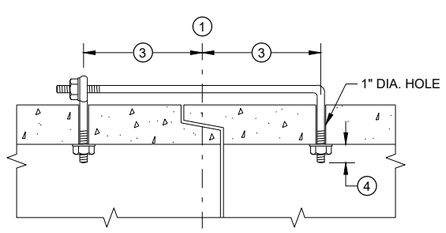

(TONGUE AND GROOVE PIPE)

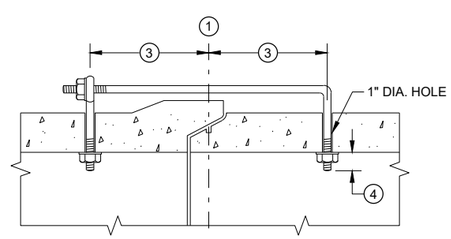

(MODIFIED BELL PIPE)

LONGITUDINAL SECTION

(JOINT TIES FOR 18" TO 66" DIA. CONCRETE PIPE)

EYE BOLT AND TIE ROD ASSEMBLY (ALTERNATE NO. 2)

ADJUSTABLE TIE ROD TABLE

PIPE DIAMETER	TIE ROD DIAMETER	D	L_1	N
12 - 60	⅝	⅝	5	½
66 - 84	¾	¾	5	½
90 - 144	1	1	7	1 7/16

DIMENSIONS SHOWN ARE IN INCHES

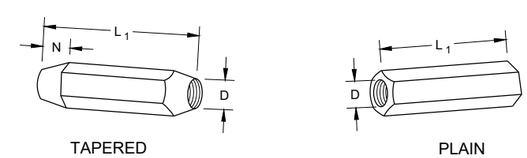

RIGHT AND LEFT THREADS

SLEEVE NUTS

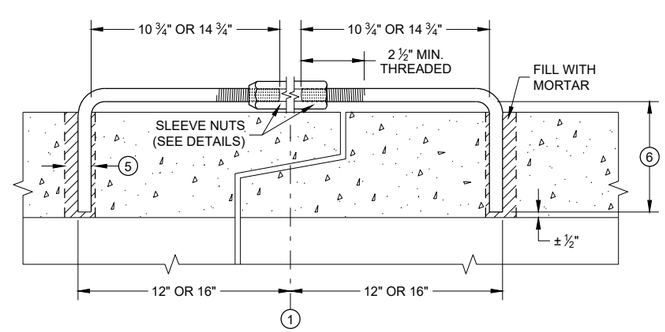

LONGITUDINAL SECTION

ADJUSTABLE TIE ROD (ALTERNATE NO. 3)

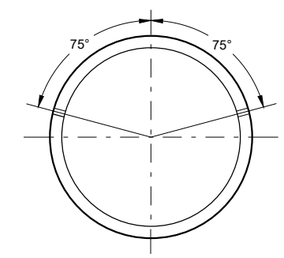

PLACEMENT OF (2) CAST-IN-PLACE INSERTS OR HOLES DURING FABRICATION FOR PIPE SECTIONS REQUIRING TIE RODS

TRANSVERSE SECTION

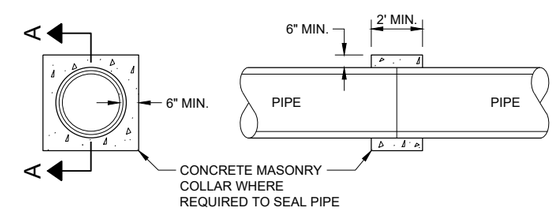

SECTION A - A

CONCRETE COLLAR DETAIL

JOINT TIES FOR CONCRETE PIPE AND CONCRETE COLLAR DETAIL

STATE OF WISCONSIN
DEPARTMENT OF TRANSPORTATION

APPROVED
November 2021 — DATE
/S/ Rodney Taylor — ROADWAY STANDARDS DEVE ENGINEER
FHWA

6

SDD 08F04 - 08

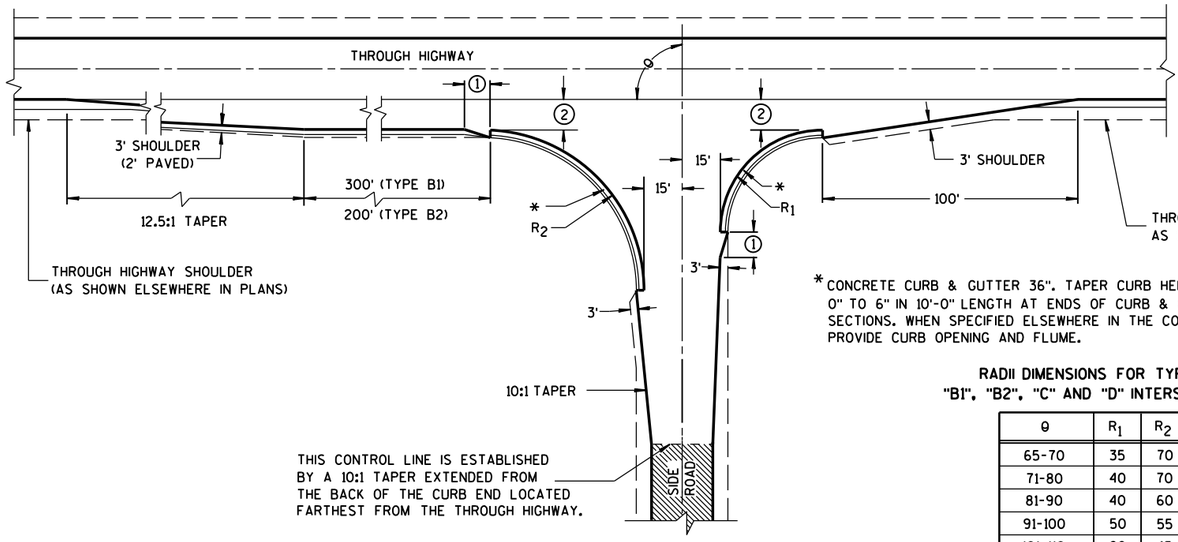

TYPE "B1" AND "B2"

*CONCRETE CURB & GUTTER 36". TAPER CURB HEIGHT 0" TO 6" IN 10'-0" LENGTH AT ENDS OF CURB & GUTTER SECTIONS. WHEN SPECIFIED ELSEWHERE IN THE CONTRACT, PROVIDE CURB OPENING AND FLUME.

RADII DIMENSIONS FOR TYPES "B1", "B2", "C" AND "D" INTERSECTIONS

θ	R_1	R_2
65-70	35	70
71-80	40	70
81-90	40	60
91-100	50	55
101-110	60	45

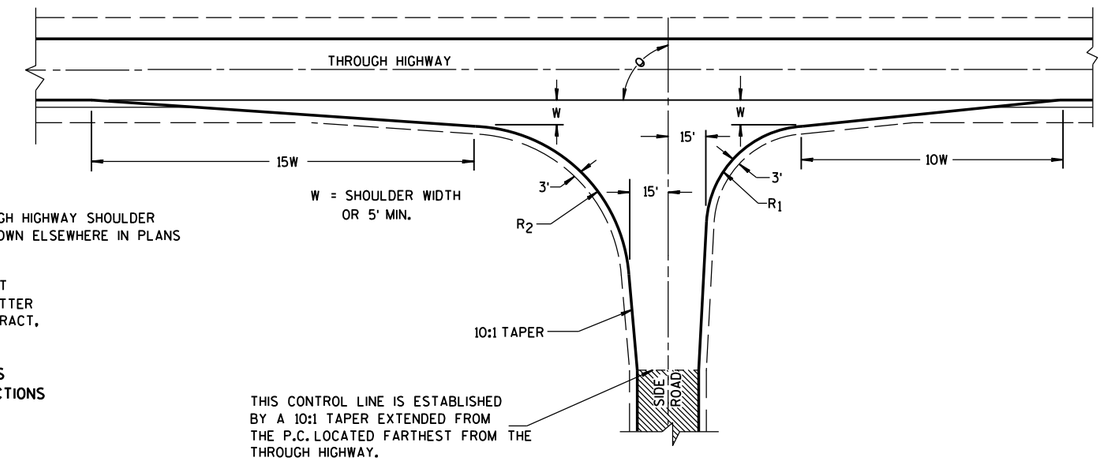

TYPE "C"

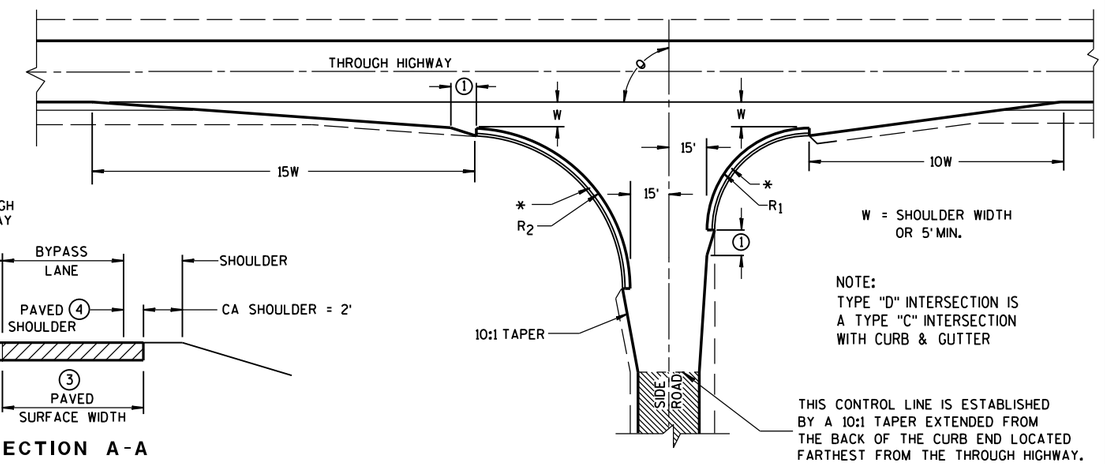

TYPE "D"

GENERAL NOTES

DESIGNS MAY BE USED INTERCHANGEABLY IN COMBINATION OR SEPARATELY FOR ANY ONE COMPLETE INTERSECTION DEPENDING UPON INTERSECTION ANGLE AND SURFACING OF EACH APPROACH ROADWAY.

SIDE ROAD SURFACING NOTE

WHEN THE SIDE ROAD IS NOT PRESENTLY PAVED, PAVEMENT SHALL BE PLACED TO THE LIMITS SHOWN UNLESS OTHERWISE PROVIDED IN THE CONTRACT. WHERE THE CONSTRUCTION LIMITS ARE BEYOND THE PAVING LIMITS, CRUSHED AGGREGATE SURFACING SHALL BE PLACED BETWEEN THE PAVING LIMITS AND CONSTRUCTION LIMITS.

WHEN THE SIDE ROAD IS PRESENTLY PAVED, NEW PAVEMENT SHALL BE PLACED TO THE LIMITS OF DESIGN AS SHOWN AND BEYOND, IF NECESSARY, TO MEET EXISTING PAVEMENT.

WHEN THE SIDE ROAD IS THE CONSTRUCTION PROJECT, THE INTERSECTION SURFACING SHALL BE THE SAME AS FOR THE PROJECT.

EXISTING PAVED SURFACE

BYPASS LANE

(1) 10-FT TYPICAL.

(2) 12-FT** PLUS ADDITIONAL WIDTH FOR BIKE LANE IF SHOWN ELSEWHERE IN THE PLAN.

**10-FT MAY BE USED ON TYPE B2 ON RESURFACING PROJECTS IF SPECIFIED IN THE CONTRACT.

(3) BYPASS LANE PAVED SURFACE WIDTH OUTSIDE OF TRAVEL LANE
-ASPHALT = 12-FT PLUS PAVED SHOULDER WIDTH.
-PC CPNCRETE = 13-FT PLUS PAVED SHOULDER WIDTH.

(4) BYPASS LANE PAVED SHOULDER WIDTH = THE GREATER OF 1-FT OR THE PAVED SHOULDER WIDTH OF THE THROUGH HIGHWAY.

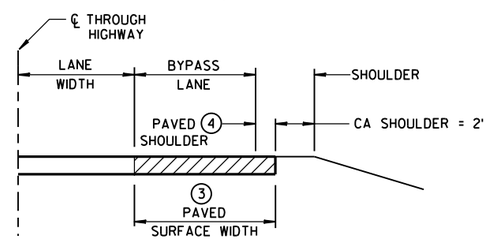

SECTION A-A
(SHOWING BYPASS LANE AND SHOULDER)

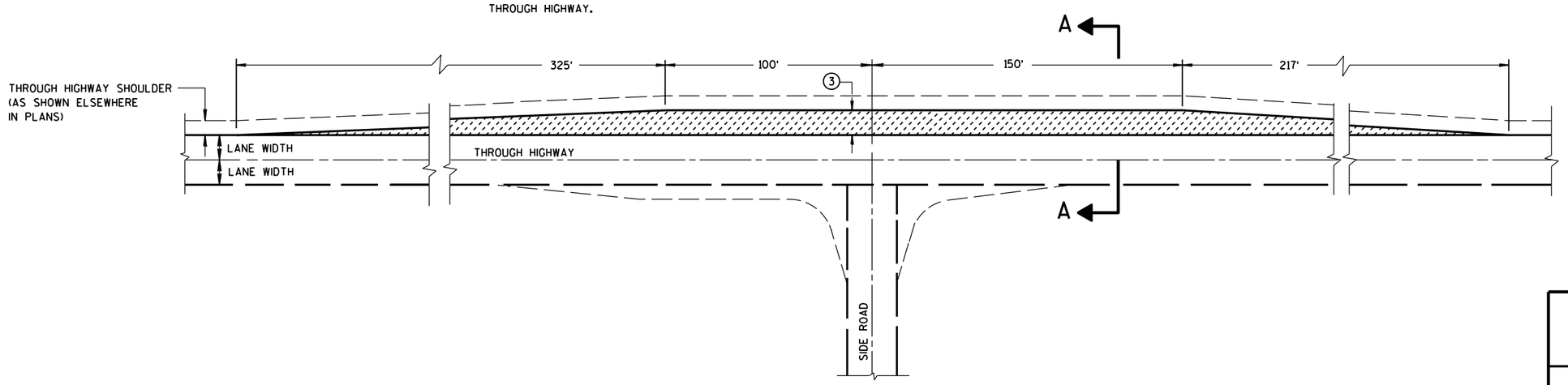

TEE INTERSECTION BYPASS LANE DETAIL

AT-GRADE SIDE ROAD INTERSECTION, TYPES "B1", "B2", "C" AND "D" AND TEE INTERSECTION BYPASS LANE

STATE OF WISCONSIN
DEPARTMENT OF TRANSPO

6

S.D.D. 9 A 1-13a

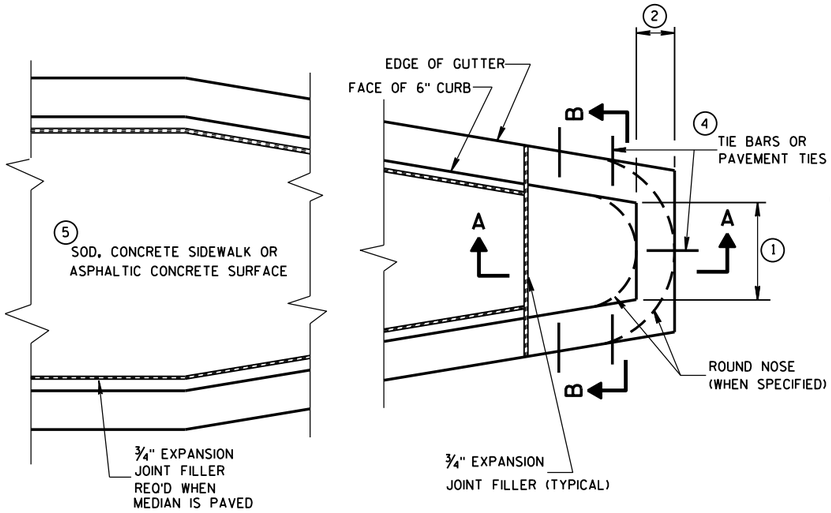

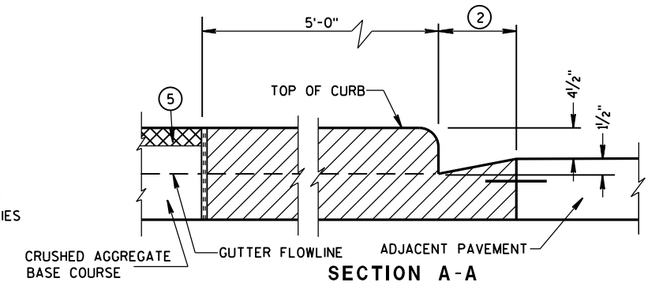

SECTION A-A

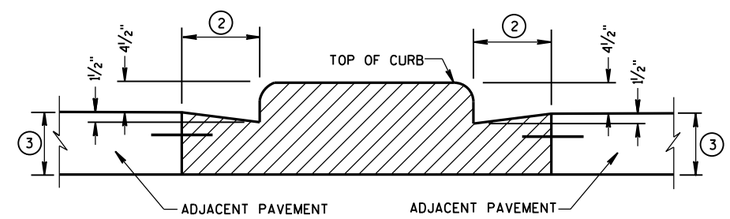

SECTION B-B

CONCRETE MEDIAN BLUNT NOSE DETAIL

GENERAL NOTES

DETAILS OF CONSTRUCTION, MATERIALS AND WORKMANSHIP NOT SHOWN ON THIS DRAWING SHALL CONFORM TO THE PERTINENT REQUIREMENTS OF THE STANDARD SPECIFICATIONS AND THE APPLICABLE SPECIAL PROVISIONS.

1. SEE PLAN FOR MEDIAN NOSE WIDTH AND RADIUS (FOR ROUND NOSE ALTERNATE).
2. WIDTH OF GUTTER TO MATCH EXISTING ADJACENT GUTTER OR AS SPECIFIED ELSEWHERE IN THE PLAN.
3. DEPTH EQUAL TO ADJACENT PAVEMENT. ADJACENT PAVEMENT STRUCTURE DETAILS ARE SHOWN ON THE PLAN. TYPICAL OPTIONS ARE:
   (1) NEW OR EXISTING CONCRETE PAVEMENT.
   (2) ASPHALTIC CONCRETE PAVEMENT OVER NEW OR EXISTING CONCRETE BASE COURSE.
   (3) ASPHALTIC CONCRETE PAVEMENT OVER CRUSHED AGGREGATE BASE COURSE.
4. TIE BARS OR PAVEMENT TIES REQUIRED IN NEW CONCRETE PAVEMENT OR CONCRETE BASE COURSE. TIE BARS SHALL BE NO. 4 X 2'-0" SPACED AT 2'-0" C-C.

   PAVEMENT TIES REQUIRED IN EXISTING CONCRETE BASE COURSE. PAVEMENT TIES SHALL BE NO. 6 X 1'-0" SPACED AT 3'-0" C-C INSTALLED ON A HORIZONTAL SKEW OF 6:1. THE DIRECTION OF SKEW SHALL ALTERNATE AFTER EVERY ONE OR TWO BARS.
5. SURFACE TYPE AND DETAILS ARE SHOWN ELSEWHERE IN THE PLAN.

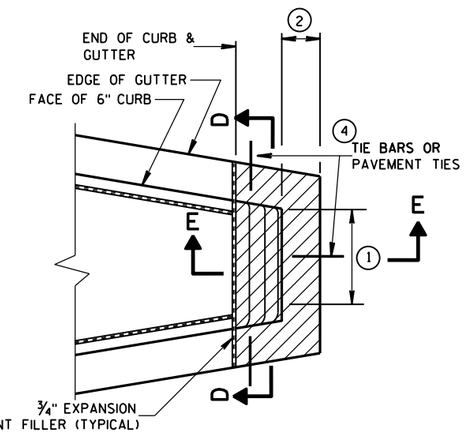

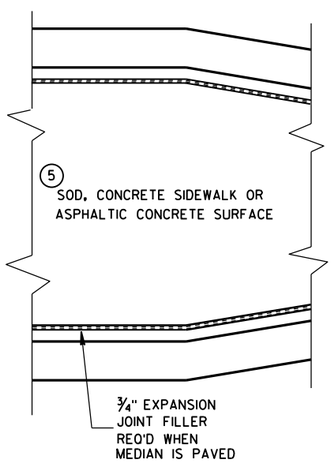

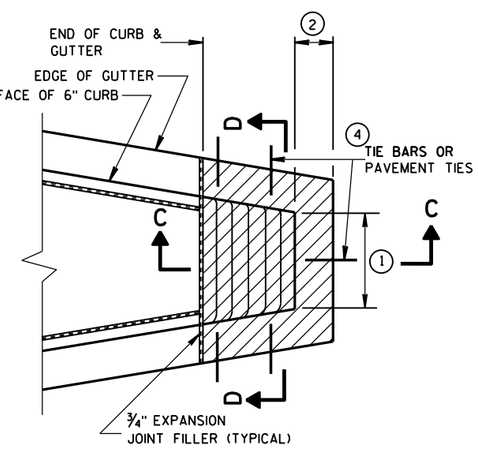

CONCRETE MEDIAN SLOPED NOSE TYPE 1

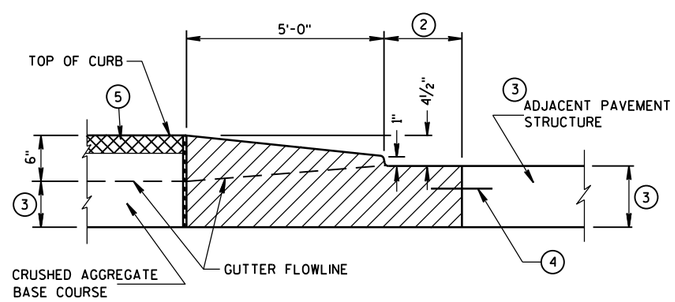

SECTION C-C

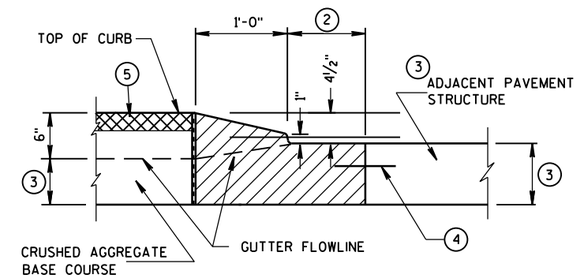

SECTION E-E

CONCRETE MEDIAN SLOPED NOSE TYPE 2

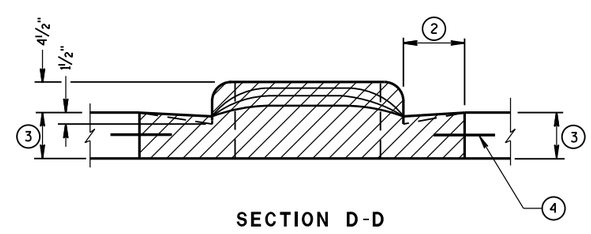

SECTION D-D

CONCRETE MEDIAN NOSE	
STATE OF WISCONSIN DEPARTMENT OF TRANSPORTATION	
APPROVED 6/8/2006 DATE	/S/ Jerry H. Zogg ROADWAY STANDARDS DEVELOPMENT ENGINEER
FHWA	

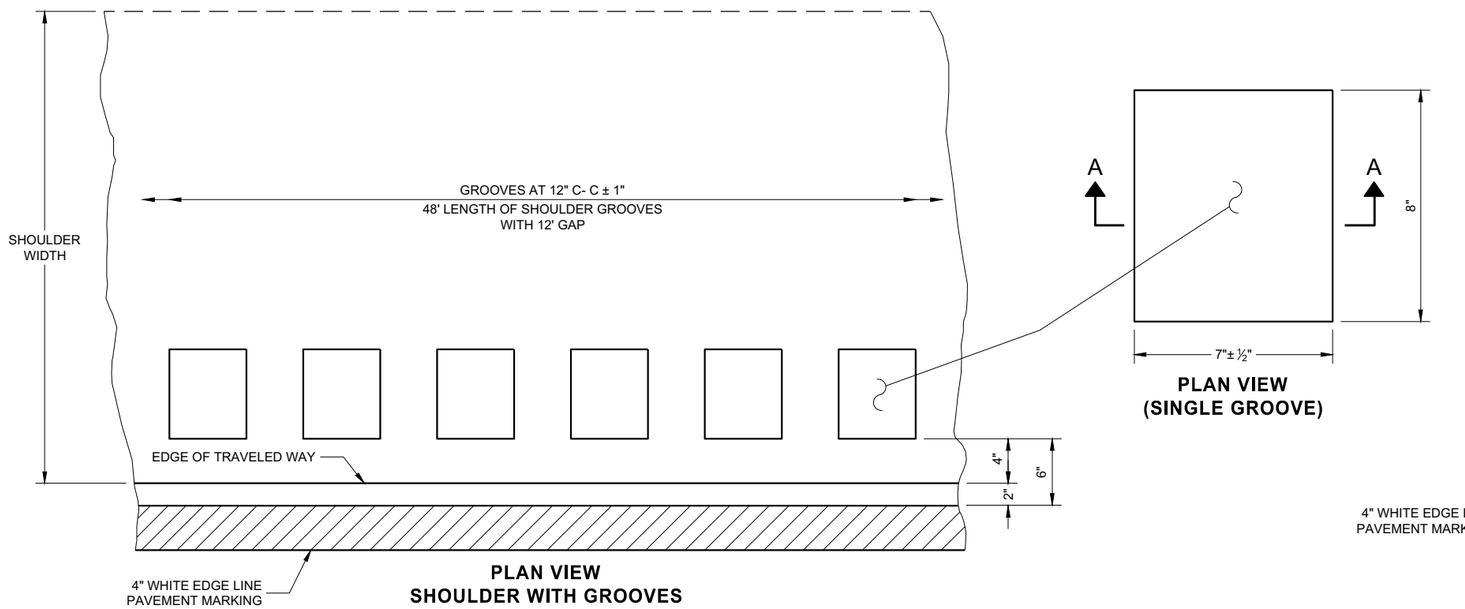

PLAN VIEW
(SINGLE GROOVE)

PLAN VIEW
SHOULDER WITH GROOVES

PLACEMENT DETAIL FOR TYPE 1 MILLED RUMBLE STRIP

GENERAL NOTES

DETAILS OF CONSTRUCTION NO SHOWN ON THIS DRAWING SHALL CONFORM TO THE PERTINENT REQUIREMENTS OF THE STANDARD SPECIFICATIONS AND APPLICABLE SPECIAL PROVISIONS.

DO NOT MILL SHOULDER GROOVES THROUGH ANY INTERSECTION, MARKED CROSSWALK, NON-MOTORIZED PATH CROSSING, OR SNOWMOBILE CROSSING.

(1) SHOULDER GROOVES MAY BE OMITTED IN AREAS WITH HIGH CONCENTRATIONS OF DRIVEWAYS. WHEN DIRECTED BY THE ENGINEER.

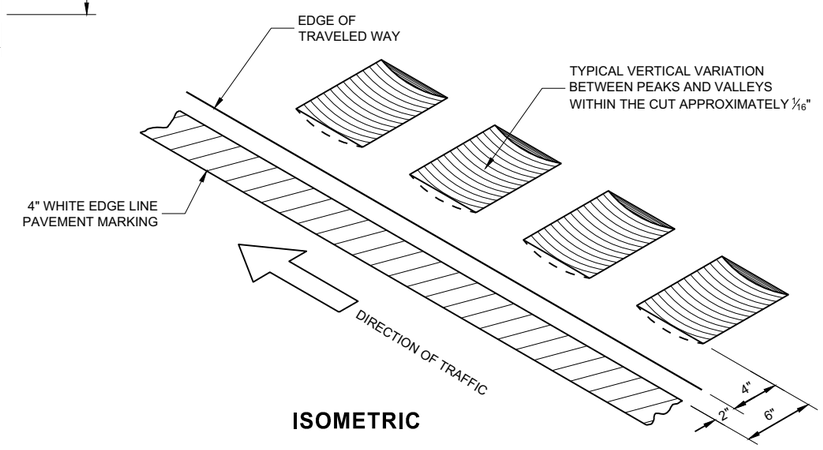

ISOMETRIC

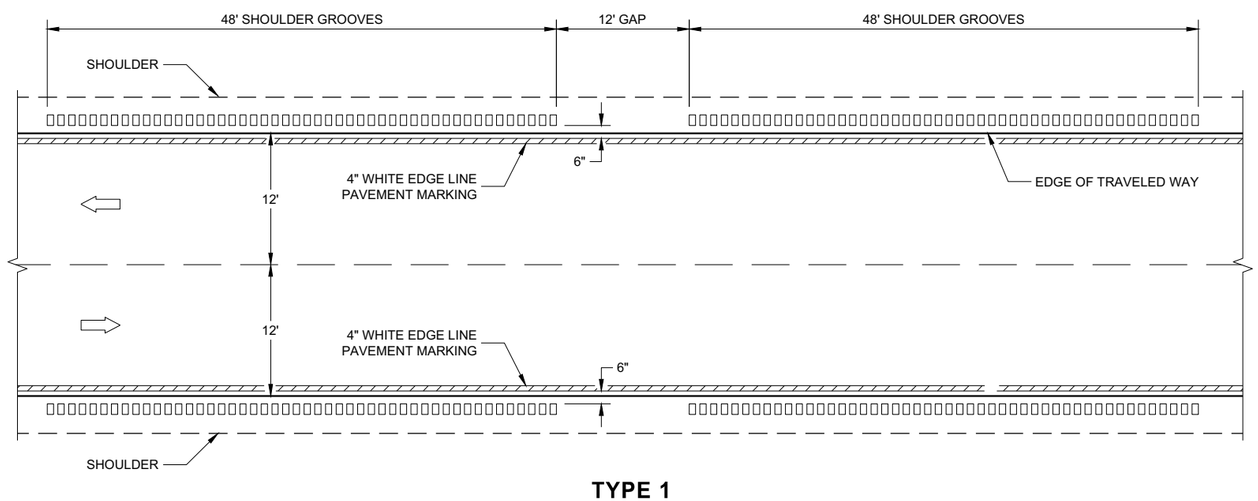

TYPE 1
2 - LANE SHOULDER RUMBLE STRIP

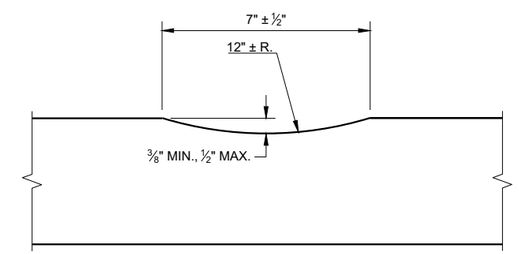

SECTION A - A

2-LANE RURAL SHOULDER RUMBLE STRIP, MILLING

STATE OF WISCONSIN
DEPARTMENT OF TRANSPORTATION

6

6

SDD 13A10 - 02a

SDD 13A10 - 02a

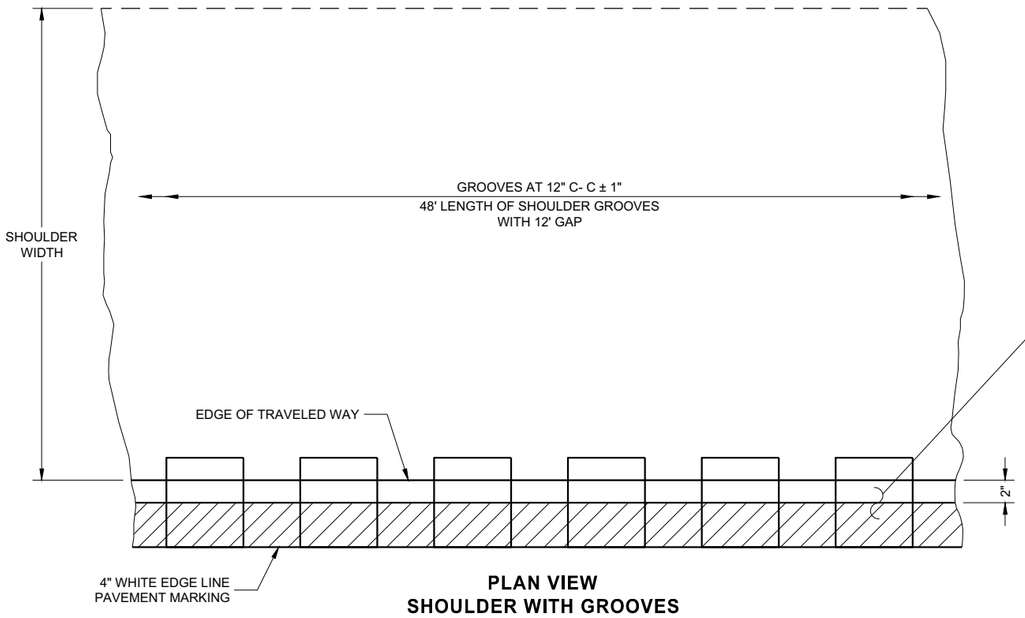

PLAN VIEW
SHOULDER WITH GROOVES

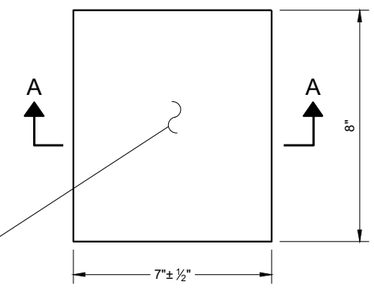

PLAN VIEW
(SINGLE GROOVE)

GENERAL NOTES

DETAILS OF CONSTRUCTION NO SHOWN ON THIS DRAWING SHALL CONFORM TO THE PERTINENT REQUIREMENTS OF THE STANDARD SPECIFICATIONS AND APPLICABLE SPECIAL PROVISIONS.

DO NOT MILL SHOULDER GROOVES THROUGH ANY INTERSECTION, MARKED CROSSWALK, NON-MOTORIZED PATH CROSSING, OR SNOWMOBILE CROSSING.

(1) SHOULDER GROOVES MAY BE OMITTED IN AREAS WITH HIGH CONCENTRATIONS OF DRIVEWAYS. WHEN DIRECTED BY THE ENGINEER.

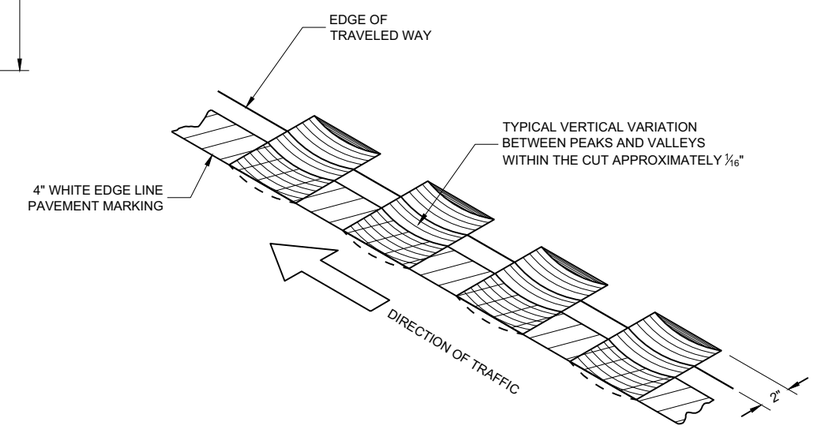

ISOMETRIC

PLACEMENT DETAIL FOR TYPE 2 MILLED RUMBLE STRIP

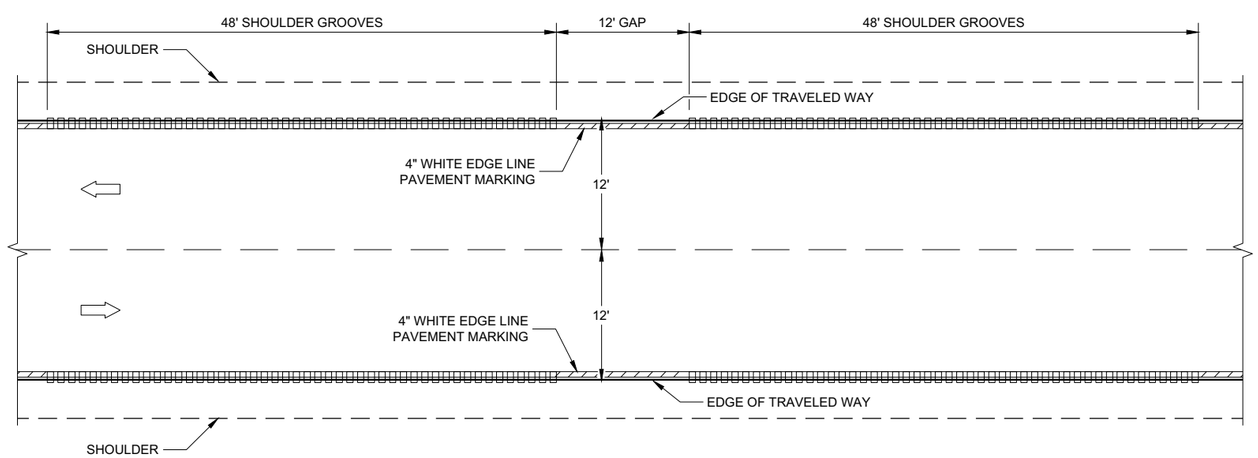

TYPE 2
2 - LANE SHOULDER RUMBLE STRIP

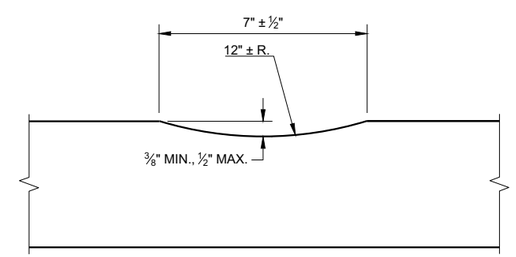

SECTION A - A

2-LANE RURAL SHOULDER RUMBLE STRIP, MILLING

STATE OF WISCONSIN
DEPARTMENT OF TRANSPORTAT

6

SDD 13A10 - 02b

6

SDD 13A10 - 02b

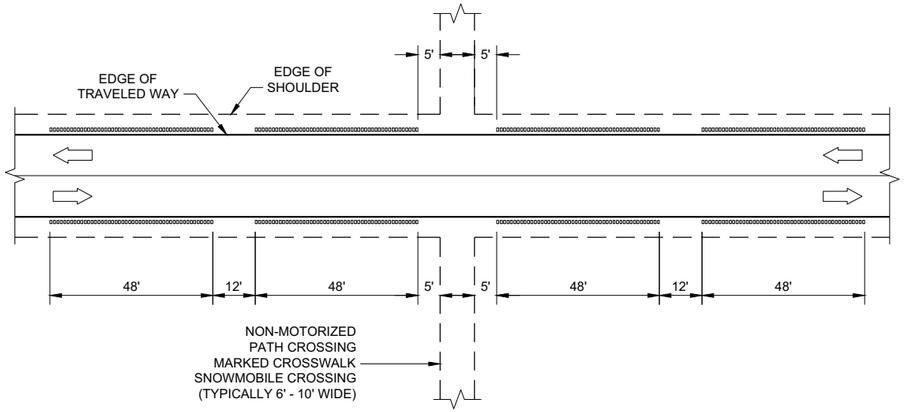

SHOULDER GROOVES AT MISCELLANEOUS CROSSINGS

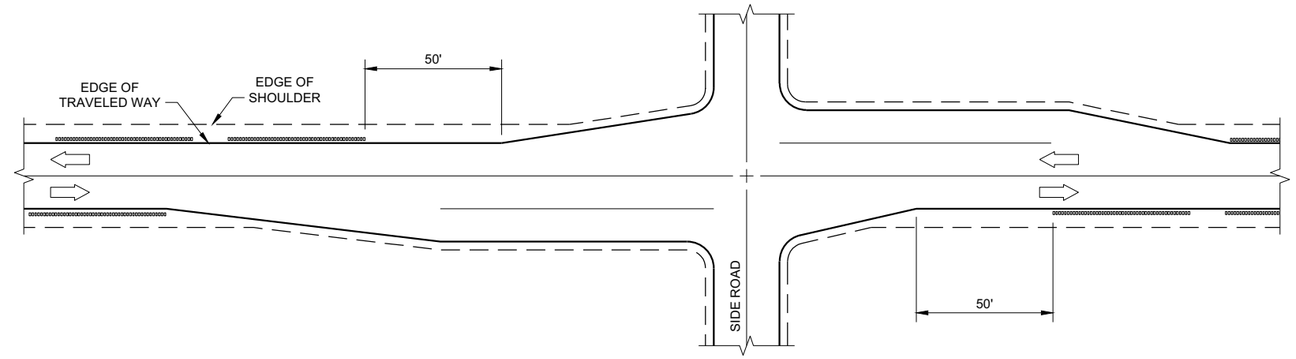

SHOULDER GROOVES AT RIGHT TURN LANE

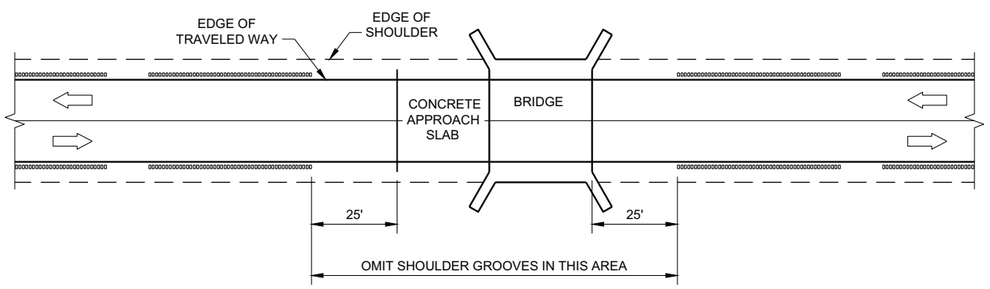

SHOULDER GROOVES AT BRIDGES

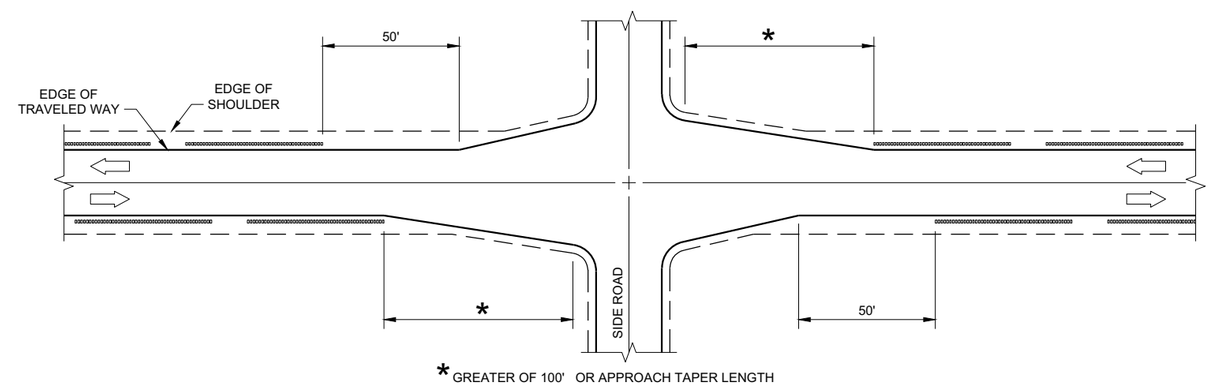

SHOULDER GROOVES AT INTERSECTIONS WITH APPROACH TAPER

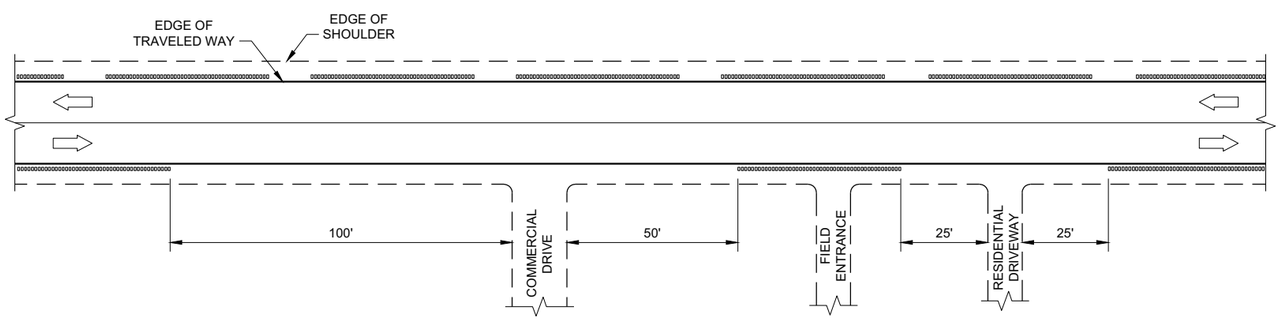

SHOULDER GROOVES AT DRIVEWAYS (1)

GENERAL NOTES

(1) SHOULDER GROOVES MAY BE OMITTED IN AREAS WITH HIGH CONCENTRATIONS OF DRIVEWAYS. WHEN DIRECTED BY THE ENGINEER.

2-LANE RURAL SHOULDER RUMBLE STRIP, MILLING

STATE OF WISCONSIN
DEPARTMENT OF TRANSPORTAT

6

SDD 13A10 - 02c

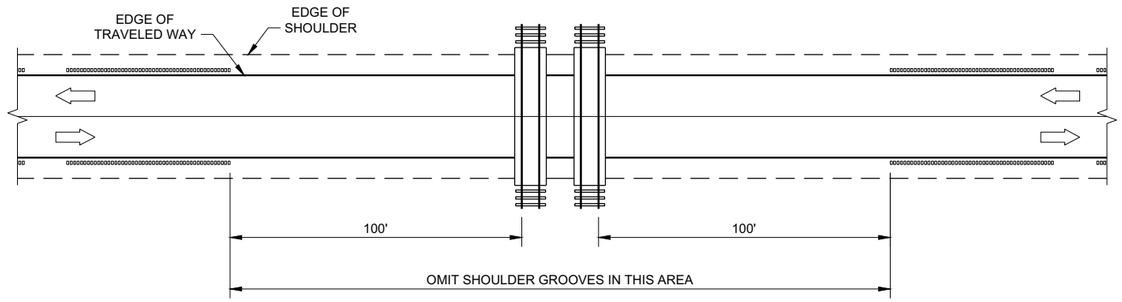

SHOULDER GROOVES AT RAILROADS

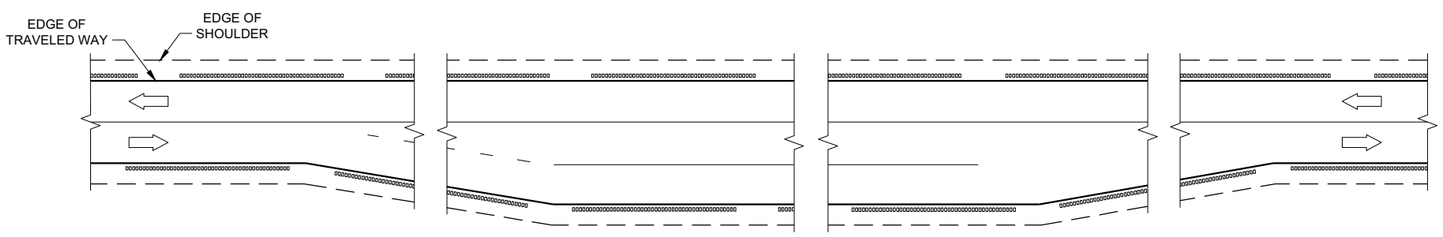

SHOULDER GROOVES AT PASSING AND CLIMBING LANES

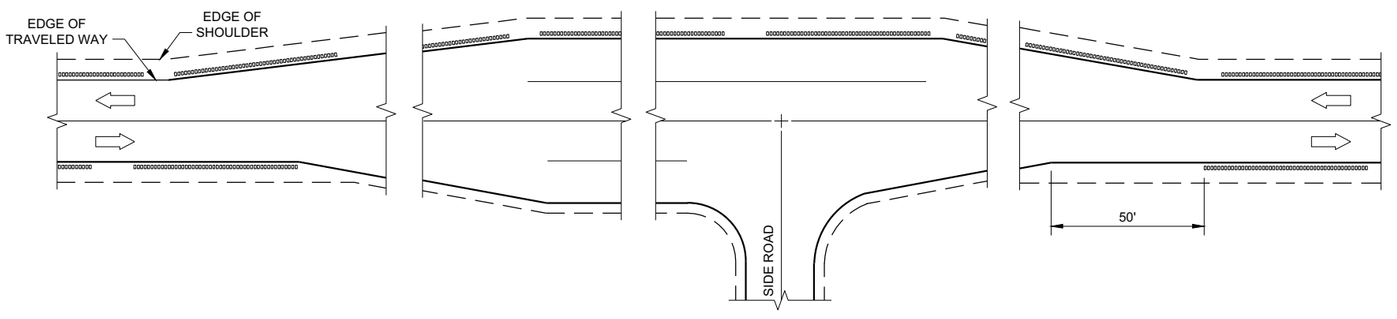

SHOULDER GROOVES AT BYPASS LANES

6

6

2-LANE RURAL SHOULDER RUMBLE STRIP, MILLING

STATE OF WISCONSIN
DEPARTMENT OF TRANSPORTATION

APPROVED

7/2018 — DATE

/S/ Rodney Taylor — ROADWAY STANDARDS DEVE ENGINEER

FHWA

SDD 13A10 - 02d

SDD 13A10 - 02d

GENERAL NOTES

DETAILS OF CONSTRUCTION NO SHOWN ON THIS DRAWING SHALL CONFORM TO THE PERTINENT REQUIREMENTS OF THE STANDARD SPECIFICATIONS AND APPLICABLE SPECIAL PROVISIONS.

DO NOT MILL CENTERLINE GROOVES THROUGH ANY INTERSECTION, MARKED CROSSWALK, NON-MOTORIZED PATH CROSSING, OR SNOWMOBILE CROSSING.

INSTALL PAVEMENT MARKING AFTER THE GROOVES ARE INSTALLED.

SEE SIGNING PLAN FOR SIGN REQUIREMENTS THAT MAY BE NEEDED.

(1) CENTERLINE GROOVES MAY BE OMITTED IN AREAS WITH HIGH CONCENTRATIONS OF DRIVEWAYS. WHEN DIRECTED BY THE ENGINEER.

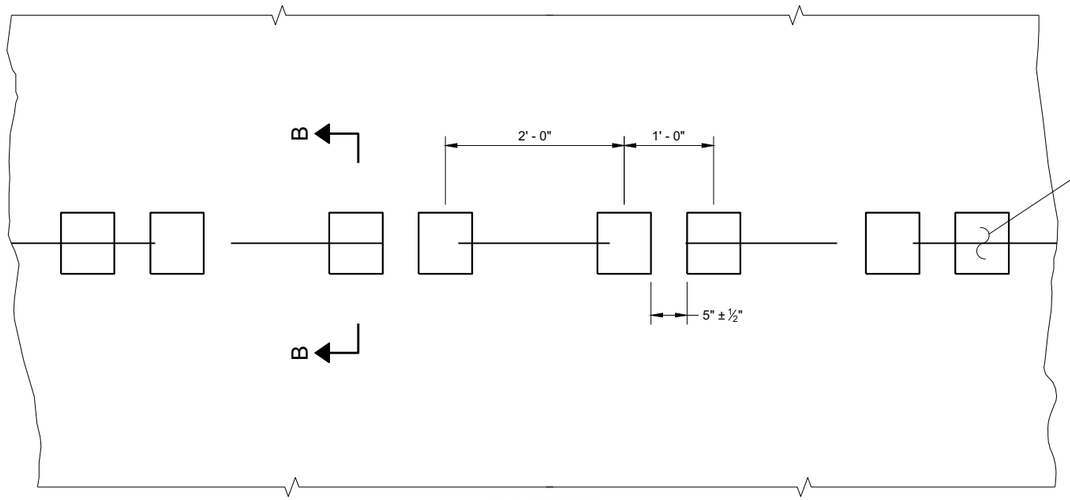

PLAN VIEW
SHOULDER WITH GROOVES

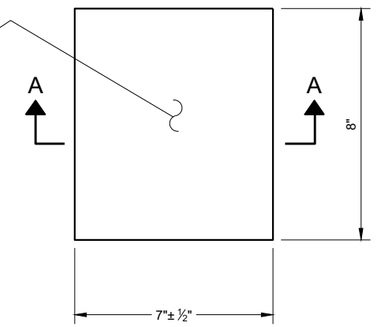

PLAN VIEW
(SINGLE GROOVE)

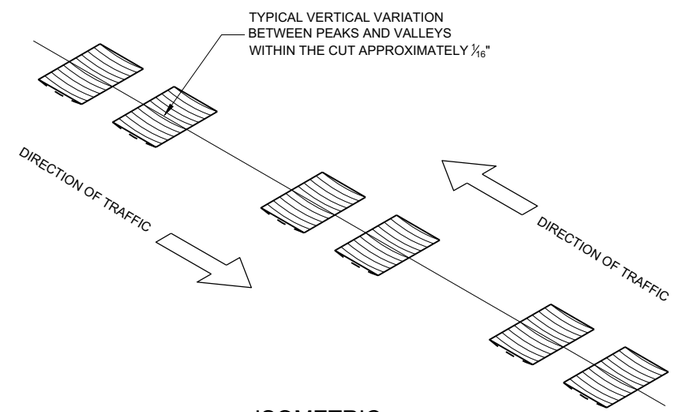

ISOMETRIC

PLACEMENT DETAIL FOR TYPE 1 MILLED RUMBLE STRIP

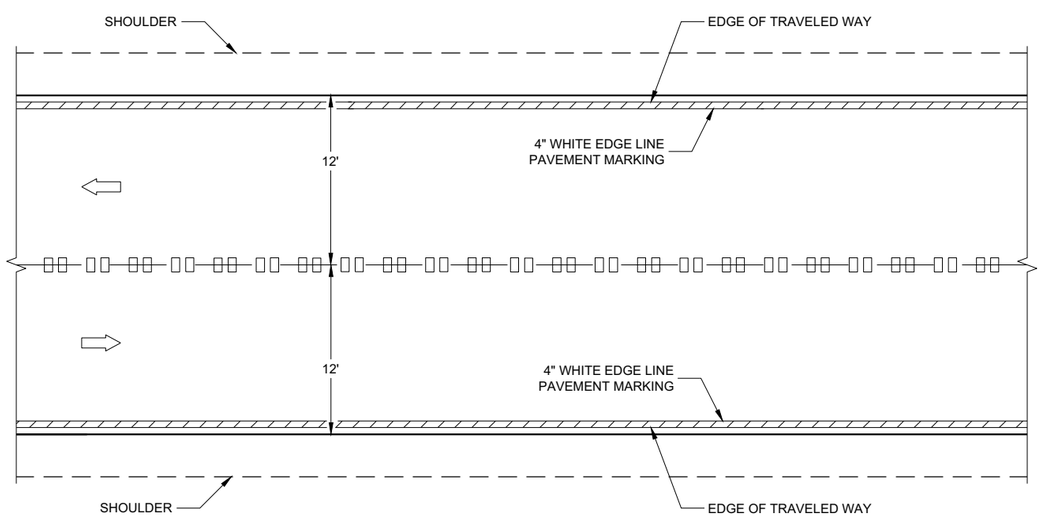

CENTERLINE GROOVES ON TWO-WAY ROADWAYS

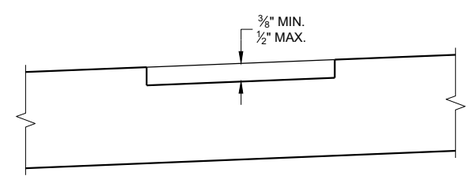

SECTION B - B
SUPERELEVATED ROADWAY

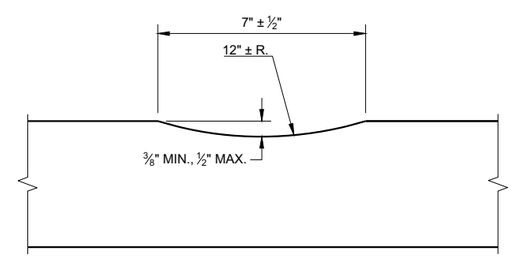

SECTION A - A

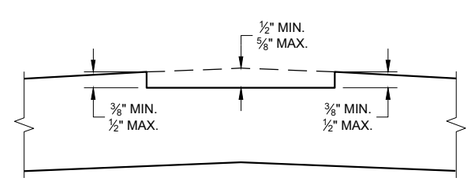

SECTION B - B
CROWNED ROADWAY

2-LANE RURAL
CENTER LINE RUMBLE STRIP, MILLING

STATE OF WISCONSIN
DEPARTMENT OF TRANSPORTAT

6

6

SDD 13A11 - 03a

SDD 13A11 - 03a

GENERAL NOTES

1. CENTERLINE GROOVES MAY BE OMITTED IN AREAS WITH HIGH CONCENTRATIONS OF DRIVEWAYS. WHEN DIRECTED BY THE ENGINEER.

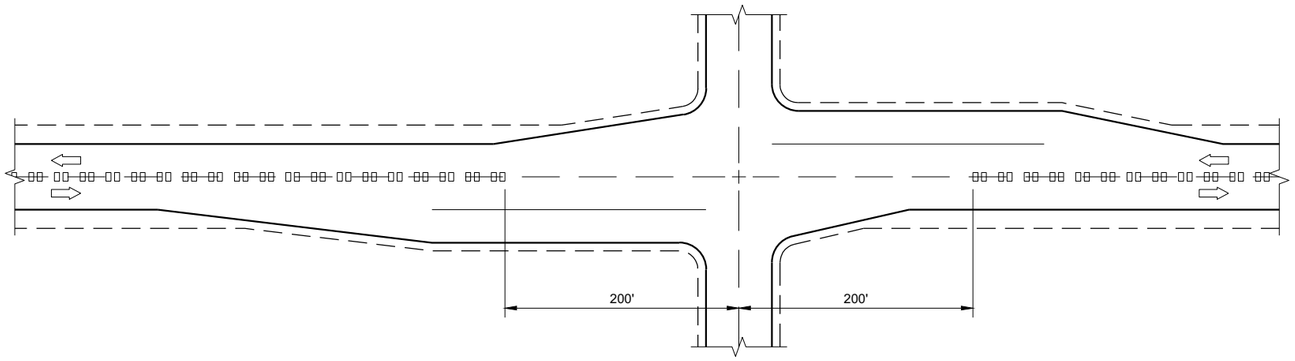

CENTERLINE GROOVES AT INTERSECTIONS

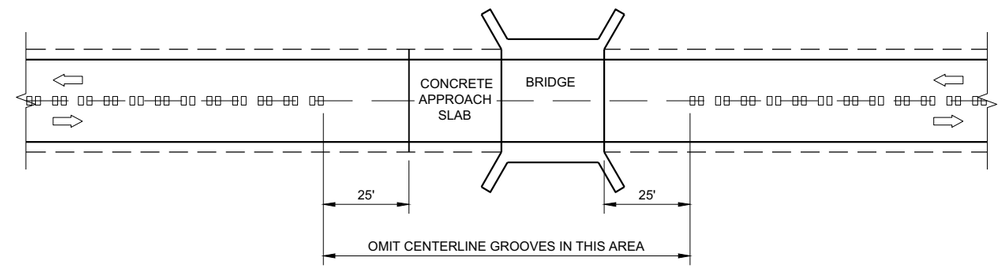

CENTERLINE GROOVES AT BRIDGES

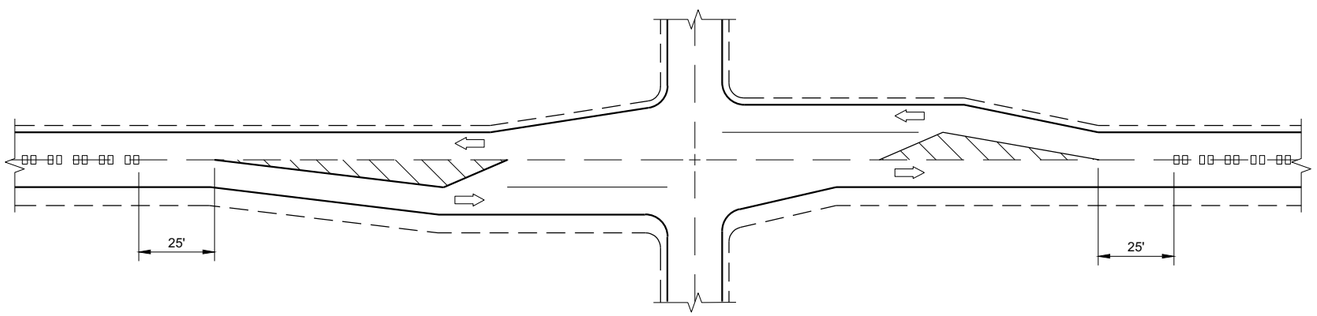

CENTERLINE GROOVES AT INTERSECTIONS (WITH LEFT TURN LANES)

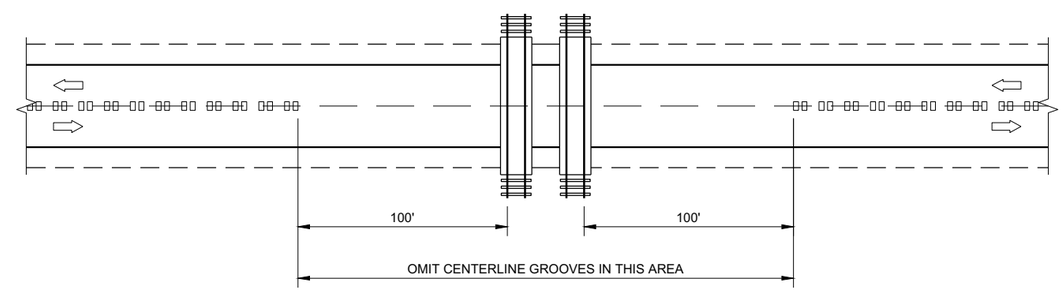

CENTERLINE GROOVES AT RAILROADS

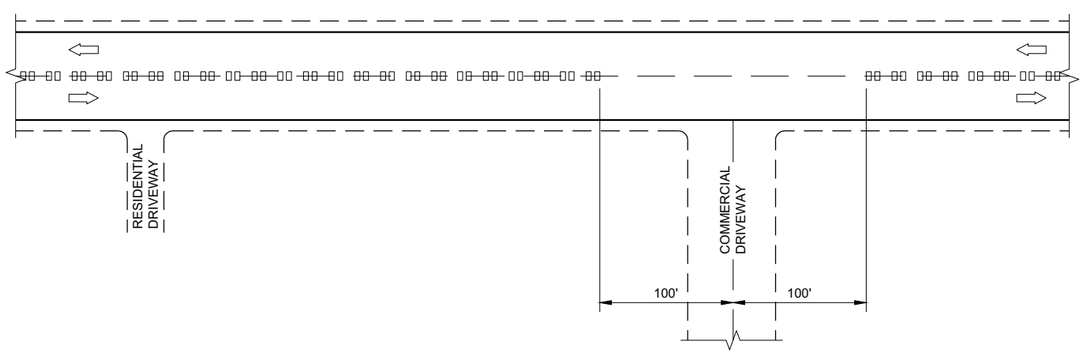

CENTERLINE GROOVES AT DRIVEWAYS (1)

6

6

SDD 13A11 - 03b

SDD 13A11 - 03b

2-LANE RURAL CENTERLINE RUMBLE STRIP, MILLING

STATE OF WISCONSIN
DEPARTMENT OF TRANSPORTATION

APPROVED

7/2018 — DATE

/S/ Rodney Taylor — ROADWAY STANDARDS DEVE ENGINEER

FHWA

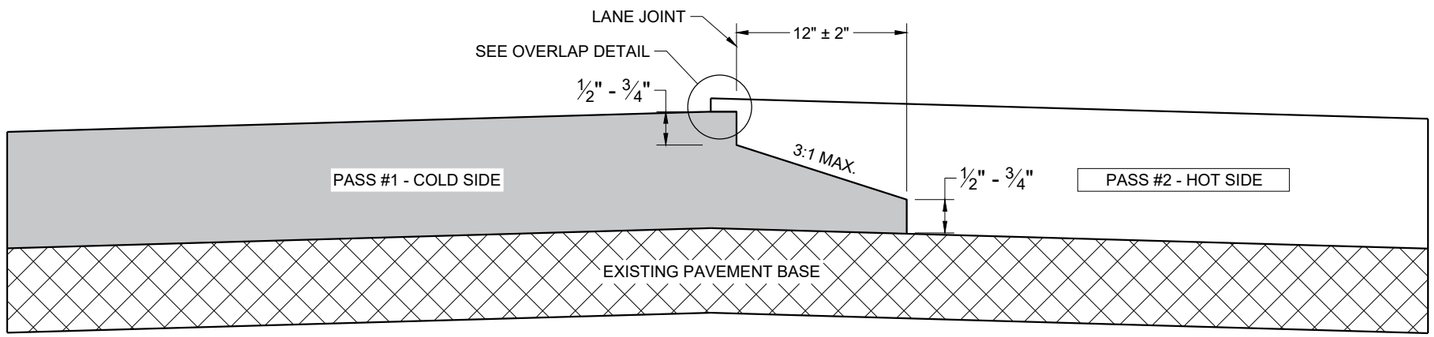

TYPICAL PAVEMENT CROSS SECTION
NOTCHED WEDGE JOINT

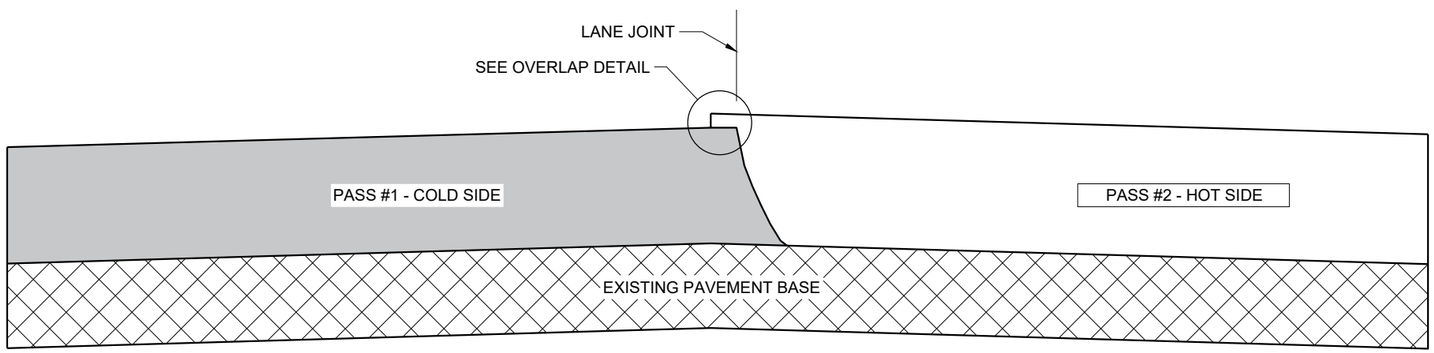

TYPICAL PAVEMENT CROSS SECTION
VERTICAL JOINT

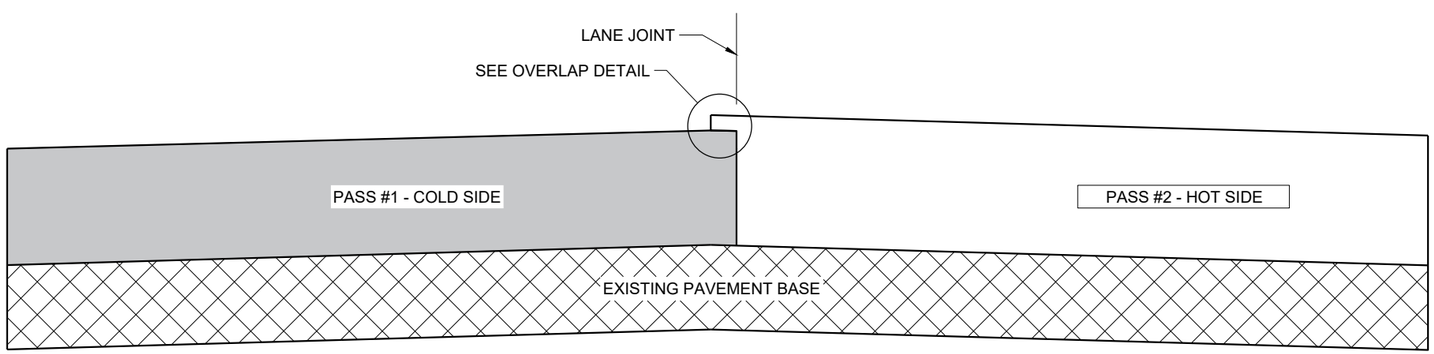

TYPICAL PAVEMENT CROSS SECTION
VERTICAL JOINT (MILLED)

GENERAL NOTES

IN ADDITION TO THE DETAILS PROVIDED IN THIS DRAWING, CONFORM TO STANDARD SPECIFICATION 450.3.2.8 FOR WHEN A NOTCHED WEDGE JOINT IS REQUIRED AND FOR GENERAL JOINT CONSTRUCTION REQUIREMENTS.

FOR ALL LONGITUDINAL JOINTS, ENSURE THE PAVER SCREED OVERLAPS THE PREVIOUSLY PLACED PAVEMENT BY 1" ± 0.5" AND THE HOT SIDE OF THE JOINT REMAINS HIGHER THAN THE COLD SIDE BY APPROXIMATELY 0.1" AFTER FINAL COMPACTION. (IT WILL BE FLUSH WHEN PAVING IN ECHELON.)

ONLY REMOVE THE LONGITUDINAL NOTCHED WEDGE JOINT FOR SMA PAVEMENT OR AS DIRECTED BY THE ENGINEER TO ADDRESS SPECIFIC LENGTHS OF JOINT DAMAGED BY TRAFFIC.

WHEN MILLING BACK OR REMOVING ANY LONGITUDINAL JOINT, LIMIT THE MATERIAL REMOVED TO 2" FROM THE TOP NOTCH OR FROM THE VERTICAL JOINT EDGE ON THE COLD SIDE OF THE JOINT.

USE LONGITUDINAL MILLED JOINT AS PLANS SHOW OR THE AS THE ENGINEER DIRECTS.

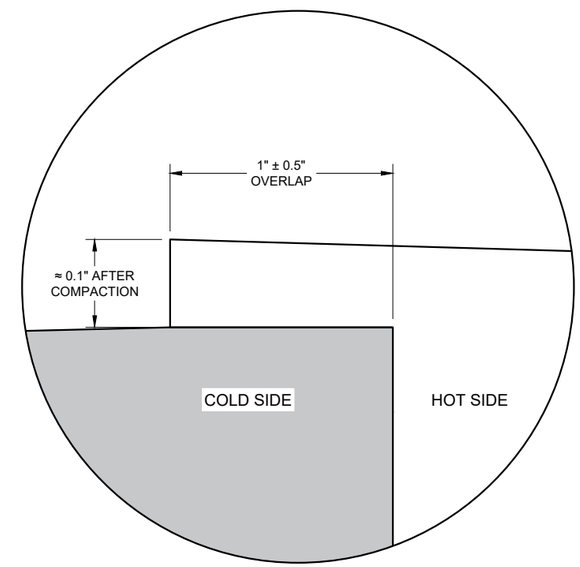

OVERLAP DETAIL (TYPICAL)

6

6

SDD 13C19 - 03

SDD 13C19 - 03

HMA LONGITUDINAL JOINTS

STATE OF WISCONSIN
DEPARTMENT OF TRANSPORTATION

APPROVED
November 2020 /S/ Steven Hefel
DATE HMA PAVEMENT ENGIN
FHWA

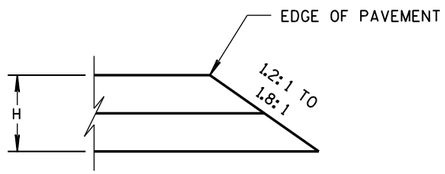

CONSTRUCTED WITH FINAL TWO LAYERS

FOR H 5" OR LESS

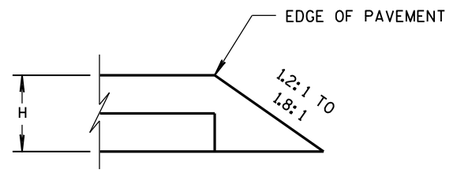

CONSTRUCTED WITH FINAL LAYER

FOR H 5" OR LESS

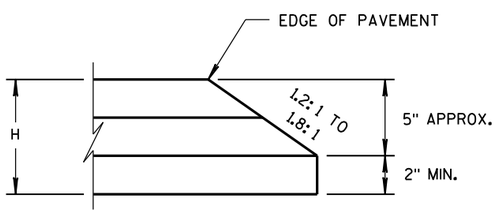

CONSTRUCTED WITH FINAL TWO LAYERS

FOR H GREATER THAN 5"

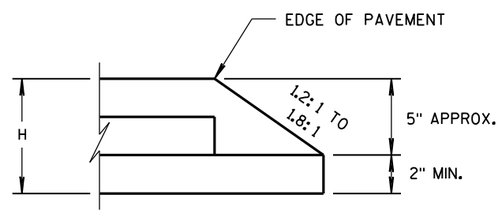

CONSTRUCTED WITH FINAL LAYER

FOR H GREATER THAN 5"

HMA PAVEMENT AND HMA OVERLAYS

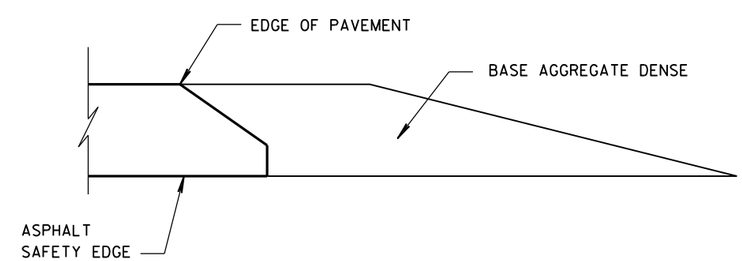

FINISHED SHOULDER AGGREGATE PLACEMENT

6

6

S.D.D. 14 B 29-1

SAFETY EDGE SM

STATE OF WISCONSIN
DEPARTMENT OF TRANSPORTATION

APPROVED

11/30/2012 — DATE

/S/ Jerry H. Zogg — ROADWAY STANDARDS DEVELOPMENT ENGINEER

FHWA

S.D.D. 14 B 29-1

1. WOOD OR STEEL POSTS (w6X9 OR w6X8.5) MAY BE USED. DO NOT INTERMIX WOOD AND STEEL POSTS. INSTALL STEEL POSTS WITH HOLES ON APPROACHING TRAFFIC SIDE.
2. USE WOOD OR APPROVED PLASTIC BLOCKOUTS. WOOD BLOCKOUTS MAY BE CONSTRUCTED OUT OF TWO OR MORE WOOD BLOCKOUTS. SEE ALTERNATE WOOD BLOCKOUT DETAIL. DIMENSIONS OF APPROVED PLASTIC BLOCKOUTS MAY VARY.
3. IF ROCK IS ENCOUNTERED DURING EXCAVATION, PROVIDE A HOLE 12 INCHES IN DIAMETER EXTENDING 20 INCHES DEEP INTO THE ROCK. PLACE APPROXIMATELY 2 1/2" INCHES OF GRANULAR MATERIAL IN THE BOTTOM OF THE HOLE. CUT THE POSTS THE TO LENGTH AMD INSTALL. BACKFILL WITH EXCAVATED MATERIAL AND COMPACT. BACKFILL IS TO BE FREE OF LARGE ROCKS.
4. WHEN THE DISTANCE FROM BACK OF POST TO SHOULDER HINGE POINT IS LESS THAN 2 FEET INSTALL LONGER POST AT HALF POST SPACING (K).
5. FOR NEW MGS INSTALLATION TOP OF W-BEAM RAIL TOLERANCE IS ±1". FOR EXISTING MGS INSTALLATION TOP OF W-BEAM IS BETWEEN 27 ¾" TO 32".
6. WHEN USING STEEL POST AND WOOD BLOCKOUTS INSTALL FOUR 16D GALVANIZED NAILS. INSTALL NAILS AT THE BACK CORNERS OF THE BLOCK AND BEND THE NAILS OVER THE FLANGE OF THE STEEL POST.
7. TOTAL POST LENGTH FOR TYPE K IS 7' - 0". TOTAL POST LENGTH FOR OTHER MGS TYPES IS 6' - 0".

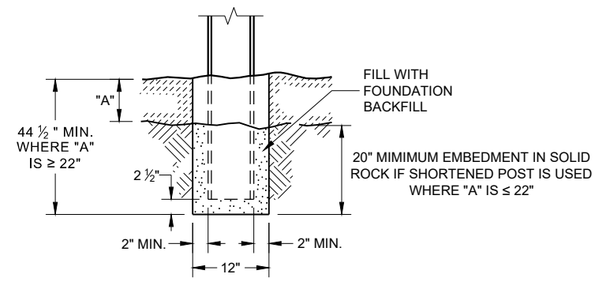

END VIEW
SETTING STEEL OR WOOD POST IN ROCK (3)

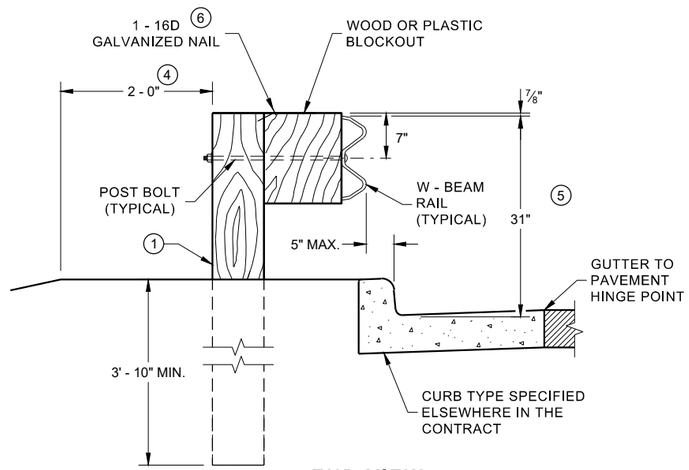

END VIEW
LOCATED ALONG A CURBED ROADWAY

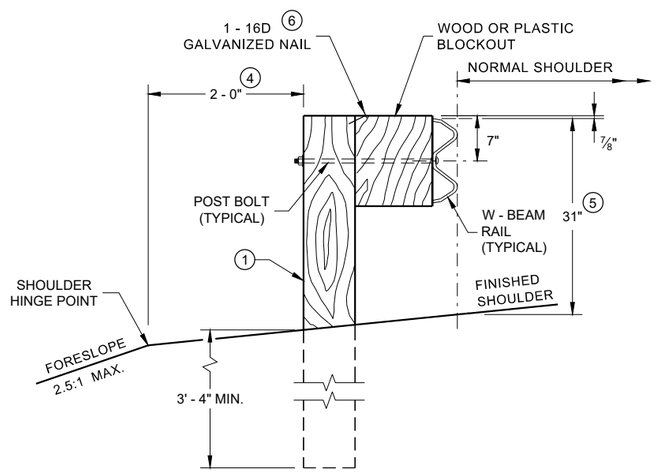

END VIEW
LOCATED ALONG A ROADWAY SHOULDER STANDARD INSTALLATION

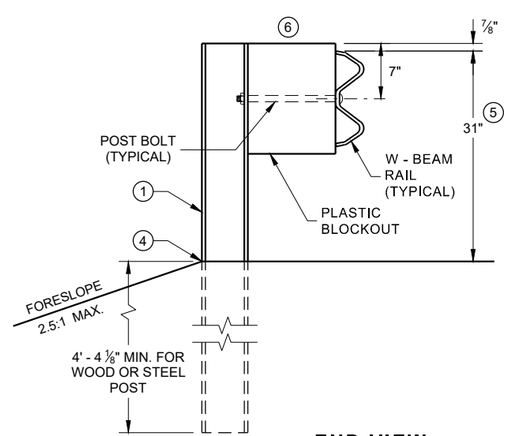

END VIEW
MGS LONGER POST AT HALFPOST SPACING W BEAM (K)

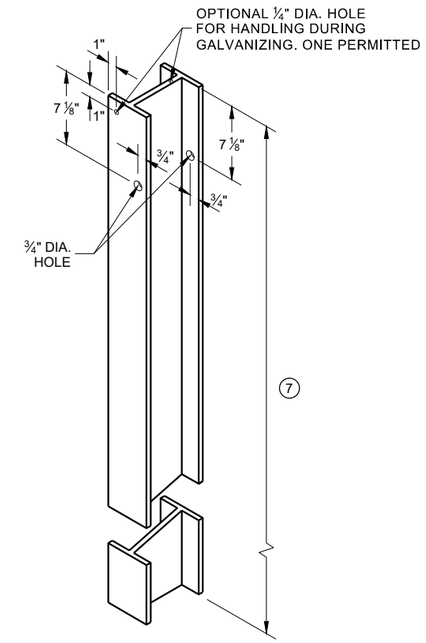

STEEL POST & HOLE PUNCHING DETAIL (W 6 X 9) (1)

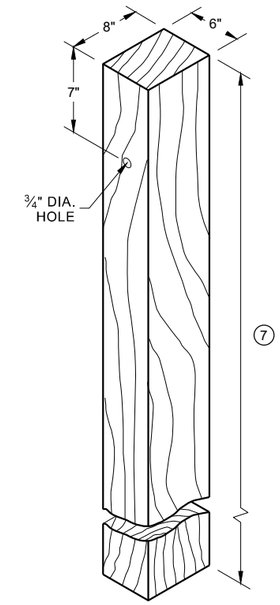

WOOD POST (6" X 8") NOMINAL (1)

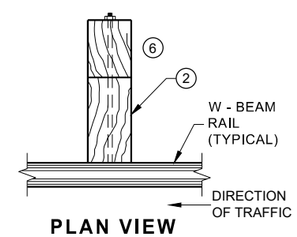

PLAN VIEW WOOD POST, BLOCKOUT & BEAM

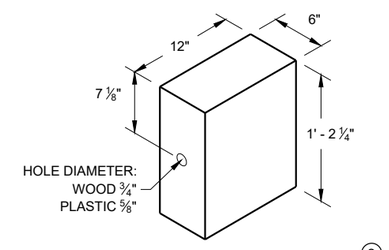

WOOD OR PLASTIC BLOCKOUT (2)

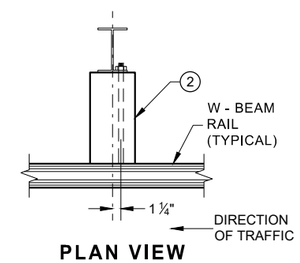

PLAN VIEW STEEL POST, PLASTIC BLOCKOUT & BEAM

MIDWEST GUARDRAIL SYSTEM (MGS) GUARDRAIL

STATE OF WISCONSIN
DEPARTMENT OF TRANSPORTA

6

SDD 14B42 - 07a

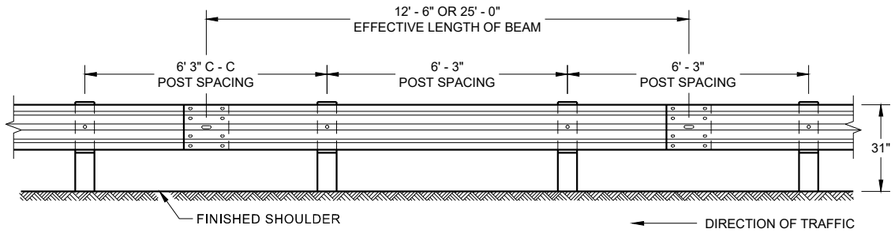

FRONT VIEW
POST SPACING STANDARD INSTALLATION

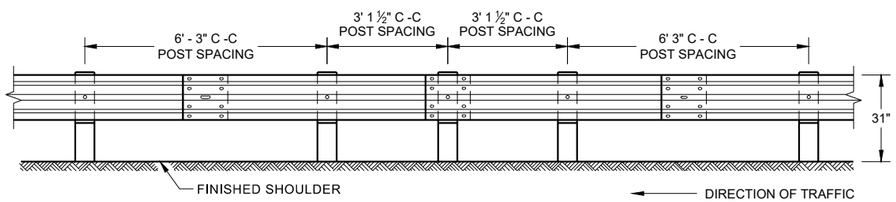

FRONT VIEW
HALF POST SPACING (HS) AND HALF POST SPACING WITH LONGER POSTS (K)

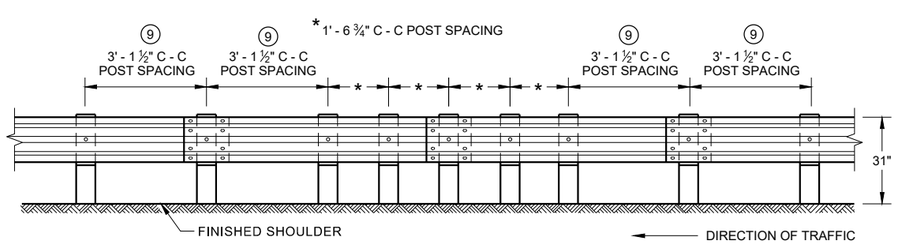

FRONT VIEW
QUARTER POST SPACING (QS)

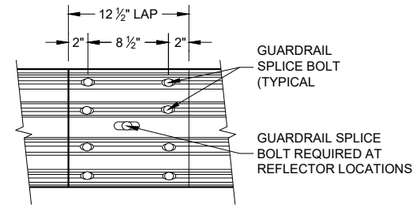

FRONT VIEW
MID-SPAN BEAM SPLICE

GENERAL NOTES

(8) DO NOT INSTALL REFLECTORS ON THE FIRST 50 FEET OF THE APPROACH END OF THE ENERGY ABSORBING TERMINAL.

(9) 25 FEET OF HALF POST SPACING IS REQUIRED ON APPROACH AND DEPARTURE ENDS OF QUARTER POST SPACING.

POST BOLTS ARE A ⅝" DIAMETER ASTM A307 GUARDRAIL BOLT. A POST BOLT REQUIRES ⅝" DIAMETER A563A DOUBLE RECESSED (DR) HEAVY HEX NUT AND ⅝" DIAMETER F844 FLAT WASHER. POST BOLTS MAY BE LONGER IF MULTIPLE BLOCKOUTS ARE BEING USED.

GUARD RAIL SPLICE BOLTS ARE A ⅝" DIAMETER ASTM A307 GUARDRAIL HEAD BOLT. A GUARDRAIL SPLICE BOLT REQUIRES ⅝" DIAMETER A563A DOUBLE RECESSED (DR) HEAVY HEX NUT.

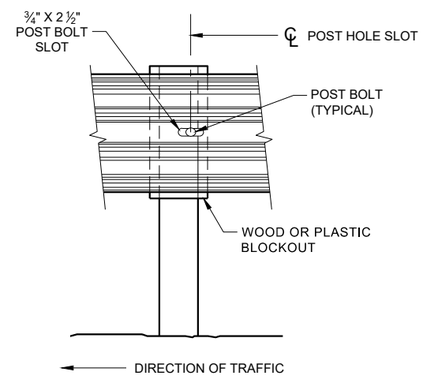

FRONT VIEW AT STEEL POST

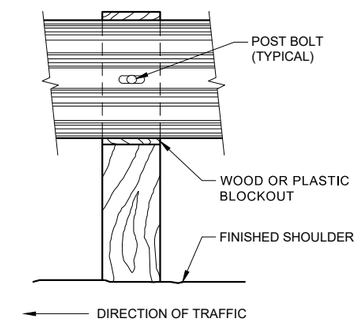

FRONT VIEW AT WOOD POST

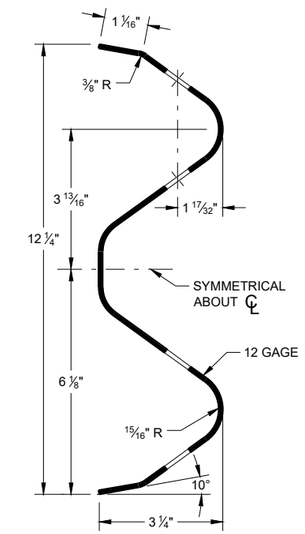

SECTION THRU W-BEAM RAIL

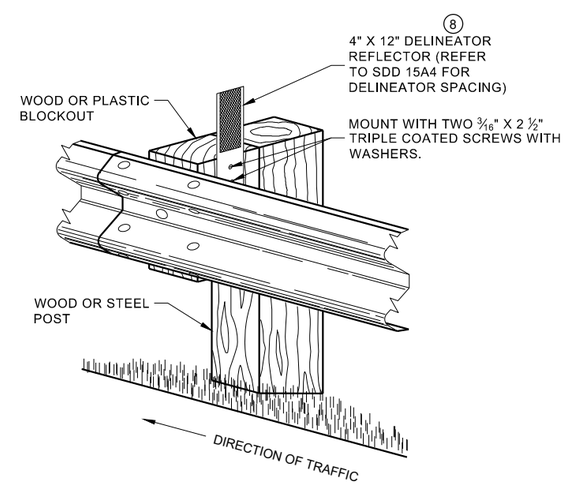

ONE SIDED REFLECTOR DETAIL AND TYPICAL INSTALLATION

MIDWEST GUARDRAIL SYSTEM (MGS) GUARDRAIL

STATE OF WISCONSIN
DEPARTMENT OF TRANSPORTATION

6

6

SDD 14B42 - 07b

SDD 14B42 - 07b

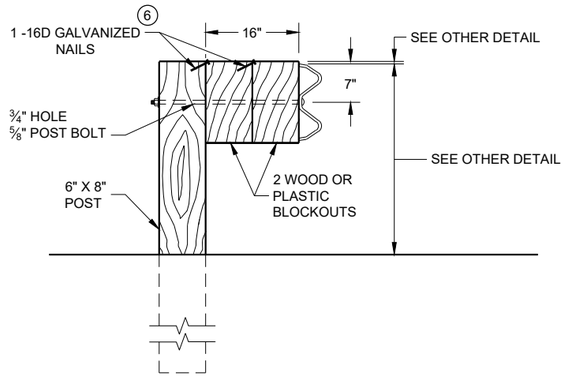

DETAIL FOR 16" BLOCKOUT DEPTH

IT IS ACCEPTABLE TO USE BLOCKOUTS UP TO 16" DEEP TO INCREASE THE POST OFFSET TO AVOID UNDERGROUND OBSTACLES. THERE IS NO LIMIT TO THE NUMBER OF POSTS THAT CAN HAVE ADDITIONAL BLOCKOUTS UP TO 16" DEEP.

NOTE:

1. ALL FILLETS SHALL HAVE A MINIMUM RADIUS OF 3/16".
2. IF THE BOLT EXTENDS MORE THAN ¼" FROM THE NUT THE BOLT SHOULD BE TRIMMED BACK.

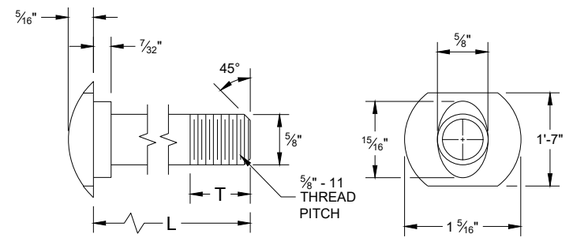

POST BOLT TABLE

L	T (MIN.)
1 ¼"	1 ⅛"
2"	1 ¾"
10"	4"
14"	4 1/16"
18"	4"
21"	4 1/16"
25"	4"

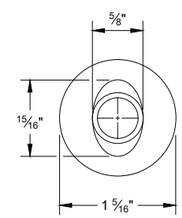

ALTERNATE BOLT HEAD

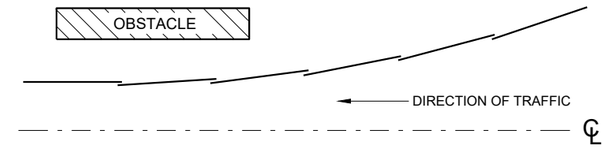

PLAN VIEW
BEAM LAPPING DETAIL

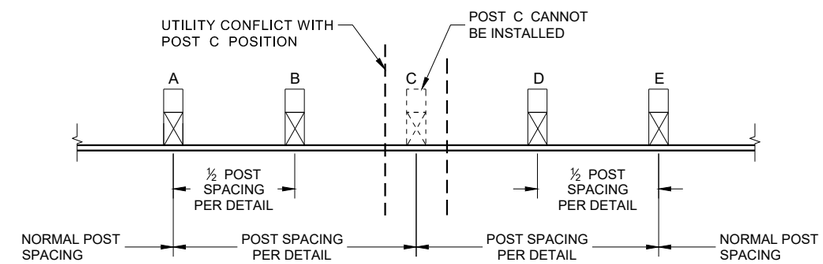

POST DRIVING FOR CONTINUOUS UNDERGROUND OBSTRUCTION

6

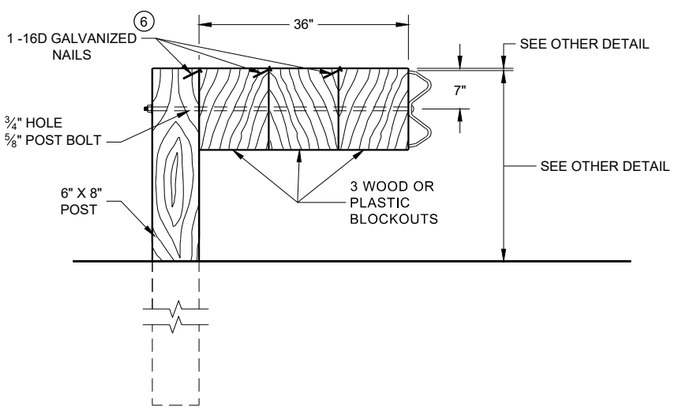

DETAIL FOR 36" BLOCKOUT DEPTH

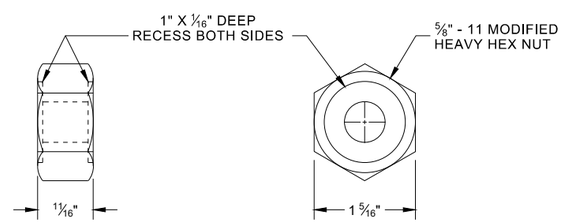

POST BOLT, SPLICE BOLT AND RECESS NUT

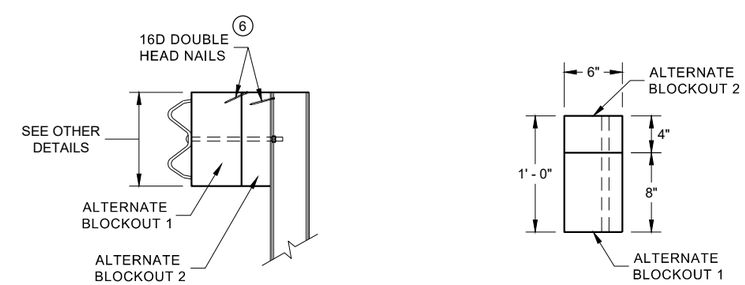

SIDE VIEW

PLAN VIEW

ALTERNATE WOOD BLOCKOUT DETAIL

NOTES: UNDER SPECIAL CIRCUMSTANCES, SUCH AS AVOIDING OBSTACLES THAT ARE NOT RELOCATED, IT IS ACCEPTABLE TO INSTALL ADDITIONAL BLOCKOUTS TO OBTAIN UP TO 36" DEPTH FOR ONE OR TWO POSTS IN A SECTION OF GUARDRAIL.

DO NOT USE 16" OR 36" BLOCKOUTS IF IT CAUSES THE POST TO BE DRIVEN BEYOND SHOULDER HINGE POINT OR CAUSES A FIXED OBJECT TO BE WITHIN THE DEFLECTION DISTANCE OF THE BARRIER.

(6) WHEN USING STEEL POST AD WOOD BLOCKOUTS, INSTALL FOUR 16D GALVANIZED NAILS. INSTALL NAILS AT THE BACK CORNERS OF THE BLOCK AND BEND THE NAILS OVER THE FLANGE OF THE STEEL POST.

MIDWEST GUARDRAIL SYSTEM (MGS) GUARDRAIL

STATE OF WISCONSIN
DEPARTMENT OF TRANSPORTA

SDD 14B42 - 07c

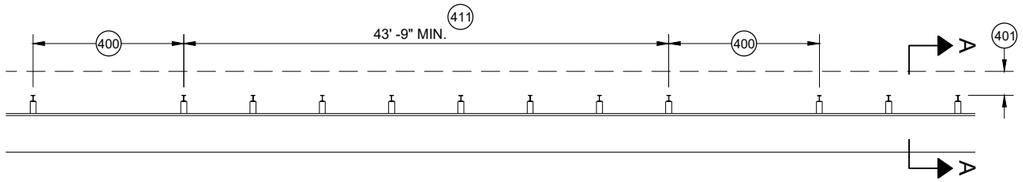

MISSING POST IN MGS GUARDRAIL

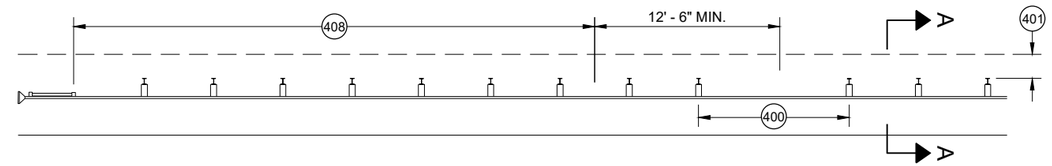

MISSING POST IN MGS GUARDRAIL NEAR EAT

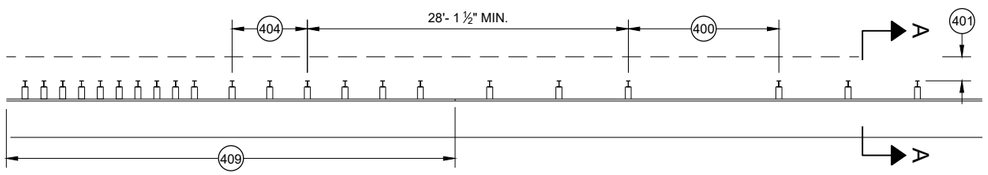

MISSING POST IN MGS GUARDRAIL NEAR AN APPROACH TRANSITION

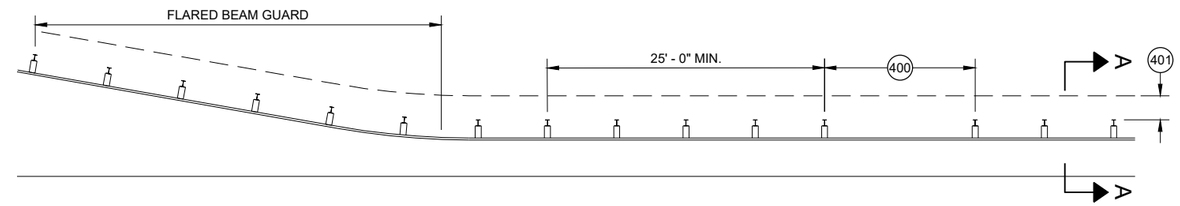

MISSING POST IN MGS GUARDRAIL NEAR FLARED BEAM GUARD

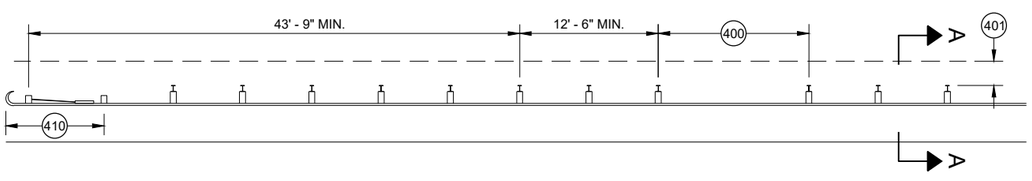

MISSING POST IN MGS GUARDRAIL NEAR A TYPE 2 END TERMINAL

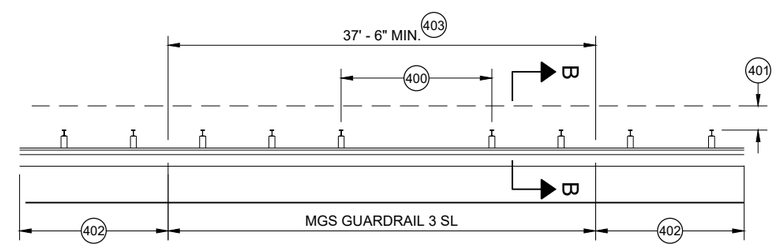

MISSING POST IN SHORT SPAN MGS GUARDRAIL NEAR CURB (SL) 407

400 MAX SPAN 12' - 6"
401 2' MIN.
402 MGS GUARDRAIL 3
403 NESTING BEAM GUARD
404 ASYMMETRIC TRANSITION
405 SOIL WELL DRAINED AND COMPACTED
406 SEE OTHER DRAWINGS IN THIS SDD
407 SEE OTHER DRAWINGS FOR MIN. SPACING BETWEEN SPANS
408 SEE SDD 14B44
409 SEE SDD 14B45
410 SEE SDD 14B47
411 MINIMUM DISTANCE BETWEEN MISSING POST SPANS.

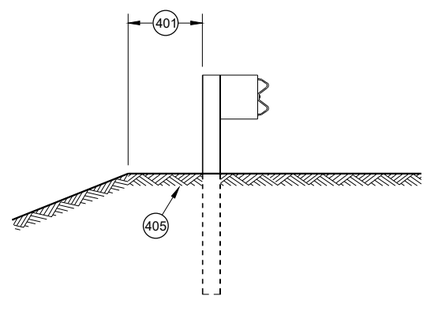

SECTION A - A 406

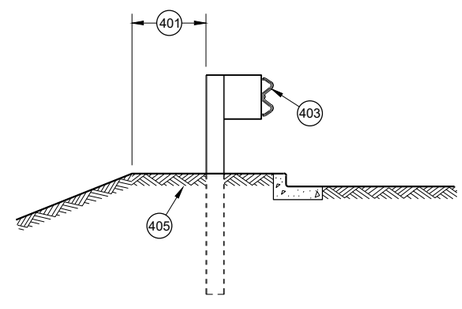

SECTION B - B 406

MIDWEST GUARDRAIL SYSTEM (MGS) GUARDRAIL

STATE OF WISCONSIN
DEPARTMENT OF TRANSPORTATION

APPROVED
May 2021 — DATE
/S/ Rodney Taylor — ROADWAY STANDARDS DEVE UNIT SUPERVISOR
FHWA

6

SDD 14B42 - 07d

GENERAL NOTES

(A) THE SLOPE IN THE AREA BOUNDED BY THE GRADELINE, THE HINGE POINT LINE (HPL) AND THE CLEAR ZONE LIMITS (CZL) SHALL BE 4:1 OR FLATTER.

(B) AFTER FINAL ASSEMBLY, RECHECK CABLE TO BE SURE IT IS TAUT AND HAS NOT RELAXED

(C) DIFFERENT MANUFACTURERS REQUIRE DIFFERENT PERFORATED W - BEAM RAIL END PANELS. SEE MANUFACTURER'S INFORMATION.

(D) ATTACH ALUMINUM SHEET TO E.A.T. HEAD USING 4 STAINLESS STEEL SELF - TAPPING SCREWS. ONE SCREW PER CORNER.

(E) HARDWARE MAY VARY BETWEEN MANUFACTURER. SEE MANUFACTURER'S DRAWING FOR INFORMATION.

DIMENSIONS MAY VARY, MANUFACTURER'S INFORMATION.

SEE SDD 14B42 FOR MORE INFORMATION.

* DO NOT ATTACH BLOCKOUTS TO POST 1 AND 2.

DO NOT INSTALL REFLECTORS ON THE FIRST 50 FEET OF THE APPROACH END OF THE ENERGY ABSORBING TERMINAL.

SEE MANUFACTURER'S DRAWING FOR SPLICE LOCATION, HARDWARE DIMENSIONS AND INSTALLATION INSTRUCTIONS.

THE CENTER OF THE UPPER 3 ½" DIAMETER HOLE ON POST NUMBER 3 THROUGH POST 9 IS TO BE FLUSH WITH THE GROUND LINE UP TO A MAXIMUM OF 2" ABOVE GROUND LINE. WOOD BLOCKS ON POSTS NUMBERED 3 THROUGH 9 MAY BE ADJUSTED UP TO 3" ABOVE THE TOP OF POST.

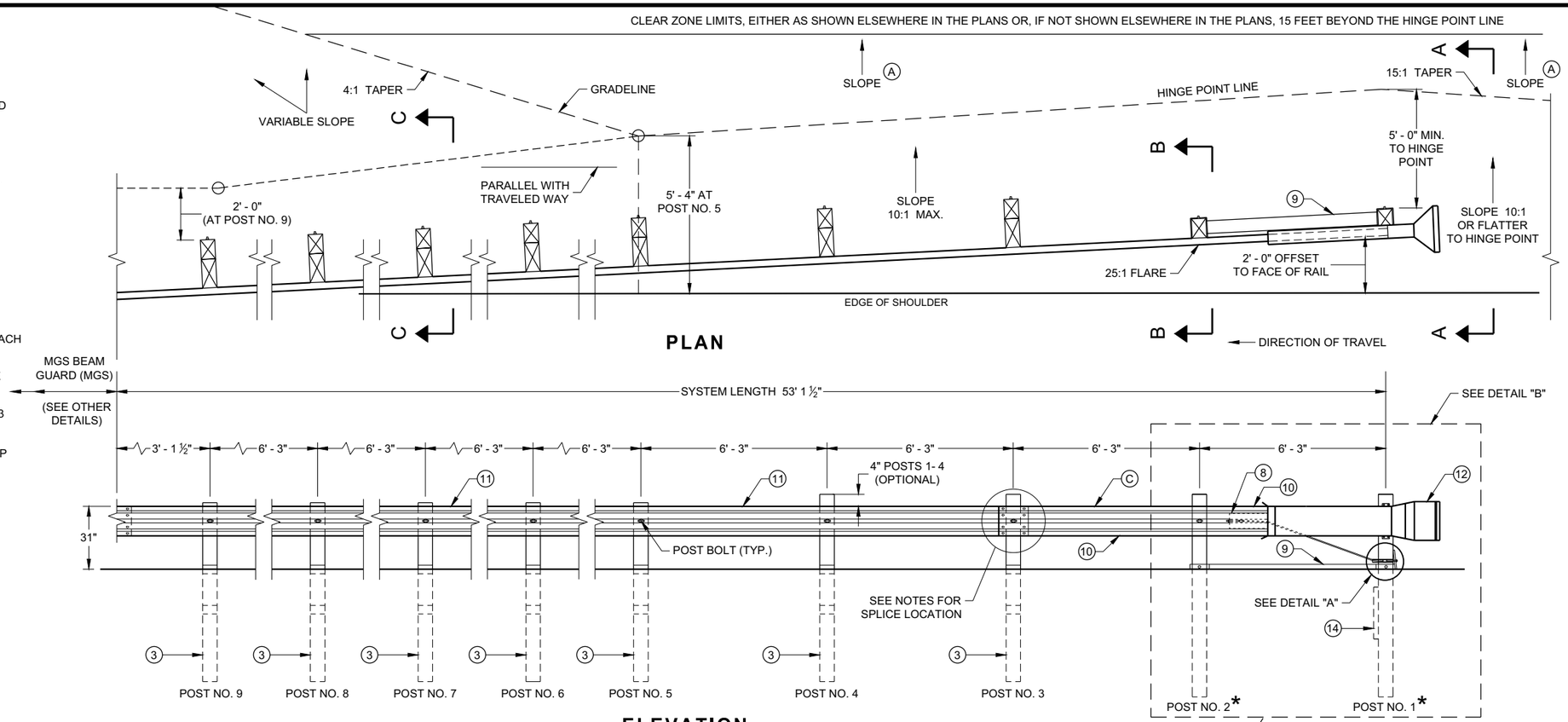

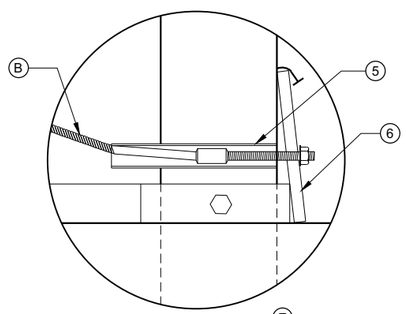

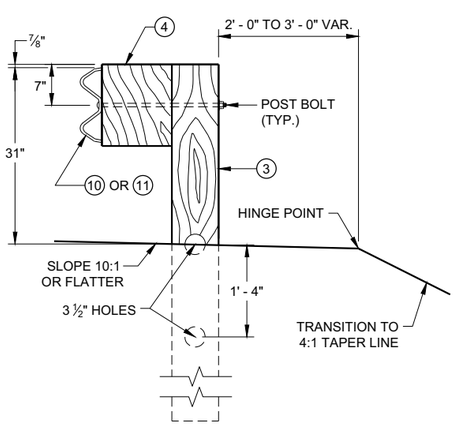

SECTION C - C
TYPICAL AT POST NOS. 3 - 9

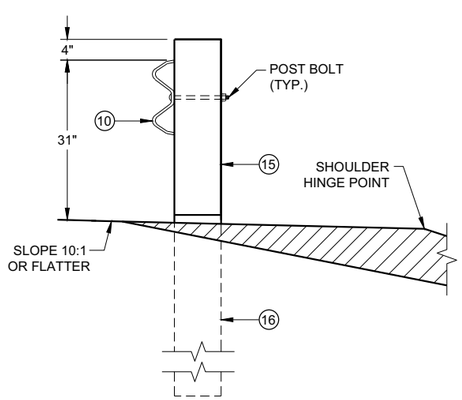

SECTION B - B
TYPICAL AT POST NO. 2*

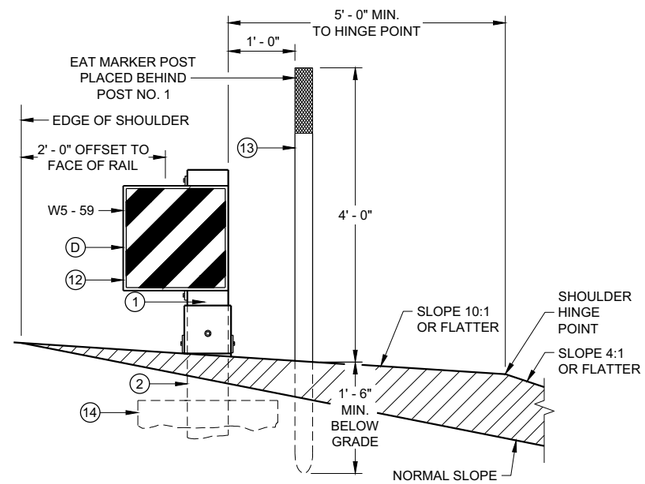

SECTION A - A
TYPICAL AT POST NO. 1*

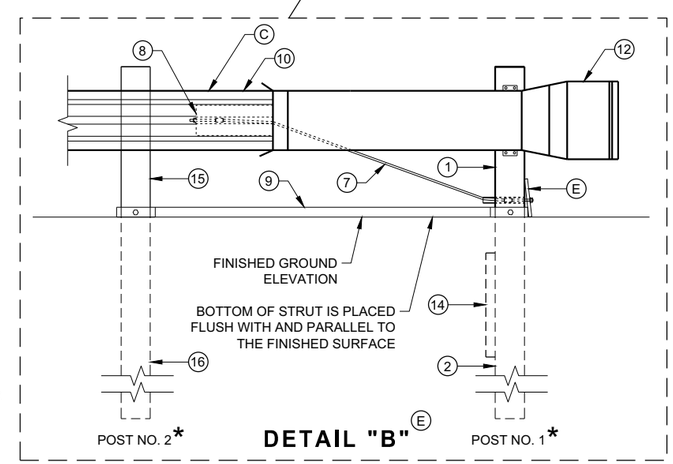

MIDWEST GUARDRAIL SYSTEM ENERGY ABSORBING TERMINAL (MGS)

STATE OF WISCONSIN
DEPARTMENT OF TRANSPORTATION

6

6

SDD 14B44 - 04a

SDD 14B44 - 04a

BILL OF MATERIALS

PART NO.	DESCRIPTION MATERIALS PROVIDED BY MGS EAT MANUFACTURER. SEE MANUGACTURER'S DETAILS FOR MORE INFORMATION.
1	UPPER POST NO. 1 6" X 6" TUBE
2	LOWER POST NO. 1
3	WOOD CRT
4	WOOD BLOCKOUT
5	PIPE SLEEVE
6	BEARING PLATE
7	BCT CABLE ASSEMBLY
8	ANCHOR CABLE BOX
9	GROUND STRUT
10	PERFORATED W-BEAM RAIL END PANEL, 12'-6" LONG.
11	STANDARD W-BEAM RAIL. MULTIPLE SECTIONS REQUIRED. SECTIONS VARY IN LENGTH.
12	IMPACT HEAD
13	EAT MARKER POST - YELLOW (SEE APPROVED PRODUCTS LIST)
14	SOIL PLATE
15	UPPER POST NO. 2
16	LOWER POST NO. 2

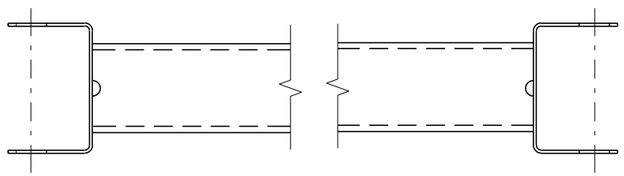

GENERIC GROUND STRUT 9 E

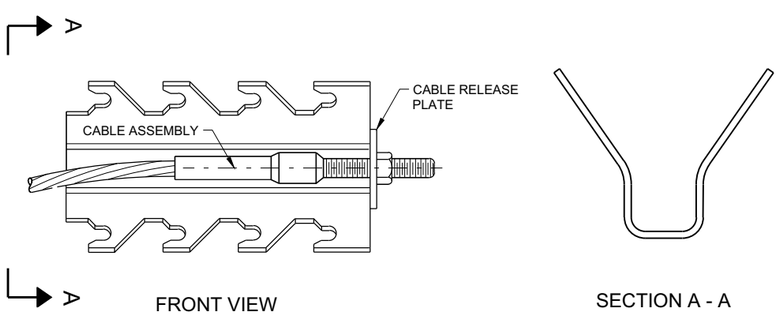

GENERIC ANCHOR CABLE BOX 9 E

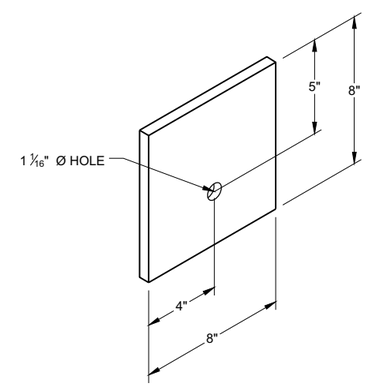

BEARING PLATE 6 E

6

6

SDD 14B44 - 04b

SDD 14B44 - 04b

MIDWEST GUARDRAIL SYSTEM ENERGY ABSORBING TERMINAL (MGS)

STATE OF WISCONSIN
DEPARTMENT OF TRANSPORTAT

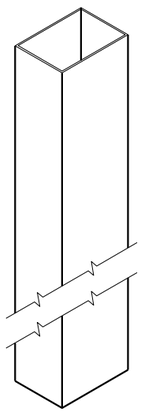

UPPER POST NO. 1 (1) (E)

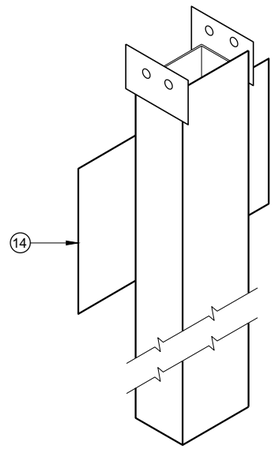

LOWER POST NO. 1 (2) (E)

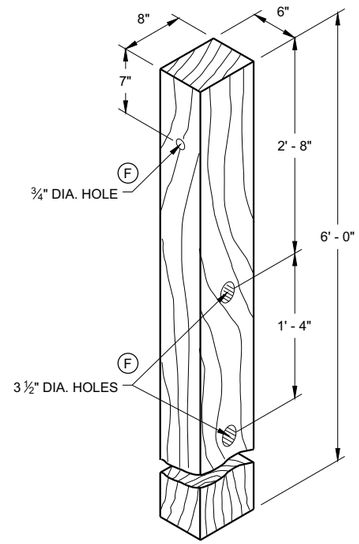

WOOD CRT POST (3) (E)
POSTS NUMBER 3-9

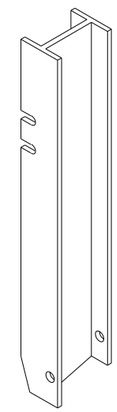

UPPER POST NO. 2 (15) (E)

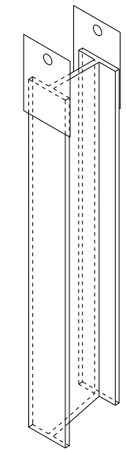

LOWER POST NO. 2 (16) (E)

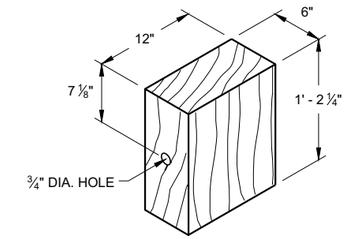

WOOD BLOCKOUT (4)
REQ'D. AT ALL POSTS EXCEPT POST NO'S 1 & 2

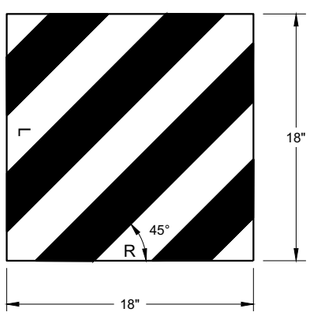

W5 - 59

REFLECTIVE SHEETING DETAIL (E)

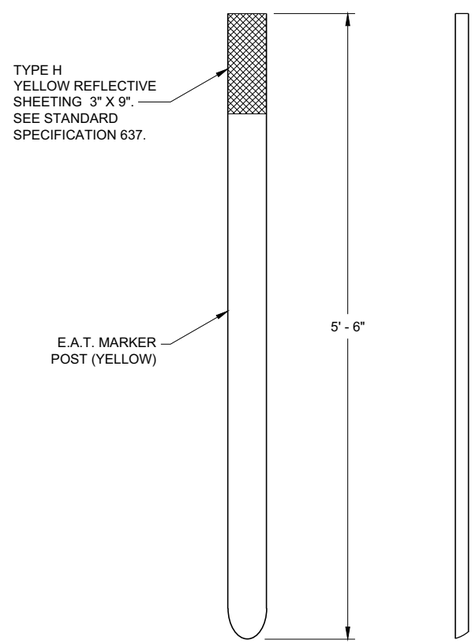

FRONT VIEW SIDE VIEW

E.A.T. MARKER POST (13)

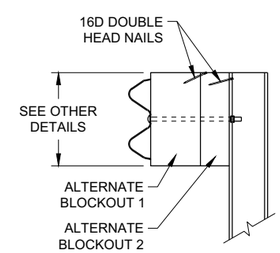

SIDE VIEW

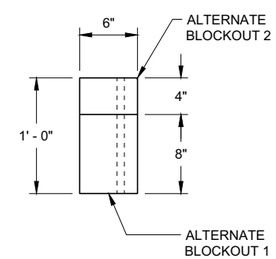

TOP VIEW

ALTERNATE WOOD BLOCKOUT DETAIL

MIDWEST GUARDRAIL SYSTEM ENERGY ABSORBING TERMINAL (MGS)

STATE OF WISCONSIN
DEPARTMENT OF TRANSPORTATION

APPROVED
7/2018 — DATE
/S/ Rodney Taylor — ROADWAY STANDARDS DEVE UNIT SUPERVISOR
FHWA

6
SDD 14B44 - 04c

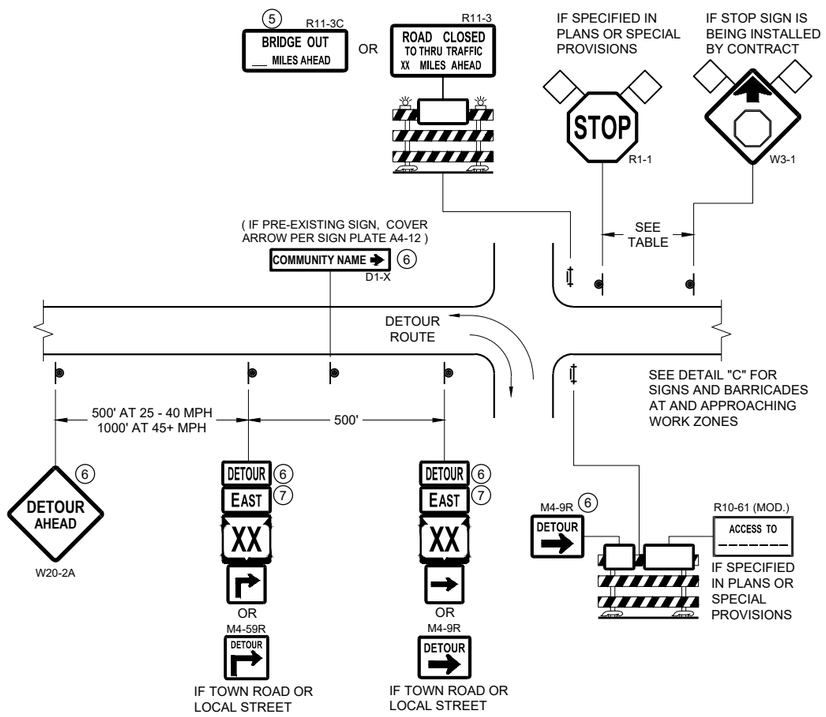

DETAIL A
MAINLINE CLOSURE WITH POSTED DETOUR

WORK ZONE GREATER THAN OR EQUAL TO ½ MILE FROM DETOUR ROUTE (1000 FEET IF URBAN)

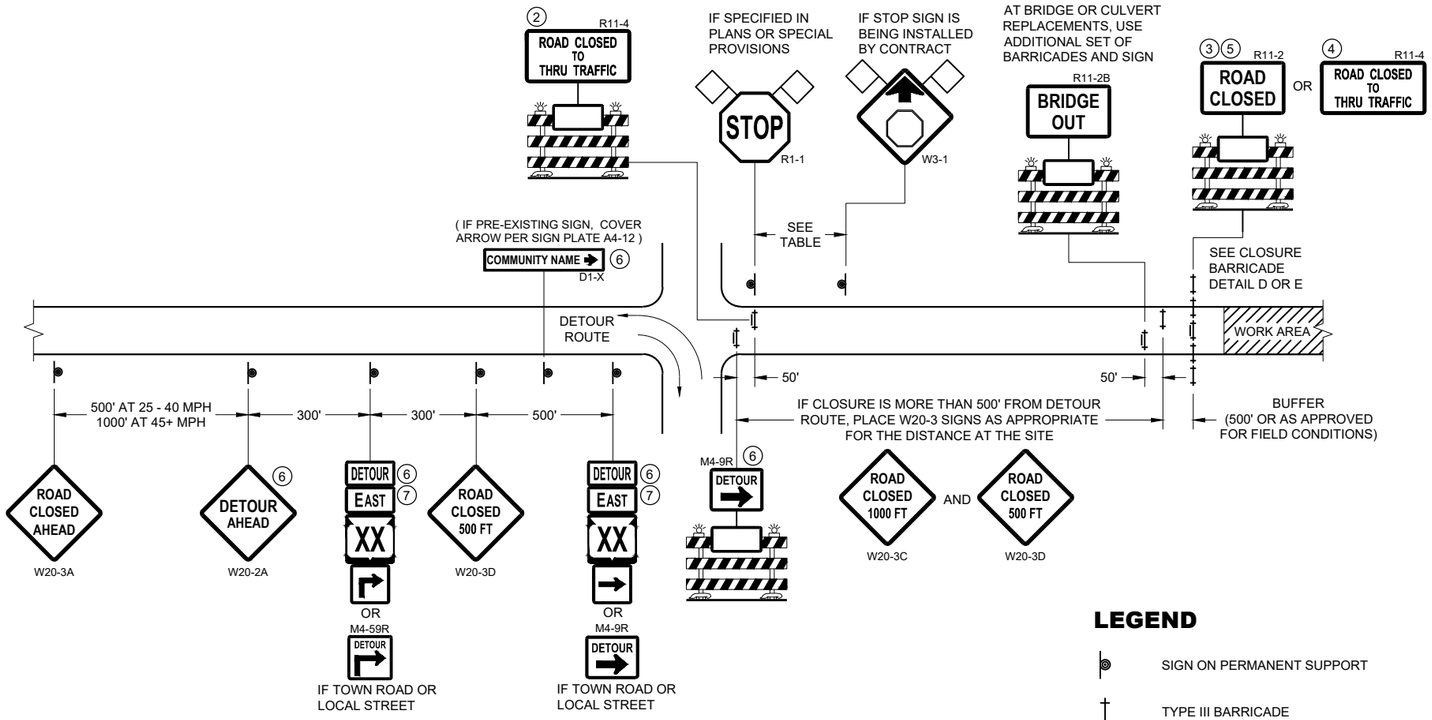

DETAIL B
MAINLINE CLOSURE WITH POSTED DETOUR

WORK ZONE LESS THAN ½ MILE FROM DETOUR ROUTE (1000 FEET IF URBAN)

LEGEND

- SIGN ON PERMANENT SUPPORT
- TYPE III BARRICADE
- TYPE III BARRICADE WITH ATTACHED SIGN
- TYPE "A" WARNING LIGHT (FLASHING)
- WORK AREA
- FLAGS, 16" X 16" MIN. (ORANGE)
- DETOUR — M4 - 8
- EAST — M3 - X
- XX (M1 - 4) OR XX (M1 - 6) OR COUNTY X (M1 - 5A)
- M05 - 1 OR M06 - 1

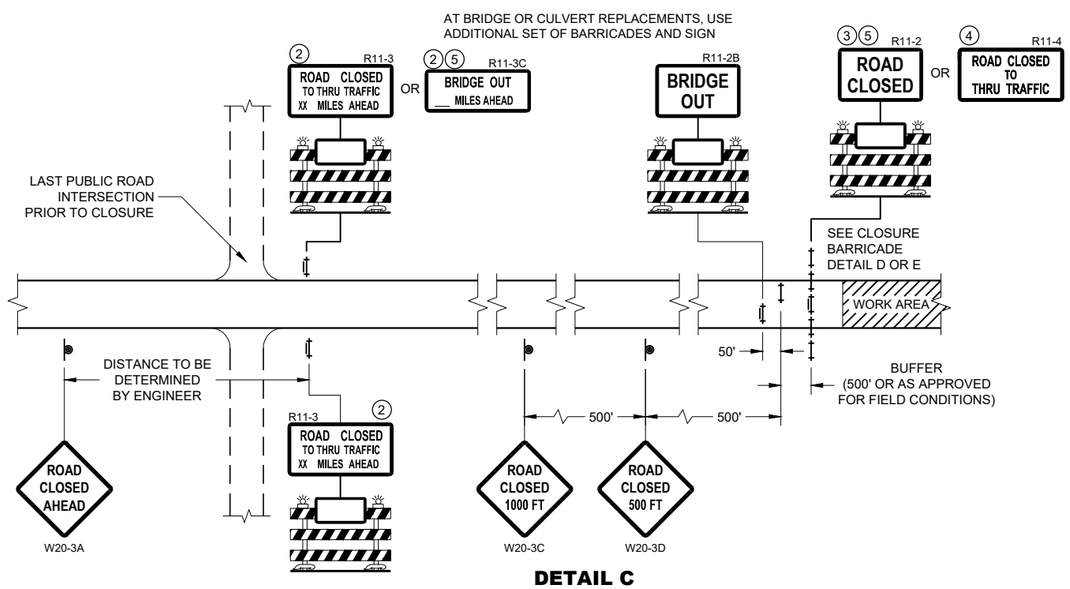

DETAIL C
MAINLINE CLOSURE, NO POSTED DETOUR

SPEED LIMIT (MPH)	"STOP AHEAD" ADVANCE WARNING DISTANCE (FT)
25	200
30	200
35	350
40	350
45	500
50	550
55	750

SEE SDD 15C2-SHEET "b" FOR GENERAL NOTES AND FOOTNOTES 1 THROUGH 7

BARRICADES AND SIGNS FOR MAINLINE CLOSURES

STATE OF WISCONSIN
DEPARTMENT OF TRANSPORTATION

APPROVED
February 2020 — DATE
/S/ Andrew Heidtke — WORK ZONE ENGINEER
FHWA

6

SDD 15C02 - 08a

THIS DRAWING PROVIDES GENERAL GUIDANCE ON TYPICAL DETOUR SIGN LAYOUT AND SPACING. SEE PROJECT DETOUR SIGNING SHEETS FOR SPECIFIC DETAILS FOR EACH PROJECT.

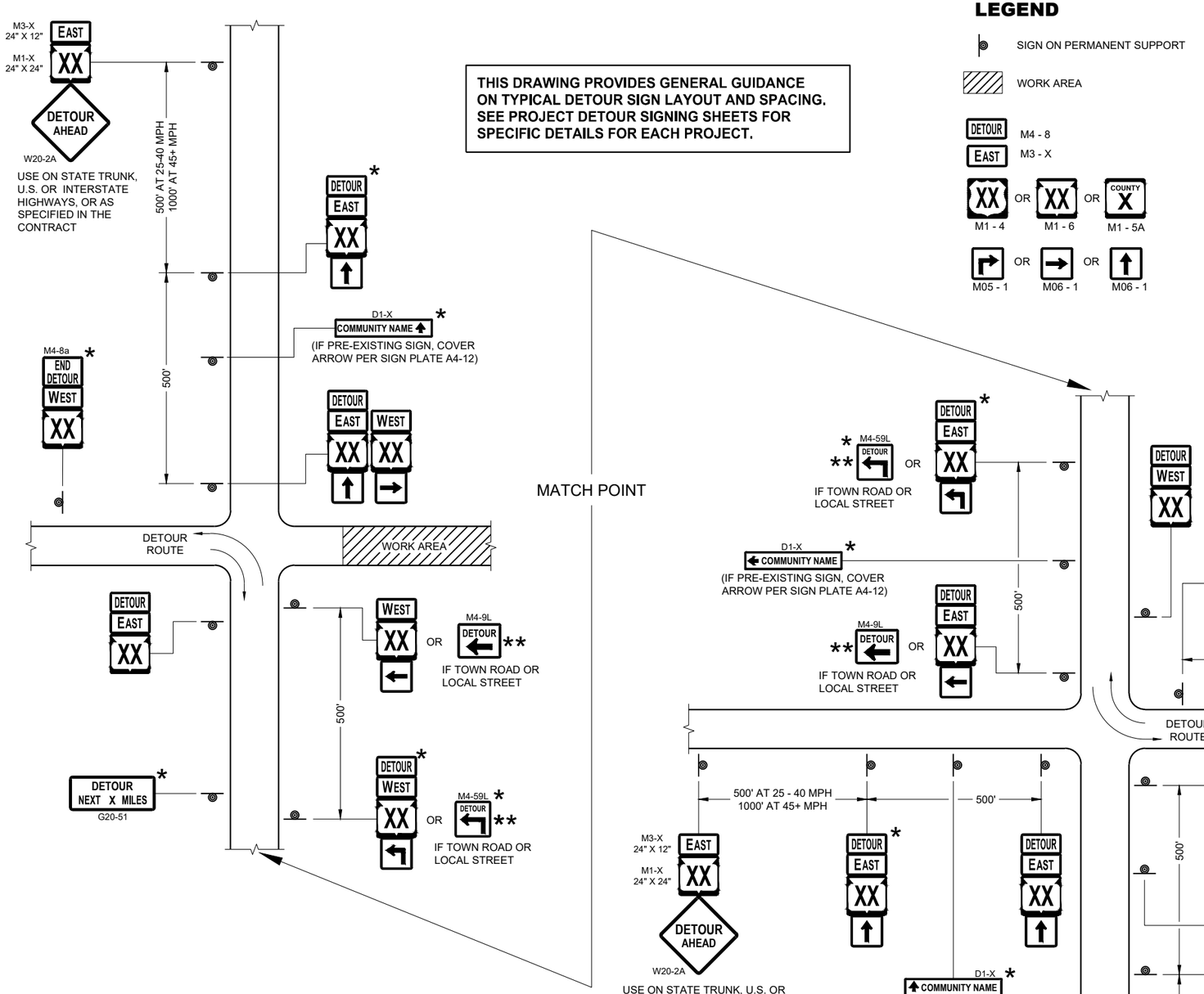

LEGEND

- SIGN ON PERMANENT SUPPORT
- WORK AREA
- DETOUR — M4 - 8
- EAST — M3 - X
- XX — M1 - 4 OR XX — M1 - 6 OR COUNTY X — M1 - 5A
- M05 - 1 OR M06 - 1 OR M06 - 1

GENERAL NOTES

THE EXACT NUMBER, LOCATION AND SPACING OF ALL SIGNS SHALL BE ADJUSTED TO FIT FIELD CONDITIONS AS APPROVED BY THE ENGINEER.

IF THERE ARE EXISTING ROUTE MARKER ASSEMBLIES THAT WILL REMAIN IN PLACE, ADJUST THE LOCATION OF THE DETOUR ROUTE SIGNS TO CORRESPOND WITH THE EXISTING ASSEMBLIES. SEE SPECIFIC PROJECT DETOUR SIGNING DETAIL SHEETS. MODIFY EXISTING SIGNS WHERE POSSIBLE.

THE SPACING BETWEEN TRAFFIC CONTROL AND DETOUR SIGNS SHOULD BE ADJUSTED TO NOT CONFLICT WITH AND TO PROVIDE A DESIRABLE MINIMUM OF 200 FEET CLEARANCE TO EXISTING SIGNS THAT WILL REMAIN IN PLACE.

ANY SIGNS TEMPORARY OR EXISTING, WHICH CONFLICT WITH TRAFFIC CONTROL "IN USE" SHALL BE REMOVED OR COVERED AS NEEDED AND AS APPROVED BY THE ENGINEER.

SIGNS THAT WILL BE IN PLACE LESS THAN 7 CONTINUOUS DAYS AND NIGHTS MAY BE MOUNTED ON PORTABLE SUPPORTS.

"MO" SIGNS ARE THE SAME AS "M" SIGNS EXCEPT THE BACKGROUND IS ORANGE.

SIGN SIZES SHALL BE AS FOLLOWS:

M3-X SHALL BE 24" X 12" (36" X 18" IF NEEDED TO MATCH EXISTING SIGNS)
M4-8 SHALL BE 24" X 12" (36" X 18" IF NEEDED TO MATCH EXISTING SIGNS)
M1-4, M1-5A AND M1-6 SHALL BE 24" X 24" (36" X 36" IF NEEDED TO MATCH EXISTING SIGNS)
M05-1 AND M06-1 SHALL BE 21" X 21" (30" X 30" IF NEEDED TO MATCH EXISTING SIGNS)
M4-9 AND M4-59 SHALL BE 30" X 24"
M4-8a SHALL BE 24" X 18"
G20-51 SHALL BE 60" X 24"
W20-2A SHALL BE 48" X 48"
D1-X SHALL BE AS SHOWN ON SPECIFIC PROJECT SIGNING DETAIL SHEETS.

* OPTIONAL SIGNS. SEE SPECIFIC PROJECT DETOUR SIGNING DETAIL SHEETS.

** FOR A TOWN ROAD OR LOCAL STREET DETOURED ONTO A STATE TRUNK HIGHWAY, PLACE A ROAD NAME PLAQUE ABOVE THE M4-9 SIGN AS SPECIFIED IN THE CONTRACT.

SEE SPECIFIC PROJECT DETOUR SIGNING DETAIL SHEETS AND DETAIL A OR B ON SDD SHEET 15C02 - SHEET "a"

DETAIL F
DETOUR SIGNING

DETOUR SIGNING FOR MAINLINE CLOSURES

STATE OF WISCONSIN
DEPARTMENT OF TRANSPORTATION

APPROVED
February 2020 — DATE
/S/ Andrew Heidtke — WORK ZONE ENGINEER
FHWA

6
SDD 15C02 - 08c

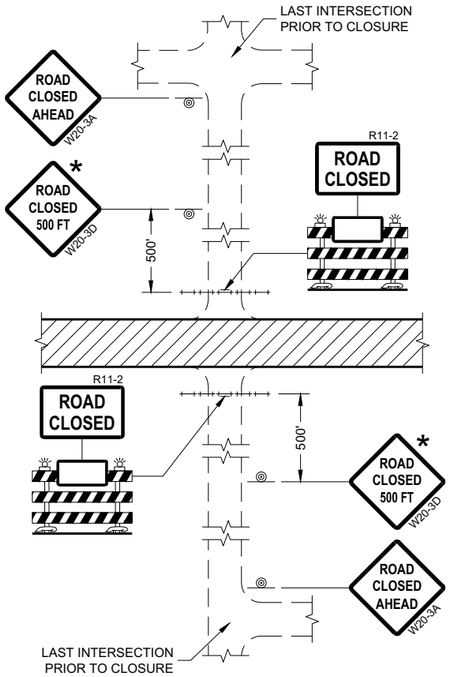

DETAIL 1
(NO ACCESS TO PROJECT)

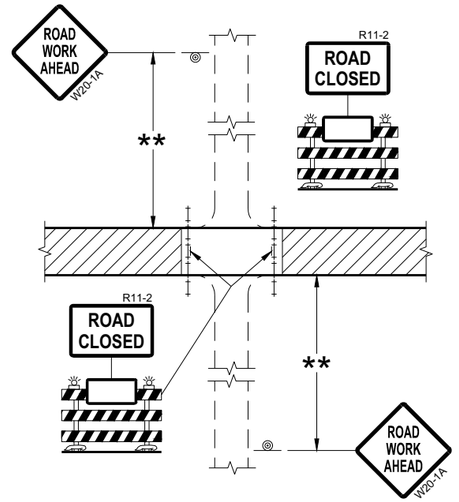

DETAIL 2
(PUBLIC CROSS-TRAFFIC MAINTAINED.
NO ACCESS TO PROJECT)

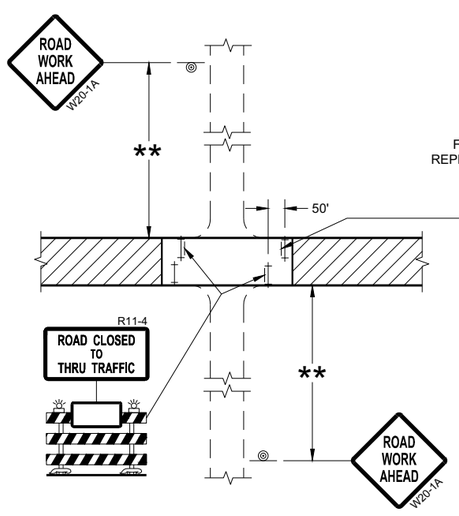

DETAIL 3
(PUBLIC CROSS-TRAFFIC MAINTAINED.
CONTRACTOR, LOCAL BUSINESS AND
RESIDENT ACCESS TO PROJECT)

FOR BRIDGE OR CULVERT
REPLACEMENT, USE ADDITIONAL
SIGN ON BARRICADE

BRIDGE OUT
XX MILES AHEAD
R11-3C

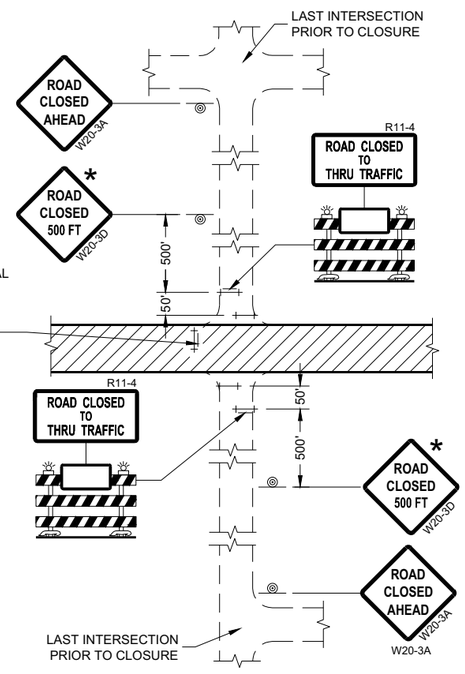

DETAIL 4
(CONTRACTOR, LOCAL BUSINESS AND
RESIDENT ACCESS TO PROJECT)

GENERAL NOTES

THE EXACT NUMBER, LOCATION, AND SPACING OF ALL SIGNS AND BARRICADES SHALL BE ADJUSTED TO FIT FIELD CONDITIONS AS APPROVED BY THE ENGINEER.

ANY SIGNS TEMPORARY OR EXISTING, WHICH CONFLICT WITH TRAFFIC CONTROL "IN USE" SHALL BE REMOVED OR COVERED AS NEEDED AND AS APPROVED BY THE ENGINEER.

THE SPACING BETWEEN TRAFFIC CONTROL SIGNS SHOULD BE ADJUSTED TO NOT CONFLICT WITH AND SHOULD PROVIDE A DESIRABLE MINIMUM OF 200 FEET CLEARANCE (500 FEET DESIRABLE) TO EXISTING SIGNS THAT WILL REMAIN IN PLACE.

IF A "STOP" SIGN MUST BE REMOVED FOR A WORK OPERATION, A TEMPORARY "STOP" SIGN SHALL BE PLACED PRIOR TO THE SIGN REMOVAL, OR A FLAGGER SHALL BE PROVIDED UNTIL THE SIGN IS REESTABLISHED.

BARRICADES THAT MUST BE MOVED FOR A WORK OPERATION SHALL BE IMMEDIATELY REESTABLISHED UPON COMPLETION OF THE OPERATION OR FOR CONTINUING OPERATIONS, AT THE END OF EACH WORKING DAY.

SIGNS THAT WILL BE IN PLACE LESS THAN SEVEN CONTINUOUS DAYS AND NIGHTS MAY BE MOUNTED ON PORTABLE SUPPORTS.

ALL TYPE III BARRICADES SHALL HAVE RAILS REFLECTORIZED ON BOTH FACES. STRIPES SHALL BE PROPERLY SLOPED DOWN TOWARD THE TRAFFIC SIDE OR AS SHOWN IN THE ROAD CLOSURE BARRICADE DETAIL "D" FOR FULL ROAD CLOSURES.

TYPE "A" LOW-INTENSITY FLASHING WARNING LIGHTS SHALL BE VISIBLE ON BOTH SIDES OF THE BARRICADE.

THE R11-2, R11-3, AND R11-4 SIGNS PLACED ON BARRICADES SHALL COVER NO MORE THAN THE TOP RAIL. THE SIGNS SHALL NOT COVER ANY PORTION OF THE MIDDLE OR BOTTOM RAILS.

ALL SIGNS SHALL BE 48" X 48" UNLESS OTHERWISE NOTED BELOW:
R11-2 SHALL BE 48" X 30".
R11-4 AND R11-3 SHALL BE 60" X 30".

* OMIT THE "ROAD CLOSED 500 FT." SIGN IF THE LAST INTERSECTION IS 500 FEET OR LESS FROM THE WORK ZONE.

** 500' MAX. OR AT LAST INTERSECTION, WHICHEVER IS CLOSEST.

LEGEND

- SIGN ON PERMANENT SUPPORT
- TYPE III BARRICADE
- TYPE III BARRICADE WITH ATTACHED SIGN
- TYPE "A" WARNING LIGHT (FLASHING)
- WORK AREA

6

6

BARRICADES AND SIGNS FOR SIDEROAD CLOSURES

STATE OF WISCONSIN
DEPARTMENT OF TRANSPORTATION

APPROVED
July 2018 — DATE
/S/ Andrew Heidtke — WORK ZONE ENGINEE
FHWA

SDD 15C03 - 05

SDD 15C03 - 05

GENERAL NOTES

THE EXACT NUMBER, LOCATION, AND SPACING OF ALL SIGNS AND DEVICES SHALL BE ADJUSTED TO FIT FIELD CONDITIONS.

THE SPACING BETWEEN TRAFFIC CONTROL SIGNS SHOULD BE ADJUSTED TO NOT CONFLICT WITH AND SHOULD PROVIDE A MINIMUM OF 200 FEET (500 FEET DESIRABLE) CLEARANCE TO EXISTING SIGNS THAT WILL REMAIN IN PLACE.

ALL SIGNS ARE 48" X 48" UNLESS OTHERWISE NOTED.

SIGNS THAT WILL BE IN PLACE LESS THAN SEVEN CONTINUOUS DAYS AND NIGHTS MAY BE MOUNTED ON PORTABLE SUPPORTS.

IF A "STOP" SIGN MUST BE REMOVED FOR A WORK OPERATION, A TEMPORARY "STOP" SIGN SHALL BE PLACED PRIOR TO THE SIGN REMOVAL, OR A FLAGGER SHALL BE PROVIDED UNTIL THE SIGN IS REESTABLISHED.

* OMIT G20-1 SIGNS IF LENGTH OF WORK AREA IS 2 MILES OR LESS

** PLACE AN ADDITIONAL W20-1A "ROAD WORK AHEAD" SIGN IF WORK AREA WITHIN THE PROJECT IS SEPARATED BY MORE THAN 2 MILES FROM PREVIOUS WORK AREA.

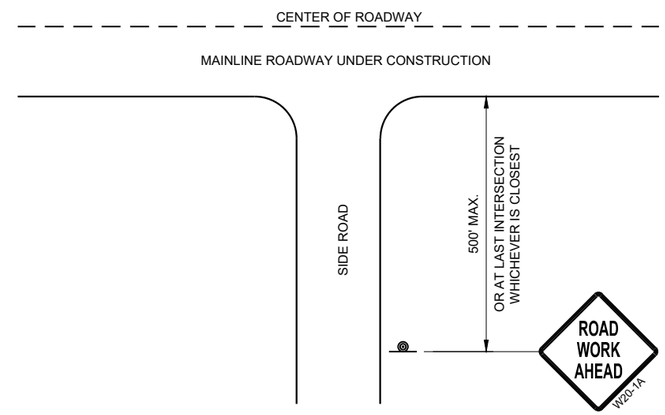

TYPICAL SIDE ROAD APPROACH WARNING SIGN DETAIL

LEGEND

- SIGN ON PERMANENT SUPPORT
- DIRECTION OF TRAFFIC
- WORK AREA

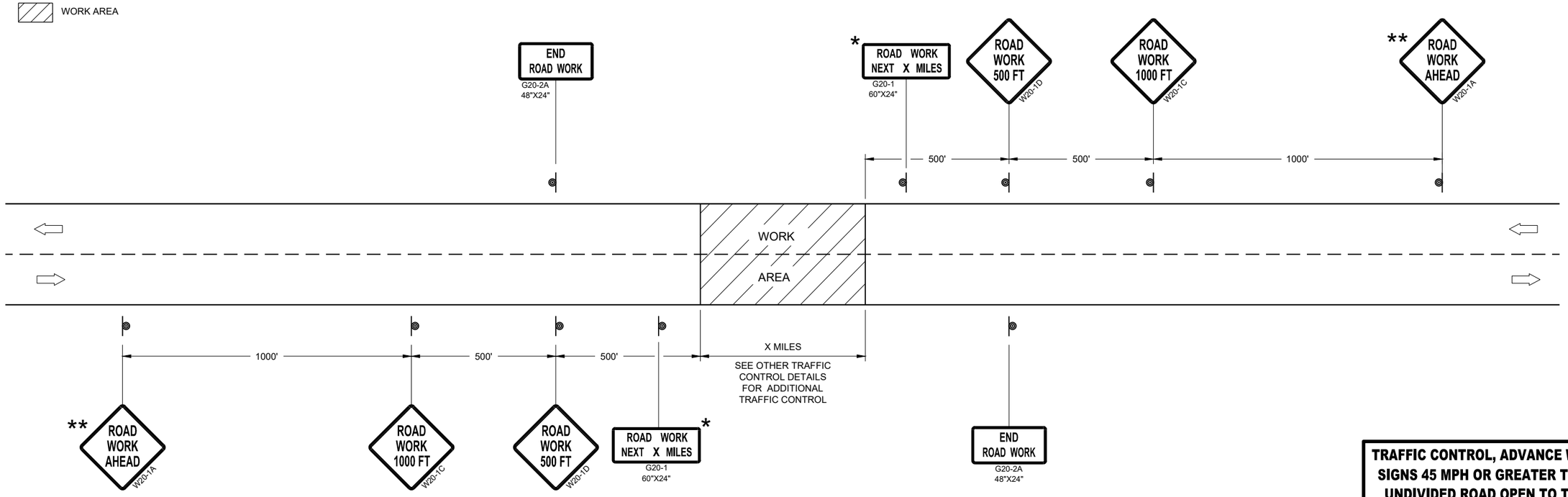

TRAFFIC CONTROL, ADVANCE WARNING SIGNS 45MPH OR GREATER

TRAFFIC CONTROL, ADVANCE WARNING SIGNS 45 MPH OR GREATER TWO-WAY UNDIVIDED ROAD OPEN TO TRAFFIC

STATE OF WISCONSIN
DEPARTMENT OF TRANSPORTATION

APPROVED
July 2018 — DATE
/S/ Andrew Heidtke — WORK ZONE ENGINEE
FHWA

6
SDD 15C04 - 05

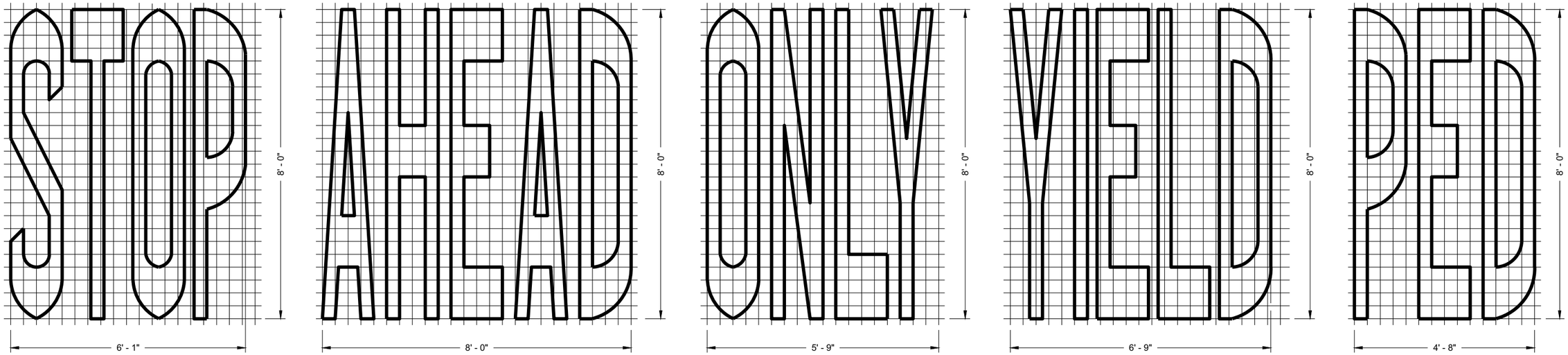

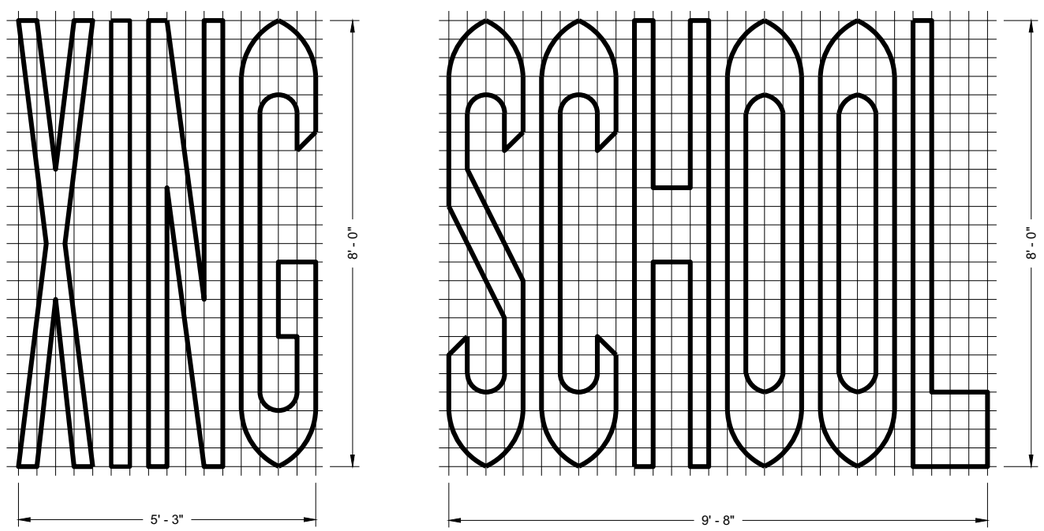

SINGLE LANE

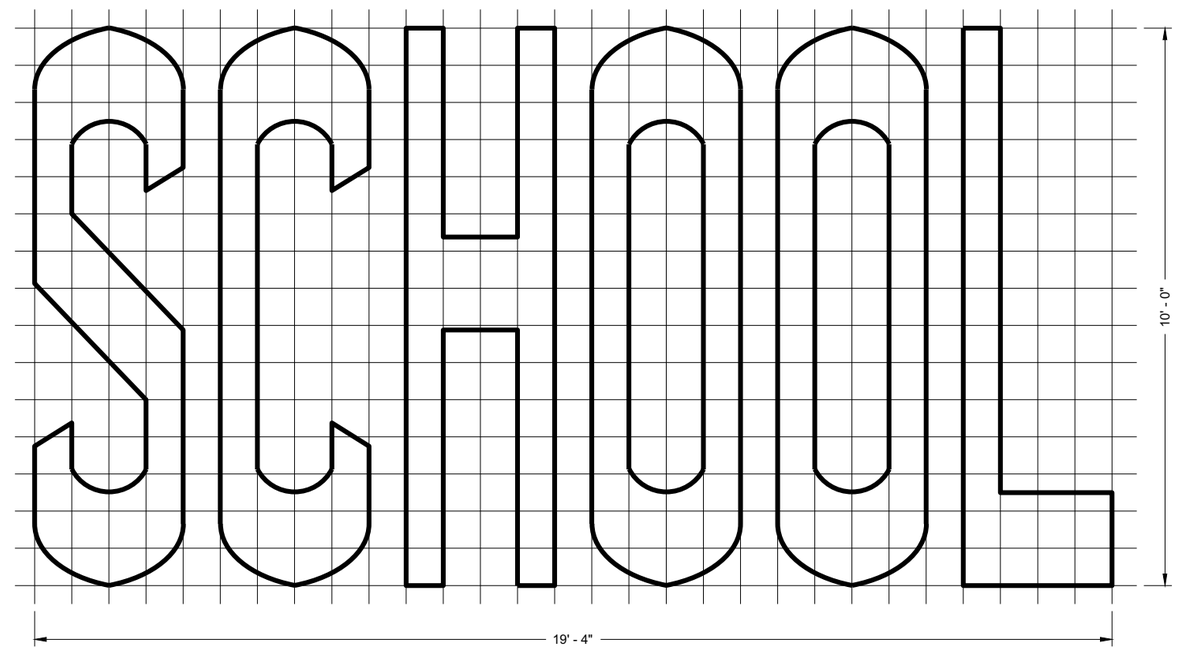

TWO - LANE

6

6

GENERAL NOTES

DETAILS OF INSTALLATION, MATERIALS AND WORKMANSHIP NOT SHOWN ON THIS DRAWING SHALL CONFORM TO THE PERTINENT REQUIREMENTS OF THE STANDARD SPECIFICATIONS AND APPLICABLE SPECIAL PROVISIONS.

PAVEMENT MARKING WORDS

STATE OF WISCONSIN
DEPARTMENT OF TRANSPORTATION

APPROVED

November 2019
DATE

/S/ Matthew Rauch
STATE SIGNING AND MAF ENGINEER

FHWA

SDD 15C07 - 15b

SDD 15C07 - 15b

GENERAL NOTES

DETAILS OF INSTALLATION, MATERIALS AND WORKMANSHIP NOT SHOWN ON THIS DRAWING SHALL CONFORM TO THE PERTINENT REQUIREMENTS OF THE STANDARD SPECIFICATIONS AND APPLICABLE SPECIAL PROVISIONS.

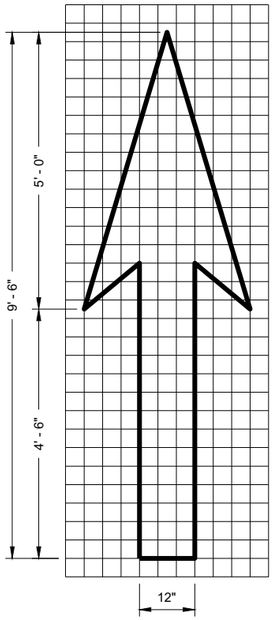

TYPE 1

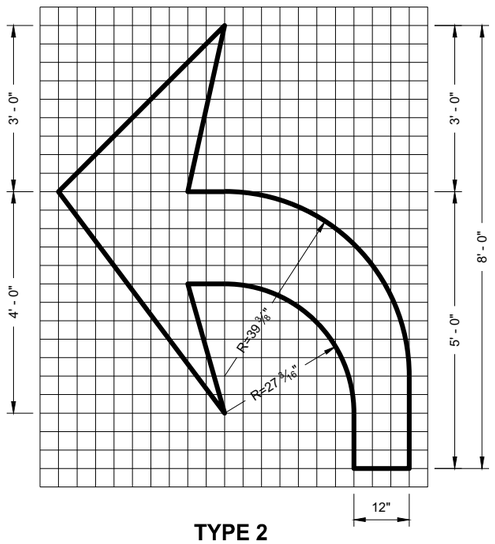

TYPE 2

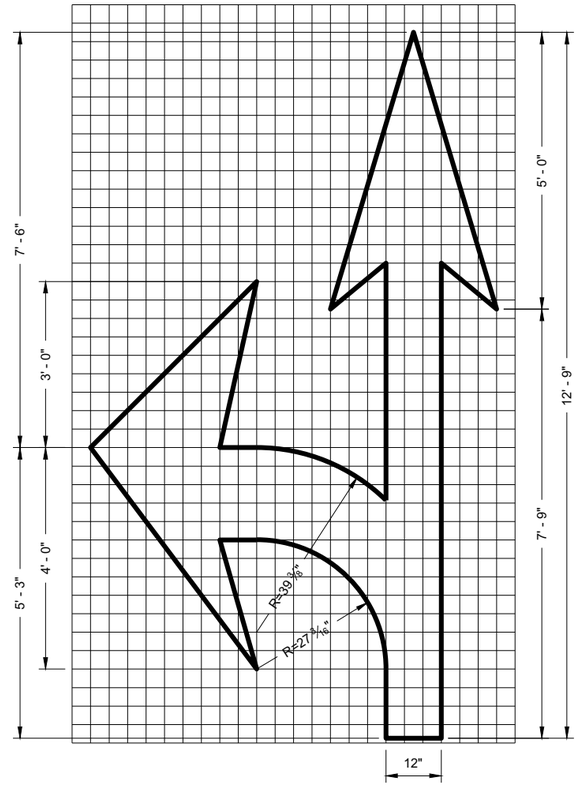

TYPE 3

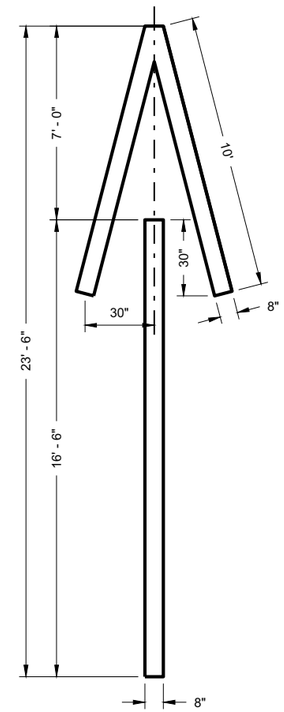

TYPE 4

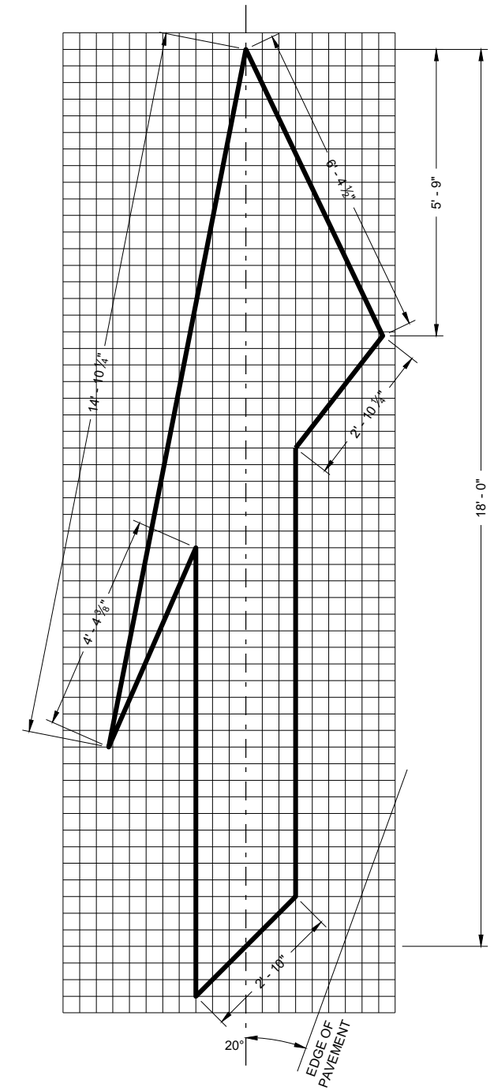

TYPE 5 LANE DROP ARROW

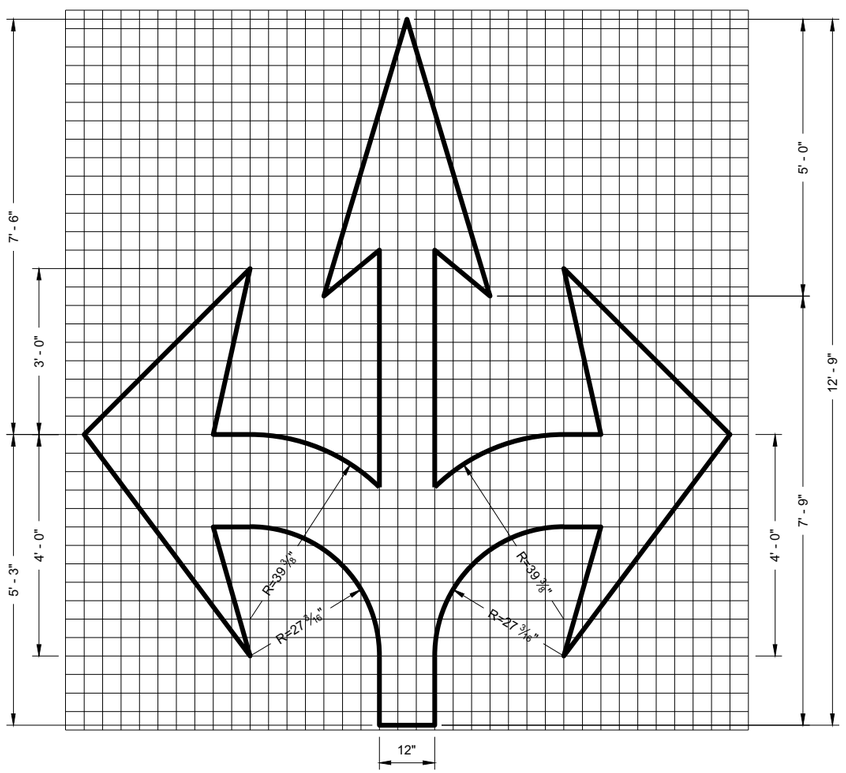

TYPE 6

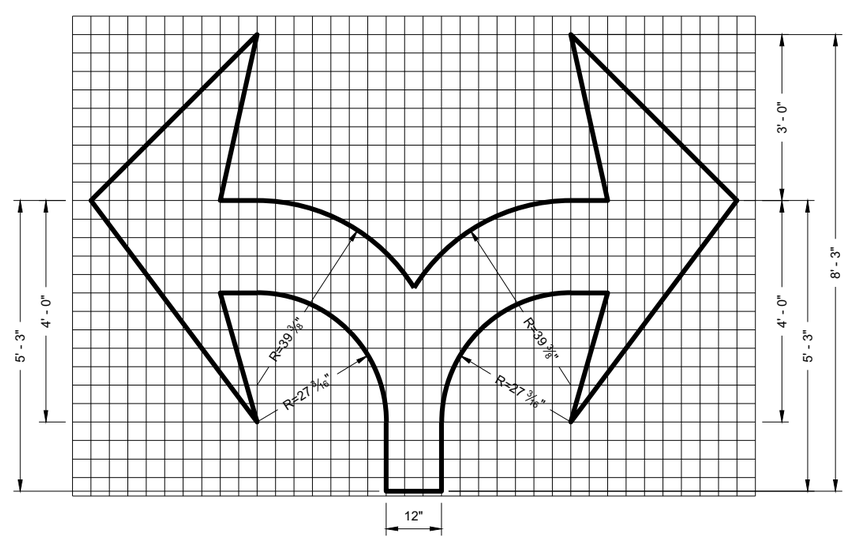

TYPE 7

6

6

PAVEMENT MARKING ARROWS

STATE OF WISCONSIN
DEPARTMENT OF TRANSPORTATION

APPROVED
November 2019 — DATE
/S/ Matthew Rauch — STATE SIGNING AND MAR ENGINEER
FHWA

SDD 15C07 - 15c

GENERAL NOTES

DETAILS OF CONSTRUCTION NOT SHOWN ON THIS DRAWING SHALL CONFORM TO STANDARD SPECIFICATIONS AND SPECIAL PROVISIONS.

1. LOCATE THE NO PASSING ZONE W14-3 SIGN WITHIN 50 FEET OF THE "T" MARKING
2. MEASURE FROM EDGE OF MARKING TO JOINT LINE. THIS DOES NOT INCLUDE SPACE NEEDED FOR GROOVING OPERATIONS.

LEGEND

"T" MARKING

SIGN ON PERMANENT SUPPORT

DIRECTION OF TRAFFIC

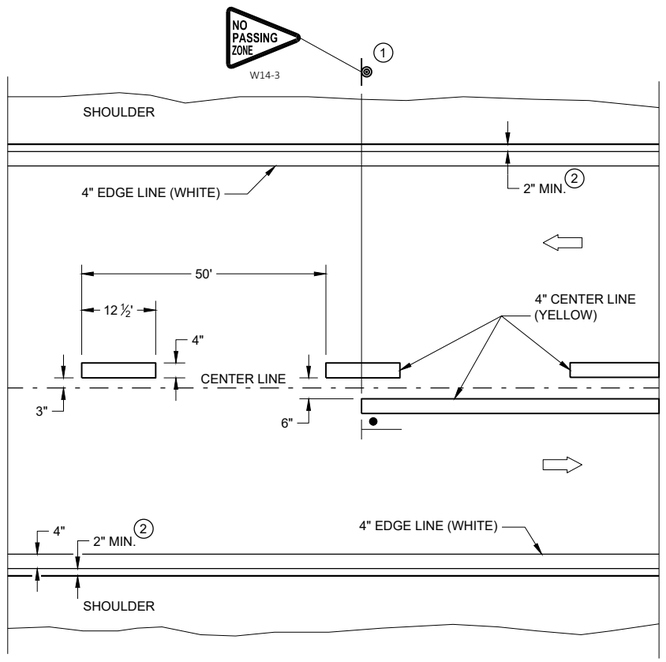

TWO WAY TRAFFIC

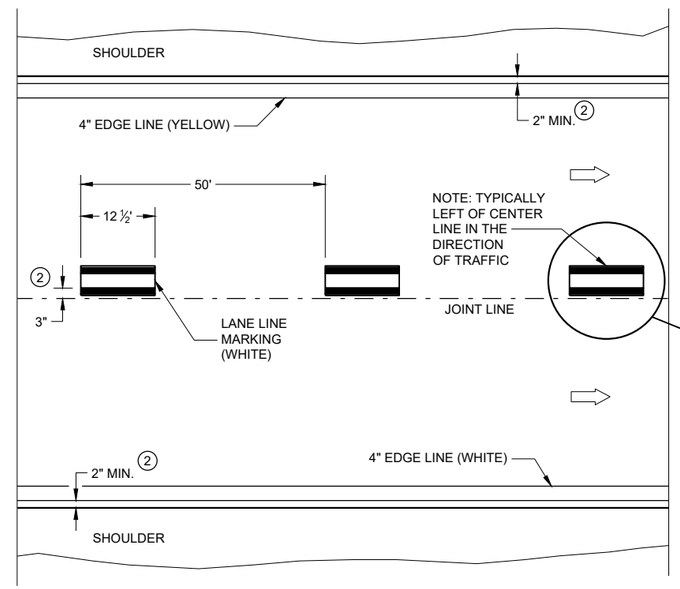

ONE WAY TRAFFIC

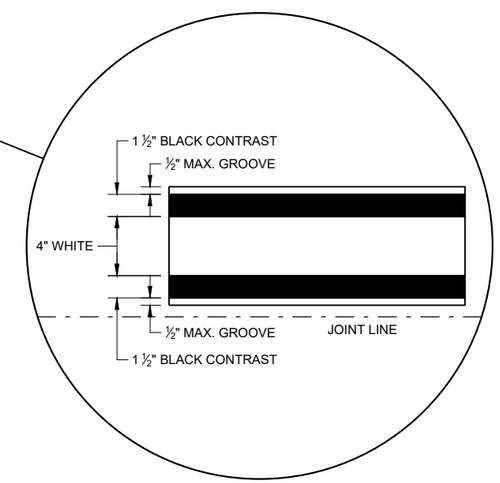

PERMANENT PAVEMENT MARKING

6

6

SDD 15C08 - 21a

SDD 15C08 - 21a

PERMANENT LONGITUDINAL PAVEMENT MARKINGS

STATE OF WISCONSIN
DEPARTMENT OF TRANSPORTATION

APPROVED
May 2022 — DATE
/S/ Jeannie Silver — STATEWIDE SIGNING AND M ENGINEER

FHWA

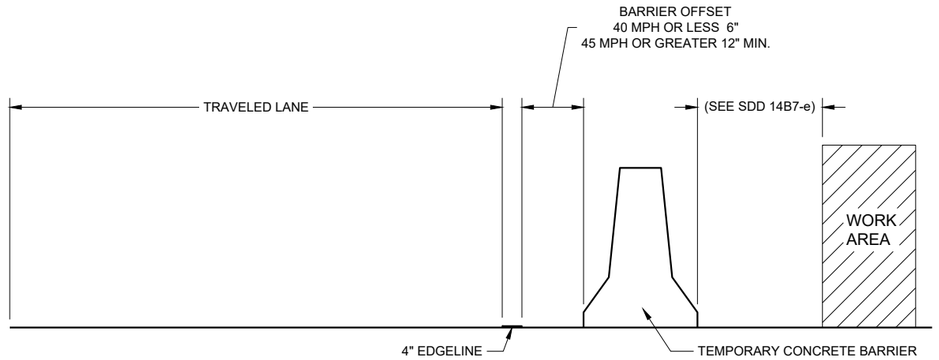

TEMPORARY BARRIER OFFSET FROM EDGELINE

GENERAL NOTES

DETAILS OF CONSTRUCTION NOT SHOWN ON THIS DRAWING SHALL CONFORM TO STANDARD SPECIFICATIONS AND SPECIAL PROVISIONS.

LEGEND

⇨ DIRECTION OF TRAFFIC

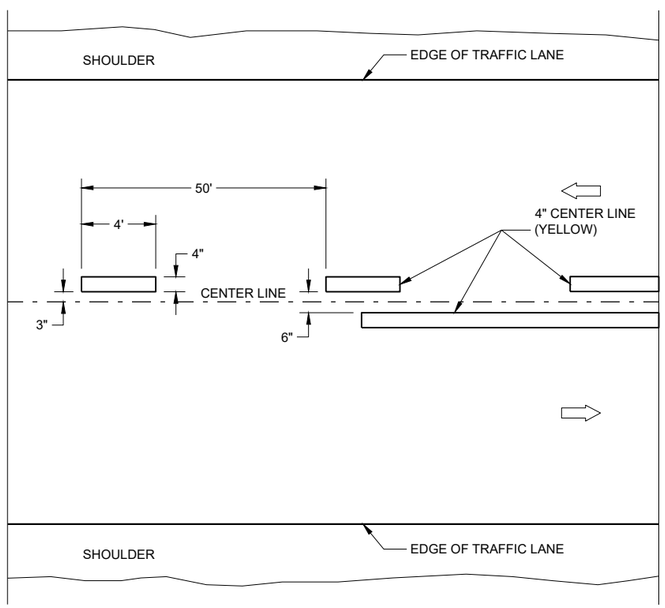

TWO WAY TRAFFIC

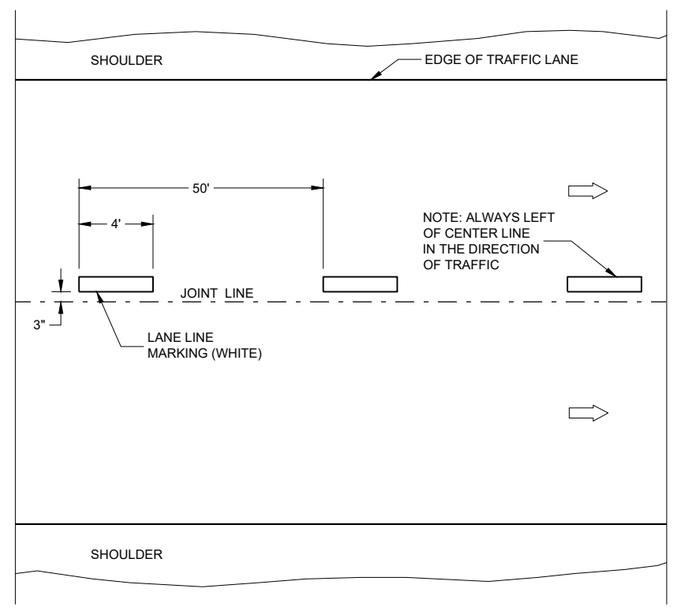

ONE WAY TRAFFIC

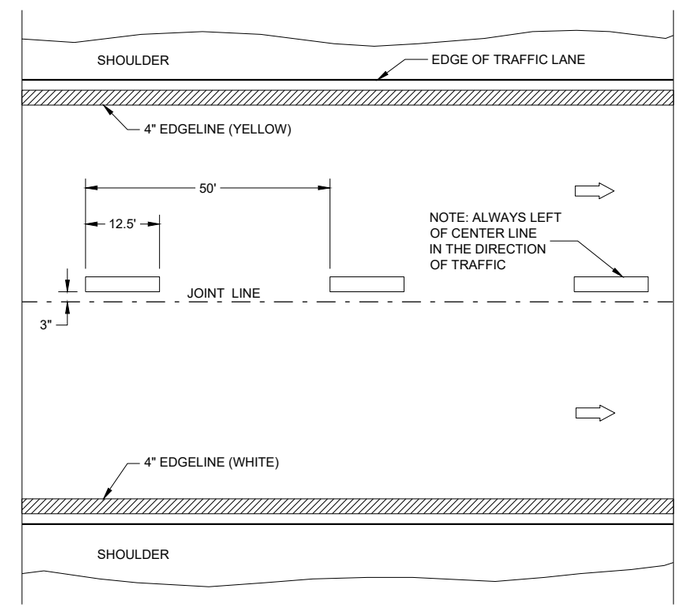

FREEWAYS AND EXPRESSWAYS

TEMPORARY PAVEMENT MARKING

6

SDD 15C08 - 21b

TEMPORARY LONGITUDINAL PAVEMENT MARKING

STATE OF WISCONSIN
DEPARTMENT OF TRANSPORTATION

APPROVED
May 2022 — DATE
/S/ Jeannie Silver — STATEWIDE SIGNING AND M ENGINEER
FHWA

6

SDD 15C08 - 21b

GENERAL NOTES

1. A SET OF ARROWS IS REQUIRED EVERY 400 FEET OR NEAR INTERSECTIONS OR DRIVEWAYS WITH TURNING TRAFFIC.
2. 8" WHITE
3. TURN BAY LENGTH OF LESS THAN 48' DOES NOT REQUIRE PAVEMENT ARROWS OR TEXT.

DIRECTION OF TRAFFIC

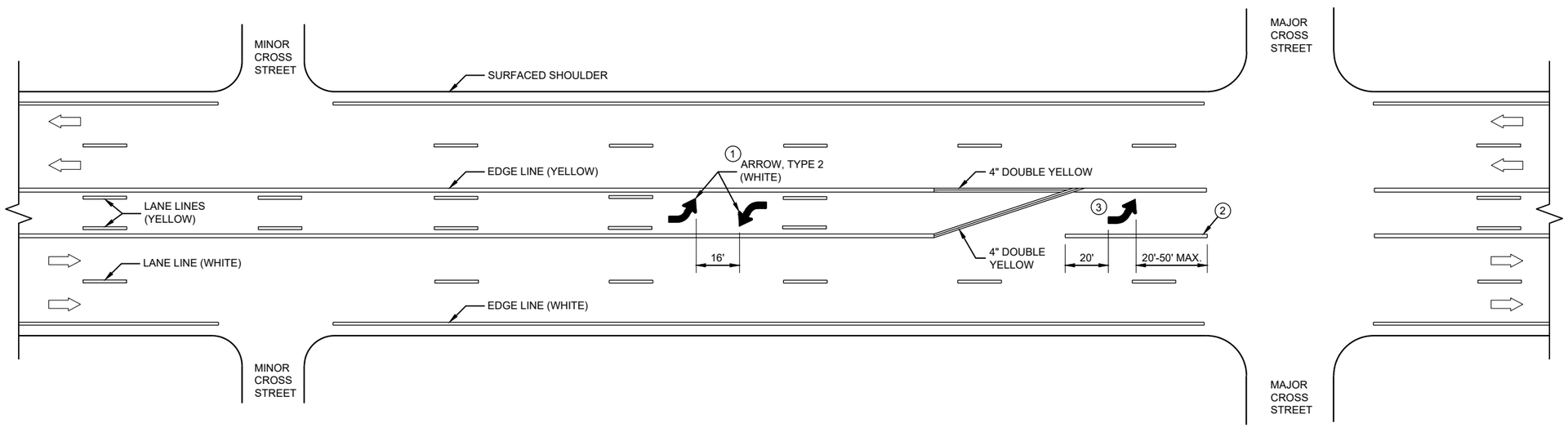

TWO WAY LEFT TURN LANE

6

6

SDD 15C08 - 21c

SDD 15C08 - 21c

PAVEMENT MARKING (TURN LANES)

STATE OF WISCONSIN
DEPARTMENT OF TRANSPORTAT

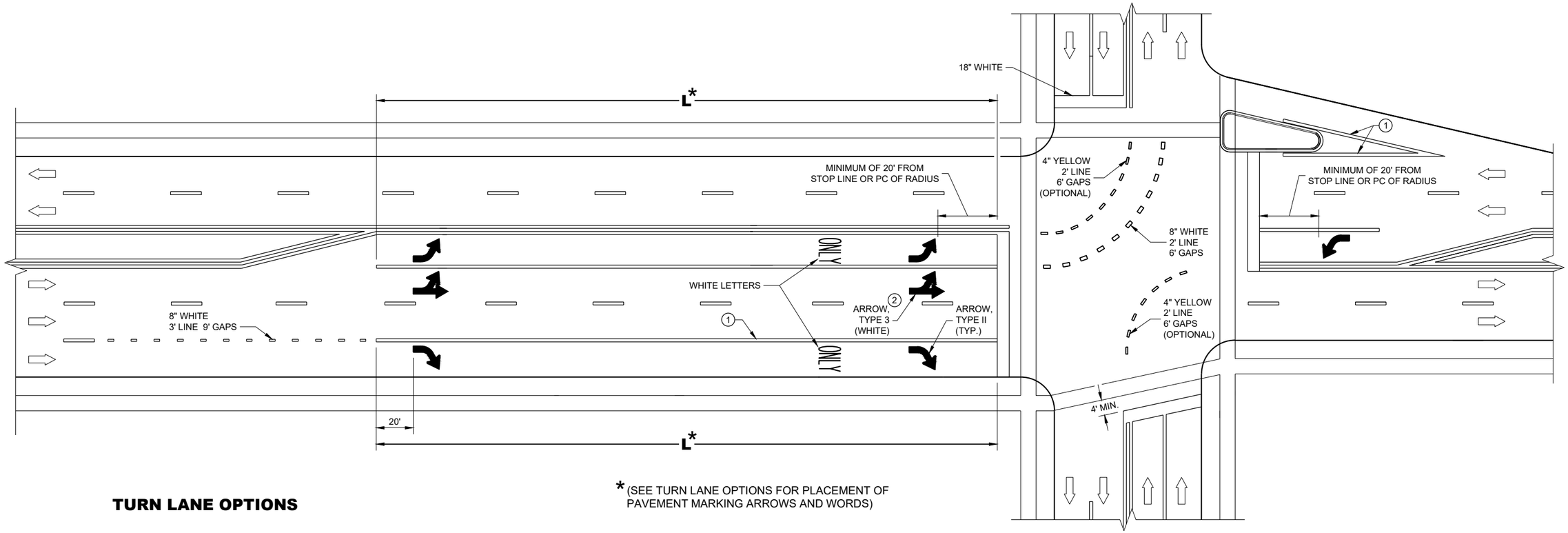

*(SEE TURN LANE OPTIONS FOR PLACEMENT OF PAVEMENT MARKING ARROWS AND WORDS)

TURN LANE OPTIONS

LENGTH OF TURN BAY (L) OF 0 - 47' DOES NOT REQUIRE PAVEMENT MARKING ARROWS OR WORDS

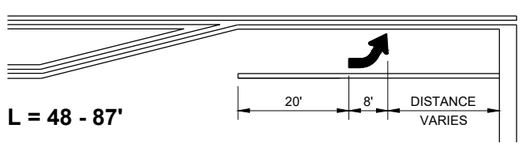

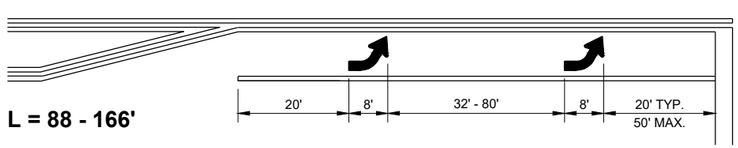

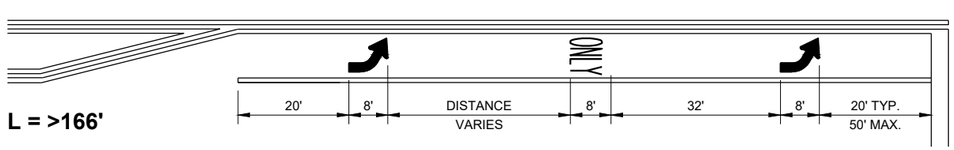

GENERAL NOTES

1. 8" WHITE
2. QUANTITY AND LOCATION OF TYPE 3 ARROWS ARE THE SAME AS THE TYPE II ARROWS IN THE ADJACENT TURN LANE. FOR TURN LANES WITH A PHYSICAL SEPARATION IN THE SAME DIRECTION OF TRAVEL, THE ARROWS AND "ONLY" MARKING MAY BE ELIMINATED.

⇨ DIRECTION OF TRAFFIC

L = LENGTH OF TURN BAY

PAVEMENT MARKING (TURN LANES)

STATE OF WISCONSIN
DEPARTMENT OF TRANSPORTA

6

SDD 15C08 - 21d

GENERAL NOTES

1. REFLECTIVE SHEETING SHALL FOLLOW THE REQUIREMENTS IN THE APPROVED PRODUCTS LISTING FOR SIGN SHEETING.
2. LOCATION OF WARNING LIGHTS WHEN SHOWN ON THE PLAN.

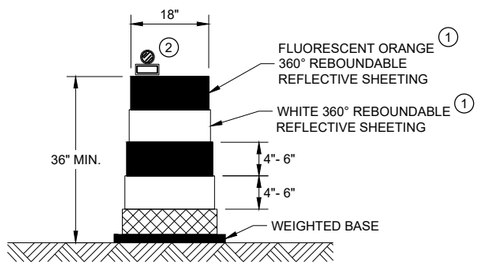

DRUM

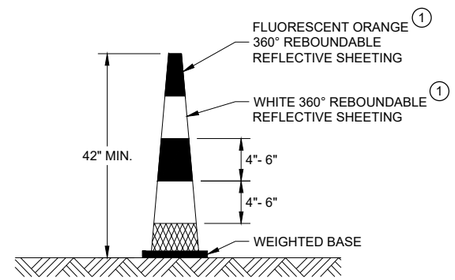

42" CONE

DO NOT USE IN TAPERS
½ SPACING OF DRUMS

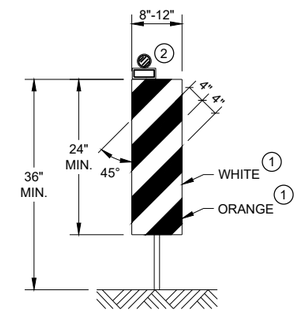

VERTICAL PANEL

THE STRIPES SHALL SLOPE DOWNWARD TO
THE TRAFFIC SIDE FOR CHANNELIZATION.

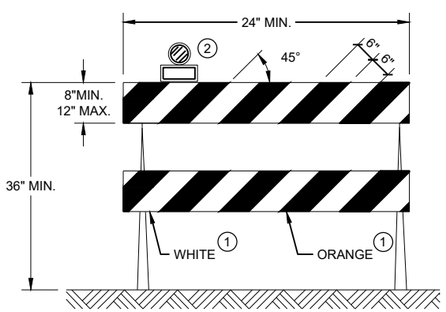

TYPE II BARRICADE

FOR RAILS LESS THAN 36" LONG, 4" WIDE STRIPES
MAY BE USED. ALL STRIPES SHALL SLOPE DOWNWARD
TO THE TRAFFIC SIDE FOR CHANNELIZATION.

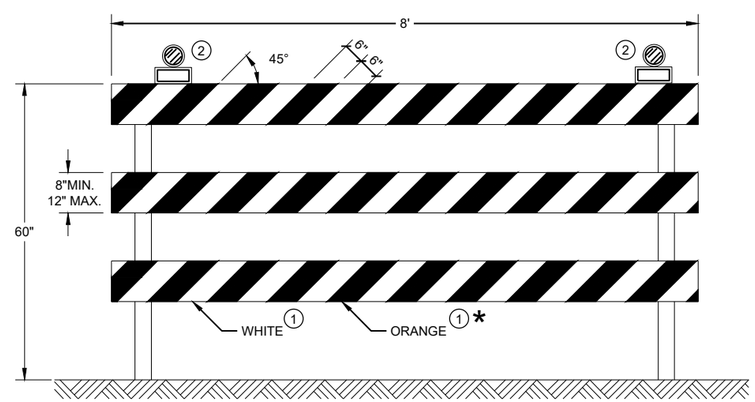

TYPE III BARRICADE

IF SIGN MOUNTED, DO NOT COVER MORE THAN 50% OF THE TOP
TWO RAILS OR 33% OF THE TOTAL AREA OF THE THREE RAILS.

* IF USED FOR A PERMANENT APPLICATION USE RED SHEETING.

CHANNELIZING DEVICES DRUMS, CONES, BARRICADES AND VERTICAL PANELS

STATE OF WISCONSIN
DEPARTMENT OF TRANSPORTATION

APPROVED
May 2021 — DATE
/S/ Andrew Heidtke — WORK ZONE ENGINEE
FHWA

6
SDD 15C11 - 09b

LEGEND

SIGN ON PORTABLE OR PERMANENT SUPPORT

TEMPORARY PORTABLE RUMBLE STRIP ARRAY

DIRECTION OF TRAFFIC

WORK AREA

FLAGGER, EQUIPPED WITH STOP/SLOW PADDLE FASTENED ON SUPPORT STAFF

GENERAL NOTES

DETAILS OF TRAFFIC CONTROL DEVICES AND INSTALLATION NOT SHOWN ON THIS DRAWING SHALL CONFORM TO THE PERTINENT REQUIREMENTS OF THE STANDARD SPECIFICATIONS, THE SPECIAL PROVISIONS, AND THE MANUAL ON UNIFORM TRAFFIC CONTROL DEVICES.

ALL SIGNS ARE 48" X 48" UNLESS OTHERWISE NOTED.

"WO" SIGNS ARE THE SAME AS "W" SIGNS EXCEPT THE BACKGROUND IS ORANGE.

THE EXACT NUMBER, LOCATION AND SPACING OF ALL SIGNS, DEVICES, AND LOCATION OF ALL FLAGGERS SHALL BE ADJUSTED TO FIT FIELD CONDITIONS AS APPROVED BY THE ENGINEER.

THE FIRST ADVANCE WARNING SIGN SHOULD TYPICALLY BE LOCATED IN ADVANCE OF THE ANTICIPATED TRAFFIC BACKUP OR QUEUE.

WHEN A SIDE ROAD OR RAMP INTERSECTS THE FACILITY ON WHICH THE WORK IS BEING PERFORMED, ADDITIONAL TRAFFIC CONTROLS SHALL BE PROVIDED AS SPECIFIED IN THE PLANS AND/OR THE SPECIAL PROVISIONS OR AS APPROVED BY THE ENGINEER.

FLAGGING

FLAGGERS SHALL BE IN SIGHT OF EACH OTHER OR IN DIRECT COMMUNICATION AT ALL TIMES. THEY SHALL BE EQUIPPED WITH STOP/SLOW PADDLES FASTENED ON SUPPORT STAFFS. WHEN THE FLAGGING OPERATION IS NOT IN EFFECT REMOVE TEMPORARY PORTABLE RUMBLE STRIPS PRIOR TO COVERING OR REMOVING ALL ADVANCE SIGNING.

(1) FOR MOVING WORK OPERATIONS, POST ADDITIONAL W20-7A FLAGGER SIGNS AT APPROXIMATELY 3,500' INTERVALS IN THE MOVING WORK OPERATION OR AS APPROVED BY THE ENGINEER.

(2) SIGN NOT REQUIRED IF FLAGGING OPERATION OCCURS WITHIN A SIGNED ROAD WORK ZONE AREA.

WHEN THE DISTANCE BETWEEN FLAGGERS EXCEEDS 2 MILES, A PILOT CAR IS REQUIRED. WHEN CURVES REDUCE SIGHT DISTANCE BELOW 400', A PILOT CAR IS REQUIRED.

TEMPORARY PORTABLE RUMBLE STRIPS

UTILIZE TEMPORARY PORTABLE RUMBLE STRIPS ON ALL FLAGGING OPERATIONS.

(3) EACH TEMPORARY PORTABLE RUMBLE STRIP ARRAY CONSISTS OF THREE RUMBLE STRIPS PLACED TRANSVERSE ACROSS THE LANE AT THE LOCATIONS SHOWN. WITHIN EACH ARRAY, SPACING BETWEEN RUMBLE STRIPS SHALL BE 15 FEET ON CENTER

ONLY USE TEMPORARY PORTABLE RUMBLE STRIPS FROM THE APPROVED PRODUCTS LIST.

INSTALL TEMPORARY RUMBLE STRIPS PER MANUFACTURER'S RECOMMENDATIONS.

PLACE ADVANCE SIGNING PRIOR TO INSTALLING TEMPORARY RUMBLE STRIPS.

DO NOT INSTALL TEMPORARY PORTABLE RUMBLE STRIPS ON GRAVEL, MILLED SURFACES, OR ASPHALT THAT HAS BEEN PAVED LESS THAN 12 HOURS.

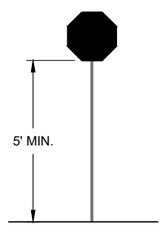

STOP/SLOW PADDLE ON SUPPORT STAFF

SIGN AND TEMPORARY RUMBLE STRIP ARRAY SPACING TABLE

SPEED LIMIT	SPACING "A"
25-30 MPH	200'
35-40 MPH	350'
45-55 MPH	500'

USE OF WO3-4 SIGN IS OPTIONAL. WHEN USED, THIS SIGN SHALL BE LOCATED BETWEEN THE W20-7A AND W20-4A SIGNS, USING SPACING "A".

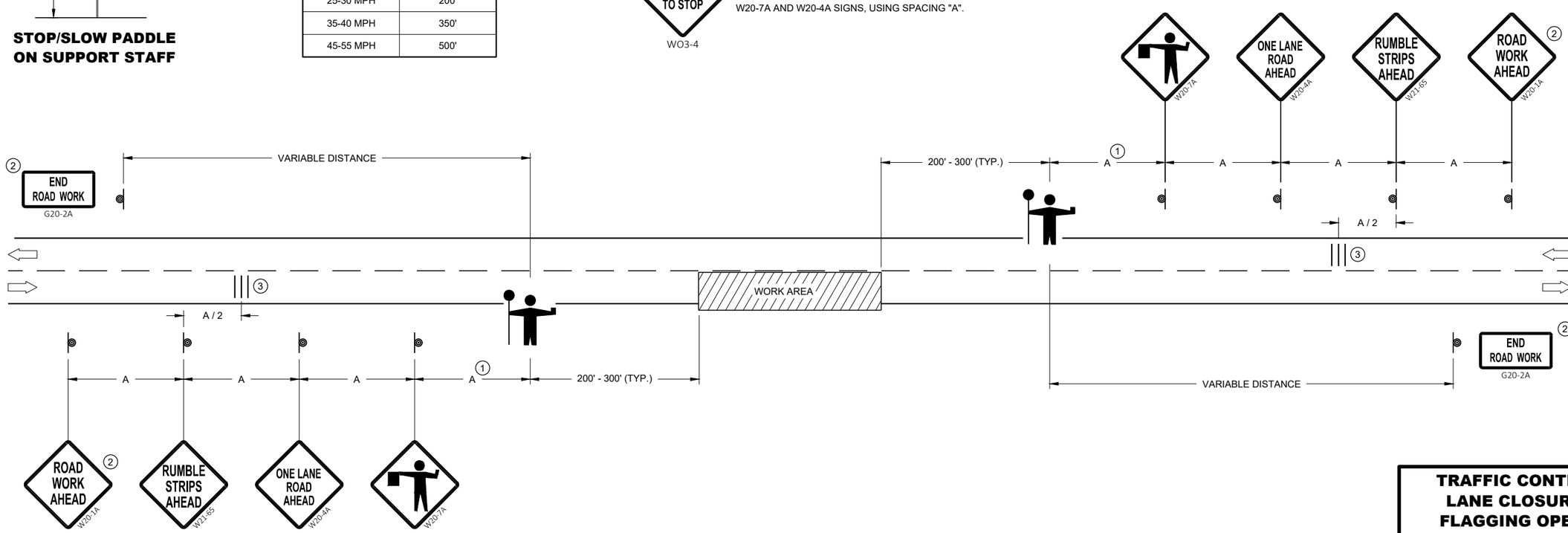

TRAFFIC CONTROL FOR LANE CLOSURE WITH FLAGGING OPERATION

STATE OF WISCONSIN
DEPARTMENT OF TRANSPORTATION

APPROVED
May 2022 — DATE
/S/ Andrew Heidtke — WORK ZONE ENGINEE
FHWA

6

SDD 15C12 - 09a

6

SDD 15C12 - 09a

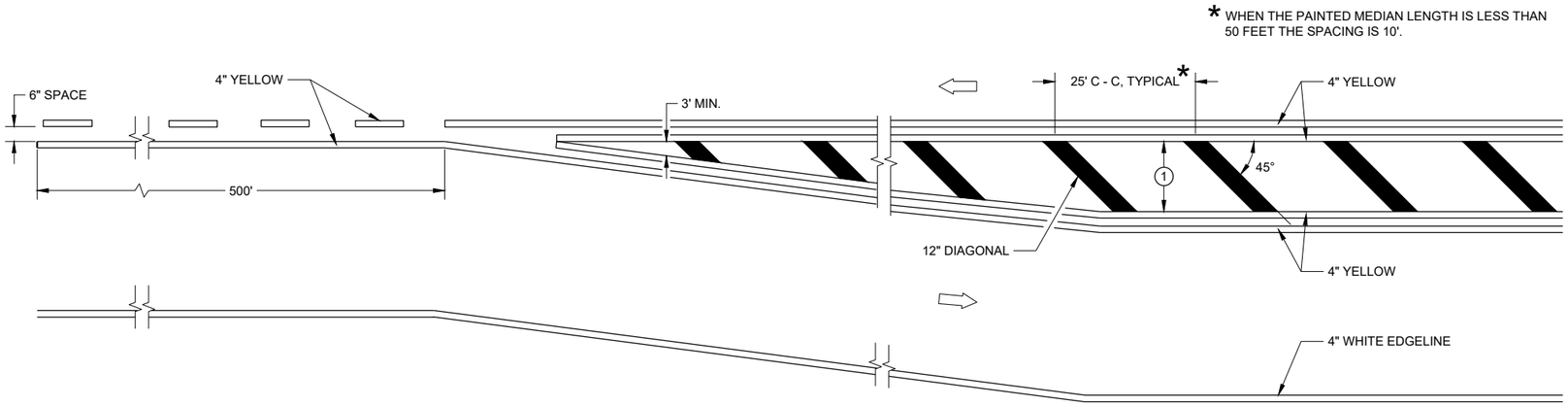

MEDIAN ISLAND DETAIL

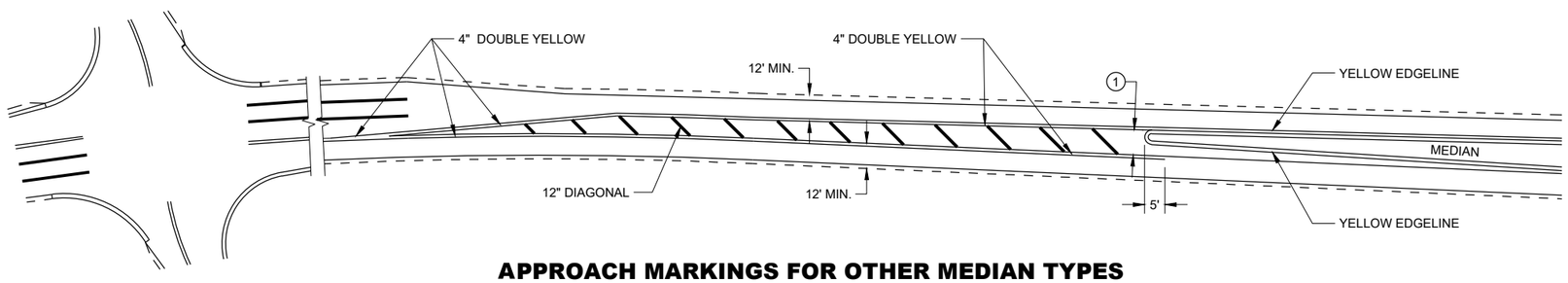

APPROACH MARKINGS FOR OTHER MEDIAN TYPES

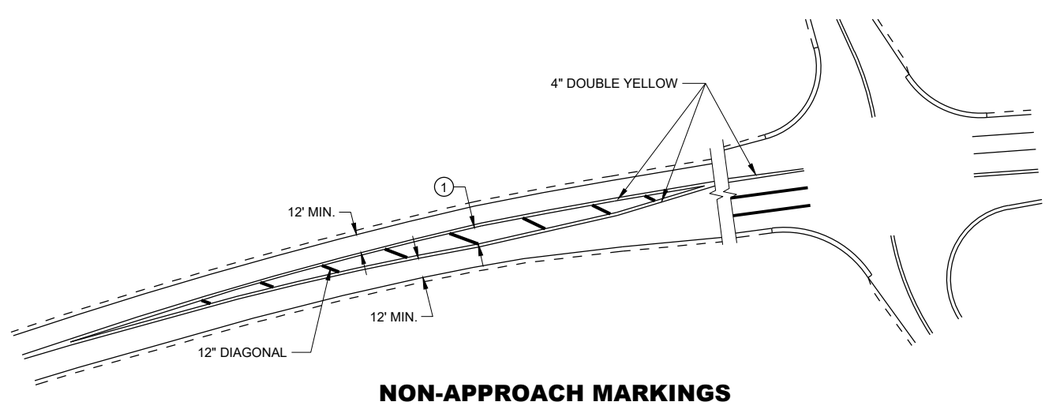

NON-APPROACH MARKINGS

GENERAL NOTES

1. DIAGONALS ARE OPTIONAL WHEN PAINTED ISLAND IS LESS THAN 6 FEET AT THE WIDEST POINT. OMIT DIAGONALS IF WIDTH IS LESS THAN 4 FEET.

⇨ DIRECTION OF TRAVEL

6

6

SDD 15C18 - 06a

SDD 15C18 - 06a

MEDIAN ISLAND PAVEMENT MARKINGS

STATE OF WISCONSIN
DEPARTMENT OF TRANSPORTATION

APPROVED

May 2022
DATE

/S/ Jeannie Silver
STATE SIGNING AND MAF ENGINEER

FHWA

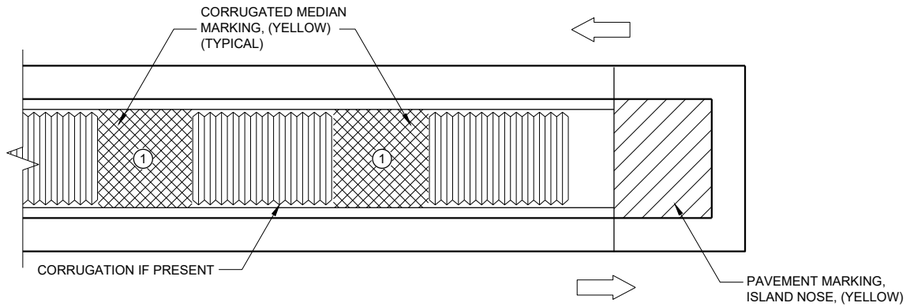

MEDIAN ISLAND WITH SQUARE BLUNT NOSE

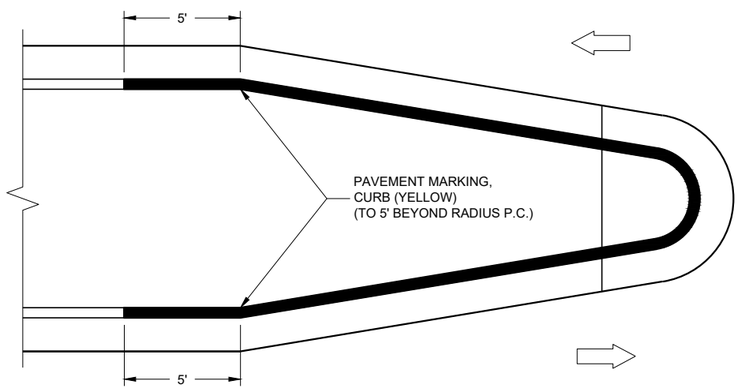

MEDIAN ISLAND WITH ROUND BLUNT NOSE

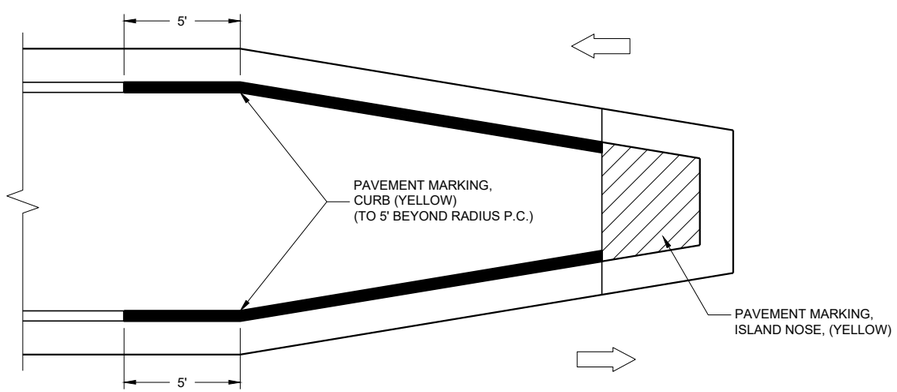

MEDIAN ISLAND WITH SLOPED NOSE

TYPICAL PLACEMENT OF
PAVEMENT MARKING ON MEDIAN ISLANDS

GENERAL NOTES

WHEN CONCRETE CORRUGATED MEDIAN IS CONSTRUCTED TO SEPARATE TRAFFIC OPERATING IN THE OPPOSING DIRECTION, YELLOW PAVEMENT MARKING SHALL BE APPLIED TO THE FLAT PORTION OF THE CONCRETE CORRUGATED MEDIAN. THE ITEM OF PAVEMENT MARKING, CONCRETE CORRUGATED MEDIAN, WILL BE MEASURED IN PLACE AND ACCEPTED IN ACCORDANCE WITH THE CONTRACT AND PAID FOR AT THE CONTRACT UNIT PRICE PER SQUARE FOOT.

(1) APPLY PAVEMENT MARKING TO THE FLAT PORTION OF CORRUGATED MEDIAN.

ISLAND NOSE MARKING

CURB MARKING

CORRUGATED MEDIAN MARKING

DIRECTION OF TRAVEL

6

6

SDD 15C18 - 06b

SDD 15C18 - 06b

PAVEMENT MARKINGS,
MEDIAN ISLAND NOSE

STATE OF WISCONSIN
DEPARTMENT OF TRANSPORTATION

APPROVED
May 2022 — DATE
/S/ Jeannie Silver — STATE SIGNING AND MAR ENGINEER
FHWA

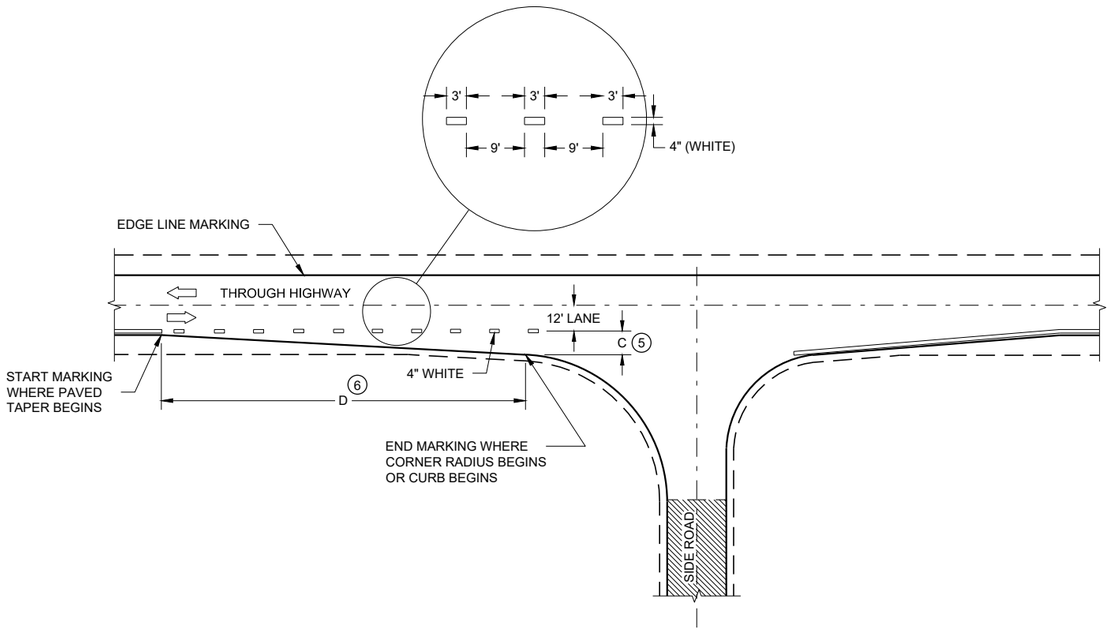

MINOR INTERSECTION

GENERAL NOTES

OMIT EDGE LINES THROUGH INTERSECTIONS. CONTINUE EDGE LINES THROUGH DRIVEWAYS.

1. WHEN DISTANCE "A" IS LESS THAN 250 FEET, OMIT LANE LINE.
2. WHEN DISTANCE "B" IS LESS THAN 100 FEET, OMIT CHANNELIZING LANE LINE.
3. BARRIER LINE ENDS AT SIDE ROAD PAVEMENT / SURFACE EDGE EXTENSION.
4. BARRIER LINE STARTS 500 FEET PRIOR TO THE BYPASS TAPER.
5. WHEN DISTANCE "C" IS LESS THAN 4 FEET, OMIT DOTTED EXTENSION.
6. WHEN DISTANCE "D" IS LESS THAN 50 FEET, OMIT DOTTED EXTENSION.

LEGEND

DIRECTION OF TRAVEL

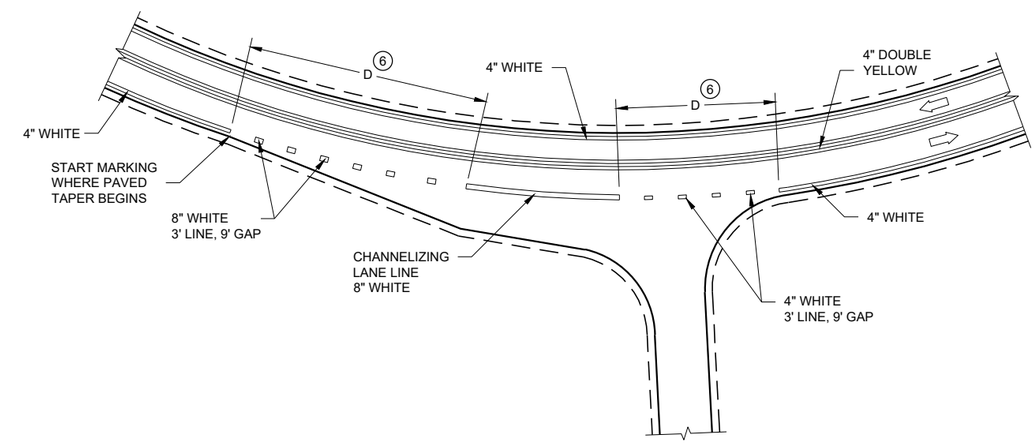

INTERSECTION ON OUTSIDE OF CURVE

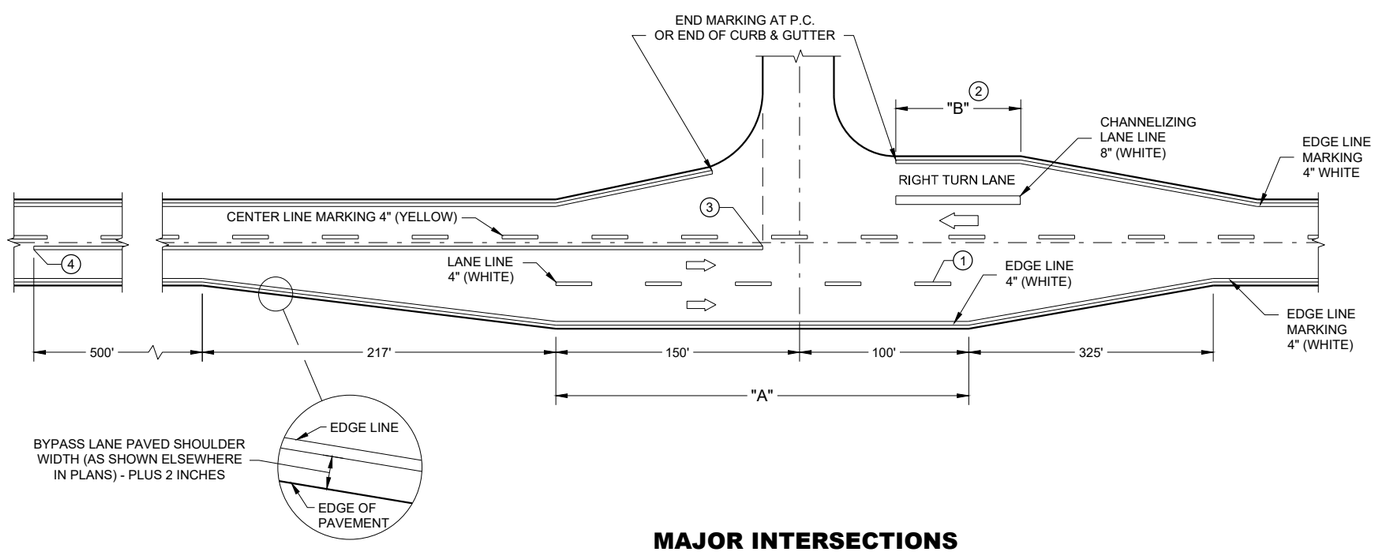

MAJOR INTERSECTIONS

(INTERSECTION WITH FULL RIGHT TURN LANE OR BYPASS LANE)

PAVEMENT MARKING (INTERSECTIONS)

STATE OF WISCONSIN
DEPARTMENT OF TRANSPORTA

6

SDD 15C35 - 05a

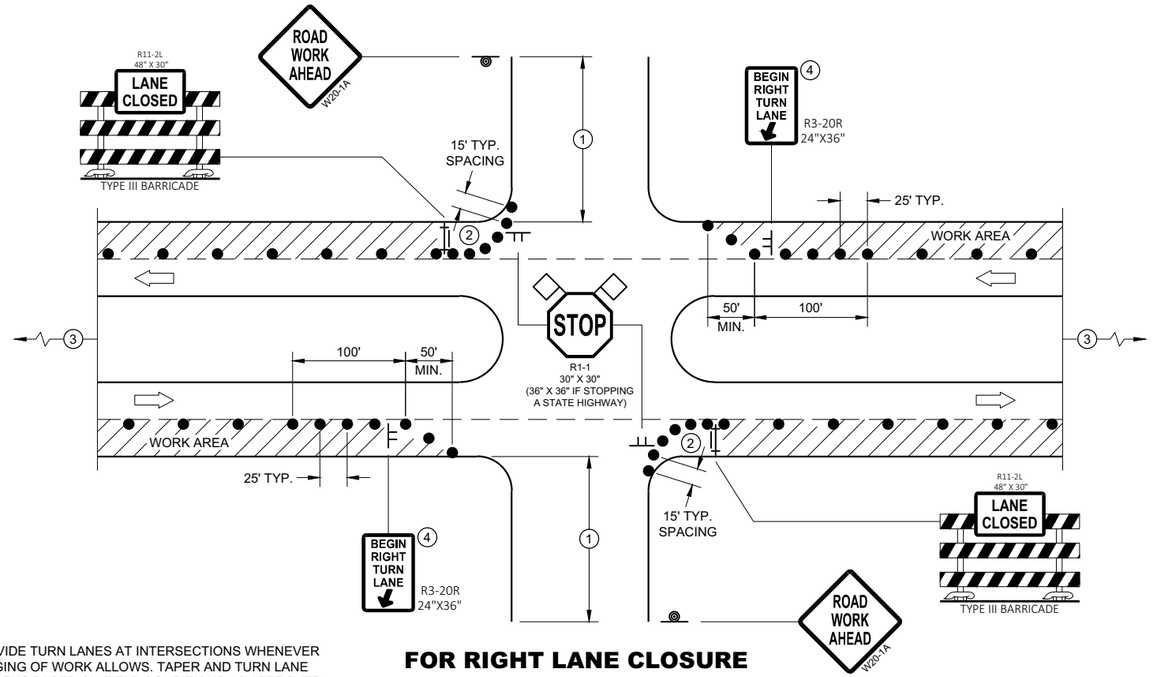

PROVIDE TURN LANES AT INTERSECTIONS WHENEVER STAGING OF WORK ALLOWS. TAPER AND TURN LANE LENGTHS BASED ON FIELD CONDITIONS AS APPROVED BY THE ENGINEER.

FOR RIGHT LANE CLOSURE AT INTERSECTION

GENERAL NOTES

ALL SIGNS ARE 48"X48" UNLESS OTHERWISE NOTED. IF NECESSARY DUE TO SPACE CONSTRAINTS IN URBAN AREAS, 36" X 36" MAY BE USED IF APPROVED BY THE DISTRICT TRAFFIC UNIT.

"WO" SIGN IS THE SAME AS "W" SIGN EXCEPT THE BACKGROUND IS ORANGE.

ANY SIGNS TEMPORARY OR EXISTING, WHICH CONFLICT WITH THE TRAFFIC CONTROL "IN USE" SHALL BE REMOVED OR COVERED AS NEEDED AND AS APPROVED BY THE ENGINEER. NO WARNING LIGHTS SHALL BE WORKING ON COVERED OR "DOWNED" SIGNS.

THE EXACT NUMBER, LOCATION, AND SPACING OF ALL SIGNS AND DEVICES SHALL BE ADJUSTED TO FIT FIELD CONDITIONS AS APPROVED BY THE ENGINEER.

THE SPACING BETWEEN TRAFFIC CONTROL SIGNS SHOULD BE ADJUSTED TO NOT CONFLICT WITH AND TO PROVIDE A MINIMUM OF 200 FEET (500' DESIRABLE) DISTANCE TO EXISTING SIGNS THAT WILL REMAIN IN PLACE

SIGN LAYOUTS SHALL BE IN ACCORDANCE WITH THE FHWA'S MANUAL OF STANDARD HIGHWAY SIGNS OR THE WISCONSIN STANDARD SIGN PLATES.

SIGNS THAT WILL REMAIN IN PLACE LESS THAN 7 CONTINUOUS DAYS AND NIGHTS OR THAT WILL BE PLACED IN A CLOSED LANE MAY BE MOUNTED ON PORTABLE SUPPORTS.

BARRICADES IN A CLOSED LANE THAT MUST BE MOVED FOR A WORK OPERATION SHALL BE IMMEDIATELY REESTABLISHED UPON COMPLETION OF THE OPERATION, OR FOR CONTINUING OPERATIONS, AT THE END OF EACH WORKING DAY.

CHANNELIZING DEVICES PLACED ADJACENT TO WORK AREA SHALL BE PULLED BACK FROM THE TRAVEL LANE WHEN WORK IS NOT IN PROGRESS.

1. 500' TYPICAL OR AT LAST INTERSECTION, WHICHEVER IS CLOSER.
   350' IF 35 - 40 MPH.
   200' IF 25 - 30 MPH.
2. ALSO USE BARRICADE AND 15 FOOT TYPICAL DRUM SPACING AT COMMERCIAL DRIVEWAYS
3. SEE SEPARATE LANE CLOSURE DETAIL FOR ADDITIONAL TRAFFIC CONTROL.
4. MINIMUM MOUNTING HEIGHT OF 5 FEET FROM EDGE OF PAVEMENT (AT EDGE LINE LOCATION) TO BOTTOM OF SIGN.

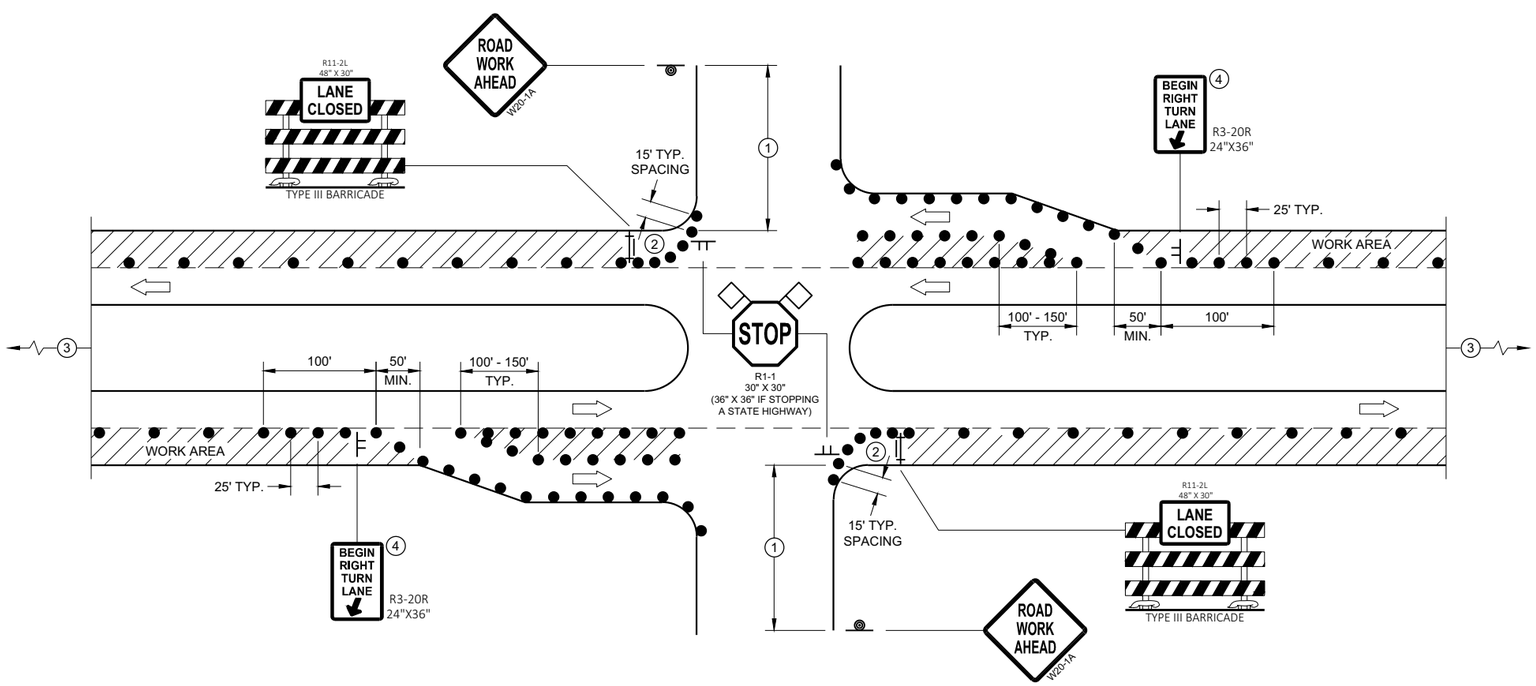

FOR RIGHT LANE CLOSURE AT INTERSECTION (WITH RIGHT TURN BAY OPEN)

LEGEND

- SIGN ON TEMPORARY SUPPORT
- SIGN ON PERMANENT SUPPORT
- TRAFFIC CONTROL DRUM
- TYPE III BARRICADE WITH ATTACHED SIGN
- DIRECTION OF TRAFFIC
- FLAGS, 16" X 16" MIN., ORANGE
- WORK AREA

TRAFFIC CONTROL, INTERSECTION WITHIN SINGLE RIGHT LANE CLOSURE

STATE OF WISCONSIN
DEPARTMENT OF TRANSPORTAT

6

SDD 15D21 - 07a

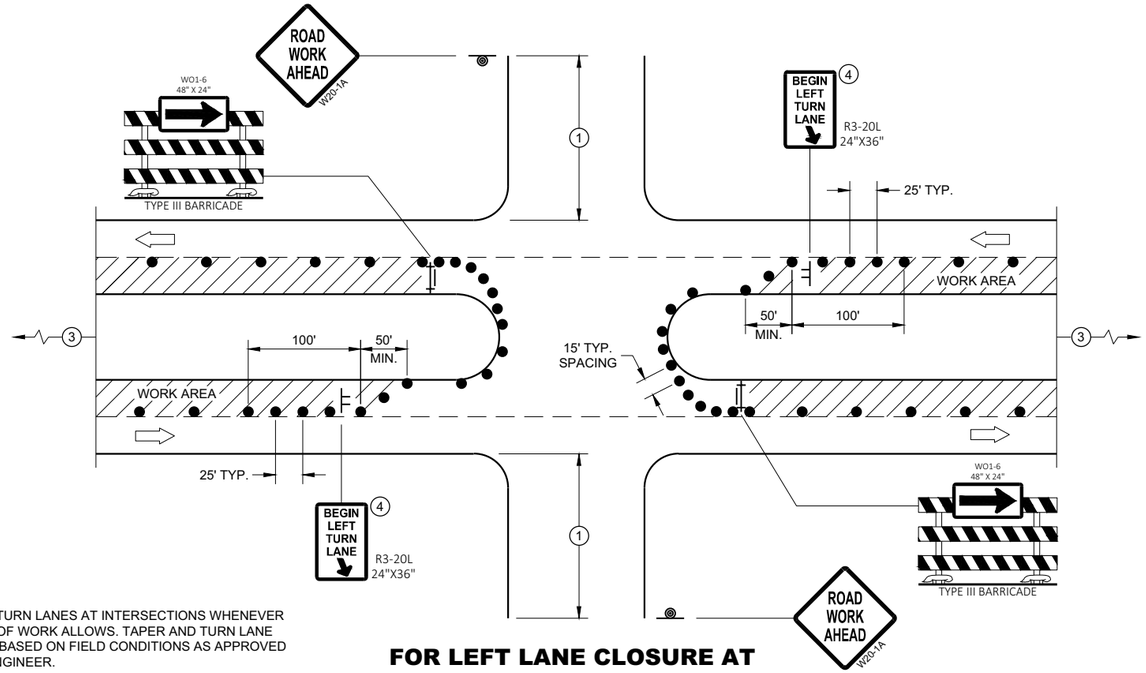

PROVIDE TURN LANES AT INTERSECTIONS WHENEVER STAGING OF WORK ALLOWS. TAPER AND TURN LANE LENGTHS BASED ON FIELD CONDITIONS AS APPROVED BY THE ENGINEER.

FOR LEFT LANE CLOSURE AT INTERSECTION OR MEDIAN OPENING

GENERAL NOTES

ALL SIGNS ARE 48"X48" UNLESS OTHERWISE NOTED. IF NECESSARY DUE TO SPACE CONSTRAINTS IN URBAN AREAS, 36" X 36" MAY BE USED IF APPROVED BY THE DISTRICT TRAFFIC UNIT.

"WO" SIGN IS THE SAME AS "W" SIGN EXCEPT THE BACKGROUND IS ORANGE.

ANY SIGNS TEMPORARY OR EXISTING, WHICH CONFLICT WITH THE TRAFFIC CONTROL "IN USE" SHALL BE REMOVED OR COVERED AS NEEDED AND AS APPROVED BY THE ENGINEER. NO WARNING LIGHTS SHALL BE WORKING ON COVERED OR "DOWNED" SIGNS.

THE EXACT NUMBER, LOCATION, AND SPACING OF ALL SIGNS AND DEVICES SHALL BE ADJUSTED TO FIT FIELD CONDITIONS AS APPROVED BY THE ENGINEER.

THE SPACING BETWEEN TRAFFIC CONTROL SIGNS SHOULD BE ADJUSTED TO NOT CONFLICT WITH AND TO PROVIDE A MINIMUM OF 200 FEET (500' DESIRABLE) DISTANCE TO EXISTING SIGNS THAT WILL REMAIN IN PLACE

SIGN LAYOUTS SHALL BE IN ACCORDANCE WITH THE FHWA'S MANUAL OF STANDARD HIGHWAY SIGNS OR THE WISCONSIN STANDARD SIGN PLATES.

SIGNS THAT WILL REMAIN IN PLACE LESS THAN 7 CONTINUOUS DAYS AND NIGHTS OR THAT WILL BE PLACED IN A CLOSED LANE MAY BE MOUNTED ON PORTABLE SUPPORTS.

BARRICADES IN A CLOSED LANE THAT MUST BE MOVED FOR A WORK OPERATION SHALL BE IMMEDIATELY REESTABLISHED UPON COMPLETION OF THE OPERATION, OR FOR CONTINUING OPERATIONS, AT THE END OF EACH WORKING DAY.

CHANNELIZING DEVICES PLACED ADJACENT TO WORK AREA SHALL BE PULLED BACK FROM THE TRAVEL LANE WHEN WORK IS NOT IN PROGRESS.

1. 500' TYPICAL OR AT LAST INTERSECTION, WHICHEVER IS CLOSER.
   350' IF 35 - 40 MPH.
   200' IF 25 - 30 MPH.
2. ALSO USE BARRICADE AND 15 FOOT TYPICAL DRUM SPACING AT COMMERCIAL DRIVEWAYS
3. SEE SEPARATE LANE CLOSURE DETAIL FOR ADDITIONAL TRAFFIC CONTROL.
4. MINIMUM MOUNTING HEIGHT OF 5 FEET FROM EDGE OF PAVEMENT (AT EDGE LINE LOCATION) TO BOTTOM OF SIGN.

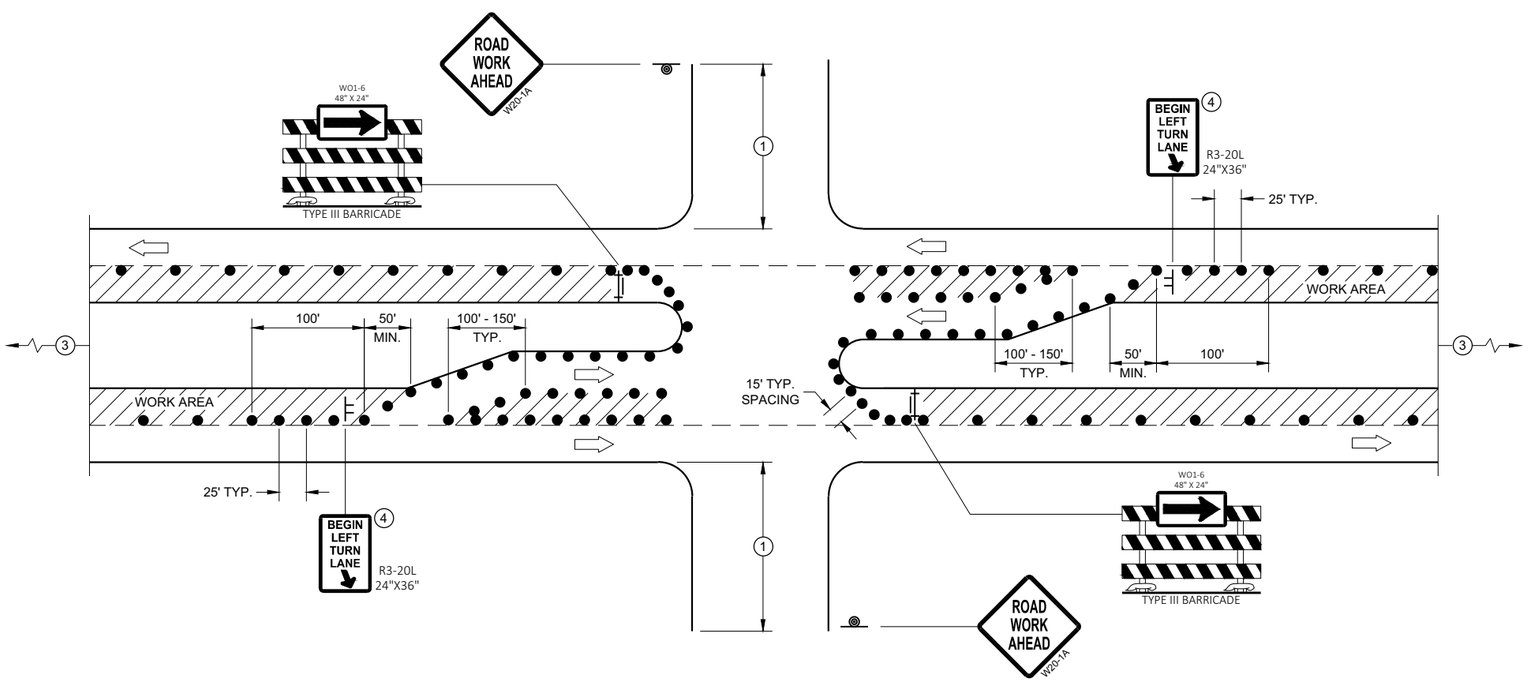

FOR LEFT LANE CLOSURE AT INTERSECTION OR MEDIAN OPENING (WITH LEFT TURN BAY OPEN)

LEGEND

- SIGN ON TEMPORARY SUPPORT
- SIGN ON PERMANENT SUPPORT
- TRAFFIC CONTROL DRUM
- TYPE III BARRICADE WITH ATTACHED SIGN
- DIRECTION OF TRAFFIC
- FLAGS, 16" X 16" MIN., ORANGE
- WORK AREA

TRAFFIC CONTROL, INTERSECTION WITHIN SINGLE LEFT LANE CLOSURE

STATE OF WISCONSIN
DEPARTMENT OF TRANSPORTATION

APPROVED
August 2020 — DATE
/S/ Andrew Heidtke — WORK ZONE ENGINEER
FHWA

URBAN AREA

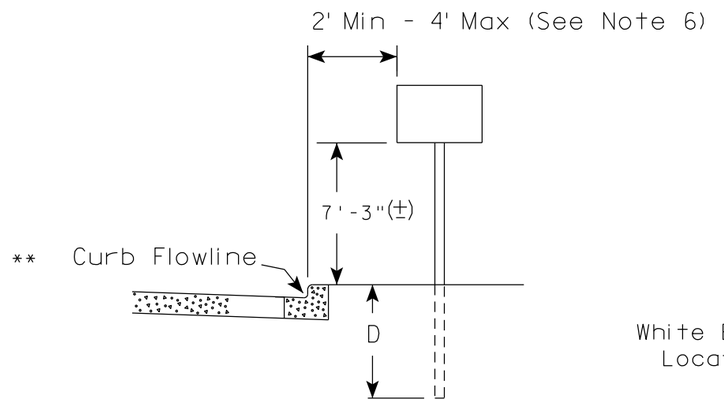

RURAL AREA (See Note 2)

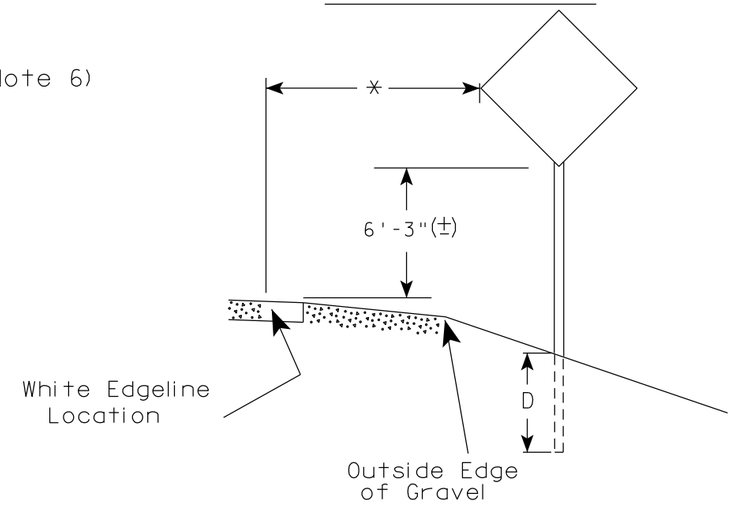

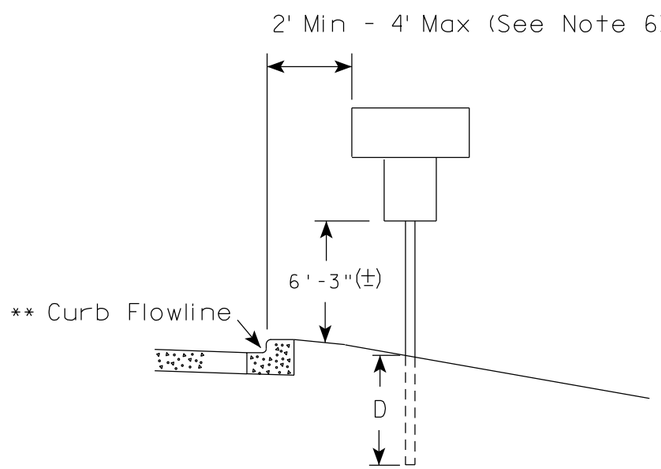

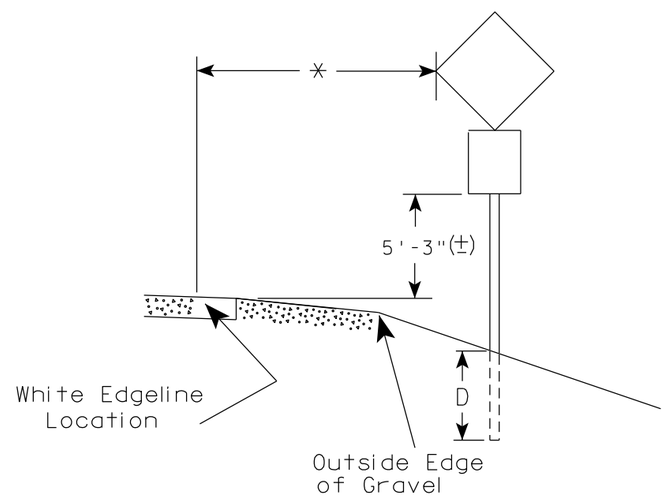

** The existence of curb and gutter does not in itself mandate the vertical clearance illustrated. That height is typically measured where there is sidewalk adjacent to the roadway or parking is permitted. In the absence of sidewalk vertical clearance is measured from the top of the curb. Offset of signs is measured from the flow line.

* 6 feet from edge of a paved shoulder or 12 feet from the edge of pavement (edge line location) or 2 feet from outside edge of gravel, whichever is greater unless directed by project engineer.

GENERAL NOTES

1. Signs wider than 4 feet or 20 sq.ft or larger, shall be mounted on multiple posts. Refer to plate A4-4.
2. If signs are mounted on or behind barrier wall, see A4-10 sign plate.
   The Double Arrow sign (W12-1D) shall be mounted at a height of 2'-3" (±). The Chevron sign (W1-8), Roundabout Chevron panel (R6-4B), Enhanced Reference Markers, Clearance Markers (W5-52), Mile Markers (D10 series), In Road Object Markers (W5-54) & End of Road Markers (W5-56) shall be mounted at a height of 4'-3" (±).
3. For expressways and freeways, mounting height is 7'- 3" (±) or 6'-3" (±) depending upon existence of a sub-sign.
4. Minimum mounting height for signs mounted on traffic signal poles is 5'- 3" (±).
5. Offset distance shall be consistent with existing signs or consistent throughout length of project.
6. The (±) tolerance for mounting height is 3 inches.
7. Folding signs shall be mounted at a height of 5'-3" (±) or as directd by the Engineer.

POST EMBEDMENT DEPTH

Area of Sign Installation (Sq.Ft.)	D (Min)
20 or Less	4'
Greater than 20	5'

TYPICAL INSTALLATION OF PERMANENT TYPE II SIGNS ON SINGLE POSTS

WISCONSIN DEPT OF TRANSPORTATION

APPROVED Matthew R Rauch for State Traffic Engineer

DATE 5/13/2020 PLATE NO. A4-3.22

7 7

PROJECT NO:	HWY:	COUNTY:		SHEET NO: 111	E

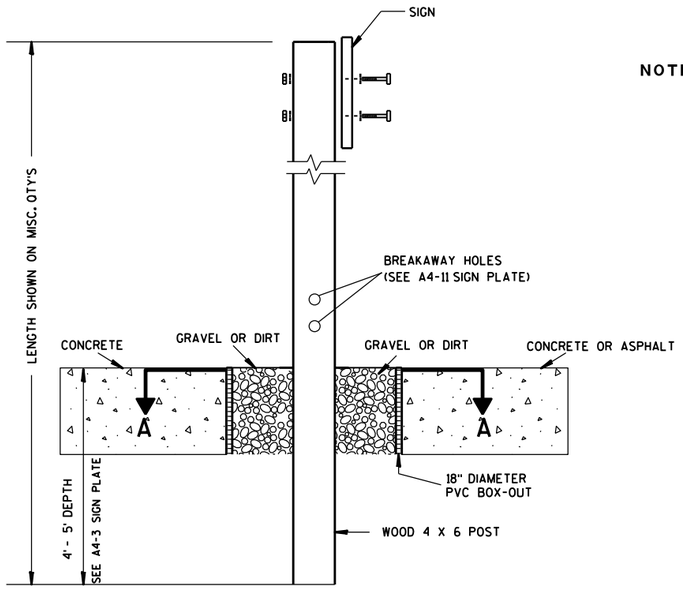

ELEVATION VIEW

DETAIL OF WOOD 4 X 6 SIGN POST IN BOX-OUT

NOTES:
1. ALL MATERIAL TO BE APPROVED BY ENGINEER PRIOR TO INSTALLATION
2. SEE SIGN PLATE A4-8 FOR SIGN HARDWARE REQUIREMENTS
3. 18 INCH X 18 INCH SQUARE BOX-OUTS MAY BE USED FOR INSTALLATIONS IN EXISTING CONCRETE OR ASPHALT LOCATIONS.

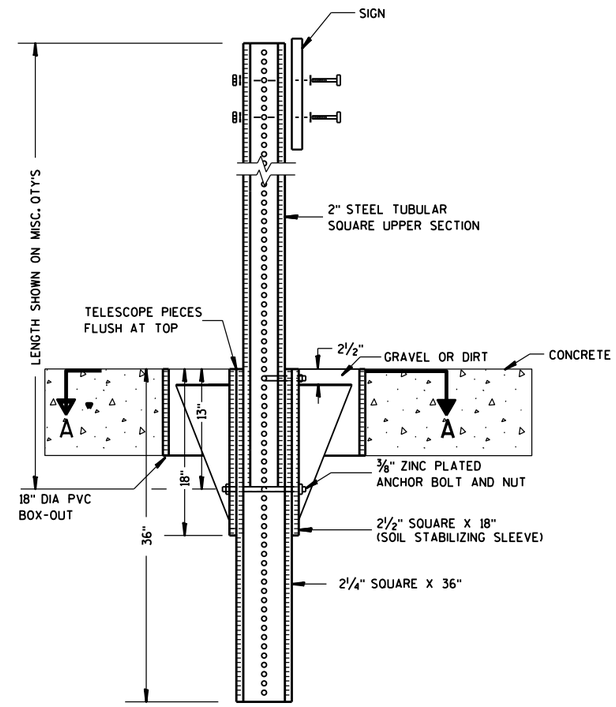

ELEVATION VIEW

DETAIL OF STEEL 2 X 2 SIGN POST IN BOX-OUT

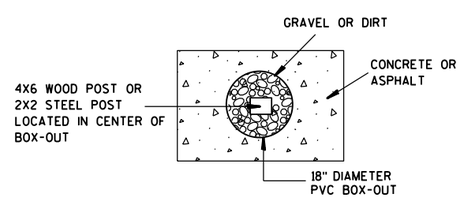

PLAN VIEW

FOR NEW CONCRETE/ASPHALT INSTALLATIONS

SIGN POST
BOX-OUTS
A4-3B

WISCONSIN DEPT OF TRANSPORTATION

APPROVED Matthew R Rauch
for State Traffic Engineer

DATE 1/27/14 PLATE NO. A4-3B.1

PROJECT NO:	HWY:	COUNTY:		SHEET NO:	E

URBAN AREA

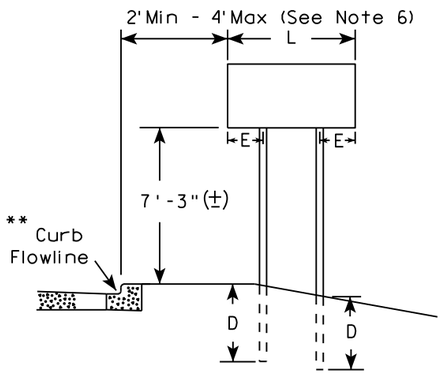

RURAL AREA (See Note 3)

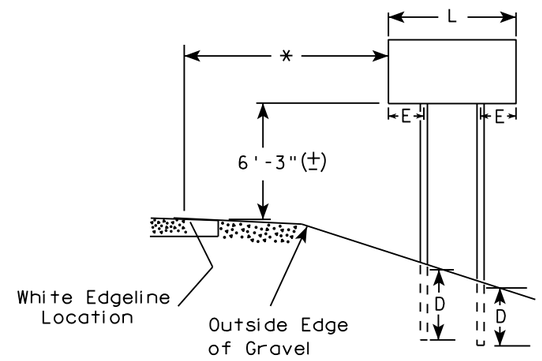

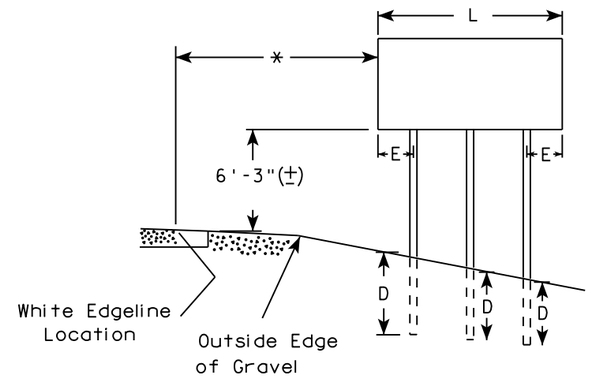

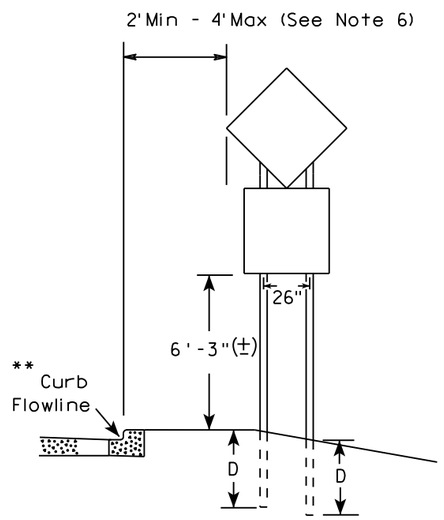

48" DIAMOND WARNING SIGN

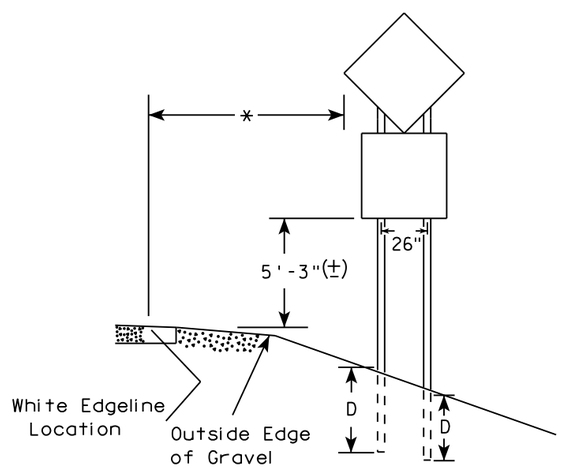

48" DIAMOND WARNING SIGN

SIGN SHAPE OTHER THAN DIAMOND (TWO POSTS REQUIRED)	
L	E
*** Greater than 48" Less than 60"	12"
60" to 108"	L/5

SIGN SHAPE OTHER THAN DIAMOND (THREE POSTS REQUIRED)	
L	E
Greater than 108" to 144"	12"

GENERAL NOTES

1. For 3 or 4 post installations, individual post spacing shall be greater than 3'-6".
2. See tables below for required number of posts.
3. For expressways and freeways, mounting height is 7'-3" (±) or 6'-3" (±) depending upon existence of sub-sign.
4. The (±) tolerance for mounting height is 3 inches.
5. J-Assemblies are considered to be one sign for mounting height.
6. Offset distance shall be consistent with existing signs or consistent throughout length of project.
7. Folding signs shall be mounted at a height of 5'-3" (±) or as directed by the engineer.
8. The Double Arrow sign (W12-1) shall be mounted at a height of 2'-3" (±). The Chevron sign (W1-8), Roundabout Chevron panel (R6-4B), Clearance Markers (W5-52), Mile Markers (D10 series), In Road Object Markers (W5-54) & End of Road Markers (W5-56) shall be mounted at a height of 4"-3" (±).

* 6 feet from edge of a paved shoulder or 12 feet from the edge of pavement (edge line location) or 2 feet from outside edge of gravel, whichever is greater unless directed by project engineer.

** The existence of curb and gutter does not in itself mandate the vertical clearance illustrated. That height is typically measured where there is sidewalk adjacent to the roadway or parking is permitted. In the absence of sidewalk vertical clearance is measured from the top of the curb. Offset of signs is measured from the flow line.

*** See A4-3 sign plate for signs 4' or less in width and less than 20 S.F. in area.

POST EMBEDMENT DEPTH

Area of Sign Installation (Sq. Ft.)	D (Min)
20 or Less	4'
Greater than 20	5'

TYPICAL INSTALLATION OF TYPE II SIGNS ON MULTIPLE POSTS

WISCONSIN DEPT OF TRANSPORTATION

APPROVED Matthew R Rauch
For State Traffic Engineer

DATE 8/21/17 PLATE NO. A4-4.15

7

7

PROJECT NO:	HWY:	COUNTY:		SHEET NO: 113	E

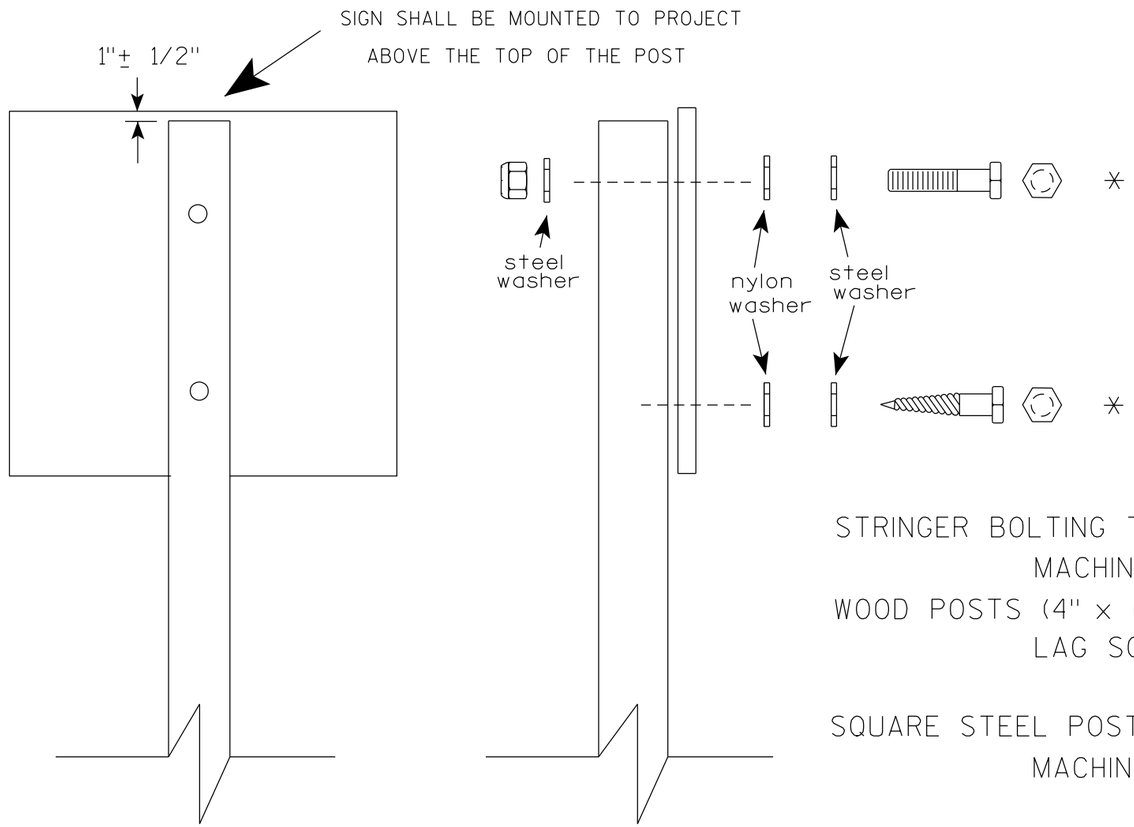

Nuts, bolts and lags used for mounting signs shall have hexagonal heads and shall be either :

a. Hot dip galvanized in accordance with ASTM Designation: A 153, Class D, or SC 3

b. Electro-galvanized in accordance with ASTM Designation : B 633, TYPE III, SC 3.

Threads on bolts and nuts shall be manufactured with sufficient allowance for the cadmium plate or galvanized coating to permit the nuts to run freely on the bolts.

STRINGER BOLTING TO ALUMINUM SIGNS (SEE SIGN PLATE A4-18)

MACHINE BOLTS - 5/16" X 1-3/4" Length w/ lock nuts

WOOD POSTS (4" x 6")

LAG SCREWS - 3/8" X 3" (NO STRINGERS ON BACK OF SIGN)
3/8" X 4" (STRINGERS ON BACK OF SIGN)

SQUARE STEEL POSTS (2" x 2")

MACHINE BOLTS - 3/8" X 3-1/4" Length w/ nuts (NO STRINGER ON BACK OF SIGN)
3/8" X 5" Length w/ nuts (STRINGERS ON BACK OF SIGN)

RIVETS - 9/32 " (6605-9-6) BULB-TITE, TRI-FOLD, ALUMINUM BODY/MANDREL
O.D. FLANGE .720-.765 INCH, GRIP RANGE .042-.375 INCH

WASHERS (ALL POSTS) -

1-1/4" O.D. X 3/8" I.D. X 1/16" STEEL
1-1/4" O.D. X 3/8" I.D. X .080 NYLON

* Two different fastening systems are shown for illustration purposes. On any individual sign, either one or the other system shall be used. Actual number of fasteners per sign varies with the sign area, but normally there are two. For a single post installation, all signs greater than 9 sq. ft. require the use of 3 fasteners.

ATTACHMENT OF SIGNS TO POSTS

WISCONSIN DEPT OF TRANSPORTATION

APPROVED Matthew R Rauch
for State Traffic Engineer

DATE 4/1/2020 PLATE NO. A4-8.9

TELESCOPIC TUBING ANCHORS
TWO PIECE SYSTEM

2 1/4" SQUARE
12 GAUGE
PERFORATED
GALVANIZED FINISH

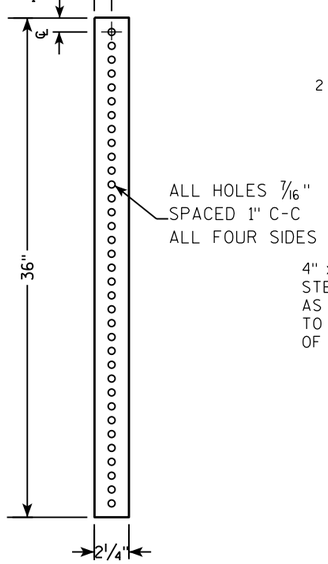

2 1/2" SQUARE
12 GAUGE
OMNI-DIRECTIONAL
PERFORATED
SOIL STABILIZING SLEEVE
GALVANIZED FINISH

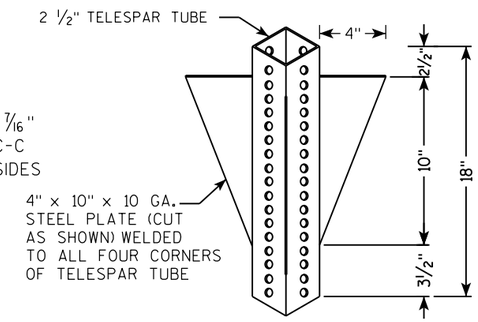

DETAIL OF TUBULAR STEEL SIGN POST
(IN POURED CONCRETE OR ASPHALT)

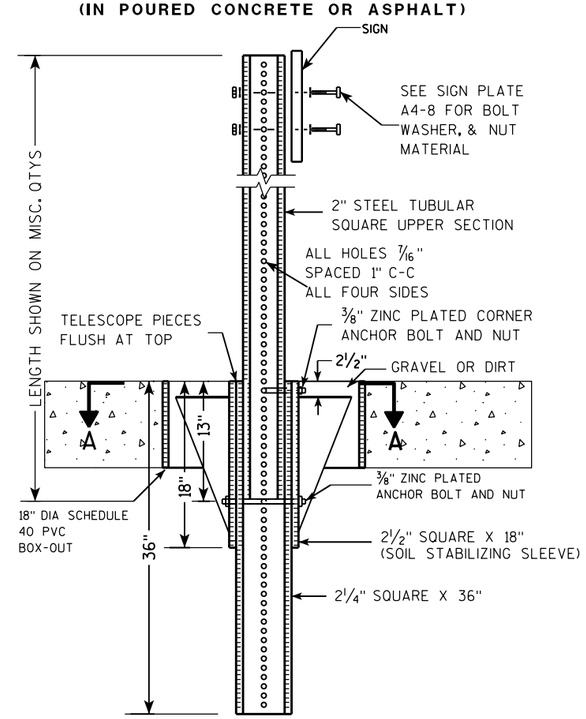

DETAIL OF TUBULAR STEEL SIGN POST
(IN LOCATIONS OTHER THAN POURED CONCRETE OR ASPHALT)

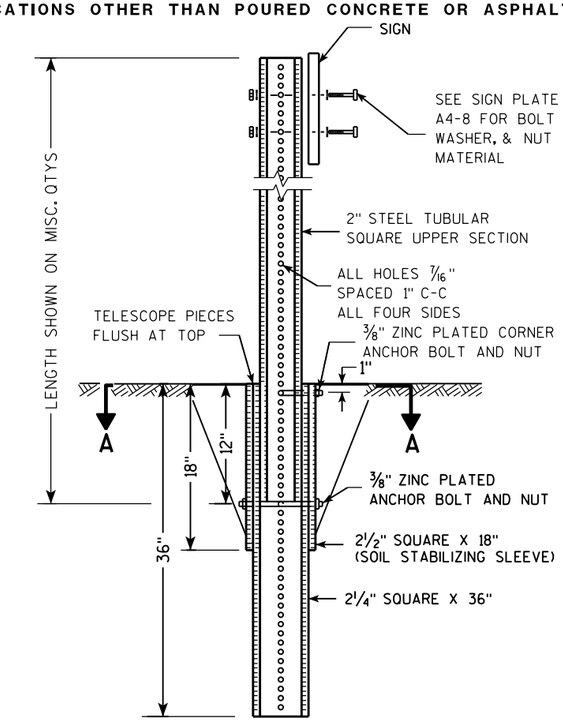

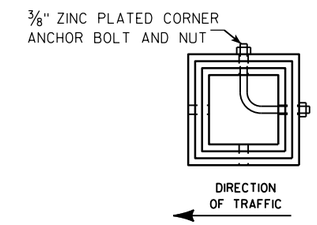

SECTION A-A

Area of Sign Installation (Sq. Ft.)	Number of Required Posts
9 or less	1
Greater than 9 less than or equal to 18	2
Greater than 18 less than or equal to 27	3

Signs wider than 3 feet or larger than 9 sq. ft shall be mounted on multiple posts (see above table).

TUBULAR STEEL
SIGN POST
A4-9

WISCONSIN DEPT OF TRANSPORTATION

APPROVED Matthew R Rauch
for State Traffic Engineer

DATE 2/05/15 PLATE A4-9.9

7 7

PROJECT NO:	HWY:	COUNTY:		SHEET NO:	E

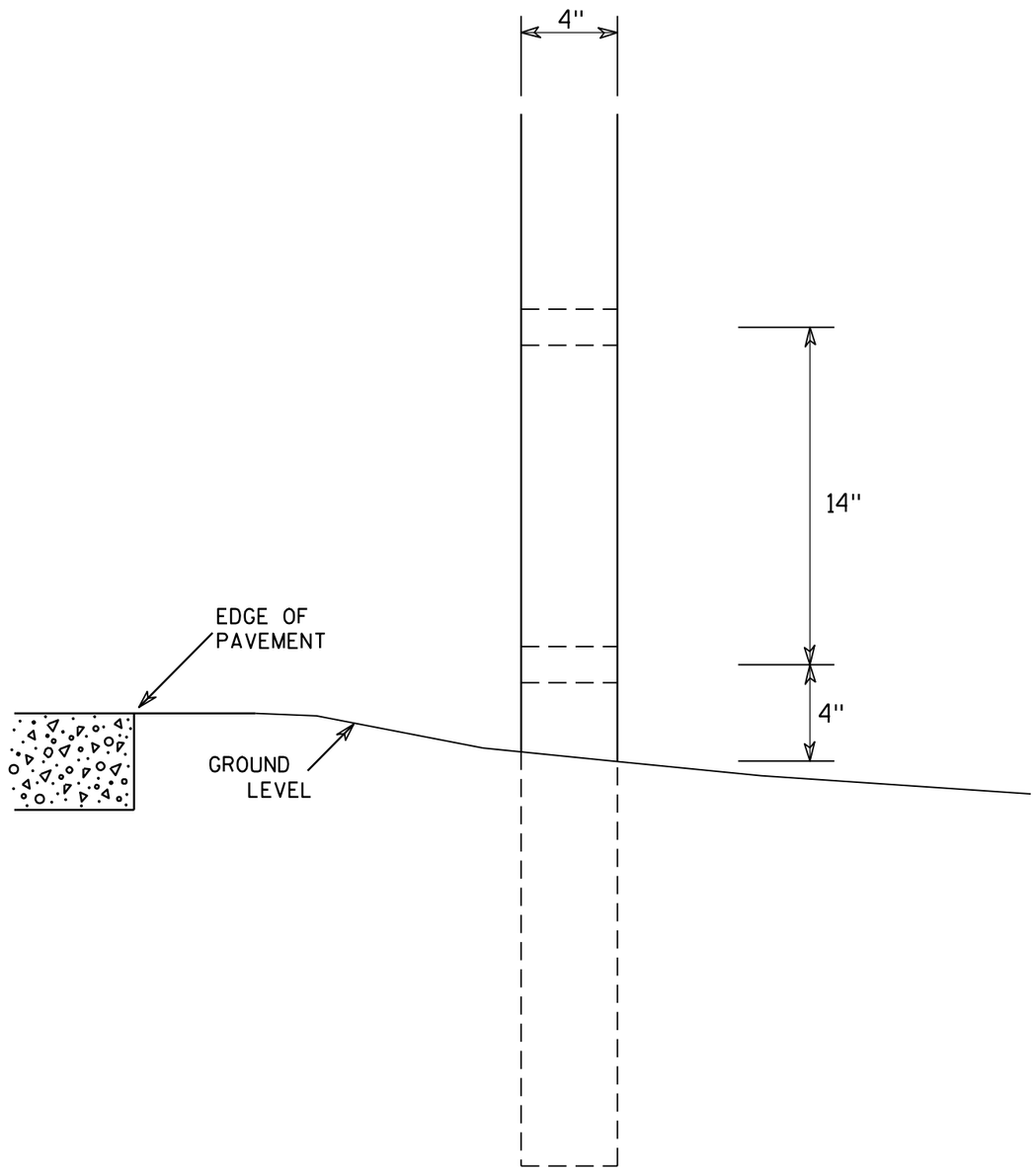

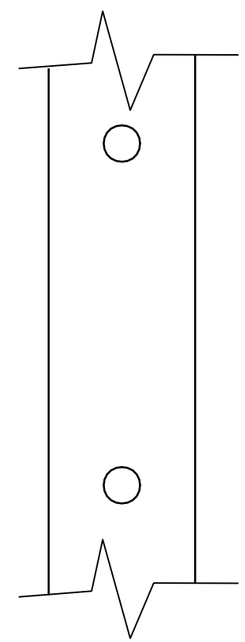

SIDE VIEW

GENERAL NOTES

1. All 4 x 6 Wood Posts shall be modified by having two 1½" diameter holes drilled perpendicular to the roadway centerline.

7

7

4 X 6 WOOD POST MODIFICATIONS

WISCONSIN DEPT OF TRANSPORTATION

APPROVED Chester J Spang for State Traffic Engineer

DATE 3/27/97 PLATE NO. A4-11.2

PROJECT NO:	HWY:	COUNTY:		SHEET NO: 116	E

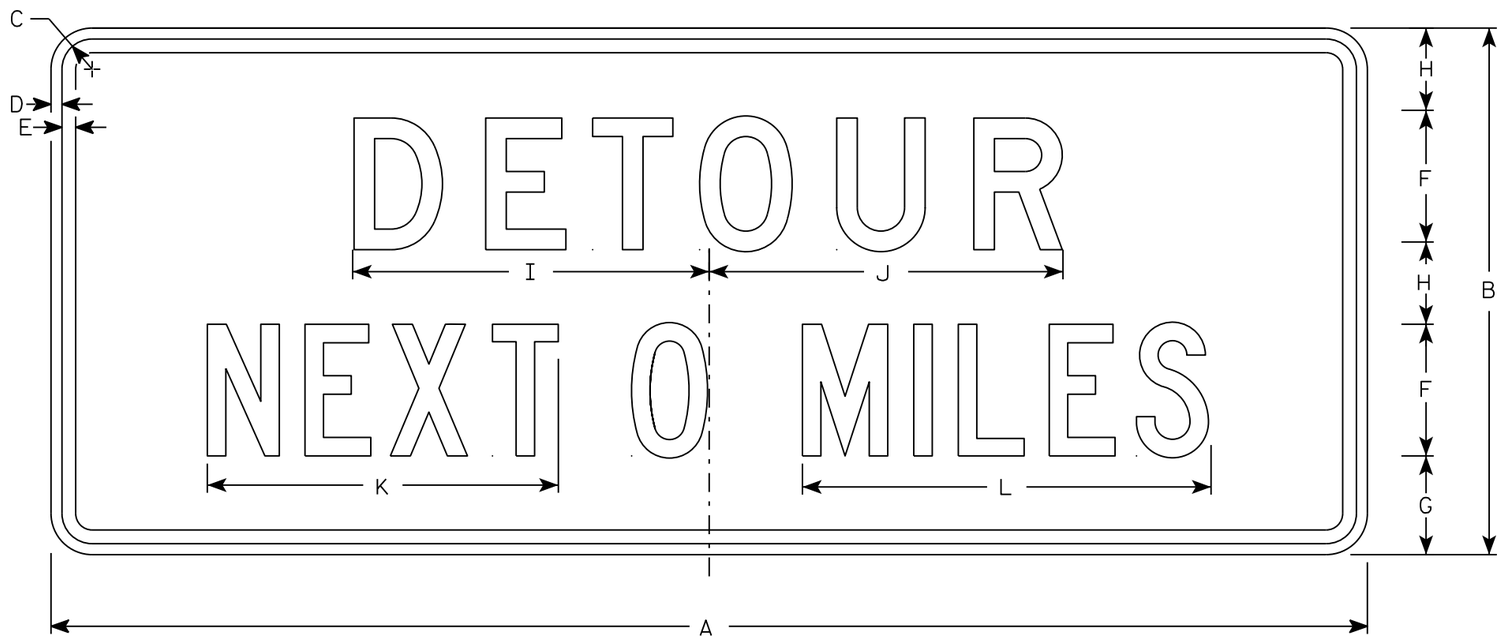

G20-51

NOTES

1. Sign is Type II - Type F Reflective
2. Color:
   Background - Orange
   Message - Black
3. Message Series - Line 1 is D and Line 2 is C
4. Corners may be square or rounded when base material is plywood but borders shall be rounded as shown. When base material is metal, the corners and borders shall be rounded.
5. Round distance to nearest whole Mile and substitute appropriate numerals and optically adjust spacing to achieve proper balance

SIZE	A	B	C	D	E	F	G	H	I	J	K	L	M	N	O	P	Q	R	S	T	U	V	W	X	Y	Z	Area sq. ft.
1																											
2	60	24	1 3/8	1/2	5/8	6	4 1/2	3 3/4	16 1/4	16 1/8	16	18 5/8															10
3																											
4	60	24	1 3/8	1/2	5/8	6	4 1/2	3 3/4	16 1/4	16 1/8	16	18 5/8															10
5																											

STANDARD SIGN
G20-51

WISCONSIN DEPT OF TRANSPORTATION

APPROVED Matthew R Rauch
for State Traffic Engineer

DATE 3/14/17 PLATE NO. G20-51.2

PROJECT NO:	HWY:	COUNTY:		SHEET NO: 117	E

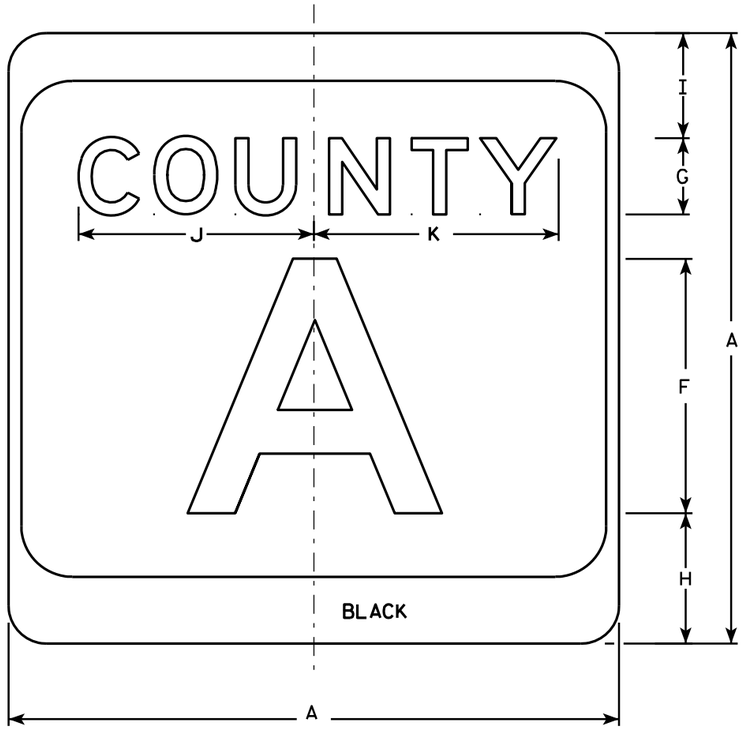

M1-5A

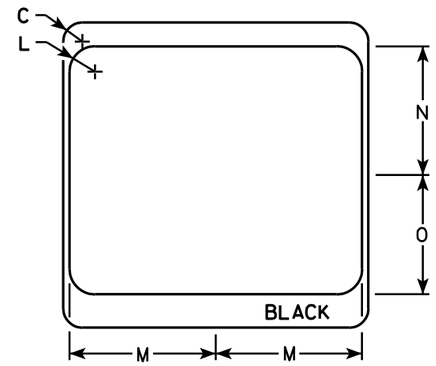

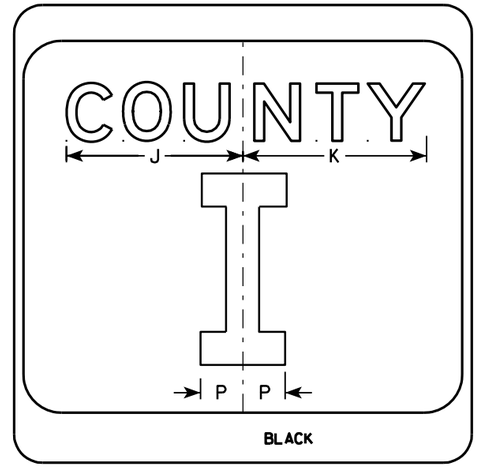

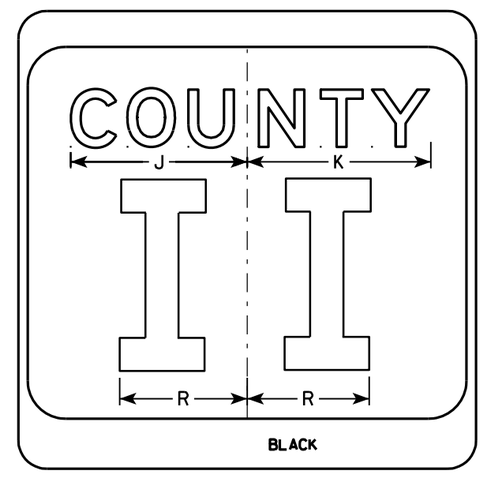

NOTES

1. Sign is Type II - see Note 7 - reference WIS DOT Standard Specification for HIGHWAY and STRUCTURE CONSTRUCTION latest edition.
2. Color:
   Background - White & Black - See Note 7
   Message - Black
3. Message Series - see Note 5
4. Corners may be square or rounded when base material is plywood but borders shall be rounded as shown. When base material is metal, the corners and borders shall be rounded.
5. Message Series E for 1 letter.
   Message Series D for 2 letters unless message is too big then Series C.
   Message Series C for 3 letters unless message is too big then Series B.
6. Substitute appropriate letters & optically center to achieve proper balance.
7. Permanent Signs
   Background - Type H Reflective
   Detour or temporary Signs
   Background - Reflective

SIZE	A	B	C	D	E	F	G	H	I	J	K	L	M	N	O	P	Q	R	S	T	U	V	W	X	Y	Z	Area sq. ft.
1																											
2	24		1 1/2			10	3	5 1/8	4 1/8	9 1/4	9 5/8	2	11 1/2	10 1/8	9 3/8	2 1/4		6 5/8									4.0
3	36		2 1/4			16	4	7 5/8	5 5/8	12 1/4	12 7/8	3	17 1/8	15 1/4	14	3 3/8		10									9.0
4	36		2 1/4			16	4	7 5/8	5 5/8	12 1/4	12 7/8	3	17 1/8	15 1/4	14	3 3/8		10									9.0
5	36		2 1/4			16	4	7 5/8	5 5/8	12 1/4	12 7/8	3	17 1/8	15 1/4	14	3 3/8		10									9.0

CTH MARKER
M1-5A FOR ASSEMBLIES

WISCONSIN DEPT OF TRANSPORTATION

APPROVED Matthew R Rauch
for State Traffic Engineer

DATE 9/27/11 PLATE NO. M1-5A.8

PROJECT NO: | HWY: | COUNTY: | SHEET NO: 118 | E

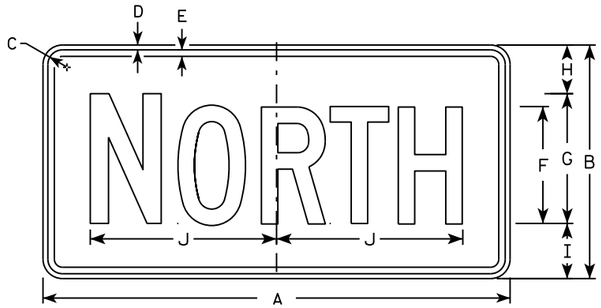

M3-1
MM3-1
MP3-1

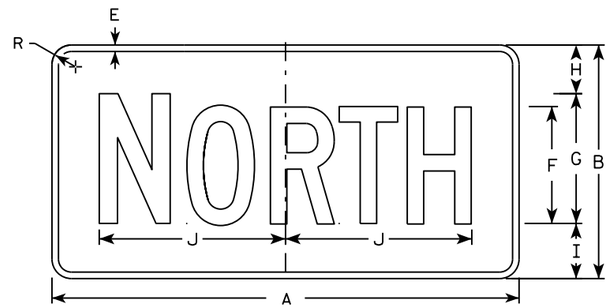

MB3-1
MK3-1
MN3-1

M3-2
MM3-2
MP3-2

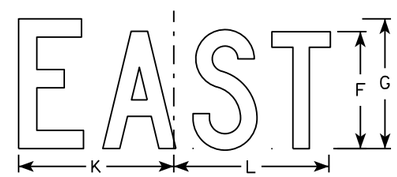

MB3-2
MK3-2
MN3-2

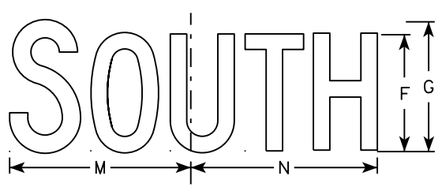

M3-3
MM3-3
MP3-3

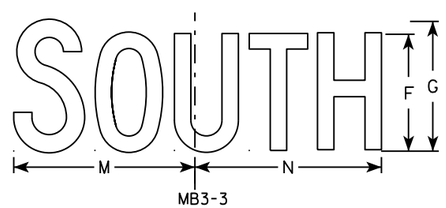

MB3-3
MK3-3
MN3-3

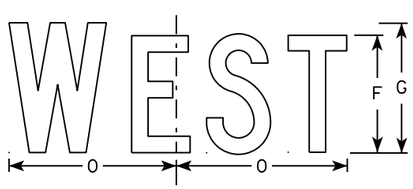

M3-4
MM3-4
MP3-4

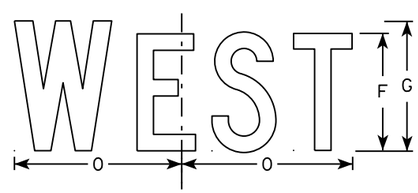

MB3-4
MK3-4
MN3-4

NOTES

1. All Signs Type II - Type H
2. Color:
   Background - See note 5
   Message - See note 5
3. Message Series - C
4. Corners may be square or rounded when base material is plywood but borders shall be rounded as shown. When base material is metal, the corners and borders shall be rounded.
5. M3-1 thru M3-4 Background - White
   Message - Black
   MB3-1 thru MB3-4 Background - Blue
   Message - White
   MK3-1 thru MK3-4 Background - Green
   Message - White
   MM3-1 thru MM3-4 Background - White
   Message - Green
   MN3-1 thru MN3-4 Background - Brown
   Message - White
   MP3-1 thru MP3-4 Background - White
   Message - Blue
6. Note the first letter of each direction is larger than the remainder of the message.

SIZE	A	B	C	D	E	F	G	H	I	J	K	L	M	N	O	P	Q	R	S	T	U	V	W	X	Y	Z	Area sq. ft.
1																											
2	24	12	1 1/8	3/8	3/8	6	7	2 1/4	2 3/4	10 1/4	7 7/8	8 3/8	10 1/4	9 3/4	8 3/4			1 1/2									2.00
3	36	18	1 1/8	3/8	1/2	9	10	3 3/4	4 1/4	14 3/8	12	12 1/8	14	14 1/8	13			1 1/2									4.5
4	36	18	1 1/8	3/8	1/2	9	10	3 3/4	4 1/4	14 3/8	12	12 1/8	14	14 1/8	13			1 1/2									4.5
5	36	18	1 1/8	3/8	1/2	9	10	3 3/4	4 1/4	14 3/8	12	12 1/8	14	14 1/8	13			1 1/2									4.5

STANDARD SIGNS
M3-1 thur M3-4
SERIES

WISCONSIN DEPT OF TRANSPORTATION

APPROVED Matthew R Rauch
for State Traffic Engineer

DATE 10/15/15 PLATE NO M3-1.14

PROJECT NO: | HWY: | COUNTY: | SHEET NO: | E

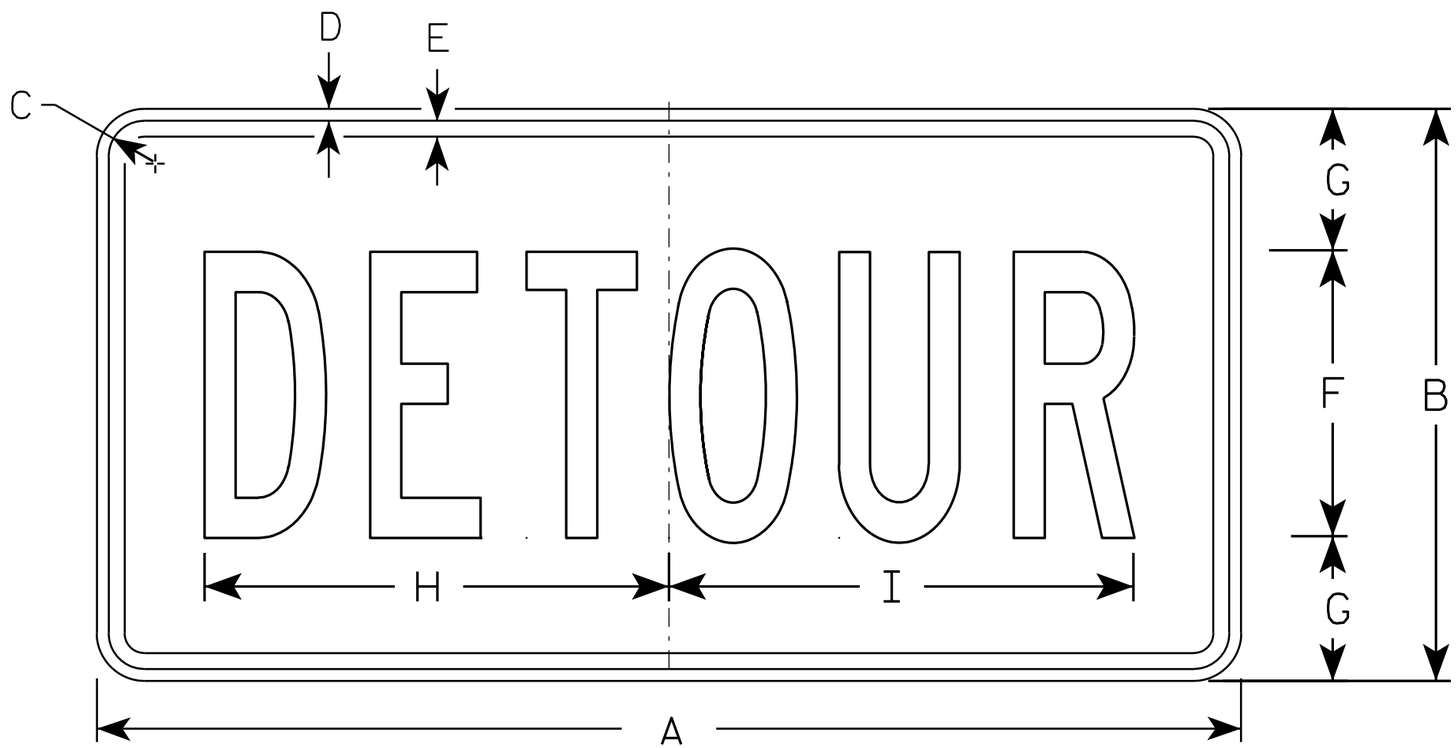

M4-8

NOTES

1. Sign is Type II - Type F Reflective - reference WIS DOT Standard Specification for HIGHWAY and STRUCTURE CONSTRUCTION latest edition.
2. Color:
   Background - Orange
   Message - Black
3. Message Series - B
4. Corners may be square or rounded when base material is plywood but borders shall be rounded as shown. When base material is metal, the corners and borders shall be rounded.

SIZE	A	B	C	D	E	F	G	H	I	J	K	L	M	N	O	P	Q	R	S	T	U	V	W	X	Y	Z	Area sq. ft.
1																											
2	24	12	1 1/8	3/8	3/8	6	3	10	10 1/4																		2.0
3	36	18	1 1/8	3/8	1/2	9	4 1/2	14 5/8	14 1/2																		4.5
4																											
5																											

STANDARD SIGN
M4-8

WISCONSIN DEPT OF TRANSPORTATION

APPROVED Matthew R Rauch
for State Traffic Engineer

DATE 11/10/10 PLATE NO. M4-8.2

PROJECT NO: | HWY: | COUNTY: | SHEET NO: 120 | E

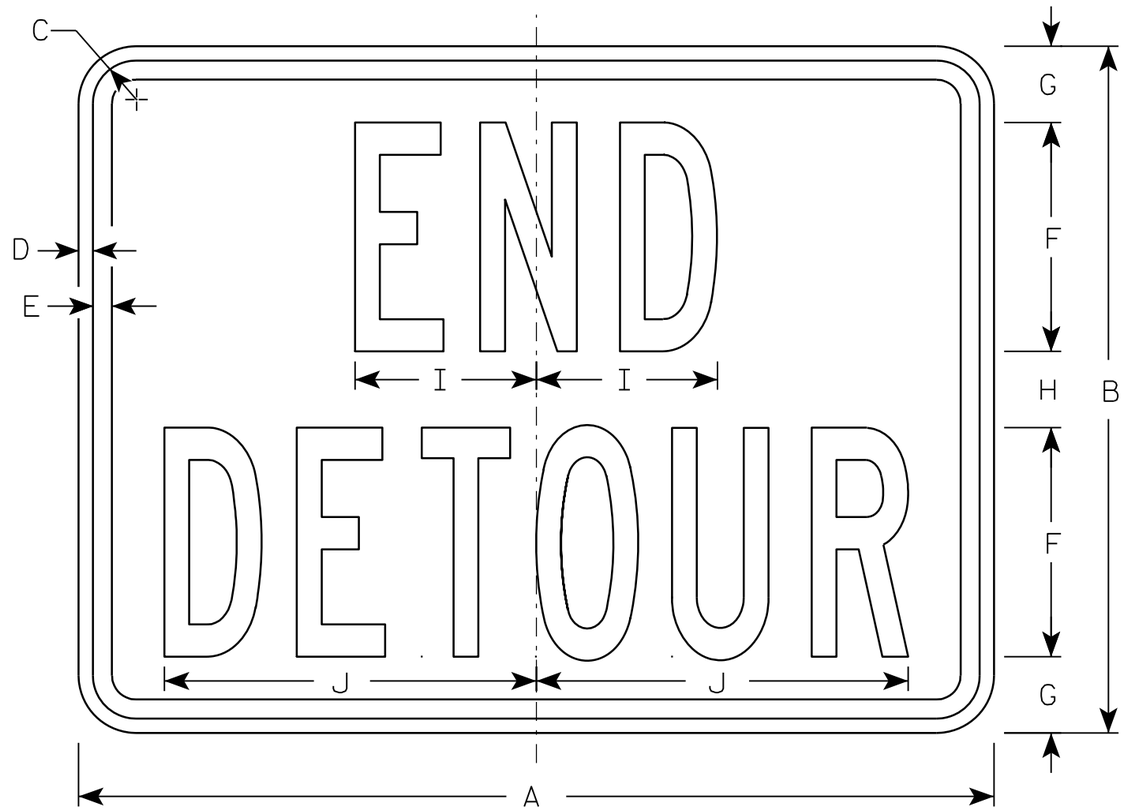

M4-8A

NOTES

1. Sign is Type II - Type F Reflective - reference WIS DOT Standard Specification for HIGHWAY and STRUCTURE CONSTRUCTION latest edition.
2. Color:
   Background - Orange
   Message - Black
3. Message Series - B
4. Corners may be square or rounded when base material is plywood but borders shall be rounded as shown. When base material is metal, the corners and borders shall be rounded.

SIZE	A	B	C	D	E	F	G	H	I	J	K	L	M	N	O	P	Q	R	S	T	U	V	W	X	Y	Z	Area sq. ft.
1																											
2	24	18	1 1/8	3/8	1/2	6	2	2	4 3/4	9 3/4																	3.0
3	30	24	1 1/8	3/8	1/2	8	2 1/2	3	6 3/4	13																	5.0
4																											
5																											

STANDARD SIGN
M4-8A

WISCONSIN DEPT OF TRANSPORTATION

APPROVED Matthew R Rauch
for State Traffic Engineer

DATE 3/9/11 PLATE NO. M4-8A.2

PROJECT NO: | HWY: | COUNTY: | SHEET NO: 121 | E

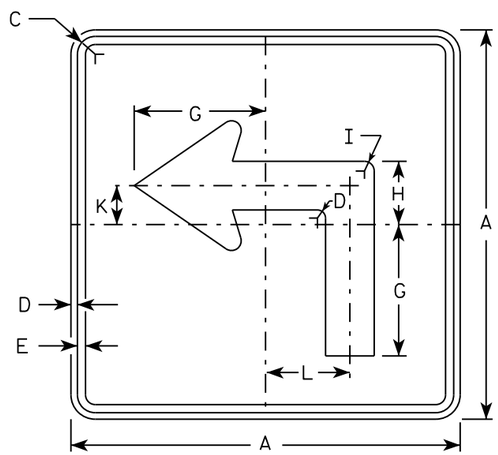

M5-1L
MM5-1L
MO5-1L
MP5-1L

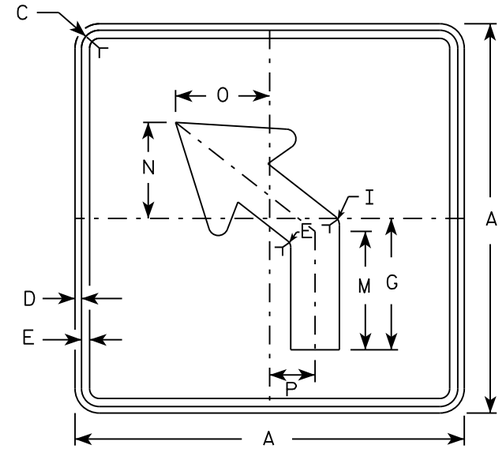

M5-2L
MM5-2L
MO5-2L
MP5-2L

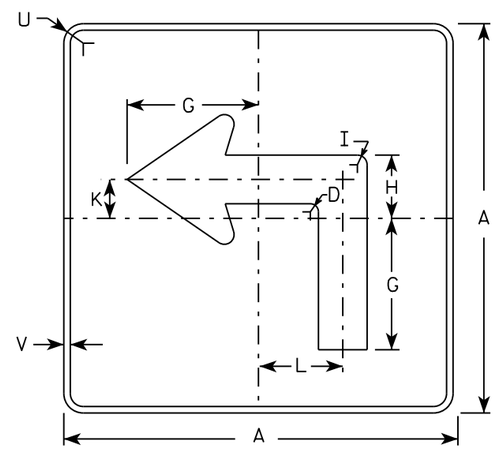

MB5-1L
MK5-1L
MN5-1L
MR5-1L

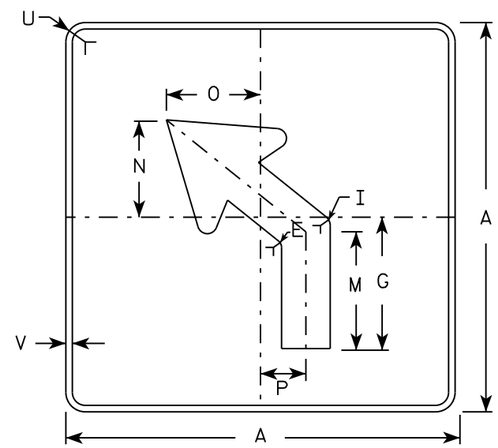

MB5-2L
MK5-2L
MN5-2L
MR5-2L

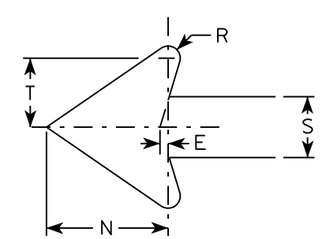

NOTES

1. Signs are Type II - Type H reflective except as shown
2. Color:
   Background - See note 4
   Message - See note 4
3. Corners may be square or rounded when base material is plywood but borders shall be rounded as shown. When base material is metal, the corners and borders shall be rounded.
4. M5-1 and M5-2 Background - White
   Message - Black
   MB5-1 and MB5-2 Background - Blue
   Message - White
   MK5-1 and MK5-2 Background - Green
   Message - White
   MM5-1 and MM5-2 Background - White
   Message - Green
   MN5-1 and MN5-2 Background - Brown
   Message - White
   MO5-1 and MO5-2 Background - Orange - Type F Reflective
   Message - Black
   MP5-1 and MP5-2 Background - White - Type H Reflective
   Message - Blue
   MR5-1 and MR5-2 Background - Brown
   Message - Yellow
5. M5-1R same as M5-1L except arrow points right.
6. M5-2R same as M5-2L except arrow tilts right.

SIZE	A	B	C	D	E	F	G	H	I	J	K	L	M	N	O	P	Q	R	S	T	U	V	W	X	Y	Z	Area sq. ft.
1																											
2	21		1 1/8	3/8	3/8		7	3 3/8	5/8		2 1/8	4 1/2	6 3/8	5 1/4	5	2 1/2		1/2	2 5/8	3	1 1/2	1/2					3.06
3	30		1 3/8	1/2	5/8		10 1/8	4 7/8	7/8		3	6 1/2	9 1/8	7 1/2	7 1/4	3 1/2		3/4	3 3/4	4 1/4	1 7/8	1/2					6.25
4	30		1 3/8	1/2	5/8		10 1/8	4 7/8	7/8		3	6 1/2	9 1/8	7 1/2	7 1/4	3 1/2		3/4	3 3/4	4 1/4	1 7/8	1/2					6.25
5	30		1 3/8	1/2	5/8		10 1/8	4 7/8	7/8		3	6 1/2	9 1/8	7 1/2	7 1/4	3 1/2		3/4	3 3/4	4 1/4	1 7/8	1/2					6.25

STANDARD SIGN
M5-1 & M5-2

WISCONSIN DEPT OF TRANSPORTATION

APPROVED Matthew R Rauch
for State Traffic Engineer

DATE 10/15/15 PLATE NO. M5-1.13

PROJECT NO:	HWY:	COUNTY:		SHEET NO:	E

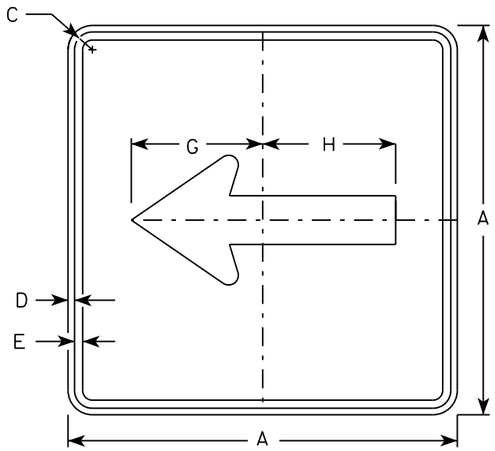

M6-1
MM6-1
MO6-1
MP6-1

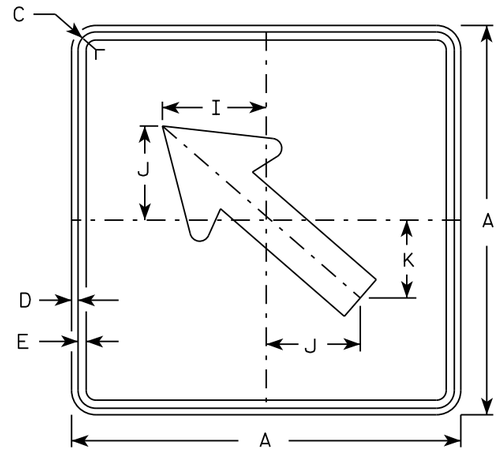

M6-2
MM6-2
MO6-2
MP6-2

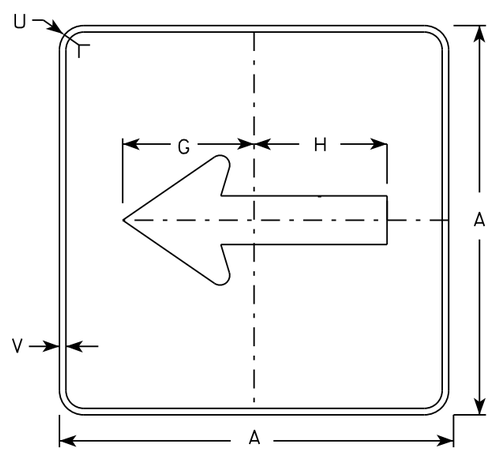

MB6-1
MK6-1
MN6-1
MR6-1

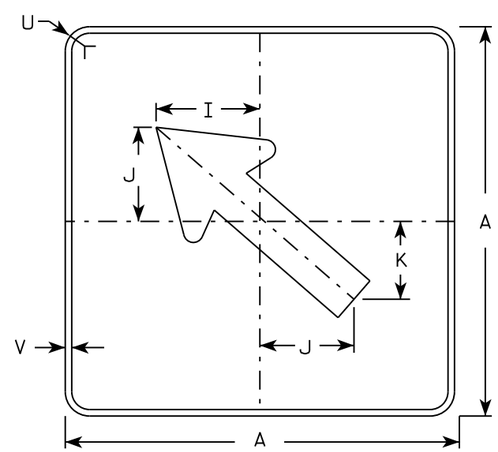

MB6-2
MK6-2
MN6-2
MR6-2

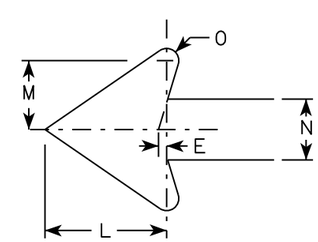

NOTES

1. Signs are Type II - Type H except as Shown
2. Color:
   Background - See note 4
   Message - See note 4
3. Corners may be square or rounded when base material is plywood but borders shall be rounded as shown. When base material is metal, the corners and borders shall be rounded.
4. M6-1 and M6-2 Background - White
   Message - Black
   MB6-1 and MB6-2 Background - Blue
   Message - White
   MK6-1 and MK6-2 Background - Green
   Message - White
   MM6-1 and MM6-2 Background - White
   Message - Green
   MN6-1 and MN6-2 Background - Brown
   Message - White
   MO6-1 and MO6-2 Background - Orange - Type F Reflective
   Message - Black
   MP6-1 and MP6-2 Background - White
   Message - Blue
   MR6-1 and MR6-2 Background - Brown
   Message - Yellow

SIZE	A	B	C	D	E	F	G	H	I	J	K	L	M	N	O	P	Q	R	S	T	U	V	W	X	Y	Z	Area sq. ft.
1																											
2	21		1 1/8	3/8	3/8		7 1/2	7 1/8	5 5/8	5	4 1/4	5 1/4	3	2 5/8	1/2						1 1/2	1/2					3.06
3	30		1 3/8	1/2	5/8		10 3/4	10 1/4	8	7 1/4	6	7 1/2	4 1/4	3 3/4	3/4						1 7/8	1/2					6.25
4	30		1 3/8	1/2	5/8		10 3/4	10 1/4	8	7 1/4	6	7 1/2	4 1/4	3 3/4	3/4						1 7/8	1/2					6.25
5	30		1 3/8	1/2	5/8		10 3/4	10 1/4	8	7 1/4	6	7 1/2	4 1/4	3 3/4	3/4						1 7/8	1/2					6.25

STANDARD SIGN
M6-1 & M6-2
SERIES

WISCONSIN DEPT OF TRANSPORTATION

APPROVED Matthew R Rauch
for State Traffic Engineer

DATE 10/15/15 PLATE 123 M6-1.15

PROJECT NO: | HWY: | COUNTY: | SHEET NO: | E

NOTES

1. Sign is Type II - Type H Reflective
2. Color:
   Background - White
   Message - Black
3. Message Series - C
4. Corners may be square or rounded when base material is plywood but borders shall be rounded as shown. When base material is metal, the corners and borders shall be rounded.
5. Substitute appropriate numerals to nearest quarter mile and optically adjust spacing to achieve proper balance.

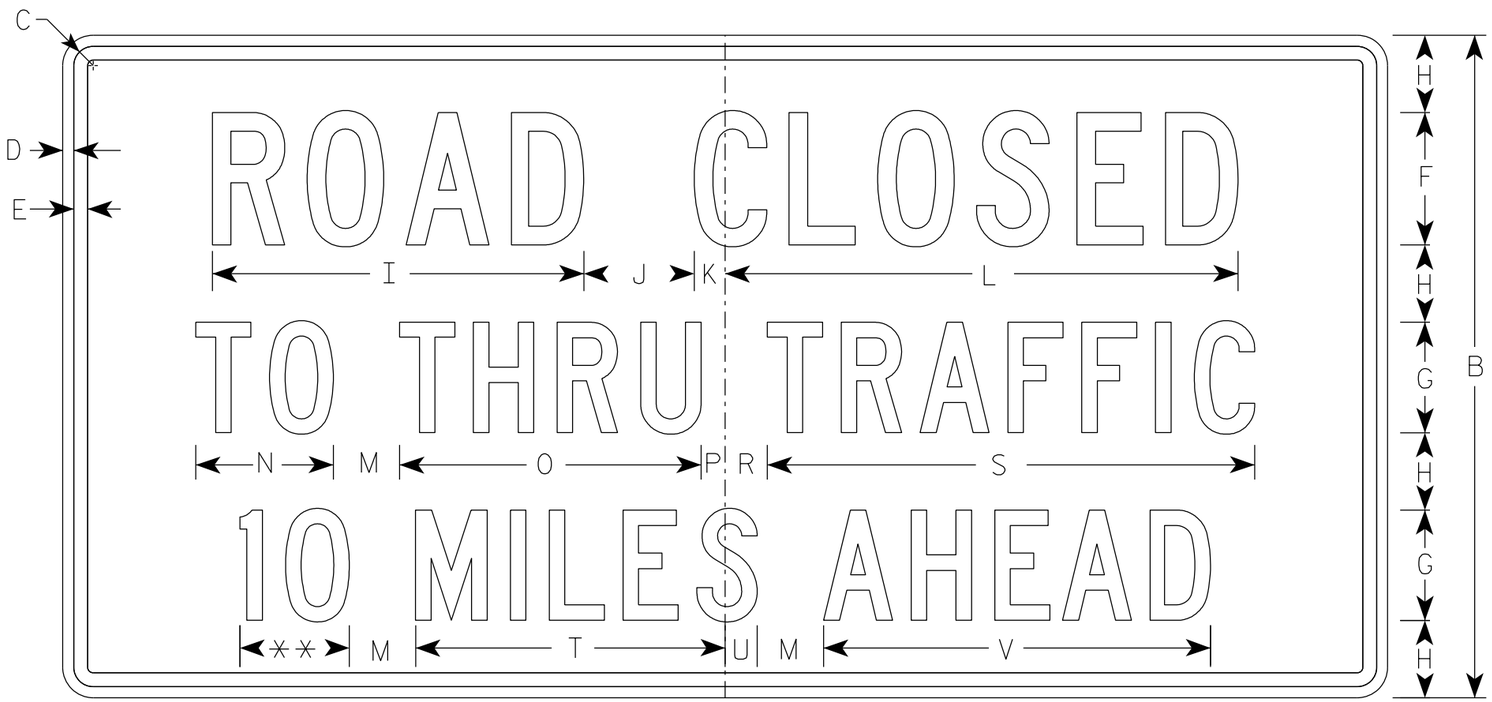

R11-3

** See Note 5

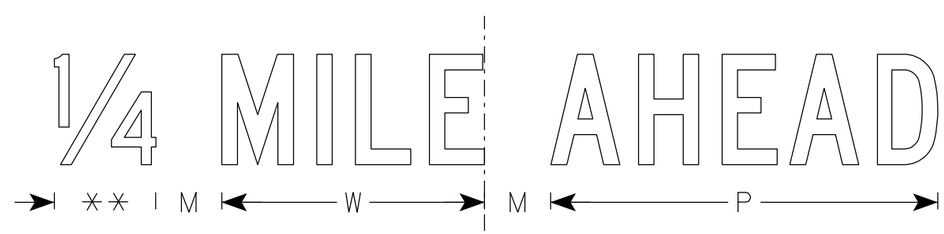

SIZE	A	B	C	D	E	F	G	H	I	J	K	L	M	N	O	P	Q	R	S	T	U	V	W	X	Y	Z	Area sq. ft.
1	36	18	1 1/4	3/8	3/8	4	3	2	11 1/4	3	1 1/8	15 3/8	2	3 3/4	8 1/4	5/8		1 3/8	13 1/4	8 3/8	7/8	10 1/2	7 1/8				4.5
2S	60	30	1 3/8	1/2	5/8	6	5	3 1/2	16 7/8	5	1 3/8	23 1/4	3	6 1/4	13 5/8	1 1/8		1 7/8	22 1/8	14	1 1/2	17 1/2	11 7/8				12.5
2M	60	30	1 3/8	1/2	5/8	6	5	3 1/2	16 7/8	5	1 3/8	23 1/4	3	6 1/4	13 5/8	1 1/8		1 7/8	22 1/8	14	1 1/2	17 1/2	11 7/8				12.5
3																											
4																											
5																											

STANDARD SIGN
R11-3

WISCONSIN DEPT OF TRANSPORTATION

APPROVED Matthew R Rauch
for State Traffic Engineer

DATE 6/14/2021 PLATE NO. R11-3.9

PROJECT NO: | HWY: | COUNTY: | SHEET NO: 124 | E

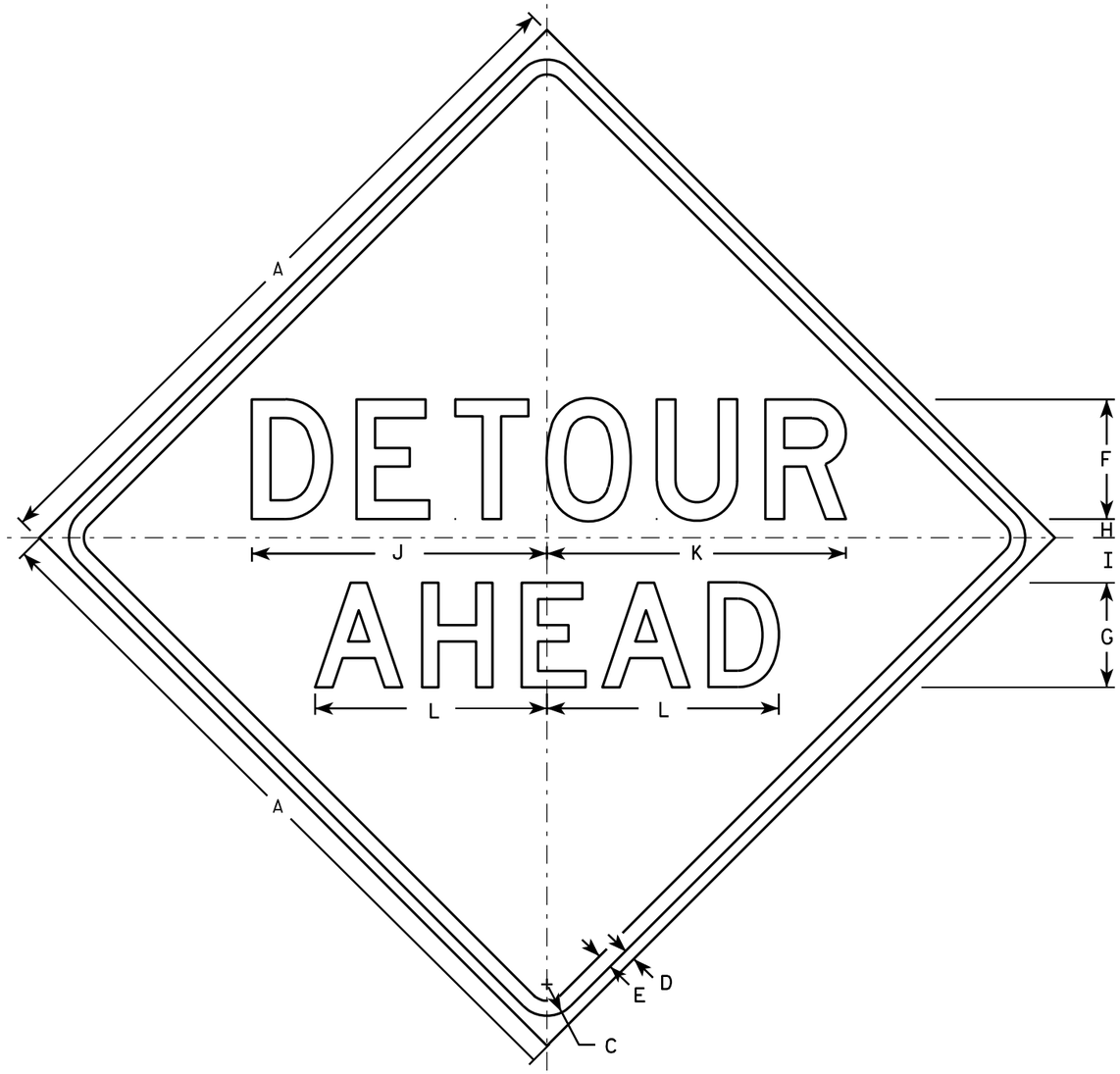

W20-2A

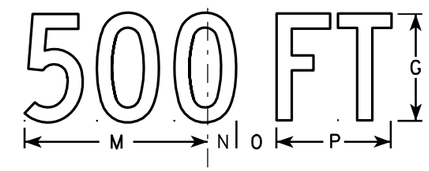

W20-2D

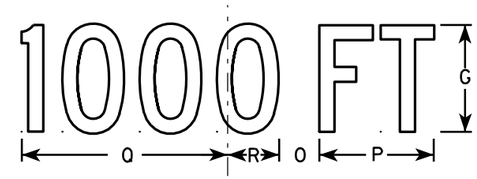

W20-2C

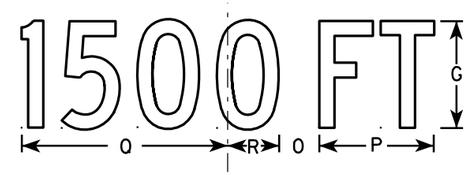

W20-2B

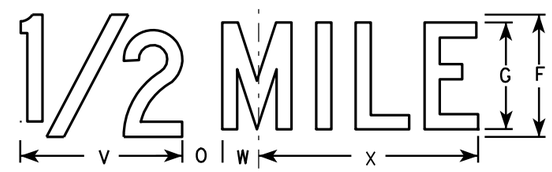

W20-2G

W20-2F

NOTES

1. Sign is Type II - Type F Reflective - reference WIS DOT Standard Specification for HIGHWAY and STRUCTURE CONSTRUCTION latest edition.
2. Color:
   Background - Orange
   Message - Black
3. Message Series - See note 5
4. Corners may be square or rounded when base material is plywood but borders shall be rounded as shown. When base material is metal, the corners and borders shall be rounded.
5. Line 1 is Series D.
   Line 2 is Series D for AHEAD and Series C for all other distances.

SIZE	A	B	C	D	E	F	G	H	I	J	K	L	M	N	O	P	Q	R	S	T	U	V	W	X	Y	Z	Area sq. ft.
1	36		1 5/8	5/8	3/4	6	5	1	2 1/4	14 3/4	15	11 5/8	9	1 3/8	1 7/8	5 5/8	10 1/8	2 1/2	1 1/8	4 1/2	3 1/2	8	1 3/4	10 3/4			9.0
2S	48		2 1/4	3/4	1	8	7	1 1/4	3	19 3/4	20	15 1/2	12	1 7/8	2 5/8	7 1/2	13 1/2	3 3/8	1 1/2	6	4 5/8	10 5/8	2 3/8	14 3/8			16.0
2M	48		2 1/4	3/4	1	8	7	1 1/4	3	19 3/4	20	15 1/2	12	1 7/8	2 5/8	7 1/2	13 1/2	3 3/8	1 1/2	6	4 5/8	10 5/8	2 3/8	14 3/8			16.0
3	48		2 1/4	3/4	1	8	7	1 1/4	3	19 3/4	20	15 1/2	12	1 7/8	2 5/8	7 1/2	13 1/2	3 3/8	1 1/2	6	4 5/8	10 5/8	2 3/8	14 3/8			16.0
4	48		2 1/4	3/4	1	8	7	1 1/4	3	19 3/4	20	15 1/2	12	1 7/8	2 5/8	7 1/2	13 1/2	3 3/8	1 1/2	6	4 5/8	10 5/8	2 3/8	14 3/8			16.0
5	48		2 1/4	3/4	1	8	7	1 1/4	3	19 3/4	20	15 1/2	12	1 7/8	2 5/8	7 1/2	13 1/2	3 3/8	1 1/2	6	4 5/8	10 5/8	2 3/8	14 3/8			16.0

STANDARD SIGN
W20-2A,B,C,D,F & G

WISCONSIN DEPT OF TRANSPORTATION

APPROVED Matthew R Rauch
for State Traffic Engineer
DATE 3/18/11 PLATE NO. W20-2.6

7

7

PROJECT NO: | HWY: | COUNTY: | SHEET NO: 125 | E

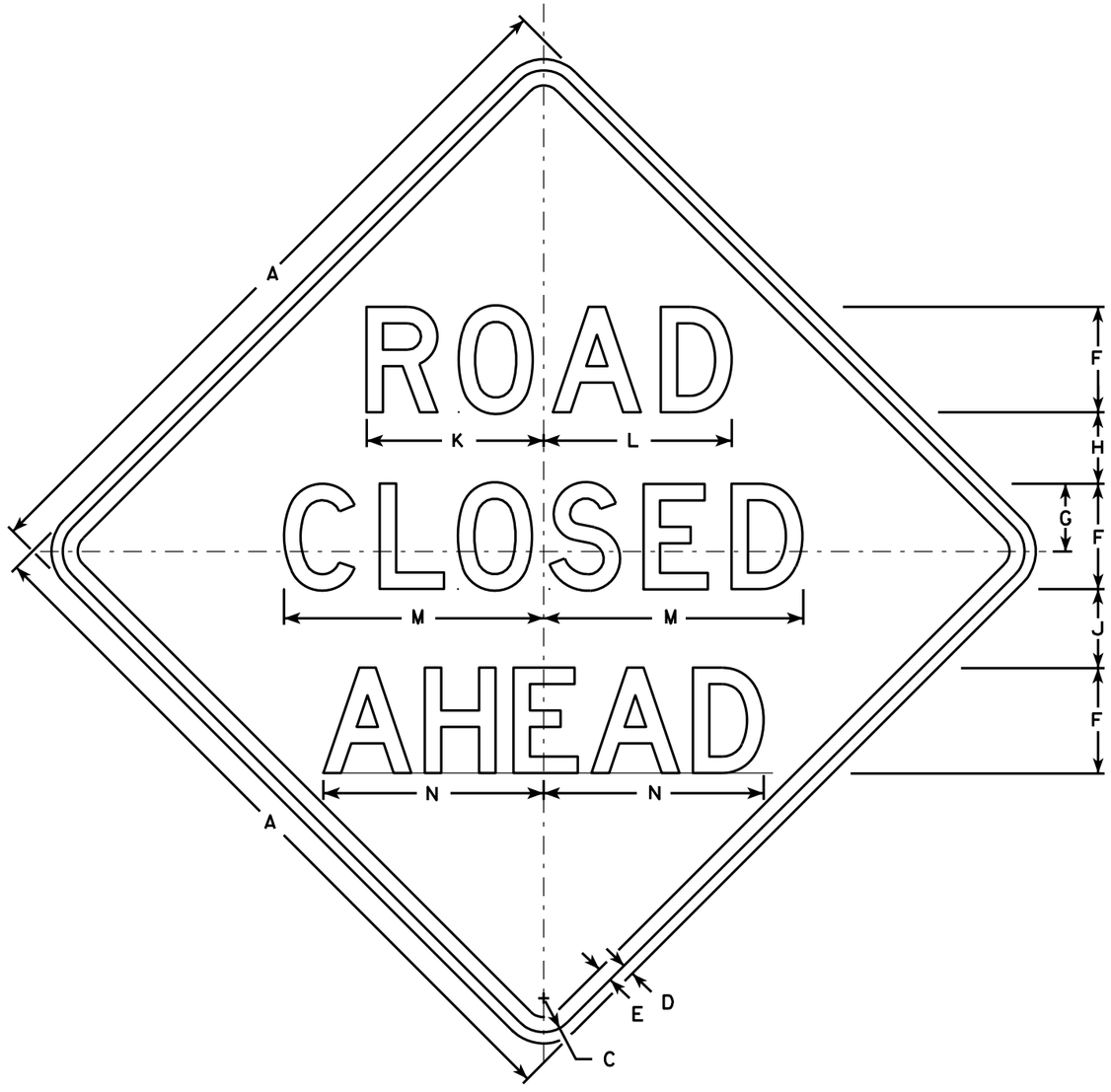

W20-3A

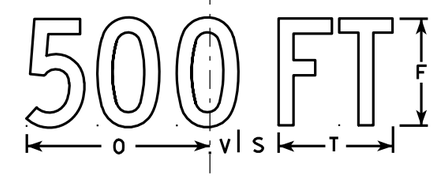

W20-3D

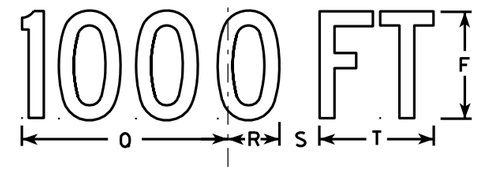

W20-3C

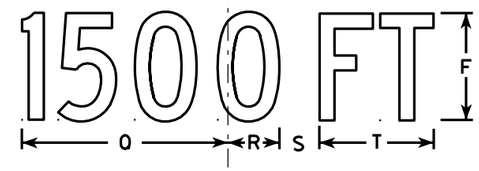

W20-3B

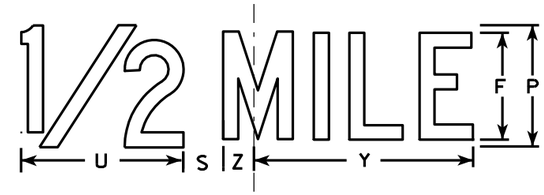

W20-3G

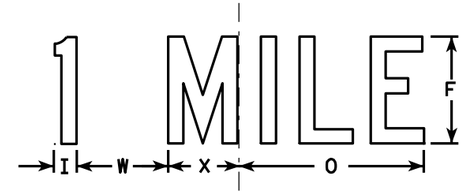

W20-3F

NOTES

1. Sign is Type II - Type F Reflective - reference WIS DOT Standard Specification for HIGHWAY and STRUCTURE CONSTRUCTION latest edition.
2. Color:
   Background - Orange
   Message - Black
3. Message Series - see note 5
4. Corners may be square or rounded when base material is plywood but borders shall be rounded as shown. When base material is metal, the corners and borders shall be rounded.
5. Lines 1 and 2 are Series D.
   Line 3 is Series D for AHEAD and Series C for all other distances.

SIZE	A	B	C	D	E	F	G	H	I	J	K	L	M	N	O	P	Q	R	S	T	U	V	W	X	Y	Z	Area sq. ft.
1	36		1 5/8	5/8	3/4	5	3 3/8	3 1/2	1 1/8	4	8 3/8	8 7/8	12 1/2	11	9	6	10 1/8	2 1/2	1 7/8	5 5/8	8	1 3/8	4 1/2	3 1/2	10 3/4	1 3/4	9.0
2S	48		2 1/4	3/4	1	7	4 1/2	4 3/4	1 1/2	5 1/4	11 3/4	12 1/2	17 1/4	14 5/8	12	8	13 1/2	3 3/8	2 5/8	7 1/2	10 5/8	1 7/8	6	4 5/8	14 3/8	2 3/8	16.0
2M	48		2 1/4	3/4	1	7	4 1/2	4 3/4	1 1/2	5 1/4	11 3/4	12 1/2	17 1/4	14 5/8	12	8	13 1/2	3 3/8	2 5/8	7 1/2	10 5/8	1 7/8	6	4 5/8	14 3/8	2 3/8	16.0
3	48		2 1/4	3/4	1	7	4 1/2	4 3/4	1 1/2	5 1/4	11 3/4	12 1/2	17 1/4	14 5/8	12	8	13 1/2	3 3/8	2 5/8	7 1/2	10 5/8	1 7/8	6	4 5/8	14 3/8	2 3/8	16.0
4	48		2 1/4	3/4	1	7	4 1/2	4 3/4	1 1/2	5 1/4	11 3/4	12 1/2	17 1/4	14 5/8	12	8	13 1/2	3 3/8	2 5/8	7 1/2	10 5/8	1 7/8	6	4 5/8	14 3/8	2 3/8	16.0
5	48		2 1/4	3/4	1	7	4 1/2	4 3/4	1 1/2	5 1/4	11 3/4	12 1/2	17 1/4	14 5/8	12	8	13 1/2	3 3/8	2 5/8	7 1/2	10 5/8	1 7/8	6	4 5/8	14 3/8	2 3/8	16.0

STANDARD SIGN
W20-3A, B, C, D, F & G

WISCONSIN DEPT OF TRANSPORTATION

APPROVED Matthew R Rauch
for State Traffic Engineer
DATE 3/18/11 PLATE NO. W20-3.7

PROJECT NO:	HWY:	COUNTY:		SHEET NO: 126	E

STATION	Distance	AREA (SF) Cut	Salvaged/ Unusable	Fill	Incremental Vol (CY) (Unadjusted) Cut	Salvaged/Unusable	Fill	Cumulative Vol (CY) Cut	Expanded Fill	Mass Ordinate
			Pavement Material			Pavement Material		1.00	1.25	Note 8
123+12		1.31	0	6.4	0	0	0	0	0	0
123+50	38	1.48	16	6.06	2	11	9	2	11	-20
124+00	50	0.68	16	7.69	2	30	13	4	27	-64
124+50	50	2.21	16	8.5	3	30	15	7	46	-109
125+00	50	5.41	16	11.54	7	30	19	14	69	-155
125+50	50	14.86	16	2.89	19	30	13	32	86	-183
126+00	50	34.63	16	2.87	46	30	5	78	92	-173
126+50	50	59.45	16	0.88	87	30	3	165	97	-120
127+00	50	81.23	16	1.07	130	30	2	296	99	-22
127+50	50	102.65	16	3.89	170	30	5	466	105	113
128+00	50	123.89	16	2.1	210	30	6	676	111	286
128+50	50	141.92	16	0	246	30	2	922	114	500
129+00	50	150.57	16	0	271	30	0	1193	114	742
129+50	50	150.67	16	35.09	279	30	32	1472	154	950
130+00	50	151.7	16	127.46	280	30	151	1752	343	1012
130+50	50	155.96	16	81.68	285	30	194	2036	585	1026
131+00	50	133.24	16	37.69	268	30	111	2304	723	1126
131+50	50	240.67	16	0	346	30	35	2650	766	1399
132+00	50	128.17	16	33.84	342	30	31	2992	806	1671
132+50	50	124.14	16	31.82	234	30	61	3226	882	1799
133+00	50	104.77	16	19.41	212	30	47	3437	941	1922
133+50	50	94.15	16	19.98	184	30	36	3622	987	2031
134+00	50	87.92	16	7.29	169	30	25	3790	1018	2139
134+50	50	83.85	16	3.81	159	30	10	3949	1031	2255
135+00	50	58.6	16	152.39	132	30	145	4081	1212	2177
135+50	50	42.99	16	68.93	94	30	205	4175	1468	1985
136+00	50	26.47	16	94.36	64	30	151	4240	1657	1831
136+50	50	13.64	16	131.74	37	30	209	4277	1919	1577
137+00	50	6.42	16	176.03	19	30	285	4295	2275	1209
137+50	50	4.36	16	281.69	10	30	424	4305	2805	660
138+00	50	4.05	0	145.38	8	15	395	4313	3299	159
						0				
Column totals					4313	856	2639			

STATION	Distance	AREA (SF) Cut	Salvaged/ Unusable	Fill	Incremental Vol (CY) (Unadjusted) Cut	Salvaged/Unusable	Fill	Cumulative Vol (CY) Cut	Expanded Fill	Mass Ordinate
			Pavement Material			Pavement Material		1.00	1.25	Note 8
244+85		3.33	0	13.17	0	0	0	0	0	0
245+25	40	0	0	37.5	2	0	38	2	47	-44
245+50	25	0	0	75.33	0	0	52	2	112	-110
245+75	25	0	0	86.32	0	0	75	2	206	-203
246+00	25	1.45	0	107.43	1	0	90	3	318	-315
246+50	50	0.35	0	16.37	2	0	115	5	461	-456
247+00	50	0	0	23.02	0	0	36	5	507	-502
247+50	50	0	0	22.92	0	0	43	5	560	-555
248+00	50	0	0	28.6	0	0	48	5	620	-614
248+50	50	0	0	25.76	0	0	50	5	682	-677
249+00	50	0.25	0	22.56	0	0	45	5	738	-733
249+50	50	0.54	0	21.99	1	0	41	6	790	-784
250+00	50	1	0	18.56	1	0	38	8	837	-829
250+50	50	0.94	0	19.65	2	0	35	9	881	-872
251+00	50	0.86	0	21.88	2	0	38	11	929	-918
251+50	50	0.48	0	25.73	1	0	44	12	984	-972
252+00	50	0.04	0	32.12	0	0	54	13	1051	-1039
252+50	50	0	0	32.66	0	0	60	13	1126	-1113
253+00	50	0.39	0	25.85	0	0	54	13	1194	-1181
253+50	50	0.9	0	21.68	1	0	44	14	1249	-1235
253+56	6	0.04	0	314.53	0	0	37	14	1296	-1281
253+81	25	0	0	290.76	0	0	280	14	1646	-1632
254+06	25	0	0	259.95	0	0	255	14	1965	-1950
254+50	44	60.96	0	83.21	50	0	280	64	2314	-2250
255+00	119	0.9	0	40.44	68	0	743	83	2575	-2492
						0				
Column totals					132	0	2594			

9

9

PROJECT NO: 9491-06-70 / 9491-06-71 | HWY: CTH K | COUNTY: MARATHON | EARTHWORK QUANTITIES: | SHEET 127 | E

STATION	Distance	AREA (SF) Cut	Salvaged/ Unusable	Fill	Incremental Vol (CY) (Unadjusted) Cut	Salvaged/Unusable	Fill	Cumulative Vol (CY) Cut	Expanded Fill	Mass Ordinate
			Pavement Material			Pavement Material		1.00	1.25	Note 8
267+02		8.06	0	13.75	0	0	0	0	0	0
267+50	48	7.12	16	14.8	13	14	25	13	32	-32
268+00	50	3.83	16	16.22	10	30	29	24	68	-88
268+50	50	13.51	16	13.32	16	30	27	40	102	-136
269+00	50	16.62	16	16.32	28	30	27	68	136	-172
269+50	50	3.65	16	23.72	19	30	37	86	182	-229
270+00	50	12.2	16	17.36	15	30	38	101	230	-291
270+50	50	22.25	16	14.02	32	30	29	133	266	-325
271+00	50	20.88	16	20.88	40	30	32	173	307	-355
271+50	50	20.59	16	26.58	38	30	44	211	362	-402
272+00	50	21.92	16	34.75	39	30	57	251	433	-463
272+50	50	41.34	16	35.2	59	30	65	309	514	-515
273+00	50	28.27	16	27.17	64	30	58	374	586	-552
273+50	50	35	16	27.24	59	30	50	432	649	-586
274+00	50	36.96	16	27.7	67	30	51	499	712	-613
274+50	50	21.58	16	30.31	54	30	54	553	779	-655
275+00	50	24.17	16	32.48	42	30	58	595	852	-715
275+50	50	22.91	16	24.94	44	30	53	639	919	-768
276+00	50	14.25	16	13.69	34	30	36	673	963	-808
276+50	50	14.37	16	19.01	27	30	30	700	1001	-849
277+00	50	42.37	16	49.86	53	30	64	752	1081	-906
277+50	50	4.67	16	93.36	44	30	133	796	1247	-1057
278+00	50	51.71	16	7.39	52	30	93	848	1363	-1151
278+50	50	10.33	16	36.06	57	30	40	906	1414	-1174
279+00	50	50.84	16	38.52	57	30	69	962	1500	-1233
279+50	50	51.06	16	38.86	94	30	72	1057	1589	-1258
280+00	50	72.14	16	38.56	114	30	72	1171	1679	-1263
280+50	50	74.63	16	32.76	136	30	66	1307	1762	-1240
281+00	50	74.17	16	31.23	138	30	59	1444	1836	-1205
281+50	50	84.45	16	40.57	147	30	66	1591	1919	-1171
282+00	50	102.26	16	46.97	173	30	81	1764	2020	-1129
282+50	50	104.06	16	47.14	191	30	87	1955	2129	-1077
283+00	50	90.05	16	46.34	180	30	87	2135	2237	-1035
283+50	50	69.39	16	41.97	148	30	82	2283	2339	-1019
284+00	50	36.55	16	54.17	98	30	89	2381	2451	-1062
284+50	50	87.28	16	23.83	115	30	72	2495	2541	-1067
285+00	50	75.78	16	17.11	151	30	38	2646	2588	-993
285+50	50	77.7	16	17.25	142	30	32	2788	2628	-921
286+00	50	47.42	16	14.95	116	30	30	2904	2665	-872
286+50	50	19.81	16	11.61	62	30	25	2967	2696	-870
287+00	50	14.16	16	10.09	31	30	20	2998	2721	-893
287+50	50	16.91	16	8.83	29	30	18	3027	2743	-916
288+00	50	13.98	16	9.71	29	30	17	3055	2765	-938
288+50	50	14.02	16	10.59	26	30	19	3081	2788	-965
288+76	26	14.63	0	5	14	8	8	3095	2797	-969
						0				
		Column totals			3095	1266	2238			

9

9

STATION	Distance	ARFA (SF) Cut	Salvaged/ Unusable Pavement Material	Fill	Incremental Vol (CY) (Unadjusted) Cut	Salvaged/Unusable Pavement Material	Fill	Cumulative Vol (CY) Cut 1.00	Fxpanded Fill 1.25	Mass Ordinate Note 8
378+32		4.42	0	17.84	0	0	0	0	0	0
378+50	18	6.28	16	13.11	4	5	10	4	13	-15
379+00	50	4.25	16	11.73	10	30	23	13	42	-63
379+50	50	7.74	16	20.65	11	30	30	24	79	-119
380+00	50	5.94	16	8.47	13	30	27	37	113	-170
380+50	50	17.08	16	4.14	21	30	12	58	127	-193
381+00	50	30.43	16	4.23	44	30	8	102	137	-188
381+50	50	41.73	16	2.89	67	30	7	169	145	-159
382+00	50	53.51	16	6.29	88	30	9	257	156	-111
382+50	50	50.73	16	7.22	97	30	13	354	172	-60
383+00	50	66.84	16	21.66	109	30	27	463	205	-14
383+50	50	46.56	16	15.57	105	30	34	568	248	18
384+00	50	41.8	16	10.43	82	30	24	650	278	40
384+50	50	36.01	16	5.98	72	30	15	722	297	64
385+00	50	10.75	16	4.45	43	30	10	765	309	65
385+50	50	12.17	16	16.07	21	30	19	786	333	33
386+00	50	8.38	16	27.81	19	30	41	805	384	-28
386+50	50	15.45	16	33.85	22	30	57	827	455	-107
387+00	50	6.41	16	33.65	20	30	63	847	533	-195
387+50	50	5.61	16	33.96	11	30	63	859	612	-292
388+00	50	3.67	16	20.88	9	30	51	867	675	-376
388+50	50	3.9	16	12.06	7	30	31	874	713	-437
388+72	22	2.44	0	11.1	3	7	9	877	725	-453
						0				
Column totals					877	604	580			

STATION	Distance	AREA (SF) Cut	Salvaged/ Unusable Pavement Material	Fill	Incremental Vol (CY) (Unadjusted) Cut	Salvaged/Unusable Pavement Material	Fill	Cumulative Vol (CY) Cut 1.00	Expanded Fill 1.25	Mass Ordinate Note 8
10+62		72.07	0	35.72	0	0	0	0	0	0
11+00	38	81.57	0	5.49	108	0	29	108	36	72
11+43	43	24.59	0	24.5	85	0	24	193	66	127
11+85	42	25.01	0	22.31	39	0	36	231	112	120
		0.00	0	0	0	0	0	231	112	120
53+32		23.56	0	0	0	0	0	231	112	120
53+88	56	48.51	0	94.32	75	0	98	306	234	72
53+93	5	52.76	0	14.99	9	0	10	315	247	69
		0.00	0	0	0	0	0	315	247	69
60+56		2.03	0	87.26	0	0	0	315	247	69
60+86	30	0.42	0	105.74	1	0	107	317	381	-64
61+39	53	4.97	0	0.31	5	0	104	322	511	-189
		0.00	0	0	0	0	0	322	511	-189
73+52		2.19	0	1.33	0	0	0	322	511	-189
74+02	50	35.97	0	2.7	35	0	4	357	515	-158
74+75	73	116.74	0	0.03	206	0	4	564	520	44
		0.00	0	0	0	0	0	564	520	44
78+47	0	1.27	0	8.79	0	0	0	564	520	44
79+14	67	52.15	0	12.72	66	0	27	630	553	77
79+37	23	3.26	0	41.71	24	0	23	654	582	71
80+64	127	72.2	0	8.43	177	0	118	831	730	101
81+44	80	23.36		14.24	142	0	34	973	772	201
81+66	102	0.29	0	16.26	121	0	49	952	791	161
						0				
Column totals					1093	0	666			

9

9

PROJECT NO: 9491-06-70 / 9491-06-71 | HWY: CTH K | COUNTY: MARATHON | EARTHWORK QUANTITIES: | SHEET 129 | E

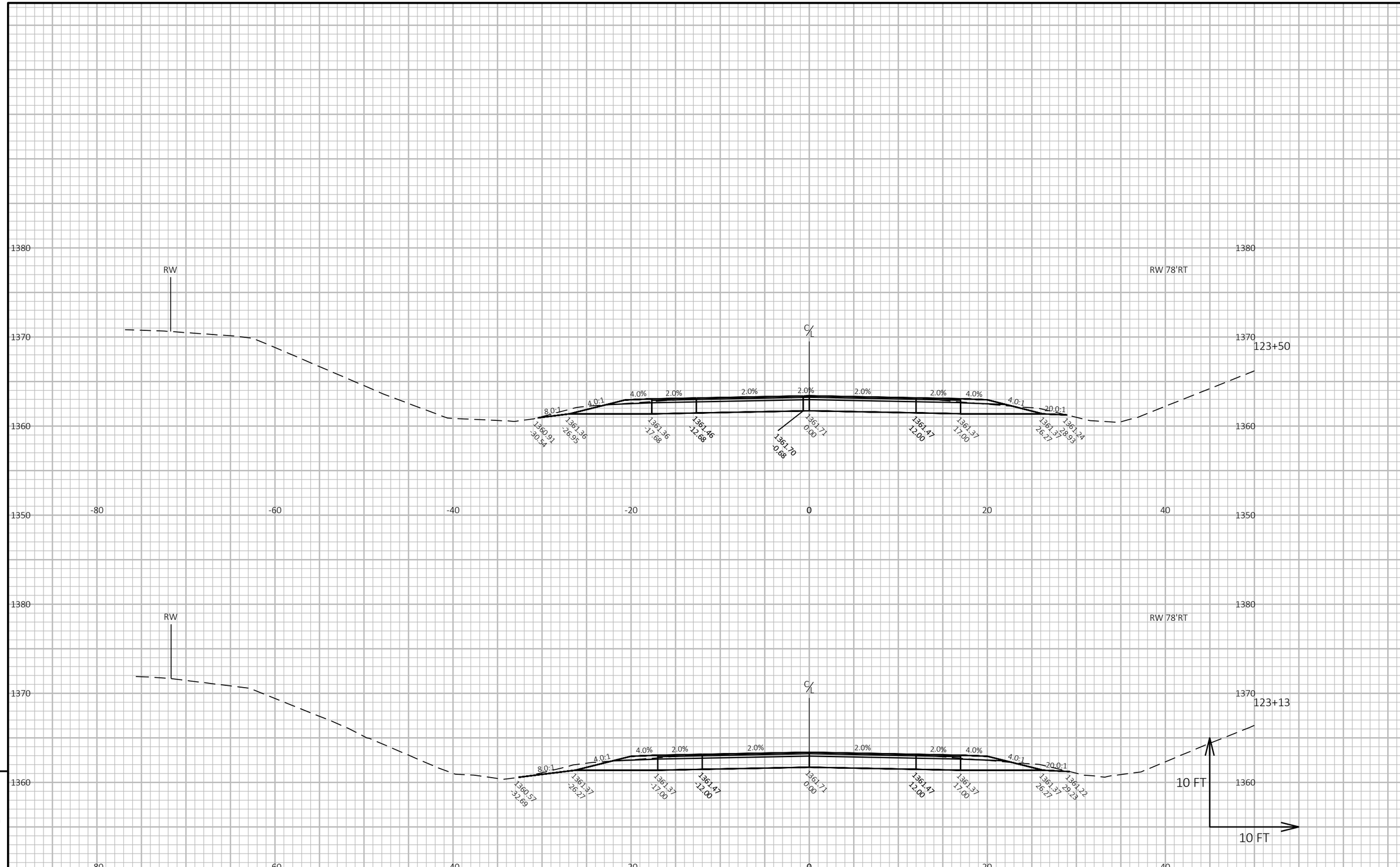

9

9

PROJECT NO: 9491-06-70 / 9491-06-71	HWY: CTH K	COUNTY: MARATHON	CROSS SECTIONS: CTH K AND MERRILL	SHEET 130	E

FILE NAME : R:\5500\5539\5539002\DWG(2018)\INTERSECTION X-SEC.DWG
LAYOUT NAME - 01

PLOT DATE : 7/27/2022 3:42 PM PLOT BY : ROCHELLE L. BURSA PLOT NAME : PLOT SCALE : 1 IN:10 FT HORZ. / 1 IN:10 FT VERT.

WISDOT/CADDS SHEET 49

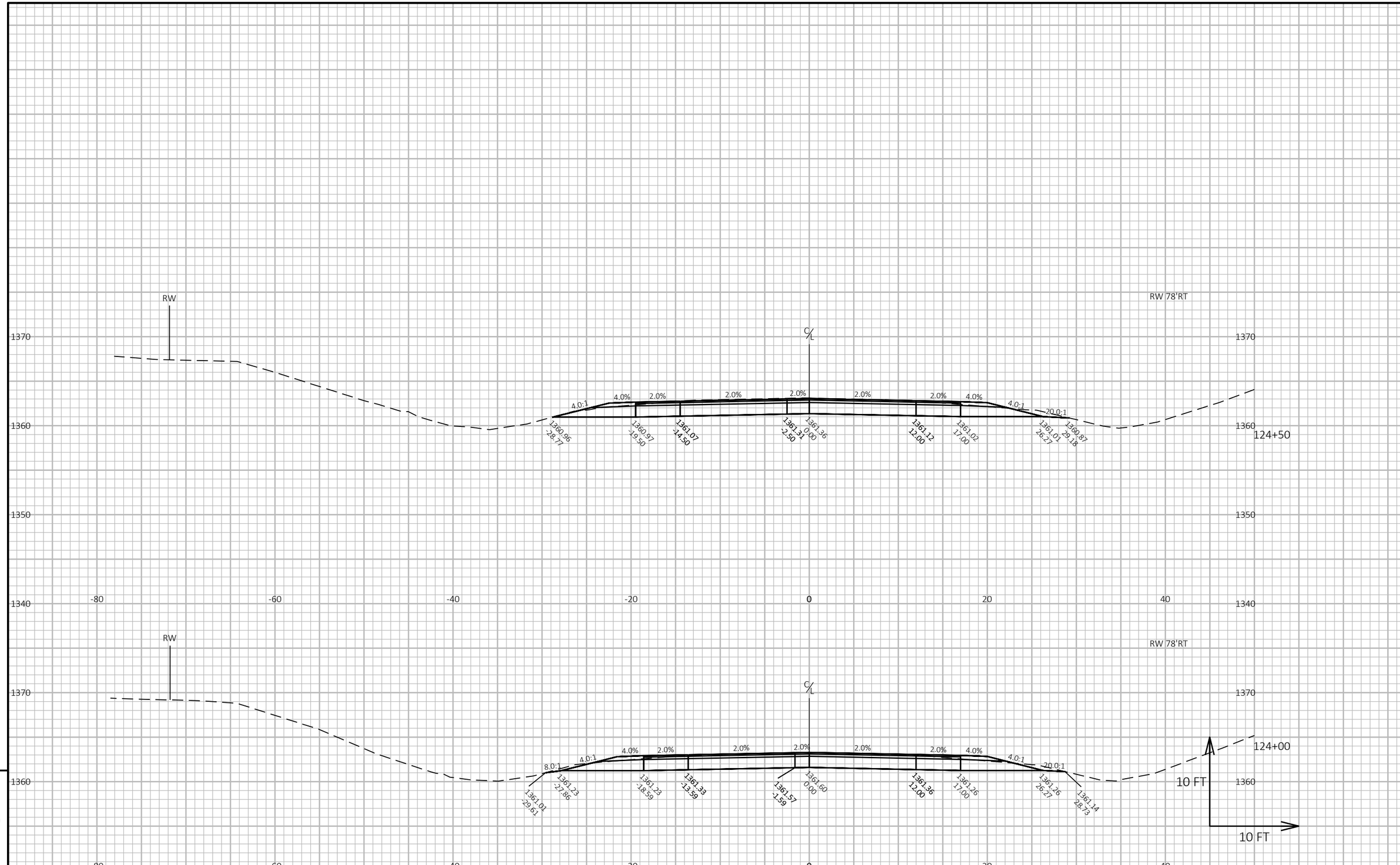

PROJECT NO: 9491-06-70 / 9491-06-71	HWY: CTH K	COUNTY: MARATHON	CROSS SECTIONS: CTH K AND MERRILL	SHEET 131	E

FILE NAME : R:\5500\5539\5539002\DWG(2018)\INTERSECTION X-SEC.DWG
LAYOUT NAME - 02
PLOT DATE : 7/27/2022 3:42 PM
PLOT BY : ROCHELLE L. BURSA
PLOT NAME :
PLOT SCALE : 1 IN:10 FT HORZ. / 1 IN:10 FT VERT.
WISDOT/CADDS SHEET 49

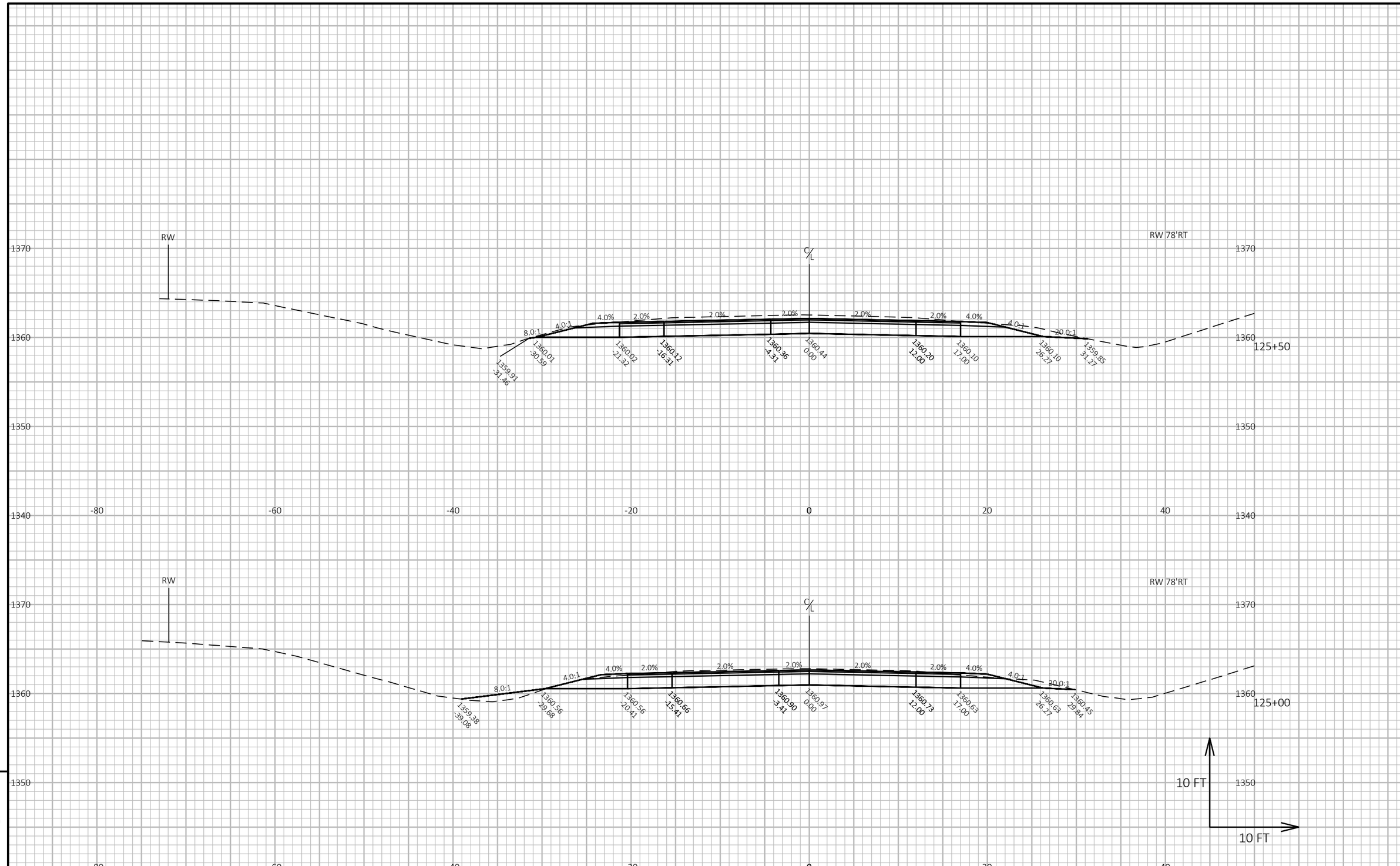

9

9

PROJECT NO: 9491-06-70 / 9491-06-71	HWY: CTH K	COUNTY: MARATHON	CROSS SECTIONS: CTH K AND MERRILL	SHEET 132	E

FILE NAME : R:\5500\5539\5539002\DWG(2018)\INTERSECTION X-SEC.DWG
LAYOUT NAME - 03
PLOT DATE : 7/27/2022 3:43 PM
PLOT BY : ROCHELLE L. BURSA
PLOT NAME :
PLOT SCALE : 1 IN:10 FT HORZ. / 1 IN:10 FT VERT.
WISDOT/CADDS SHEET 49

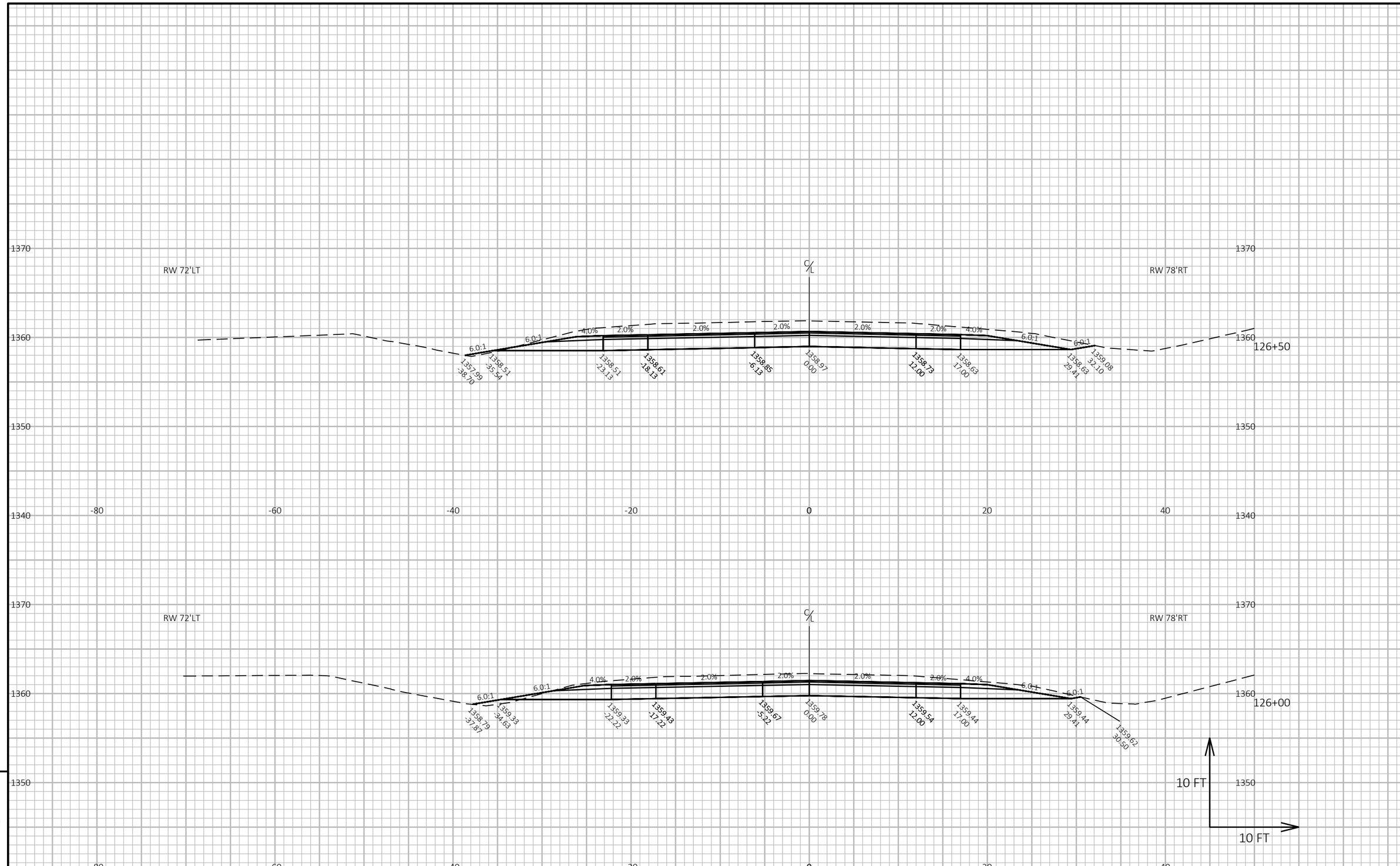

9

9

PROJECT NO: 9491-06-70 / 9491-06-71	HWY: CTH K	COUNTY: MARATHON	CROSS SECTIONS: CTH K AND MERRILL	SHEET 133	E

FILE NAME : R:\5500\5539\5539002\DWG(2018)\INTERSECTION X-SEC.DWG
LAYOUT NAME - 04
PLOT DATE : 7/27/2022 3:43 PM
PLOT BY : ROCHELLE L. BURSA
PLOT NAME :
PLOT SCALE : 1 IN:10 FT HORZ. / 1 IN:10 FT VERT.
WISDOT/CADDS SHEET 49

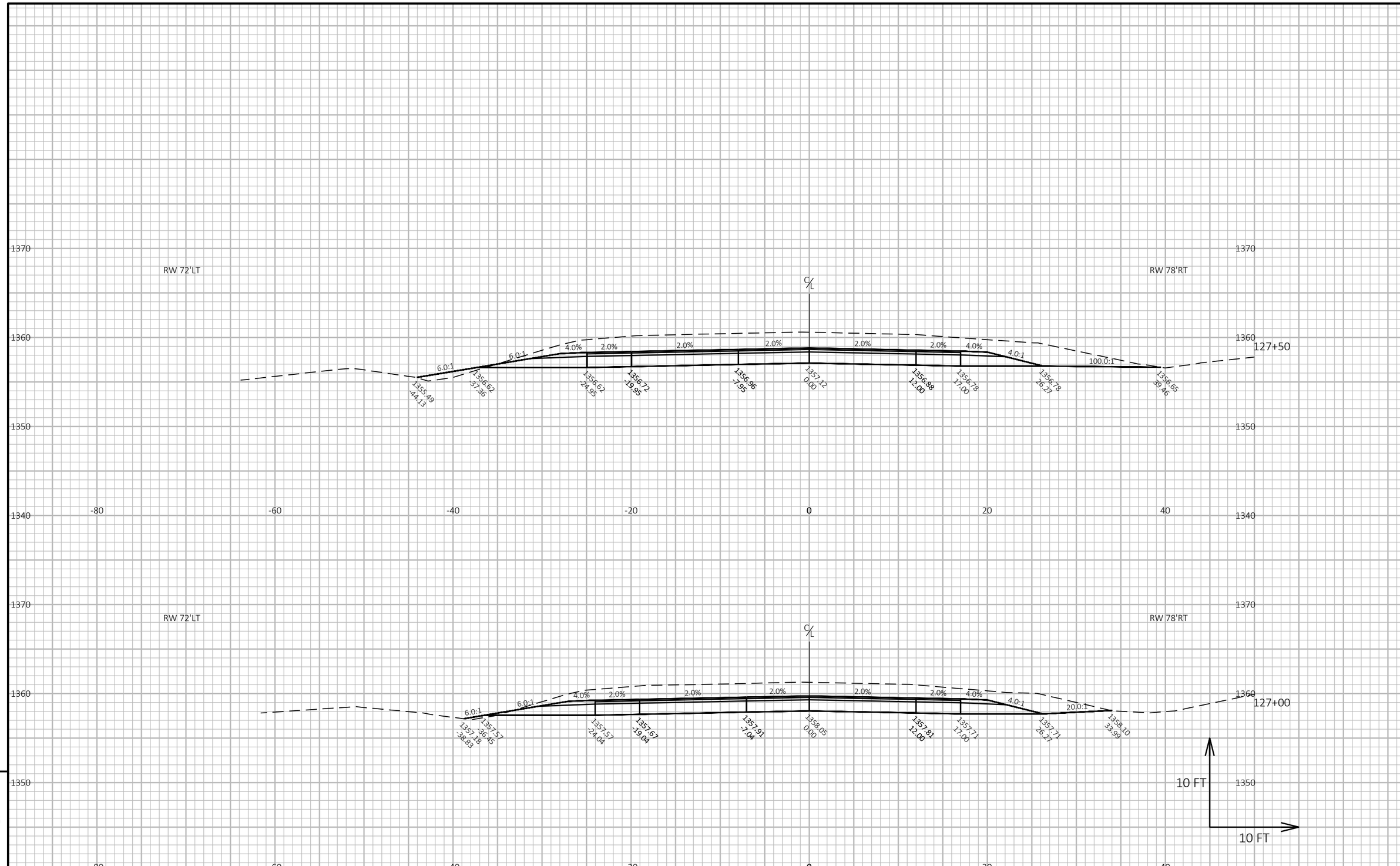

9

9

PROJECT NO: 9491-06-70 / 9491-06-71	HWY: CTH K	COUNTY: MARATHON	CROSS SECTIONS: CTH K AND MERRILL	SHEET 134	E

FILE NAME : R:\5500\5539\5539002\DWG(2018)\INTERSECTION X-SEC.DWG
LAYOUT NAME - 05
PLOT DATE : 7/27/2022 3:43 PM
PLOT BY : ROCHELLE L. BURSA
PLOT NAME :
PLOT SCALE : 1 IN:10 FT HORZ. / 1 IN:10 FT VERT.
WISDOT/CADDS SHEET 49

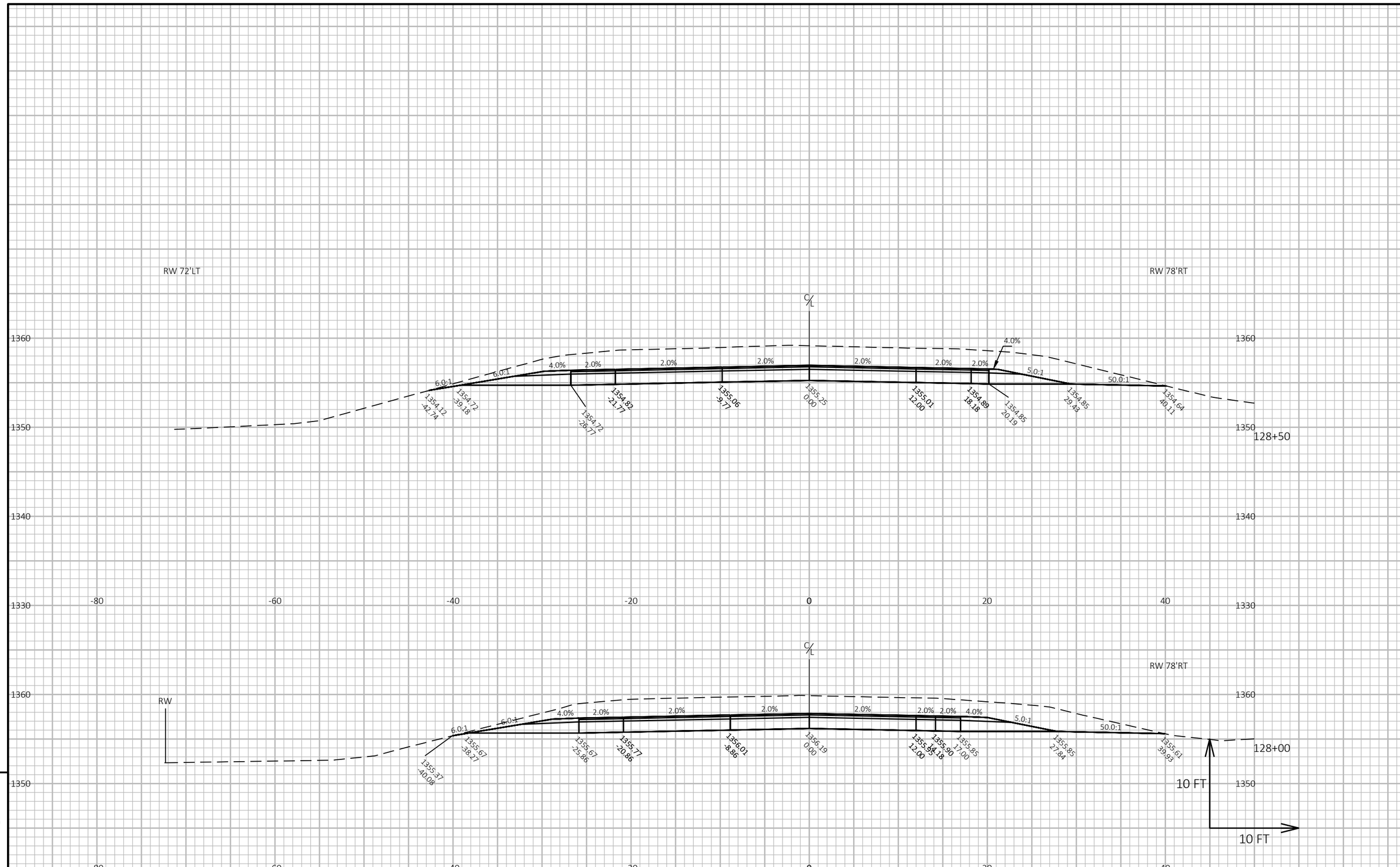

PROJECT NO: 9491-06-70 / 9491-06-71	HWY: CTH K	COUNTY: MARATHON	CROSS SECTIONS: CTH K AND MERRILL	SHEET 135	E

FILE NAME : R:\5500\5539\5539002\DWG(2018)\INTERSECTION X-SEC.DWG
LAYOUT NAME - 06
PLOT DATE : 7/27/2022 3:43 PM
PLOT BY : ROCHELLE L. BURSA
PLOT NAME :
PLOT SCALE : 1 IN:10 FT HORZ. / 1 IN:10 FT VERT.
WISDOT/CADDS SHEET 49

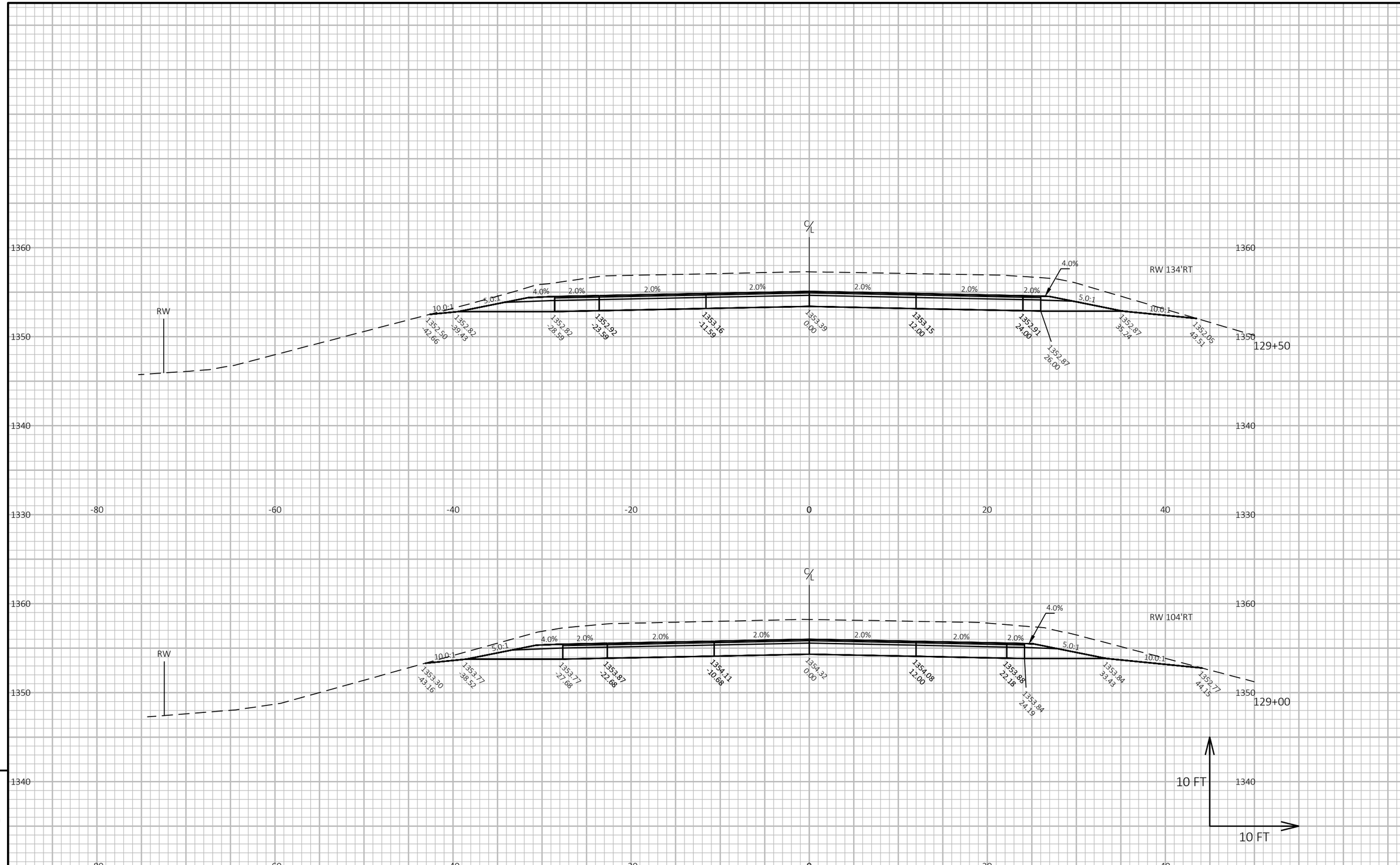

9

9

PROJECT NO: 9491-06-70 / 9491-06-71	HWY: CTH K	COUNTY: MARATHON	CROSS SECTIONS: CTH K AND MERRILL	SHEET 136	E

FILE NAME : R:\5500\5539\5539002\DWG(2018)\INTERSECTION X-SEC.DWG
LAYOUT NAME - 07

PLOT DATE : 7/27/2022 3:43 PM

PLOT BY : ROCHELLE L. BURSA

PLOT NAME :

PLOT SCALE : 1 IN:10 FT HORZ. / 1 IN:10 FT VERT.

WISDOT/CADDS SHEET 49

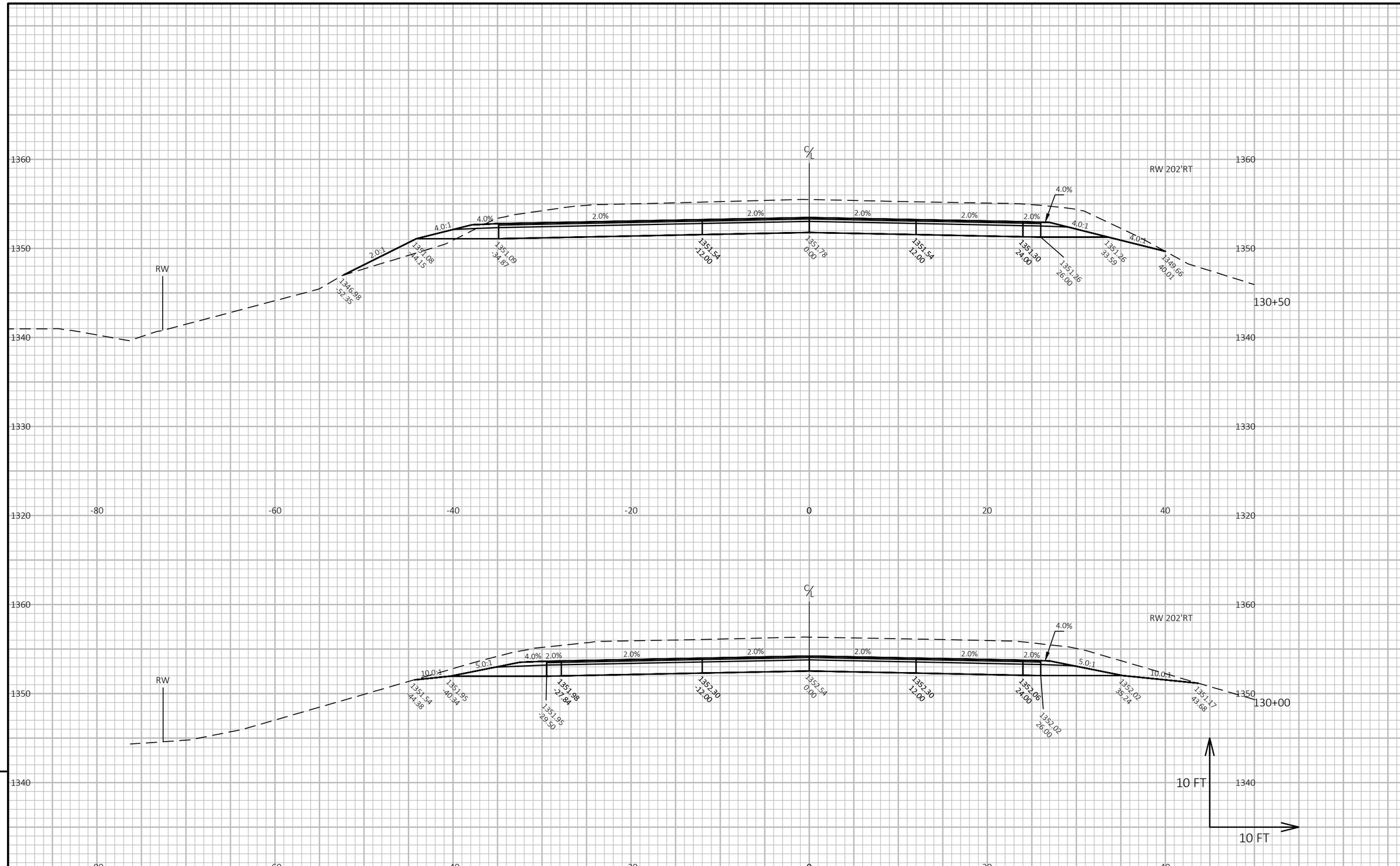

9

9

PROJECT NO: 9491-06-70 / 9491-06-71	HWY: CTH K	COUNTY: MARATHON	CROSS SECTIONS: CTH K AND MERRILL	SHEET 137	E

FILE NAME : R:\5500\5539\5539002\DWG(2018)\INTERSECTION X-SEC.DWG
LAYOUT NAME - 08
PLOT DATE : 7/27/2022 3:43 PM
PLOT BY : ROCHELLE L. BURSA
PLOT NAME :
PLOT SCALE : 1 IN:10 FT HORZ. / 1 IN:10 FT VERT.
WISDOT/CADDS SHEET 49

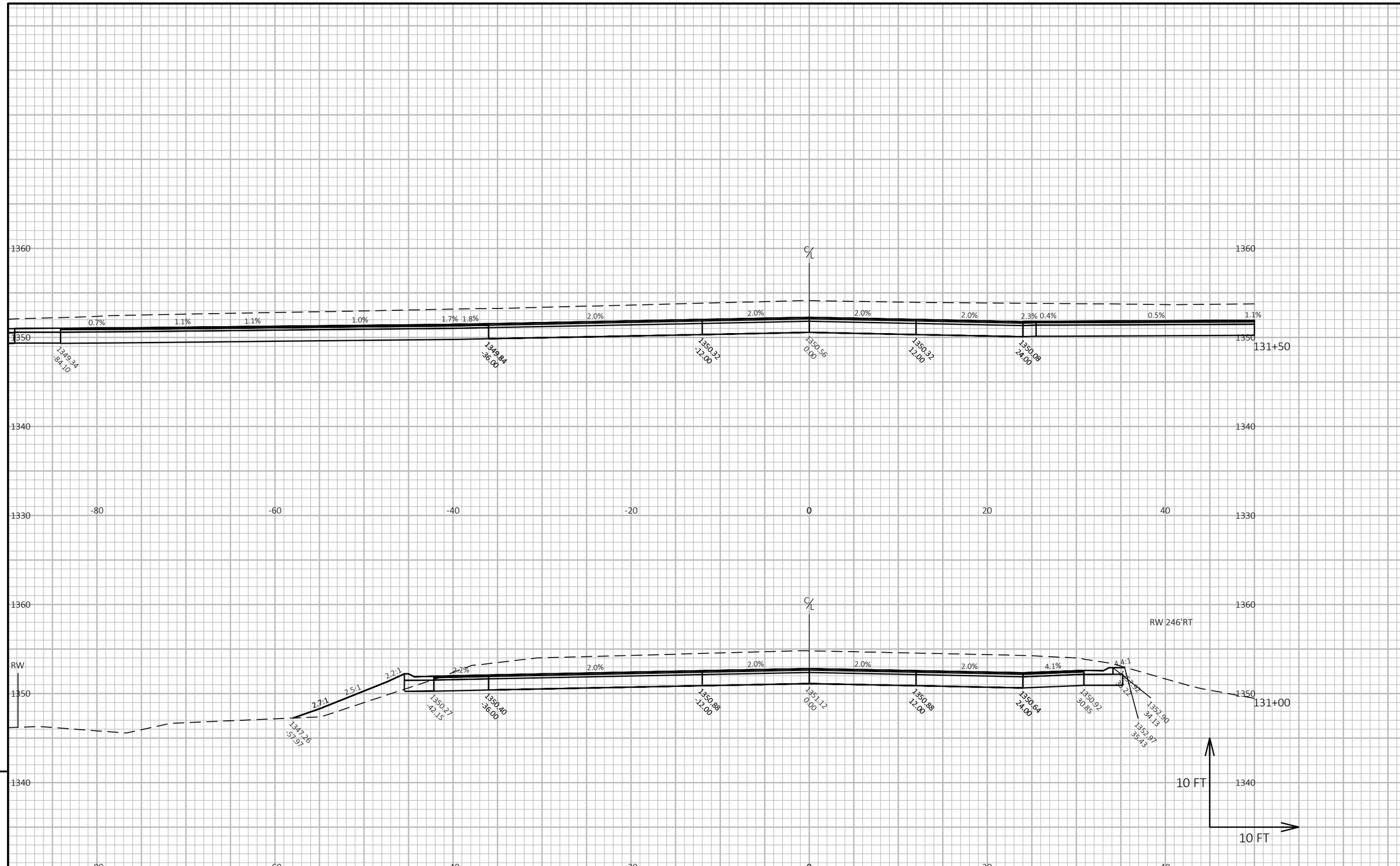

9

9

PROJECT NO: 9491-06-70 / 9491-06-71	HWY: CTH K	COUNTY: MARATHON	CROSS SECTIONS: CTH K AND MERRILL	SHEET 138	E

FILE NAME : R:\5500\5539\5539002\DWG(2018)\INTERSECTION X-SEC.DWG
LAYOUT NAME - 09
PLOT DATE : 7/27/2022 3:43 PM
PLOT BY : ROCHELLE L. BURSA
PLOT NAME :
PLOT SCALE : 1 IN:10 FT HORZ. / 1 IN:10 FT VERT.
WISDOT/CADDS SHEET 49

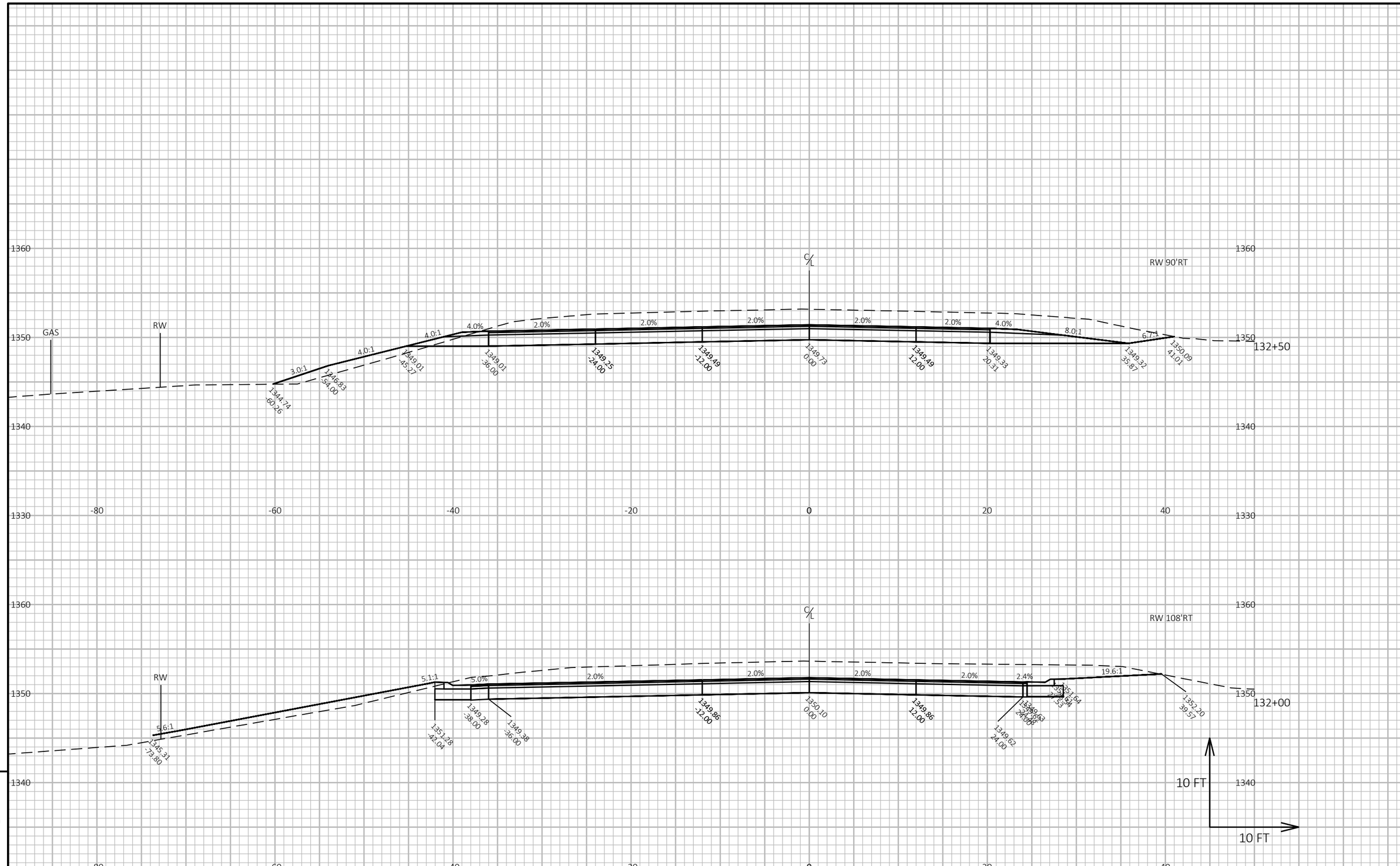

9

9

PROJECT NO: 9491-06-70 / 9491-06-71	HWY: CTH K	COUNTY: MARATHON	CROSS SECTIONS: CTH K AND MERRILL	SHEET 139	E

FILE NAME : R:\5500\5539\5539002\DWG(2018)\INTERSECTION X-SEC.DWG
LAYOUT NAME - 10

PLOT DATE : 7/27/2022 3:43 PM PLOT BY : ROCHELLE L. BURSA PLOT NAME : **PLOT SCALE :** 1 IN:10 FT HORZ. / 1 IN:10 FT VERT.

WISDOT/CADDS SHEET 49

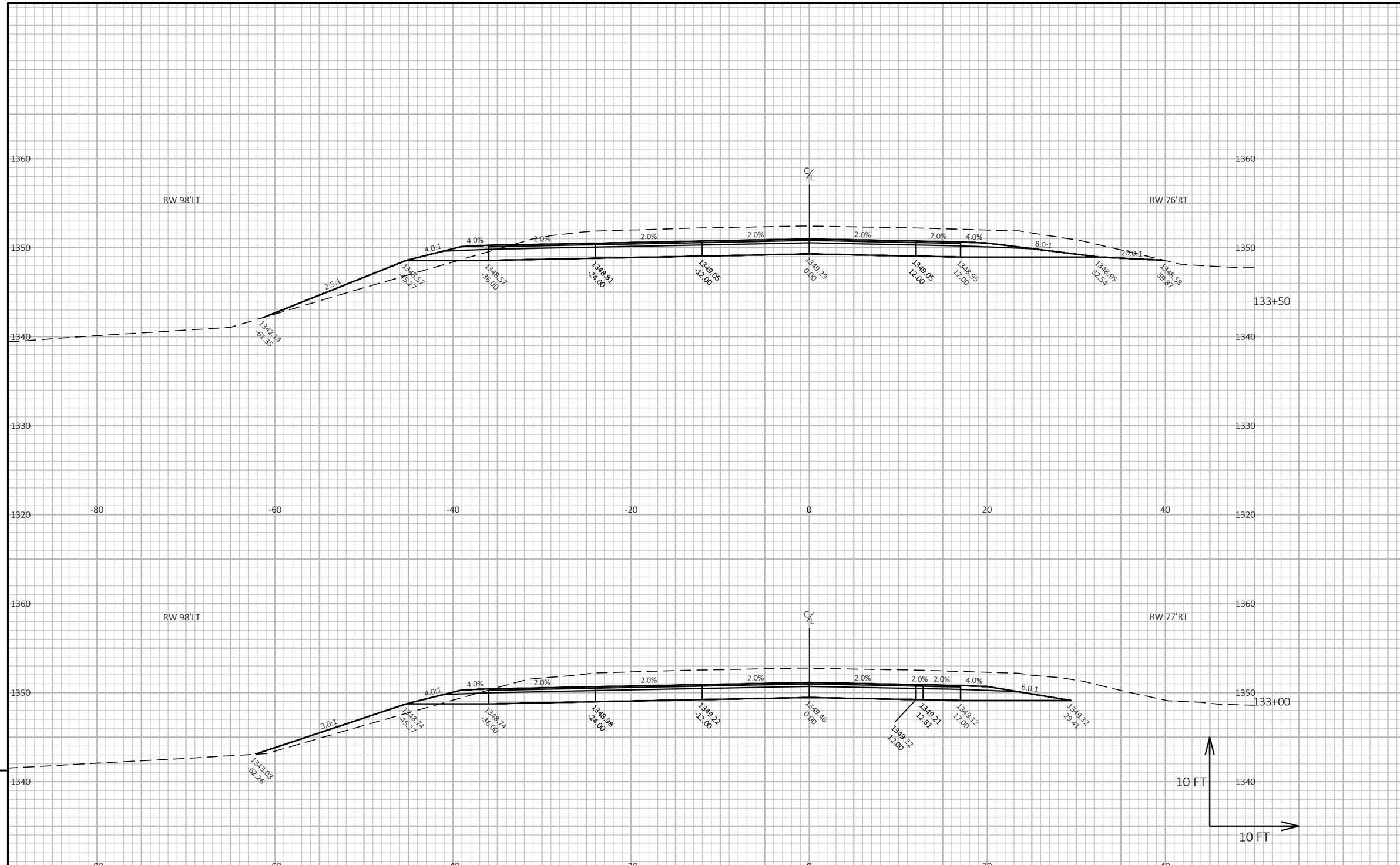

PROJECT NO: 9491-06-70 / 9491-06-71	HWY: CTH K	COUNTY: MARATHON	CROSS SECTIONS: CTH K AND MERRILL	SHEET 140	E

FILE NAME : R:\5500\5539\5539002\DWG(2018)\INTERSECTION X-SEC.DWG
LAYOUT NAME - 11
PLOT DATE : 7/27/2022 3:44 PM
PLOT BY : ROCHELLE L. BURSA
PLOT NAME :
PLOT SCALE : 1 IN:10 FT HORZ. / 1 IN:10 FT VERT.
WISDOT/CADDS SHEET 49

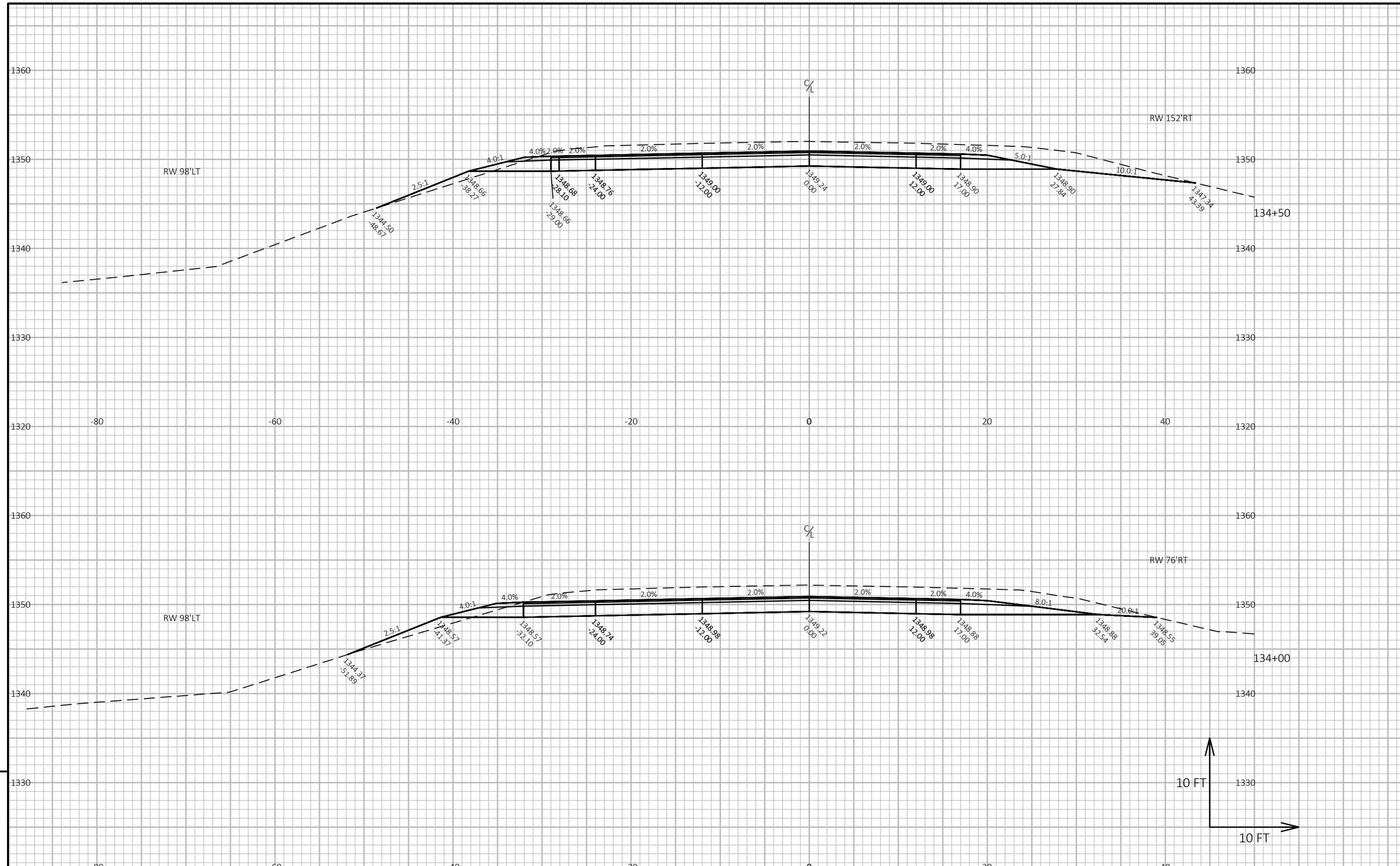

9

9

PROJECT NO: 9491-06-70 / 9491-06-71	HWY: CTH K	COUNTY: MARATHON	CROSS SECTIONS: CTH K AND MERRILL	SHEET 141	E

FILE NAME : R:\5500\5539\5539002\DWG(2018)\INTERSECTION X-SEC.DWG
LAYOUT NAME - 12
PLOT DATE : 7/27/2022 3:44 PM
PLOT BY : ROCHELLE L. BURSA
PLOT NAME :
PLOT SCALE : 1 IN:10 FT HORZ. / 1 IN:10 FT VERT.
WISDOT/CADDS SHEET 49

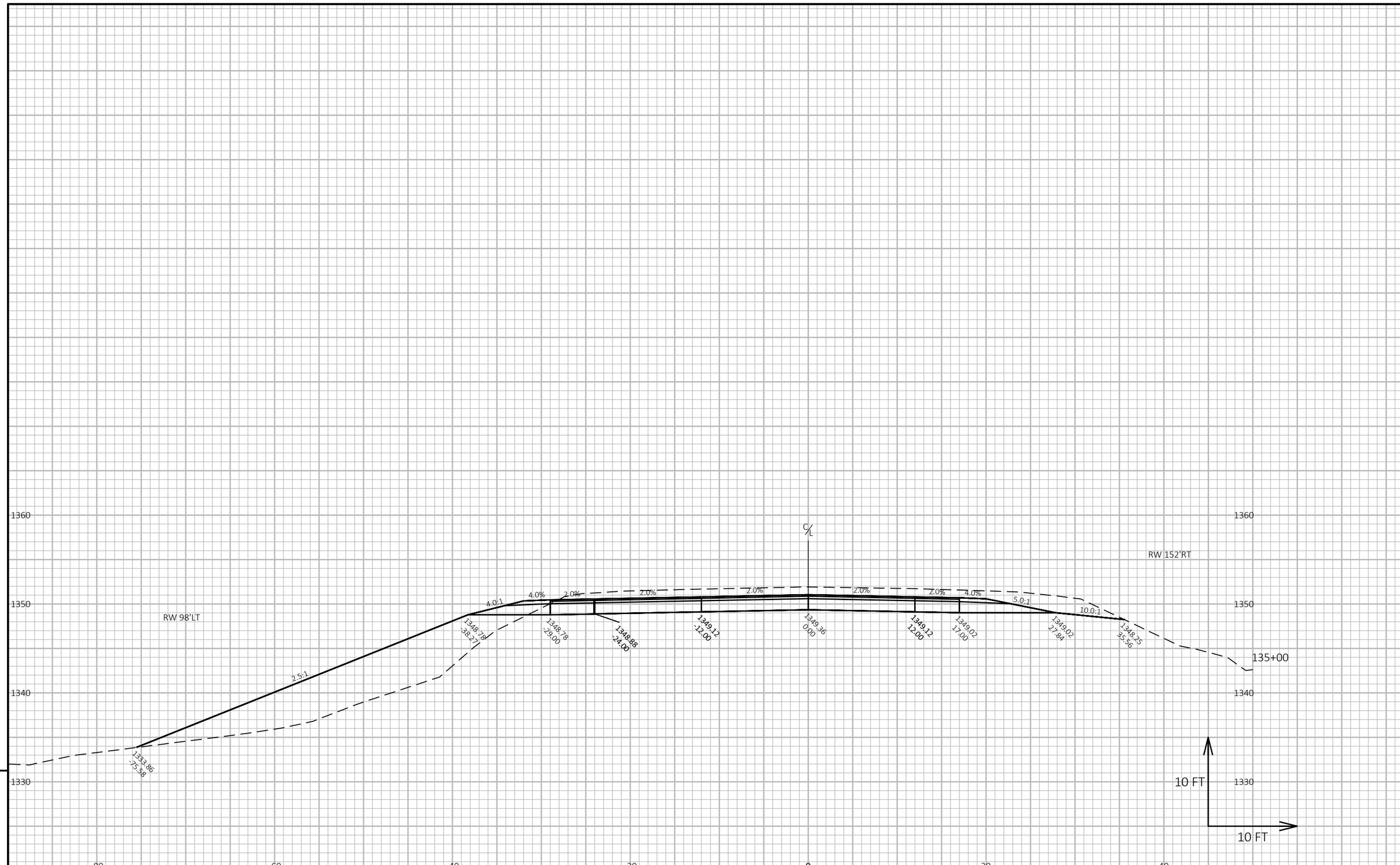

9

9

PROJECT NO: 9491-06-70 / 9491-06-71	HWY: CTH K	COUNTY: MARATHON	CROSS SECTIONS: CTH K AND MERRILL	SHEET 142	E

FILE NAME : R:\5500\5539\5539002\DWG(2018)\INTERSECTION X-SEC.DWG
LAYOUT NAME - 13
PLOT DATE : 7/27/2022 3:44 PM
PLOT BY : ROCHELLE L. BURSA
PLOT NAME :
PLOT SCALE : 1 IN:10 FT HORZ. / 1 IN:10 FT VERT.
WISDOT/CADDS SHEET 49

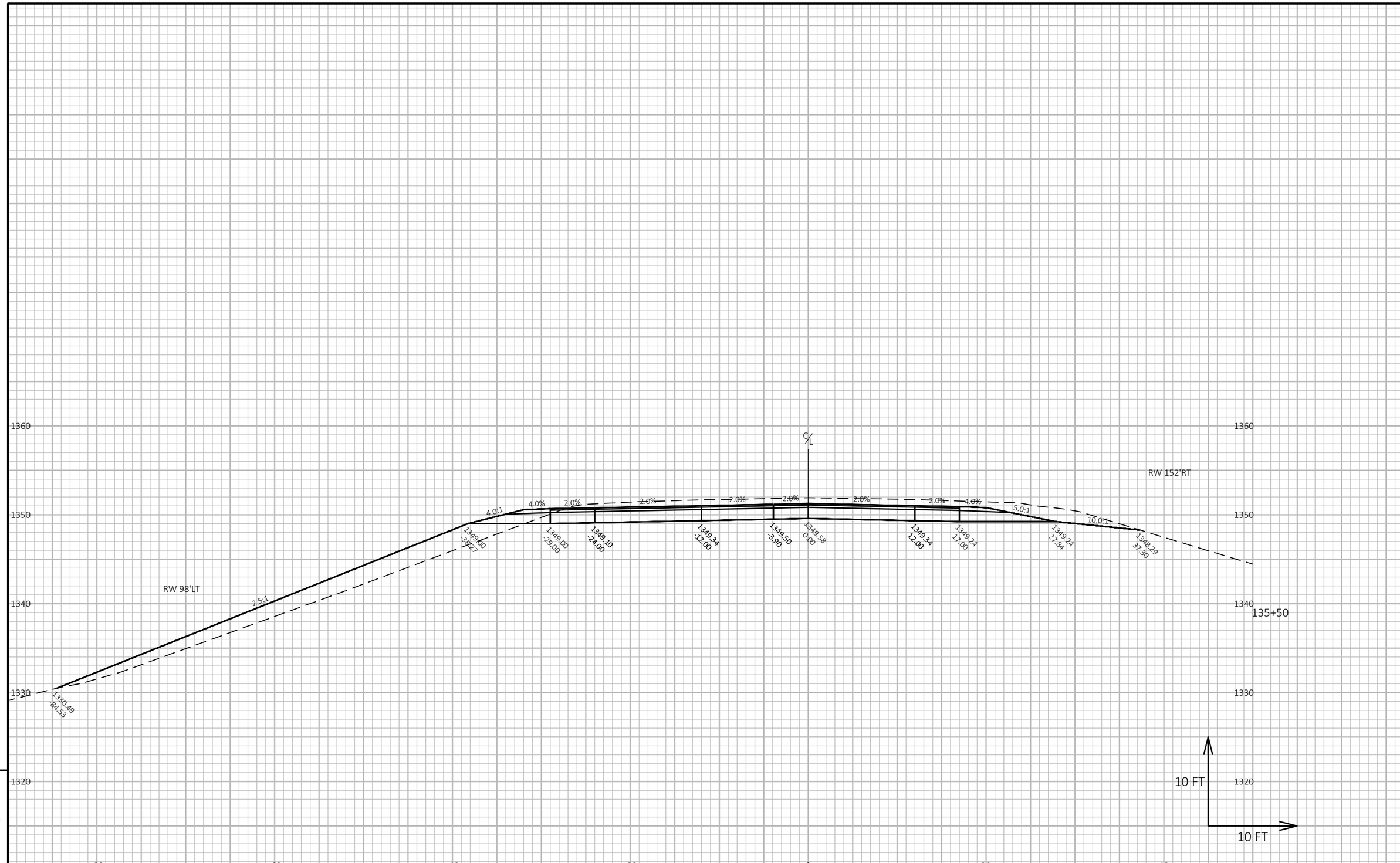

9

9

PROJECT NO: 9491-06-70 / 9491-06-71	HWY: CTH K	COUNTY: MARATHON	CROSS SECTIONS: CTH K AND MERRILL	SHEET 143	E

FILE NAME : R:\5500\5539\5539002\DWG(2018)\INTERSECTION X-SEC.DWG
LAYOUT NAME - 14

PLOT DATE : 7/27/2022 3:44 PM PLOT BY : ROCHELLE L. BURSA PLOT NAME : PLOT SCALE : 1 IN:10 FT HORZ. / 1 IN:10 FT VERT.

WISDOT/CADDS SHEET 49

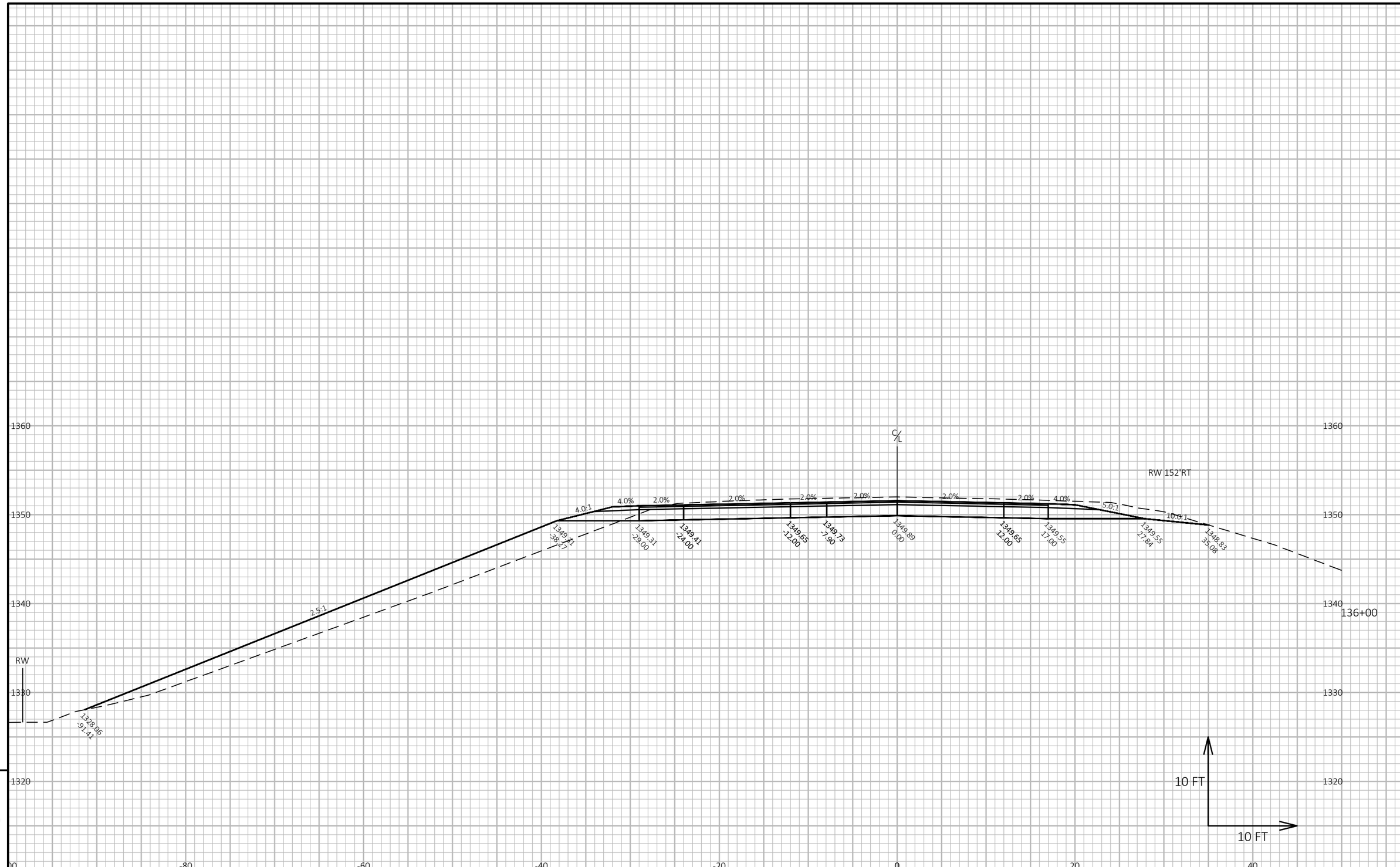

9

9

PROJECT NO: 9491-06-70 / 9491-06-71	HWY: CTH K	COUNTY: MARATHON	CROSS SECTIONS: CTH K AND MERRILL	SHEET 144	E

FILE NAME : R:\5500\5539\5539002\DWG(2018)\INTERSECTION X-SEC.DWG
LAYOUT NAME - 15

PLOT DATE : 7/27/2022 3:44 PM PLOT BY : ROCHELLE L. BURSA PLOT NAME : PLOT SCALE : 1 IN:10 FT HORZ. / 1 IN:10 FT VERT.

WISDOT/CADDS SHEET 49

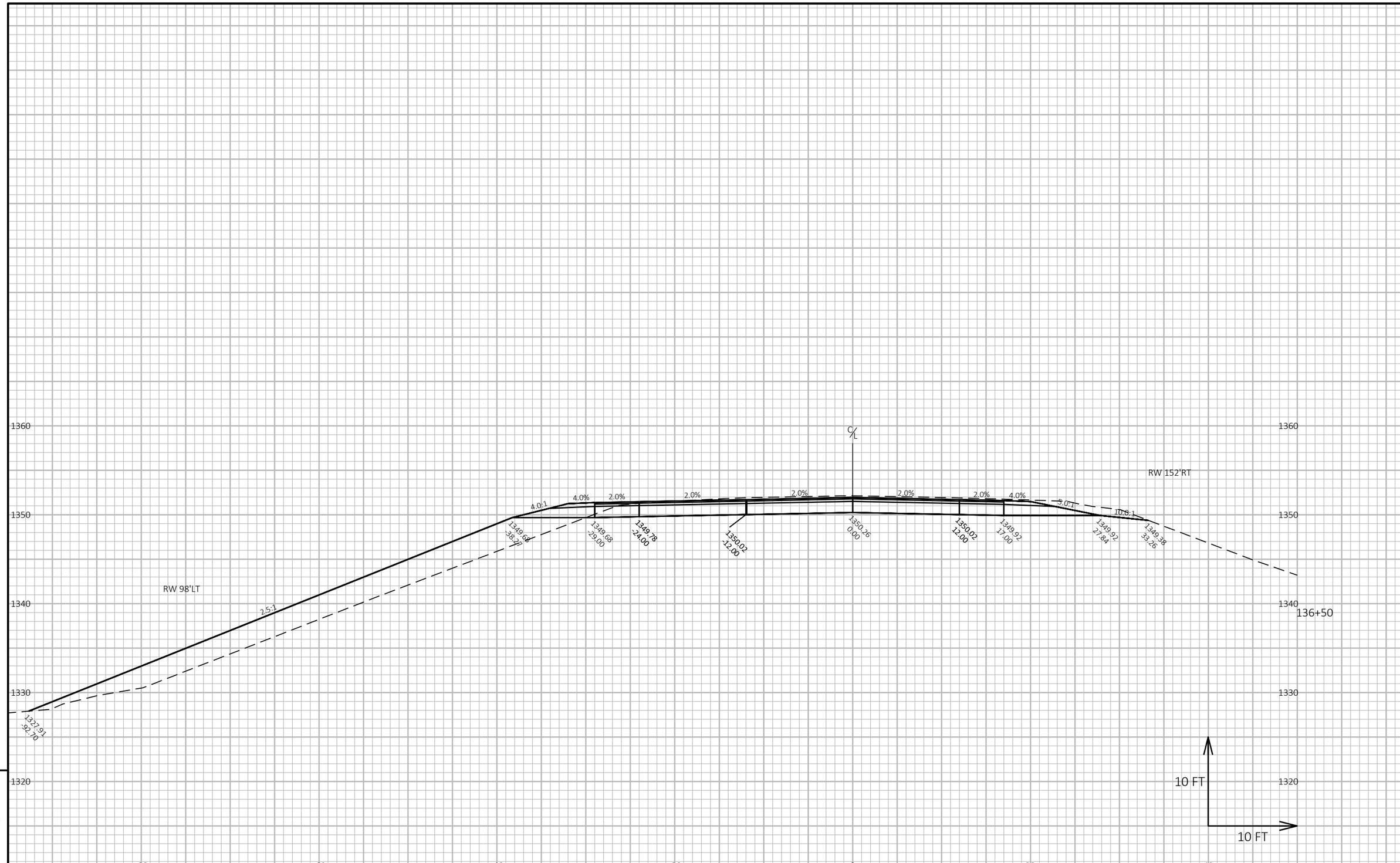

9

9

PROJECT NO: 9491-06-70 / 9491-06-71	HWY: CTH K	COUNTY: MARATHON	CROSS SECTIONS: CTH K AND MERRILL	SHEET 145	E

FILE NAME : R:\5500\5539\5539002\DWG(2018)\INTERSECTION X-SEC.DWG
LAYOUT NAME - 16

PLOT DATE : 7/27/2022 3:44 PM PLOT BY : ROCHELLE L. BURSA PLOT NAME : PLOT SCALE : 1 IN:10 FT HORZ. / 1 IN:10 FT VERT.

WISDOT/CADDS SHEET 49

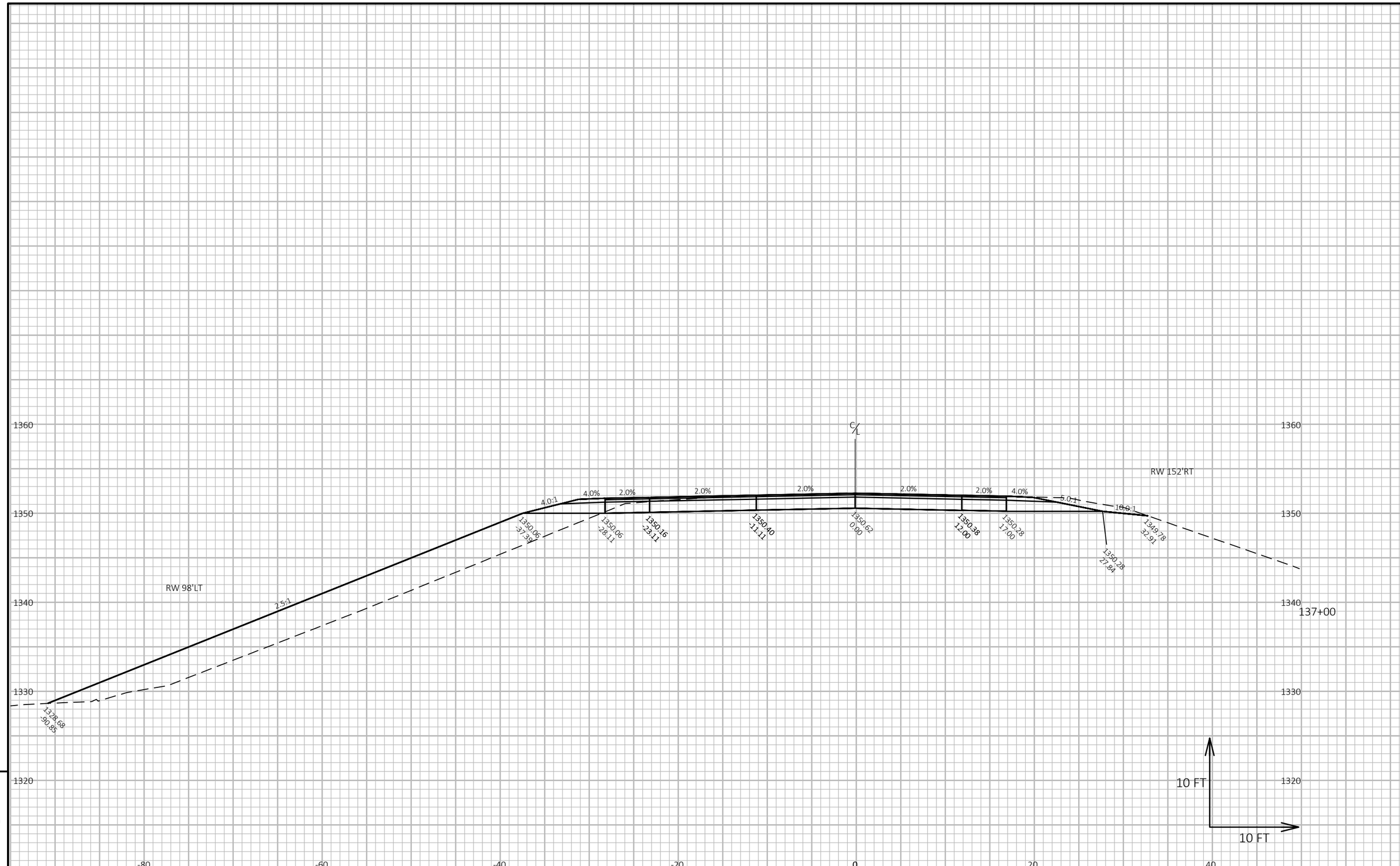

9

9

PROJECT NO: 9491-06-70 / 9491-06-71	HWY: CTH K	COUNTY: MARATHON	CROSS SECTIONS: CTH K AND MERRILL	SHEET 146	E

FILE NAME : R:\5500\5539\5539002\DWG(2018)\INTERSECTION X-SEC.DWG
LAYOUT NAME - 16 (2)
PLOT DATE : 7/27/2022 3:44 PM
PLOT BY : ROCHELLE L. BURSA
PLOT NAME :
PLOT SCALE : 1 IN:10 FT HORZ. / 1 IN:10 FT VERT.
WISDOT/CADDS SHEET 49

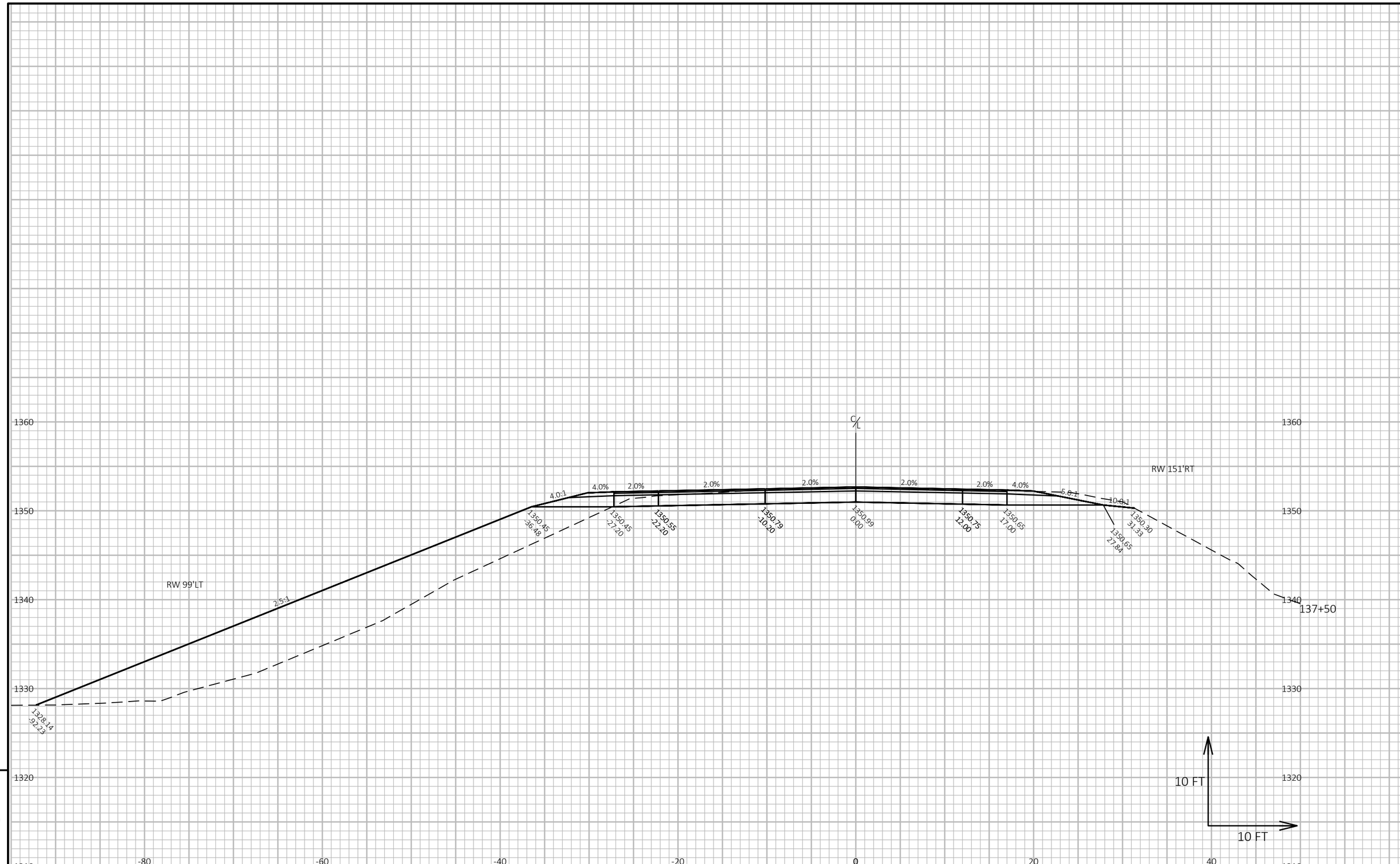

9

9

PROJECT NO: 9491-06-70 / 9491-06-71	HWY: CTH K	COUNTY: MARATHON	CROSS SECTIONS: CTH K AND MERRILL	SHEET 147	E

FILE NAME : R:\5500\5539\5539002\DWG(2018)\INTERSECTION X-SEC.DWG
LAYOUT NAME - 16 (3)
PLOT DATE : 7/27/2022 3:44 PM
PLOT BY : ROCHELLE L. BURSA
PLOT NAME :
PLOT SCALE : 1 IN:10 FT HORZ. / 1 IN:10 FT VERT.
WISDOT/CADDS SHEET 49

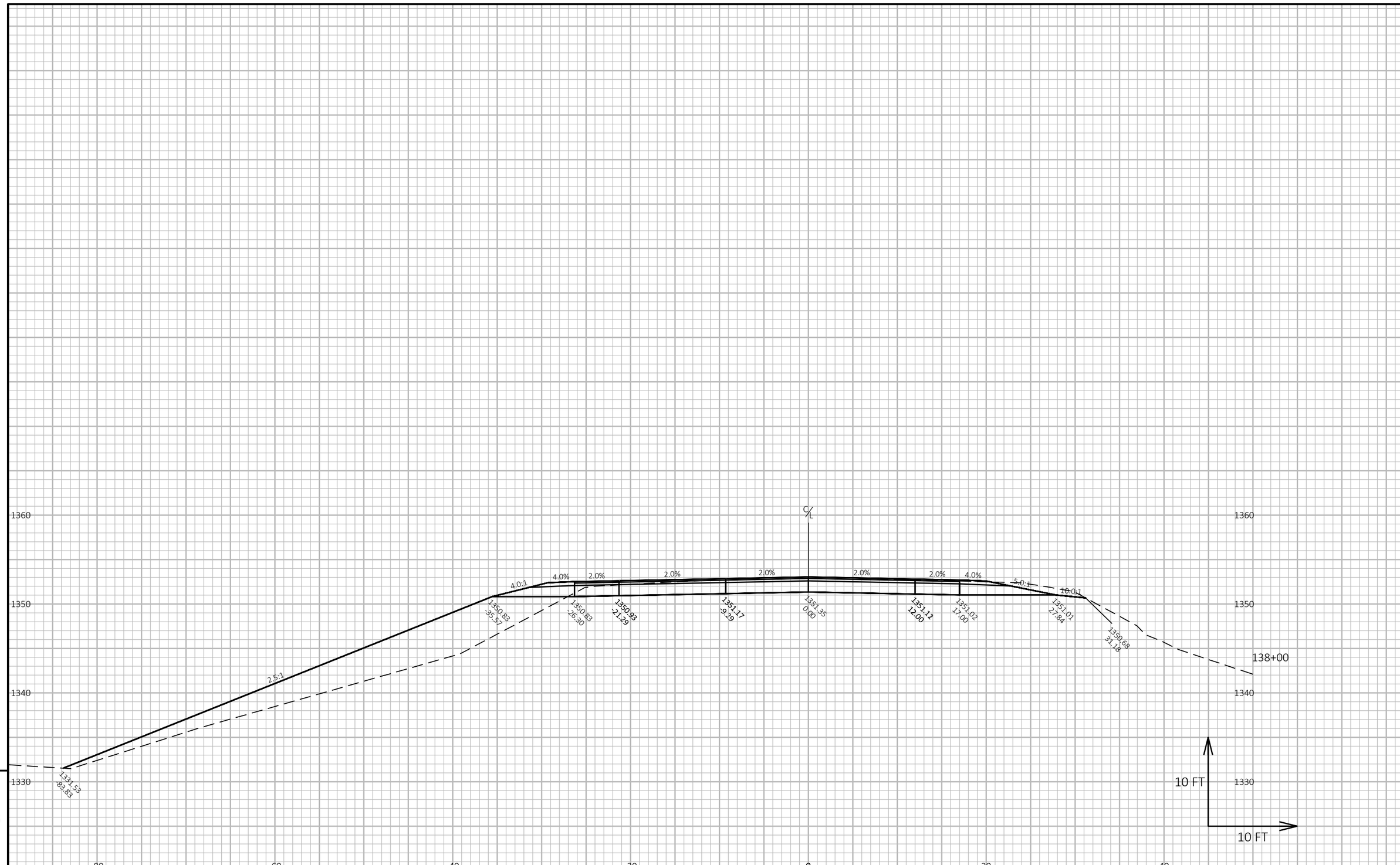

9

9

PROJECT NO: 9491-06-70 / 9491-06-71	HWY: CTH K	COUNTY: MARATHON	CROSS SECTIONS: CTH K AND MERRILL	SHEET 148	E

FILE NAME : R:\5500\5539\5539002\DWG(2018)\INTERSECTION X-SEC.DWG
LAYOUT NAME - 16 (4)
PLOT DATE : 7/27/2022 3:45 PM
PLOT BY : ROCHELLE L. BURSA
PLOT NAME :
PLOT SCALE : 1 IN:10 FT HORZ. / 1 IN:10 FT VERT.
WISDOT/CADDS SHEET 49

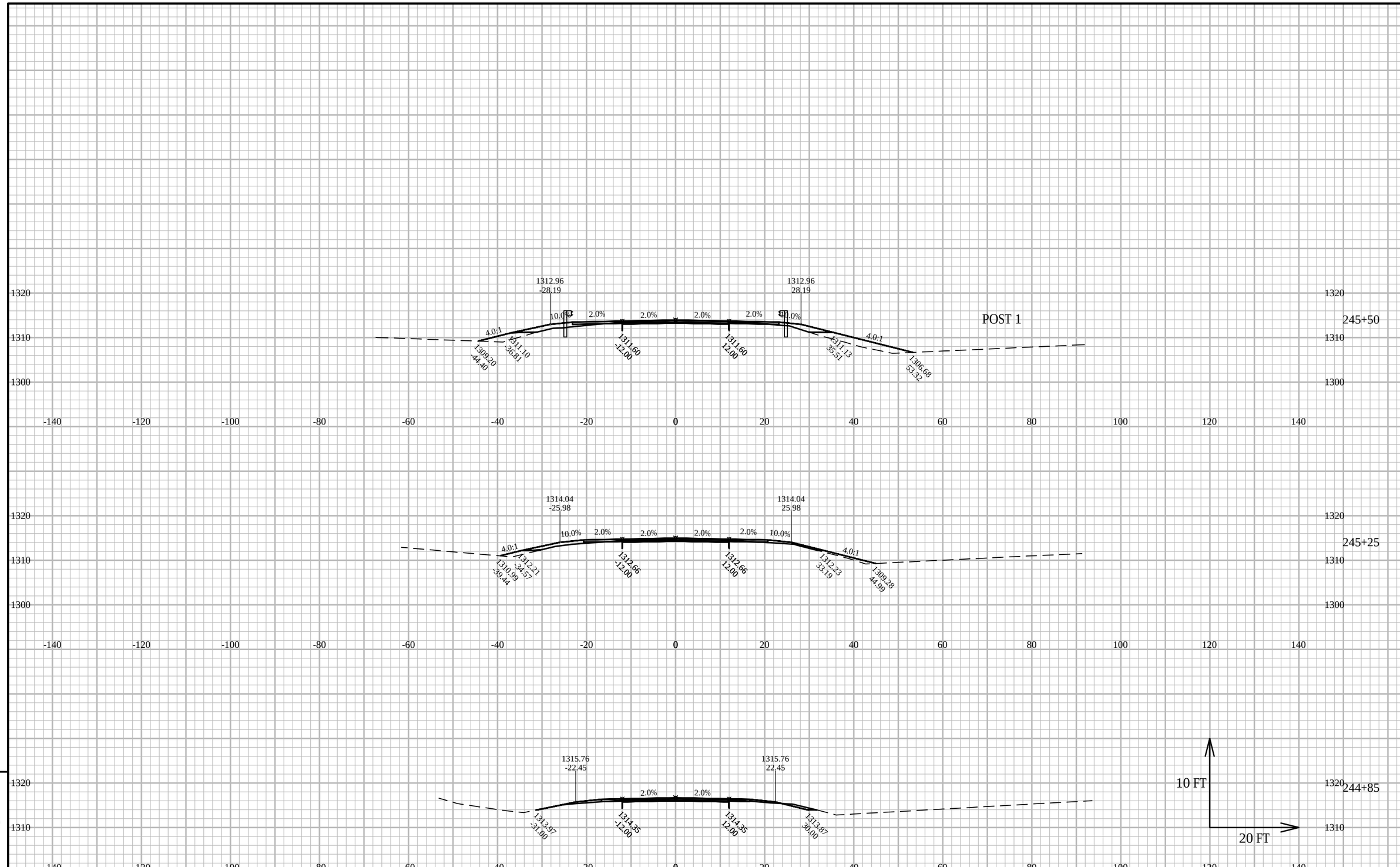

PROJECT NO: 9491-06-70/9491-06-71	HWY: CTH K	COUNTY: MARATHON	CROSS SECTIONS: CTH K	SHEET 149	E

FILE NAME : R:\5500\5539\5539002\DRAWINGS\DWG\090101-XS.DWG
LAYOUT NAME - XS- (1)
PLOT DATE : 7/28/2022 4:27 PM
PLOT BY : SCOTT M. DEBAKER
PLOT NAME :
PLOT SCALE : 1 IN:20 FT HORZ. / 1 IN:10 FT VERT.

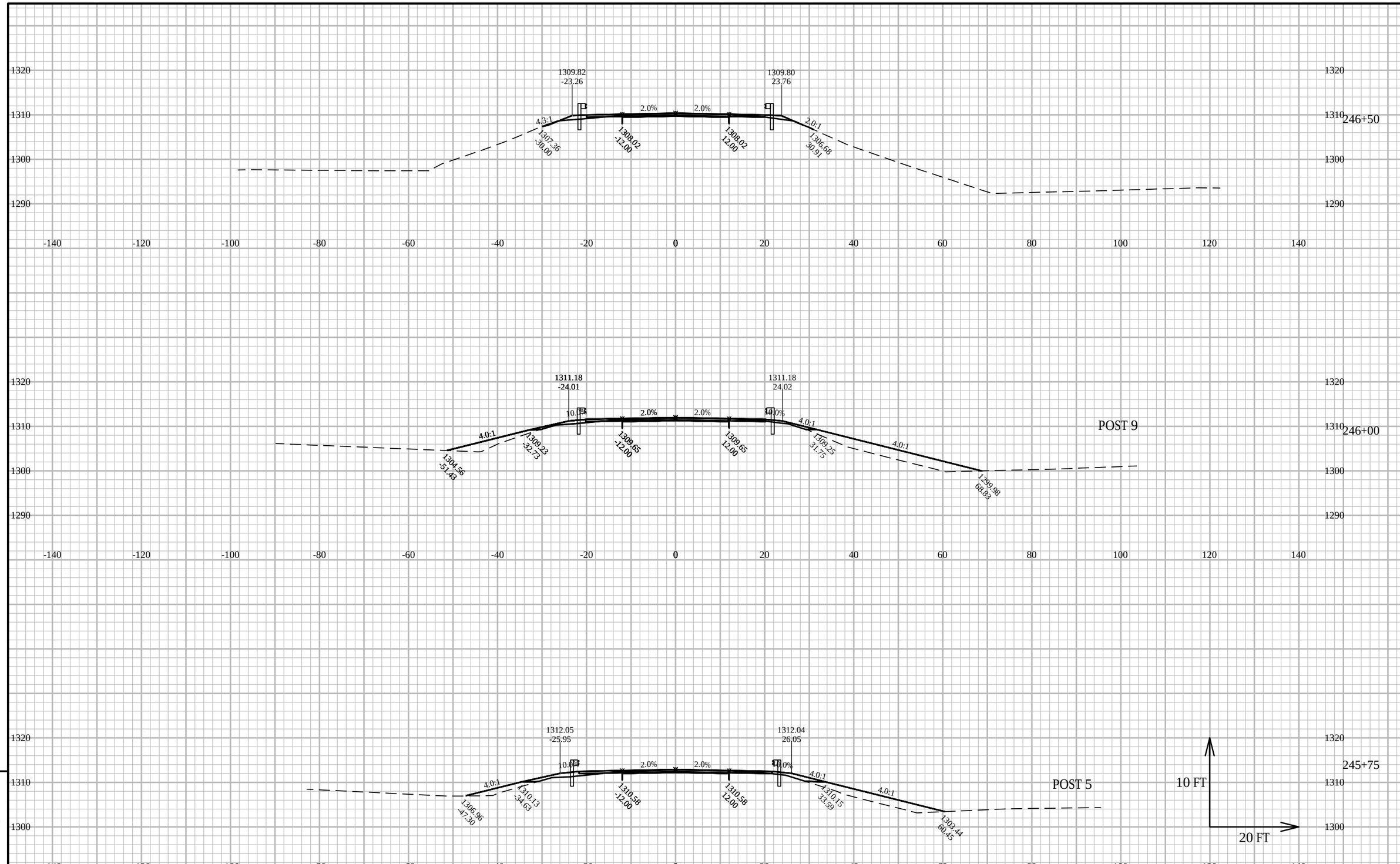

9

9

PROJECT NO: 9491-06-70/9491-06-71	HWY: CTH K	COUNTY: MARATHON	CROSS SECTIONS: CTH K	SHEET 150	E

FILE NAME : R:\5500\5539\5539002\DRAWINGS\DWG\090101-XS.DWG
LAYOUT NAME - XS- (2)
PLOT DATE : 7/28/2022 4:27 PM
PLOT BY : SCOTT M. DEBAKER
PLOT NAME :
PLOT SCALE : 1 IN:20 FT HORZ. / 1 IN:10 FT VERT.
WISDOT/CADDS SHEET 49

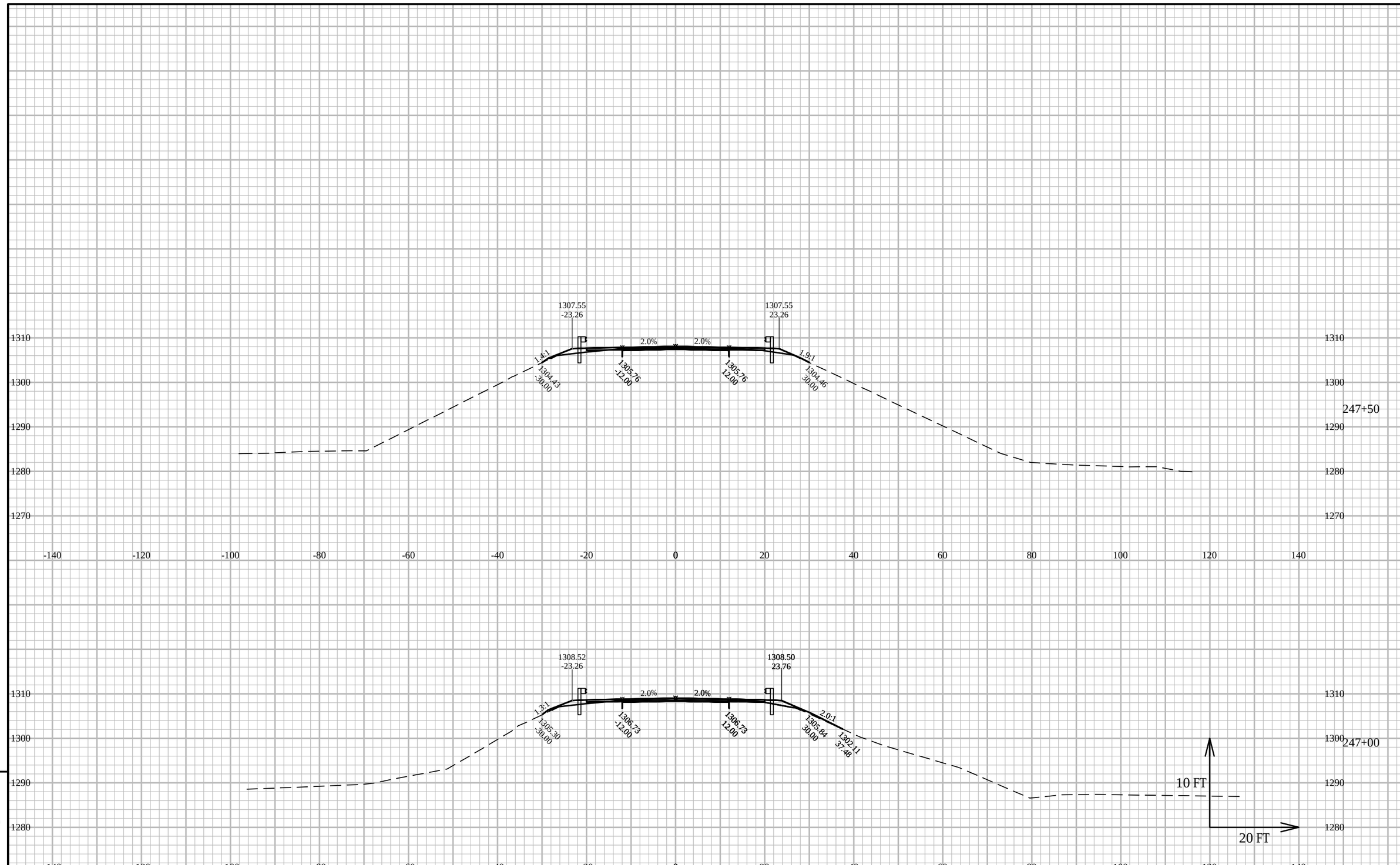

9

9

PROJECT NO: 9491-06-70/9491-06-71	HWY: CTH K	COUNTY: MARATHON	CROSS SECTIONS: CTH K	SHEET 151	E

FILE NAME : R:\5500\5539\5539002\DRAWINGS\DWG\090101-XS.DWG
LAYOUT NAME - XS- (3)
PLOT DATE : 7/28/2022 4:27 PM
PLOT BY : SCOTT M. DEBAKER
PLOT NAME :
PLOT SCALE : 1 IN:20 FT HORZ. / 1 IN:10 FT VERT.
WISDOT/CADDS SHEET 49

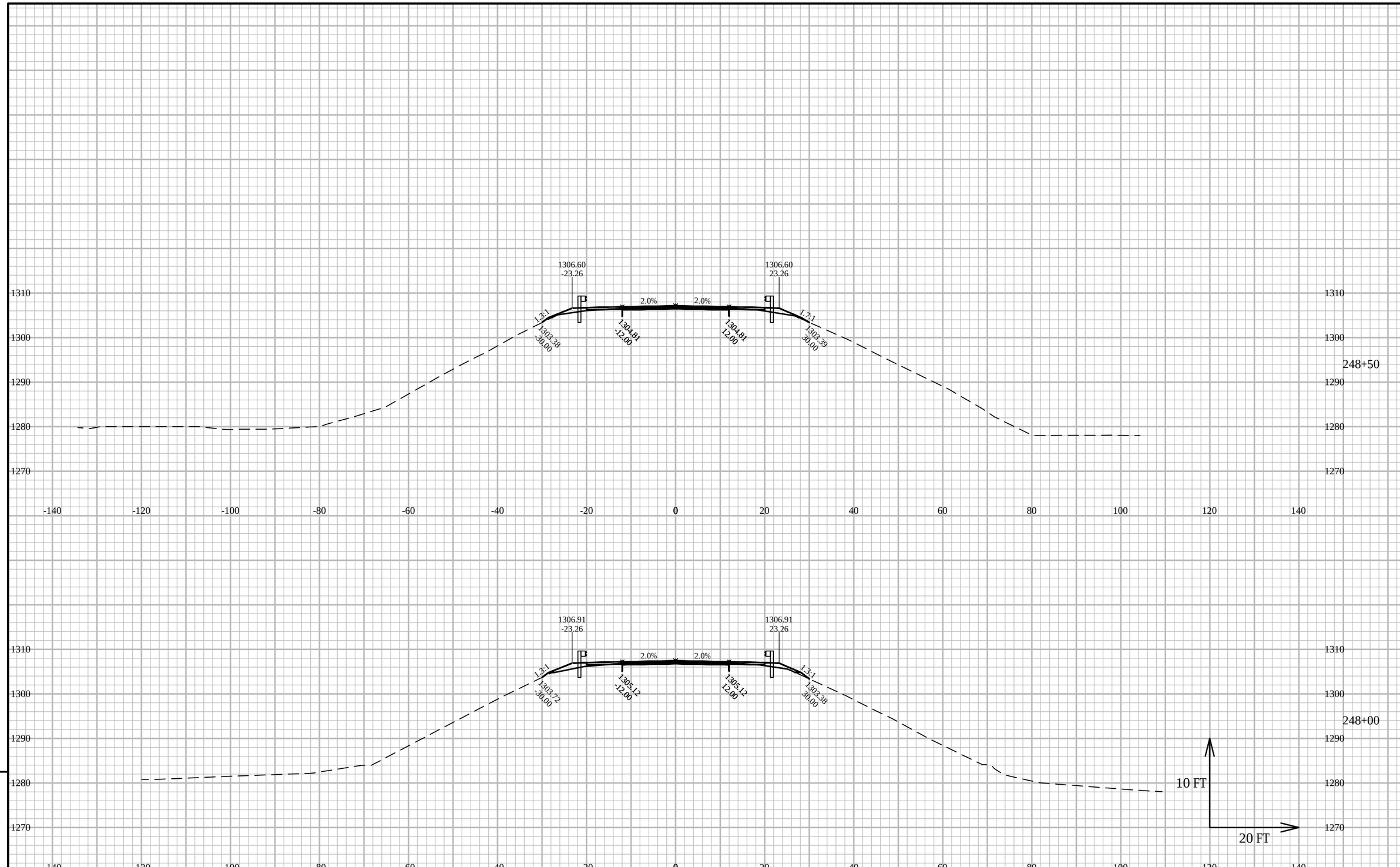

9

9

PROJECT NO: 9491-06-70/9491-06-71	HWY: CTH K	COUNTY: MARATHON	CROSS SECTIONS: CTH K	SHEET 152	E

FILE NAME : R:\5500\5539\5539002\DRAWINGS\DWG\090101-XS.DWG
LAYOUT NAME - XS- (4)
PLOT DATE : 7/28/2022 4:27 PM
PLOT BY : SCOTT M. DEBAKER
PLOT NAME :
PLOT SCALE : 1 IN:20 FT HORZ. / 1 IN:10 FT VERT.
WISDOT/CADDS SHEET 49

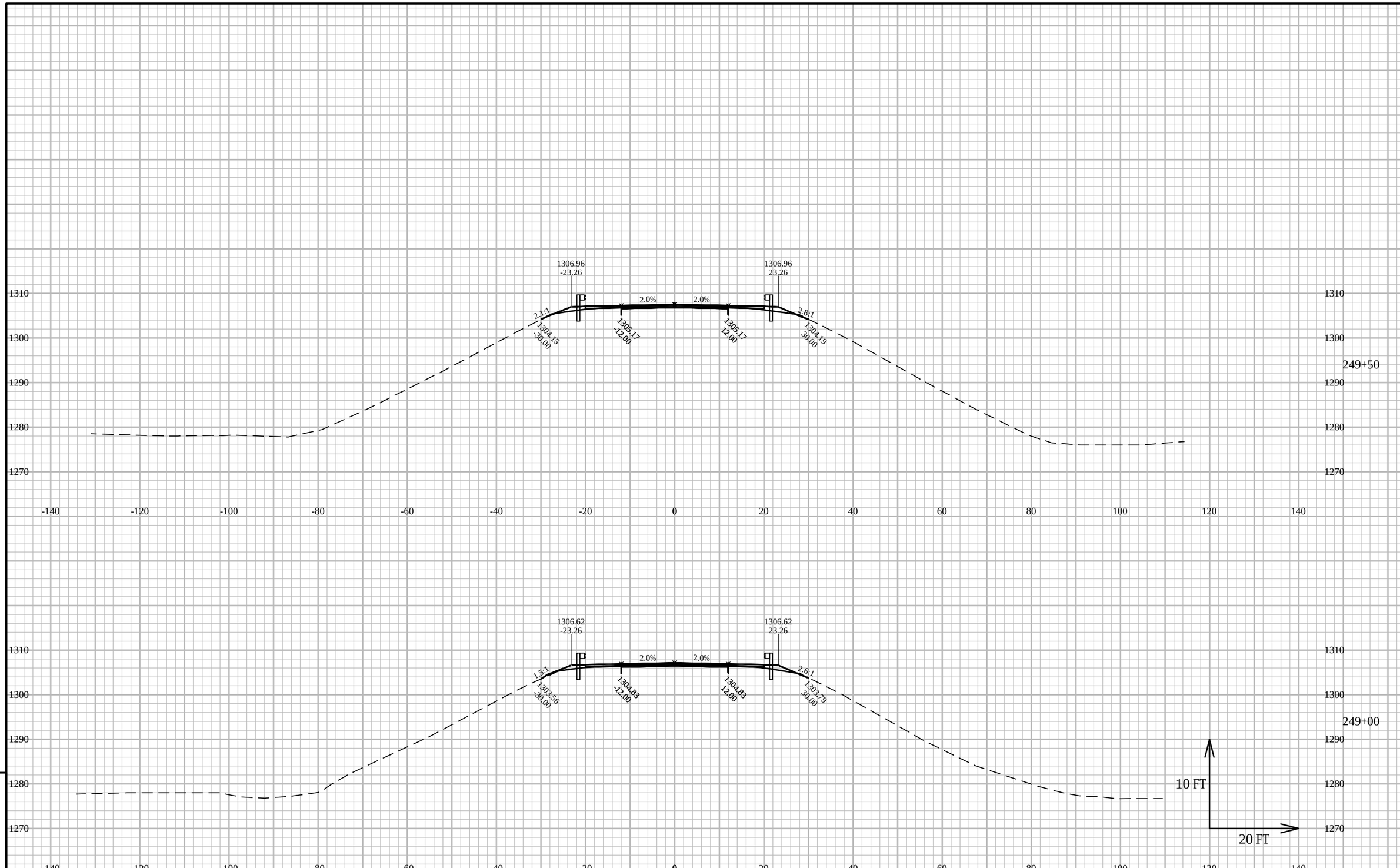

9

9

PROJECT NO: 9491-06-70/9491-06-71	HWY: CTH K	COUNTY: MARATHON	CROSS SECTIONS: CTH K	SHEET 153	E

FILE NAME : R:\5500\5539\5539002\DRAWINGS\DWG\090101-XS.DWG
LAYOUT NAME - XS- (5)
PLOT DATE : 7/28/2022 4:27 PM
PLOT BY : SCOTT M. DEBAKER
PLOT NAME :
PLOT SCALE : 1 IN:20 FT HORZ. / 1 IN:10 FT VERT.
WISDOT/CADDS SHEET 49

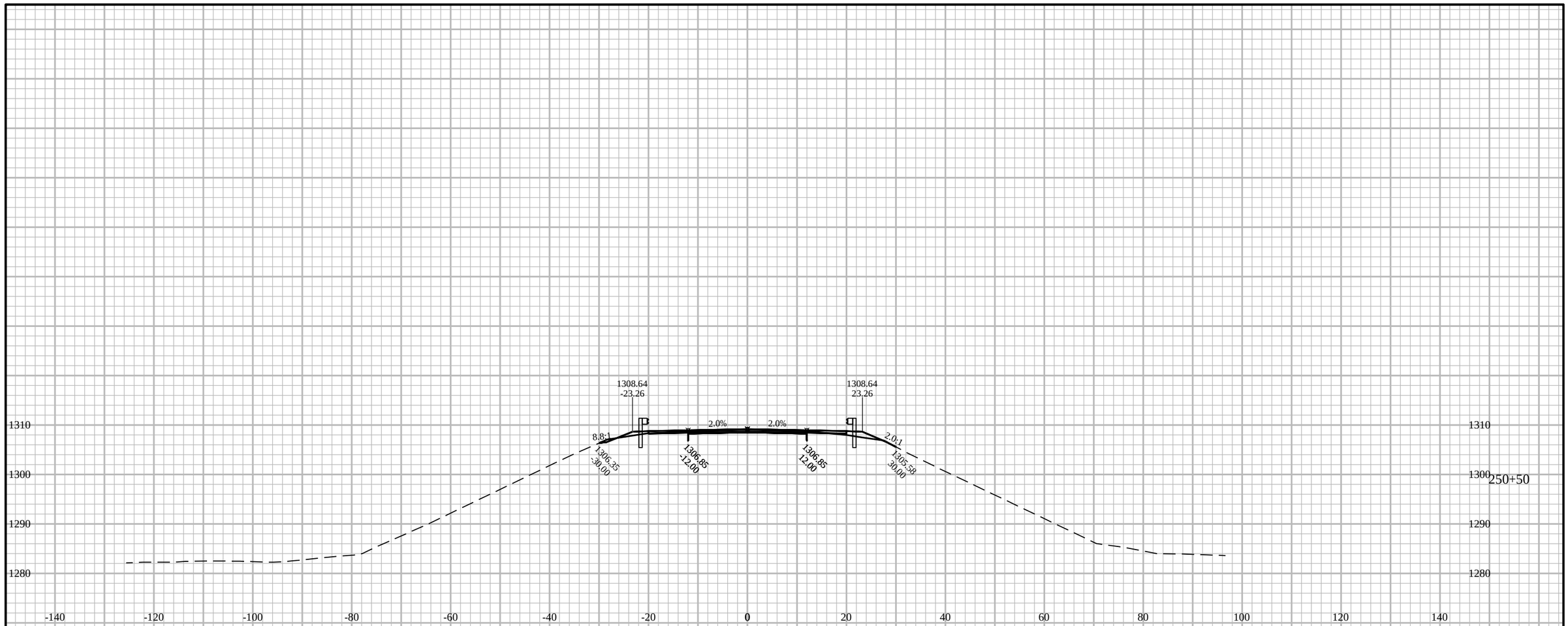

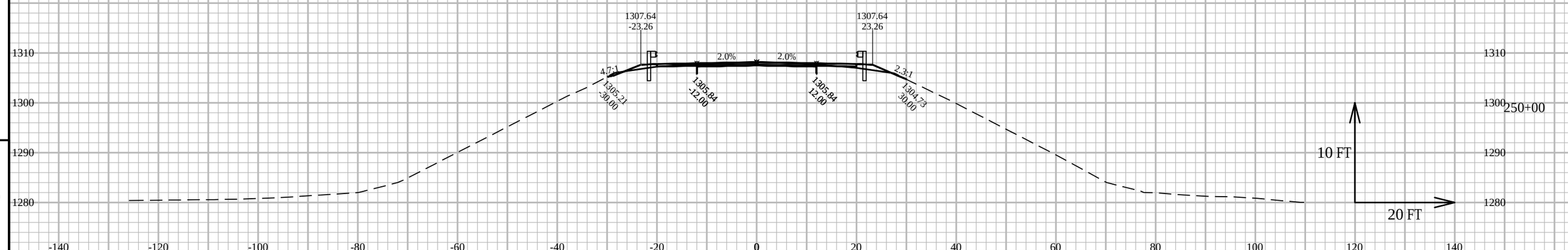

9

9

PROJECT NO: 9491-06-70/9491-06-71	HWY: CTH K	COUNTY: MARATHON	CROSS SECTIONS: CTH K	SHEET 154	E

FILE NAME : R:\5500\5539\5539002\DRAWINGS\DWG\090101-XS.DWG
LAYOUT NAME - XS- (6)
PLOT DATE : 7/28/2022 4:27 PM
PLOT BY : SCOTT M. DEBAKER
PLOT NAME :
PLOT SCALE : 1 IN:20 FT HORZ. / 1 IN:10 FT VERT.
WISDOT/CADDS SHEET 49

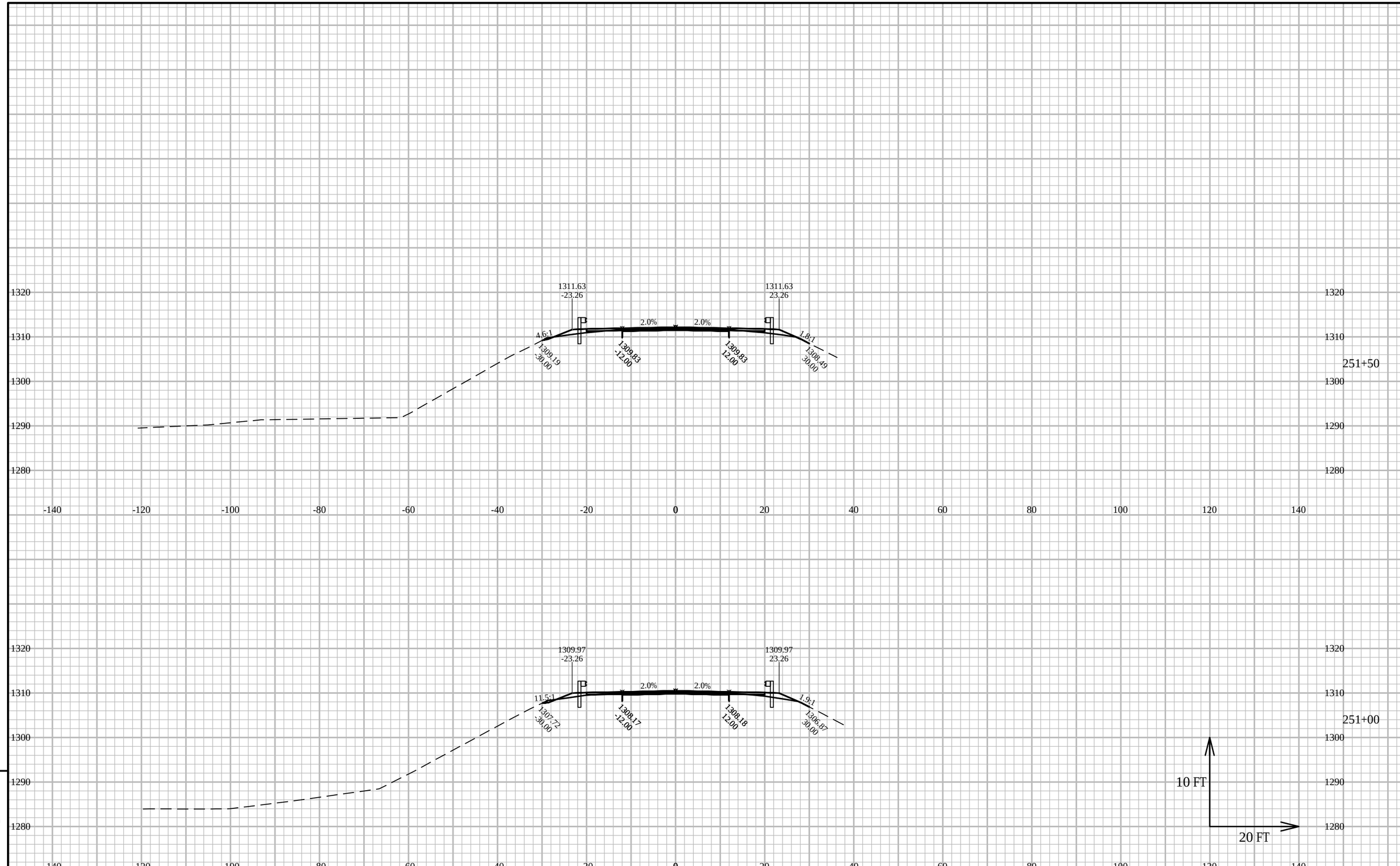

9

9

PROJECT NO: 9491-06-70/9491-06-71	HWY: CTH K	COUNTY: MARATHON	CROSS SECTIONS: CTH K	SHEET 155	E

FILE NAME : R:\5500\5539\5539002\DRAWINGS\DWG\090101-XS.DWG
LAYOUT NAME - XS- (7)
PLOT DATE : 7/28/2022 4:27 PM
PLOT BY : SCOTT M. DEBAKER
PLOT NAME :
PLOT SCALE : 1 IN:20 FT HORZ. / 1 IN:10 FT VERT.
WISDOT/CADDS SHEET 49

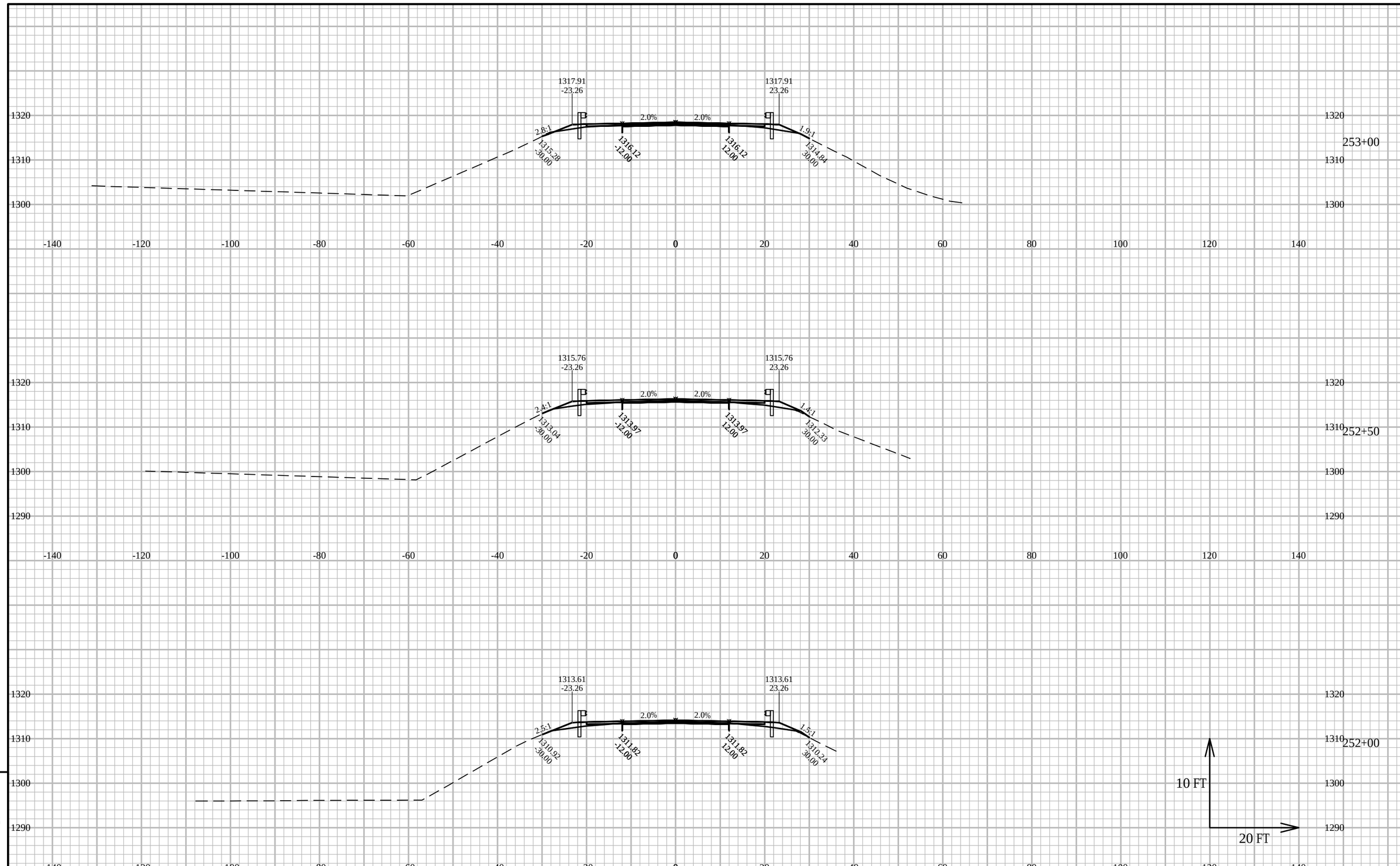

9

9

PROJECT NO: 9491-06-70/9491-06-71	HWY: CTH K	COUNTY: MARATHON	CROSS SECTIONS: CTH K	SHEET 156	E

FILE NAME : R:\5500\5539\5539002\DRAWINGS\DWG\090101-XS.DWG
LAYOUT NAME - XS- (8)
PLOT DATE : 7/28/2022 4:27 PM
PLOT BY : SCOTT M. DEBAKER
PLOT NAME :
PLOT SCALE : 1 IN:20 FT HORZ. / 1 IN:10 FT VERT.
WISDOT/CADDS SHEET 49

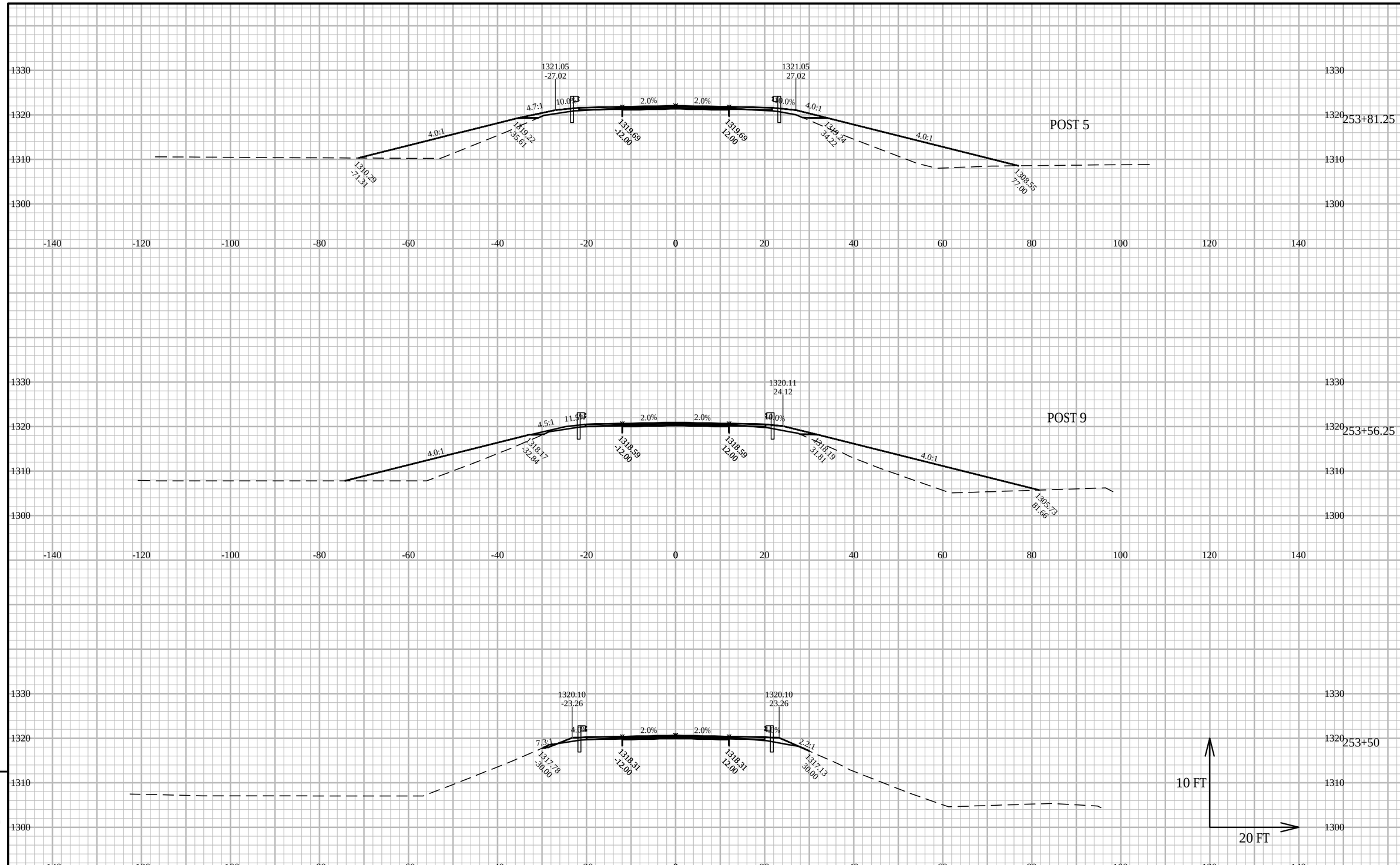

9

9

PROJECT NO: 9491-06-70/9491-06-71	HWY: CTH K	COUNTY: MARATHON	CROSS SECTIONS: CTH K	SHEET 157	E

FILE NAME : R:\5500\5539\5539002\DRAWINGS\DWG\090101-XS.DWG
LAYOUT NAME - XS- (9)
PLOT DATE : 7/28/2022 4:27 PM
PLOT BY : SCOTT M. DEBAKER
PLOT NAME :
PLOT SCALE : 1 IN:20 FT HORZ. / 1 IN:10 FT VERT.
WISDOT/CADDS SHEET 49

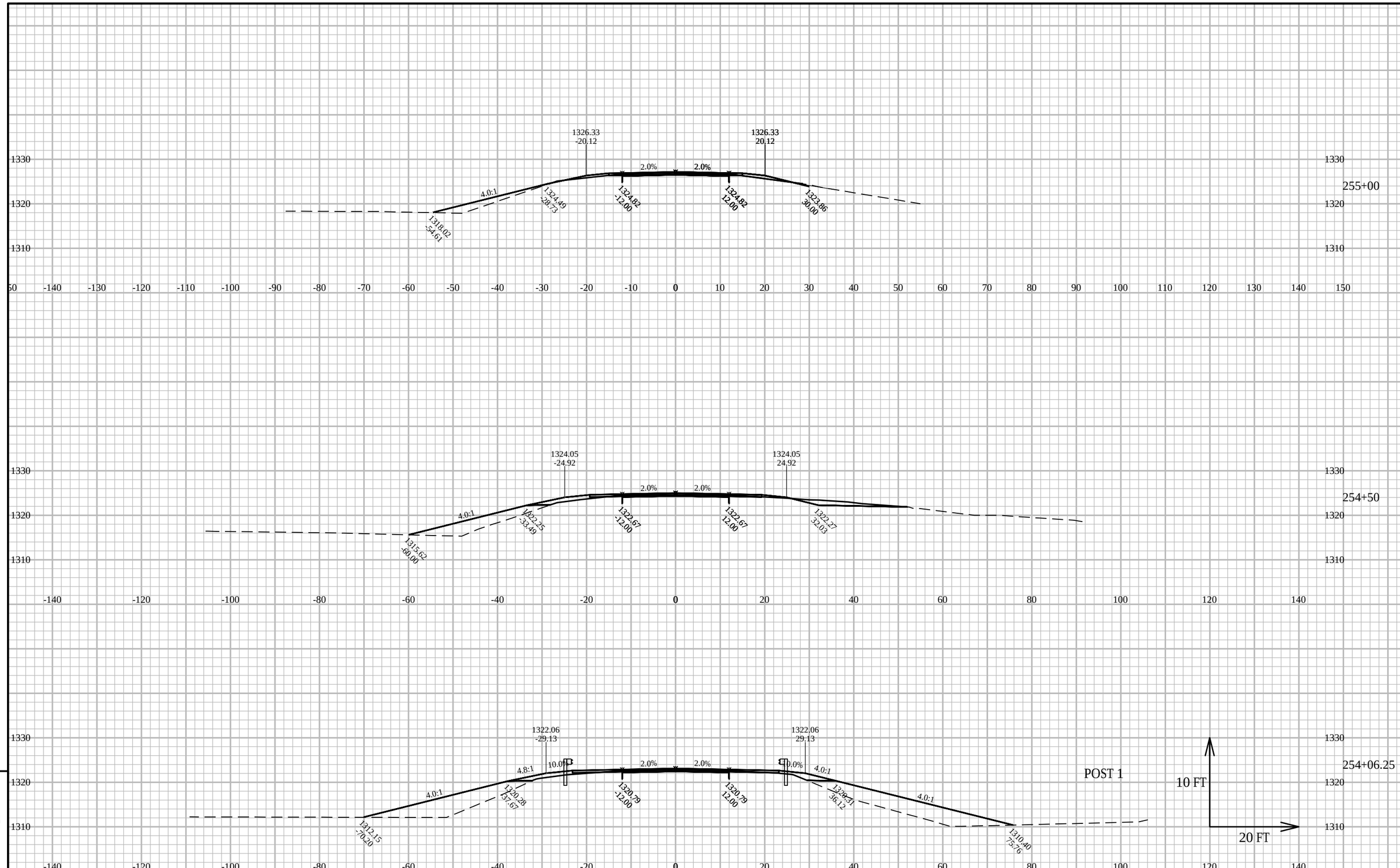

PROJECT NO: 9491-06-70/9491-06-71	HWY: CTH K	COUNTY: MARATHON	CROSS SECTIONS: CTH K	SHEET 158	E

FILE NAME : R:\5500\5539\5539002\DRAWINGS\DWG\090101-XS.DWG
LAYOUT NAME - XS-(10)
PLOT DATE : 7/28/2022 4:27 PM
PLOT BY : SCOTT M. DEBAKER
PLOT NAME :
PLOT SCALE : 1 IN:20 FT HORZ. / 1 IN:10 FT VERT.
WISDOT/CADDS SHEET 49

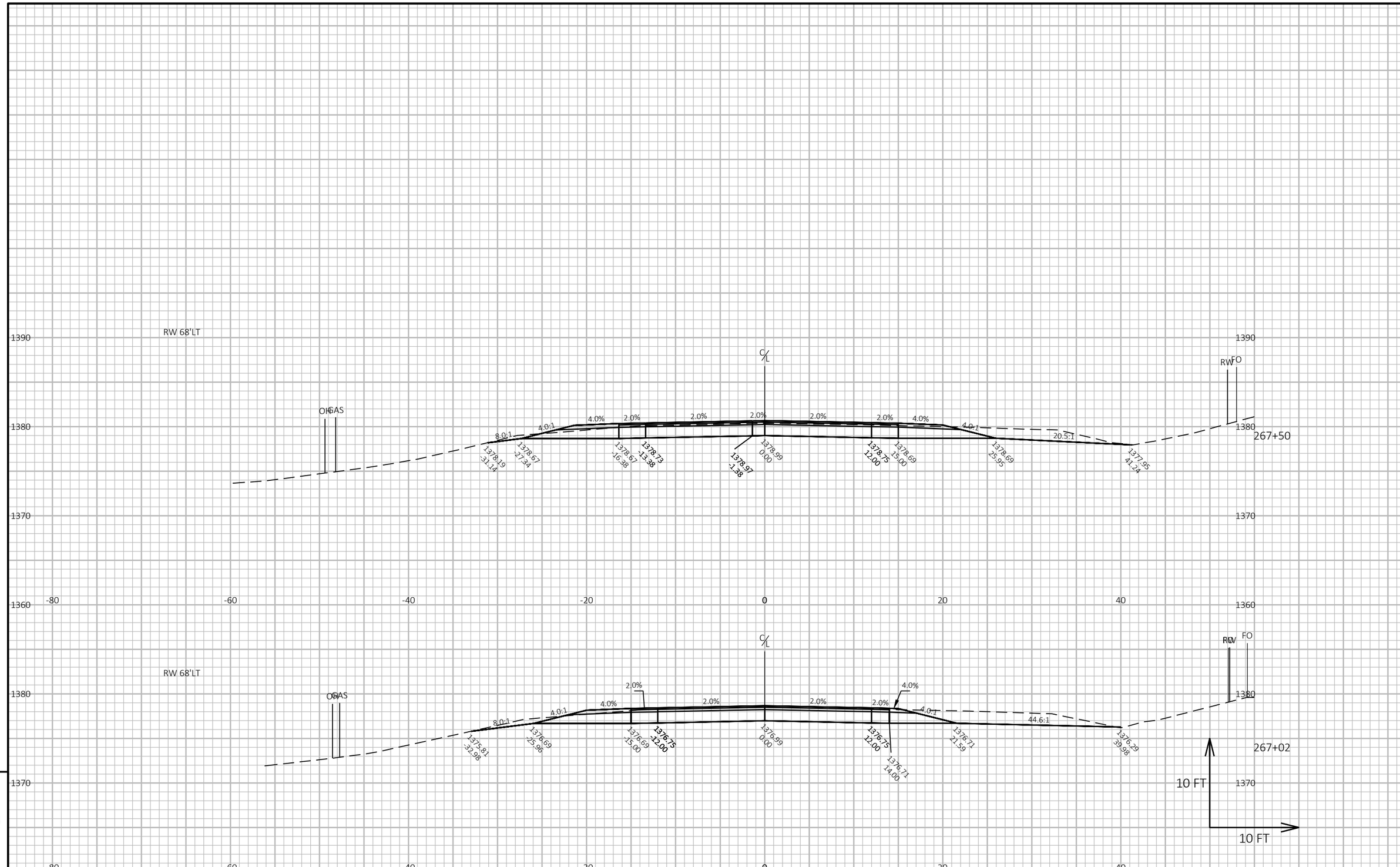

PROJECT NO: 9491-06-70 / 9491-06-71	HWY: CTH K	COUNTY: MARATHON	CROSS SECTIONS: CTH K AND CTH A	SHEET 159	E

FILE NAME : R:\5500\5539\5539002\DWG(2018)\INTERSECTION X-SEC.DWG
LAYOUT NAME - 27
PLOT DATE : 7/27/2022 3:46 PM
PLOT BY : ROCHELLE L. BURSA
PLOT NAME :
PLOT SCALE : 1 IN:10 FT HORZ. / 1 IN:10 FT VERT.
WISDOT/CADDS SHEET 49

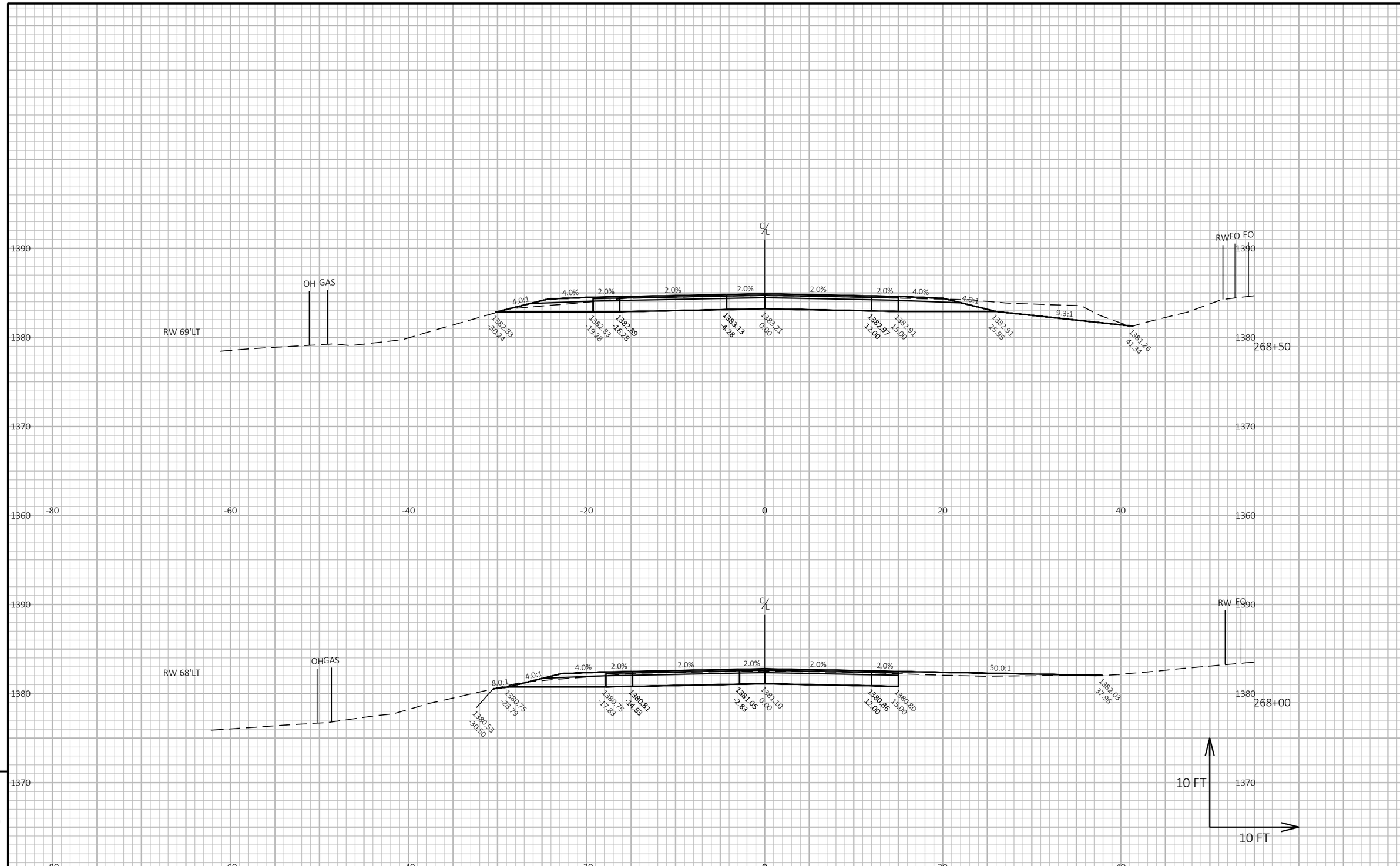

PROJECT NO: 9491-06-70 / 9491-06-71	HWY: CTH K	COUNTY: MARATHON	CROSS SECTIONS: CTH K AND CTH A	SHEET 160	E

FILE NAME : R:\5500\5539\5539002\DWG(2018)\INTERSECTION X-SEC.DWG
LAYOUT NAME - 28
PLOT DATE : 7/27/2022 3:46 PM
PLOT BY : ROCHELLE L. BURSA
PLOT NAME :
PLOT SCALE : 1 IN:10 FT HORZ. / 1 IN:10 FT VERT.
WISDOT/CADDS SHEET 49

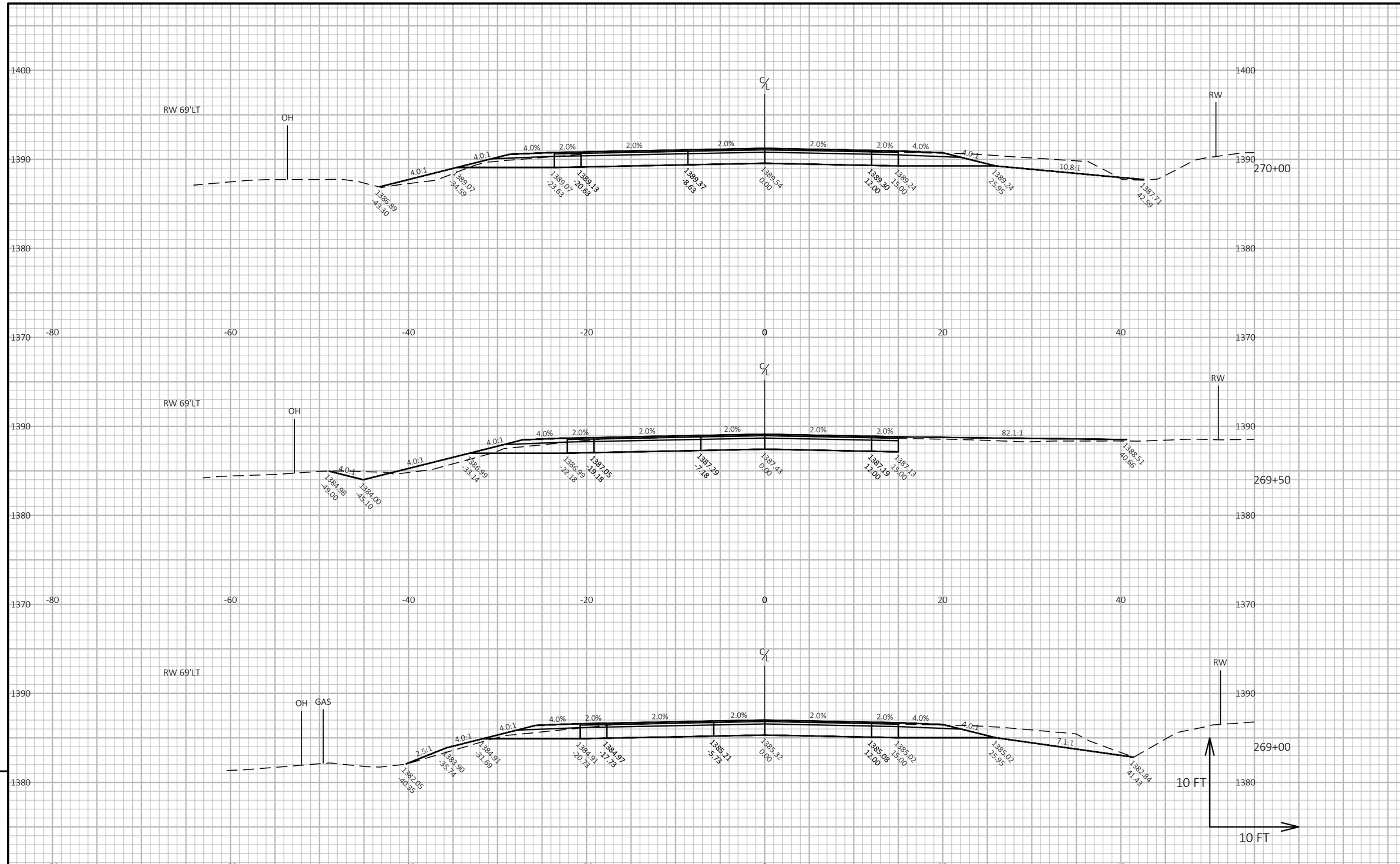

PROJECT NO: 9491-06-70 / 9491-06-71	HWY: CTH K	COUNTY: MARATHON	CROSS SECTIONS: CTH K AND CTH A	SHEET 161	E

FILE NAME : R:\5500\5539\5539002\DWG(2018)\INTERSECTION X-SEC.DWG
LAYOUT NAME - 29
PLOT DATE : 7/27/2022 3:46 PM
PLOT BY : ROCHELLE L. BURSA
PLOT NAME :
PLOT SCALE : 1 IN:10 FT HORZ. / 1 IN:10 FT VERT.
WISDOT/CADDS SHEET 49

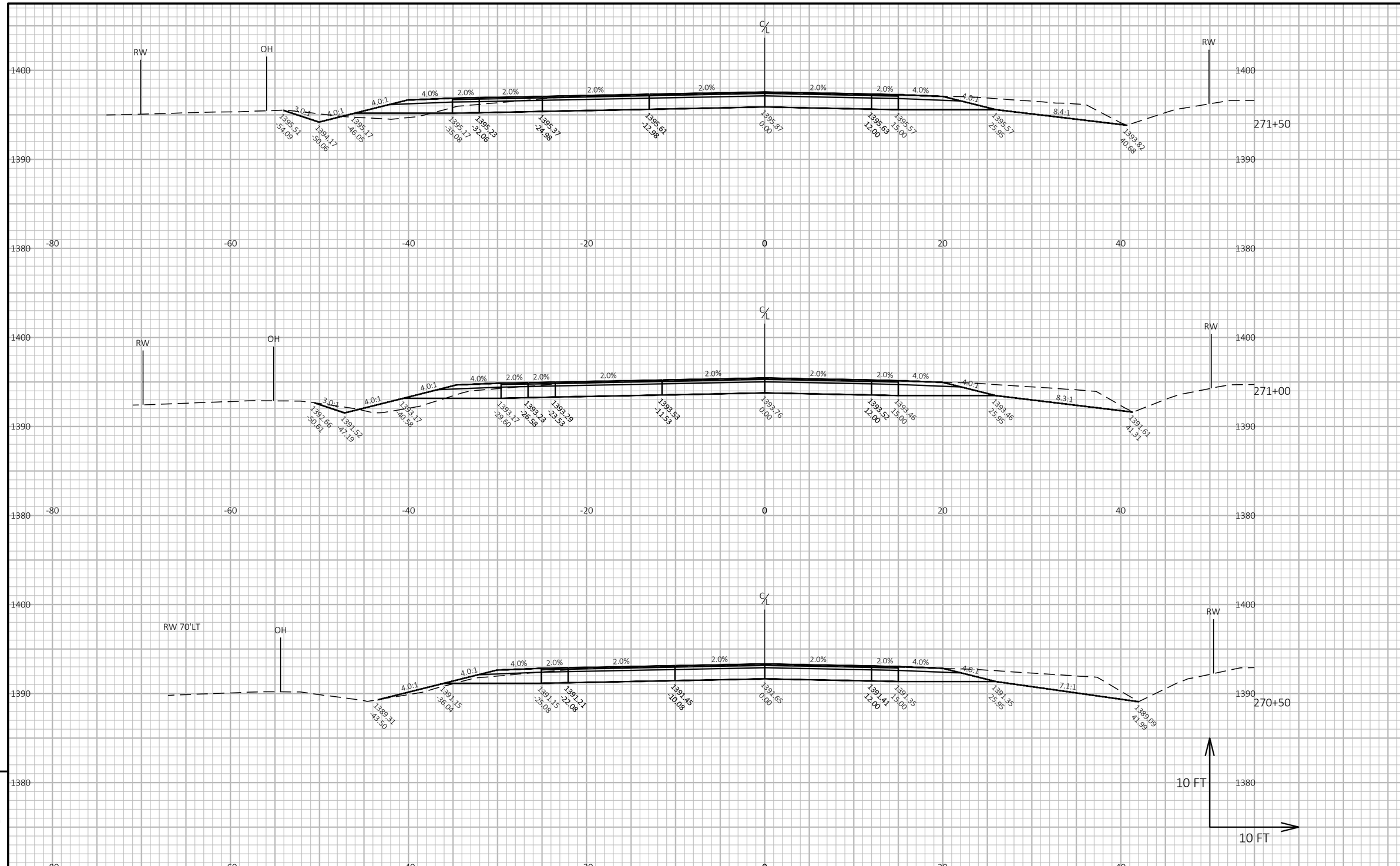

9

9

PROJECT NO: 9491-06-70 / 9491-06-71	HWY: CTH K	COUNTY: MARATHON	CROSS SECTIONS: CTH K AND CTH A	SHEET 162	E

FILE NAME : R:\5500\5539\5539002\DWG(2018)\INTERSECTION X-SEC.DWG
LAYOUT NAME - 30
PLOT DATE : 7/27/2022 3:46 PM
PLOT BY : ROCHELLE L. BURSA
PLOT NAME :
PLOT SCALE : 1 IN:10 FT HORZ. / 1 IN:10 FT VERT.
WISDOT/CADDS SHEET 49

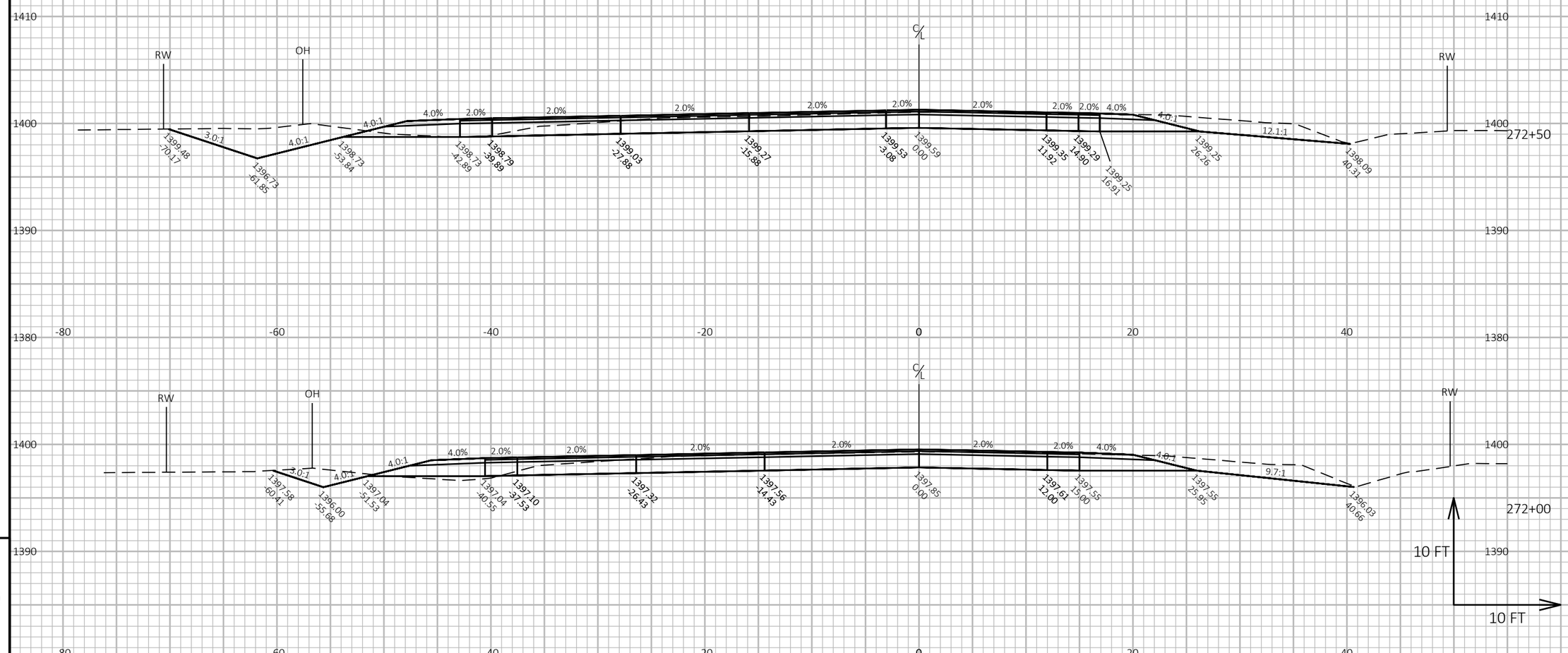

9

9

PROJECT NO: 9491-06-70 / 9491-06-71	HWY: CTH K	COUNTY: MARATHON	CROSS SECTIONS: CTH K AND CTH A	SHEET 163	E

FILE NAME : R:\5500\5539\5539002\DWG(2018)\INTERSECTION X-SEC.DWG
LAYOUT NAME - 31

PLOT DATE : 7/27/2022 3:46 PM PLOT BY : ROCHELLE L. BURSA PLOT NAME : **PLOT SCALE :** 1 IN:10 FT HORZ. / 1 IN:10 FT VERT.

WISDOT/CADDS SHEET 49

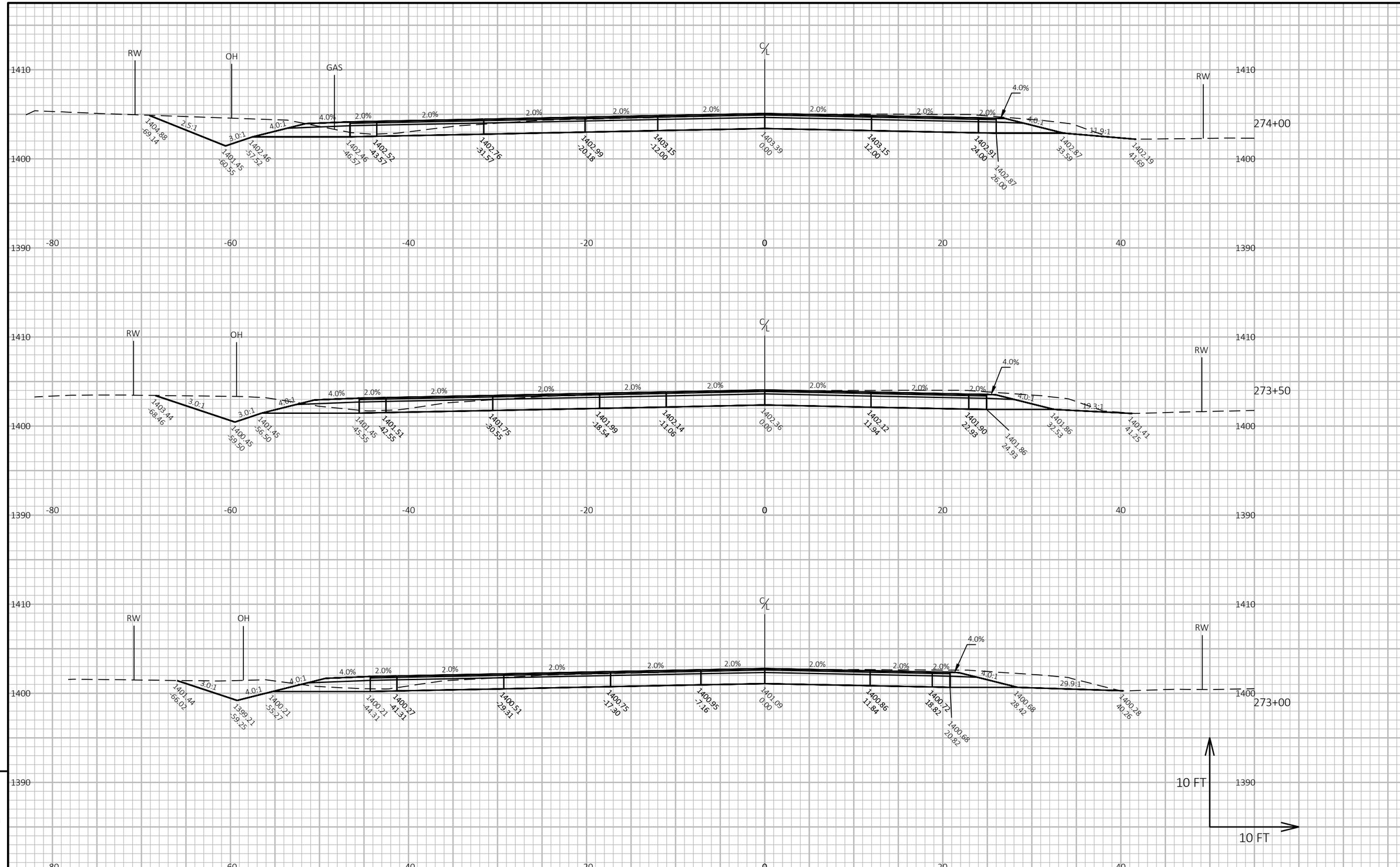

9

9

PROJECT NO: 9491-06-70 / 9491-06-71	HWY: CTH K	COUNTY: MARATHON	CROSS SECTIONS: CTH K AND CTH A	SHEET 164	E

FILE NAME : R:\5500\5539\5539002\DWG(2018)\INTERSECTION X-SEC.DWG
LAYOUT NAME - 32

PLOT DATE : 7/27/2022 3:47 PM PLOT BY : ROCHELLE L. BURSA PLOT NAME : PLOT SCALE : 1 IN:10 FT HORZ. / 1 IN:10 FT VERT.

WISDOT/CADDS SHEET 49

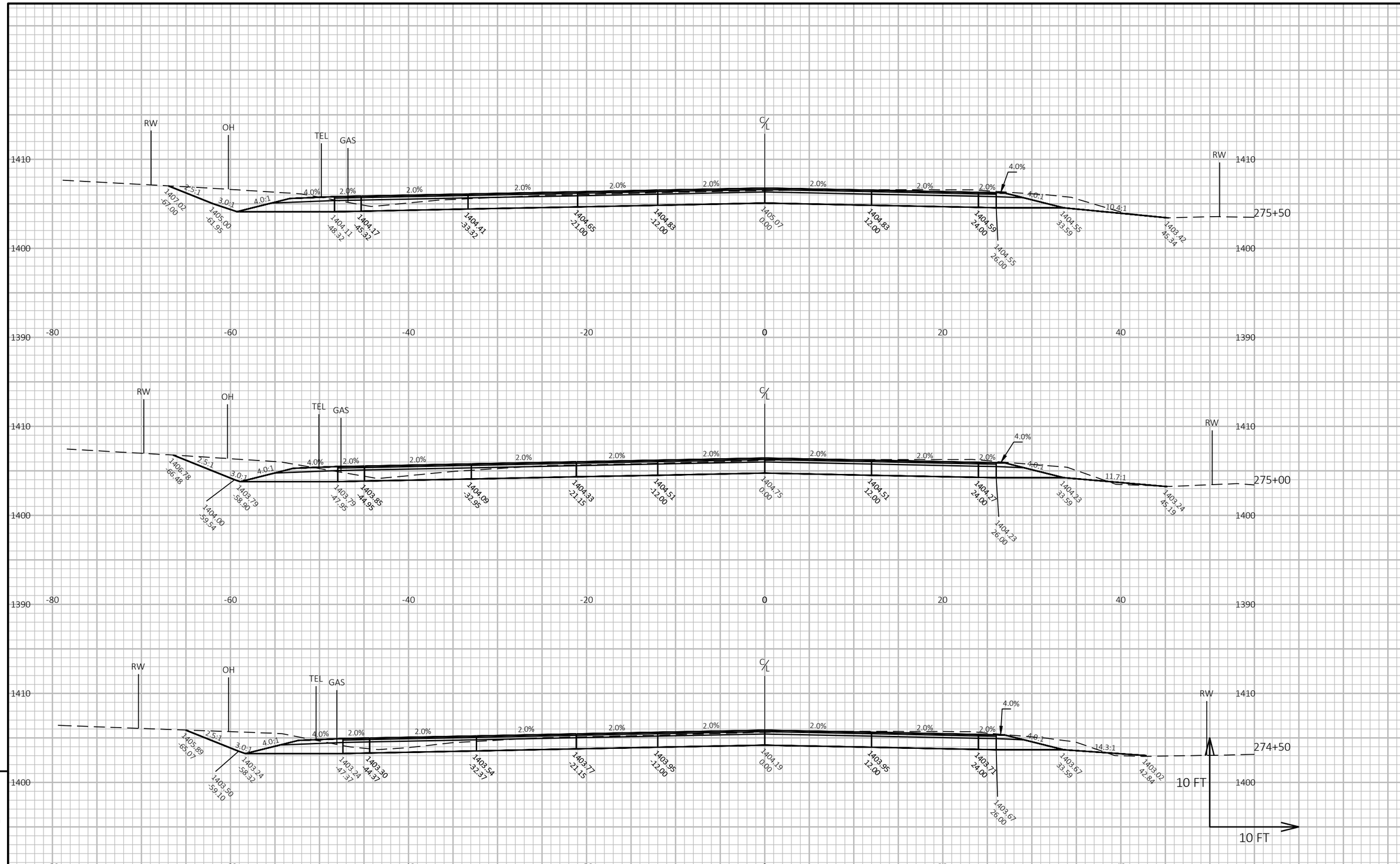

PROJECT NO: 9491-06-70 / 9491-06-71	HWY: CTH K	COUNTY: MARATHON	CROSS SECTIONS: CTH K AND CTH A	SHEET 165	E

FILE NAME : R:\5500\5539\5539002\DWG(2018)\INTERSECTION X-SEC.DWG
LAYOUT NAME - 33
PLOT DATE : 7/27/2022 3:47 PM
PLOT BY : ROCHELLE L. BURSA
PLOT NAME :
PLOT SCALE : 1 IN:10 FT HORZ. / 1 IN:10 FT VERT.
WISDOT/CADDS SHEET 49

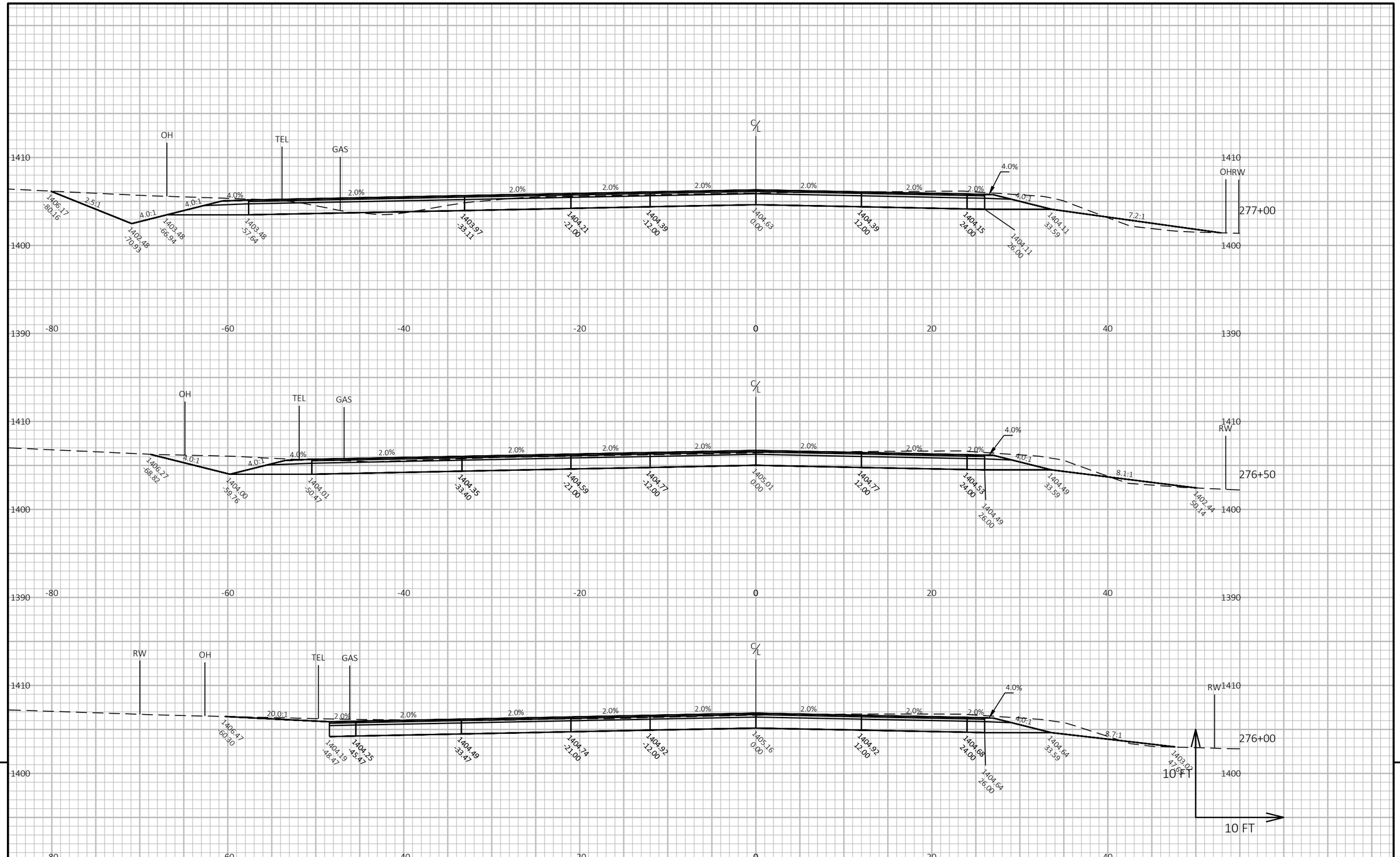

9

9

PROJECT NO: 9491-06-70 / 9491-06-71	HWY: CTH K	COUNTY: MARATHON	CROSS SECTIONS: CTH K AND CTH A	SHEET 166	E

FILE NAME : R:\5500\5539\5539002\DWG(2018)\INTERSECTION X-SEC.DWG
LAYOUT NAME - 34

PLOT DATE : 7/27/2022 3:47 PM PLOT BY : ROCHELLE L. BURSA PLOT NAME : **PLOT SCALE :** 1 IN:10 FT HORZ. / 1 IN:10 FT VERT.

WISDOT/CADDS SHEET 49

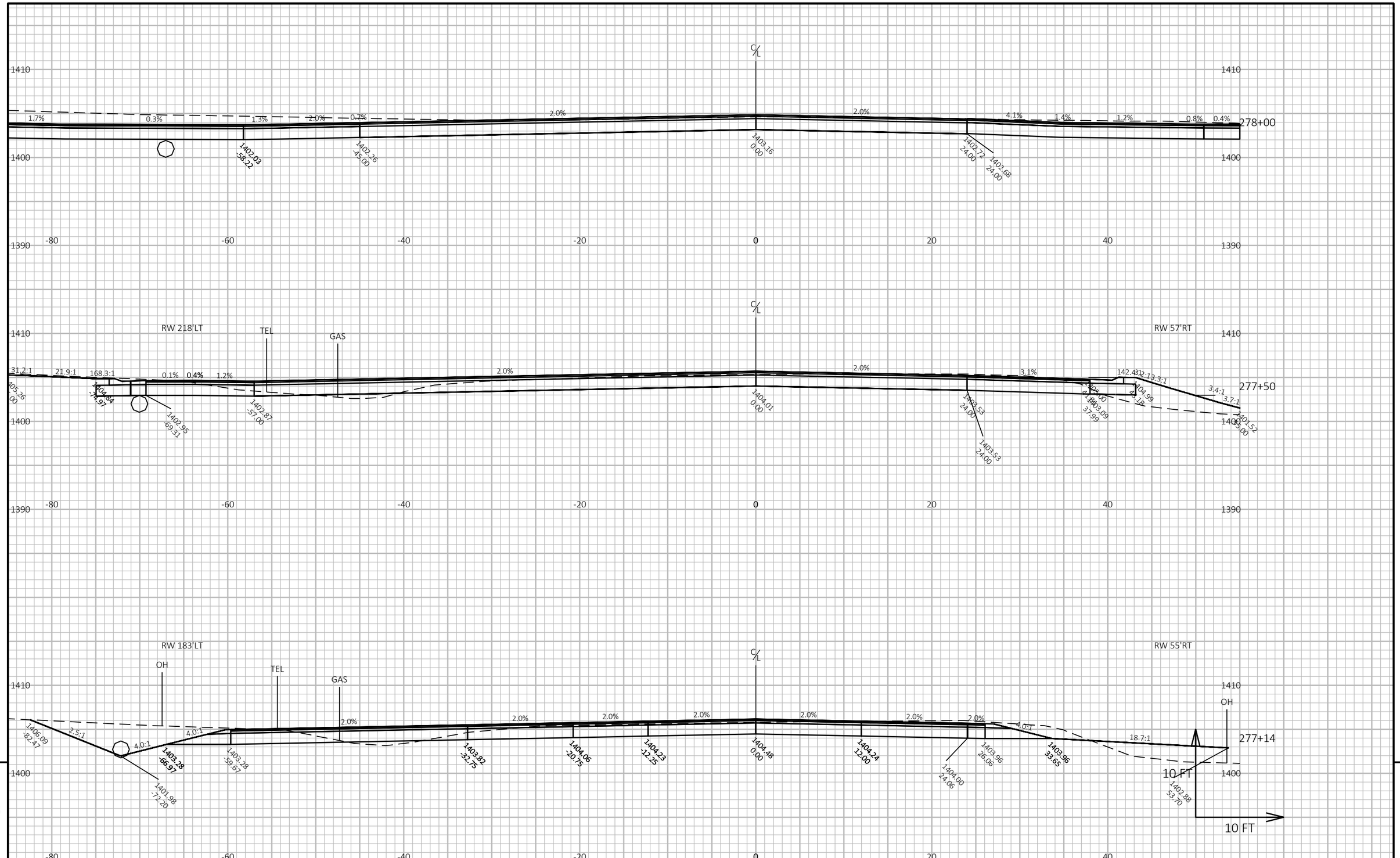

9

9

PROJECT NO: 9491-06-70 / 9491-06-71	HWY: CTH K	COUNTY: MARATHON	CROSS SECTIONS: CTH K AND CTH A	SHEET 167	E

FILE NAME : R:\5500\5539\5539002\DWG(2018)\INTERSECTION X-SEC.DWG
LAYOUT NAME - 35
PLOT DATE : 7/27/2022 3:47 PM
PLOT BY : ROCHELLE L. BURSA
PLOT NAME :
PLOT SCALE : 1 IN:10 FT HORZ. / 1 IN:10 FT VERT.
WISDOT/CADDS SHEET 49

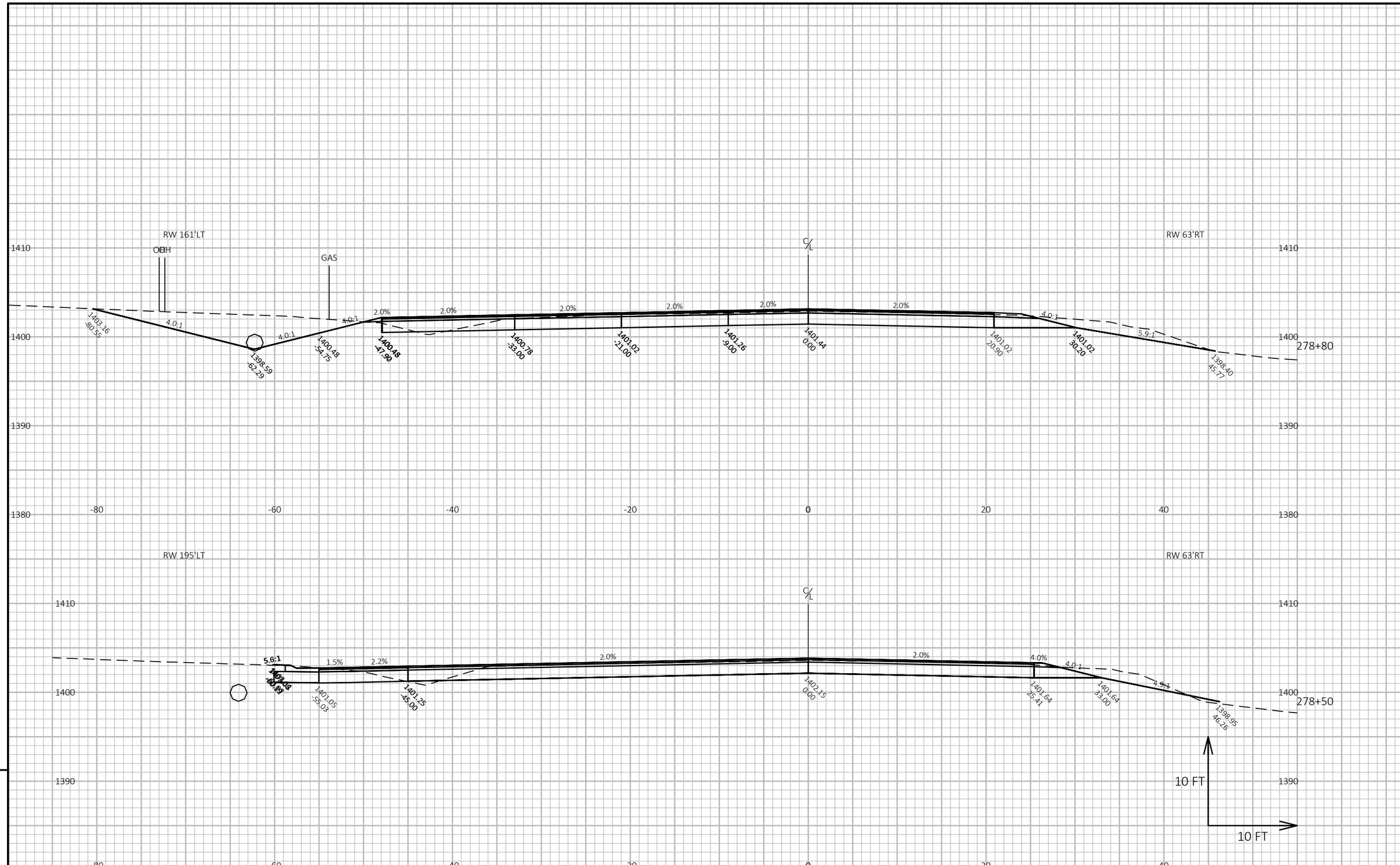

PROJECT NO: 9491-06-70 / 9491-06-71	HWY: CTH K	COUNTY: MARATHON	CROSS SECTIONS: CTH K AND CTH A	SHEET 168	E

FILE NAME : R:\5500\5539\5539002\DWG(2018)\INTERSECTION X-SEC.DWG
LAYOUT NAME - 36
PLOT DATE : 7/27/2022 3:47 PM
PLOT BY : ROCHELLE L. BURSA
PLOT NAME :
PLOT SCALE : 1 IN:10 FT HORZ. / 1 IN:10 FT VERT.
WISDOT/CADDS SHEET 49

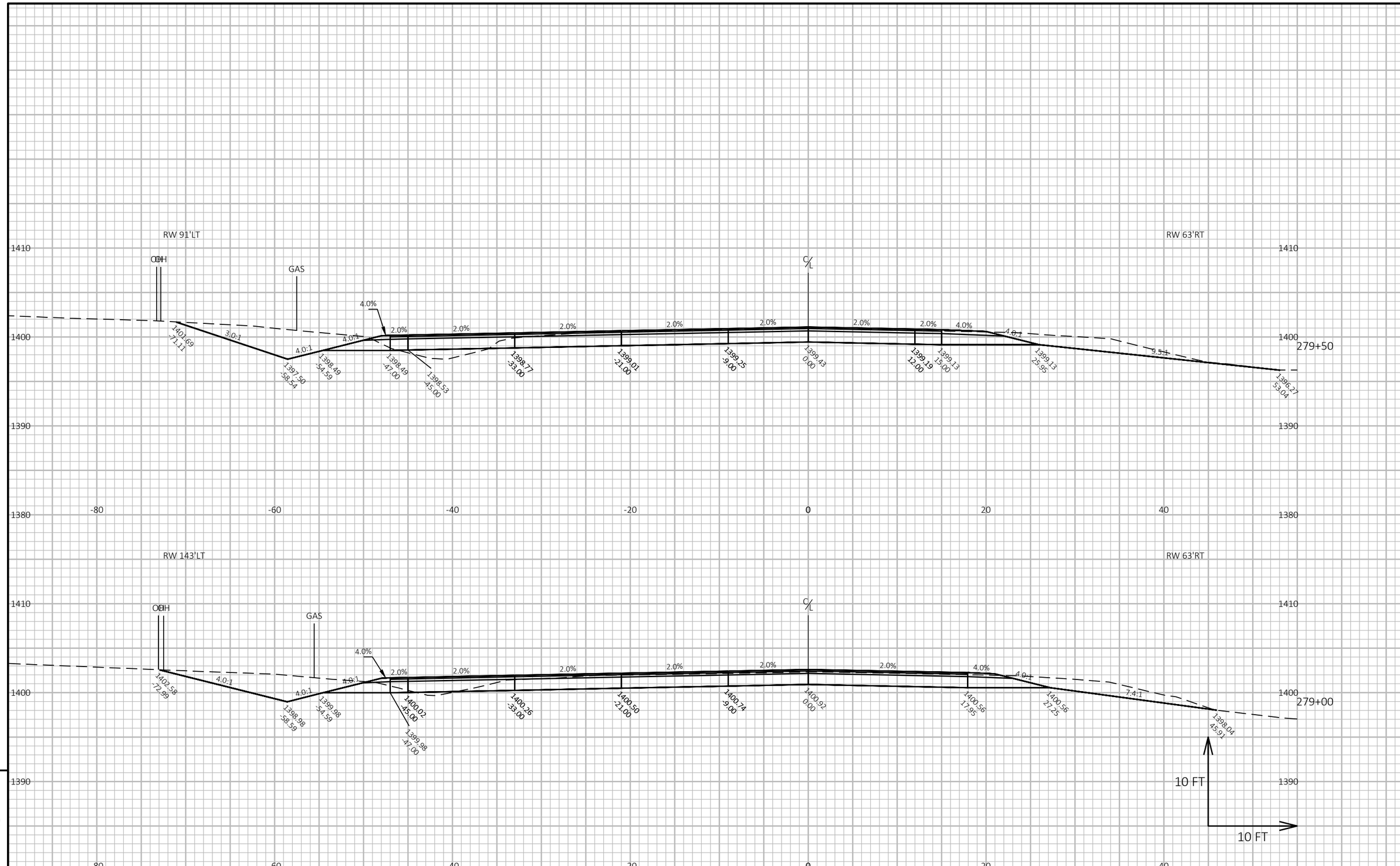

9

9

PROJECT NO: 9491-06-70 / 9491-06-71	HWY: CTH K	COUNTY: MARATHON	CROSS SECTIONS: CTH K AND CTH A	SHEET 169	E

FILE NAME : R:\5500\5539\5539002\DWG(2018)\INTERSECTION X-SEC.DWG
LAYOUT NAME - 37

PLOT DATE : 7/27/2022 3:47 PM PLOT BY : ROCHELLE L. BURSA PLOT NAME : **PLOT SCALE :** 1 IN:10 FT HORZ. / 1 IN:10 FT VERT.

WISDOT/CADDS SHEET 49

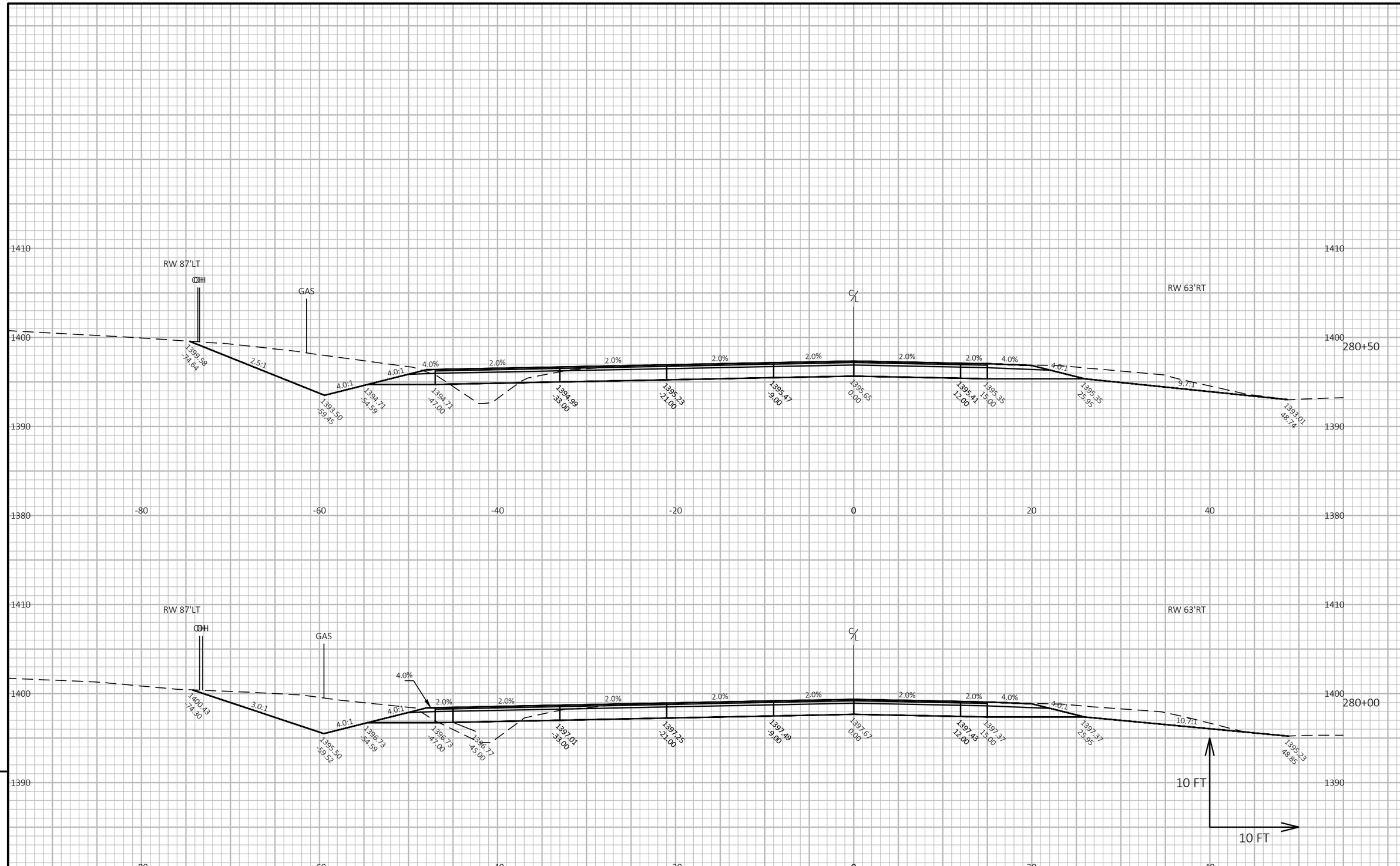

9

9

PROJECT NO: 9491-06-70 / 9491-06-71	HWY: CTH K	COUNTY: MARATHON	CROSS SECTIONS: CTH K AND CTH A	SHEET 170	E

FILE NAME : R:\5500\5539\5539002\DWG(2018)\INTERSECTION X-SEC.DWG
LAYOUT NAME - 38

PLOT DATE : 7/27/2022 3:47 PM PLOT BY : ROCHELLE L. BURSA PLOT NAME : **PLOT SCALE :** 1 IN:10 FT HORZ. / 1 IN:10 FT VERT.

WISDOT/CADDS SHEET 49

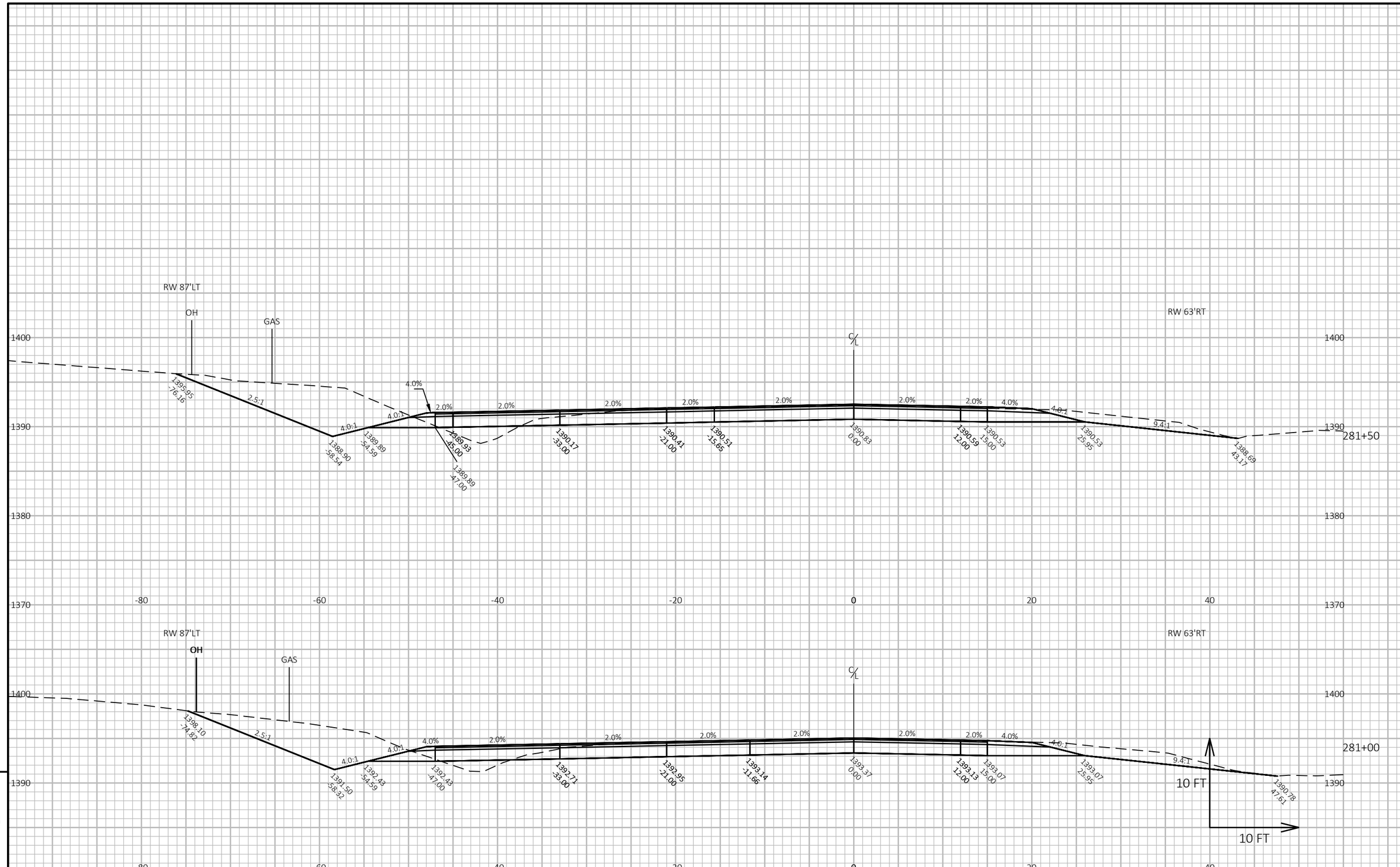

PROJECT NO: 9491-06-70 / 9491-06-71	HWY: CTH K	COUNTY: MARATHON	CROSS SECTIONS: CTH K AND CTH A	SHEET 171	E

FILE NAME : R:\5500\5539\5539002\DWG(2018)\INTERSECTION X-SEC.DWG
LAYOUT NAME - 39
PLOT DATE : 7/27/2022 3:47 PM
PLOT BY : ROCHELLE L. BURSA
PLOT NAME :
PLOT SCALE : 1 IN:10 FT HORZ. / 1 IN:10 FT VERT.
WISDOT/CADDS SHEET 49

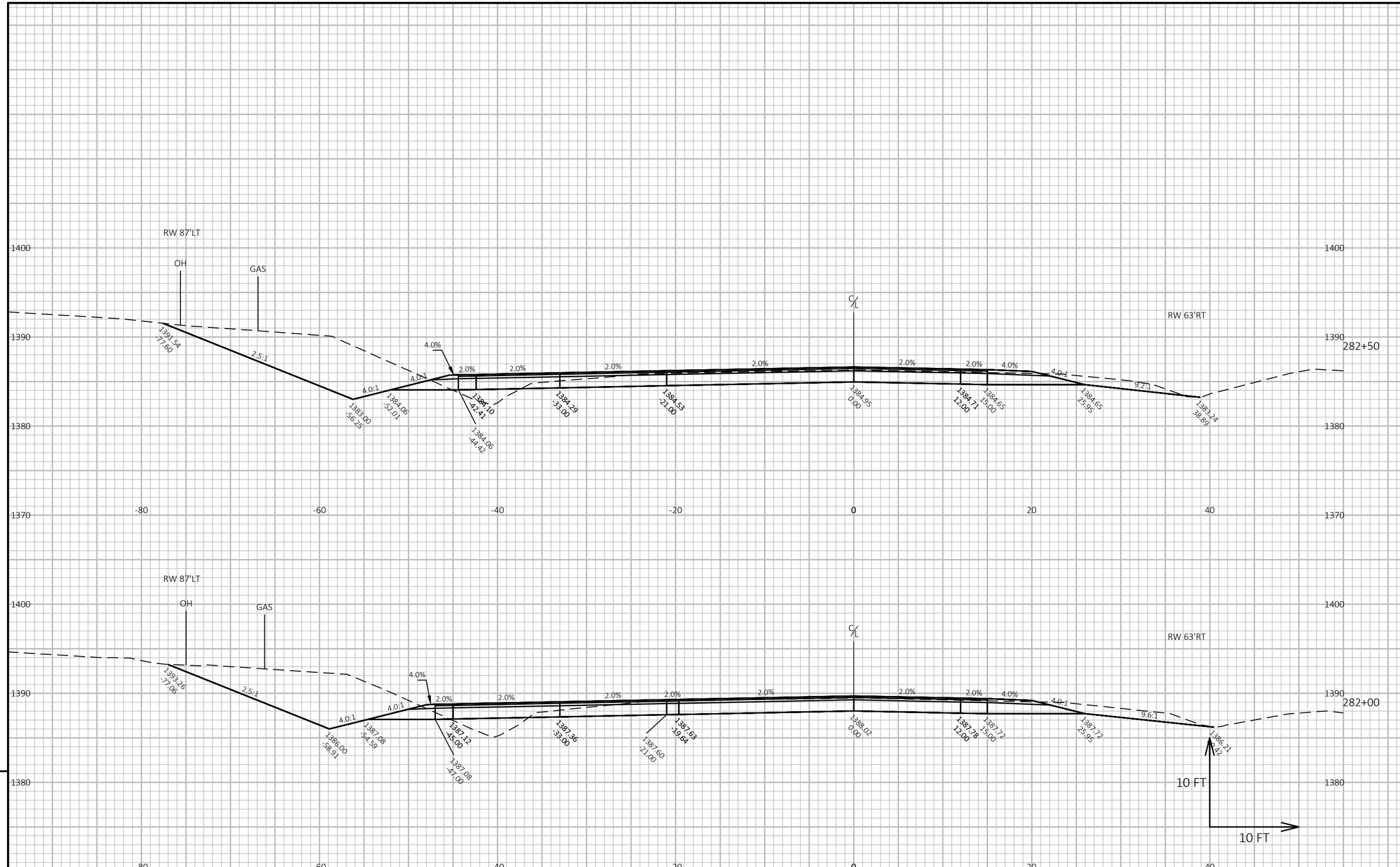

PROJECT NO: 9491-06-70 / 9491-06-71	HWY: CTH K	COUNTY: MARATHON	CROSS SECTIONS: CTH K AND CTH A	SHEET 172	E

FILE NAME : R:\5500\5539\5539002\DWG(2018)\INTERSECTION X-SEC.DWG
LAYOUT NAME - 40
PLOT DATE : 7/27/2022 3:48 PM
PLOT BY : ROCHELLE L. BURSA
PLOT NAME :
PLOT SCALE : 1 IN:10 FT HORZ. / 1 IN:10 FT VERT.
WISDOT/CADDS SHEET 49

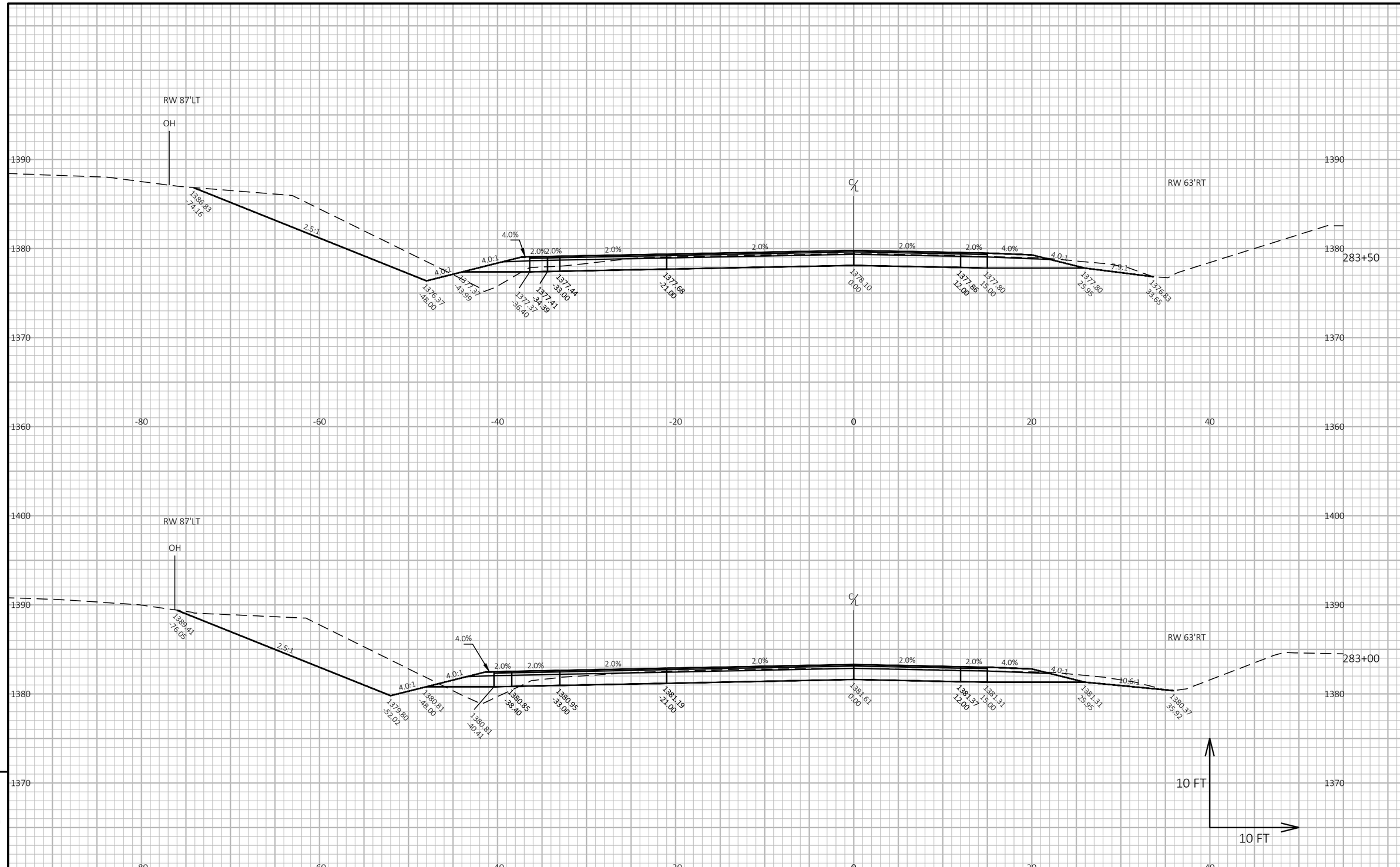

PROJECT NO: 9491-06-70 / 9491-06-71	HWY: CTH K	COUNTY: MARATHON	CROSS SECTIONS: CTH K AND CTH A	SHEET 173	E

FILE NAME : R:\5500\5539\5539002\DWG(2018)\INTERSECTION X-SEC.DWG
LAYOUT NAME - 41
PLOT DATE : 7/27/2022 3:48 PM
PLOT BY : ROCHELLE L. BURSA
PLOT NAME :
PLOT SCALE : 1 IN:10 FT HORZ. / 1 IN:10 FT VERT.
WISDOT/CADDS SHEET 49

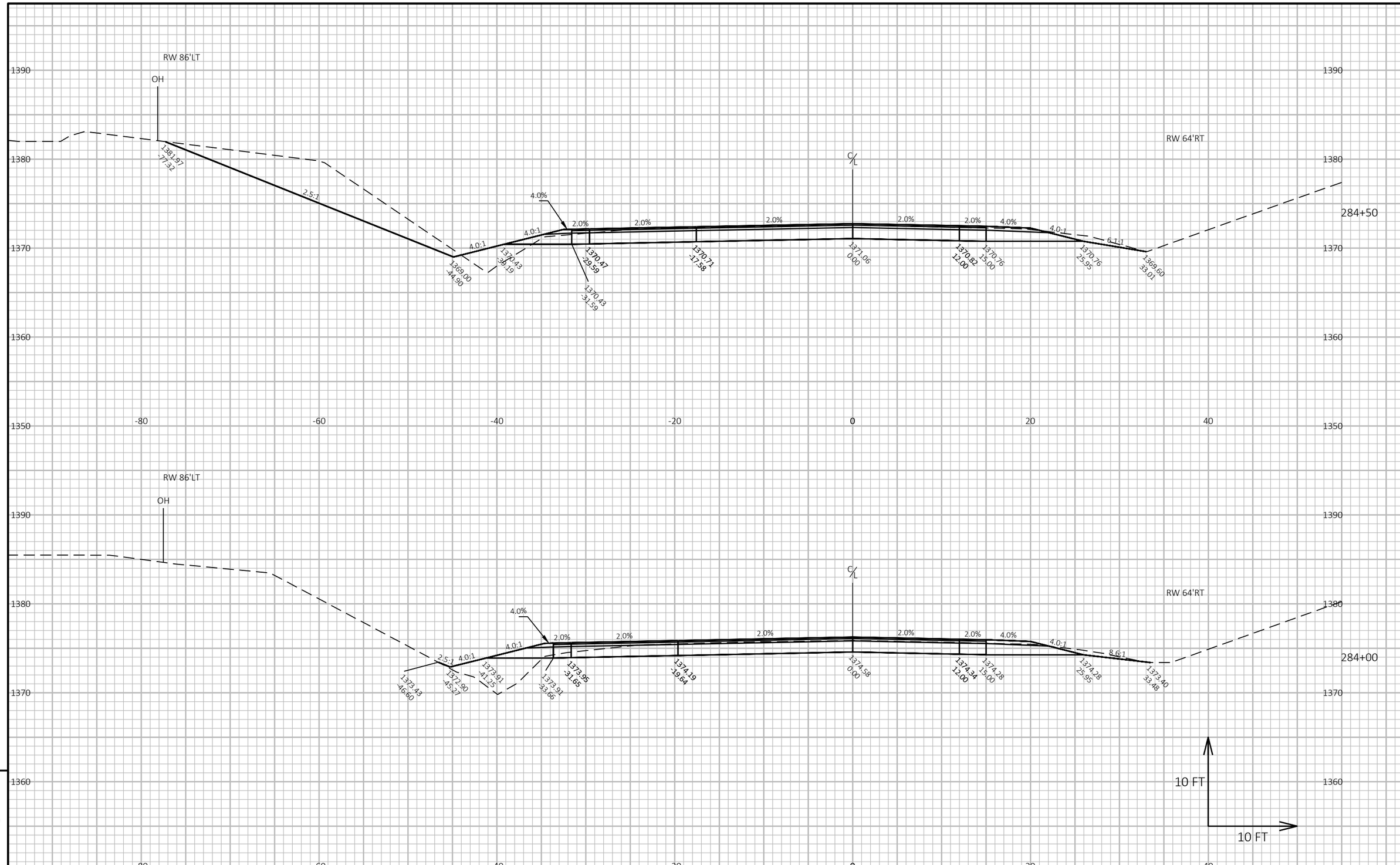

9

9

PROJECT NO: 9491-06-70 / 9491-06-71	HWY: CTH K	COUNTY: MARATHON	CROSS SECTIONS: CTH K AND CTH A	SHEET 174	E

FILE NAME : R:\5500\5539\5539002\DWG(2018)\INTERSECTION X-SEC.DWG
LAYOUT NAME - 42
PLOT DATE : 7/27/2022 3:48 PM
PLOT BY : ROCHELLE L. BURSA
PLOT NAME :
PLOT SCALE : 1 IN:10 FT HORZ. / 1 IN:10 FT VERT.
WISDOT/CADDS SHEET 49

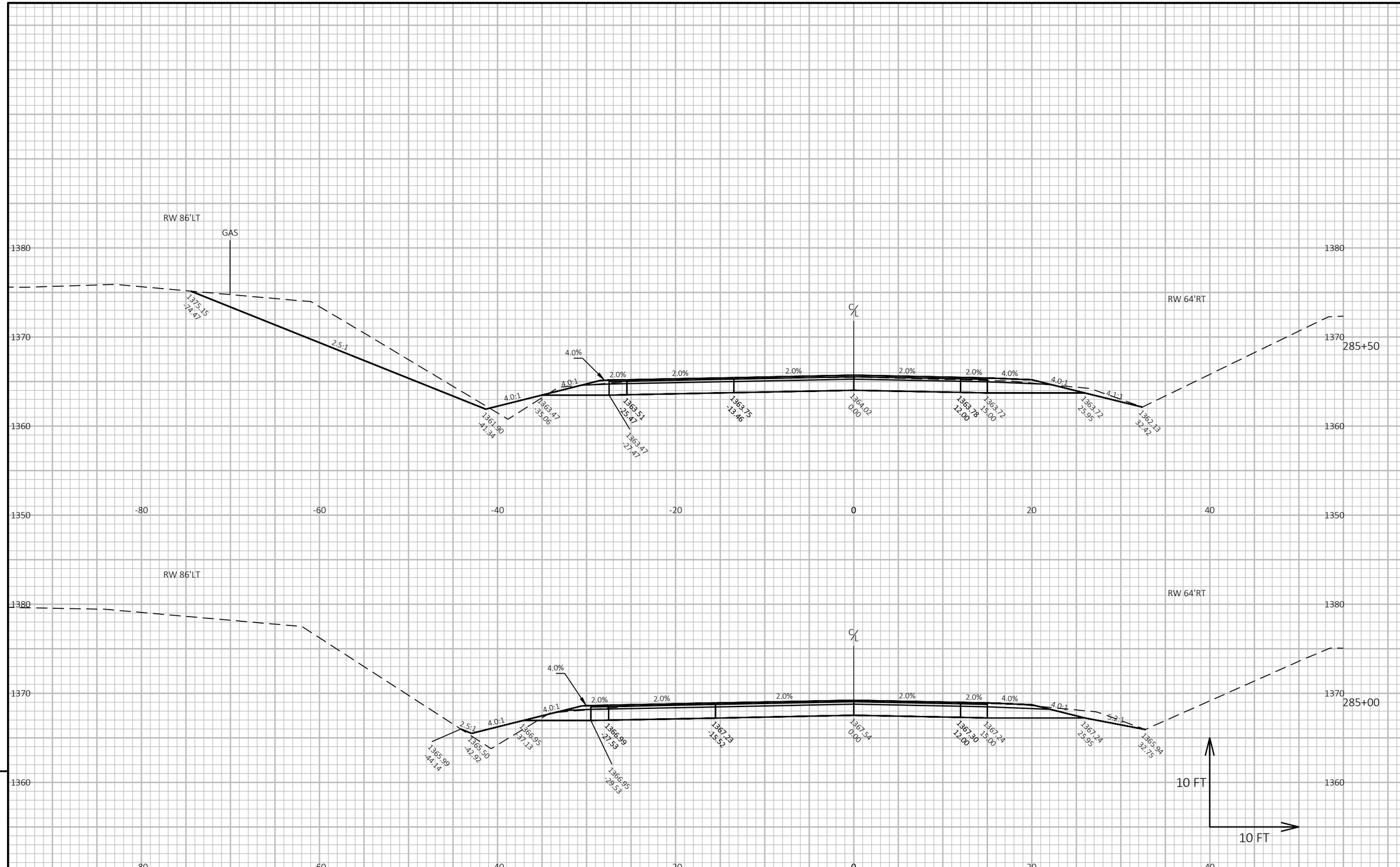

PROJECT NO: 9491-06-70 / 9491-06-71	HWY: CTH K	COUNTY: MARATHON	CROSS SECTIONS: CTH K AND CTH A	SHEET 175	E

FILE NAME : R:\5500\5539\5539002\DWG(2018)\INTERSECTION X-SEC.DWG
LAYOUT NAME - 43
PLOT DATE : 7/27/2022 3:48 PM
PLOT BY : ROCHELLE L. BURSA
PLOT NAME :
PLOT SCALE : 1 IN:10 FT HORZ. / 1 IN:10 FT VERT.
WISDOT/CADDS SHEET 49

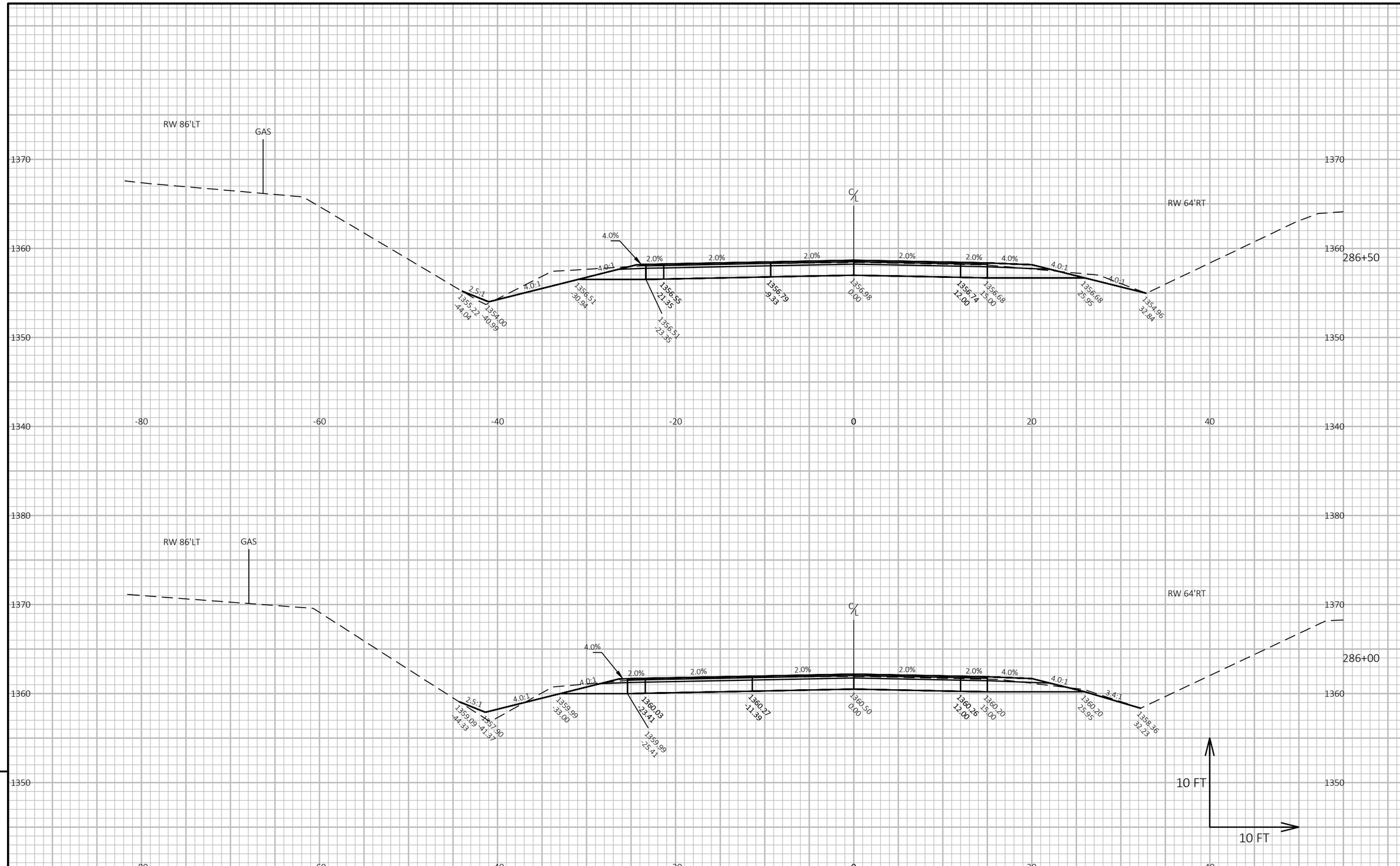

9

9

PROJECT NO: 9491-06-70 / 9491-06-71	HWY: CTH K	COUNTY: MARATHON	CROSS SECTIONS: CTH K AND CTH A	SHEET 176	E

FILE NAME : R:\5500\5539\5539002\DWG(2018)\INTERSECTION X-SEC.DWG
LAYOUT NAME - 44
PLOT DATE : 7/27/2022 3:48 PM
PLOT BY : ROCHELLE L. BURSA
PLOT NAME :
PLOT SCALE : 1 IN:10 FT HORZ. / 1 IN:10 FT VERT.
WISDOT/CADDS SHEET 49

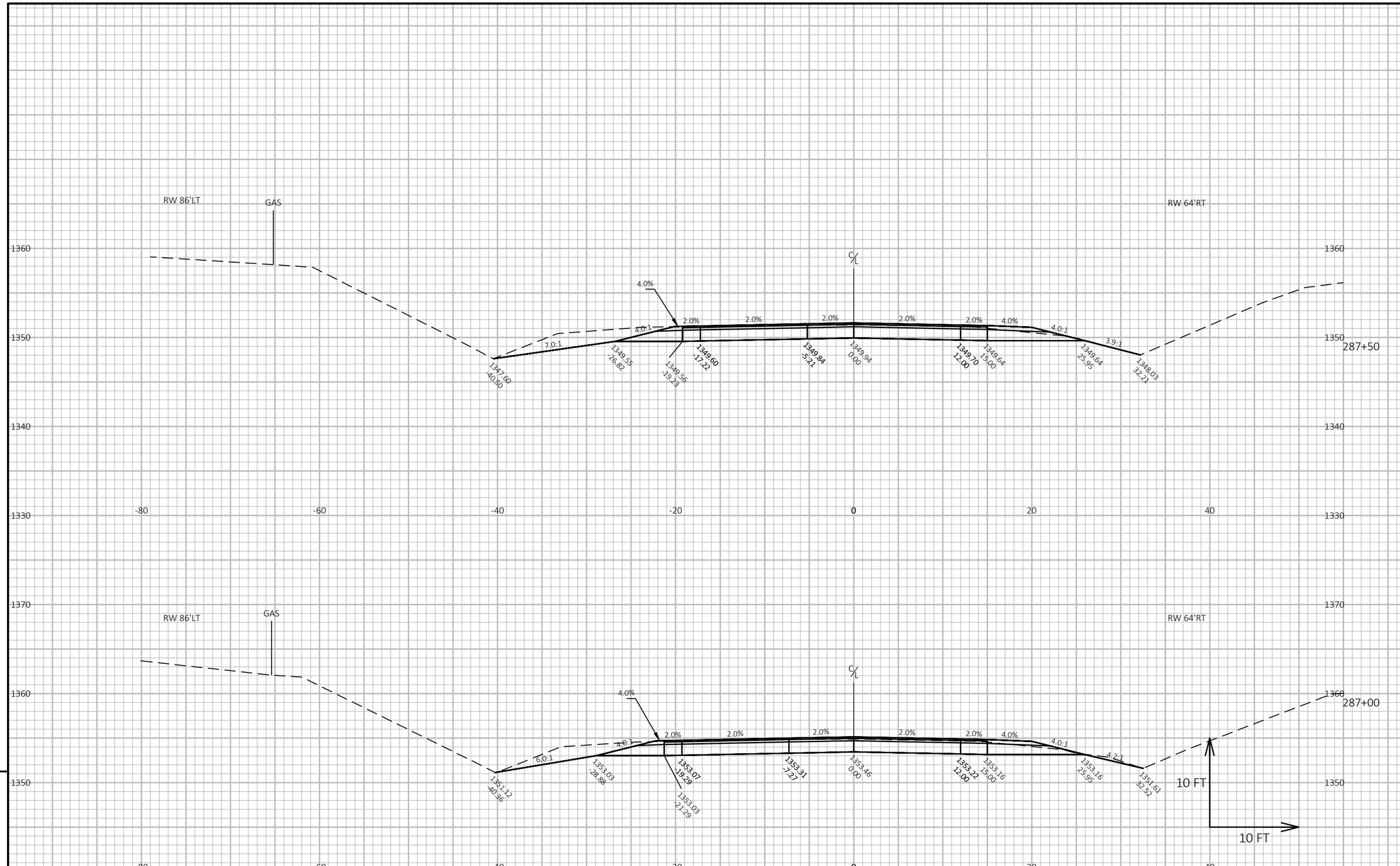

9

9

PROJECT NO: 9491-06-70 / 9491-06-71	HWY: CTH K	COUNTY: MARATHON	CROSS SECTIONS: CTH K AND CTH A	SHEET 177	E

FILE NAME : R:\5500\5539\5539002\DWG(2018)\INTERSECTION X-SEC.DWG
LAYOUT NAME - 45
PLOT DATE : 7/27/2022 3:48 PM
PLOT BY : ROCHELLE L. BURSA
PLOT NAME :
PLOT SCALE : 1 IN:10 FT HORZ. / 1 IN:10 FT VERT.
WISDOT/CADDS SHEET 49

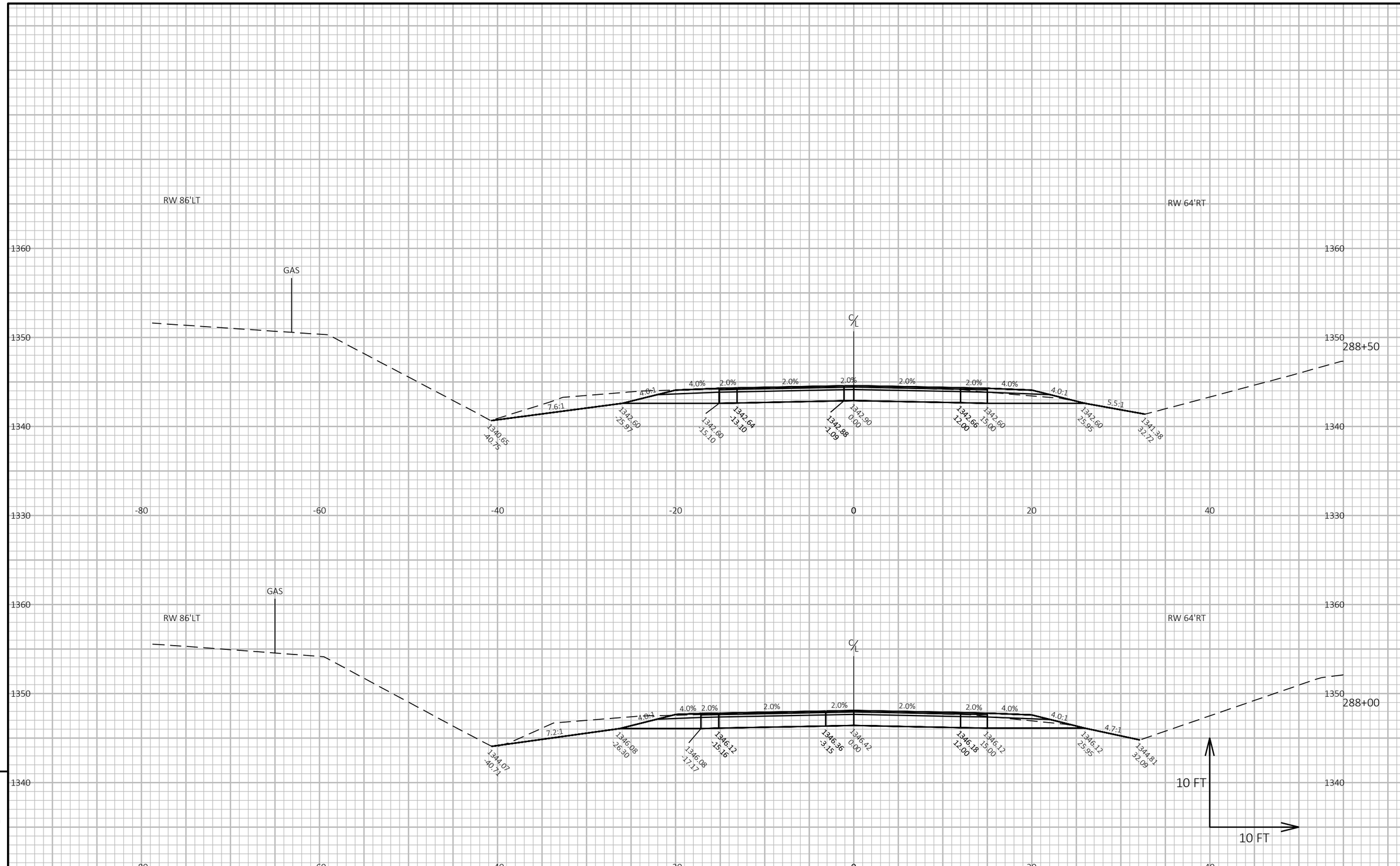

9

9

PROJECT NO: 9491-06-70 / 9491-06-71	HWY: CTH K	COUNTY: MARATHON	CROSS SECTIONS: CTH K AND CTH A	SHEET 178	E

FILE NAME : R:\5500\5539\5539002\DWG(2018)\INTERSECTION X-SEC.DWG
LAYOUT NAME - 46
PLOT DATE : 7/27/2022 3:48 PM
PLOT BY : ROCHELLE L. BURSA
PLOT NAME :
PLOT SCALE : 1 IN:10 FT HORZ. / 1 IN:10 FT VERT.
WISDOT/CADDS SHEET 49

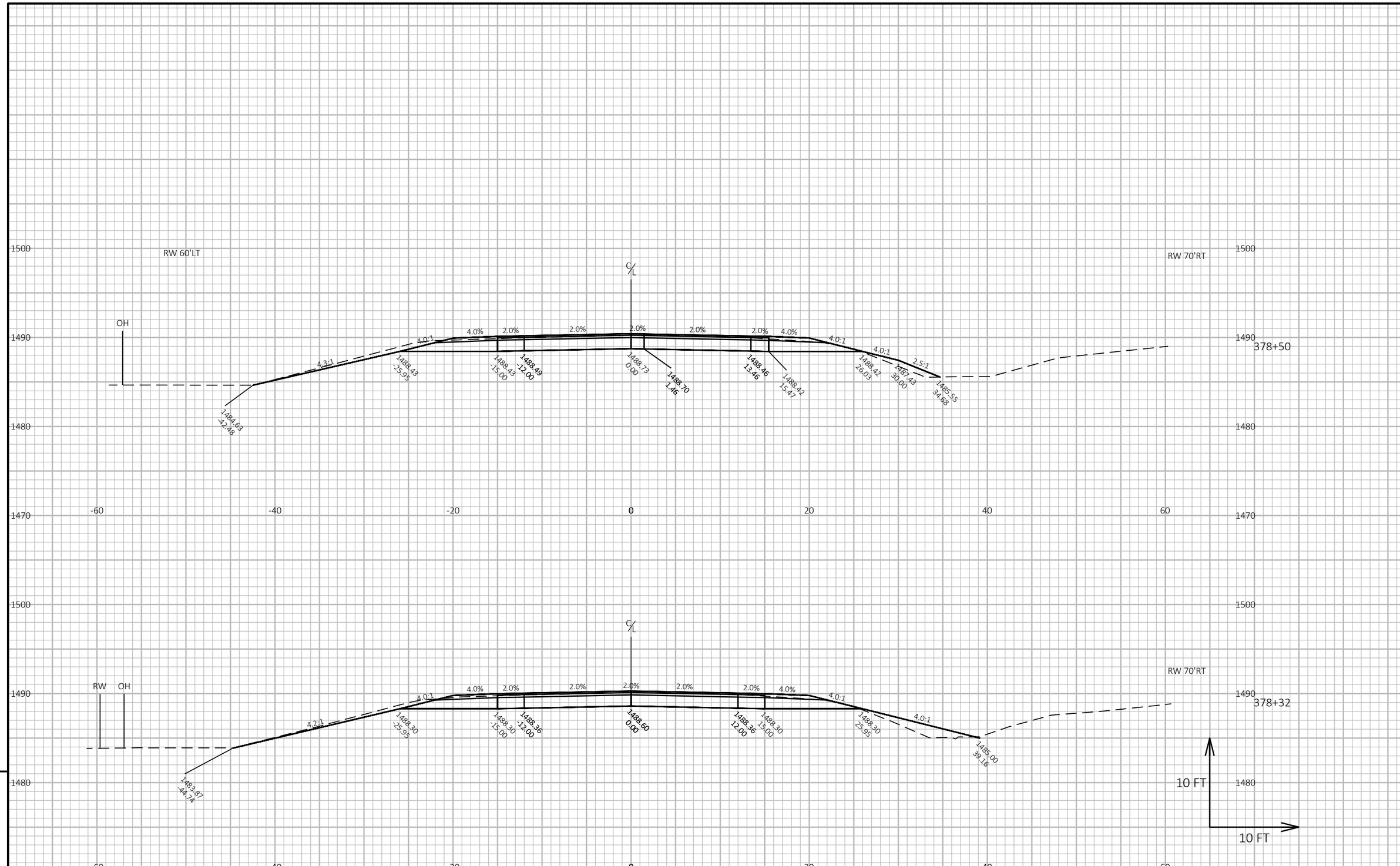

9

9

PROJECT NO: 9491-06-70 / 9491-06-71	HWY: CTH K	COUNTY: MARATHON	CROSS SECTIONS: CTH K AND NAUGART	SHEET 179	E

FILE NAME : R:\5500\5539\5539002\DWG(2018)\INTERSECTION X-SEC.DWG
LAYOUT NAME - 17
PLOT DATE : 7/27/2022 3:45 PM
PLOT BY : ROCHELLE L. BURSA
PLOT NAME :
PLOT SCALE : 1 IN:10 FT HORZ. / 1 IN:10 FT VERT.
WISDOT/CADDS SHEET 49

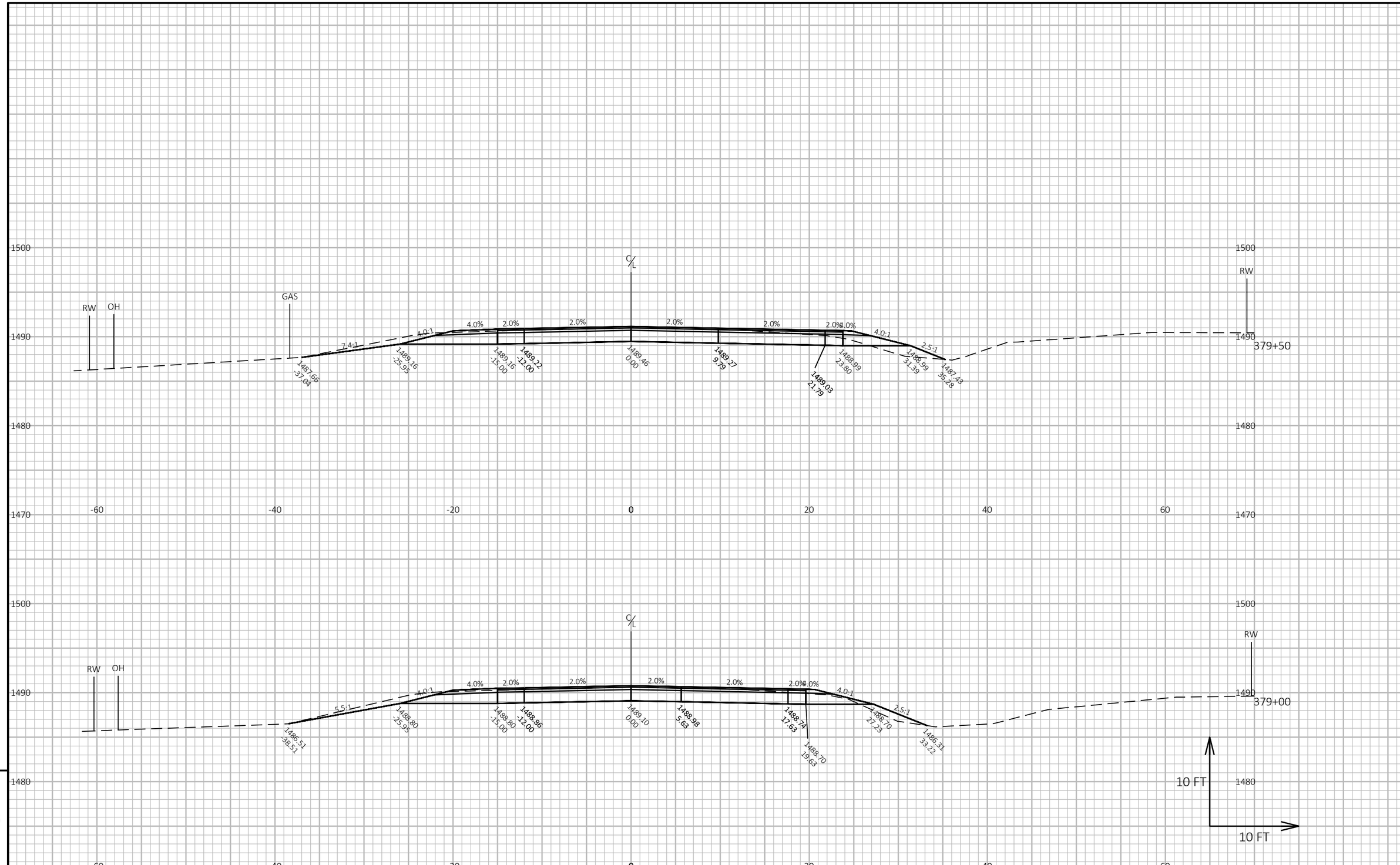

9

9

PROJECT NO: 9491-06-70 / 9491-06-71	HWY: CTH K	COUNTY: MARATHON	CROSS SECTIONS: CTH K AND NAUGART	SHEET 180	E

FILE NAME : R:\5500\5539\5539002\DWG(2018)\INTERSECTION X-SEC.DWG
LAYOUT NAME - 18
PLOT DATE : 7/27/2022 3:45 PM
PLOT BY : ROCHELLE L. BURSA
PLOT NAME :
PLOT SCALE : 1 IN:10 FT HORZ. / 1 IN:10 FT VERT.
WISDOT/CADDS SHEET 49

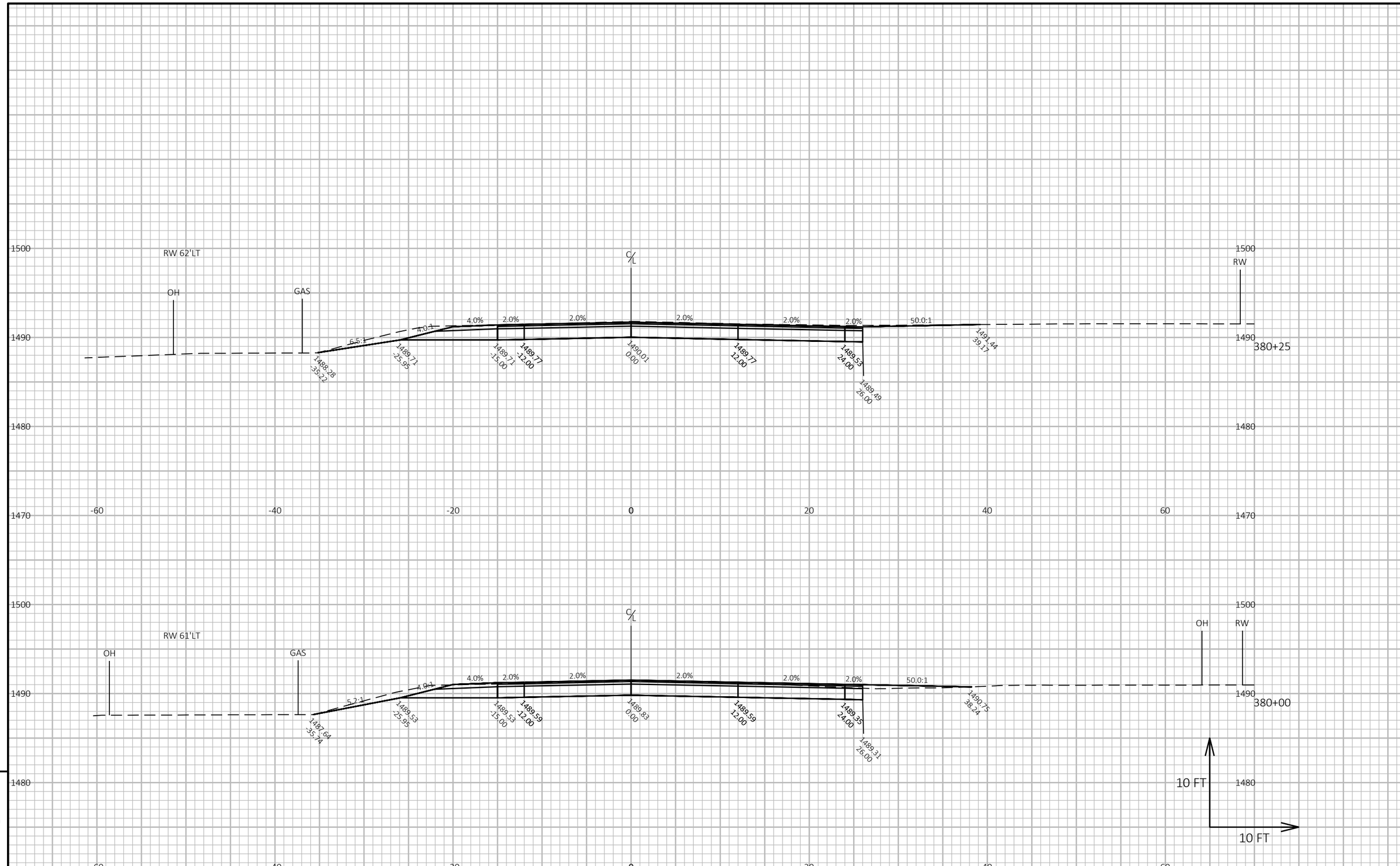

9

9

PROJECT NO: 9491-06-70 / 9491-06-71	HWY: CTH K	COUNTY: MARATHON	CROSS SECTIONS: CTH K AND NAUGART	SHEET 181	E

FILE NAME : R:\5500\5539\5539002\DWG(2018)\INTERSECTION X-SEC.DWG
LAYOUT NAME - 19
PLOT DATE : 7/27/2022 3:45 PM
PLOT BY : ROCHELLE L. BURSA
PLOT NAME :
PLOT SCALE : 1 IN:10 FT HORZ. / 1 IN:10 FT VERT.
WISDOT/CADDS SHEET 49

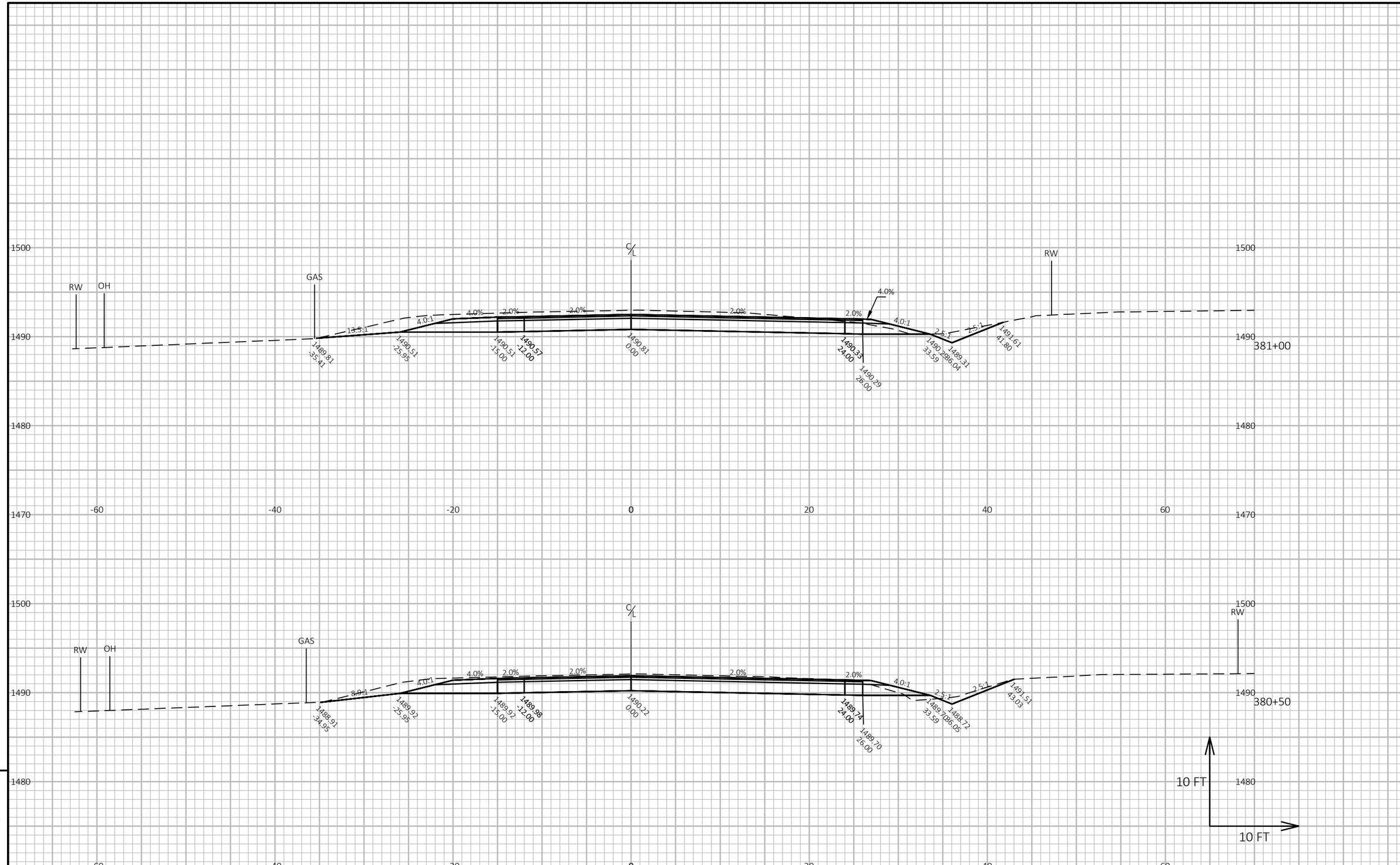

PROJECT NO: 9491-06-70 / 9491-06-71	HWY: CTH K	COUNTY: MARATHON	CROSS SECTIONS: CTH K AND NAUGART	SHEET 182	E

FILE NAME : R:\5500\5539\5539002\DWG(2018)\INTERSECTION X-SEC.DWG
LAYOUT NAME - 20
PLOT DATE : 7/27/2022 3:45 PM
PLOT BY : ROCHELLE L. BURSA
PLOT NAME :
PLOT SCALE : 1 IN:10 FT HORZ. / 1 IN:10 FT VERT.
WISDOT/CADDS SHEET 49

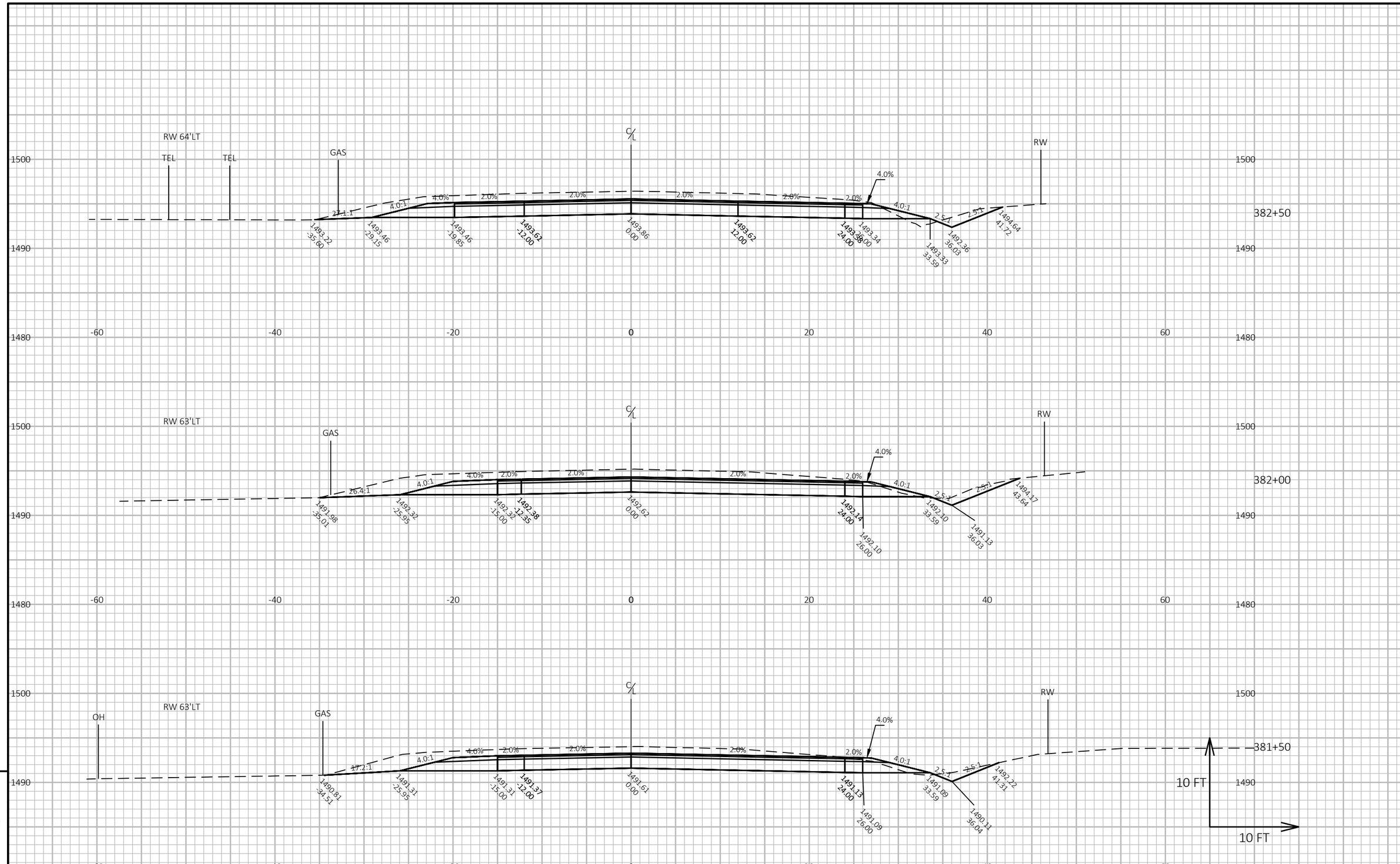

9

9

PROJECT NO: 9491-06-70 / 9491-06-71	HWY: CTH K	COUNTY: MARATHON	CROSS SECTIONS: CTH K AND NAUGART	SHEET 183	E

FILE NAME : R:\5500\5539\5539002\DWG(2018)\INTERSECTION X-SEC.DWG
LAYOUT NAME - 21

PLOT DATE : 7/27/2022 3:45 PM PLOT BY : ROCHELLE L. BURSA PLOT NAME : **PLOT SCALE :** 1 IN:10 FT HORZ. / 1 IN:10 FT VERT.

WISDOT/CADDS SHEET 49

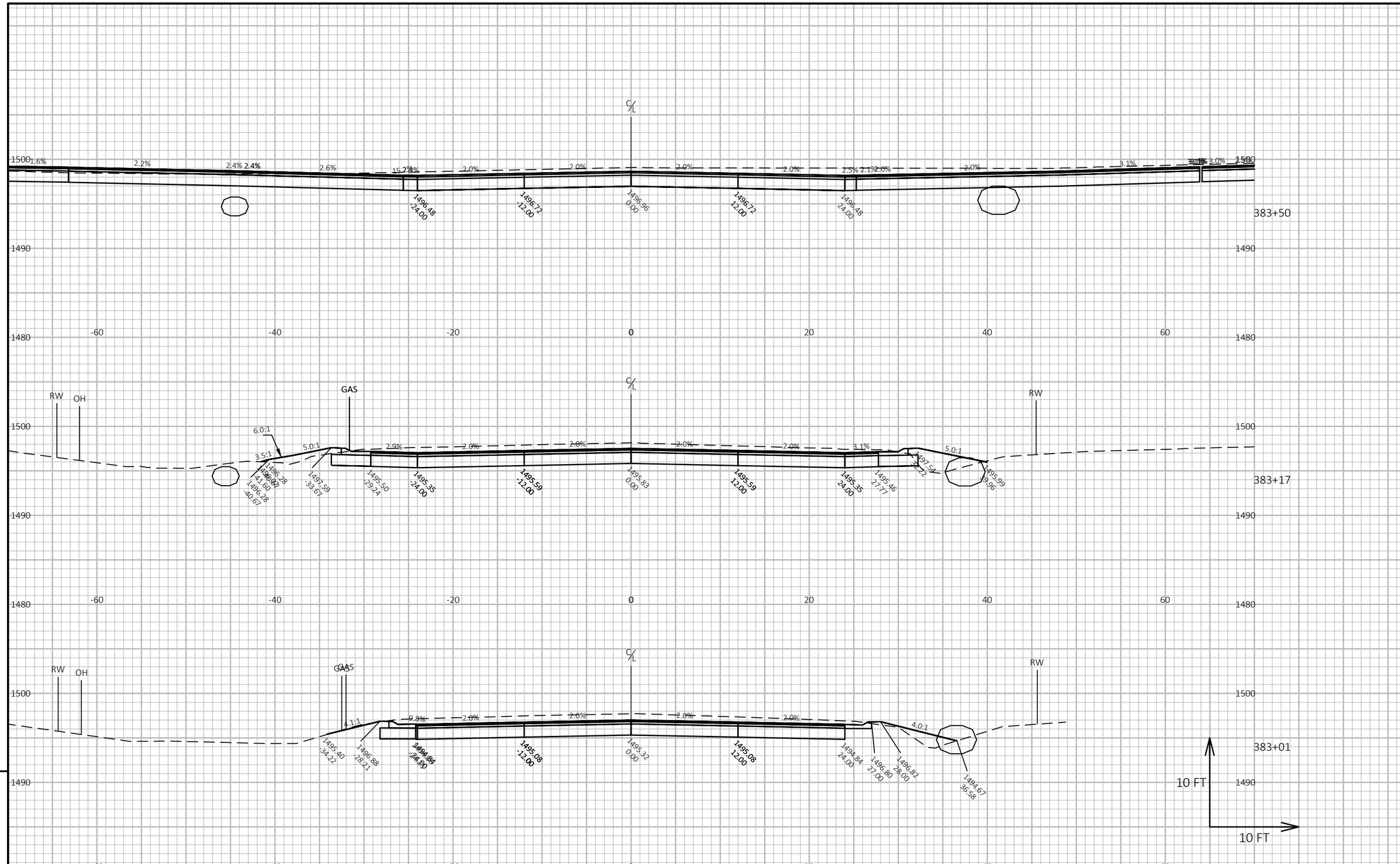

PROJECT NO: 9491-06-70 / 9491-06-71	HWY: CTH K	COUNTY: MARATHON	CROSS SECTIONS: CTH K AND NAUGART	SHEET 184	E

FILE NAME : R:\5500\5539\5539002\DWG(2018)\INTERSECTION X-SEC.DWG
LAYOUT NAME - 22
PLOT DATE : 7/27/2022 3:45 PM
PLOT BY : ROCHELLE L. BURSA
PLOT NAME :
PLOT SCALE : 1 IN:10 FT HORZ. / 1 IN:10 FT VERT.
WISDOT/CADDS SHEET 49

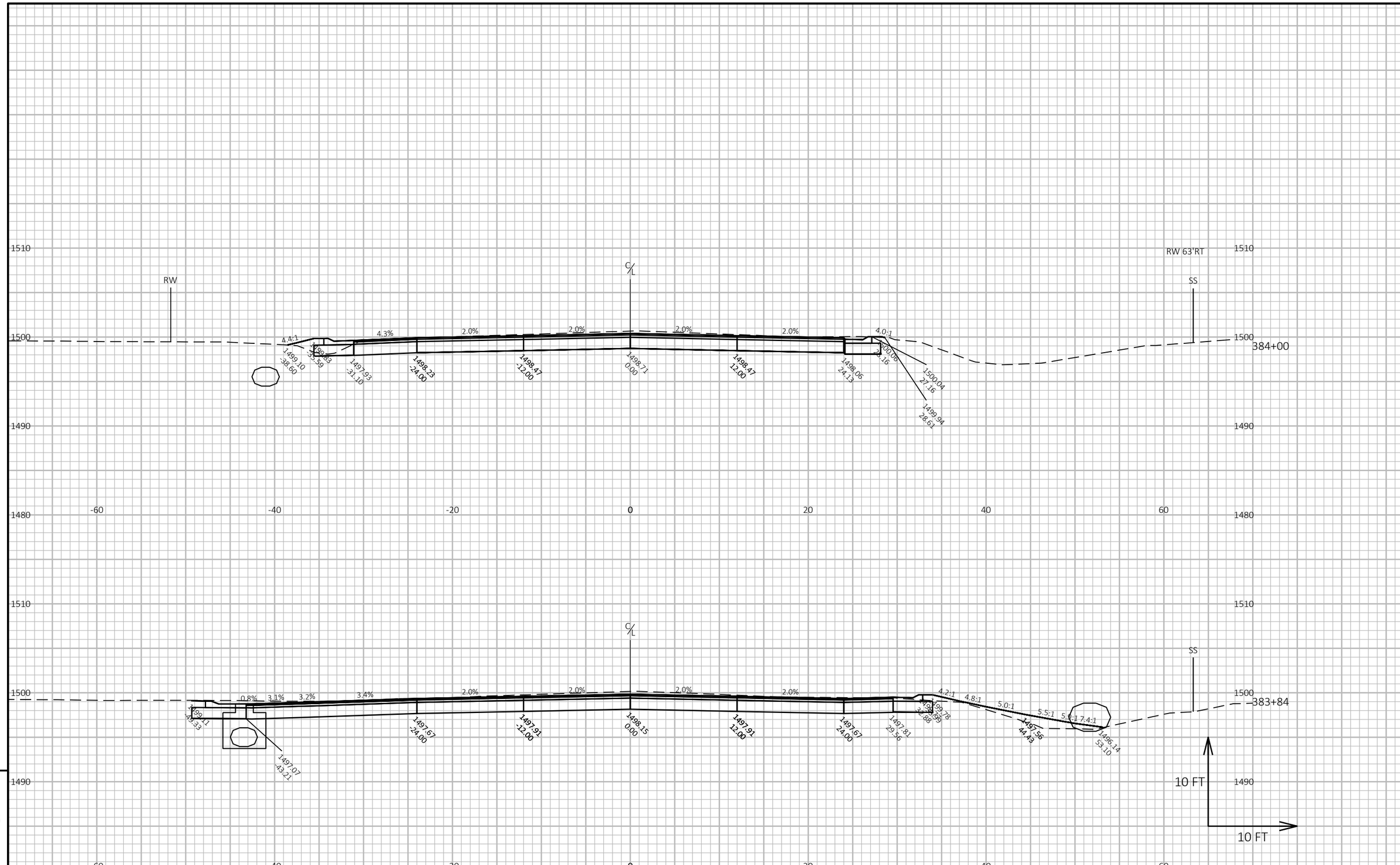

PROJECT NO: 9491-06-70 / 9491-06-71	HWY: CTH K	COUNTY: MARATHON	CROSS SECTIONS: CTH K AND NAUGART	SHEET 185	E

FILE NAME : R:\5500\5539\5539002\DWG(2018)\INTERSECTION X-SEC.DWG
LAYOUT NAME - 23
PLOT DATE : 7/27/2022 3:45 PM
PLOT BY : ROCHELLE L. BURSA
PLOT NAME :
PLOT SCALE : 1 IN:10 FT HORZ. / 1 IN:10 FT VERT.
WISDOT/CADDS SHEET 49

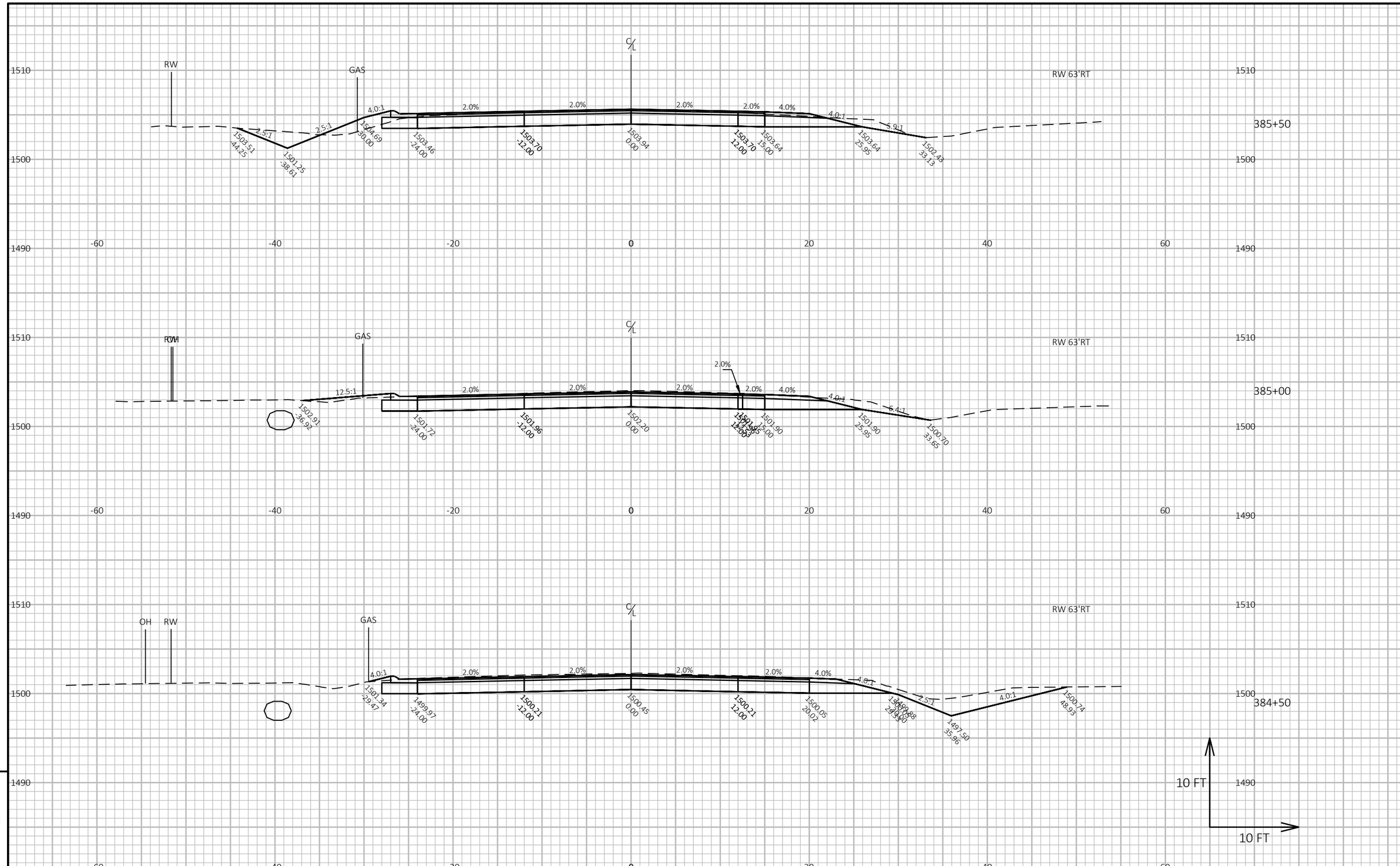

PROJECT NO: 9491-06-70 / 9491-06-71	HWY: CTH K	COUNTY: MARATHON	CROSS SECTIONS: CTH K AND NAUGART	SHEET 186	E

FILE NAME : R:\5500\5539\5539002\DWG(2018)\INTERSECTION X-SEC.DWG
LAYOUT NAME - 24
PLOT DATE : 7/27/2022 3:46 PM
PLOT BY : ROCHELLE L. BURSA
PLOT NAME :
PLOT SCALE : 1 IN:10 FT HORZ. / 1 IN:10 FT VERT.
WISDOT/CADDS SHEET 49

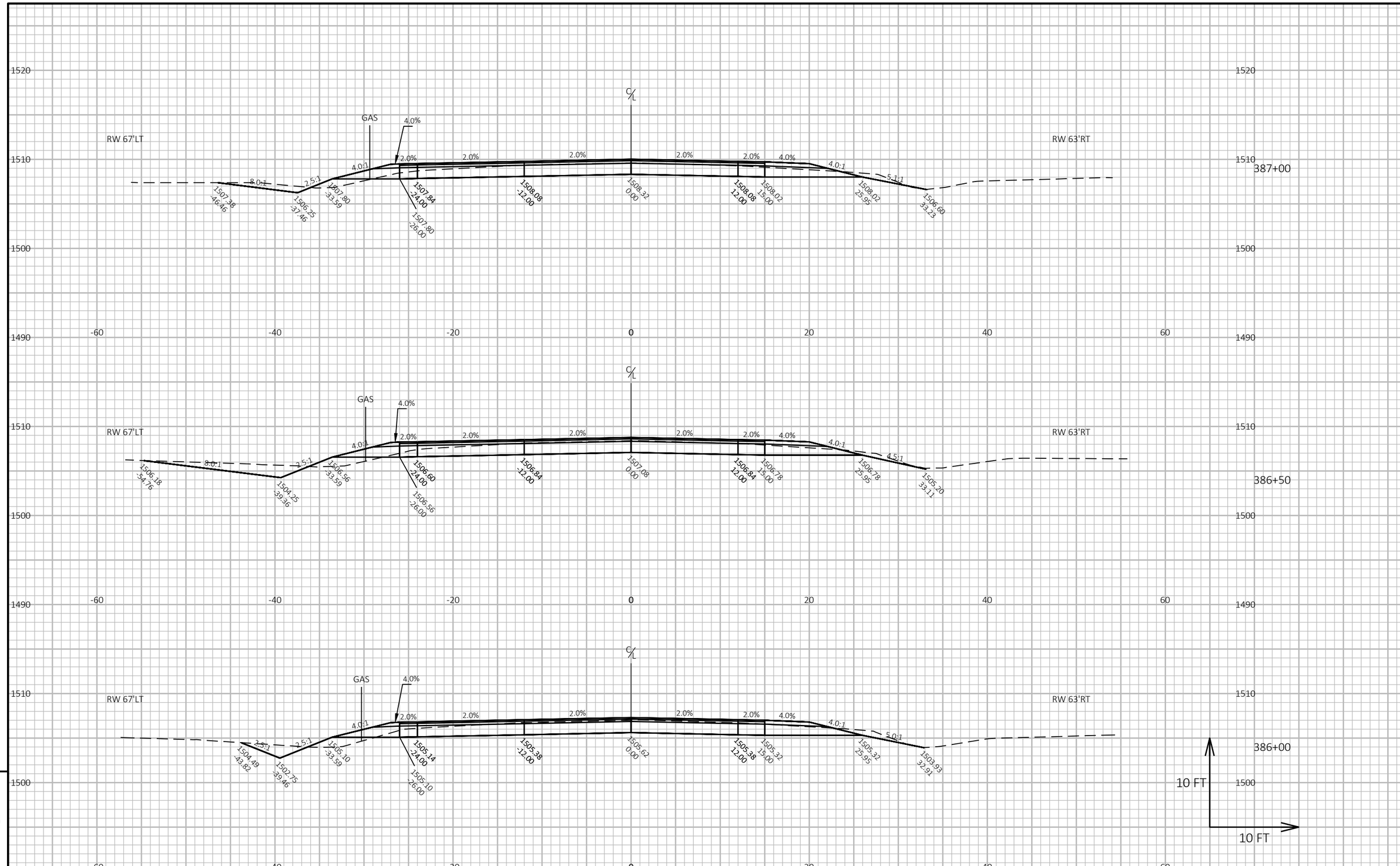

PROJECT NO: 9491-06-70 / 9491-06-71	HWY: CTH K	COUNTY: MARATHON	CROSS SECTIONS: CTH K AND NAUGART	SHEET 187	E

FILE NAME : R:\5500\5539\5539002\DWG(2018)\INTERSECTION X-SEC.DWG
LAYOUT NAME - 25
PLOT DATE : 7/27/2022 3:46 PM
PLOT BY : ROCHELLE L. BURSA
PLOT NAME :
PLOT SCALE : 1 IN:10 FT HORZ. / 1 IN:10 FT VERT.
WISDOT/CADDS SHEET 49

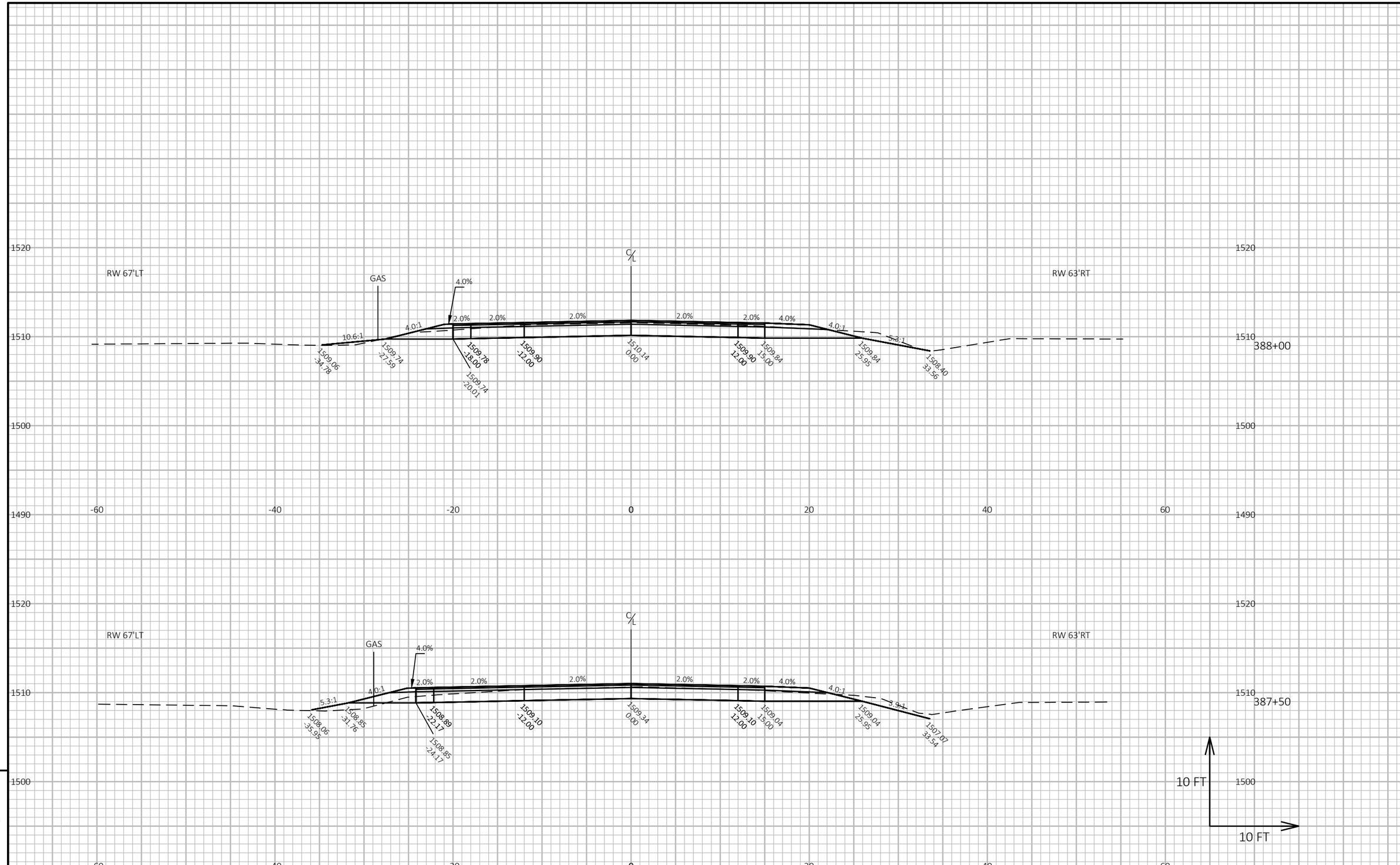

9

9

PROJECT NO: 9491-06-70 / 9491-06-71	HWY: CTH K	COUNTY: MARATHON	CROSS SECTIONS: CTH K AND NAUGART	SHEET 188	E

FILE NAME : R:\5500\5539\5539002\DWG(2018)\INTERSECTION X-SEC.DWG
LAYOUT NAME - 26

PLOT DATE : 7/27/2022 3:46 PM PLOT BY : ROCHELLE L. BURSA PLOT NAME : **PLOT SCALE :** 1 IN:10 FT HORZ. / 1 IN:10 FT VERT.

WISDOT/CADDS SHEET 49

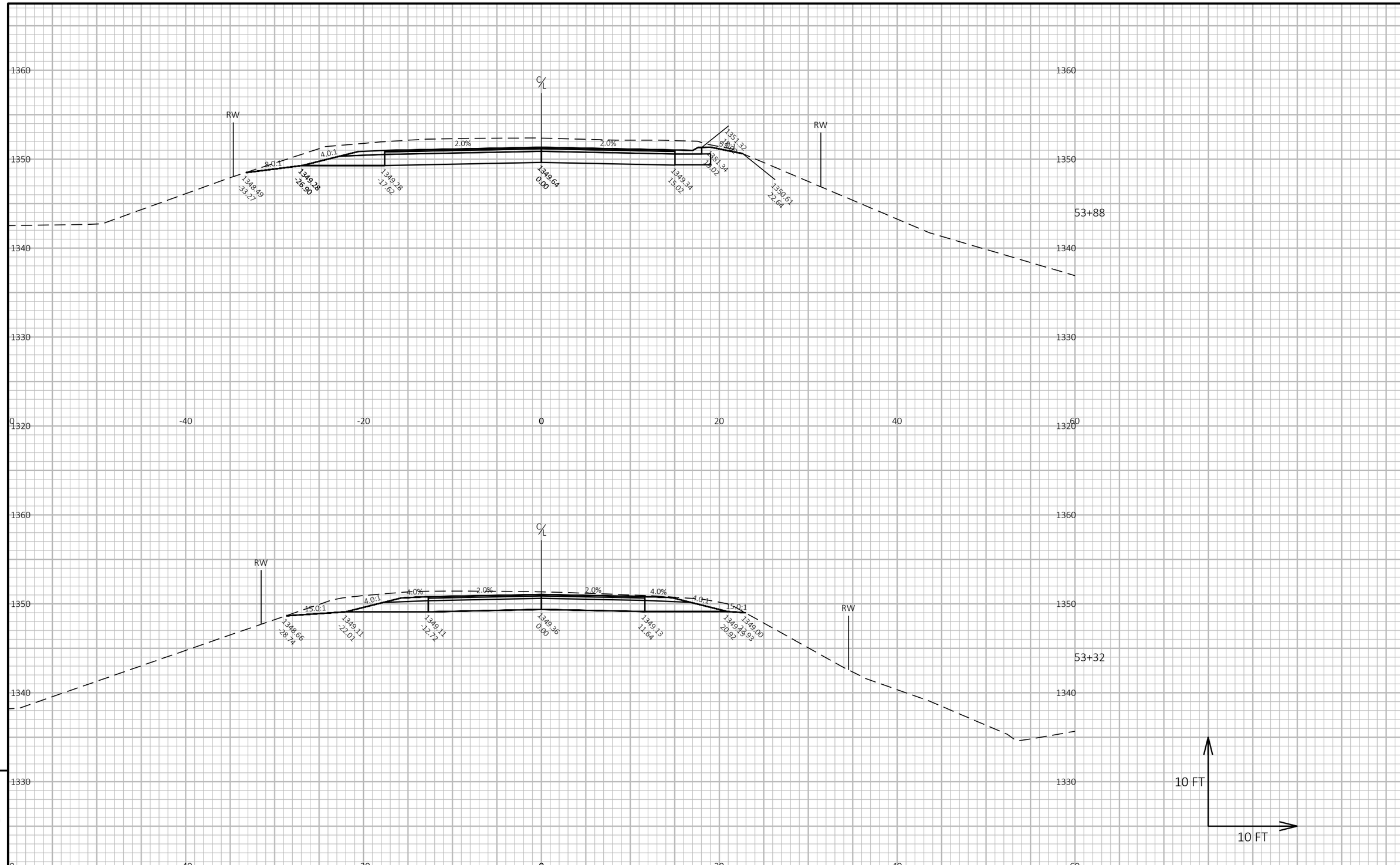

9

9

PROJECT NO: 9491-06-70 / 9491-06-71	HWY: CTH K	COUNTY: MARATHON	CROSS SECTIONS: MERRILL INTERSECTION	SHEET 189	E

FILE NAME : R:\5500\5539\5539002\DWG(2018)\INTERSECTION X-SEC.DWG
LAYOUT NAME - 53
PLOT DATE : 7/27/2022 3:49 PM
PLOT BY : ROCHELLE L. BURSA
PLOT NAME :
PLOT SCALE : 1 IN:10 FT HORZ. / 1 IN:10 FT VERT.
WISDOT/CADDS SHEET 49

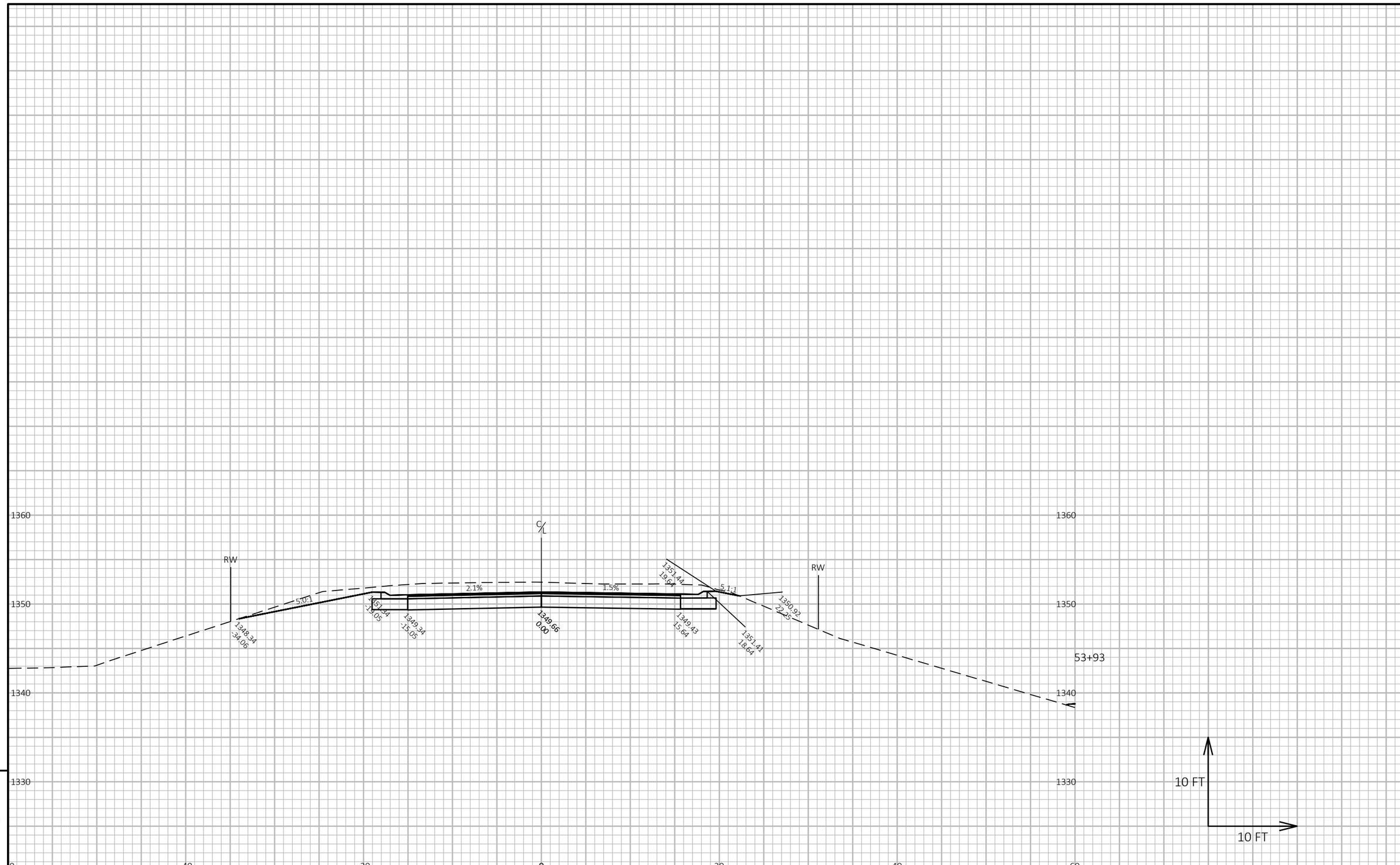

9

9

PROJECT NO: 9491-06-70 / 9491-06-71	HWY: CTH K	COUNTY: MARATHON	CROSS SECTIONS: MERRILL INTERSECTION	SHEET 190	E

FILE NAME : R:\5500\5539\5539002\DWG(2018)\INTERSECTION X-SEC.DWG
LAYOUT NAME - 54

PLOT DATE : 7/27/2022 3:49 PM

PLOT BY : ROCHELLE L. BURSA

PLOT NAME :

PLOT SCALE : 1 IN:10 FT HORZ. / 1 IN:10 FT VERT.

WISDOT/CADDS SHEET 49

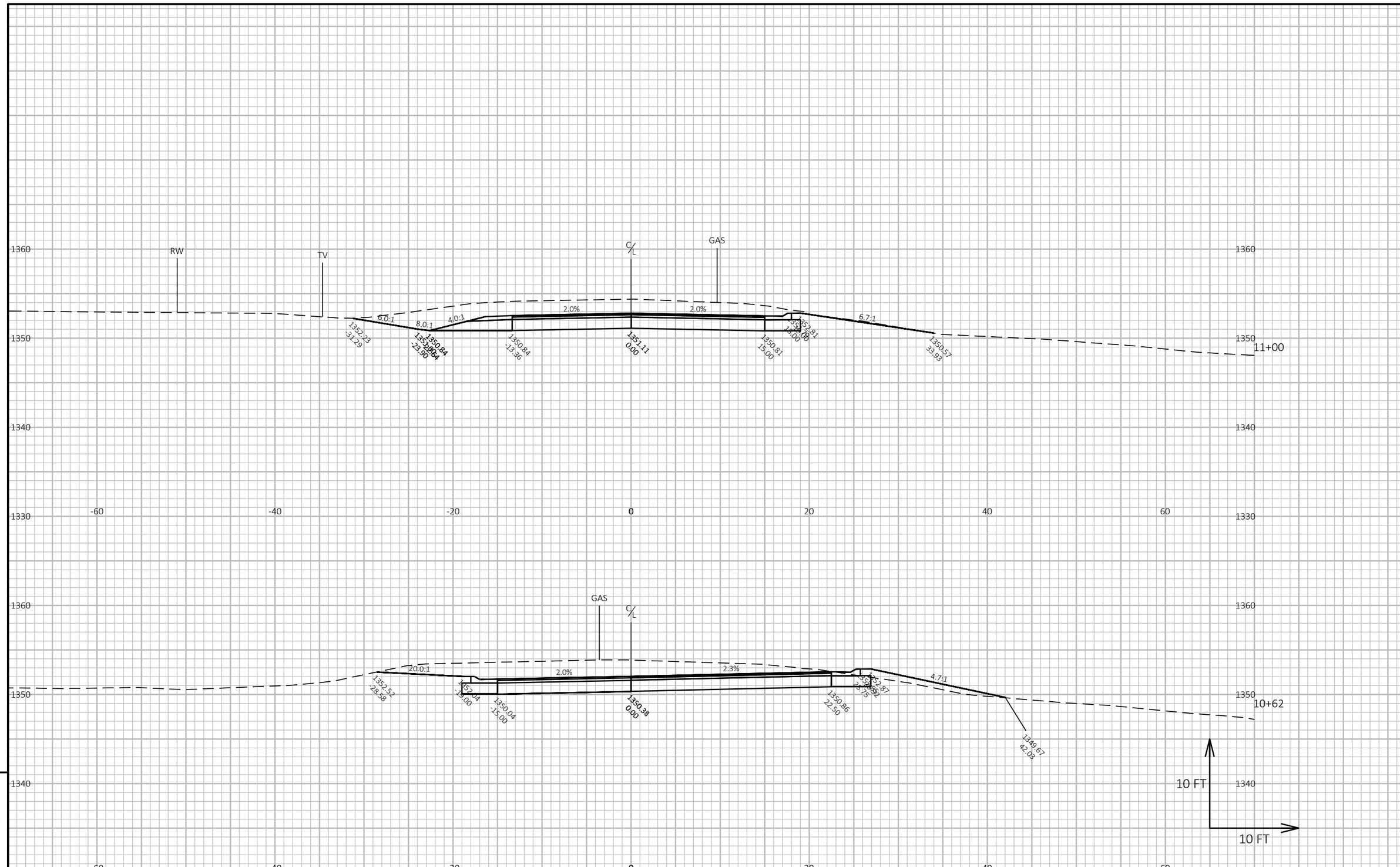

PROJECT NO: 9491-06-70 / 9491-06-71	HWY: CTH K	COUNTY: MARATHON	CROSS SECTIONS: EMERY INTERSECTION	SHEET 191	E

FILE NAME : R:\5500\5539\5539002\DWG(2018)\INTERSECTION X-SEC.DWG
LAYOUT NAME - 55
PLOT DATE : 7/27/2022 3:50 PM
PLOT BY : ROCHELLE L. BURSA
PLOT NAME :
PLOT SCALE : 1 IN:10 FT HORZ. / 1 IN:10 FT VERT.
WISDOT/CADDS SHEET 49

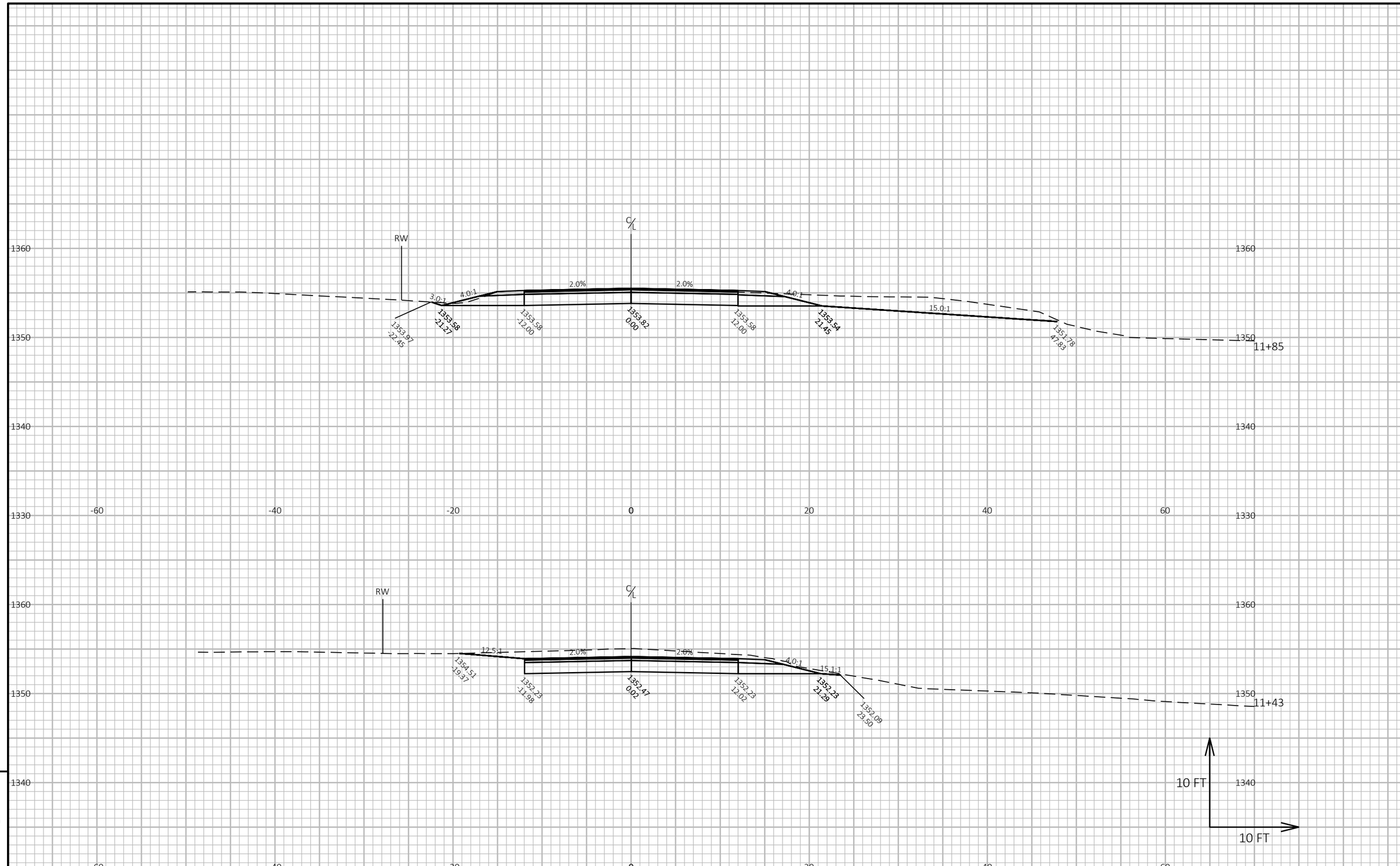

9

9

PROJECT NO: 9491-06-70 / 9491-06-71	HWY: CTH K	COUNTY: MARATHON	CROSS SECTIONS: EMERY INTERSECTION	SHEET 192	E

FILE NAME : R:\5500\5539\5539002\DWG(2018)\INTERSECTION X-SEC.DWG
LAYOUT NAME - 56
PLOT DATE : 7/27/2022 3:50 PM
PLOT BY : ROCHELLE L. BURSA
PLOT NAME :
PLOT SCALE : 1 IN:10 FT HORZ. / 1 IN:10 FT VERT.
WISDOT/CADDS SHEET 49

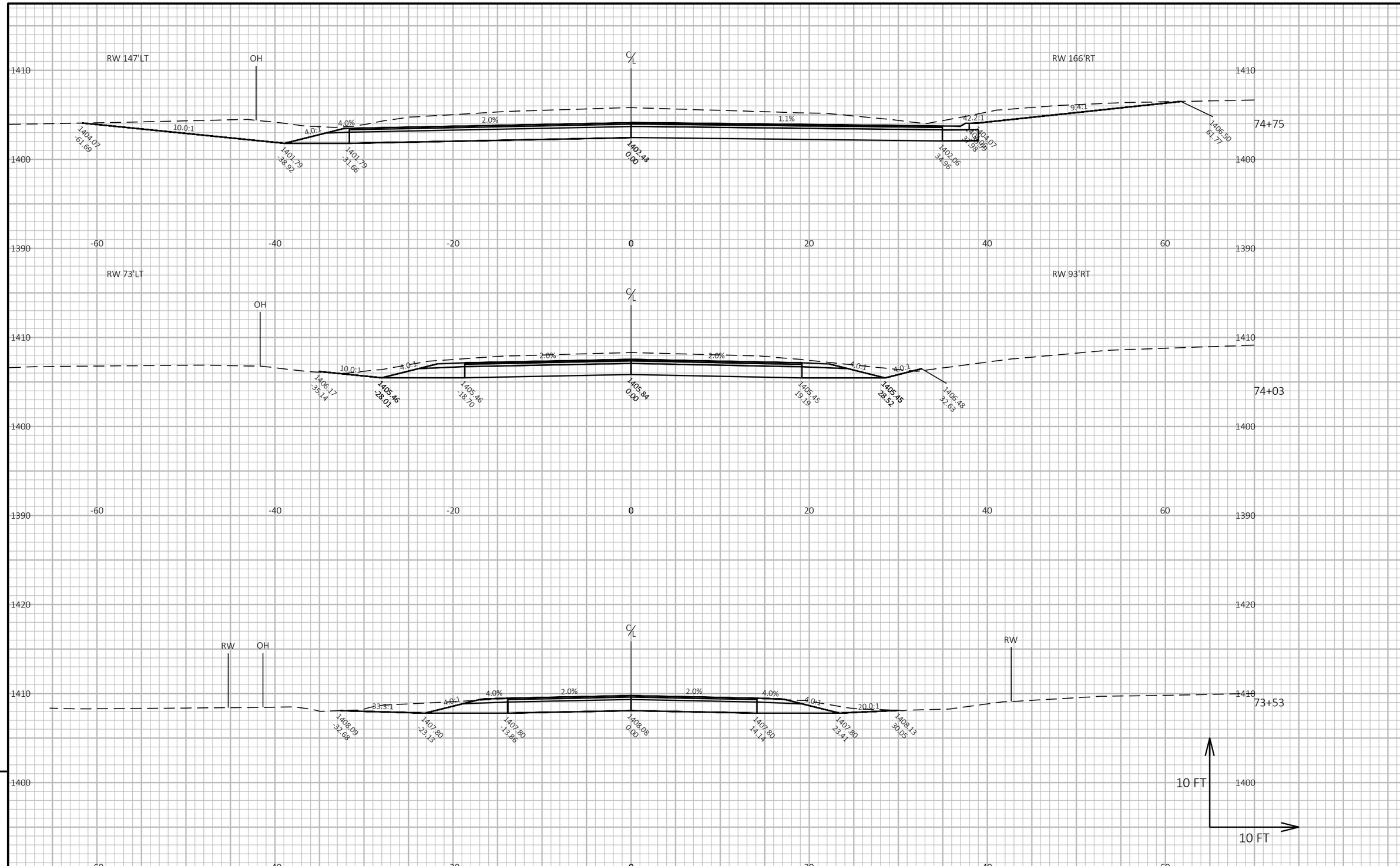

9

9

PROJECT NO: 9491-06-70 / 9491-06-71	HWY: CTH K	COUNTY: MARATHON	CROSS SECTIONS: CTH A INTERSECTION	SHEET 193	E

FILE NAME : R:\5500\5539\5539002\DWG(2018)\INTERSECTION X-SEC.DWG
LAYOUT NAME - 50
PLOT DATE : 7/27/2022 3:49 PM
PLOT BY : ROCHELLE L. BURSA
PLOT NAME :
PLOT SCALE : 1 IN:10 FT HORZ. / 1 IN:10 FT VERT.
WISDOT/CADDS SHEET 49

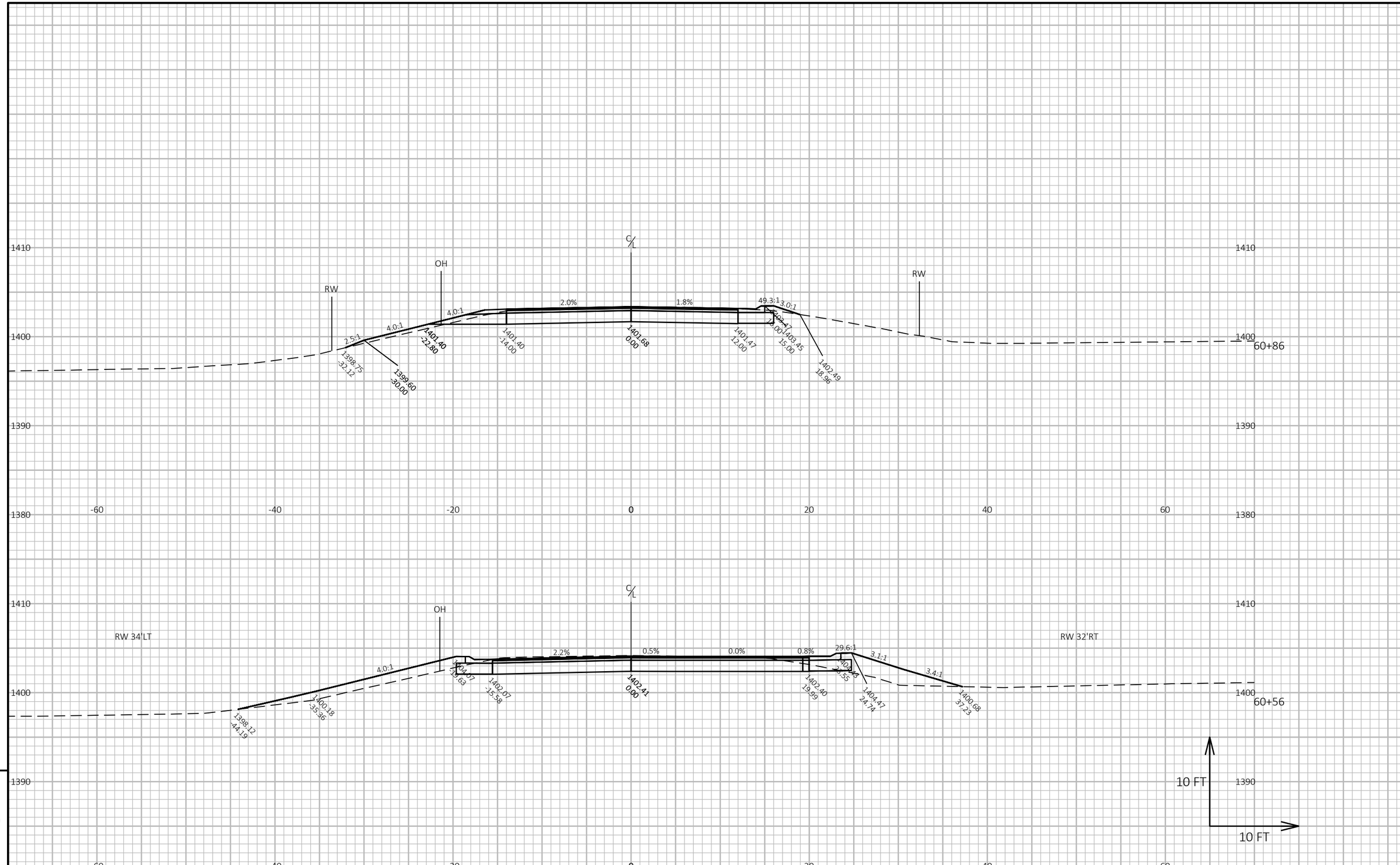

9

9

PROJECT NO: 9491-06-70 / 9491-06-71	HWY: CTH K	COUNTY: MARATHON	CROSS SECTIONS: JULIAN INTERSECTION	SHEET 194	E

FILE NAME : R:\5500\5539\5539002\DWG(2018)\INTERSECTION X-SEC.DWG
LAYOUT NAME - 51
PLOT DATE : 7/27/2022 3:49 PM
PLOT BY : ROCHELLE L. BURSA
PLOT NAME :
PLOT SCALE : 1 IN:10 FT HORZ. / 1 IN:10 FT VERT.
WISDOT/CADDS SHEET 49

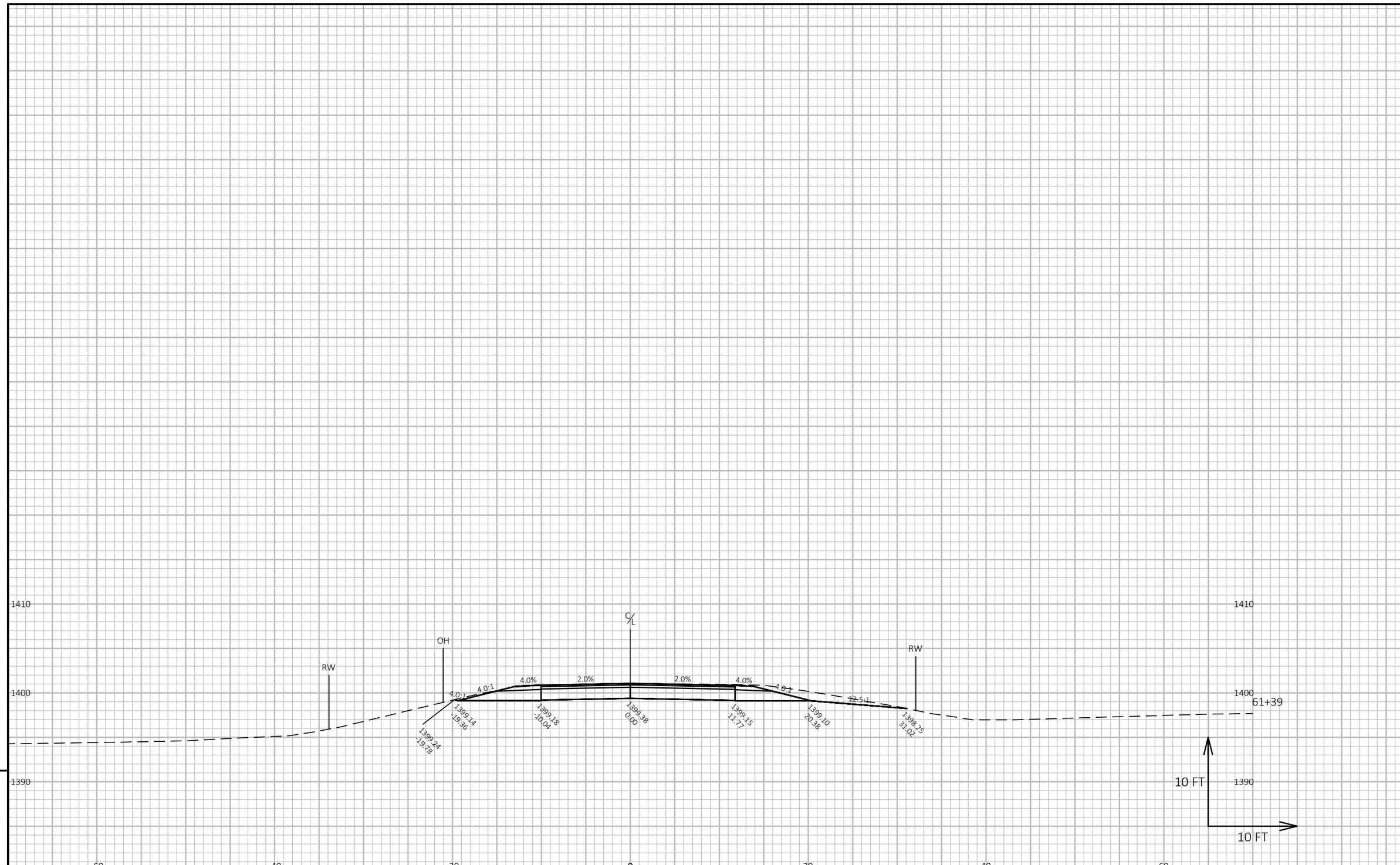

PROJECT NO: 9491-06-70 / 9491-06-71	HWY: CTH K	COUNTY: MARATHON	CROSS SECTIONS: JULIAN INTERSECTION	SHEET 195	E

FILE NAME : R:\5500\5539\5539002\DWG(2018)\INTERSECTION X-SEC.DWG
LAYOUT NAME - 52
PLOT DATE : 7/27/2022 3:49 PM
PLOT BY : ROCHELLE L. BURSA
PLOT NAME :
PLOT SCALE : 1 IN:10 FT HORZ. / 1 IN:10 FT VERT.
WISDOT/CADDS SHEET 49

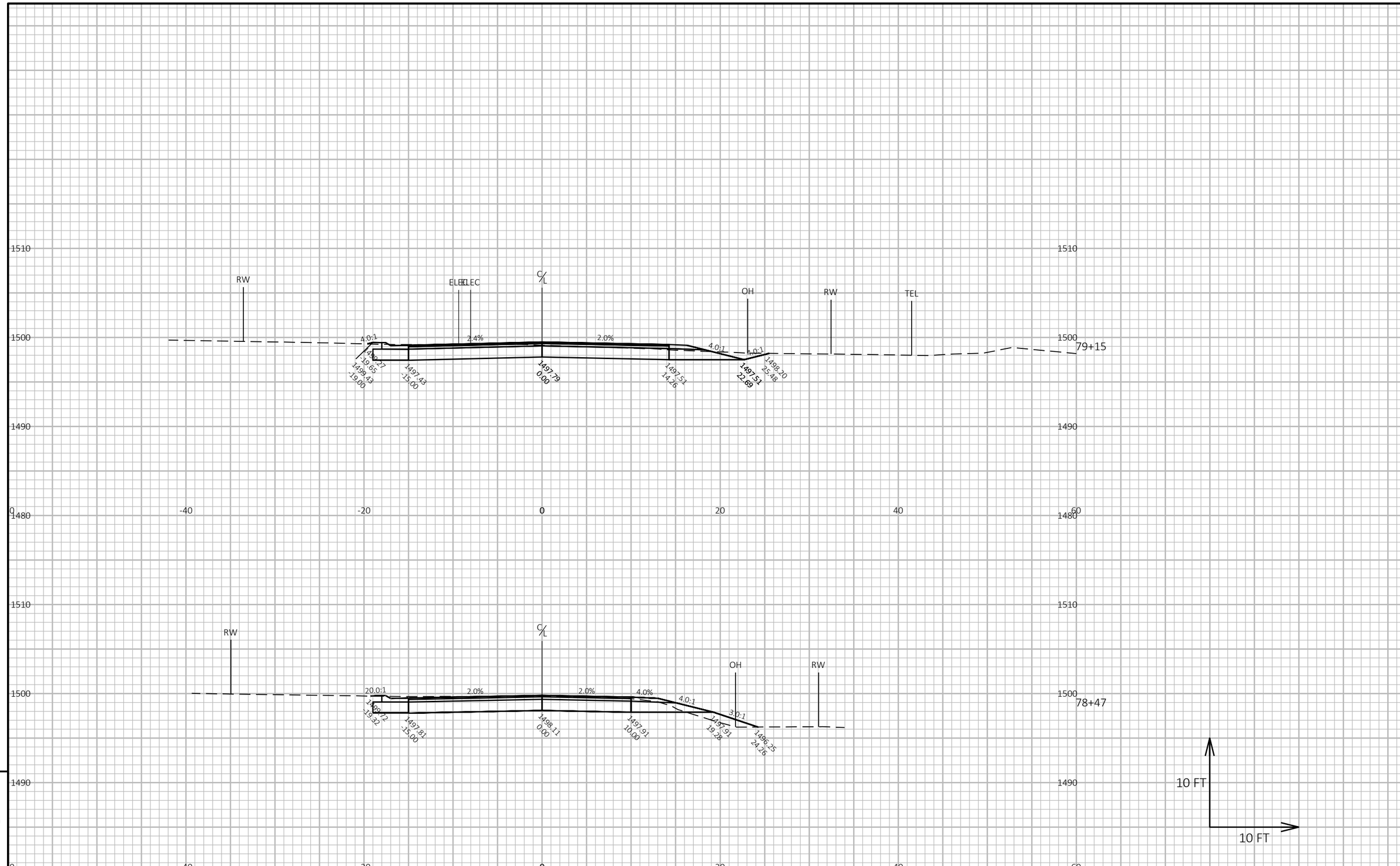

PROJECT NO: 9491-06-70 / 9491-06-71	HWY: CTH K	COUNTY: MARATHON	CROSS SECTIONS: NAUGART INTERSECTION	SHEET 196	E

FILE NAME : R:\5500\5539\5539002\DWG(2018)\INTERSECTION X-SEC.DWG
LAYOUT NAME - 47
PLOT DATE : 7/27/2022 3:49 PM
PLOT BY : ROCHELLE L. BURSA
PLOT NAME :
PLOT SCALE : 1 IN:10 FT HORZ. / 1 IN:10 FT VERT.
WISDOT/CADDS SHEET 49

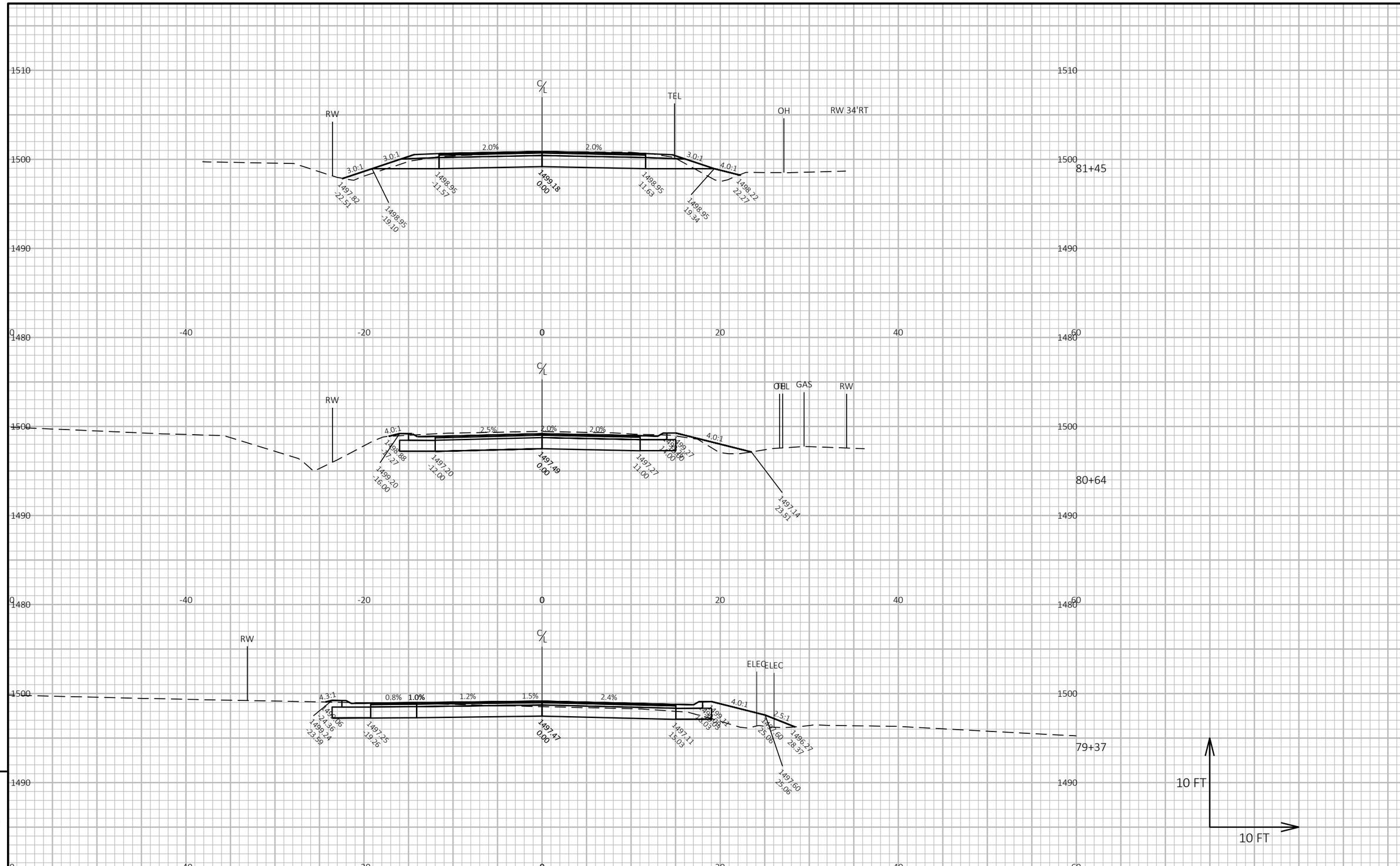

9

9

PROJECT NO: 9491-06-70 / 9491-06-71	HWY: CTH K	COUNTY: MARATHON	CROSS SECTIONS: NAUGART INTERSECTION	SHEET 197	E

FILE NAME : R:\5500\5539\5539002\DWG(2018)\INTERSECTION X-SEC.DWG
LAYOUT NAME - 48

PLOT DATE : 7/27/2022 3:49 PM PLOT BY : ROCHELLE L. BURSA PLOT NAME : PLOT SCALE : 1 IN:10 FT HORZ. / 1 IN:10 FT VERT.

WISDOT/CADDS SHEET 49

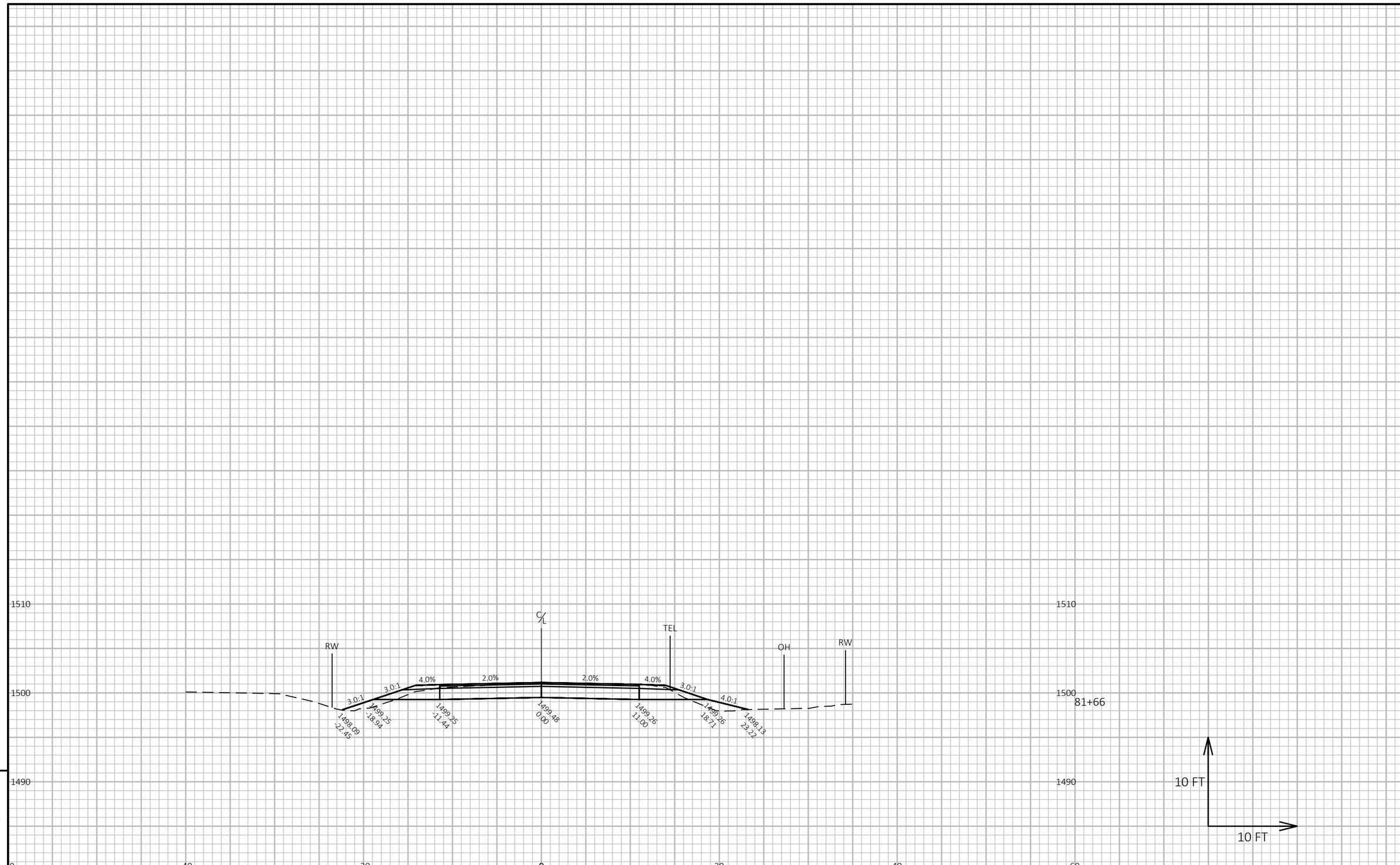

9

9

PROJECT NO: 9491-06-70 / 9491-06-71	HWY: CTH K	COUNTY: MARATHON	CROSS SECTIONS: NAUGART INTERSECTION	SHEET 198	E

FILE NAME : R:\5500\5539\5539002\DWG(2018)\INTERSECTION X-SEC.DWG
LAYOUT NAME - 49
PLOT DATE : 7/27/2022 3:49 PM
PLOT BY : ROCHELLE L. BURSA
PLOT NAME :
PLOT SCALE : 1 IN:10 FT HORZ. / 1 IN:10 FT VERT.
WISDOT/CADDS SHEET 49

Notes

Wisconsin Department of Transportation

Dedicated people creating transportation solutions through innovation and exceptional service.

http://www.dot.wisconsin.gov