WIS Jan 10, 2023

PROJECT ID: 6280-00-60
WITH: N/A

COUNTY: PORTAGE

ORDER OF SHEETS

Section No.	1	Title
Section No.	2	Typical Sections and Details
Section No.	3	Estimate of Quantities
Section No.	3	Miscellaneous Quantities
Section No.	4	Right of Way Plat
Section No.	5	Plan and Profile
Section No.	6	Standard Detail Drawings
~~Section No.~~	~~7~~	~~Sign Plates~~
~~Section No.~~	~~8~~	~~Structure Plans~~
Section No.	9	Computer Earthwork Data
Section No.	9	Cross Sections

TOTAL SHEETS = 134

STATE PROJECT	FEDERAL PROJECT	
	PROJECT	CONTRACT
6280-00-60	WISC 2023162	1

STATE OF WISCONSIN
DEPARTMENT OF TRANSPORTATION

PLAN OF PROPOSED IMPROVEMENT

STEVENS POINT - ROSHOLT

NORTH CTH J TO STH 49

STH 66
PORTAGE COUNTY

STATE PROJECT NUMBER
6280-00-60

N

DESIGN DESIGNATION

A.A.D.T.	(2023)	=	2,660
A.A.D.T.	(2043)	=	2,970
D.H.V.		=	
D.D.		=	
T.		=	18.0%
DESIGN SPEED		=	55 MPH
ESALS		=	927,100

BEGIN PROJECT
STA 417+90
X = 201,300.561
Y = 221,749.616

NET EXCEPTION TO CL LENGTH
STA 882+86 - STA 883+49
B-49-0132

END PROJECT
STA 973+65.82

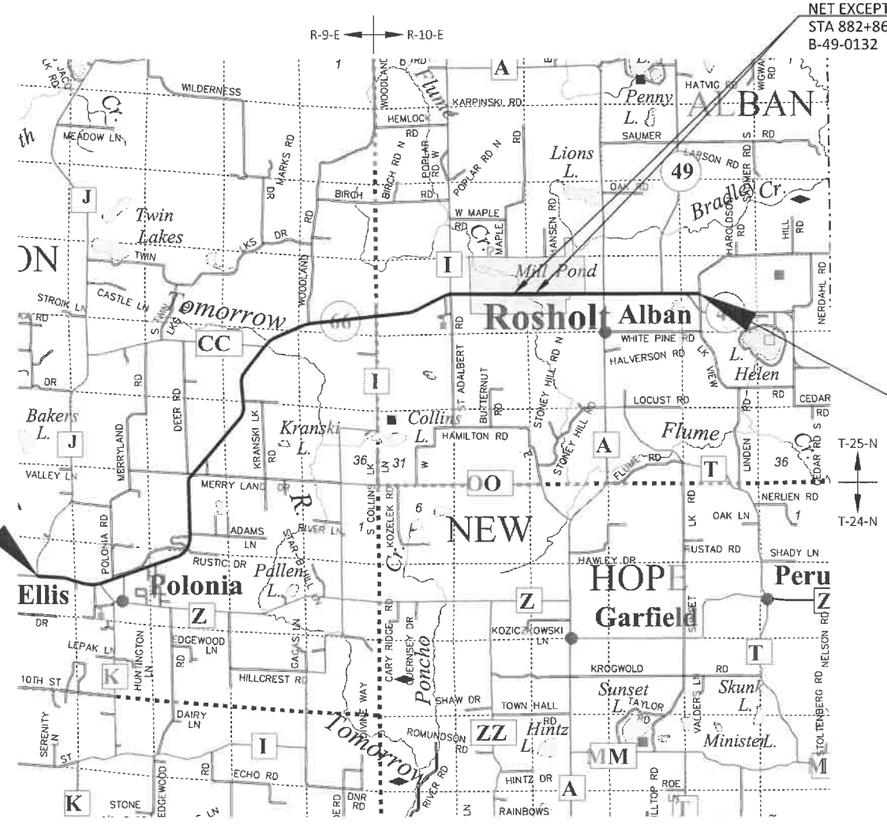

LAYOUT
SCALE 0 — 2 MI

TOTAL NET LENGTH OF CENTERLINE = 10.514 MI.

HORIZONTAL POSITIONS SHOWN ON THIS PLAN ARE WISCONSIN COORDINATE REFERENCE SYSTEM (WISCRS), PORTAGE COUNTY, NAD83 (2011), IN U.S. SURVEY FEET. POSITIONS SHOWN ARE GRID COORDINATES, GRID BEARINGS, AND GRID DISTANCES. GRID DISTANCES ARE THE SAME AS GROUND DISTANCES. ELEVATIONS ARE REFERENCED TO NAVD 88 (2012). GPS DERIVED ELEVATIONS ARE BASED ON GEOID 12A.

CONVENTIONAL SYMBOLS

PLAN
- CORPORATE LIMITS
- PROPERTY LINE
- LOT LINE
- LIMITED HIGHWAY EASEMENT
- EXISTING RIGHT OF WAY
- PROPOSED OR NEW R/W LINE
- SLOPE INTERCEPT
- REFERENCE LINE (300' EB)
- EXISTING CULVERT
- PROPOSED CULVERT (Box or Pipe)
- COMBUSTIBLE FLUIDS (CAUTION)
- MARSH AREA
- WOODED OR SHRUB AREA

PROFILE
- GRADE LINE
- ORIGINAL GROUND
- MARSH OR ROCK PROFILE (To be noted as such) (ROCK)
- SPECIAL DITCH (LABEL)
- GRADE ELEVATION (95.36)
- CULVERT (Profile View)

UTILITIES
- ELECTRIC (E)
- FIBER OPTIC (FO)
- GAS (G)
- OVERHEAD (OH)
- SANITARY SEWER (SAN)
- STORM SEWER (SS)
- TELEPHONE (T)
- WATER (W)
- UTILITY PEDESTAL
- POWER POLE
- TELEPHONE POLE

ORIGINAL PLANS PREPARED BY

CORRE ENGINEERING
MADISON | EAU CLAIRE | WAUKESHA | APPLETON | TOMAH | WITTENBERG

WISCONSIN PROFESSIONAL ENGINEER
KEVIN L. MEYER
E-36000-006
ELK MOUND, WI
7/15/22

DATE: _____ (Signature)

STATE OF WISCONSIN
DEPARTMENT OF TRANSPORTATION

PREPARED BY

Surveyor	CORRE, INC.
Designer	CORRE, INC.
Project Manager	WENDY ARNESON
Regional Examiner	ZACH GRULING
Regional Supervisor	MIKE KRETSCHMER

APPROVED FOR THE DEPARTMENT

DATE: 7/18/2022 Wendy Arneson (Signature)

E

UTILITY CONTACTS

* ALLIANT ENERGY - ELECTRICITY
  MARY MONTGOMERY
  200 FIRST ST
  CEDAR RAPIDS IA, 52401
  PHONE: (319) 786-4768
  EMAIL: MARYMONTGOMERY@ALLIANTENERGY.COM

* AMHERST TELEPHONE COMPANY - COMMUNICATION LINE
  TOM IVERSON
  120 MILL ST
  PO BOX 279
  AMHERST, WI 54406-279
  PHONE: (715) 824-2006
  EMAIL: TIVERSON@TVALLEYCOM.COM

* CHARTER/SPECTRUM - COMMUNICATION LINE
  RUDI RUDIGER
  5024 HEFFRON ST
  STEVENS POINT, WI 54481
  PHONE: (715) 204-5339
  EMAIL: RUDI.RUDIGER@CHARTER.COM

* VILLAGE OF ROSHOLT - SEWER
  RICH KRUZICKI
  101 SOUTH MAIN STREET
  ROSHOLT, WI 54473
  PHONE: (715) 677-4510
  EMAIL: ROSHOLTSEWER@HOTMAIL.COM

* CENTRAL WISCONSIN ELECTRIC COOPERATIVE - ELECTRICITY
  DENNIS MAGEE
  10401 LYSTUL RD
  PO BOX 100
  ROSHOLT, WI 54473-0100
  PHONE: (715) 677-2243
  EMAIL: DENNIS.MAGEE@CWECOOP.COM

* WISCONSIN PUBLIC SERVICE CORP - GAS/PETROLEUM
  WENDY CHRIST
  700 N ADAMS ST
  PO BOX 19001
  GREEN BAY, WI 54307-9001
  PHONE (920) 617-5173
  EMAIL: UTILITIESRELOCATION@WISCONSINPUBLICSERVICE.COM

* WISCONSIN PUBLIC SERVICE CORP - ELECTRICITY
  WENDY CHRIST
  700 N ADAMS ST
  PO BOX 19001
  GREEN BAY, WI 54307-9001
  PHONE (920) 617-5173
  EMAIL: UTILITIESRELOCATION@WISCONSINPUBLICSERVICE.COM

DNR CONTACT

TRANSPORATION LIAISON
BUREAU OF ENVIRONMENTAL ANALYSIS & SUSTAINABILTY
WISCONSIN DEPARTMENT OF NATURAL RESOURCES

CASEY JONES
625 E. CTY RD Y, SUITE 700
OSHKOSH, WI 54901
PHONE: (715) 213-6571
EMAIL: CASEY.JONES@WISCONSIN.GOV

GENERAL NOTES

WHEN THE QUANTITY OF BASE AGGREGATE OR ASPHALTIC SURFACE IS MEASURED FOR PAYMENT BY THE TON OR CUBIC YARD, THE DEPTH OR THICKNESS OF THE LAYER SHOWN ON THE PLANS IS APPROXIMATE AND THE ACTUAL THICKNESS WILL DEPEND ON THE DISTRIBUTION OF THE MATERIAL AS DIRECTED BY THE ENGINEER.

THE LOCATION OF EXISTING AND PROPOSED UTILITY INSTALLATIONS AS SHOWN ON THE PLANS IS APPROXIMATE. THERE MAY BE OTHER UTILITY INSTALLATIONS WITHIN THE PROJECT AREA THAT ARE NOT SHOWN.

CURVE DATA IS BASED ON THE ARC DEFINITION.

BEARINGS SHOWN ON THE PLANS ARE GRID/GROUND/PROJECT BEARINGS TO THE NEAREST SECOND.

ALL CURB AND GUTTER RADII, PAVEMENT DIMENSIONS AND STATIONS ARE SHOWN TO THE EDGE OF PAVEMENT UNLESS NOTED OTHERWISE.

ORDER OF SECTION 2 SHEETS

PROJECT OVERVIEW
TYPICAL SECTIONS
CONSTRUCTION DETAILS

RUNOFF COEFFICIENT TABLE

	HYDROLOGIC SOIL GROUP											
	A			B			C			D		
	SLOPE RANGE (PERCENT)			SLOPE RANGE (PERCENT)			SLOPE RANGE (PERCENT)			SLOPE RANGE (PERCENT)		
LAND USE:	0 - 2	2 - 6	6 & OVER	0 - 2	2 - 6	6 & OVER	0 - 2	2 - 6	6 & OVER	0 - 2	2 - 6	6 & OVER
ROW CROPS	.08 .22	.16 .30	.22 .38	.12 .26	.20 .34	.27 .44	.15 .30	.24 .37	.33 .50	.19 .34	.28 .41	.38 .56
MEDIAN STRIP-TURF	.19 .24	.20 .26	.24 .30	.19 .25	.22 .28	.26 .33	.20 .26	.23 .30	.30 .37	.20 .27	.25 .32	.30 .40
SIDE SLOPE-TURF			.25 .32			.27 .34			.28 .36			.30 .38
PAVEMENT:												
ASPHALT	.70 - .95											
CONCRETE	.80 - .95											
BRICK	.70 - .80											
DRIVES, WALKS	.75 - .85											
ROOFS	.75 - .95											
GRAVEL ROADS, SHOULDERS	.40 - .60											

TOTAL PROJECT AREA = 85.28 ACRES

TOTAL AREA EXPECTED TO BE DISTURBED BY CONSTRUCTION ACTIVITIES = 0.68 ACRES

DIGGERS HOTLINE
Dial 811 or (800)242-8511
www.DiggersHotline.com

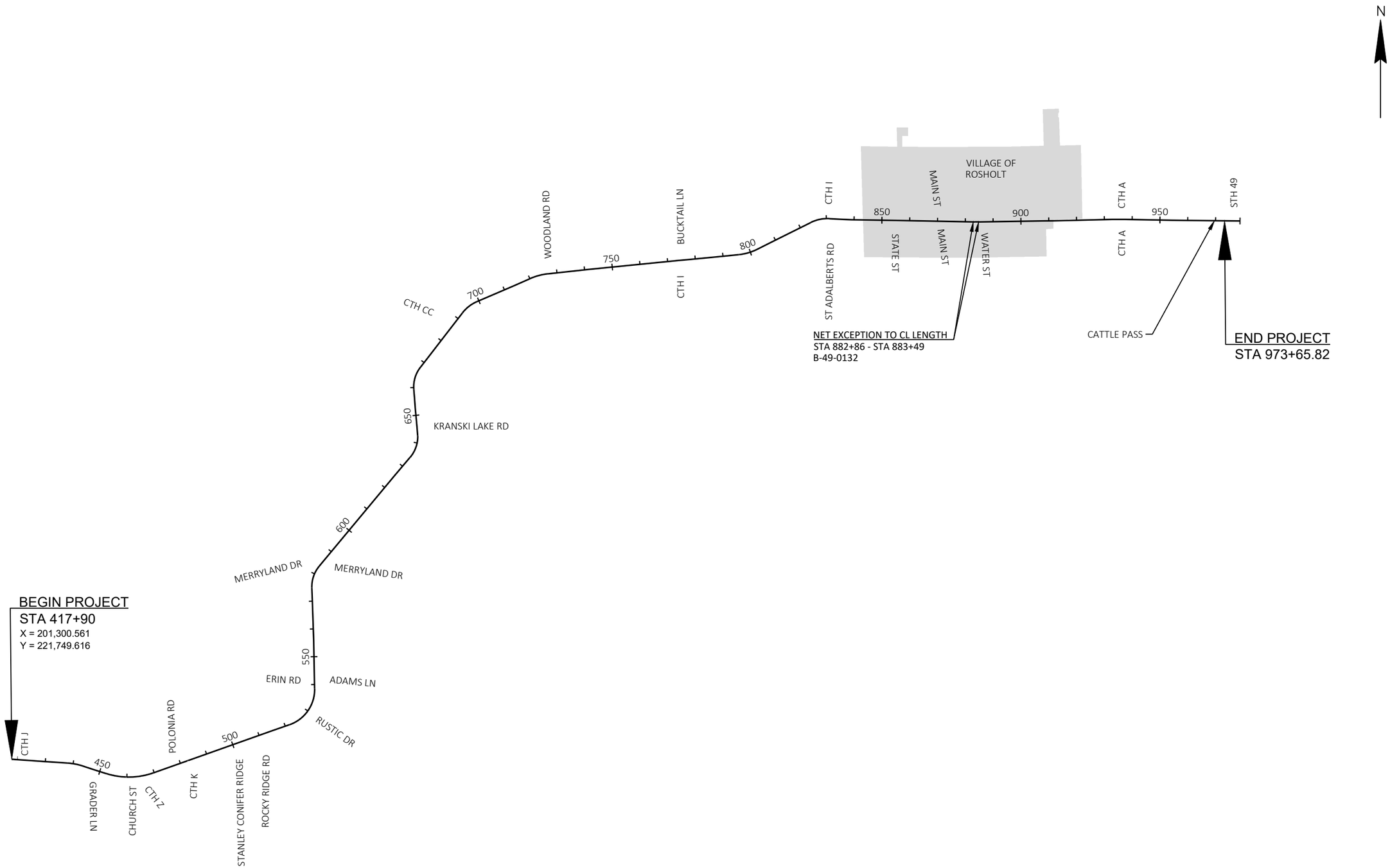

PROJECT NO: 6280-00-60	HWY: STH 66	COUNTY: PORTAGE	PROJECT OVERVIEW	SHEET 3	E

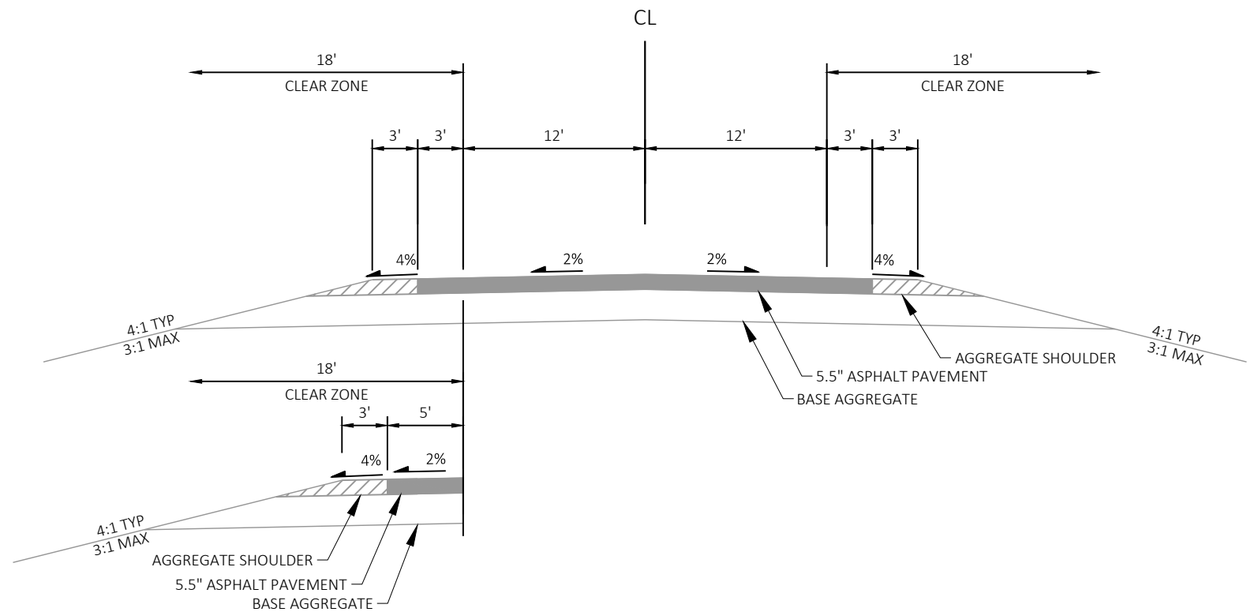

STA 417+90.00 TO 424+48.00

EXISTING TYPICAL SECTION

STA 424+48.00 TO 773+55.00
STA 904+00.18 TO 973+65.82

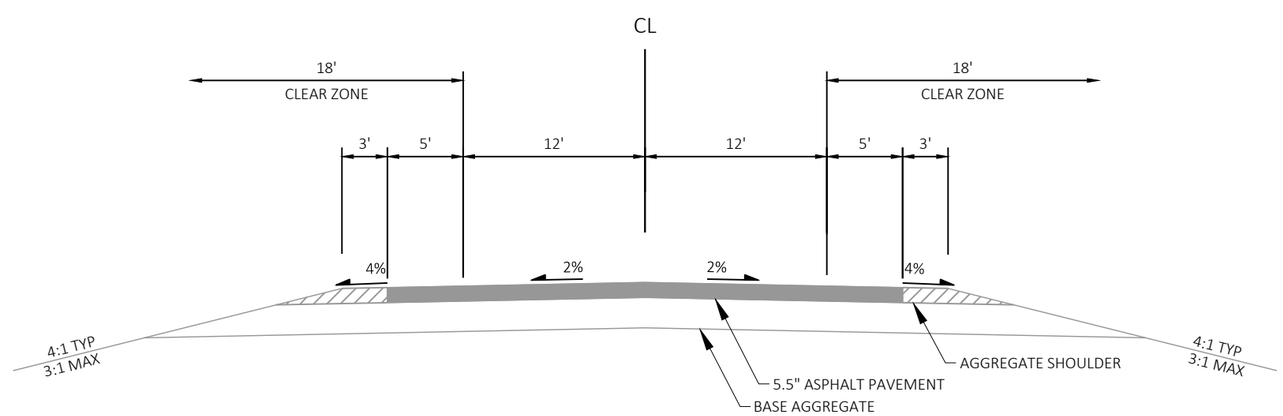

EXISTING TYPICAL SECTION

STA 773+55.00 TO 843+01.53

PROJECT NO: 6280-00-60	HWY: STH 66	COUNTY: PORTAGE	TYPICAL SECTIONS	SHEET 4	E

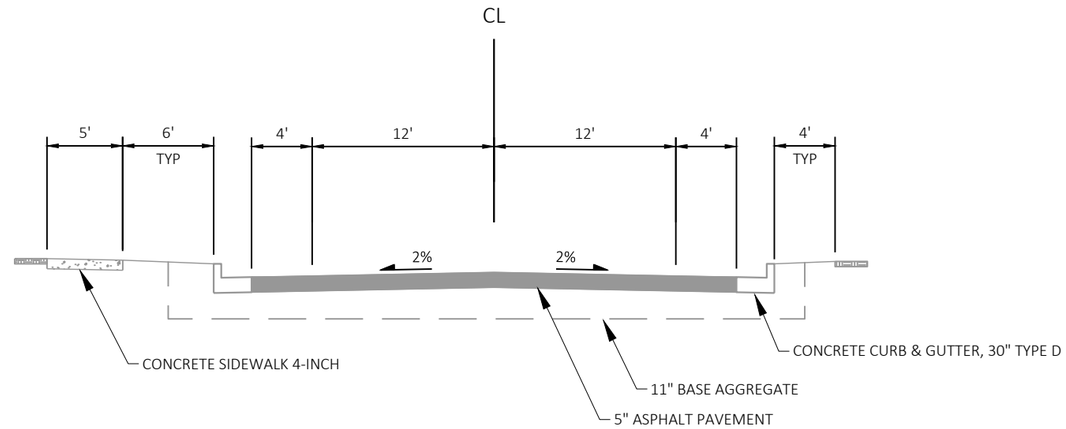

EXISTING TYPICAL URBAN SECTION

STA 843+01.53 TO 864+10.97

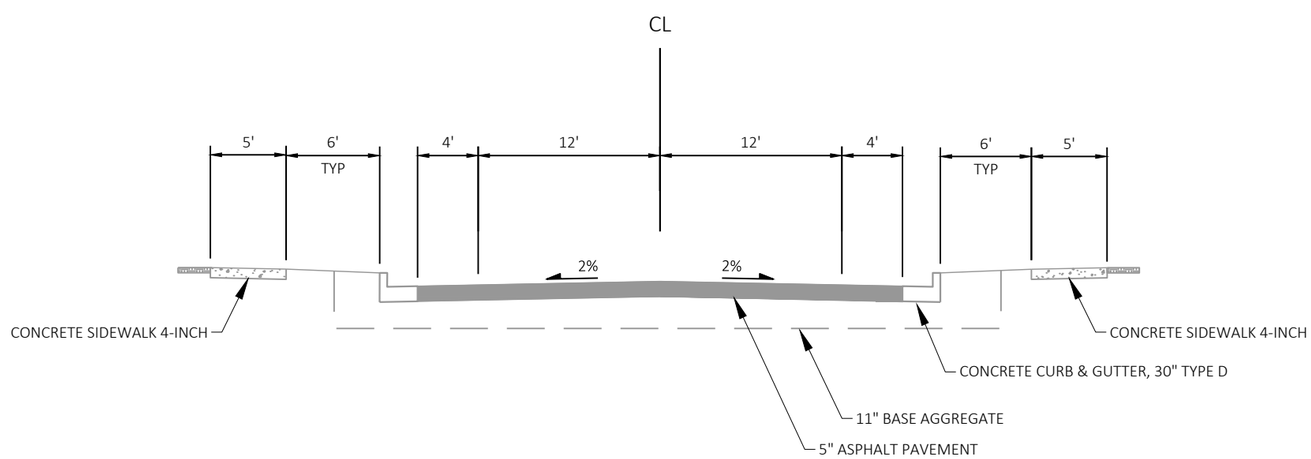

EXISTING TYPICAL URBAN SECTION

STA 864+10.97 TO 872+49.87

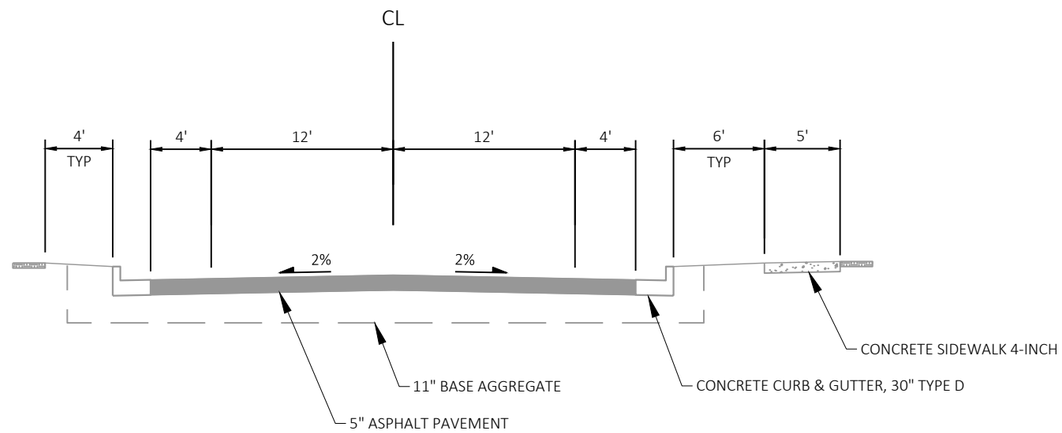

EXISTING TYPICAL URBAN SECTION

STA 872+49.87 TO 904+00.18

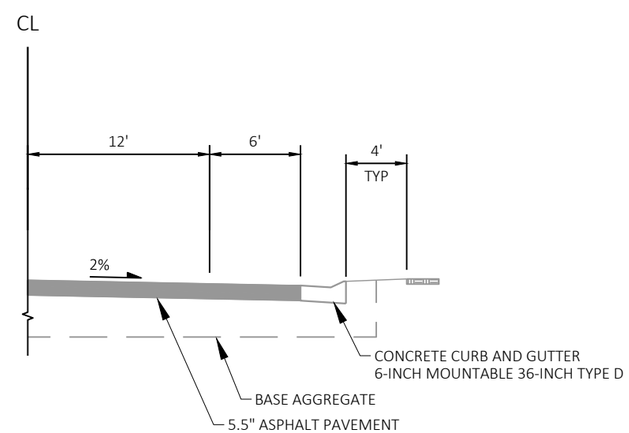

EXISTING TYPICAL RURAL CURB & GUTTER SECTION

STA 449+97.06 RT TO 454+01.34 RT
STA 455+99.92 LT TO 460+53.62 LT
STA 532+00.60 LT TO 538+83.84 LT
STA 707+88.40 LT TO 725+07.81 LT
STA 709+03.09 RT TO 726+25.11 RT

2

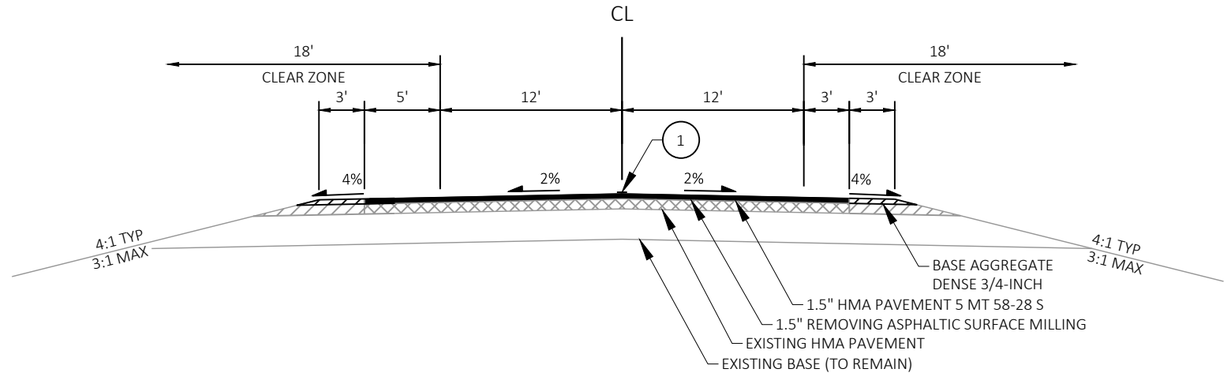

1 ASPHALTIC CENTERLINE RUMBLE STRIPS 2-LANE RURAL

FINISHED TYPICAL SECTION

STA 417+90.00 TO 424+48.00

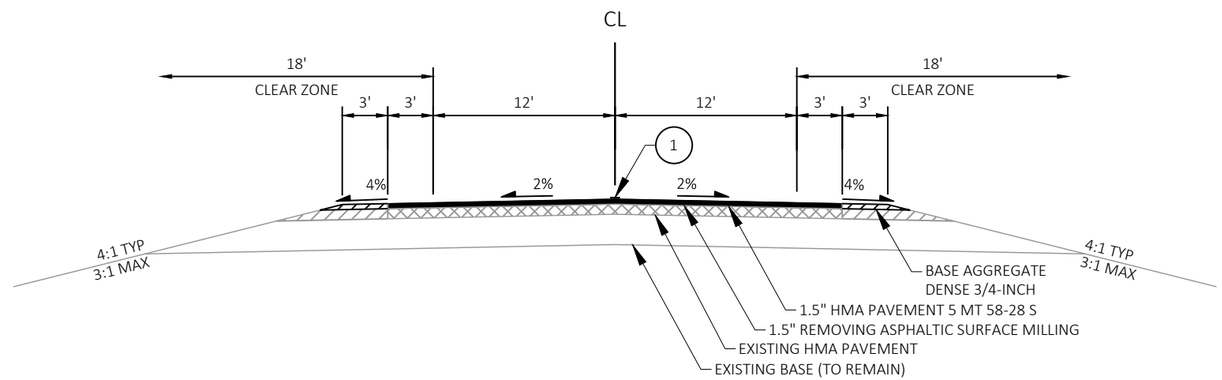

FINISHED TYPICAL SECTION

STA 424+48.00 TO 773+55.00
STA 935+00.00 TO 973+65.82

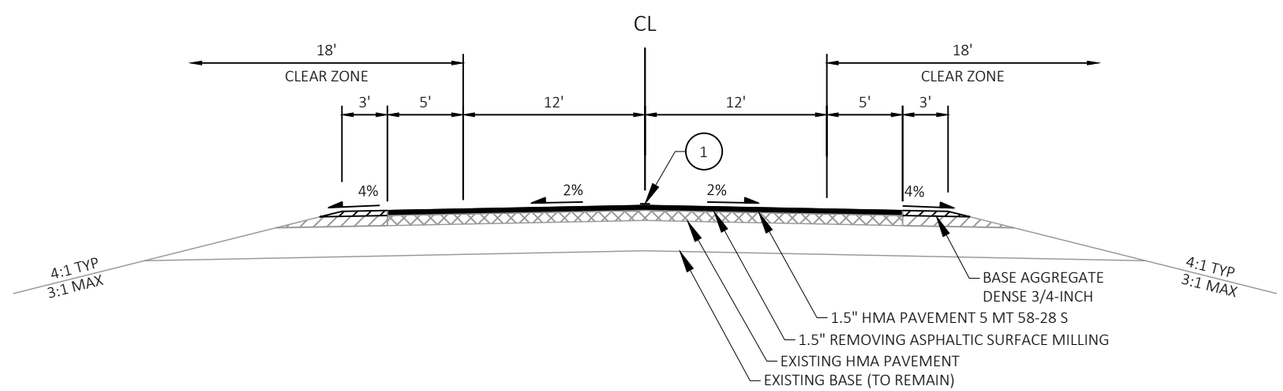

FINISHED TYPICAL SECTION

STA 773+55.00 TO 843+01.53

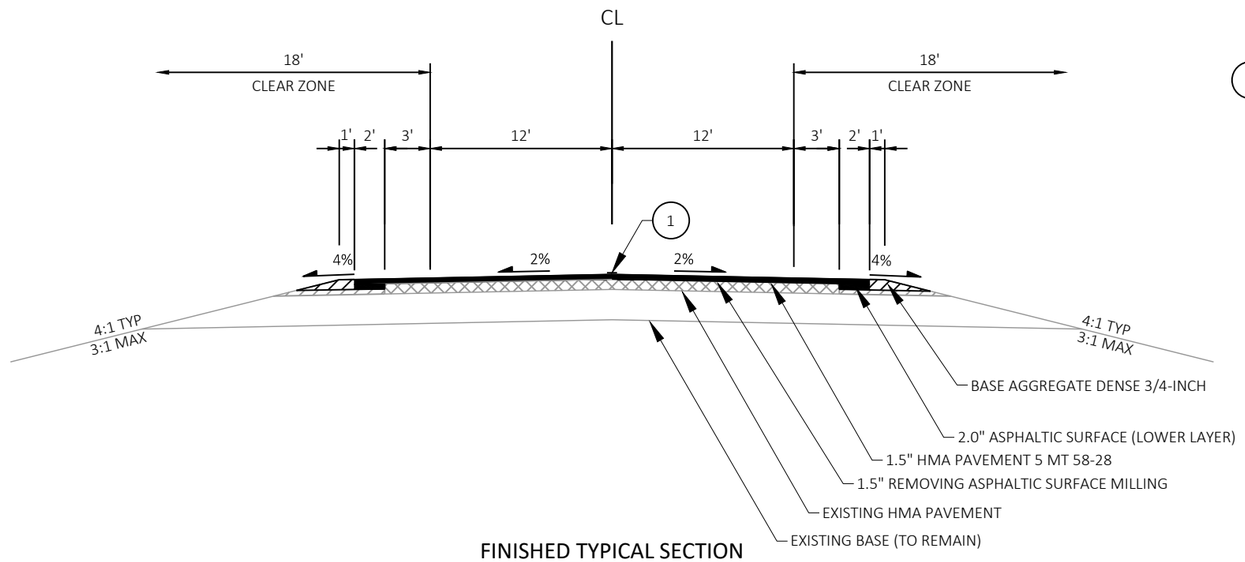

1 ASPHALTIC CENTERLINE RUMBLE STRIPS 2-LANE RURAL

FINISHED TYPICAL SECTION

STA 904+00.18 TO 935+00.00

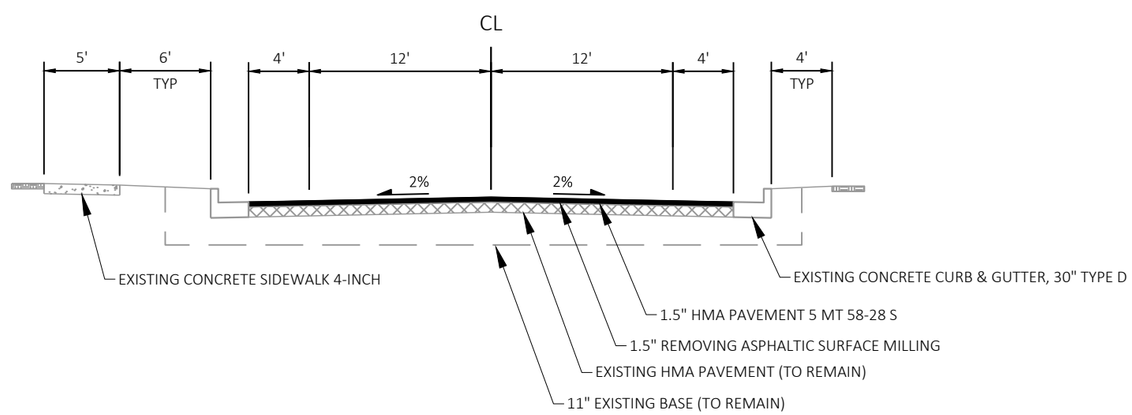

FINISHED TYPICAL SECTION

STA 843+01.53 TO 864+10.97

PROJECT NO: 6280-00-60	HWY: STH 66	COUNTY: PORTAGE	TYPICAL SECTIONS	SHEET 8	E

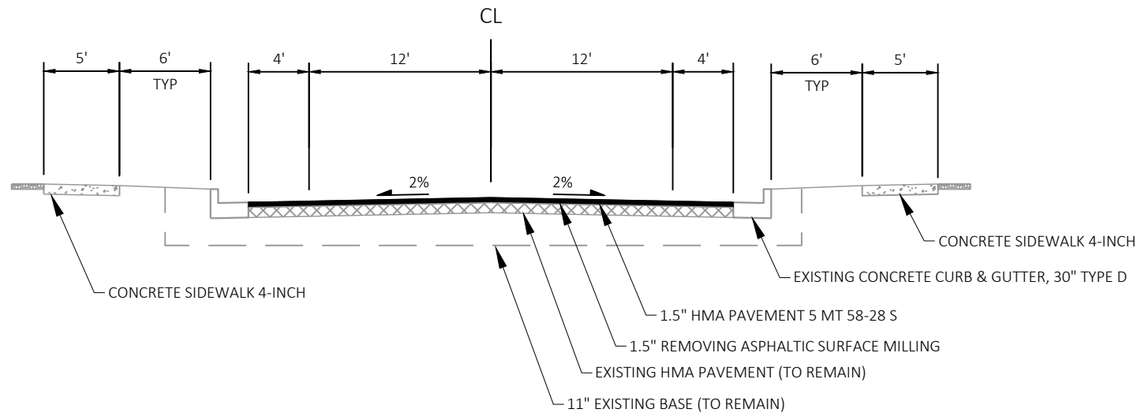

FINISHED TYPICAL SECTION

STA 864+10.97 TO 872+49.87

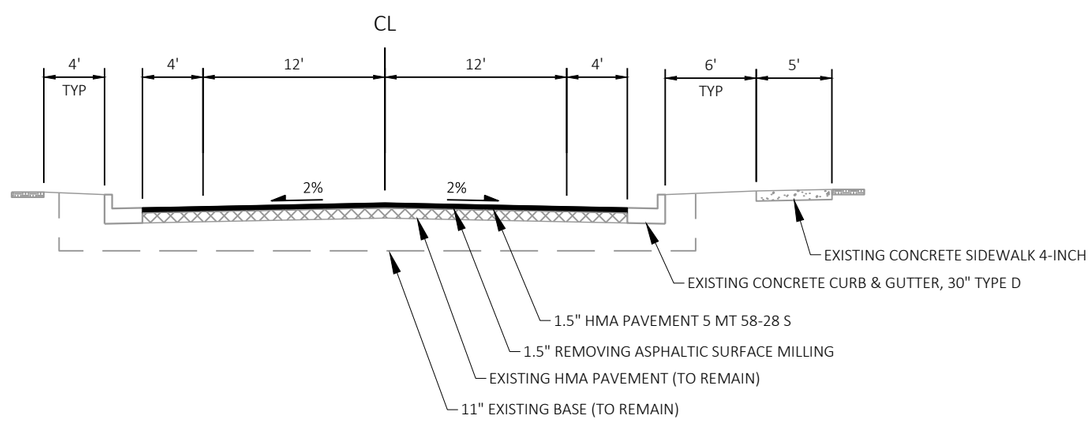

FINISHED TYPICAL SECTION

STA 872+49.87 TO 904+00.18

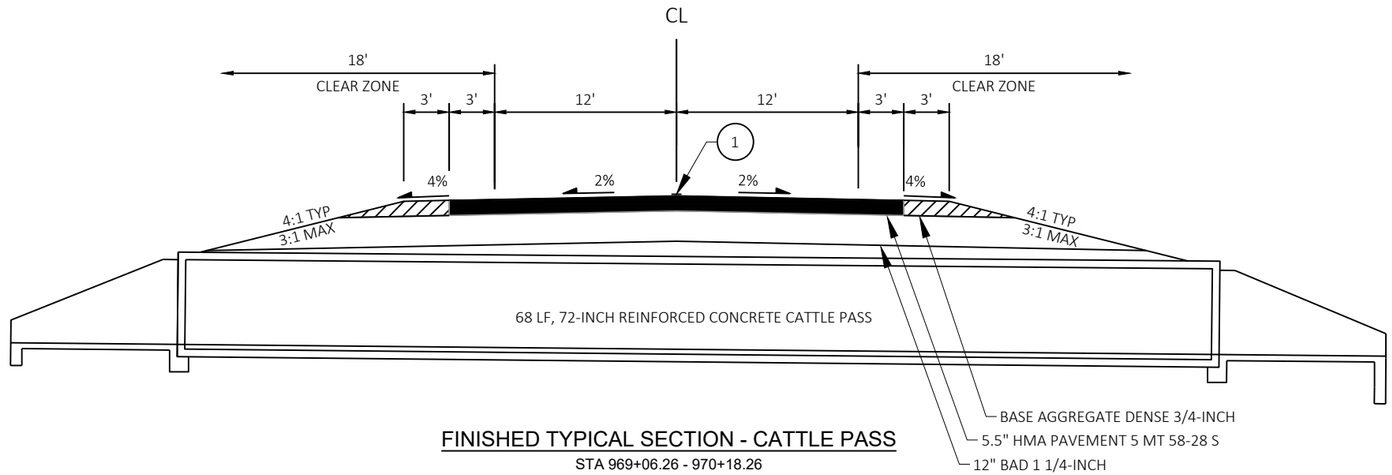

FINISHED TYPICAL SECTION - CATTLE PASS

STA 969+06.26 - 970+18.26

1 ASPHALTIC CENTERLINE RUMBLE STRIPS 2-LANE RURAL

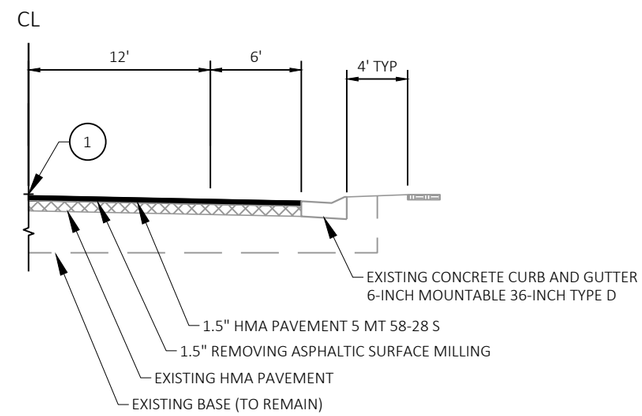

FINISHED TYPICAL SECTION

STA 449+97.06 RT TO 454+01.34 RT
STA 455+99.92 LT TO 460+53.62 LT
STA 532+00.60 LT TO 538+83.84 LT
STA 707+88.40 LT TO 725+07.81 LT
STA 709+03.09 RT TO 726+25.11 RT

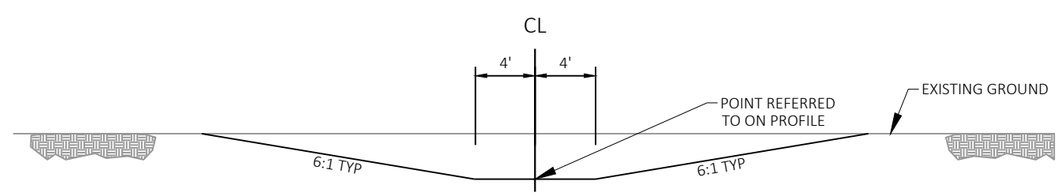

FINISHED TYPICAL SECTION - CATTLE PASS DRAINAGE DITCH

STA 11+14.00 - 13+12.98
STA 14+11.58 - 15+35.00

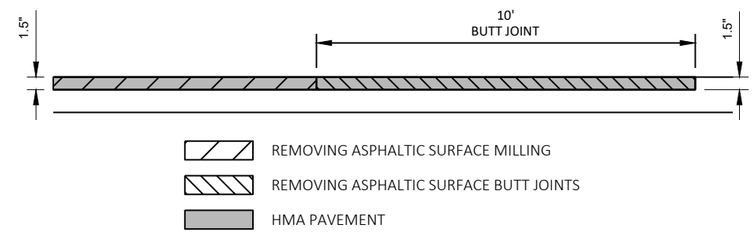

BUTT JOINT

MAINLINE AND SIDEROADS

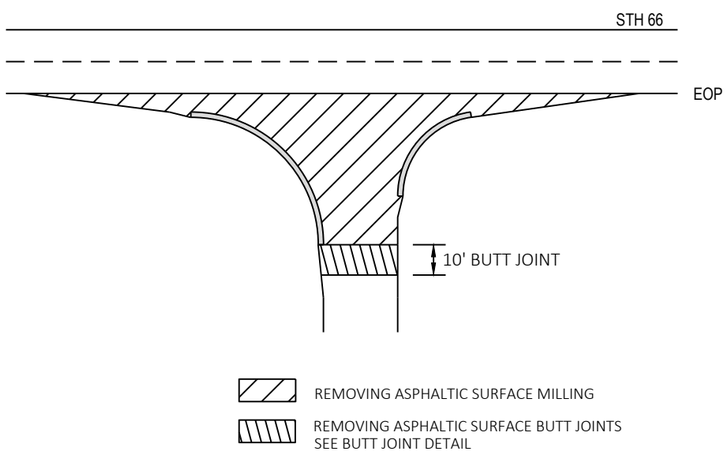

SIDE ROADS

WITH CURB AND GUTTER

CTH J	MARRYLAND DRIVE	MASON STREET
CHURCH STREET	CTH CC	N. MAIN STREET
CTH Z	WOODLAND ROAD	S. MAIN STREET
CTH K	BUCKTAIL LANE	UNION STREET
RUSTIC DRIVE	CTH I SOUTH	S. UNION STREET
ERIN ROAD	ST ADALBERTS ROAD	DEPOT STREET
ADAMS LANE	STATE STREET	WATER STREET
	FREDRICKSON STREET	JEFFERSON STREET

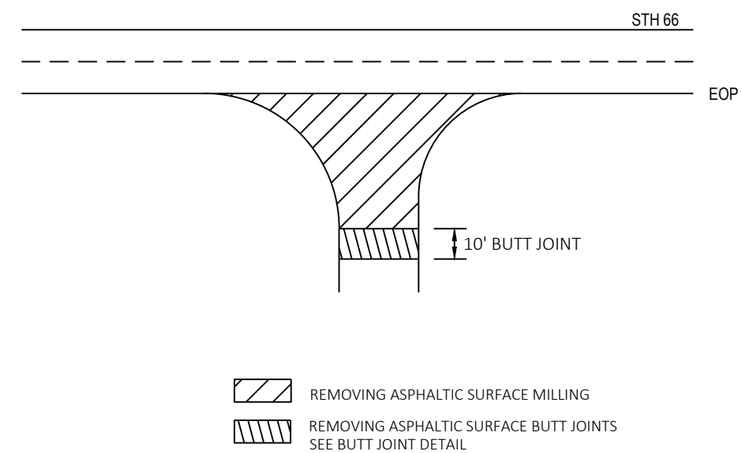

SIDE ROADS

WITHOUT CURB AND GUTTER

GRADER LANE
POLONIA ROAD
STANLEY CONIFER RIDGE
ROCKY RIDGE ROAD
KRANSKI LAKE ROAD
POST OFFICE ALLEY
MARKS LANE
CTH A

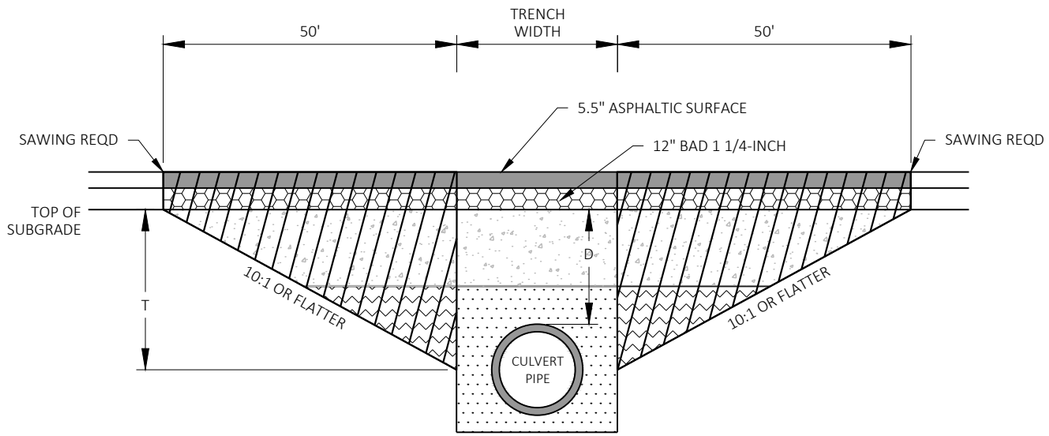

DEPTH D < 6 FT

TRANSITION CUT DEPTH (T) = THE LESSER OF DEPTH TO CENTER OF PIPE OR 5 FT.
DO NOT EXTEND TRANSITION CUT BELOW HORIZONTAL CENTER OF PIPE.

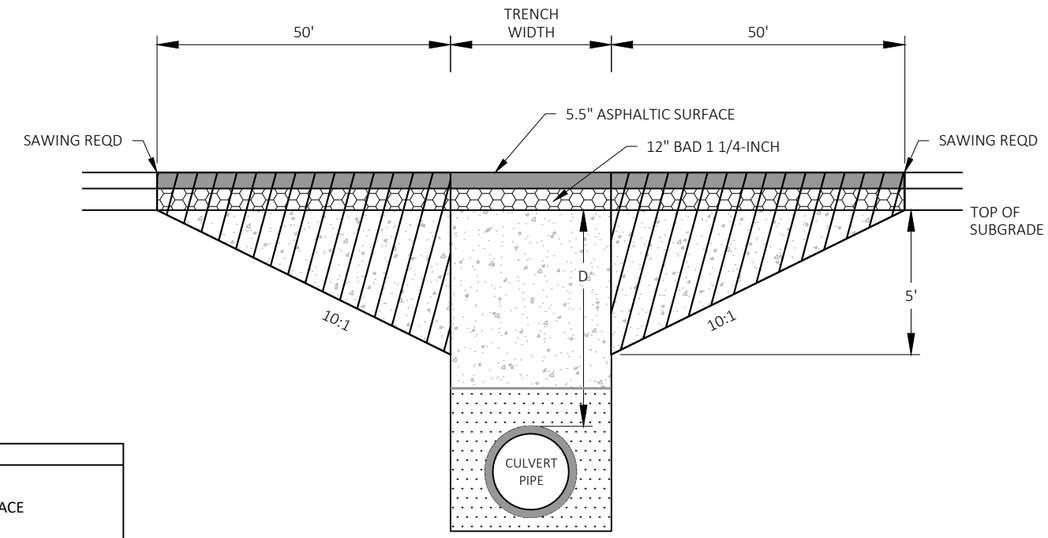

DEPTH D ≥ 6 FT

NOTES

TRANSITION CUT IS PAID AS EXCAVATION COMMON.
TRANSITION CUT WIDTH IS FROM SUBGRADE SHOULDER POINT TO SUBGRADE SHOULDER POINT.
BACKFILL THE TRANSITION CUT AREAS WITH FOUNDATION AND TRENCH BACKFILL AS SPECIFIED IN STANDARD SPEC 520.
PERFORM CULVERT PIPE INSTALLATION BEFORE MILLING.
PLACE HMA PAVEMENT AFTER CULVERT PIPE INSTALLATION AND BEFORE MILLING.

KEY

- PROPOSED SURFACE
- PROPOSED BASE
- TRENCH BACKFILL
- TRENCH OR FOUNDATION BACKFILL
- FOUNDATION BACKFILL
- TRANSITION CUT

CULVERT PIPE TRANSITION

ROUTE	STA (CL)	DEPTH D (FT)	PIPE DIA (IN)	REMARKS
STH 66	960+36	4.7	24	
STH 66	969+62	3.5	72	

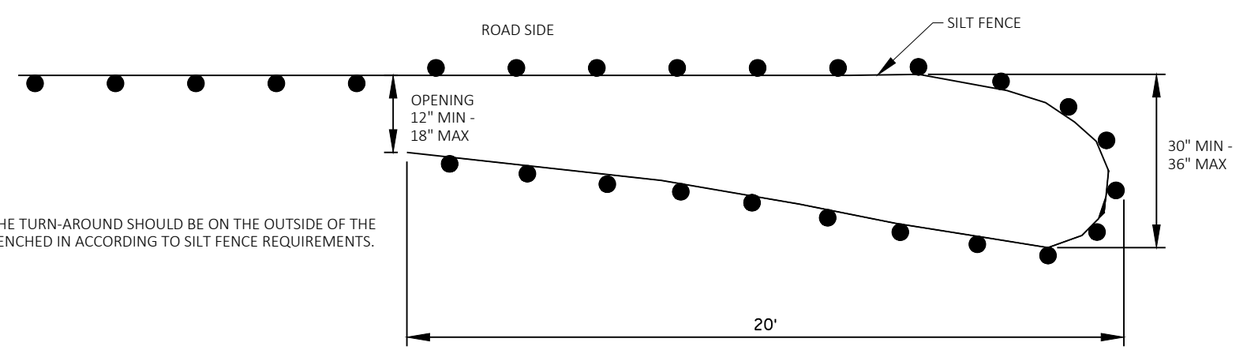

GENERAL NOTES:
SILT FENCE POSTS FOR THE TURN-AROUND SHOULD BE ON THE OUTSIDE OF THE TURN-AROUND. AND TRENCHED IN ACCORDING TO SILT FENCE REQUIREMENTS.

PLAN VIEW

TEMPORARY SMALL ANIMAL TURN-AROUND

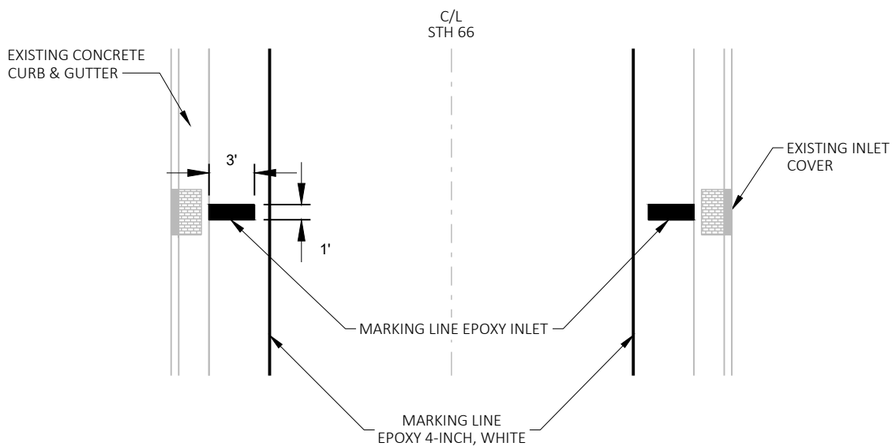

NOTE: SEE PAVEMENT MARKING PLAN FOR INLET LOCATIONS AND PROPOSED INLET MARKING ORIENTATION.

INLET PAVEMENT MARKING DETAIL

NOTES

COMPLETE CURB & GUTTER AND ASPHALTIC SURFACE PATCHING BEFORE MILLING.

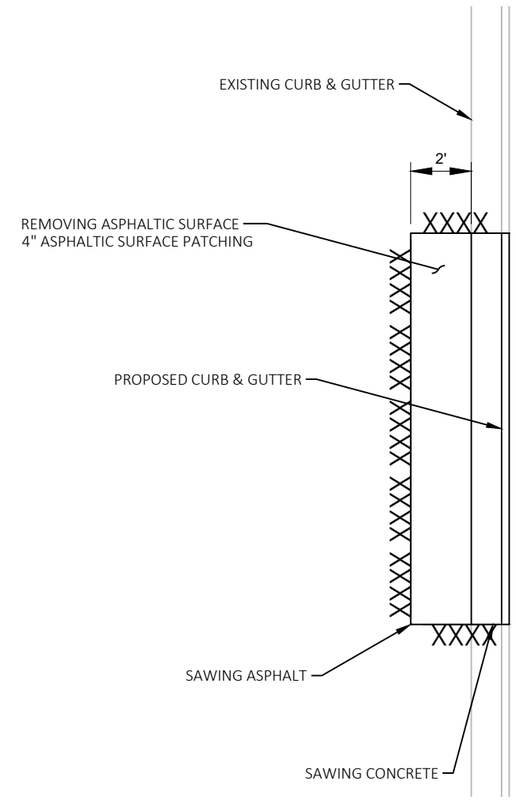

INLET PAVEMENT MARKING DETAIL

2

LEGEND

- TYPE II BARRICADE WITH / WITHOUT ATTACHED SIGN
- TRAFFIC CONTROL DRUMS
- TRAFFIC CONTROL DRUMS WITH LIGHT
- WORK AREA
- TEMPORARY PEDESTRIAN CURB RAMP
- TEMPORARY PEDESTRIAN SURFACE MATTING

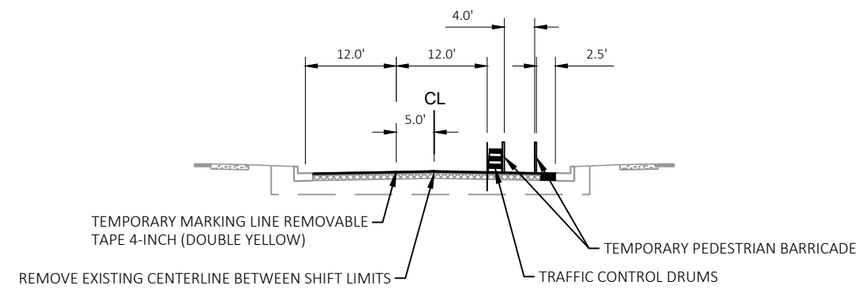

TYPICAL SECTION: LANE SHIFT

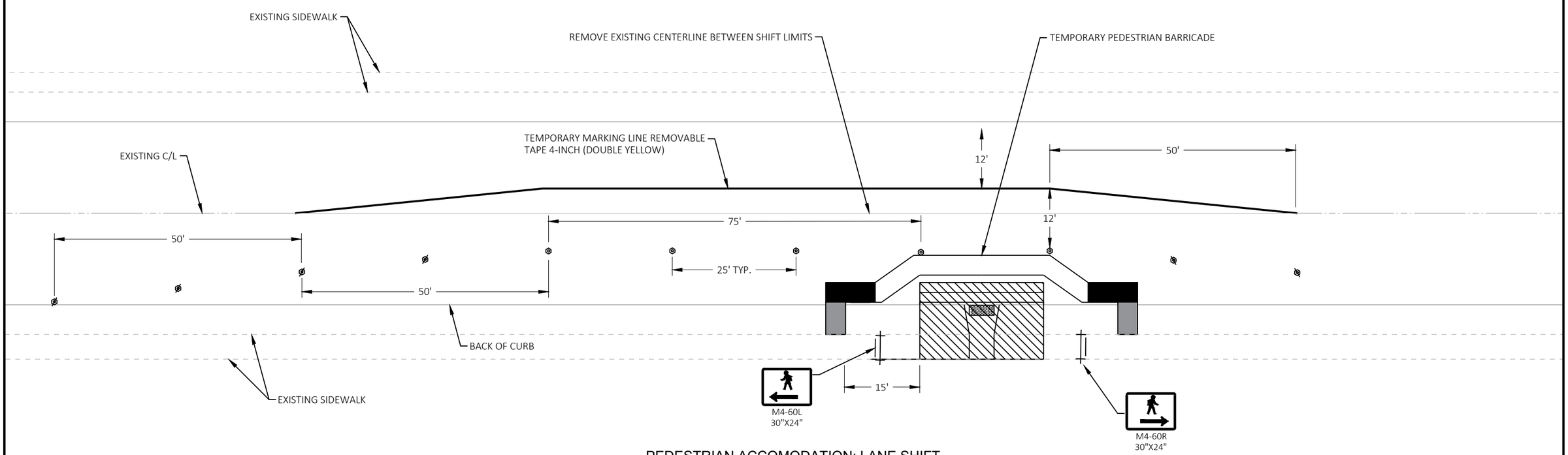

PEDESTRIAN ACCOMODATION: LANE SHIFT

SEE "TRAFFIC CONTROL, PEDESTRIAN ACCOMODATION" SDD FOR ADDITIONAL DETAILS.
SEE "ADVANCED WIDTH RESTRICTION SIGNING" SDD FOR WIDTH RESTRICTION SIGNING.

NOTES:

DASHED LINES SHOWN FOR PROPOSED SIDEWALK ARE FOR INFORMATION ONLY AND DO NOT INDICATE JOINT LOCATIONS.

SEE THE STANDARD DETAIL DRAWINGS FOR COMPLETE CURB RAMP REQUIREMENTS.

ALL STATION AND OFFSET INFORMATION REFERENCE STH 66 R/L.

SEE "TRAFFIC CONTROL, WORK ON SHOULDER OR PARKING LANE, UNDIVIDED ROADWAY" FOR TRAFFIC CONTROL FOR CURB RAMP CONSTRUCTION.

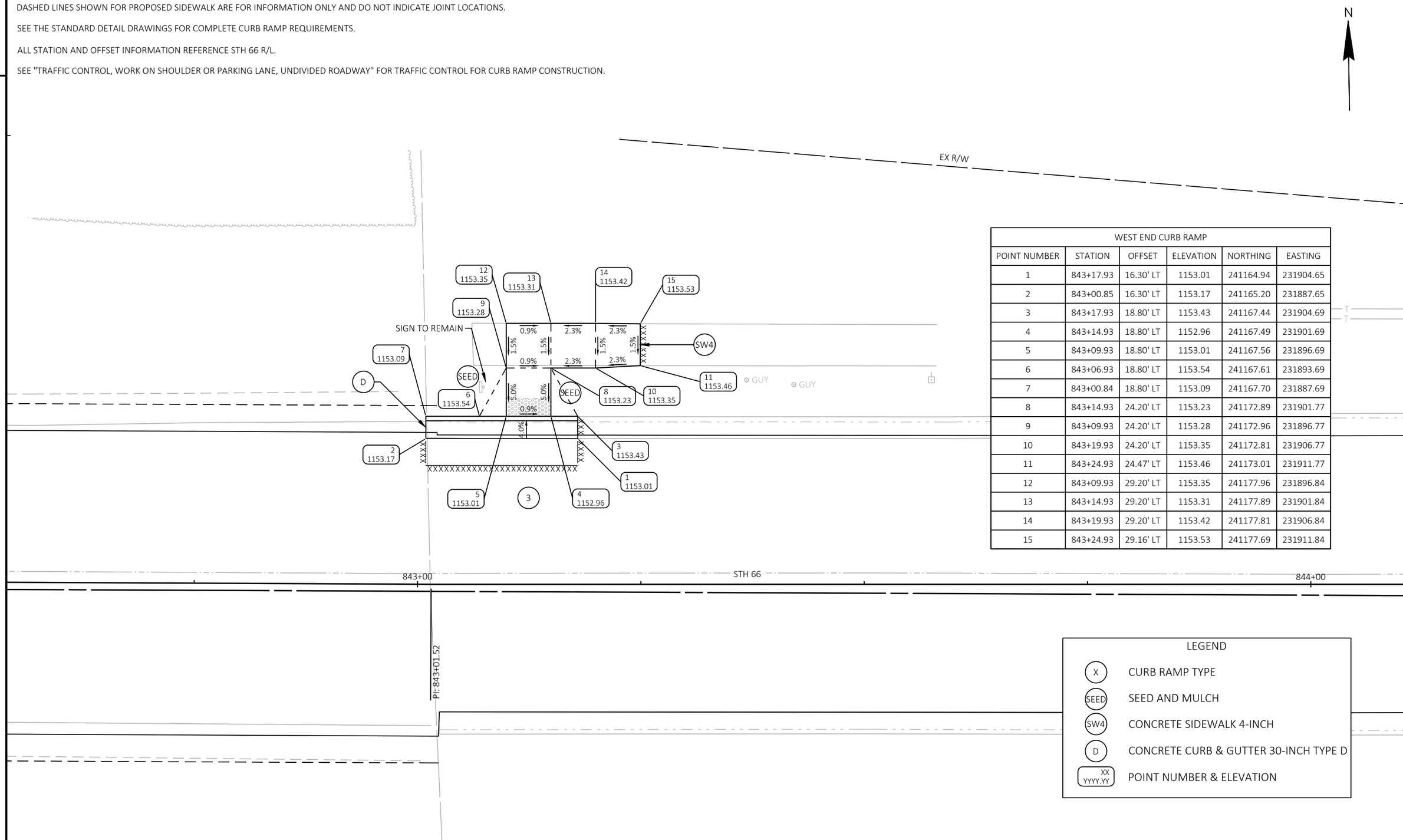

WEST END CURB RAMP					
POINT NUMBER	STATION	OFFSET	ELEVATION	NORTHING	EASTING
1	843+17.93	16.30' LT	1153.01	241164.94	231904.65
2	843+00.85	16.30' LT	1153.17	241165.20	231887.65
3	843+17.93	18.80' LT	1153.43	241167.44	231904.69
4	843+14.93	18.80' LT	1152.96	241167.49	231901.69
5	843+09.93	18.80' LT	1153.01	241167.56	231896.69
6	843+06.93	18.80' LT	1153.54	241167.61	231893.69
7	843+00.84	18.80' LT	1153.09	241167.70	231887.69
8	843+14.93	24.20' LT	1153.23	241172.89	231901.77
9	843+09.93	24.20' LT	1153.28	241172.96	231896.77
10	843+19.93	24.20' LT	1153.35	241172.81	231906.77
11	843+24.93	24.47' LT	1153.46	241173.01	231911.77
12	843+09.93	29.20' LT	1153.35	241177.96	231896.84
13	843+14.93	29.20' LT	1153.31	241177.89	231901.84
14	843+19.93	29.20' LT	1153.42	241177.81	231906.84
15	843+24.93	29.16' LT	1153.53	241177.69	231911.84

LEGEND

- (X) CURB RAMP TYPE
- (SEED) SEED AND MULCH
- (SW4) CONCRETE SIDEWALK 4-INCH
- (D) CONCRETE CURB & GUTTER 30-INCH TYPE D
- [XX / YYYY.YY] POINT NUMBER & ELEVATION

PROJECT NO: 6280-00-60	HWY: STH 66	COUNTY: PORTAGE	CURB RAMP DETAILS - WEST END	SHEET 15	E

NOTES:

DASHED LINES SHOWN FOR PROPOSED SIDEWALK ARE FOR INFORMATION ONLY AND DO NOT INDICATE JOINT LOCATIONS.

SEE THE STANDARD DETAIL DRAWINGS FOR COMPLETE CURB RAMP REQUIREMENTS.

ALL STATION AND OFFSET INFORMATION REFERENCE STH 66 R/L.

SEE "TRAFFIC CONTROL, WORK ON SHOULDER OR PARKING LANE, UNDIVIDED ROADWAY" FOR TRAFFIC CONTROL FOR CURB RAMP CONSTRUCTION.

LEGEND

X	CURB RAMP TYPE
SEED	SEED AND MULCH
SW4	CONCRETE SIDEWALK 4-INCH
D	CONCRETE CURB & GUTTER 30-INCH TYPE D
XX YYYY.YY	POINT NUMBER & ELEVATION

GAS STATION 1 - N

POINT NUMBER	STATION	OFFSET	ELEVATION	NORTHING	EASTING
01	852+86.74	16.03' LT	1162.44	241149.98	232873.34
02	852+81.93	16.05' LT	1162.32	241150.07	232868.53
03	852+79.37	16.06' LT	1162.26	241150.12	232865.97
04	852+73.37	16.08' LT	1162.17	241150.24	232859.98
05	852+70.64	16.10' LT	1162.11	241150.29	232857.25
06	852+62.74	16.13' LT	1161.92	241150.45	232849.35
07	852+81.88	18.55' LT	1162.54	241152.58	232868.52
08	852+78.88	18.56' LT	1162.17	241152.63	232865.52
09	852+73.88	18.58' LT	1162.10	241152.73	232860.52
10	852+70.88	18.60' LT	1162.33	241152.79	232857.52
11	852+83.90	24.06' LT	1162.73	241158.06	232870.63
12	852+78.90	24.06' LT	1162.56	241158.13	232865.63
13	852+73.90	24.05' LT	1162.48	241158.20	232860.63
14	852+68.90	24.05' LT	1162.35	241158.28	232855.63
15	852+83.92	29.06' LT	1162.77	241163.06	232870.72
16	852+78.92	29.06' LT	1162.63	241163.13	232865.72
17	852+73.92	29.05' LT	1162.56	241163.20	232860.72
18	852+68.92	29.05' LT	1162.58	241163.27	232855.72

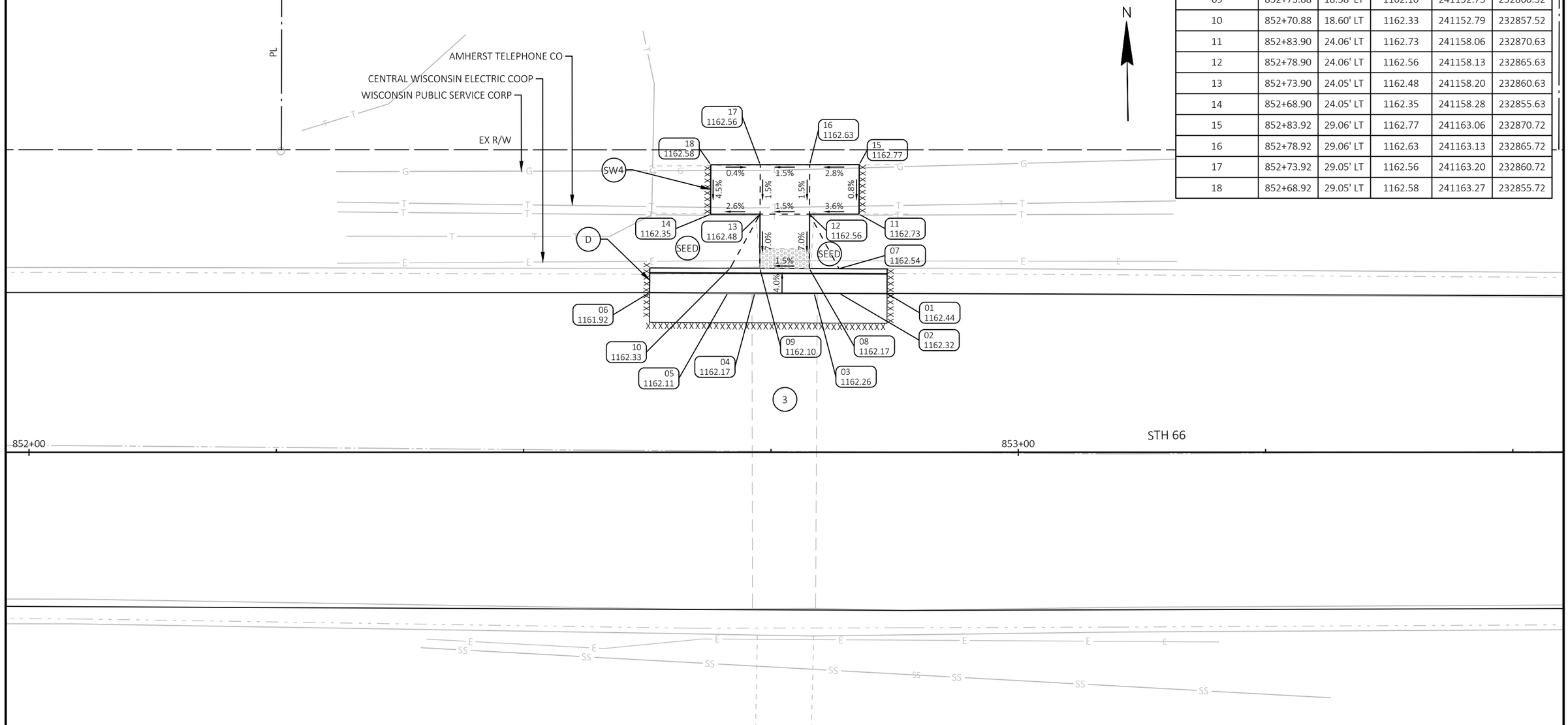

PROJECT NO: 6280-00-60	HWY: STH 66	COUNTY: PORTAGE	CURB RAMP DETAILS - GAS STATION 1	SHEET 16	E

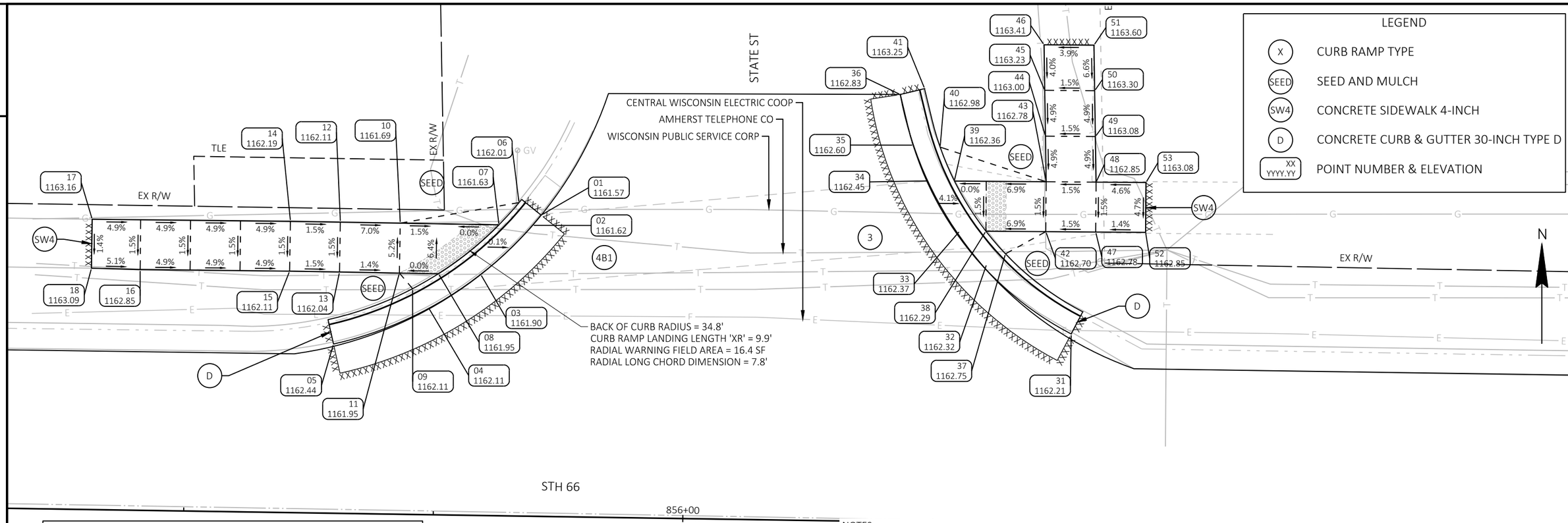

STATE ST - W					
POINT NUMBER	STATION	OFFSET	ELEVATION	NORTHING	EASTING
01	855+85.35	30.17' LT	1161.57	241159.60	233172.13
02	855+84.50	29.13' LT	1161.62	241158.57	233171.27
03	855+79.39	24.14' LT	1161.90	241153.66	233166.08
04	855+74.18	20.78' LT	1162.11	241150.38	233160.82
05	855+64.75	16.95' LT	1162.44	241146.69	233151.34
06	855+83.11	31.40' LT	1162.01	241160.86	233169.92
07	855+81.14	29.14' LT	1161.63	241158.63	233167.91
08	855+75.16	24.15' LT	1161.95	241153.73	233161.86
09	855+72.59	22.61' LT	1162.11	241152.23	233159.26
10	855+71.25	29.16' LT	1161.69	241158.80	233158.02
11	855+71.24	24.16' LT	1161.95	241153.80	233157.94
12	855+65.25	29.17' LT	1162.11	241158.90	233152.03
13	855+65.24	24.17' LT	1162.04	241153.90	233151.94
14	855+60.25	29.18' LT	1162.19	241158.99	233147.03
15	855+60.24	24.18' LT	1162.11	241153.99	233146.94
16	855+45.28	24.10' LT	1162.85	241154.14	233131.98
17	855+40.39	29.08' LT	1163.16	241159.19	233127.16
18	855+40.39	24.18' LT	1163.09	241154.28	233127.09

NOTES:

DASHED LINES SHOWN FOR PROPOSED SIDEWALK ARE FOR INFORMATION ONLY AND DO NOT INDICATE JOINT LOCATIONS.

SEE THE STANDARD DETAIL DRAWINGS FOR COMPLETE CURB RAMP REQUIREMENTS.

ALL STATION AND OFFSET INFORMATION REFERENCE STH 66 R/L.

SEE "TRAFFIC CONTROL, WORK ON SHOULDER OR PARKING LANE, UNDIVIDED ROADWAY" FOR TRAFFIC CONTROL FOR CURB RAMP CONSTRUCTION.

STATE ST - E					
POINT NUMBER	STATION	OFFSET	ELEVATION	NORTHING	EASTING
31	856+38.62	19.08' LT	1162.21	241147.70	233225.23
32	856+30.04	25.93' LT	1162.32	241154.68	233216.76
33	856+27.30	29.22' LT	1162.37	241158.01	233214.07
34	856+24.10	34.19' LT	1162.45	241163.03	233210.94
35	856+22.52	37.75' LT	1162.60	241166.61	233209.42
36	856+21.14	42.80' LT	1162.83	241171.68	233208.11
37	856+31.91	27.00' LT	1162.75	241155.72	233218.64
38	856+29.92	29.24' LT	1162.29	241157.99	233216.68
39	856+26.69	34.21' LT	1162.36	241163.01	233213.53
40	856+25.21	37.59' LT	1162.98	241166.41	233212.10
41	856+23.57	43.42' LT	1163.25	241172.27	233210.55
42	856+35.92	29.29' LT	1162.70	241157.94	233222.68
43	856+35.88	34.29' LT	1162.78	241162.94	233222.72

STATE ST - E					
POINT NUMBER	STATION	OFFSET	ELEVATION	NORTHING	EASTING
44	856+35.74	38.85' LT	1163.00	241167.51	233222.65
45	856+35.60	43.44' LT	1163.23	241172.10	233222.58
46	856+35.46	48.00' LT	1163.41	241176.66	233222.51
47	856+40.92	29.32' LT	1162.78	241157.91	233227.68
48	856+40.88	34.32' LT	1162.85	241162.91	233227.72
49	856+40.74	38.89' LT	1163.08	241167.47	233227.65
50	856+40.60	43.47' LT	1163.30	241172.06	233227.58
51	856+40.46	48.04' LT	1163.60	241176.63	233227.51
52	856+45.82	29.37' LT	1162.85	241157.87	233232.68
53	856+45.76	34.37' LT	1163.08	241162.87	233232.72

2

NOTES:

DASHED LINES SHOWN FOR PROPOSED SIDEWALK ARE FOR INFORMATION ONLY AND DO NOT INDICATE JOINT LOCATIONS.

SEE THE STANDARD DETAIL DRAWINGS FOR COMPLETE CURB RAMP REQUIREMENTS.

ALL STATION AND OFFSET INFORMATION REFERENCE STH 66 R/L.

SEE "TRAFFIC CONTROL, WORK ON SHOULDER OR PARKING LANE, UNDIVIDED ROADWAY" FOR TRAFFIC CONTROL FOR CURB RAMP CONSTRUCTION.

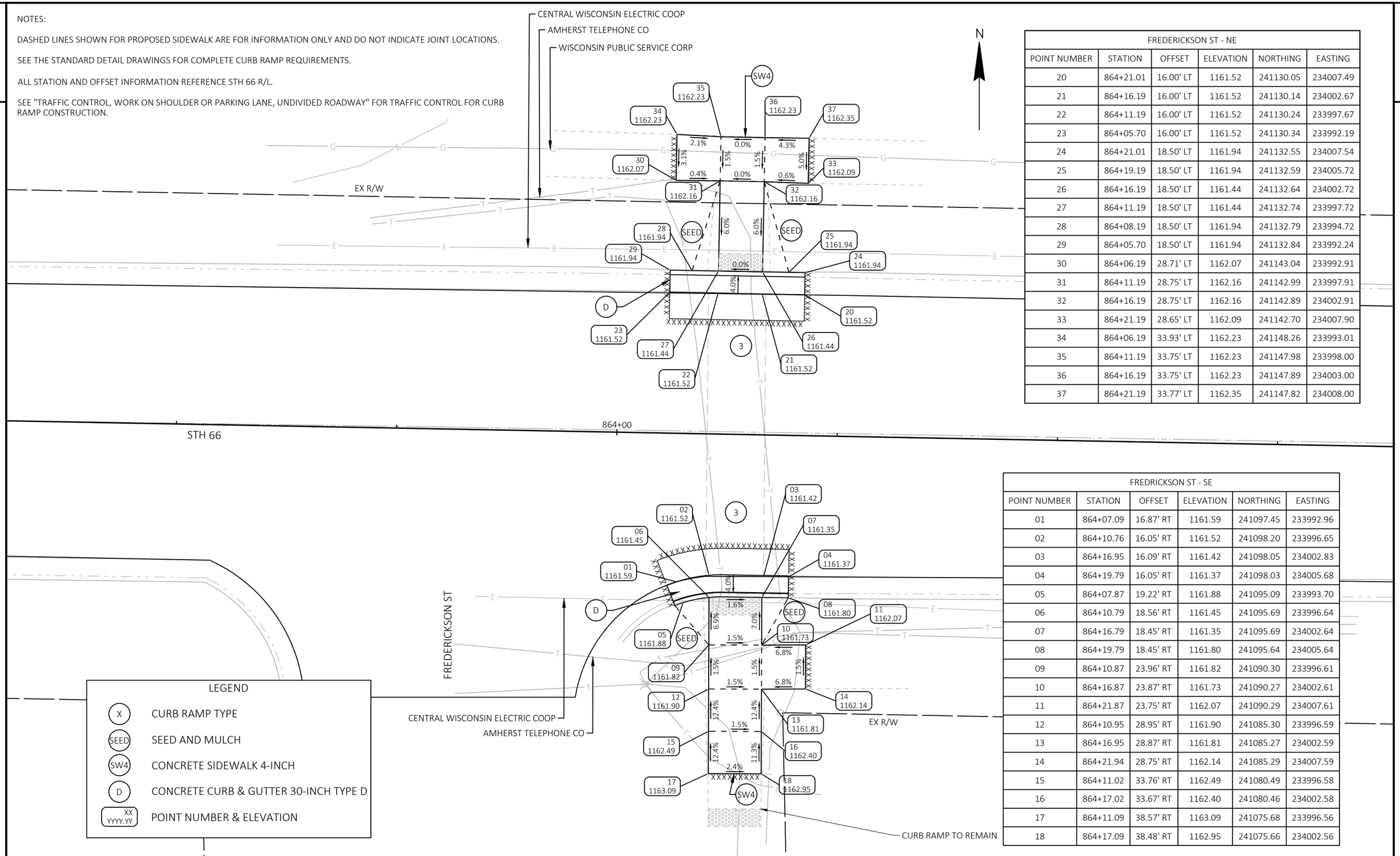

FREDERICKSON ST - NE					
POINT NUMBER	STATION	OFFSET	ELEVATION	NORTHING	EASTING
20	864+21.01	16.00' LT	1161.52	241130.05	234007.49
21	864+16.19	16.00' LT	1161.52	241130.14	234002.67
22	864+11.19	16.00' LT	1161.52	241130.24	233997.67
23	864+05.70	16.00' LT	1161.52	241130.34	233992.19
24	864+21.01	18.50' LT	1161.94	241132.55	234007.54
25	864+19.19	18.50' LT	1161.94	241132.59	234005.72
26	864+16.19	18.50' LT	1161.44	241132.64	234002.72
27	864+11.19	18.50' LT	1161.44	241132.74	233997.72
28	864+08.19	18.50' LT	1161.94	241132.79	233994.72
29	864+05.70	18.50' LT	1161.94	241132.84	233992.24
30	864+06.19	28.71' LT	1162.07	241143.04	233992.91
31	864+11.19	28.75' LT	1162.16	241142.99	233997.91
32	864+16.19	28.75' LT	1162.16	241142.89	234002.91
33	864+21.19	28.65' LT	1162.09	241142.70	234007.90
34	864+06.19	33.93' LT	1162.23	241148.26	233993.01
35	864+11.19	33.75' LT	1162.23	241147.98	233998.00
36	864+16.19	33.75' LT	1162.23	241147.89	234003.00
37	864+21.19	33.77' LT	1162.35	241147.82	234008.00

FREDRICKSON ST - SE					
POINT NUMBER	STATION	OFFSET	ELEVATION	NORTHING	EASTING
01	864+07.09	16.87' RT	1161.59	241097.45	233992.96
02	864+10.76	16.05' RT	1161.52	241098.20	233996.65
03	864+16.95	16.09' RT	1161.42	241098.05	234002.83
04	864+19.79	16.05' RT	1161.37	241098.03	234005.68
05	864+07.87	19.22' RT	1161.88	241095.09	233993.70
06	864+10.79	18.56' RT	1161.45	241095.69	233996.64
07	864+16.79	18.45' RT	1161.35	241095.69	234002.64
08	864+19.79	18.45' RT	1161.80	241095.64	234005.64
09	864+10.87	23.96' RT	1161.82	241090.30	233996.61
10	864+16.87	23.87' RT	1161.73	241090.27	234002.61
11	864+21.87	23.75' RT	1162.07	241090.29	234007.61
12	864+10.95	28.95' RT	1161.90	241085.30	233996.59
13	864+16.95	28.87' RT	1161.81	241085.27	234002.59
14	864+21.94	28.75' RT	1162.14	241085.29	234007.59
15	864+11.02	33.76' RT	1162.49	241080.49	233996.58
16	864+17.02	33.67' RT	1162.40	241080.46	234002.58
17	864+11.09	38.57' RT	1163.09	241075.68	233996.56
18	864+17.09	38.48' RT	1162.95	241075.66	234002.56

LEGEND

X	CURB RAMP TYPE
SEED	SEED AND MULCH
SW4	CONCRETE SIDEWALK 4-INCH
D	CONCRETE CURB & GUTTER 30-INCH TYPE D
XX YYYY.YY	POINT NUMBER & ELEVATION

PROJECT NO: 6280-00-60	HWY: STH 66	COUNTY: PORTAGE	CURB RAMP DETAILS - FREDERICKSON ST	SHEET 18	E

2

NOTES:

DASHED LINES SHOWN FOR PROPOSED SIDEWALK ARE FOR INFORMATION ONLY AND DO NOT INDICATE JOINT LOCATIONS.

SEE THE STANDARD DETAIL DRAWINGS FOR COMPLETE CURB RAMP REQUIREMENTS.

ALL STATION AND OFFSET INFORMATION REFERENCE STH 66 R/L.

SEE "TRAFFIC CONTROL, WORK ON SHOULDER OR PARKING LANE, UNDIVIDED ROADWAY" FOR TRAFFIC CONTROL FOR CURB RAMP CONSTRUCTION.

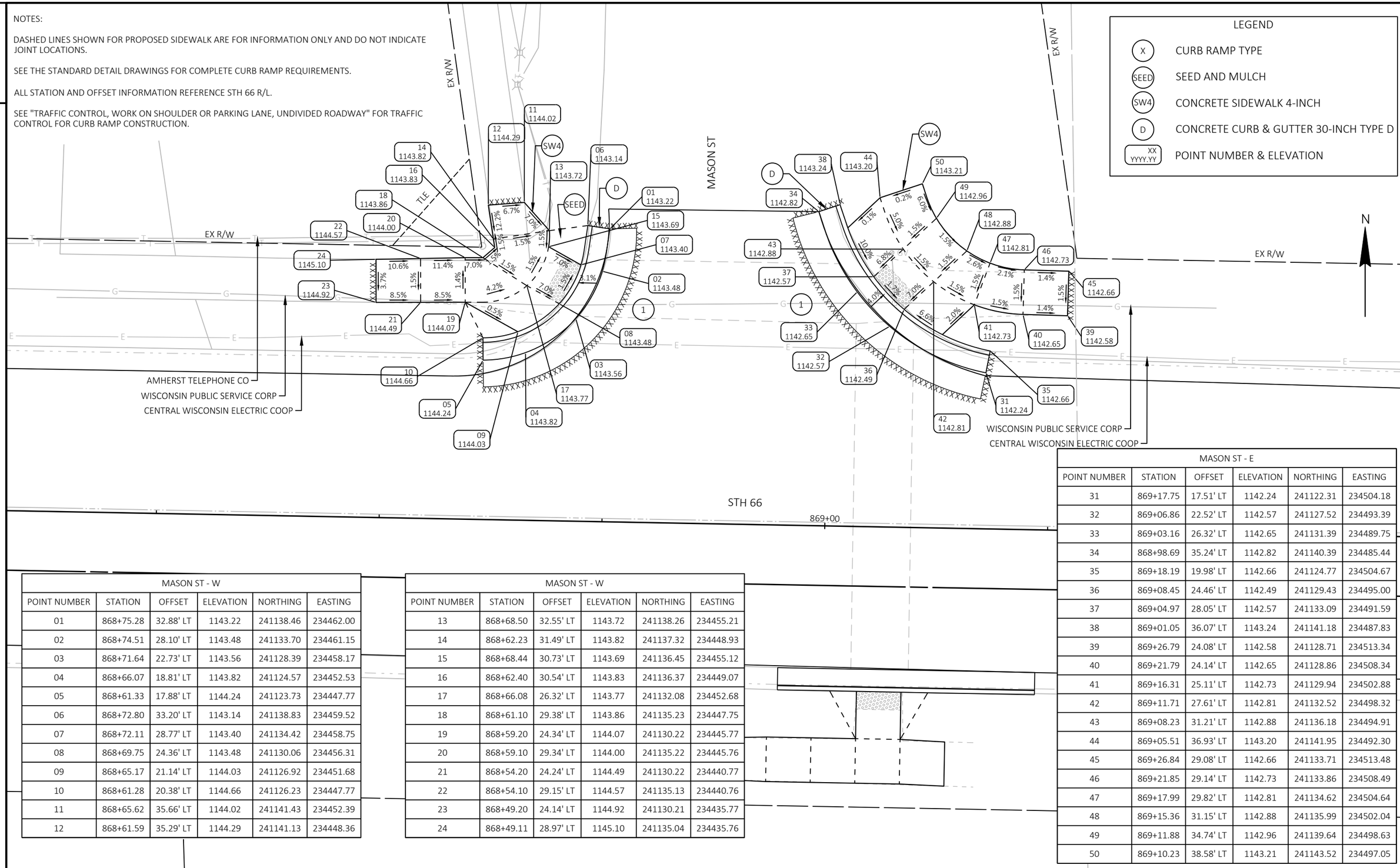

MASON ST - W					
POINT NUMBER	STATION	OFFSET	ELEVATION	NORTHING	EASTING
01	868+75.28	32.88' LT	1143.22	241138.46	234462.00
02	868+74.51	28.10' LT	1143.48	241133.70	234461.15
03	868+71.64	22.73' LT	1143.56	241128.39	234458.17
04	868+66.07	18.81' LT	1143.82	241124.57	234452.53
05	868+61.33	17.88' LT	1144.24	241123.73	234447.77
06	868+72.80	33.20' LT	1143.14	241138.83	234459.52
07	868+72.11	28.77' LT	1143.40	241134.42	234458.75
08	868+69.75	24.36' LT	1143.48	241130.06	234456.31
09	868+65.17	21.14' LT	1144.03	241126.92	234451.68
10	868+61.28	20.38' LT	1144.66	241126.23	234447.77
11	868+65.62	35.66' LT	1144.02	241141.43	234452.39
12	868+61.59	35.29' LT	1144.29	241141.13	234448.36

MASON ST - W					
POINT NUMBER	STATION	OFFSET	ELEVATION	NORTHING	EASTING
13	868+68.50	32.55' LT	1143.72	241138.26	234455.21
14	868+62.23	31.49' LT	1143.82	241137.32	234448.93
15	868+68.44	30.73' LT	1143.69	241136.45	234455.12
16	868+62.40	30.54' LT	1143.83	241136.37	234449.07
17	868+66.08	26.32' LT	1143.77	241132.08	234452.68
18	868+61.10	29.38' LT	1143.86	241135.23	234447.75
19	868+59.20	24.34' LT	1144.07	241130.22	234445.77
20	868+59.10	29.34' LT	1144.00	241135.22	234445.76
21	868+54.20	24.24' LT	1144.49	241130.22	234440.77
22	868+54.10	29.15' LT	1144.57	241135.13	234440.76
23	868+49.20	24.14' LT	1144.92	241130.21	234435.77
24	868+49.11	28.97' LT	1145.10	241135.04	234435.76

MASON ST - E					
POINT NUMBER	STATION	OFFSET	ELEVATION	NORTHING	EASTING
31	869+17.75	17.51' LT	1142.24	241122.31	234504.18
32	869+06.86	22.52' LT	1142.57	241127.52	234493.39
33	869+03.16	26.32' LT	1142.65	241131.39	234489.75
34	868+98.69	35.24' LT	1142.82	241140.39	234485.44
35	869+18.19	19.98' LT	1142.66	241124.77	234504.67
36	869+08.45	24.46' LT	1142.49	241129.43	234495.00
37	869+04.97	28.05' LT	1142.57	241133.09	234491.59
38	869+01.05	36.07' LT	1143.24	241141.18	234487.83
39	869+26.79	24.08' LT	1142.58	241128.71	234513.34
40	869+21.79	24.14' LT	1142.65	241128.86	234508.34
41	869+16.31	25.11' LT	1142.73	241129.94	234502.88
42	869+11.71	27.61' LT	1142.81	241132.52	234498.32
43	869+08.23	31.21' LT	1142.88	241136.18	234494.91
44	869+05.51	36.93' LT	1143.20	241141.95	234492.30
45	869+26.84	29.08' LT	1142.66	241133.71	234513.48
46	869+21.85	29.14' LT	1142.73	241133.86	234508.49
47	869+17.99	29.82' LT	1142.81	241134.62	234504.64
48	869+15.36	31.15' LT	1142.88	241135.99	234502.04
49	869+11.88	34.74' LT	1142.96	241139.64	234498.63
50	869+10.23	38.58' LT	1143.21	241143.52	234497.05

2

PROJECT NO: 6280-00-60	HWY: STH 66	COUNTY: PORTAGE	CURB RAMP DETAILS - NORTH MASON ST	SHEET 19	E

2

NOTES:

DASHED LINES SHOWN FOR PROPOSED SIDEWALK ARE FOR INFORMATION ONLY AND DO NOT INDICATE JOINT LOCATIONS.

SEE THE STANDARD DETAIL DRAWINGS FOR COMPLETE CURB RAMP REQUIREMENTS.

ALL STATION AND OFFSET INFORMATION REFERENCE STH 66 R/L.

SEE "TRAFFIC CONTROL, WORK ON SHOULDER OR PARKING LANE, UNDIVIDED ROADWAY" FOR TRAFFIC CONTROL FOR CURB RAMP CONSTRUCTION.

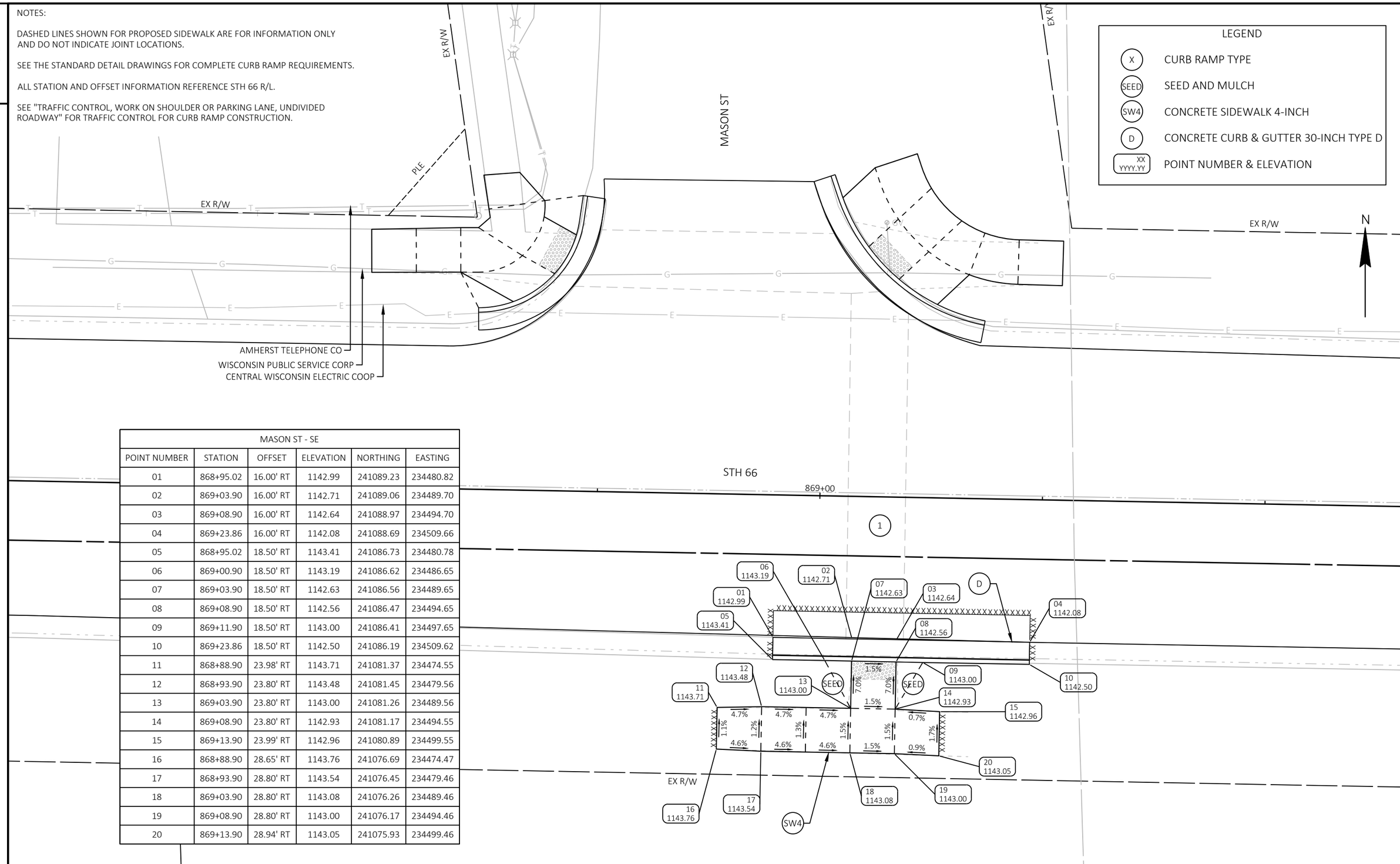

MASON ST - SE					
POINT NUMBER	STATION	OFFSET	ELEVATION	NORTHING	EASTING
01	868+95.02	16.00' RT	1142.99	241089.23	234480.82
02	869+03.90	16.00' RT	1142.71	241089.06	234489.70
03	869+08.90	16.00' RT	1142.64	241088.97	234494.70
04	869+23.86	16.00' RT	1142.08	241088.69	234509.66
05	868+95.02	18.50' RT	1143.41	241086.73	234480.78
06	869+00.90	18.50' RT	1143.19	241086.62	234486.65
07	869+03.90	18.50' RT	1142.63	241086.56	234489.65
08	869+08.90	18.50' RT	1142.56	241086.47	234494.65
09	869+11.90	18.50' RT	1143.00	241086.41	234497.65
10	869+23.86	18.50' RT	1142.50	241086.19	234509.62
11	868+88.90	23.98' RT	1143.71	241081.37	234474.55
12	868+93.90	23.80' RT	1143.48	241081.45	234479.56
13	869+03.90	23.80' RT	1143.00	241081.26	234489.56
14	869+08.90	23.80' RT	1142.93	241081.17	234494.55
15	869+13.90	23.99' RT	1142.96	241080.89	234499.55
16	868+88.90	28.65' RT	1143.76	241076.69	234474.47
17	868+93.90	28.80' RT	1143.54	241076.45	234479.46
18	869+03.90	28.80' RT	1143.08	241076.26	234489.46
19	869+08.90	28.80' RT	1143.00	241076.17	234494.46
20	869+13.90	28.94' RT	1143.05	241075.93	234499.46

2

PROJECT NO: 6280-00-60	HWY: STH 66	COUNTY: PORTAGE	CURB RAMP DETAILS - SOUTH MASON ST	SHEET 20	E

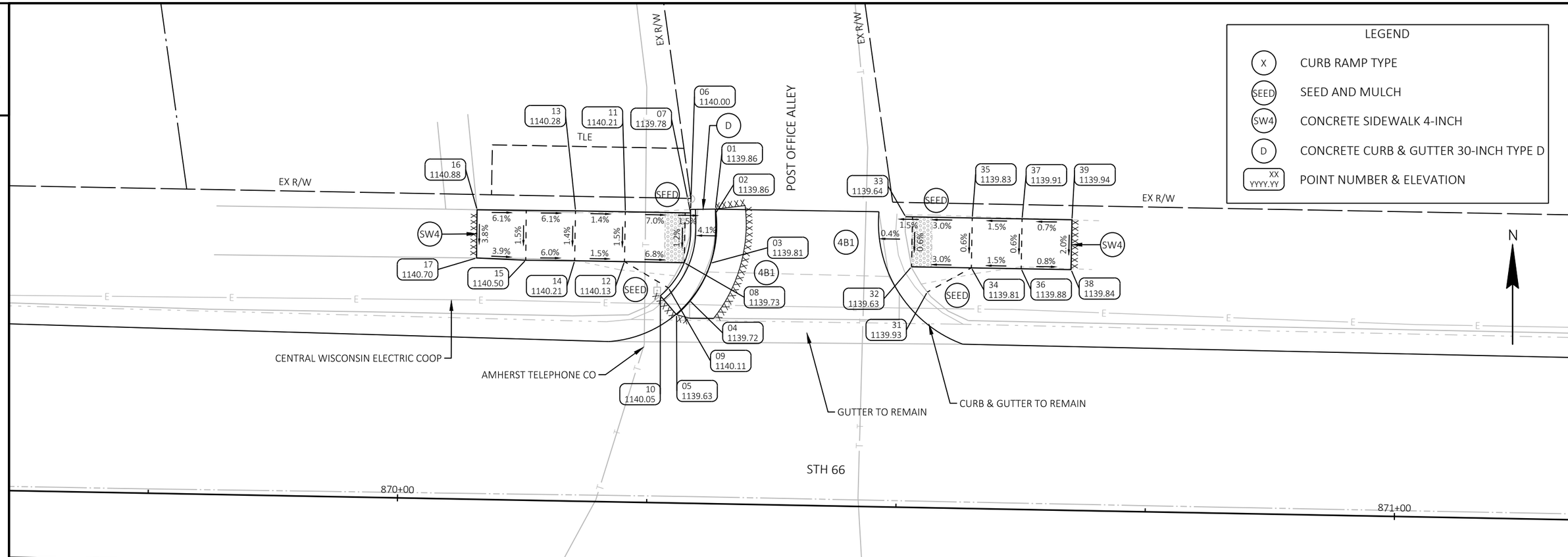

POST OFFICE ALLEY - W					
POINT NUMBER	STATION	OFFSET	ELEVATION	NORTHING	EASTING
01	870+31.35	29.52' LT	1139.86	241132.20	234617.98
02	870+31.36	29.10' LT	1139.86	241131.78	234617.98
03	870+30.96	24.10' LT	1139.81	241126.79	234617.49
04	870+28.93	20.32' LT	1139.72	241123.04	234615.39
05	870+27.64	18.87' LT	1139.63	241121.62	234614.07
06	870+28.86	29.45' LT	1140.00	241132.18	234615.49
07	870+28.86	29.10' LT	1139.78	241131.83	234615.48
08	870+28.32	24.10' LT	1139.73	241126.84	234614.85
09	870+26.78	21.54' LT	1140.11	241124.31	234613.26
10	870+25.99	20.74' LT	1140.05	241123.52	234612.45
11	870+22.32	29.10' LT	1140.21	241131.94	234608.94
12	870+22.32	24.10' LT	1140.13	241126.94	234608.85
13	870+17.32	29.09' LT	1140.28	241132.03	234603.94
14	870+17.32	24.09' LT	1140.21	241127.03	234603.85
15	870+12.42	24.06' LT	1140.50	241127.09	234598.95
16	870+07.44	29.02' LT	1140.88	241132.15	234594.07
17	870+07.48	24.19' LT	1140.70	241127.31	234594.02

POST OFFICE ALLEY - E					
POINT NUMBER	STATION	OFFSET	ELEVATION	NORTHING	EASTING
31	870+52.74	21.61' LT	1139.93	241123.90	234639.22
32	870+51.12	24.12' LT	1139.63	241126.43	234637.64
33	870+50.42	29.12' LT	1139.64	241131.44	234637.04
34	870+57.12	24.12' LT	1139.81	241126.32	234643.64
35	870+57.11	29.12' LT	1139.83	241131.32	234643.73
36	870+62.12	24.13' LT	1139.88	241126.23	234648.64
37	870+62.11	29.13' LT	1139.91	241131.23	234648.73
38	870+67.12	24.13' LT	1139.84	241126.14	234653.64
39	870+67.11	29.13' LT	1139.94	241131.14	234653.73

NOTES:

DASHED LINES SHOWN FOR PROPOSED SIDEWALK ARE FOR INFORMATION ONLY AND DO NOT INDICATE JOINT LOCATIONS.

SEE THE STANDARD DETAIL DRAWINGS FOR COMPLETE CURB RAMP REQUIREMENTS.

ALL STATION AND OFFSET INFORMATION REFERENCE STH 66 R/L.

SEE "TRAFFIC CONTROL, WORK ON SHOULDER OR PARKING LANE, UNDIVIDED ROADWAY" FOR TRAFFIC CONTROL FOR CURB RAMP CONSTRUCTION.

2

NOTES:

DASHED LINES SHOWN FOR PROPOSED SIDEWALK ARE FOR INFORMATION ONLY AND DO NOT INDICATE JOINT LOCATIONS.

SEE THE STANDARD DETAIL DRAWINGS FOR COMPLETE CURB RAMP REQUIREMENTS.

ALL STATION AND OFFSET INFORMATION REFERENCE STH 66 R/L.

SEE "TRAFFIC CONTROL, WORK ON SHOULDER OR PARKING LANE, UNDIVIDED ROADWAY" FOR TRAFFIC CONTROL FOR CURB RAMP CONSTRUCTION.

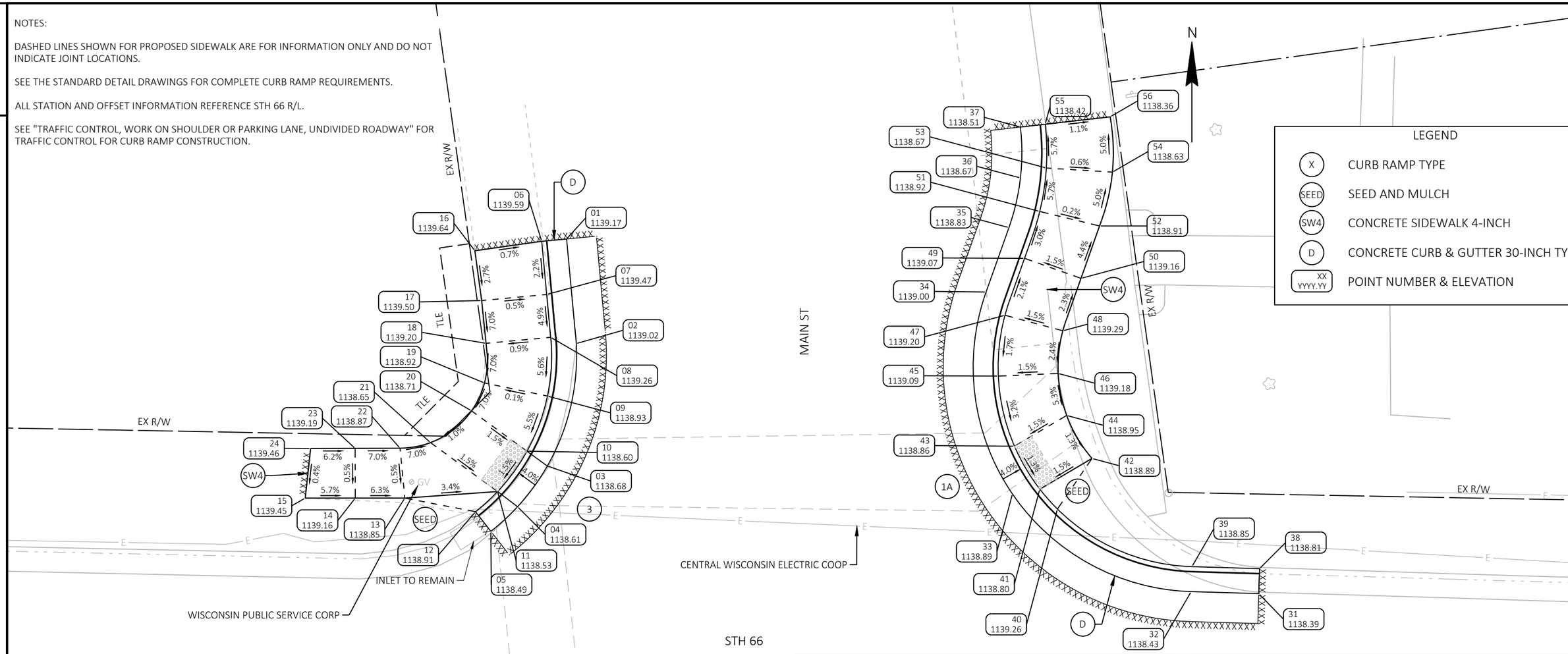

MAIN ST - NW					
POINT NUMBER	STATION	OFFSET	ELEVATION	NORTHING	EASTING
01	871+89.29	50.53' LT	1139.17	241150.26	234776.29
02	871+90.43	40.06' LT	1139.02	241139.77	234777.23
03	871+87.78	27.76' LT	1138.68	241127.52	234774.35
04	871+84.88	23.62' LT	1138.61	241123.44	234771.37
05	871+82.25	21.10' LT	1138.49	241120.97	234768.70
06	871+86.81	50.25' LT	1139.59	241150.03	234773.80
07	871+87.40	44.93' LT	1139.47	241144.70	234774.29
08	871+87.88	40.65' LT	1139.26	241140.41	234774.69
09	871+87.66	34.76' LT	1138.93	241134.53	234774.36
10	871+85.72	29.20' LT	1138.60	241129.00	234772.32
11	871+82.85	25.10' LT	1138.53	241124.96	234769.37
12	871+80.68	23.04' LT	1138.91	241122.94	234767.16

MAIN ST - NW					
POINT NUMBER	STATION	OFFSET	ELEVATION	NORTHING	EASTING
13	871+73.58	24.27' LT	1138.85	241124.30	234760.09
14	871+68.61	24.18' LT	1139.16	241124.30	234755.12
15	871+63.60	24.09' LT	1139.45	241124.30	234750.11
16	871+80.13	49.18' LT	1139.64	241149.08	234767.10
17	871+80.91	44.20' LT	1139.50	241144.09	234767.78
18	871+81.42	39.93' LT	1139.20	241139.81	234768.22
19	871+81.34	35.96' LT	1138.92	241135.84	234768.06
20	871+80.10	33.14' LT	1138.71	241133.04	234766.77
21	871+76.05	29.87' LT	1138.65	241129.86	234762.66
22	871+73.01	29.26' LT	1138.87	241129.30	234759.61
23	871+68.51	29.16' LT	1139.19	241129.28	234755.11
24	871+64.05	29.06' LT	1139.46	241129.27	234750.65

MAIN ST - NE					
POINT NUMBER	STATION	OFFSET	ELEVATION	NORTHING	EASTING
31	872+59.28	16.30' LT	1138.39	241114.73	234845.62
32	872+52.50	16.37' LT	1138.43	241114.93	234838.85
33	872+34.42	25.82' LT	1138.89	241124.71	234820.94
34	872+31.40	46.00' LT	1139.00	241144.95	234818.31
35	872+33.57	52.49' LT	1138.83	241151.40	234820.60
36	872+34.63	57.49' LT	1138.67	241156.37	234821.75
37	872+34.54	62.59' LT	1138.51	241161.47	234821.75
38	872+59.30	18.80' LT	1138.81	241117.23	234845.69
39	872+52.53	18.87' LT	1138.85	241117.43	234838.92
40	872+38.96	24.40' LT	1139.26	241123.21	234825.46
41	872+37.15	26.35' LT	1138.80	241125.19	234823.69
42	872+42.32	29.53' LT	1138.89	241128.27	234828.91
43	872+34.53	30.61' LT	1138.86	241129.50	234821.15

MAIN ST - NE					
POINT NUMBER	STATION	OFFSET	ELEVATION	NORTHING	EASTING
44	872+39.70	33.79' LT	1138.95	241132.58	234826.38
45	872+32.79	37.60' LT	1139.09	241136.52	234819.53
46	872+38.77	37.98' LT	1139.18	241136.79	234825.53
47	872+33.34	43.71' LT	1139.20	241142.62	234820.20
48	872+39.16	42.26' LT	1139.29	241141.06	234825.99
49	872+35.19	49.45' LT	1139.07	241148.33	234822.16
50	872+40.88	47.55' LT	1139.16	241146.32	234827.81
51	872+36.63	54.17' LT	1138.92	241153.02	234823.68
52	872+42.65	52.83' LT	1138.91	241151.56	234829.67
53	872+37.21	58.53' LT	1138.67	241157.37	234824.34
54	872+43.83	58.24' LT	1138.63	241156.96	234830.96
55	872+37.01	62.92' LT	1138.42	241161.76	234824.23
56	872+43.51	63.78' LT	1138.36	241162.50	234830.74

2

MAIN ST - SW					
POINT NUMBER	STATION	OFFSET	ELEVATION	NORTHING	EASTING
01	871+94.20	16.39' RT	1138.67	241083.26	234779.95
02	872+07.28	23.45' RT	1139.04	241075.96	234792.89
03	872+11.32	28.55' RT	1139.11	241070.79	234796.84
04	872+14.85	36.91' RT	1139.48	241062.36	234800.21
05	871+93.63	18.76' RT	1138.61	241080.91	234779.34
06	871+98.38	20.31' RT	1139.21	241079.26	234784.05
07	871+99.55	20.87' RT	1139.26	241078.68	234785.21
08	872+03.73	23.58' RT	1138.94	241075.89	234789.35
09	872+08.40	28.56' RT	1139.01	241070.83	234793.92
10	872+10.41	31.98' RT	1139.65	241067.37	234795.87
11	872+12.47	37.66' RT	1139.90	241061.66	234797.81
12	872+03.76	28.58' RT	1139.01	241070.89	234789.27
13	871+97.73	23.61' RT	1139.18	241075.98	234783.35
14	871+97.76	28.61' RT	1139.26	241070.98	234783.28
15	871+93.54	23.63' RT	1139.13	241076.03	234779.15
16	871+93.44	28.63' RT	1139.22	241071.04	234778.95

MAIN ST - SE					
POINT NUMBER	STATION	OFFSET	ELEVATION	NORTHING	EASTING
20	872+47.58	32.32' RT	1138.87	241066.34	234833.02
21	872+48.92	26.57' RT	1138.68	241072.06	234834.46
22	872+51.56	22.27' RT	1138.60	241076.32	234837.19
23	872+64.57	16.16' RT	1138.39	241082.19	234850.31
24	872+50.07	32.46' RT	1138.86	241066.16	234835.51
25	872+50.93	28.27' RT	1138.61	241070.33	234836.45
26	872+53.48	23.87' RT	1138.52	241074.68	234839.07
27	872+55.63	21.79' RT	1138.97	241076.72	234841.26

MAIN ST - SE					
POINT NUMBER	STATION	OFFSET	ELEVATION	NORTHING	EASTING
28	872+64.59	18.66' RT	1138.81	241079.69	234850.28
29	872+56.74	33.14' RT	1138.76	241065.35	234842.16
30	872+59.40	28.85' RT	1138.67	241069.59	234844.90
31	872+65.49	28.80' RT	1138.82	241069.52	234850.99
32	872+70.96	28.77' RT	1139.05	241069.45	234856.47
33	872+59.99	23.84' RT	1138.56	241074.59	234845.58
34	872+65.46	23.80' RT	1138.74	241074.52	234851.06
35	872+70.93	23.77' RT	1138.90	241074.45	234856.53

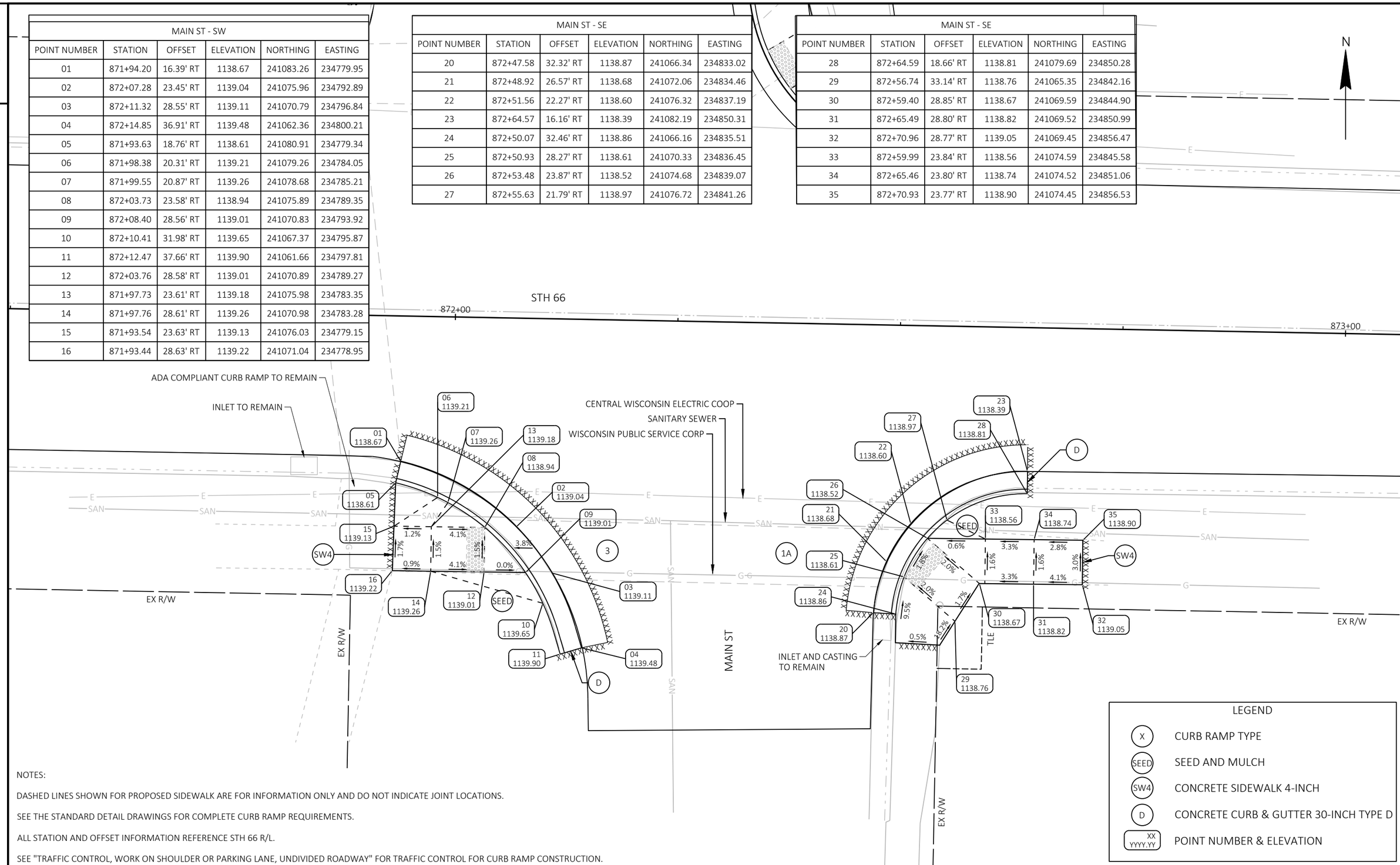

LEGEND

X	CURB RAMP TYPE
SEED	SEED AND MULCH
SW4	CONCRETE SIDEWALK 4-INCH
D	CONCRETE CURB & GUTTER 30-INCH TYPE D
XX YYYY.YY	POINT NUMBER & ELEVATION

NOTES:

DASHED LINES SHOWN FOR PROPOSED SIDEWALK ARE FOR INFORMATION ONLY AND DO NOT INDICATE JOINT LOCATIONS.

SEE THE STANDARD DETAIL DRAWINGS FOR COMPLETE CURB RAMP REQUIREMENTS.

ALL STATION AND OFFSET INFORMATION REFERENCE STH 66 R/L.

SEE "TRAFFIC CONTROL, WORK ON SHOULDER OR PARKING LANE, UNDIVIDED ROADWAY" FOR TRAFFIC CONTROL FOR CURB RAMP CONSTRUCTION.

2

UNION ST - W					
POINT NUMBER	STATION	OFFSET	ELEVATION	NORTHING	EASTING
01	881+78.45	20.63' RT	1129.34	241060.68	235763.94
02	881+83.27	23.88' RT	1129.50	241057.34	235768.70
03	881+88.43	28.82' RT	1129.56	241052.30	235773.77
04	881+90.79	31.83' RT	1129.75	241049.26	235776.08
05	881+77.22	22.81' RT	1129.61	241058.53	235762.68
06	881+79.02	23.89' RT	1129.39	241057.41	235764.45
07	881+85.10	28.88' RT	1129.46	241052.31	235770.44
08	881+87.68	31.86' RT	1130.08	241049.28	235772.96
09	881+88.79	33.34' RT	1130.18	241047.78	235774.05
10	881+75.01	23.90' RT	1129.45	241057.48	235760.45
11	881+75.02	28.90' RT	1129.52	241052.48	235760.36
12	881+69.01	23.90' RT	1129.87	241057.59	235754.45
13	881+69.02	28.90' RT	1129.94	241052.59	235754.36
14	881+64.01	23.91' RT	1129.94	241057.67	235749.45
15	881+64.02	28.91' RT	1130.02	241052.67	235749.37
16	881+59.01	23.92' RT	1130.17	241057.76	235744.45
17	881+59.02	28.92' RT	1130.24	241052.76	235744.37

NOTES:

DASHED LINES SHOWN FOR PROPOSED SIDEWALK ARE FOR INFORMATION ONLY AND DO NOT INDICATE JOINT LOCATIONS.

SEE THE STANDARD DETAIL DRAWINGS FOR COMPLETE CURB RAMP REQUIREMENTS.

ALL STATION AND OFFSET INFORMATION REFERENCE STH 66 R/L.

SEE "TRAFFIC CONTROL, WORK ON SHOULDER OR PARKING LANE, UNDIVIDED ROADWAY" FOR TRAFFIC CONTROL FOR CURB RAMP CONSTRUCTION.

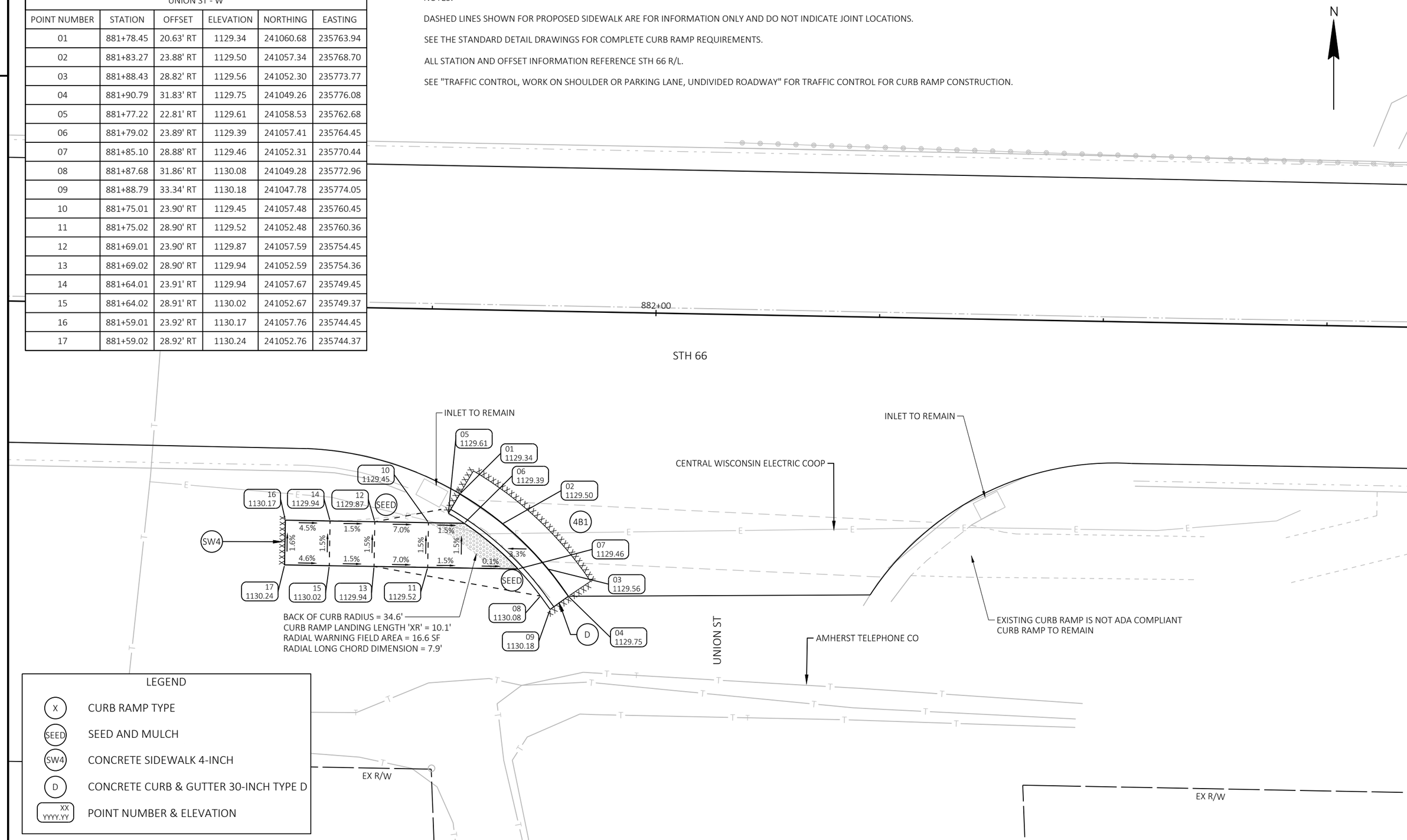

2

PROJECT NO: 6280-00-60	HWY: STH 66	COUNTY: PORTAGE	CURB RAMP DETAILS - UNION ST	SHEET 24	E

2

GAS STATION 2 - W					
POINT NUMBER	STATION	OFFSET	ELEVATION	NORTHING	EASTING
01	885+93.17	22.09' RT	1131.18	241057.71	236179.35
02	885+95.71	23.55' RT	1130.92	241056.29	236181.92
03	886+01.03	28.47' RT	1130.99	241051.46	236187.32
04	885+91.89	23.60' RT	1130.98	241056.18	236178.10
05	885+91.97	28.60' RT	1131.06	241051.18	236178.25
06	885+85.89	23.69' RT	1131.16	241055.99	236172.10
07	885+85.97	28.69' RT	1131.23	241051.00	236172.25
08	885+80.89	23.76' RT	1131.24	241055.84	236167.10
09	885+80.97	28.76' RT	1131.30	241050.84	236167.26

LEGEND

- (X) CURB RAMP TYPE
- (SEED) SEED AND MULCH
- (SW4) CONCRETE SIDEWALK 4-INCH
- (D) CONCRETE CURB & GUTTER 30-INCH TYPE D
- (XX / YYYY.YY) POINT NUMBER & ELEVATION

GAS STATION 2 - E					
POINT NUMBER	STATION	OFFSET	ELEVATION	NORTHING	EASTING
31	886+46.38	31.10' RT	1131.49	241049.55	236232.70
32	886+47.52	28.33' RT	1131.43	241052.34	236233.80
33	886+51.83	23.39' RT	1131.44	241057.35	236238.03
34	886+54.29	21.67' RT	1131.61	241059.10	236240.46
35	886+57.76	28.47' RT	1131.77	241052.36	236244.04
36	886+57.83	23.47' RT	1131.69	241057.36	236244.03
37	886+62.39	28.53' RT	1131.79	241052.37	236248.66
38	886+62.46	23.53' RT	1131.72	241057.37	236248.65
39	886+67.01	28.60' RT	1131.82	241052.38	236253.28
40	886+67.08	23.60' RT	1131.74	241057.38	236253.27
41	886+71.63	28.66' RT	1131.78	241052.39	236257.91
42	886+71.70	23.66' RT	1131.70	241057.39	236257.90

NOTES:

DASHED LINES SHOWN FOR PROPOSED SIDEWALK ARE FOR INFORMATION ONLY AND DO NOT INDICATE JOINT LOCATIONS.

SEE THE STANDARD DETAIL DRAWINGS FOR COMPLETE CURB RAMP REQUIREMENTS.

ALL STATION AND OFFSET INFORMATION REFERENCE STH 66 R/L.

SEE "TRAFFIC CONTROL, WORK ON SHOULDER OR PARKING LANE, UNDIVIDED ROADWAY" FOR TRAFFIC CONTROL FOR CURB RAMP CONSTRUCTION.

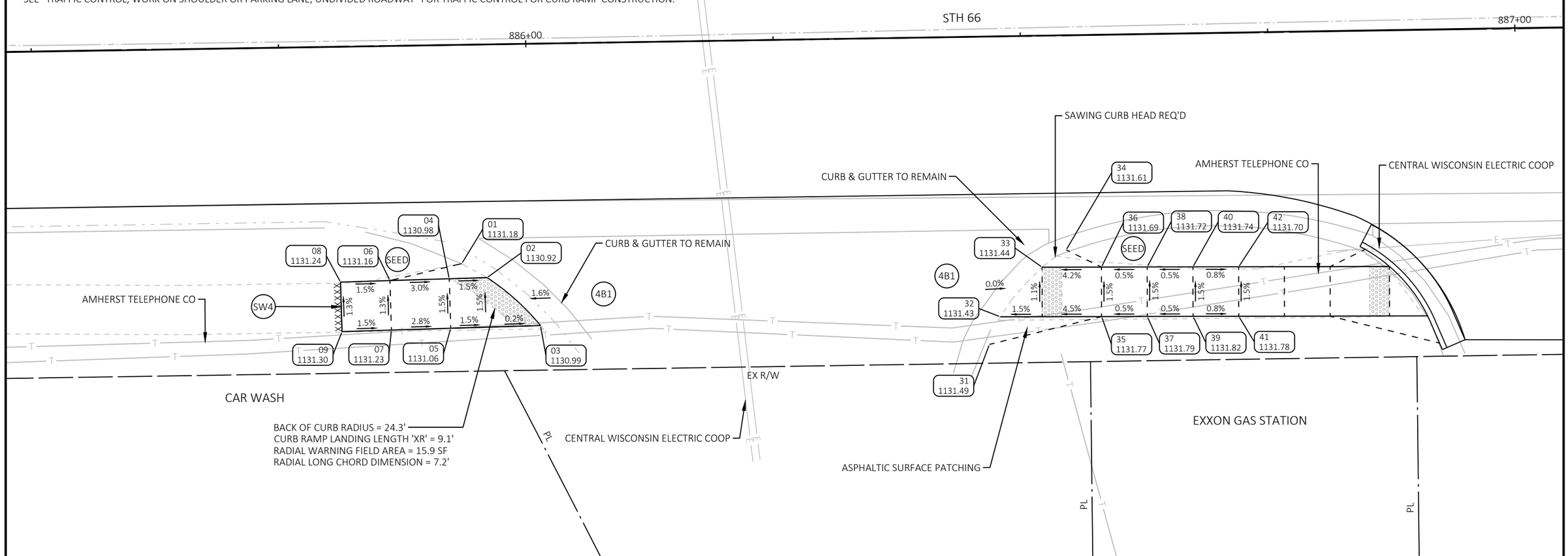

2

PROJECT NO: 6280-00-60	HWY: STH 66	COUNTY: PORTAGE	CURB RAMP DETAILS - GAS STATION 2	SHEET 25	E

2

DEPOT ST - W					
POINT NUMBER	STATION	OFFSET	ELEVATION	NORTHING	EASTING
01	886+85.17	19.61' RT	1131.29	241061.65	236271.31
02	886+90.45	23.92' RT	1131.55	241057.43	236276.65
03	886+93.46	28.96' RT	1131.62	241052.43	236279.74
04	886+94.47	31.38' RT	1131.77	241050.03	236280.78
05	886+83.99	21.82' RT	1131.71	241059.43	236270.16
06	886+86.94	23.87' RT	1131.45	241057.42	236273.14
07	886+90.72	28.92' RT	1131.52	241052.43	236277.00
08	886+92.16	32.34' RT	1131.69	241049.03	236278.49
09	886+80.94	23.79' RT	1131.63	241057.41	236267.14
10	886+80.87	28.79' RT	1131.70	241052.41	236267.15
11	886+76.32	23.72' RT	1131.66	241057.40	236262.52
12	886+76.25	28.72' RT	1131.74	241052.40	236262.53
13	886+71.70	23.66' RT	1131.70	241057.39	236257.90
14	886+71.63	28.66' RT	1131.78	241052.39	236257.91
15	886+67.08	23.60' RT	1131.74	241057.38	236253.27
16	886+67.01	28.60' RT	1131.82	241052.38	236253.28
17	886+62.46	23.53' RT	1131.72	241057.37	236248.65
18	886+62.39	28.53' RT	1131.79	241052.37	236248.66

DEPOT ST - E					
POINT NUMBER	STATION	OFFSET	ELEVATION	NORTHING	EASTING
31	887+38.88	31.92' RT	1131.81	241050.20	236325.20
32	887+39.84	29.08' RT	1131.69	241053.05	236326.12
33	887+43.64	24.02' RT	1131.61	241058.17	236329.84
34	887+46.59	22.03' RT	1131.92	241060.22	236332.75
35	887+49.71	28.93' RT	1131.96	241053.36	236335.99
36	887+49.64	23.93' RT	1131.88	241058.36	236335.83
37	887+54.71	28.85' RT	1132.03	241053.52	236340.98
38	887+54.64	23.85' RT	1131.96	241058.52	236340.83
39	887+59.71	28.88' RT	1132.07	241053.57	236345.98
40	887+59.74	23.88' RT	1132.00	241058.57	236345.93
41	887+64.82	28.91' RT	1132.12	241053.63	236351.09
42	887+64.85	23.91' RT	1132.04	241058.63	236351.04

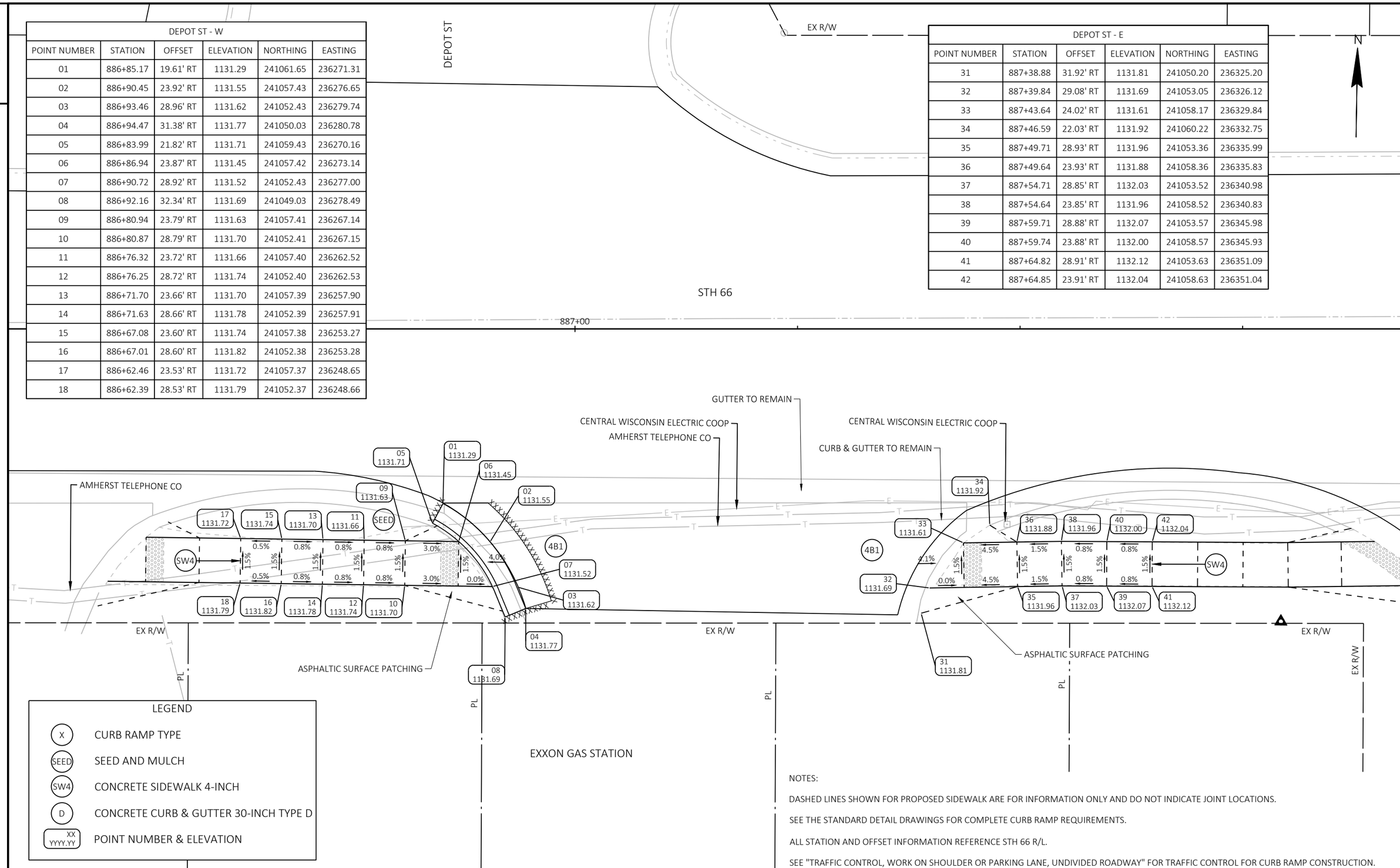

LEGEND

- (X) CURB RAMP TYPE
- (SEED) SEED AND MULCH
- (SW4) CONCRETE SIDEWALK 4-INCH
- (D) CONCRETE CURB & GUTTER 30-INCH TYPE D
- (XX YYYY.YY) POINT NUMBER & ELEVATION

NOTES:

DASHED LINES SHOWN FOR PROPOSED SIDEWALK ARE FOR INFORMATION ONLY AND DO NOT INDICATE JOINT LOCATIONS.

SEE THE STANDARD DETAIL DRAWINGS FOR COMPLETE CURB RAMP REQUIREMENTS.

ALL STATION AND OFFSET INFORMATION REFERENCE STH 66 R/L.

SEE "TRAFFIC CONTROL, WORK ON SHOULDER OR PARKING LANE, UNDIVIDED ROADWAY" FOR TRAFFIC CONTROL FOR CURB RAMP CONSTRUCTION.

PROJECT NO: 6280-00-60	HWY: STH 66	COUNTY: PORTAGE	CURB RAMP DETAILS - DEPOT ST	SHEET 26	E

2

WATER ST - W					
POINT NUMBER	STATION	OFFSET	ELEVATION	NORTHING	EASTING
01	887+87.51	22.54' RT	1129.57	241060.35	236373.67
02	887+89.82	23.87' RT	1131.77	241059.07	236376.00
03	887+96.17	28.78' RT	1131.70	241054.25	236382.43
04	887+98.68	31.45' RT	1131.65	241051.62	236384.99
05	887+86.06	23.91' RT	1131.78	241058.96	236372.24
06	887+86.12	28.91' RT	1131.86	241053.96	236372.39
07	887+80.06	23.99' RT	1132.05	241058.79	236366.25
08	887+80.12	28.99' RT	1132.13	241053.79	236366.39
09	887+75.06	23.97' RT	1132.12	241058.73	236361.25
10	887+75.02	28.96' RT	1132.20	241053.73	236361.29
11	887+69.95	23.94' RT	1132.08	241058.68	236356.14
12	887+69.92	28.94' RT	1132.16	241053.68	236356.19
13	887+64.85	23.91' RT	1132.04	241058.63	236351.04
14	887+64.82	28.91' RT	1132.12	241053.63	236351.09
15	887+59.74	23.88' RT	1132.00	241058.57	236345.93
16	887+59.71	28.88' RT	1132.07	241053.57	236345.98

WATER ST - E					
POINT NUMBER	STATION	OFFSET	ELEVATION	NORTHING	EASTING
31	888+30.23	34.03' RT	1131.76	241049.54	236416.57
32	888+31.63	28.95' RT	1131.79	241054.64	236417.89
33	888+35.23	23.33' RT	1131.80	241060.32	236421.40
34	888+42.81	18.59' RT	1132.13	241065.18	236428.91
35	888+32.68	34.54' RT	1132.18	241049.07	236419.03
36	888+33.32	31.74' RT	1132.12	241051.89	236419.63
37	888+34.39	28.96' RT	1131.73	241054.68	236420.65
38	888+38.30	23.95' RT	1131.86	241059.75	236424.48
39	888+40.77	22.24' RT	1132.39	241061.50	236426.93
40	888+43.60	20.97' RT	1132.55	241062.81	236429.74

WATER ST - E					
POINT NUMBER	STATION	OFFSET	ELEVATION	NORTHING	EASTING
41	888+44.30	23.95' RT	1132.28	241059.85	236430.48
42	888+44.30	28.95' RT	1132.21	241054.86	236430.56
43	888+49.30	23.94' RT	1132.35	241059.94	236435.48
44	888+49.30	28.94' RT	1132.28	241054.94	236435.56
45	888+54.30	23.94' RT	1132.56	241060.02	236440.48
46	888+54.30	28.94' RT	1132.51	241055.02	236440.56
47	888+59.30	23.93' RT	1132.77	241060.11	236445.48
48	888+59.30	28.93' RT	1132.73	241055.11	236445.56
49	888+64.30	23.93' RT	1132.99	241060.19	236450.47
50	888+64.30	28.93' RT	1132.96	241055.19	236450.56

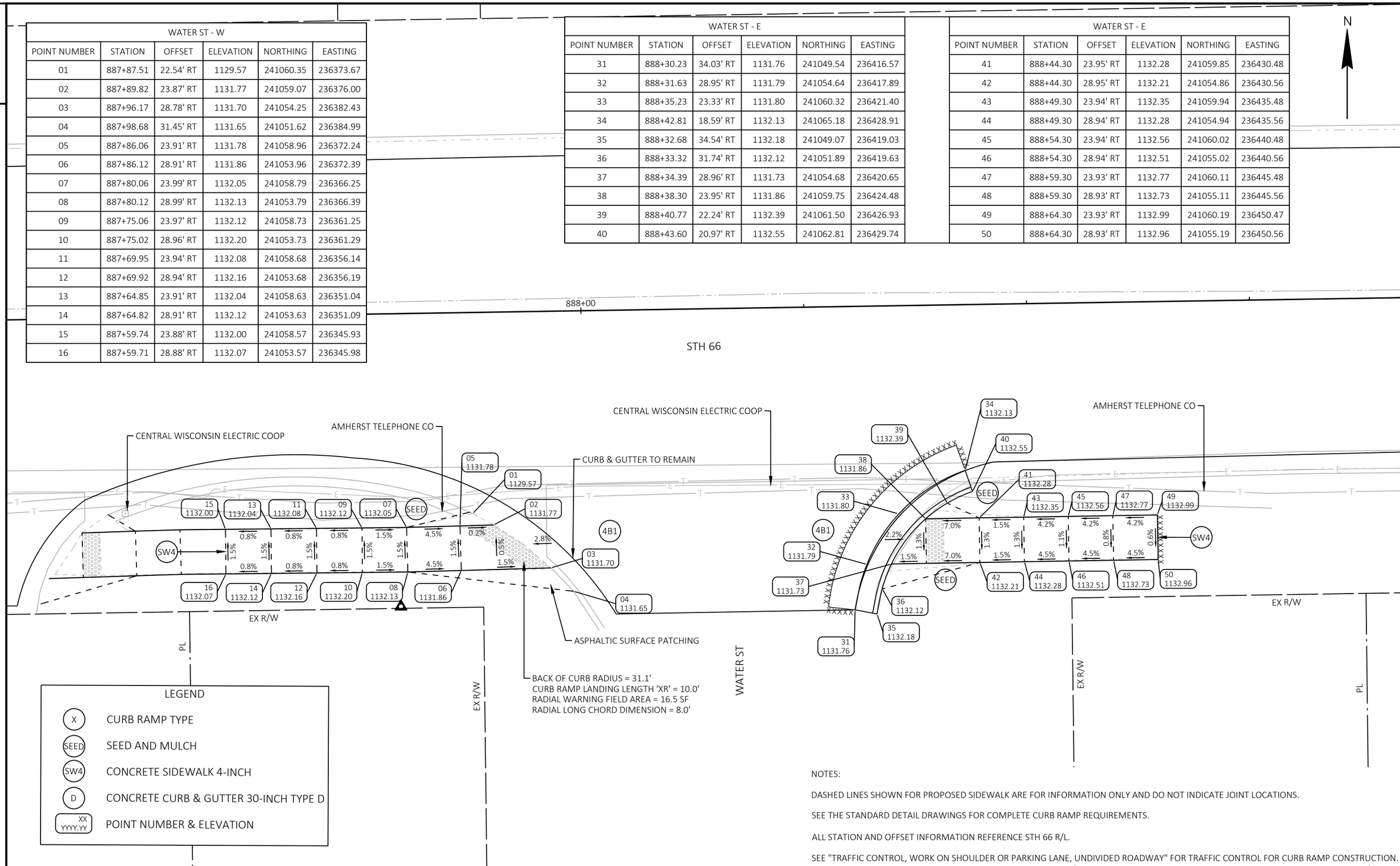

NOTES:

DASHED LINES SHOWN FOR PROPOSED SIDEWALK ARE FOR INFORMATION ONLY AND DO NOT INDICATE JOINT LOCATIONS.

SEE THE STANDARD DETAIL DRAWINGS FOR COMPLETE CURB RAMP REQUIREMENTS.

ALL STATION AND OFFSET INFORMATION REFERENCE STH 66 R/L.

SEE "TRAFFIC CONTROL, WORK ON SHOULDER OR PARKING LANE, UNDIVIDED ROADWAY" FOR TRAFFIC CONTROL FOR CURB RAMP CONSTRUCTION.

2

JEFFERSON ST - W					
POINT NUMBER	STATION	OFFSET	ELEVATION	NORTHING	EASTING
01	891+99.38	19.12' RT	1134.97	241070.34	236785.44
02	892+06.04	23.75' RT	1135.13	241065.81	236792.18
03	892+09.28	28.85' RT	1135.19	241060.76	236795.49
04	892+10.45	33.30' RT	1135.28	241056.34	236796.73
05	891+98.53	21.47' RT	1135.39	241067.97	236784.63
06	892+02.72	23.85' RT	1135.03	241065.66	236788.85
07	892+06.59	28.85' RT	1135.09	241060.72	236792.80
08	892+08.01	33.82' RT	1135.70	241055.78	236794.30
09	891+96.72	23.85' RT	1135.43	241065.56	236782.85
10	891+96.72	28.85' RT	1135.46	241060.56	236782.93
11	891+91.72	23.85' RT	1135.50	241065.48	236777.86
12	891+91.72	28.85' RT	1135.53	241060.48	236777.93
13	891+86.72	23.85' RT	1135.48	241065.41	236772.86
14	891+86.72	28.85' RT	1135.60	241060.41	236772.93
15	892+07.69	32.38' RT	1135.67	241057.21	236793.96

NOTES:

DASHED LINES SHOWN FOR PROPOSED SIDEWALK ARE FOR INFORMATION ONLY AND DO NOT INDICATE JOINT LOCATIONS.

SEE THE STANDARD DETAIL DRAWINGS FOR COMPLETE CURB RAMP REQUIREMENTS.

ALL STATION AND OFFSET INFORMATION REFERENCE STH 66 R/L.

SEE "TRAFFIC CONTROL, WORK ON SHOULDER OR PARKING LANE, UNDIVIDED ROADWAY" FOR TRAFFIC CONTROL FOR CURB RAMP CONSTRUCTION.

JEFFERSON ST - E					
POINT NUMBER	STATION	OFFSET	ELEVATION	NORTHING	EASTING
31	892+31.96	34.29' RT	1135.20	241055.69	236818.25
32	892+33.60	28.77' RT	1135.04	241061.24	236819.80
33	892+36.69	23.86' RT	1134.99	241066.20	236822.82
34	892+44.19	18.44' RT	1134.89	241071.73	236830.23
35	892+34.42	34.70' RT	1135.62	241055.32	236820.72
36	892+34.95	32.11' RT	1135.54	241057.92	236821.21
37	892+36.21	28.86' RT	1134.93	241061.19	236822.41
38	892+40.08	23.86' RT	1134.92	241066.25	236826.21
39	892+42.48	22.08' RT	1135.37	241068.07	236828.58
40	892+45.11	20.77' RT	1135.31	241069.42	236831.19
41	892+46.08	23.86' RT	1135.27	241066.34	236832.20
42	892+46.08	28.86' RT	1135.35	241061.34	236832.28
43	892+51.08	23.86' RT	1135.35	241066.42	236837.20
44	892+51.08	28.86' RT	1135.42	241061.42	236837.28
45	892+56.08	23.86' RT	1135.40	241066.50	236842.20
46	892+56.08	28.86' RT	1135.60	241061.50	236842.28

N

2

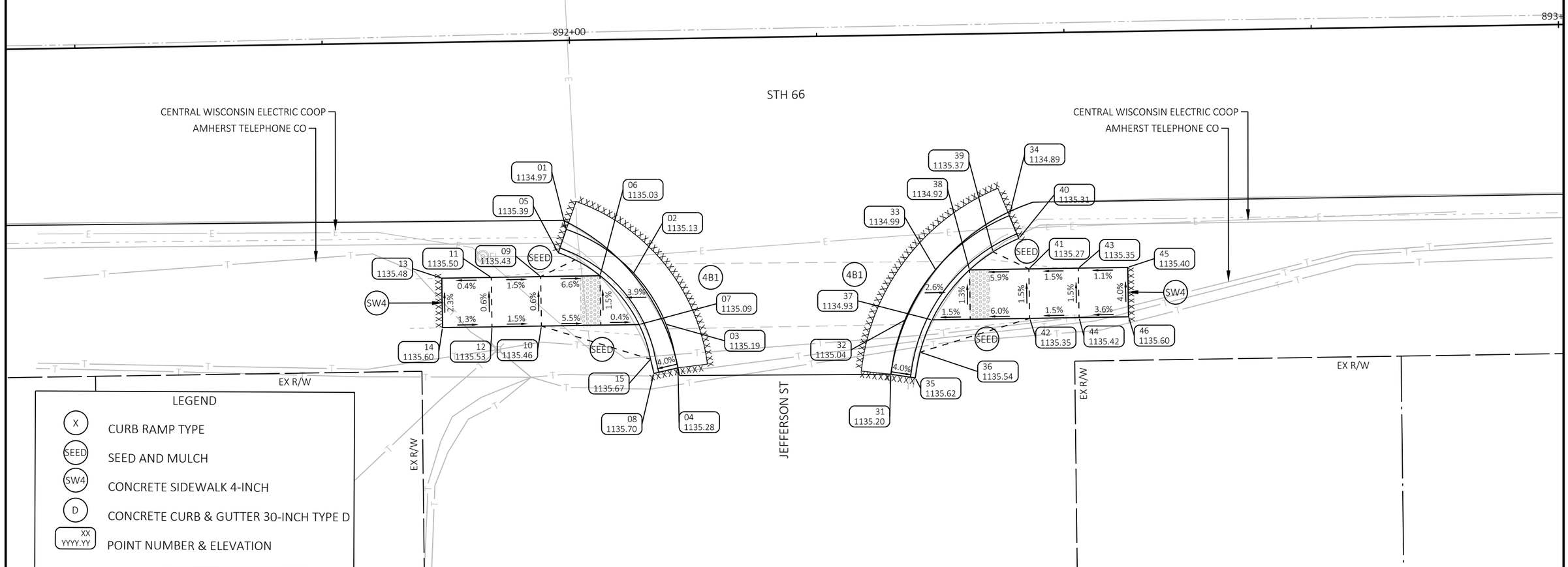

PROJECT NO: 6280-00-60	HWY: STH 66	COUNTY: PORTAGE	CURB RAMP DETAILS - JEFFERSON ST	SHEET 28	E

NOTES:

DASHED LINES SHOWN FOR PROPOSED SIDEWALK ARE FOR INFORMATION ONLY AND DO NOT INDICATE JOINT LOCATIONS.

SEE THE STANDARD DETAIL DRAWINGS FOR COMPLETE CURB RAMP REQUIREMENTS.

ALL STATION AND OFFSET INFORMATION REFERENCE STH 66 R/L.

SEE "TRAFFIC CONTROL, WORK ON SHOULDER OR PARKING LANE, UNDIVIDED ROADWAY" FOR TRAFFIC CONTROL FOR CURB RAMP CONSTRUCTION.

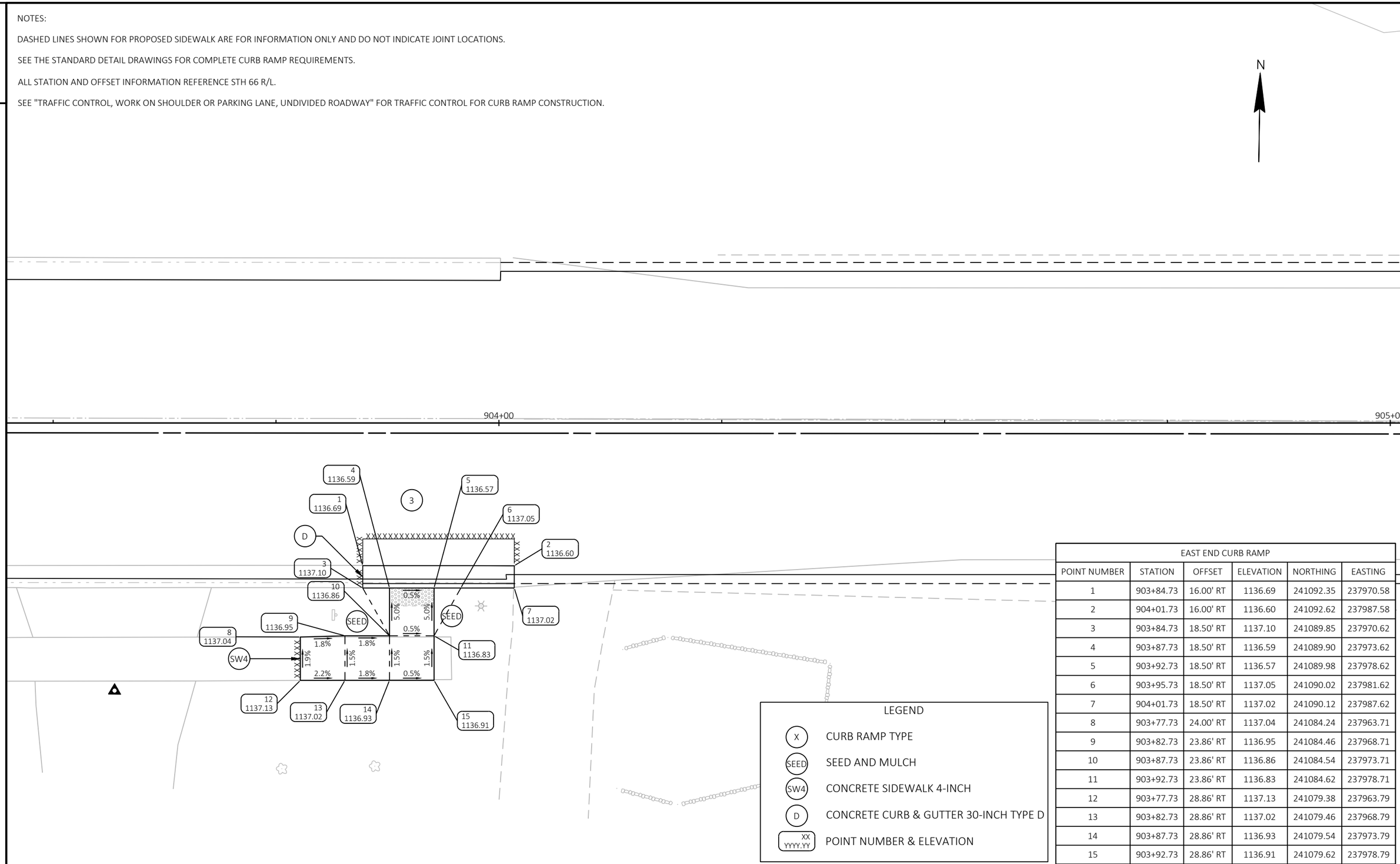

EAST END CURB RAMP					
POINT NUMBER	STATION	OFFSET	ELEVATION	NORTHING	EASTING
1	903+84.73	16.00' RT	1136.69	241092.35	237970.58
2	904+01.73	16.00' RT	1136.60	241092.62	237987.58
3	903+84.73	18.50' RT	1137.10	241089.85	237970.62
4	903+87.73	18.50' RT	1136.59	241089.90	237973.62
5	903+92.73	18.50' RT	1136.57	241089.98	237978.62
6	903+95.73	18.50' RT	1137.05	241090.02	237981.62
7	904+01.73	18.50' RT	1137.02	241090.12	237987.62
8	903+77.73	24.00' RT	1137.04	241084.24	237963.71
9	903+82.73	23.86' RT	1136.95	241084.46	237968.71
10	903+87.73	23.86' RT	1136.86	241084.54	237973.71
11	903+92.73	23.86' RT	1136.83	241084.62	237978.71
12	903+77.73	28.86' RT	1137.13	241079.38	237963.79
13	903+82.73	28.86' RT	1137.02	241079.46	237968.79
14	903+87.73	28.86' RT	1136.93	241079.54	237973.79
15	903+92.73	28.86' RT	1136.91	241079.62	237978.79

2

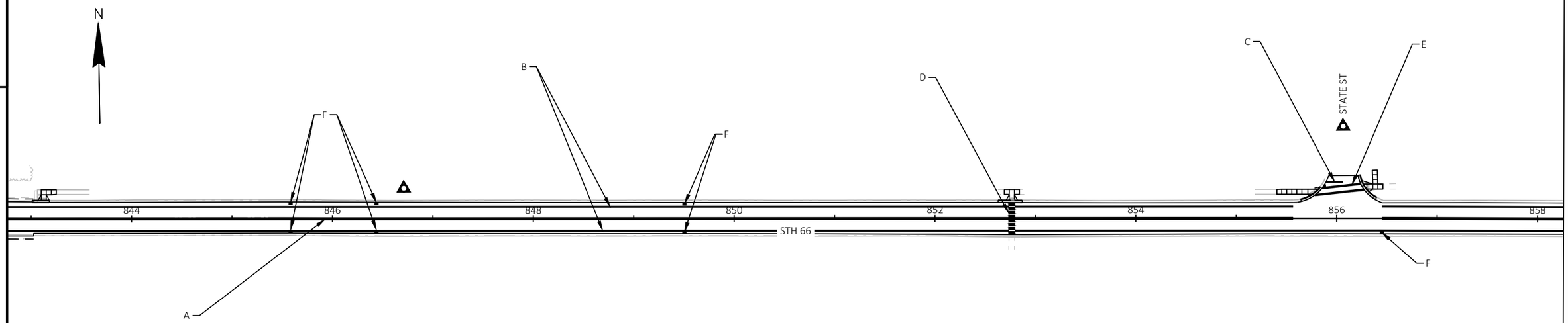

PAVEMENT MARKING LEGEND	
A	MARKING LINE EPOXY 4-INCH (DOUBLE YELLOW)
B	MARKING LINE EPOXY 4-INCH (SINGLE WHITE)
C	MARKING STOP LINE EPOXY 18-INCH
D	MARKING CROSSWALK EPOXY BLOCK STYLE 24-INCH
E	MARKING CROSSWALK EPOXY TRANSVERSE LINE 6-INCH
F	MARKING LINE EPOXY INLET

NOTE:

WHITE EDGELINES BETWEEN STA 843+01 AND STA 904+02 SHALL BE MARKING LINE EPOXY 4-INCH.

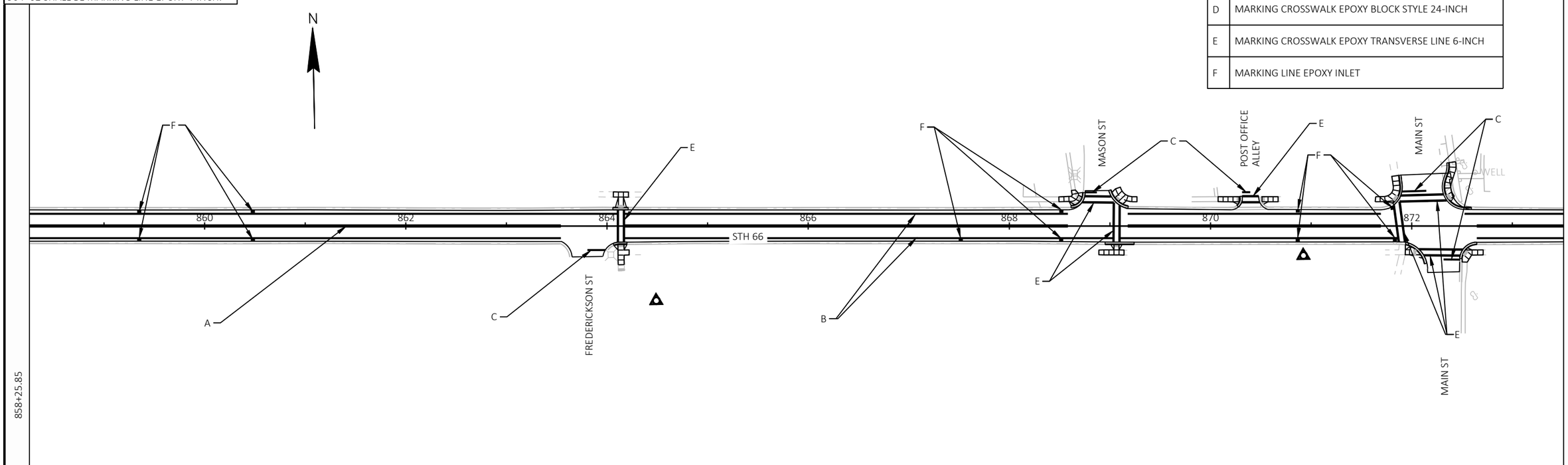

PROJECT NO: 6280-00-60	HWY: STH 66	COUNTY: PORTAGE	PAVEMENT MARKING	SHEET 30	E

2

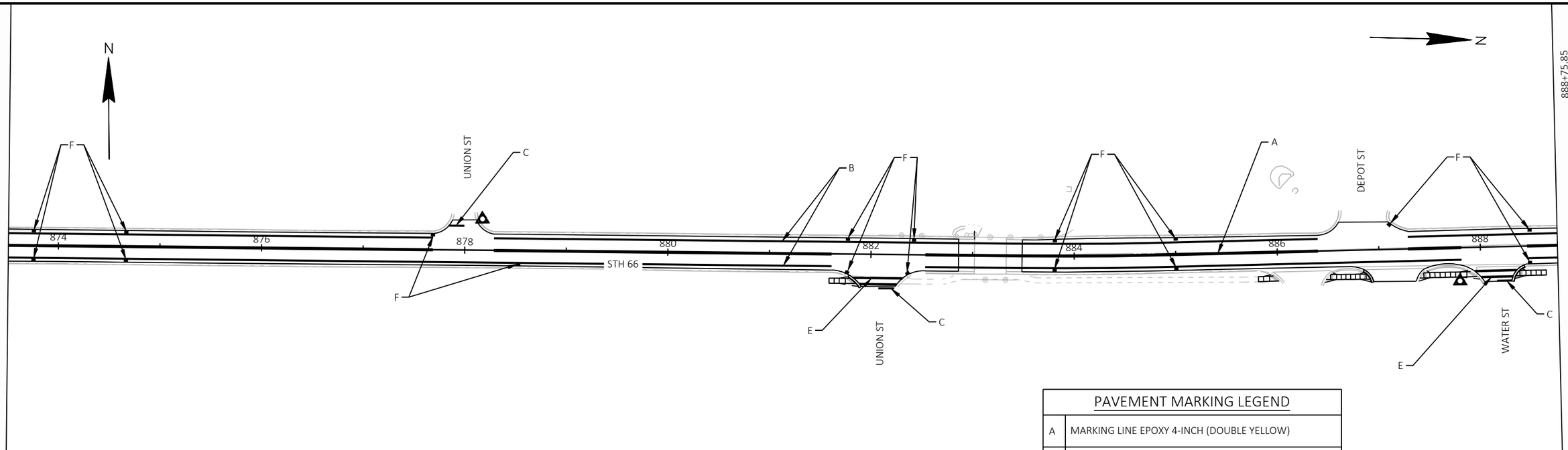

PAVEMENT MARKING LEGEND	
A	MARKING LINE EPOXY 4-INCH (DOUBLE YELLOW)
B	MARKING LINE EPOXY 4-INCH (SINGLE WHITE)
C	MARKING STOP LINE EPOXY 18-INCH
D	MARKING CROSSWALK EPOXY BLOCK STYLE 24-INCH
E	MARKING CROSSWALK EPOXY TRANSVERSE LINE 6-INCH
F	MARKING LINE EPOXY INLET

NOTE:

WHITE EDGELINES BETWEEN STA 843+01 AND STA 904+02 SHALL BE MARKING LINE EPOXY 4-INCH.

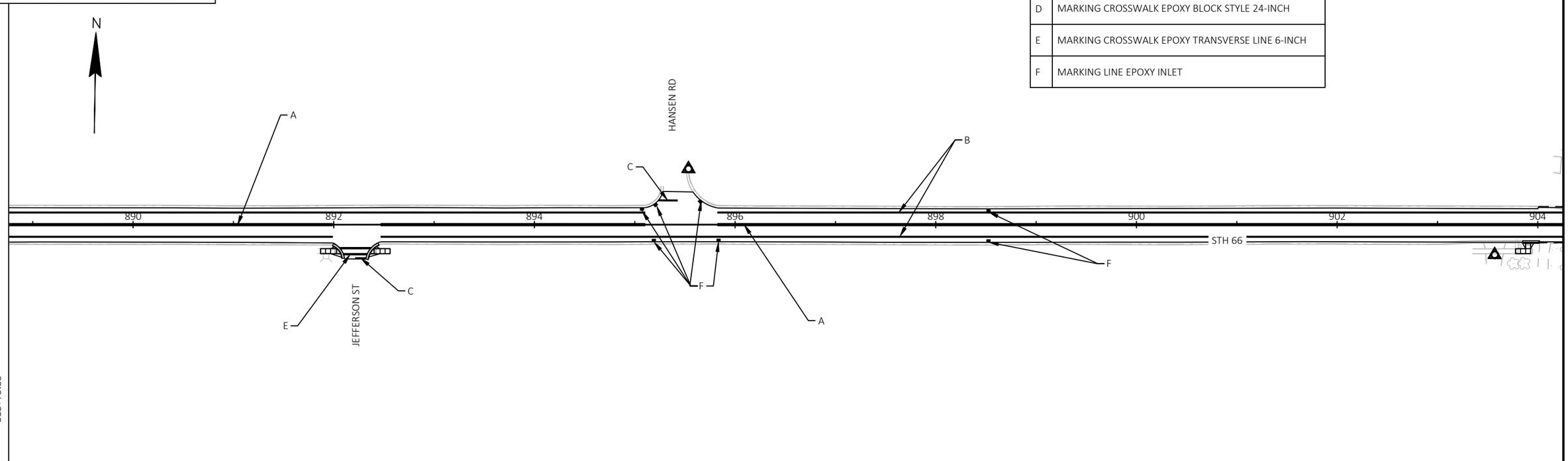

PROJECT NO: 6280-00-60	HWY: STH 66	COUNTY: PORTAGE	PAVEMENT MARKING	SHEET 31	E

2

LEGEND

- TYPE II BARRICADE WITH/WITHOUT ATTACHED SIGN
- TRAFFIC CONTROL DRUMS
- WORK AREA
- TEMPORARY PEDESTRIAN CURB RAMP
- TEMPORARY PEDESTRIAN SURFACE MATTING
- TEMPORARY PEDESTRIAN BARRICADE
- PEDESTRIAN PATH DURING CONSTRUCTION

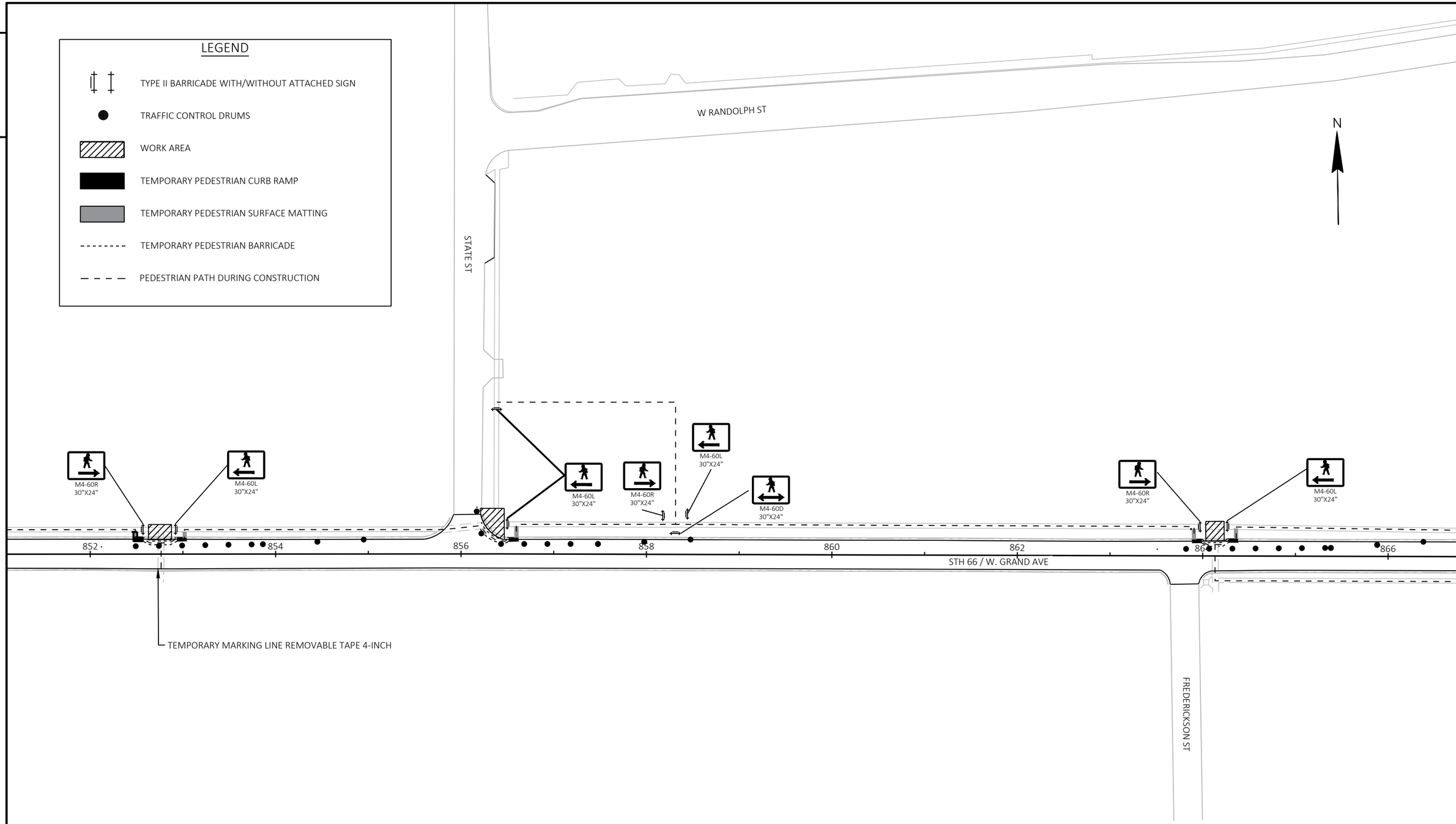

REFER TO CONSTRUCTION DETAILS- PEDESTRIAN ACCOMMODATIONS: LANE SHIFT FOR TRAFFIC CONTROL GUIDANCE

PROJECT NO: 6280-00-60	HWY: STH 66	COUNTY: PORTAGE	PEDESTRIAN TRAFFIC CONTROL STAGE 1	SHEET 32	E

2

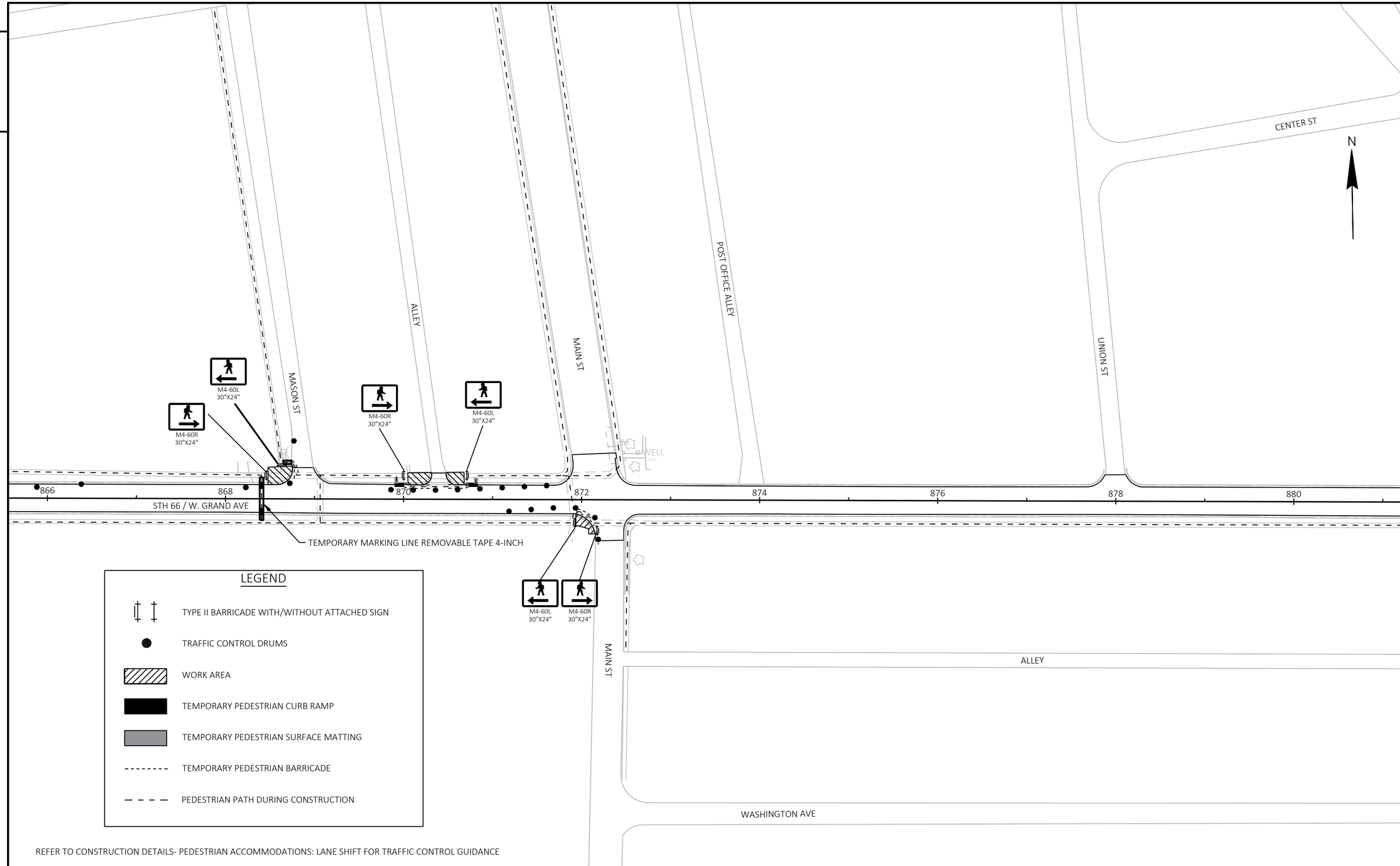

REFER TO CONSTRUCTION DETAILS- PEDESTRIAN ACCOMMODATIONS: LANE SHIFT FOR TRAFFIC CONTROL GUIDANCE

PROJECT NO: 6280-00-60	HWY: STH 66	COUNTY: PORTAGE	PEDESTRIAN TRAFFIC CONTROL STAGE 1	SHEET 33	E

FILE NAME : C:\OD\CORRE, INC\PROJECTS - WI-NC REGION\6280-00-30_STH 66_PORTAGE CO\500_CADD\501_C3D_2018\62800030\SHEETSPLAN\027001-DT.DWG
LAYOUT NAME - 02
PLOT DATE : 7/15/2022 5:33 PM PLOT BY : BOBBY JONES PLOT NAME : PLOT SCALE : 1 IN:100 FT

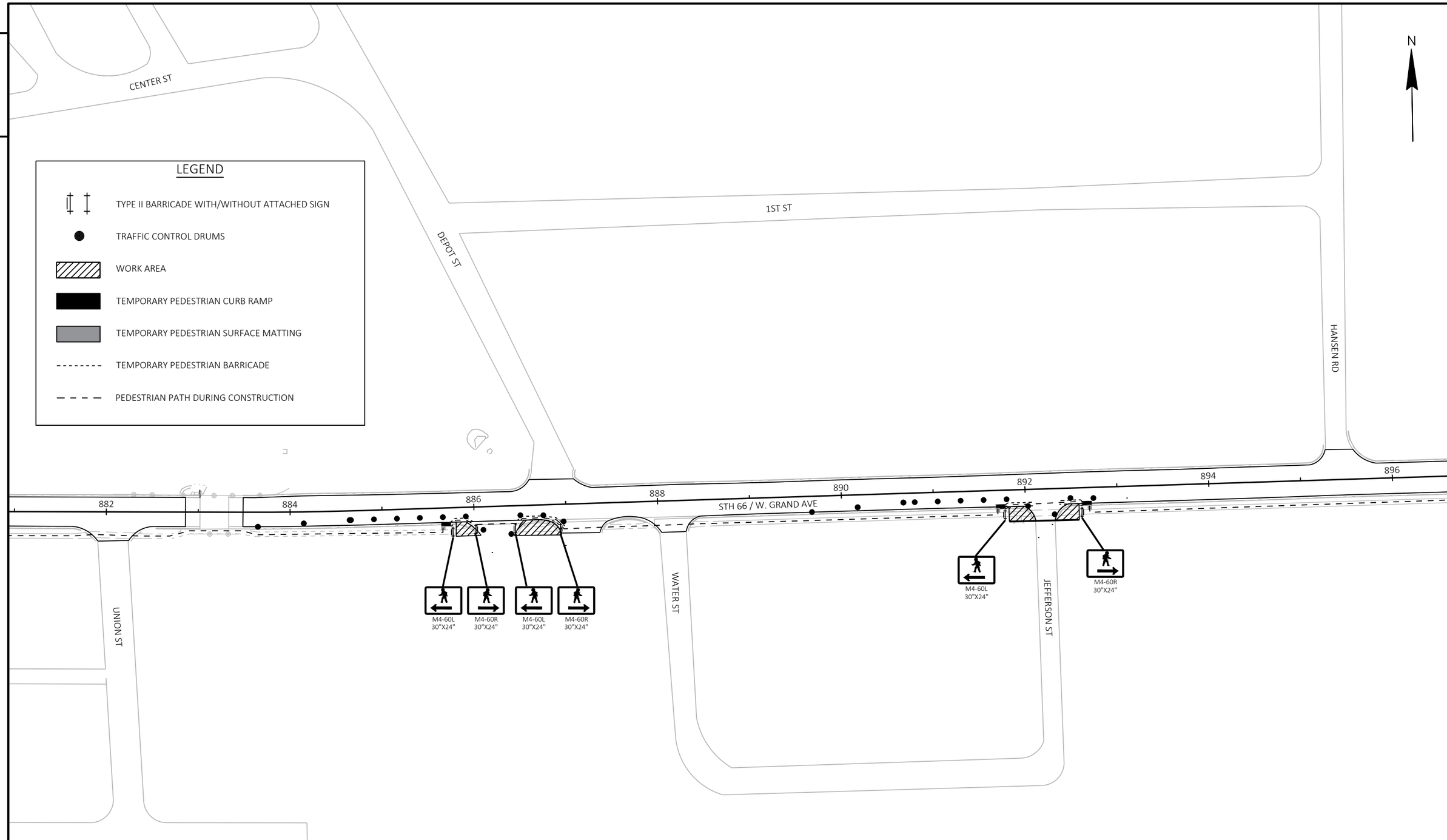

REFER TO CONSTRUCTION DETAILS- PEDESTRIAN ACCOMMODATIONS: LANE SHIFT FOR TRAFFIC CONTROL GUIDANCE

PROJECT NO: 6280-00-60	HWY: STH 66	COUNTY: PORTAGE	PEDESTRIAN TRAFFIC CONTROL STAGE 1	SHEET 34	E

FILE NAME : C:\OD\CORRE, INC\PROJECTS - WI-NC REGION\6280-00-30_STH 66_PORTAGE CO\500_CADD\501_C3D_2018\62800030\SHEETSPLAN\027001-DT.DWG
LAYOUT NAME - 03
PLOT DATE : 7/15/2022 5:33 PM PLOT BY : BOBBY JONES PLOT NAME : PLOT SCALE : 1 IN:100 FT

2

LEGEND

- TYPE II BARRICADE WITH/WITHOUT ATTACHED SIGN
- TRAFFIC CONTROL DRUMS
- WORK AREA
- TEMPORARY PEDESTRIAN CURB RAMP
- TEMPORARY PEDESTRIAN SURFACE MATTING
- TEMPORARY PEDESTRIAN BARRICADE
- PEDESTRIAN PATH DURING CONSTRUCTION

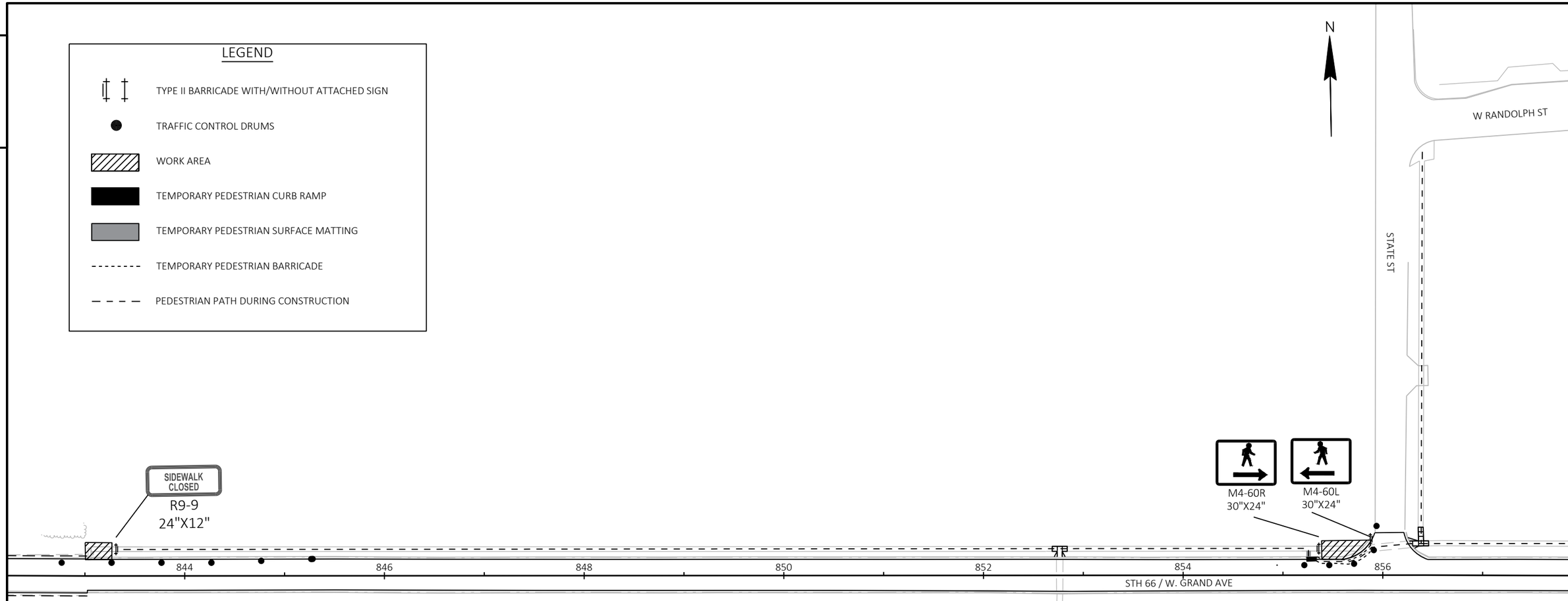

REFER TO CONSTRUCTION DETAILS- PEDESTRIAN ACCOMMODATIONS: LANE SHIFT FOR TRAFFIC CONTROL GUIDANCE

PROJECT NO: 6280-00-60	HWY: STH 66	COUNTY: PORTAGE	PEDESTRIAN TRAFFIC CONTROL STAGE 2	SHEET 35	E

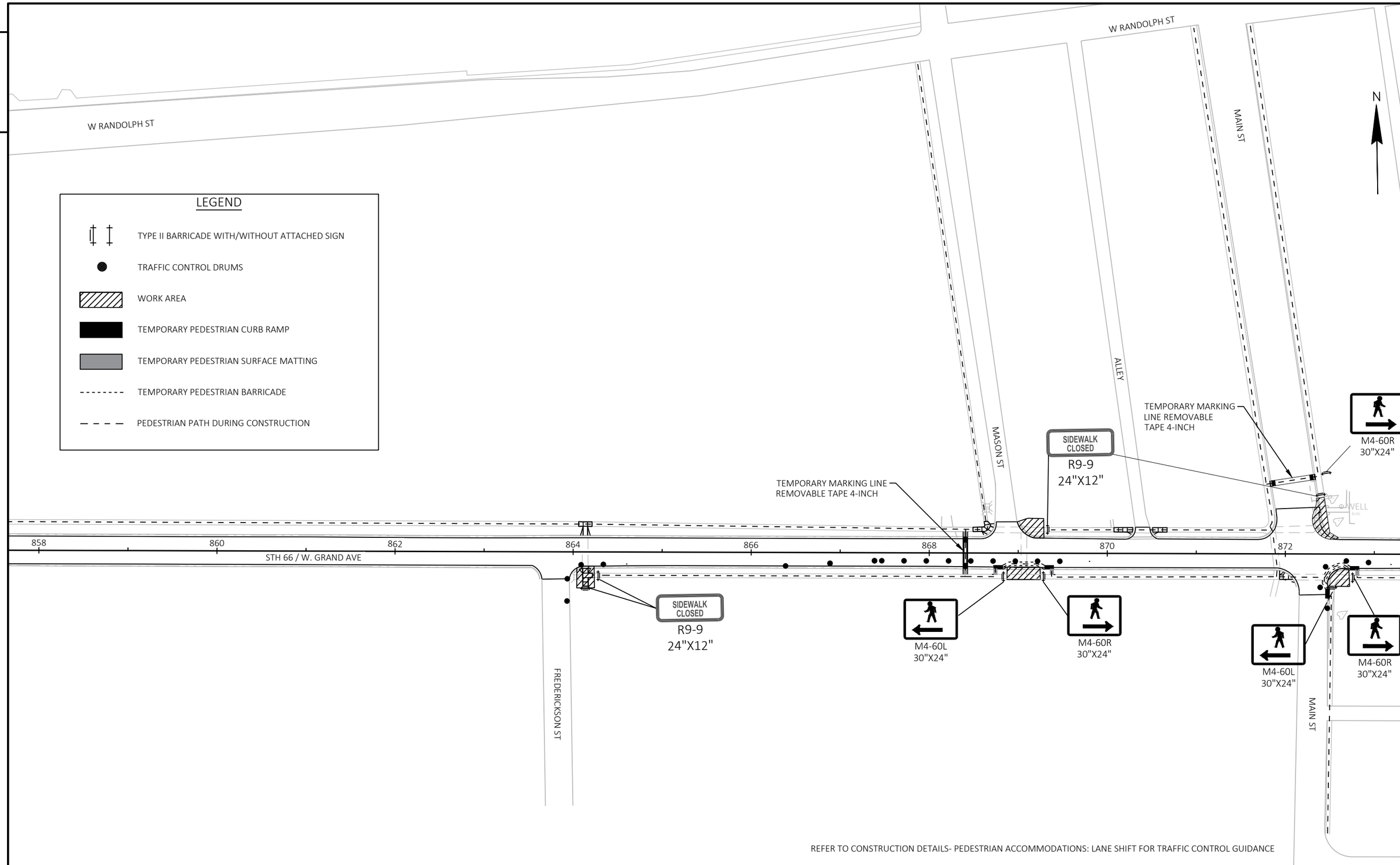

PROJECT NO: 6280-00-60	HWY: STH 66	COUNTY: PORTAGE	PEDESTRIAN TRAFFIC CONTROL STAGE 2	SHEET 36	E

FILE NAME : C:\OD\CORRE, INC\PROJECTS - WI-NC REGION\6280-00-30_STH 66_PORTAGE CO\500_CADD\501_C3D_2018\62800030\SHEETSPLAN\027002-DT.DWG
LAYOUT NAME - 02
PLOT DATE : 7/15/2022 5:33 PM PLOT BY : BOBBY JONES PLOT NAME : PLOT SCALE : 1 IN:100 FT

WISDOT/CADDS SHEET 44

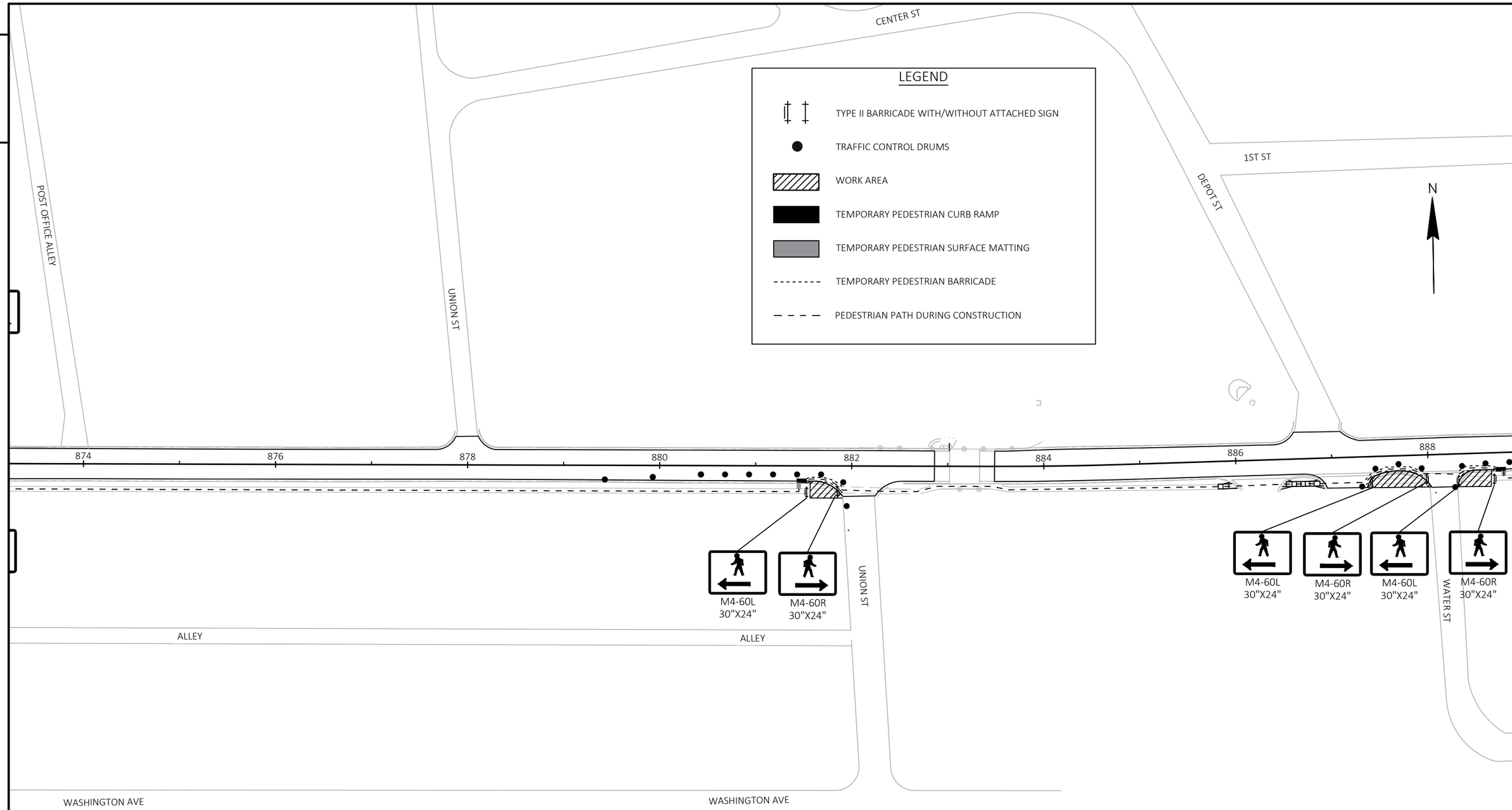

REFER TO CONSTRUCTION DETAILS- PEDESTRIAN ACCOMMODATIONS: LANE SHIFT FOR TRAFFIC CONTROL GUIDANCE

PROJECT NO: 6280-00-60	HWY: STH 66	COUNTY: PORTAGE	PEDESTRIAN TRAFFIC CONTROL STAGE 2	SHEET 37	E

FILE NAME : C:\OD\CORRE, INC\PROJECTS - WI-NC REGION\6280-00-30_STH 66_PORTAGE CO\500_CADD\501_C3D_2018\62800030\SHEETSPLAN\027002-DT.DWG
LAYOUT NAME - 03
PLOT DATE : 7/15/2022 5:33 PM PLOT BY : BOBBY JONES PLOT NAME : PLOT SCALE : 1 IN:100 FT

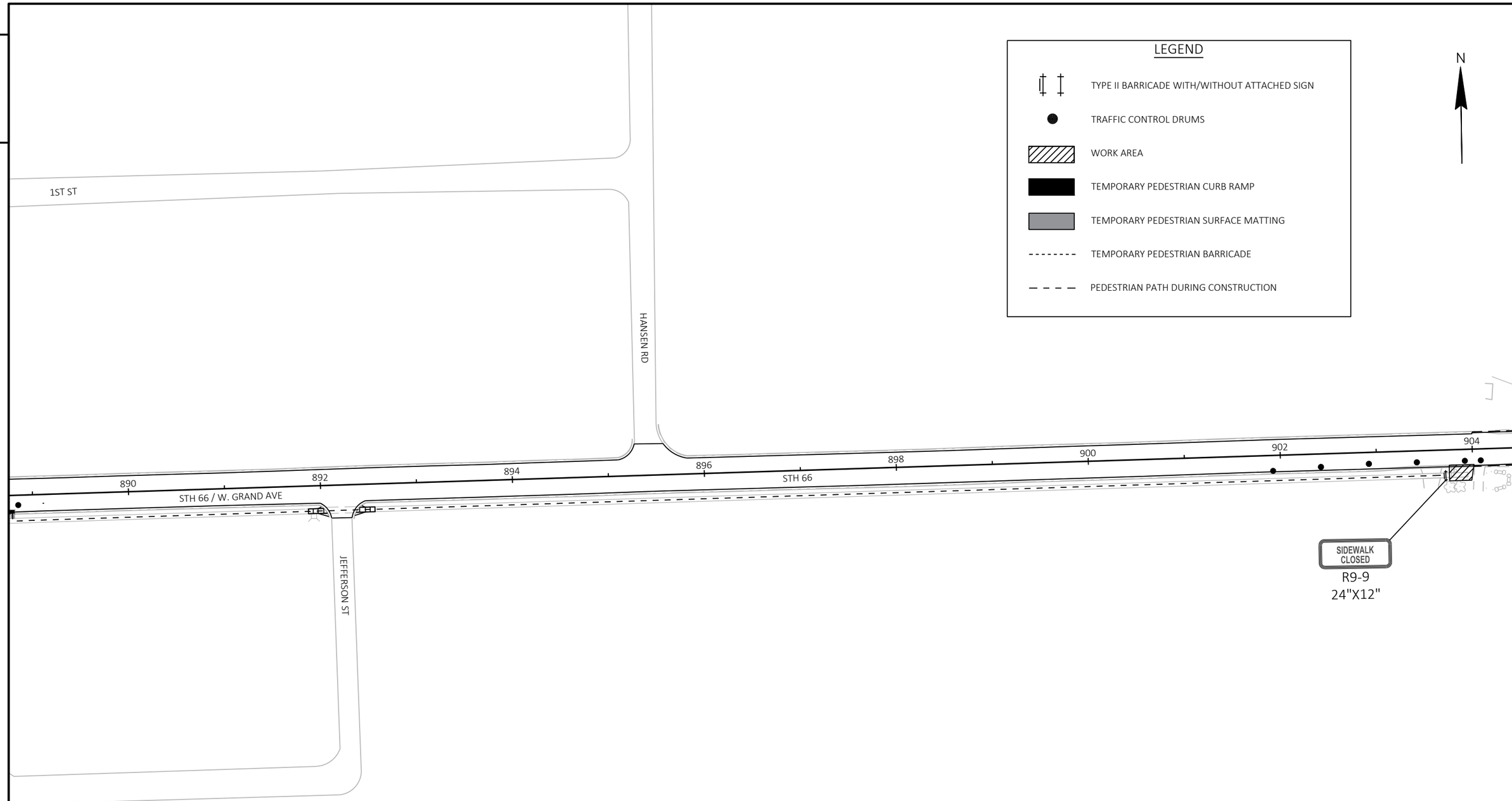

REFER TO CONSTRUCTION DETAILS- PEDESTRIAN ACCOMMODATIONS: LANE SHIFT FOR TRAFFIC CONTROL GUIDANCE

PROJECT NO: 6280-00-60	HWY: STH 66	COUNTY: PORTAGE	PEDESTRIAN TRAFFIC CONTROL STAGE 2	SHEET 38	E

FILE NAME : C:\OD\CORRE, INC\PROJECTS - WI-NC REGION\6280-00-30_STH 66_PORTAGE CO\500_CADD\501_C3D_2018\62800030\SHEETSPLAN\027002-DT.DWG
LAYOUT NAME - 04
PLOT DATE : 7/15/2022 5:33 PM PLOT BY : BOBBY JONES PLOT NAME : PLOT SCALE : 1 IN:100 FT

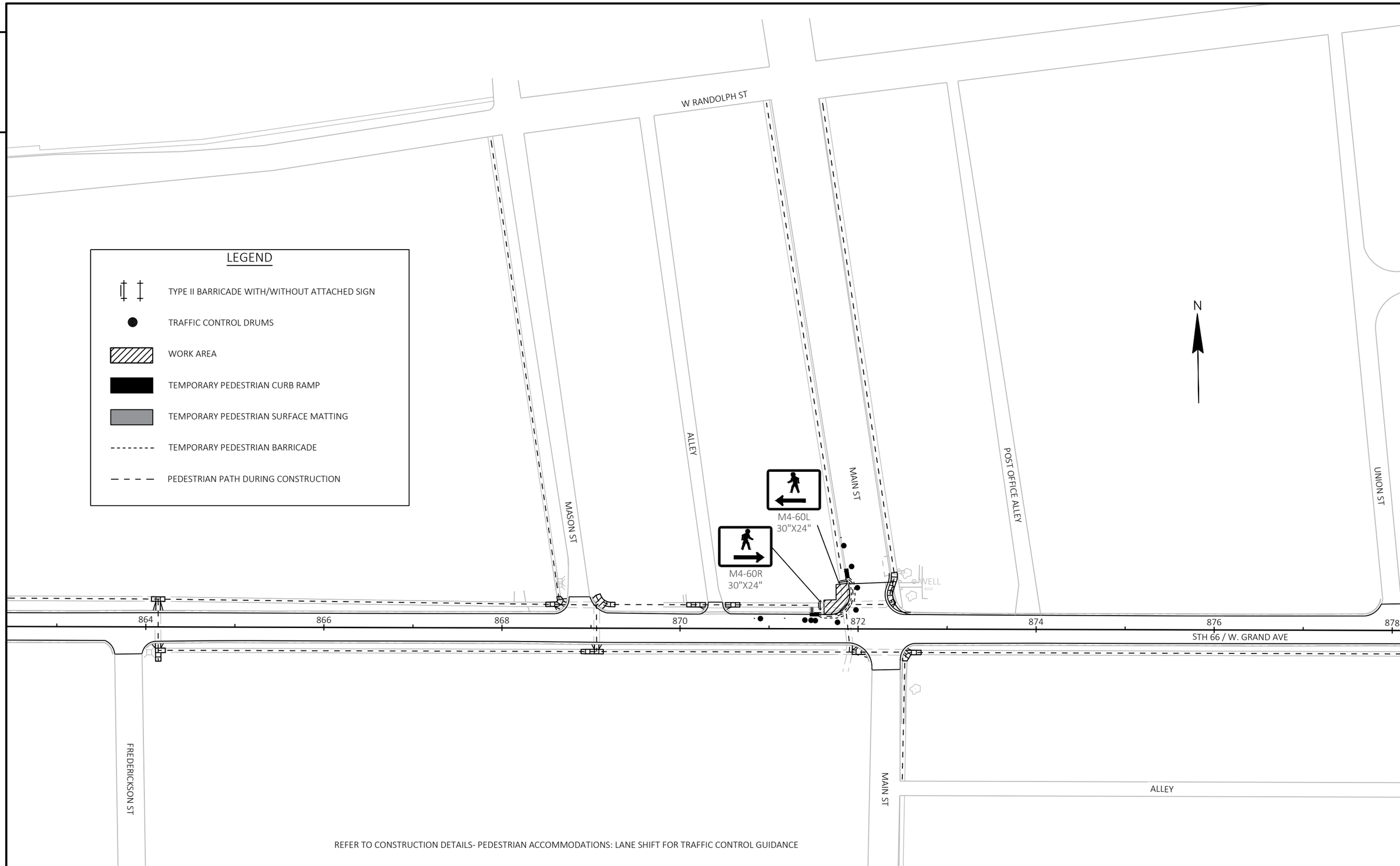

REFER TO CONSTRUCTION DETAILS- PEDESTRIAN ACCOMMODATIONS: LANE SHIFT FOR TRAFFIC CONTROL GUIDANCE

PROJECT NO: 6280-00-60	HWY: STH 66	COUNTY: PORTAGE	PEDESTRIAN TRAFFIC CONTROL STAGE 3	SHEET 39	E

FILE NAME : C:\OD\CORRE, INC\PROJECTS - WI-NC REGION\6280-00-30_STH 66_PORTAGE CO\500_CADD\501_C3D_2018\62800030\SHEETSPLAN\027003-DT.DWG
LAYOUT NAME - 01
PLOT DATE : 7/15/2022 5:33 PM
PLOT BY : BOBBY JONES
PLOT NAME :
PLOT SCALE : 1 IN:100 FT
WISDOT/CADDS SHEET 44

6280-00-60

Line	Item	Item Description	Unit	Total	Qty
0002	201.0105	Clearing	STA	1.000	1.000
0004	201.0205	Grubbing	STA	1.000	1.000
0006	203.0100	Removing Small Pipe Culverts	EACH	1.000	1.000
0008	204.0110	Removing Asphaltic Surface	SY	210.000	210.000
0010	204.0115	Removing Asphaltic Surface Butt Joints	SY	1,402.000	1,402.000
0012	204.0120	Removing Asphaltic Surface Milling	SY	206,200.000	206,200.000
0014	204.0150	Removing Curb & Gutter	LF	463.000	463.000
0016	204.0155	Removing Concrete Sidewalk	SY	380.000	380.000
0018	204.0165	Removing Guardrail	LF	432.000	432.000
0020	204.0190	Removing Surface Drains	EACH	1.000	1.000
0022	204.9060.S	Removing (item description) 01. Endwalls	EACH	1.000	1.000
0024	205.0100	Excavation Common	CY	1,843.000	1,843.000
0026	208.1500.S	Temporary Lane Shift During Culvert Work	EACH	4.000	4.000
0028	211.0400	Prepare Foundation for Asphaltic Shoulders	STA	62.000	62.000
0030	213.0100	Finishing Roadway (project) 01. 6280-00-60	EACH	1.000	1.000
0032	305.0110	Base Aggregate Dense 3/4-Inch	TON	3,561.000	3,561.000
0034	305.0120	Base Aggregate Dense 1 1/4-Inch	TON	1,945.000	1,945.000
0036	305.0504.S	Hauling Excess Shoulder Material	CY	250.000	250.000
0038	455.0605	Tack Coat	GAL	14,540.000	14,540.000
0040	460.0105.S	HMA Percent Within Limits (PWL) Test Strip Volumetrics	EACH	1.000	1.000
0042	460.0110.S	HMA Percent Within Limits (PWL) Test Strip Density	EACH	1.000	1.000
0044	460.2005	Incentive Density PWL HMA Pavement	DOL	12,440.000	12,440.000
0046	460.2007	Incentive Density HMA Pavement Longitudinal Joints	DOL	22,210.000	22,210.000
0048	460.2010	Incentive Air Voids HMA Pavement	DOL	17,450.000	17,450.000
0050	460.6225	HMA Pavement 5 MT 58-28 S	TON	17,450.000	17,450.000
0052	465.0105	Asphaltic Surface	TON	379.000	379.000
0054	465.0110	Asphaltic Surface Patching	TON	50.000	50.000
0056	465.0315	Asphaltic Flumes	SY	25.000	25.000
0058	465.0475	Asphalt Centerline Rumble Strips 2-Lane Rural	LF	41,910.000	41,910.000
0060	504.0900	Concrete Masonry Endwalls	CY	12.000	12.000
0062	520.1024	Apron Endwalls for Culvert Pipe 24-Inch	EACH	2.000	2.000
0064	520.3324	Culvert Pipe Class III-A 24-Inch	LF	56.000	56.000
0066	520.8000	Concrete Collars for Pipe	EACH	1.000	1.000
0068	522.0130	Culvert Pipe Reinforced Concrete Class III 30-Inch	LF	8.000	8.000
0070	522.1030	Apron Endwalls for Culvert Pipe Reinforced Concrete 30-Inch	EACH	1.000	1.000
0072	522.1500	Pipe Cattle Pass Reinforced Concrete	LF	68.000	68.000
0074	601.0411	Concrete Curb & Gutter 30-Inch Type D	LF	543.000	543.000
0076	601.0557	Concrete Curb & Gutter 6-Inch Sloped 36-Inch Type D	LF	30.000	30.000
0078	602.0405	Concrete Sidewalk 4-Inch	SF	3,311.000	3,311.000
0080	602.0505	Curb Ramp Detectable Warning Field Yellow	SF	210.000	210.000
0082	602.0605	Curb Ramp Detectable Warning Field Radial Yellow	SF	65.000	65.000
0084	614.2300	MGS Guardrail 3	LF	450.000	450.000
0086	614.2340	MGS Guardrail 3 L	LF	225.000	225.000
0088	614.2610	MGS Guardrail Terminal EAT	EACH	4.000	4.000
0090	618.0100	Maintenance And Repair of Haul Roads (project) 01. 6280-00-60	EACH	1.000	1.000
0092	619.1000	Mobilization	EACH	1.000	1.000
0094	625.0100	Topsoil	SY	3,292.000	3,292.000
0096	627.0200	Mulching	SY	1,810.000	1,810.000
0098	628.1504	Silt Fence	LF	2,500.000	2,500.000

6280-00-60

Line	Item	Item Description	Unit	Total	Qty
0100	628.1520	Silt Fence Maintenance	LF	2,500.000	2,500.000
0102	628.1905	Mobilizations Erosion Control	EACH	2.000	2.000
0104	628.1910	Mobilizations Emergency Erosion Control	EACH	2.000	2.000
0106	628.2008	Erosion Mat Urban Class I Type B	SY	1,482.000	1,482.000
0108	629.0210	Fertilizer Type B	CWT	2.400	2.400
0110	630.0120	Seeding Mixture No. 20	LB	67.000	67.000
0112	630.0140	Seeding Mixture No. 40	LB	17.000	17.000
0114	630.0500	Seed Water	MGAL	89.000	89.000
0116	642.5001	Field Office Type B	EACH	1.000	1.000
0118	643.0300	Traffic Control Drums	DAY	4,918.000	4,918.000
0120	643.0410	Traffic Control Barricades Type II	DAY	546.000	546.000
0122	643.0705	Traffic Control Warning Lights Type A	DAY	546.000	546.000
0124	643.0900	Traffic Control Signs	DAY	4,416.000	4,416.000
0126	643.1000	Traffic Control Signs Fixed Message	SF	36.000	36.000
0128	643.3105	Temporary Marking Line Paint 4-Inch	LF	68,600.000	68,600.000
0130	643.3120	Temporary Marking Line Epoxy 4-Inch	LF	70,100.000	70,100.000
0132	643.3150	Temporary Marking Line Removable Tape 4-Inch	LF	4,800.000	4,800.000
0134	643.5000	Traffic Control	EACH	1.000	1.000
0136	644.1440	Temporary Pedestrian Surface Matting	SF	475.000	475.000
0138	644.1601	Temporary Pedestrian Curb Ramp	DAY	322.000	322.000
0140	644.1810	Temporary Pedestrian Barricade	LF	1,674.000	1,674.000
0142	646.1020	Marking Line Epoxy 4-Inch	LF	81,500.000	81,500.000
0144	646.1040	Marking Line Grooved Wet Ref Epoxy 4-Inch	LF	97,000.000	97,000.000
0146	646.3040	Marking Line Grooved Wet Ref Epoxy 8-Inch	LF	860.000	860.000
0148	646.4520	Marking Line Same Day Epoxy 4-Inch	LF	4,160.000	4,160.000
0150	646.6120	Marking Stop Line Epoxy 18-Inch	LF	423.000	423.000
0152	646.7420	Marking Crosswalk Epoxy Transverse Line 6-Inch	LF	781.000	781.000
0154	646.7520	Marking Crosswalk Epoxy Block Style 24-Inch	LF	48.000	48.000
0156	646.9000	Marking Removal Line 4-Inch	LF	1,642.000	1,642.000
0158	648.0100	Locating No-Passing Zones	MI	10.520	10.520
0160	650.4500	Construction Staking Subgrade	LF	732.000	732.000
0162	650.5000	Construction Staking Base	LF	732.000	732.000
0164	650.5500	Construction Staking Curb Gutter and Curb & Gutter	LF	643.000	643.000
0166	650.6000	Construction Staking Pipe Culverts	EACH	2.000	2.000
0168	650.8000	Construction Staking Resurfacing Reference	LF	55,513.000	55,513.000
0170	650.9000	Construction Staking Curb Ramps	EACH	25.000	25.000
0172	650.9911	Construction Staking Supplemental Control (project) 01. 6280-00-60	EACH	1.000	1.000
0174	650.9920	Construction Staking Slope Stakes	LF	732.000	732.000
0176	690.0150	Sawing Asphalt	LF	768.000	768.000
0178	690.0250	Sawing Concrete	LF	256.000	256.000
0180	740.0440	Incentive IRI Ride	DOL	42,055.000	42,055.000
0182	ASP.1T0A	On-the-Job Training Apprentice at $5.00/HR	HRS	2,000.000	2,000.000
0184	ASP.1T0G	On-the-Job Training Graduate at $5.00/HR	HRS	1,260.000	1,260.000
0186	SPV.0030	Special 01. Fertilizer for Lawn Type Turf	CWT	0.100	0.100
0188	SPV.0060	Special 01. Marking line Epoxy Inlet	EACH	41.000	41.000
0190	SPV.0090	Special 01. Construction Staking Cattle Pass Ditch	LF	330.000	330.000
0192	SPV.0180	Special 01. Preparing Topsoil for Lawn Type Turf	SY	90.000	90.000

3

CATEGORY	STATION	TO	STATION	LOCATION	201.0105 CLEARING STA	201.0205 GRUBBING STA
0010	969+00	-	970+00	LT	1	1
				TOTAL 0010	1	1

CATEGORY	STATION	TO	STATION	204.0120 REMOVING ASPHALTIC SURFACE MILLING SY
0010	418+00	-	882+76	173,100
0010	883+59	-	973+56	33,100
				206,200

CATEGORY	STATION	TO	STATION	LOCATION	* 205.0100 EXCAVATION COMMON CY
0010	CULVERT REPLACEMENTS			LT/RT	740
0010	843+12	-	903+90	SIDEWALK	65
				TOTAL 0010	805

* ITEM SHOWN ELSEWHERE IN THE PLAN

CATEGORY	STATION	LOCATION	208.1500.S TEMPORARY LANE SHIFT DURING CULVERT WORK EACH
0010	960+36	ML	2
0010	969+62	ML	2
		TOTAL 0010	4

CATEGORY	STATION	TO	STATION	LOCATION	203.0100 REMOVING SMALL PIPE CULVERTS FACH	204.0110 REMOVING ASPHALTIC SURFACE SY	204.0150 REMOVING CURB & GUTTER LF	204.0155 REMOVING CONCRETE SIDEWALK SY	204.0165 REMOVING GUARDRAIL LF
0010	449+97	-	450+00	RT	-	-	3	-	-
0010	467+71	-	468+01	RT	-	-	30	-	-
0010	692+75	-	694+95	RT	-	-	-	-	220
0010	692+78	-	694+90	LT	-	-	-	-	212
0010	CURB RAMPS			LT/RT	-	210	430	380	-
0010	960+36				1	-	-	-	-
				TOTAL 0010	1	210	463	380	432

CATEGORY	STATION	TO	STATION	LOCATION	305.0110 BASE AGGREGATE DENSE 3/4-INCH TON	305.0120 BASE AGGREGATE DENSE 1 1/4-INCH TON	REMARKS
0010	417+90	-	773+55	ML	2,500	-	
0010	773+55	-	843+02	ML	500	-	
0010	904+00	-	935+00	ML	230	-	
0010	935+00	-	973+66	ML	300	-	
0010	BEAMGUARD			ML	-	1,110	
0010	843+12	-	903+90	LT/RT	-	125	NEW SIDEWALK
0010	959+84	-	960+88	ML	15	340	
0010	969+06	-	970+18	ML	16	370	
				TOTAL 0010	3,561	1,945	

CATEGORY	STATION	TO	STATION	LOCATION	211.0400 PREPARE FOUNDATION FOR ASPHALTIC SHOULDERS STA	305.0504.S HAULING EXCESS SHOULDER MATERIAL CY
0010	904+00	-	935+00	LT/RT	62	250
				TOTAL 0010	62	250

CATEGORY	STATION	LOCATION	204.0190 REMOVING SURFACE DRAINS EACH
0010	460+60	LT	1
		TOTAL 0010	1

CATEGORY	STATION	LOCATION	204.9060.S.01 REMOVING (ITEM DESCRIPTION) (01. ENDWALLS) EACH
0010	805+64	LT	1
		TOTAL 0010	1

CATEGORY	STATION	LOCATION	204.0115 REMOVING ASPHALTIC SURFACE BUTT JOINTS SY
0010	417+90	BEGIN PROJECT	40
0010	421+28	NORTH CTH J	36
0010	449+05	GRADER LN	34
0010	462+34	CHURCH ST	33
0010	466+24	CTH Z	36
0010	475+93	POLONIA RD	36
0010	483+39	CTH K	40
0010	500+42	STANLEY CONIFER RIDGE	27
0010	506+08	ROCKY RIDGE RD	34
0010	530+98	RUSTIC DR	42
0010	539+43	ERIN RD	45
0010	541+65	ADAMS LN	42
0010	583+42	MERRYLAND DR	42
0010	583+61	MERRYLAND DR	42
0010	647+36	KRANSKI LAKE RD	27
0010	689+67	CTH CC	39
0010	725+66	WOODLAND RD	45
0010	773+56	CTH I	35
0010	829+55	ST ADALBERTS RD	35
0010	829+66	CTH I	45
0010	856+05	STATE ST	34
0010	863+80	FREDERICKSON ST	35
0010	868+87	MASON ST	27
0010	870+40	POST OFFICE ALLEY	19
0010	872+14	N MAIN ST	56
0010	872+30	S MAIN ST	36
0010	877+99	UNION ST	27
0010	882+08	UNION ST	38
0010	882+86	BRIDGE	36
0010	883+49	BRIDGE	36
0010	886+85	DEPOT ST	55
0010	888+16	WATER ST	30
0010	892+21	JEFFERSON ST	25
0010	895+42	HANSEN RD	35
0010	906+89	MARKS LN	24
0010	934+36	CTH A	43
0010	934+36	CTH A	46
0010	973+65	END PROJECT	45
		TOTAL 0010	1,402

3

3

DIVISION	EROM/TO STATION	LOCATION	205.0100* COMMON EXCAVATION (1) CUT (2)	SALVAGED/UNUSABLE PAVEMENT MATERIAL (4)	AVAILABLE MATERIAL (5)	UNEXPANDED EILL	EXPANDED EILL (13) EACTOR 1.25	MASS ORDINATE +/- (14)	WASTE	208.0100 BORROW	COMMENT
DIVISION 1											
STH 66	690+18/697+50		555	0	555	179	224	331	331	0	
DIVISION 1 SUBTOTAL			555	0	555	179	224	331	331	0	
DIVISION 2											
CATTLE PASS	11+25/15+25		483	0	483	0	0	483	483	0	
DIVISION 2 SUBTOTAL			483	0	483	0	0	483	483	0	
GRAND TOTAL			1,038	0	1,038	179	224	814	814	0	
TOTAL COMMON EXC			1,038								

NOTES:

(1) COMMON EXCAVATION IS THE SUM OF THE CUT AND EBS EXCAVATION COLUMNS. ITEM NUMBER 205.0100

(2) SALVAGED/UNSUABLE PAVEMENT MATERIAL IS INCLUDED IN CUT.

(4) SALVAGED/UNUSABLE PAVEMENT MATERIAL

5) AVAILABLE MATERIAL = CUT - SALVAGED/UNUSUABLE PAVEMENT MATERIAL

(13) EXPANDED FILL FACTOR = 1.25

EXPANDED FILL = (UNEXPANDED FILL) * FILL FACTOR

(14) THE MASS ORDINATE + OR - QTY CALCULATED FOR THE DIVISION. PLUS QUANTITY INDICATES AN EXCESS OF MATERIAL WITHIN THE DIVISION. MINUS INDICATES A SHORTAGE OF MATERIAL WITHIN THE DIVISION.

*ITEM SHOWN ELSEWHERE IN PLAN

3

PWL MIXTURE USE TABLE								
THE FOLLOWING ACCEPTANCE CRITERIA ARE APPLICABLE TO THIS PROJECT								
LOCATION	STATION	MIXTURE USE	UNDERLYING SURFACE	BID ITEM	TONS	THICKNESS	QUALITY MANAGEMENT PROGRAM TO BE USED FOR	
							MIXTURE ACCEPTANCE	DENSITY ACCEPTANCE
12-FOOT DRIVING LANE	417+90 TO 973+65	UPPER LAYER	MILLED HMA SURFACE	5 MT 58-28 S	12,435	1.5-INCHES	INCENTIVE AIR VOIDS HMA PAVEMENT 460.2010	INCENTIVE DENSITY PWL HMA PAVEMENT 460.2005
PAVED SHOULDER AND INTERSECTIONS	417+90 TO 973+65	UPPER LAYER	MILLED HMA SURFACE	5 MT 58-28 S	5170	1.5-INCHES		ACCEPTANCE TESTING BY THE DEPARTMENT; NOT ELIGIBLE FOR INCENTIVE
VARIOUS		SHOULDER WIDENING LOWER LAYER	BASE AGGREGATE	ASPHALTIC SURFACE	155	2.0-INCHES	QMP AS PER SS 465	ACCEPTANCE BY ORDINARY COMPACTION
VARIOUS		CULVERT PATCHES	BASE AGGREGATE	ASPHALTIC SURFACE	220	5.5-INCHES		

3

CATEGORY	STATION	TO	STATION	455.0605 TACK COAT GAL	460.6225 HMA PAVEMENT 5 MT 58-28 S TON	465.0105 ASPHALTIC SURFACE TON	465.0110 ASPHALTIC SURFACE PATCHING TON	465.0315 ASPHALTIC FLUMES SY	REMARKS
0010	460+60			-	-	-	-	25	
0010	417+90	-	882+86	12,200	14,640	-	-	-	
0010	883+48	-	973+66	2,340	2,810	-	-	-	
0010	904+00	-	935+00	-	-	155	-	-	SHOULDER WIDENING LOWER LAYER
0010	CURB RAMPS			-	-	-	50	-	
0010	CULVERT REPLACEMENTS			-	-	224	-	-	
			TOTAL 0010	14,540	17,450	379	50	25	

CATEGORY	STATION	TO	STATION	LOCATION	465.0475 ASPHALT CENTERLINE RUMBLE STRIPS 2-LANE RURAL LF
0010	417+90	-	843+00	ML	35,710
0010	904+00	-	974+00	ML	6,200
				TOTAL 0010	41,910

CATEGORY	STATION	LOCATION	504.0900 CONCRETE MASONRY ENDWALLS CY	520.1024 APRON ENDWALLS FOR CULVERT PIPE 24-INCH EACH	520.3324 CULVERT PIPE CLASS III-A 24-INCH LF	520.8000 CONCRETE COLLARS FOR PIPE EACH	522.0130 CULVERT PIPE REINFORCED CONCRETE CLASS III 30-INCH LF	522.1030 APRON ENDWALLS FOR CULVERT PIPE REINFORCED CONCRETE 30-INCH EACH	522.1500 PIPE CATTLE PASS REINFORCED CONCRETE LF	650.6000 CONSTRUCTION STAKING PIPE CULVERTS EACH
0010	805+64	LT	-	-	-	1	8	1	-	-
0010	960+36	LT/RT	-	2	56	-	-	-	-	1
0010	969+62	LT/RT	-	-	-	-	-	-	-	1
		TOTAL 0010	0	2	56	1	8	1	0	2
0020	969+62	LT/RT	12	-	-	-	-	-	68	-
		TOTAL 0020	12	0	0	0	0	0	68	0
		PROJECT TOTAL	12	2	56	1	8	1	68	2

*REQUIRED THICKNESS FOR STEEL CULVERTS = 0.064 INCH

CATEGORY	STATION	TO	STATION	LOCATION	601.0411 CONCRETE CURB & GUTTER 30-INCH TYPE D LF	601.0557 CONCRETE CURB & GUTTER 6-INCH SLOPED 36-INCH TYPE D LF
0010	449+20	-	450+00	RT	90	-
0010	467+71	-	468+01	RT	-	30
0010	-		843+12	LT	17	-
0010	-		852+76	LT	24	-
0010	-		855+80	LT	24	-
0010	-		856+26	LT	29	-
0010	-		864+14	LT	15	-
0010	-		864+14	RT	13	-
0010	-		868+74	LT	20	-
0010	-		869+06	LT	25	-
0010	-		869+06	RT	29	-
0010	-		870+31	LT	10	-
0010	-		871+89	LT	30	-
0010	-		872+08	RT	29	-
0010	-		872+46	LT	63	-
0010	-		872+50	RT	23	-
0010	-		881+85	RT	16	-
0010	-		886+91	RT	14	-
0010	-		888+40	RT	19	-
0010	-		892+07	RT	17	-
0010	-		892+36	RT	19	-
0010	-		903+90	RT	17	-
				TOTAL 0010	543	30

3

CATEGORY	STATION	LOCATION	602.0405 CONCRETE SIDEWALK 4-INCH SF	602.0505 CURB RAMP DETECTABLE WARNING FIELD YELLOW SF	602.0605 CURB RAMP DETECTABLE WARNING FIELD RADIAL YELLOW SF
0010	843+12	LT	101	10	-
0010	852+76	LT	102	10	-
0010	855+80	LT	190	-	17
0010	856+26	LT	157	10	-
0010	864+14	LT	127	10	-
0010	864+14	RT	145	10	-
0010	868+74	LT	166	10	-
0010	869+06	LT	195	10	-
0010	869+06	RT	151	10	-
0010	870+31	LT	106	10	-
0010	870+51	LT	82	10	-
0010	871+89	LT	241	10	-
0010	872+08	RT	94	10	-
0010	872+46	LT	228	10	-
0010	872+50	RT	144	10	-
0010	881+85	RT	116	-	17
0010	885+99	RT	88	-	15
0010	886+46	RT	197	10	-
0010	886+91	RT	-	10	-
0010	887+41	RT	257	10	-
0010	887+93	RT	-	-	16
0010	888+40	RT	141	10	-
0010	892+07	RT	91	10	-
0010	892+36	RT	91	10	-
0010	903+90	RT	101	10	-
		TOTAL 0010	3,311	210	65

CATEGORY	STATION	TO	STATION	LOCATION	614.2300 MGS GUARDRAIL 3 LF	614.2340 MGS GUARDRAIL 3 L LF	614.2610 MGS GUARDRAIL TERMINAL EAT EACH
0010	691+65	-	696+02	LT	225	113	2
0010	691+66	-	696+04	RT	225	113	2
				TOTAL 0010	450	225	4

CATEGORY	LOCATION	628.1504 SILT FENCE LF	628.1520 SILT FENCE MAINTENANCE LF
0010	BEAMGUARD	1,650	1,650
0010	LANE SHIFT	500	500
0010	CULVERT EXTENSION	60	60
0010	STA 969+62 CULVERT	290	290
	TOTAL 0010	2,500	2,500

3

CATEGORY	LOCATION	625.0100 TOPSOIL SY	627.0200 MULCHING SY	628.2008 EROSION MAT URBAN CLASS I TYPE B SY	629.0210 FERTILIZER TYPE B CWT	630.0120 SEEDING MIXTURE NO. 20 LB	630.0140 SEEDING MIXTURE NO. 40 LB	630.0500 SEED WATER MGAL	SPV.0030.01 SPECIAL (01. FERTILIZER FOR LAWN TYPE TURF) CWT	SPV.0180.01 SPECIAL (01. PREPARING TOPSOIL FOR LAWN TYPE TURF) SY	REMARKS
0010	BEAMGUARD	1,380	-	1,380	0.9	38	-	40	-	-	
0010	SIDEWALKS	90	-	90	-	-	2	4	0.1	90	
0010	FLUMES	10	10	-	0.1	1	-	2	-	-	
0010	CULVERTS	12	-	12	0.1	1	-	2	-	-	
0010	DITCH GRADING	980	980	-	0.7	27	-	22	-	-	11+14 - 13+15
0010	DITCH GRADING	820	820	-	0.6	-	15	19	-	-	14+06 - 15+35
	TOTAL 0010	3,292	1,810	1,482	2.4	67	17	89	0.1	90	

CATEGORY	STATION	LOCATION	* 643.0300 TRAFFIC CONTROL DRUMS DAY	643.0410 TRAFFIC CONTROL BARRICADES TYPE II DAY	643.0705 TRAFFIC CONTROL WARNING LIGHTS TYPE A DAY	* 643.0900 TRAFFIC CONTROL SIGNS DAY	643.3150 TEMPORARY MARKING LINE REMOVABLE TAPE 4-INCH LF	644.1440 TEMPORARY PEDESTRIAN SURFACE MATTING SF	644.1601 TEMPORARY PEDESTRIAN CURB RAMP DAY	644.1810 TEMPORARY PEDESTRIAN BARRICADE LF	646.9000 MARKING REMOVAL LINE 4-INCH LF
0010	843+12	LT	84	14	14	14	0	0	0	0	0
0010	852+77	LT	126	28	28	28	400	50	28	139	63
0010	STATE ST	LT/RT	196	70	70	70	400	50	28	193	75
0010	FREDERICKSON ST	LT/RT	224	56	56	56	600	50	28	56	263
0010	MASON ST	LT/RT	210	70	70	70	800	100	56	131	263
0010	ALLEY	LT	112	28	28	28	400	50	28	101	263
0010	MAIN ST	LT/RT	280	98	98	98	800	50	84	371	263
0010	UNION ST	RT	140	28	28	28	400	25	14	82	263
0010	GAS STATION ENTRANCE	RT	182	56	56	56	400	25	14	167	63
0010	DEPOT ST	RT	0	0	0	0	0	0	0	176	0
0010	WATER ST	RT	112	56	56	56	400	25	14	147	63
0010	JEEEERSON ST	RT	168	28	28	28	200	50	28	110	63
0010	END OE PROJECT	RT	84	14	14	14	0	0	0	0	0
		TOTAL 0010	1,918	546	546	546	4,800	475	322	1,674	1,642

*ITEM SHOWN ELSEWHERE IN THE PLAN

CATEGORY	LOCATION	643.0300 TRAFFIC CONTROL DRUMS DAY	643.0900 TRAFFIC CONTROL SIGNS DAY	643.1000 TRAFFIC CONTROL SIGNS FIXED MESSAGE SF
0010	ML	3,000	3,870	36
	TOTAL 0010	3,000	3,870	36

3

CATEGORY	STATION	TO	STATION	LOCATION	646.6120 MARKING STOP LINE EPOXY 18-INCH LF	646.7420 MARKING CROSSWALK EPOXY TRANSVERSE LINE 6-INCH LF	646.7520 MARKING CROSSWALK EPOXY BLOCK STYLE 24-INCH LF
0010	421+02	-	421+28	LT	29	-	-
0010	466+24	-	466+51	RT	31	-	-
0010	483+47	-	483+78	RT	35	-	-
0010	689+40	-	689+60	LT	31	-	-
0010	773+56	-	773+93	RT	38	-	-
0010	829+35	-	829+66	LT	34	-	-
0010	855+89	-	856+07	LT	18	-	-
0010	863+80	-	863+98	RT	18	-	-
0010	868+75	-	868+87	LT	12	-	-
0010	870+31		870+39	LT	12	-	-
0010	871+90	-	872+14	LT	24	-	-
0010	872+32	-	872+47	RT	15	-	-
0010	877+84	-	877+99	LT	15	-	-
0010	882+08	-	882+23	RT	15	-	-
0010	888+16	-	888+30	RT	14	-	-
0010	892+21	-	892+32	RT	11	-	-
0010	895+23	-	895+43	LT	20	-	-
0010	906+89	-	907+03	RT	14	-	-
0010	935+01	-	935+30	RT	29	-	-
0010	870+31	-	870+39	LT	8	-	-
0010	855+83	-	856+25	LT	-	88	-
0010	864+11	-	864+17	ML	-	64	-
0010	868+74	-	869+03	LT	-	58	-
0010	869+04	-	869+10	ML	-	76	-
0010	870+31	-	870+48	LT	-	34	-
0010	871+85	-	871+91	ML	-	78	-
0010	871+88	-	872+33	LT	-	89	-
0010	872+10	-	872+49	RT	-	80	-
0010	881+85	-	882+28	RT	-	86	-
0010	887+98	-	888+33	RT	-	73	-
0010	892+08	-	892+35	RT	-	55	-
0010	852+73	-	852+79	ML	-	-	48
				TOTAL 0010	423	781	48

CATEGORY	STATION	TO	STATION	LOCATION	650.4500 CONSTRUCTION STAKING SUBGRADE LF	650.5000 CONSTRUCTION STAKING BASE LF	650.5500 CONSTRUCTION STAKING CURB GUTTER AND CURB & GUTTER LF	650.8000 CONSTRUCTION STAKING RESURFACING REFERENCE LF	650.9000 CONSTRUCTION STAKING CURB RAMPS EACH	650.9920 CONSTRUCTION STAKING SLOPE STAKES LF	SPV.0090.01 SPECIAL (01. CONSTRUCTION STAKING CATTLE PASS DITCH) LF
0010	417+90	-	882+86	ML	-	-	-	46,496	-	-	-
0010	883+49	-	973+66	ML	-	-	-	9,017	-	-	-
0010	449+20	-	450+00	RT	-	-	90	-	-	-	-
0010	467+02	-	468+01	RT	-	-	100	-	-	-	-
0010	690+18	-	697+50	LT/RT	732	732	-	-	-	732	-
0010	843+12	-	903+90	LT/RT	-	-	453	-	25	-	-
0010	11+14	-	13+15	DITCH	-	-	-	-	-	-	201
0010	14+06	-	15+35	DITCH	-	-	-	-	-	-	129
				TOTAL 0010	732	732	643	55,513	25	732	330

CATEGORY	STATION	TO	STATION	LOCATION	690.0150 SAWING ASPHALT LF	REMARKS
0010	960+36			ML	60	CULVERT REPLACEMENT
0010	969+62			ML	60	CULVERT REPLACEMENT
0010	843+12	-	903+90	LT/RT	648	CURB RAMP LOCATIONS
				TOTAL 0010	768	

CATEGORY	STATION	TO	STATION	LOCATION	690.0250 SAWING CONCRETE LF	REMARKS
0010	450+00			RT	3	CURB AND GUTTER
0010	467+02			RT	3	CURB AND GUTTER
0010	843+12	-	903+90	LT/RT	250	CURB RAMP LOCATIONS
				TOTAL 0010	256	

CATEGORY	STATION	LOCATION	SPV.0060.01 SPECIAL (01. MARKING LINE EPOXY INLET) EACH
0010	845+58	LT/RT	2
0010	846+44	LT/RT	2
0010	849+50	LT/RT	2
0010	855+87	LT	1
0010	856+45	RT	1
0010	859+35	LT/RT	2
0010	860+48	LT/RT	2
0010	867+52	RT	1
0010	868+52	LT/RT	2
0010	870+87	LT/RT	2
0010	871+81	LT/RT	2
0010	874+67	LT/RT	2
0010	877+69	LT	1
0010	878+53	RT	1
0010	881+77	LT/RT	2
0010	882+39	LT/RT	2
0010	883+81	LT/RT	2
0010	885+00	LT/RT	2
0010	887+11	LT	1
0010	888+49	LT/RT	2
0010	895+16	LT/RT	3
0010	895+74	LT/RT	2
0010	898+52	LT/RT	2
		TOTAL 0010	41

CATEGORY	STATION	TO	STATION	LOCATION	643.3105 TEMPORARY MARKING LINE PAINT 4-INCH LF	643.3120 TEMPORARY MARKING LINE EPOXY 4-INCH LF	646.1020 MARKING LINE EPOXY 4-INCH LF	646.1040 MARKING LINE GROOVED WET REF EPOXY 4-INCH LF	646.3040 MARKING LINE GROOVED WET REF EPOXY 8-INCH LF	646.4520 MARKING LINE SAME DAY EPOXY 4-INCH LF	REMARKS
0010	417+90	-	973+66	ML	68,600	-	-	-	-	-	MILLED SURFACE, C/L
0010	417+90	-	973+66	ML	-	70,100	70,100	-	-	4,160	YELLOW CENTERLINE
0010	417+90	-	843+01	ML	-	-	-	83,200	860	-	WHITE EDGELINE/TURN LANE
0010	843+01	-	904+02	ML	-	-	11,400	-	-	-	WHITE EDGELINE
0010	904+02	-	973+66	ML	-	-	-	13,800	-	-	WHITE EDGELINE
				TOTAL 0010	68,600	70,100	81,500	97,000	860	4,160	

CATEGORY	STATION	TO	STATION	LOCATION	648.0100 LOCATING NO-PASSING ZONES MI
0010	417+90	-	973+66	ML	10.52
				TOTAL 0010	10.52

3

PROJECT NO: 6280-00-60	HWY: STH 66	COUNTY: PORTAGE	MISCELLANEOUS QUANTITIES	SHEET 46	E

R/W PROJECT NUMBER 6280-00-20	SHEET NUMBER	TOTAL SHEETS
R/W PROJECT NUMBER 6280-00-20	4.01	6

PLAT OF RIGHT OF WAY REQUIRED FOR

STEVENS POINT - ROSHOLT NORTH CTH J TO STH 49

STH 66 PORTAGE COUNTY

CONSTRUCTION PROJECT NUMBER: 6280-00-60

CAUTION
THIS PLAT IS A GRAPHIC REPRESENTATION AND IS FOR REFERENCE PURPOSES ONLY.
DEEDS MUST BE CHECKED TO DETERMINE PROPERTY BOUNDARIES AND ACCESS RIGHTS.

N

CONVENTIONAL SYMBOLS

SECTION LINE
QUARTER LINE
SIXTEENTH LINE
NEW REFERENCE LINE
NEW R/W LINE
EXISTING R/W OR HE LINE
PROPERTY LINE
LDT, TIE & OTHER MINOR LINES
SLOPE INTERCEPT
CORPORATE LIMITS
UNDERGROUND FACILITY (COMMUNICATIONS, ELECTRIC, ETC)
NEW R/W (FEE OR HE) (HATCHING VARIES BY OWNER)
TEMPORARY LIMITED EASEMENT AREA
EASEMENT AREA (PERMANENT LIMITED OR RESTRICTED DEVELOPMENT)
TRANSMISSION STRUCTURES
BUILDING
TO BE REMOVED
BRIDGE

SECTION CORNER SYMBOL
SECTION CORNER MONUMENT
GEODETIC SURVEY MONUMENT
SIXTEENTH CORNER MONUMENT
SIGN
OFF-PREMISE SIGN
R/W MONUMENT (TO BE SET)
NON-MONUMENTED R/W POINT
FOUND IRON PIN (1-INCH UNLESS NOTED)

	COMPENSABLE	NON-COMPENSABLE
ELECTRIC POLE		
TELEPHONE POLE		
PEDESTAL (LABEL TYPE) (TV, TEL, ELEC, ETC.)		

ACCESS RESTRICTED BY ACQUISITION
NO ACCESS (BY STATUTORY AUTHORITY)
ACCESS RESTRICTED (BY PREVIOUS PROJECT OR CONTROL)
NO ACCESS (NEW HIGHWAY)
PARCEL NUMBER 25
UTILITY NUMBER 40
PARALLEL OFFSETS

CONVENTIONAL ABBREVIATIONS

ACCESS RIGHTS	AR	POINT OF INTERSECTION	PI
ACRES	AC	PROPERTY LINE	PL
AHEAD	AH	RECORDED AS	(100')
ALUMINUM	ALUM	REEL / IMAGE	R/I
AND OTHERS	ET AL	REFERENCE LINE	R/L
BACK	BK	REMAINING	REM
BLOCK	BLK	RESTICTIVE DEVELOPMENT	RDE
CENTERLINE	C/L	EASEMENT	
CERTIFIED SURVEY MAP	CSM	RIGHT	RT
CONCRETE	CONC	RIGHT OF WAY	R/W
COUNTY	CO	SECTION	SEC
COUNTY TRUNK HIGHWAY	CTH	SEPTIC VENT	SEPV
DISTANCE	DIST	SQUARE FEET	SF
CORNER	COR	STATE TRUNK HIGHWAY	STH
DOCUMENT NUMBER	DOC	STATION	STA
EASEMENT	EASE	TELEPHONE PEDESTAL	TP
EXISTING	EX	TEMPORARY LIMITED EASEMENT	TLE
GAS VALVE	GV		
GRID NORTH	GN	TRANSPORTATION PROJECT	TPP
HIGHWAY EASEMENT	HE	PLAT	
IDENTIFICATION	ID	UNITED STATES HIGHWAY	USH
LAND CONTRACT	LC	VOLUME	V
LEFT	LT		
MONUMENT	MON		
NATIONAL GEODETIC SURVEY	NGS		
NUMBER	NO		
OUTLOT	OL		
PAGE	P		
POINT OF TANGENCY	PT		
PERMANENT LIMITED EASEMENT	PLE		
POINT OF BEGINNING	POB		
POINT OF CURVATURE	PC		
POINT OF COMPOUND CURVE	PCC		

CURVE DATA

LONG CHORD	LCH
LONG CHORD BEARING	LCB
RADIUS	R
DEGREE OF CURVE	D
CENTRAL ANGLE	Δ/DELTA
LENGTH OF CURVE	L
TANGENT	T
DIRECTION AHEAD	DA
DIRECTION BACK	DB

R-09-E ← → R-10-E

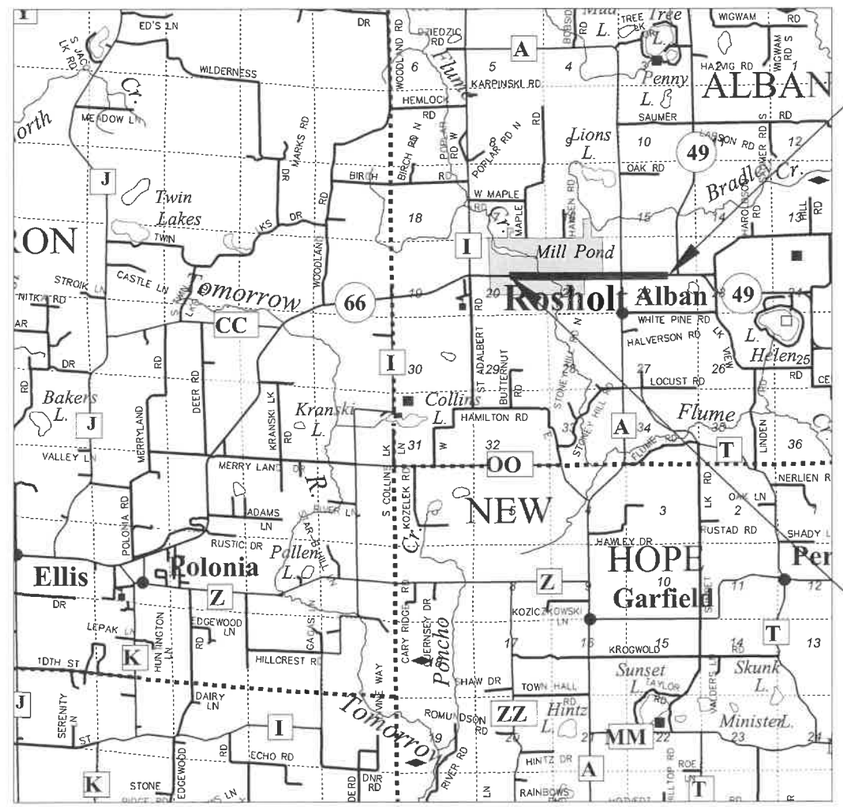

END RELOCATION ORDER
STA 971+00.00
1,742.24' WEST AND 10.66' NORTH
OF THE EAST QUARTER OF SEC 22,
T-25-N, R-10-E

BEGIN RELOCATION ORDER
STA 855+00.00
142.72' WEST AND 8.84' NORTH
OF THE CENTER OF SEC 20, T-25-N, R-10-E
Y = 241,130.72
X = 233,086.34

CORRE ENGINEERING
MADISON | OCONOMOWOC | EAU CLAIRE | GREEN BAY | WITTENBERG

WISCONSIN BRYON J. MOTSZKO S-2846 MENOMONIE WI LAND SURVEYOR

I, BRYON J. MOTSZKO, PROFESSIONAL LAND SURVEYOR, S-2846, HEREBY CERTIFY THAT I HAVE SURVEYED THE LAND DESCRIBED HEREON AND THAT THE MAP HEREON IS A CORRECT REPRESENTATION OF THAT SURVEY TO THE BEST OF MY KNOWLEDGE AND BELIEF.

DATE: 8/10/21 Bryon Motszko (Signature)

CONVENTIONAL UTILITY SYMBOLS

WATER —W—
GAS —G—
TELEPHONE —T—
OVERHEAD TRANSMISSION LINES —OH—
ELECTRIC —E—
CABLE TELEVISION —TV—
FIBER OPTIC —FO—
SANITARY SEWER —SAN—
STORM SEWER —SS—

LAYOUT
SCALE 0 2 MILE

TOTAL NET LENGTH OF CENTERLINE = 2.197 MILES

NOTES:

POSITIONS SHOWN ON THIS PLAT ARE WISCONSIN COORDINATE REFERENCE SYSTEM COORDINATES (WISCRS), PORTAGE COUNTY, NADB3 (2011) IN US SURVEY FEET VALUES SHOWN ARE GRID COORDINATES, GRID BEARINGS, AND GRID DISTANCES. GRID DISTANCES MAY BE USED AS GROUND DISTANCES.

ALL NEW RIGHT-OF-WAY MONUMENTS WILL BE TYPE 2 (TYPICALLY 3/4"X24" IRON REBARS) UNLESS OTHERWISE NOTED, AND WILL BE PLACED PRIOR TO THE COMPLETION OF THE PROJECT.

RIGHT-OF-WAY BOUNDARIES ARE DEFINED WITH COURSES OF THE PERIMETER OF THE HIGHWAY LANDS REFERENCED TO THE U.S. PUBLIC LAND SURVEY SYSTEM OR OTHER "SURVEYS" OF PUBLIC RECORD.

DIMENSIONS FOR THE NEW RIGHT-OF-WAY IS MEASURED ALONG AND PERPENDICULAR TO NEW REFERENCE LINES.

INFORMATION FOR THE BASIS OF EXISTING RIGHT-OF-WAY POINTS OF REFERENCE AND ACCESS CONTROL ARE LISTED ON DETAIL SHEETS.

A TEMPORARY LIMITED EASEMENT (TLE) IS A RIGHT FOR CONSTRUCTION PURPOSES, AS DEFINED HEREIN, INCLUDING THE RIGHT TO OPERATE NECESSARY EQUIPMENT THEREON, THE RIGHT OF INGRESS AND EGRESS, AS LONG AS REQUIRED FOR SUCH PUBLIC PURPOSE, INCLUDING THE RIGHT TO PRESERVE, PROTECT, REMOVE, OR PLANT THEREON ANY VEGETATION THAT THE HIGHWAY AUTHORITIES MAY DEEM DESIRABLE ALL (TLEs) ON THIS PLAT EXPIRE AT THE COMPLETION OF THE CONSTRUCTION PROJECT FOR WHICH THIS INSTRUMENT IS GIVEN.

REVISION DATE

STATE OF WISCONSIN
DEPARTMENT OF TRANSPORTATION

APPROVED FOR THE DEPARTMENT

DATE: 8-10-21 Brent L Stella (Signatu

4

SCHEDULE OF LANDS & INTERESTS REQUIRED

OWNERS NAMES ARE SHOWN FOR REFERENCE ONLY AND ARE SUBJECT TO CHANGE PRIOR TO THE TRANSFER OF LAND INTERESTS TO THE DEPARTMENT.

PARCEL NUMBER	SHEET NUMBER	OWNER	INTEREST REQUIRED	R/W ACRES REQUIRED			T.L.E.
				NEW (SF)	EXISTING (SF)	TOTAL (SF)	(SF)
1	4.04	ADAM J. SPARKS	TLE	----	----	----	125
2	4.05	JEREMY J. & JENNIFER R. LOSINSKI	TLE	----	----	----	49
3	4.05	NEIL KOSOBUCKI	TLE	----	----	----	98
4	4.05	BUTTS & BONES BARBEQUE, LLC	TLE	----	----	----	64
5	4.05	BARRY L. & LINDA DIANE MYERS	TLE	----	----	----	35
6	4.06	MICHEAL D. & SHERI L. ZDROIK	TLE	----	----	----	25,079

UTILITY INTERESTS REQUIRED

UTILTY NUMBER	SHEET NUMBER	OWNER	INTEREST REQUIRED
80	4.04 - 4.06	AMHERST TELEPHONE COMPANY	RELEASE OF RIGHTS
81	4.06	CENTRAL WISCONSIN ELECTRIC COOPERATIVE	RELEASE OF RIGHTS

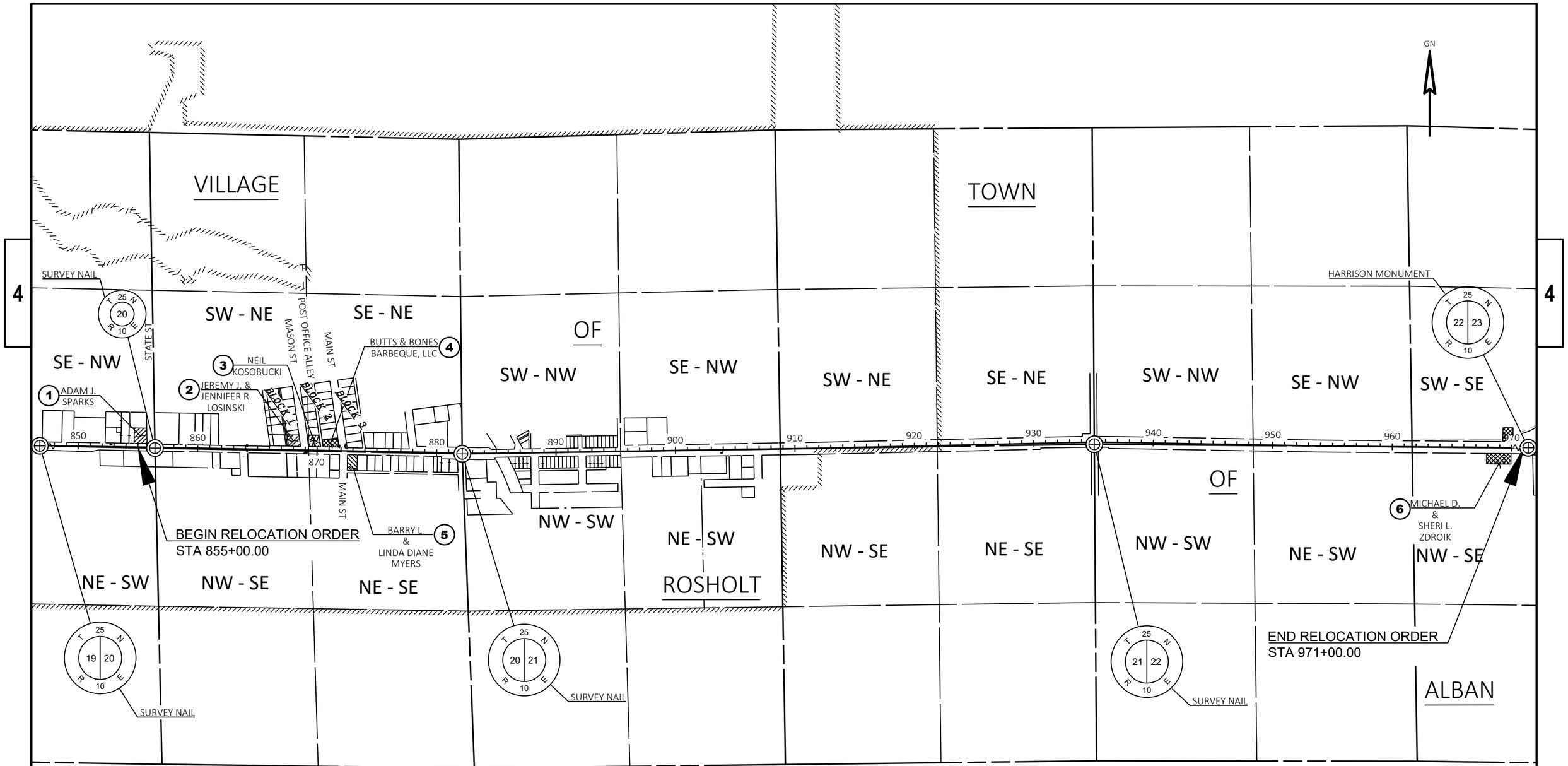

REVISION DATE	DATE	SCALE, FEET: N/A	HWY: STH 66	STATE R/W PROJECT NUMBER: 6280-00-20	PLAT SHEET 4. ----	
	GRID FACTOR		COUNTY: PORTAGE	CONSTRUCTION PROJECT NUMBER: 6280-00-60	PS&E SHEET — 49	E

FILE NAME : 040103-RP.DWG
LAYOUT NAME - 040103-rwp
PLOT DATE : 5/5/2022 12:47 PM PLOT BY : ANDREW PETERSON, PE PLOT NAME : PLOT SCALE : 1 IN:800 FT
WISDOT/CADDS SHEET 75

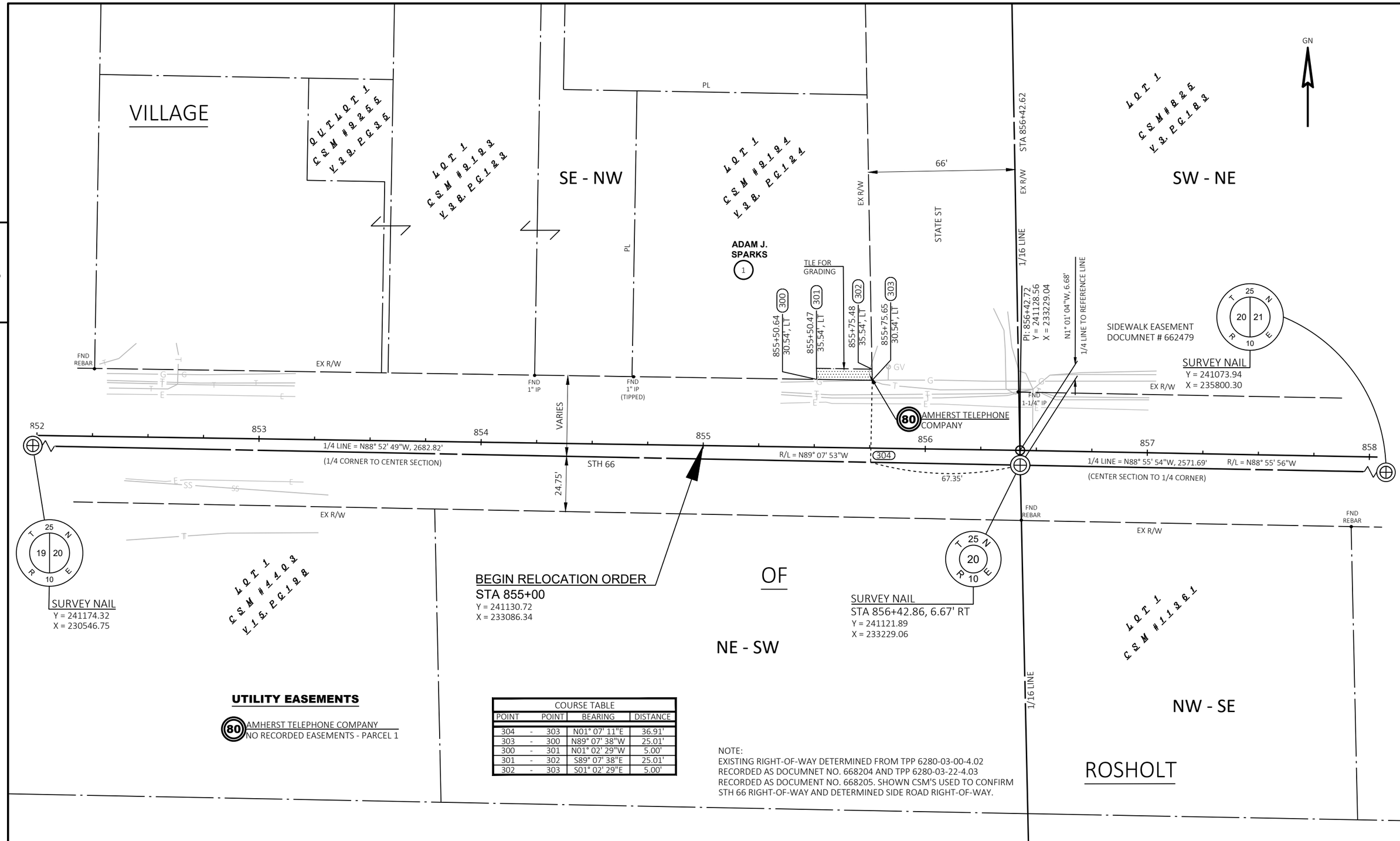

UTILITY EASEMENTS

80 AMHERST TELEPHONE COMPANY
NO RECORDED EASEMENTS - PARCEL 1

COURSE TABLE				
POINT		POINT	BEARING	DISTANCE
304	-	303	N01° 07' 11"E	36.91'
303	-	300	N89° 07' 38"W	25.01'
300	-	301	N01° 02' 29"W	5.00'
301	-	302	S89° 07' 38"E	25.01'
302	-	303	S01° 02' 29"E	5.00'

NOTE:
EXISTING RIGHT-OF-WAY DETERMINED FROM TPP 6280-03-00-4.02 RECORDED AS DOCUMNET NO. 668204 AND TPP 6280-03-22-4.03 RECORDED AS DOCUMENT NO. 668205. SHOWN CSM'S USED TO CONFIRM STH 66 RIGHT-OF-WAY AND DETERMINED SIDE ROAD RIGHT-OF-WAY.

REVISION DATE	DATE	SCALE, FEET 0 20 40	HWY: STH 66
	GRID FACTOR		COUNTY: PORTAGE

STATE R/W PROJECT NUMBER: 6280-00-20	PLAT SHEET 4.04	
CONSTRUCTION PROJECT NUMBER: 6280-00-60	PS&E SHEET 50	E

FILE NAME : 040102-RP.DWG
LAYOUT NAME - 040104-rwp
PLOT DATE : 5/5/2022 12:47 PM PLOT BY : ANDREW PETERSON, PE PLOT NAME : PLOT SCALE : 1 IN:40 FT

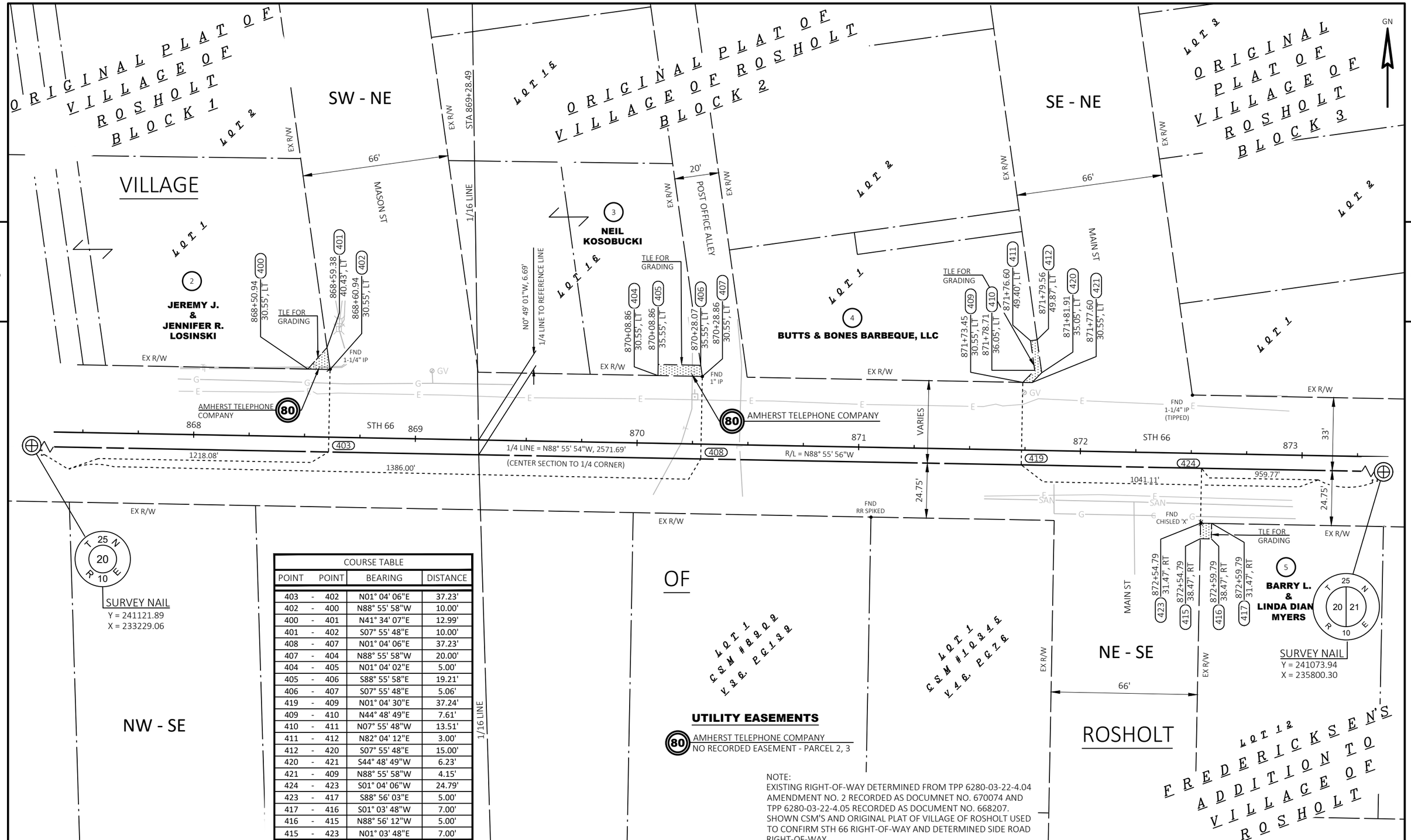

COURSE TABLE			
POINT	POINT	BEARING	DISTANCE
403	402	N01° 04' 06"E	37.23'
402	400	N88° 55' 58"W	10.00'
400	401	N41° 34' 07"E	12.99'
401	402	S07° 55' 48"E	10.00'
408	407	N01° 04' 06"E	37.23'
407	404	N88° 55' 58"W	20.00'
404	405	N01° 04' 02"E	5.00'
405	406	S88° 55' 58"E	19.21'
406	407	S07° 55' 48"E	5.06'
419	409	N01° 04' 30"E	37.24'
409	410	N44° 48' 49"E	7.61'
410	411	N07° 55' 48"W	13.51'
411	412	N82° 04' 12"E	3.00'
412	420	S07° 55' 48"E	15.00'
420	421	S44° 48' 49"W	6.23'
421	409	N88° 55' 58"W	4.15'
424	423	S01° 04' 06"W	24.79'
423	417	S88° 56' 03"E	5.00'
417	416	S01° 03' 48"W	7.00'
416	415	N88° 56' 12"W	5.00'
415	423	N01° 03' 48"E	7.00'

NOTE:
EXISTING RIGHT-OF-WAY DETERMINED FROM TPP 6280-03-22-4.04 AMENDMENT NO. 2 RECORDED AS DOCUMNET NO. 670074 AND TPP 6280-03-22-4.05 RECORDED AS DOCUMENT NO. 668207. SHOWN CSM'S AND ORIGINAL PLAT OF VILLAGE OF ROSHOLT USED TO CONFIRM STH 66 RIGHT-OF-WAY AND DETERMINED SIDE ROAD RIGHT-OF-WAY.

REVISION DATE	DATE	HWY: STH 66	STATE R/W PROJECT NUMBER: 6280-00-20	PLAT SHEET 4. 05
	GRID FACTOR	COUNTY: PORTAGE	CONSTRUCTION PROJECT NUMBER: 6280-00-60	PS&E SHEET 51

SCALE, FEET 0 20 40

E

FILE NAME : 040102-RP.DWG
LAYOUT NAME - 040105-rwp
PLOT DATE : 5/5/2022 12:47 PM PLOT BY : ANDREW PETERSON, PE PLOT NAME : PLOT SCALE : 1 IN:40 FT

WISDOT/CADDS SHEET 75

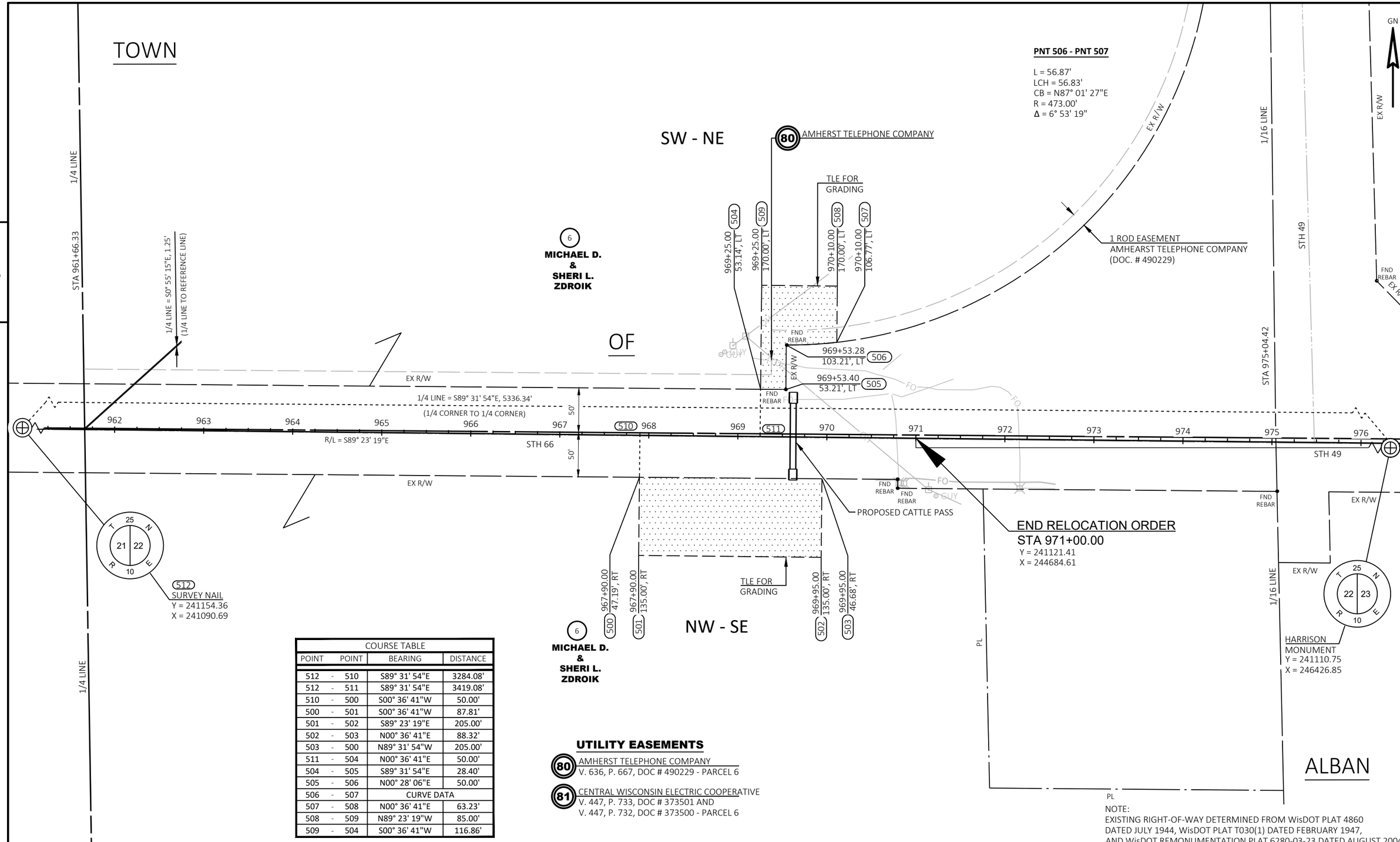

COURSE TABLE				
POINT		POINT	BEARING	DISTANCE
512	-	510	S89° 31' 54"E	3284.08'
512	-	511	S89° 31' 54"E	3419.08'
510	-	500	S00° 36' 41"W	50.00'
500	-	501	S00° 36' 41"W	87.81'
501	-	502	S89° 23' 19"E	205.00'
502	-	503	N00° 36' 41"E	88.32'
503	-	500	N89° 31' 54"W	205.00'
511	-	504	N00° 36' 41"E	50.00'
504	-	505	S89° 31' 54"E	28.40'
505	-	506	N00° 28' 06"E	50.00'
506	-	507	CURVE DATA	
507	-	508	N00° 36' 41"E	63.23'
508	-	509	N89° 23' 19"W	85.00'
509	-	504	S00° 36' 41"W	116.86'

UTILITY EASEMENTS

80 AMHERST TELEPHONE COMPANY
V. 636, P. 667, DOC # 490229 - PARCEL 6

81 CENTRAL WISCONSIN ELECTRIC COOPERATIVE
V. 447, P. 733, DOC # 373501 AND
V. 447, P. 732, DOC # 373500 - PARCEL 6

REVISION DATE	DATE	SCALE, FEET 0 50 100	HWY: STH 66
	GRID FACTOR		COUNTY: PORTAGE

STATE R/W PROJECT NUMBER: 6280-00-20
CONSTRUCTION PROJECT NUMBER: 6280-00-60
PLAT SHEET 4. 06
PS&E SHEET 52
E

FILE NAME : 040102-RP.DWG
LAYOUT NAME - 040106-rwp
PLOT DATE : 5/5/2022 12:47 PM
PLOT BY : ANDREW PETERSON, PE
PLOT NAME :
PLOT SCALE : 1 IN:100 FT
WISDOT/CADDS SHEET 75

5

5

PROJECT NO: 6280-00-60	HWY: STH 66	COUNTY: PORTAGE	PLAN	SHEET 53	E

FILE NAME : C:\OD\CORRE, INC\PROJECTS - WI-NC REGION\6280-00-30_STH 66_PORTAGE CO\500_CADD\501_C3D_2018\62800030\SHEETSPLAN\050201-PN.DWG
LAYOUT NAME - 050201-pn
PLOT DATE : 5/5/2022 12:48 PM PLOT BY : ANDREW PETERSON, PE PLOT NAME : PLOT SCALE : 1 IN:100 FT

WISDOT/CADDS SHEET 44

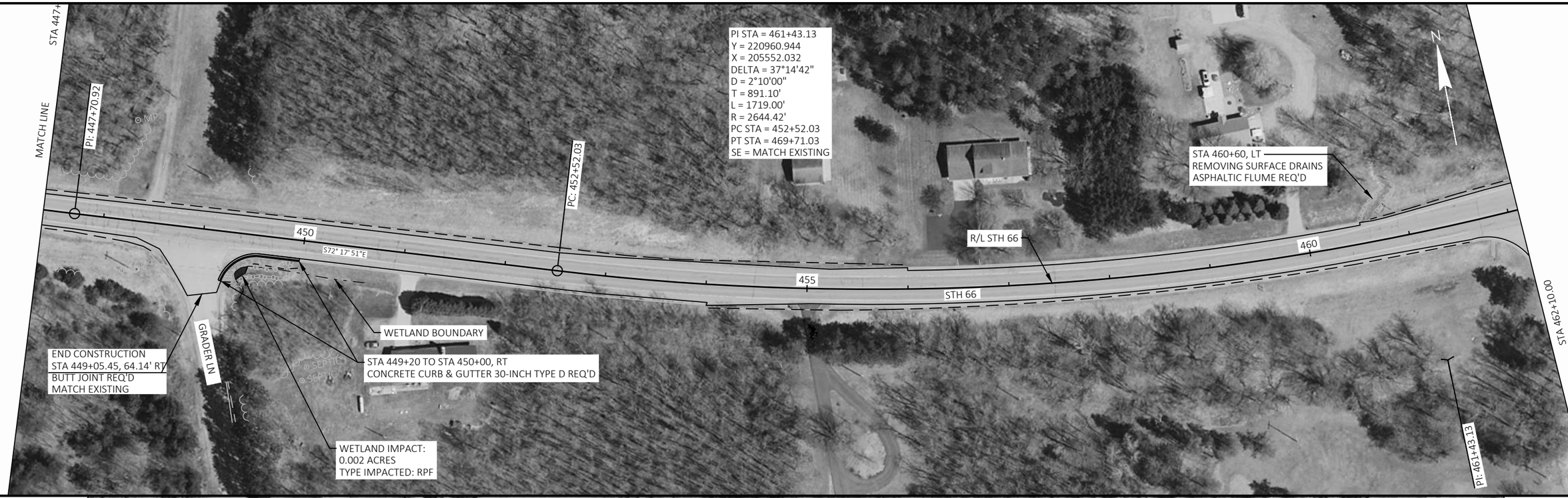

5

5

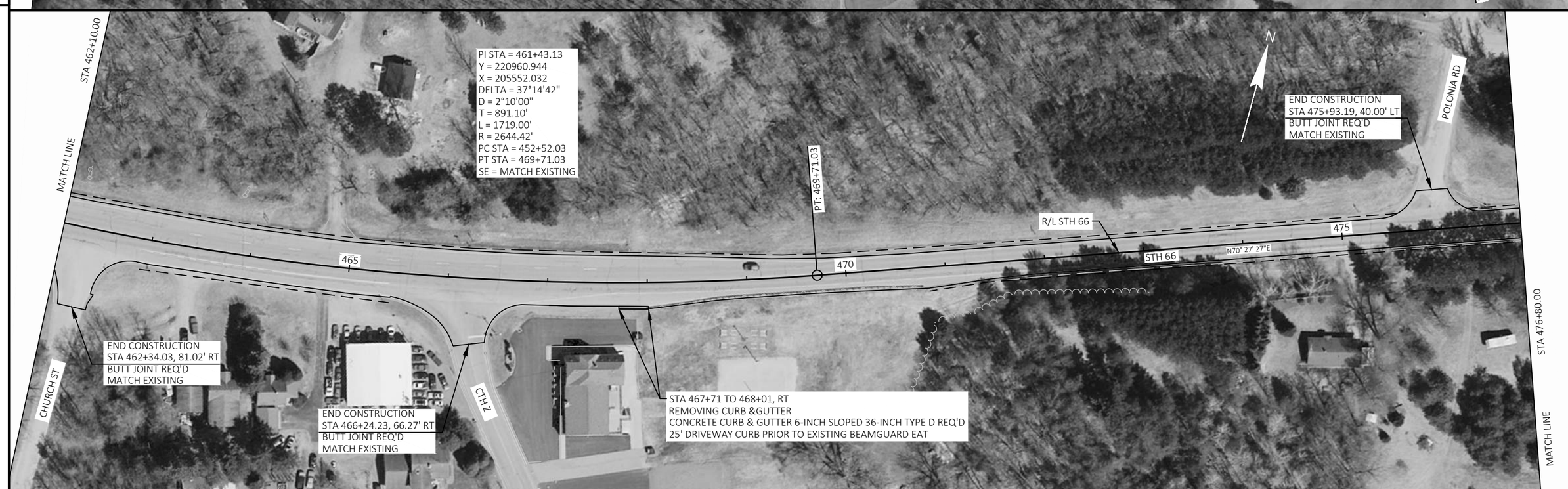

PROJECT NO: 6280-00-60	HWY: STH 66	COUNTY: PORTAGE	PLAN	SHEET 54	E

5

5

PROJECT NO: 6280-00-60	HWY: STH 66	COUNTY: PORTAGE	PLAN	SHEET 55	E

FILE NAME : C:\OD\CORRE, INC\PROJECTS - WI-NC REGION\6280-00-30_STH 66_PORTAGE CO\500_CADD\501_C3D_2018\62800030\SHEETSPLAN\050201-PN.DWG
LAYOUT NAME - 050203-pn
PLOT DATE : 5/5/2022 12:48 PM
PLOT BY : ANDREW PETERSON, PE
PLOT NAME :
PLOT SCALE : 1 IN:100 FT

5

5

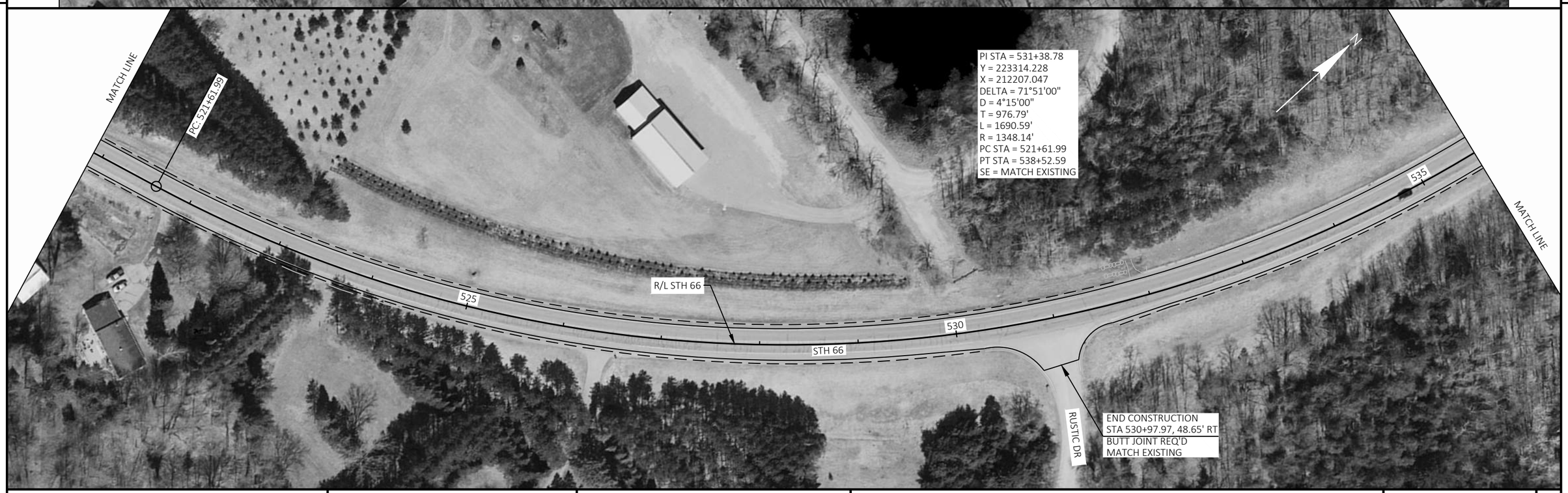

PROJECT NO: 6280-00-60	HWY: STH 66	COUNTY: PORTAGE	PLAN	SHEET 56	E

FILE NAME : C:\OD\CORRE, INC\PROJECTS - WI-NC REGION\6280-00-30_STH 66_PORTAGE CO\500_CADD\501_C3D_2018\62800030\SHEETSPLAN\050201-PN.DWG
LAYOUT NAME - 050204-pn
PLOT DATE : 5/5/2022 12:48 PM
PLOT BY : ANDREW PETERSON, PE
PLOT NAME :
PLOT SCALE : 1 IN:100 FT

WISDOT/CADDS SHEET 44

5

5

PROJECT NO: 6280-00-60	HWY: STH 66	COUNTY: PORTAGE	PLAN	SHEET 57	E

FILE NAME : C:\OD\CORRE, INC\PROJECTS - WI-NC REGION\6280-00-30_STH 66_PORTAGE CO\500_CADD\501_C3D_2018\62800030\SHEETSPLAN\050201-PN.DWG
LAYOUT NAME - 050205-pn
PLOT DATE : 5/5/2022 12:48 PM
PLOT BY : ANDREW PETERSON, PE
PLOT NAME :
PLOT SCALE : 1 IN:100 FT

WISDOT/CADDS SHEET 44

5

5

PROJECT NO: 6280-00-60	HWY: STH 66	COUNTY: PORTAGE	PLAN	SHEET 58	E

FILE NAME : C:\OD\CORRE, INC\PROJECTS - WI-NC REGION\6280-00-30_STH 66_PORTAGE CO\500_CADD\501_C3D_2018\62800030\SHEETSPLAN\050201-PN.DWG
LAYOUT NAME - 050206-pn
PLOT DATE : 5/5/2022 12:48 PM PLOT BY : ANDREW PETERSON, PE PLOT NAME : PLOT SCALE : 1 IN:100 FT

WISDOT/CADDS SHEET 44

5

STA 594+40.00

MATCH LINE

STA 609+10.00

MATCH LINE

5

STA 609+10.00

MATCH LINE

STA 623+80.00

MATCH LINE

PROJECT NO: 6280-00-60	HWY: STH 66	COUNTY: PORTAGE	PLAN	SHEET 59	E

FILE NAME : C:\OD\CORRE, INC\PROJECTS - WI-NC REGION\6280-00-30_STH 66_PORTAGE CO\500_CADD\501_C3D_2018\62800030\SHEETSPLAN\050201-PN.DWG
LAYOUT NAME - 050207-pn
PLOT DATE : 5/5/2022 12:48 PM
PLOT BY : ANDREW PETERSON, PE
PLOT NAME :
PLOT SCALE : 1 IN:100 FT

WISDOT/CADDS SHEET 44

5

5

PROJECT NO: 6280-00-60	HWY: STH 66	COUNTY: PORTAGE	PLAN	SHEET 60	E

FILE NAME : C:\OD\CORRE, INC\PROJECTS - WI-NC REGION\6280-00-30_STH 66_PORTAGE CO\500_CADD\501_C3D_2018\62800030\SHEETSPLAN\050201-PN.DWG
LAYOUT NAME - 050208-pn
PLOT DATE : 5/5/2022 12:48 PM
PLOT BY : ANDREW PETERSON, PE
PLOT NAME :
PLOT SCALE : 1 IN:100 FT

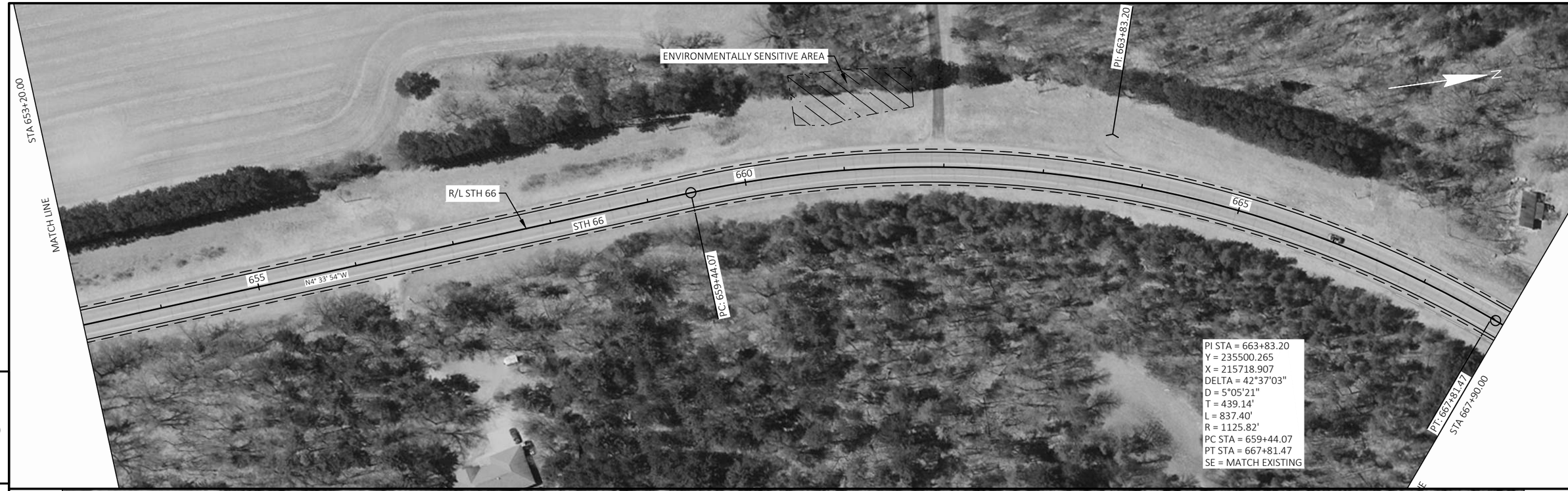

5

5

PROJECT NO: 6280-00-60	HWY: STH 66	COUNTY: PORTAGE	PLAN	SHEET 61	E

FILE NAME : C:\OD\CORRE, INC\PROJECTS - WI-NC REGION\6280-00-30_STH 66_PORTAGE CO\500_CADD\501_C3D_2018\62800030\SHEETSPLAN\050201-PN.DWG
LAYOUT NAME - 050209-pn
PLOT DATE : 5/5/2022 12:48 PM
PLOT BY : ANDREW PETERSON, PE
PLOT NAME :
PLOT SCALE : 1 IN:100 FT

WISDOT/CADDS SHEET 44

PROJECT NO: 6280-00-60	HWY: STH 66	COUNTY: PORTAGE	PLAN	SHEET 62	E

FILE NAME : C:\OD\CORRE, INC\PROJECTS - WI-NC REGION\6280-00-30_STH 66_PORTAGE CO\500_CADD\501_C3D_2018\62800030\SHEETSPLAN\050201-PN.DWG
LAYOUT NAME - 050210-pn
PLOT DATE : 5/5/2022 12:49 PM
PLOT BY : ANDREW PETERSON, PE
PLOT NAME :
PLOT SCALE : 1 IN:100 FT

WISDOT/CADDS SHEET 44

5

5

PROJECT NO: 6280-00-60	HWY: STH 66	COUNTY: PORTAGE	PLAN	SHEET 63	E

FILE NAME : C:\OD\CORRE, INC\PROJECTS - WI-NC REGION\6280-00-30_STH 66_PORTAGE CO\500_CADD\501_C3D_2018\62800030\SHEETSPLAN\050201-PN.DWG
LAYOUT NAME - 050211-pn
PLOT DATE : 5/5/2022 12:49 PM PLOT BY : ANDREW PETERSON, PE PLOT NAME : PLOT SCALE : 1 IN:100 FT

WISDOT/CADDS SHEET 44

5

STA 741+40.00

MATCH LINE

STA 756+09.99

MATCH LINE

5

STA 756+09.99

MATCH LINE

STA 770+79.99

MATCH LINE

PROJECT NO: 6280-00-60	HWY: STH 66	COUNTY: PORTAGE	PLAN	SHEET 64	E

FILE NAME : C:\OD\CORRE, INC\PROJECTS - WI-NC REGION\6280-00-30_STH 66_PORTAGE CO\500_CADD\501_C3D_2018\62800030\SHEETSPLAN\050201-PN.DWG
LAYOUT NAME - 050212-pn
PLOT DATE : 5/5/2022 12:49 PM
PLOT BY : ANDREW PETERSON, PE
PLOT NAME :
PLOT SCALE : 1 IN:100 FT

WISDOT/CADDS SHEET 44

5

5

PROJECT NO: 6280-00-60	HWY: STH 66	COUNTY: PORTAGE	PLAN	SHEET 65	E

FILE NAME : C:\OD\CORRE, INC\PROJECTS - WI-NC REGION\6280-00-30_STH 66_PORTAGE CO\500_CADD\501_C3D_2018\62800030\SHEETSPLAN\050201-PN.DWG
LAYOUT NAME - 050213-pn
PLOT DATE : 5/5/2022 12:49 PM
PLOT BY : ANDREW PETERSON, PE
PLOT NAME :
PLOT SCALE : 1 IN:100 FT

5

5

PROJECT NO: 6280-00-60	HWY: STH 66	COUNTY: PORTAGE	PLAN	SHEET 66	E

FILE NAME : C:\OD\CORRE, INC\PROJECTS - WI-NC REGION\6280-00-30_STH 66_PORTAGE CO\500_CADD\501_C3D_2018\62800030\SHEETSPLAN\050201-PN.DWG
LAYOUT NAME - 050214-pn
PLOT DATE : 5/5/2022 12:49 PM PLOT BY : ANDREW PETERSON, PE PLOT NAME : PLOT SCALE : 1 IN:100 FT

WISDOT/CADDS SHEET 44

CONTROL POINTS						
CP NO.	STATION	OFFSET	ELEV	DESCRIPTION	Y	X
500	846+70.93	30.41 , LT	1152.69	MAG NAIL	241173.69	232257.82
501	856+06.40	91.74 , LT	1164.40	MAG NAIL	241220.84	233194.11

PROJECT NO: 6280-00-60	HWY: STH 66	COUNTY: PORTAGE	PLAN	SHEET 67	E

FILE NAME : C:\OD\CORRE, INC\PROJECTS - WI-NC REGION\6280-00-30_STH 66_PORTAGE CO\500_CADD\501_C3D_2018\62800030\SHEETSPLAN\050201-PN.DWG
LAYOUT NAME - 050215-pn
PLOT DATE : 5/5/2022 12:49 PM PLOT BY : ANDREW PETERSON, PE PLOT NAME : PLOT SCALE : 1 IN:100 FT

WISDOT/CADDS SHEET 44

CONTROL POINTS

CP NO.	STATION	OFFSET	ELEV	DESCRIPTION	Y	X
502	864+48.85	74.26 , RT	1164.45	MAG NAIL	241039.29	234033.65
503	870+92.20	29.40 , RT	1139.88	MAG NAIL	241072.15	234677.72

CONTROL POINTS

CP NO.	STATION	OFFSET	ELEV	DESCRIPTION	Y	X
504	878+17.17	30.73 , LT	1136.76	REBAR W/CAP	241118.76	235403.68
505	887+79.29	32.86 , RT	1132.08	MAG NAIL	241049.91	236365.62

PROJECT NO: 6280-00-60	HWY: STH 66	COUNTY: PORTAGE	PLAN	SHEET 68	E

FILE NAME : C:\OD\CORRE, INC\PROJECTS - WI-NC REGION\6280-00-30_STH 66_PORTAGE CO\500_CADD\501_C3D_2018\62800030\SHEETSPLAN\050201-PN.DWG
LAYOUT NAME - 050216-pn
PLOT DATE : 5/5/2022 12:49 PM PLOT BY : ANDREW PETERSON, PE PLOT NAME : PLOT SCALE : 1 IN:100 FT

WISDOT/CADDS SHEET 44

CONTROL POINTS

CP NO.	STATION	OFFSET	ELEV	DESCRIPTION	Y	X
506	895+53.41	55.56 , LT	1133.72	MAG NAIL	241150.65	237138.23

CONTROL POINTS

CP NO.	STATION	OFFSET	ELEV	DESCRIPTION	Y	X
507	903+56.88	30.01 , RT	1137.15	MAG NAIL	241077.90	237942.97

5

5

PROJECT NO: 6280-00-60	HWY: STH 66	COUNTY: PORTAGE	PLAN	SHEET 69	E

FILE NAME : C:\OD\CORRE, INC\PROJECTS - WI-NC REGION\6280-00-30_STH 66_PORTAGE CO\500_CADD\501_C3D_2018\62800030\SHEETSPLAN\050201-PN.DWG
LAYOUT NAME - 050217-pn
PLOT DATE : 5/5/2022 12:49 PM PLOT BY : ANDREW PETERSON, PE PLOT NAME : PLOT SCALE : 1 IN:100 FT

WISDOT/CADDS SHEET 44

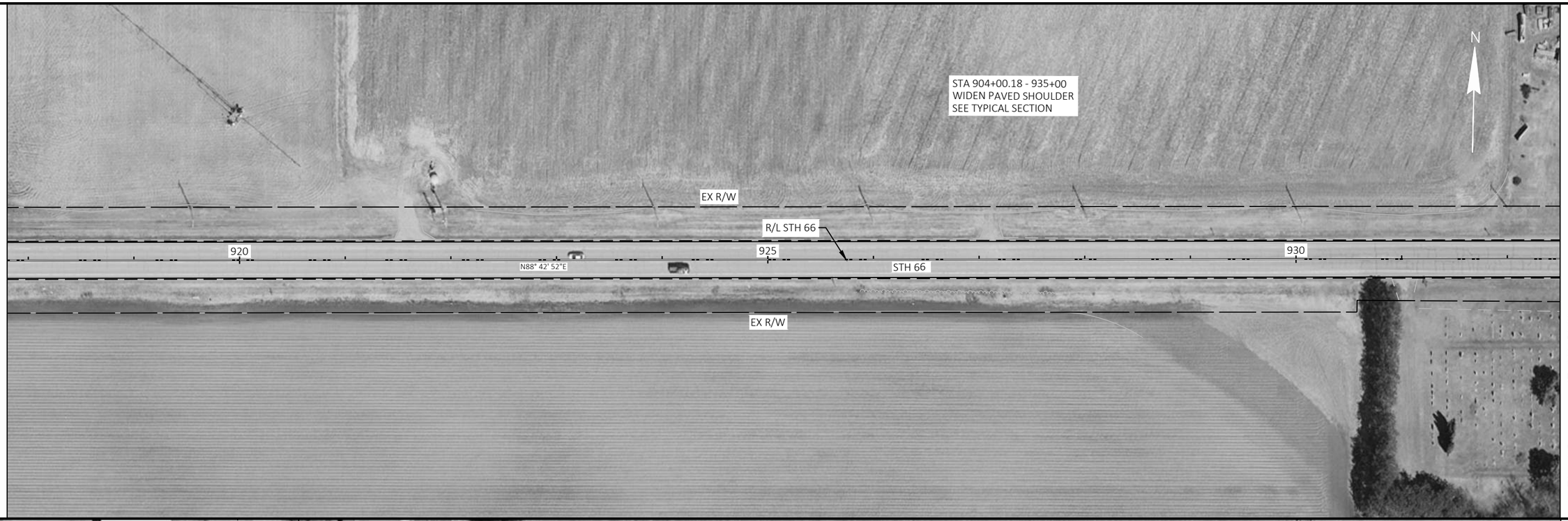

5

5

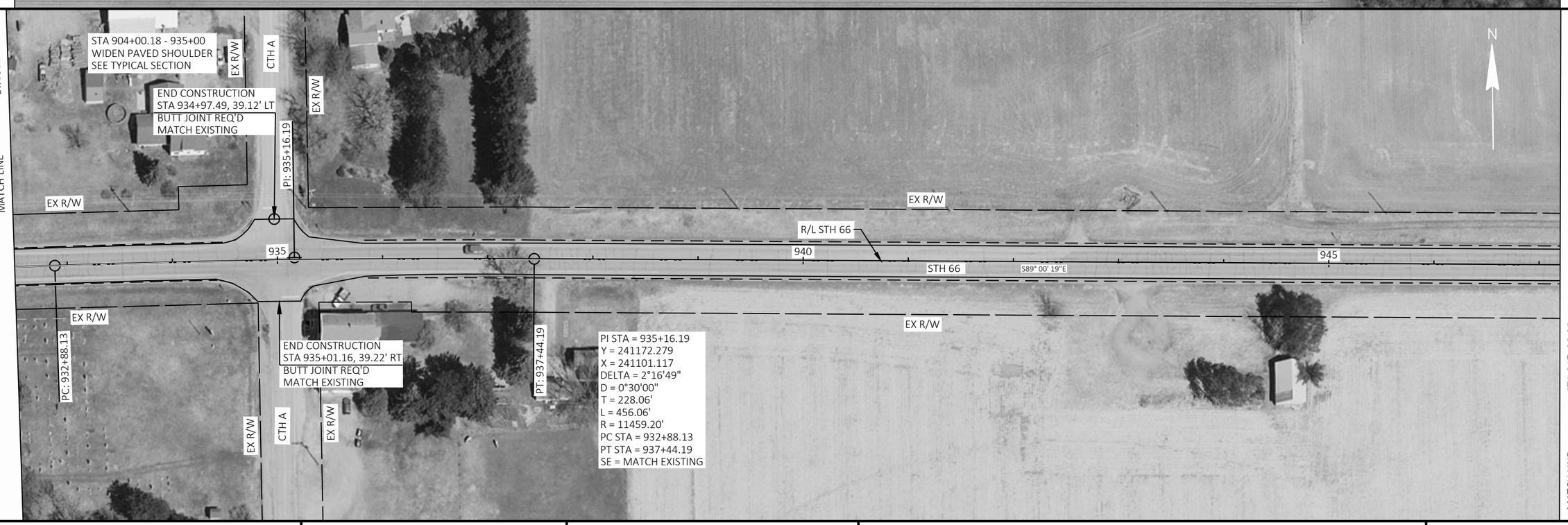

PROJECT NO: 6280-00-60	HWY: STH 66	COUNTY: PORTAGE	PLAN	SHEET 70	E

FILE NAME : C:\OD\CORRE, INC\PROJECTS - WI-NC REGION\6280-00-30_STH 66_PORTAGE CO\500_CADD\501_C3D_2018\62800030\SHEETSPLAN\050201-PN.DWG
LAYOUT NAME - 050218-pn
PLOT DATE : 5/5/2022 12:49 PM
PLOT BY : ANDREW PETERSON, PE
PLOT NAME :
PLOT SCALE : 1 IN:100 FT

5

5

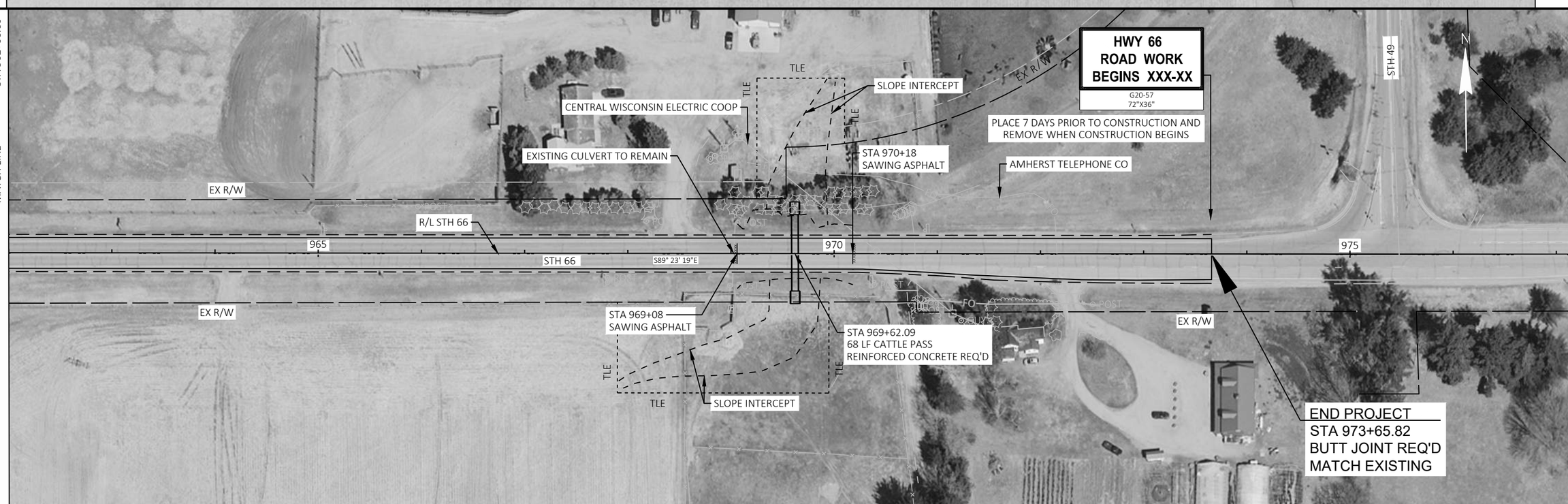

PROJECT NO: 6280-00-60	HWY: STH 66	COUNTY: PORTAGE	PLAN	SHEET 71	E

FILE NAME : C:\OD\CORRE, INC\PROJECTS - WI-NC REGION\6280-00-30_STH 66_PORTAGE CO\500_CADD\501_C3D_2018\62800030\SHEETSPLAN\050201-PN.DWG
LAYOUT NAME - 050219-pn
PLOT DATE : 5/5/2022 12:49 PM PLOT BY : ANDREW PETERSON, PE PLOT NAME : PLOT SCALE : 1 IN:100 FT

WISDOT/CADDS SHEET 44

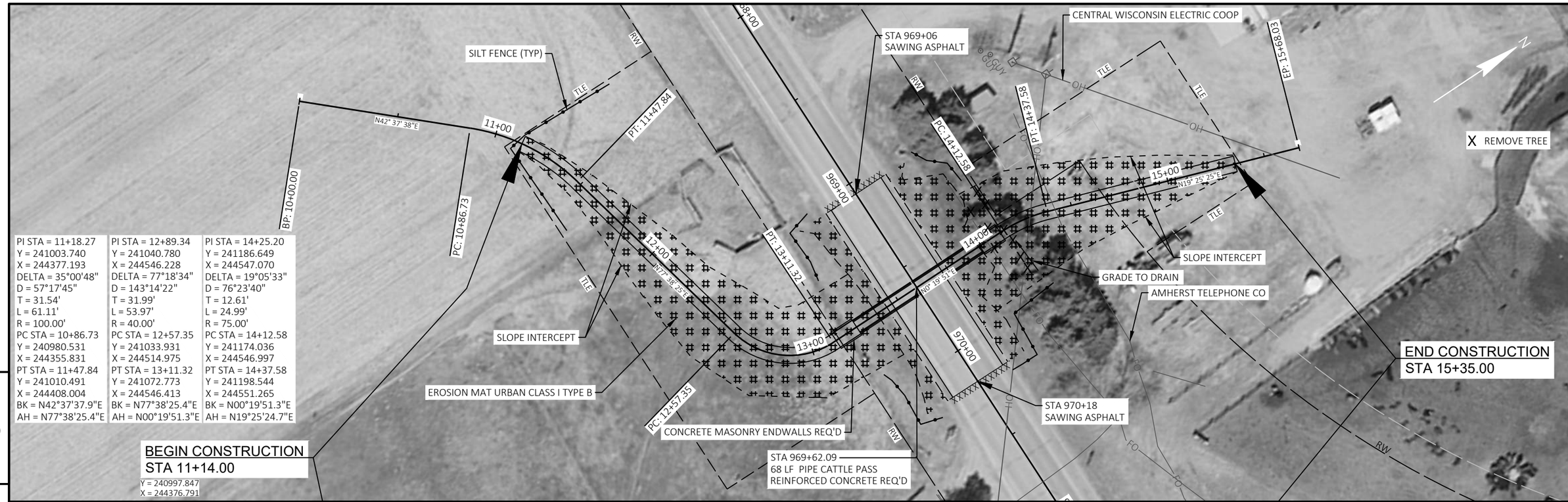

PI STA = 11+18.27	PI STA = 12+89.34	PI STA = 14+25.20
Y = 241003.740	Y = 241040.780	Y = 241186.649
X = 244377.193	X = 244546.228	X = 244547.070
DELTA = 35°00'48"	DELTA = 77°18'34"	DELTA = 19°05'33"
D = 57°17'45"	D = 143°14'22"	D = 76°23'40"
T = 31.54'	T = 31.99'	T = 12.61'
L = 61.11'	L = 53.97'	L = 24.99'
R = 100.00'	R = 40.00'	R = 75.00'
PC STA = 10+86.73	PC STA = 12+57.35	PC STA = 14+12.58
Y = 240980.531	Y = 241033.931	Y = 241174.036
X = 244355.831	X = 244514.975	X = 244546.997
PT STA = 11+47.84	PT STA = 13+11.32	PT STA = 14+37.58
Y = 241010.491	Y = 241072.773	Y = 241198.544
X = 244408.004	X = 244546.413	X = 244551.265
BK = N42°37'37.9"E	BK = N77°38'25.4"E	BK = N00°19'51.3"E
AH = N77°38'25.4"E	AH = N00°19'51.3"E	AH = N19°25'24.7"E

5

5

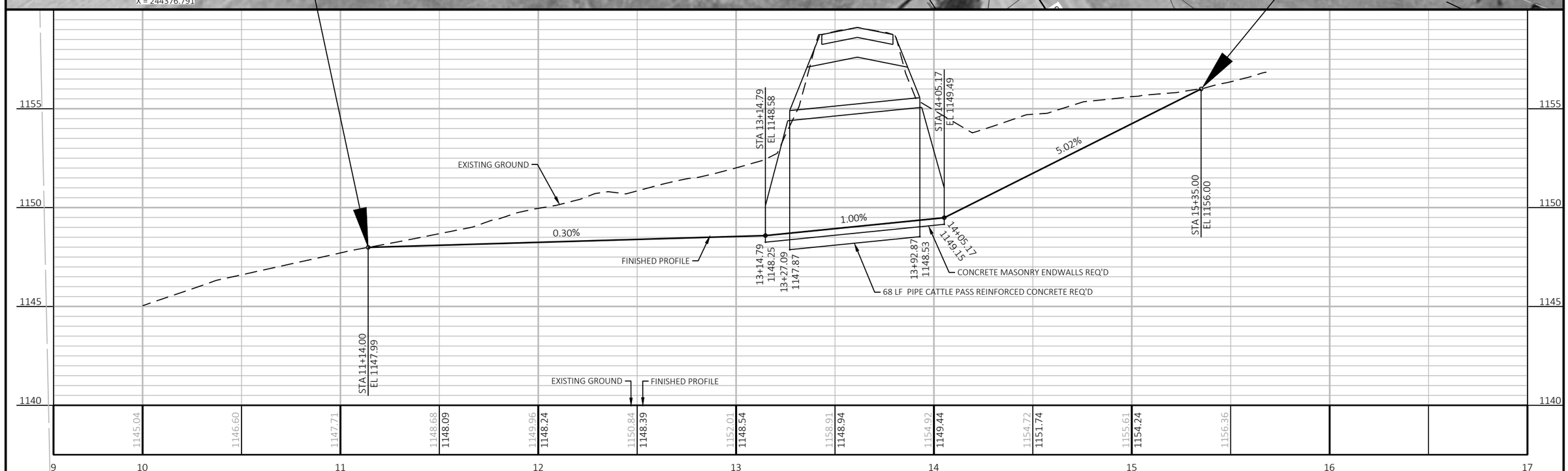

PROJECT NO: 6280-00-60	HWY: STH 66	COUNTY: PORTAGE	PLAN AND PROFILE: CATTLE PASS	SHEET 72	E

Standard Detail Drawing List

08D01-22A	CONCRETE CURB & GUTTER
08D01-22B	CONCRETE CURB, TIES AND CURB AND GUTTER APPLICATIONS
08D04-06	CONCRETE SURFACE DRAINS & ASPHALTIC FLUMES
08D05-20A	CURB RAMPS TYPES 1 AND 1-A
08D05-20B	CURB RAMPS TYPES 2 AND 3
08D05-20C	CURB RAMPS TYPES 4A AND 4A1
08D05-20D	CURB RAMPS TYPE 4B AND 4B1
08D05-20E	CURB RAMPS TYPES 5, 6, 7A, 7B & 8
08D05-20F	CURB RAMPS RADIAL DETECTABLE WARNING FIELD APPLICATIONS
08D05-20G	CURB RAMPS RECTANGULAR AND RADIAL DETECTABLE WARNING PLATES
08E09-06	SILT FENCE
08F01-11	APRON ENDWALLS FOR CULVERT PIPE
08F03-03	DETAILS FOR PIPE CATTLE PASS, CONCRETE ENDWALLS AND STEPS
08F04-08	JOINT TIES FOR CONCRETE PIPE AND CONCRETE COLLAR DETAIL
13A11-03A	2-LANE RURAL CENTER LINE RUMBLE STRIP, MILLING
13A11-03B	2-LANE RURAL CENTER LINE RUMBLE STRIP, MILLING
13C19-03	HMA LONGITUDINAL JOINTS
14B42-07A	MIDWEST GUARDRAIL SYSTEM (MGS) GUARDRAIL
14B42-07B	MIDWEST GUARDRAIL SYSTEM (MGS) GUARDRAIL
14B42-07C	MIDWEST GUARDRAIL SYSTEM (MGS) GUARDRAIL
14B42-07D	MIDWEST GUARDRAIL SYSTEM (MGS) GUARDRAIL
14B43-04A	MIDWEST GUARDRAIL SYSTEM LONG SPAN MGS (L)
14B43-04B	MIDWEST GUARDRAIL SYSTEM LONG SPAN MGS (L)
14B43-04C	MIDWEST GUARDRAIL SYSTEM LONG SPAN MGS (L)
14B44-04A	MIDWEST GUARDRAIL SYSTEM ENERGY ABSORBING TERMINAL (MGS)
14B44-04B	MIDWEST GUARDRAIL SYSTEM ENERGY ABSORBING TERMINAL (MGS)
14B44-04C	MIDWEST GUARDRAIL SYSTEM ENERGY ABSORBING TERMINAL (MGS)
15C02-08F	ADVANCED WIDTH RESTRICTION SIGNING
15C03-05	BARRICADES AND SIGNS FOR SIDEROAD CLOSURES
15C04-05	TRAFFIC CONTROL, ADVANCE WARNING SIGNS 45 M.P.H. OR GREATER TWO-WAY UNDIVIDED ROAD OPEN TO TRAFFIC
15C05-05	TRAFFIC CONTROL, ADVANCE WARNING SIGNS 40 M.P.H. OR LESS
15C08-21A	LONGITUDINAL MARKING (MAINLINE)
15C08-21B	TEMPORARY LONGITUDINAL PAVEMENT MARKING
15C11-09B	CHANNELIZING DEVICES DRUMS, CONES, BARRICADES AND VERTICAL PANELS
15C12-09A	TRAFFIC CONTROL FOR LANE CLOSURE WITH FLAGGING OPERATION
15C19-07A	MOVING PAVEMENT MARKING OPERATION TWO-LANE TWO-WAY ROADWAY
15C35-05A	PAVEMENT MARKING (INTERSECTIONS)
15D28-04	TRAFFIC CONTROL, WORK ON SHOULDER OR PARKING LANE, UNDIVIDED ROADWAY
15D30-07A	TRAFFIC CONTROL, PEDESTRIAN ACCOMMODATION
15D30-07B	TRAFFIC CONTROL, TEMPORARY ADA COMPLIANT PEDESTRIAN ACCOMMODATION
15D30-07C	TRAFFIC CONTROL, PEDESTRIAN ACCOMMODATION
15D30-07J	TRAFFIC CONTROL, PEDESTRIAN ACCOMMODATION
15D39-02	TRAFFIC CONTROL, DROP-OFF SIGNING
15D44-02	TRAFFIC CONTROL, SIGNING ON ROADWAYS WITH MILLED SURFACES
15D45-03	TRAFFIC CONTROL, SIGNING ON ROADWAYS WITH LOOSE GRAVEL
15D48-01	TRAFFIC CONTROL, LANE SHIFT IN FLAGGING OPERATION
15D51-01	TRAFFIC CONTROL, MOBILE OPERATIONS ON AN UNDIVIDED ROADWAY

6

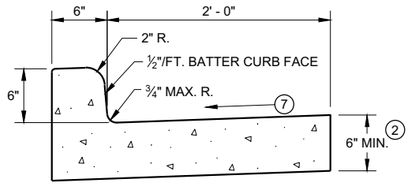

TYPES A[1] & D

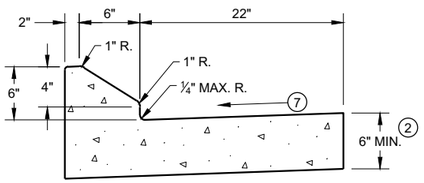

6" SLOPED CURB TYPES G[1] & J

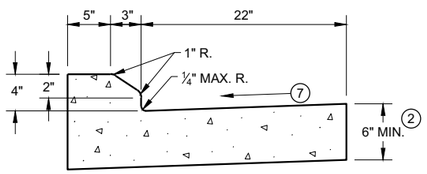

4" SLOPED CURB TYPES G[1] & J

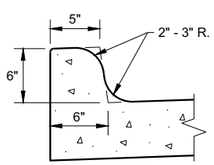

TYPES K[1] & L
(OPTIONAL CURB SHAPE)

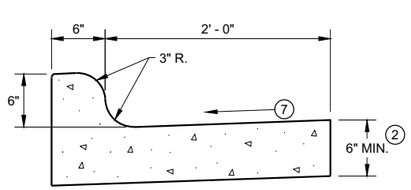

TYPES K[1] & L

CONCRETE CURB AND GUTTER 30"

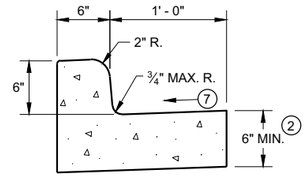

TYPES A[1] & D

CONCRETE CURB AND GUTTER 18"

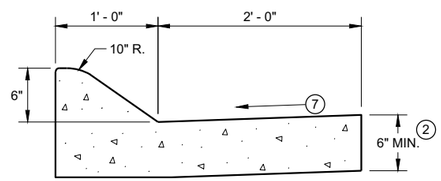

6" SLOPED CURB TYPES A[1] & D

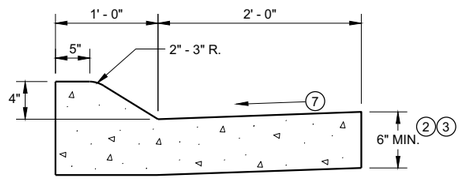

4" SLOPED CURB TYPES A[1] & D

CONCRETE CURB AND GUTTER 36"

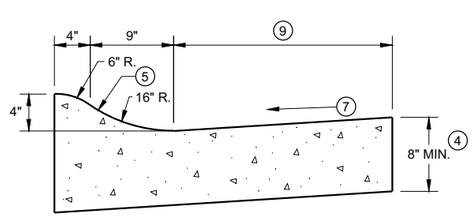

4" SLOPED CURB TYPES R[1] & T

TBT & TBTT	X
30"	22"
36"	28"

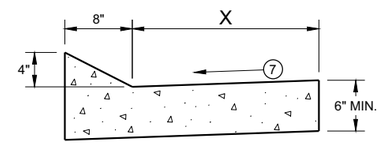

TYPES TBT & TBTT[1]

CONCRETE CURB AND GUTTER

GENERAL NOTES

DETAILS OF CONSTRUCTION AND WORKMANSHIP NOT SHOWN ON THIS DRAWING SHALL CONFORM TO THE PERTINENT REQUIREMENTS OF THE CONTRACT.

PAVEMENT TIES AND TIE BARS SHALL BE EPOXY COATED IN CONFORMANCE WITH SUBSECTION 505.2.6.2 OF THE STANDARD SPECIFICATIONS.

INTEGRAL CURB AND GUTTER SHALL CONFORM TO THE DETAILS SHOWN FOR CONCRETE CURB AND GUTTER INCLUDING THE TRANSVERSE GUTTER SLOPE.

UNLESS OTHERWISE SHOWN ON THE TYPICAL CROSS SECTIONS, THE BASE AGGREGATE AND COMMON EXCAVATION LIMITS ARE 2' - 0" BEHIND THE BACK OF CURBS.

1. TIE BARS ARE REQUIRED FOR CURB AND GUTTERS TYPES A, G, K, R, AND TBTT.
2. THE BOTTOM OF CURB AND GUTTER MAY BE CONSTRUCTED EITHER LEVEL OR PARALLEL TO THE SLOPE OF THE SUBGRADE OR BASE AGGREGATE PROVIDED A 6" MINIMUM GUTTER THICKNESS IS MAINTAINED.
3. USE 8" MINIMUM GUTTER THICKNESS WHEN USED WITH AN ADJACENT CONCRETE TRUCK APRON PLACED BEHIND BACK OF CURB.
4. THE BOTTOM OF CURB AND GUTTER MAY BE CONSTRUCTED EITHER LEVEL OR PARALLEL TO THE SLOPE OF THE SUBGRADE OR BASE AGGREGATE PROVIDED A 8" MINIMUM GUTTER THICKNESS IS MAINTAINED.
5. UNLESS OTHERWISE NOTED, FOR STAKING PURPOSES THE FACE OF CURB IS 6" FROM THE BACK OF CURB.
6. WHEN REVERSE SLOPE GUTTER IS REQUIRED, THE LOCATION(S) WILL BE SHOWN ELSEWHERE IN THE PLAN.
7. USE 4% GUTTER CROSS SLOPE UNLESS OTHERWISE NOTED IN THE PLANS.
8. INCLUDE LONGITUDINAL JOINT AND TIE BARS ALONG LANE EDGE WHEN CONCRETE PANEL WIDTH EXCEEDS THE MAXIMUM WIDTH PER TABLE BELOW. LONGITUDINAL JOINT(S) ARE NOT ALLOWED WITHIN TRAFFIC LANES AND BIKE LANES. LONGITUDINAL JOINT MAY BE SAWED.
9. CONCRETE CURB AND GUTTER 4-INCH SLOPED 30-INCH TYPE "R" AND "T" = 17 INCHES
   CONCRETE CURB AND GUTTER 4-INCH SLOPED 36-INCH TYPE "R" AND "T" = 23 INCHES

PAVEMENT THICKNESS AND MAXIMUM CONCRETE PANEL WIDTH TABLE

PAVEMENT THICKNESS	MAXIMUM PANEL WIDTH
LESS THAN 10"	12'
10" & ABOVE	15'

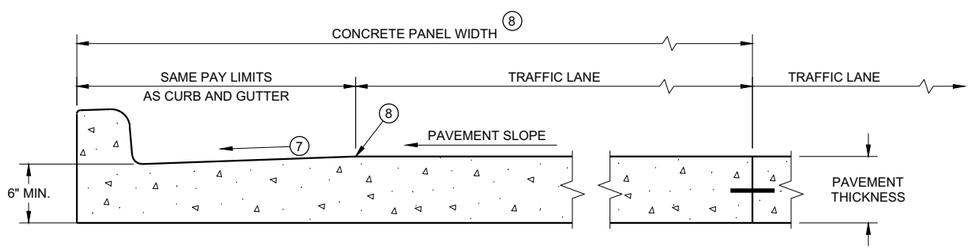

PARTIAL SECTION OF PAVEMENT *
WITH INTEGRAL CURB AND GUTTER

* BIKE LANE IS NOT SHOWN

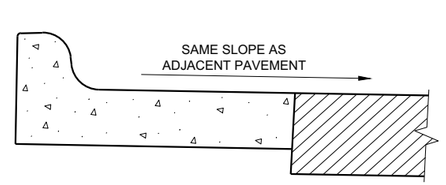

REVERSE SLOPE GUTTER[6]
(TYPICAL FOR ALL CURB & GUTTER TYPES)

CONCRETE CURB AND GUTTER

STATE OF WISCONSIN
DEPARTMENT OF TRANSPORTATION

6

SDD 08D01 - 22a

GENERAL NOTES

DETAILS OF CONSTRUCTION AND WORKMANSHIP NOT SHOWN ON THIS DRAWING SHALL CONFORM TO THE PERTINENT REQUIREMENTS OF THE CONTRACT.

PAVEMENT TIES AND TIE BARS SHALL BE EPOXY COATED IN CONFORMANCE WITH SUBSECTION 505.2.6.2 OF THE STANDARD SPECIFICATIONS.

UNLESS OTHERWISE SHOWN ON THE TYPICAL CROSS SECTIONS, THE BASE AGGREGATE AND COMMON EXCAVATION LIMITS ARE 2' - 0" BEHIND THE BACK OF CURBS.

(1) TIE BARS ARE REQUIRED FOR CURB AND GUTTERS TYPES A, G, K, R, AND TBTT.

(2) THE BOTTOM OF CURB AND GUTTER MAY BE CONSTRUCTED EITHER LEVEL OR PARALLEL TO THE SLOPE OF THE SUBGRADE OR BASE AGGREGATE PROVIDED A 6" MINIMUM GUTTER THICKNESS IS MAINTAINED.

(9) REFER TO SDD 08D18 AND 08D19 FOR ADDITIONAL DRIVEWAY ENTRANCE CURB DETAILS.

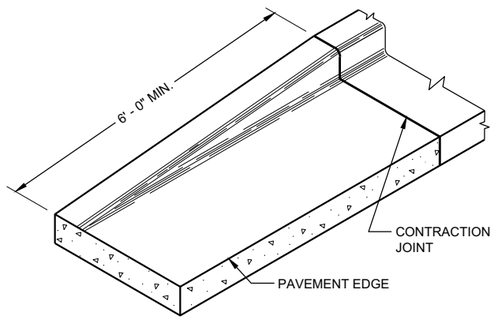

END SECTIONCURB AND GUTTER

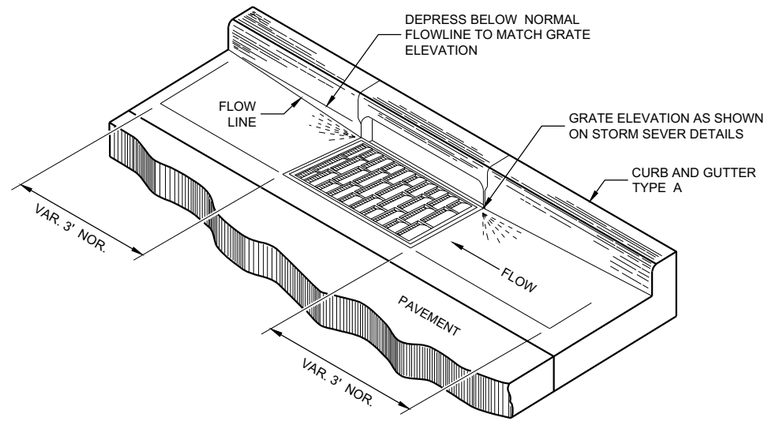

DETAIL OF CURB AND GUTTER AT INLETS
(TYPICAL H INLET COVER SHOWN)

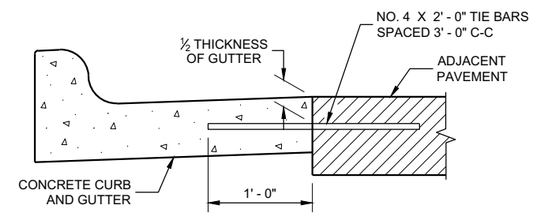

TYPICAL TIE BAR LOCATION (1)

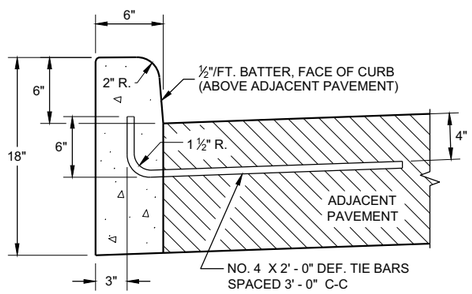

TYPES A (1) & D

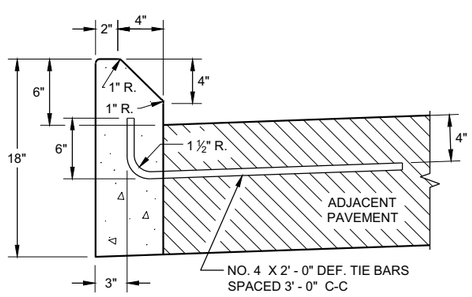

TYPES G (1) & J

CONCRETE CURB

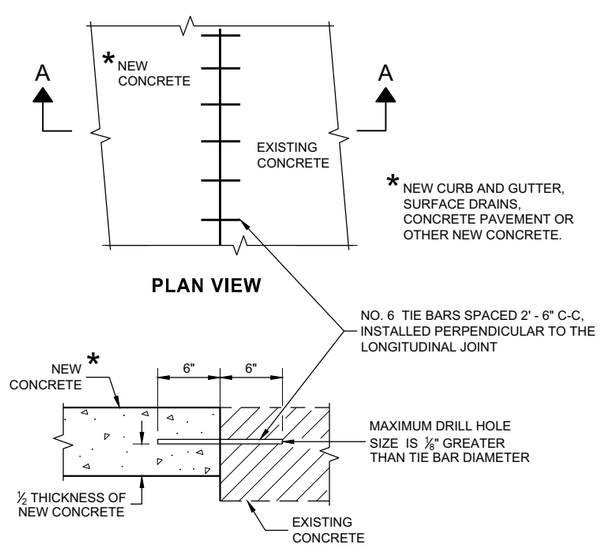

PLAN VIEW

SECTION A - A

TIE BARS DRILLED INTO EXISTING PAVEMENT

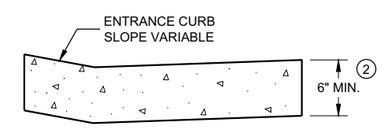

DRIVEWAY ENTRANCE CURB (9)
(WHEN DIRECTED BY THE ENGINEER)

CONCRETE CURB, TIES AND CURB AND GUTTER APPLICATIONS

STATE OF WISCONSIN
DEPARTMENT OF TRANSPORTATION

APPROVED
February 2021 — DATE
/S/ Rodnery Taylor — ROADWAY STANDARDS DEVE ENGINEER
FHWA

6
SDD 08D01 - 22b

NOTE: TAPER CURB ENDS TO GUTTER IN 1' - 0"

ASPHALTIC FLUME

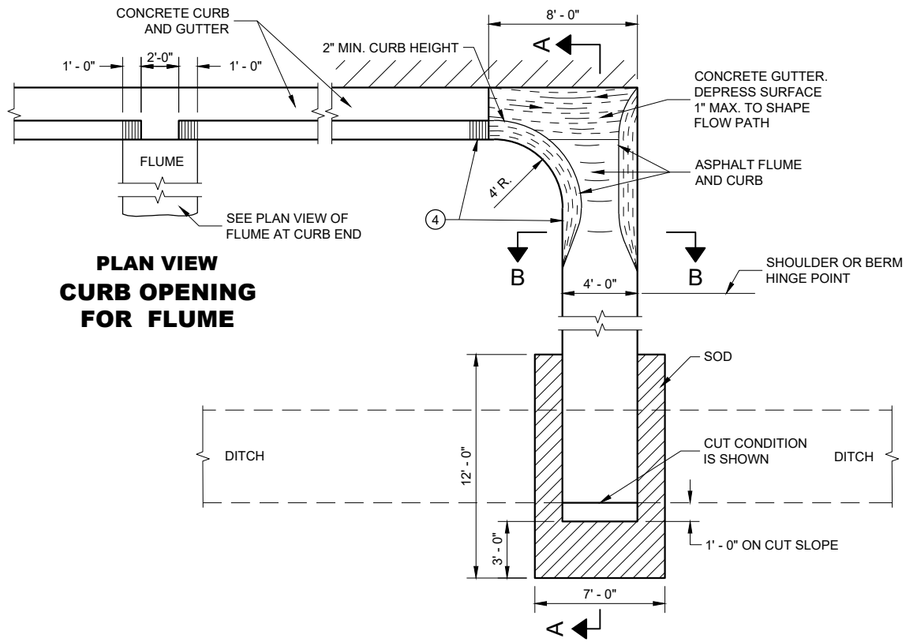

PLAN VIEW
CURB OPENING FOR FLUME

PLAN VIEW
FLUME AT CURB END

GENERAL NOTES

DETAILS OF CONSTRUCTION, MATERIALS AND WORKMANSHIP NOT SHOWN ON THIS DRAWING SHALL CONFORM TO PERTINENT REQUIREMENTS OF THE STANDARD SPECIFICATIONS AND APPLICABLE SPECIAL PROVISIONS.

4" X 4" - W3.0 X W3.0 CONCRETE REINFORCEMENT SHALL BE IN ACCORDANCE WITH AASHTO SPECIFICATION M55.

1. JOINTS SHALL BE ⅛" TO ¼" WIDE BY 1½" DEEP AND SPACED AT UNIFORM INTERVALS OF APPROXIMATELY 4 FEET.
2. GEOTEXTILE TYPE "R" SHALL UNDERLAY THE FULL LENGTH AND WIDTH OF THE CONCRETE SURFACE DRAIN AND RIPRAP.
3. CONCRETE SURFACE DRAIN WITHOUT CURB AND GUTTER MAY BE USED ON BACKSLOPES WHEN SPECIFIED.
4. ANGLE OF FLUME IN RELATION TO BACK OF CURB TO BE CONSTRUCTED PER THE PLAN DETAILS OR AS DIRECTED BY THE ENGINEER. ANGLE OF FLUME MAY BE OTHER THAN 90 DEGREES AS SHOWN.

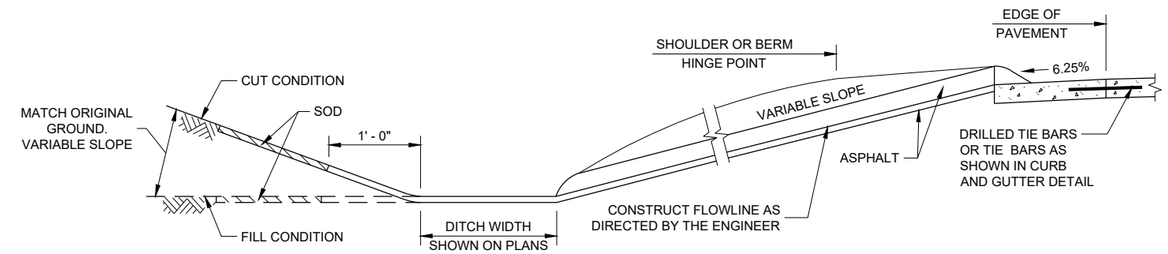

SECTION A - A

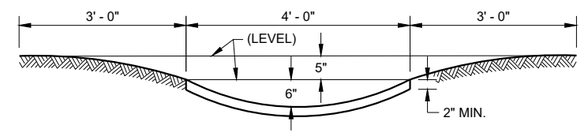

SECTION B - B

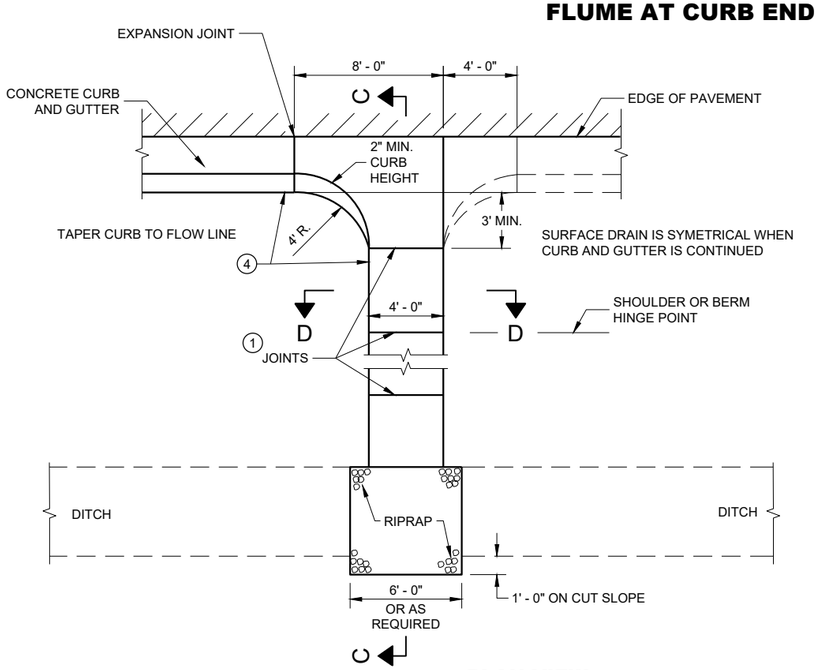

PLAN VIEW
CONCRETE SURFACE DRAIN

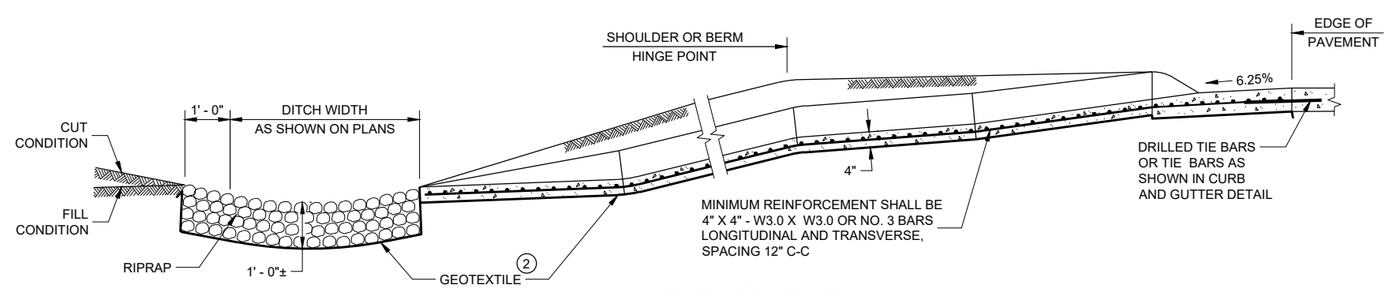

SECTION C - C

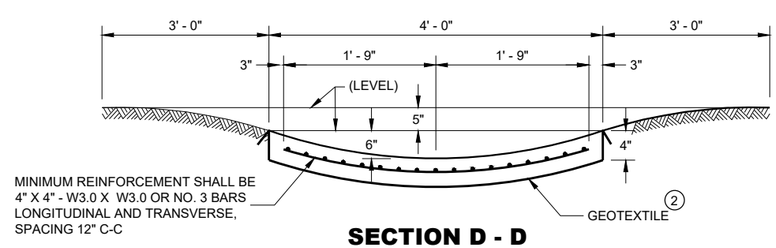

SECTION D - D

CONCRETE SURFACE DRAINS AND ASPHALTIC FLUMES

STATE OF WISCONSIN
DEPARTMENT OF TRANSPORTATION

APPROVED
November 2021 — DATE
/S/ Rodney Taylor — ROADWAY STANDARDS DEVE ENGINEER
FHWA

6

SDD 08D04 - 06

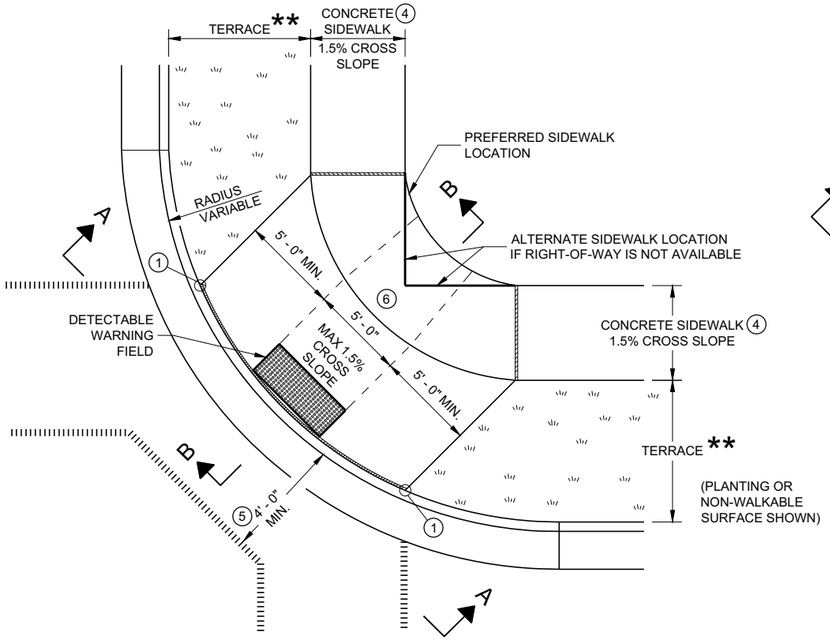

PLAN VIEW

CURB RAMP TYPE 1

(CENTER OF CORNER RADIUS)

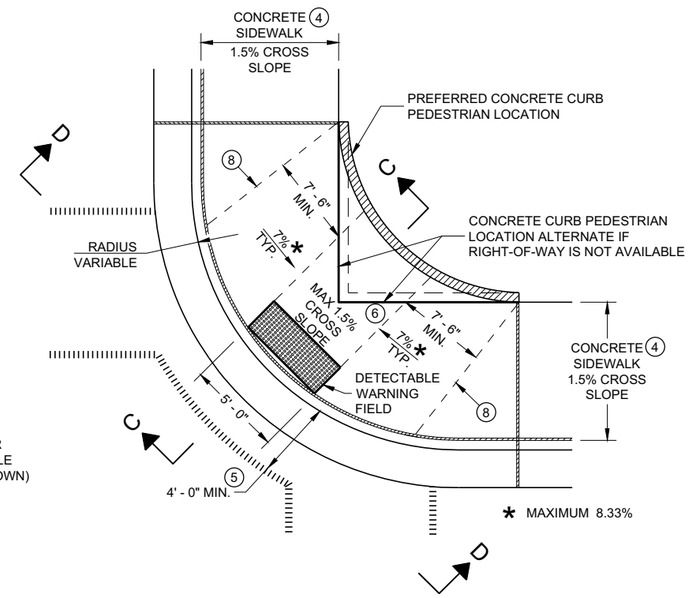

PLAN VIEW

CURB RAMP TYPE 1 - A

(NO TERRACE)

GENERAL NOTES

AVOID PLACING DRAINAGE STRUCTURES, JUNCTION BOXES OR OTHER OBSTRUCTIONS IN FRONT OF RAMP ACCESS AREAS.

DETAILS OF CONSTRUCTION, MATERIALS AND WORKMANSHIP NOT SHOWN ON THIS DRAWING SHALL CONFORM TO THE PERTINENT REQUIREMENTS OF THE STANDARD SPECIFICATIONS AND THE APPLICABLE SPECIAL PROVISIONS.

WHEN NECESSARY, THE SIDEWALK ELEVATION MAY BE LOWERED TO MEET THE HIGH POINT ON THE RAMP.

TYPE 1 CURB RAMPS SHALL HAVE A NORMAL SIDEWALK APRON AND CURB ON BOTH SIDES OF RAMP.

DETECTABLE WARNING FILED SHALL BE MEASURED AND PAID BY THE SQUARE FOOT AS "CURB RAMP DETECTABLE WARNING FIELD". THE CONCRETE PEDESTRIAN CURB, IF NEEDED, SHALL BE MEASURED AND PAID BY THE LINEAR FOOT AS "CONCRETE CURB PEDESTRIAN". CONCRETE SIDEWALK IN THE CURB RAMP AREA SHALL BE MEASURED AND PAID BY THE SQUARE FOOT AS CONCRETE SIDEWALK, INCLUDING THE AREA UNDER THE DETECTABLE WARNING FIELD.

SELECT CURB RAMP DETECTABLE WARNING FIELD MATERIALS AND DEVICES FROM THE DEPARTMENT'S APPROVED MATERIALS LIST. THE COLOR OF THE DETECTABLE WARNING FIELD IS SPECIFIED ELSEWHERE AND IS INCIDENTAL TO THE BID ITEM OF "CURB RAMP DETECTABLE WARNING FIELD"

DETECTABLE WARNING FIELDS THAT ARE INSTALLED AS A GROUP OR SIDE BY SIDE, SHALL BE FROM THE SAME MANUFACTURER.

SURFACE TEXTURE OF THE RAMP SHALL BE OBTAINED BY COARSE BROOMING TRANSVERSE TO THE SLOPE OF THE RAMP.

1. THIS POINT IS AN EXTENSION OF OUTSIDE EDGE OF APPROACHING SIDEWALK WHERE IT MEETS THE BACK OF CONCRETE CURB. POINT LOCATION MAY BE ADJUSTED TO ALIGN WITH BEGINNING OF FULL-HEIGHT CURB IF THIS DISTANCE IS SHORT.
2. GRADE CHANGE BETWEEN GUTTER FLAG SLOPE AND THE CURB RAMP SLOPE SHALL NOT EXCEED 11%. MAXIMUM GUTTER FLAG SLOPE IS 4%. PROVIDE LONGITUDINAL DRAINAGE AROUND CURB AND AWAY FROM CURB RAMP. NO VERTICAL LIPS OR DISCONTINUITIES GREATER THAN ¼ - INCH ARE ALLOWED. SLOPE OF CURB HEAD OPENING SHALL MATCH THE RAMP SLOPE, MINIMALLY 1.5% AND NOT TO EXCEED 7%. WHEN ADJACENT TO 1.5% LANDING, CONSTRUCT CURB HEAD OPENING AT 1.5% IN THE DIRECTION OF PEDESTRIAN TRAVEL.
3. MAXIMUM 8.33% CURB RAMP SLOPE IS ALLOWABLE WITH FLATTENED GUTTER FLAG SLOPE AND NOT TO EXCEED 11% GRADE CHANGE.
4. ±0.5% CONSTRUCTION TOLERANCE IN SIDEWALK CROSS SLOPE. THE SIDEWALK CROSS SLOPE SHALL NOT EXCEED 2% WITHOUT PRIOR APPROVAL FROM THE ENGINEER.
5. PROVIDE A LEVEL LANDING IN THE STREET AND GUTTER AREA (2% MAXIMUM SLOPE IN ANY DIRECTION). WHEN THE GUTTER SLOPE EXCEEDS 2%, CONSTRUCT THE LEVEL LANDING IN THE STREET AREA.
6. PROVIDE A LEVEL LANDING (MAXIMUM 2% SLOPE) IN ANY DIRECTION OF PEDESTRIAN TRAVEL. STANDARD LEVEL LANDING SIZE IS 5 FEET BY 5 FEET.
8. PROVIDE GRADE BREAK PERPENDICULAR TO DIRECTION OF WHEELCHAIR TRAVEL.

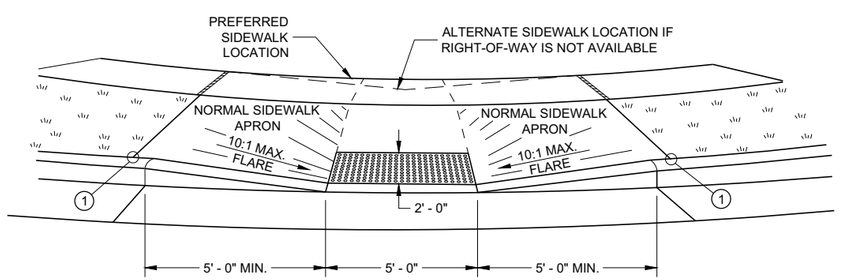

VIEW A - A FOR TYPE 1

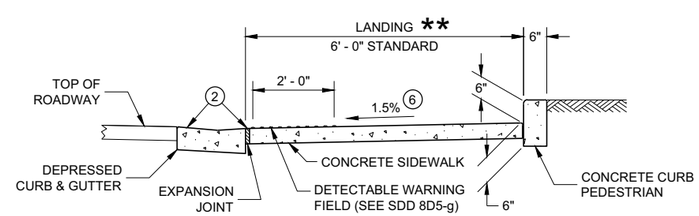

SECTION C - C FOR TYPE 1 - A

LEGEND

- ½" EXPANSION JOINT SIDEWALK
- CONTRACTION JOINT FIELD LOCATED
- PAVEMENT MARKING CROSSWALK (WHITE)

** WIDTH SHOWN ELSEWHERE IN THE PLANS

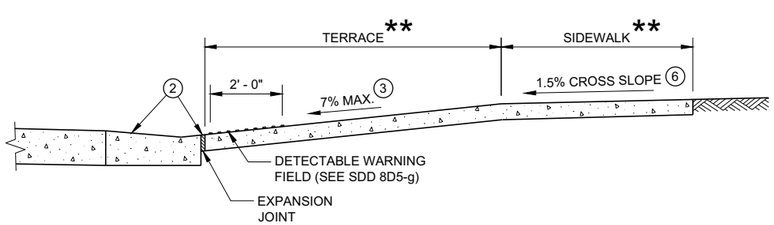

SECTION B - B FOR TYPE 1

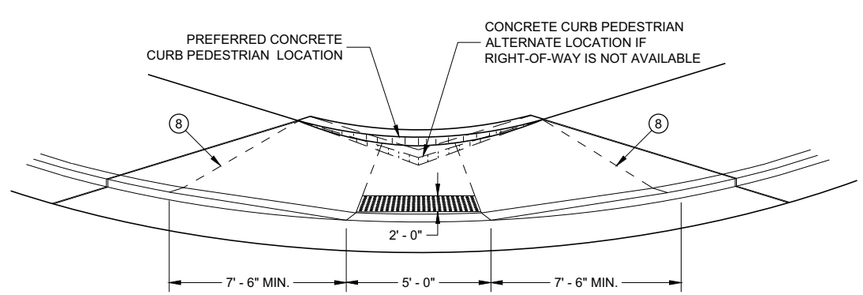

VIEW D - D FOR TYPE 1 - A

CURB RAMPS TYPE 1 AND 1-A

STATE OF WISCONSIN
DEPARTMENT OF TRANSPORTATION

6
SDD 08D05 - 20a

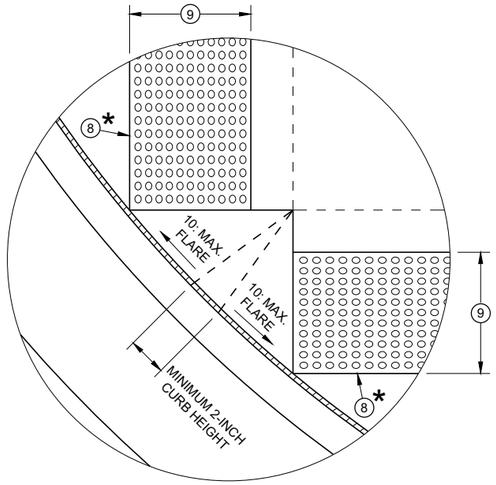

DETAIL A

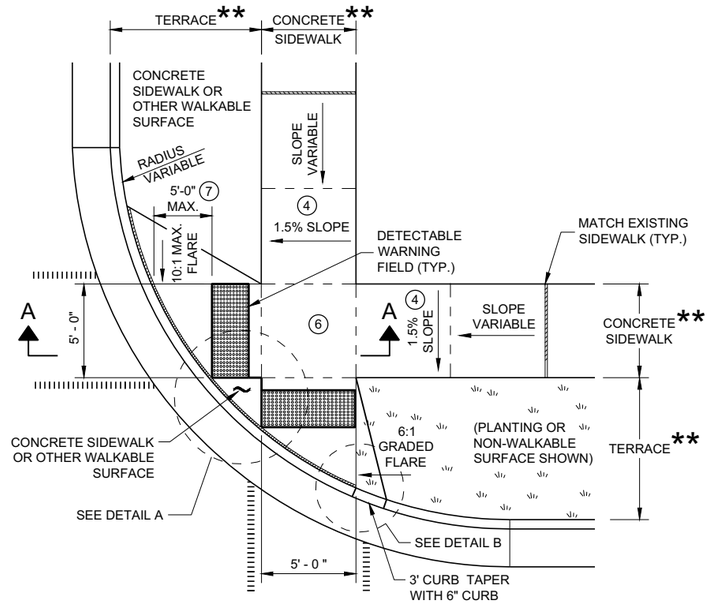

PLAN VIEW
CURB RAMP TYPE 2
(CENTER OF CORNER RADIUS)

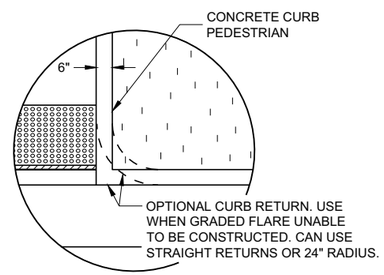

DETAIL B

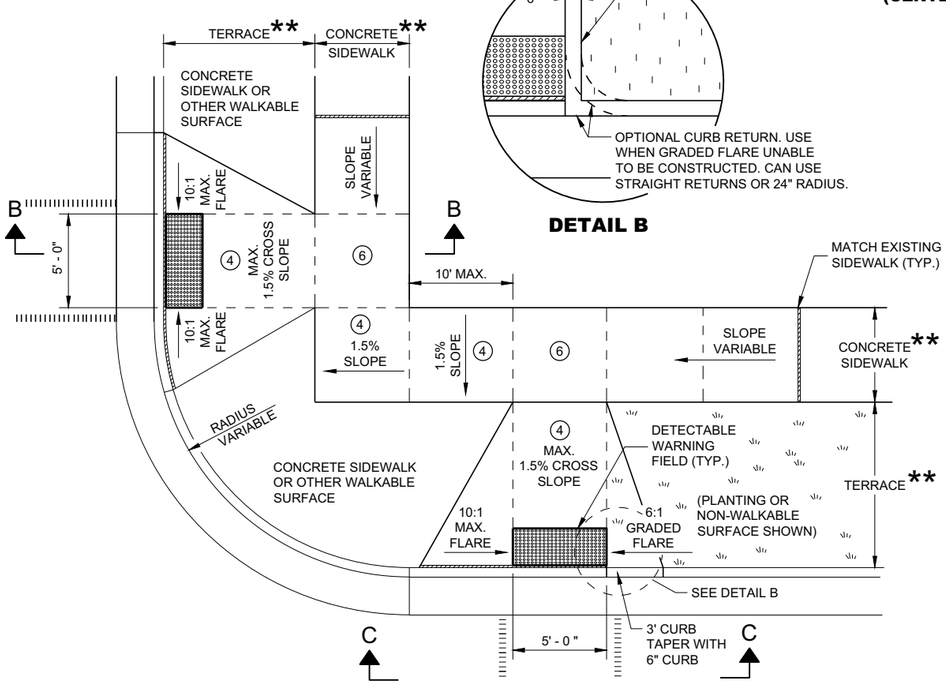

PLAN VIEW
CURB RAMP TYPE 3
(OUTSIDE OF CROSSWALK AREA)

GENERAL NOTES

AVOID PLACING DRAINAGE STRUCTURES, JUNCTION BOXES OR OTHER OBSTRUCTIONS IN FRONT OF RAMP ACCESS AREAS.

DETAILS OF CONSTRUCTION, MATERIALS AND WORKMANSHIP NOT SHOWN ON THIS DRAWING SHALL CONFORM TO THE PERTINENT REQUIREMENTS OF THE STANDARD SPECIFICATIONS AND THE APPLICABLE SPECIAL PROVISIONS.

DETECTABLE WARNING FIELDS THAT ARE INSTALLED AS A GROUP OR SIDE BY SIDE SHALL BE FROM THE SAME MANUFACTURER.

(2) GRADE CHANGE BETWEEN GUTTER FLAG SLOPE AND THE CURB RAMP SLOPE SHALL NOT EXCEED 11%. MAXIMUM GUTTER FLAG SLOPE IS 4%. PROVIDE LONGITUDINAL DRAINAGE AROUND CURB AND AWAY FROM CURB RAMP. NO VERTICAL LIPS OR DISCONTINUITIES GREATER THAN ¼ - INCH ARE ALLOWED. SLOPE OF CURB HEAD OPENING SHALL MATCH THE RAMP SLOPE, MINIMALLY 1.5% AND NOT TO EXCEED 7%. WHEN ADJACENT TO 1.5% LANDING, CONSTRUCT CURB HEAD OPENING AT 1.5% IN THE DIRECTION OF PEDESTRIAN TRAVEL.

(3) AN 8.33% CURB RAMP SLOPE IS ALLOWABLE WITH FLATTENED GUTTER FLAG SLOPE (2.67% OR LESS) AND NOT TO EXCEED 11% GRADE CHANGE.

(4) ±0.5% CONSTRUCTION TOLERANCE IN SIDEWALK CROSS SLOPE. THE SIDEWALK CROSS SLOPE SHALL NOT EXCEED 2% WITHOUT PRIOR APPROVAL FROM THE ENGINEER.

(6) PROVIDE A LEVEL LANDING (MAXIMUM 2% SLOPE) IN ANY DIRECTION OF PEDESTRIAN TRAVEL. STANDARD LEVEL LANDING SIZE IS 5 FEET X 5 FEET.

(7) WHEN GRADE BREAK DISTANCE EXCEEDS 5 FEET, USE RADIAL DETECTABLE WARNING FIELD PER SDD 8D5-f.

(8) PROVIDE GRADE BREAK PERPENDICULAR TO DIRECTION OF WHEELCHAIR TRAVEL.

(9) WHEN DISTANCE IS LESS THAN 6' - 0", IT MAY BE DIFFICULT TO ACHIEVE A 7% SLOPE OR FLATTER ALONG THE RAMP. REDUCE CURB HEIGHT IN TRIANGLE AREA TO ACHIEVE 7% SLOPE OR FLATTER ON RAMP. CONSTRUCT 2-INCH MINIMUM CURB HEIGHT BETWEEN 10:1 FLARES.

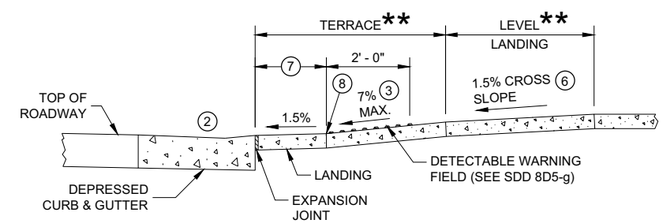

SECTION A - A FOR TYPE 2

* MAXIMUM 2.0% SLOPE IN ALL DIRECTIONS IN FRONT OF GRADE BREAK

** WIDTH SHOWN ELSEWHERE IN THE PLANS

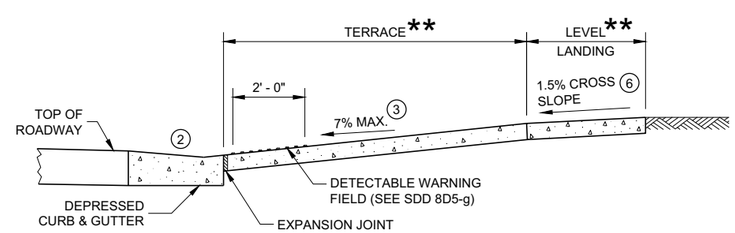

SECTION B - B FOR TYPE 3

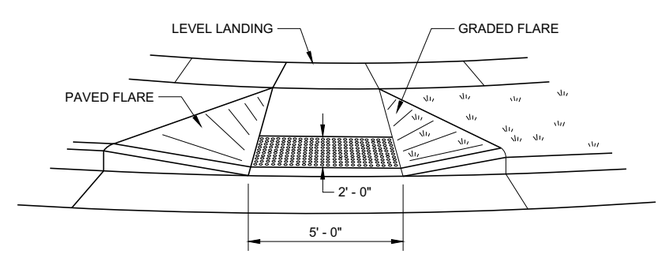

VIEW C - C FOR TYPE 3

LEGEND

- ½" EXPANSION JOINT SIDEWALK
- CONTRACTION JOINT SIDEWALK
- PAVEMENT MARKING CROSSWALK (WHITE)

CURB RAMPS TYPE 2 AND 3

STATE OF WISCONSIN
DEPARTMENT OF TRANSPORTATION

6

SDD 08D05 - 20b

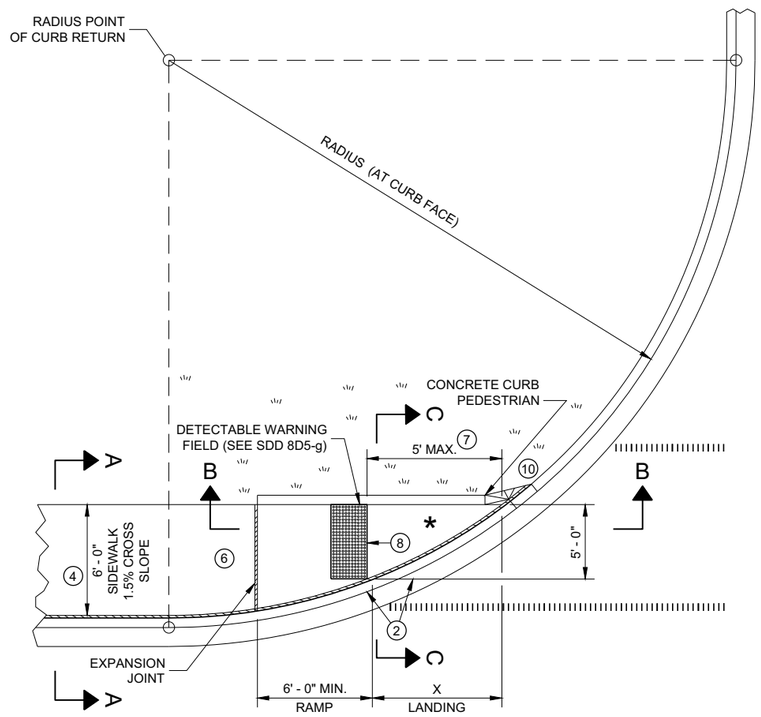

PLAN VIEW
CURB RAMP TYPE 4A

RADIUS (AT CURB FACE)	X
10 FEET	4' - 7"
15 FEET	6' - 5½"

INTERMEDIATE RADII CAN BE INTERPOLATED

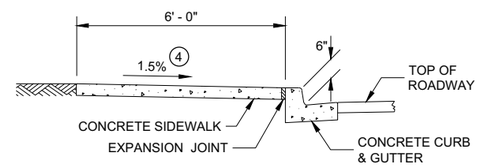

SECTION A - A FOR TYPE 4A

GENERAL NOTES

AVOID PLACING DRAINAGE STRUCTURES, JUNCTION BOXES OR OTHER OBSTRUCTIONS IN FRONT OF RAMP ACCESS AREAS.

DETAILS OF CONSTRUCTION, MATERIALS AND WORKMANSHIP NOT SHOWN ON THIS DRAWING SHALL CONFORM TO THE PERTINENT REQUIREMENTS OF THE STANDARD SPECIFICATIONS AND THE APPLICABLE SPECIAL PROVISIONS.

DETECTABLE WARNING FIELDS THAT ARE INSTALLED AS A GROUP OR SIDE BY SIDE, SHALL BE FROM THE SAME MANUFACTURER.

(2) GRADE CHANGE BETWEEN GUTTER FLAG SLOPE AND THE CURB RAMP SLOPE SHALL NOT EXCEED 11%. MAXIMUM GUTTER FLAG SLOPE IS 4%. PROVIDE LONGITUDINAL DRAINAGE AROUND CURB AND AWAY FROM CURB RAMP. NO VERTICAL LIPS OR DISCONTINUITIES GREATER THAN ¼ - INCH ARE ALLOWED. SLOPE OF CURB HEAD OPENING SHALL MATCH THE RAMP SLOPE, MINIMALLY 1.5% AND NOT TO EXCEED 7%. WHEN ADJACENT TO 1.5% LANDING, CONSTRUCT CURB HEAD OPENING AT 1.5% IN THE DIRECTION OF PEDESTRIAN TRAVEL.

(3) AN 8.33% CURB RAMP SLOPE IS ALLOWABLE WITH FLATTENED GUTTER FLAG SLOPE AND NOT TO EXCEED 11% GRADE CHANGE.

(4) ±0.5% CONSTRUCTION TOLERANCE IN SIDEWALK CROSS SLOPE. THE SIDEWALK CROSS SLOPE SHALL NOT EXCEED 2% WITHOUT PRIOR APPROVAL FROM THE ENGINEER.

(6) PROVIDE A LEVEL LANDING (MAXIMUM 2% SLOPE) IN ANY DIRECTION OF PEDESTRIAN TRAVEL. STANDARD LEVEL LANDING SIZE IS 5 FEET BY 5 FEET.

(7) WHEN THIS GRADE BREAK DISTANCE EXCEEDS 5 FEET, USE RADIAL DETECTABLE WARNING FIELD PER SDD 8D5-f.

(8) PROVIDE GRADE BREAK PERPENDICULAR TO DIRECTION OF WHEELCHAIR TRAVEL.

(10) INSTALL TRANSITION NOSE (INCIDENTAL TO OTHER PAY ITEMS). DO NOT MARK TRANSITION NOSE.

LEGEND

- ½" EXPANSION JOINT SIDEWALK
- CONTRACTION JOINT SIDEWALK
- PAVEMENT MARKING CROSSWALK (WHITE)

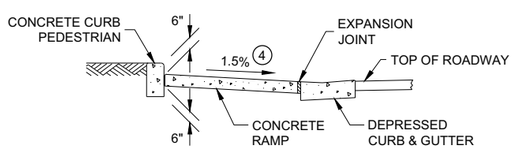

SECTION C - C FOR TYPE 4A

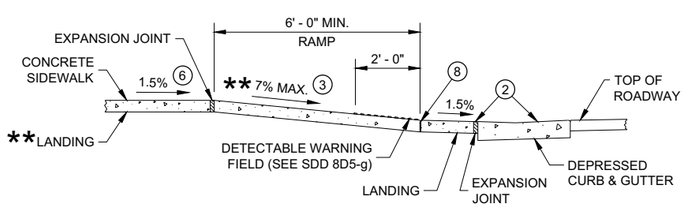

** IF RAMP SLOPE IS LESS THAN 5.0%, THEN NO ADJACENT UPHILL LANDING IS REQUIRED

SECTION B - B FOR TYPE 4A AND TYPE 4A1

* MAXIMUM 2.0% SLOPE IN ALL DIRECTIONS IF FRONT OF GRADE BREAK

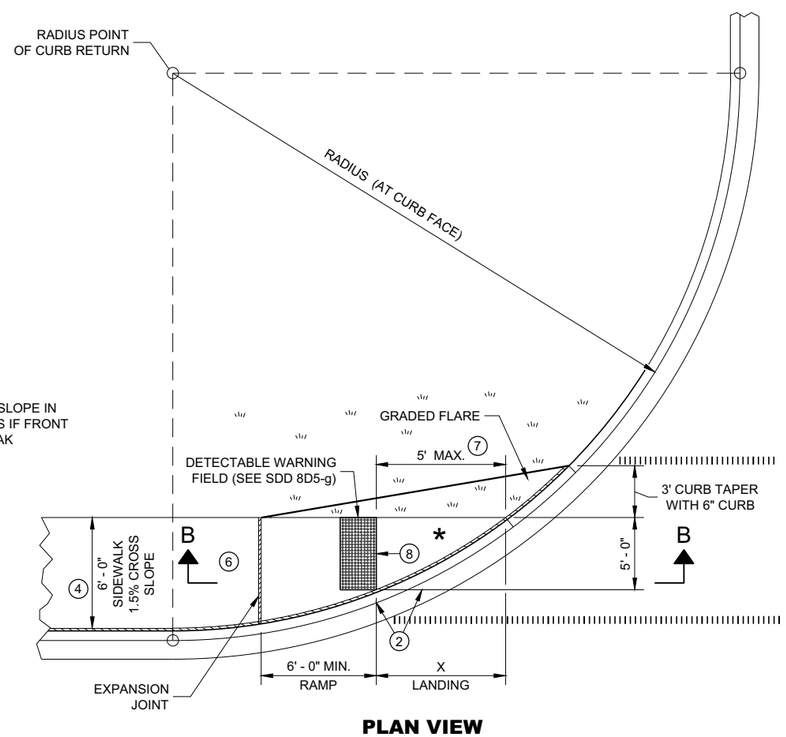

PLAN VIEW
CURB RAMP TYPE 4A1

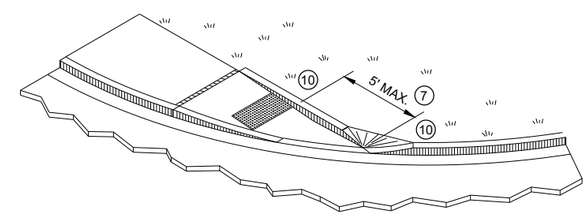

ISOMETRIC VIEW FOR TYPE 4A

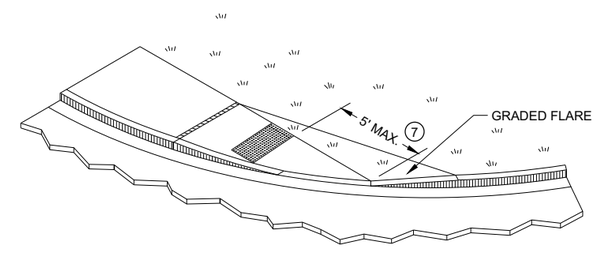

ISOMETRIC VIEW FOR TYPE 4A1

CURB RAMPS
TYPE 4A AND 4A1

STATE OF WISCONSIN
DEPARTMENT OF TRANSPORTATION

6

SDD 08D05 - 20c

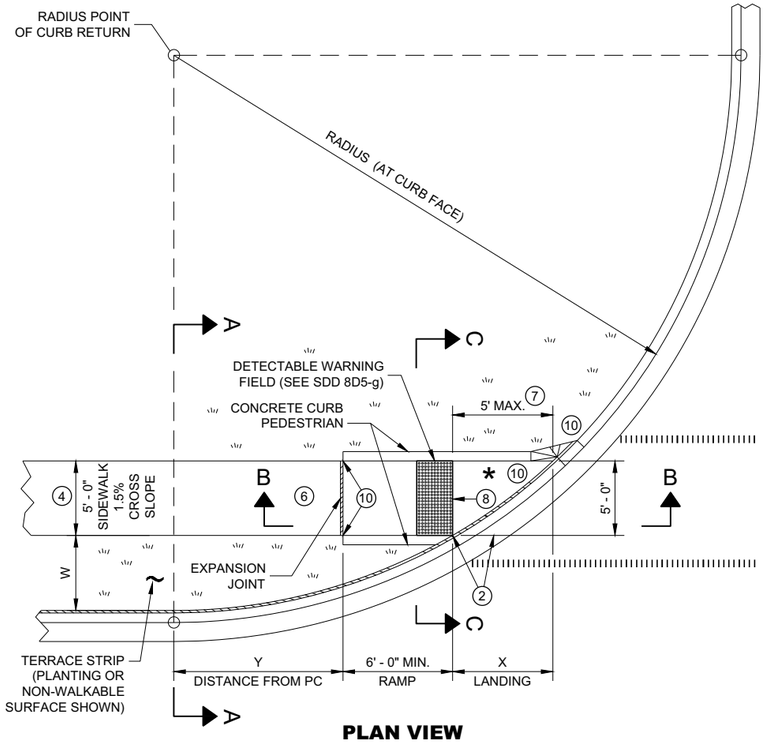

PLAN VIEW

CURB RAMP TYPE 4B

RADIUS (AT CURB FACE)	W = 3' - 0"		W = 4' - 0"		W = 5' - 0"		W = 6' - 0"		W = 7' - 0"		W = 8' - 0"		W = 9' - 0"		W = 10' - 0"	
	X	Y	X	Y	X	Y	X	Y	X	Y	X	Y	X	Y	X	Y
10 FEET	2' - 10 ¼"	0' - 5"	2' - 1"	1' - 4 ½"	1' - 5"	2' - 1"	0' - 10"	2' - 7 ½"	0' - 3 ¼"	3' - 0 ¼"						
15 FEET	4' - 6 ¾"	2' - 1 ¾"	3' - 9"	3' - 5 ¾"	3' - 1 ¼"	4' - 6"	2' - 6 ¾"	5' - 4 ½"	2' - 1"	6' - 1"	1' - 8"	6' - 8 ½"	1' - 3 ¼"	7' - 2 ½"	0' - 10 ¾"	7' - 7 ¼"
20 FEET	5' - 9 ¾"	3' - 6 ½"	4' - 11 ½"	5' - 1 ¾"	4' - 3 ¼"	6' - 5 ½"	3' - 8 ¾"	7' - 7"	3' - 3"	8' - 6 ½"	2' - 10"	9' - 4 ½"	2' - 5 ½"	10' - 1 ¼"	2' - 1 ¼"	10' - 9"
30 FEET			6' - 9 ¼"	7' - 11 ¼"	6' - 0 ¼"	9' - 8"	5' - 5"	11' - 1 ¾"	4' - 10 ¾"	12' - 5 ¾"	4' - 5 ½"	13' - 7 ¾"	4' - 0 ¾"	14' - 8 ½"	3' - 8 ½"	15' - 8 ¼"
40 FEET									6' - 1 ¾"	15' - 8 ½"	5' - 8"	17' - 2"	5' - 3"	18' - 5 ¾"	4' - 10 ¾"	19' - 8 ¼"
50 FEET															5' - 10 ¼"	23' - 2"

INTERMEDIATE RADII CAN BE INTERPOLATED
DIMENSION "Y" IS CALCULATED BASED ON 6'-0" RAMP LENGTH
DIMENSION "X" IS CALCULATED BASED ON 5'-0" SIDEWALK WIDTH

LEGEND

- ½" EXPANSION JOINT SIDEWALK
- CONTRACTION JOINT SIDEWALK
- PAVEMENT MARKING CROSSWALK (WHITE)

GENERAL NOTES

AVOID PLACING DRAINAGE STRUCTURES, JUNCTION BOXES OR OTHER OBSTRUCTIONS IN FRONT OF RAMP ACCESS AREAS.

DETAILS OF CONSTRUCTION, MATERIALS AND WORKMANSHIP NOT SHOWN ON THIS DRAWING SHALL CONFORM TO THE PERTINENT REQUIREMENTS OF THE STANDARD SPECIFICATIONS AND THE APPLICABLE SPECIAL PROVISIONS.

DETECTABLE WARNING FIELDS THAT ARE INSTALLED AS A GROUP OR SIDE BY SIDE, SHALL BE FROM THE SAME MANUFACTURER.

(2) GRADE CHANGE BETWEEN GUTTER FLAG SLOPE AND THE CURB RAMP SLOPE SHALL NOT EXCEED 11%. MAXIMUM GUTTER FLAG SLOPE IS 4%. PROVIDE LONGITUDINAL DRAINAGE AROUND CURB AND AWAY FROM CURB RAMP. NO VERTICAL LIPS OR DISCONTINUITIES GREATER THAN ¼ - INCH ARE ALLOWED. SLOPE OF CURB HEAD OPENING SHALL MATCH THE RAMP SLOPE, MINIMALLY 1.5% AND NOT TO EXCEED 7%. WHEN ADJACENT TO 1.5% LANDING, CONSTRUCT CURB HEAD OPENING AT 1.5% IN THE DIRECTION OF PEDESTRIAN TRAVEL.

(3) AN 8.33% CURB RAMP SLOPE IS ALLOWABLE WITH FLATTENED GUTTER FLAG SLOPE AND NOT TO EXCEED 11% GRADE CHANGE.

(4) ±0.5% CONSTRUCTION TOLERANCE IN SIDEWALK CROSS SLOPE. THE SIDEWALK CROSS SLOPE SHALL NOT EXCEED 2% WITHOUT PRIOR APPROVAL FROM THE ENGINEER.

(6) PROVIDE A LEVEL LANDING (MAXIMUM 2% SLOPE) IN ANY DIRECTION OF PEDESTRIAN TRAVEL. STANDARD LEVEL LANDING SIZE IS 5 FEET BY 5 FEET.

(7) WHEN THIS GRADE BREAK DISTANCE EXCEEDS 5 FEET, USE RADIAL DETECTABLE WARNING FIELD PER SDD 8D5-f.

(8) PROVIDE GRADE BREAK PERPENDICULAR TO DIRECTION OF WHEELCHAIR TRAVEL.

(10) INSTALL TRANSITION NOSE (INCIDENTAL TO OTHER PAY ITEMS). DO NOT MARK TRANSITION NOSE.

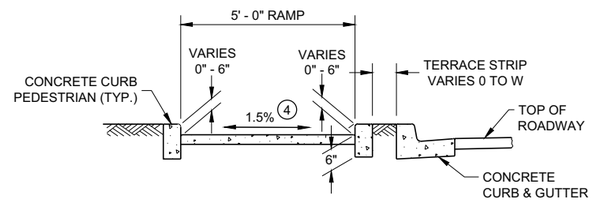

SECTION C - C FOR TYPE 4B

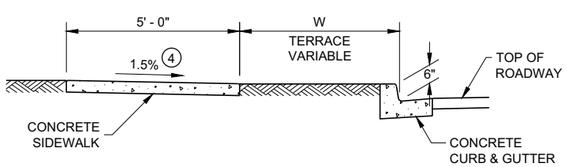

SECTION A - A FOR TYPE 4B

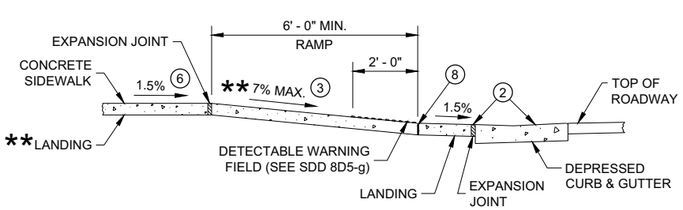

** IF RAMP SLOPE IS LESS THAN 5.0%, THEN NO ADJACENT UPHILL LANDING IS REQUIRED

SECTION B - B FOR TYPE 4B AND TYPE 4B1

* MAXIMUM 2.0% SLOPE IN ALL DIRECTIONS IF FRONT OF GRADE BREAK

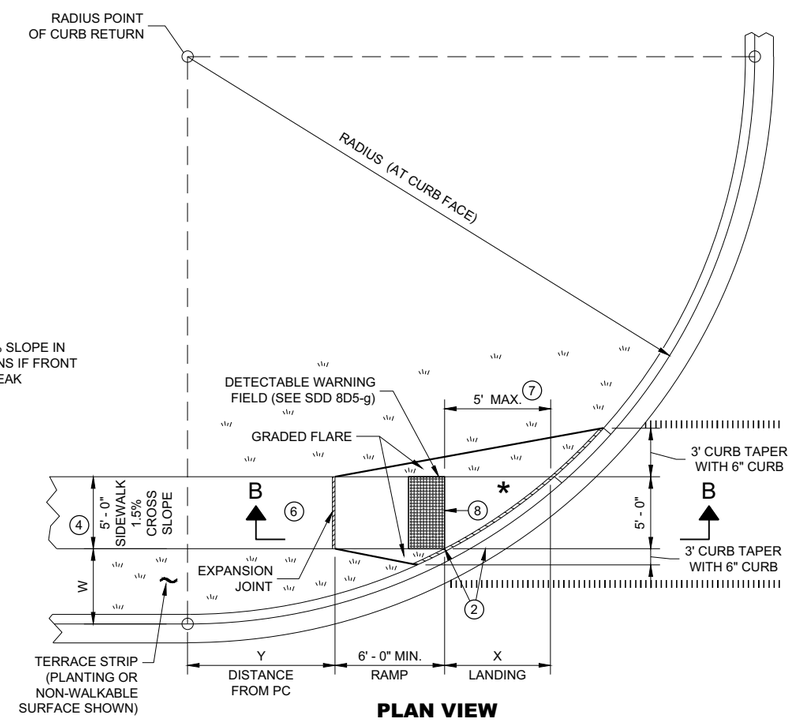

PLAN VIEW

CURB RAMP TYPE 4B1

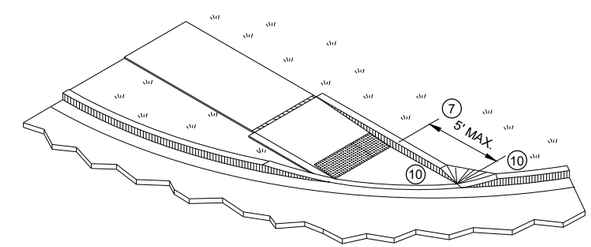

ISOMETRIC VIEW FOR TYPE 4B

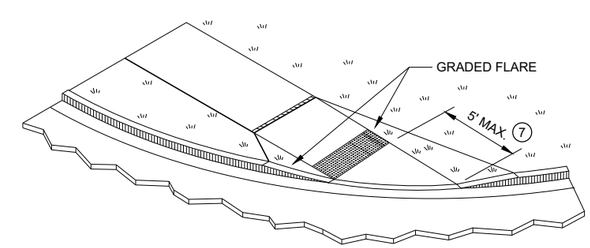

ISOMETRIC VIEW FOR TYPE 4B1

CURB RAMPS TYPE 4B AND 4B1

STATE OF WISCONSIN
DEPARTMENT OF TRANSPORTATION

6

SDD 08D05 - 20d

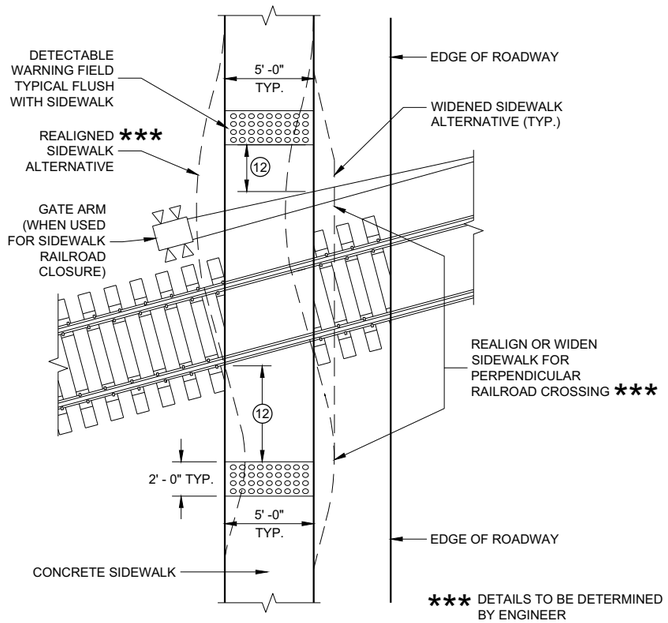

CURB RAMP TYPE 8

DETECTABLE WARNINGS AT RAILROAD CROSSING

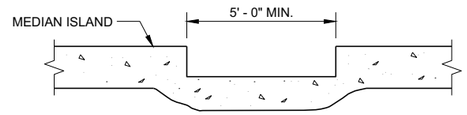

SECTION A - A FOR TYPE 5

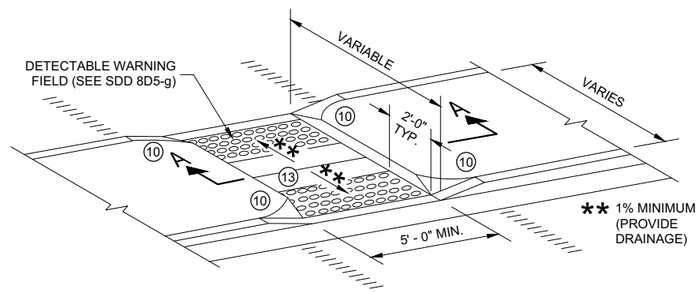

CURB RAMP TYPE 5

MEDIAN ISLAND NON-ELEVATED PEDESTRIAN CROSSING

GENERAL NOTES

AVOID PLACING DRAINAGE STRUCTURES, JUNCTION BOXES OR OTHER OBSTRUCTIONS IN FRONT OF RAMP ACCESS AREAS.

DETAILS OF CONSTRUCTION, MATERIALS AND WORKMANSHIP NOT SHOWN ON THIS DRAWING SHALL CONFORM TO THE PERTINENT REQUIREMENTS OF THE STANDARD SPECIFICATIONS AND THE APPLICABLE SPECIAL PROVISIONS.

SIDEWALK CROSS SLOPE SHALL NOT EXCEED 2%.

DETECTABLE WARNING FIELDS THAT ARE INSTALLED AS A GROUP OR SIDE BY SIDE, SHALL BE FROM THE SAME MANUFACTURER.

(2) GRADE CHANGE BETWEEN GUTTER FLAG SLOPE AND THE CURB RAMP SLOPE SHALL NOT EXCEED 11%. MAXIMUM GUTTER FLAG SLOPE IS 4%. PROVIDE LONGITUDINAL DRAINAGE AROUND CURB AND AWAY FROM CURB RAMP. NO VERTICAL LIPS OR DISCONTINUITIES GREATER THAN ¼ - INCH ARE ALLOWED. SLOPE OF CURB HEAD OPENING SHALL MATCH THE RAMP SLOPE, MINIMALLY 1.5% AND NOT TO EXCEED 7%. WHEN ADJACENT TO 1.5% LANDING, CONSTRUCT CURB HEAD OPENING AT 1.5% IN THE DIRECTION OF PEDESTRIAN TRAVEL.

(3) AN 8.33% CURB RAMP SLOPE IS ALLOWABLE WITH FLATTENED GUTTER FLAG SLOPE AND NOT TO EXCEED 11% GRADE CHANGE.

(4) ±0.5% CONSTRUCTION TOLERANCE IN SIDEWALK CROSS SLOPE. THE SIDEWALK CROSS SLOPE SHALL NOT EXCEED 2% WITHOUT PRIOR APPROVAL FROM THE ENGINEER.

(6) PROVIDE A LEVEL LANDING (MAXIMUM 2% SLOPE) IN ANY DIRECTION OF PEDESTRIAN TRAVEL. STANDARD LEVEL LANDING SIZE IS 5 FEET BY 5 FEET.

(10) INSTALL TRANSITION NOSE (INCIDENTAL TO OTHER PAY ITEMS). DO NOT MARK TRANSITION NOSE.

(11) SLOPE SIDEWALK TOWARD LANDING AS SHOWN WHERE THERE IS NO TERRACE OR WHERE THE TERRACE WIDTH IS LESS THAN 6 FEET WIDE.

(12) THE EDGE OF THE DETECTABLE WARNING FIELD NEAREST TO A RAILROAD CROSSING SHALL BE 1.5 FEET ±0.1' FROM THE FACE OF THE GATE ARM IF THE GATE ARM EXTENDS ACROSS THE SIDEWALK. WHERE THERE IS NO PEDESTRIAN GATE, THE EDGE OF THE DETECTABLE WARNING FIELD NEAREST TO THE RAILROAD CROSSING SHALL BE 15 FEET FROM THE NEAREST RAIL.

(13) DO NOT INSTALL DETECTABLE WARNING FIELDS AT THE EDGES OF STEET-LEVEL PEDESTRIAN REFUGE ISLANDS IF A MINIMUM 2 FOOT CONCRETE SURFACE WITHOUT DETECTABLE WARNINGS (MEASURED IN THE DIRECTION OF PEDESTRIAN TRAVEL) CANNOT BE ACHIEVED.

LEGEND

- ½" EXPANSION JOINT SIDEWALK
- CONTRACTION JOINT FIELD LOCATED
- PAVEMENT MARKING CROSSWALK (WHITE)

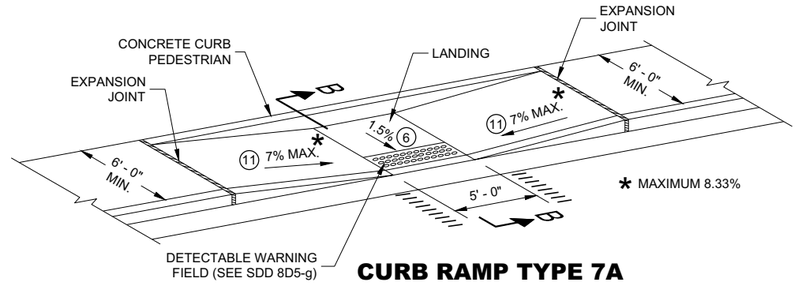

CURB RAMP TYPE 7A

MID BLOCK CROSSING

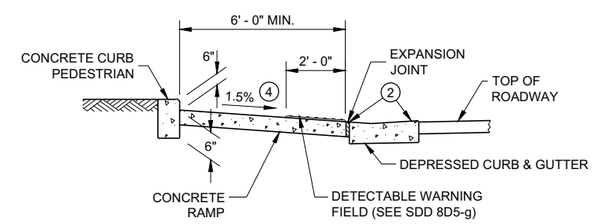

SECTION B - B FOR TYPE 7A

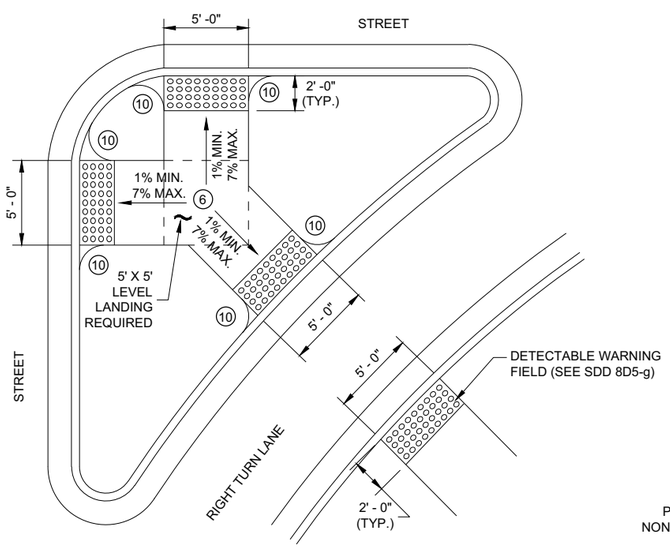

CURB RAMP TYPE 6

DETECTABLE WARNING AT ISLANDS

REFER TO GENERAL NOTES (2) AND (3) FOR ALL ISLAND CURB RAMPS

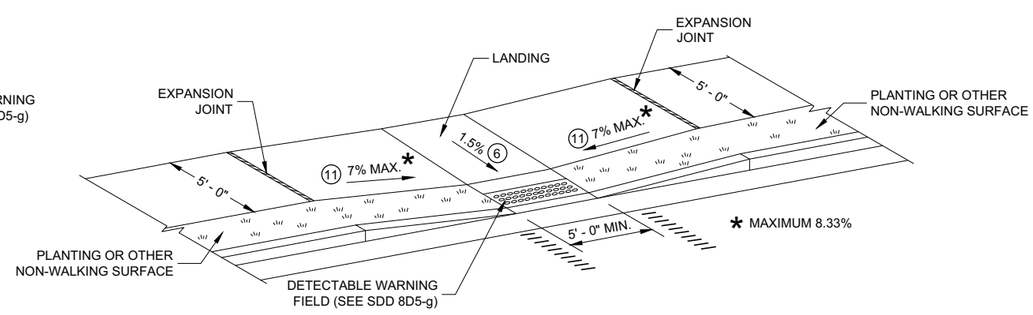

CURB RAMP TYPE 7B

MID BLOCK CROSSING

NOTE: THESE PARALLEL AND PARALLEL/PERPENDICULAR CURB RAMPS MAY BE USED AT INTERSECTIONS AND MID BLOCK LOCATIONS.

CURB RAMPS TYPE 5, 6, 7A, 7B & 8

STATE OF WISCONSIN
DEPARTMENT OF TRANSPORTATION

6

SDD 08D05 - 20e

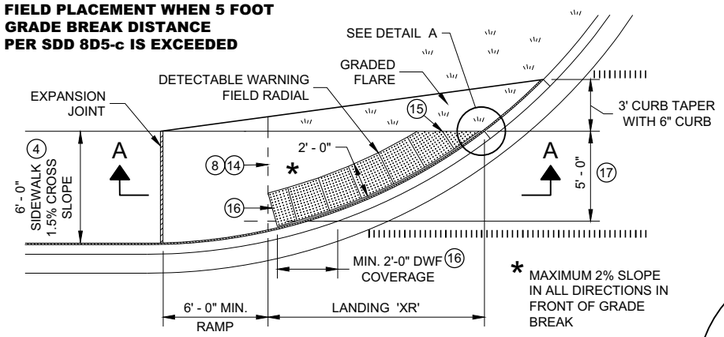

PLAN VIEW

CURB RAMP TYPE 4A1

(GRADE BREAK DISTANCE GREATER THAN 5 FEET)

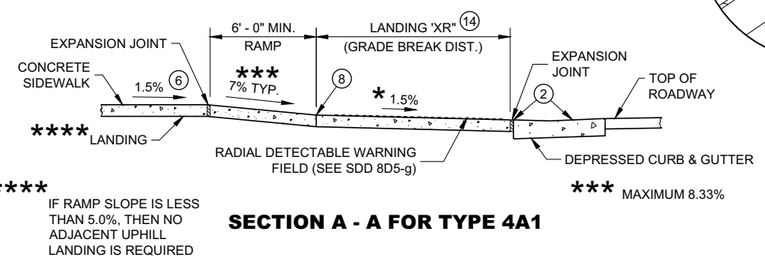

SECTION A - A FOR TYPE 4A1

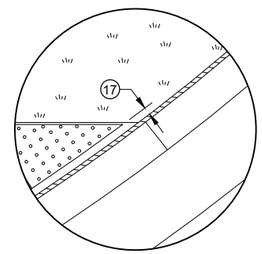

DETAIL A

LEGEND

- ½" EXPANSION JOINT SIDEWALK
- CONTRACTION JOINT SIDEWALK
- PAVEMENT MARKING CROSSWALK (WHITE)

GENERAL NOTES

AVOID PLACING DRAINAGE STRUCTURES, JUNCTION BOXES OR OTHER OBSTRUCTIONS IN FRONT OF RAMP ACCESS AREAS.

DETAILS OF CONSTRUCTION, MATERIALS AND WORKMANSHIP NOT SHOWN ON THIS DRAWING SHALL CONFORM TO THE PERTINENT REQUIREMENTS OF THE STANDARD SPECIFICATIONS AND THE APPLICABLE SPECIAL PROVISIONS.

DETECTABLE WARNING FIELDS THAT ARE INSTALLED AS A GROUP OR SIDE BY SIDE, SHALL BE FROM THE SAME MANUFACTURER.

APPLY RADIAL DETECTABLE WARNING PLACEMENT SIMILARLY FOR TYPE 4A AND 4A1 CURB RAMPS AND SIMILARLY FOR TYPE 4B AND 4B1 CURB RAMPS. TYPE 4A AND 4B CURB RAMPS ARE NOT SHOWN.

REFER TO SDD 8D5-g FOR ADDITIONAL RADIAL PLATE REQUIREMENTS.

FIELD CUTS AT INTERMEDIATE JOINTS WITHIN THE RADIAL DETECTABLE WARNING FILED ARE PROHIBITED.

DETERMINE FINAL RADIAL WARNING FIELD CONFIGURATION AD ITS INDIVIDUAL PLATE LOCATIONS. PERFORM PRE-LAYOUT PRIOR TO PLACEMENT IN PLASTIC CONCRETE. FOLLOW MANUFACTURER'S PRODUCT LIST AND INSTALLATION RECOMMENDATIONS.

(2) GRADE CHANGE BETWEEN GUTTER FLAG SLOPE AND THE CURB RAMP SLOPE SHALL NOT EXCEED 11%. MAXIMUM GUTTER FLAG SLOPE IS 4%. PROVIDE LONGITUDINAL DRAINAGE AROUND CURB AND AWAY FROM CURB RAMP. NO VERTICAL LIPS OR DISCONTINUITIES GREATER THAN ¼ - INCH ARE ALLOWED. SLOPE OF CURB HEAD OPENING SHALL MATCH THE RAMP SLOPE, MINIMALLY 1.5% AND NOT TO EXCEED 7%. WHEN ADJACENT TO 1.5% LANDING, CONSTRUCT CURB HEAD OPENING AT 1.5% IN THE DIRECTION OF PEDESTRIAN TRAVEL.

(3) AN 8.33% CURB RAMP SLOPE IS ALLOWABLE WITH FLATTENED GUTTER FLAG SLOPE AND NOT TO EXCEED 11% GRADE CHANGE.

(4) ±0.5% CONSTRUCTION TOLERANCE IN SIDEWALK CROSS SLOPE. THE SIDEWALK CROSS SLOPE SHALL NOT EXCEED 2% WITHOUT PRIOR APPROVAL FROM THE ENGINEER.

(6) PROVIDE A LEVEL LANDING (MAXIMUM 2% SLOPE) IN ANY DIRECTION OF PEDESTRIAN TRAVEL. STANDARD LANDING SIZE IS 5 FEET BY 5 FEET.

(8) PROVIDE GRADE BREAK PERPENDICULAR TO DIRECTION OF WHEELCHAIR TRAVEL.

(14) CONSULT ENGINEER IF GRADE BREAK LOCATION (END OF LANDING DIMENSION "XR") REQUIRES FIELD ADJUSTMENT WHEN ESTABLISHING FINAL RADIAL DETECTABLE WARNING FIELD LOCATION.

(15) FIELD SAW CUTS ALONG RADIAL DETECTABLE WARNING PLATES WILL BE NECESSARY TO MATCH EACH CURB RAMP EDGE. AVOID CUTTING THROUGH DOMES WHENEVER POSSIBLE. MAKE FIELD CUTS TRUE TO LINE AND WITHIN ⅛" DEVIATION. SMOOTH EDGES OF FIELD CUT PLATES.

(16) USE 1' X 2" RECTANGULAR END PLATE AT END OF TYPE 4A1 RAMP AND PROVIDE MINIMUM 2' - 0" DETECTABLE WARNING FIELD COVERAGE (IN DIRECTION OF PEDESTRIAN TRAVEL) ALONG THE ENTIRE CURB RAMP WIDTH.

(17) A MAXIMUM 3 INCH CONCRETE BORDER WITH IS ALLOWABLE IN FROM OF RADIAL DETECTABLE WARNING FIELD FOR CONSTRUCTABILITY PURPOSES. CONCRETE BORDER WIDTH MAY VARY UP TO 1 INCH.

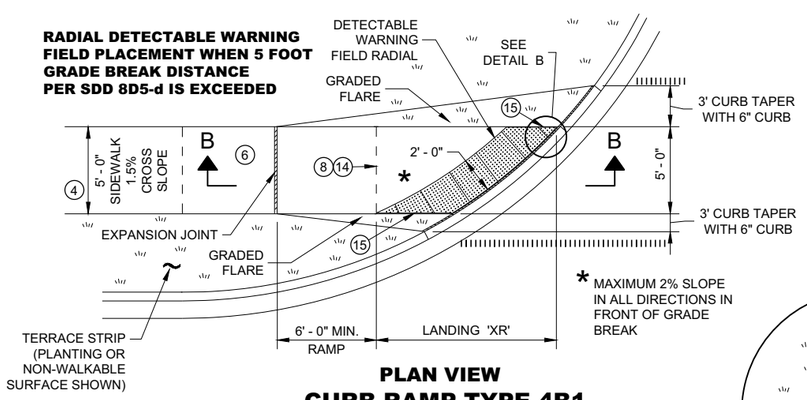

PLAN VIEW

CURB RAMP TYPE 4B1

(GRADE BREAK DISTANCE GREATER THAN 5 FEET)

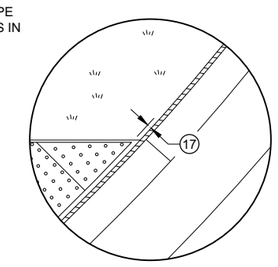

DETAIL B

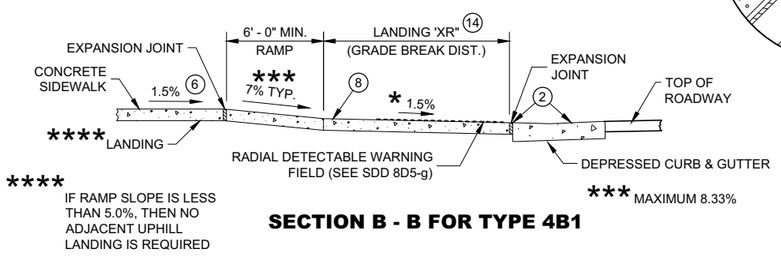

SECTION B - B FOR TYPE 4B1

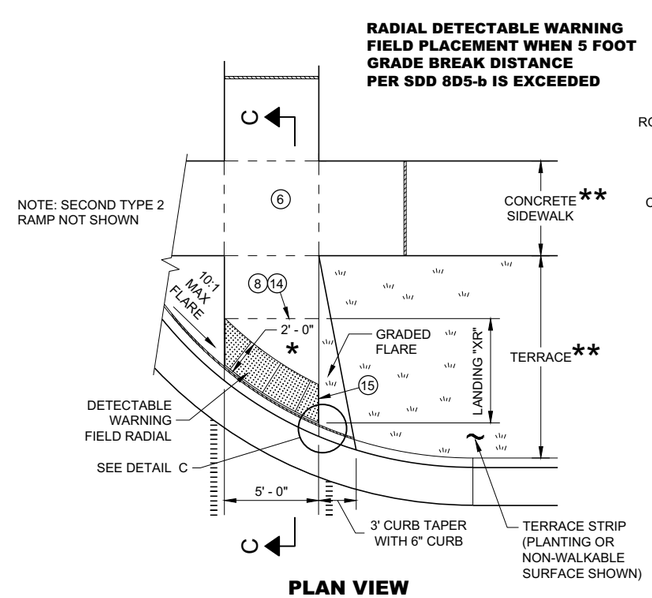

PLAN VIEW

CURB RAMP TYPE 2

(GRADE BREAK DISTANCE GREATER THAN 5 FEET)

(ON LINE WITH SIDEWALK)

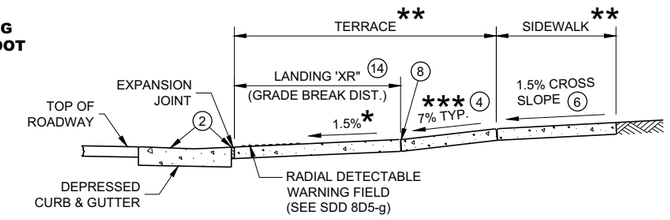

SECTION C - C FOR TYPE 2

* MAXIMUM 2% SLOPE IN ALL DIRECTIONS IN FRONT OF GRADE BREAK

** WIDTH SHOWN ELSEWHERE IN THE PLANS

*** MAXIMUM 8.33%

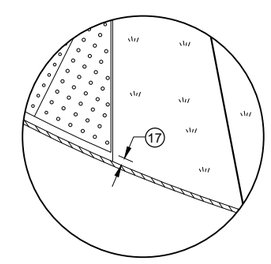

DETAIL C

CURB RAMPS
RADIAL DETECTABLE WARNING FIELD APPLICATIONS

STATE OF WISCONSIN
DEPARTMENT OF TRANSPORTATION

6

6

SDD 08D05 - 20f

SDD 08D05 - 20f

	MIN.	MAX.
A	1.6"	2.4"
B	0.65"	1.5"
C	*	*
D	0.9"	1.4"

* THE C DIMENSION IS 50% TO 65% OF THE D DIMENSION.

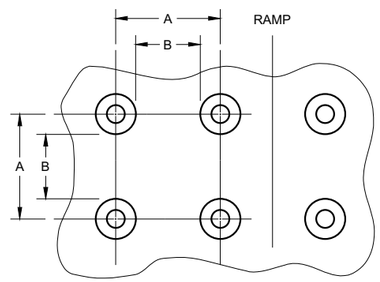

PLAN VIEW

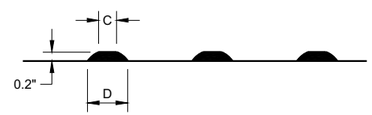

ELEVATION VIEW

TRUNCATED DOMES
DETECTABLE WARNING PATTERN DETAIL

GENERAL NOTES

DETECTABLE WARNING FIELDS THAT ARE INSTALLED AT A CURB RAMP SHALL BE FROM THE SAME MANUFACTURER.

PLACE ALL DETECTABLE WARNING FIELD SYSTEMS IN ACCORDANCE TO THE MANUFACTURER'S RECOMMENDATION.

FIELD CUTS AT INTERMEDIATE JOINTS WITHIN THE RADIAL DETECTABLE WARNING FILED ARE PROHIBITED.

DETERMINE FINAL RADIAL WARNING FIELD CONFIGURATION AND ITS INDIVIDUAL PLATE LOCATIONS. PERFORM PRE-LAYOUT PRIOR TO PLACEMENT IN PLASTIC CONCRETE. FOLLOW MANUFACTURER'S PRODUCT LIST AND INSTALLATION RECOMMENDATIONS.

FOR RADIAL DETECTABLE WARNING FIELD APPLICATIONS WHERE STANDARD RADIAL PLATES ARE NOT AVAILABLE AT AN INTERSECTION CURB RADIUS, A COMBINATION OF SQUARE OR RECTANGULAR PLATES AND RADIAL PLATES MAY BE USED TO FORM RADIAL CONFIGURATION. RADIAL WEDGE PLATES IN COMBINATION WITH SQUARE PLATES ARE ALSO ACCEPTABLE. FOLLOW MANUFACTURER'S RECOMMENDATIONS.

REFER TO CONTRACT AND STANDARD SPECIFICATIONS FOR FIELD CUTTING REQUIREMENTS.

DO NOT EMBED IN CONCRETE ANY FIELD-CUT PLATES WITH CUT EDGES SHORTER THAN 6 INCHES. CONSULT WITH MANUFACTURER FOR RE-DRILLING AND ANCHORING REQUIREMENTS OF FIELD-CUT PLATES.

(15) FIELD SAW CUTS ALONG RADIAL DETECTABLE WARNING PLATES WILL BE NECESSARY TO MATCH EACH CURB RAMP EDGE. AVOID CUTTING THROUGH DOMES WHENEVER POSSIBLE. MAKE FIELD CUTS TRUE TO LINE AND WITHIN ⅛" DEVIATION. SMOOTH EDGES OF FIELD CUT PLATES.

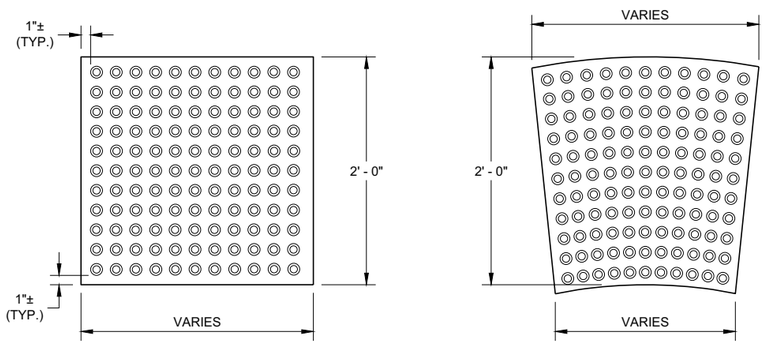

RECTANGULAR PLATES **RADIAL PLATES**

PLAN VIEW
DETECTABLE WARNING FIELDS (TYPICAL)

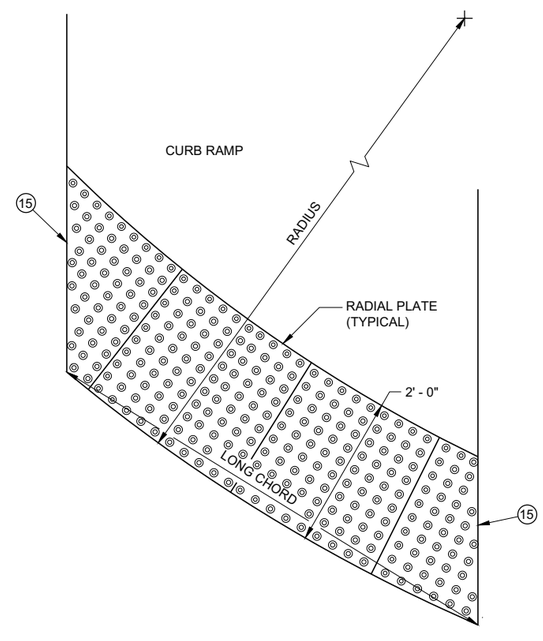

PLAN VIEW
RADIAL DETECTABLE WARNING FIELD ATTRIBUTES

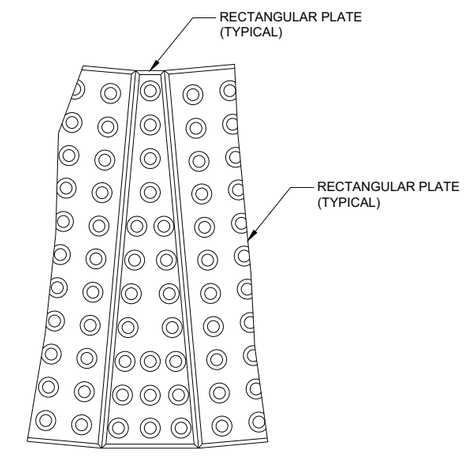

PLAN VIEW
RADIAL WEDGE PLATE CONNECTION DETAIL

6

6

SDD 08D05 - 20g

SDD 08D05 - 20g

CURB RAMPS
RECTANGULAR AND RADIAL DETECTABLE WARNING PLATES

STATE OF WISCONSIN
DEPARTMENT OF TRANSPORTATION

APPROVED
May 2019 — DATE
/S/ Rodney Taylor — ROADWAY STANDARDS DEVE UNIT SUPERVISOR
FHWA

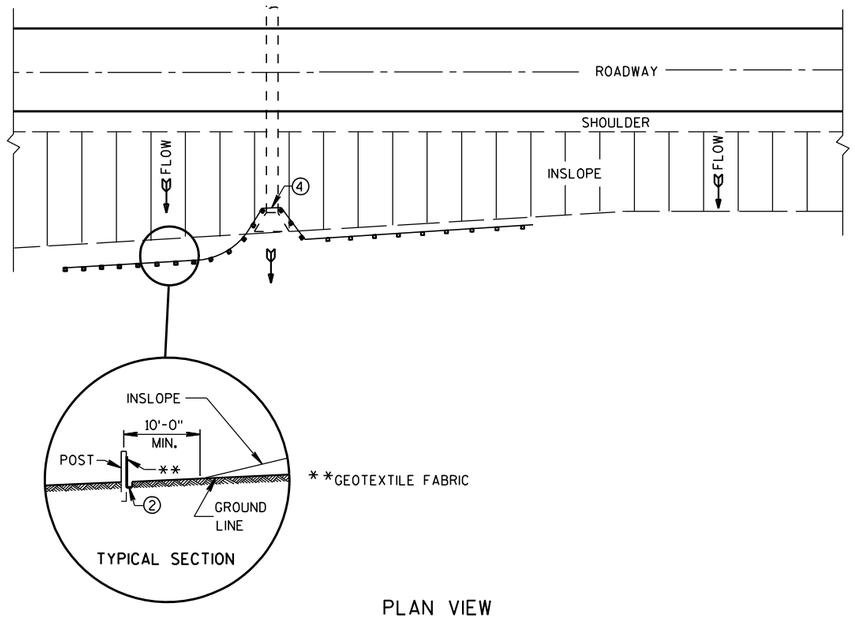

PLAN VIEW

TYPICAL APPLICATION OF SILT FENCE

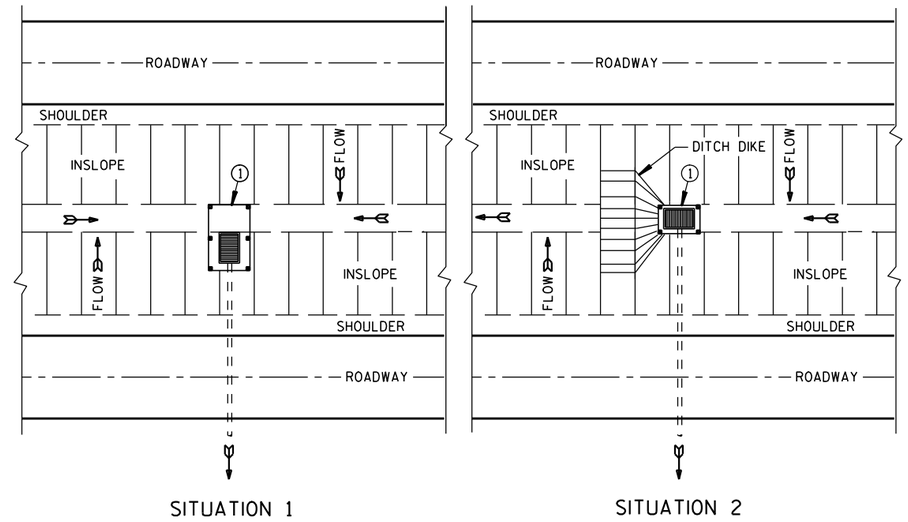

PLAN VIEW

SILT FENCE AT MEDIAN SURFACE DRAINS

GENERAL NOTES

DETAILS OF CONSTRUCTION NOT SHOWN ON THIS DRAWING SHALL CONFORM TO THE PERTINENT REQUIREMENTS OF THE STANDARD SPECIFICATIONS AND APPLICABLE SPECIAL PROVISIONS.

① HORIZONTAL BRACE REQUIRED WITH 2" X 4" WOODEN FRAME OR EQUIVALENT AT TOP OF POSTS.

② FOR MANUAL INSTALLATIONS THE TRENCH SHALL BE A MINIMUM OF 4" WIDE & 6" DEEP TO BURY AND ANCHOR THE GEOTEXTILE FABRIC. FOLD MATERIAL TO FIT TRENCH AND BACKFILL & COMPACT TRENCH WITH EXCAVATED SOIL.

③ WOOD POSTS SHALL BE A MINIMUM SIZE OF 1⅛" X 1⅛" OF OAK OR HICKORY.

④ SILT FENCE TO EXTEND ACROSS THE TOP OF THE PIPE.

⑤ CONSTRUCT SILT FENCE FROM A CONTINUOUS ROLL IF POSSIBLE BY CUTTING LENGTHS TO AVOID JOINTS. IF A JOINT IS NECESSARY USE ONE OF THE FOLLOWING TWO METHODS; A) OVERLAP THE END POSTS AND TWIST, OR ROTATE, AT LEAST 180 DEGREES. B) HOOK THE END OF EACH SILT FENCE LENGTH.

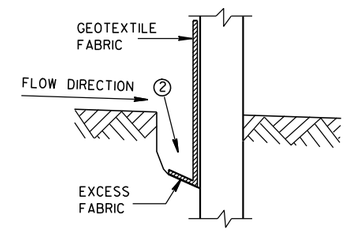

TRENCH DETAIL

NOTE: ADDITIONAL POST DEPTH OR TIE BACKS MAY BE REQUIRED IN UNSTABLE SOILS

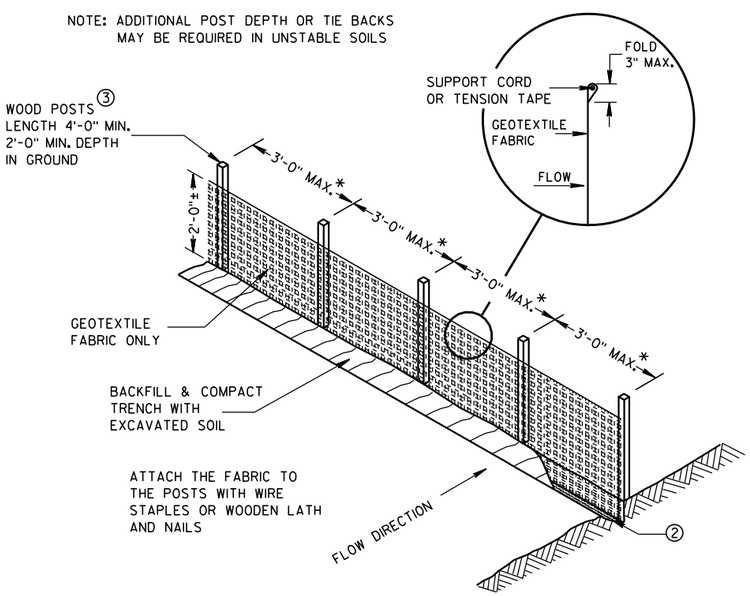

*NOTE: 8'-0" POST SPACING ALLOWED IF A WOVEN GEOTEXTILE FABRIC IS USED.

SILT FENCE

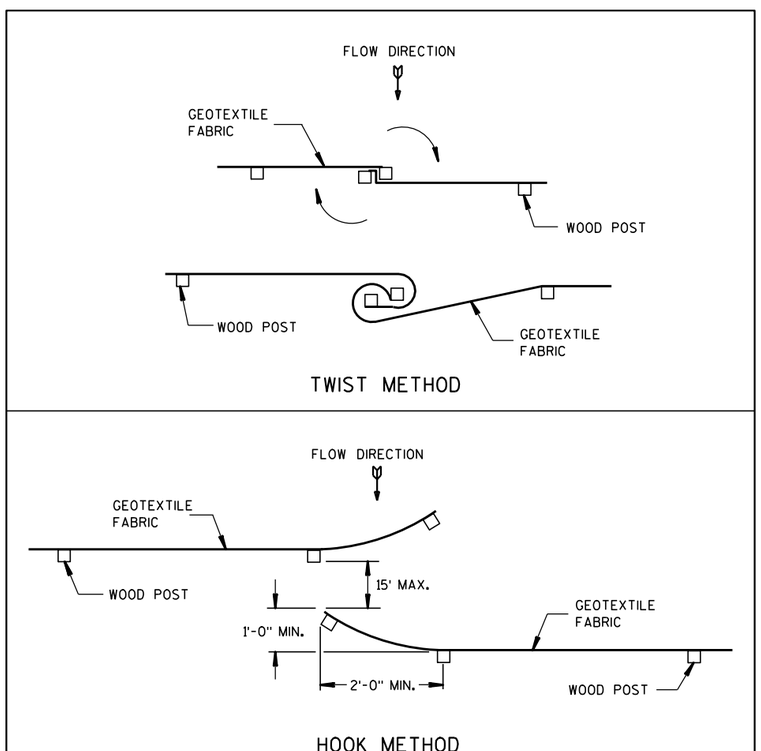

JOINING TWO LENGTHS OF SILT FENCE ⑤

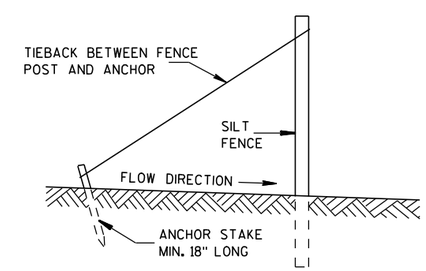

SILT FENCE TIE BACK

(WHEN REQUIRED BY THE ENGINEER)

SILT FENCE	
STATE OF WISCONSIN DEPARTMENT OF TRANSPORTATION	
APPROVED 4-29-05 DATE	/S/ Beth Cann-- CHIEF ROADWAY DEVELOP ENGINEER
FHWA	

6

6

S.D.D. 8 E 9-6

S.D.D. 8 E 9-6

METAL APRON ENDWALLS

PIPE DIA. (IN.)	MIN. THICK. (Inches) STEEL	MIN. THICK. (Inches) ALUM.	DIMENSIONS (Inches) A (±1")	B (MAX.)	H (±1")	L (±1 1/2")	L1 ①	L2 ①	W (±2")	APPROX. SLOPE	BODY
12	.064	.060	6	6	6	21	12	17 1/2	24	2 1/2 to 1	1 Pc.
15	.064	.060	7	8	6	26	14	21 3/4	30	2 1/2 to 1	1 Pc.
18	.064	.060	8	10	6	31	15	28 1/4	36	2 1/2 to 1	1 Pc.
21	.064	.060	9	12	6	36	18	29 5/8	42	2 1/2 to 1	1 Pc.
24	.064	.075	10	13	6	41	18	37 1/4	48	2 1/2 to 1	1 Pc.
30	.079	.075	12	16	8	51	18	52 1/4	60	2 1/2 to 1	1 Pc.
36	.079	.105	14	19	9	60	24	59 3/4	72	2 1/2 to 1	2 Pc.
42	.109	.105	16	22	11	69	24	75 5/8	84	2 1/2 to 1	2 Pc.
48	.109	.105	18	27	12	78	24	81	90	2 1/4 to 1	3 Pc.
54	.109	.105	18	30	12	84	30	85 1/2	102	2 1/4 to 1	3 Pc.
60	.109×	.105×	18	33	12	87	—	—	114	2 to 1	3 Pc.
66	.109×	.105×	18	36	12	87	—	—	120	2 to 1	3 Pc.
72	.109×	.105×	18	39	12	87	—	—	126	2 to 1	3 Pc.
78	.109×	.105×	18	42	12	87	—	—	132	1 1/2 to 1	3 Pc.
84	.109×	.105×	18	45	12	87	—	—	138	1 1/2 to 1	3 Pc.
90	.109×	.105×	18	37	12	87	—	—	144	1 1/2 to 1	3 Pc.
96	.109×	.105×	18	35	12	87	—	—	150	1 1/2 to 1	3 Pc.

× EXCEPT CENTER PANEL
SEE GENERAL NOTES

REINFORCED CONCRETE APRON ENDWALLS

PIPE DIA. (IN.)	DIMENSIONS (Inches) T	A	B	C	D	E	G	APPROX. SLOPE
12	2	4	24	48 7/8	72 7/8	24	2	3 to 1
15	2 1/4	6	27	46	73	30	2 1/4	3 to 1
18	2 1/2	9	27	46	73	36	2 1/2	3 to 1
21	2 3/4	9	36	37 1/2	73 1/2	42	2 3/4	3 to 1
24	3	9 1/2	43 1/2	30	73 1/2	48	3	3 to 1
27	3 1/4	10 1/2	49 1/2	24	73 1/2	54	3 1/4	3 to 1
30	3 1/2	12	54	19 3/4	73 1/2	60	3 1/2	3 to 1
36	4	15	63	34 3/4	97 3/4	72	4	3 to 1
42	4 1/2	21	63	35	98	78	4 1/2	3 to 1
48	5	24	72	26	98	84	5	3 to 1
54	5 1/2	27	65	*33 1/4-**35	*98 1/4-**100	90	5 1/2	2 2/5 to 1
60	6	*30-**35	60	39	99	96	5	2 to 1
66	6 1/2	*24-**30	*72-**78	*21-**27	99	102	5 1/2	2 to 1
72	7	*24-**36	78	21	99	108	6	2 to 1
78	7 1/2	*24-**36	78	21	99	114	6 1/2	2 to 1
84	8	36	90 1/2	21	111 1/2	120	6 1/2	1 1/2 to 1
90	8 1/2	41	87 1/2	24	111 1/2	132	6 1/2	1 1/2 to 1

*MINIMUM
**MAXIMUM

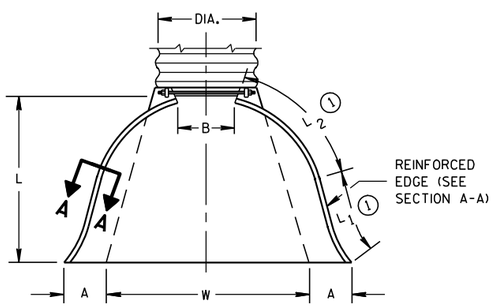

PLAN VIEW

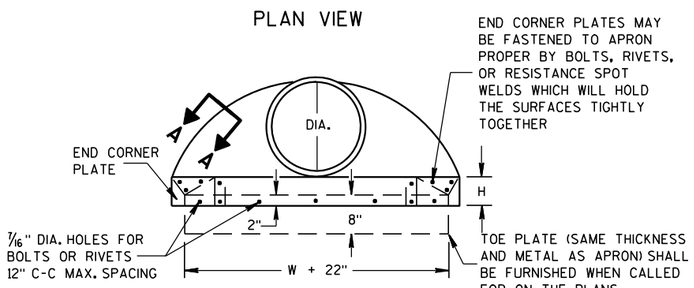

END VIEW

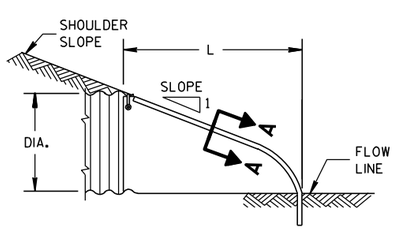

SIDE ELEVATION

METAL ENDWALLS

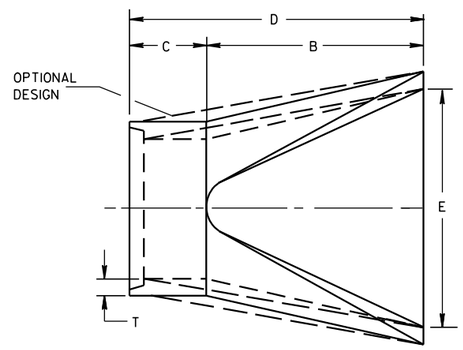

PLAN

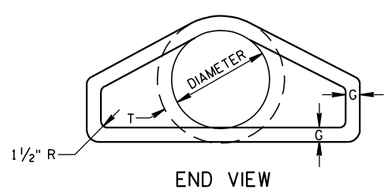

END VIEW

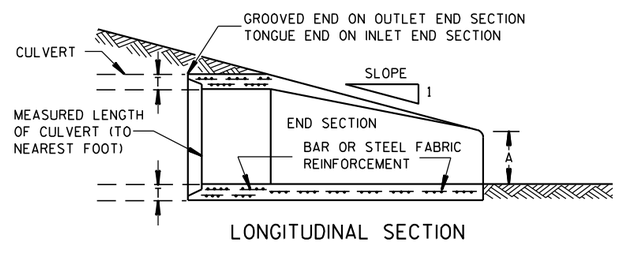

LONGITUDINAL SECTION

CONCRETE ENDWALLS

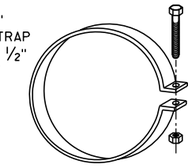

ALTERNATE FOR TYPE 1 CONNECTION

END SECTION CONNECTOR STRAP

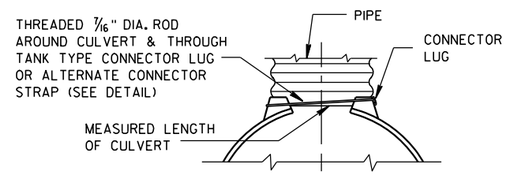

TYPE 1
FOR 12" THRU 24" CORR. PIPE

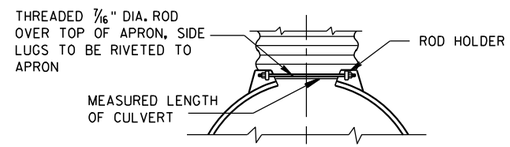

TYPE 2
FOR 30" THRU 96" CORR. PIPE

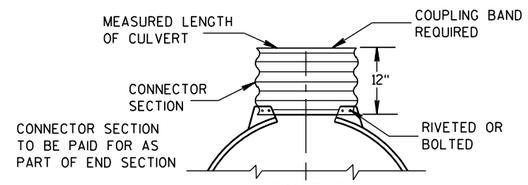

TYPE 3
FOR 42" THRU 96" CORR. PIPE

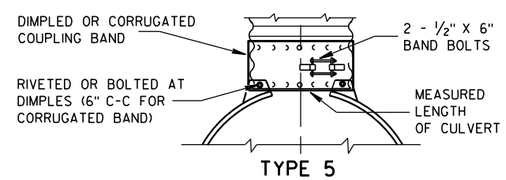

TYPE 5
ALTERNATE FOR:
ALL SIZES CORRUGATED CIRCULAR PIPE

NOTE: DIMPLED BAND FITS OVER OUTSIDE OF ENDWALL, AND CORRUGATED BAND FITS INSIDE ENDWALL. DIMPLED BAND MAY BE USED WITH HELICALLY CORRUGATED PIPE.

FOR CIRCUMFERENTIALLY CORRUGATED PIPE USE ENDWALL CONNECTION DETAILS 1, 2, 3 OR 5 AS APPLICABLE.

FOR HELICALLY CORRUGATED PIPE USE ENDWALL CONNECTION DETAILS 1, 2 OR 5.

FOR HELICALLY CORRUGATED PIPES WITH TWO CIRCUMFERENTIAL CORRUGATIONS AT EACH END USE ENDWALL CONNECTION DETAILS 1, 2 OR 3.

CONNECTION DETAILS

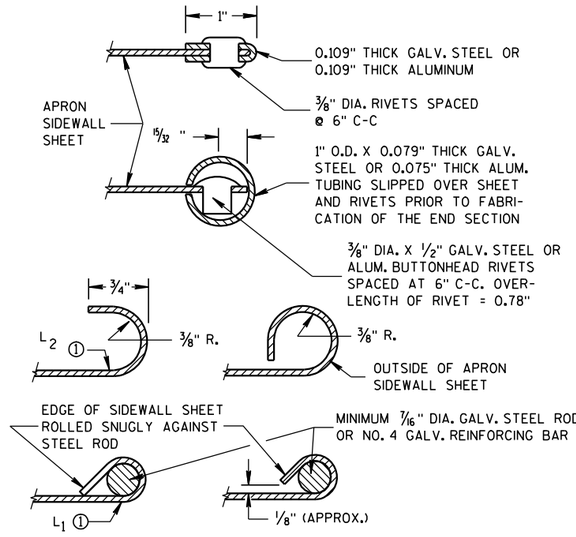

SECTION A-A

GENERAL NOTES

DETAILS OF CONSTRUCTION, MATERIALS AND WORKMANSHIP NOT SHOWN ON THIS DRAWING SHALL CONFORM TO THE PERTINENT REQUIREMENTS OF THE STANDARD SPECIFICATIONS AND THE APPLICABLE SPECIAL PROVISIONS.

CONCRETE CULVERT ENDWALLS MAY NOT BE USED WITH GALVANIZED STEEL OR ALUMINUM CULVERT PIPE OR VISE VERSA. GALVANIZED STEEL OR ALUMINUM ENDWALLS SHALL NORMALLY BE INSTALLED ON CULVERT PIPE OF THE SAME METAL.

ALL THREE PIECE STEEL APRON ENDWALLS FOR 60" DIAMETER PIPE AND LARGER SHALL HAVE 0.109" SIDES AND 0.138" CENTER PANELS. ALL THREE PIECE ALUMINUM APRON ENDWALLS FOR 60" DIAMETER PIPE AND LARGER SHALL HAVE 0.105" SIDES AND 0.134" CENTER PANELS. THE WIDTH OF CENTER PANELS SHALL BE GREATER THAN 20 PERCENT OF THE PIPE PERIMETER.

LAP SEAMS SHALL BE TIGHTLY JOINED BY GALVANIZED RIVETS OR BOLTS FOR STEEL UNITS AND ALUMINUM RIVETS AND BOLTS FOR ALUMINUM UNITS. FOR THE 60" THROUGH 96" DIAMETER APRON ENDWALL SIZES, THE REINFORCED EDGES AND CENTER PANEL SEAMS SHALL BE FURTHER REINFORCED WITH GALVANIZED STEEL OR ALUMINUM STIFFENER ANGLES. THE ANGLES SHALL BE ATTACHED BY GALVANIZED NUTS AND BOLTS FOR STEEL UNITS AND ALUMINUM NUTS AND BOLTS FOR ALUMINUM UNITS.

WHERE TWO OR MORE PIPES WITH APRON ENDWALLS ARE LAID ADJACENT TO EACH OTHER, THEY SHALL BE SEPARATED BY A DISTANCE SUFFICIENT TO PROVIDE A MINIMUM CLEARANCE OF 6 INCHES BETWEEN APRON ENDWALLS.

① FOR PIPE SIZES UP TO 60" DIAMETER, A 180° ROLLED EDGE MAY BE USED INSTEAD OF STEEL ROD REINFORCEMENT. SEE SECTION A-A.

APRON ENDWALLS FOR CULVERT PIPE

STATE OF WISCONSIN
DEPARTMENT OF TRANSPORTATION

APPROVED
11/30/94 — DATE
/S/ Rory L. Rhinesmith — CHIEF ROADWAY DEVELOPMENT ENGINEER
FHWA

6
S.D.D. 8 F 1-11

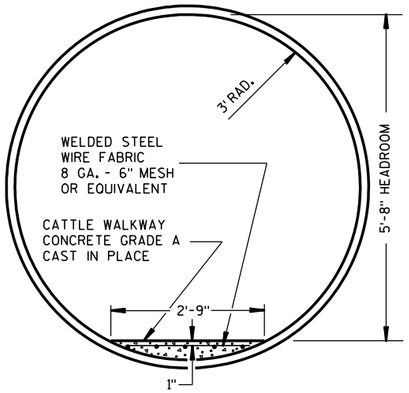

CROSS SECTION

CORRUGATED METAL PIPE CATTLE PASS

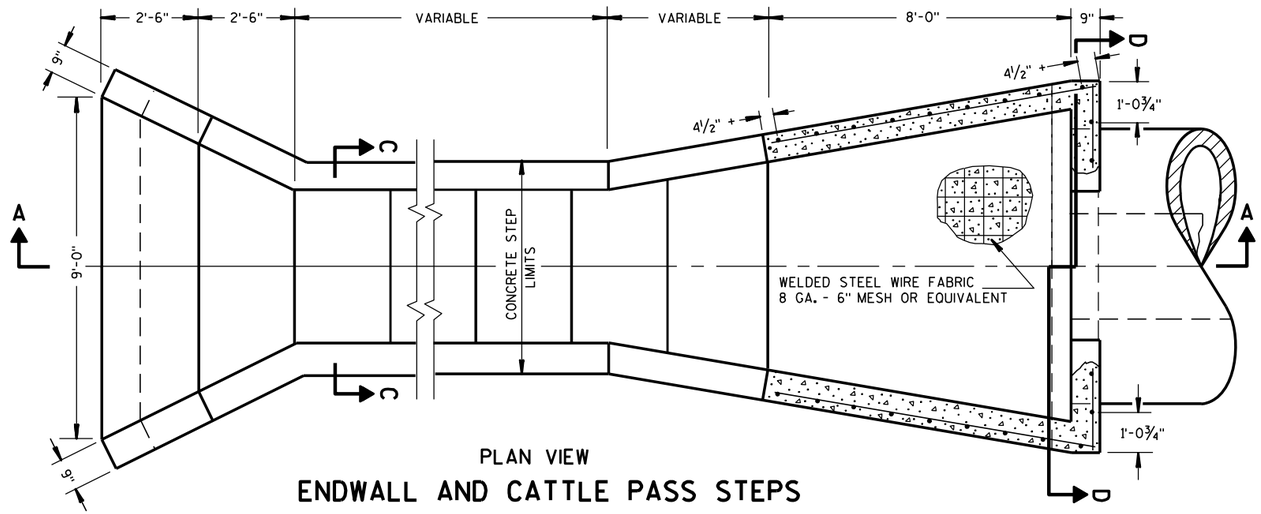

PLAN VIEW

ENDWALL AND CATTLE PASS STEPS

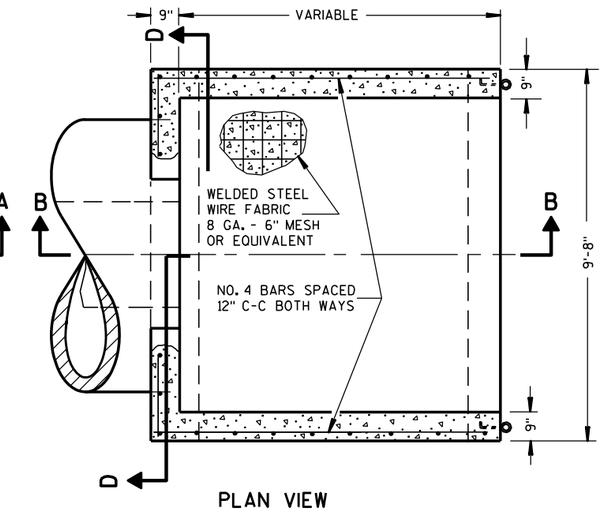

PLAN VIEW

ENDWALL FOR CATTLE PASS

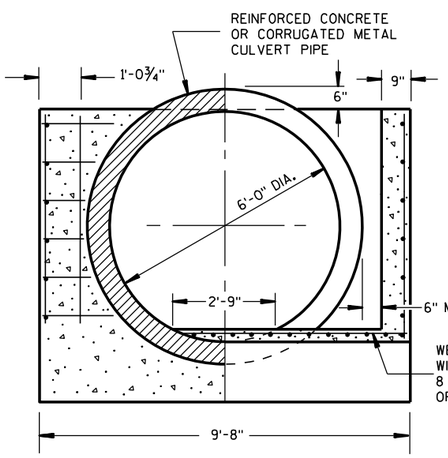

SECTION D-D

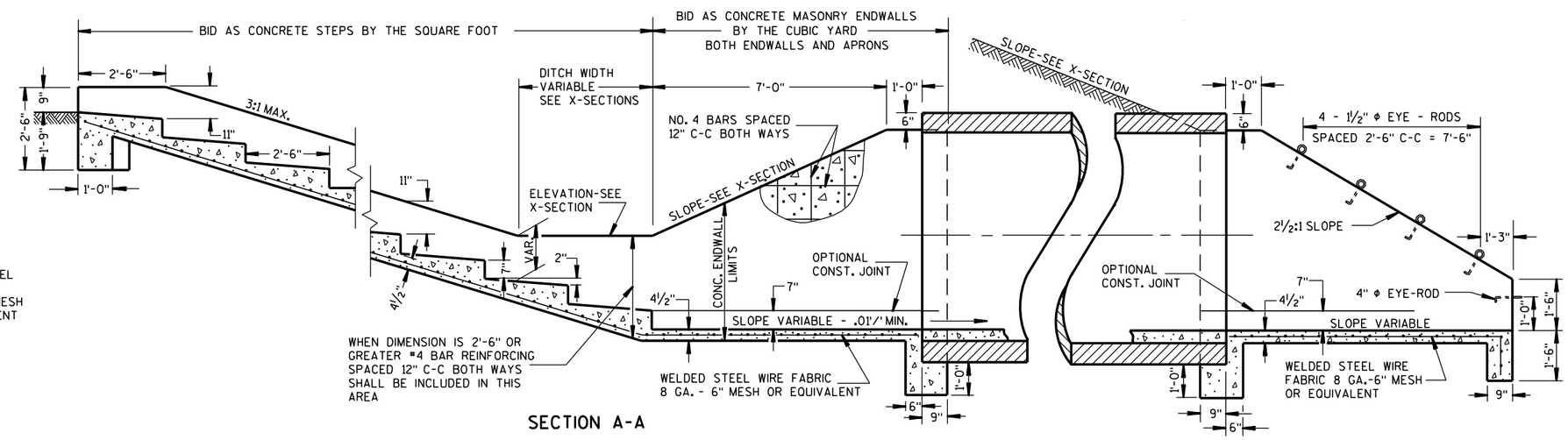

SECTION A-A

SECTION B-B

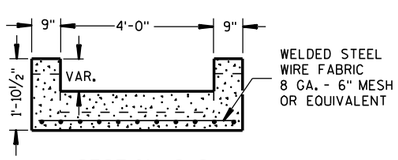

SECTION C-C

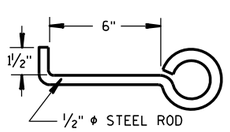

EYE-ROD ANCHOR

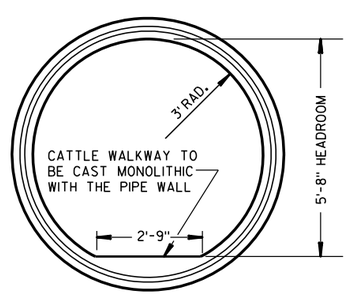

END VIEW

REINFORCED CONCRETE PIPE CATTLE PASS

GENERAL NOTES

DETAILS OF CONSTRUCTION, MATERIALS AND WORKMANSHIP NOT SHOWN ON THIIS DRAWING SHALL CONFORM TO THE PERTINENT REQUIREMENTS OF THE STANDARD SPECIFICATIONS AND THE APPLICABLE SPECIAL PROVISIONS.

ALL STEEL REINFORCEMENT IN ENDWALLS AND CATTLE PASS STEPS SHALL BE EMBEDDED 2 INCHES CLEAR UNLESS OTHERWISE NOTED.

ALL STEEL REINFORCEMENT OR FABRIC USED AS SHOWN ABOVE SHALL BE INCIDENTAL TO THE BID ITEM OF WHICH IT IS AN INTEGRAL PART.

EYE-RODS FOR FENCE CONNECTIONS SHALL BE PROVIDED BY THE CONTRACTOR AS AN INCIDENTAL TO THE BID ITEM OF CONCRETE MASONRY, ENDWALLS AND SHALL BE GALVANIZED.

CONCRETE USED FOR THE CATTLE WALKWAY WITHIN THE PIPE SHALL BE INCIDENTAL TO THE BID ITEM OF PIPE CATTLE PASS.

DETAILS FOR PIPE CATTLE PASS, CONCRETE ENDWALL AND STEPS

STATE OF WISCONSIN
DEPARTMENT OF TRANSPORTATION

APPROVED

6/6/75 — DATE

/S/ Harold Fi[illegible] — STATE DESIGN ENGINE[illegible]

HWYS

FHWA

6

S.D.D. 8 F 3-3

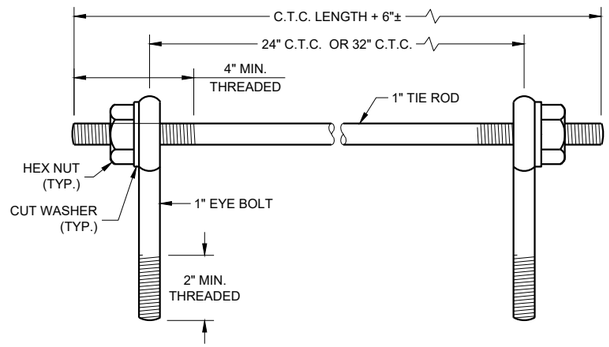

EYE BOLTS AND TIE ROD

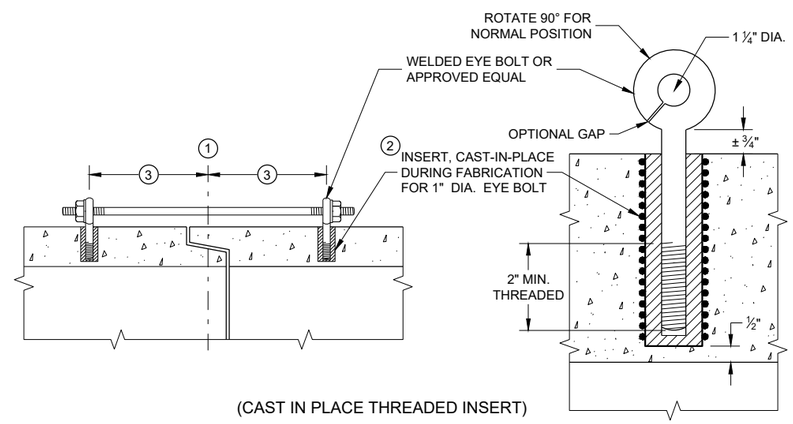

(CAST IN PLACE THREADED INSERT)

LONGITUDINAL SECTIONS

EYE BOLT AND TIE ROD ASSEMBLY (ALTERNATE NO. 1)

GENERAL NOTES

DETAILS OF CONSTRUCTION, MATERIALS, AND WORKMANSHIP NOT SHOWN ON THIS DRAWING SHALL CONFORM TO THE PERTINENT REQUIREMENTS OF THE STANDARD SPECIFICATIONS AND APPLICABLE SPECIAL PROVISIONS.

CONCRETE CULVERT AND STORM SEWER PIPE SHALL BE TIED TOGETHER IN THE MANNER ILLUSTRATED BY THIS DETAIL AT LOCATIONS DESIGNATED IN THE STANDARD SPECIFICATIONS AND THE PLAN. THE CONTRACTOR MAY USE EITHER ALTERNATE 1, 2 OR 3 FOR DRAINAGE STRUCTURES. ONLY ALTERNATE 1 AND 3 MAY BE USED FOR CATTLE PASSES, UNLESS OTHERWISE STATED IN THE CONTRACT. THE MATERIALS, FABRICATION AND WORK NECESSARY TO TIE THE PIPE BY THIS DETAIL WILL BE CONSIDERED INCIDENTAL TO THE PIPE AND APRON ENDWALLS IF REQUIRED.

DETAILED DRAWINGS FOR PROPOSED ALTERNATE DESIGNS FOR JOINT TIES SHALL BE SUBMITTED TO THE ENGINEER FOR APPROVAL.

JOINT TIES TO BE HOT-DIP GALVANIZED PER ASTM A 153.

1. CENTER LINE OF TONGUE AND GROOVE OR BELL AND SPIGOT JOINTS.
2. THE INSIDE OF THE THREADED INSERTS SHALL BE CLEAN TO ALLOW THE INSERTION OF THREADED EYE BOLTS.
3. HOLES SHALL BE CAST-IN-PLACE OR DRILLED PER THE APPLICABLE DETAIL, AND EQUAL DISTANCE FROM THE CENTERLINE OF THE JOINT.
4. BOLT PROJECTION INSIDE OF PIPE SHALL NOT EXCEED 2 INCHES.
5. OPENING TO BE ROD DIAMETER PLUS 1 INCH.
6. LENGTH ADEQUATE TO EXTEND TO WITHIN ½ INCH OF THE INNER SURFACE OF THE PIPE.
7. EYE BOLT LENGTH DETERMINED BY WALL THICKNESS, BELL THICKNESS AND BOLT PROJECTION INSIDE PIPE.

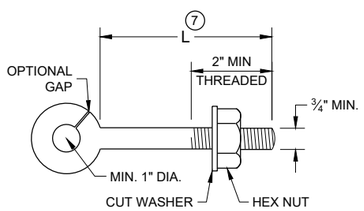

EYE BOLT 7

NOTE: TWO EYE BOLTS MAY BE USED WITH A 30" OR 38" LONG THREADED ROD IN LIEU OF THE 90° BENT TIE ROD.

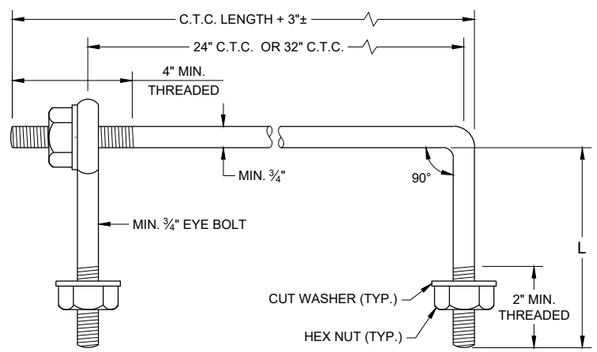

EYE BOLT AND TIE ROD

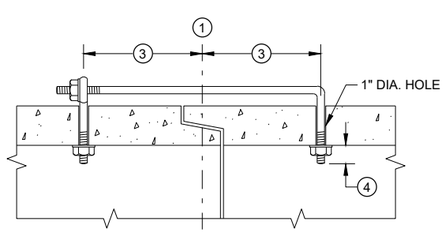

(TONGUE AND GROOVE PIPE)

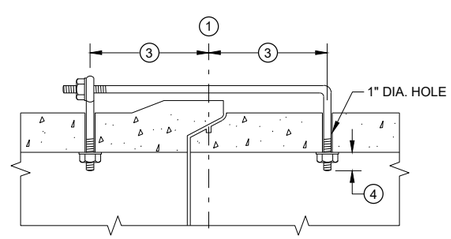

(MODIFIED BELL PIPE)

LONGITUDINAL SECTION

(JOINT TIES FOR 18" TO 66" DIA. CONCRETE PIPE)

EYE BOLT AND TIE ROD ASSEMBLY (ALTERNATE NO. 2)

ADJUSTABLE TIE ROD TABLE

PIPE DIAMETER	TIE ROD DIAMETER	D	L_1	N
12 - 60	⅝	⅝	5	½
66 - 84	¾	¾	5	½
90 - 144	1	1	7	1 7/16

DIMENSIONS SHOWN ARE IN INCHES

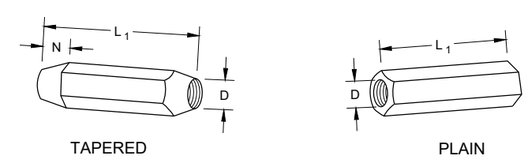

RIGHT AND LEFT THREADS

SLEEVE NUTS

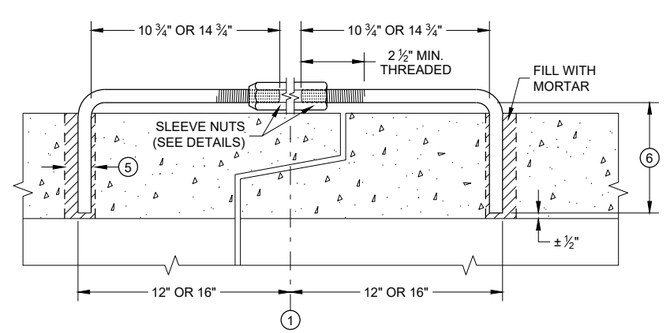

LONGITUDINAL SECTION

ADJUSTABLE TIE ROD (ALTERNATE NO. 3)

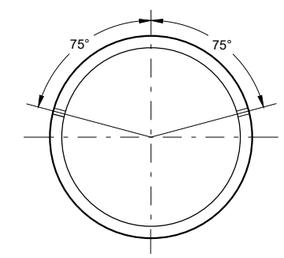

PLACEMENT OF (2) CAST-IN-PLACE INSERTS OR HOLES DURING FABRICATION FOR PIPE SECTIONS REQUIRING TIE RODS

TRANSVERSE SECTION

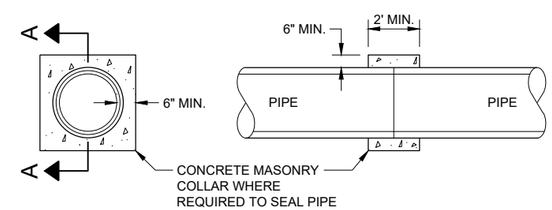

SECTION A - A

CONCRETE COLLAR DETAIL

JOINT TIES FOR CONCRETE PIPE AND CONCRETE COLLAR DETAIL

STATE OF WISCONSIN
DEPARTMENT OF TRANSPORTATION

APPROVED
November 2021 — DATE
/S/ Rodney Taylor — ROADWAY STANDARDS DEVE ENGINEER
FHWA

6

SDD 08F04 - 08

GENERAL NOTES

DETAILS OF CONSTRUCTION NO SHOWN ON THIS DRAWING SHALL CONFORM TO THE PERTINENT REQUIREMENTS OF THE STANDARD SPECIFICATIONS AND APPLICABLE SPECIAL PROVISIONS.

DO NOT MILL CENTERLINE GROOVES THROUGH ANY INTERSECTION, MARKED CROSSWALK, NON-MOTORIZED PATH CROSSING, OR SNOWMOBILE CROSSING.

INSTALL PAVEMENT MARKING AFTER THE GROOVES ARE INSTALLED.

SEE SIGNING PLAN FOR SIGN REQUIREMENTS THAT MAY BE NEEDED.

(1) CENTERLINE GROOVES MAY BE OMITTED IN AREAS WITH HIGH CONCENTRATIONS OF DRIVEWAYS. WHEN DIRECTED BY THE ENGINEER.

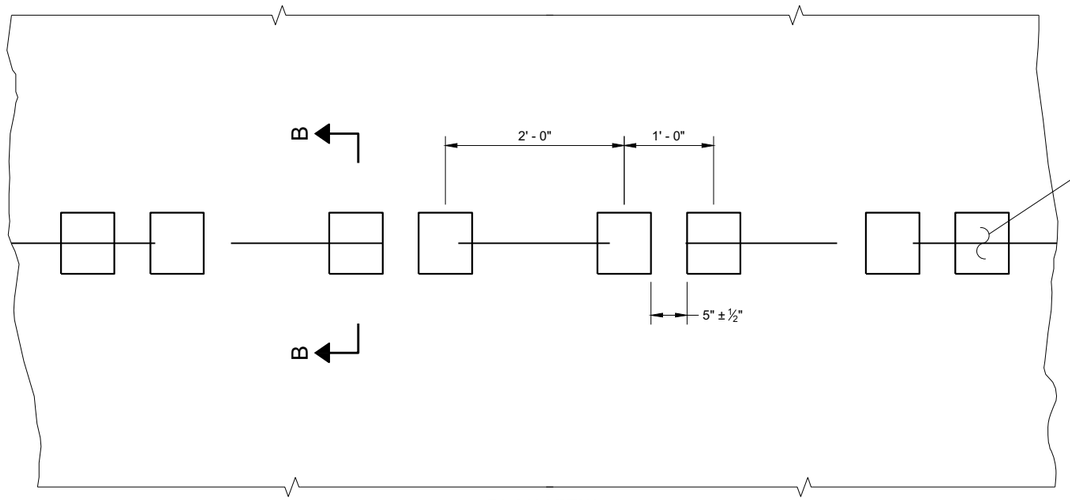

PLAN VIEW
SHOULDER WITH GROOVES

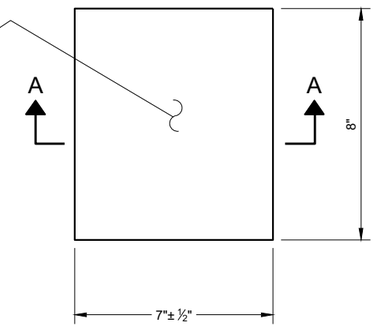

PLAN VIEW
(SINGLE GROOVE)

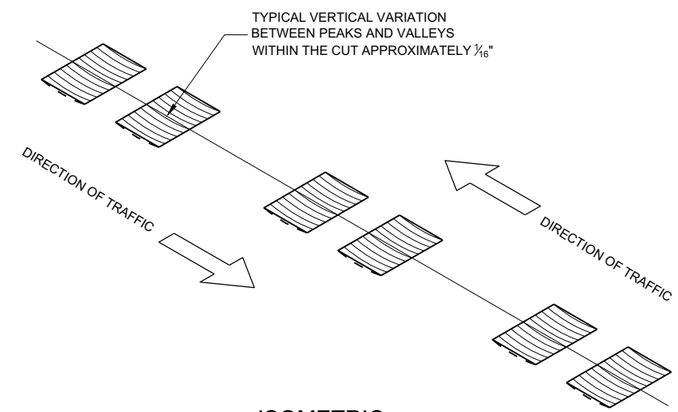

ISOMETRIC

PLACEMENT DETAIL FOR TYPE 1 MILLED RUMBLE STRIP

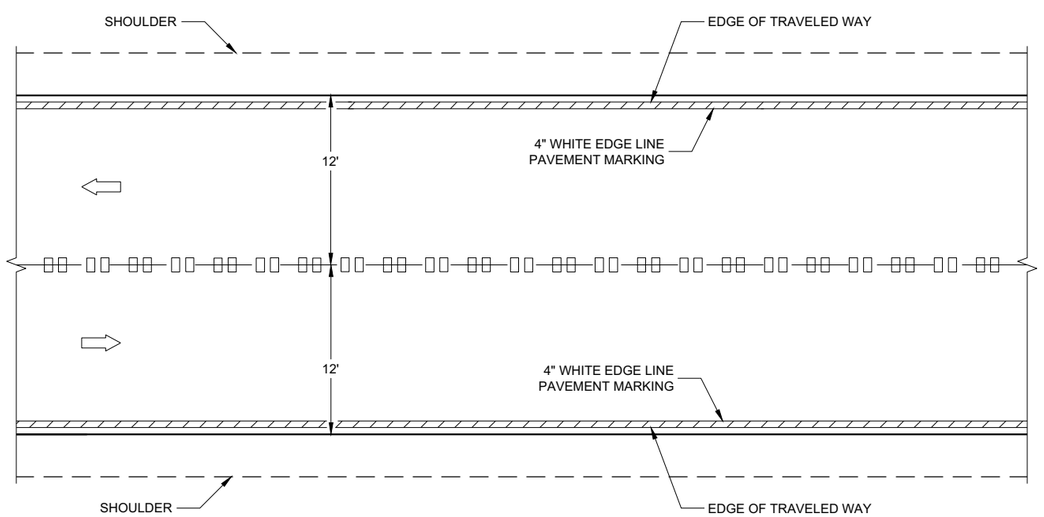

CENTERLINE GROOVES ON TWO-WAY ROADWAYS

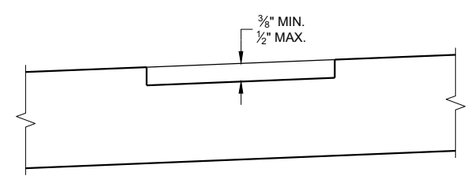

SECTION B - B
SUPERELEVATED ROADWAY

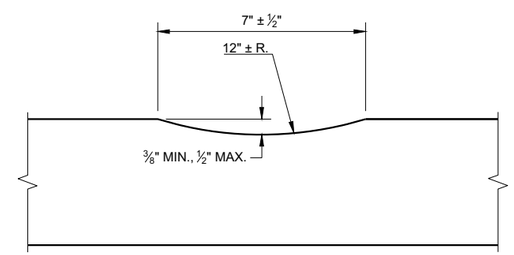

SECTION A - A

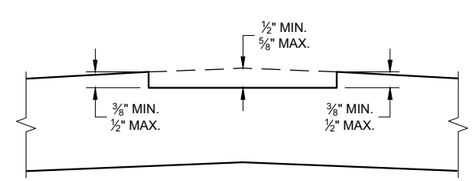

SECTION B - B
CROWNED ROADWAY

2-LANE RURAL
CENTER LINE RUMBLE STRIP, MILLING

STATE OF WISCONSIN
DEPARTMENT OF TRANSPORTAT

6

6

SDD 13A11 - 03a

SDD 13A11 - 03a

GENERAL NOTES

1. CENTERLINE GROOVES MAY BE OMITTED IN AREAS WITH HIGH CONCENTRATIONS OF DRIVEWAYS. WHEN DIRECTED BY THE ENGINEER.

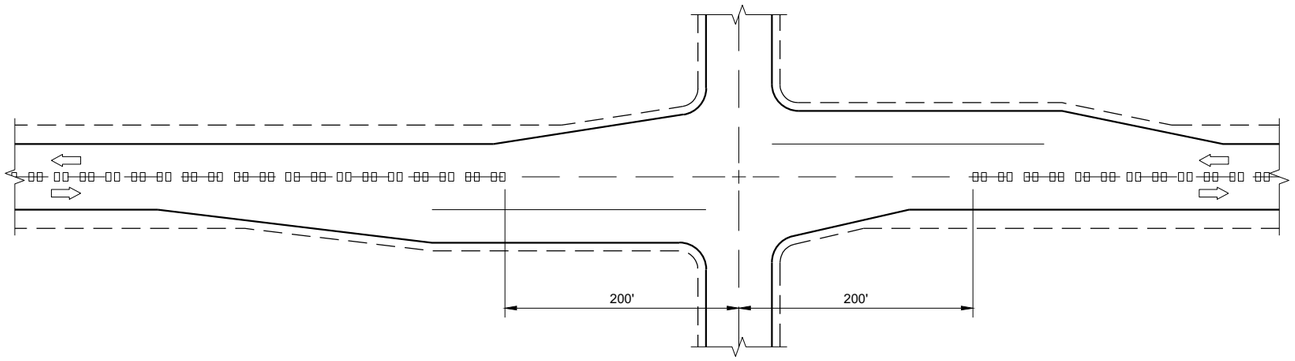

CENTERLINE GROOVES AT INTERSECTIONS

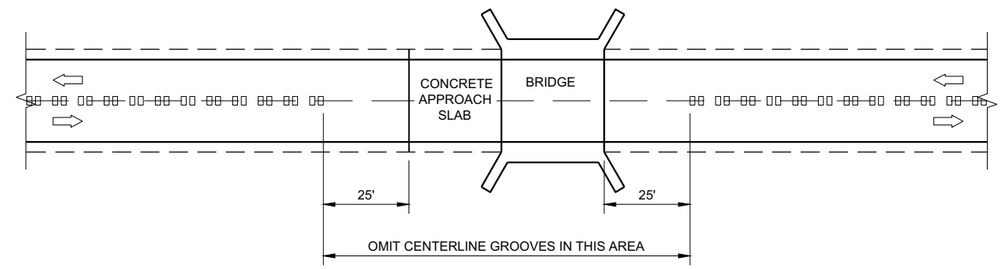

CENTERLINE GROOVES AT BRIDGES

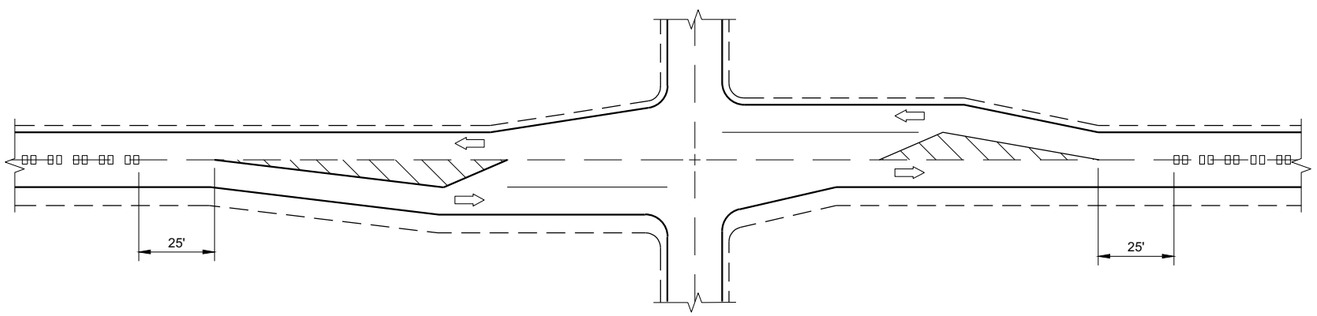

CENTERLINE GROOVES AT INTERSECTIONS (WITH LEFT TURN LANES)

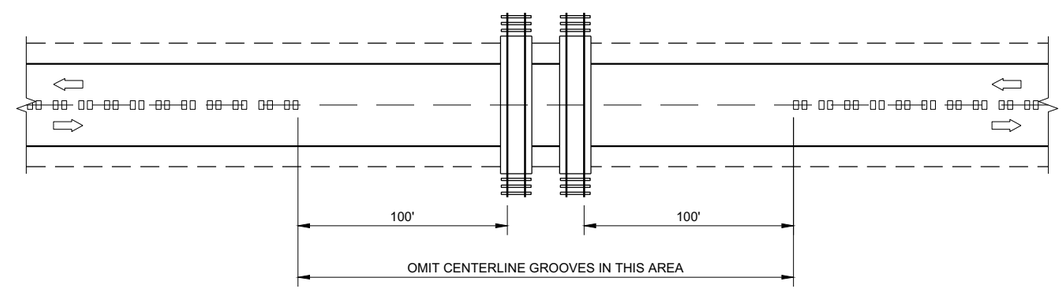

CENTERLINE GROOVES AT RAILROADS

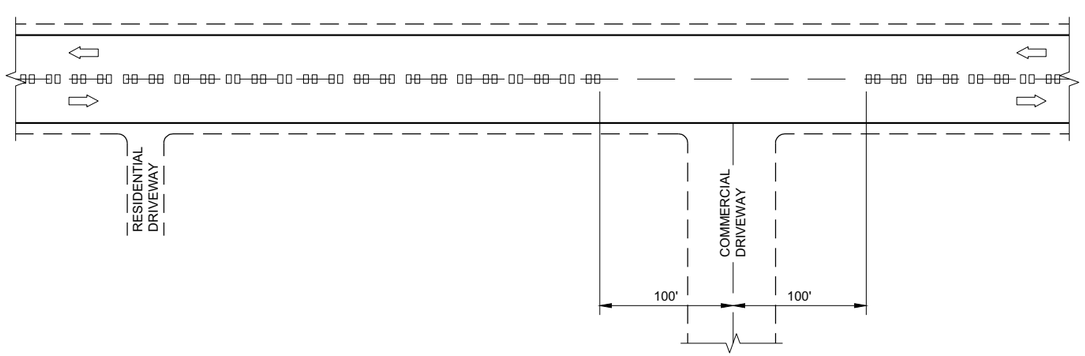

CENTERLINE GROOVES AT DRIVEWAYS (1)

6

6

SDD 13A11 - 03b

SDD 13A11 - 03b

2-LANE RURAL CENTERLINE RUMBLE STRIP, MILLING

STATE OF WISCONSIN
DEPARTMENT OF TRANSPORTATION

APPROVED

7/2018 — DATE

/S/ Rodney Taylor — ROADWAY STANDARDS DEVE ENGINEER

FHWA

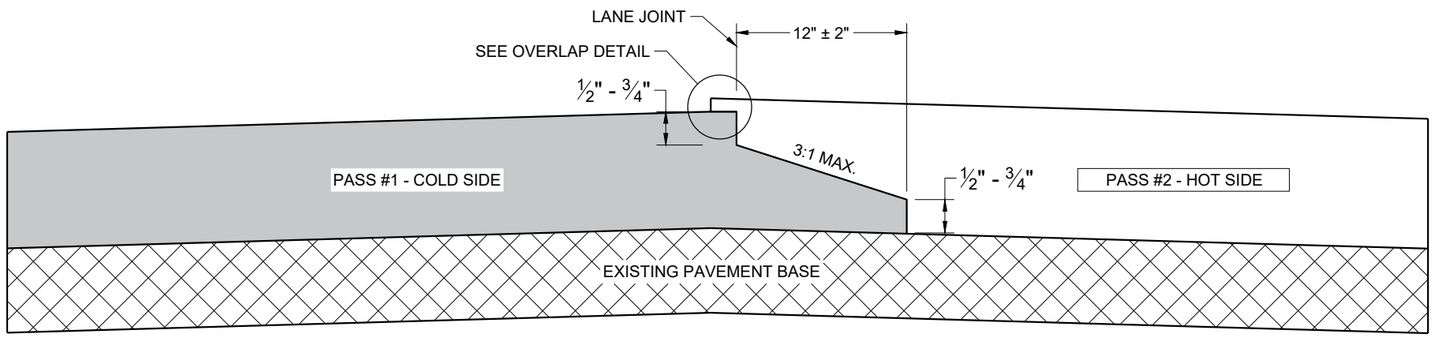

TYPICAL PAVEMENT CROSS SECTION
NOTCHED WEDGE JOINT

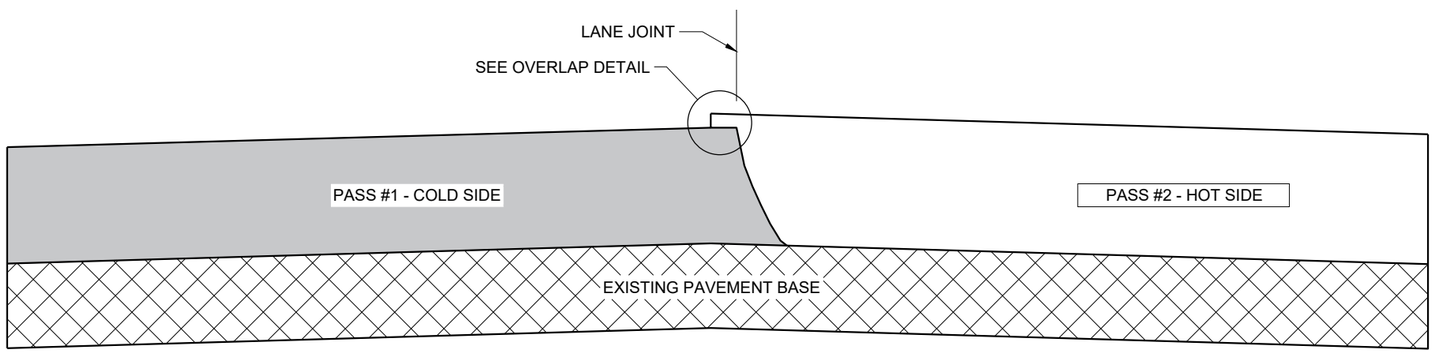

TYPICAL PAVEMENT CROSS SECTION
VERTICAL JOINT

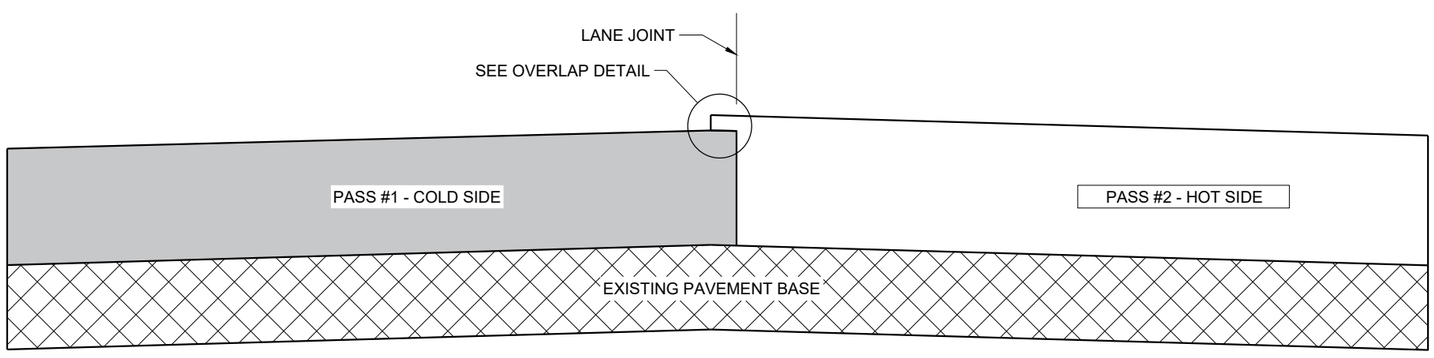

TYPICAL PAVEMENT CROSS SECTION
VERTICAL JOINT (MILLED)

GENERAL NOTES

IN ADDITION TO THE DETAILS PROVIDED IN THIS DRAWING, CONFORM TO STANDARD SPECIFICATION 450.3.2.8 FOR WHEN A NOTCHED WEDGE JOINT IS REQUIRED AND FOR GENERAL JOINT CONSTRUCTION REQUIREMENTS.

FOR ALL LONGITUDINAL JOINTS, ENSURE THE PAVER SCREED OVERLAPS THE PREVIOUSLY PLACED PAVEMENT BY 1" ± 0.5" AND THE HOT SIDE OF THE JOINT REMAINS HIGHER THAN THE COLD SIDE BY APPROXIMATELY 0.1" AFTER FINAL COMPACTION. (IT WILL BE FLUSH WHEN PAVING IN ECHELON.)

ONLY REMOVE THE LONGITUDINAL NOTCHED WEDGE JOINT FOR SMA PAVEMENT OR AS DIRECTED BY THE ENGINEER TO ADDRESS SPECIFIC LENGTHS OF JOINT DAMAGED BY TRAFFIC.

WHEN MILLING BACK OR REMOVING ANY LONGITUDINAL JOINT, LIMIT THE MATERIAL REMOVED TO 2" FROM THE TOP NOTCH OR FROM THE VERTICAL JOINT EDGE ON THE COLD SIDE OF THE JOINT.

USE LONGITUDINAL MILLED JOINT AS PLANS SHOW OR THE AS THE ENGINEER DIRECTS.

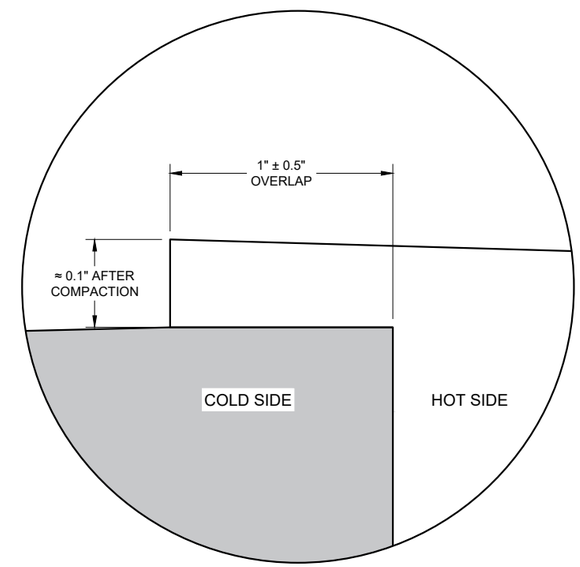

OVERLAP DETAIL (TYPICAL)

6

6

SDD 13C19 - 03

SDD 13C19 - 03

HMA LONGITUDINAL JOINTS

STATE OF WISCONSIN
DEPARTMENT OF TRANSPORTATION

APPROVED
November 2020 /S/ Steven Hefel
DATE HMA PAVEMENT ENGIN
FHWA

1. WOOD OR STEEL POSTS (w6X9 OR w6X8.5) MAY BE USED. DO NOT INTERMIX WOOD AND STEEL POSTS. INSTALL STEEL POSTS WITH HOLES ON APPROACHING TRAFFIC SIDE.
2. USE WOOD OR APPROVED PLASTIC BLOCKOUTS. WOOD BLOCKOUTS MAY BE CONSTRUCTED OUT OF TWO OR MORE WOOD BLOCKOUTS. SEE ALTERNATE WOOD BLOCKOUT DETAIL. DIMENSIONS OF APPROVED PLASTIC BLOCKOUTS MAY VARY.
3. IF ROCK IS ENCOUNTERED DURING EXCAVATION, PROVIDE A HOLE 12 INCHES IN DIAMETER EXTENDING 20 INCHES DEEP INTO THE ROCK. PLACE APPROXIMATELY 2 1/2" INCHES OF GRANULAR MATERIAL IN THE BOTTOM OF THE HOLE. CUT THE POSTS THE TO LENGTH AMD INSTALL. BACKFILL WITH EXCAVATED MATERIAL AND COMPACT. BACKFILL IS TO BE FREE OF LARGE ROCKS.
4. WHEN THE DISTANCE FROM BACK OF POST TO SHOULDER HINGE POINT IS LESS THAN 2 FEET INSTALL LONGER POST AT HALF POST SPACING (K).
5. FOR NEW MGS INSTALLATION TOP OF W-BEAM RAIL TOLERANCE IS ±1". FOR EXISTING MGS INSTALLATION TOP OF W-BEAM IS BETWEEN 27 ¾" TO 32".
6. WHEN USING STEEL POST AND WOOD BLOCKOUTS INSTALL FOUR 16D GALVANIZED NAILS. INSTALL NAILS AT THE BACK CORNERS OF THE BLOCK AND BEND THE NAILS OVER THE FLANGE OF THE STEEL POST.
7. TOTAL POST LENGTH FOR TYPE K IS 7' - 0". TOTAL POST LENGTH FOR OTHER MGS TYPES IS 6' - 0".

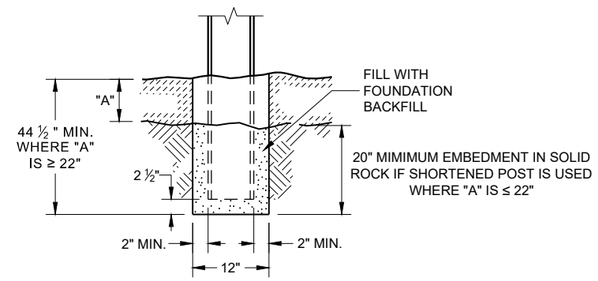

END VIEW
SETTING STEEL OR WOOD POST IN ROCK (3)

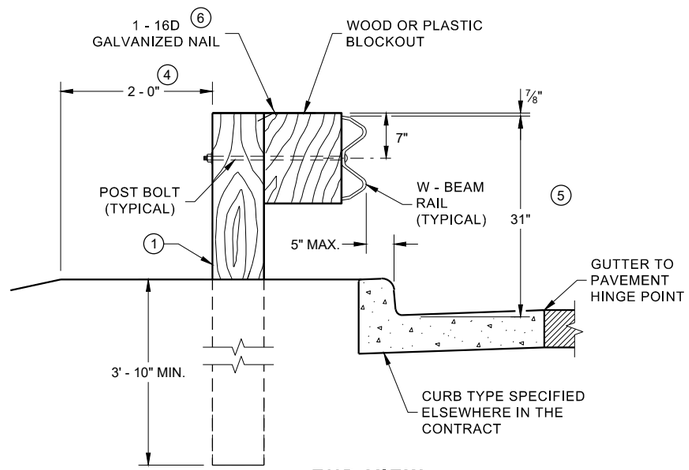

END VIEW
LOCATED ALONG A CURBED ROADWAY

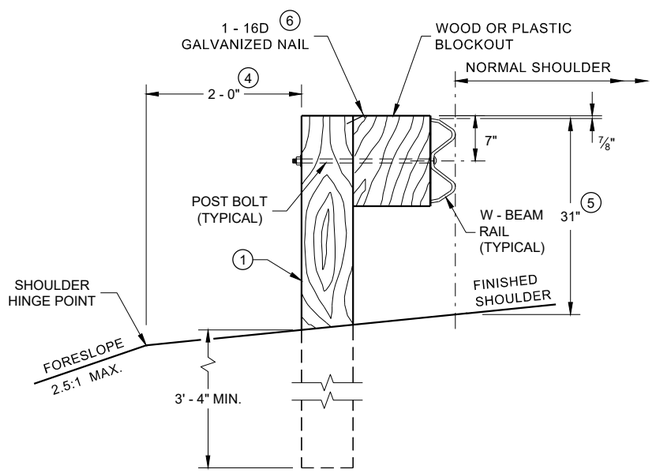

END VIEW
LOCATED ALONG A ROADWAY SHOULDER STANDARD INSTALLATION

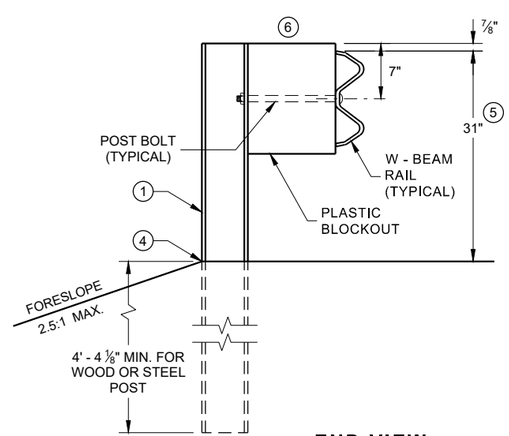

END VIEW
MGS LONGER POST AT HALFPOST SPACING W BEAM (K)

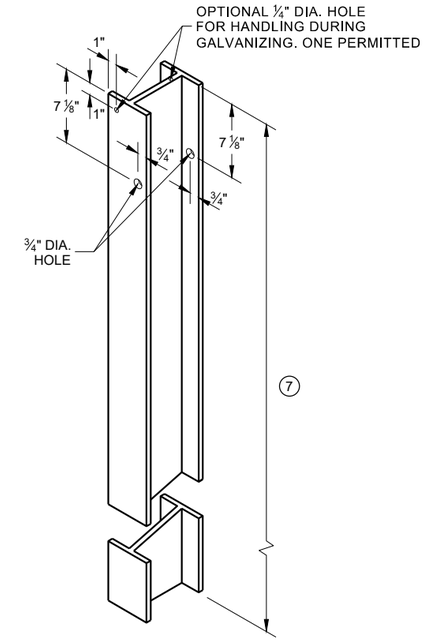

STEEL POST & HOLE PUNCHING DETAIL (W 6 X 9) (1)

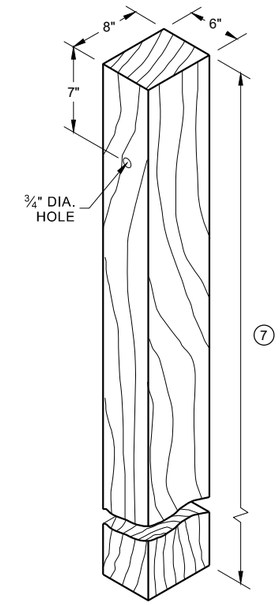

WOOD POST (6" X 8") NOMINAL (1)

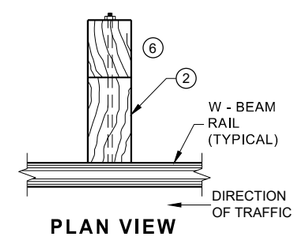

PLAN VIEW WOOD POST, BLOCKOUT & BEAM

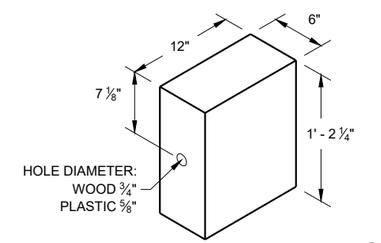

WOOD OR PLASTIC BLOCKOUT (2)

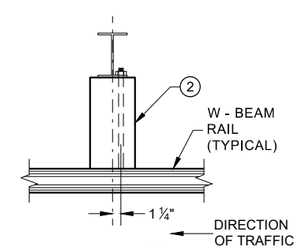

PLAN VIEW STEEL POST, PLASTIC BLOCKOUT & BEAM

MIDWEST GUARDRAIL SYSTEM (MGS) GUARDRAIL

STATE OF WISCONSIN
DEPARTMENT OF TRANSPORTA

6

6

SDD 14B42 - 07a

SDD 14B42 - 07a

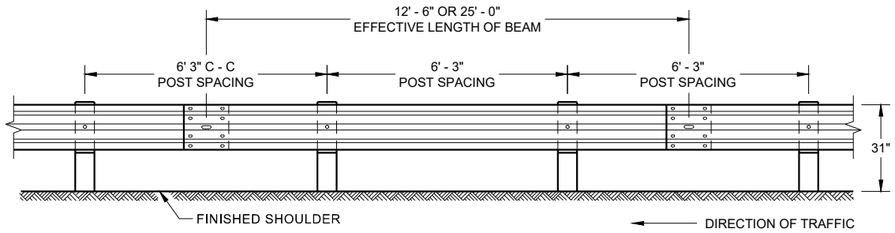

FRONT VIEW
POST SPACING STANDARD INSTALLATION

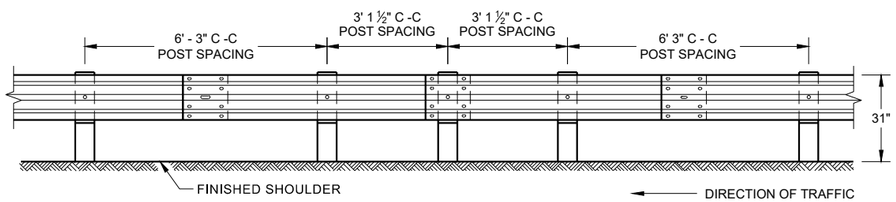

FRONT VIEW
HALF POST SPACING (HS) AND HALF POST SPACING WITH LONGER POSTS (K)

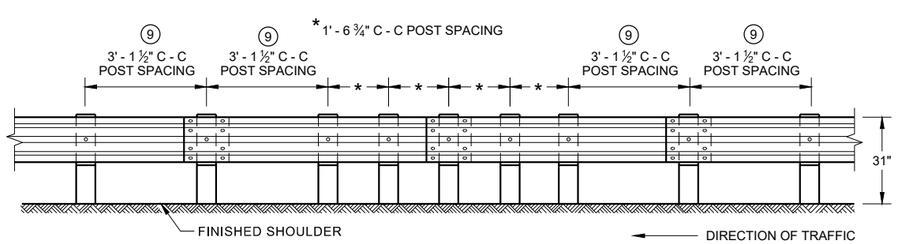

FRONT VIEW
QUARTER POST SPACING (QS)

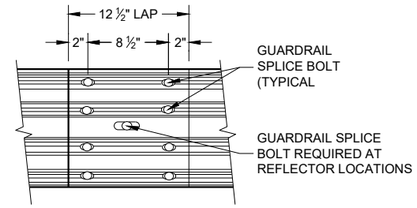

FRONT VIEW
MID-SPAN BEAM SPLICE

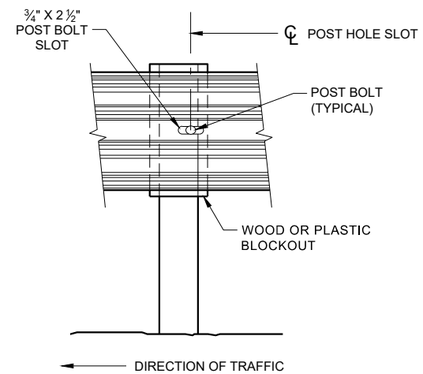

FRONT VIEW AT STEEL POST

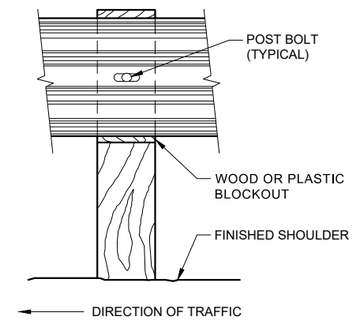

FRONT VIEW AT WOOD POST

GENERAL NOTES

8. DO NOT INSTALL REFLECTORS ON THE FIRST 50 FEET OF THE APPROACH END OF THE ENERGY ABSORBING TERMINAL.

9. 25 FEET OF HALF POST SPACING IS REQUIRED ON APPROACH AND DEPARTURE ENDS OF QUARTER POST SPACING.

POST BOLTS ARE A ⅝" DIAMETER ASTM A307 GUARDRAIL BOLT. A POST BOLT REQUIRES ⅝" DIAMETER A563A DOUBLE RECESSED (DR) HEAVY HEX NUT AND ⅝" DIAMETER F844 FLAT WASHER. POST BOLTS MAY BE LONGER IF MULTIPLE BLOCKOUTS ARE BEING USED.

GUARD RAIL SPLICE BOLTS ARE A ⅝" DIAMETER ASTM A307 GUARDRAIL HEAD BOLT. A GUARDRAIL SPLICE BOLT REQUIRES ⅝" DIAMETER A563A DOUBLE RECESSED (DR) HEAVY HEX NUT.

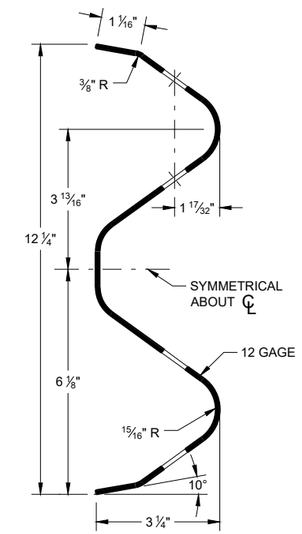

SECTION THRU W-BEAM RAIL

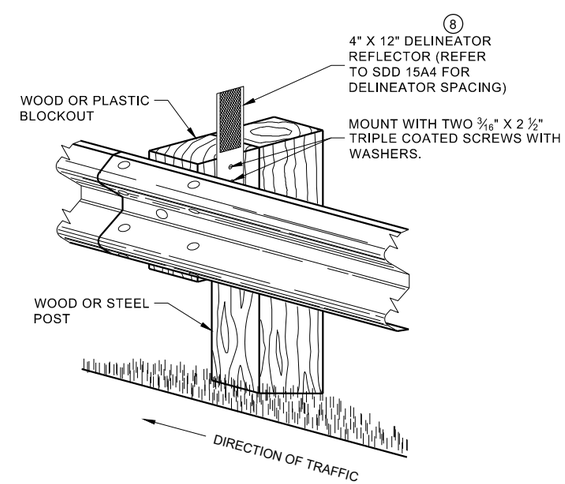

ONE SIDED REFLECTOR DETAIL AND TYPICAL INSTALLATION

MIDWEST GUARDRAIL SYSTEM (MGS) GUARDRAIL

STATE OF WISCONSIN
DEPARTMENT OF TRANSPORTAT

6

SDD 14B42 - 07b

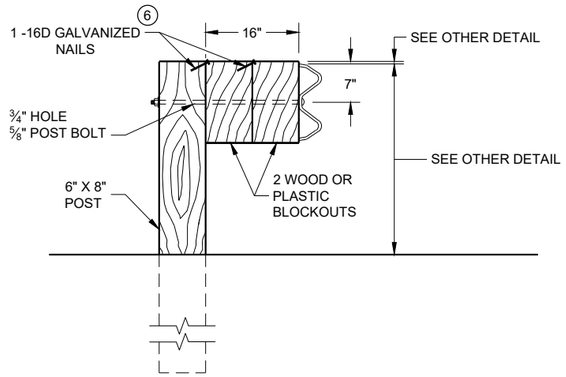

DETAIL FOR 16" BLOCKOUT DEPTH

IT IS ACCEPTABLE TO USE BLOCKOUTS UP TO 16" DEEP TO INCREASE THE POST OFFSET TO AVOID UNDERGROUND OBSTACLES. THERE IS NO LIMIT TO THE NUMBER OF POSTS THAT CAN HAVE ADDITIONAL BLOCKOUTS UP TO 16" DEEP.

NOTE:

1. ALL FILLETS SHALL HAVE A MINIMUM RADIUS OF 3/16".
2. IF THE BOLT EXTENDS MORE THAN ¼" FROM THE NUT THE BOLT SHOULD BE TRIMMED BACK.

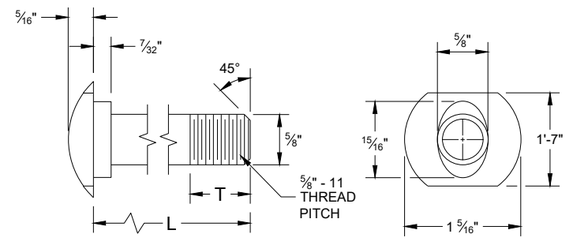

POST BOLT TABLE

L	T (MIN.)
1 ¼"	1 ⅛"
2"	1 ¾"
10"	4"
14"	4 1/16"
18"	4"
21"	4 1/16"
25"	4"

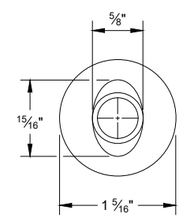

ALTERNATE BOLT HEAD

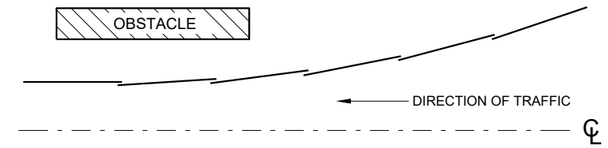

PLAN VIEW
BEAM LAPPING DETAIL

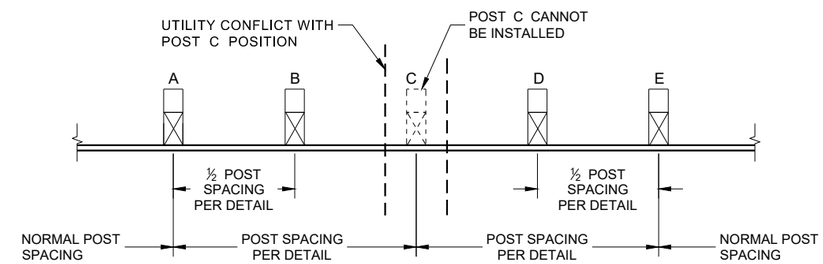

POST DRIVING FOR CONTINUOUS UNDERGROUND OBSTRUCTION

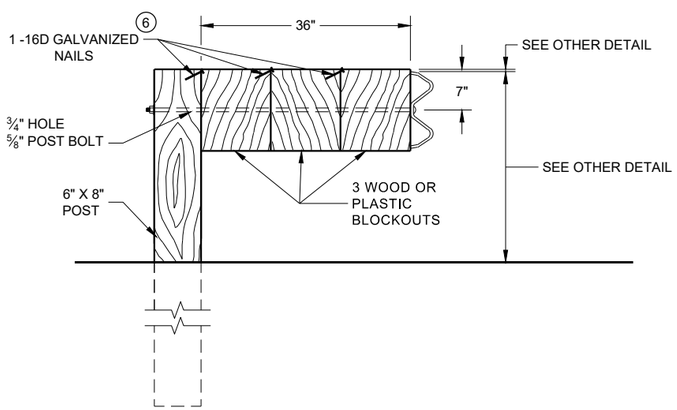

DETAIL FOR 36" BLOCKOUT DEPTH

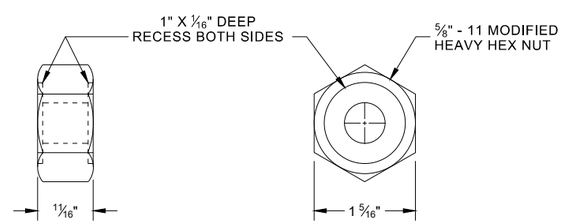

POST BOLT, SPLICE BOLT AND RECESS NUT

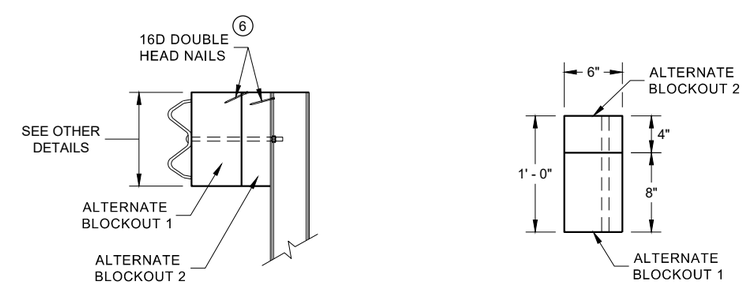

SIDE VIEW

PLAN VIEW

ALTERNATE WOOD BLOCKOUT DETAIL

NOTES: UNDER SPECIAL CIRCUMSTANCES, SUCH AS AVOIDING OBSTACLES THAT ARE NOT RELOCATED, IT IS ACCEPTABLE TO INSTALL ADDITIONAL BLOCKOUTS TO OBTAIN UP TO 36" DEPTH FOR ONE OR TWO POSTS IN A SECTION OF GUARDRAIL.

DO NOT USE 16" OR 36" BLOCKOUTS IF IT CAUSES THE POST TO BE DRIVEN BEYOND SHOULDER HINGE POINT OR CAUSES A FIXED OBJECT TO BE WITHIN THE DEFLECTION DISTANCE OF THE BARRIER.

(6) WHEN USING STEEL POST AD WOOD BLOCKOUTS, INSTALL FOUR 16D GALVANIZED NAILS. INSTALL NAILS AT THE BACK CORNERS OF THE BLOCK AND BEND THE NAILS OVER THE FLANGE OF THE STEEL POST.

MIDWEST GUARDRAIL SYSTEM (MGS) GUARDRAIL

STATE OF WISCONSIN
DEPARTMENT OF TRANSPORTA

6

SDD 14B42 - 07c

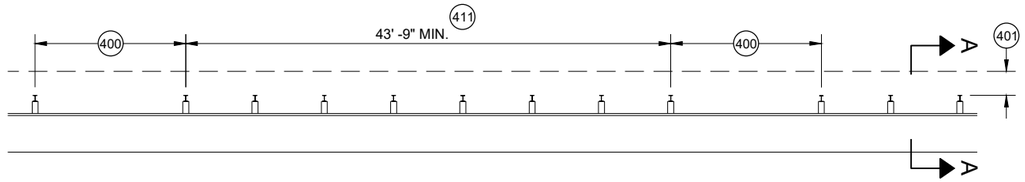

MISSING POST IN MGS GUARDRAIL

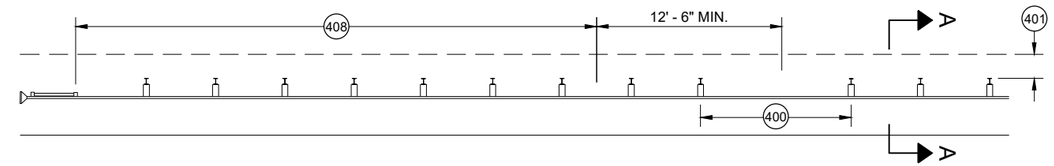

MISSING POST IN MGS GUARDRAIL NEAR EAT

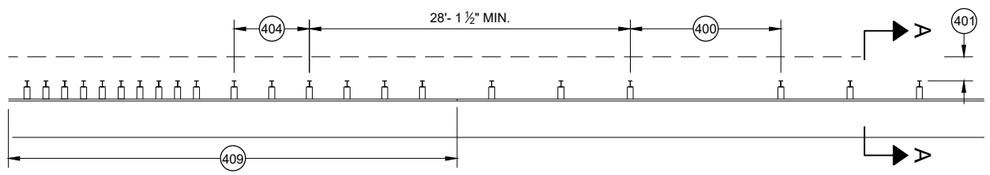

MISSING POST IN MGS GUARDRAIL NEAR AN APPROACH TRANSITION

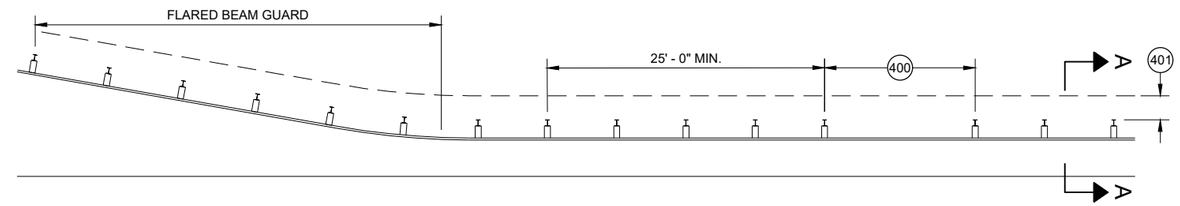

MISSING POST IN MGS GUARDRAIL NEAR FLARED BEAM GUARD

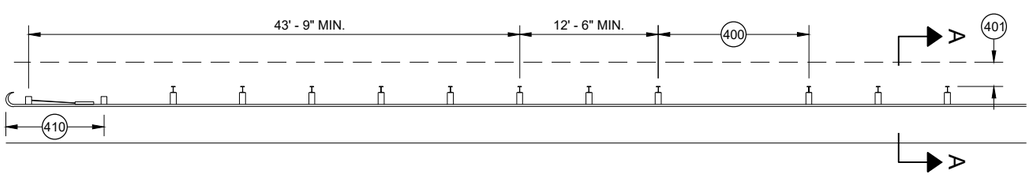

MISSING POST IN MGS GUARDRAIL NEAR A TYPE 2 END TERMINAL

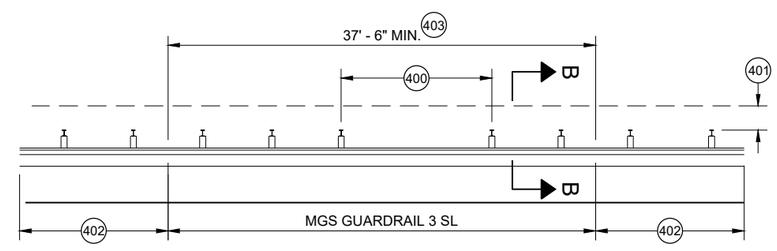

MISSING POST IN SHORT SPAN MGS GUARDRAIL NEAR CURB (SL) 407

400 MAX SPAN 12' - 6"
401 2' MIN.
402 MGS GUARDRAIL 3
403 NESTING BEAM GUARD
404 ASYMMETRIC TRANSITION
405 SOIL WELL DRAINED AND COMPACTED
406 SEE OTHER DRAWINGS IN THIS SDD
407 SEE OTHER DRAWINGS FOR MIN. SPACING BETWEEN SPANS
408 SEE SDD 14B44
409 SEE SDD 14B45
410 SEE SDD 14B47
411 MINIMUM DISTANCE BETWEEN MISSING POST SPANS.

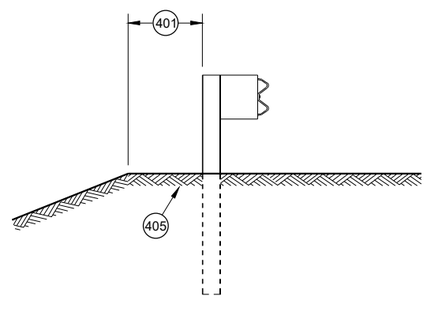

SECTION A - A 406

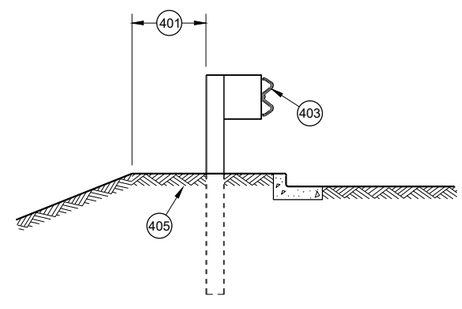

SECTION B - B 406

MIDWEST GUARDRAIL SYSTEM (MGS) GUARDRAIL

STATE OF WISCONSIN
DEPARTMENT OF TRANSPORTATION

APPROVED
May 2021 — DATE
/S/ Rodney Taylor — ROADWAY STANDARDS DEVE UNIT SUPERVISOR
FHWA

6

SDD 14B42 - 07d

GENERAL NOTES

POSTS 1 THROUGH 3 ARE CRT POSTS.
ALL OTHER POSTS SHALL BE WOOD OR STEEL.

SEE SDD 14 B 42 FOR MORE DETAILS.

(A) FLARE FOR MGS EAT SHOWN. IF INSTALLING MGS NO FLARE NEEDED.

(B) VALUES SHOWN ON DRAWING REPRESENT THE MAXIMUM LENGTH. SHORTER DIMENSIONS ARE POSSIBLE. SEE OTHER SECTION OF PLAN FOR MORE INFORMATION.

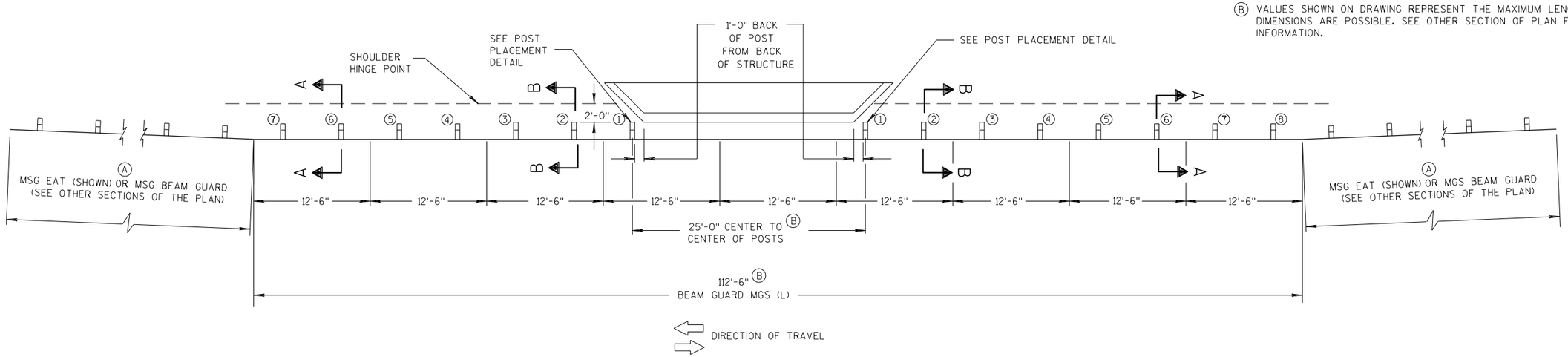

PLAN VIEW

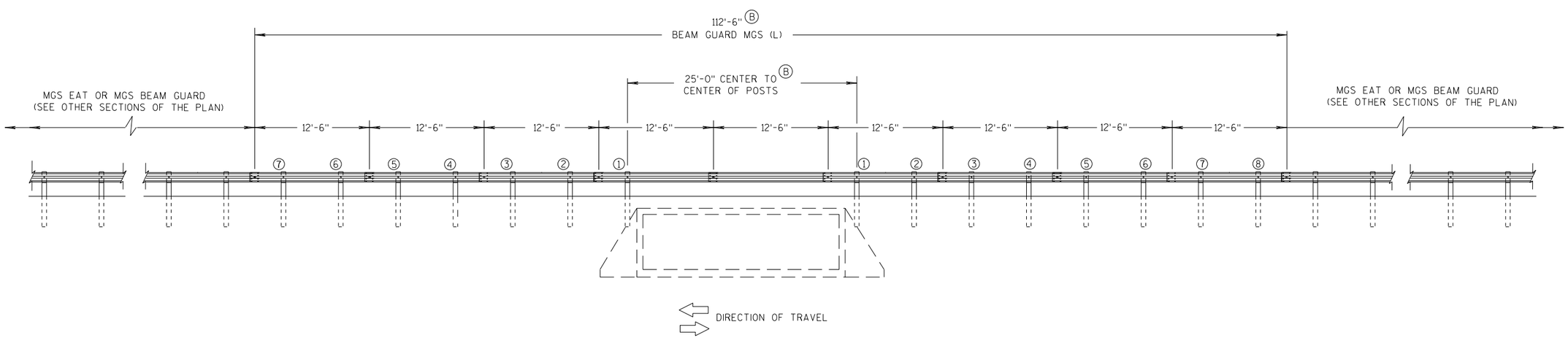

ELEVATION VIEW

MIDWEST GUARDRAIL SYSTEM LONG SPAN MGS (L) TWO-WAY TRAFFIC

MIDWEST GUARDRAIL SYSTEM LONG SPAN MGS (L)

STATE OF WISCONSIN
DEPARTMENT OF TRANSPORTATION

6
S.D.D. 14 B 43-4a

GENERAL NOTES

POSTS 1 THROUGH 3 ARE CRT POSTS.
ALL OTHER POSTS SHALL BE WOOD OR STEEL.

SEE SDD 14 B 42 FOR MORE DETAILS.

(A) FLARE FOR MGS EAT SHOWN. IF INSTALLING MGS NO FLARE NEEDED.

(B) VALUES SHOWN ON DRAWING REPRESENT THE MAXIMUM LENGTH. SHORTER DIMENSIONS ARE POSSIBLE. SEE OTHER SECTION OF PLAN FOR MORE INFORMATION.

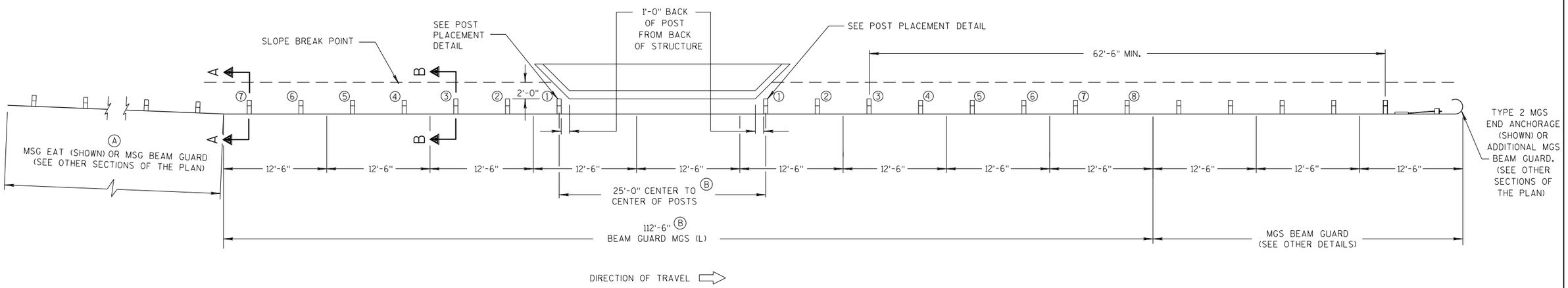

PLAN VIEW

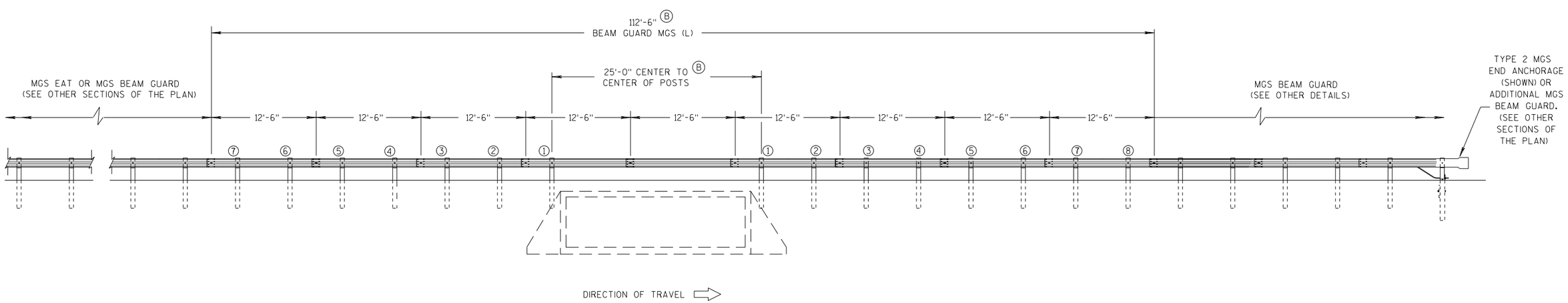

ELEVATION VIEW

MIDWEST GUARDRAIL SYSTEM LONG SPAN MGS (L) ONE-WAY TRAFFIC

MIDWEST GUARDRAIL SYSTEM LONG SPAN MGS (L)

STATE OF WISCONSIN
DEPARTMENT OF TRANSPORTATION

6

S.D.D. 14 B 43-4b

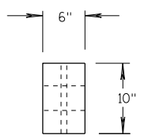

PLAN VIEW

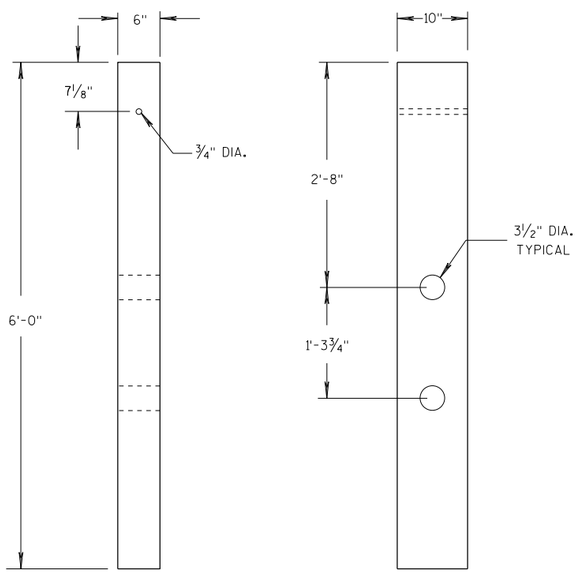

FRONT VIEW

SIDE VIEW

CRT WOOD POST

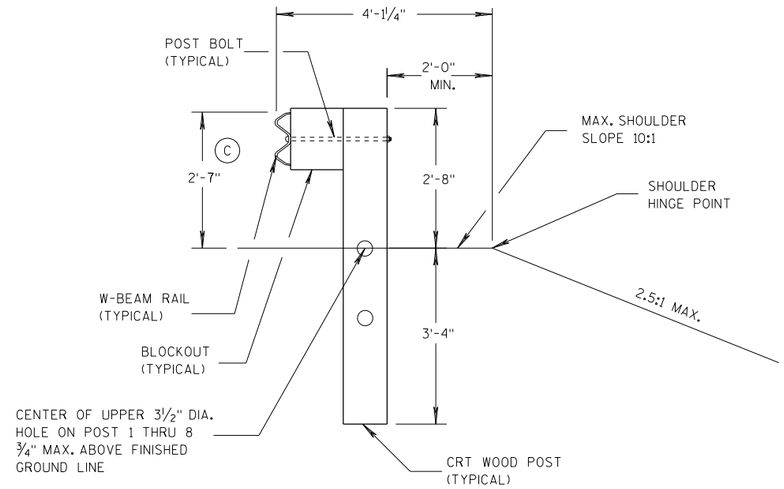

SECTION B-B

POSTS NO. 1-3

SEE OTHER DETAILS

GENERAL NOTES

(C) TOLERANCE FOR TOP OF W-BEAM RAIL IS ± 1".

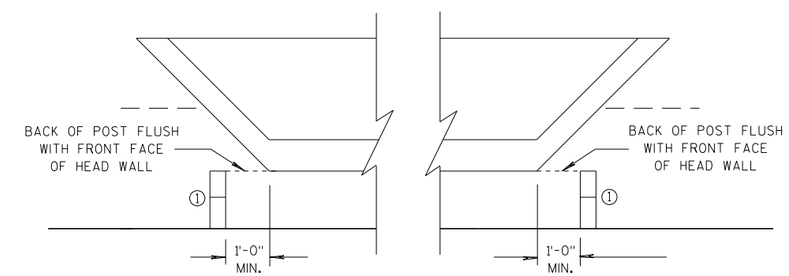

POST PLACEMENT DETAIL

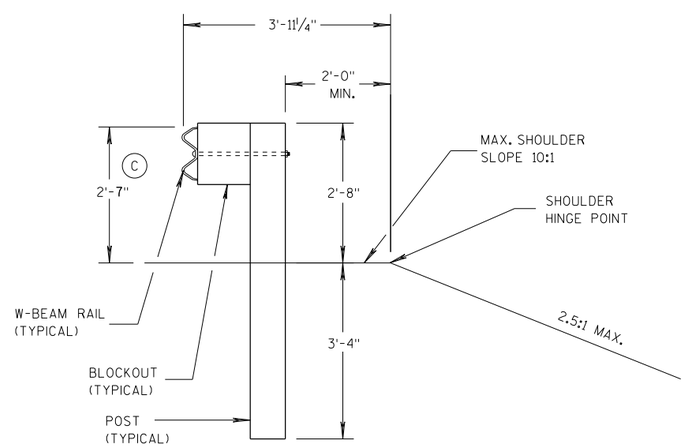

SECTION A-A

POSTS NO. 4-8

SEE OTHER DETAILS

MIDWEST GUARDRAIL SYSTEM
LONG SPAN MGS (L)

STATE OF WISCONSIN
DEPARTMENT OF TRANSPORTATION

APPROVED
07/2018
DATE
FHWA

/S/ Rodney Taylor
ROADWAY STANDARDS DEVELOPMENT ENGINEER

NT

6

S.D.D. 14 B 43-4c

6

S.D.D. 14 B 43-4c

GENERAL NOTES

(A) THE SLOPE IN THE AREA BOUNDED BY THE GRADELINE, THE HINGE POINT LINE (HPL) AND THE CLEAR ZONE LIMITS (CZL) SHALL BE 4:1 OR FLATTER.

(B) AFTER FINAL ASSEMBLY, RECHECK CABLE TO BE SURE IT IS TAUT AND HAS NOT RELAXED

(C) DIFFERENT MANUFACTURERS REQUIRE DIFFERENT PERFORATED W - BEAM RAIL END PANELS. SEE MANUFACTURER'S INFORMATION.

(D) ATTACH ALUMINUM SHEET TO E.A.T. HEAD USING 4 STAINLESS STEEL SELF - TAPPING SCREWS. ONE SCREW PER CORNER.

(E) HARDWARE MAY VARY BETWEEN MANUFACTURER. SEE MANUFACTURER'S DRAWING FOR INFORMATION.

DIMENSIONS MAY VARY, MANUFACTURER'S INFORMATION.

SEE SDD 14B42 FOR MORE INFORMATION.

* DO NOT ATTACH BLOCKOUTS TO POST 1 AND 2.

DO NOT INSTALL REFLECTORS ON THE FIRST 50 FEET OF THE APPROACH END OF THE ENERGY ABSORBING TERMINAL.

SEE MANUFACTURER'S DRAWING FOR SPLICE LOCATION, HARDWARE DIMENSIONS AND INSTALLATION INSTRUCTIONS.

THE CENTER OF THE UPPER 3 ½" DIAMETER HOLE ON POST NUMBER 3 THROUGH POST 9 IS TO BE FLUSH WITH THE GROUND LINE UP TO A MAXIMUM OF 2" ABOVE GROUND LINE. WOOD BLOCKS ON POSTS NUMBERED 3 THROUGH 9 MAY BE ADJUSTED UP TO 3" ABOVE THE TOP OF POST.

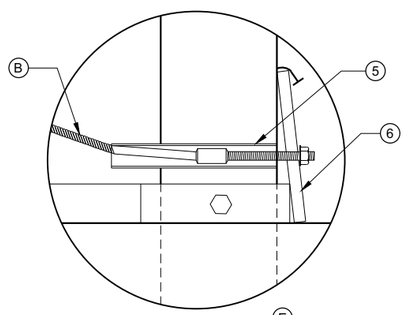

DETAIL "A" (E)

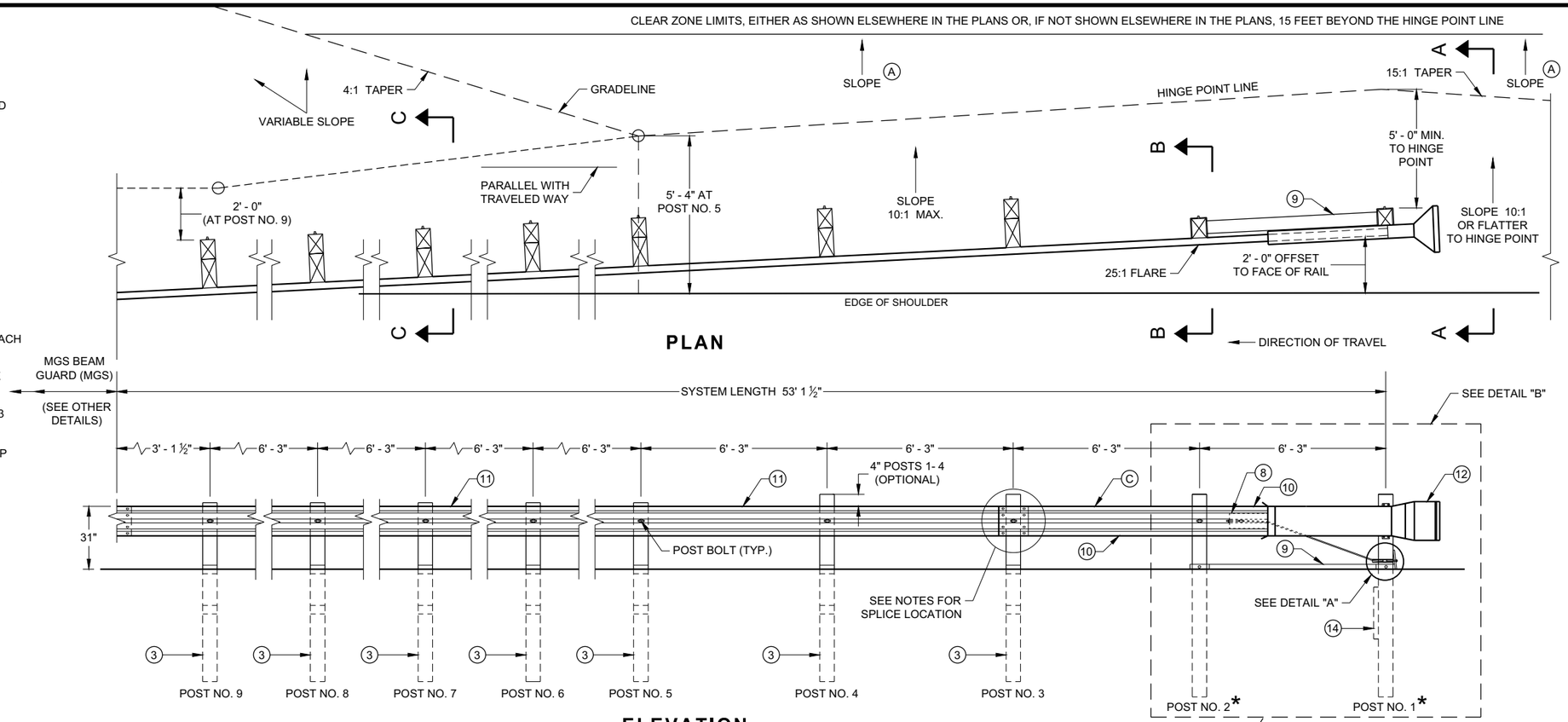

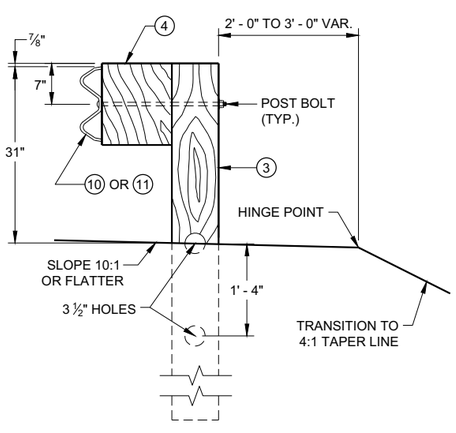

SECTION C - C
TYPICAL AT POST NOS. 3 - 9

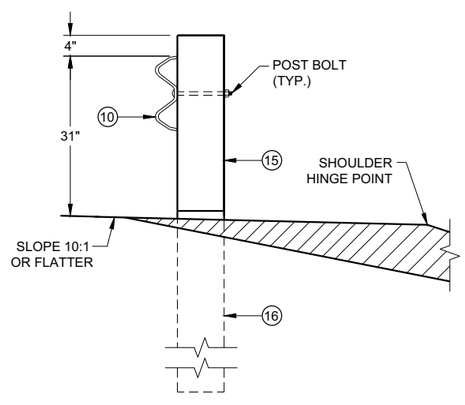

SECTION B - B
TYPICAL AT POST NO. 2*

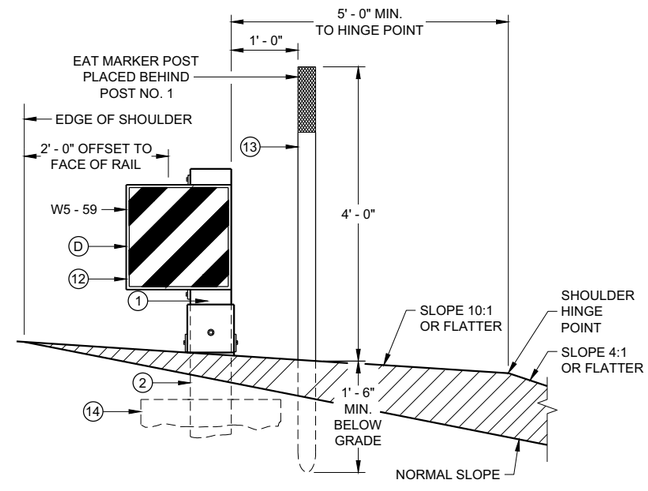

SECTION A - A
TYPICAL AT POST NO. 1*

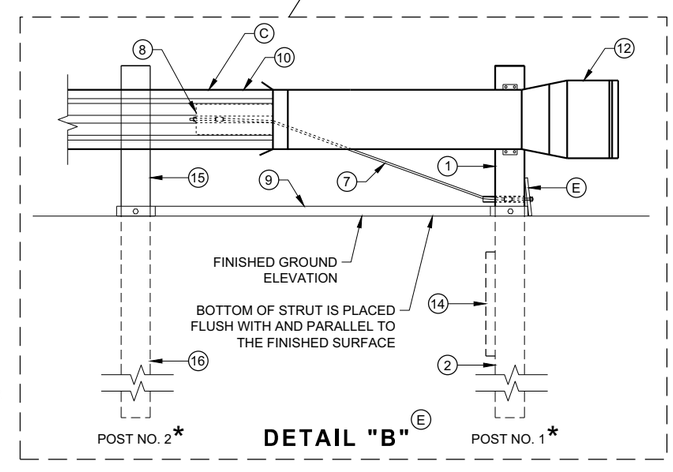

DETAIL "B" (E)

MIDWEST GUARDRAIL SYSTEM ENERGY ABSORBING TERMINAL (MGS)

STATE OF WISCONSIN
DEPARTMENT OF TRANSPORTATION

6

SDD 14B44 - 04a

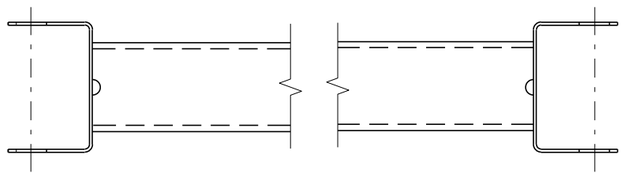

GENERIC GROUND STRUT 9 E

BILL OF MATERIALS

PART NO.	DESCRIPTION MATERIALS PROVIDED BY MGS EAT MANUFACTURER. SEE MANUGACTURER'S DETAILS FOR MORE INFORMATION.
1	UPPER POST NO. 1 6" X 6" TUBE
2	LOWER POST NO. 1
3	WOOD CRT
4	WOOD BLOCKOUT
5	PIPE SLEEVE
6	BEARING PLATE
7	BCT CABLE ASSEMBLY
8	ANCHOR CABLE BOX
9	GROUND STRUT
10	PERFORATED W-BEAM RAIL END PANEL, 12'-6" LONG.
11	STANDARD W-BEAM RAIL. MULTIPLE SECTIONS REQUIRED. SECTIONS VARY IN LENGTH.
12	IMPACT HEAD
13	EAT MARKER POST - YELLOW (SEE APPROVED PRODUCTS LIST)
14	SOIL PLATE
15	UPPER POST NO. 2
16	LOWER POST NO. 2

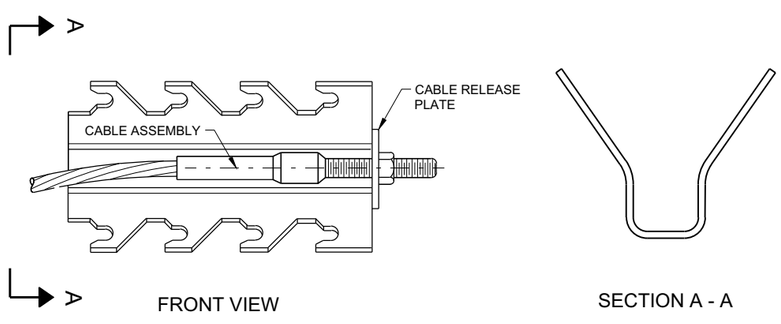

GENERIC ANCHOR CABLE BOX 9 E

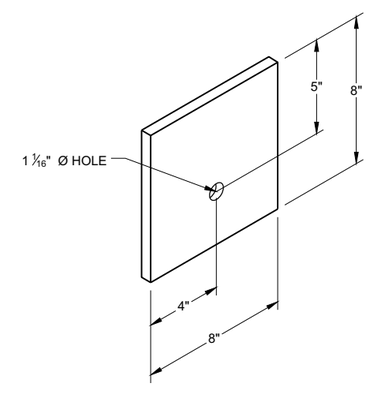

BEARING PLATE 6 E

6

6

SDD 14B44 - 04b

SDD 14B44 - 04b

MIDWEST GUARDRAIL SYSTEM ENERGY ABSORBING TERMINAL (MGS)

STATE OF WISCONSIN
DEPARTMENT OF TRANSPORTAT

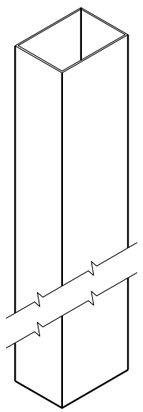

UPPER POST NO. 1 (1) (E)

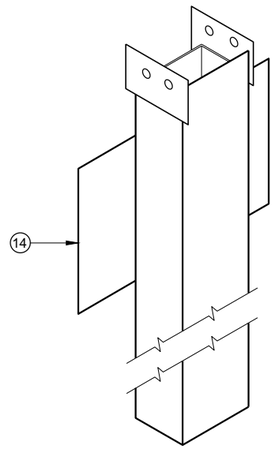

LOWER POST NO. 1 (2) (E)

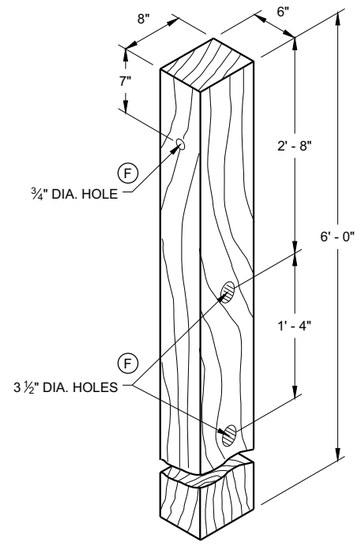

WOOD CRT POST (3) (E)

POSTS NUMBER 3-9

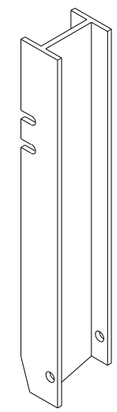

UPPER POST NO. 2 (15) (E)

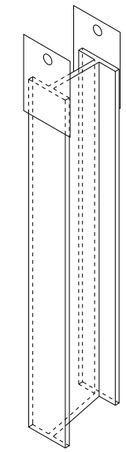

LOWER POST NO. 2 (16) (E)

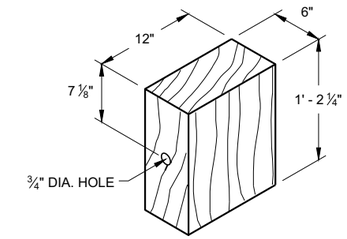

WOOD BLOCKOUT (4)

REQ'D. AT ALL POSTS EXCEPT POST NO'S 1 & 2

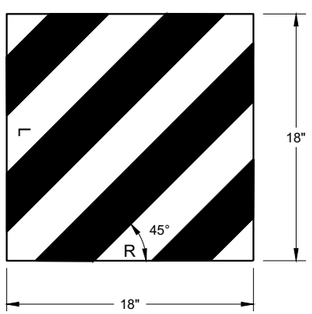

W5 - 59

REFLECTIVE SHEETING DETAIL (E)

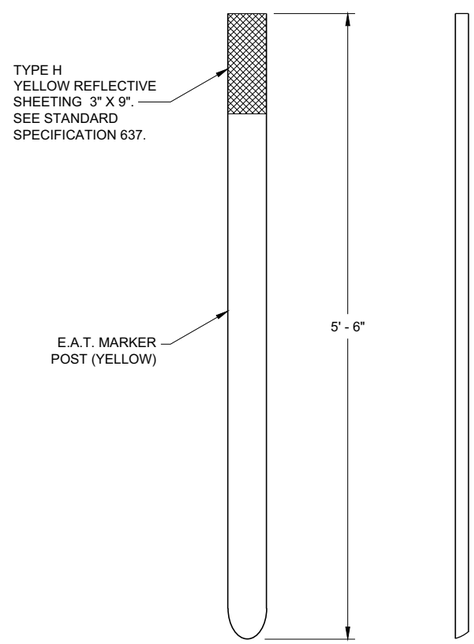

FRONT VIEW SIDE VIEW

E.A.T. MARKER POST (13)

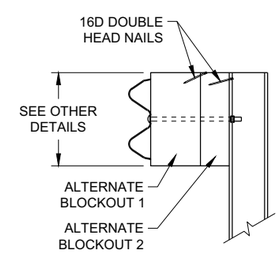

SIDE VIEW

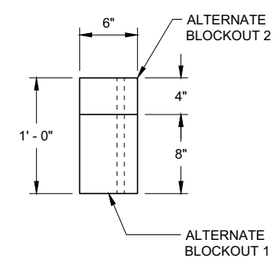

TOP VIEW

ALTERNATE WOOD BLOCKOUT DETAIL

6

6

SDD 14B44 - 04c

SDD 14B44 - 04c

MIDWEST GUARDRAIL SYSTEM ENERGY ABSORBING TERMINAL (MGS)

STATE OF WISCONSIN
DEPARTMENT OF TRANSPORTATION

APPROVED

7/2018 — DATE

/S/ Rodney Taylor — ROADWAY STANDARDS DEVE UNIT SUPERVISOR

FHWA

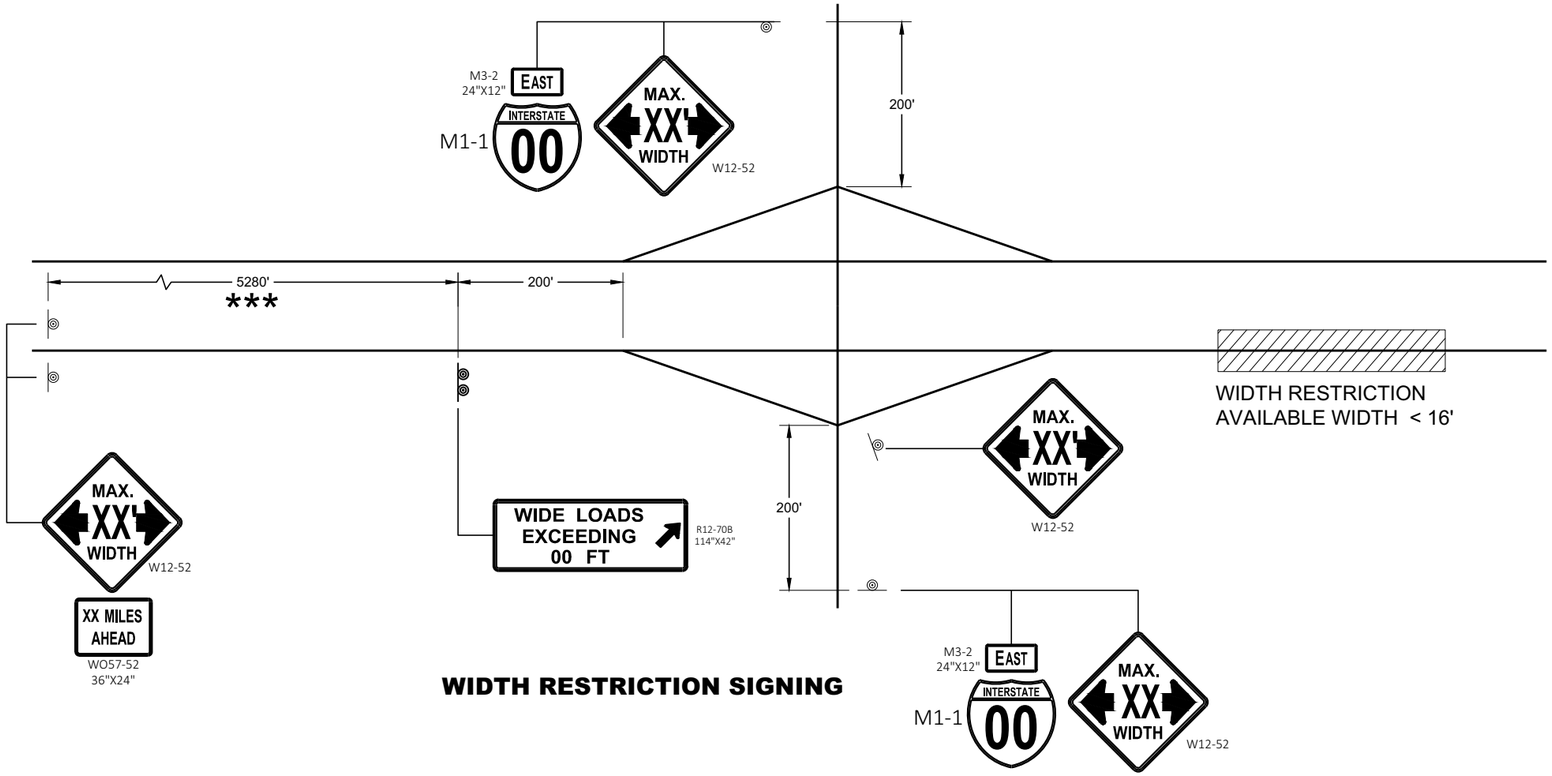

WIDTH RESTRICTION SIGNING

LEGEND

◎ SIGN ON PERMANENT SUPPORT

GENERAL NOTES

THE EXACT NUMBER, LOCATION AND SPACING OF ALL SIGNS SHALL BE ADJUSTED TO FIT FIELD CONDITIONS AS APPROVED BY THE ENGINEER.

THE SPACING BETWEEN SIGNS SHOULD BE ADJUSTED TO NOT CONFLICT WITH AND TO PROVIDE A DESIRABLE MINIMUM OF 200 FEET CLEARANCE TO EXISTING SIGNS THAT WILL REMAIN IN PLACE.

ANY SIGNS TEMPORARY OR EXISTING, WHICH CONFLICT WITH TRAFFIC CONTROL " IN USE" SHALL BE REMOVED OR COVERED AS NEEDED AND AS APPROVED BY THE ENGINEER.

ALL SIGNS ARE 48" X 48" UNLESS OTHERWISE NOTED.

"WO" SIGNS ARE THE SAME AS "W" SIGNS EXCEPT THE BACKGROUND IS ORANGE.

WIDTH ON SIGN TO BE APPROXIMATELY ONE FOOT LESS THAN AVAILABLE WIDTH.

* PLACE 500 FEET AFTER THE W20 - 1A AND 500 FEET BEFORE ADDITIONAL SIGNS FOR ROADWAYS WITH A PRE - CONSTRUCTION SPEED LIMIT OF 45 MPH OR MORE. FOR 35-40 MPH, USE 350 FOOT TYPICAL SPACING. FOR 25-30 MPH, USE 200 FOOT TYPICAL SPACING.

** SIGN SHALL BE VISIBLE FROM ROADWAY.

*** ADDITIONAL SIGNS NEEDED IF THERE IS AN ON RAMP BETWEEN SIGNS.

WIDTH ON SIGN TO BE APPROX. 1 - FOOT LESS THAN AVAILABLE WIDTH

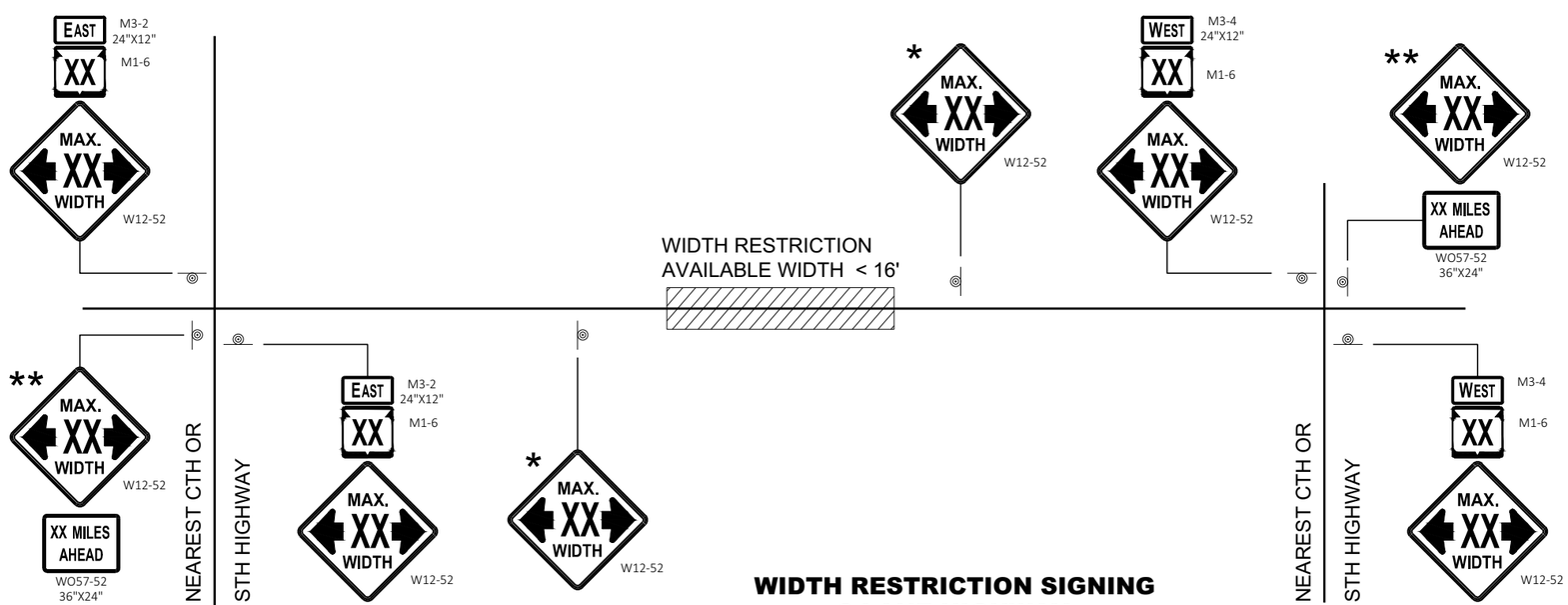

WIDTH RESTRICTION SIGNING
2 LANE HIGHWAY

ADVANCED WIDTH RESTRICTION SIGNING

STATE OF WISCONSIN
DEPARTMENT OF TRANSPORTATION

APPROVED
February 2020 — DATE
/S/ Andrew Heidtke — WORK ZONE ENGINEER
FHWA

6

SDD 15C02 - 08f

6

SDD 15C02 - 08f

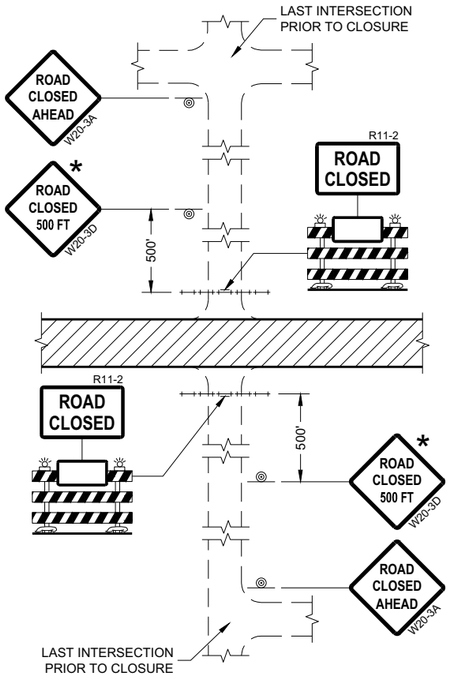

DETAIL 1
(NO ACCESS TO PROJECT)

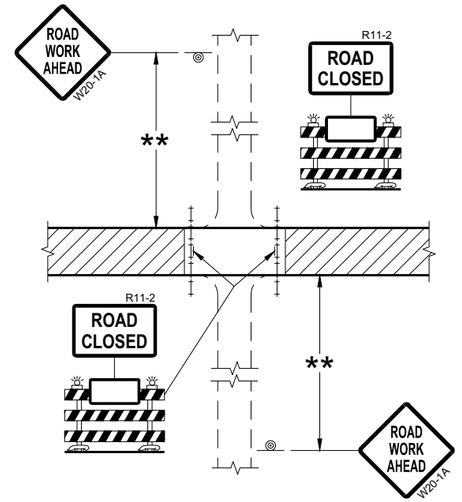

DETAIL 2
(PUBLIC CROSS-TRAFFIC MAINTAINED.
NO ACCESS TO PROJECT)

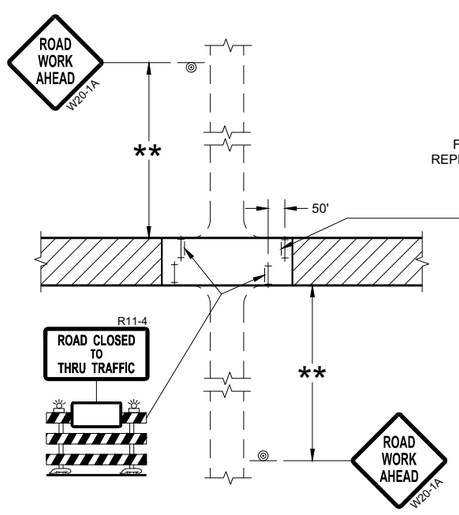

DETAIL 3
(PUBLIC CROSS-TRAFFIC MAINTAINED.
CONTRACTOR, LOCAL BUSINESS AND
RESIDENT ACCESS TO PROJECT)

FOR BRIDGE OR CULVERT
REPLACEMENT, USE ADDITIONAL
SIGN ON BARRICADE

BRIDGE OUT
XX MILES AHEAD
R11-3C

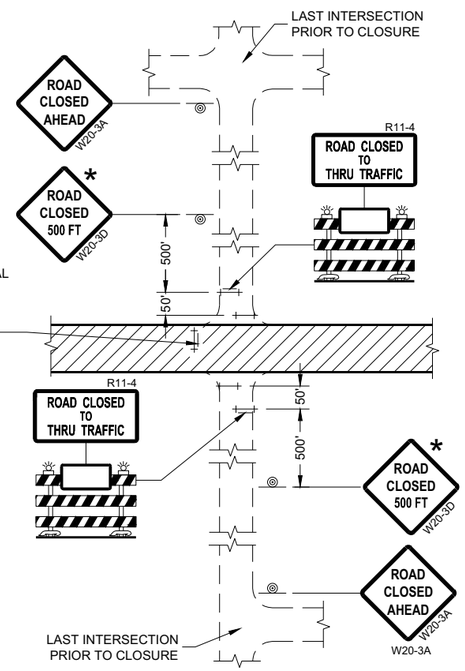

DETAIL 4
(CONTRACTOR, LOCAL BUSINESS AND
RESIDENT ACCESS TO PROJECT)

GENERAL NOTES

THE EXACT NUMBER, LOCATION, AND SPACING OF ALL SIGNS AND BARRICADES SHALL BE ADJUSTED TO FIT FIELD CONDITIONS AS APPROVED BY THE ENGINEER.

ANY SIGNS TEMPORARY OR EXISTING, WHICH CONFLICT WITH TRAFFIC CONTROL "IN USE" SHALL BE REMOVED OR COVERED AS NEEDED AND AS APPROVED BY THE ENGINEER.

THE SPACING BETWEEN TRAFFIC CONTROL SIGNS SHOULD BE ADJUSTED TO NOT CONFLICT WITH AND SHOULD PROVIDE A DESIRABLE MINIMUM OF 200 FEET CLEARANCE (500 FEET DESIRABLE) TO EXISTING SIGNS THAT WILL REMAIN IN PLACE.

IF A "STOP" SIGN MUST BE REMOVED FOR A WORK OPERATION, A TEMPORARY "STOP" SIGN SHALL BE PLACED PRIOR TO THE SIGN REMOVAL, OR A FLAGGER SHALL BE PROVIDED UNTIL THE SIGN IS REESTABLISHED.

BARRICADES THAT MUST BE MOVED FOR A WORK OPERATION SHALL BE IMMEDIATELY REESTABLISHED UPON COMPLETION OF THE OPERATION OR FOR CONTINUING OPERATIONS, AT THE END OF EACH WORKING DAY.

SIGNS THAT WILL BE IN PLACE LESS THAN SEVEN CONTINUOUS DAYS AND NIGHTS MAY BE MOUNTED ON PORTABLE SUPPORTS.

ALL TYPE III BARRICADES SHALL HAVE RAILS REFLECTORIZED ON BOTH FACES. STRIPES SHALL BE PROPERLY SLOPED DOWN TOWARD THE TRAFFIC SIDE OR AS SHOWN IN THE ROAD CLOSURE BARRICADE DETAIL "D" FOR FULL ROAD CLOSURES.

TYPE "A" LOW-INTENSITY FLASHING WARNING LIGHTS SHALL BE VISIBLE ON BOTH SIDES OF THE BARRICADE.

THE R11-2, R11-3, AND R11-4 SIGNS PLACED ON BARRICADES SHALL COVER NO MORE THAN THE TOP RAIL. THE SIGNS SHALL NOT COVER ANY PORTION OF THE MIDDLE OR BOTTOM RAILS.

ALL SIGNS SHALL BE 48" X 48" UNLESS OTHERWISE NOTED BELOW:
R11-2 SHALL BE 48" X 30".
R11-4 AND R11-3 SHALL BE 60" X 30".

* OMIT THE "ROAD CLOSED 500 FT." SIGN IF THE LAST INTERSECTION IS 500 FEET OR LESS FROM THE WORK ZONE.

** 500' MAX. OR AT LAST INTERSECTION, WHICHEVER IS CLOSEST.

LEGEND

- SIGN ON PERMANENT SUPPORT
- TYPE III BARRICADE
- TYPE III BARRICADE WITH ATTACHED SIGN
- TYPE "A" WARNING LIGHT (FLASHING)
- WORK AREA

BARRICADES AND SIGNS FOR SIDEROAD CLOSURES

STATE OF WISCONSIN
DEPARTMENT OF TRANSPORTATION

APPROVED
July 2018 — DATE
/S/ Andrew Heidtke — WORK ZONE ENGINEE
FHWA

6
SDD 15C03 - 05

GENERAL NOTES

THE EXACT NUMBER, LOCATION, AND SPACING OF ALL SIGNS AND DEVICES SHALL BE ADJUSTED TO FIT FIELD CONDITIONS.

THE SPACING BETWEEN TRAFFIC CONTROL SIGNS SHOULD BE ADJUSTED TO NOT CONFLICT WITH AND SHOULD PROVIDE A MINIMUM OF 200 FEET (500 FEET DESIRABLE) CLEARANCE TO EXISTING SIGNS THAT WILL REMAIN IN PLACE.

ALL SIGNS ARE 48" X 48" UNLESS OTHERWISE NOTED.

SIGNS THAT WILL BE IN PLACE LESS THAN SEVEN CONTINUOUS DAYS AND NIGHTS MAY BE MOUNTED ON PORTABLE SUPPORTS.

IF A "STOP" SIGN MUST BE REMOVED FOR A WORK OPERATION, A TEMPORARY "STOP" SIGN SHALL BE PLACED PRIOR TO THE SIGN REMOVAL, OR A FLAGGER SHALL BE PROVIDED UNTIL THE SIGN IS REESTABLISHED.

* OMIT G20-1 SIGNS IF LENGTH OF WORK AREA IS 2 MILES OR LESS

** PLACE AN ADDITIONAL W20-1A "ROAD WORK AHEAD" SIGN IF WORK AREA WITHIN THE PROJECT IS SEPARATED BY MORE THAN 2 MILES FROM PREVIOUS WORK AREA.

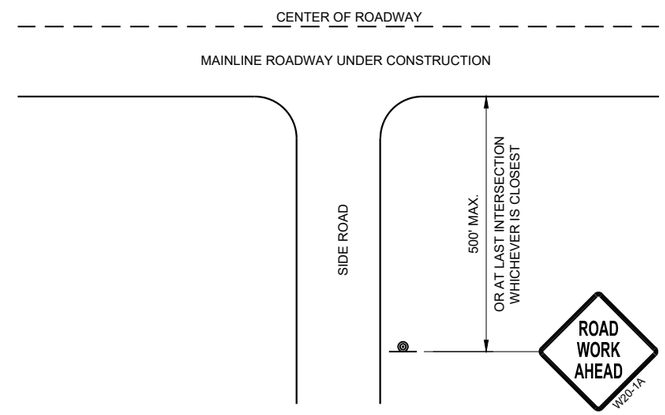

TYPICAL SIDE ROAD APPROACH WARNING SIGN DETAIL

LEGEND

- SIGN ON PERMANENT SUPPORT
- DIRECTION OF TRAFFIC
- WORK AREA

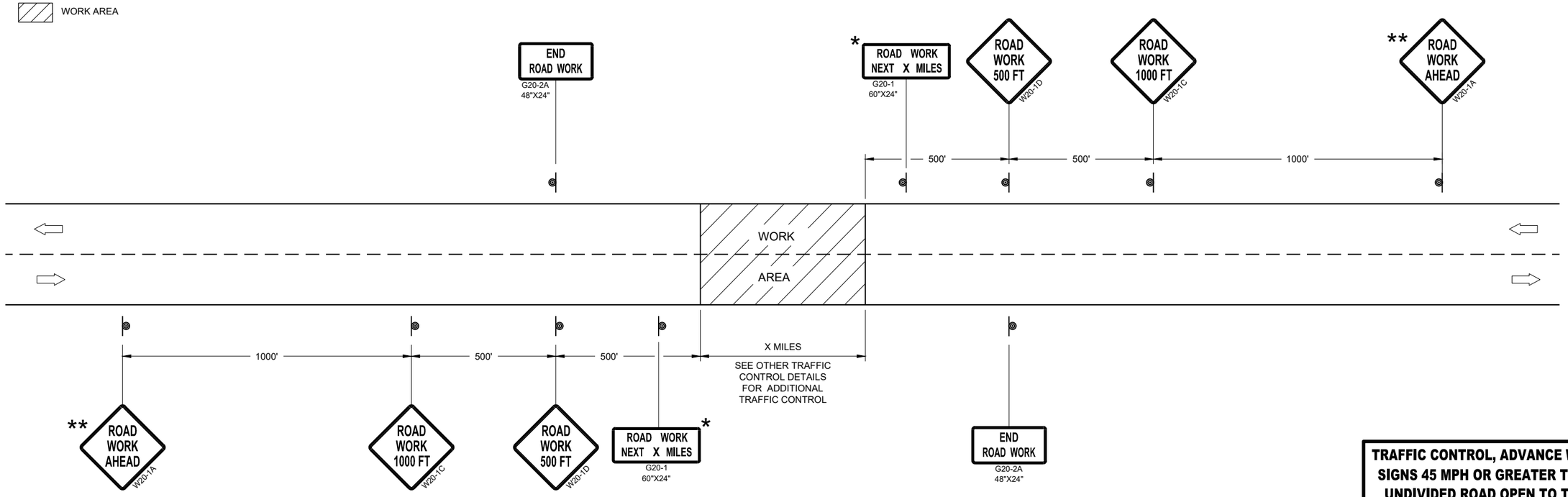

TRAFFIC CONTROL, ADVANCE WARNING SIGNS 45MPH OR GREATER

TRAFFIC CONTROL, ADVANCE WARNING SIGNS 45 MPH OR GREATER TWO-WAY UNDIVIDED ROAD OPEN TO TRAFFIC

STATE OF WISCONSIN
DEPARTMENT OF TRANSPORTATION

APPROVED
July 2018 — DATE
/S/ Andrew Heidtke — WORK ZONE ENGINEE
FHWA

6
SDD 15C04 - 05

GENERAL NOTES

THE EXACT NUMBER, LOCATION, AND SPACING OF ALL SIGNS AND DEVICES SHALL BE ADJUSTED TO FIT FIELD CONDITIONS.

THE SPACING BETWEEN TRAFFIC CONTROL SIGNS SHOULD BE ADJUSTED TO NOT CONFLICT WITH AND SHOULD PROVIDE A MINIMUM OF 200 FEET (500 FEET DESIRABLE) CLEARANCE TO EXISTING SIGNS THAT WILL REMAIN IN PLACE.

ALL SIGNS ARE 48" X 48" UNLESS OTHERWISE NOTED. IF NECESSARY DUE TO SPACE CONSTRAINTS, 36"X36" SIGNS MAY BE USED INSTEAD OF 48" X 48" SIGNS.

SIGNS THAT WILL BE IN PLACE LESS THAN SEVEN CONTINUOUS DAYS AND NIGHTS MAY BE MOUNTED ON PORTABLE SUPPORTS.

IF A "STOP" SIGN MUST BE REMOVED FOR A WORK OPERATION, A TEMPORARY "STOP" SIGN SHALL BE PLACED PRIOR TO THE SIGN REMOVAL, OR A FLAGGER SHALL BE PROVIDED UNTIL THE SIGN IS REESTABLISHED.

* THE THIRD W20-1 SIGN IS REQUIRED ONLY IF THERE IS AN INTERSECTION BETWEEN THE "ROAD WORK 500 FEET" SIGN AND THE WORK ZONE. ADJUST THE PLACEMENT OF THIS SIGN BASED ON INTERSECTION LOCATION AND OTHER FIELD CONDITIONS.

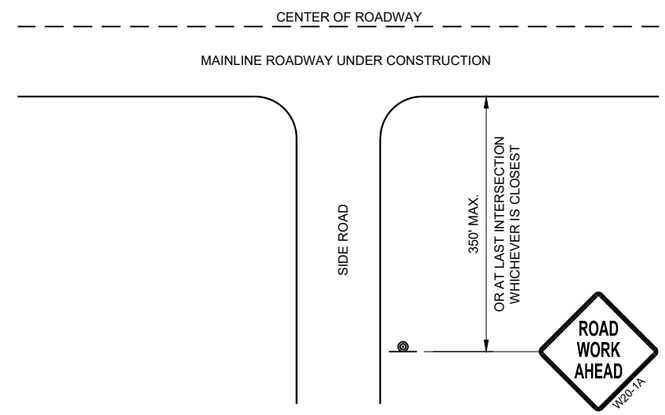

TYPICAL SIDE ROAD APPROACH WARNING SIGN DETAIL

LEGEND

- SIGN ON PERMANENT SUPPORT
- DIRECTION OF TRAFFIC
- WORK AREA

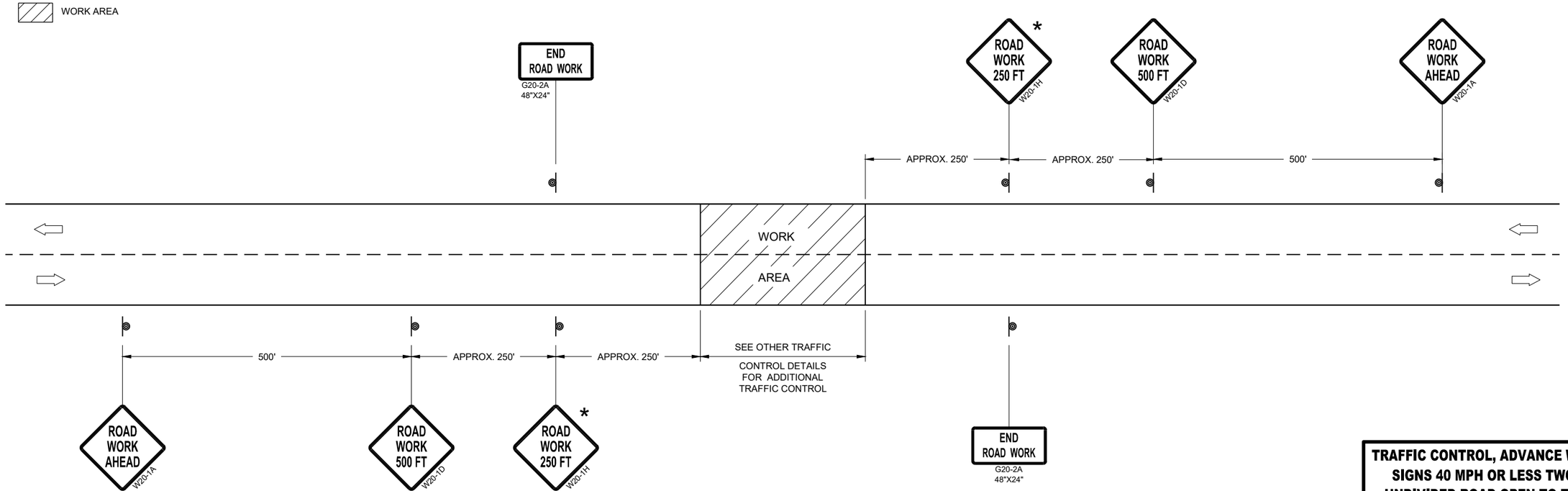

TRAFFIC CONTROL, ADVANCE WARNING SIGNS 40MPH OR LESS

TRAFFIC CONTROL, ADVANCE WARNING SIGNS 40 MPH OR LESS TWO-WAY UNDIVIDED ROAD OPEN TO TRAFFIC

STATE OF WISCONSIN
DEPARTMENT OF TRANSPORTATION

APPROVED
July 2018 — DATE
/S/ Andrew Heidtke — WORK ZONE ENGINEE
FHWA

6
SDD 15C05 - 05

GENERAL NOTES

DETAILS OF CONSTRUCTION NOT SHOWN ON THIS DRAWING SHALL CONFORM TO STANDARD SPECIFICATIONS AND SPECIAL PROVISIONS.

1. LOCATE THE NO PASSING ZONE W14-3 SIGN WITHIN 50 FEET OF THE "T" MARKING
2. MEASURE FROM EDGE OF MARKING TO JOINT LINE. THIS DOES NOT INCLUDE SPACE NEEDED FOR GROOVING OPERATIONS.

LEGEND

"T" MARKING

SIGN ON PERMANENT SUPPORT

DIRECTION OF TRAFFIC

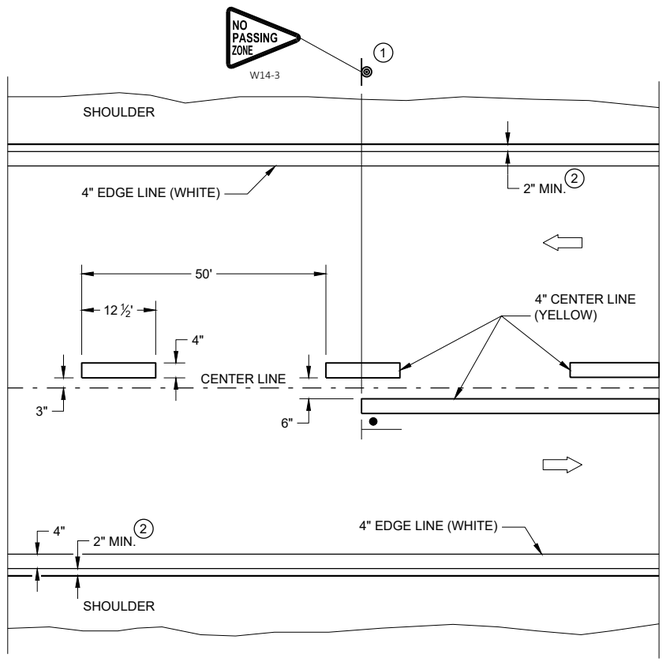

TWO WAY TRAFFIC

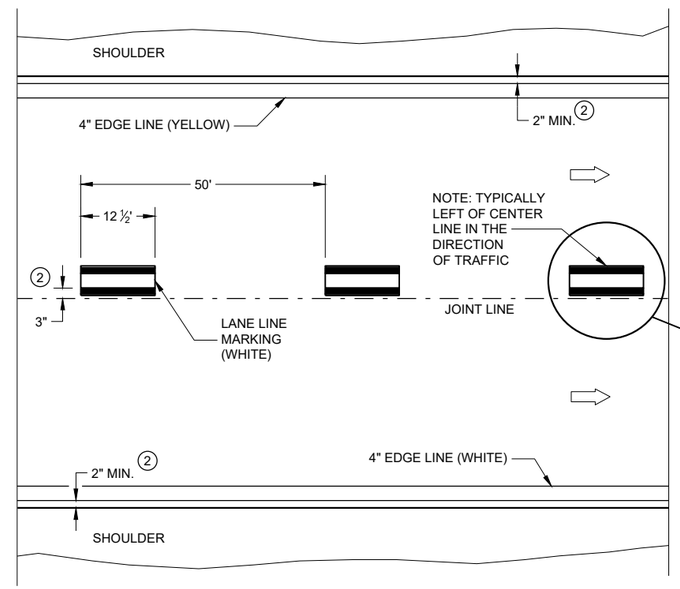

ONE WAY TRAFFIC

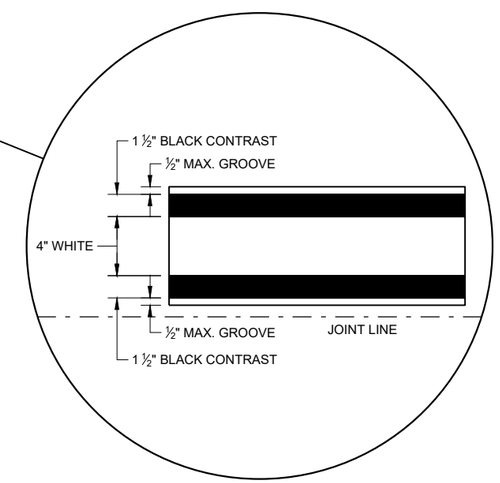

PERMANENT PAVEMENT MARKING

6

6

SDD 15C08 - 21a

SDD 15C08 - 21a

PERMANENT LONGITUDINAL PAVEMENT MARKINGS

STATE OF WISCONSIN
DEPARTMENT OF TRANSPORTATION

APPROVED
May 2022 — DATE
/S/ Jeannie Silver — STATEWIDE SIGNING AND M ENGINEER

FHWA

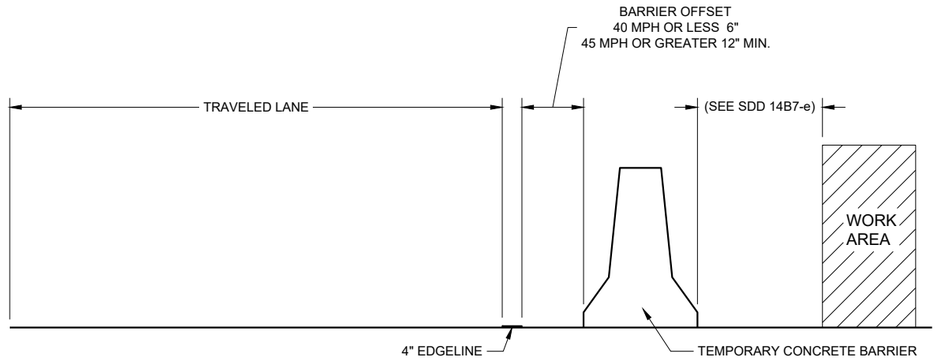

TEMPORARY BARRIER OFFSET FROM EDGELINE

GENERAL NOTES

DETAILS OF CONSTRUCTION NOT SHOWN ON THIS DRAWING SHALL CONFORM TO STANDARD SPECIFICATIONS AND SPECIAL PROVISIONS.

LEGEND

⇨ DIRECTION OF TRAFFIC

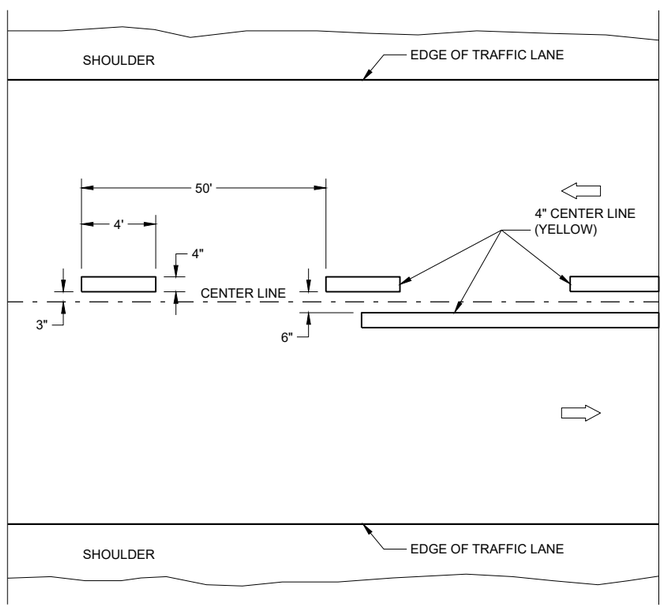

TWO WAY TRAFFIC

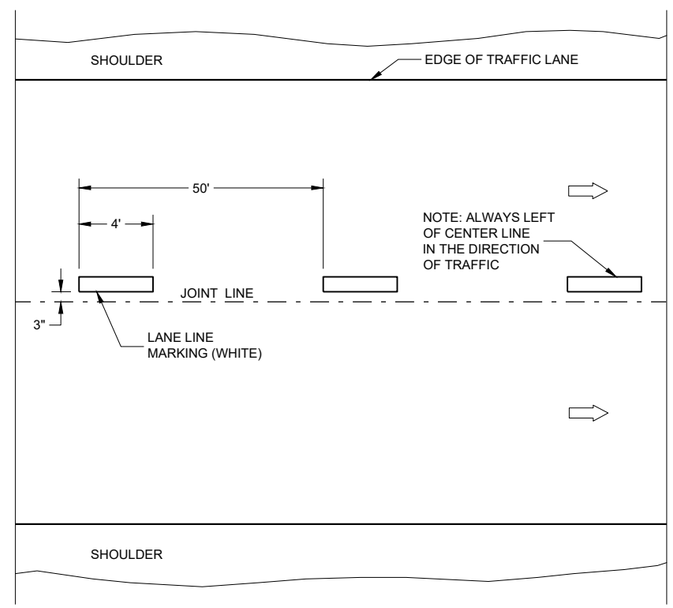

ONE WAY TRAFFIC

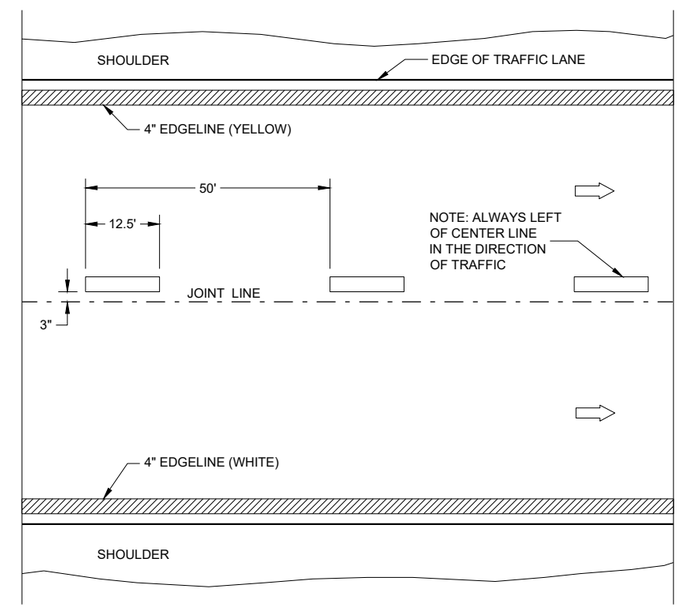

FREEWAYS AND EXPRESSWAYS

TEMPORARY PAVEMENT MARKING

6

SDD 15C08 - 21b

TEMPORARY LONGITUDINAL PAVEMENT MARKING

STATE OF WISCONSIN
DEPARTMENT OF TRANSPORTATION

APPROVED
May 2022 — DATE
/S/ Jeannie Silver — STATEWIDE SIGNING AND M ENGINEER
FHWA

6

SDD 15C08 - 21b

GENERAL NOTES

1. REFLECTIVE SHEETING SHALL FOLLOW THE REQUIREMENTS IN THE APPROVED PRODUCTS LISTING FOR SIGN SHEETING.
2. LOCATION OF WARNING LIGHTS WHEN SHOWN ON THE PLAN.

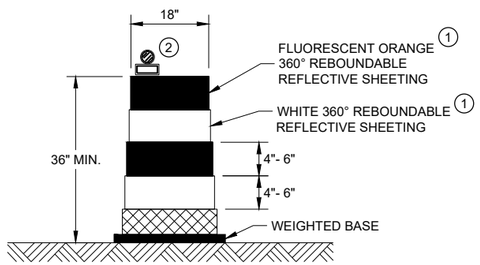

DRUM

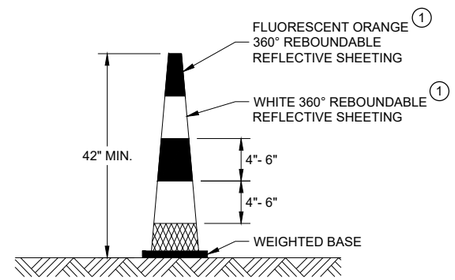

42" CONE

DO NOT USE IN TAPERS
½ SPACING OF DRUMS

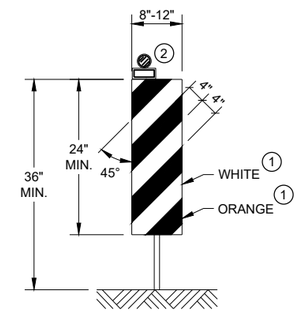

VERTICAL PANEL

THE STRIPES SHALL SLOPE DOWNWARD TO
THE TRAFFIC SIDE FOR CHANNELIZATION.

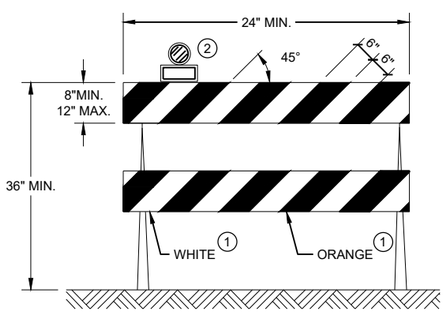

TYPE II BARRICADE

FOR RAILS LESS THAN 36" LONG, 4" WIDE STRIPES
MAY BE USED. ALL STRIPES SHALL SLOPE DOWNWARD
TO THE TRAFFIC SIDE FOR CHANNELIZATION.

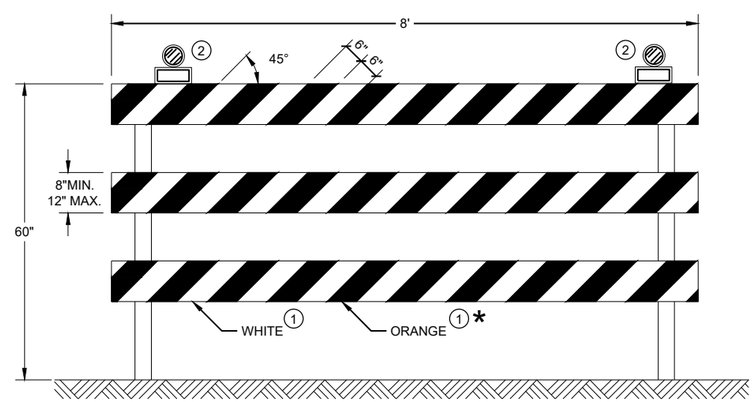

TYPE III BARRICADE

IF SIGN MOUNTED, DO NOT COVER MORE THAN 50% OF THE TOP
TWO RAILS OR 33% OF THE TOTAL AREA OF THE THREE RAILS.

* IF USED FOR A PERMANENT APPLICATION USE RED SHEETING.

CHANNELIZING DEVICES DRUMS, CONES, BARRICADES AND VERTICAL PANELS

STATE OF WISCONSIN
DEPARTMENT OF TRANSPORTATION

APPROVED
May 2021 — DATE
/S/ Andrew Heidtke — WORK ZONE ENGINEE
FHWA

6

6

SDD 15C11 - 09b

SDD 15C11 - 09b

LEGEND

SIGN ON PORTABLE OR PERMANENT SUPPORT

TEMPORARY PORTABLE RUMBLE STRIP ARRAY

DIRECTION OF TRAFFIC

WORK AREA

FLAGGER, EQUIPPED WITH STOP/SLOW PADDLE FASTENED ON SUPPORT STAFF

GENERAL NOTES

DETAILS OF TRAFFIC CONTROL DEVICES AND INSTALLATION NOT SHOWN ON THIS DRAWING SHALL CONFORM TO THE PERTINENT REQUIREMENTS OF THE STANDARD SPECIFICATIONS, THE SPECIAL PROVISIONS, AND THE MANUAL ON UNIFORM TRAFFIC CONTROL DEVICES.

ALL SIGNS ARE 48" X 48" UNLESS OTHERWISE NOTED.

"WO" SIGNS ARE THE SAME AS "W" SIGNS EXCEPT THE BACKGROUND IS ORANGE.

THE EXACT NUMBER, LOCATION AND SPACING OF ALL SIGNS, DEVICES, AND LOCATION OF ALL FLAGGERS SHALL BE ADJUSTED TO FIT FIELD CONDITIONS AS APPROVED BY THE ENGINEER.

THE FIRST ADVANCE WARNING SIGN SHOULD TYPICALLY BE LOCATED IN ADVANCE OF THE ANTICIPATED TRAFFIC BACKUP OR QUEUE.

WHEN A SIDE ROAD OR RAMP INTERSECTS THE FACILITY ON WHICH THE WORK IS BEING PERFORMED, ADDITIONAL TRAFFIC CONTROLS SHALL BE PROVIDED AS SPECIFIED IN THE PLANS AND/OR THE SPECIAL PROVISIONS OR AS APPROVED BY THE ENGINEER.

FLAGGING

FLAGGERS SHALL BE IN SIGHT OF EACH OTHER OR IN DIRECT COMMUNICATION AT ALL TIMES. THEY SHALL BE EQUIPPED WITH STOP/SLOW PADDLES FASTENED ON SUPPORT STAFFS. WHEN THE FLAGGING OPERATION IS NOT IN EFFECT REMOVE TEMPORARY PORTABLE RUMBLE STRIPS PRIOR TO COVERING OR REMOVING ALL ADVANCE SIGNING.

(1) FOR MOVING WORK OPERATIONS, POST ADDITIONAL W20-7A FLAGGER SIGNS AT APPROXIMATELY 3,500' INTERVALS IN THE MOVING WORK OPERATION OR AS APPROVED BY THE ENGINEER.

(2) SIGN NOT REQUIRED IF FLAGGING OPERATION OCCURS WITHIN A SIGNED ROAD WORK ZONE AREA.

WHEN THE DISTANCE BETWEEN FLAGGERS EXCEEDS 2 MILES, A PILOT CAR IS REQUIRED. WHEN CURVES REDUCE SIGHT DISTANCE BELOW 400', A PILOT CAR IS REQUIRED.

TEMPORARY PORTABLE RUMBLE STRIPS

UTILIZE TEMPORARY PORTABLE RUMBLE STRIPS ON ALL FLAGGING OPERATIONS.

(3) EACH TEMPORARY PORTABLE RUMBLE STRIP ARRAY CONSISTS OF THREE RUMBLE STRIPS PLACED TRANSVERSE ACROSS THE LANE AT THE LOCATIONS SHOWN. WITHIN EACH ARRAY, SPACING BETWEEN RUMBLE STRIPS SHALL BE 15 FEET ON CENTER

ONLY USE TEMPORARY PORTABLE RUMBLE STRIPS FROM THE APPROVED PRODUCTS LIST.

INSTALL TEMPORARY RUMBLE STRIPS PER MANUFACTURER'S RECOMMENDATIONS.

PLACE ADVANCE SIGNING PRIOR TO INSTALLING TEMPORARY RUMBLE STRIPS.

DO NOT INSTALL TEMPORARY PORTABLE RUMBLE STRIPS ON GRAVEL, MILLED SURFACES, OR ASPHALT THAT HAS BEEN PAVED LESS THAN 12 HOURS.

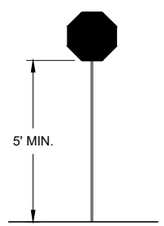

STOP/SLOW PADDLE ON SUPPORT STAFF

SIGN AND TEMPORARY RUMBLE STRIP ARRAY SPACING TABLE

SPEED LIMIT	SPACING "A"
25-30 MPH	200'
35-40 MPH	350'
45-55 MPH	500'

WO3-4

USE OF WO3-4 SIGN IS OPTIONAL. WHEN USED, THIS SIGN SHALL BE LOCATED BETWEEN THE W20-7A AND W20-4A SIGNS, USING SPACING "A".

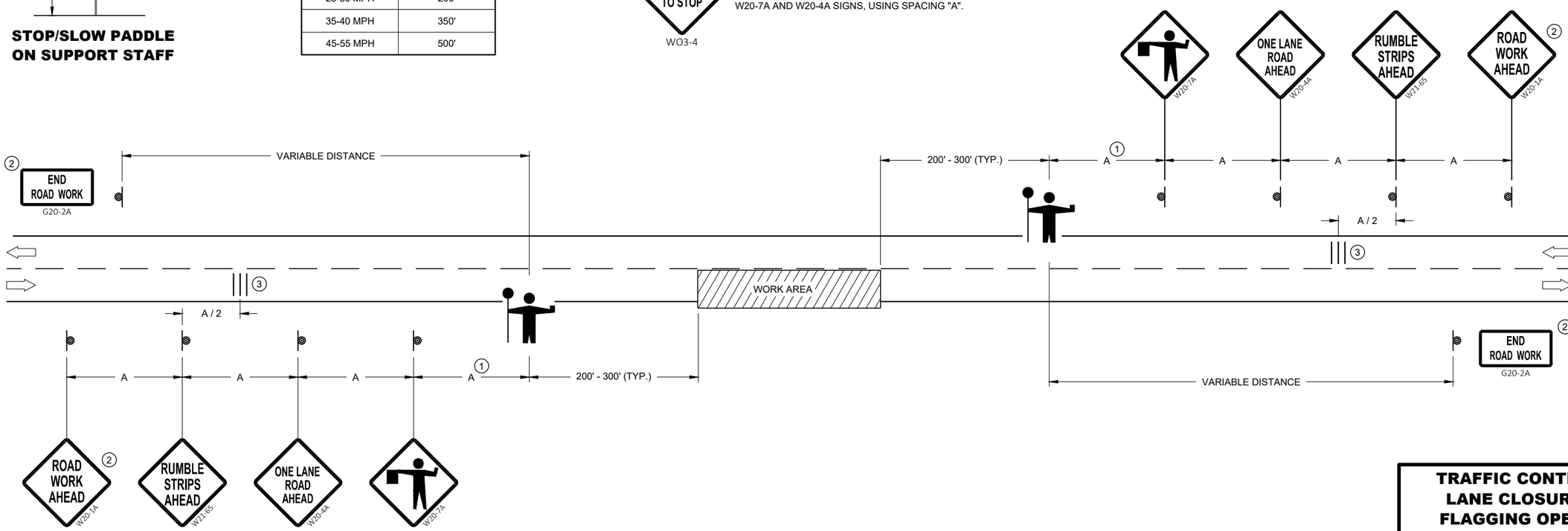

TRAFFIC CONTROL FOR LANE CLOSURE WITH FLAGGING OPERATION

STATE OF WISCONSIN
DEPARTMENT OF TRANSPORTATION

APPROVED
May 2022 — DATE
/S/ Andrew Heidtke — WORK ZONE ENGINEE
FHWA

6

SDD 15C12 - 09a

LEGEND

V1 LEAD VEHICLE

V2 MARKING VEHICLE

V3 SHADOW VEHICLE

TRUCK MOUNTED ATTENUATOR (TMA)

SIGN ON TEMPORARY SUPPORT

DIRECTION OF TRAFFIC

FLASHING ARROW PANEL (CAUTION)

GENERAL NOTES

ALL VEHICLES SHALL BE EQUIPPED WITH TWO 360 DEGREE HIGH INTENSITY YELLOW FLASHING LIGHTS OR STROBE LIGHTS AND OPERATED WITH HEADLIGHTS TURNED ON.

ALL VEHICLES SHALL BE EQUIPPED WITH REAR FACING TYPE B OR C FLASHING ARROW PANEL OPERATING IN CAUTION MODE. SIGNS PLACED ON VEHICLES MUST NOT OBSCURE THE ARROW PANEL.

ALL SIGNS ARE 48" X 48" UNLESS OTHERWISE SPECIFIED.

DISTANCE BETWEEN VEHICLES MAY VARY ACCORDING TO TERRAIN, SIGHT DISTANCE, PAINT DRYING TIME, AND OTHER FACTORS. WHENEVER ADEQUATE STOPPING SIGHT DISTANCE EXISTS TO THE REAR, SHADOW VEHICLES SHOULD MAINTAIN THE MINIMUM DISTANCE FROM THE WORK VEHICLE AND PROCEED AT THE SAME SPEED AS THE WORK VEHICLE. SHADOW VEHICLES SHOULD SLOW DOWN IN ADVANCE OF VERTICAL AND HORIZONTAL CURVES THAT RESTRICT SIGHT DISTANCE.

THE WORK AND SHADOW VEHICLES SHOULD PULL OVER PERIODICALLY TO ALLOW TRAFFIC TO PASS.

WHEN NO WORK ACTIVITY IS TAKING PLACE, REMOVE OR LAY STATIONARY SIGNS AND SUPPORTS FLAT ON THE GRADE WITH UPRIGHTS ORIENTED PARALLEL TO AND DOWNSTREAM FROM TRAFFIC.

CONES SHOULD BE USED BETWEEN THE MARKING AND SHADOW VEHICLE AT 100 FOOT SPACING. CONES MAY BE OMITTED ON PAINTED LINE IF APPROVED BY THE ENGINEER. CONSIDER PAVEMENT MARKING DRY OR CURE TIMES AND TRAFFIC VOLUME.

CONES SHALL BE A MINIMUM OF 28" FOR WET PAVEMENT MARKING .

1. SIGNS SHALL BE REPEATED APPROXIMATELY EVERY THREE MILES.
2. IF CONSTRUCTION WORK ZONE SIGNS ARE IN PLACE, W20-1A OR W21-63 ARE NOT REQUIRED.
3. V1 AND V2 CAN BE SWITCHED SO THAT THE MARKER IS THE LEAD VEHICLE.

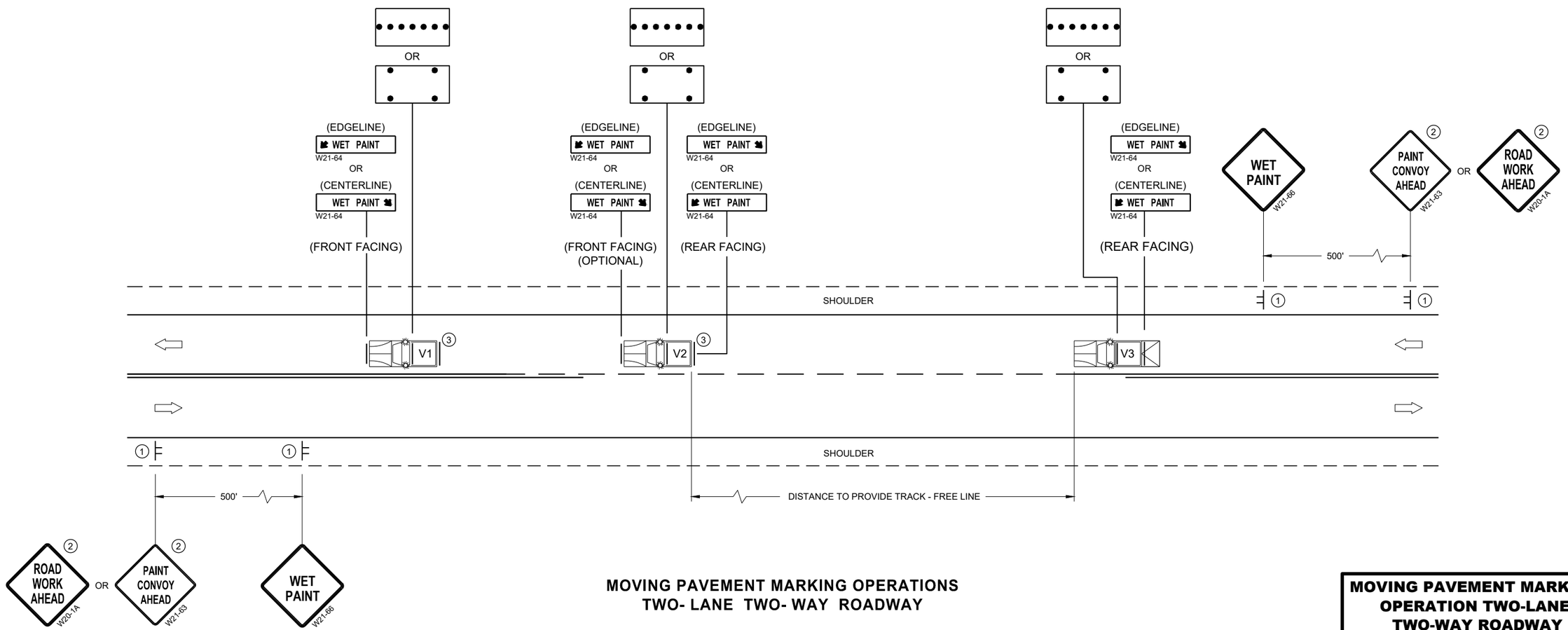

MOVING PAVEMENT MARKING OPERATIONS
TWO- LANE TWO- WAY ROADWAY

MOVING PAVEMENT MARKING OPERATION TWO-LANE TWO-WAY ROADWAY

STATE OF WISCONSIN
DEPARTMENT OF TRANSPORTATION

APPROVED
May 2022 — DATE
/S/ Andrew Heidtke — WORK ZONE ENGINEE
FHWA

6

SDD 15C19 - 07a

6

SDD 15C19 - 07a

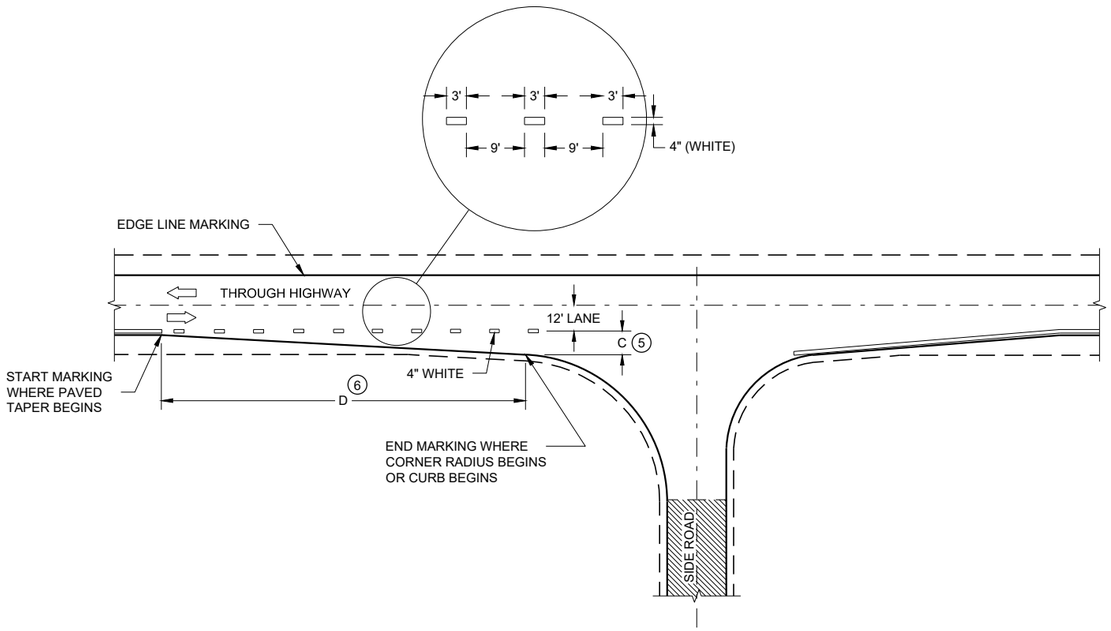

MINOR INTERSECTION

GENERAL NOTES

OMIT EDGE LINES THROUGH INTERSECTIONS. CONTINUE EDGE LINES THROUGH DRIVEWAYS.

1. WHEN DISTANCE "A" IS LESS THAN 250 FEET, OMIT LANE LINE.
2. WHEN DISTANCE "B" IS LESS THAN 100 FEET, OMIT CHANNELIZING LANE LINE.
3. BARRIER LINE ENDS AT SIDE ROAD PAVEMENT / SURFACE EDGE EXTENSION.
4. BARRIER LINE STARTS 500 FEET PRIOR TO THE BYPASS TAPER.
5. WHEN DISTANCE "C" IS LESS THAN 4 FEET, OMIT DOTTED EXTENSION.
6. WHEN DISTANCE "D" IS LESS THAN 50 FEET, OMIT DOTTED EXTENSION.

LEGEND

DIRECTION OF TRAVEL

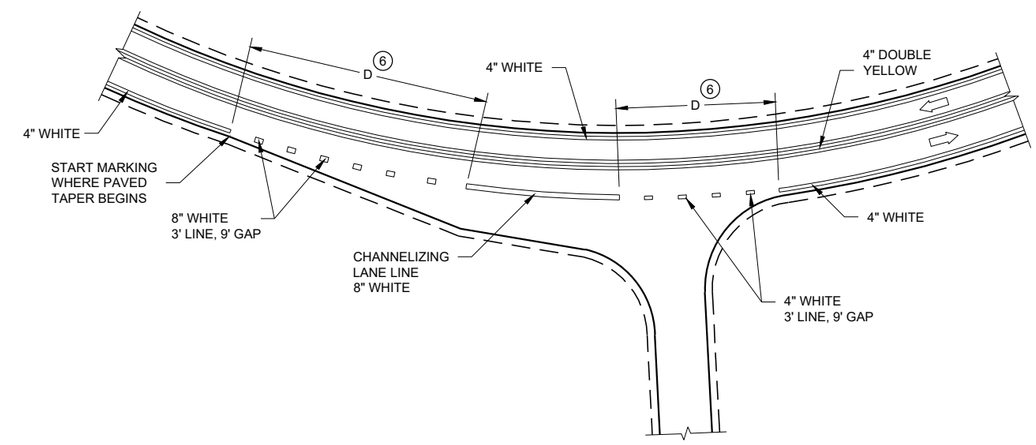

INTERSECTION ON OUTSIDE OF CURVE

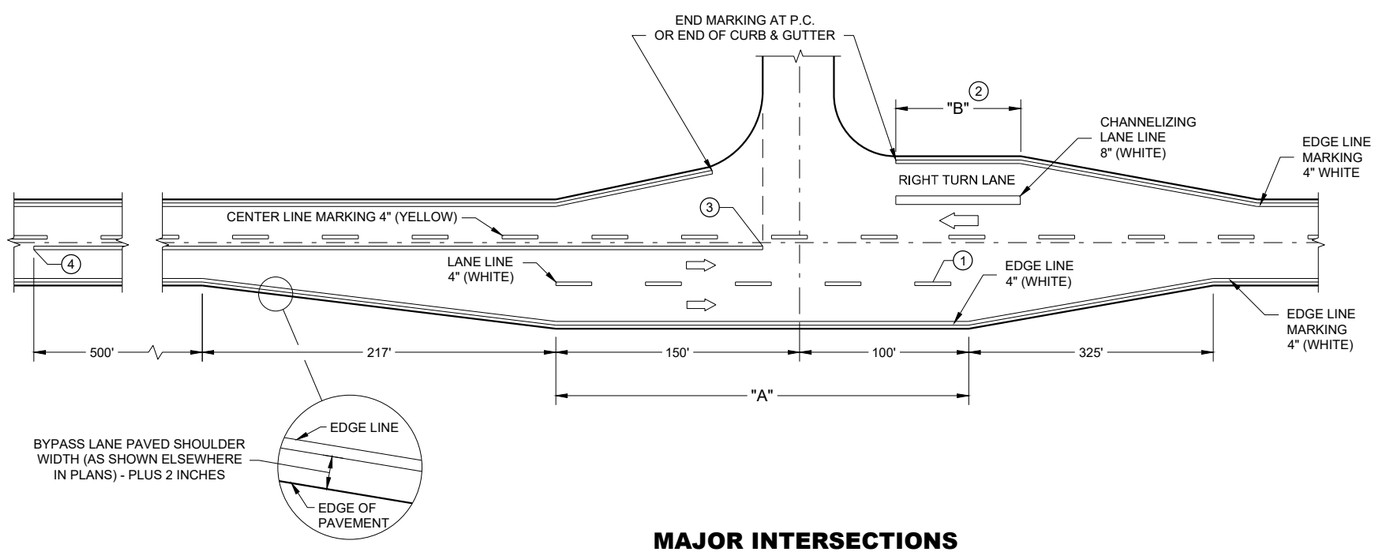

MAJOR INTERSECTIONS

(INTERSECTION WITH FULL RIGHT TURN LANE OR BYPASS LANE)

PAVEMENT MARKING (INTERSECTIONS)

STATE OF WISCONSIN
DEPARTMENT OF TRANSPORTA

6

SDD 15C35 - 05a

LEGEND

SIGN ON PERMANENT SUPPORT

TRAFFIC CONTROL DRUM

DIRECTION OF TRAFFIC

WORK ZONE

GENERAL NOTES

ALL SIGNS ARE 48"X48" UNLESS OTHERWISE NOTED. IF NECESSARY DUE TO SPACE CONSTRAINTS IN URBAN AREAS, 36" X 36" SIGNS MAY BE USED IF APPROVED BY THE REGIONAL TRAFFIC UNIT.

"WO" SIGN IS THE SAME AS "W" SIGN EXCEPT THE BACKGROUND IS ORANGE.

ANY SIGNS TEMPORARY OR EXISTING, WHICH CONFLICT WITH THE TRAFFIC CONTROL "IN USE" SHALL BE REMOVED OR COVERED AS NEEDED AND AS APPROVED BY THE ENGINEER.

THE EXACT NUMBER, LOCATION, AND SPACING OF ALL SIGNS AND DEVICES SHALL BE ADJUSTED TO FIT FIELD CONDITIONS AS APPROVED BY THE ENGINEER.

CHANNELIZING DEVICES PLACED ADJACENT TO WORK AREA SHALL BE PULLED BACK FROM THE TRAVEL LANE WHEN WORK IS NOT IN PROGRESS.

SIGNS THAT WILL BE IN PLACE LESS THAN 7 CONTINUOUS DAYS AND NIGHTS MAY BE MOUNTED ON PORTABLE SUPPORTS.

W20-1A AND G20-2A SIGNS ARE NOT REQUIRED IF THE WORK AREA IS WITHIN A LARGER WORK ZONE WHERE THESE SIGNS ARE ALREADY PRESENT. G20-2A SIGNS MAY ALSO BE OMITTED IF DURATION OF WORK IS LESS THAN 7 CONTINUOUS DAYS AND NIGHTS.

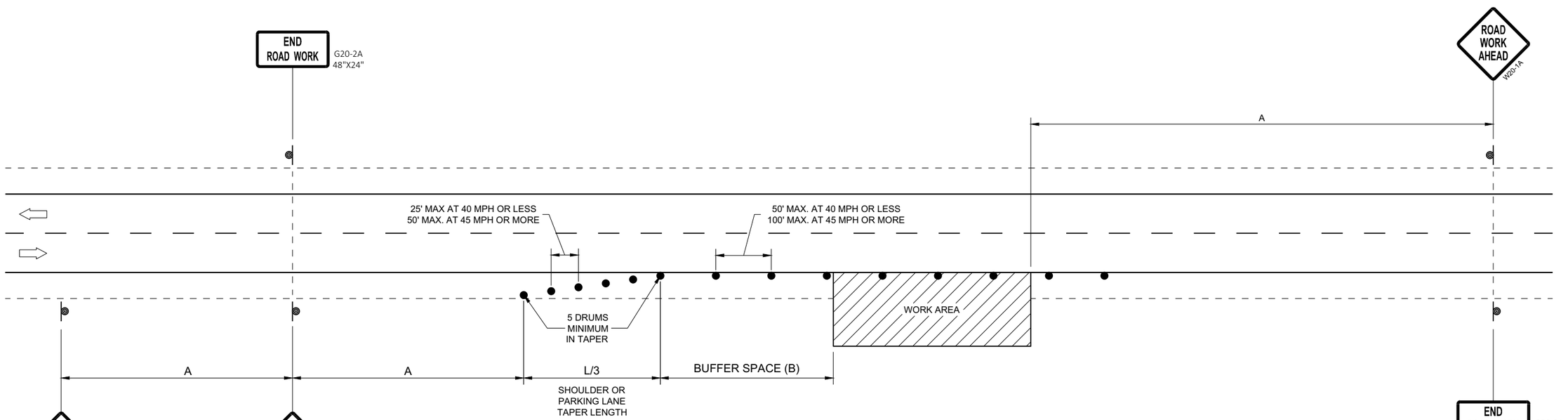

OR
IF TRAFFIC CONTROL DEVICES
ENCROACH ONTO TRAVELED WAY, USE

POSTED SPEED LIMIT PRIOR TO WORK STARTING (MPH)	ADVANCE WARNING SIGN SPACING (A) FEET	SHOULDER TAPER L / 3 W, LATERAL OFFSET (FT)						BUFFER SPACE (B) FEET
		3	4	5	6	7	8	
25	200'	10	14	17	21	24	28	55
30	200'	15	20	25	30	35	40	85
35	350'	20	27	34	40	47	54	120
40	350'	26	35	44	53	62	70	170
45	500'	45	59	74	89	104	119	220
50	500'	50	66	83	99	116	132	280
55	500'	54	73	91	109	127	145	335'

TRAFFIC CONTROL, WORK ON SHOULDER OR PARKING LANE, UNDIVIDED ROADWAY

STATE OF WISCONSIN
DEPARTMENT OF TRANSPORTATION

APPROVED
May 2020
DATE

/S/ Andrew Heidtke
STATEWIDE WORK ZONE T
SAFETY ENGINEER

FHWA

6

SDD 15D28 - 04

GENERAL NOTES

BARRICADE DEVICE SELECTED FROM APPROVED PRODUCT LIST

1. REFLECTIVE SHEETING SHALL FOLLOW THE REQUIREMENTS IN THE APPROVED PRODUCTS LISTING FOR SIGN SHEETING.
2. SHEETING REQUIRED ON MORE THAN 50% OF BARRICADE WIDTH.
3. PLACE SHEETING ON BOTH SIDES OF THE BARRICADE.

* USE THIS DETAIL FOR SHEETING PLACEMENT REFERENCE.

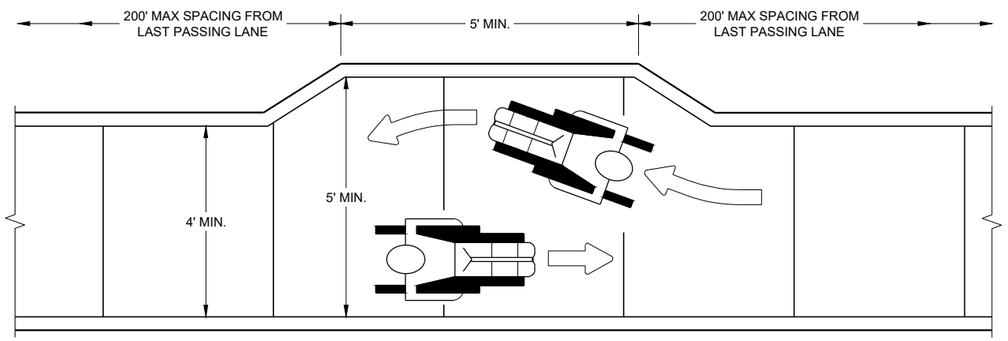

NARROW SIDEWALK PASSING DETAIL

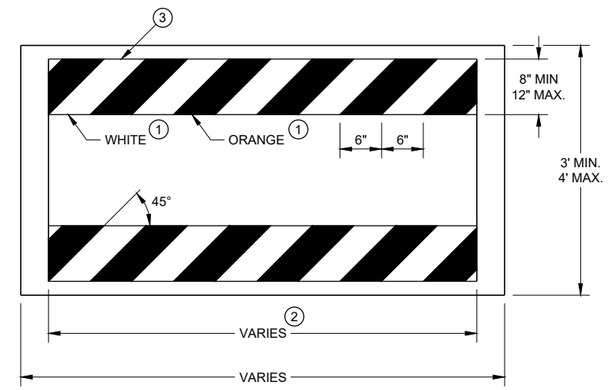

TEMPORARY PEDESTRIAN BARRICADE*

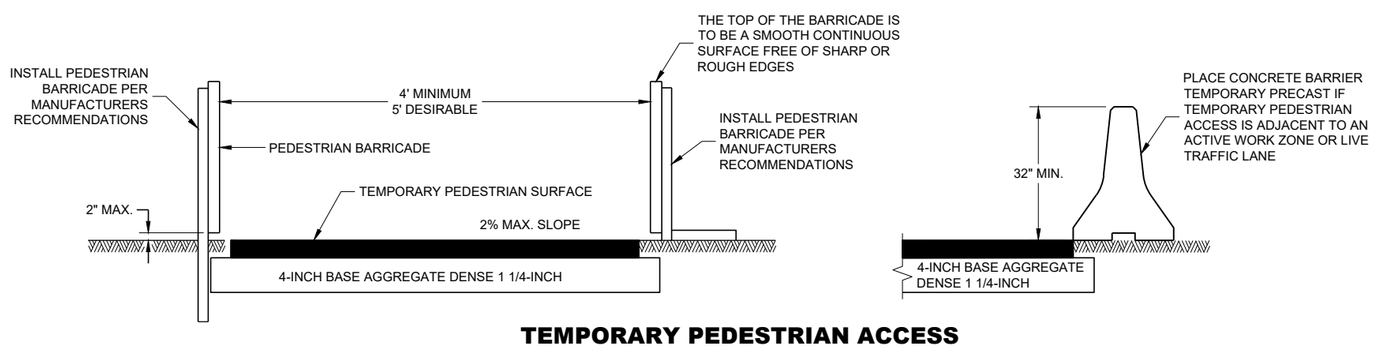

TEMPORARY PEDESTRIAN ACCESS

6

6

SDD 15D30 - 07a

SDD 15D30 - 07a

TRAFFIC CONTROL, PEDESTRIAN ACCOMMODATION

STATE OF WISCONSIN
DEPARTMENT OF TRANSPORTAT

GENERAL NOTES

CURB RAMPS SHALL BE 48" MIN. WIDTH WITH A FIRM, STABLE AND SLIP RESISTANT SURFACE.

CURB RAMPS AND LANDINGS SHALL HAVE A 1:50 (2%) MAX. CROSS-SLOPE.

CLEAR SPACE OF 48" X 48" SHALL BE PROVIDED ABOVE AND BELOW THE CURB RAMP.
LATERAL JOINTS OR GAPS BETWEEN SURFACES SHALL BE LESS THAN ½" WIDTH.

CHANGES BETWEEN SURFACE HEIGHTS SHALL NOT EXCEED ½". LATERAL EDGES MAY BE VERTICAL UP TO ¼" HIGH AND SHALL BE BEVELED AT 1:2 BETWEEN ¼" AND ½".

1. INSTALL CONTRASTING TEMPORARY DETECTABLE WARNING FIELD AT PEDESTRIAN STREET CROSSINGS, AS SHOWN IN THE PLANS.
2. PROTECTIVE EDGING WITH A 2" MIN. HEIGHT SHALL BE INSTALLED WHEN A CURB RAMP OR LANDING PLATFORM HAS A VERTICAL DROP OF 6" OR GREATER OR HAS A SIDE APRON SLOPE STEEPER THAN 1:3 (33%). PROTECTIVE EDGING SHOULD BE CONSIDERED WHEN CURB RAMPS OR LANDING PLATFORMS HAVE A VERTICAL DROP OF 3" OR MORE.
3. DETECTABLE EDGING WITH 6" MIN. HEIGHT AND CONTRASTING COLOR SHALL BE INSTALLED ON ALL CURB RAMP LANDINGS WHERE THE WALKWAY CHANGES DIRECTION (TURNS).
4. DO NOT RESTRICT WATER FLOW IN THE GUTTER SYSTEM.
5. 6" MINIMUM BETWEEN CURB FACE AND EDGE OF RAMP
6. IF ONLY PART OF THE END PANEL OF TEMPORARY PEDESTRIAN BARRICADE PANEL IS NEEDED, EXTEND EXCESS PORTION OF TEMPORARY PEDESTRIAN BARRICADE PANEL HERE.

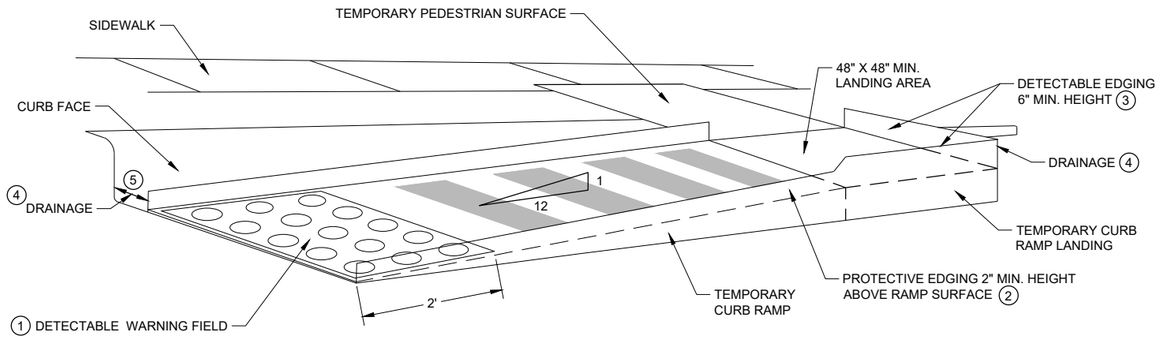

PERSPECTIVE VIEW

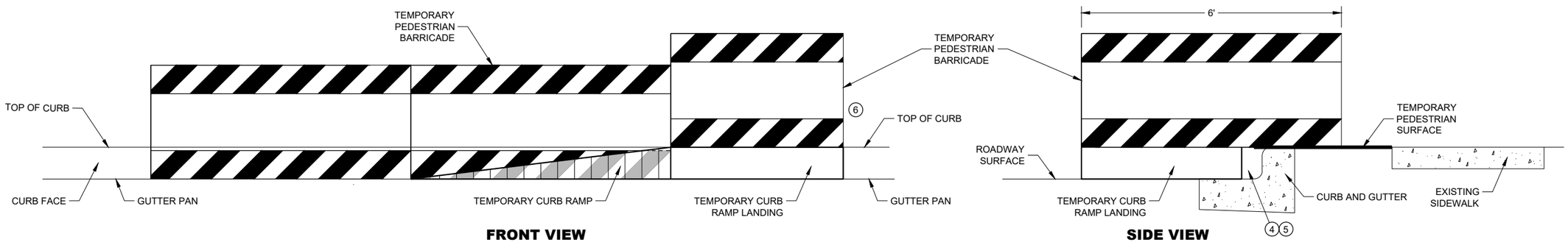

FRONT VIEW **SIDE VIEW**

TEMPORARY CURB RAMP PARALLEL TO CURB

6

6

SDD 15D30 - 07b

SDD 15D30 - 07b

TRAFFIC CONTROL, PEDESTRIAN ACCOMMODATION

STATE OF WISCONSIN
DEPARTMENT OF TRANSPORTAT

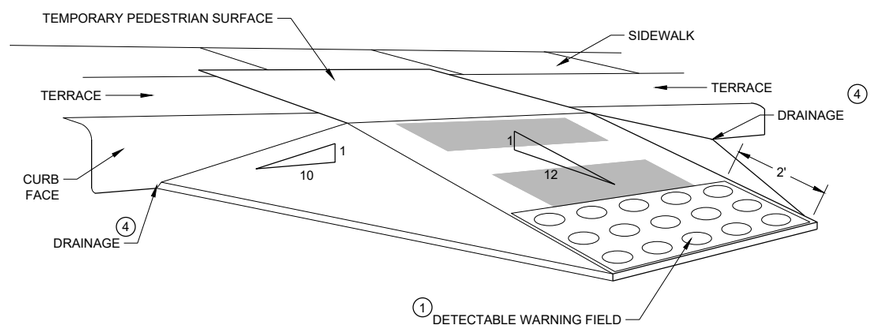

WITH SIDE APRON 5

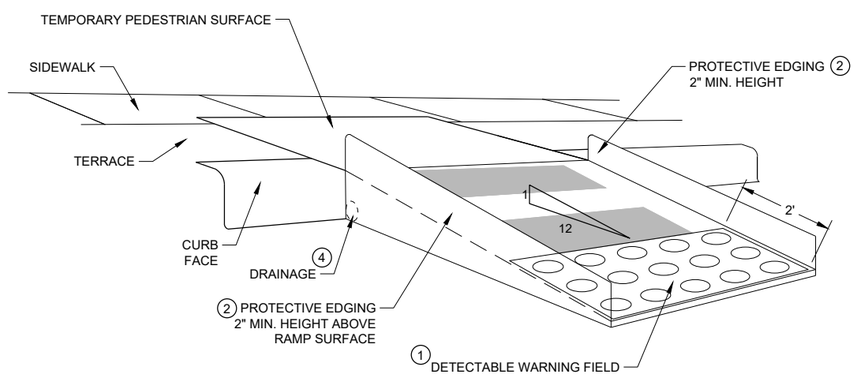

WITH PROTECTIVE EDGE

TEMPORARY CURB RAMP PERPENDICULAR TO CURB

GENERAL NOTES

CURB RAMPS SHALL BE 48" MINIMUM WIDTH WITH A FIRM, STABLE AND SLIP RESISTANT SURFACE.

ALTERNATE SIDEWALK WORK BETWEEN LEFT AND RIGHT SIDE OF ROADWAY TO MAINTAIN PEDESTRIAN ACCESS.

CURB RAMPS AND LANDINGS SHALL HAVE A 1:50 (2%) MAX. CROSS-SLOPE.

CLEAR SPACE OF 48" X 48" SHALL BE PROVIDED ABOVE AND BELOW THE CURB RAMP.

LATERAL JOINTS OR GAPS BETWEEN SURFACES SHALL BE LESS THAN ½" WIDTH.

CHANGES BETWEEN SURFACE HEIGHTS SHALL NOT EXCEED ½". LATERAL EDGES MAY BE VERTICAL UP TO ¼" HIGH AND SHALL BE BEVELED AT 1:2 BETWEEN ¼" AND ½".

1. INSTALL CONTRASTING TEMPORARY DETECTABLE WARNING FIELD AT PEDESTRIAN STREET CROSSINGS, AS SHOWN IN THE PLANS
2. PROTECTIVE EDGING WITH A 2" MIN. HEIGHT SHALL BE INSTALLED WHEN A CURB RAMP OR LANDING PLATFORM HAS A VERTICAL DROP OF 6" OR GREATER OR HAS A SIDE APRON SLOPE STEEPER THAN 1:3 (33%). PROTECTIVE EDGING SHOULD BE CONSIDERED WHEN CURB RAMPS OR LANDING PLATFORMS HAVE A VERTICAL DROP OF 3" OR MORE.
3. DETECTABLE EDGING WITH 6" MIN. HEIGHT AND CONTRASTING COLOR SHALL BE INSTALLED ON ALL CURB RAMP LANDINGS WHERE THE WALKWAY CHANGES DIRECTION (TURNS).
4. DO NOT RESTRICT WATER FLOW IN THE GUTTER SYSTEM.
5. CAN ONLY BE USED FOR RAMPS WITH 6" OR LESS OF VERTICAL CHANGE.

6

SDD 15D30 - 07c

TRAFFIC CONTROL, PEDESTRIAN ACCOMMODATION

STATE OF WISCONSIN
DEPARTMENT OF TRANSPORTAT

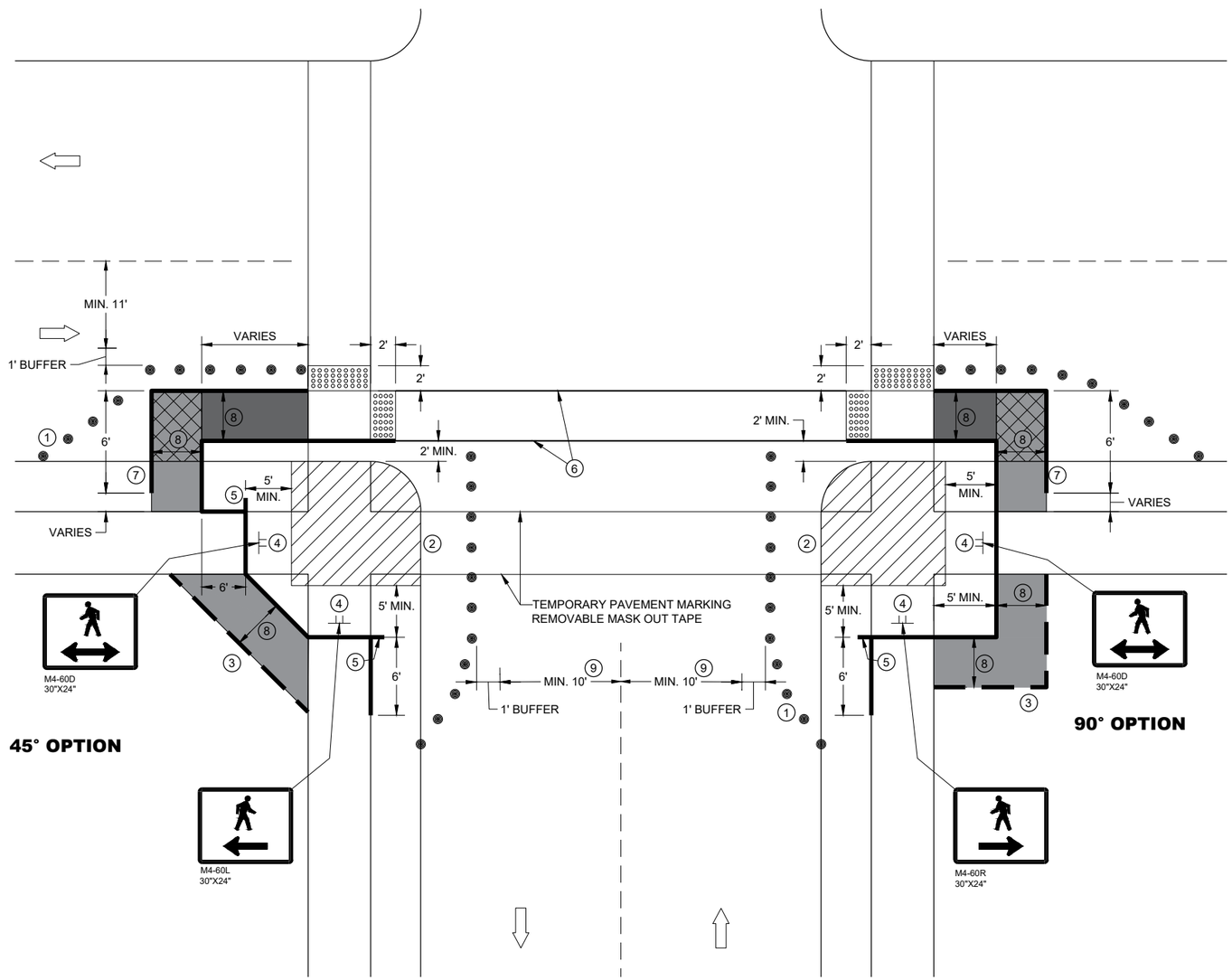

CURB RAMP PEDESTRIAN TRAFFIC CONTROL

GENERAL NOTES

IF PEDESTRIAN PUSH BUTTONS ARE PRESENT ON THE EXISTING FACILITY, ENSURE THEY ARE MAINTAINED/ACCESSIBLE FOR PEDESTRIAN USE THROUGHOUT THE TEMPORARY PEDESTRIAN ACCOMMODATIONS.

SIGN LAYOUTS SHALL BE IN ACCORDANCE WITH THE WISCONSIN STANDARD SIGN PLATES.

TYPICAL TEMPORARY PEDESTRIAN BARRICADE PANEL IS 6 FEET LONG

WHEN TEMPORARY PEDESTRIAN BARRICADE RUNS PARALLEL ALONG THE SIDEWALK, PLACE THE FACE OF THE BARRICADE AT THE EDGE OF THE SIDEWALK.

1. SHOULDER OR LANE CLOSURE ADVANCE WARNING AND PROPER BUFFER SPACE REQUIRED.
2. PROVIDE ADEQUATE SPACE FOR CONTRACTOR OPERATIONS
3. USE TEMPORARY PEDESTRIAN BARRICADE TO SEPARATE PEDESTRIANS FROM DROP OFFS OR FOR ADDITIONAL PEDESTRIAN CHANNELIZATION.
4. MOUNTING HEIGHT OF 5 FEET FROM SIDEWALK SURFACE TO BOTTOM OF SIGN.
5. PLACE EXCESS PORTION OF TEMPORARY PEDESTRIAN BARRICADE PANEL IN THE SIDEWALK TERRACE.
6. WHITE 6" TEMPORARY PAVEMENT MARKING
7. IF TEMPORARY PEDESTRIAN BARRICADE DOES NOT REACH THE FACE OF THE CURB, USE AN ADDITIONAL PANEL AND EXTEND INTO THE TERRACE.
8. 4 FEET MINIMUM, 5 FEET DESIRABLE
9. IF MINIMUM LANE WIDTHS CAN'T BE ATTAINED, CURB RAMPS MAY NEED TO BE CONSTRUCTED AT SEPARATE TIMES.

LEGEND

- SIGN ON TEMPORARY SUPPORT
- TRAFFIC CONTROL DRUM
- WORK AREA
- TEMPORARY CURB RAMP
- TEMPORARY PEDESTRIAN SURFACE "A"
- TEMPORARY PEDESTRIAN SURFACE "B"
- TEMPORARY DETECTABLE WARNING FIELD
- TEMPORARY PEDESTRIAN BARRICADE
- OPTIONAL TEMPORARY PEDESTRIAN BARRICADE
- DIRECTION OF TRAFFIC

TRAFFIC CONTROL, PEDESTRIAN ACCOMMODATION

STATE OF WISCONSIN
DEPARTMENT OF TRANSPORTAT

6

SDD 15D30 - 07j

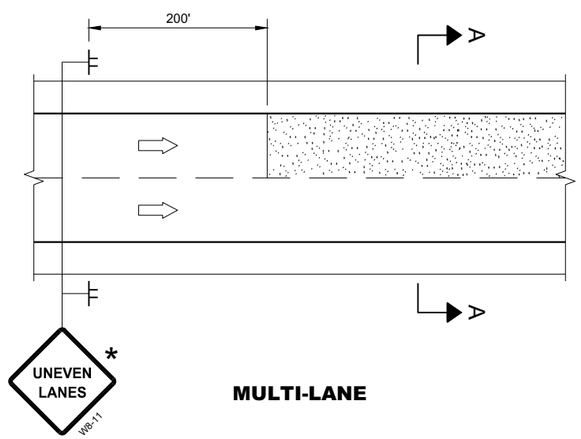

MULTI-LANE

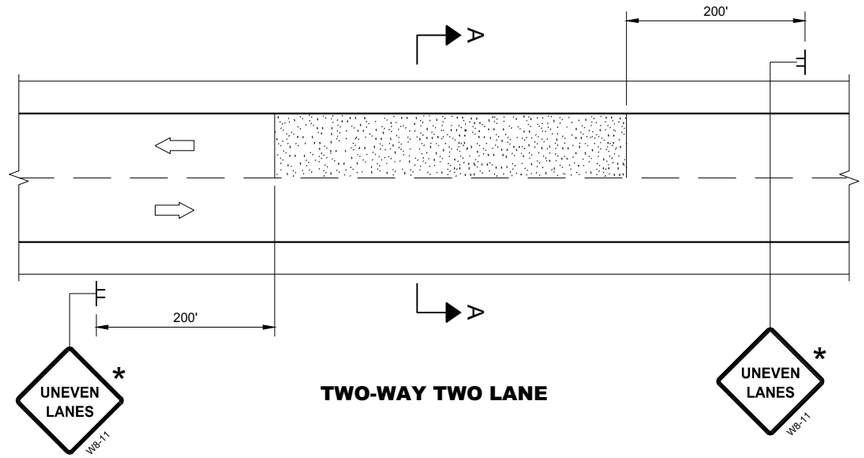

TWO-WAY TWO LANE

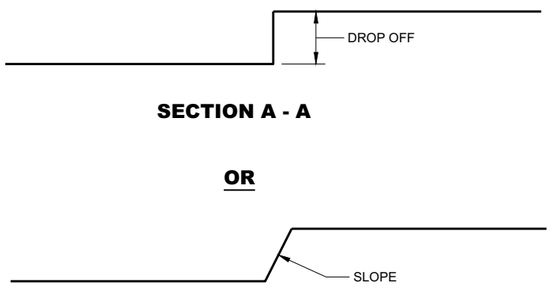

SECTION A - A

SECTION A - A

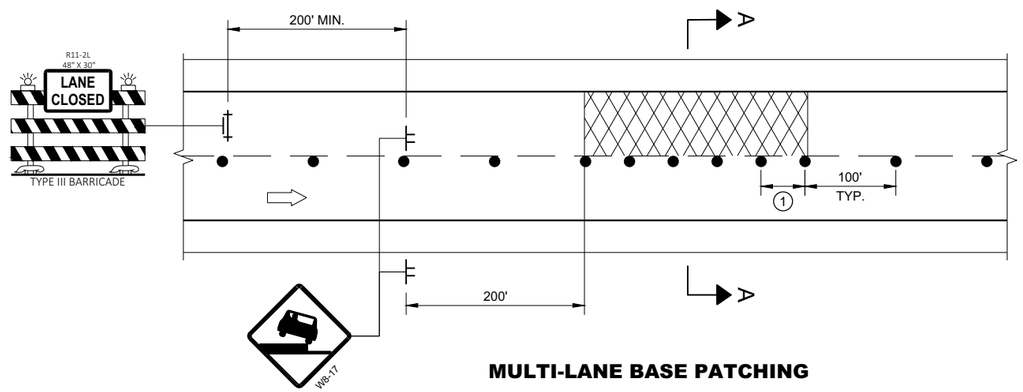

MULTI-LANE BASE PATCHING

ADJACENT LANE DROP-OFFS

GENERAL NOTES

FOR SPOT LOCATIONS USE ENGINEERING JUDGEMENT WHEN PLACING ADDITIONAL SIGNS.

ALL SIGNS ARE 48" X 48" UNLESS OTHERWISE NOTED.

"WO" SIGNS ARE THE SAME AS "W" SIGNS EXCEPT THE BACKGROUND IS ORANGE.

WARNING LIGHTS ARE NOT REQUIRED IF THE LANE CLOSURE IS A DAYTIME ONLY OPERATION.

* IF THE DROP-OFF IS CONTINUOUS ALONG THE PROJECT, PLACE ADDITIONAL SIGNS EVERY 1 MILE AND AFTER EVERY ENTRANCE RAMP.

(1) USE CLOSER SPACING WHEN DELINEATING DROP-OFF.

LEGEND

- SIGN ON TEMPORARY SUPPORT
- TRAFFIC CONTROL DRUM
- TYPE III BARRICADE WITH ATTACHED SIGN
- TYPE "A" WARNING LIGHT (FLASHING)
- DIRECTION OF TRAFFIC
- WORK AREA WITH DROP-OFF
- MILLED SURFACE

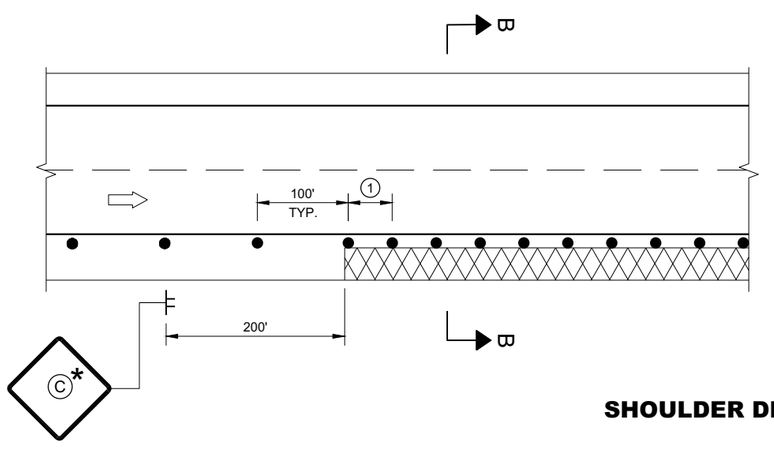

SHOULDER DROP-OFFS

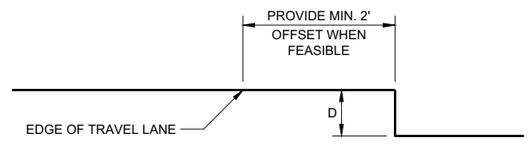

SECTION B - B

D	SIGN (C)
< 2" WITH A SLOPE STEEPER THAN 3:1	LOW SHOULDER WO8-9
2" < 6" WITH A SLOPE STEEPER THAN 3:1	SHOULDER DROP - OFF W8-9A PROVIDE A 3:1 OR FLATTER SLOPE OF MATERIAL ADJACENT TO THE PAVEMENT

TRAFFIC CONTROL, DROP-OFF SIGNING

STATE OF WISCONSIN
DEPARTMENT OF TRANSPORTATION

APPROVED
March 2018 — DATE
/S/ Andrew Heidtke — WORK ZONE ENGINEE
FHWA

6

SDD 15D39 - 02

GENERAL NOTES

DRAWING NOT TO SCALE. ALL SIGNS AND POSTS ON THIS SHEET SHALL BE PAID FOR WITH 'TRAFFIC CONTROL SIGNS' BID ITEM. ALL SIDE ROADS WHICH ARE UNDER CONSTRUCTION OF CURB AND GUTTER AND/OR GRADING SHALL BE ADEQUATELY SIGNED.

ALL SIGNS AND DEVICES SHALL BE IN CONFORMANCE WITH THE WISCONSIN MANUAL OF UNIFORM TRAFFIC CONTROL DEVICES (WMUTCD). SIGN LAYOUTS SHALL BE IN ACCORDANCE WITH THE WISDOT STANDARD SIGN PLATES.

"WO" SIGNS ARE THE SAME AS "W" SIGNS EXCEPT THAT THE BACKGROUND IS ORANGE.

ALL SIGNS ARE 48" X 48" UNLESS OTHERWISE NOTED.

THE EXACT NUMBER, LOCATION AND SPACING OF ALL SIGNS AND DEVICES SHALL BE ADJUSTED TO FIT FIELD CONDITIONS AS DIRECTED BY THE ENGINEER.

ALL SIGNS INAPPROPRIATE TO THE STATUS OF THE CONTROL ZONE, INCLUDING PRE-EXISTING SIGNS IN THE VICINITY, SHALL BE COVERED OR REMOVED AS DIRECTED BY THE ENGINEER.

SEE 15C34 FOR ADDITIONAL TRAFFIC CONTROL SIGNING WHEN CENTERLINE PAVEMENT MAKINGS ARE MISSING. 'DO NOT PASS' SIGNS MUST BE INSTALLED ON THE SAME DAY AS MILLING OPERATIONS.

(1) PLACE SIGNS 350' IN ADVANCE OF MILLED SURFACES AND AT 1 MILE INTERVALS, OR AS DIRECTED BY THE ENGINEER.

(2) PLACE SIGN 200' MIN. FROM INTERSECTION AND 200' MIN. AFTER ADVANCE WARNING SIGN SHOWN IN SDD 15C04.

LEGEND

SIGN ON TEMPORARY SUPPORT

DIRECTION OF TRAFFIC

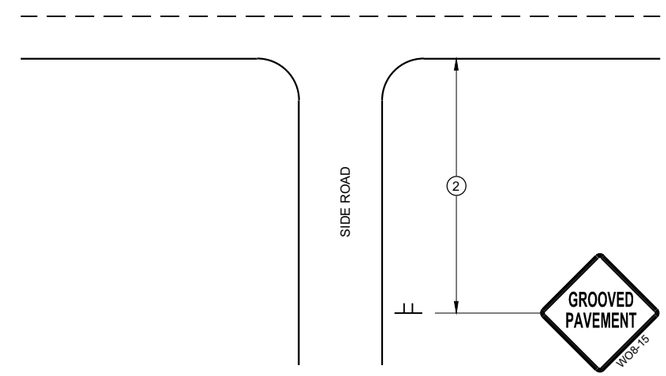

TYPICAL SIDE ROAD APPROACH SIGN DETAIL

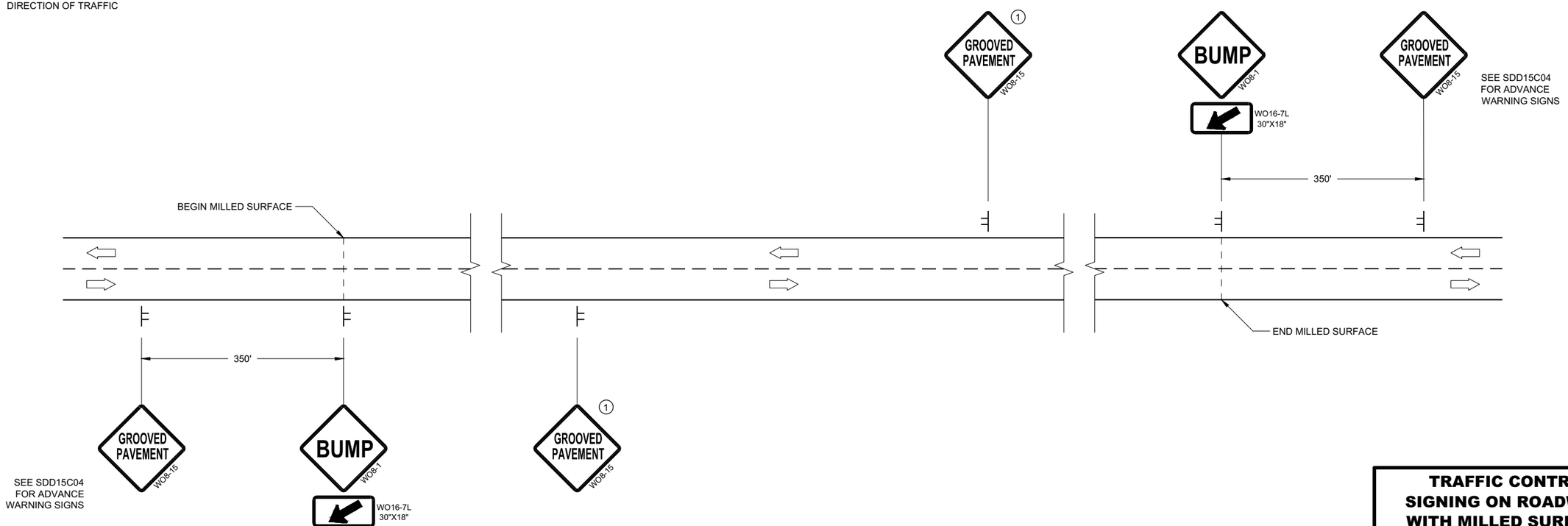

DETAIL FOR SIGNING ON MILLED SURFACES

TRAFFIC CONTROL, SIGNING ON ROADWAYS WITH MILLED SURFACES

STATE OF WISCONSIN
DEPARTMENT OF TRANSPORTATION

APPROVED
February 2020 /S/ Andrew Heidtke
DATE WORK ZONE ENGINEE
FHWA

6

SDD 15D44 - 02

GENERAL NOTES

DRAWING NOT TO SCALE. ALL SIGNS AND POSTS ON THIS SHEET SHALL BE PAID FOR WITH 'TRAFFIC CONTROL SIGNS' BID ITEM. ALL SIDE ROADS WHICH ARE UNDER CONSTRUCTION OF CURB AND GUTTER AND/OR GRADING SHALL BE ADEQUATELY SIGNED.

ALL SIGNS AND DEVICES SHALL BE IN CONFORMANCE WITH THE WISCONSIN MANUAL OF UNIFORM TRAFFIC CONTROL DEVICES (WMUTCD). SIGN LAYOUTS SHALL BE IN ACCORDANCE WITH THE WISDOT STANDARD SIGN PLATES.

"WO" SIGNS ARE THE SAME AS "W" SIGNS EXCEPT THAT THE BACKGROUND IS ORANGE.

ALL SIGNS ARE 48" X 48" UNLESS OTHERWISE NOTED.

THE EXACT NUMBER, LOCATION AND SPACING OF ALL SIGNS AND DEVICES SHALL BE ADJUSTED TO FIT FIELD CONDITIONS AS DIRECTED BY THE ENGINEER.

ALL SIGNS INAPPROPRIATE TO THE STATUS OF THE CONTROL ZONE, INCLUDING PRE-EXISTING SIGNS IN THE VICINITY, SHALL BE COVERED OR REMOVED AS DIRECTED BY THE ENGINEER.

SEE 15C34 FOR ADDITIONAL TRAFFIC CONTROL SIGNING WHEN CENTERLINE PAVEMENT MAKINGS ARE MISSING. 'DO NOT PASS' SIGNS MUST BE INSTALLED ON THE SAME DAY AS MILLING OPERATIONS.

1. PLACE SIGNS 350' IN ADVANCE OF CHIP SEALED OR LOOSE GRAVEL SURFACES AND AT 1 MILE INTERVALS, OR AS DIRECTED BY THE ENGINEER.
2. PLACE SIGN 200' MIN. FROM INTERSECTION AND 200' MIN. AFTER ADVANCE WARNING SIGN SHOWN IN SDD 15C04.
3. ADD WO8-1 OR WO8-2 SIGN WHEN THE CONDITION IS PRESENT.

LEGEND

SIGN ON TEMPORARY SUPPORT

DIRECTION OF TRAFFIC

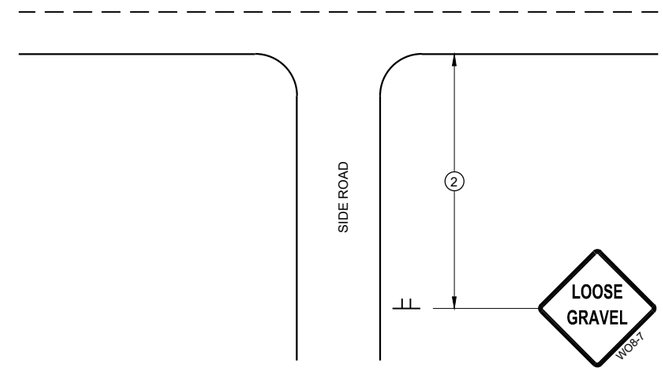

TYPICAL SIDE ROAD APPROACH SIGN DETAIL

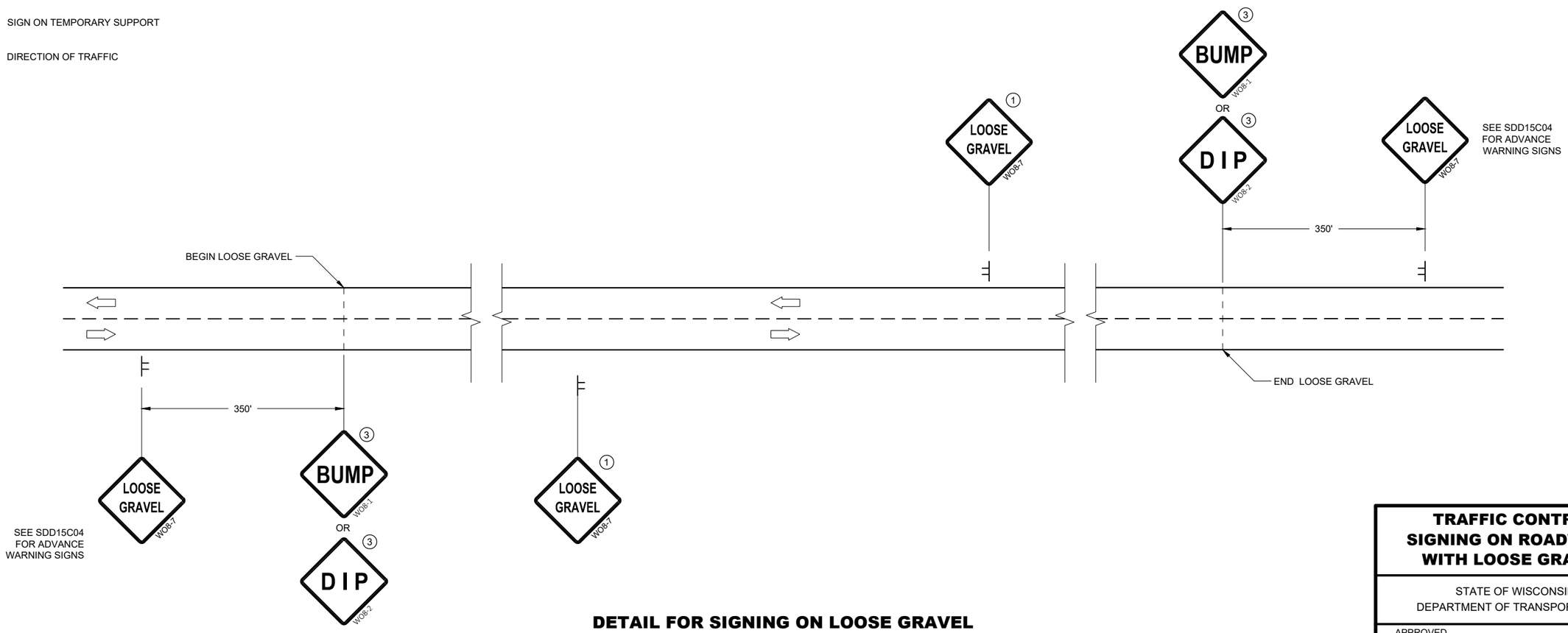

DETAIL FOR SIGNING ON LOOSE GRAVEL OR CHIP SEALED SURFACES

TRAFFIC CONTROL SIGNING ON ROADWAYS WITH LOOSE GRAVEL

STATE OF WISCONSIN
DEPARTMENT OF TRANSPORTATION

APPROVED
February 2021 /S/ Andrew Heidtke
DATE WORK ZONE ENGINEE
FHWA

6

SDD 15D45 - 03

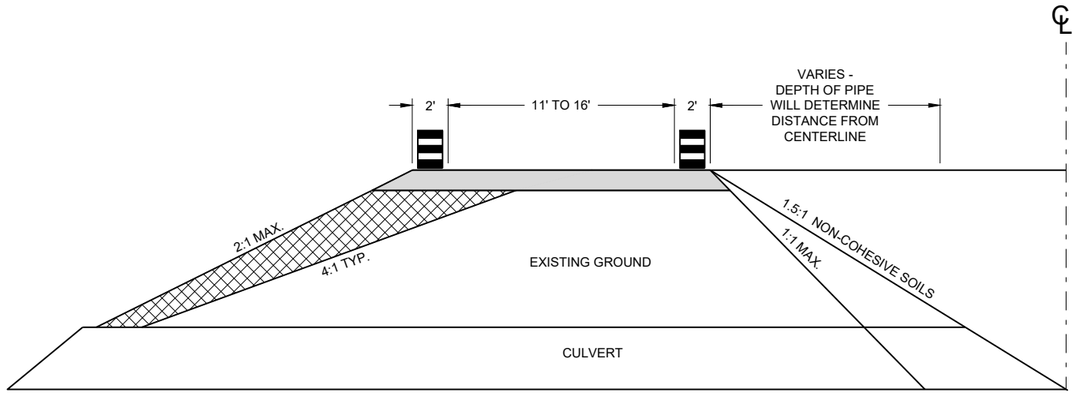

CROSS SECTION

GENERAL NOTES

USE 1:1 FOR COHESIVE CLAYS AND SILTS, LOAMS, SANDY CLAYS AND ANGULAR GRAVEL SOILS.
USE 1.5:1 FOR NON-COHESIVE SOILS.

THE TAPER SHOULD EXTEND ACROSS THE SHOULDER UNLESS DOING SO WOULD GREATLY CONFLICT WITH THE WORK OPERATION.

ALL LANE CLOSURE SIGNS SHALL BE REMOVED OR COVERED AND ALL DEVICES REMOVED BEYOND THE SHOULDER WHEN WORK IS NOT IN PROGRESS AND THE LANE IS RESTORED TO A SAFE OPERATING CONDITION.

CHANNELIZING DEVICES PLACED ADJACENT TO WORK AREA SHALL BE PULLED BACK FROM TRAVEL LANE WHEN WORK IS NOT IN PROGRESS.

USE WITH SDD 15C12 "TRAFFIC CONTROL FOR LANE CLOSURE WITH FLAGGING OPERATIONS"

USE WITH SDD 15D45 "SIGNING ON ROADWAYS WITH LOOSE GRAVEL"

LEGEND

- DRUM WITHOUT WARNING LIGHT
- 6" BASE AGGREGATE DENSE 1 ¼" -INCIDENTAL TO LANE SHIFT ITEM
- FILL - INCIDENTAL TO LANE SHIFT ITEM
- WORK AREA
- FLAGGER, EQUIPPED WITH STOP/SLOW PADDLE FASTENED ON SUPPORT STAFF

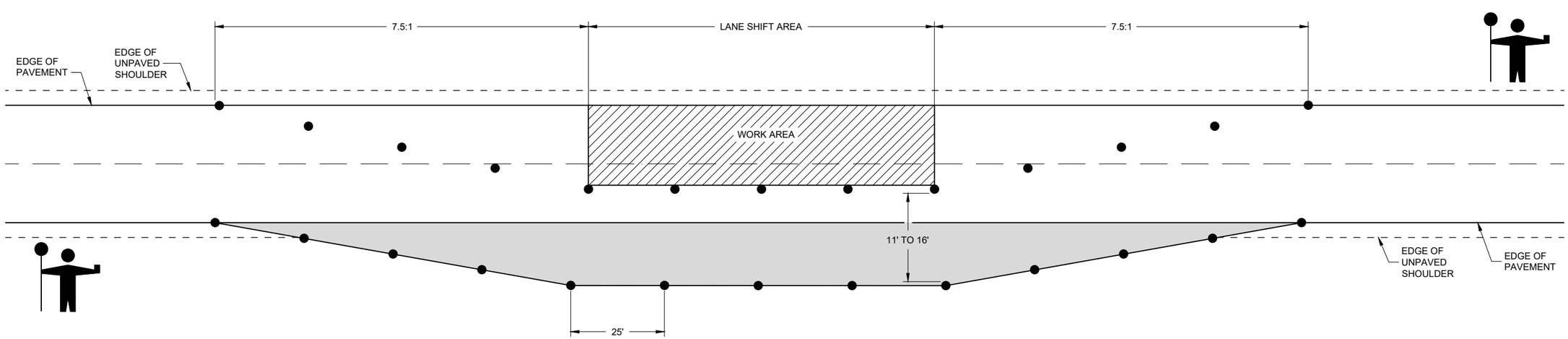

LANE SHIFT IN FLAGGING OPERATION

TRAFFIC CONTROL, TEMPORARY LANE SHIFT DURING CULVERT WORK

STATE OF WISCONSIN
DEPARTMENT OF TRANSPORTATION

APPROVED
February 2021 — DATE
/S/ Andrew Heidtke — WORK ZONE ENGINEE
FHWA

6

SDD 15D48 - 01

LEGEND

V1 WORK VEHICLE

V2 SHADOW VEHICLE

TRUCK MOUNTED ATTENUATOR (TMA)

FLASHING ARROW PANEL (CAUTION)

WORK AREA

DIRECTION OF TRAFFIC

POSTED SPEED PRIOR TO WORK STARTING (MPH)	DECISION SIGHT DISTANCE (D)
0 - 25	550'
30	550'
35	700'
40	700'
45	900'
50	900'
55	1200'

GENERAL NOTES

ALL SIGNS ARE 48"X48" UNLESS OTHERWISE NOTED.

MOBILE IS WORK THAT MOVES CONTINUOUSLY OR MOVES AT LEAST THE DECISION SIGHT DISTANCE EVERY 15 MINUTES.

ALL VEHICLES SHALL BE EQUIPPED WITH TWO 360 DEGREE HIGH INTENSITY YELLOW FLASHING LIGHTS OR STROBE LIGHTS AND OPERATED WITH HEADLIGHTS TURNED ON.

ALL ARROW PANELS SHALL BE REAR FACING, TYPE "B" OR "C", AND DISPLAYING THE FLASHING CAUTION MODE. SIGNS PLACED ON VEHICLES MUST NOT OBSCURE THE ARROW PANEL.

USE AN ATTENUATOR ON THE REARMOST VEHICLE THAT BLOCKS ALL OR PART OF THE TRAFFIC LANE.

1 DISTANCE BETWEEN VEHICLES MAY INCREASE FROM THE ATTENUATOR'S ROLL AHEAD BASED ON TERRAIN, SIGHT DISTANCE, AND OTHER FACTORS. WHENEVER ADEQUATE STOPPING SIGHT DISTANCE EXISTS TO THE REAR, SHADOW VEHICLES SHOULD MAINTAIN THE MINIMUM DISTANCE FROM THE WORK VEHICLE AND PROCEED AT THE SAME SPEED AS THE WORK VEHICLE. SHADOW VEHICLES SHOULD SLOW DOWN IN ADVANCE OF VERTICAL OR HORIZONTAL CURVES THAT RESTRICT SIGHT DISTANCE.

2 ALIGN LEFT SIDE OF SHADOW VEHICLE WITH EDGE OF WORK AREA.

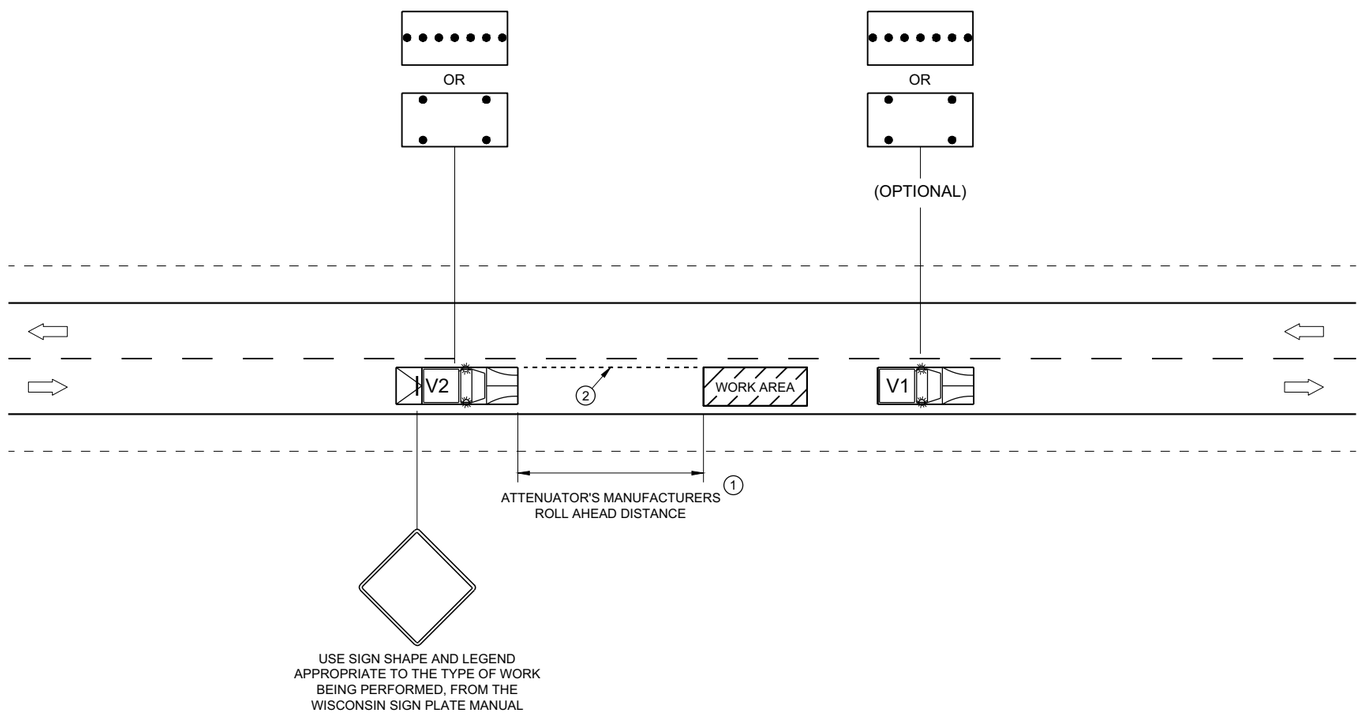

TRAFFIC CONTROL, MOBILE OPERATIONS ON AN UNDIVIDED ROADWAY

STATE OF WISCONSIN
DEPARTMENT OF TRANSPORTATION

APPROVED
February 2021 — DATE
/S/ Andrew Heidtke — STATEWIDE WORK ZONE T SAFETY ENGINEER
FHWA

6

SDD 15D51 - 01

DIVISION 1 - STH 66

STATION	REAL STATION	DISTANCE	AREA (SE) CUT	AREA (SE) SALVAGED/UNUSABLE PAVEMENT MATERIAL	AREA (SE) EILL	INCREMENTAL VOL (CY) (UNADJUSTED) CUT NOTE 1	INCREMENTAL VOL (CY) (UNADJUSTED) SALVAGED/UNUSABLE PAVEMENT MATERIAL NOTE 2	INCREMENTAL VOL (CY) (UNADJUSTED) FILL NOTE 3	CUMULATIVE VOL (CY) CUT 1.00 NOTE 1	CUMULATIVE VOL (CY) EXPANDED EILL 1.25	CUMULATIVE VOL (CY) MASS ORDINATE NOTE 8
690+17.637	69017.64	0.00	0.00	0.00	0.00	0	0	0	0	0	0
690+50	69050.00	32.36	12.80	0.00	13.23	8	0	8	8	10	-2
691+00	69100.00	50.00	17.08	0.00	8.74	28	0	20	36	35	1
691+50	69150.00	50.00	18.42	0.00	16.98	33	0	24	69	65	4
691+63.42	69163.42	13.42	17.25	0.00	23.30	9	0	10	78	78	1
691+66.068	69166.07	2.65	17.04	0.00	24.23	2	0	2	80	80	0
691+88.42	69188.42	22.35	16.76	0.00	13.20	14	0	15	94	99	-5
691+91.069	69191.07	2.65	16.68	0.00	12.18	2	0	1	96	100	-4
692+00	69200.00	8.93	22.23	0.00	8.11	6	0	3	102	104	-2
692+13.416	69213.42	13.42	22.27	0.00	6.88	11	0	4	113	109	4
692+16.07	69216.07	2.65	22.74	0.00	6.06	2	0	1	115	110	5
692+50	69250.00	33.93	24.95	0.00	1.80	30	0	5	145	116	29
693+00	69300.00	50.00	27.74	0.00	3.43	49	0	5	194	123	72
693+50	69350.00	50.00	13.94	0.00	11.29	39	0	14	233	140	93
694+50	69450.00	100.00	33.55	0.00	0.52	88	0	22	321	168	154
695+00	69500.00	50.00	39.91	0.00	0.00	68	0	0	389	168	222
695+50	69550.00	50.00	19.10	0.00	4.74	55	0	4	444	173	272
695+51.83	69551.83	1.83	19.18	0.00	4.83	1	0	0	445	173	273
695+51.86	69551.86	0.03	19.19	0.00	4.85	0	0	0	445	173	273
695+76.83	69576.83	24.97	17.14	0.00	8.03	17	0	6	462	180	282
695+76.86	69576.86	0.03	17.07	0.00	8.30	0	0	0	462	180	282
696+00	69600.00	23.14	16.76	0.00	15.54	14	0	10	476	193	284
696+01.83	69601.83	1.83	16.82	0.00	15.98	1	0	1	477	194	283
696+01.859	69601.86	0.03	16.82	0.00	15.99	0	0	0	477	194	283
696+50	69650.00	48.14	16.88	0.00	4.87	30	0	19	507	218	290
697+00	69700.00	50.00	17.28	0.00	0.44	32	0	5	539	224	315
697+50.27	69750.27	50.27	0.00	0.00	0.00	16	0	0	555	224	331

Notes:	
1 - CUT	CUT INCLUDES SALVAGED/UNUSABLE PAVEMENT MATERIAL
2 - SALVAGED/UNUSABLE PAVEMENT MATERIAL	THIS DOES NOT SHOW UP IN CROSS SECTIONS
3 - FILL	DOES NOT INCLUDE UNUSABLE PAVEMENT EXC VOLUME
8 - MASS ORDINATE	CUT - SALVAGED PAVT - (FILL * FILL FACTOR)

DIVISION 2 - CATTLE PASS

STATION	REAL STATION	DISTANCE	AREA (SF) CUT	AREA (SF) EILL	INCREMENTAL VOL (CY) (UNADJUSTED) CUT NOTE 1	INCREMENTAL VOL (CY) (UNADJUSTED) EILL NOTE 3	CUMULATIVE VOL (CY) CUT 1.00 NOTE 1	CUMULATIVE VOL (CY) EXPANDED EILL 1.25	CUMULATIVE VOL (CY) MASS ORDINATE NOTE 8
11+14	1114.00	0.00	0.00	0.00	0	0	0	0	0
11+25	1125.00	11.00	1.57	0.00	0	0	0	0	0
11+50	1150.00	25.00	6.75	0.00	4	0	4	0	4
11+75	1175.00	25.00	16.92	0.00	11	0	15	0	15
12+00	1200.00	25.00	32.74	0.00	23	0	38	0	38
12+25	1225.00	25.00	48.87	0.00	38	0	76	0	76
12+50	1250.00	25.00	63.66	0.00	52	0	128	0	128
12+75	1275.00	25.00	81.43	0.00	67	0	195	0	195
13+00	1300.00	25.00	99.38	0.00	84	0	279	0	279
13+01	1301.00	1.00	99.42	0.00	4	0	283	0	283
14+24	1424.00	0.00	113.91	0.00	0	0	283	0	283
14+25	1425.00	1.00	114.18	0.00	4	0	287	0	287
14+50	1450.00	25.00	78.34	0.00	89	0	376	0	376
14+75	1475.00	25.00	50.78	0.00	60	0	436	0	436
15+00	1500.00	25.00	22.47	0.00	34	0	470	0	470
15+25	1525.00	25.00	3.97	0.00	12	0	482	0	482
15+35	1535.00	10.00	0.00	0.00	1	0	483	0	483

Notes:	
1 - CUT	CUT INCLUDES SALVAGED/UNUSABLE PAVEMENT MATERIAL
3 - FILL	DOES NOT INCLUDE UNUSABLE PAVEMENT EXC VOLUME
8 - MASS ORDINATE	CUT - (FILL * FILL FACTOR)

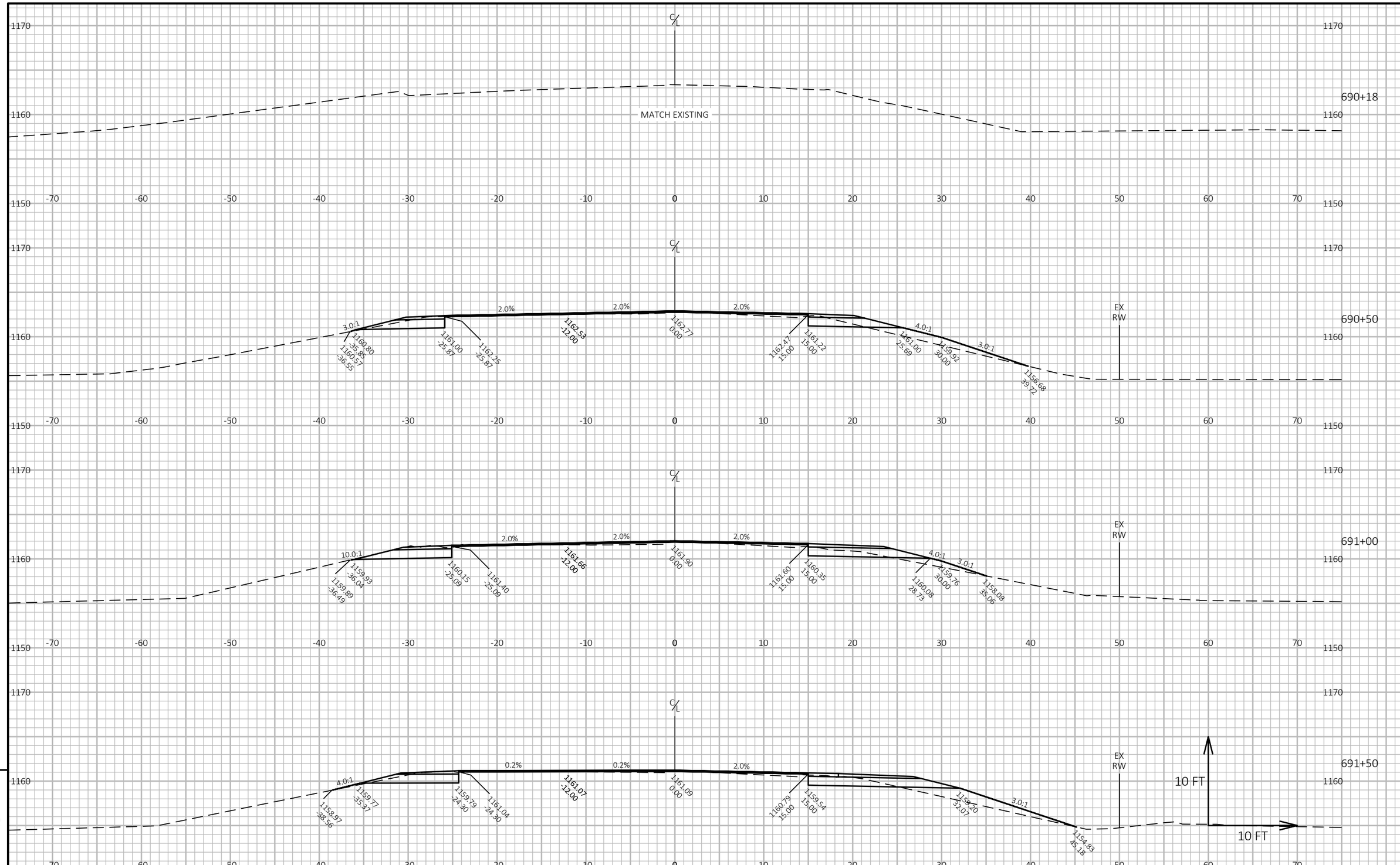

PROJECT NO: 6280-00-60	HWY: STH 66	COUNTY: PORTAGE	CROSS SECTIONS: STH 66	SHEET 122	E

FILE NAME : C:\OD\CORRE, INC\PROJECTS - WI-NC REGION\6280-00-30_STH 66_PORTAGE CO\500_CADD\501_C3D_2018\62800030\SHEETSPLAN\090201-XS_STH 66.DWG
LAYOUT NAME - 01
PLOT DATE : 5/5/2022 12:50 PM PLOT BY : ANDREW PETERSON, PE PLOT NAME : PLOT SCALE : 1 IN:10 FT HORZ. / 1 IN:10 FT VERT.

WISDOT/CADDS SHEET 49

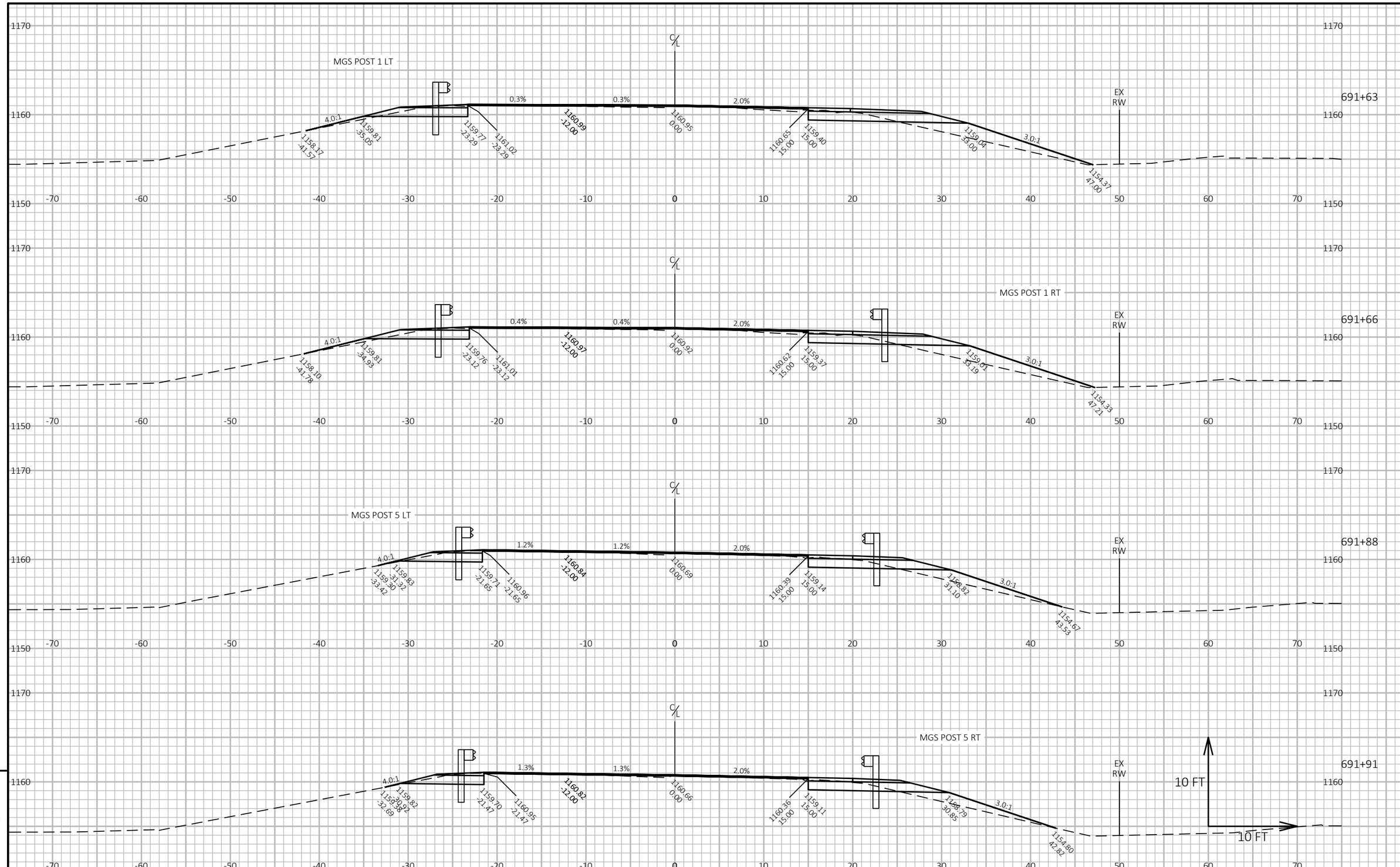

9

9

PROJECT NO: 6280-00-60	HWY: STH 66	COUNTY: PORTAGE	CROSS SECTIONS: STH 66	SHEET 123	E

FILE NAME : C:\OD\CORRE, INC\PROJECTS - WI-NC REGION\6280-00-30_STH 66_PORTAGE CO\500_CADD\501_C3D_2018\62800030\SHEETSPLAN\090201-XS_STH 66.DWG
LAYOUT NAME - 02
PLOT DATE : 5/5/2022 12:50 PM
PLOT BY : ANDREW PETERSON, PE
PLOT NAME :
PLOT SCALE : 1 IN:10 FT HORZ. / 1 IN:10 FT VERT.
WISDOT/CADDS SHEET 49

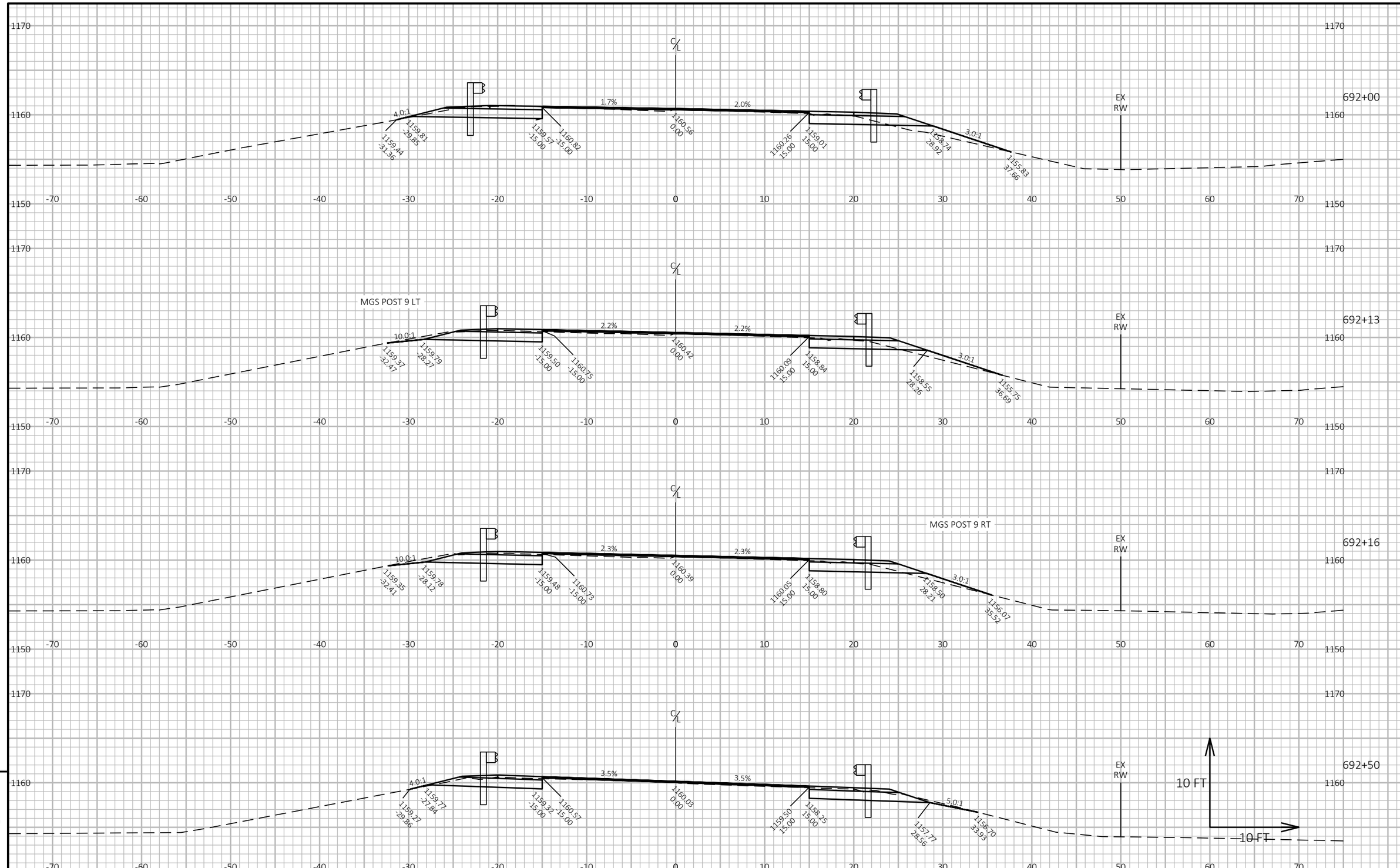

9

9

PROJECT NO: 6280-00-60	HWY: STH 66	COUNTY: PORTAGE	CROSS SECTIONS: STH 66	SHEET 124	E

FILE NAME : C:\OD\CORRE, INC\PROJECTS - WI-NC REGION\6280-00-30_STH 66_PORTAGE CO\500_CADD\501_C3D_2018\62800030\SHEETSPLAN\090201-XS_STH 66.DWG
LAYOUT NAME - 03
PLOT DATE : 5/5/2022 12:50 PM
PLOT BY : ANDREW PETERSON, PE
PLOT NAME :
PLOT SCALE : 1 IN:10 FT HORZ. / 1 IN:10 FT VERT.

WISDOT/CADDS SHEET 49

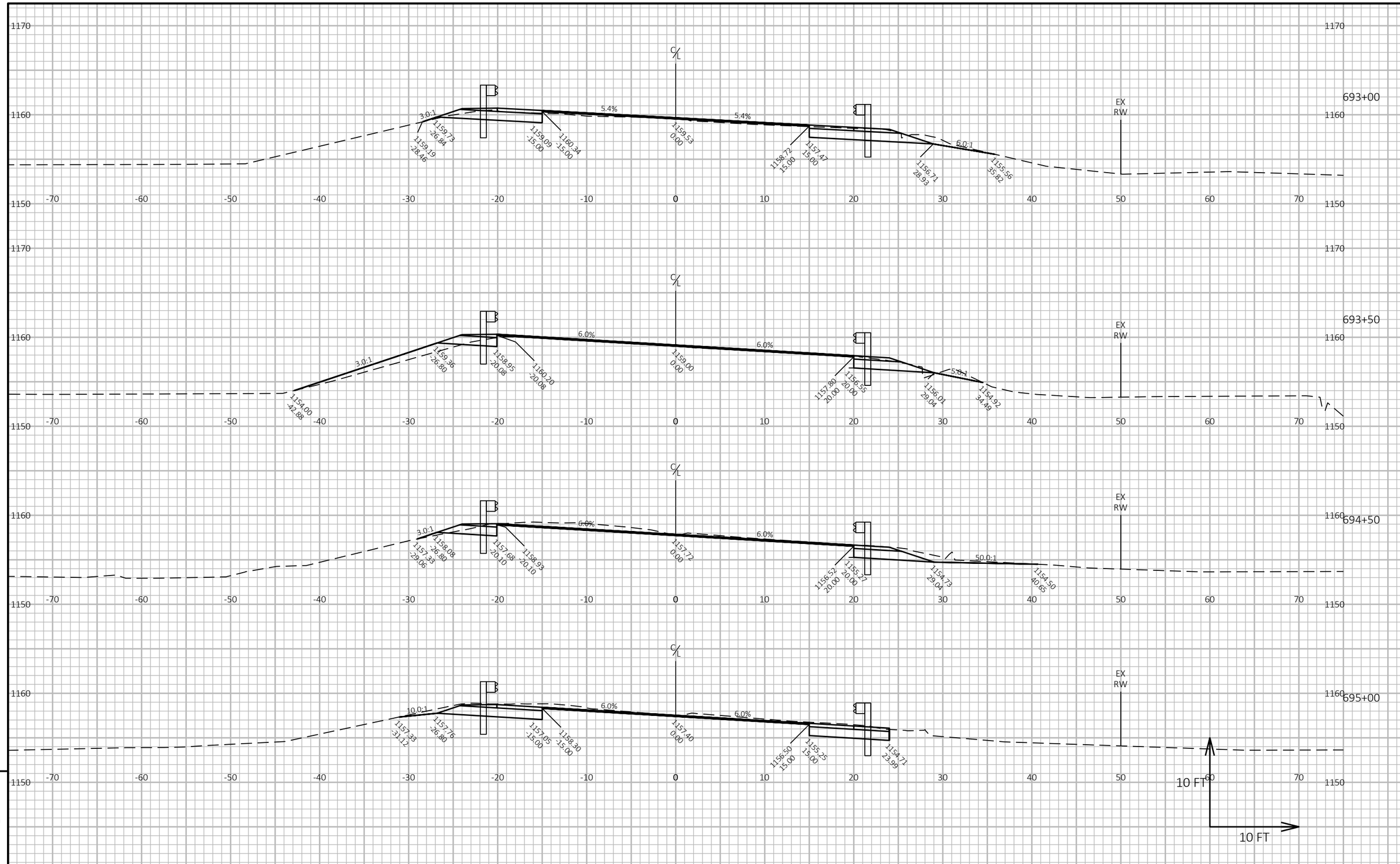

9

9

PROJECT NO: 6280-00-60	HWY: STH 66	COUNTY: PORTAGE	CROSS SECTIONS: STH 66	SHEET 125	E

FILE NAME : C:\OD\CORRE, INC\PROJECTS - WI-NC REGION\6280-00-30_STH 66_PORTAGE CO\500_CADD\501_C3D_2018\62800030\SHEETSPLAN\090201-XS_STH 66.DWG
LAYOUT NAME - 04
PLOT DATE : 5/5/2022 12:50 PM
PLOT BY : ANDREW PETERSON, PE
PLOT NAME :
PLOT SCALE : 1 IN:10 FT HORZ. / 1 IN:10 FT VERT.
WISDOT/CADDS SHEET 49

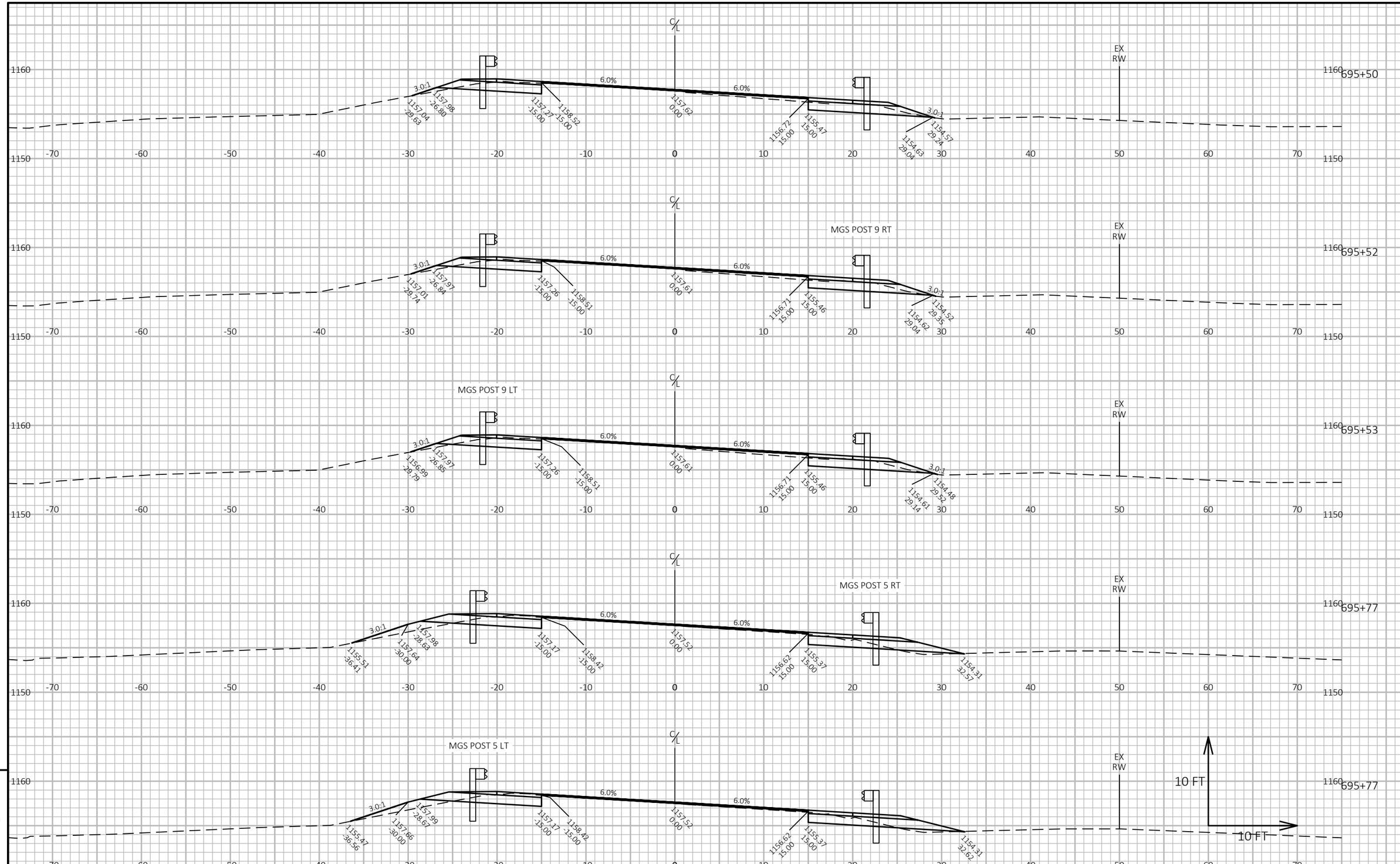

PROJECT NO: 6280-00-60	HWY: STH 66	COUNTY: PORTAGE	CROSS SECTIONS: STH 66	SHEET 126	E

FILE NAME : C:\OD\CORRE, INC\PROJECTS - WI-NC REGION\6280-00-30_STH 66_PORTAGE CO\500_CADD\501_C3D_2018\62800030\SHEETSPLAN\090201-XS_STH 66.DWG
LAYOUT NAME - 05
PLOT DATE : 5/5/2022 12:51 PM
PLOT BY : ANDREW PETERSON, PE
PLOT NAME :
PLOT SCALE : 1 IN:10 FT HORZ. / 1 IN:10 FT VERT.
WISDOT/CADDS SHEET 49

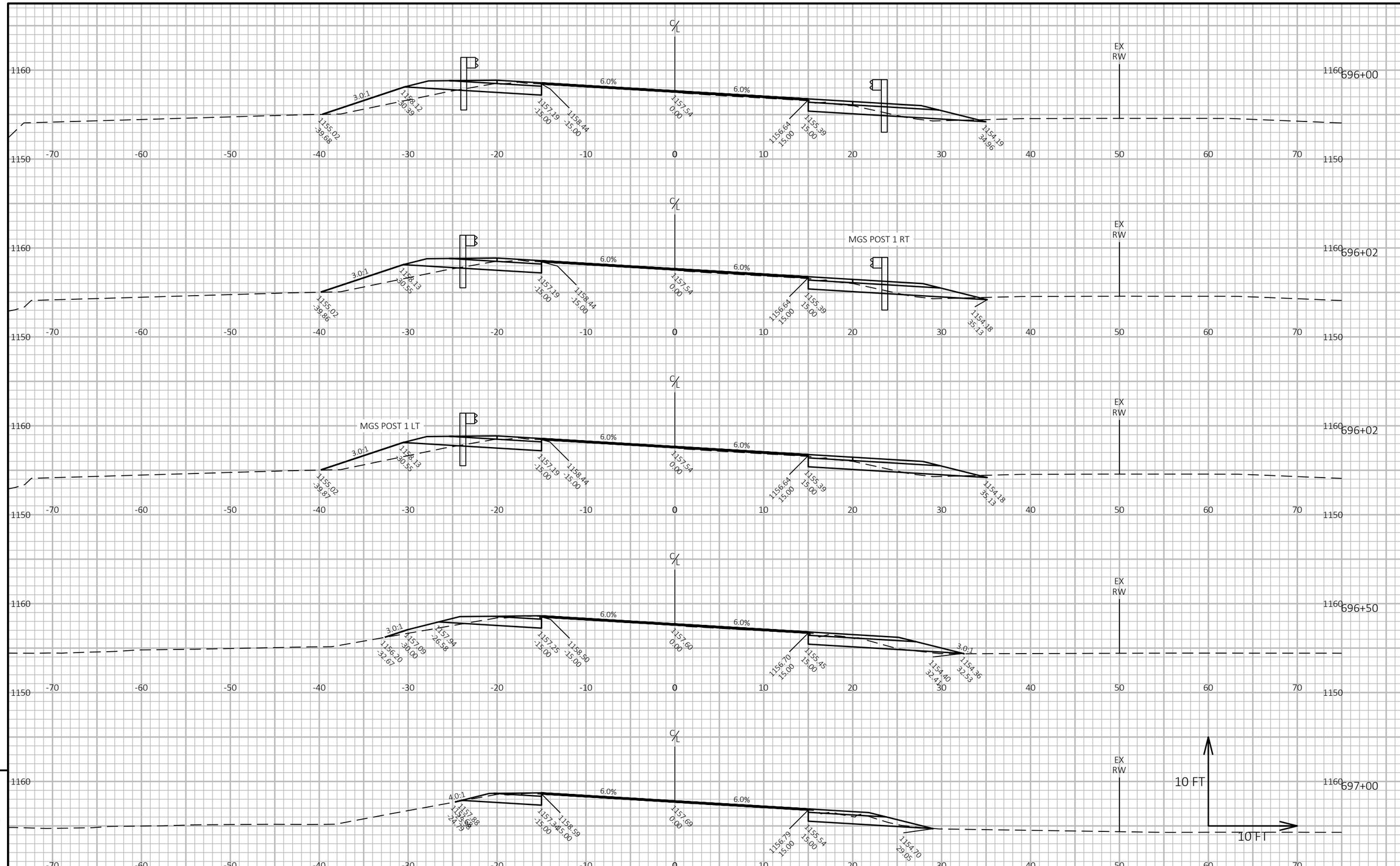

PROJECT NO: 6280-00-60	HWY: STH 66	COUNTY: PORTAGE	CROSS SECTIONS: STH 66	SHEET 127	E

FILE NAME : C:\OD\CORRE, INC\PROJECTS - WI-NC REGION\6280-00-30_STH 66_PORTAGE CO\500_CADD\501_C3D_2018\62800030\SHEETSPLAN\090201-XS_STH 66.DWG
LAYOUT NAME - 06
PLOT DATE : 5/5/2022 12:51 PM PLOT BY : ANDREW PETERSON, PE PLOT NAME : PLOT SCALE : 1 IN:10 FT HORZ. / 1 IN:10 FT VERT.

WISDOT/CADDS SHEET 49

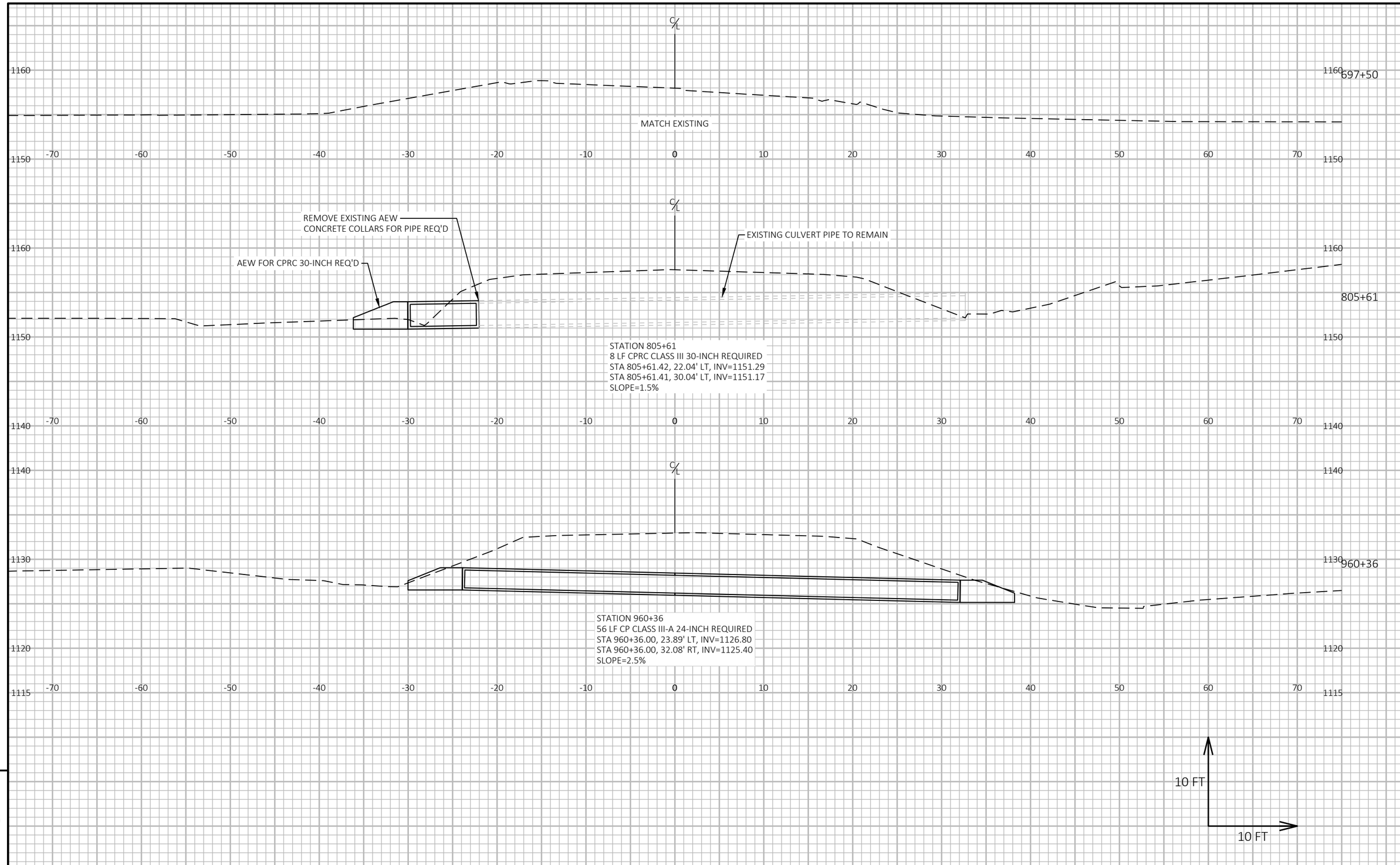

9

9

PROJECT NO: 6280-00-60	HWY: STH 66	COUNTY: PORTAGE	CROSS SECTIONS: STH 66	SHEET 128	E

FILE NAME : C:\OD\CORRE, INC\PROJECTS - WI-NC REGION\6280-00-30_STH 66_PORTAGE CO\500_CADD\501_C3D_2018\62800030\SHEETSPLAN\090201-XS_STH 66.DWG
LAYOUT NAME - 07
PLOT DATE : 5/5/2022 12:51 PM
PLOT BY : ANDREW PETERSON, PE
PLOT NAME :
PLOT SCALE : 1 IN:10 FT HORZ. / 1 IN:10 FT VERT.
WISDOT/CADDS SHEET 49

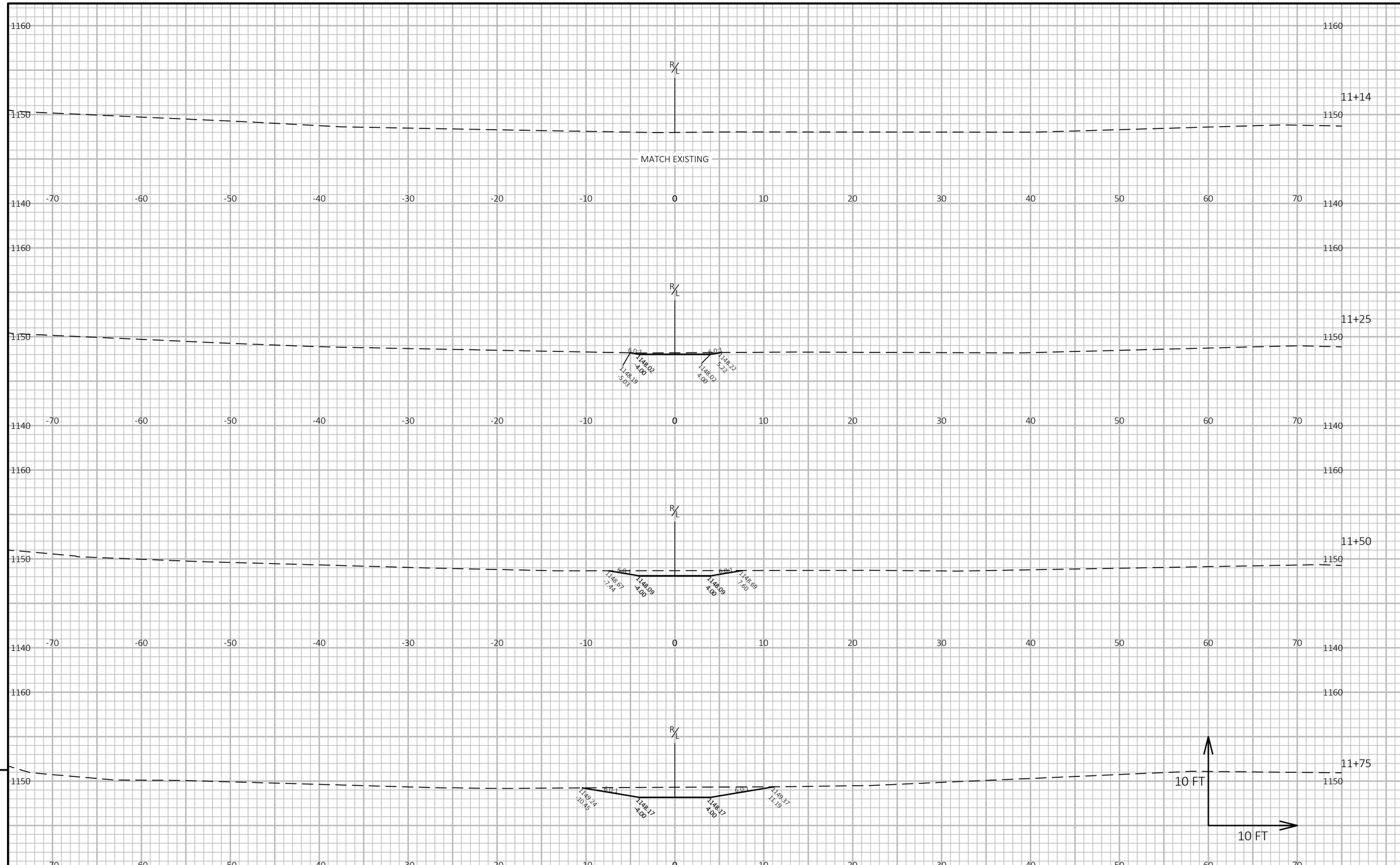

PROJECT NO: 6280-00-60	HWY: STH 66	COUNTY: PORTAGE	CROSS SECTIONS: CATTLE PASS	SHEET 129	E

FILE NAME : C:\OD\CORRE, INC\PROJECTS - WI-NC REGION\6280-00-30_STH 66_PORTAGE CO\500_CADD\501_C3D_2018\62800030\SHEETSPLAN\090202-XS_CATTLEPASS.DWG
LAYOUT NAME - 01
PLOT DATE : 5/5/2022 12:51 PM PLOT BY : ANDREW PETERSON, PE PLOT NAME : PLOT SCALE : 1 IN:10 FT HORZ. / 1 IN:10 FT VERT.

WISDOT/CADDS SHEET 49

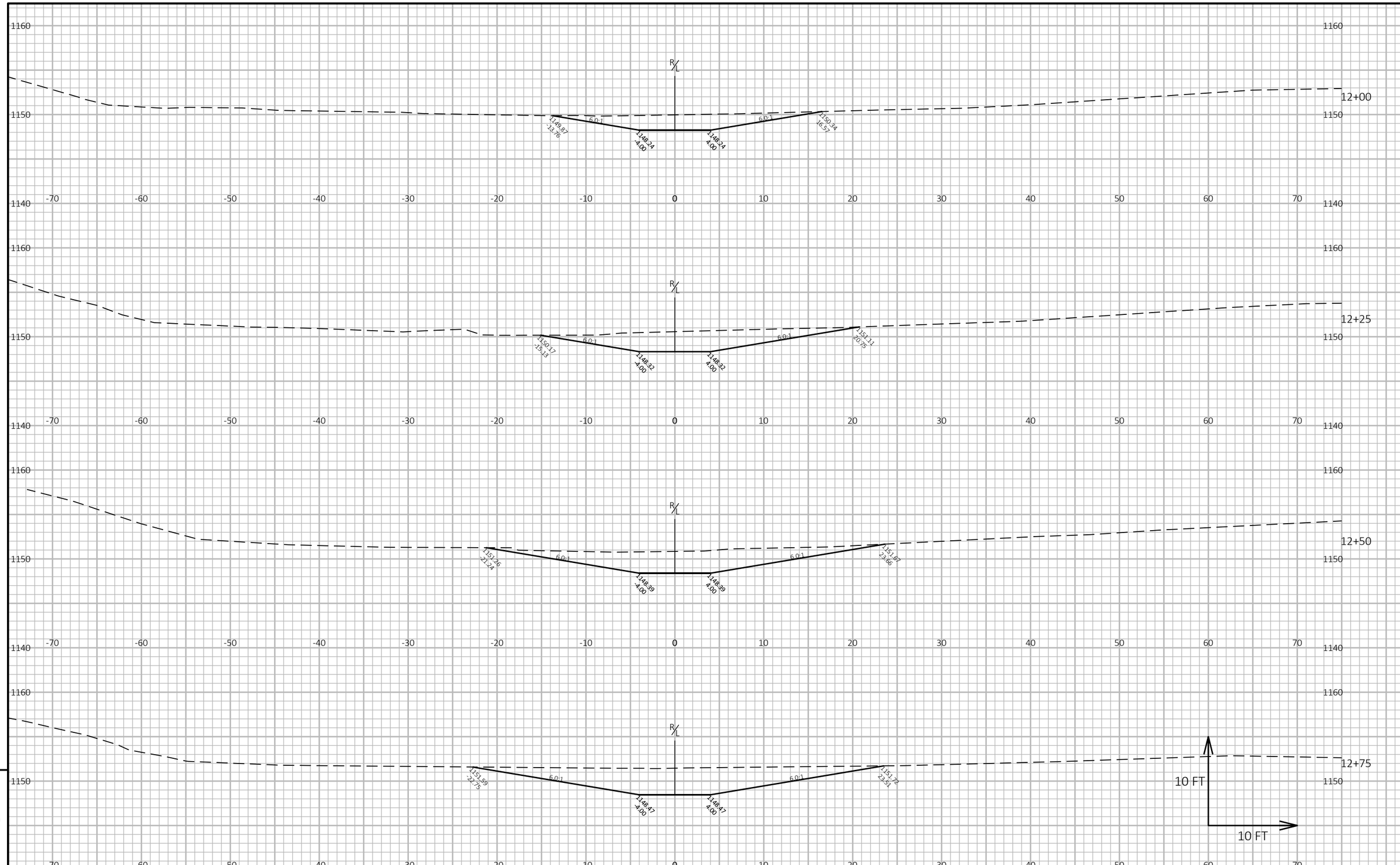

9

9

PROJECT NO: 6280-00-60	HWY: STH 66	COUNTY: PORTAGE	CROSS SECTIONS: CATTLE PASS	SHEET 130	E

FILE NAME : C:\OD\CORRE, INC\PROJECTS - WI-NC REGION\6280-00-30_STH 66_PORTAGE CO\500_CADD\501_C3D_2018\62800030\SHEETSPLAN\090202-XS_CATTLEPASS.DWG
LAYOUT NAME - 02
PLOT DATE : 5/5/2022 12:51 PM
PLOT BY : ANDREW PETERSON, PE
PLOT NAME :
PLOT SCALE : 1 IN:10 FT HORZ. / 1 IN:10 FT VERT.
WISDOT/CADDS SHEET 49

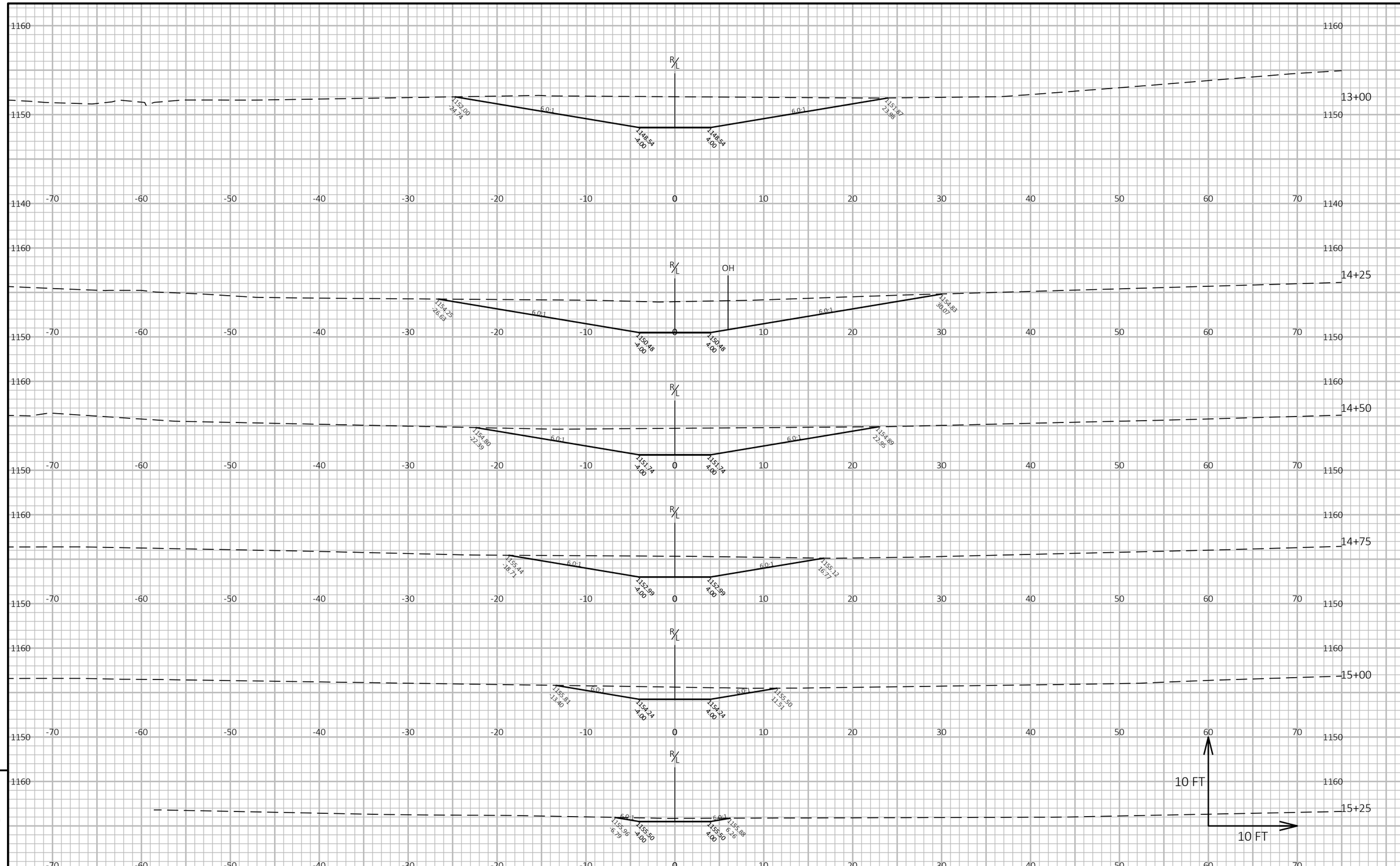

PROJECT NO: 6280-00-60	HWY: STH 66	COUNTY: PORTAGE	CROSS SECTIONS: CATTLE PASS	SHEET 131	E

FILE NAME : C:\OD\CORRE, INC\PROJECTS - WI-NC REGION\6280-00-30_STH 66_PORTAGE CO\500_CADD\501_C3D_2018\62800030\SHEETSPLAN\090202-XS_CATTLEPASS.DWG
LAYOUT NAME - 03
PLOT DATE : 5/5/2022 12:51 PM PLOT BY : ANDREW PETERSON, PE PLOT NAME : PLOT SCALE : 1 IN:10 FT HORZ. / 1 IN:10 FT VERT.

WISDOT/CADDS SHEET 49

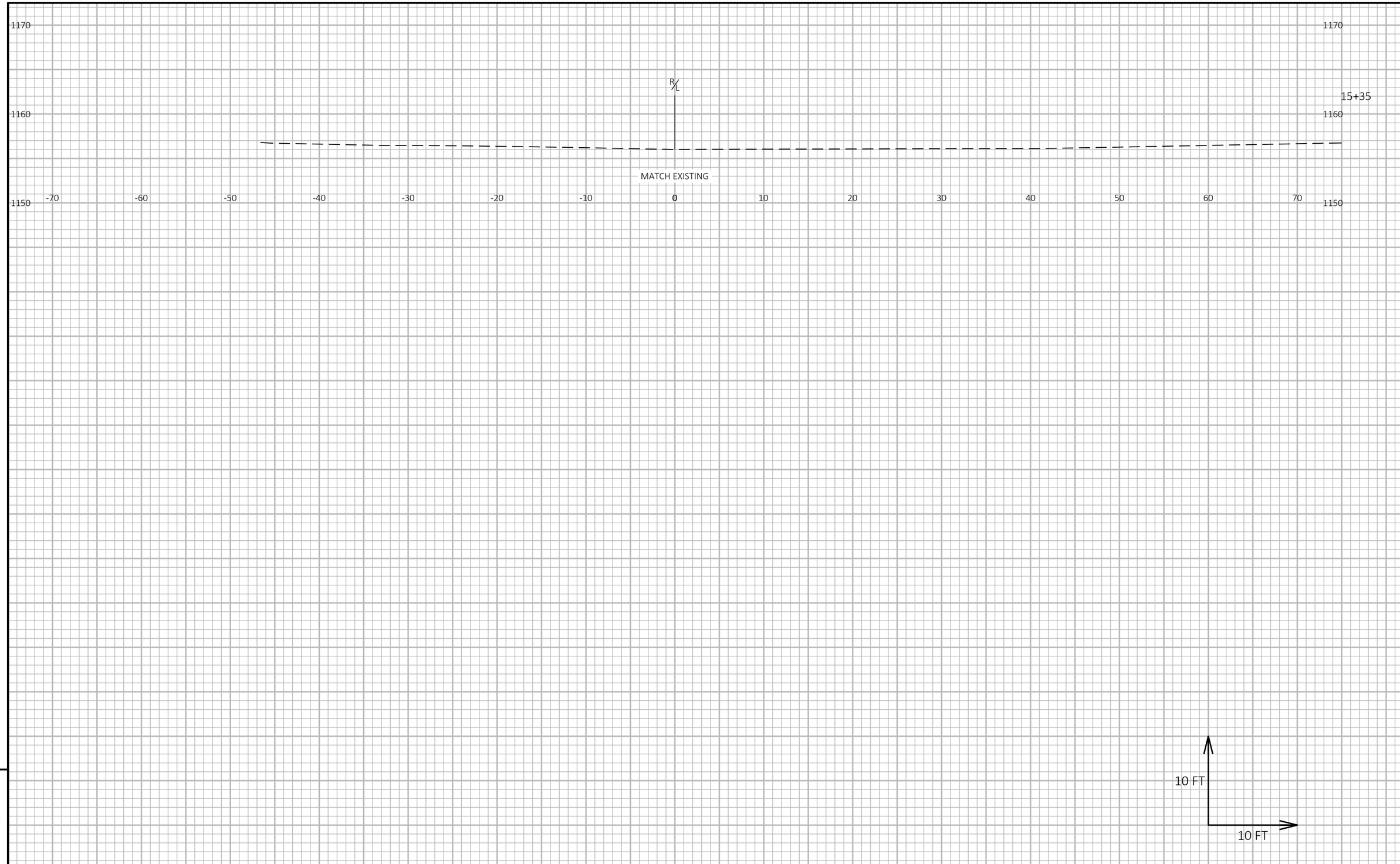

9

9

PROJECT NO: 6280-00-60	HWY: STH 66	COUNTY: PORTAGE	CROSS SECTIONS: CATTLE PASS	SHEET 132	E

FILE NAME : C:\OD\CORRE, INC\PROJECTS - WI-NC REGION\6280-00-30_STH 66_PORTAGE CO\500_CADD\501_C3D_2018\62800030\SHEETSPLAN\090202-XS_CATTLEPASS.DWG
LAYOUT NAME - 04
PLOT DATE : 5/5/2022 12:51 PM
PLOT BY : ANDREW PETERSON, PE
PLOT NAME :
PLOT SCALE : 1 IN:10 FT HORZ. / 1 IN:10 FT VERT.
WISDOT/CADDS SHEET 49

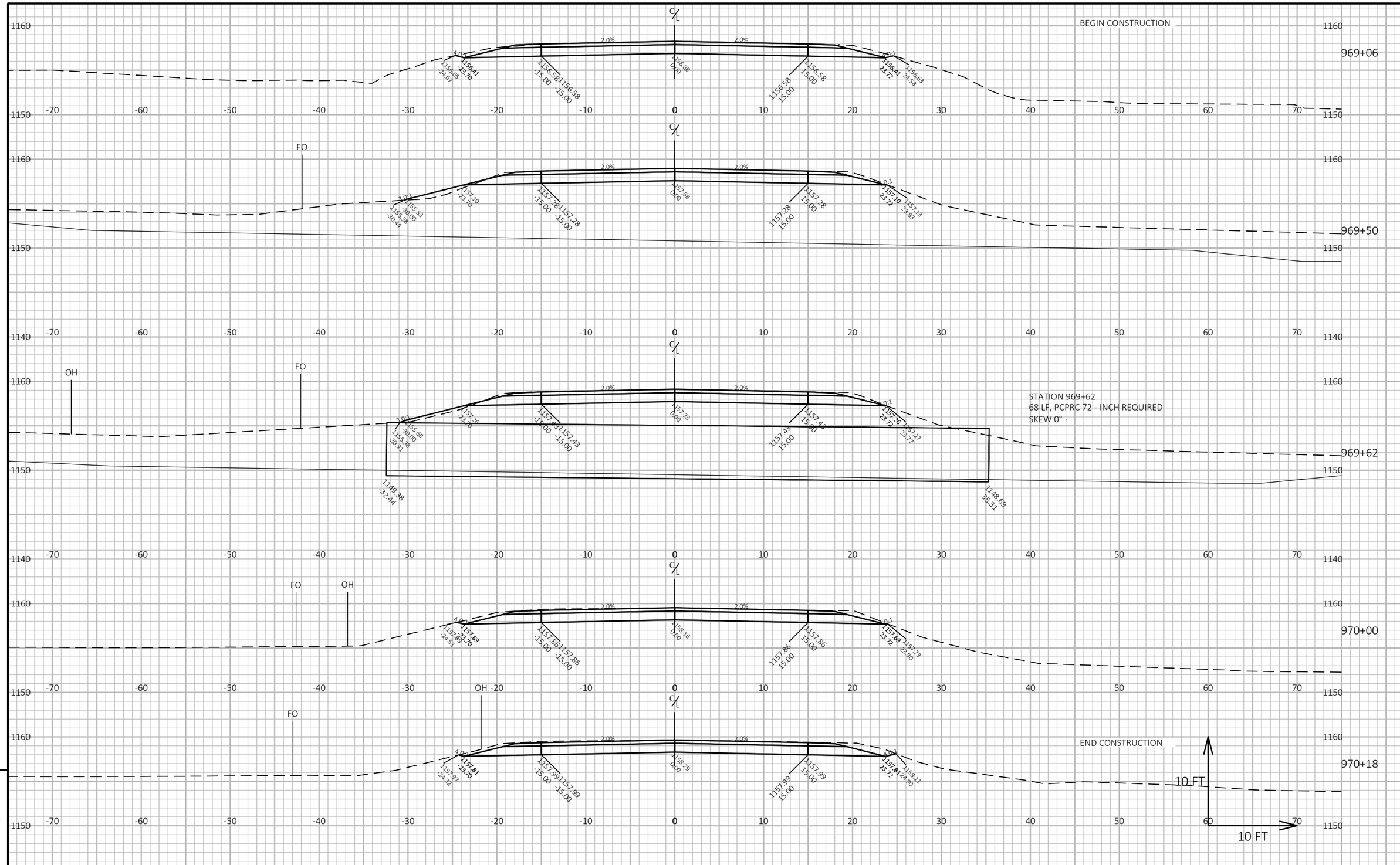

PROJECT NO: 6280-00-60	HWY: STH 66	COUNTY: PORTAGE	CROSS SECTIONS: CATTLE PASS	SHEET 133	E

FILE NAME : C:\OD\CORRE, INC\PROJECTS - WI-NC REGION\6280-00-30_STH 66_PORTAGE CO\500_CADD\501_C3D_2018\62800030\SHEETSPLAN\090202-XS_CATTLEPASS.DWG
LAYOUT NAME - 05
PLOT DATE : 6/2/2022 6:34 AM PLOT BY : BOBBY JONES PLOT NAME : **PLOT SCALE :** 1 IN:10 FT HORZ. / 1 IN:10 FT VERT.

Wisconsin Department of Transportation

Dedicated people creating transportation solutions through innovation and exceptional service.

http://www.dot.wisconsin.gov