MAD

JANUARY 2023

PROJECT ID: 5235-03-70

WITH: N/A

COUNTY: GRANT

06

ORDER OF SHEETS

TOTAL SHEETS = 418

STATE PROJECT	FEDERAL PROJECT	
	PROJECT	CONTRACT
5235-03-70	WISC 2023140	1

STATE OF WISCONSIN
DEPARTMENT OF TRANSPORTATION

PLAN OF PROPOSED IMPROVEMENT

HAZEL GREEN - PLATTEVILLE

N LIMIT CUBA CITY TO BUS 151

STH 80
GRANT COUNTY

STATE PROJECT NUMBER
5235-03-70

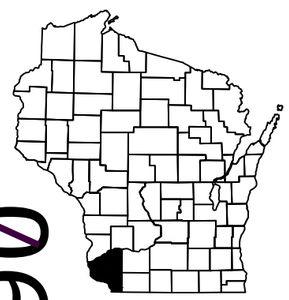

N

DESIGN DESIGNATION

A.A.D.T.	2023	=	6,300
A.A.D.T.	2044	=	7,220
D.H.V.		=	774
D.D.		=	60/40
T.		=	20.2%
DESIGN SPEED		=	60 MPH
ESALS		=	2,4000,000

CONVENTIONAL SYMBOLS

PLAN

CORPORATE LIMITS
PROPERTY LINE
LOT LINE
LIMITED HIGHWAY EASEMENT
EXISTING RIGHT OF WAY
PROPOSED OR NEW R/W LINE
SLOPE INTERCEPT
REFERENCE LINE (300'EB')
EXISTING CULVERT
PROPOSED CULVERT (Box or Pipe)
COMBUSTIBLE FLUIDS (CAUTION)
MARSH AREA
WOODED OR SHRUB AREA

PROFILE

GRADE LINE
ORIGINAL GROUND
MARSH OR ROCK PROFILE (To be noted as such) (ROCK)
SPECIAL DITCH (LABEL)
GRADE ELEVATION (95.36)
CULVERT (Profile View)

UTILITIES

ELECTRIC (E)
FIBER OPTIC (FO)
GAS (G)
SANITARY SEWER (SAN)
STORM SEWER (SS)
TELEPHONE (T)
WATER (W)
UTILITY PEDESTAL
POWER POLE
TELEPHONE POLE

BRIDGE STRUCTURE B-22-7

BOX CULVERT C-22-14

END PROJECT 5235-03-70
STA 959+97.02

EXCEPTION TO NET ℄ LENGTH
STA 885+57.78 TO STA 894+40.27
B-22-203

BEGIN PROJECT 5235-03-70
STA 499+22.20
X=893956.87
Y=438565.29

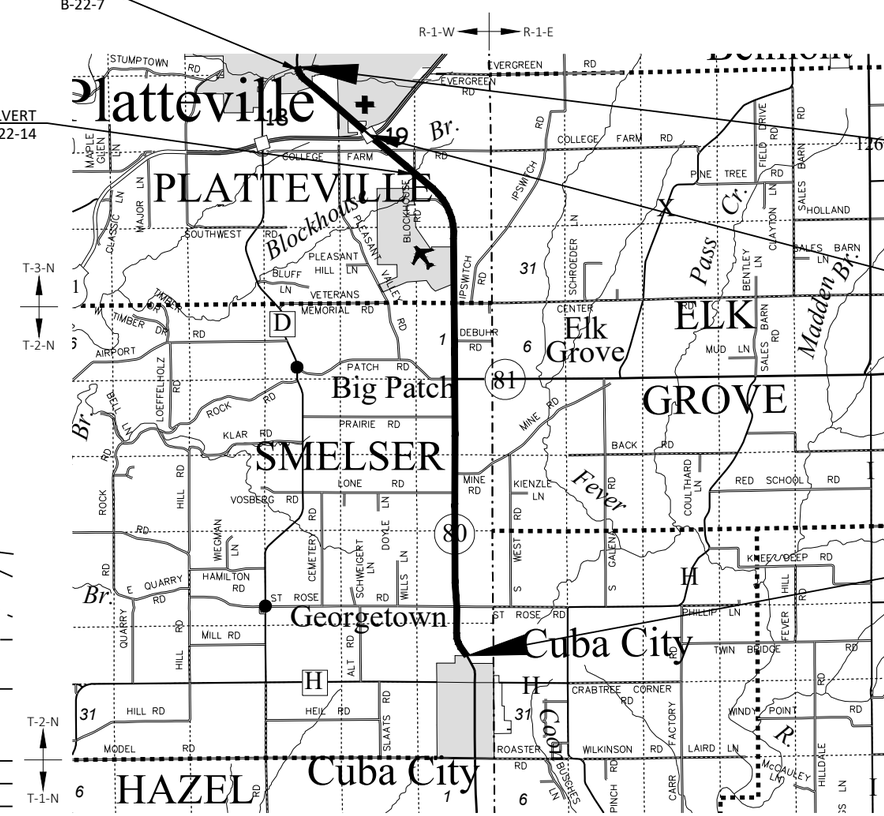

LAYOUT

SCALE 0 2 MI

TOTAL NET LENGTH OF CENTERLINE = 8.557 MILES

HORIZONTAL POSITIONS SHOWN ON THIS PLAN ARE WISCONSIN COORDINATE REFERENCE SYSTEM (WISCRS), GRANT COUNTY, NAD83 (2011), IN U.S. SURVEY FEET. POSITIONS SHOWN ARE GRID COORDINATES, GRID BEARINGS, AND GRID DISTANCES. GRID DISTANCES ARE THE SAME AS GROUND DISTANCES. ELEVATIONS ARE REFERENCED TO NAVD 88 (2012). GPS DERIVED ELEVATIONS ARE BASED ON GEOID 12A.

ORIGINAL PLANS PREPARED BY

JT ENGINEERING, INC Consultant Services

WISCONSIN BRADLEY R. GROH E-41411 MADISON WI PROFESSIONAL ENGINEER

DATE: 7/7/2022 (Professional Engineer Signature)

STATE OF WISCONSIN
DEPARTMENT OF TRANSPORTATION

PREPARED BY

Surveyor	JT ENGINEERING, INC,
Designer	BRADLEY R. GROH, PE
Project Manager	DEREK POTTER, PE
Regional Examiner	SW REGION
Regional Supervisor	CHAD SCHROEDER, PE

APPROVED FOR THE DEPARTMENT

DATE: 7/8/22 (Signature)

E

GENERAL NOTES

HMA PAVEMENT 4 MT 58-28 S SHALL BE PLACED IN EQUAL 1.75" LAYERS IN MILL AND OVERLAY SECTIONS. HMA PAVEMENT AT THE STH 80/STH 81 ROUNDABOUT SHALL BE PLACED WITH A 3.25" LOWER LAYER OF 3 MT 58-28 S AND A 2.25" UPPER LAYER OF 4 MT 58-28 H.

HMA PAVEMENT WEIGHT CALCULATIONS ARE BASED ON 112 LB/SY/IN.

THE CONTRACTOR'S PAVING OPERATIONS SHALL BE CONSISTENT WITH THE PLAN TYPICAL SECTIONS AND CONSTRUCTED TO PREVENT HMA LONGITUDINAL JOINTS FROM BEING LOCATED WITHIN A DRIVING, TURNING, PASSING, OR PARKING LANE.

TACK COAT APPLICATION RATES ARE BASED ON 0.07 GAL/SY ON MILLED SURFACES AND 0.05 GAL/SY BETWEEN LAYERS OF HMA PAVEMENT.

EROSION CONTROL ITEMS IN THE MISCELLANEOUS QUANTITIES ARE SUGGESTED. EXACT LOCATIONS WILL BE DETERMINED BY THE ENGINEER IN THE FIELD. MAINTAIN EROSION CONTROL ITEMS UNTIL SUCH A TIME AS THE ENGINEER DETERMINES THE MEASURE IS NO LONGER NECESSARY. PROTECT WETLANDS AND OTHER WATERWAYS THAT ARE PRESENT WITHIN THE PROJECT LIMITS.

NO TREES OR SHRUBS ARE TO BE REMOVED WITHOUT THE APPROVAL OF THE ENGINEER.

THE LOCATIONS OF EXISTING AND PROPOSED UTILITY INSTALLATIONS AS SHOWN ON THE PLAN ARE APPROXIMATE. THERE ARE UTILITY FACILITIES WITHIN THE PROJECT AREA THAT ARE NOT SHOWN ON THE PLANS.

THE CONTRACTOR SHALL COORDINATE THEIR CONSTRUCTION ACTIVITIES WITH A CALL TO DIGGERS HOTLINE AND/OR A DIRECT CALL TO THE UTILITIES THAT HAVE FACILITIES IN THE AREA. NOT ALL UTILITIES ARE MEMBERS OF DIGGERS HOTLINE.

WETLANDS, WATERWAYS, AND OTHER ENVIRONMENTALLY SENSITIVE AREAS SHALL BE PROTECTED AT ALL TIMES. DO NOT STORE EQUIPMENT OR MATERIALS NEAR THESE SITES.

PLACE SALVAGED TOPSOIL OR TOPSOIL IN ALL GRADED AREAS AS DESIGNATED BY THE ENGINEER IMMEDIATELY AFTER GRADING HAS BEEN COMPLETED. SEED, MULCH AND FERTILIZE ALL AREAS 5 DAYS AFTER PLACEMENT OF SALVAGED TOPSOIL OR TOPSOIL.

EXACT LOCATIONS AND WIDTHS OF DRIVEWAYS AND PRIVATE FIELD ENTRANCES SHALL BE DETERMINED BY THE ENGINEER IN THE FIELD.

PRIOR TO THE PLACEMENT OF THE BEAM GUARD AND BEAM GUARD TERMINALS, THE SHOULDERS SHALL BE IN PLACE, SHAPED AND COMPACTED.

A 20' VERTICAL CLEARANCE IS REQUIRED FROM HIGHEST POINT ON THE PAVEMENT SURFACE TO THE LOWEST POINT OF THE OBSTACLE

PROTECT HMOD DH8237 AT APPROXIMATELY STA 559+25 RT AND HMOD DH8238 AT APPROXIMATELY STA 661+00 LT. NO GRADING IS ANTICIPATED IN THESE AREAS, BUT IF ANY DISTURBANCE OCCURS DURING THE DURATION OF THE PROJECT FOR ANY REASON, IMMEDIATELY NOTIFY WISCONSIN HEIGHT MODERNIZATION PROGRAM MANAGER JACOB ROCKWEILER AT 608-516-6362 OR JACOB.ROCKWEILER@DOT.WI.GOV.

STANDARD ABBREVIATIONS

AADT	ANNUAL AVERAGE DAILY TRAFFIC
ABUT	ABUTMENT
AC	ACRE
ADT	AVERAGE DAILY TRAFFIC
AGG	AGGREGATE
ASPH	ASPHALTIC
AVG	AVERAGE
BK	BACK
BM	BENCH MARK
C & G	CURB AND CUTTER
CE	COMMERCIAL ENTRANCE
CH	CHORD
CL OR C/L	CENTER LINE
CO	COUNTY
CONC	CONCRETE
CPCS	CULVERT PIPE CORRUGATED STEEL
CPRC	CULVERT PIPE REINFORCED CONCRETE
CTH	COUNTY TRUNK HIGHWAY
CULV	CULVERT
CWT	HUNDREDWEIGHT
CY	CUBIC YARD
D	DEGREE OF CURVE
DD	DIRECTIONAL DISTRIBUTION
DHV	DESIGN HOURLY VOLUME
DWY	DRIVEWAY
E	EAST
EAT	ENERGY ABSORBING TERMINAL
EB	EASTBOUND
EBS	EXCAVATION BELOW SUBGRADE
ELEC	ELECTRIC
EL OR ELEV	ELEVATION
EMB	EMBANKMENT
ESALS	EQUIVALENT SINGLE AXLE LOADS
EXC	EXCAVATION
EXIST	EXISTING
FE	FIELD ENTRANCE
FL	FLOW LINE
FT	FOOT
FTG	FOOTING
HMA	HOT MIX ASPHALT
HES	HIGH EARLY STRENGTH
HWY	HIGHWAY
HYD	HYDRANT
I	INTERSECTION ANGLE
IN	INCH
INL	INLET
INV	INVERT
IP	IRON PIPE OR PIN
JCT	JUNCTION
JT	JOINT
LT	LEFT
L	LENGTH OF CURVE
LB	POUND
LS	LUMP SUM
MAINT	MAINTENANCE
MAX	MAXIMUM
MB	MESSAGE BOARD
MGS	MIDWEST GUARDRAIL SYSTEM
MH	MANHOLE
MIN	MINIMUM
N	NORTH
NB	NORTHBOUND
NC	NORMAL CROWN
NOM	NOMINAL
NO	NUMBER
NOR	NORMAL
OBLIT	OBLITERATE
PAVT	PAVEMENT
PB	PULL BOX
PC	POINT OF CURVATURE
PCC	PORTLAND CEMENT CONCRETE
PCP	PIPE CATTLE PASS
PCPRC	PIPE CATTLE PASS REINFORCED CONCRETE
PE	PRIVATE ENTRANCE
PERM	PERMANENT
PI	POINT OF INTERSECTION
PL	PROPERTY LINE
PRC	POINT OF REVERSE CURVATURE
PSI	POUNDS PER SQUARE INCH
PT	POINT OF TANGENCY
PU	PIPE UNDERDRAIN
R	RADIUS
RD	ROAD
RDWY	ROADWAY
REINF	REINFORCEMENT
REQD	REQUIRED
RL OR R/L	REFERENCE LINE
RP	REFERENCE POINT
RR	RAILROAD
RT	RIGHT
R/W	RIGHT-OF-WAY
S	SOUTH
SALV	SALVAGED
SAN	SANITARY
SB	SOUTHBOUND
SDD	STANDARD DETAIL DRAWINGS
SEC	SECTION
SF	SQUARE FEET
SHLDR	SHOULDER
SS	STORM SEWER
STA	STATION
STD	STANDARD
STH	STATE TRUNK HIGHWAYS
SURF	SURFACE
SW	SIDEWALK
SY	SQUARE YARDS
T	TANGENT
T	TRUCKS (PERCENT OF)
TEMP	TEMPORARY
TLE	TEMPORARY LIMITED EASEMENT
TYP	TYPICAL
USH	UNITED STATES HIGHWAY
VAR	VARIABLE
VERT	VERTICAL
VC	VERTICAL CURVE
VOL	VOLUME
VPC	VERTICAL POINT OF CURVE
VPI	VERTICAL POINT OF INTERSECTION
VPT	VERTICAL POINT OF TANGENCY
W	WATER
W	WEST
WB	WESTBOUND
WV	WATER VALVE
YD	YARD

UTILITY CONTACTS

ALLIANT ENERGY - ELECTRICITY
JOSH MEYER
761 ENTERPRISE DRIVE
PLATTEVILLE, WI 53818
PHONE: 608-364-6506
EMAIL: JOSHUAMEYER@ALLIANTENERGY.COM

ALLIANT ENERGY - GAS/PETROLEUM
JOSH MEYER
761 ENTERPRISE DRIVE
PLATTEVILLE, WI 53818
PHONE: 608-364-6506
EMAIL: JOSHUAMEYER@ALLIANTENERGY.COM

ASTREA - COMMUNICATION LINE
RUSSEL KENNY
105 KENT STREET
P.O. BOX 190
IRON MOUNTAIN, MI 49801
PHONE: 906-262-6434
EMAIL: RUSSEL.KENNY@ASTREACONNECT.COM

ATC MANAGEMENT INC. - ELECTRICITY TRANSMISSION
RYAN STREHLOW
2489 RINDEN ROAD
COTTAGE GROVE, WI 53527
PHONE: 608-215-7800
EMAIL: RSTREHLOW@ATCLLC.COM

CENTURYLINK/BRIGHTSPEED - COMMUNICATION LINE
DOUG MCGOWAN
135 N BONSON STREET
PLATTEVILLE, WI 53818
PHONE: 608-482-5377
EMAIL: DOUG.MCGOWAN1@BRIGHTSPEED.COM

CITY OF PLATTEVILLE - WATER
HOWARD CROFOOT
75 N BONSON STREET
P.O. BOX 780
PLATTEVILLE, WI 53818-0780
PHONE: 608-348-1826
EMAIL: CROFOOTH@PLATTEVILLE.ORG

CUBA CITY ELECTRIC & WATER UTILITY - ELECTRICITY
GEORGE MORRISSEY
108 N MAIN STREET
CUBA CITY, WI 53807
PHONE: 608-744-2152
EMAIL: GMORRISSEY@CUBACITYLIGHTANDWATER.ORG

CUBA CITY ELECTRIC & WATER UTILITY - WATER
GEORGE MORRISSEY
108 N MAIN STREET
CUBA CITY, WI 53807
PHONE: 608-744-2152
EMAIL: GMORRISSEY@CUBACITYLIGHTANDWATER.ORG

CUBA CITY TELEPHONE EXCHANGE COMPANY - COMMUNICATION LINE
JERRY CULLEN
121 N WASHINGTON ST
CUBA CITY, WI 53807
PHONE: 608-744-2154
EMAIL: JERRY@CSTECH.COM

NORTHERN NATURAL GAS COMPANY - GAS/PETROLEUM
LENNY KLAAS
5557 COUNTY HIGHWAY D
PLATTEVILLE, WI 53818
PHONE: 402-530-2806
EMAIL: LEONARD.KLAAS@NNGCO.COM

SCENIC RIVERS ENERGY COOPERATIVE - ELECTRICITY
CHAD OLMSTEAD
231 N SHERIDAN STREET
LANCASTER, WI 53813
PHONE: 608-723-2121 EXT. 561
EMAIL: COLMSTEAD@SREC.NET

WE ENERGIES - GAS/PETROLEUM
ADAM MARING
N3025 14TH AVE
MONROE, WI 53566
PHONE: 608-328-5679
EMAIL: ADAM.MARING@WE-ENERGIES.COM

WINDSTREAM KDL, LLC - COMMUNICATION LINE
LORI KETTER
314 N DANZ STREET
GREEN BAY, WI 54302
PHONE: 920-410-6902
EMAIL: LORI.KETTER@WINDSTREAM.COM

DIGGERS HOTLINE
Dial 811 or (800)242-8511
www.DiggersHotline.com

ENVIRONMENTAL CONTACTS

WISDOT - SW REGION
ANNA JAHNS
3550 MORMON COULEE RD
LA CROSSE, WI 54601
PHONE: 608-785-9961
EMAIL: ANNAH.JAHNS@DOT.WI.GOV

WISCONSIN DNR
ANDY BARTA
3911 FISH HATCHERY ROAD
FITCHBURG, WI 53711
PHONE: 608-275-3308
EMAIL: ANDREW.BARTA@WISCONSIN.GOV

DESIGN CONTACTS

WISDOT - SW REGION
DEREK POTTER, PE
2101 WRIGHT STREET
MADISON, WI 53704
PHONE: 608-246-3861
EMAIL: DEREK.POTTER@DOT.WI.GOV

JT ENGINEERING, INC.
BRAD GROH, PE
6325 ODANA ROAD, SUITE 2
MADISON, WI 53719
PHONE: 608-204-0909
EMAIL: BRADG@JT-ENGINEERING.COM

ORDER OF DETAIL SHEETS

2

BORING LOG TABLE

Boring	Northing	Easting	Elevation	Station	Offset	GWT	Qp (tsf)	B Count	ASPHALT (in)	B Course (in)
BORE/N1	458130.199	893055.727	1008.588	697+24.72	20.87 RT	Dry	2			
BORE/N2	458002.990	893042.187	1011.819	695+97.61	35.32 RT	Dry		10		
BORE/N3	458013.335	892949.620	1012.794	695+87.58	57.28 LT	Dry	1.5			
BORE/N4	458131.629	892943.284	1007.096	697+01.66	89.19 LT	Dry	0.5			
BORE/N5	458074.596	893232.026	1004.563	697+08.79	205.05 RT	Dry	4.75			
BORE/N6	457827.081	893020.973	1012.093	694+09.78	17.55 RT	Dry	1.2	12	7	25
BORE/N7	458062.881	892747.215	1008.058	695+63.69	264.29 LT	Dry		5		
BORE/N8	458327.164	892982.748	1013.596	699+20.97	31.82 LT	Dry	3.75	9	8.5	22
BORE/N9	458077.296	892993.808	1012.798	696+59.62	28.06 LT	Dry	3.1		11	31

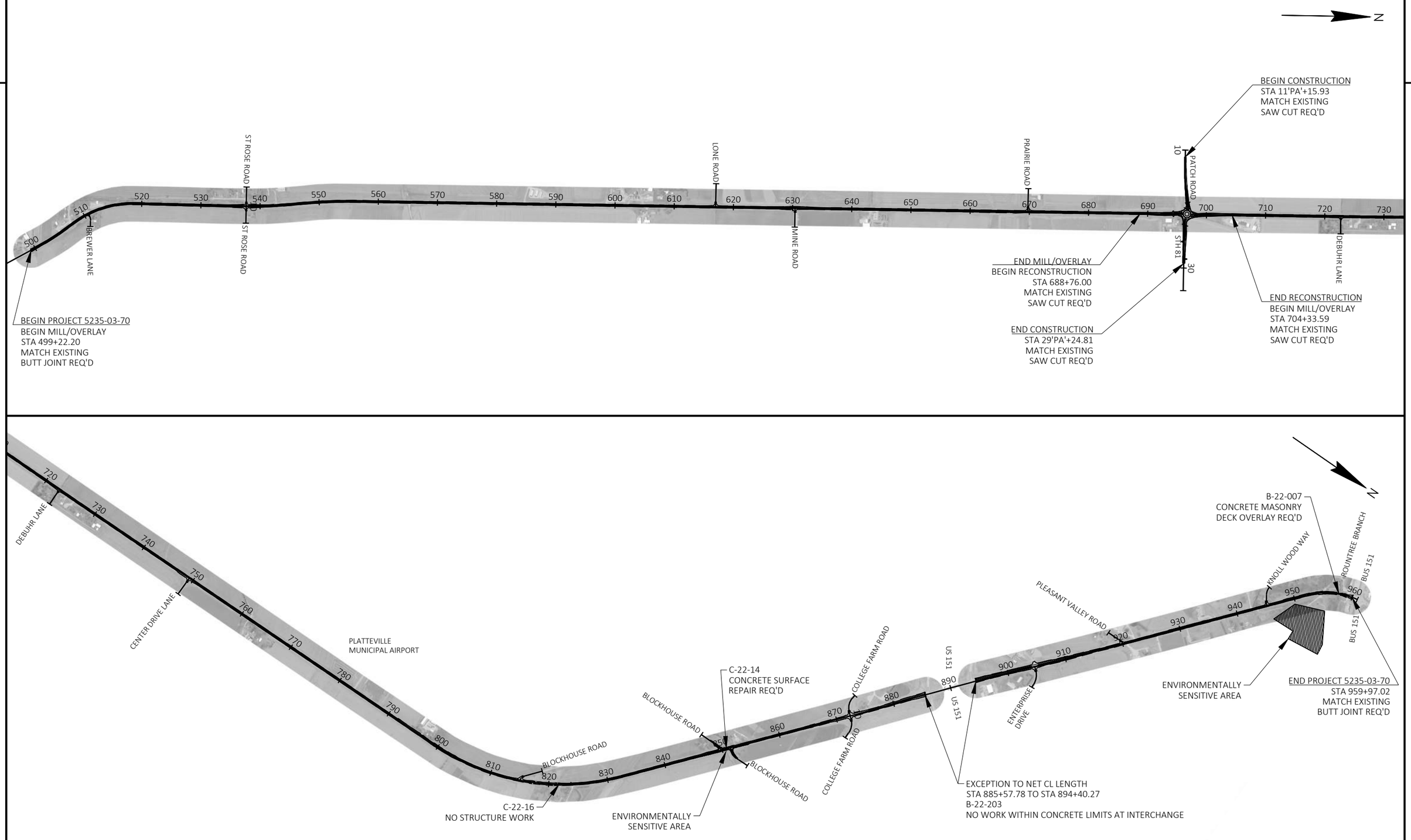

PROJECT NO: 5235-03-70	HWY: STH 80	COUNTY: GRANT	PROJECT OVERVIEW	SHEET 4	E

FILE NAME : X:\PROJECTS\GRANT\200050MW - 5235-03-00 STH 80\DESIGN\C3D\SHEETSPLAN\020201-PO.DWG
LAYOUT NAME - 020201-po
PLOT DATE : 6/29/2022 4:33 PM PLOT BY : MICHAEL LISKA PLOT NAME : PLOT SCALE : 1 IN: 1500 FT

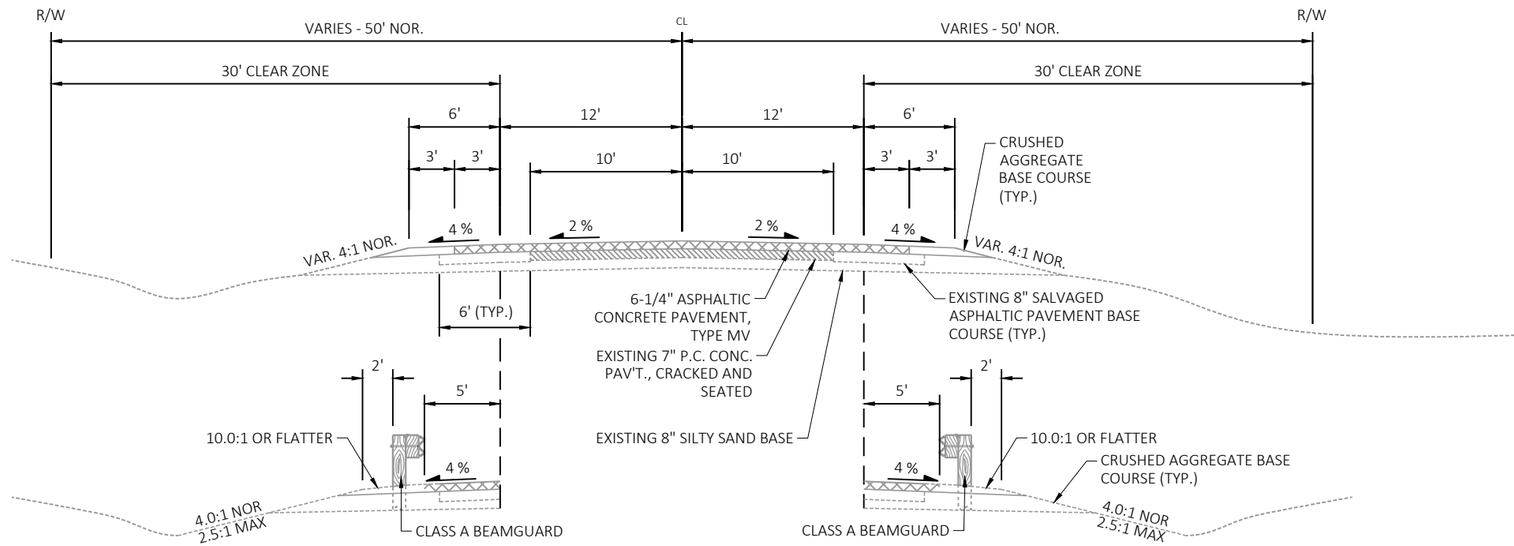

STA 792+25 - 796+18
STA 799+25 - 803+32
STA 817+25 - 822+06
STA 848+18 - 8'BS'+76
STA 9'BS'+04 - 851+84
STA 929+28 - 933+57
STA 948+77 - 954+77
STA 955+46 - 958+71

EXISTING TYPICAL SECTION - STH 80

STA 499+22.20 - 865+44.59
STA 919+25.31 - 957+24.07
STA 957+93.12 - 959+97.02

STA 661+20 - 667+25
STA 798+76 - 802+05
STA 816+77 - 821+29
STA 849+19 - 11'BN'+11
STA 955+27 - 958+75

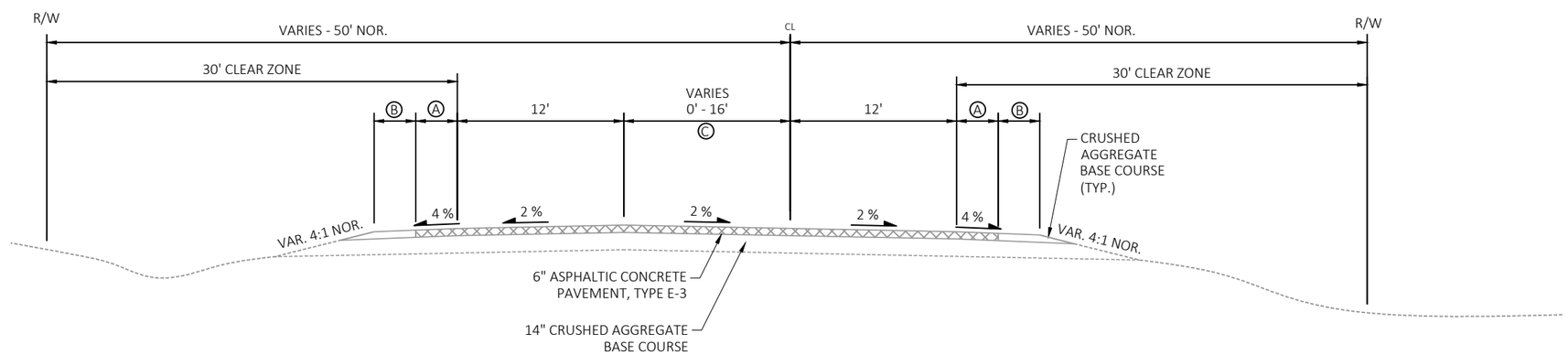

Ⓐ 3.0' (STA 865+44.59 - 880+72.75)
5.0' (STA 911+96.69 - 919+25.31)
Ⓑ 7.0' (STA 865+44.59 - 880+72.75)
5.0' (STA 911+96.69 - 919+25.31)
Ⓒ CONCRETE CORRUGATED MEDIAN (STA 878+97.54 - 880+72.75; 911+96.69 - 913+68.34)

EXISTING TYPICAL SECTION - STH 80

STA 865+44.59 - 880+72.75
STA 911+96.69 - 919+25.31

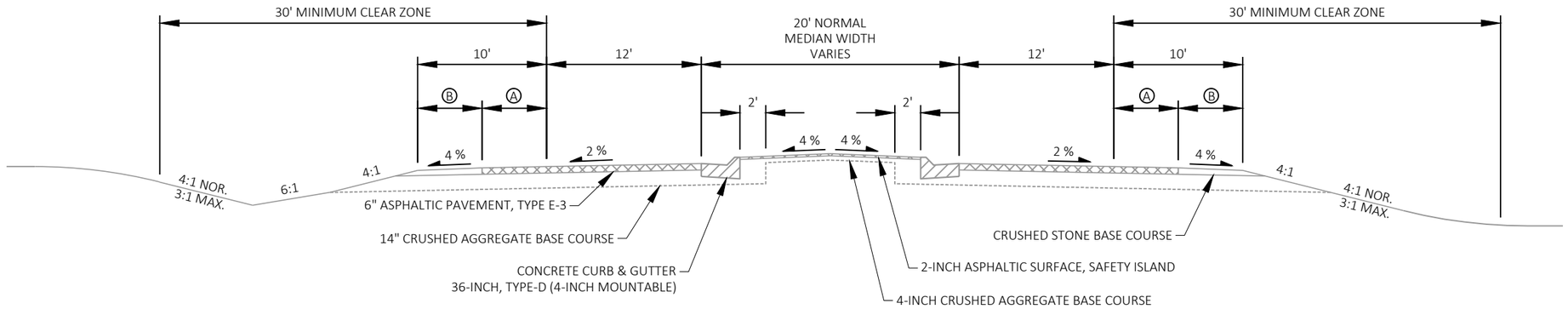

Ⓐ 3.0' (STA 880+72.75 - 885+57.78)
5.0' (STA 894+40.27 - 911+96.69)
Ⓑ 7.0' (STA 880+72.75 - 885+57.78)
5.0' (STA 894+40.27 - 911+96.69)

EXISTING TYPICAL SECTION - STH 80

STA. 880+72.75 - 885+57.78
STA. 894+40.27 - 911+96.69

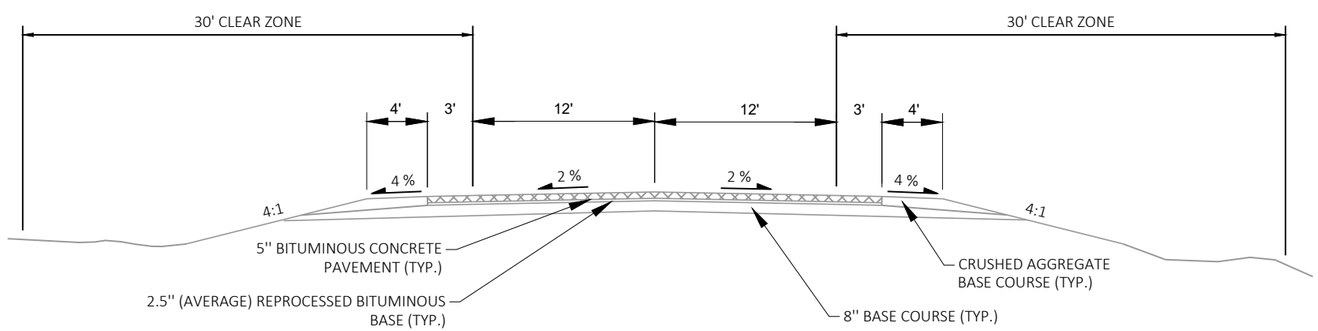

EXISTING TYPICAL SECTION - STH 81

STA 21'PA'+67.30 - 29'PA'+24.81

PROJECT NO: 5235-03-70	HWY: STH 80	COUNTY: GRANT	TYPICAL SECTIONS	SHEET 6	E

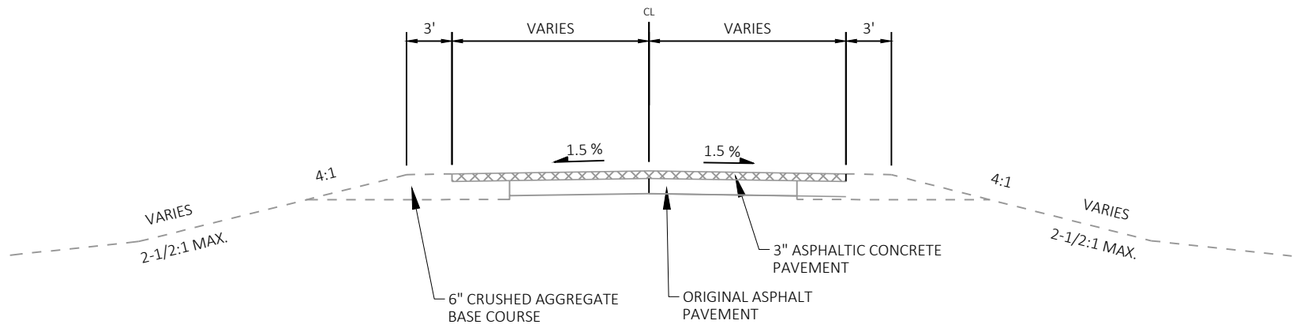

EXISTING TYPICAL SECTION - PATCH RD

STA. 11'PA'+14.91 - 20'PA'+24.59

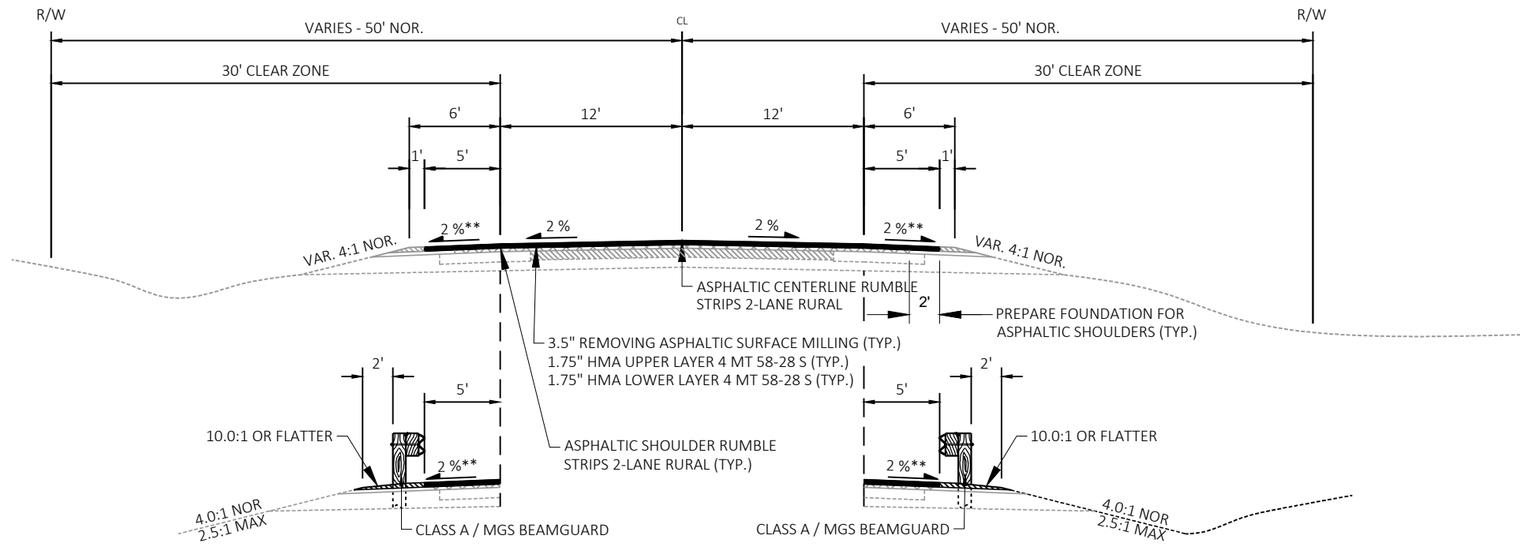

STA 792+25 - 796+18
STA 799+25 - 803+32
STA 817+25 - 822+03
STA 847+46 - 8'BS'+54
STA 7'BS'+90 - 851+95

PROPOSED TYPICAL SECTION - STH 80

STA 499+22.20 - 865+44.59
STA 919+25.31 - 957+24.07
STA 957+93.12 - 959+97.02

STA 661+20 - 667+72
STA 799+12 - 802+67
STA 816+71 - 821+27
STA 849+76 - 11'BN'+29
STA 11'BN'+50 - 854+38

** NORMAL 2% PAVED SHOULDER SLOPE. CAN BE AS HIGH AS 4% TO MATCH FIELD CONDITIONS AS DIRECTED BY THE ENGINEER.

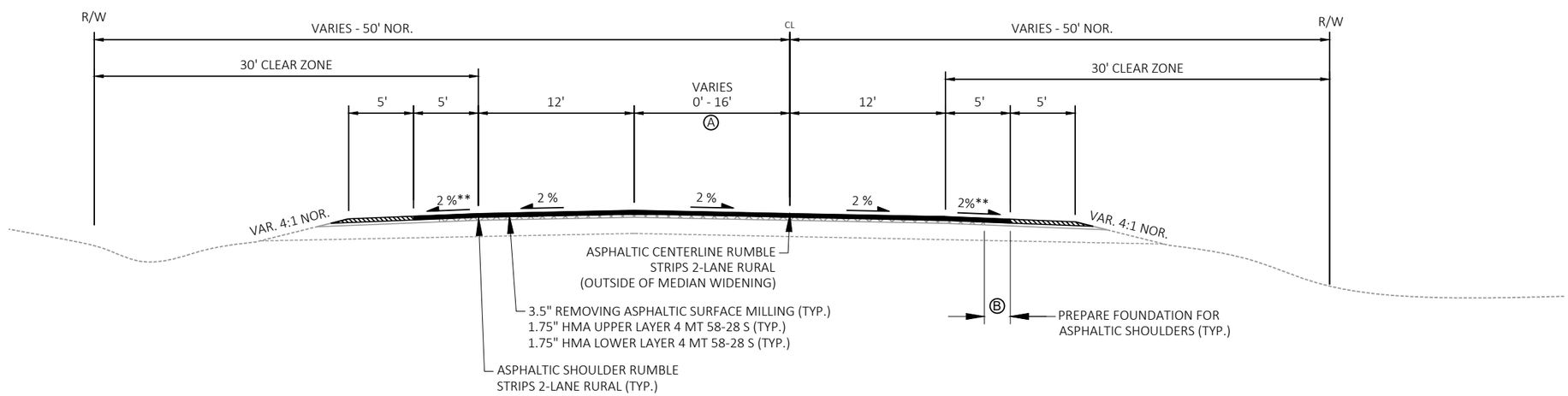

Ⓐ EXISTING CONCRETE CORRUGATED MEDIAN (STA 878+97.54 - 880+72.75; 911+96.69 - 913+68.34); NO PROPOSED WORK ON EXISTING CONCRETE CORRUGATED MEDIAN

PROPOSED TYPICAL SECTION - STH 80

STA 865+44.59 - 880+72.75
STA 911+96.69 - 919+25.31

Ⓑ 2.0' (STA 865+44.59 - 880+72.75)
0' (STA 911+96.69 - 919+25.31)

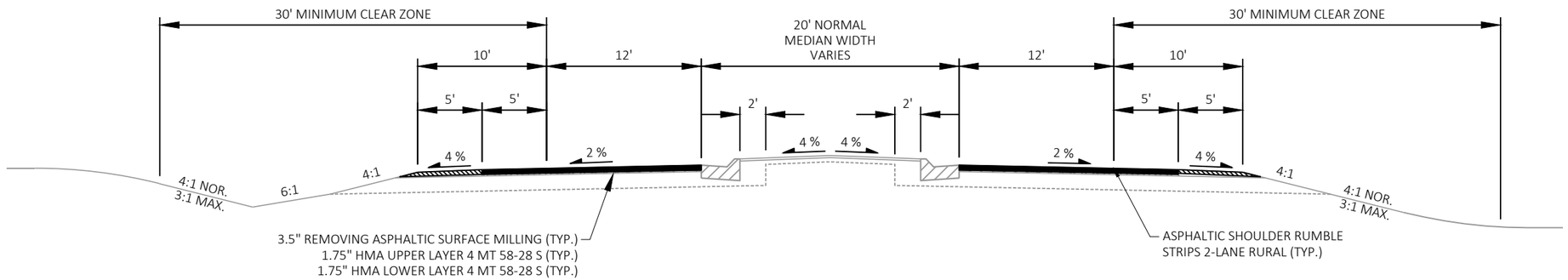

PROPOSED TYPICAL SECTION - STH 80

STA. 880+72.75 - 885+57.78
STA. 894+40.27 - 911+96.69

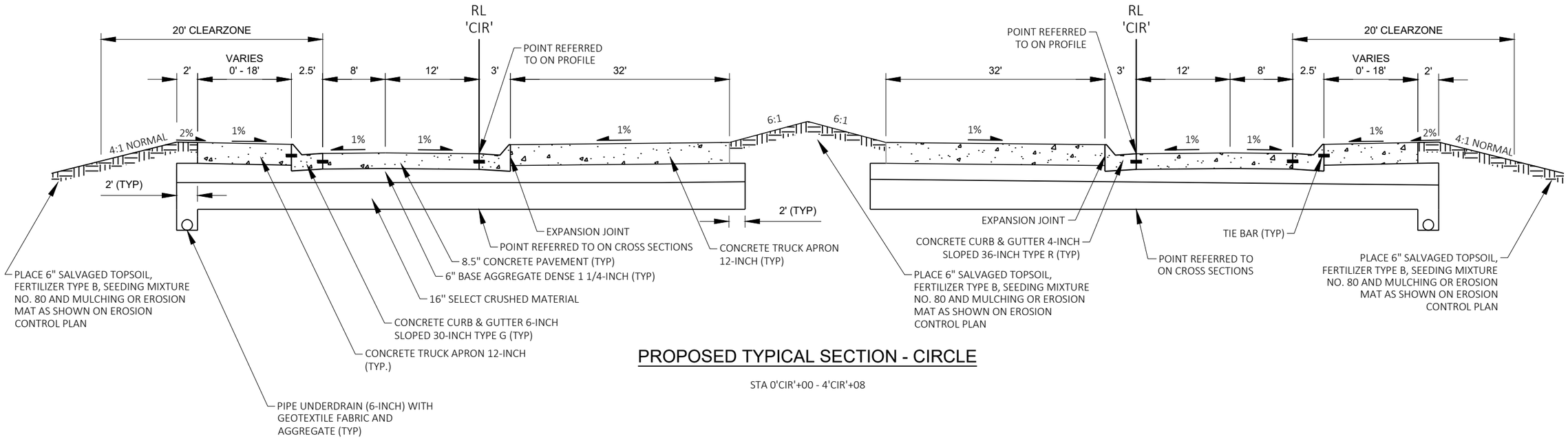

PROPOSED TYPICAL SECTION - CIRCLE

STA 0'CIR'+00 - 4'CIR'+08

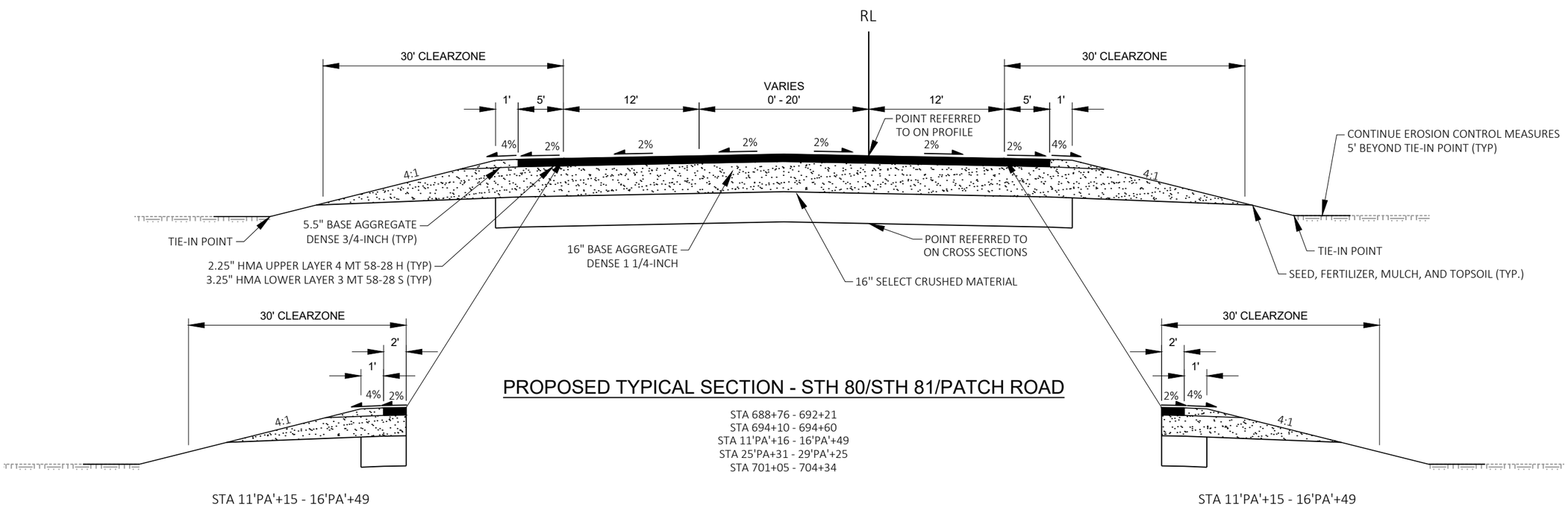

PROPOSED TYPICAL SECTION - STH 80/STH 81/PATCH ROAD

STA 688+76 - 692+21
STA 694+10 - 694+60
STA 11'PA'+16 - 16'PA'+49
STA 25'PA+31 - 29'PA'+25
STA 701+05 - 704+34

STA 11'PA'+15 - 16'PA'+49

STA 11'PA'+15 - 16'PA'+49

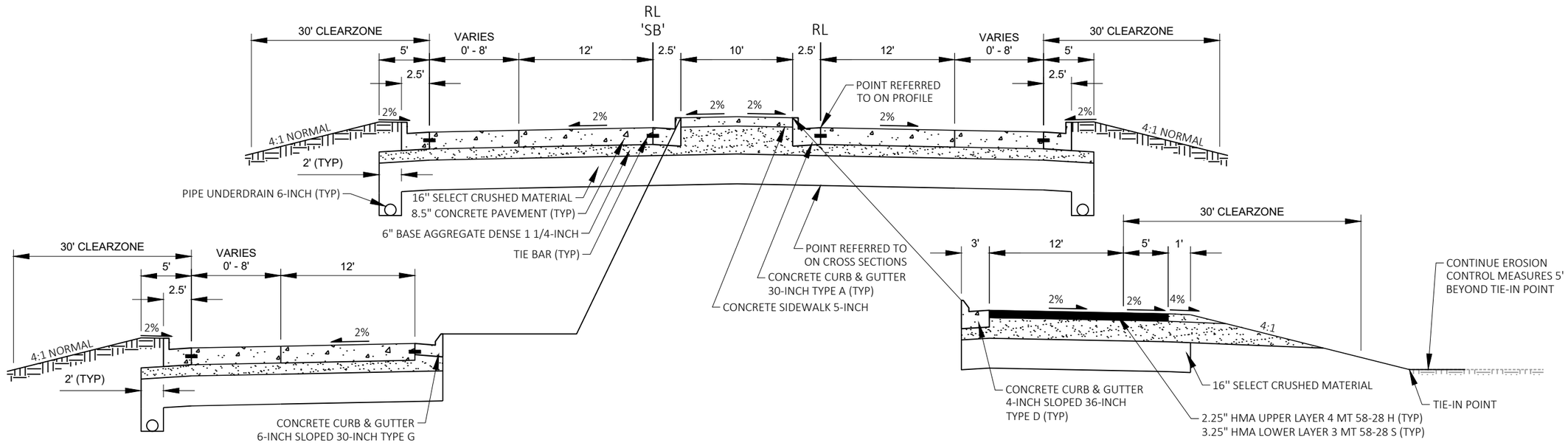

STA 21'PA'+67 - 22'PA'+51

STA 698+47 - 698+60
STA 22'PA'+51 - 22'PA'+83

PROPOSED TYPICAL SECTION - STH 80/STH 81

STA 18'PA'+96 - 19'PA'+96
STA 21'PA'+67 - 22'PA'+83
STA 697+47 - 698+60

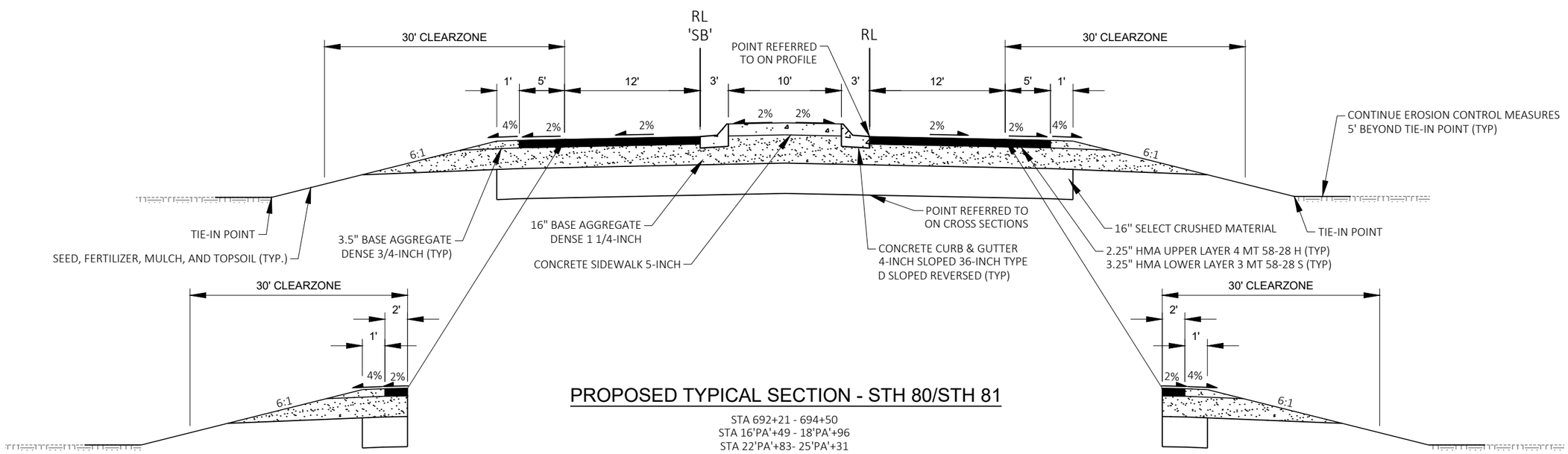

PROPOSED TYPICAL SECTION - STH 80/STH 81

STA 692+21 - 694+50
STA 16'PA'+49 - 18'PA'+96
STA 22'PA'+83- 25'PA'+31
STA 698+60 - 701+05

STA 16'PA'+46 - 18'PA'+96

STA 16'PA'+46 - 18'PA'+96

PROJECT NO: 5235-03-70	HWY: STH 80	COUNTY: GRANT	TYPICAL SECTIONS	SHEET 11	E

FILE NAME : X:\PROJECTS\GRANT\200050MW - 5235-03-00 STH 80\DESIGN\C3D\SHEETSPLAN\020301-TS.DWG
LAYOUT NAME - 020306-ts
PLOT DATE : 6/29/2022 4:34 PM PLOT BY : MICHAEL LISKA PLOT NAME : PLOT SCALE : 1 IN:10 FT

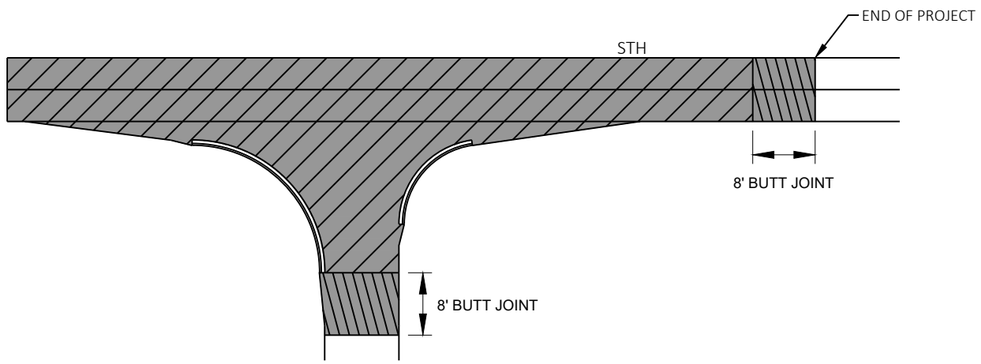

SIDEROADS

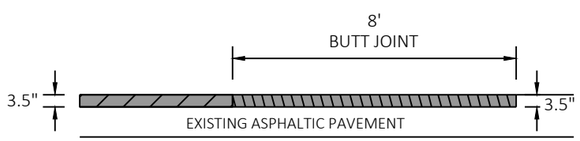

BUTT JOINT
MAINLINE AND SIDE ROADS

HMA PAVEMENT

REMOVING ASPHALTIC SURFACE MILLING

REMOVING ASPHALTIC SURFACE BUTT JOINTS

RUNOFF COEFFICIENT TABLE

	HYDROLOGIC SOIL GROUP											
	A			B			C			D		
	SLOPE RANGE (PERCENT)			SLOPE RANGE (PERCENT)			SLOPE RANGE (PERCENT)			SLOPE RANGE (PERCENT)		
LAND USE:	0-2	2-6	6 & OVER	0-2	2-6	6 & OVER	0-2	2-6	6 & OVER	0-2	2-6	6 & OVER
ROW CROPS	.08 .22	.16 .30	.22 .38	.12 .26	.20 .34	.27 .44	.15 .30	.24 .37	.33 .50	.19 .34	.28 .41	.38 .56
MEDIAN STRIP-TURF	.19 .24	.20 .26	.24 .30	.19 .25	.22 .28	.26 .33	.20 .26	.23 .30	.30 .37	.20 .27	.25 .32	.30 .40
SIDE SLOPE-TURF			.25 .32			.27 .34			.28 .36			.30 .38
PAVEMENT:												
ASPHALT	.70 - .95											
CONCRETE	.80 - .95											
BRICK	.70 - .80											
DRIVES, WALKS	.75 - .85											
ROOFS	.75 - .95											
GRAVEL ROADS, SHOULDERS	.40 - .60											

TOTAL PROJECT AREA = 126.16 ACRES
TOTAL AREA EXPECTED TO BE DISTURBED BY CONSTRUCTION ACTIVITIES = 83.52 ACRES

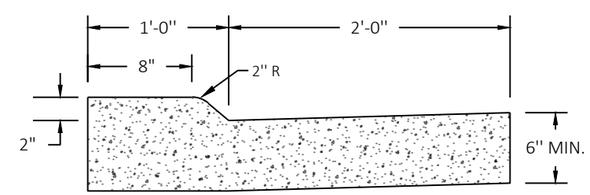

2" SLOPED CURB (36-INCH)
BLOCKHOUSE RD.
INTERSECTION

2

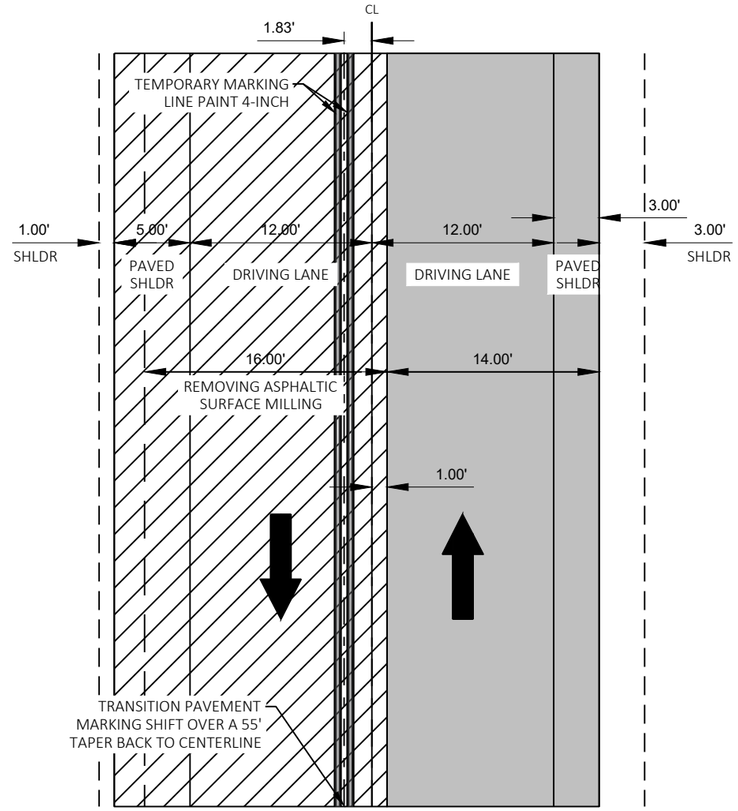

PLAN VIEW

EXISTING ASPHALTIC SURFACE

FIRST PASS 1 $\frac{3}{4}$" HMA PAVEMENT 4 MT 58-28 S PAVING LIMITS (BINDER)

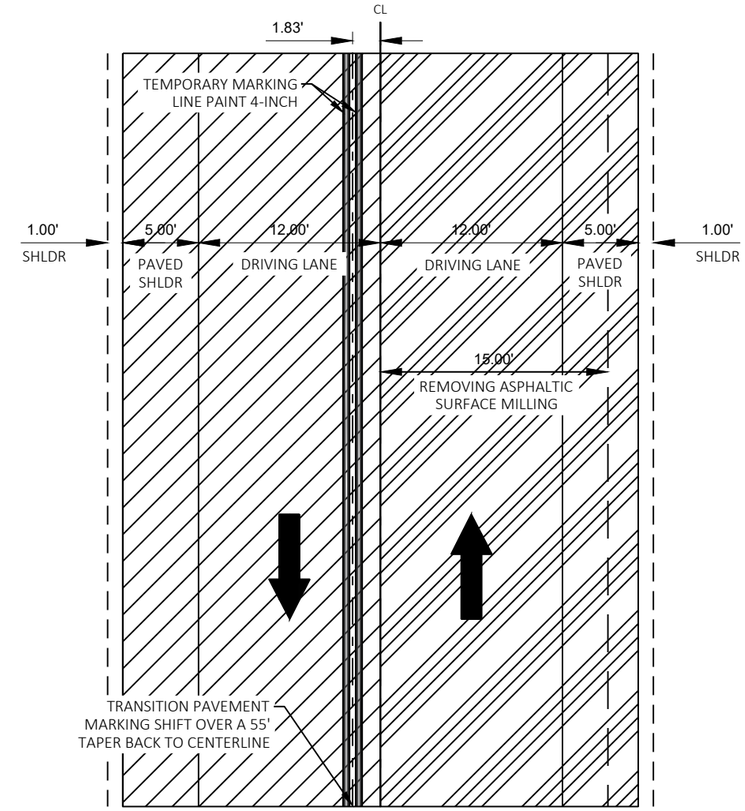

PLAN VIEW

EXISTING ASPHALTIC SURFACE

FIRST PASS 1 $\frac{3}{4}$" HMA PAVEMENT 4 MT 58-28 S PAVING LIMITS (BINDER)

SECOND PASS 1 $\frac{3}{4}$" HMA PAVEMENT 4 MT 58-28 S PAVING LIMITS (BINDER)

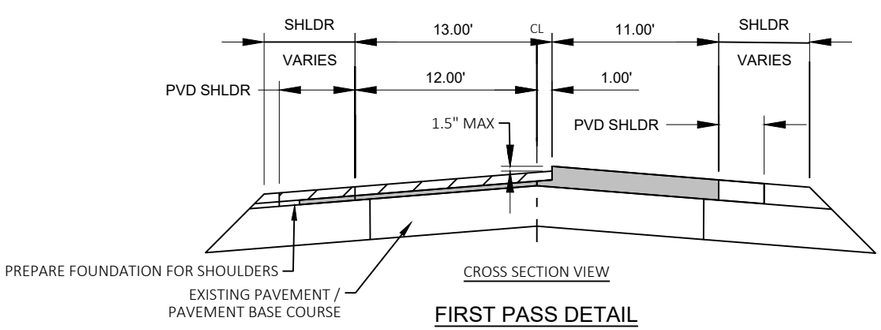

FIRST PASS DETAIL

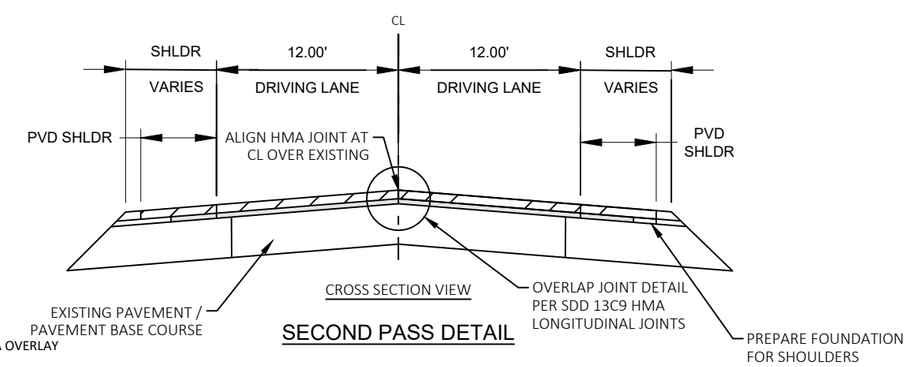

SECOND PASS DETAIL

NOTE: SEE CONSTRUCTION STAGING FOR MILLING AND HMA OVERLAY DETAIL FOR ADDITIONAL INFORMATION

2

PROJECT NO: 5235-03-70	HWY: STH 80	COUNTY: GRANT	CONSTRUCTION DETAILS	SHEET 13	E

2

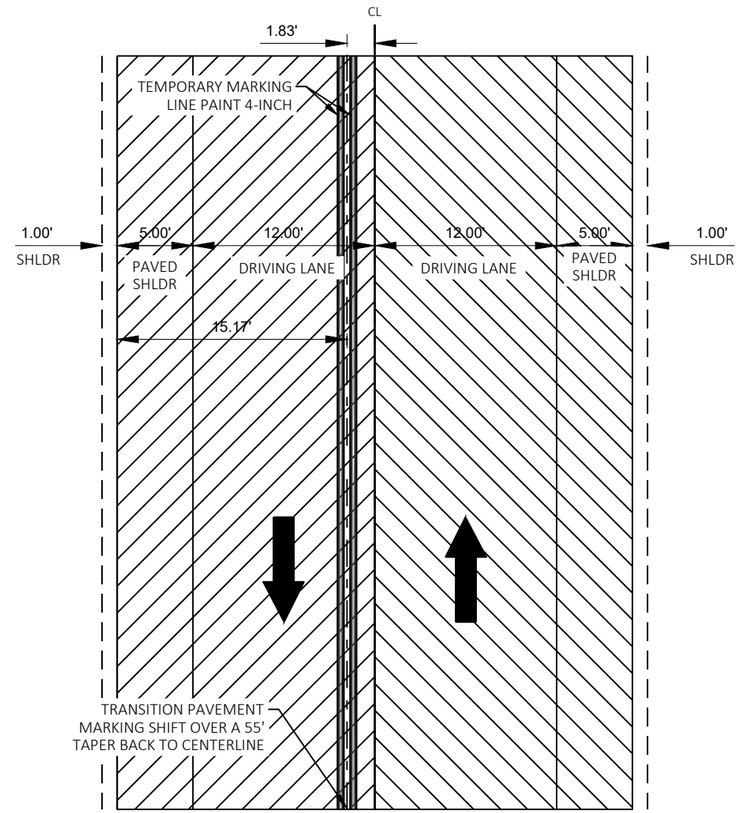

PLAN VIEW

EXISTING ASPHALTIC SURFACE

FIRST PASS 1 $\frac{3}{4}$" HMA PAVEMENT 4 MT 58-28 S PAVING LIMITS (BINDER)

SECOND PASS 1 $\frac{3}{4}$" HMA PAVEMENT 4 MT 58-28 S PAVING LIMITS (BINDER)

THIRD PASS 1 $\frac{3}{4}$" HMA PAVEMENT 4 MT 58-28 S PAVING LIMITS (SURFACE)

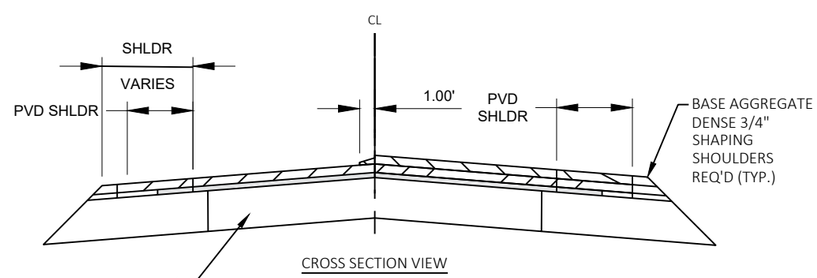

CROSS SECTION VIEW

THIRD PASS DETAIL

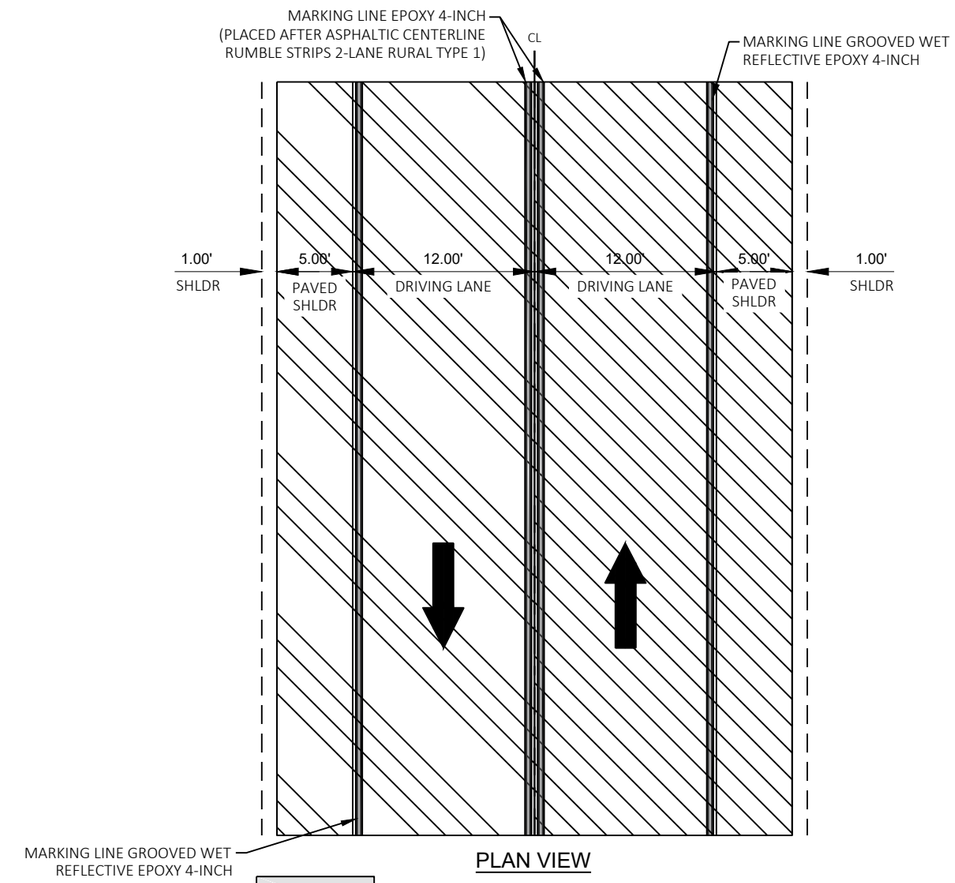

PLAN VIEW

EXISTING ASPHALTIC SURFACE

FIRST PASS 1 $\frac{3}{4}$" HMA PAVEMENT 4 MT 58-28 S PAVING LIMITS (BINDER)

SECOND PASS 1 $\frac{3}{4}$" HMA PAVEMENT 4 MT 58-28 S PAVING LIMITS (BINDER)

THIRD PASS 1 $\frac{3}{4}$" HMA PAVEMENT 4 MT 58-28 S PAVING LIMITS (SURFACE)

FOURTH PASS 1 $\frac{3}{4}$" HMA PAVEMENT 4 MT 58-28 S PAVING LIMITS (SURFACE)

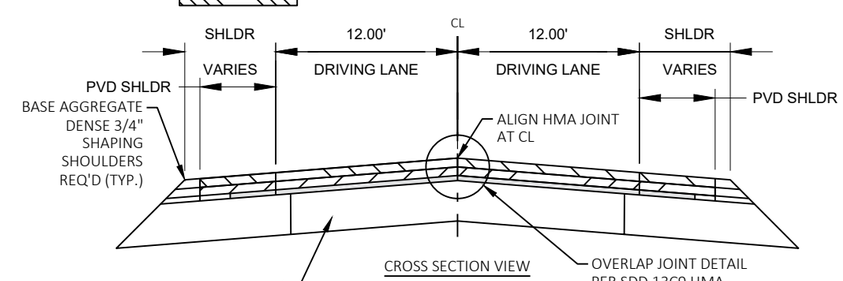

CROSS SECTION VIEW

FOURTH PASS DETAIL

NOTE: SEE CONSTRUCTION STAGING FOR MILLING AND HMA OVERLAY DETAIL FOR ADDITIONAL INFORMATION

PROJECT NO: 5235-03-70	HWY: STH 80	COUNTY: GRANT	CONSTRUCTION DETAILS	SHEET 14	E

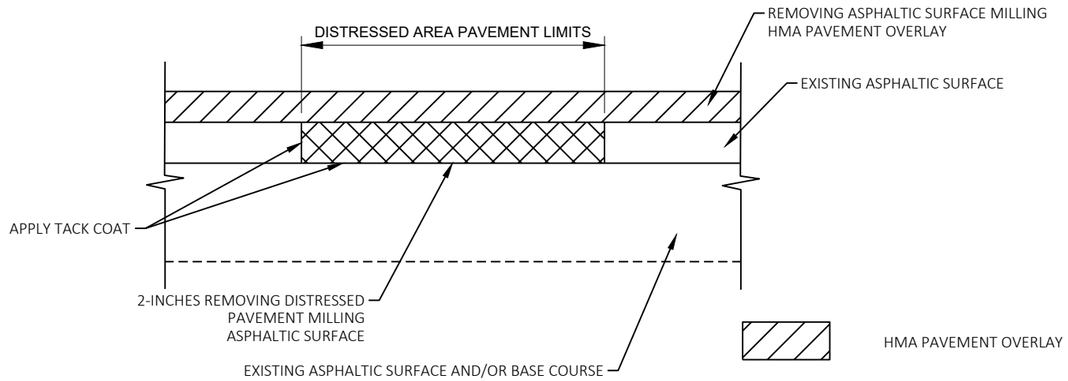

REMOVING DISTRESSED PAVEMENT MILLING
SECTION A-A

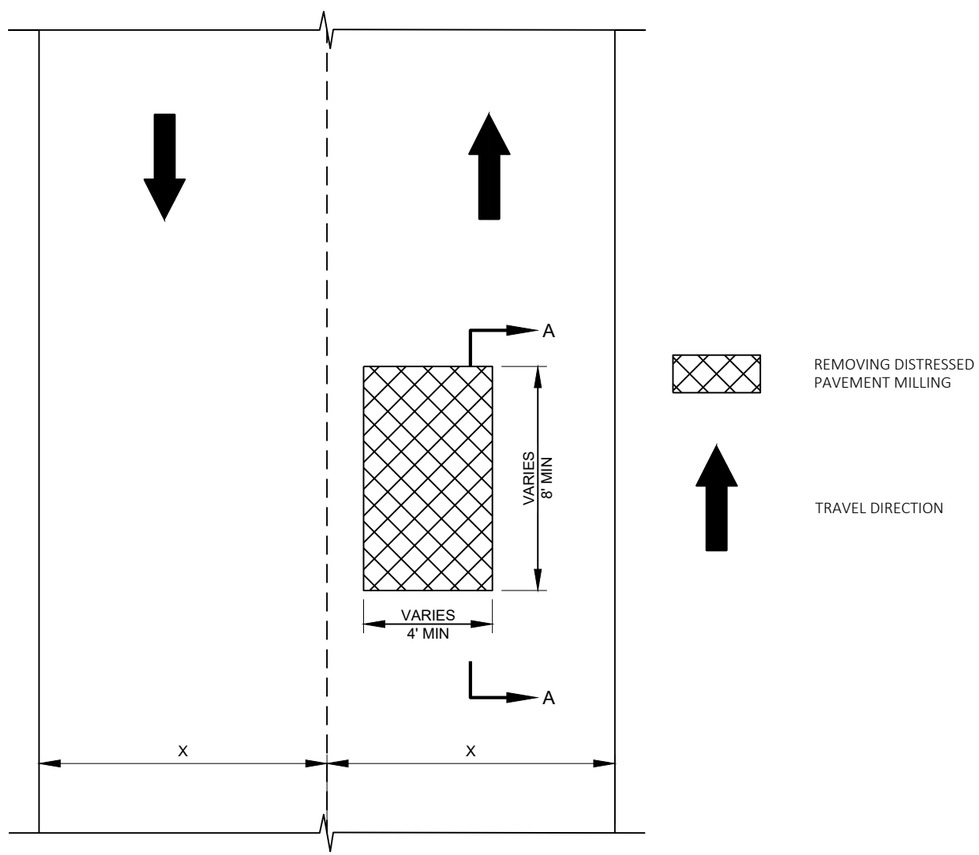

PLAN VIEW

EXACT LOCATION AND LIMITS OF REMOVING DISTRESSED PAVEMENT MILLING TO BE DETERMINED BY THE ENGINEER IN THE FIELD

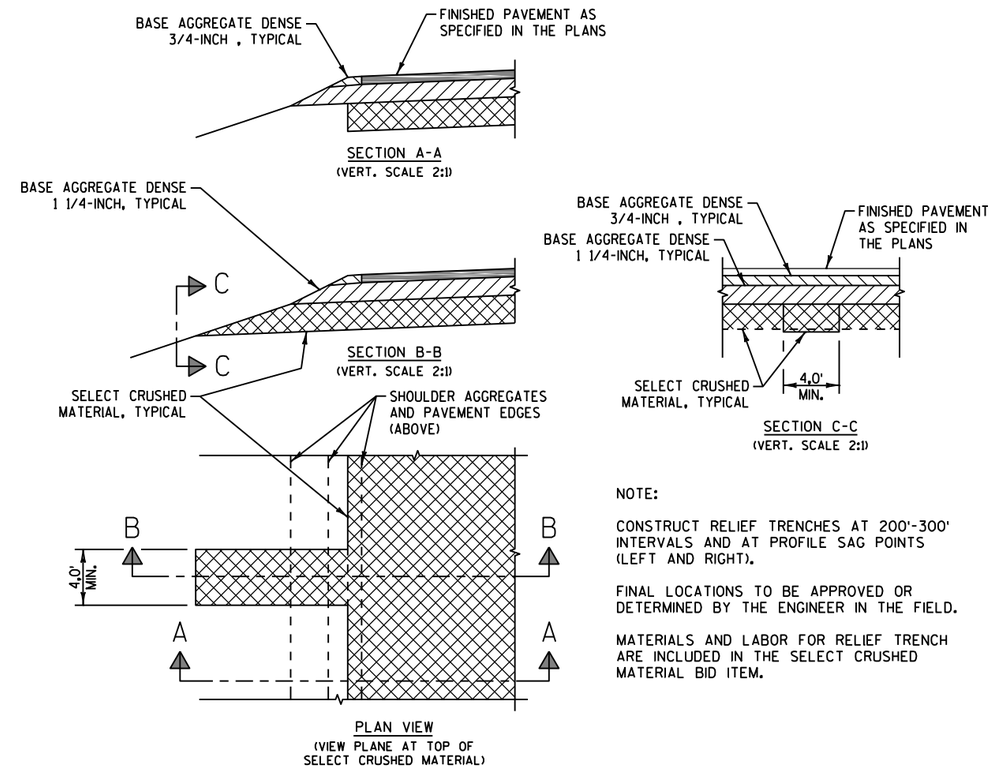

RELIEF TRENCH

NOTE:

CONSTRUCT RELIEF TRENCHES AT 200'-300' INTERVALS AND AT PROFILE SAG POINTS (LEFT AND RIGHT).

FINAL LOCATIONS TO BE APPROVED OR DETERMINED BY THE ENGINEER IN THE FIELD.

MATERIALS AND LABOR FOR RELIEF TRENCH ARE INCLUDED IN THE SELECT CRUSHED MATERIAL BID ITEM.

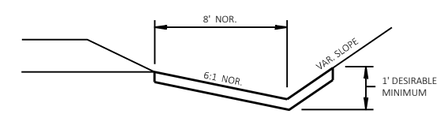

EROSION MAT DETAIL FOR DITCHES

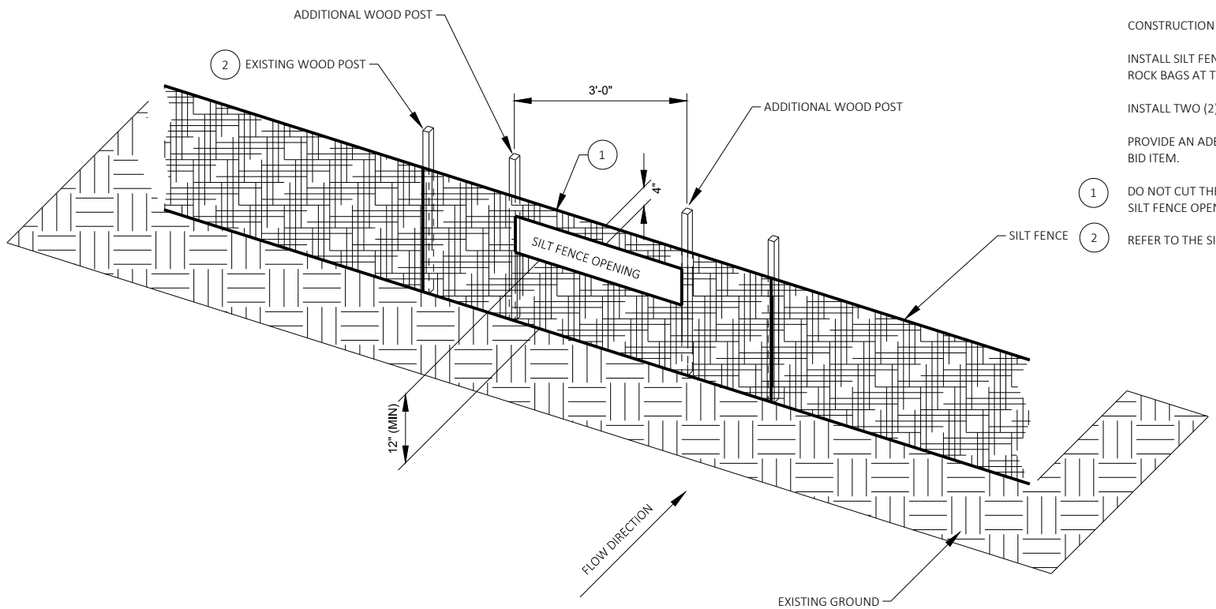

GENERAL NOTES

THE SILT FENCE RELIEF DETAIL IS A SUPPLEMENTAL DETAIL TO THE SILT FENCE STANDARD DETAILS AND SHALL CONFORM TO THE PERTINENT REQUIREMENTS OF THE STANDARD SPECIFICATIONS AND APPLICABLE SPECIAL PROVISIONS.

CONSTRUCTION OF THE SILT FENCE OPENING SHALL BE INCIDENTAL TO THE COST OF THE SILT FENCE MAINTENANCE BID ITEM.

INSTALL SILT FENCE PRIOR TO CONSTRUCTING THE SILT FENCE OPENING. PRIOR TO CUTTING THE SILT FENCE OPENING, PLACE ROCK BAGS AT THE SILT FENCE OPENING AS SHOWN IN THIS DETAIL. SILT FENCE OPENING SHOULD BE BETWEEN 4" - 8" TALL

INSTALL TWO (2) ADDITIONAL POSTS AT 3' SPACING AT LOCATION OF OPENING.

PROVIDE AN ADEQUATE NUMBER OF ROCK BAGS TO STACK TO A HEIGHT OF 1' (MINIMUM). ROCK BAGS SHALL BE PAID UNDER THE ROCK BAGS BID ITEM.

1 DO NOT CUT THE SUPPORT CORD OR TENSION TAPE WHEN CONSTRUCTING THE SILT FENCE OPENING. CUT THE SILT FENCE OPENING AT LEAST 1" BELOW THE 3" FOLD AT THE SUPPORT CORD OR TENSION TAPE.

2 REFER TO THE SILT FENCE STANDARD DETAILS FOR ALLOWABLE ADJUSTMENTS TO POST SPACING.

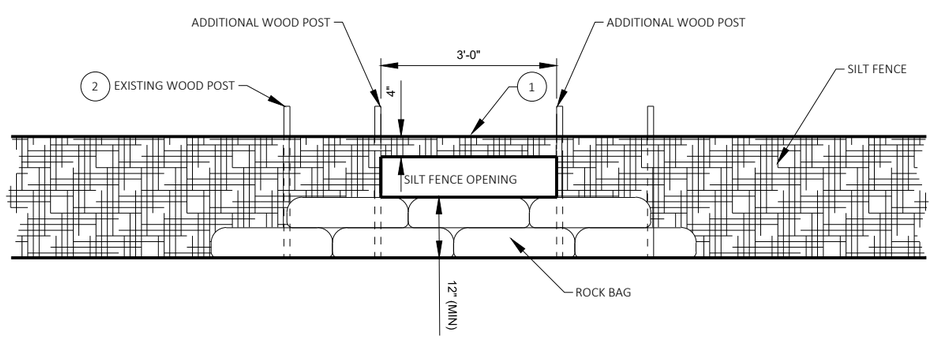

SECTION VIEW

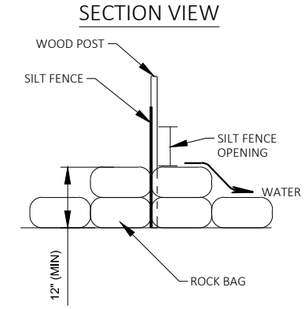

SECTION VIEW

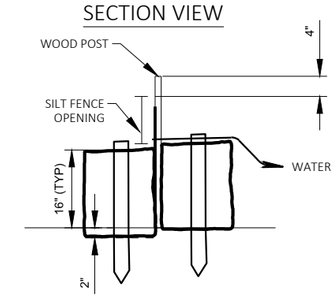

SILT FENCE RELIEF DETAIL

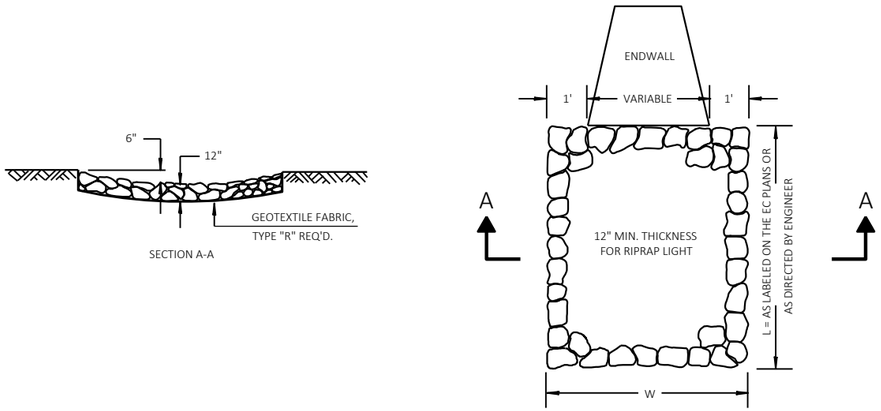

RIPRAP LIGHT TREATMENT AT CULVERTS

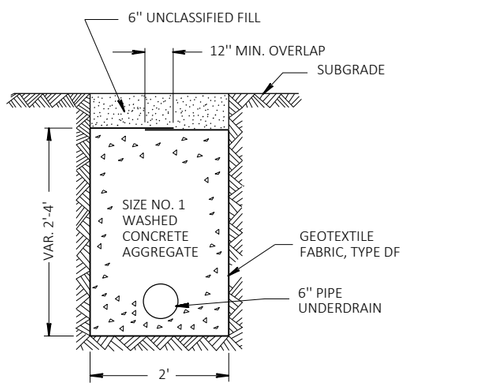

SECTION A-A

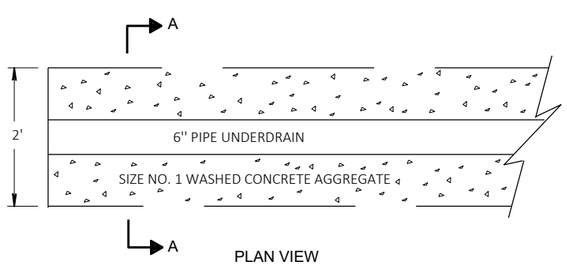

PLAN VIEW

SPV.0090.04 PIPE UNDERDRAIN WITH GEOTEXTILE FABRIC AND AGGREGATE DETAIL

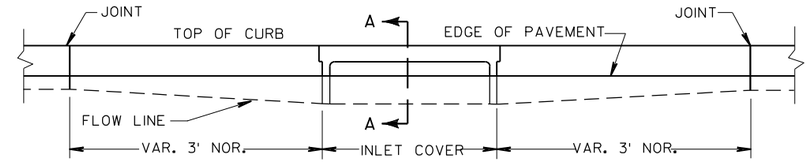

ELEVATION

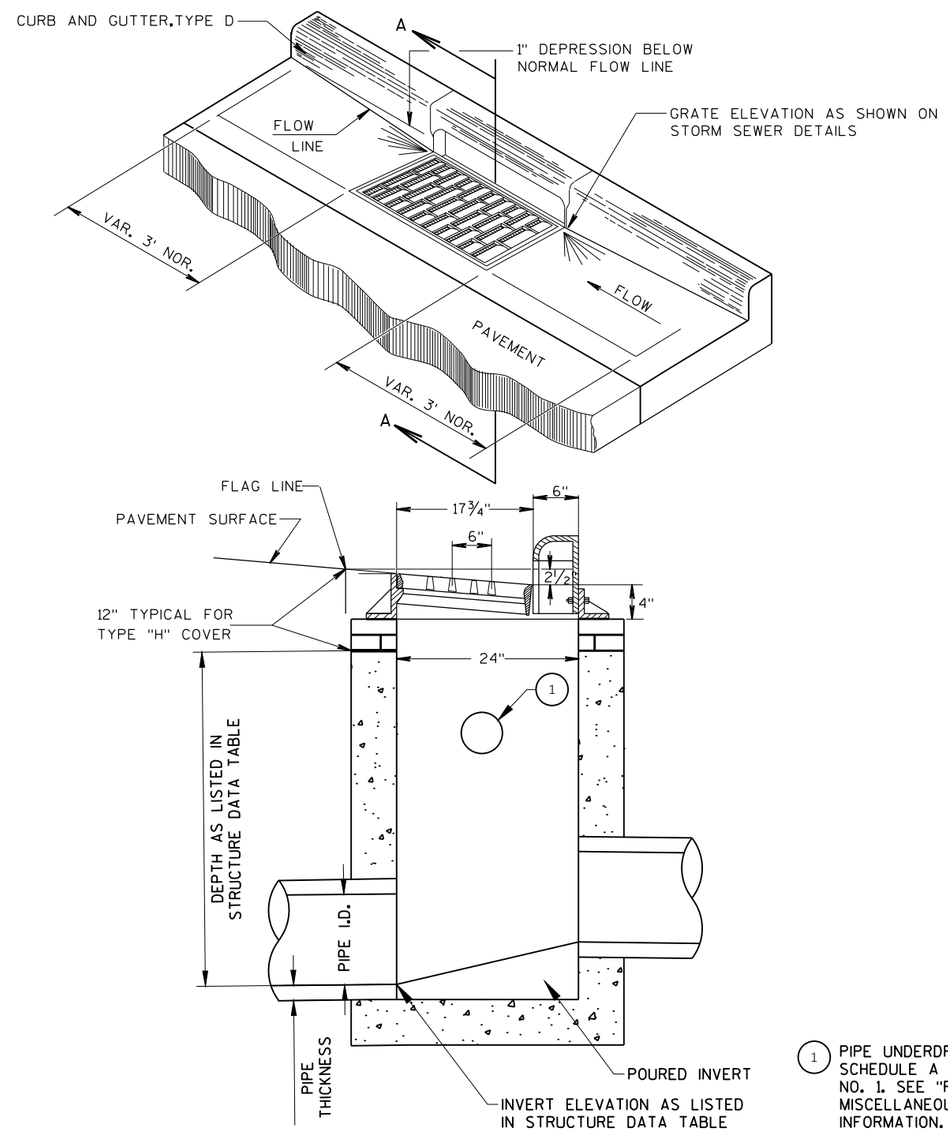

1 PIPE UNDERDRAIN (6-INCH) WITH GEOTEXTILE FABRIC AND AGGREGATE SCHEDULE A AND BACKFILL COARSE AGGREGATE SIZE NO. 1. SEE "PIPE UNDERDRAIN 6-INCH DETAIL" AND MISCELLANEOUS QUANTITIES FOR LOCATIONS AND ADDITIONAL INFORMATION.

SECTION A-A

DETAIL OF CURB AND GUTTER AT INLETS AT SAG LOCATIONS

(INLET TYPE 2X3-H SHOWN)

2

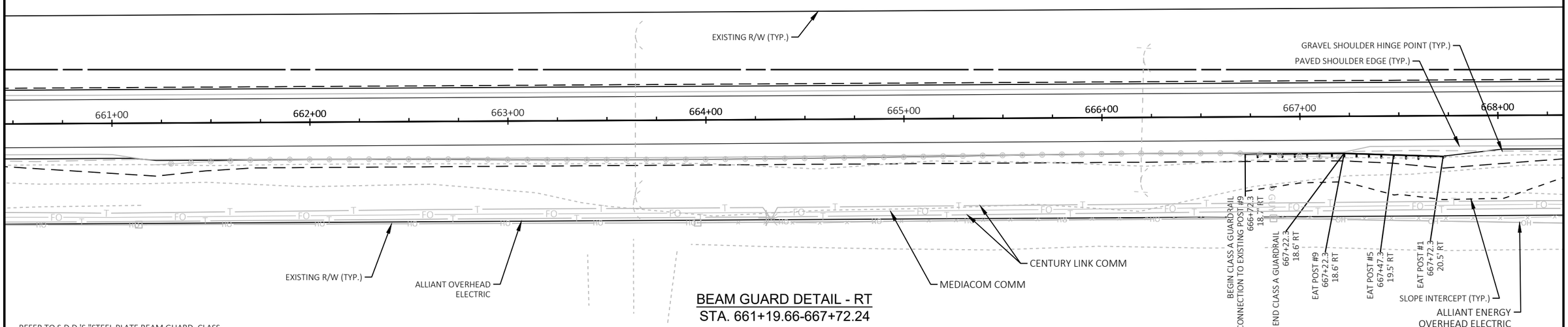

BEAM GUARD DETAIL - RT
STA. 661+19.66-667+72.24

REFER TO S.D.D.'S "STEEL PLATE BEAM GUARD, CLASS "A", INSTALLATION AND ELEMENTS" FOR ADDITIONAL INFORMATION.

STA 666+72.3 RT TO STA 667+22.3 RT - CLASS A GUARDRAIL
STA 667+22.3 RT TO STA 667+72.2 RT - CLASS A TERMINAL EAT

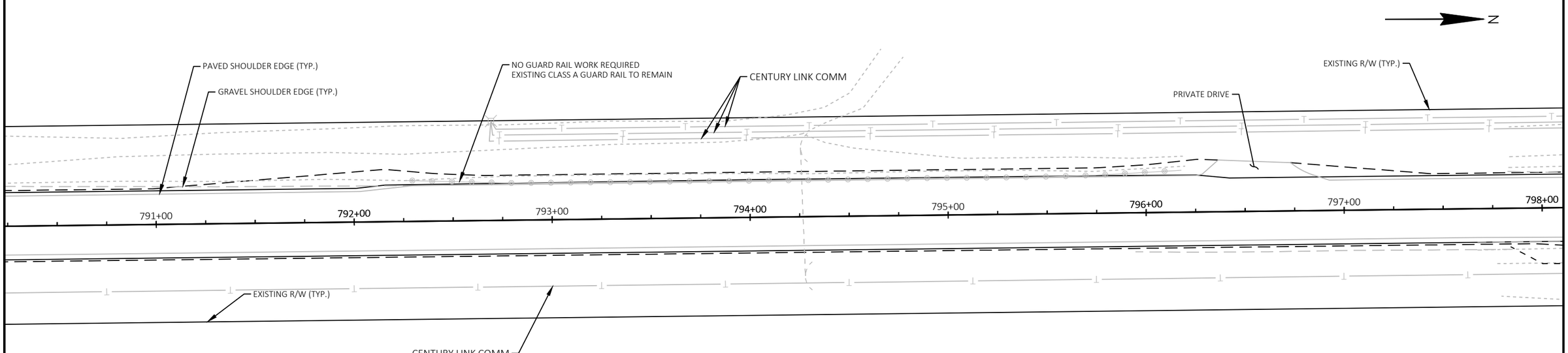

BEAM GUARD DETAIL - LT
STA. 792+25.31-796+18.02

PROJECT NO: 5235-03-70	HWY: STH 80	COUNTY: GRANT	BEAM GUARD DETAILS	SHEET 18	E

2

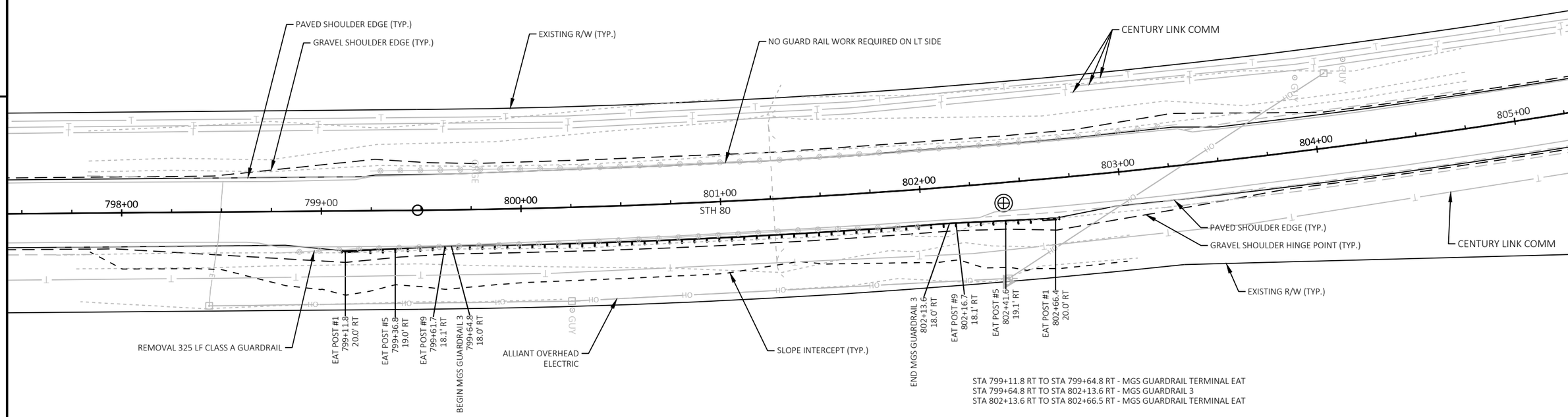

REFER TO S.D.D.'S "MIDWEST GUARDRAIL SYSTEM (MGS) GUARDRAIL", "MIDWEST GUARDRAIL SYSTEM (MGS) ENERGY ABSORBING TERMINAL" FOR ADDITIONAL INFORMATION.

BEAM GUARD DETAIL - RT & LT
STA. 799+11.8 - 802+66.4

2

PROJECT NO: 5235-03-70	HWY: STH 80	COUNTY: GRANT	BEAM GUARD DETAILS	SHEET 19	E

FILE NAME : X:\PROJECTS\GRANT\200050MW - 5235-03-00 STH 80\DESIGN\C3D\SHEETSPLAN\021002-BG.DWG
LAYOUT NAME - 021003-bg
PLOT DATE : 6/29/2022 4:37 PM PLOT BY : MICHAEL LISKA PLOT NAME : PLOT SCALE : 1 IN:50 FT
WISDOT/CADDS SHEET 44

2

STA 821+52.2 LT TO STA 822+02.7 LT -
STEEL PLATE BEAM GUARD ENERGY ABSORBING TERMINAL

ALTERNATIVE GRADING AREA

SLOPE INTERCEPT (TYP.)

CONNECTION TO EXISTING CLASS A BEAMGUARD AT EXISTING POST #9
821+52.2
-19.6' LT

EAT POST #1
821+02.7
-18.3' LT

EAT POST #5
821+77.3
-19.1' LT

EAT POST #9
821+52.2
-19.6' LT

VARIABLE SLOPE GRADING WITHIN RIGHT-OF-WAY
TO REDUCE HIGH SLOPES TO <3:1

REPLACE DAMAGED BEAM GUARD SECTION

ALLIANT OVERHEAD ELECTRIC

EXISTING R/W (TYP.)

CONNECTION TO EXISTING CLASS A BEAMGUARD AT EXISTING POST #9

CENTURY LINK COMM

STA 817+24.7 LT TO STA 817+75.1 LT -
STEEL PLATE BEAM GUARD ENERGY
ABSORBING TERMINAL

EAT POST #1
817+24.6
-22.2' LT

EAT POST #5
817+50
-21.2' LT

OST #9
17+75.1
-20.4' LT

817+75.1
-20.4' LT

SLOPE INTERCEPT (TYP.)

BLOCKHOUSE ROAD

HHB.9

HHB.8

STH 80

C-14-22-16

815+00

816+00

817+00

818+00

819+00

820+00

821+00

822+00

823+00

EAT POST #1
821+27.3
17.1' RT

SLOPE INTERCEPT (TYP.)

ALTERNATIVE GRADING AREA

EAT POST #5
821+02.2
17.0' RT

EAT POST #9
820+77.3
17.0' RT

CONNECTION TO EXISTING CLASS A BEAMGUARD AT EXISTING POST #9
820+77.3
17.0' RT

REPLACE DAMAGED BEAM
GUARD SECTION

STA 820+77.3 RT TO STA 821+27.3 RT -
STEEL PLATE BEAM GUARD ENERGY ABSORBING TERMINAL

CENTURY LINK COMM

ALTERNATIVE GRADING AREA

CONNECTION TO EXISTING CLASS A BEAMGUARD AT EXISTING POST #9
817+21.1
17.2' RT

EAT POST #9
817+21.1
17.2' RT

EAT POST #5
816+96.2
17.1' RT

EAT POST #1
816+71.1
17.2' RT

STA 816+71.1 RT TO STA 817+21.1 RT -
STEEL PLATE BEAM GUARD ENERGY ABSORBING TERMINAL

SLOPE INTERCEPT (TYP.)

EXISTING R/W (TYP.)

N

BEAM GUARD DETAIL - RT & LT EAT'S
STA. 816+71.07 - 822+02.68

REFER TO S.D.D. "STEEL PLATE BEAM GUARD ENERGY ABSORBING TERMINAL" FOR ADDITIONAL INFORMATION.

2

PROJECT NO: 5235-03-70	HWY: STH 80	COUNTY: GRANT	BEAM GUARD DETAILS	SHEET 20	E

FILE NAME : X:\PROJECTS\GRANT\200050MW - 5235-03-00 STH 80\DESIGN\C3D\SHEETSPLAN\021002-BG.DWG
LAYOUT NAME - 021004-bg
PLOT DATE : 6/29/2022 4:37 PM PLOT BY : MICHAEL LISKA PLOT NAME : PLOT SCALE : 1 IN:50 FT

WISDOT/CADDS SHEET 42

2

2

ALLIANT ENERGY OVERHEAD ELECTRIC

EAT POST #1 7'BS'+90 -9.5' LT

EAT POST #5 8'BS'+14.9 -9.0' LT

EAT POST #9 8'BS'+39.9 -8.5' LT

BEGIN MGS GUARDRAIL 3 8'BS'+43.1 -8.4' LT

STA 7'BS'+90.0 LT TO STA 8'BS'+43.1 LT - MGS GUARDRAIL TERMINAL EAT
STA 8'BS'+43.1 LT TO STA 9'BS'+62.8 LT - MGS GUARDRAIL 3
STA 9'BS'+62.8 LT TO STA 850+28.4 LT - MGS GUARDRAIL SHORT RADIUS
STA 850+28.4 LT TO STA 850+82.9 LT - MGS GUARDRAIL 3 HS
STA 850+28.4 LT TO STA 851+42.3 LT - MGS GUARDRAIL 3
STA 851+42.3 LT TO STA 851+95.4 LT - MGS GUARDRAIL TERMINAL EAT

STA 847+45.9 LT TO STA 847+98.9 LT - MGS GUARDRAIL TERMINAL EAT
STA 847+98.9 LT TO STA 849+23.7 LT - MGS GUARDRAIL 3
STA 849+23.7 LT TO STA 9'BS'+35.8 RT - MGS GUARDRAIL SHORT RADIUS
STA 9'BS'+35.8 RT TO STA 9'BS'+09.3 RT - MGS GUARDRAIL 3
STA 9'BS'+09.3 RT TO STA 8'BS'+54.4 RT - MGS GUARDRAIL TERMINAL EAT

SLOPE INTERCEPT (TYP.)

EAT POST #1 8'BS'+54.4 11.8' RT

EAT POST #5 8'BS'+80.1 13.2' RT

EAT POST #9 9'BS'+06.1 12.7' RT

END MGS GUARDRAIL 3 9'BS'+09.3 12.6' RT

TEMPORARY GRADING EASEMENT (TYP.)

BLOCKHOUSE ROAD

7'BS'+00

8'BS'+00

9'BS'+00

EXISTING R/W (TYP.)

CENTURY LINK COMM

EXISTING R/W (TYP.)

SLOPE INTERCEPT (TYP.)

EAT POST #1 847+45.9 -20.0' LT

EAT POST #5 847+70.8 -19.1' LT

EAT POST #9 847+95.8 -18.1' LT

BEGIN MGS GUARDRAIL 3 847+98.9 -18.0' LT

END MGS GUARDRAIL SHORT RADIUS 9'BS'+35.8 11.6' RT

R = 23'

BEGIN MGS GUARDRAIL SHORT RADIUS 849+23.7 -18.0' LT

BEGIN MGS GUARDRAIL SHORT RADIUS 9'BS'+62.8 -23.0' LT

END MGS GUARDRAIL SHORT RADIUS 850+28.4 -22.1' LT

R = 60'

END MGS GUARDRAIL 3 HS 850+82.9 -18.0' LT

END MGS GUARDRAIL 3 851+42.3 -18.0' LT

EAT POST #9 851+45.4 -18.1' LT

EAT POST #5 851+70.4 -19.1' LT

EAT POST #1 851+95.4 -20.0' LT

PRIVATE DRIVEWAY

PAVED SHOULDER EDGE (TYP.)

GRAVEL SHOULDER HINGE POINT (TYP.)

STH 80 847+00 848+00 850+00 851+00 852+00 853+00 854+00 STH 80

C-22-14

INSTALL 2" SLOPED CURB (36-INCH, DETAIL ON SHEET 021001-CD)

INSTALL 2" SLOPED CURB (36-INCH, DETAIL ON SHEET 021001-CD)

BEGIN MGS GUARDRAIL SHORT RADIUS 850+91.2 18.0' RT

R = 48'

R = 45'

CENTURY LINK COMM

EAT POST #1 846+75.9 18.0' RT

EAT POST #5 847+00.9 18.0' RT

EAT POST #9 847+25.9 18.0' RT

BEGIN MGS GUARDRAIL 3 847+29 18.0' RT

BEGIN MGS GUARDRAIL 3 HS 848+82.2 18.0' RT

SLOPE INTERCEPT (TYP.)

EXISTING R/W (TYP.)

END MGS GUARDRAIL SHORT RADIUS 10'BN'+53.0 14.9' RT

END MGS GUARDRAIL 3 10'BN'+77.8 13.4' RT

EAT POST #9 10'BN'+80.8 13.5' RT

EAT POST #5 11'BN'+04.7 14.3' RT

EAT POST #1 11'BN'+28.6 14.9' RT

11'BN'+00

BLOCKHOUSE ROAD

12'BN'+00

END MGS GUARDRAIL SHORT RADIUS 852+10.2 18.0' RT

BEGIN MGS GUARDRAIL SHORT RADIUS 10'BN'+69.6 -11.7' LT

BEGIN MGS GUARDRAIL 3 10'BN'+95.1 -10.0' LT

EAT POST #9 10'BN'+98.4 -10.1' LT

EAT POST #5 11'BN'+24.3 -10.8' LT

EAT POST #1 11'BN'+50.3 -11.5' LT

SLOPE INTERCEPT (TYP.)

EXISTING R/W (TYP.)

END MGS GUARDRAIL 3 853+85.4 18.0' RT

EAT POST #9 853+88.5 18.1' RT

EAT POST #5 854+15.5 19.1' RT

EAT POST #1 854+38.4 20.0' RT

STA 846+75.9 RT TO STA 847+29.0 RT - MGS GUARDRAIL TERMINAL EAT
STA 847+29.0 RT TO STA 848+82.2 RT - MGS GUARDRAIL 3
STA 848+82.2 RT TO STA 850+91.5 RT - MGS GUARDRAIL 3 HS
STA 850+91.5 RT TO STA 10'BN'+53.0 RT - MGS GUARDRAIL SHORT RADIUS
STA 10'BN'+53.0 RT TO STA 10'BN'+77.8 RT - MGS GUARDRAIL 3
STA 10'BN'+77.8 RT TO STA 11'BN'+28.5 RT - MGS GUARDRAIL TERMINAL EAT

STA 11'BN'+50.3 LT TO STA 10'BN'+95.1 LT - MGS BEAMGUARD TERMINAL EAT
STA 10'BN'+95.1 LT TO STA 10'BN'+69.5 LT - MGS GUARDRAIL 3
STA 10'BN'+69.5 LT TO STA 852+10.4 RT - MGS GUARDRAIL SHORT RADIUS
STA 852+10.4 RT TO STA 853+85.4 RT - MGS GUARDRAIL 3
STA 853+85.4 RT TO STA 854+38.4 RT - MGS GUARDRAIL TERMINAL EAT

REFER TO S.D.D.'S "MIDWEST GUARDRAIL SYSTEM (MGS) GUARDRAIL", "MIDWEST GUARDRAIL SYSTEM (MGS) ENERGY ABSORBING TERMINAL" AND "SHORT RADIUS BEAM GUARD AND TERMINAL (MGS)" FOR ADDITIONAL INFORMATION.

BEAM GUARD DETAIL - BLOCKHOUSE ROAD INTERSECTION
STA. 846+75.91 - 854+38.42

(1) AREAS WITH ALTERNATIVE GRADING AT MIDWEST GUARDRAIL SYSTEM ENERGY ABSORBING TERMINALS. SEE CROSS SECTIONS FOR DETAILS.

PROJECT NO: 5235-03-70	HWY: STH 80	COUNTY: GRANT	BEAM GUARD DETAILS	SHEET 21	E

2

STA 928+13.8 LT TO STA 928+66.9 LT - MGS GUARDRAIL TERMINAL EAT
STA 928+66.9 LT TO STA 933+66.9 LT - MGS GUARDRAIL 3
STA 933+66.9 LT TO STA 934+20.0 LT - MGS GUARDRAIL TERMINAL EAT

EXISTING RIGHT-OF-WAY
EAT POST #1 928+13.8 -20.0' LT
EAT POST #5 928+38.8 -19.1' LT
EAT POST #9 928+63.8 -18.1' LT
BEGIN MGS GUARDRAIL 3 928+66.9 -18.0' LT
CENTURY LINK COMM
SLOPE INTERCEPT (TYP.)
CONCRETE STORMWATER BOX OUTLET (UNNUMBERED)
ALLIANT ENERGY OVERHEAD ELECTRIC
END MGS GUARDRAIL 3 933+66.9 -18.0' LT
EAT POST #9 933+70 -18.1' LT
EAT POST #5 933+95 -19.1' LT
EAT POST #1 934+20 -20.0' LT
ALLIANT ENERGY GAS
N

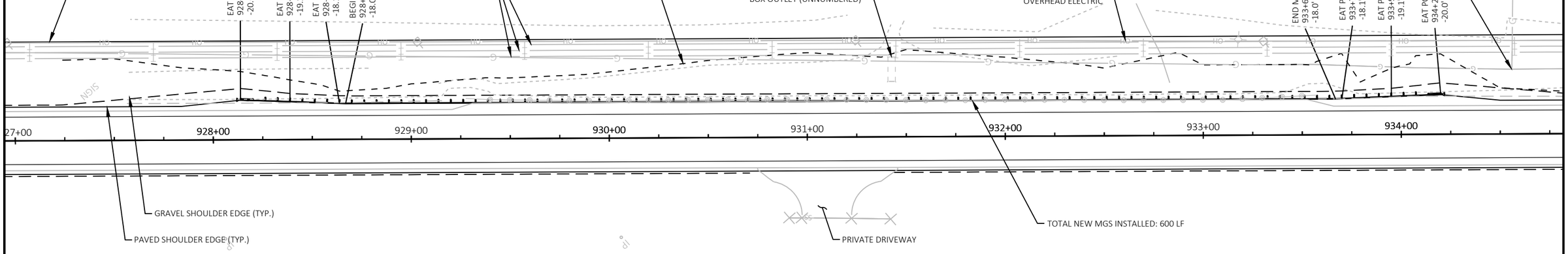

REFER TO S.D.D.'S "MIDWEST GUARDRAIL SYSTEM (MGS) GUARDRAIL" AND "MIDWEST GUARDRAIL SYSTEM (MGS) ENERGY ABSORBING TERMINAL" FOR ADDITIONAL INFORMATION.

BEAM GUARD DETAIL - LT
STA. 928+13.84 - 934+20.00

ALLIANT ENERGY ELECTRIC
GUARD RAIL NEAR END LENGTH NOT COMPLIANT. CANNOT EXTEND DUE TO HOTEL ENTRANCE.
HOTEL ENTRANCE
EXISTING RIGHT-OF-WAY
NO GUARD RAIL WORK REQUIRED
EXISTING CLASS A GUARD RAIL TO REMAIN
CENTURY LINK COMM
ALLIANT ELECTRIC

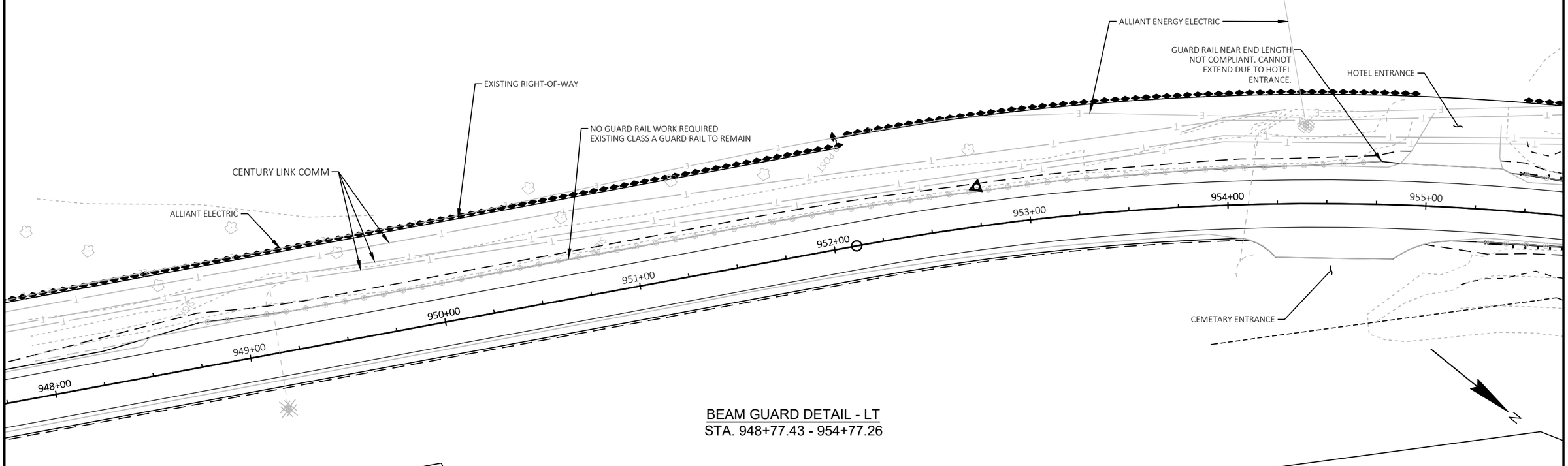

BEAM GUARD DETAIL - LT
STA. 948+77.43 - 954+77.26

PROJECT NO: 5235-03-70	HWY: STH 80	COUNTY: GRANT	BEAM GUARD DETAILS	SHEET 22	E

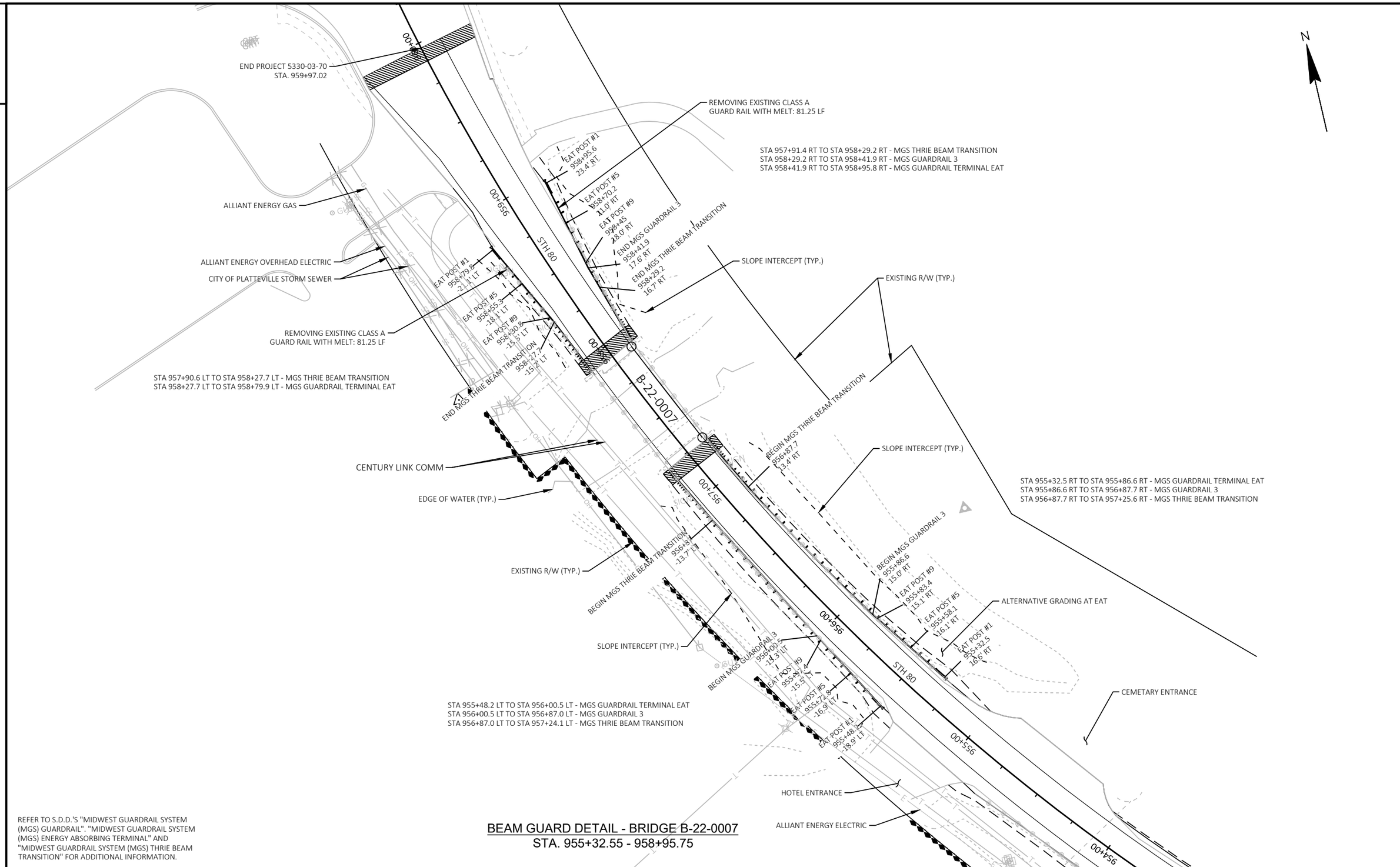

REFER TO S.D.D.'S "MIDWEST GUARDRAIL SYSTEM (MGS) GUARDRAIL". "MIDWEST GUARDRAIL SYSTEM (MGS) ENERGY ABSORBING TERMINAL" AND "MIDWEST GUARDRAIL SYSTEM (MGS) THRIE BEAM TRANSITION" FOR ADDITIONAL INFORMATION.

BEAM GUARD DETAIL - BRIDGE B-22-0007
STA. 955+32.55 - 958+95.75

PROJECT NO: 5235-03-70	HWY: STH 80	COUNTY: GRANT	BEAM GUARD DETAILS	SHEET 23	E

FILE NAME : X:\PROJECTS\GRANT\200050MW - 5235-03-00 STH 80\DESIGN\C3D\SHEETSPLAN\021002-BG.DWG
LAYOUT NAME - 021007-bg
PLOT DATE : 7/15/2022 1:37 PM PLOT BY : BRAD GROH PLOT NAME : PLOT SCALE : 1 IN:50 FT

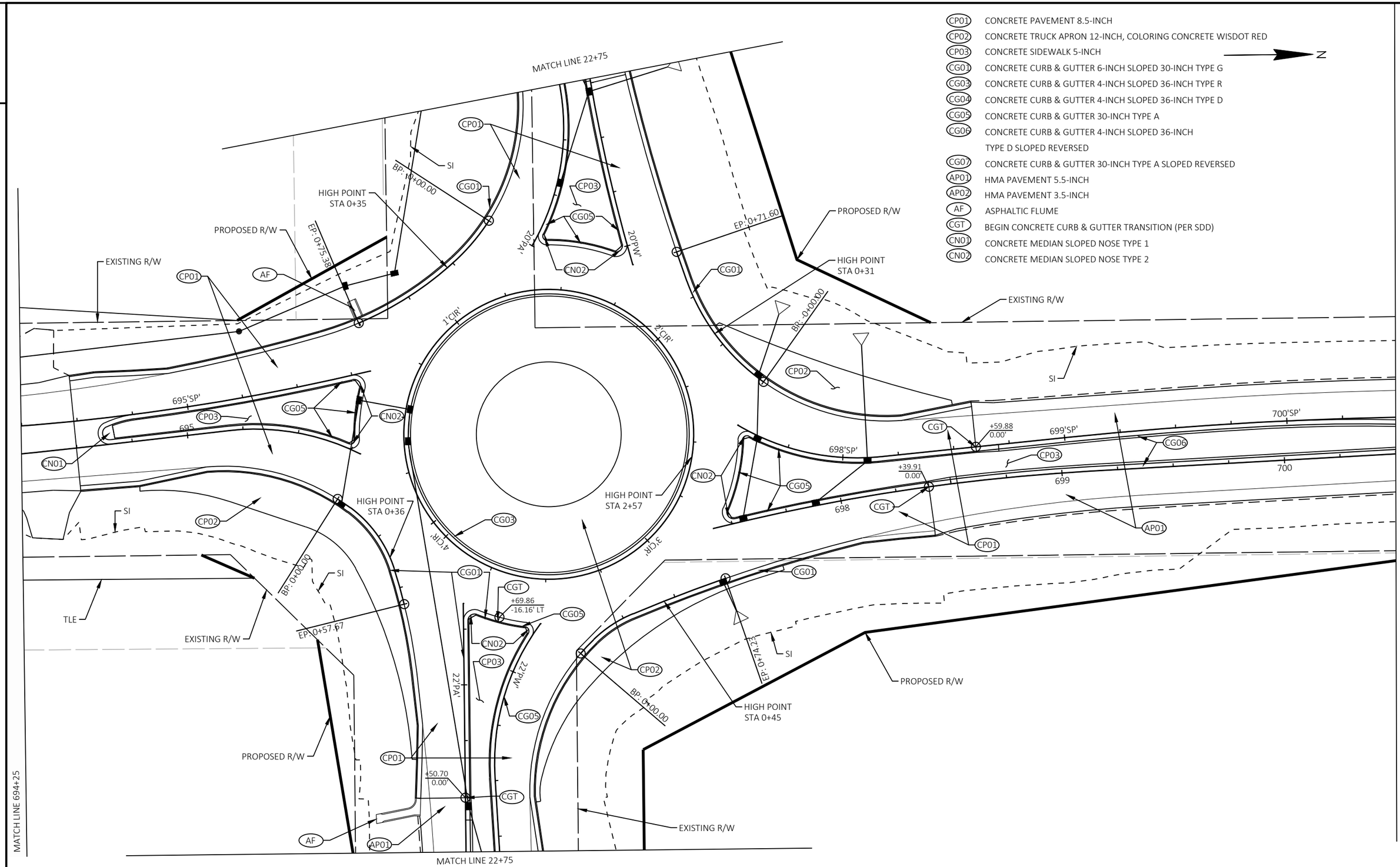

PROJECT NO: 5235-03-70	HWY: STH 80	COUNTY: GRANT	INTERSECTION DETAILS	SHEET 24	E

2

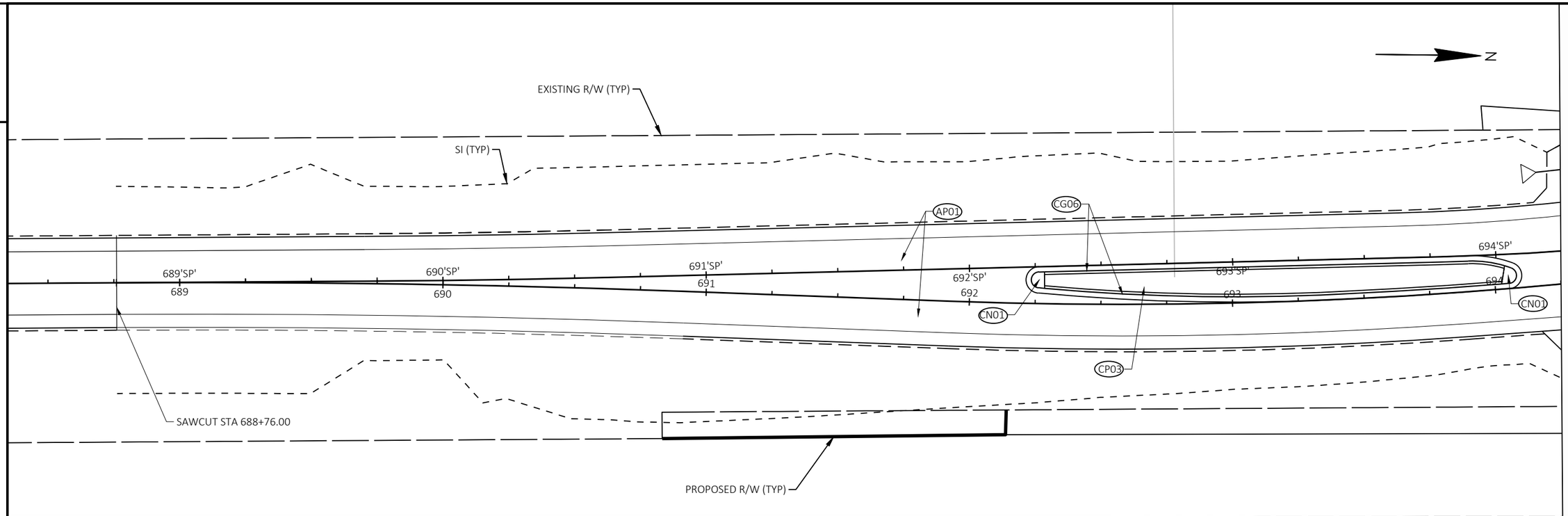

2

CP01	CONCRETE PAVEMENT 8.5-INCH
CP02	CONCRETE TRUCK APRON 12-INCH, COLORING CONCRETE WISDOT RED
CP03	CONCRETE SIDEWALK 5-INCH
CG01	CONCRETE CURB & GUTTER 6-INCH SLOPED 30-INCH TYPE G
CG03	CONCRETE CURB & GUTTER 4-INCH SLOPED 36-INCH TYPE R
CG04	CONCRETE CURB & GUTTER 4-INCH SLOPED 36-INCH TYPE D
CG05	CONCRETE CURB & GUTTER 30-INCH TYPE A
CG06	CONCRETE CURB & GUTTER 4-INCH SLOPED 36-INCH TYPE D SLOPED REVERSED
CG07	CONCRETE CURB & GUTTER 30-INCH TYPE A SLOPED REVERSED
AP01	HMA PAVEMENT 5.5-INCH
AP02	HMA PAVEMENT 3.5-INCH
AF	ASPHALTIC FLUME
CGT	BEGIN CONCRETE CURB & GUTTER TRANSITION (PER SDD)
CN01	CONCRETE MEDIAN SLOPED NOSE TYPE 1
CN02	CONCRETE MEDIAN SLOPED NOSE TYPE 2

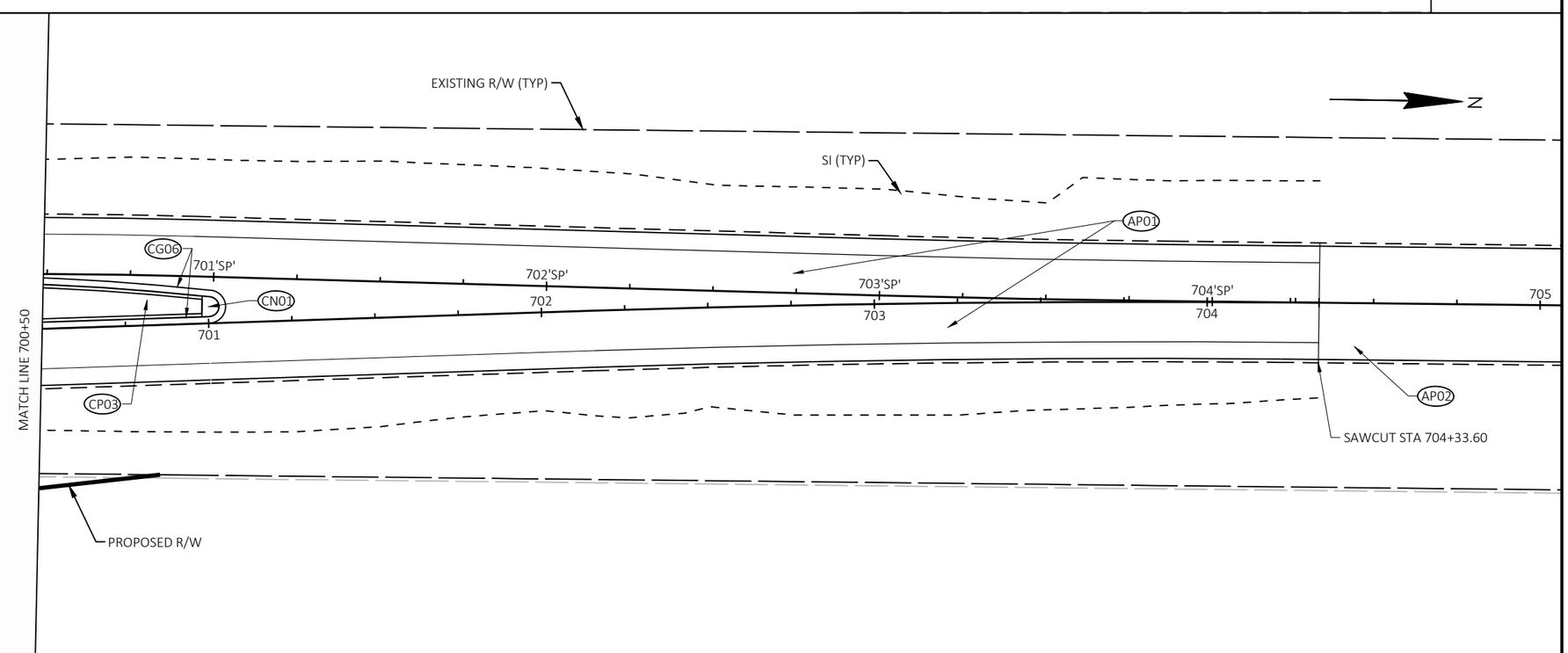

PROJECT NO: 5235-03-70	HWY: STH 80	COUNTY: GRANT	INTERSECTION DETAILS	SHEET 25	E

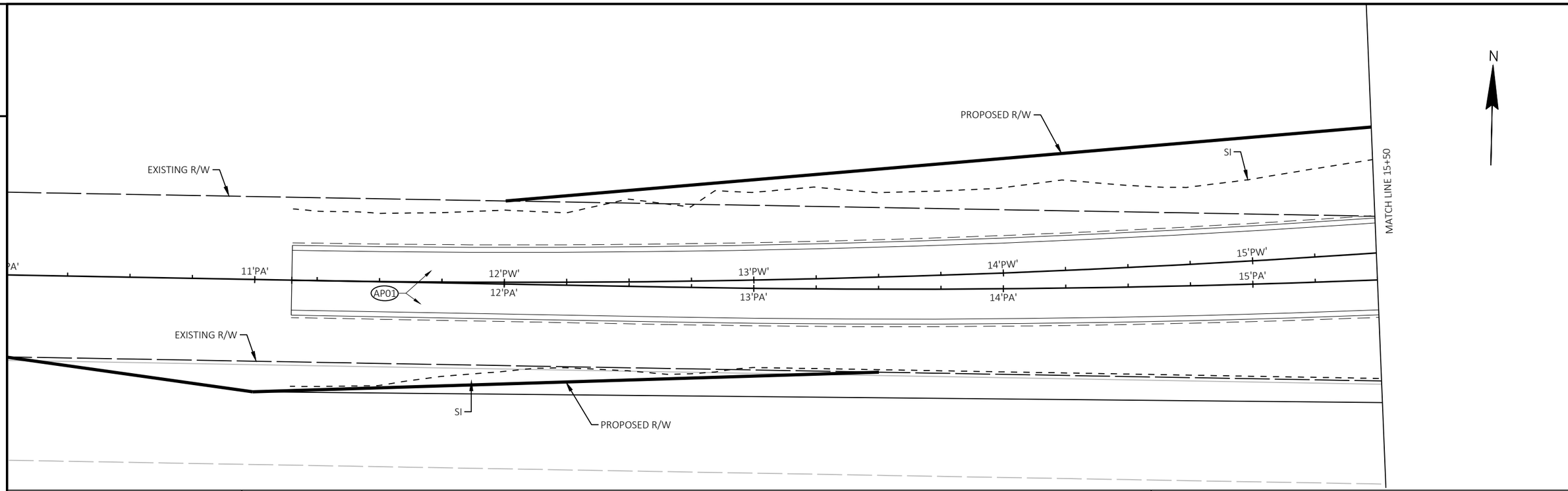

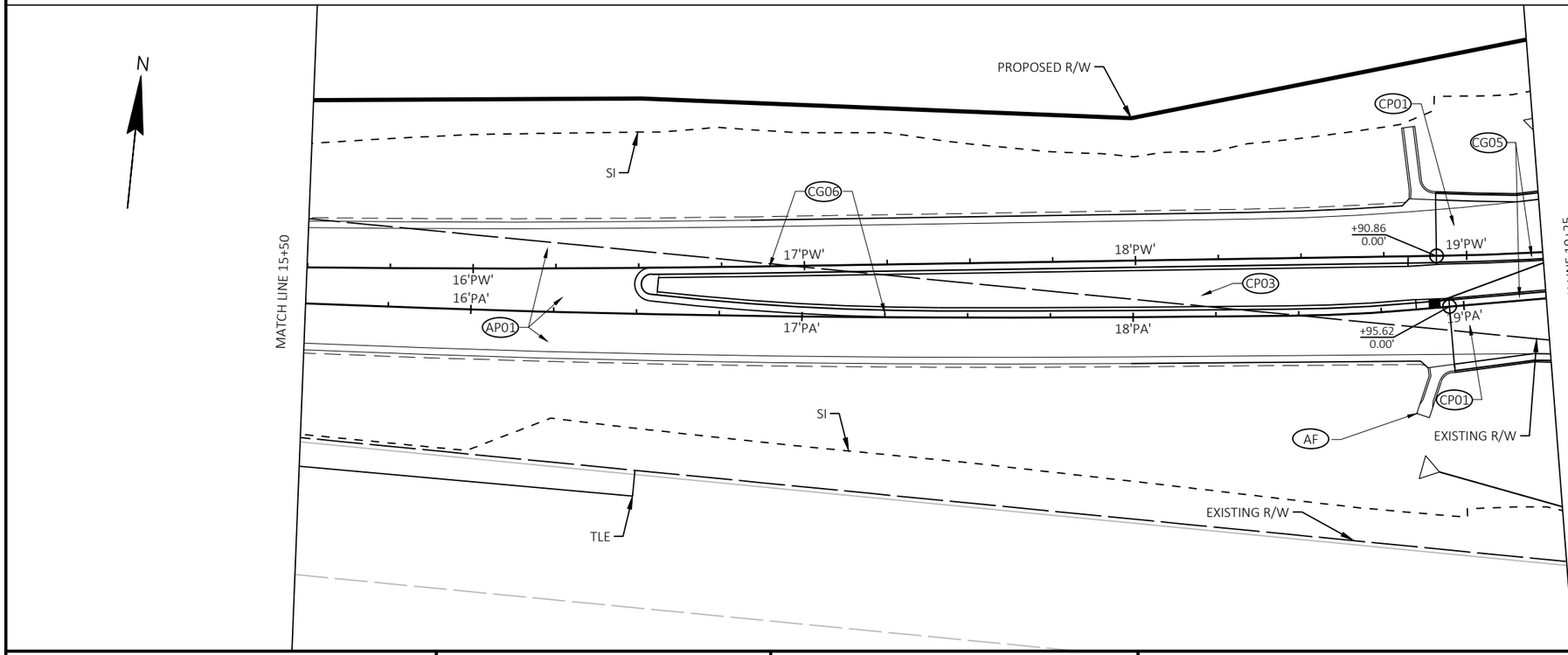

CP01	CONCRETE PAVEMENT 8.5-INCH
CP02	CONCRETE TRUCK APRON 12-INCH, COLORING CONCRETE WISDOT RED
CP03	CONCRETE SIDEWALK 5-INCH
CG01	CONCRETE CURB & GUTTER 6-INCH SLOPED 30-INCH TYPE G
CG03	CONCRETE CURB & GUTTER 4-INCH SLOPED 36-INCH TYPE R
CG04	CONCRETE CURB & GUTTER 4-INCH SLOPED 36-INCH TYPE D
CG05	CONCRETE CURB & GUTTER 30-INCH TYPE A
CG06	CONCRETE CURB & GUTTER 4-INCH SLOPED 36-INCH TYPE D SLOPED REVERSED
CG07	CONCRETE CURB & GUTTER 30-INCH TYPE A SLOPED REVERSED
AP01	HMA PAVEMENT 5.5-INCH
AP02	HMA PAVEMENT 3.5-INCH
AF	ASPHALTIC FLUME
CGT	BEGIN CONCRETE CURB & GUTTER TRANSITION (PER SDD)
CN01	CONCRETE MEDIAN SLOPED NOSE TYPE 1
CN02	CONCRETE MEDIAN SLOPED NOSE TYPE 2

2

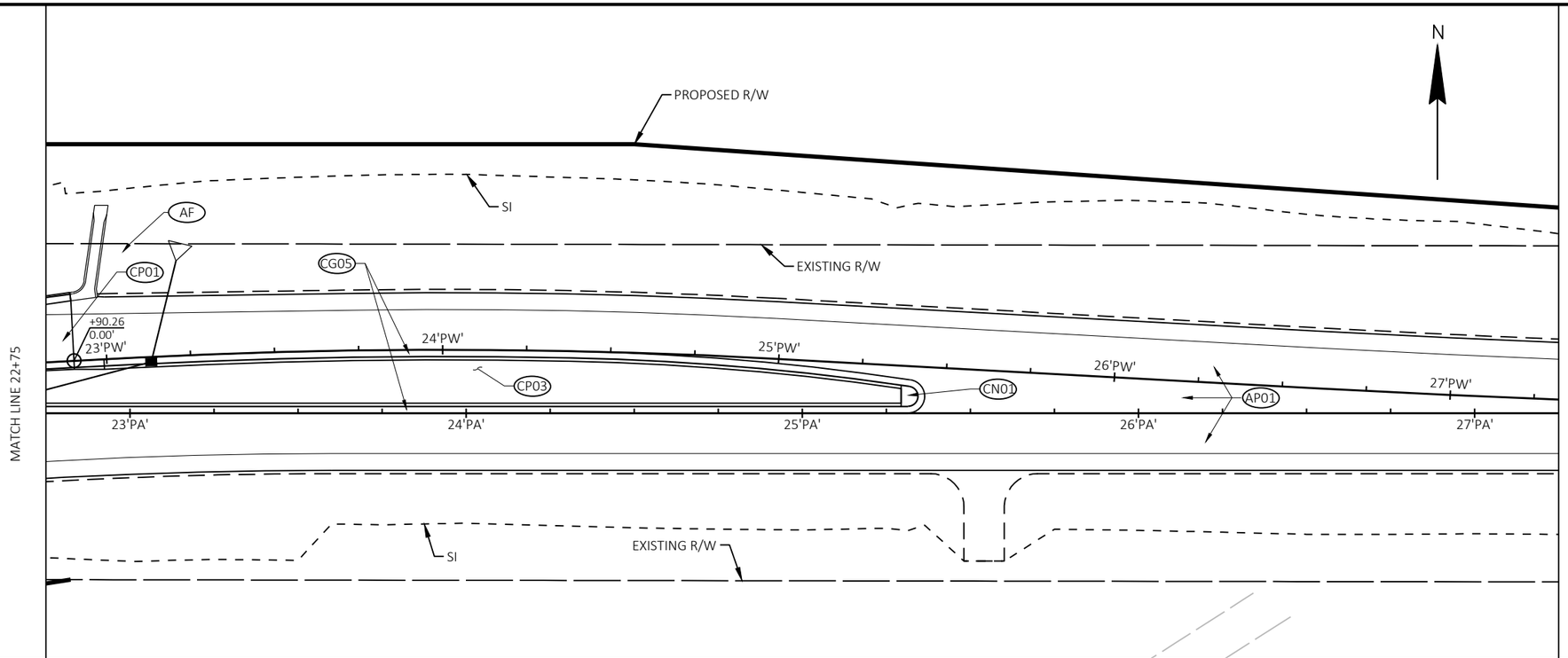

2

CP01	CONCRETE PAVEMENT 8.5-INCH
CP02	CONCRETE TRUCK APRON 12-INCH, COLORING CONCRETE WISDOT RED
CP03	CONCRETE SIDEWALK 5-INCH
CG01	CONCRETE CURB & GUTTER 6-INCH SLOPED 30-INCH TYPE G
CG03	CONCRETE CURB & GUTTER 4-INCH SLOPED 36-INCH TYPE R
CG04	CONCRETE CURB & GUTTER 4-INCH SLOPED 36-INCH TYPE D
CG05	CONCRETE CURB & GUTTER 30-INCH TYPE A
CG06	CONCRETE CURB & GUTTER 4-INCH SLOPED 36-INCH TYPE D SLOPED REVERSED
CG07	CONCRETE CURB & GUTTER 30-INCH TYPE A SLOPED REVERSED
AP01	HMA PAVEMENT 5.5-INCH
AP02	HMA PAVEMENT 3.5-INCH
AF	ASPHALTIC FLUME
CGT	BEGIN CONCRETE CURB & GUTTER TRANSITION (PER SDD)
CN01	CONCRETE MEDIAN SLOPED NOSE TYPE 1
CN02	CONCRETE MEDIAN SLOPED NOSE TYPE 2

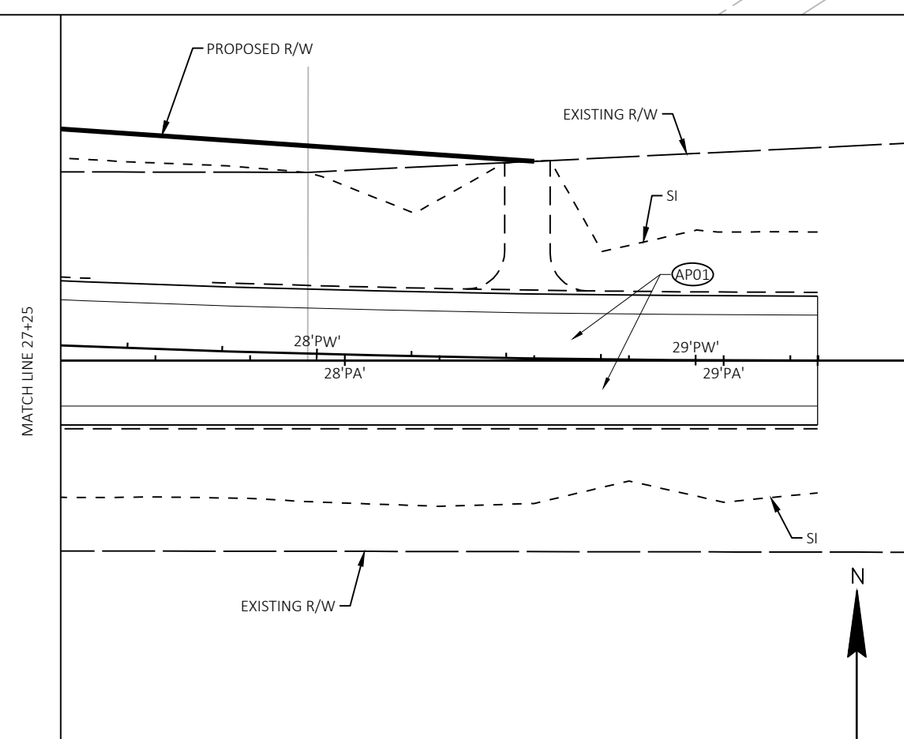

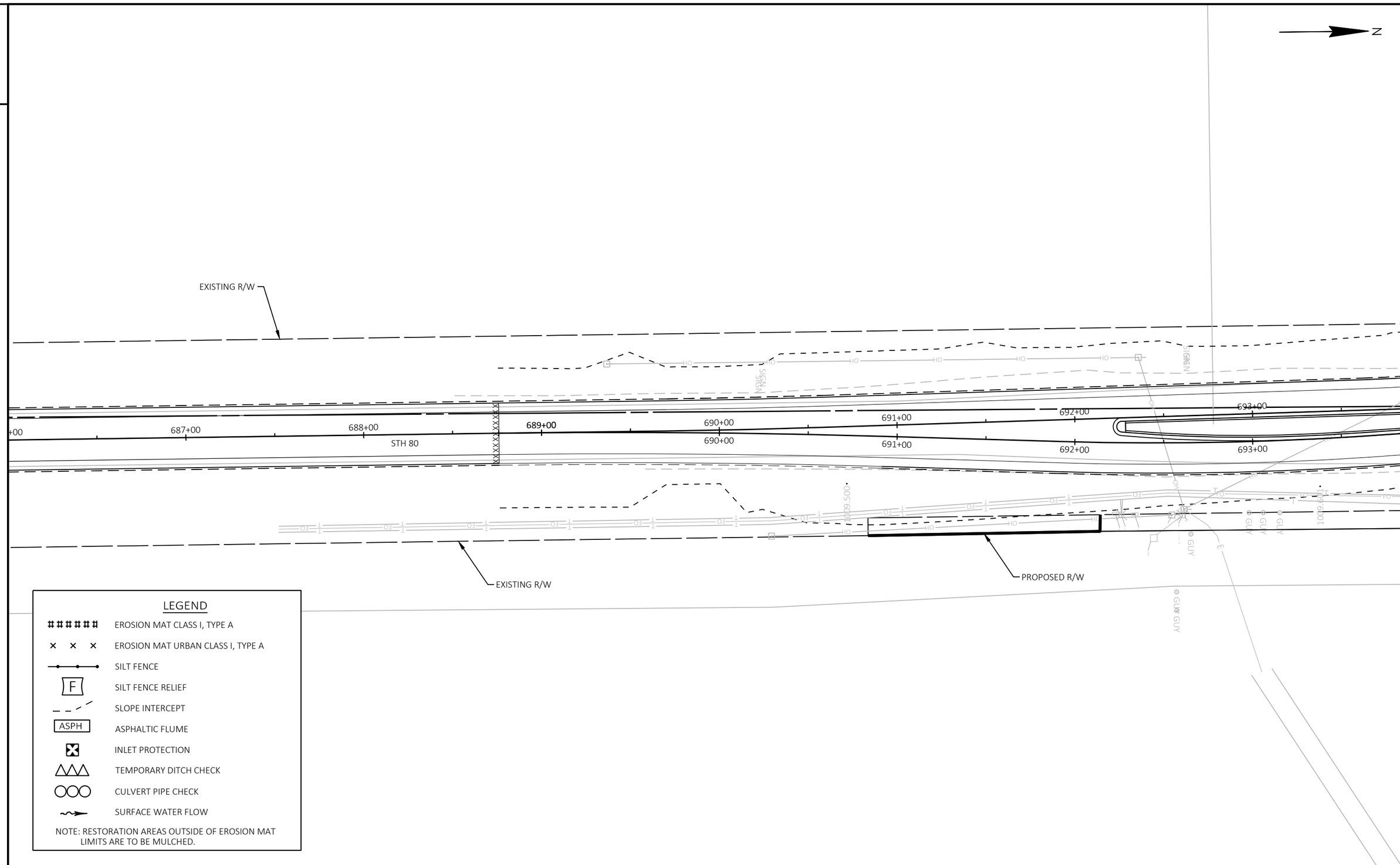
N
EXISTING R/W
+00
687+00
688+00
689+00
690+00
691+00
692+00
693+00
STH 80
EXISTING R/W
PROPOSED R/W
GUY
LEGEND
EROSION MAT CLASS I, TYPE A
EROSION MAT URBAN CLASS I, TYPE A
SILT FENCE
F
SILT FENCE RELIEF
SLOPE INTERCEPT
ASPH
ASPHALTIC FLUME
INLET PROTECTION
TEMPORARY DITCH CHECK
CULVERT PIPE CHECK
SURFACE WATER FLOW
NOTE: RESTORATION AREAS OUTSIDE OF EROSION MAT LIMITS ARE TO BE MULCHED.

2

LIGHT RIPRAP
3' X 6'

PATCH RD

ASPH

19+00

19+00

PROPOSED R/W

LIGHT RIPRAP
6' X 7'

20+00

20+00

PROPOSED R/W

LIGHT RIPRAP
6' X 5'

LIGHT RIPRAP
6' X 9'

EXISTING R/W

TLE

EXISTING R/W

21+00

695+00

693+00

694+00

STH 80

695+00

693+00

694+00

698+00

699+00

700+00

STH 80

699+00

700+00

698+00

34+00

44+00

EXISTING R/W

TLE

EXISTING R/W

LIGHT RIPRAP
6' X 8'

PROPOSED R/W

22+00

22+00

STH 181

PROPOSED R/W

23+00

23+00

LIGHT RIPRAP
6' X 16'

BLDG

BLDG

BLDG

BLDG

LEGEND

# # # # # #	EROSION MAT CLASS I, TYPE A
× × ×	EROSION MAT URBAN CLASS I, TYPE A
—•—•—	SILT FENCE
F	SILT FENCE RELIEF
— — —	SLOPE INTERCEPT
ASPH	ASPHALTIC FLUME
	INLET PROTECTION
△△△	TEMPORARY DITCH CHECK
○○○	CULVERT PIPE CHECK
~~→	SURFACE WATER FLOW

NOTE: RESTORATION AREAS OUTSIDE OF EROSION MAT LIMITS ARE TO BE MULCHED.

PROJECT NO: 5235-03-70	HWY: STH 80	COUNTY: GRANT	EROSION CONTROL	SHEET 29	E

FILE NAME : X:\PROJECTS\GRANT\200050MW - 5235-03-00 STH 80\DESIGN\C3D\SHEETSPLAN\022001-EC_V2.DWG
LAYOUT NAME - 022002

PLOT DATE : 10/19/2022 1:33 PM PLOT BY : BRAD GROH PLOT NAME : PLOT SCALE : 1 IN:50 FT

WISDOT/CADDS SHEET 42

2

LEGEND

- EROSION MAT CLASS I, TYPE A
- EROSION MAT URBAN CLASS I, TYPE A
- SILT FENCE
- F — SILT FENCE RELIEF
- SLOPE INTERCEPT
- ASPH — ASPHALTIC FLUME
- INLET PROTECTION
- TEMPORARY DITCH CHECK
- CULVERT PIPE CHECK
- SURFACE WATER FLOW

NOTE: RESTORATION AREAS OUTSIDE OF EROSION MAT LIMITS ARE TO BE MULCHED.

N

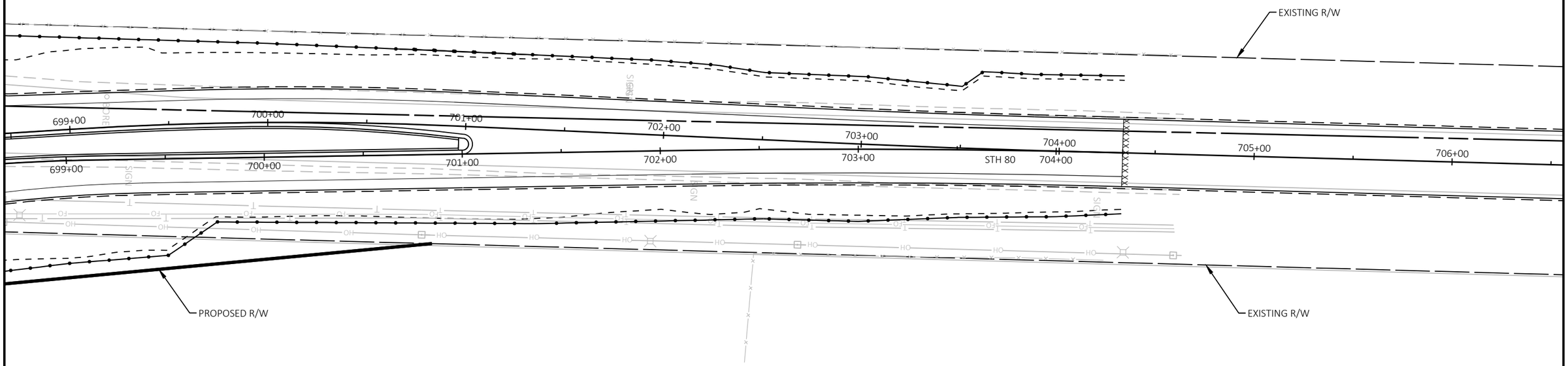

PROJECT NO: 5235-03-70	HWY: STH 80	COUNTY: GRANT	EROSION CONTROL	SHEET 30	E

FILE NAME : X:\PROJECTS\GRANT\200050MW - 5235-03-00 STH 80\DESIGN\C3D\SHEETSPLAN\022001-EC_V2.DWG
LAYOUT NAME - 022003
PLOT DATE : 10/19/2022 1:33 PM
PLOT BY : BRAD GROH
PLOT NAME :
PLOT SCALE : 1 IN:50 FT

WISDOT/CADDS SHEET 42

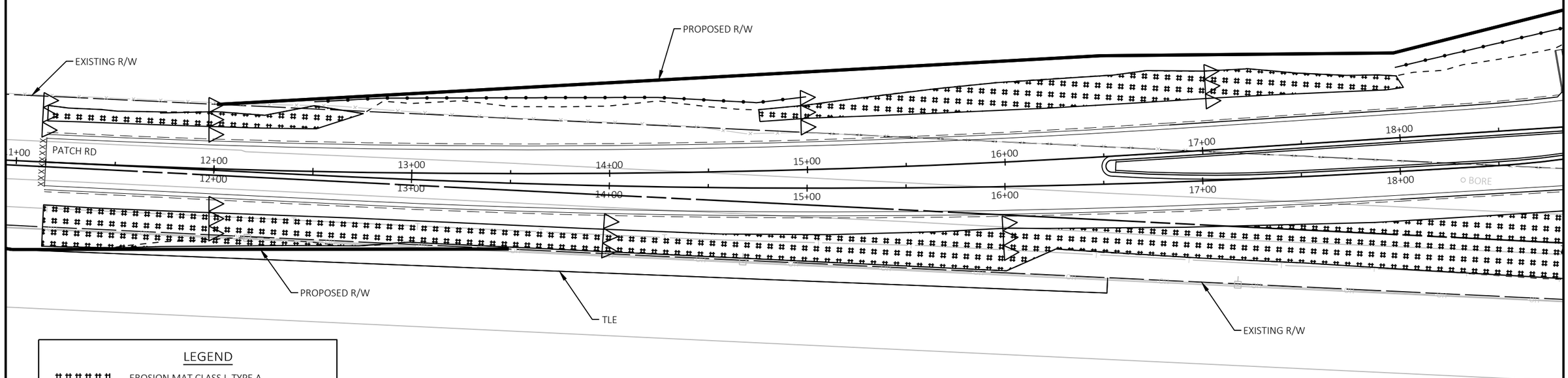

LEGEND

- EROSION MAT CLASS I, TYPE A
- EROSION MAT URBAN CLASS I, TYPE A
- SILT FENCE
- F — SILT FENCE RELIEF
- SLOPE INTERCEPT
- ASPH — ASPHALTIC FLUME
- INLET PROTECTION
- TEMPORARY DITCH CHECK
- CULVERT PIPE CHECK
- SURFACE WATER FLOW

NOTE: RESTORATION AREAS OUTSIDE OF EROSION MAT LIMITS ARE TO BE MULCHED.

PROJECT NO: 5235-03-70	HWY: STH 80	COUNTY: GRANT	EROSION CONTROL	SHEET 31	E

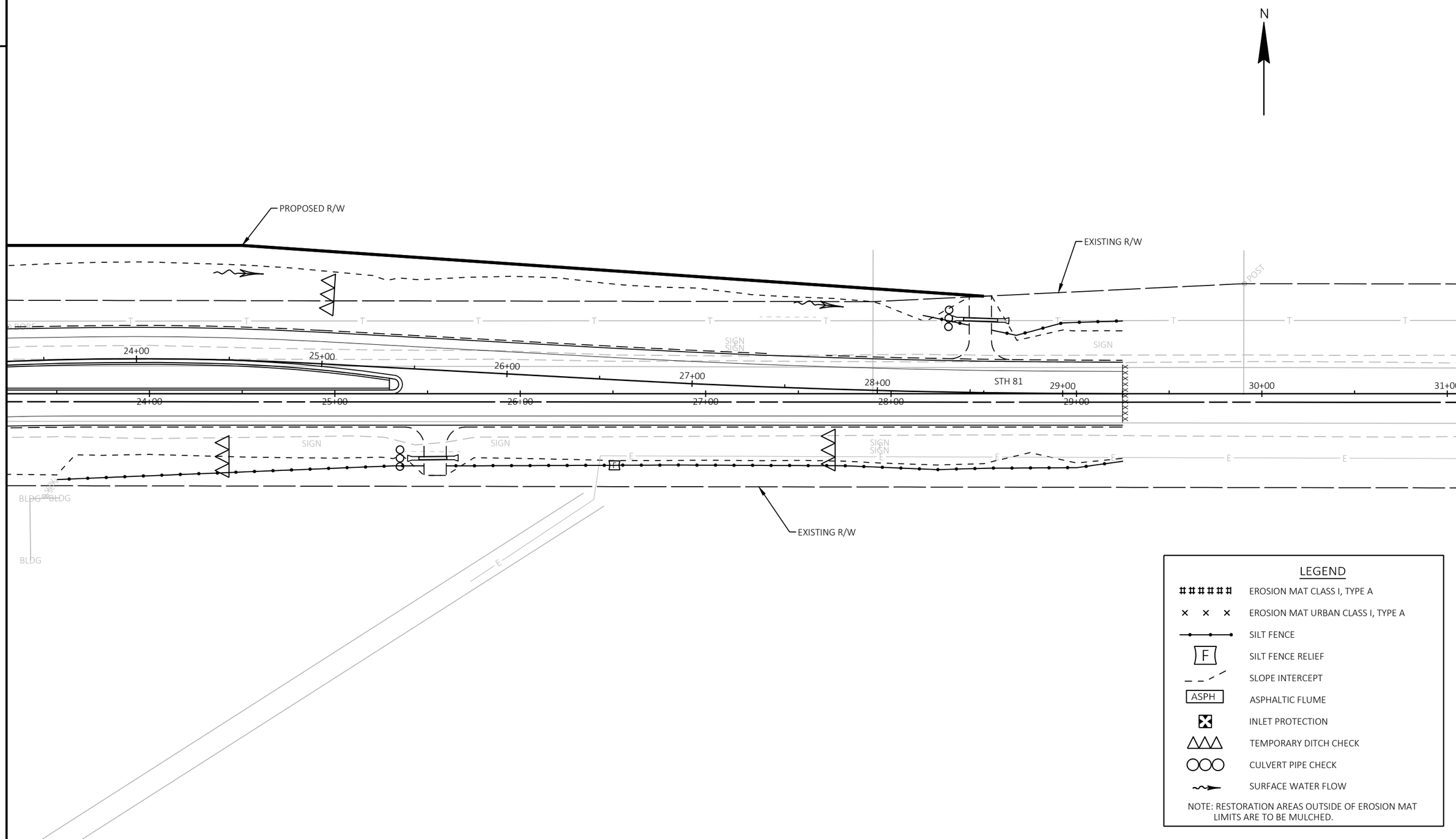

PROJECT NO: 5235-03-70	HWY: STH 80	COUNTY: GRANT	EROSION CONTROL	SHEET 32	E

FILE NAME : X:\PROJECTS\GRANT\200050MW - 5235-03-00 STH 80\DESIGN\C3D\SHEETSPLAN\022001-EC_V2.DWG
LAYOUT NAME - 022005
PLOT DATE : 10/19/2022 1:36 PM PLOT BY : BRAD GROH PLOT NAME : PLOT SCALE : 1 IN:50 FT

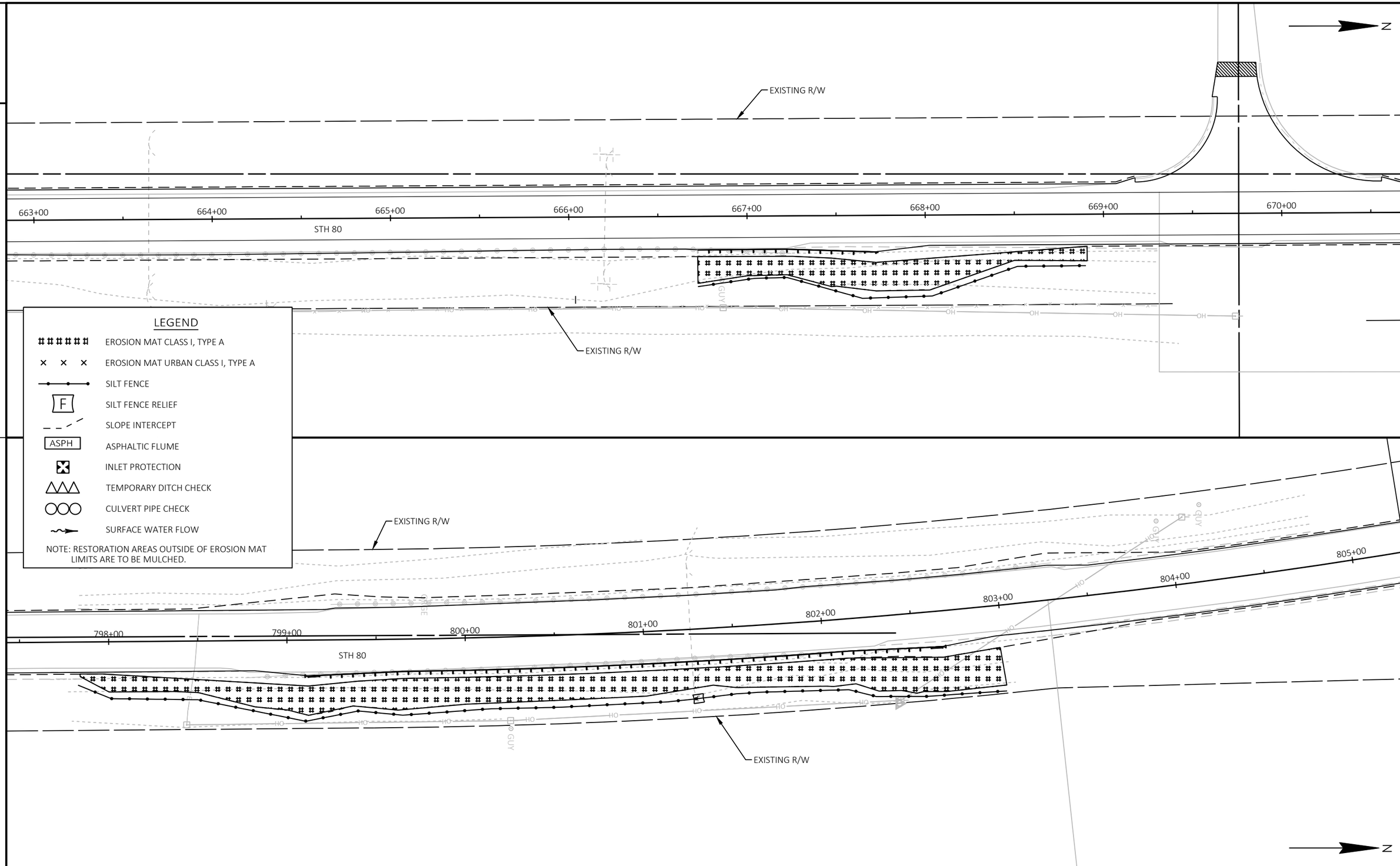

PROJECT NO: 5235-03-70	HWY: STH 80	COUNTY: GRANT	EROSION CONTROL	SHEET 33	E

FILE NAME : X:\PROJECTS\GRANT\200050MW - 5235-03-00 STH 80\DESIGN\C3D\SHEETSPLAN\022001-EC_V2.DWG
LAYOUT NAME - 022006
PLOT DATE : 10/19/2022 1:37 PM
PLOT BY : BRAD GROH
PLOT NAME :
PLOT SCALE : 1 IN:50 FT

2

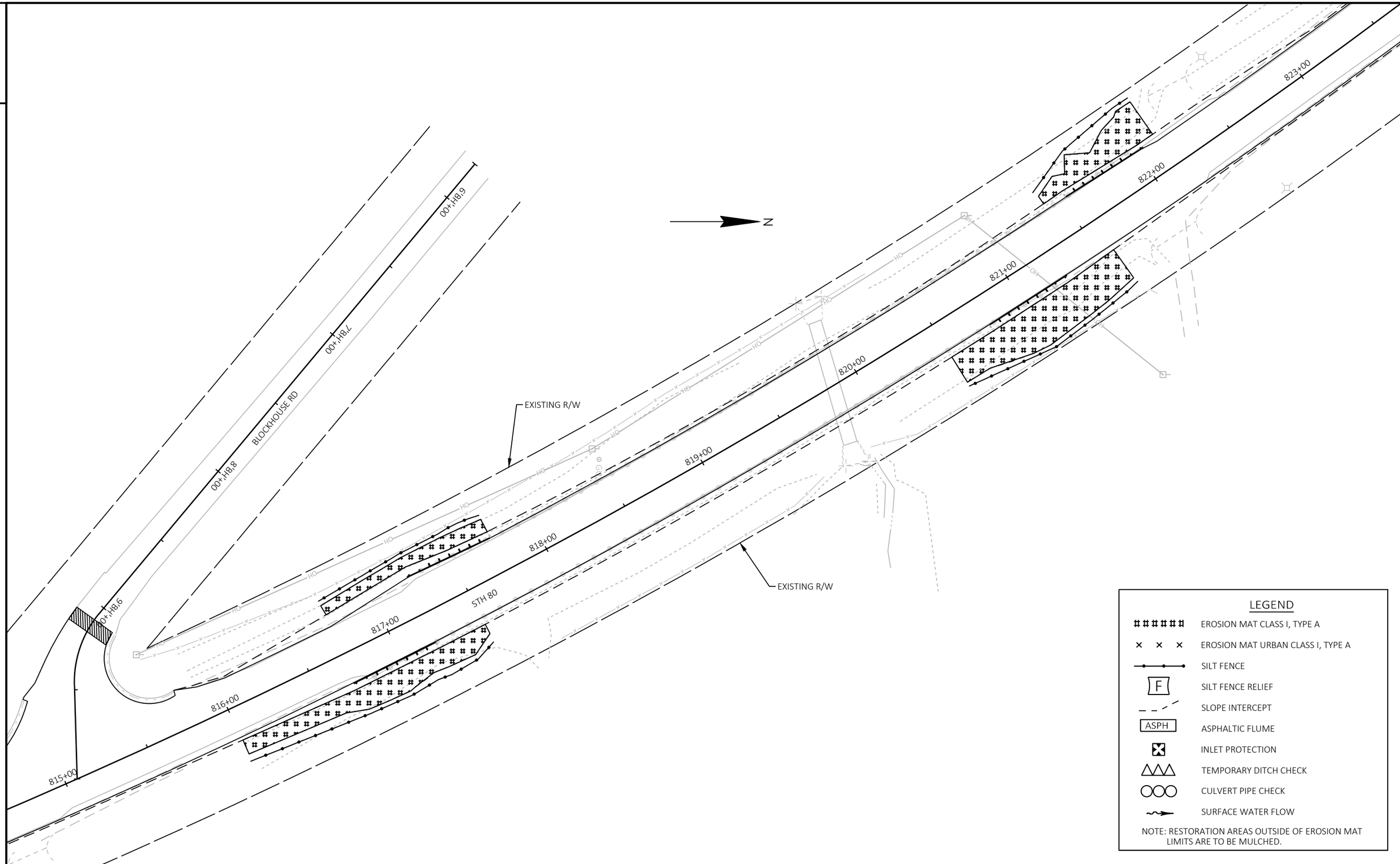

2

PROJECT NO: 5235-03-70	HWY: STH 80	COUNTY: GRANT	EROSION CONTROL	SHEET 34	E

FILE NAME : X:\PROJECTS\GRANT\200050MW - 5235-03-00 STH 80\DESIGN\C3D\SHEETSPLAN\022001-EC_V2.DWG
LAYOUT NAME - 022007
PLOT DATE : 10/19/2022 1:37 PM
PLOT BY : BRAD GROH
PLOT NAME :
PLOT SCALE : 1 IN:50 FT
WISDOT/CADDS SHEET 42

2

2

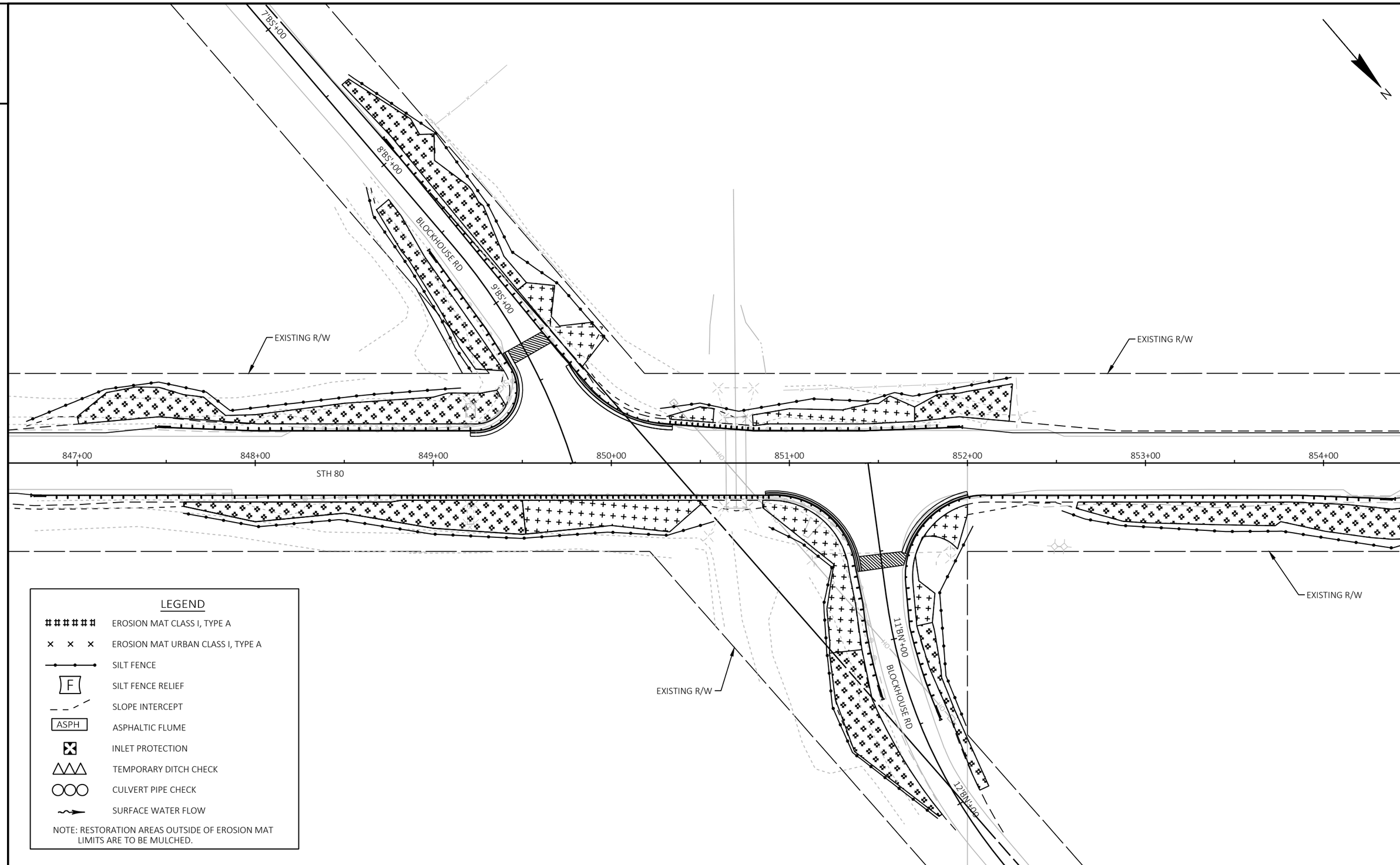

PROJECT NO: 5235-03-70	HWY: STH 80	COUNTY: GRANT	EROSION CONTROL	SHEET 35	E

FILE NAME : X:\PROJECTS\GRANT\200050MW - 5235-03-00 STH 80\DESIGN\C3D\SHEETSPLAN\022001-EC_V2.DWG
LAYOUT NAME - 022008
PLOT DATE : 10/19/2022 1:41 PM PLOT BY : BRAD GROH PLOT NAME : PLOT SCALE : 1 IN:50 FT

WISDOT/CADDS SHEET 42

2

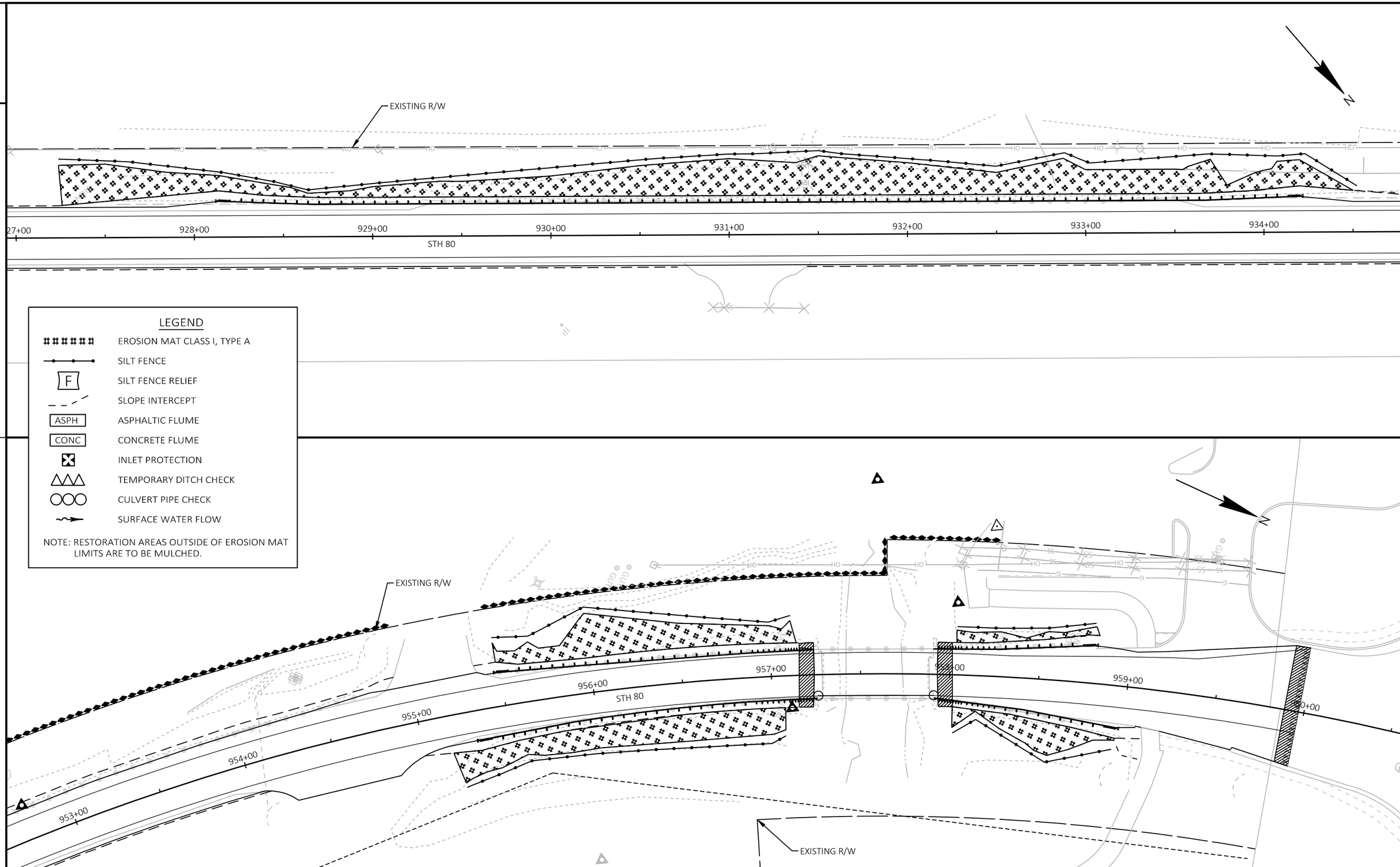

2

PROJECT NO: 5235-03-70	HWY: STH 80	COUNTY: GRANT	EROSION CONTROL	SHEET 36	E

FILE NAME : X:\PROJECTS\GRANT\200050MW - 5235-03-00 STH 80\DESIGN\C3D\SHEETSPLAN\022001-EC_V2.DWG
LAYOUT NAME - 022009
PLOT DATE : 10/19/2022 1:43 PM
PLOT BY : BRAD GROH
PLOT NAME :
PLOT SCALE : 1 IN:50 FT

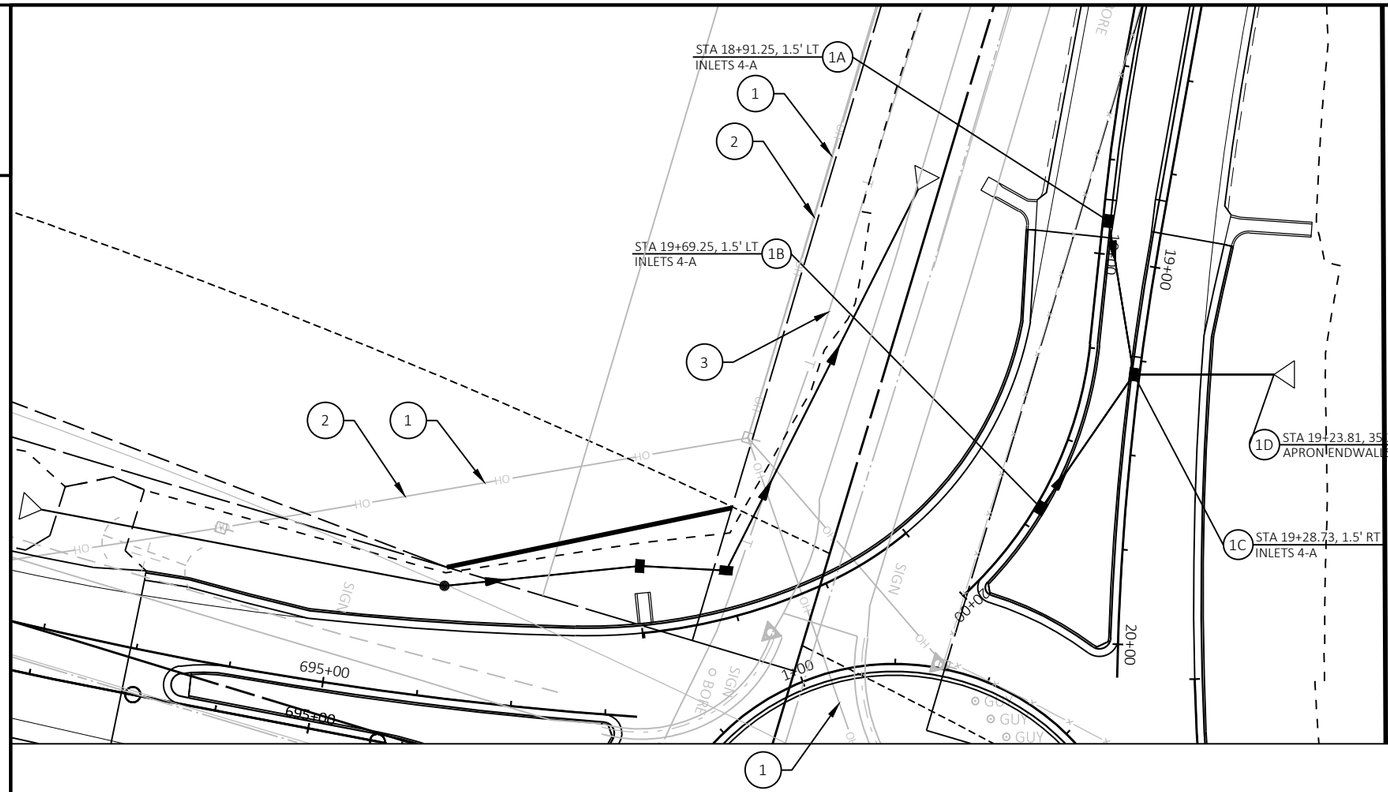

N

UTILITY LEGEND	
1 ALLIANT ENERGY ELECTR	3 CENTURY LINK
2 ATC	4 SCENIC RIVERS ELECTRIC

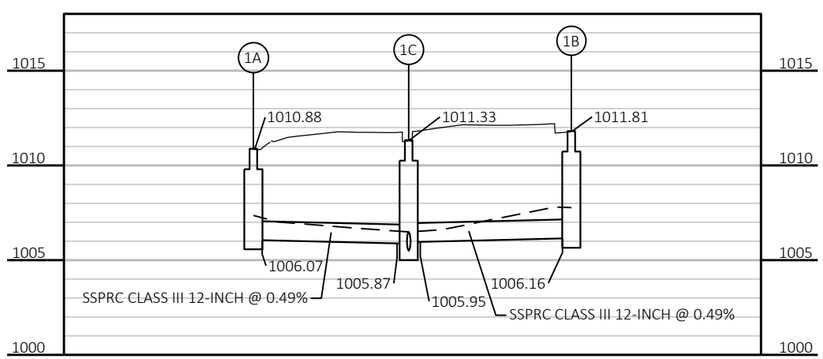

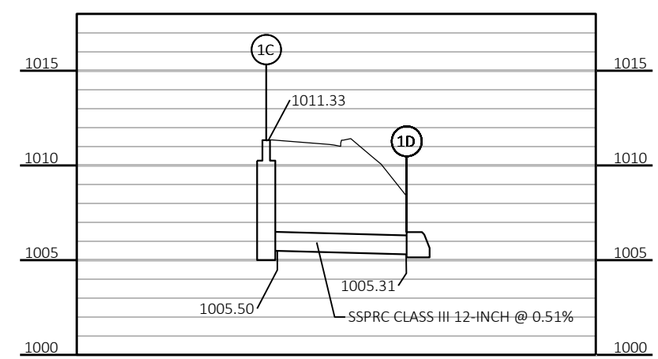

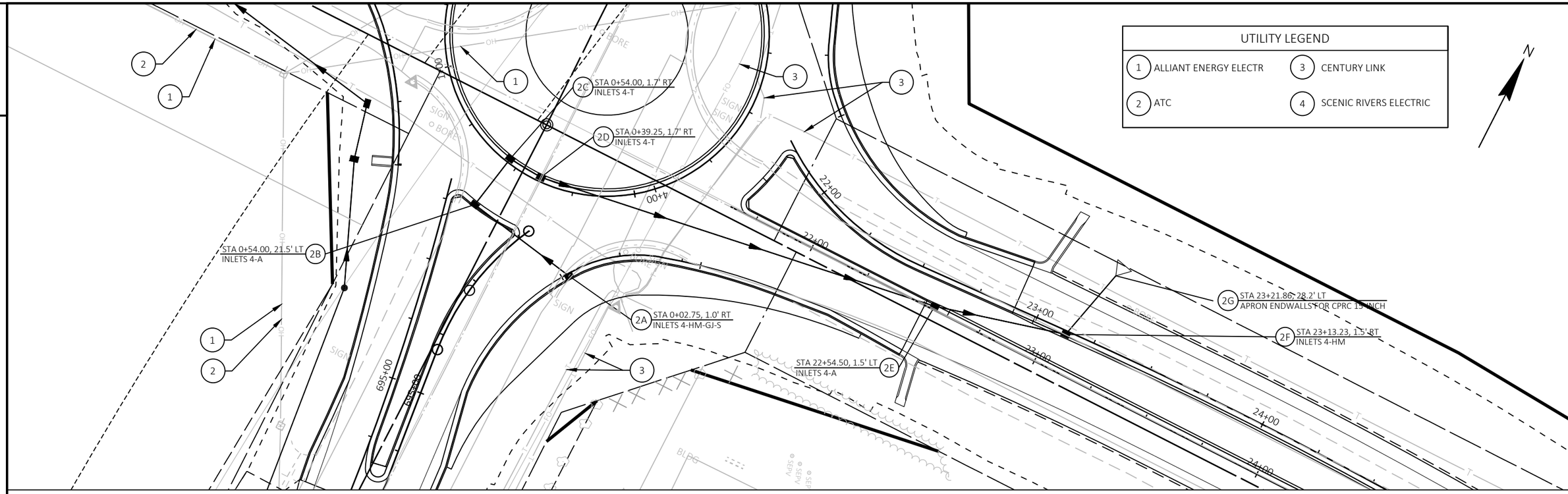

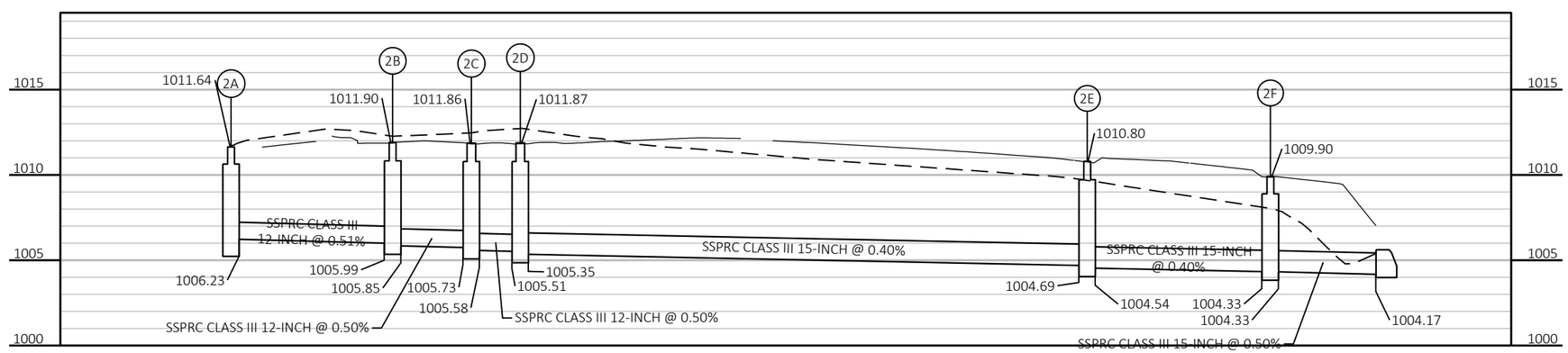

PROJECT NO: 5235-03-70	HWY: STH 80	COUNTY: GRANT	STORM SEWER	SHEET 38	E

FILE NAME : X:\PROJECTS\GRANT\200050MW - 5235-03-00 STH 80\DESIGN\C3D\SHEETSPLAN\022501-SS.DWG
LAYOUT NAME - 022502
PLOT DATE : 6/29/2022 4:45 PM PLOT BY : MICHAEL LISKA PLOT NAME : PLOT SCALE : 1 IN:40 FT

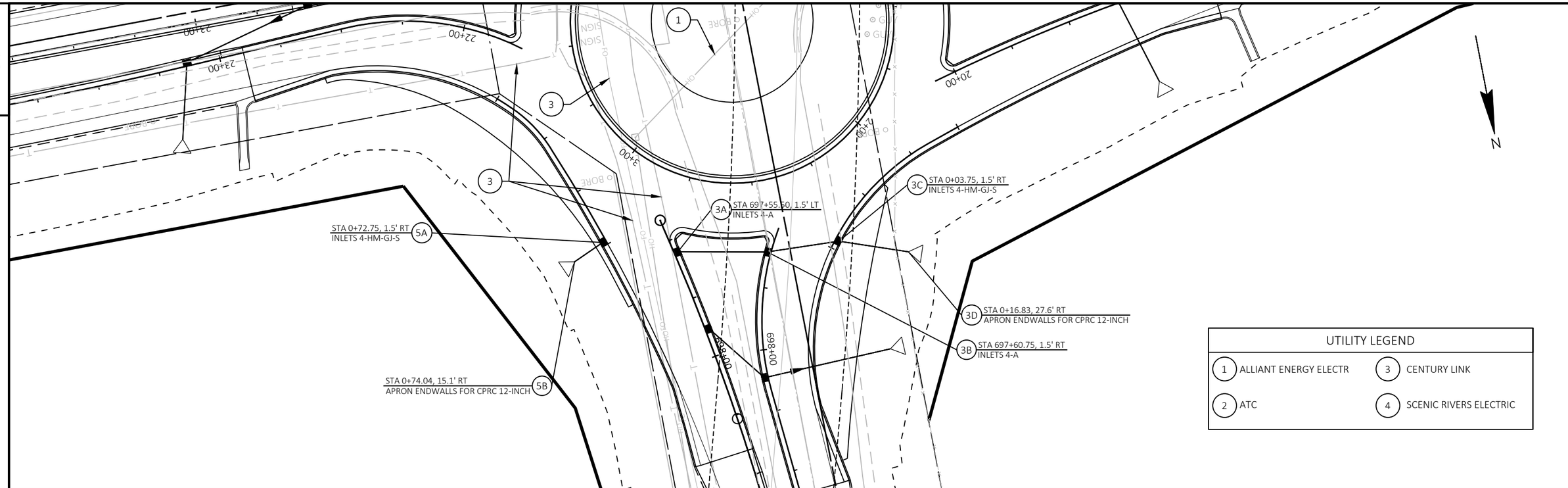
1
3
3
3A STA 697+55.50, 1.5' LT
INLETS 4-A
3C STA 0+03.75, 1.5' RT
INLETS 4-HM-GJ-S
5A STA 0+72.75, 1.5' RT
INLETS 4-HM-GJ-S
3D STA 0+16.83, 27.6' RT
APRON ENDWALLS FOR CPRC 12-INCH
3B STA 697+60.75, 1.5' RT
INLETS 4-A
5B STA 0+74.04, 15.1' RT
APRON ENDWALLS FOR CPRC 12-INCH
698+00
699+00
22+00
23+00
24+00
20+00
N
UTILITY LEGEND
1 ALLIANT ENERGY ELECTR
2 ATC
3 CENTURY LINK
4 SCENIC RIVERS ELECTRIC

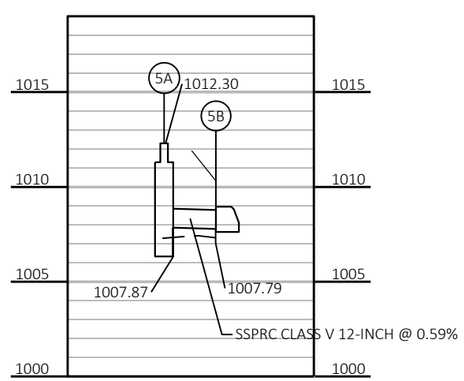
1015
1010
1005
1000
5A
1012.30
5B
1007.87
1007.79
SSPRC CLASS V 12-INCH @ 0.59%

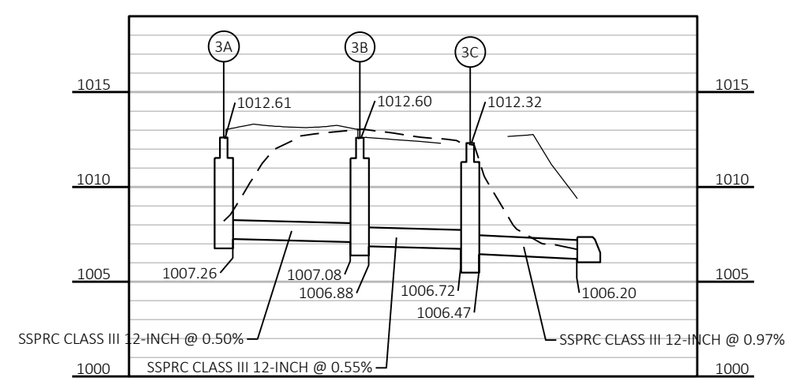
1015
1010
1005
1000
3A
3B
3C
1012.61
1012.60
1012.32
1007.26
1007.08
1006.88
1006.72
1006.47
1006.20
SSPRC CLASS III 12-INCH @ 0.50%
SSPRC CLASS III 12-INCH @ 0.55%
SSPRC CLASS III 12-INCH @ 0.97%

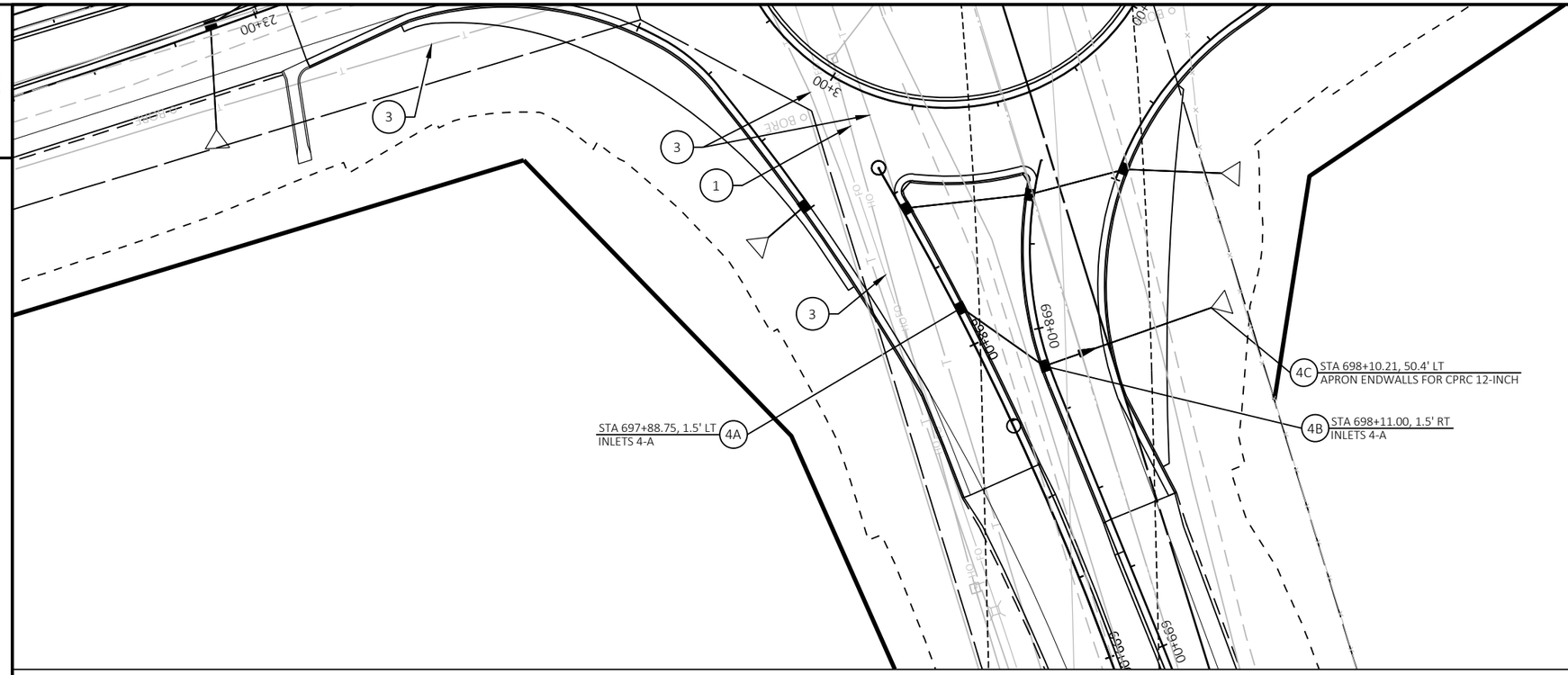

UTILITY LEGEND	
1 ALLIANT ENERGY ELECTR	3 CENTURY LINK
2 ATC	4 SCENIC RIVERS ELECTRIC

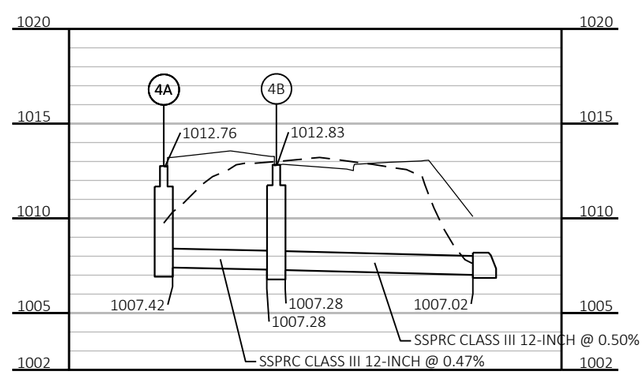

PROJECT NO: 5235-03-70	HWY: STH 80	COUNTY: GRANT	STORM SEWER	SHEET 40	E

2

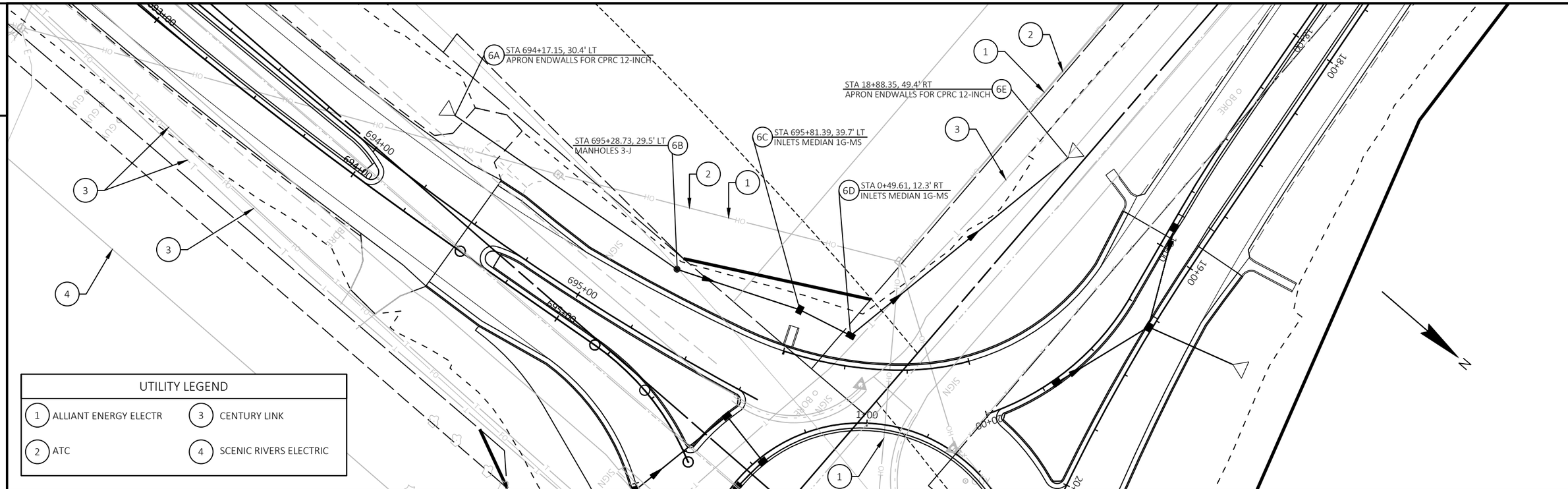

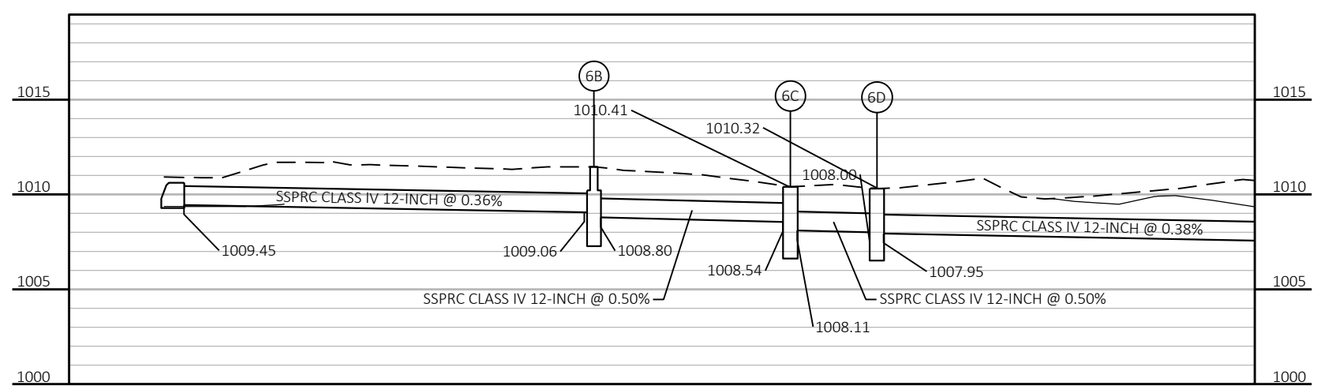

PROJECT NO: 5235-03-70	HWY: STH 80	COUNTY: GRANT	STORM SEWER	SHEET 41	E

FILE NAME : X:\PROJECTS\GRANT\200050MW - 5235-03-00 STH 80\DESIGN\C3D\SHEETSPLAN\022501-SS.DWG
LAYOUT NAME - 022505
PLOT DATE : 6/29/2022 4:45 PM PLOT BY : MICHAEL LISKA PLOT NAME : PLOT SCALE : 1 IN:40 FT

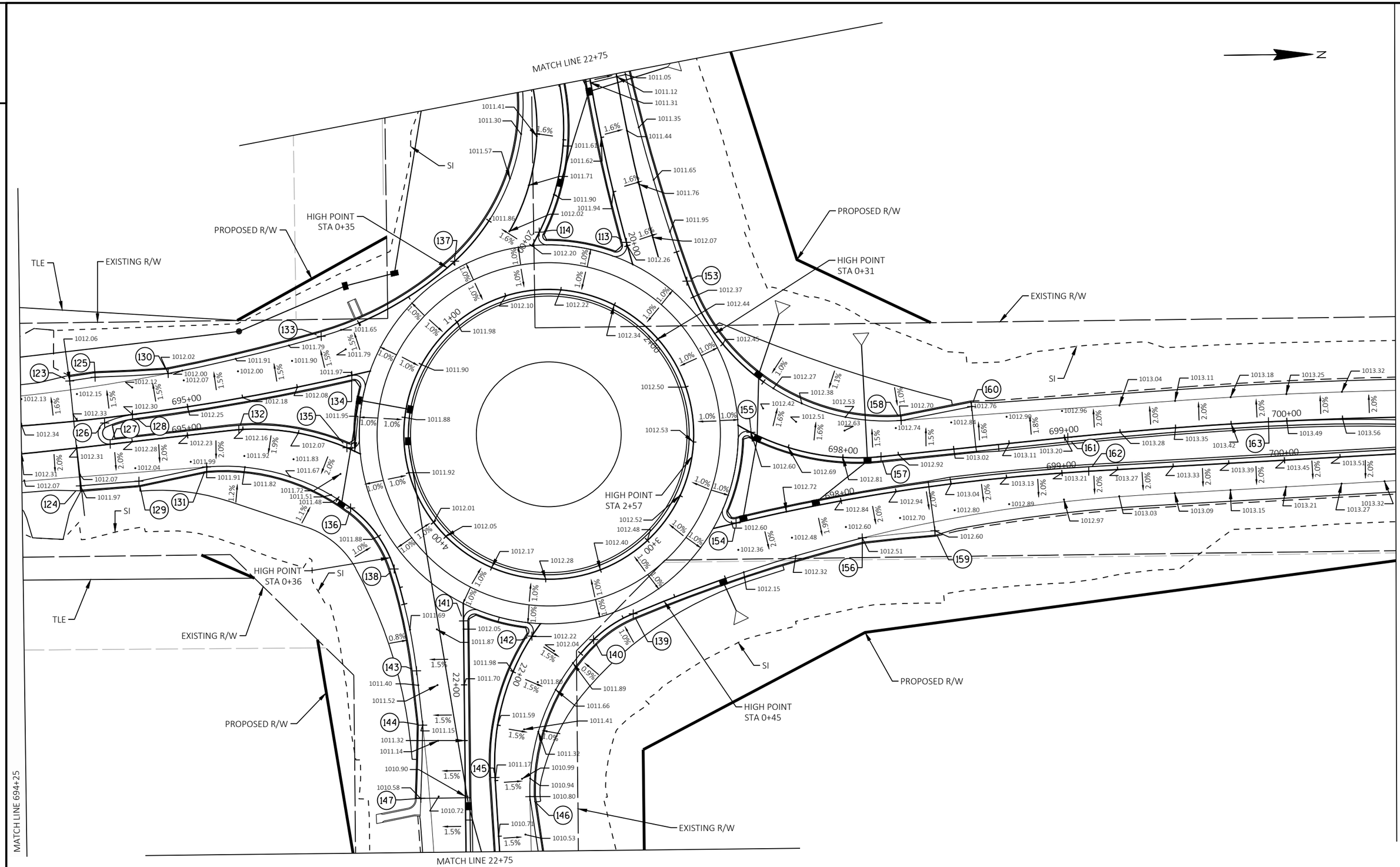
MATCH LINE 22+75
MATCH LINE 700+50
MATCH LINE 694+25
N
PROPOSED R/W
EXISTING R/W
TLE
SI
HIGH POINT STA 0+35
HIGH POINT STA 0+31
HIGH POINT STA 2+57
HIGH POINT STA 0+36
HIGH POINT STA 0+45
695+00
698+00
699+00
700+00
1+00
2+00
3+00
4+00
20+00
22+00
22+00

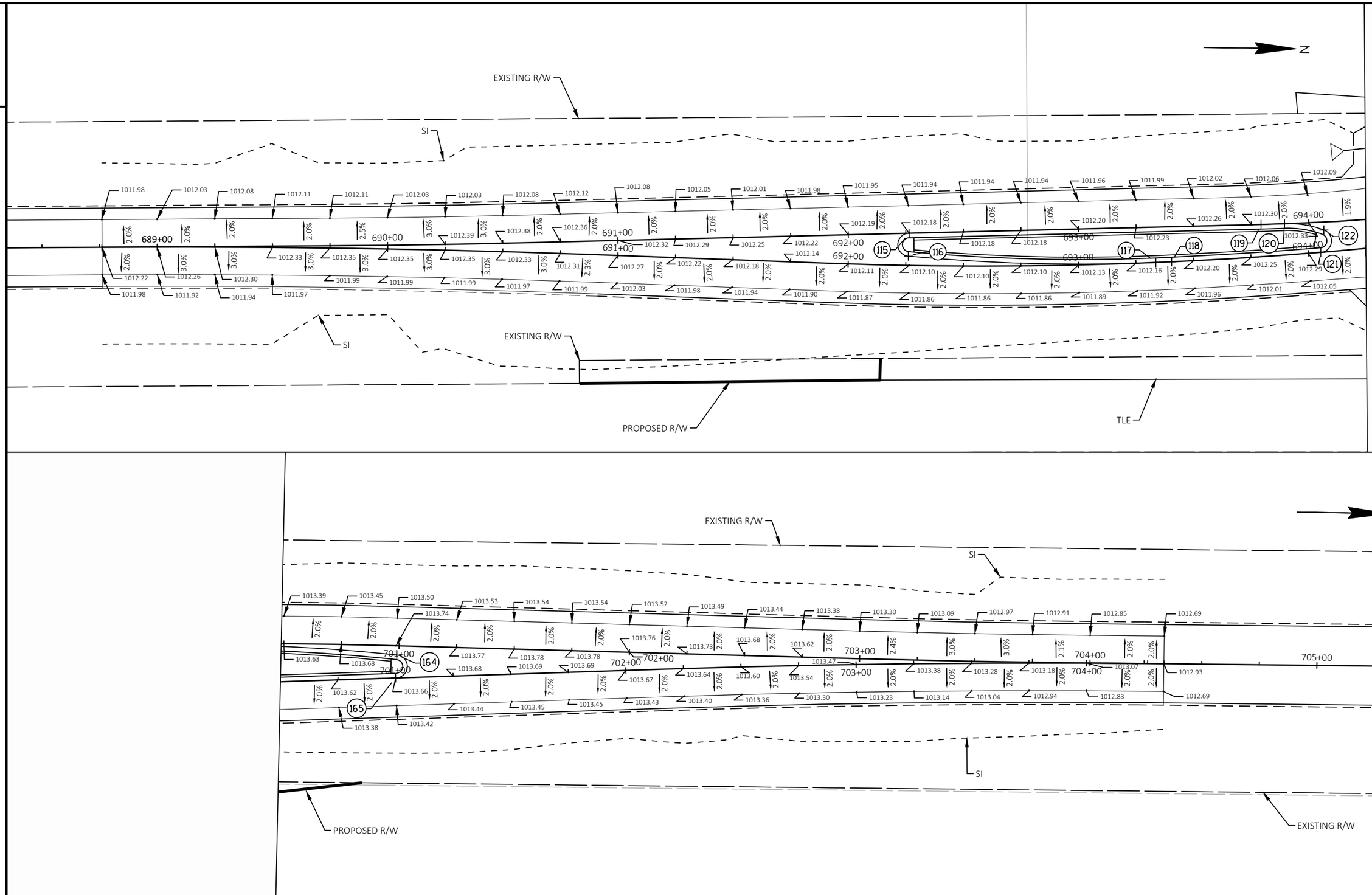
N
EXISTING R/W
SI
689+00
690+00
691+00
692+00
693+00
694+00
115
116
117
118
119
120
121
122
PROPOSED R/W
TLE
701+00
702+00
703+00
704+00
705+00
164
165
PROPOSED R/W
EXISTING R/W

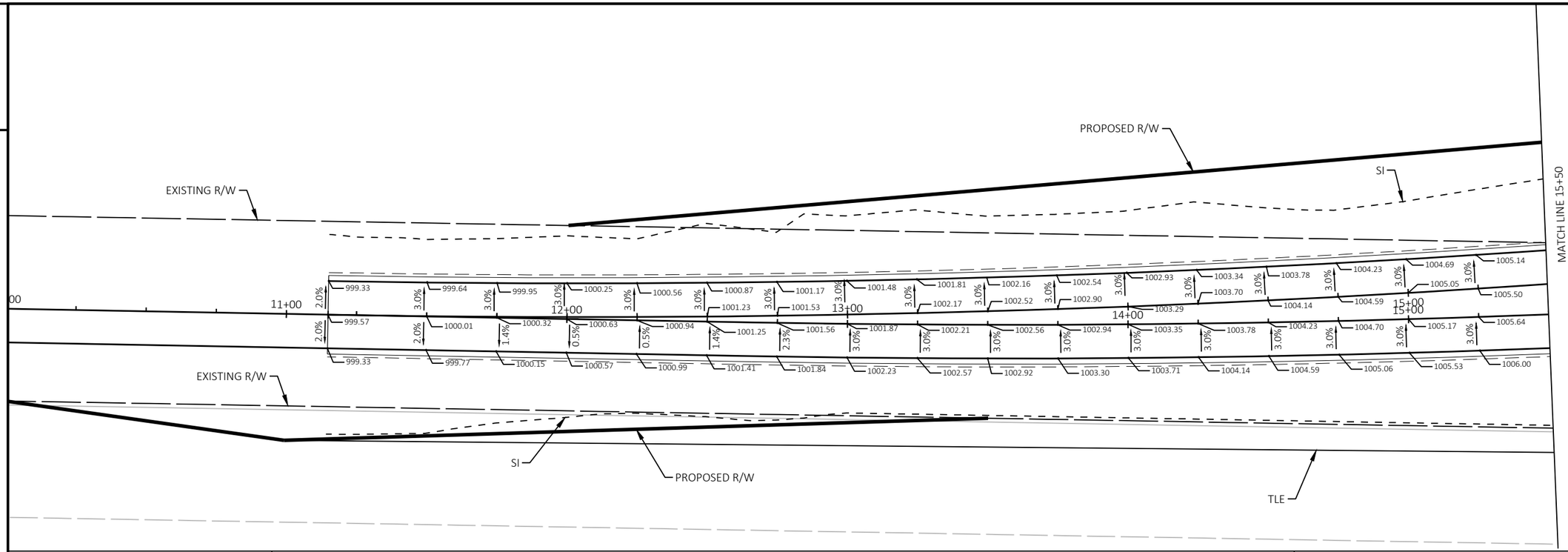
PROPOSED R/W
EXISTING R/W
SI
MATCH LINE 15+50
N
11+00
12+00
13+00
14+00
15+00
999.33
999.64
999.95
1000.25
1000.56
1000.87
1001.17
1001.48
1001.81
1002.16
1002.54
1002.93
1003.34
1003.78
1004.23
1004.69
1005.14
999.57
1000.01
1000.32
1000.63
1000.94
1001.25
1001.56
1001.87
1002.21
1002.56
1002.94
1003.35
1003.78
1004.23
1004.70
1005.17
1005.64
999.33
999.77
1000.15
1000.57
1000.99
1001.41
1001.84
1002.23
1002.57
1002.92
1003.30
1003.71
1004.14
1004.59
1005.06
1005.53
1006.00
1002.17
1002.52
1002.90
1003.29
1003.70
1004.14
1004.59
1005.05
1005.50
TLE

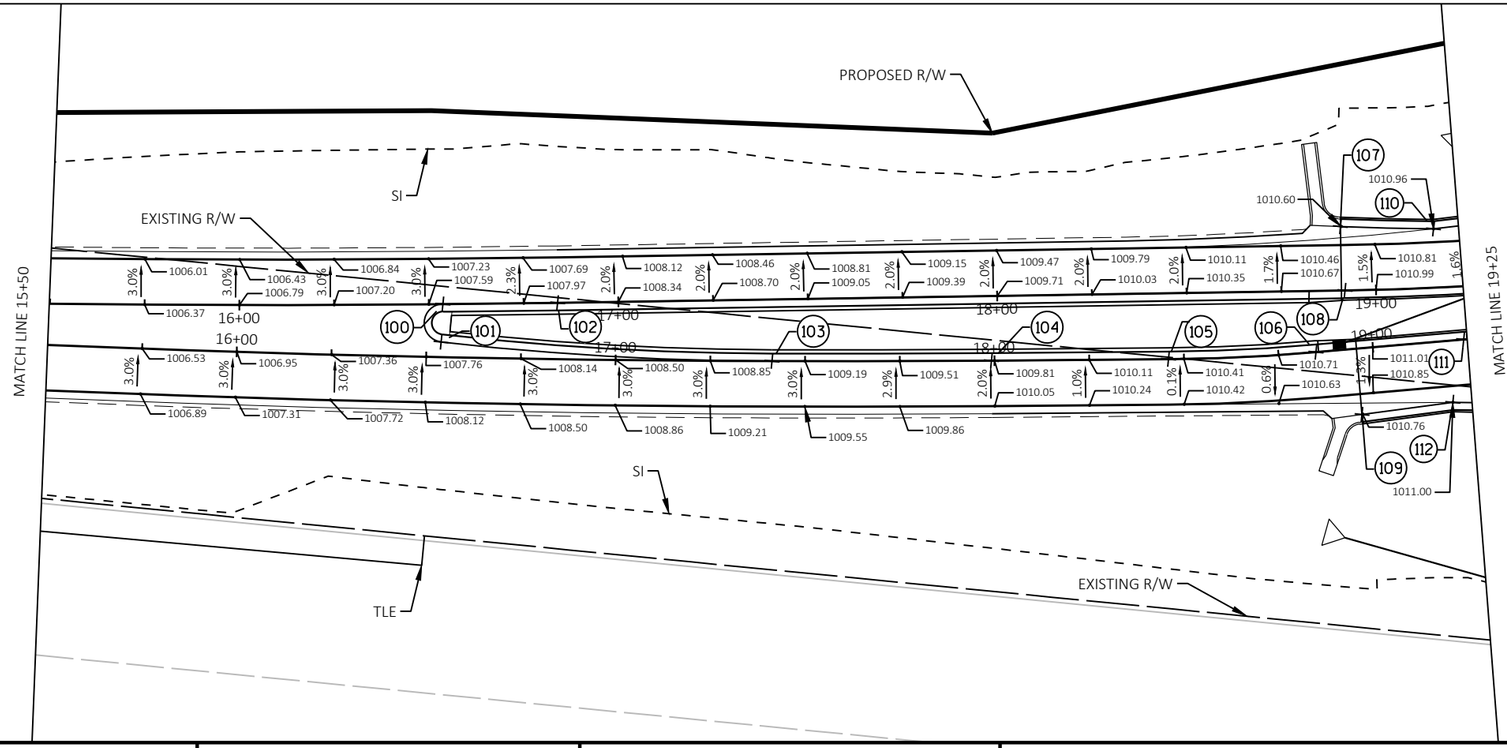
PROPOSED R/W
SI
EXISTING R/W
MATCH LINE 15+50
MATCH LINE 19+25
N
16+00
17+00
18+00
19+00
100
101
102
103
104
105
106
107
108
109
110
111
112
1006.01
1006.43
1006.79
1006.84
1007.20
1007.23
1007.59
1007.69
1007.97
1008.12
1008.34
1008.46
1008.70
1008.81
1009.05
1009.15
1009.39
1009.47
1009.71
1009.79
1010.03
1010.11
1010.35
1010.46
1010.67
1010.81
1010.99
1006.37
1006.53
1006.95
1007.36
1007.76
1008.14
1008.50
1008.85
1009.19
1009.51
1009.81
1010.05
1010.11
1010.24
1010.41
1010.42
1010.63
1010.71
1010.85
1011.01
1006.89
1007.31
1007.72
1008.12
1008.50
1008.86
1009.21
1009.55
1009.86
1010.60
1010.96
1010.76
1011.00
TLE
EXISTING R/W

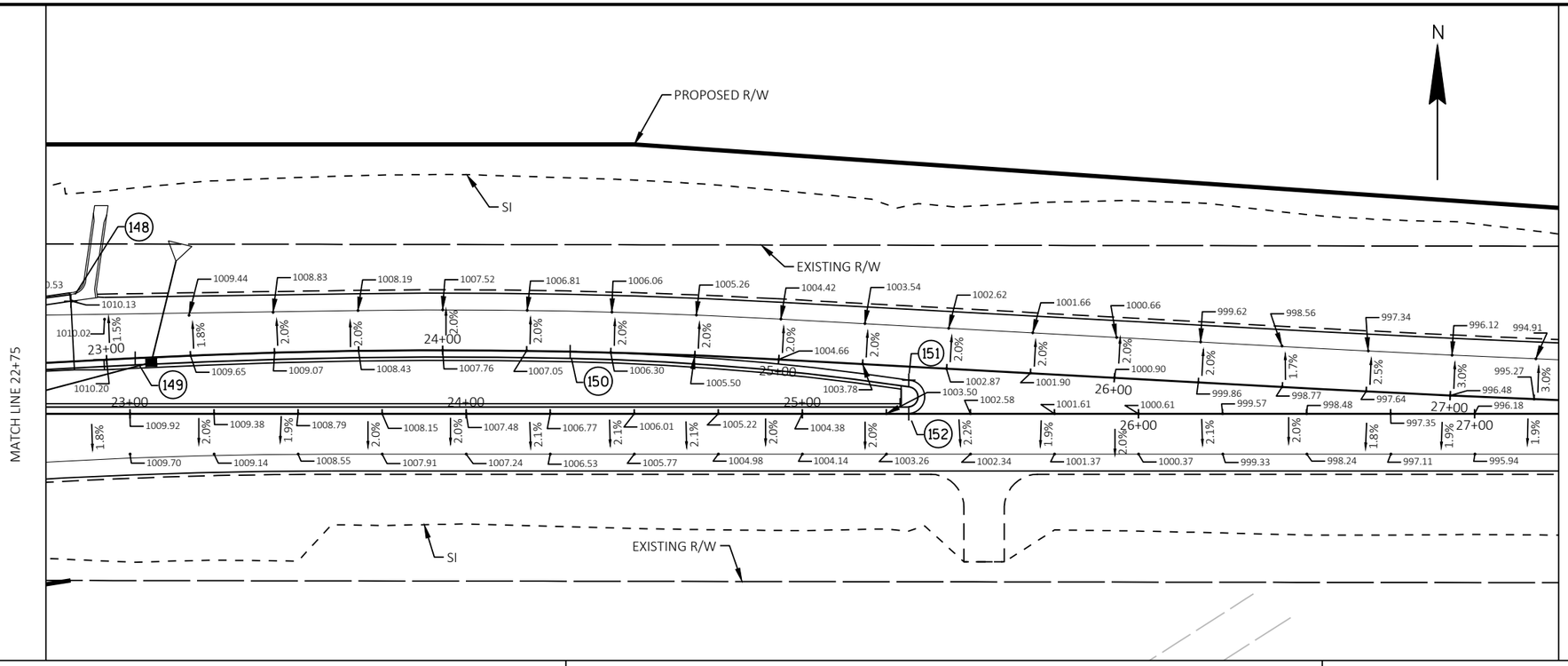

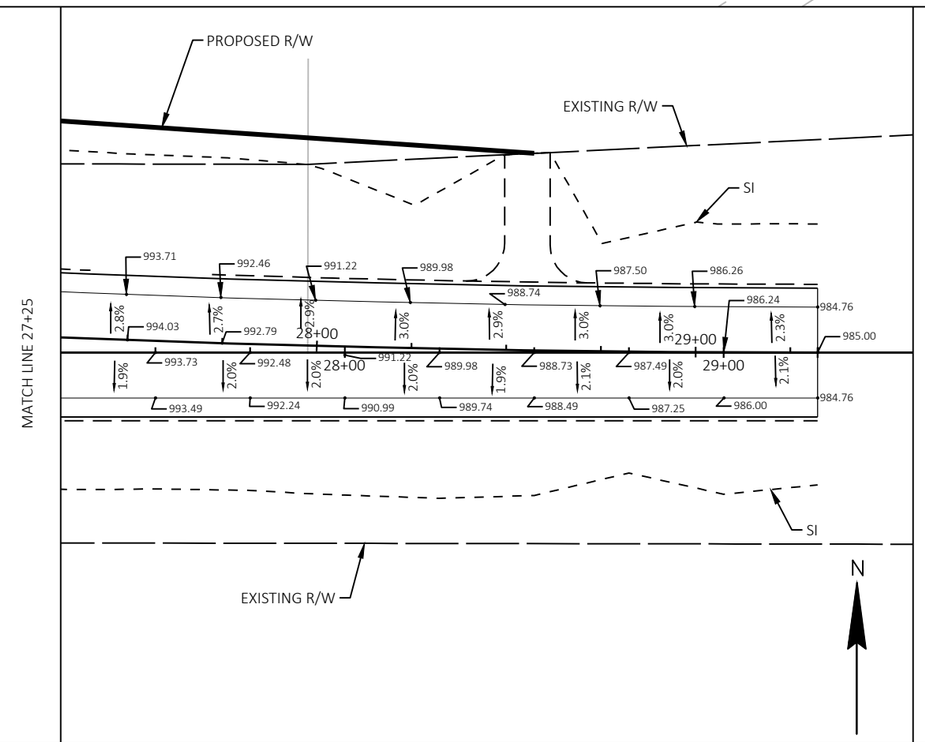

PROJECT NO: 5235-03-70	HWY: STH 80	COUNTY: GRANT	PAVING GRADES	SHEET 45	E

STATION & OFFSET TABLE

POINT	STATION	OFFSET	Y COORDS	X COORDS	ELEVATION
100	16+54.16'PA'	13.99 LT	458065.687	892569.002	1007.65
101	16+53.85'PA'	4.02 LT	458055.718	892569.499	1007.74
102	16+84.50'PA'	14.91 LT	458069.128	892599.073	1008.11
103	17+41.29'PA'	0.00 RT	458059.522	892656.916	1009.07
104	17+99.23'PA'	0.00	458065.541	892714.544	1009.80
105	18+45.95'PA'	0.00	458070.660	892760.977	1010.36
106	18+84.94'PA'	0.00	458076.439	892799.526	1010.83
107	18+94.19'PA'	32.46 LT	458110.056	892802.557	1010.60
108	18+93.97'PA'	15.54 LT	458093.388	892805.496	1010.88
109	18+95.62'PA'	17.41 RT	458061.329	892813.271	1010.76
110	19+18.63'PA'	29.72 LT	458111.924	892827.083	1010.96
111	19+24.03'PA'	0.00	458083.737	892837.936	1011.30
112	19+19.78'PA'	16.29 RT	458066.941	892836.798	1011.00
113	19+83.34'PA'	37.73 LT	458113.290	892910.089	1012.24
114	19+93.07'PA'	0.00	458074.210	892905.067	1012.12

STATION & OFFSET TABLE

POINT	STATION	OFFSET	Y COORDS	X COORDS	ELEVATION
115	692+26.22	14.00 LT	457642.588	892994.817	1012.18
116	692+26.06	4.01 LT	457642.209	893004.793	1012.01
117	693+33.58	0.00	457749.621	893007.963	1012.17
118	693+40.45	0.00	457756.486	893007.691	1012.18
119	693+80.28	13.99 LT	457795.371	892991.632	1012.31
120	693+90.53	13.58 LT	457805.544	892991.369	1012.32
121	694+05.33	0.00	457821.244	893003.831	1012.30
122	694+07.44	9.54 LT	457822.596	892994.158	1012.46
123	694+50.18	30.28 LT	457862.820	892969.678	1012.06
124	694+49.60	17.02 RT	457867.078	893016.791	1011.97
125	694+61.74	30.64 LT	457874.231	892968.128	1012.04
126	694+63.64	9.74 LT	457878.294	892988.717	1012.26
127	694+65.07	0.00 LT	457880.725	892998.253	1012.29
128	694+76.53	12.07 LT	457890.873	892985.059	1012.30
129	694+75.98	17.95 RT	457893.438	893014.980	1011.92

STATION & OFFSET TABLE

POINT	STATION	OFFSET	Y COORDS	X COORDS	ELEVATION
130	694+94.50	28.56 LT	457907.033	892966.796	1012.02
131	695+06.85	15.04 RT	457923.839	893008.881	1011.91
132	695+23.18	0.00	457938.526	892992.325	1012.17
133	695+51.46	44.52 LT	457975.886	892950.878	1011.71
134	695+64.54	31.17 LT	457989.448	892968.482	1011.97
135	695+72.77	0.00	457986.904	893000.928	1011.97
136	695+80.18	24.64 RT	457988.297	893027.987	1011.70
137	20+13.38'PA'	32.72 RT	458036.147	892917.746	1012.02
138	696+04.99	47.36 RT	458007.571	893055.550	1011.90
139	21+53.63'PA'	75.79 LT	458114.611	893076.767	1012.33
140	21+80.36'PA'	58.35 LT	458096.748	893088.184	1012.10
141	21+71.29'PA'	0.00	458038.386	893079.167	1012.09
142	21+78.45'PA'	30.66 LT	458069.048	893086.295	1012.23
143	21+93.45'PA'	21.27 RT	458017.131	893101.345	1011.48
144	22+17.87'PA'	18.75 RT	458019.677	893125.763	1011.15

STATION & OFFSET TABLE

POINT	STATION	OFFSET	Y COORDS	X COORDS	ELEVATION
145	22+41.71'PA'	13.40 LT	458051.844	893149.573	1011.20
146	22+50.49'PA'	28.93 LT	458067.386	893158.342	1010.80
147	22+50.70'PA'	20.00 RT	458018.455	893158.586	1010.58
148	22+82.43'PA'	33.40 LT	458071.880	893190.276	1010.13
149	23+01.57'PA'	16.47 LT	458054.966	893209.430	1010.02
150	24+30.95'PA'	18.45 LT	458057.057	893338.806	1006.66
151	25+31.64'PA'	9.99 LT	458048.682	893439.500	1003.20
152	25+31.64'PA'	0.00	458038.689	893439.508	1003.26
153	19+87.26'PA'	69.43 LT	458140.253	892927.772	1012.28
154	697+51.87	0.00	458161.208	893036.487	1012.61
155	697+67.13	38.13 LT	458168.275	892995.904	1012.60
156	698+06.50	18.03 RT	458217.739	893043.765	1012.51
157	698+20.84	16.54 LT	458226.544	893007.387	1012.88
158	698+31.91	31.19 LT	458235.730	892991.289	1012.70
159	698+39.91	19.94 RT	458250.376	893040.928	1012.60

STATION & OFFSET TABLE

POINT	STATION	OFFSET	Y COORDS	X COORDS	ELEVATION
160	698+62.97	33.36 LT	458267.427	892985.348	1012.76
161	699+03.64	15.76 LT	458310.449	892999.633	1013.20
162	699+12.00	0.00	458319.673	893014.944	1013.24
163	699+93.83	17.61 LT	458400.600	892993.580	1013.46
164	701+00.91	9.95 LT	458507.923	892996.285	1013.65
165	701+00.00	0.00	458507.471	893006.269	1013.66

2

UTILITY LEGEND	
1 ALLIANT ENERGY ELECTR	3 CENTURY LINK
2 ATC	4 SCENIC RIVERS ELECTRIC

N

701"SB"+05, 26 LT - LB15
LED A - 6 - 5 - 5 - 2,4
701"SB"+05, 22' LT - PB15

EXISTING R/W

PROPOSED R/W

699"SB"+55, 22' LT - PB14
699"SB"+55, 26' LT - LB14
LED A - 6 - 5 - 5 - 1,3

697"SB"+85, 48' LT - LB13
LED A - 6 - 5 - 5 - 2,4
697"NB"+91 - 79' LT - PB13
19"EB"+82 - 75' LT - LB12
LED A - 6 - 5 - 5 - 1,3
19"WB"+98, 31' LT - PB12

697"NB"+53 - 35' RT - PB16
21"EB"+71 - 113' LT - LB16
LED A - 6 - 5 - 5 - 1,3
22"WB"+05 - 48' LT - PB17
22"WB"+11 - 39' LT - LB01
LED A - 6 - 5 - 5 - 2,4
CONTROL CABINET "A"
22"WB"+31, 38' LT
22"WB"+50, 29' LT - PB01

23"WB"+77 - 26' LT - LB02
LED A - 6 - 5 - 5 - 1,3
23"WB"+77, 22' LT - PB02

25"WB"+44 - 26' LT - LB03
LED A - 6 - 5 - 5 - 2,4
25"WB"+44, 22' LT - PB03

16"EB"+40, 21' RT - PB11
16"EB"+40 - 25' RT - LB11
LED A - 6 - 5 - 5 - 2,4

18"EB"+18, 21' RT - PB10
18"EB"+18 - 25' RT - LB10
LED A - 6 - 5 - 5 - 1,3

19"EB"+63 - 30' RT - LB09
LED A - 6 - 5 - 5 - 2,4
19"EB"+91, 32' RT - PB09

695"NB"+61 - 70' LT - LB08
LED A - 6 - 5 - 5 - 1,3
695"EB"+71 - 31' LT - PB08

22"EB"+16, 34' RT - PB04
21"EB"+68 - 47' RT - LB04
LED A - 6 - 5 - 5 - 1,3
695"SB"+42, 72' RT - PB05
695"NB"+31 - 46' RT - LB05
LED A - 6 - 5 - 5 - 2,4

693"NB"+96 - 26' RT - LB06
LED A - 6 - 5 - 5 - 1,3
693"NB"+96, 22' RT - PB06

692"NB"+23 - 25' RT - LB07
LED A - 6 - 5 - 5 - 2,4
692"NB"+23, 22' RT - PB07

PATCH RD

STH 80 / 81

STH 81

STH 80

1&2

3

4

LEGEND

- LIGHTING CONTROL CABINET
- CONDUIT RIGID NONMETALLIC SCHEDULE 40 2-INCH, UNLESS OTHERWISE NOTED
- PULL BOX (24" X 36") NON-CONDUCTIVE
- PULL BOX (24" X 42") NON-CONDUCTIVE
- LUMINAIRE

16'EB'+25 - 25' RT - LB01
LED A - 6 - 5 - 5 - 1,3

LUMINAIRE TYPE
MAST ARM LENGTH (FT)
BASE TYPE
POLE TYPE
CIRCUIT

HIGHWAY LIGHTING
STH 80 & STH 81
TOWN OF SMELSER
GRANT COUNTY

INST. NO. L22-0002

REGION CONTACT:
DESIGNED BY: JT ENGINEERING, INC.
REVISED BY:

PAGE 1 OF 1

PROJECT NO: 5235-03-70	HWY: STH 80	COUNTY: GRANT	LIGHTING PLAN	SHEET 47	E

FILE NAME : X:\PROJECTS\GRANT\200050MW - 5235-03-00 STH 80\DESIGN\C3D\SHEETSPLAN\023601-LP.DWG
LAYOUT NAME - Plan 1 IN 100 FT
PLOT DATE : 6/29/2022 4:49 PM
PLOT BY : MICHAEL LISKA
PLOT NAME :
PLOT SCALE : 1 IN:100 FT

WISDOT/CADDS SHEET 42

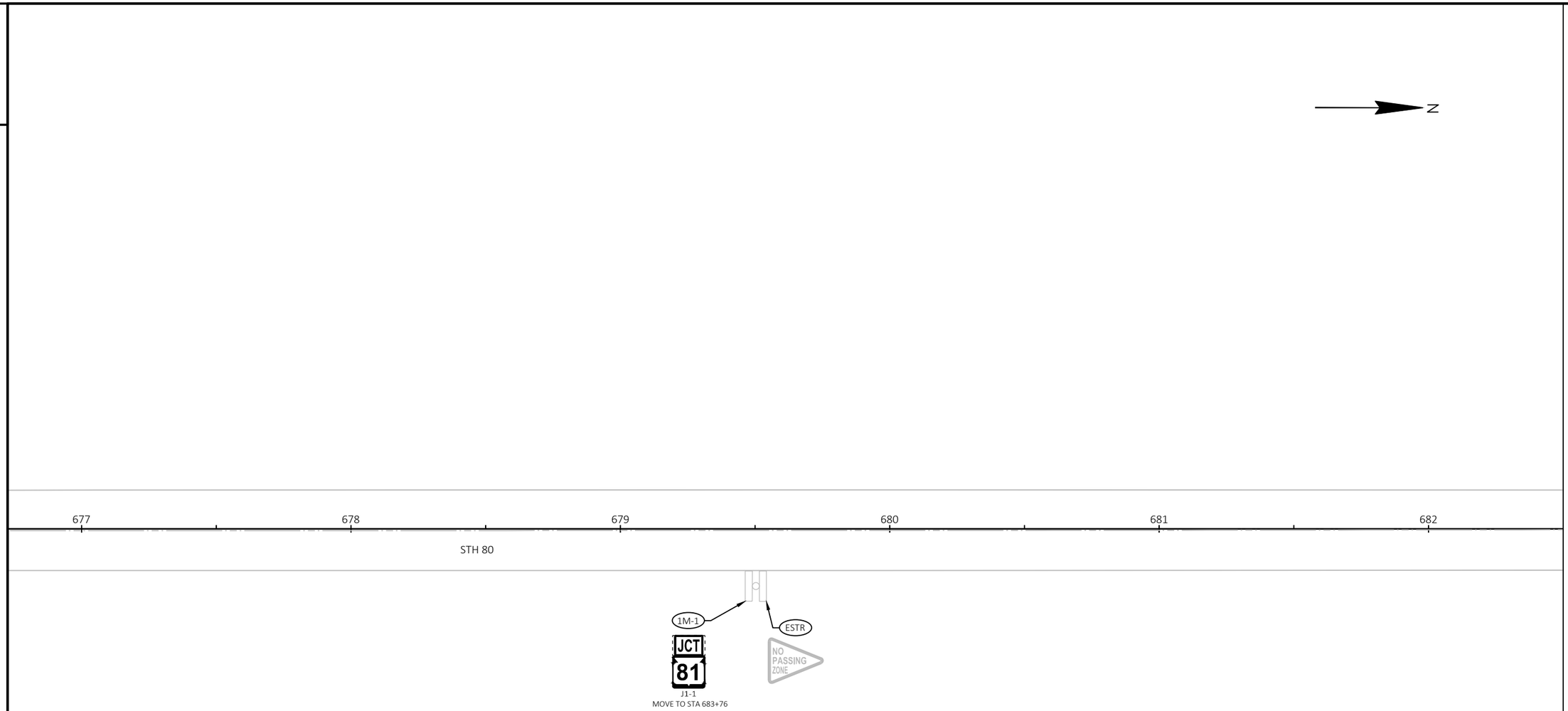

MATCH LINE 682+50

LEGEND

- EXISTING SIGN MOUNTED ON POST(S)
- PROPOSED SIGN MOUNTED ON POSTS
- 1-1 PROPOSED SIGN NUMBER
- 1M-1 MOVE EXISTING SIGN
- 1R-1 REMOVE EXISTING SIGN
- ESTR EXISTING SIGN TO REMAIN

PROJECT NO: 5235-03-70	HWY: STH 80	COUNTY: GRANT	SIGN REMOVALS	SHEET 48	E

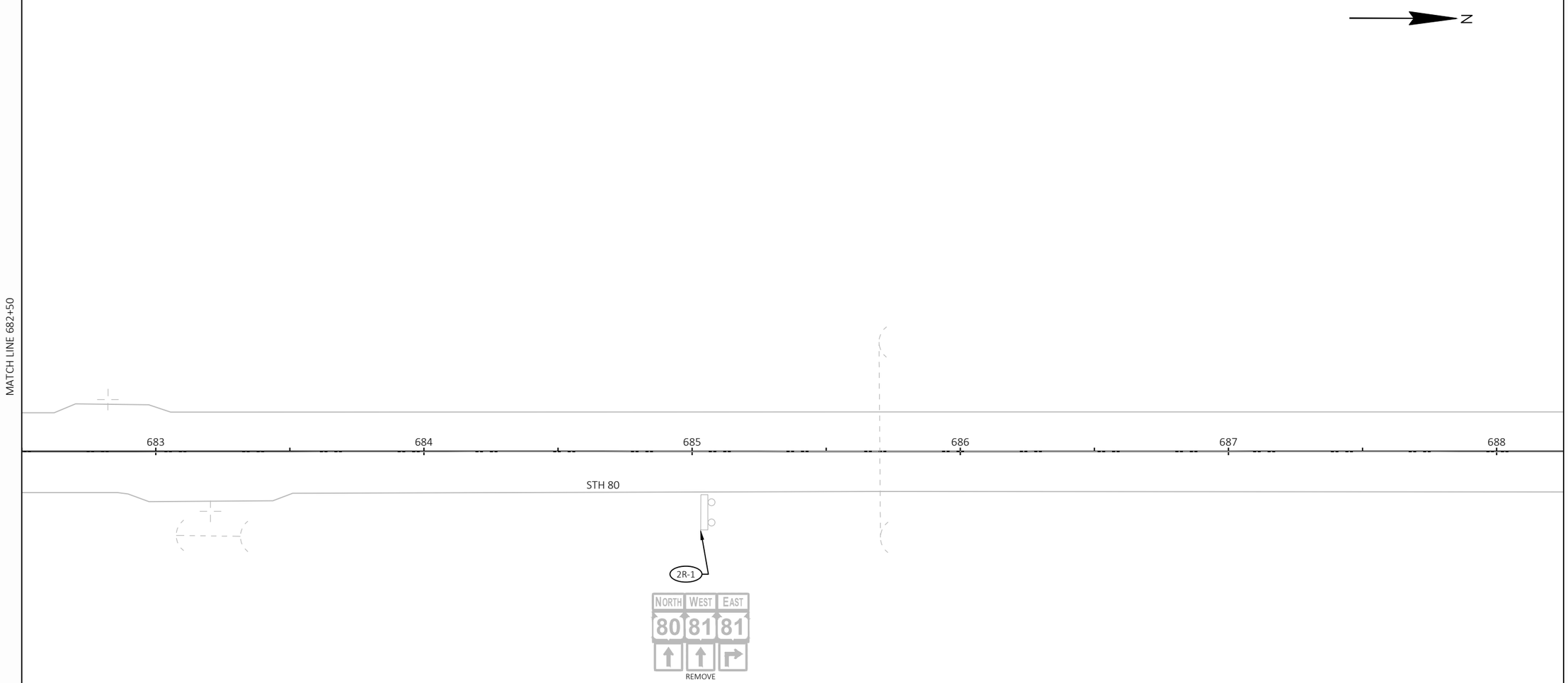

LEGEND

- EXISTING SIGN MOUNTED ON POST(S)
- PROPOSED SIGN MOUNTED ON POSTS
- 1-1 PROPOSED SIGN NUMBER
- 1M-1 MOVE EXISTING SIGN
- 1R-1 REMOVE EXISTING SIGN
- ESTR EXISTING SIGN TO REMAIN

PROJECT NO: 5235-03-70	HWY: STH 80	COUNTY: GRANT	SIGN REMOVALS	SHEET 49	E

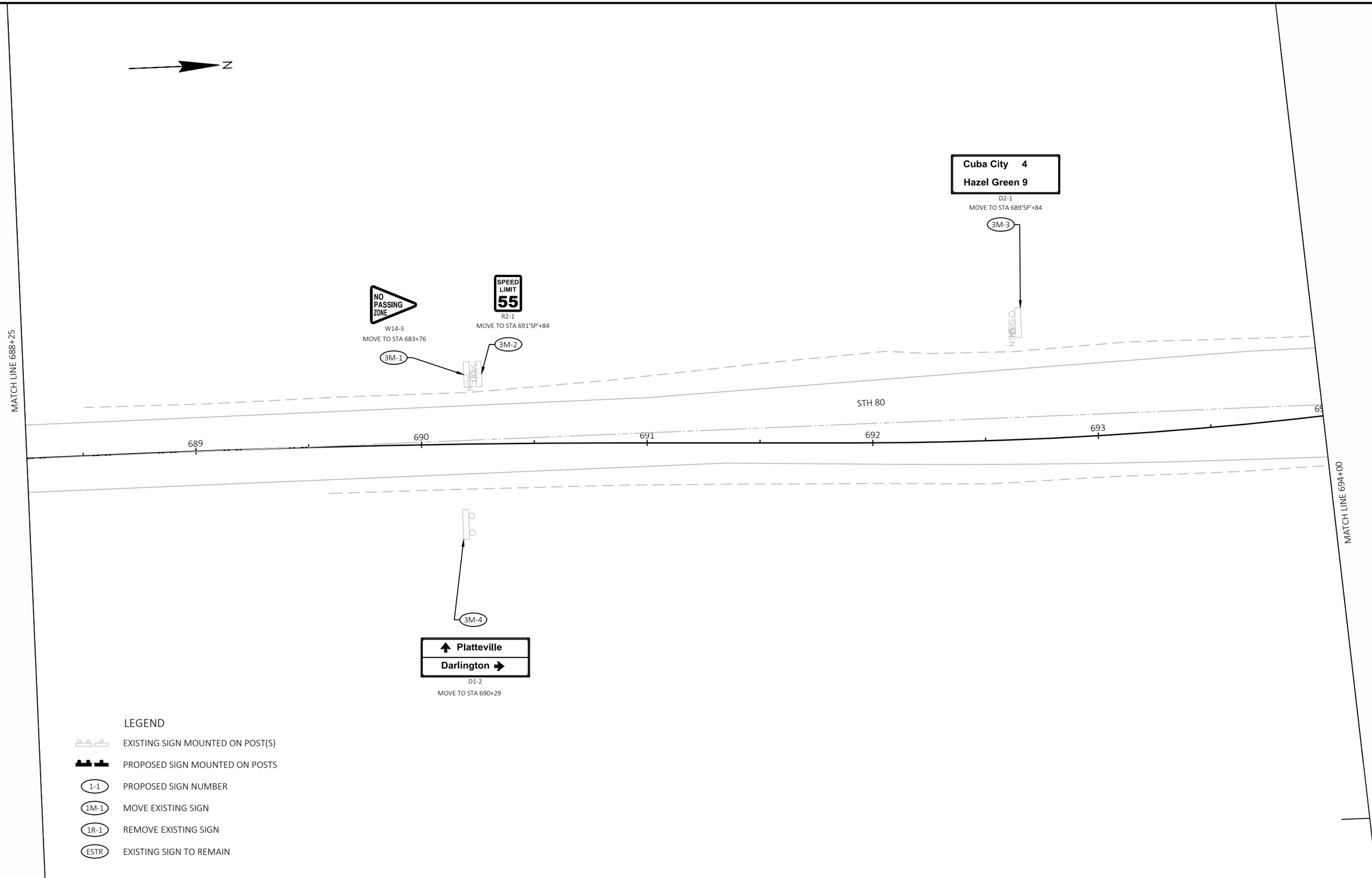

PROJECT NO: 5235-03-70	HWY: STH 80	COUNTY: GRANT	SIGN REMOVALS	SHEET 50	E

FILE NAME : X:\PROJECTS\GRANT\200050MW - 5235-03-00 STH 80\DESIGN\C3D\SHEETSPLAN\023200-PS-REMOVALS.DWG
LAYOUT NAME - 023200-ps-removals03
PLOT DATE : 6/29/2022 4:50 PM PLOT BY : MICHAEL LISKA PLOT NAME : PLOT SCALE : 1 IN:40 FT

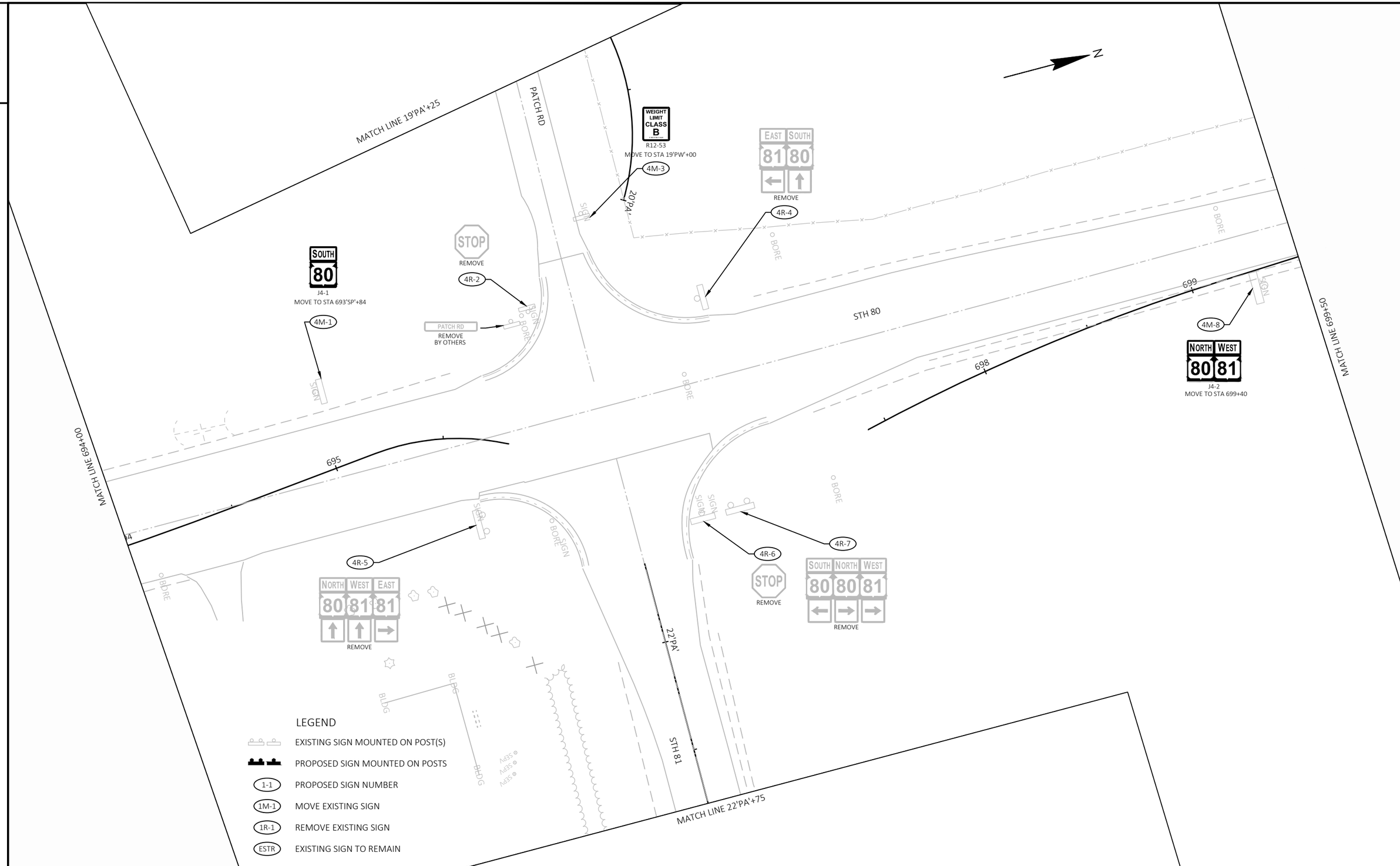

PROJECT NO: 5235-03-70	HWY: STH 80	COUNTY: GRANT	SIGN REMOVALS	SHEET 51	E

FILE NAME : X:\PROJECTS\GRANT\200050MW - 5235-03-00 STH 80\DESIGN\C3D\SHEETSPLAN\023200-PS-REMOVALS.DWG
LAYOUT NAME - 023200-ps-removals04
PLOT DATE : 6/29/2022 4:50 PM PLOT BY : MICHAEL LISKA PLOT NAME : PLOT SCALE : 1 IN:40 FT

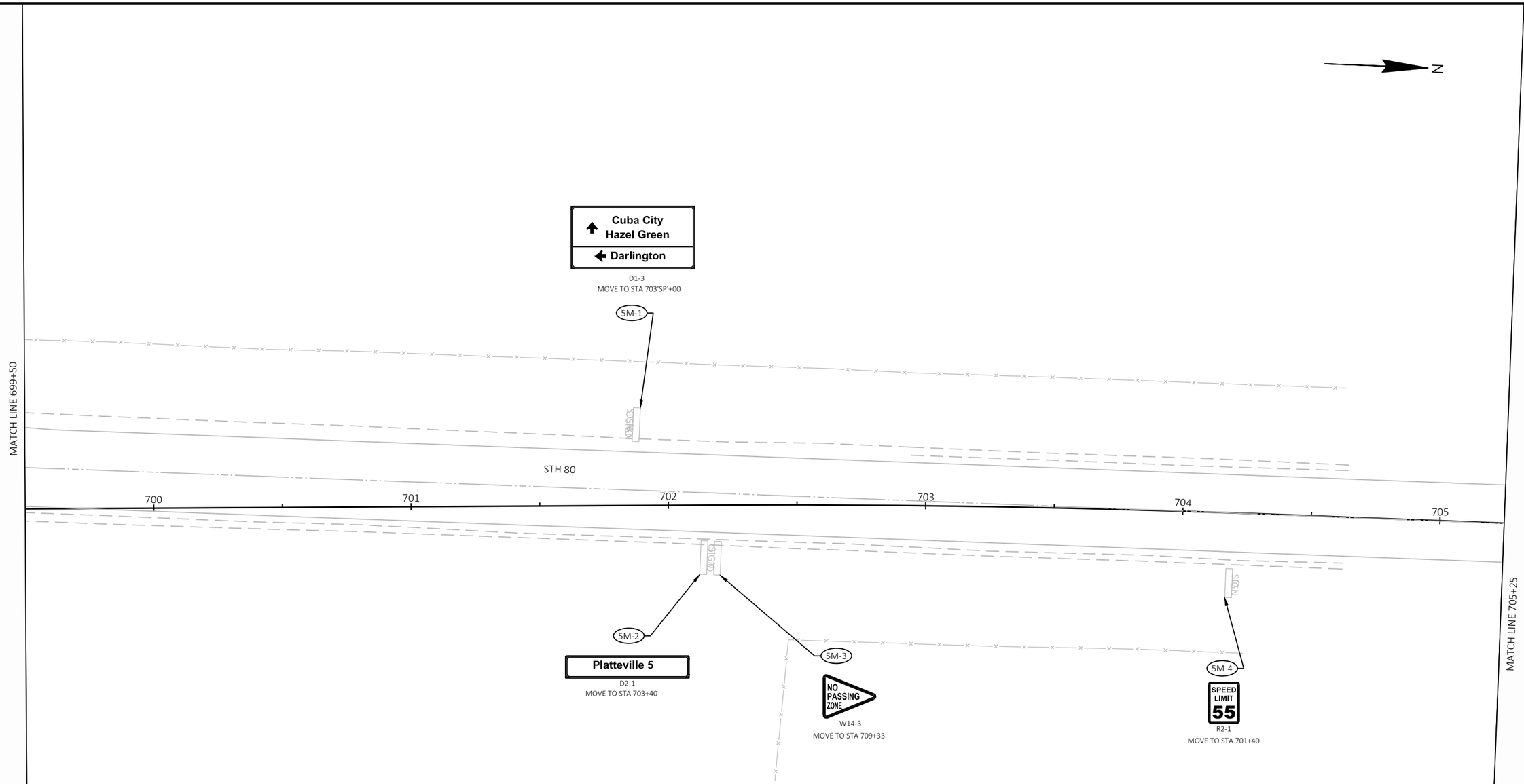

LEGEND

- EXISTING SIGN MOUNTED ON POST(S)
- PROPOSED SIGN MOUNTED ON POSTS
- (1-1) PROPOSED SIGN NUMBER
- (1M-1) MOVE EXISTING SIGN
- (1R-1) REMOVE EXISTING SIGN
- (ESTR) EXISTING SIGN TO REMAIN

PROJECT NO: 5235-03-70	HWY: STH 80	COUNTY: GRANT	SIGN REMOVALS	SHEET 52	E

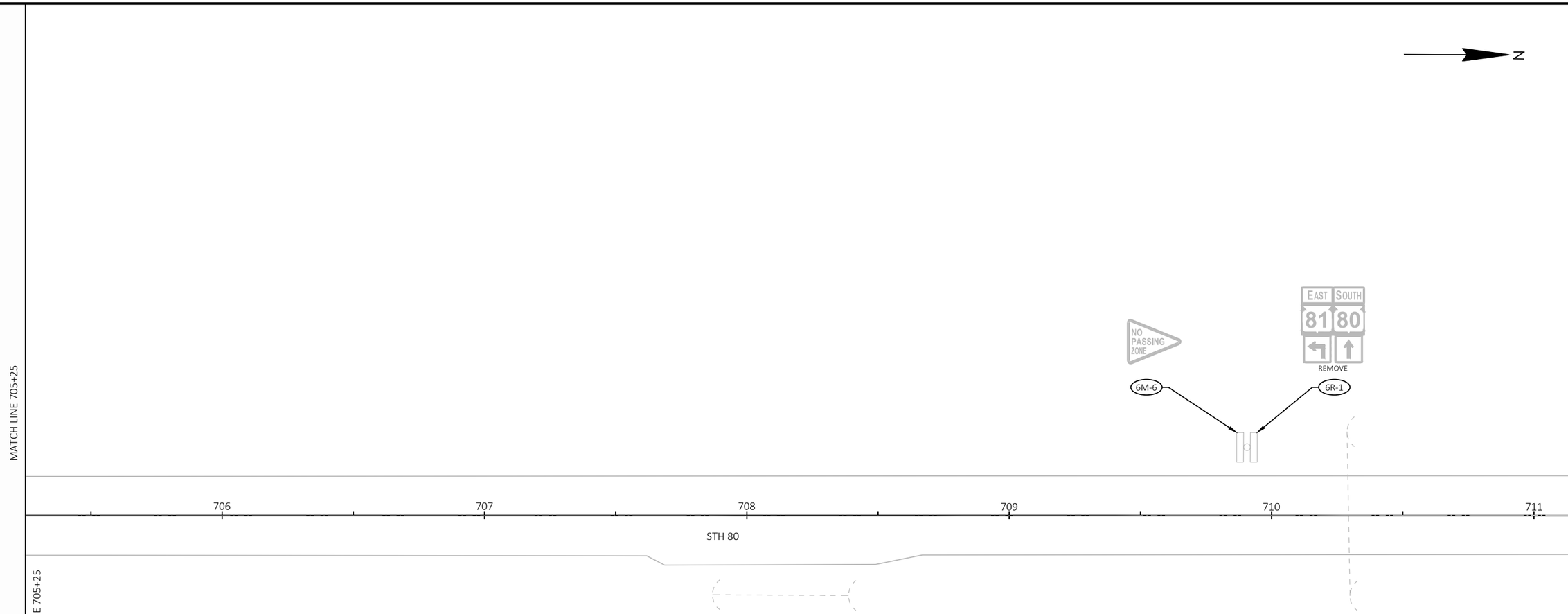

LEGEND

- EXISTING SIGN MOUNTED ON POST(S)
- PROPOSED SIGN MOUNTED ON POSTS
- (1-1) PROPOSED SIGN NUMBER
- (1M-1) MOVE EXISTING SIGN
- (1R-1) REMOVE EXISTING SIGN
- (ESTR) EXISTING SIGN TO REMAIN

2

2

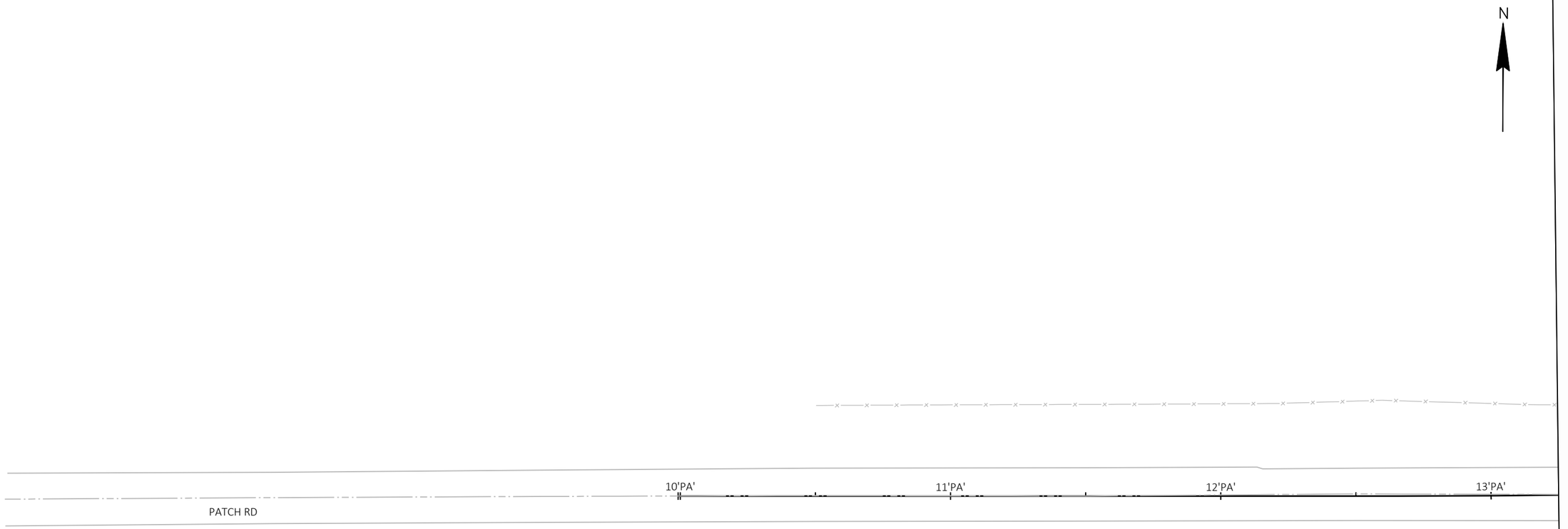

MATCH LINE 13+25

LEGEND

- EXISTING SIGN MOUNTED ON POST(S)
- PROPOSED SIGN MOUNTED ON POSTS
- 1-1 PROPOSED SIGN NUMBER
- 1M-1 MOVE EXISTING SIGN
- 1R-1 REMOVE EXISTING SIGN
- ESTR EXISTING SIGN TO REMAIN

PROJECT NO: 5235-03-70	HWY: STH 80	COUNTY: GRANT	SIGN REMOVALS	SHEET 54	E

2

2

N

MATCH LINE 13+25

14'PA'

15'PA'

16'PA'

17'PA'

18'PA'

19'PA'

BORE

PATCH RD

LEGEND

EXISTING SIGN MOUNTED ON POST(S)

PROPOSED SIGN MOUNTED ON POSTS

1-1 PROPOSED SIGN NUMBER

1M-1 MOVE EXISTING SIGN

1R-1 REMOVE EXISTING SIGN

ESTR EXISTING SIGN TO REMAIN

PROJECT NO: 5235-03-70	HWY: STH 80	COUNTY: GRANT	SIGN REMOVALS	SHEET 55	E

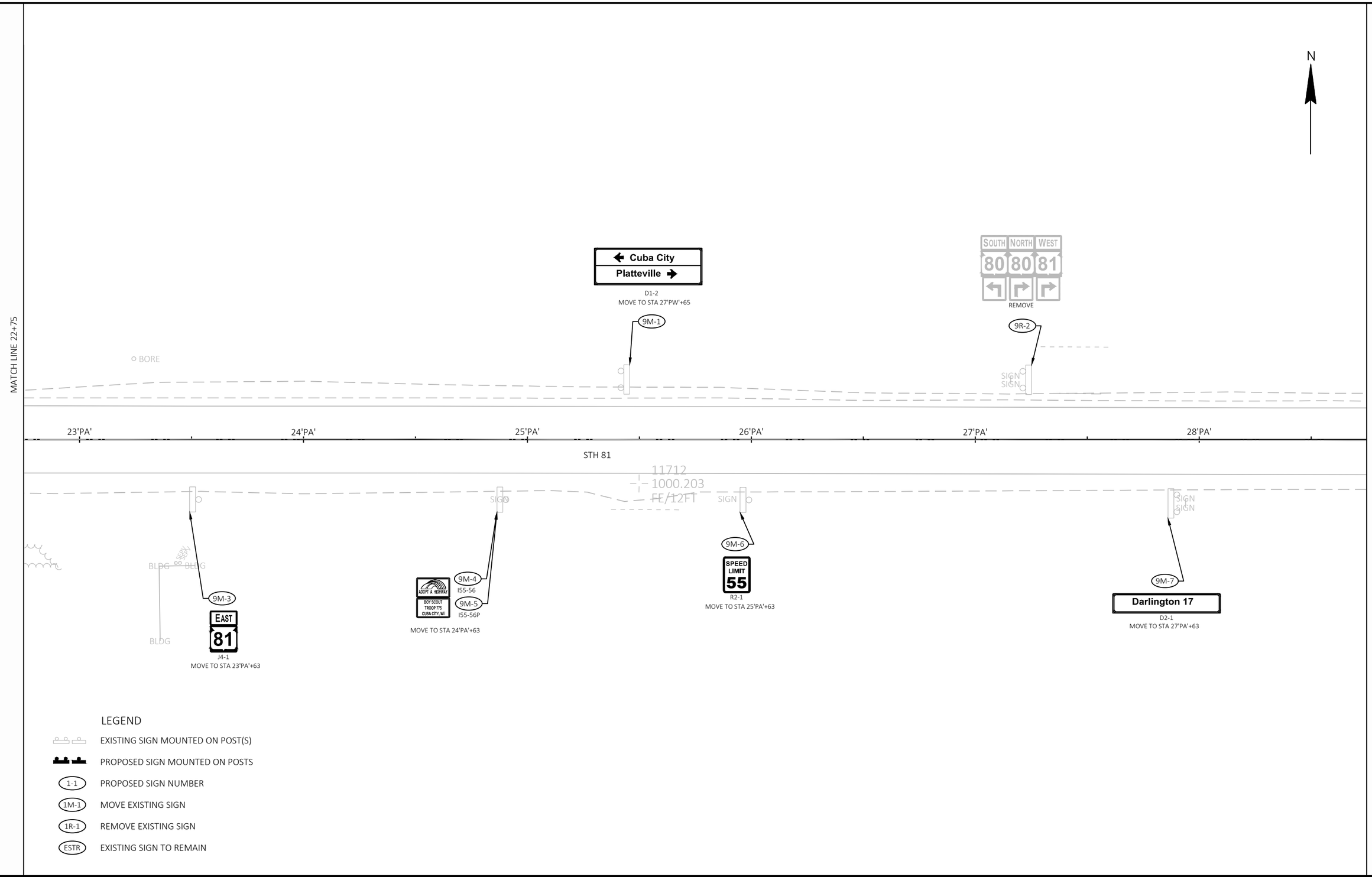

LEGEND

- EXISTING SIGN MOUNTED ON POST(S)
- PROPOSED SIGN MOUNTED ON POSTS
- (1-1) PROPOSED SIGN NUMBER
- (1M-1) MOVE EXISTING SIGN
- (1R-1) REMOVE EXISTING SIGN
- (ESTR) EXISTING SIGN TO REMAIN

PROJECT NO: 5235-03-70	HWY: STH 80	COUNTY: GRANT	SIGN REMOVALS	SHEET 56	E

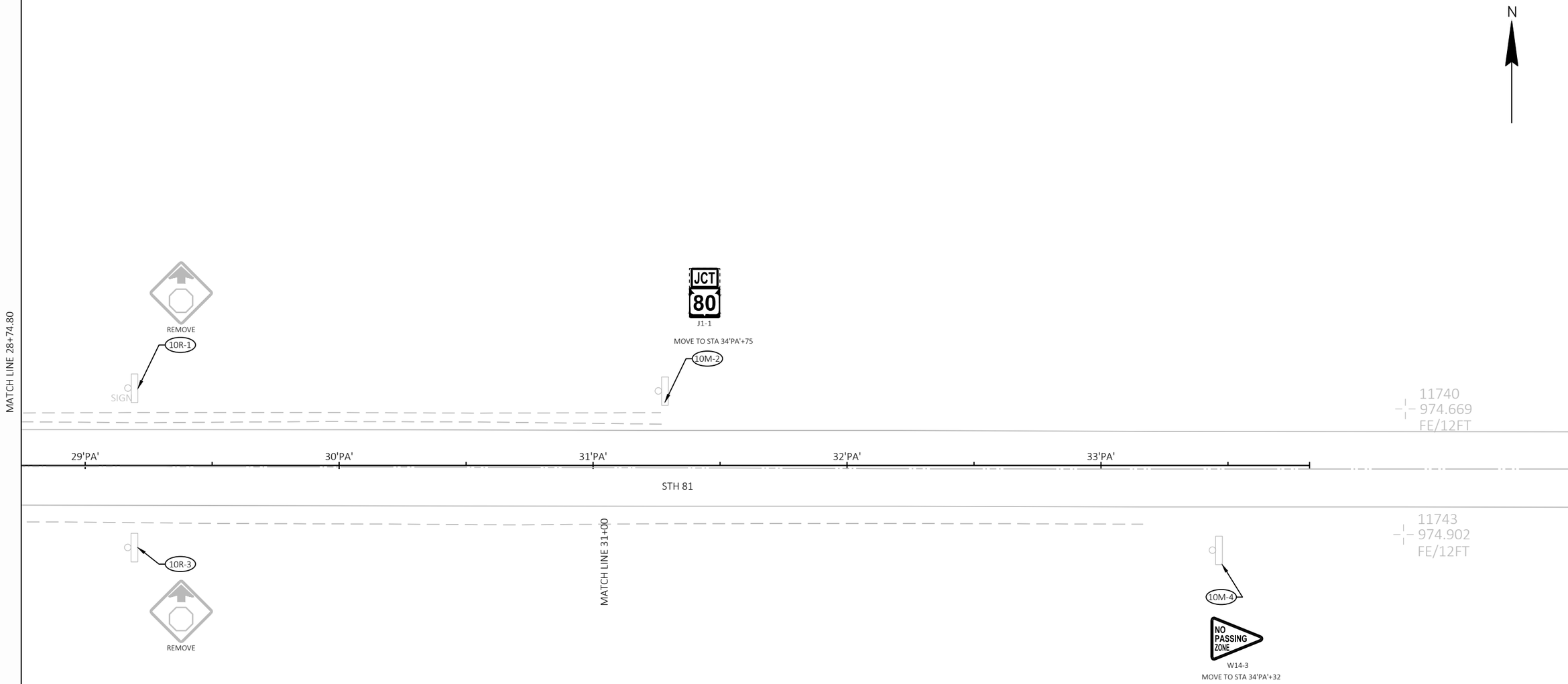

LEGEND

- EXISTING SIGN MOUNTED ON POST(S)
- PROPOSED SIGN MOUNTED ON POSTS
- (1-1) PROPOSED SIGN NUMBER
- (1M-1) MOVE EXISTING SIGN
- (1R-1) REMOVE EXISTING SIGN
- (ESTR) EXISTING SIGN TO REMAIN

PROJECT NO: 5235-03-70	HWY: STH 80	COUNTY: GRANT	SIGN REMOVALS	SHEET 57	E

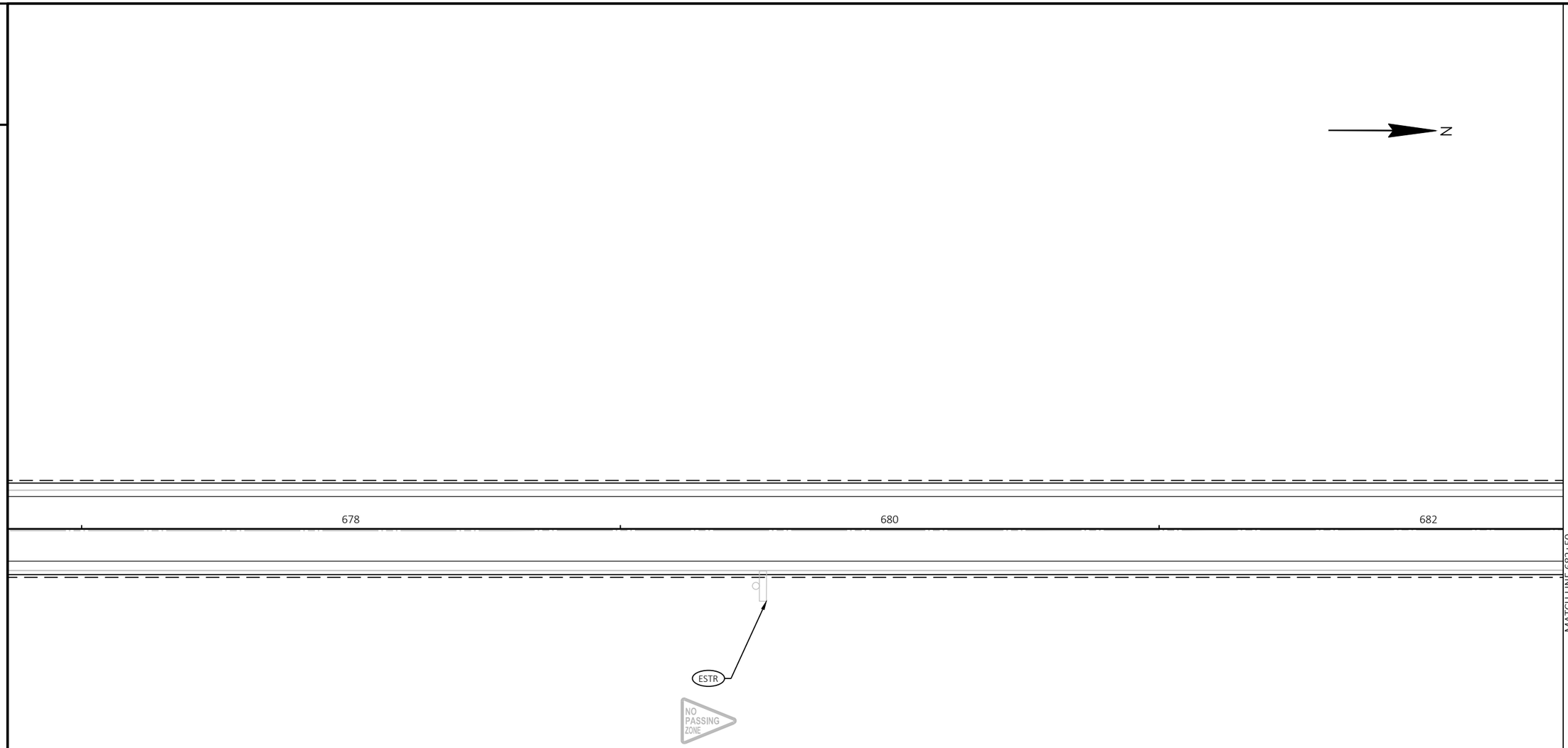

LEGEND

- EXISTING SIGN MOUNTED ON POST(S)
- PROPOSED SIGN MOUNTED ON POSTS
- (1-1) PROPOSED SIGN NUMBER
- (1M-1) MOVE EXISTING SIGN
- (1R-1) REMOVE EXISTING SIGN
- (ESTR) EXISTING SIGN TO REMAIN

PROJECT NO: 5235-03-70	HWY: STH 80	COUNTY: GRANT	PERMANENT SIGNING	SHEET 58	E

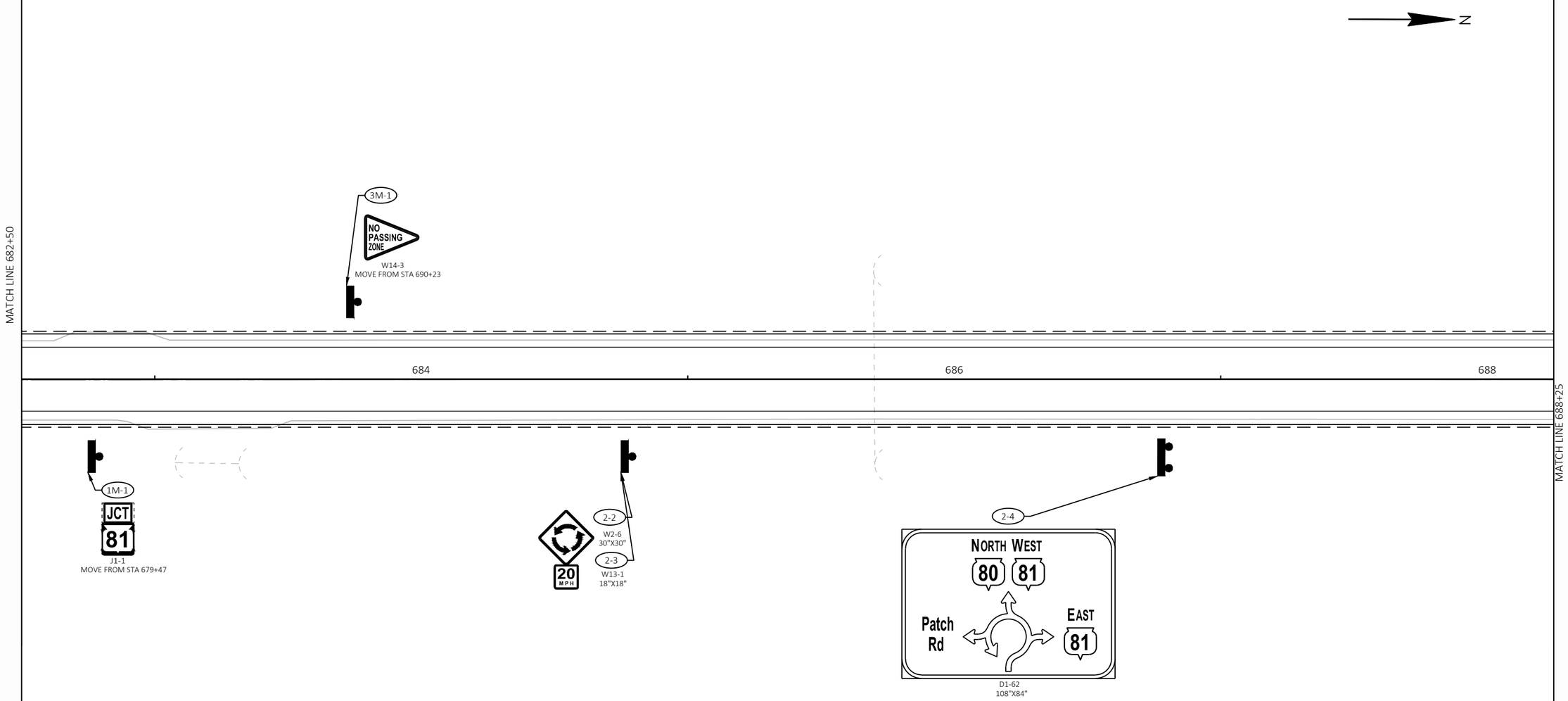

LEGEND

- EXISTING SIGN MOUNTED ON POST(S)
- PROPOSED SIGN MOUNTED ON POSTS
- (1-1) PROPOSED SIGN NUMBER
- (1M-1) MOVE EXISTING SIGN
- (1R-1) REMOVE EXISTING SIGN
- (ESTR) EXISTING SIGN TO REMAIN

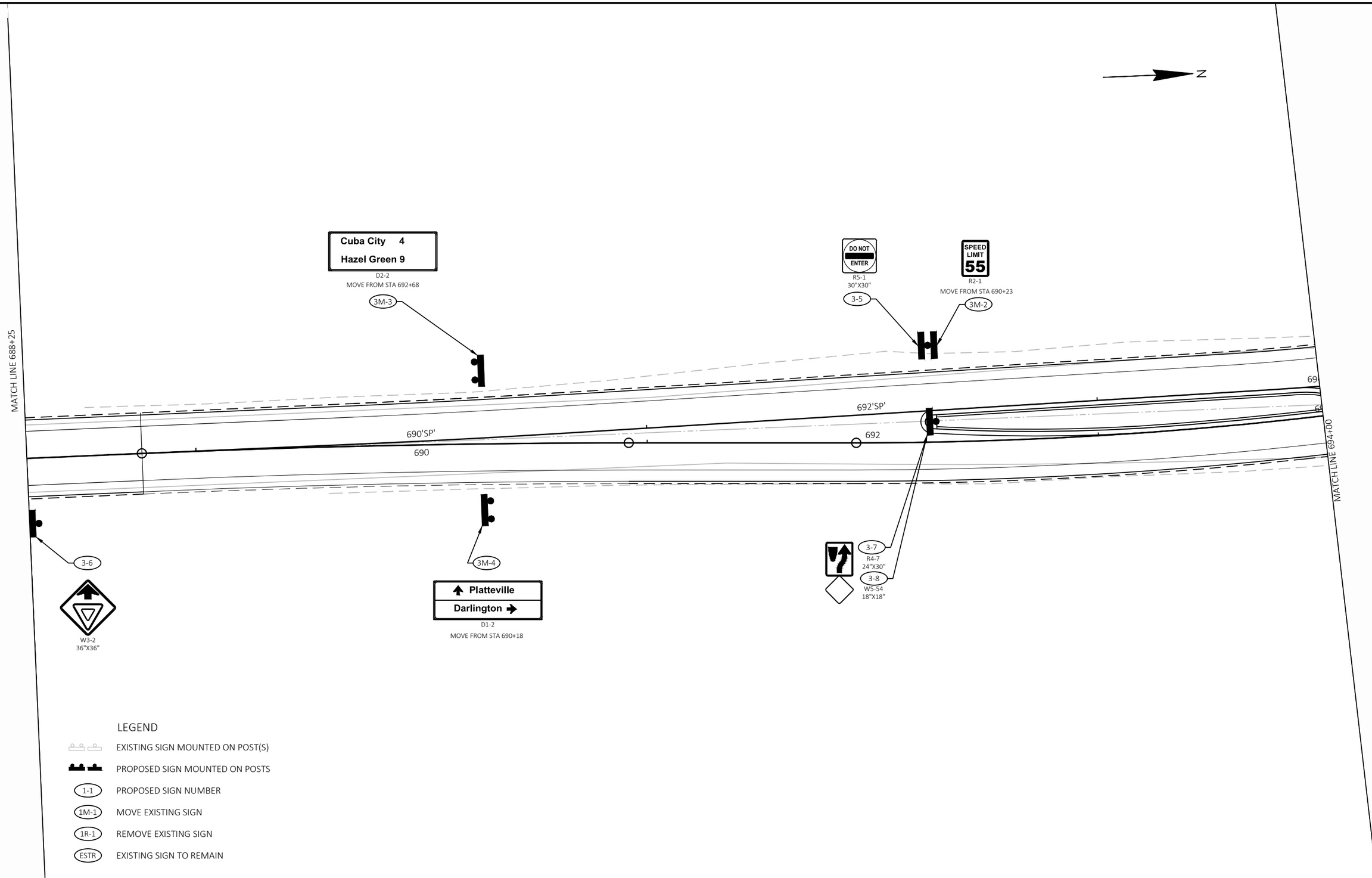

PROJECT NO: 5235-03-70	HWY: STH 80	COUNTY: GRANT	PERMANENT SIGNING	SHEET 60	E

FILE NAME : X:\PROJECTS\GRANT\200050MW - 5235-03-00 STH 80\DESIGN\C3D\SHEETSPLAN\023201-PS.DWG
LAYOUT NAME - 023201-ps-03
PLOT DATE : 6/29/2022 4:52 PM PLOT BY : MICHAEL LISKA PLOT NAME : PLOT SCALE : 1 IN:40 FT
WISDOT/CADDS SHEET 42

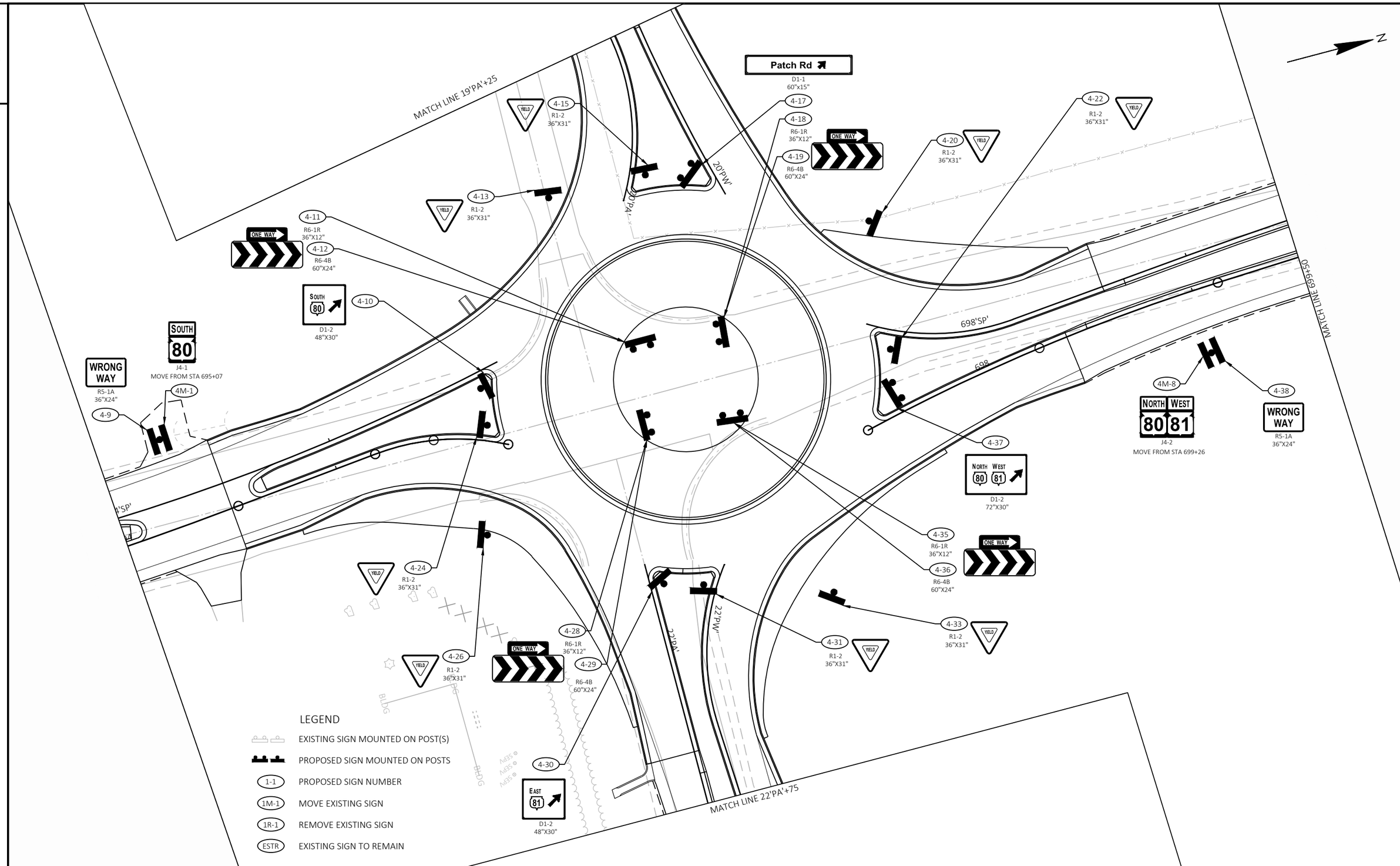

PROJECT NO: 5235-03-70	HWY: STH 80	COUNTY: GRANT	PERMANENT SIGNING	SHEET 61	E

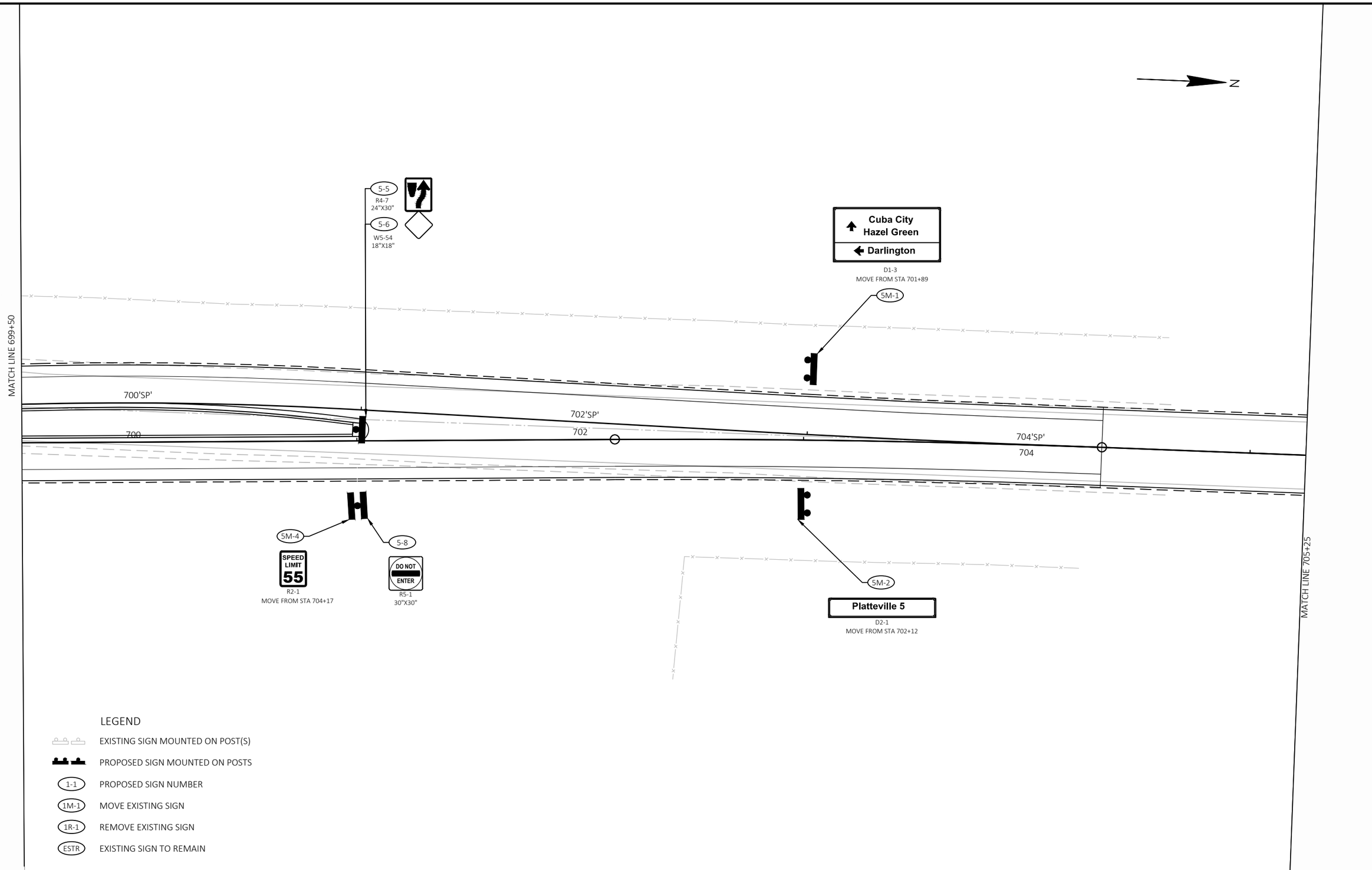
N
5-5
R4-7
24"X30"
5-6
W5-54
18"X18"
Cuba City
Hazel Green
Darlington
D1-3
MOVE FROM STA 701+89
5M-1
MATCH LINE 699+50
700'SP'
700
702'SP'
702
704'SP'
704
5M-4
SPEED LIMIT 55
R2-1
MOVE FROM STA 704+17
5-8
DO NOT ENTER
R5-1
30"X30"
5M-2
Platteville 5
D2-1
MOVE FROM STA 702+12
MATCH LINE 705+25
LEGEND
EXISTING SIGN MOUNTED ON POST(S)
PROPOSED SIGN MOUNTED ON POSTS
1-1
PROPOSED SIGN NUMBER
1M-1
MOVE EXISTING SIGN
1R-1
REMOVE EXISTING SIGN
ESTR
EXISTING SIGN TO REMAIN

2

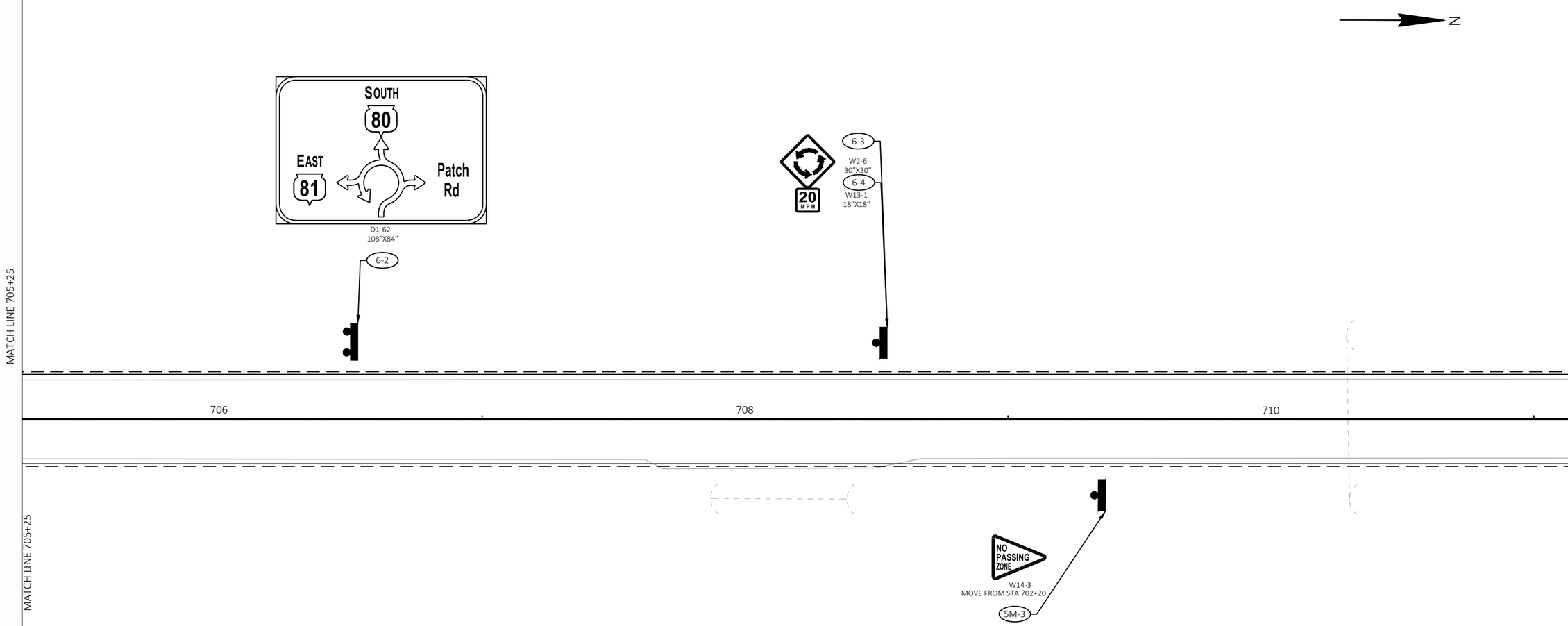

LEGEND

- EXISTING SIGN MOUNTED ON POST(S)
- PROPOSED SIGN MOUNTED ON POSTS
- (1-1) PROPOSED SIGN NUMBER
- (1M-1) MOVE EXISTING SIGN
- (1R-1) REMOVE EXISTING SIGN
- (ESTR) EXISTING SIGN TO REMAIN

PROJECT NO: 5235-03-70	HWY: STH 80	COUNTY: GRANT	PERMANENT SIGNING	SHEET 63	E

2

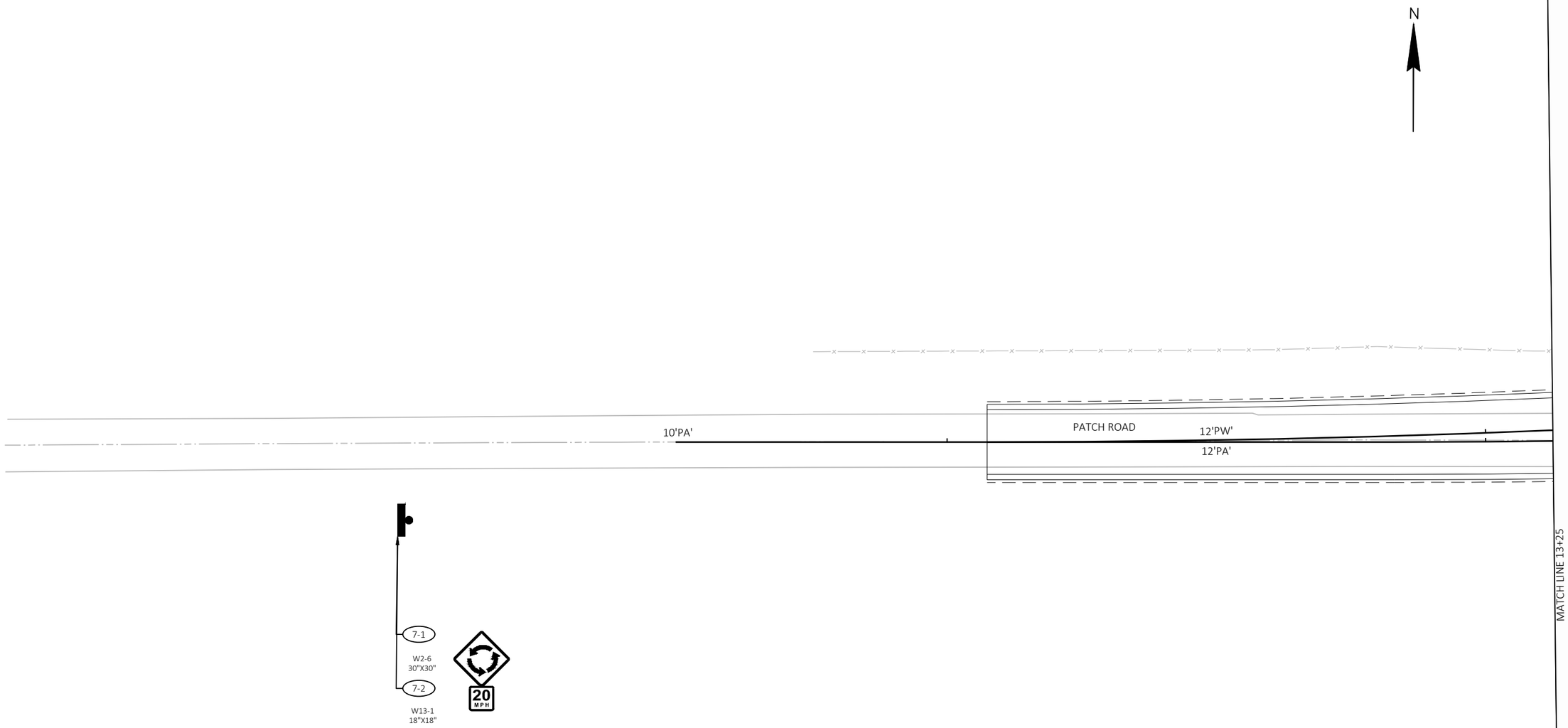

LEGEND

- EXISTING SIGN MOUNTED ON POST(S)
- PROPOSED SIGN MOUNTED ON POSTS
- 1-1 PROPOSED SIGN NUMBER
- 1M-1 MOVE EXISTING SIGN
- 1R-1 REMOVE EXISTING SIGN
- ESTR EXISTING SIGN TO REMAIN

PROJECT NO: 5235-03-70	HWY: STH 80	COUNTY: GRANT	PERMANENT SIGNING	SHEET 64	E

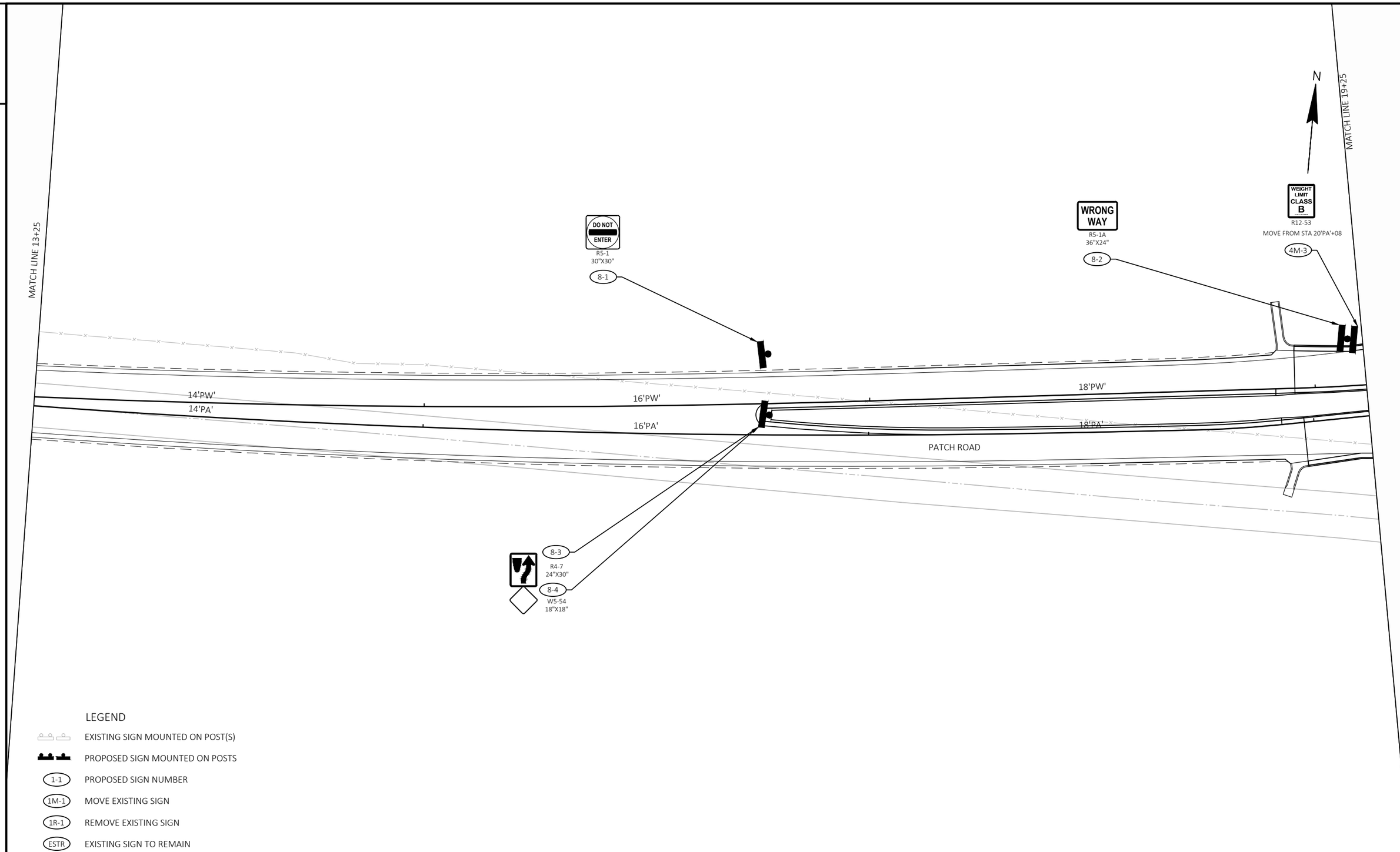

LEGEND

- EXISTING SIGN MOUNTED ON POST(S)
- PROPOSED SIGN MOUNTED ON POSTS
- 1-1 PROPOSED SIGN NUMBER
- 1M-1 MOVE EXISTING SIGN
- 1R-1 REMOVE EXISTING SIGN
- ESTR EXISTING SIGN TO REMAIN

PROJECT NO: 5235-03-70	HWY: STH 80	COUNTY: GRANT	PERMANENT SIGNING	SHEET 65	E

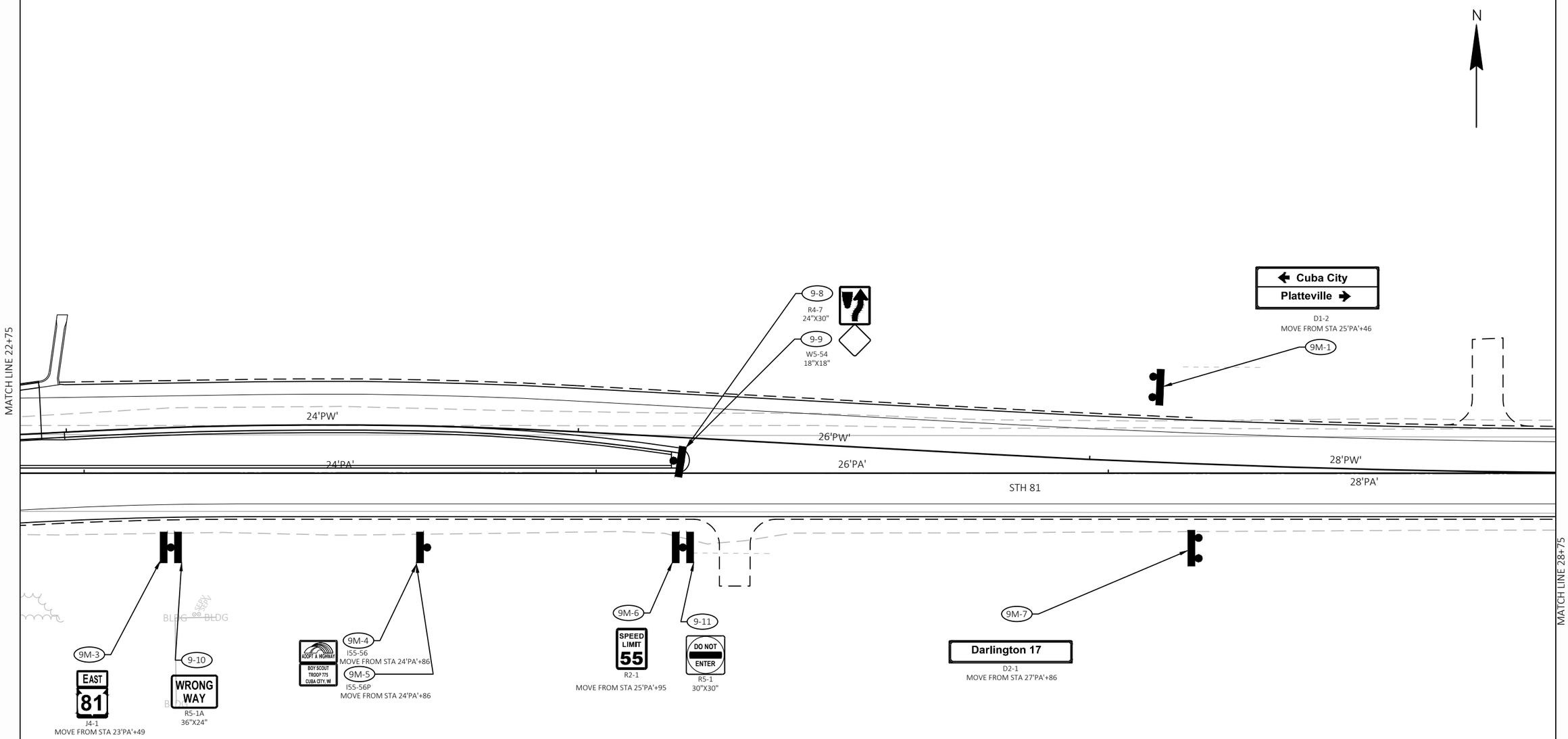

LEGEND

- EXISTING SIGN MOUNTED ON POST(S)
- PROPOSED SIGN MOUNTED ON POSTS
- (1-1) PROPOSED SIGN NUMBER
- (1M-1) MOVE EXISTING SIGN
- (1R-1) REMOVE EXISTING SIGN
- (ESTR) EXISTING SIGN TO REMAIN

PROJECT NO: 5235-03-70	HWY: STH 80	COUNTY: GRANT	PERMANENT SIGNING	SHEET 66	E

MATCH LINE 31+00

N

W3-2
36"X36"

10-5

Patch Rd
SOUTH 80
NORTH 80 WEST 81

D1-62
132"X60"

10-6

10-7
W2-6
30"X30"

10-8
W13-1
18"X18"

20 MPH

JCT 80
J1-1
MOVE FROM STA 31'PA'+30

10M-2

30'PA'

32'PA'

STH 81

MATCH LINE 28+75

10M-4

NO PASSING ZONE
W14-3
MOVE FROM STA 33'PA'+48

LEGEND

- EXISTING SIGN MOUNTED ON POST(S)
- PROPOSED SIGN MOUNTED ON POSTS
- (1-1) PROPOSED SIGN NUMBER
- (1M-1) MOVE EXISTING SIGN
- (1R-1) REMOVE EXISTING SIGN
- (ESTR) EXISTING SIGN TO REMAIN

PROJECT NO: 5235-03-70	HWY: STH 80	COUNTY: GRANT	PERMANENT SIGNING	SHEET 67	E

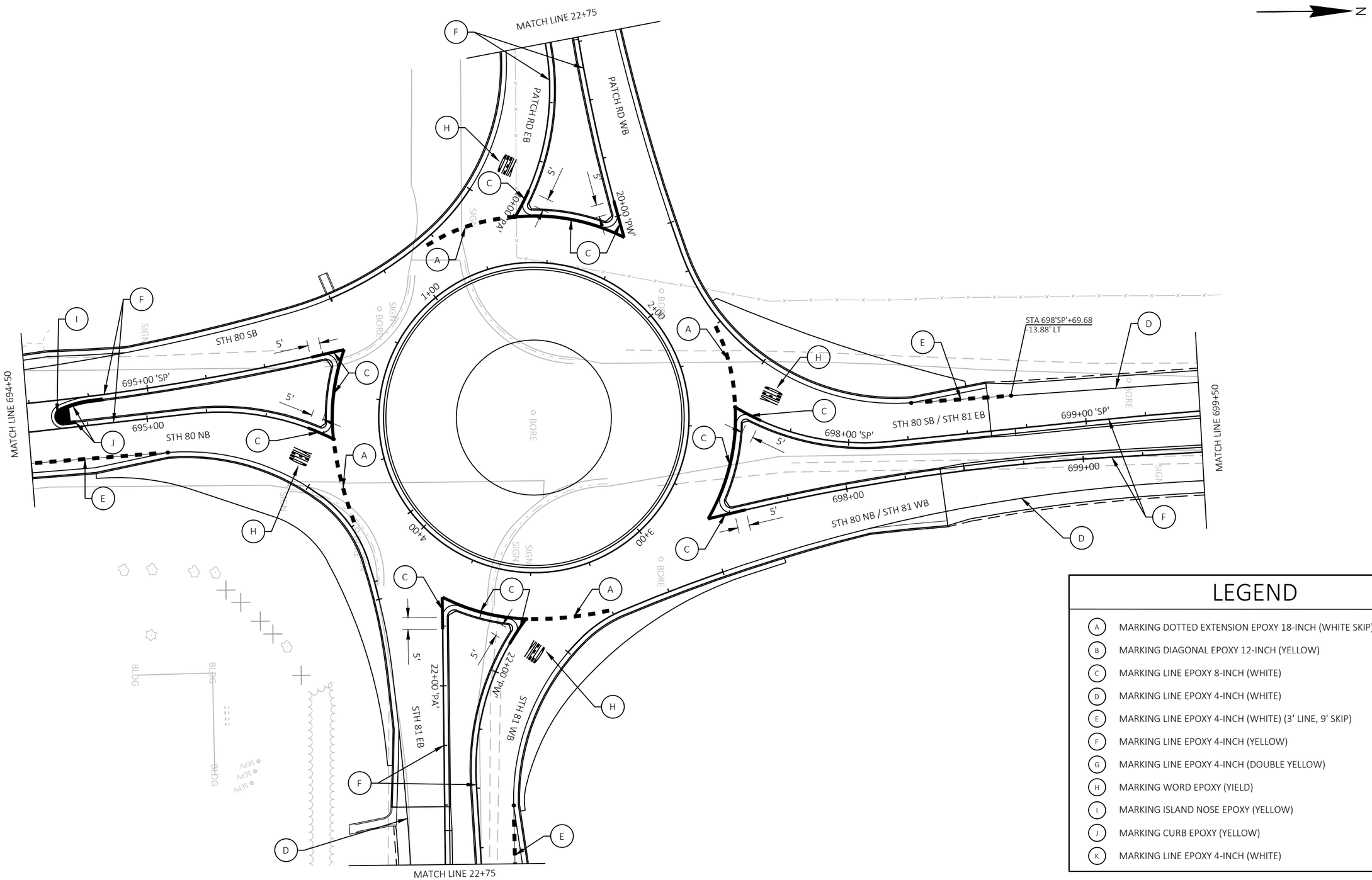

LEGEND

A	MARKING DOTTED EXTENSION EPOXY 18-INCH (WHITE SKIP) (2' LINE, 2' SKIP)
B	MARKING DIAGONAL EPOXY 12-INCH (YELLOW)
C	MARKING LINE EPOXY 8-INCH (WHITE)
D	MARKING LINE EPOXY 4-INCH (WHITE)
E	MARKING LINE EPOXY 4-INCH (WHITE) (3' LINE, 9' SKIP)
F	MARKING LINE EPOXY 4-INCH (YELLOW)
G	MARKING LINE EPOXY 4-INCH (DOUBLE YELLOW)
H	MARKING WORD EPOXY (YIELD)
I	MARKING ISLAND NOSE EPOXY (YELLOW)
J	MARKING CURB EPOXY (YELLOW)
K	MARKING LINE EPOXY 4-INCH (WHITE)

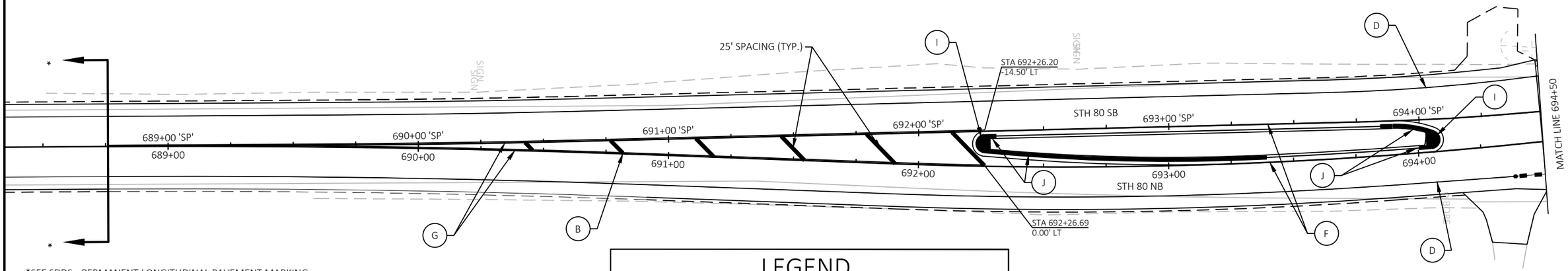

*SEE SDDS: PERMANENT LONGITUDINAL PAVEMENT MARKING
PAVEMENT MARKING (TURN LANES)
PAVEMENT MARKING (INTERSECTIONS)

NOTE: START OF NO PASSING ZONE MUST BE AT LEAST 500' FROM MEDIAN SPLIT

LEGEND

- (A) MARKING DOTTED EXTENSION EPOXY 18-INCH (WHITE SKIP) (2' LINE, 2' SKIP)
- (B) MARKING DIAGONAL EPOXY 12-INCH (YELLOW)
- (C) MARKING LINE EPOXY 8-INCH (WHITE)
- (D) MARKING LINE EPOXY 4-INCH (WHITE)
- (E) MARKING LINE EPOXY 4-INCH (WHITE) (3' LINE, 9' SKIP)
- (F) MARKING LINE EPOXY 4-INCH (YELLOW)
- (G) MARKING LINE EPOXY 4-INCH (DOUBLE YELLOW)
- (H) MARKING WORD EPOXY (YIELD)
- (I) MARKING ISLAND NOSE EPOXY (YELLOW)
- (J) MARKING CURB EPOXY (YELLOW)
- (K) MARKING LINE EPOXY 4-INCH (WHITE)

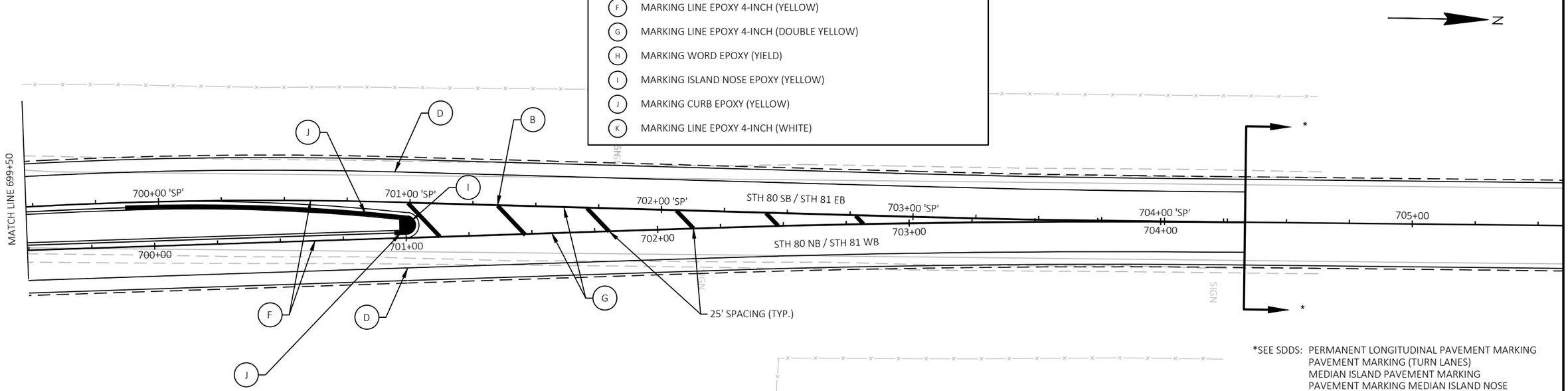

*SEE SDDS: PERMANENT LONGITUDINAL PAVEMENT MARKING
PAVEMENT MARKING (TURN LANES)
MEDIAN ISLAND PAVEMENT MARKING
PAVEMENT MARKING MEDIAN ISLAND NOSE
PAVEMENT MARKING (INTERSECTIONS)

NOTE: START OF NO PASSING ZONE MUST BE AT LEAST
500' FROM MEDIAN SPLIT

2

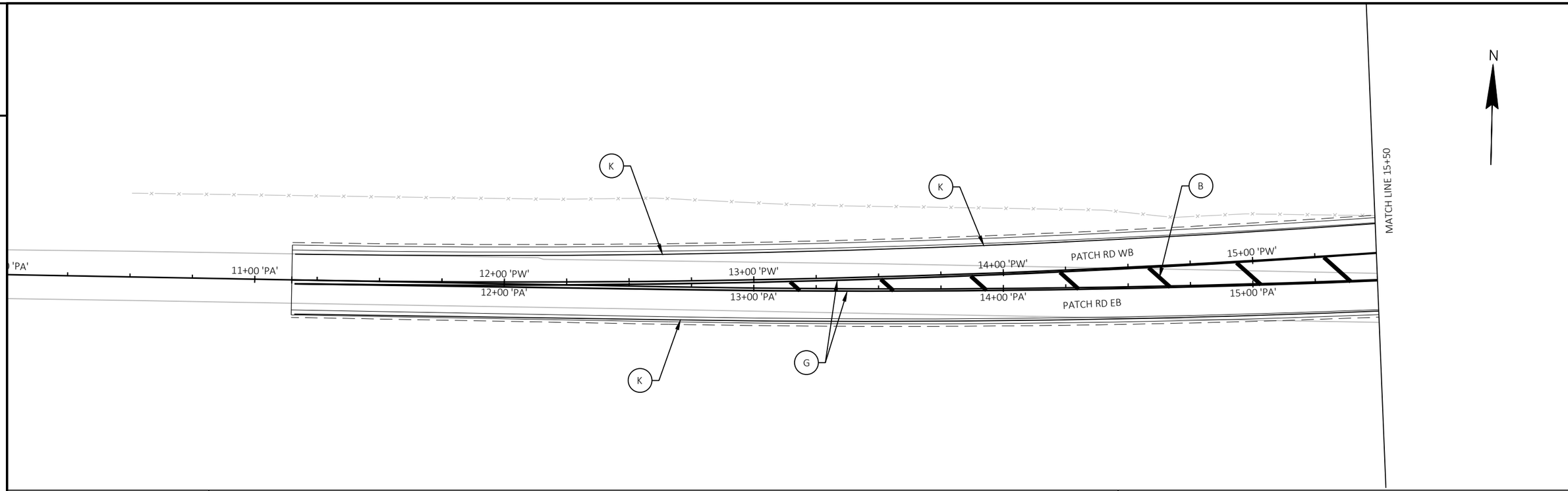

2

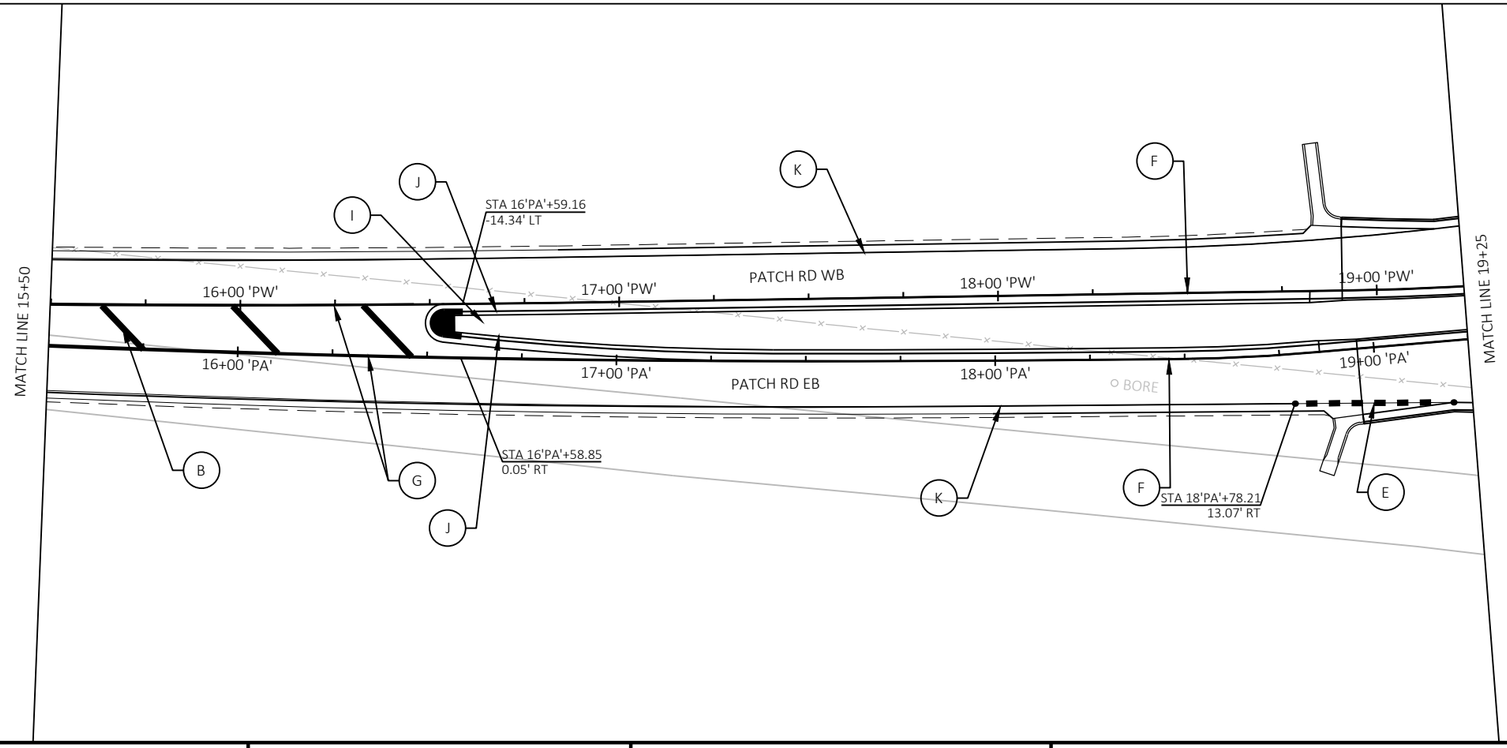

LEGEND

A	MARKING DOTTED EXTENSION EPOXY 18-INCH (WHITE SKIP) (2' LINE, 2' SKIP)
B	MARKING DIAGONAL EPOXY 12-INCH (YELLOW)
C	MARKING LINE EPOXY 8-INCH (WHITE)
D	MARKING LINE EPOXY 4-INCH (WHITE)
E	MARKING LINE EPOXY 4-INCH (WHITE) (3' LINE, 9' SKIP)
F	MARKING LINE EPOXY 4-INCH (YELLOW)
G	MARKING LINE EPOXY 4-INCH (DOUBLE YELLOW)
H	MARKING WORD EPOXY (YIELD)
I	MARKING ISLAND NOSE EPOXY (YELLOW)
J	MARKING CURB EPOXY (YELLOW)
K	MARKING LINE EPOXY 4-INCH (WHITE)

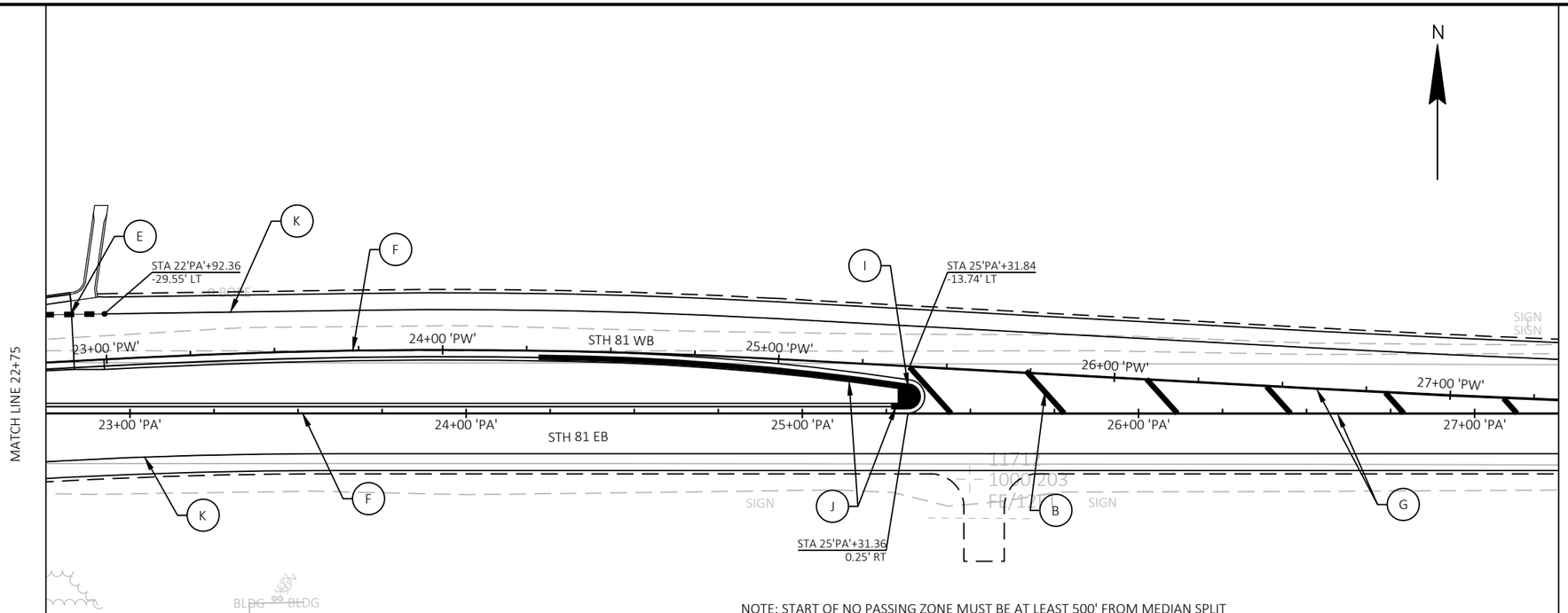

NOTE: START OF NO PASSING ZONE MUST BE AT LEAST 500' FROM MEDIAN SPLIT

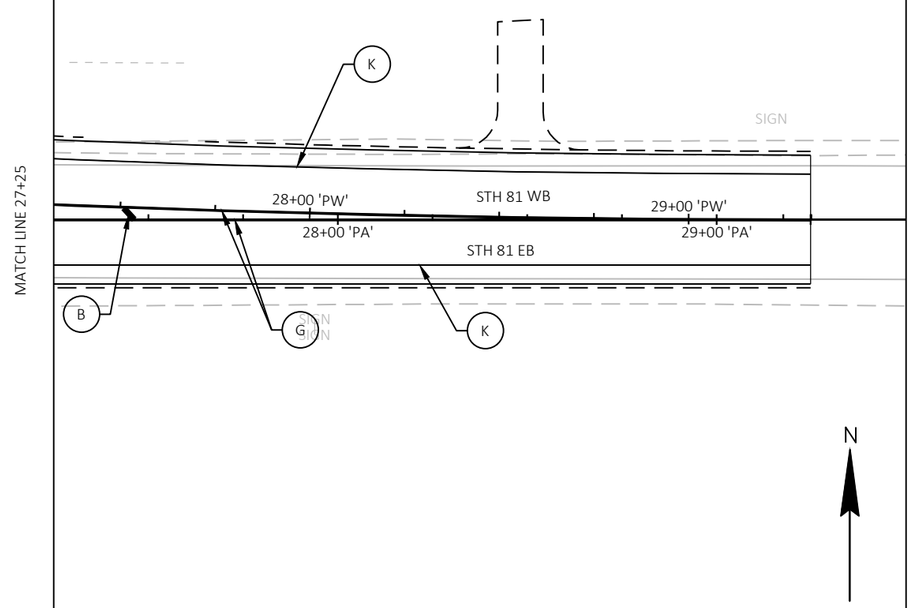

LEGEND

- (A) MARKING DOTTED EXTENSION EPOXY 18-INCH (WHITE SKIP) (2' LINE, 2' SKIP)
- (B) MARKING DIAGONAL EPOXY 12-INCH (YELLOW)
- (C) MARKING LINE EPOXY 8-INCH (WHITE)
- (D) MARKING LINE EPOXY 4-INCH (WHITE)
- (E) MARKING LINE EPOXY 4-INCH (WHITE) (3' LINE, 9' SKIP)
- (F) MARKING LINE EPOXY 4-INCH (YELLOW)
- (G) MARKING LINE EPOXY 4-INCH (DOUBLE YELLOW)
- (H) MARKING WORD EPOXY (YIELD)
- (I) MARKING ISLAND NOSE EPOXY (YELLOW)
- (J) MARKING CURB EPOXY (YELLOW)
- (K) MARKING LINE EPOXY 4-INCH (WHITE)

2

2

GENERAL TRAFFIC CONTROL NOTES

DRAWINGS SHOW TRAFFIC CONTROL FOR A TYPICAL SITUATION. ADDITIONAL TRAFFIC CONTROL DEVICES MAY BE REQUIRED AND/OR LAYOUT DETAILS MODIFIED DEPENDING ON CONTRACTOR METHODS OR SEQUENCE OF OPERATIONS

MILL AND OVERLAY WORK TO FOLLOW FLAGGING OPERATIONS PER SDD 15C12-A.

ALL "W" AND "WO" SIGNS SHALL BE 48"X48" UNLESS OTHERWISE NOTED, OR AS PROVIDED FOR IN SDD'S, AND SHALL HAVE REFLECTIVE FLUORESCENT DIAMOND GRADE SHEETING.

THE EXACT NUMBER, LOCATION, AND SPACING OF ALL SIGNS AND DEVICES SHALL BE ADJUSTED TO FIT FIELD CONDITIONS AS APPROVED BY THE ENGINEER.

ALL SIGNS INAPPROPRIATE TO THE STATUS OF TRAFFIC CONTROL, INCLUDING PRE-EXISTING SIGNING IN THE VICINITY, SHALL BE COVERED OR REMOVED AS SPECIFIED IN THE PLANS AND/OR AS DIRECTED BY THE ENGINEER.

"WO" SIGNS ARE THE SAME AS "W" SIGNS, EXCEPT THE BACKGROUND SHALL BE ORANGE.

WARNING LIGHTS SHALL NOT BE WORKING ON "COVERED" OR "DOWNED" SIGNS OR BARRICADES.

DURING HOURS OF DARKNESS, ALL BARRICADES USED TO SHIELD A HAZARD SHALL BE EQUIPPED WITH TYPE "A" LIGHTS.

FOR NIGHTTIME OPERATION, ALL DRUMS IN TAPERS SHALL HAVE A TYPE "C" STEADY BURN WARNING LIGHT.

ALL R11-2, R11-3, AND R11-4 SIGNS SHALL BE ATTACHED ONLY TO THE TOP RAIL OF THE TYPE III BARRICADE. THE SIGNS SHALL NOT COVER THE MIDDLE RAIL.

TYPE "H" REFLECTIVE SHEETING SHALL BE USED ON ALL BARRICADES AND ON R11-2, R11-3, AND R11-4 SIGNS.

ALL TYPE III BARRICADES SHALL HAVE AN EQUIVALENT WIDTH OF 8 FEET.

DETAILS OF TRAFFIC CONTROL DEVICES AND THEIR LOCATION NOT SHOWN ON THIS DRAWING SHALL CONFORM TO THE PERTINENT REQUIREMENTS OF THE WISCONSIN MANUAL OF TRAFFIC CONTROL DEVICES, THE PLANS, SPECIFICATIONS, AND CONTRACT.

UNLESS NOTED IN THE PLANS, PCMS SIGN LOCATION AND MESSAGE TO BE DETERMINED BY THE ENGINEER.

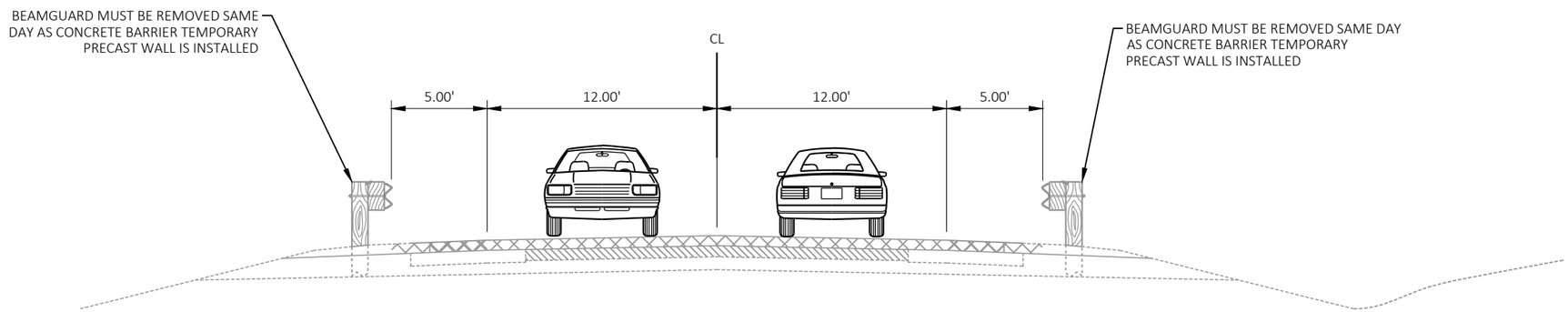

STA 846+50 - 852+00

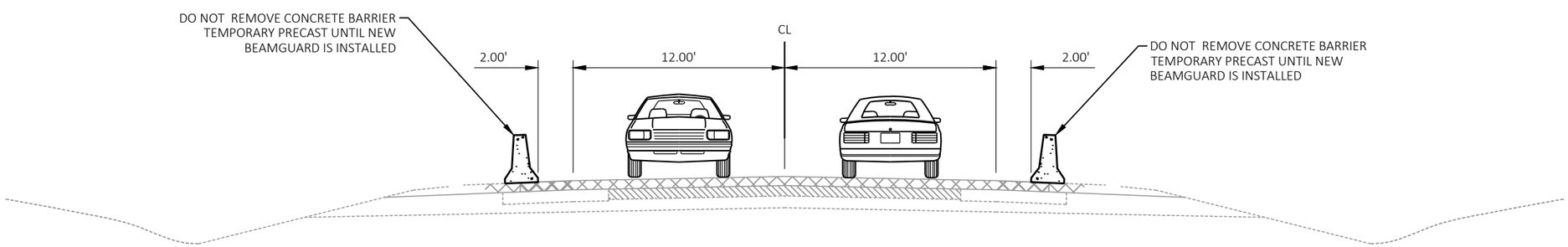

STA 846+50 - 852+00

2

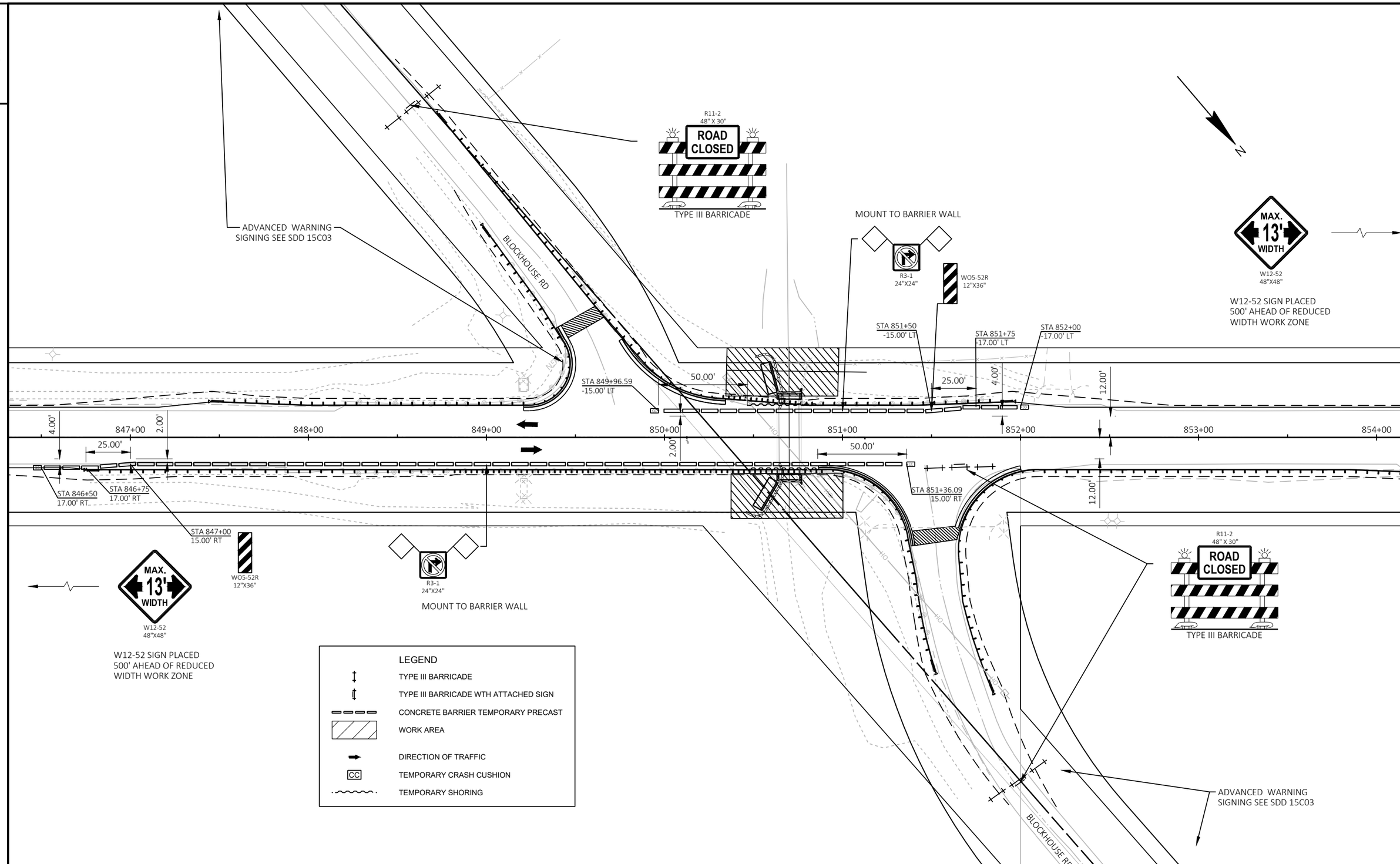

PROJECT NO: 5235-03-70	HWY: STH 80	COUNTY: GRANT	TRAFFIC CONTROL - BOX CULVERT	SHEET 74	E

FILE NAME : X:\PROJECTS\GRANT\200050MW - 5235-03-00 STH 80\DESIGN\C3D\SHEETSPLAN\025101-TC.DWG
LAYOUT NAME - 025102-tc
PLOT DATE : 6/29/2022 4:55 PM PLOT BY : MICHAEL LISKA PLOT NAME : PLOT SCALE : 1 IN:50 FT

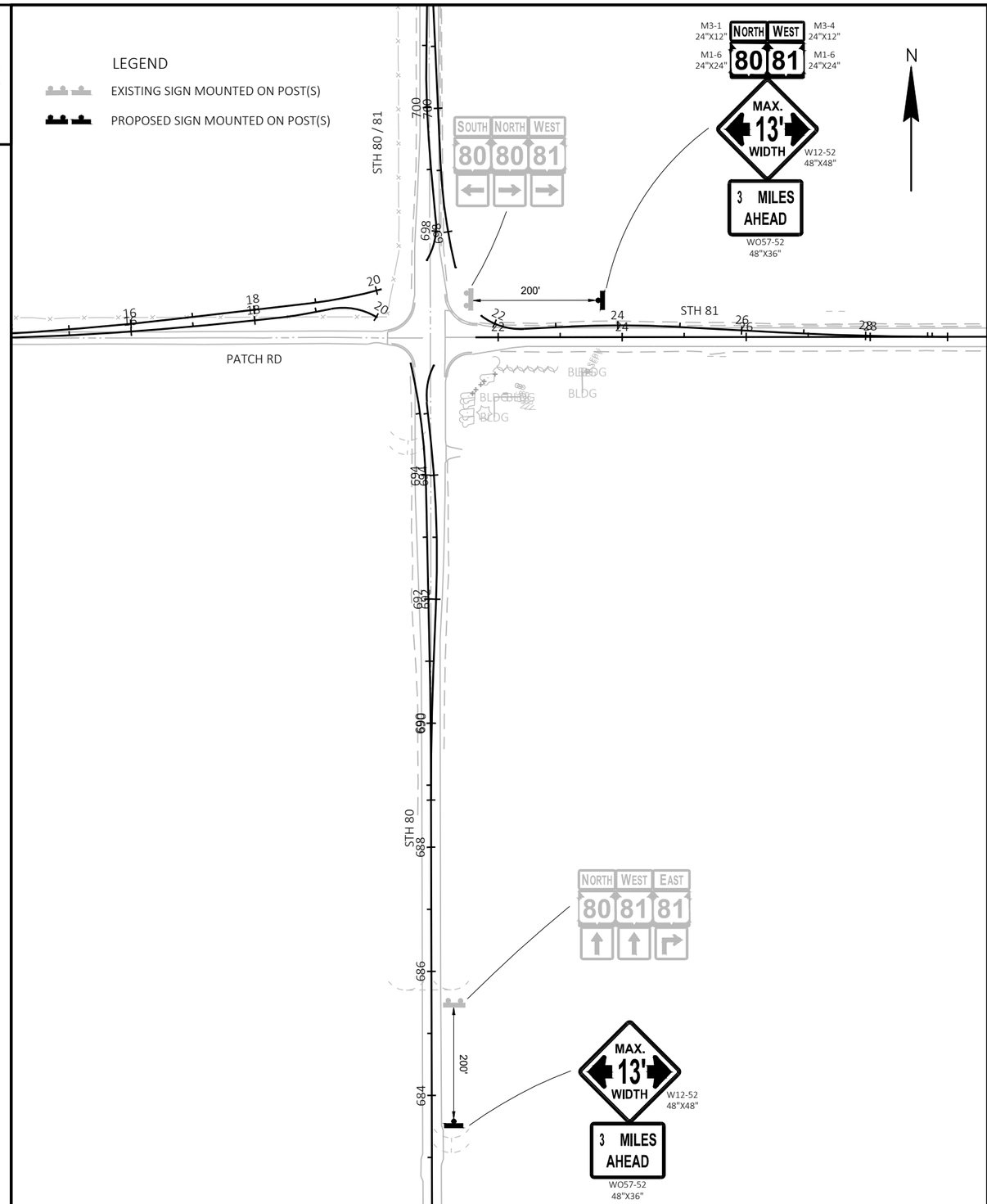

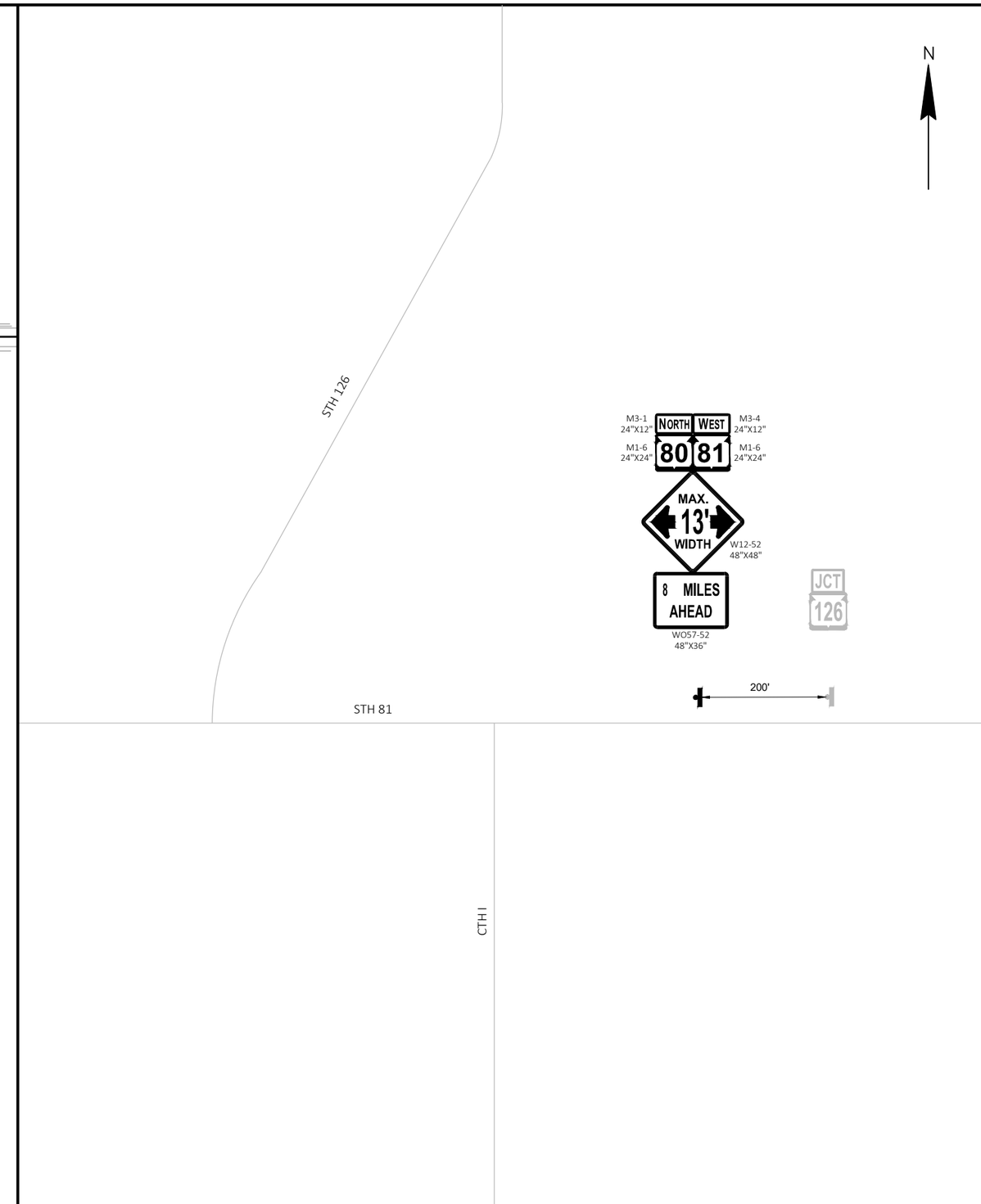

PROJECT NO: 5235-03-70	HWY: STH 80	COUNTY: GRANT	TRAFFIC CONTROL - BOX CULVERT	SHEET 75	E

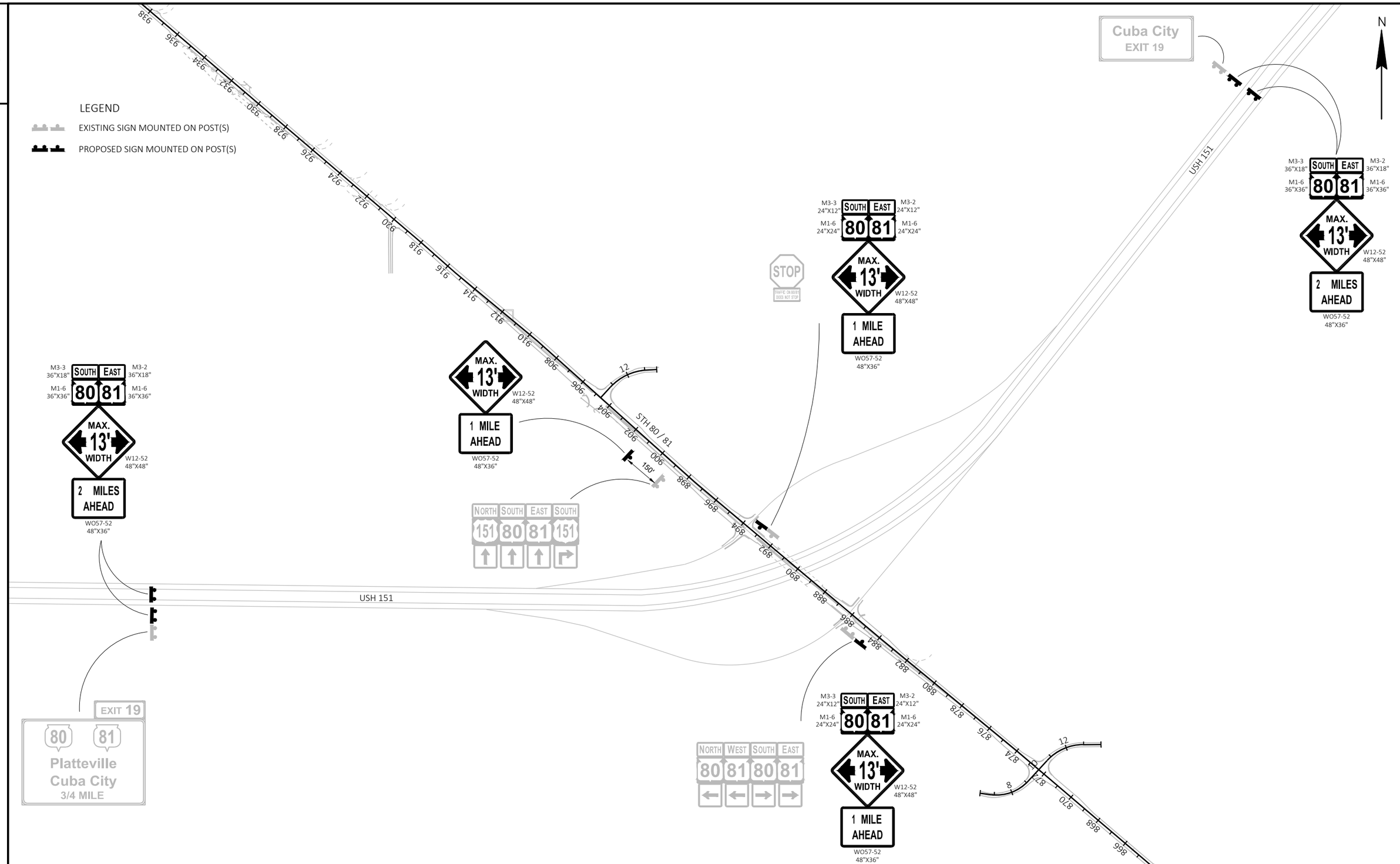

PROJECT NO: 5235-03-70	HWY: STH 80	COUNTY: GRANT	TRAFFIC CONTROL - BOX CULVERT	SHEET 76	E

FILE NAME : X:\PROJECTS\GRANT\200050MW - 5235-03-00 STH 80\DESIGN\C3D\SHEETSPLAN\025103-TC.DWG
LAYOUT NAME - 025104-tc
PLOT DATE : 6/29/2022 4:56 PM
PLOT BY : MICHAEL LISKA
PLOT NAME :
PLOT SCALE : 1 IN:500 FT

2

LEGEND

- EXISTING SIGN MOUNTED ON POST(S)
- PROPOSED SIGN MOUNTED ON POST(S)
- TYPE III BARRICADE
- TYPE III BARRICADE WITH ATTACHED SIGN
- WORK ZONE

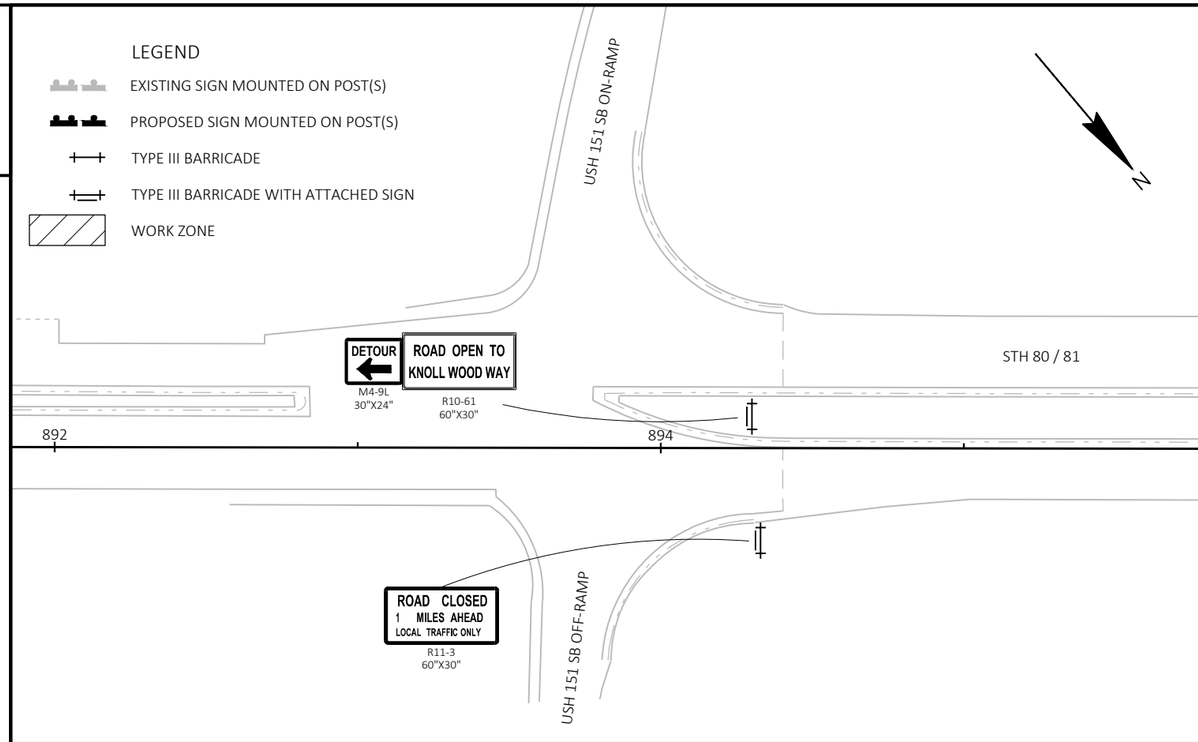

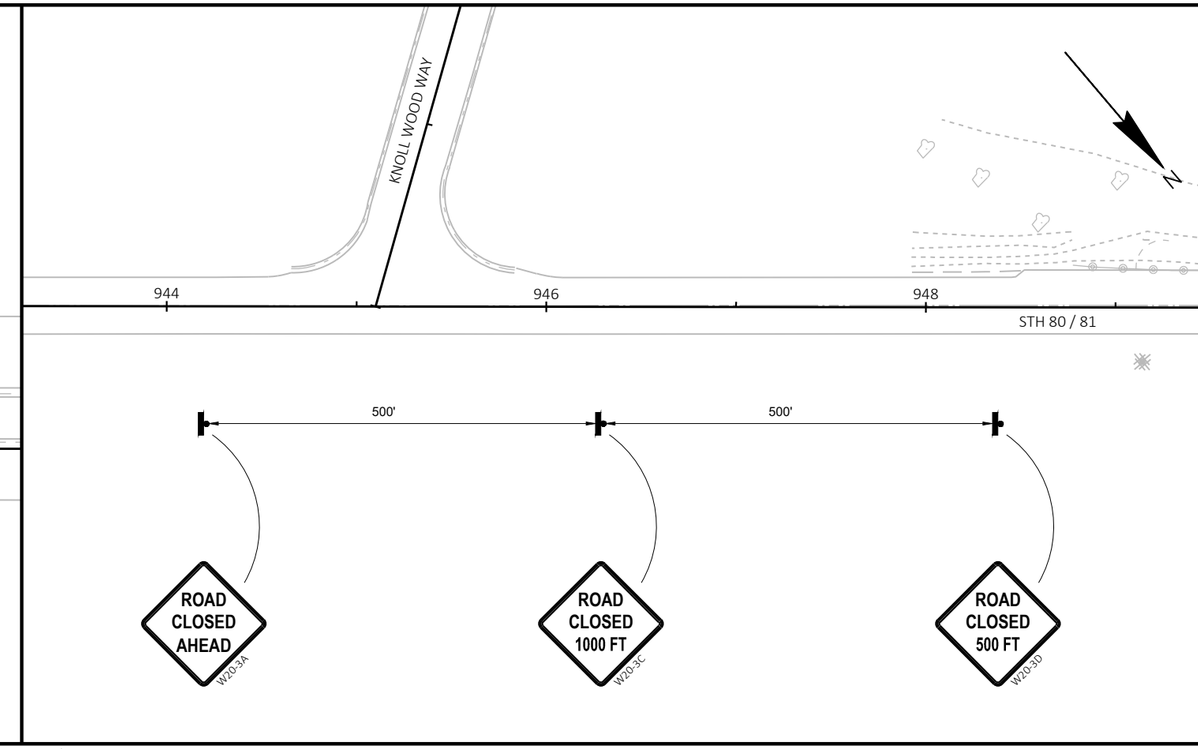

2

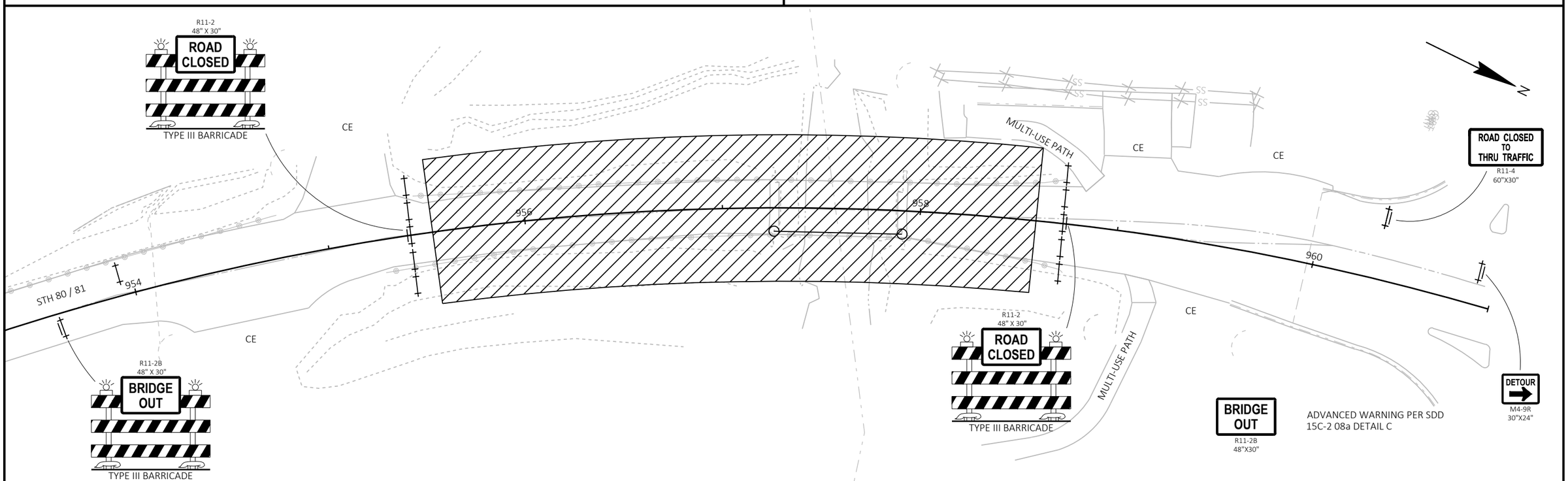

PROJECT NO: 5235-03-70	HWY: STH 80	COUNTY: GRANT	TRAFFIC CONTROL - BRIDGE CLOSURE	SHEET 77	E

2

LEGEND

- EXISTING SIGN MOUNTED ON POST(S)
- PROPOSED SIGN MOUNTED ON POST(S)
- X-XX DENOTES SIGN NUMBER
- DETOUR ROUTE
- COVERING ARROWS PER SIGN PLATE A4-12
- WORK AREA
- NORTH WEST 80/81 SIGN COVERING

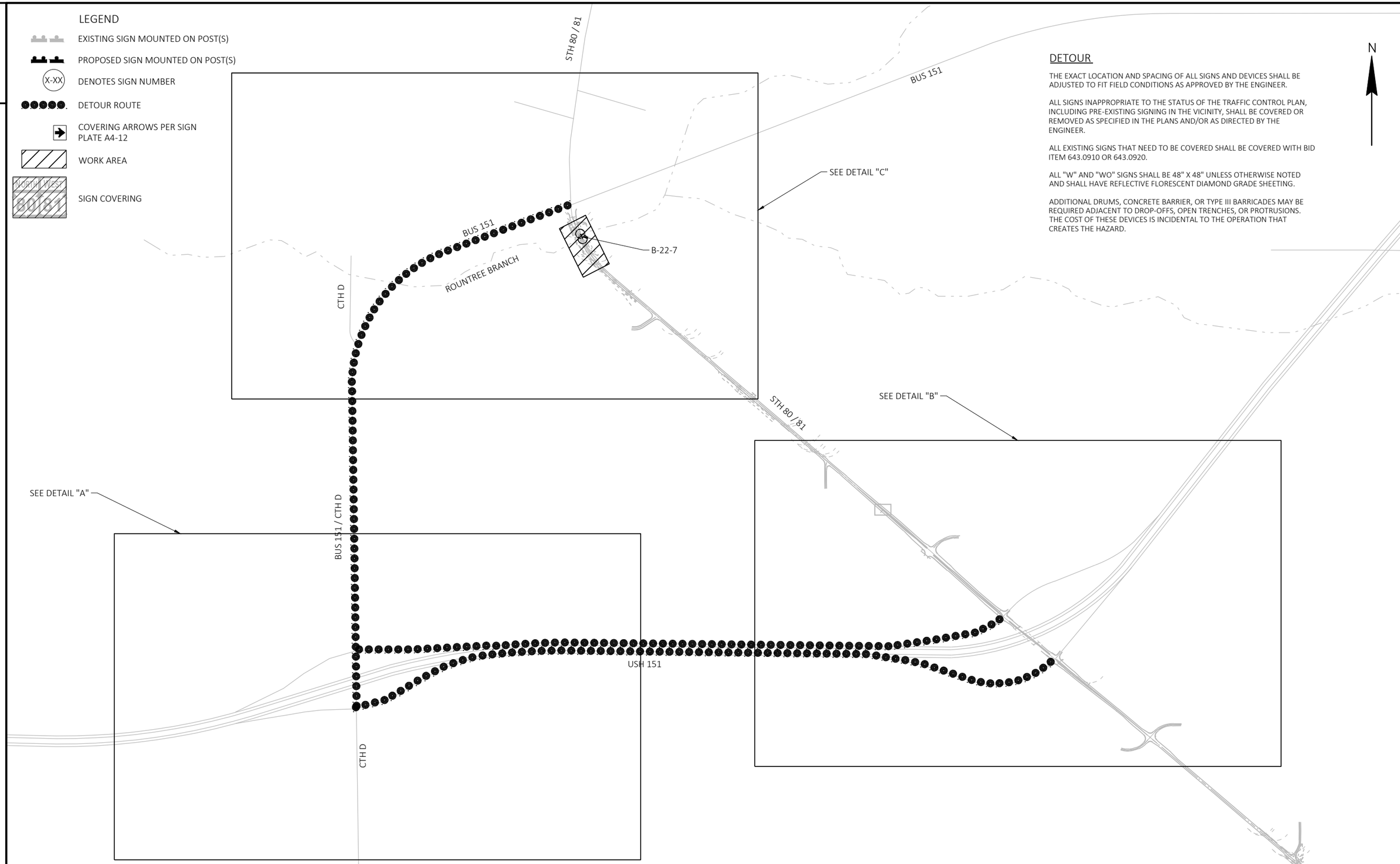

DETOUR

THE EXACT LOCATION AND SPACING OF ALL SIGNS AND DEVICES SHALL BE ADJUSTED TO FIT FIELD CONDITIONS AS APPROVED BY THE ENGINEER.

ALL SIGNS INAPPROPRIATE TO THE STATUS OF THE TRAFFIC CONTROL PLAN, INCLUDING PRE-EXISTING SIGNING IN THE VICINITY, SHALL BE COVERED OR REMOVED AS SPECIFIED IN THE PLANS AND/OR AS DIRECTED BY THE ENGINEER.

ALL EXISTING SIGNS THAT NEED TO BE COVERED SHALL BE COVERED WITH BID ITEM 643.0910 OR 643.0920.

ALL "W" AND "WO" SIGNS SHALL BE 48" X 48" UNLESS OTHERWISE NOTED AND SHALL HAVE REFLECTIVE FLORESCENT DIAMOND GRADE SHEETING.

ADDITIONAL DRUMS, CONCRETE BARRIER, OR TYPE III BARRICADES MAY BE REQUIRED ADJACENT TO DROP-OFFS, OPEN TRENCHES, OR PROTRUSIONS. THE COST OF THESE DEVICES IS INCIDENTAL TO THE OPERATION THAT CREATES THE HAZARD.

2

PROJECT NO: 5235-03-70	HWY: STH 80	COUNTY: GRANT	DETOUR - BRIDGE CLOSURE - OVERVIEW	SHEET 78	E

LEGEND

- EXISTING SIGN MOUNTED ON POST(S)
- PROPOSED SIGN MOUNTED ON POST(S)
- X-XX DENOTES SIGN NUMBER
- NORTH WEST 80 81 SIGN COVERING
- COVERING ARROWS PER SIGN PLATE A4-12
- WORK AREA

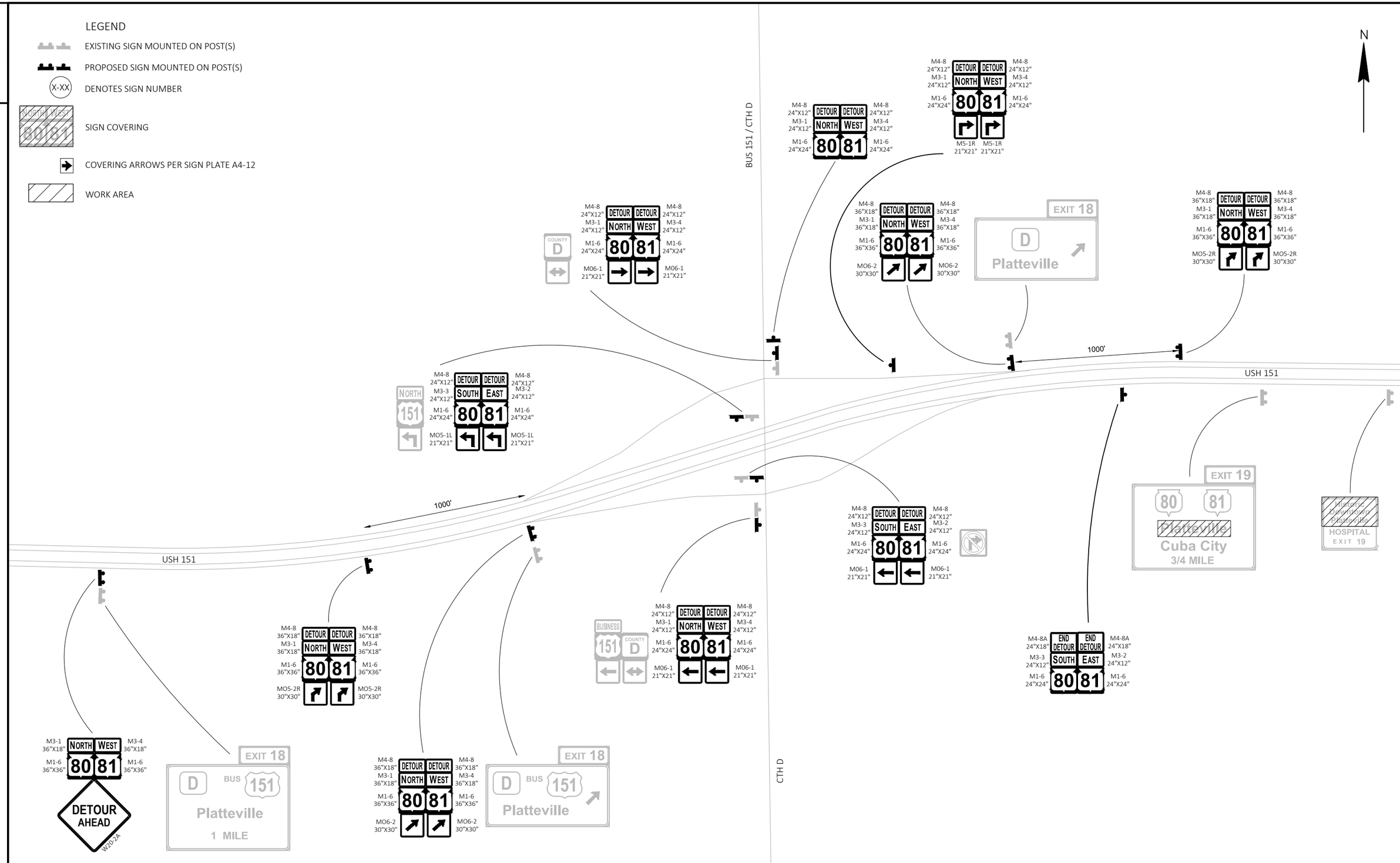

PROJECT NO: 5235-03-70	HWY: STH 80	COUNTY: GRANT	DETOUR - BRIDGE CLOSURE - DETAIL "A"	SHEET 79	E

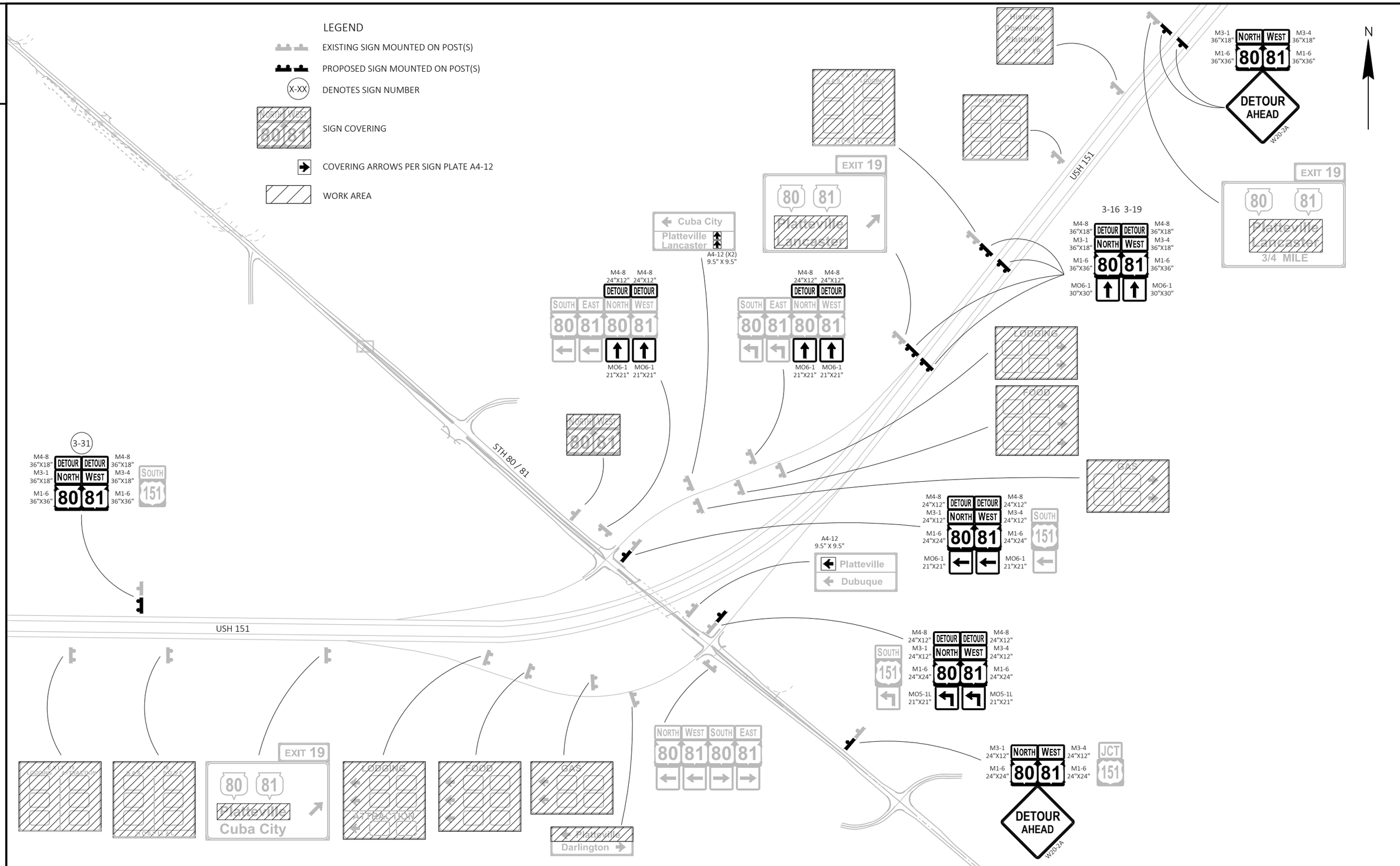

PROJECT NO: 5235-03-70	HWY: STH 80	COUNTY: GRANT	DETOUR - BRIDGE CLOSURE - DETAIL "B"	SHEET 80	E

FILE NAME : X:\PROJECTS\GRANT\200050MW - 5235-03-00 STH 80\DESIGN\C3D\SHEETSPLAN\027001-DT.DWG
LAYOUT NAME - 027003-dt
PLOT DATE : 6/29/2022 4:57 PM PLOT BY : MICHAEL LISKA PLOT NAME : PLOT SCALE : 1 IN:500 FT

2

LEGEND

EXISTING SIGN MOUNTED ON POST(S)

PROPOSED SIGN MOUNTED ON POST(S)

X-XX DENOTES SIGN NUMBER

SIGN COVERING

COVERING ARROWS PER SIGN PLATE A4-12

WORK AREA

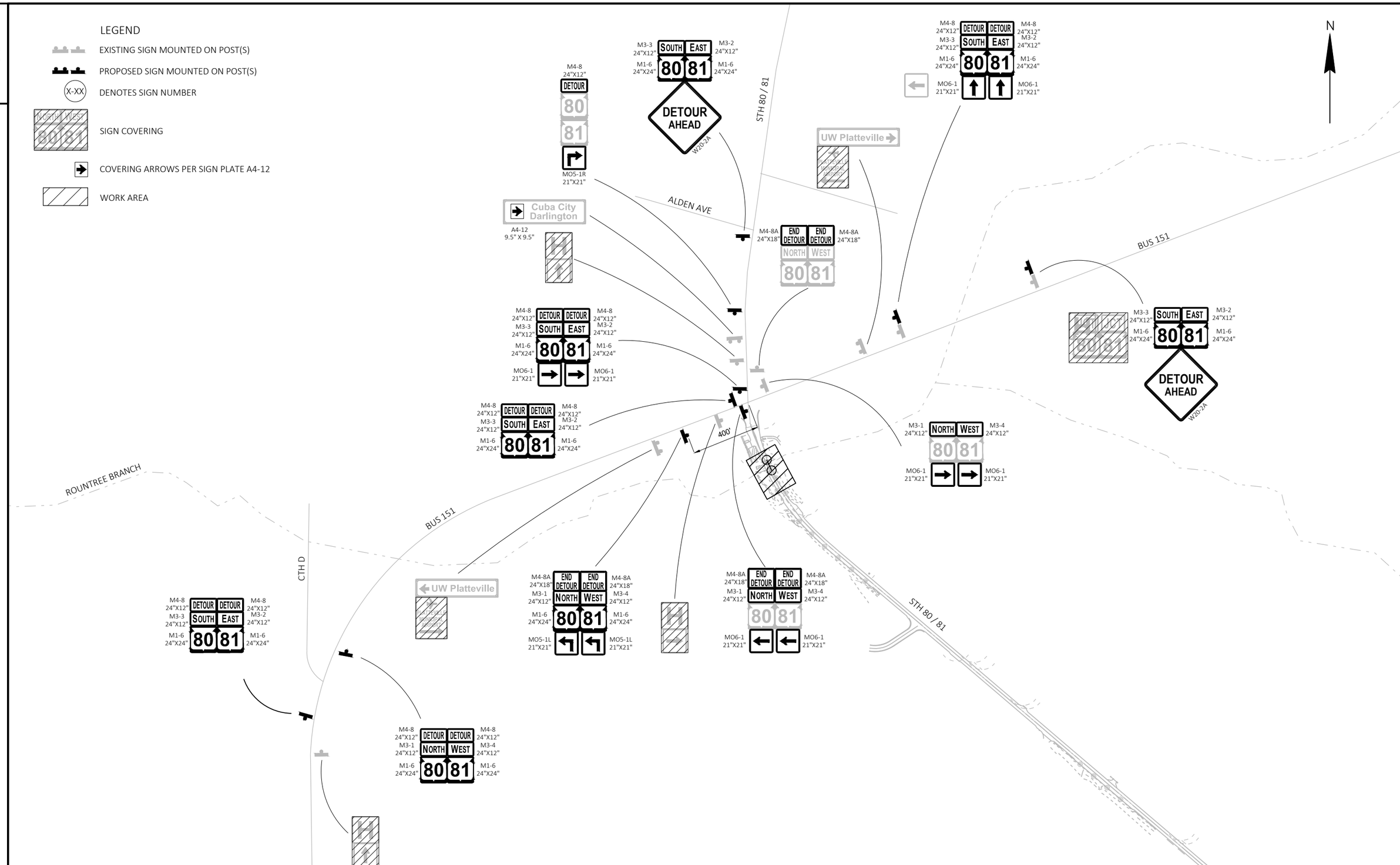

PROJECT NO: 5235-03-70	HWY: STH 80	COUNTY: GRANT	DETOUR - BRIDGE CLOSURE - DETAIL "C"	SHEET 81	E

FILE NAME : X:\PROJECTS\GRANT\200050MW - 5235-03-00 STH 80\DESIGN\C3D\SHEETSPLAN\027001-DT.DWG
LAYOUT NAME - 027004-dt
PLOT DATE : 6/29/2022 4:58 PM PLOT BY : MICHAEL LISKA PLOT NAME : PLOT SCALE : 1 IN:500 FT

WISDOT/CADDS SHEET 42

PRE STAGE 1 OVERVIEW PAGE

WORK ZONE PRE STAGE 1

N

PORTABLE CHANGEABLE MESSAGE BOARD PLACED AT 736+75 LT OR 500' ADVANCE OF ROAD WORK AHEAD SIGNAGE. PLACE 7 DAYS PRIOR TO ROAD WORK MESSAGE: HWY 80 ROAD WORK / BEGINS XX/XX

PCMS

PCMS PORTABLE CHANGEABLE MESSAGE BOARD PLACED AT 677+00 RT OR 500' ADVANCE OF ROAD WORK AHEAD SIGNAGE. PLACE 7 DAYS PRIOR TO ROAD WORK MESSAGE: HWY 80 ROAD WORK / BEGINS XX/XX

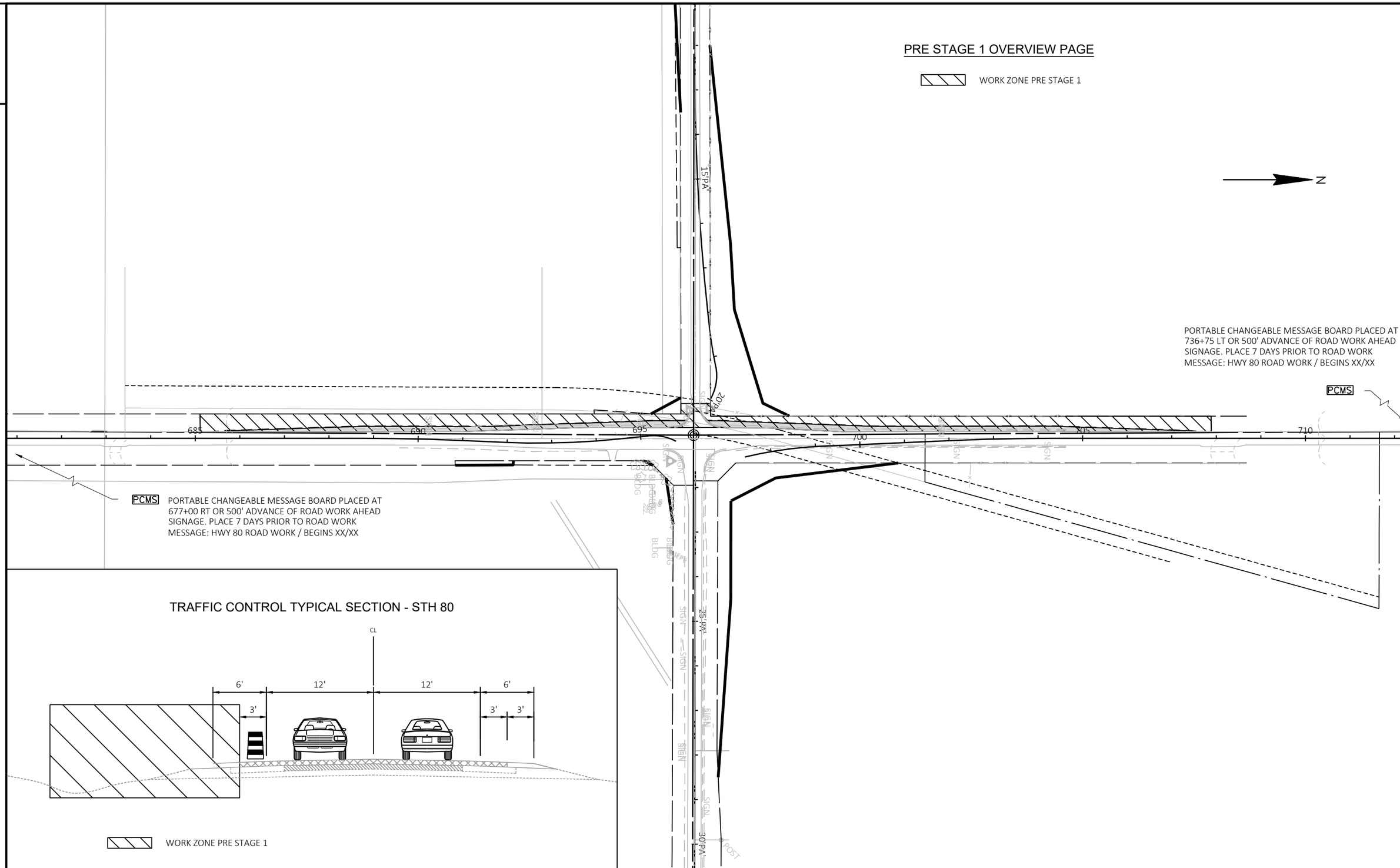

TRAFFIC CONTROL TYPICAL SECTION - STH 80

WORK ZONE PRE STAGE 1

PROJECT NO: 5235-03-70	HWY: STH 80	COUNTY: GRANT	TRAFFIC CONTROL - RAB - PRE STAGE 1	SHEET 82	E

2

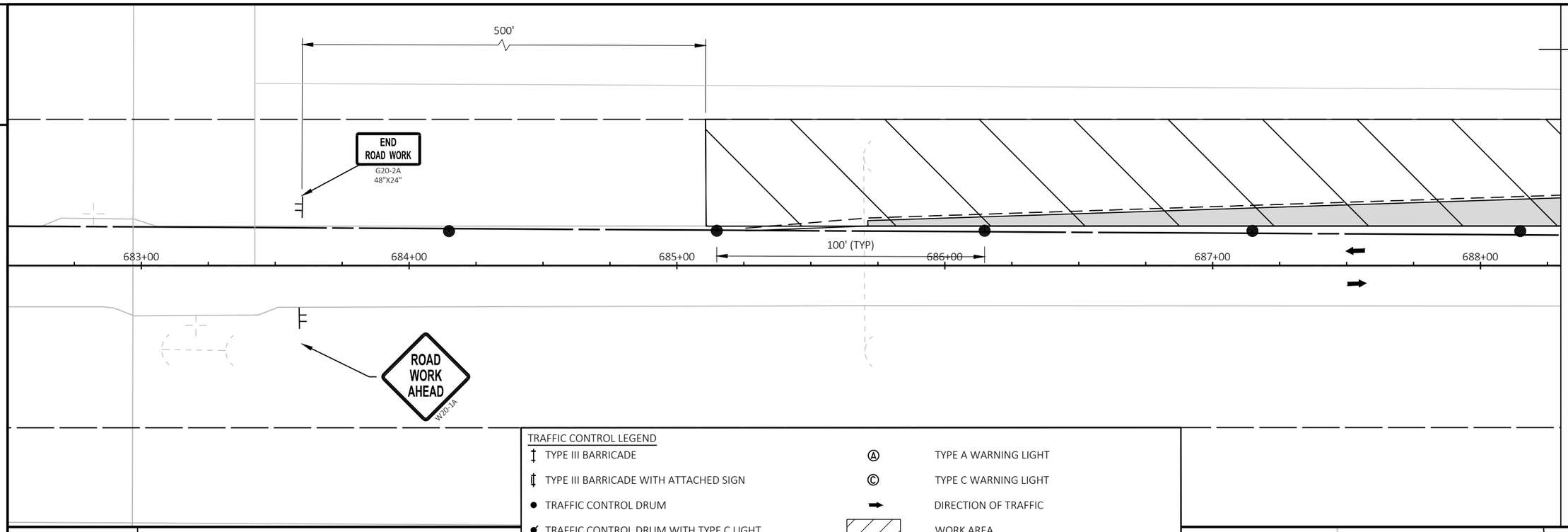

TRAFFIC CONTROL LEGEND

- TYPE III BARRICADE
- TYPE III BARRICADE WITH ATTACHED SIGN
- TRAFFIC CONTROL DRUM
- TRAFFIC CONTROL DRUM WITH TYPE C LIGHT
- TRAFFIC CONTROL SIGN ON PORTABLE SIGN SUPPORT
- TRAFFIC CONTROL SIGN ON POST
- Ⓐ TYPE A WARNING LIGHT
- Ⓒ TYPE C WARNING LIGHT
- DIRECTION OF TRAFFIC
- WORK AREA
- TEMPORARY ASPHALTIC PAVEMENT
- PCMS — PORTABLE CHANGEABLE MESSAGE BOARD PLACE 7 DAYS PRIOR TO ROAD WORK MESSAGE: HWY 80 ROAD WORK / BEGINS XX/XX

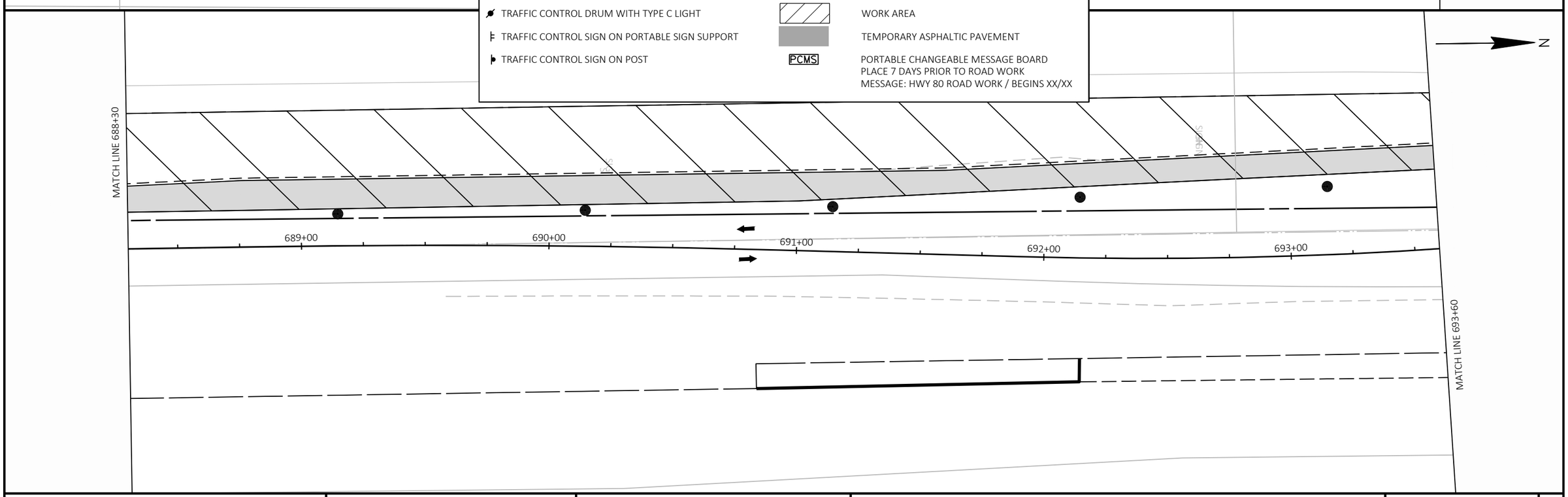

2

PROJECT NO: 5235-03-70	HWY: STH 80	COUNTY: GRANT	TRAFFIC CONTROL - RAB - PRE STAGE 1	SHEET 83	E

FILE NAME : X:\PROJECTS\GRANT\200050MW - 5235-03-00 STH 80\DESIGN\C3D\SHEETSPLAN\025104-P1.DWG
LAYOUT NAME - 25104-p101
PLOT DATE : 6/29/2022 5:00 PM PLOT BY : MICHAEL LISKA PLOT NAME : PLOT SCALE : 1 IN:40 FT

2

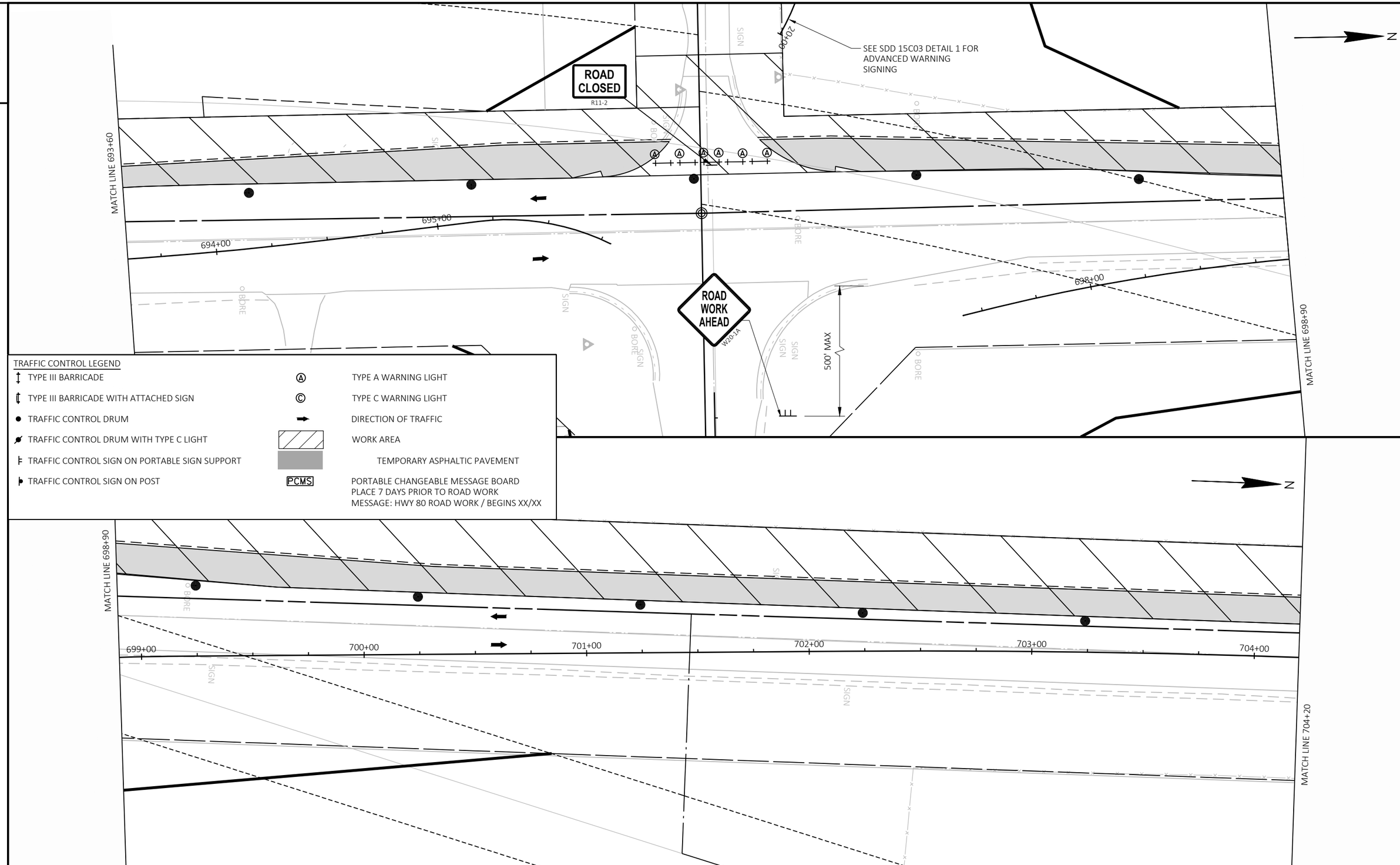

TRAFFIC CONTROL LEGEND

- TYPE III BARRICADE
- TYPE III BARRICADE WITH ATTACHED SIGN
- TRAFFIC CONTROL DRUM
- TRAFFIC CONTROL DRUM WITH TYPE C LIGHT
- TRAFFIC CONTROL SIGN ON PORTABLE SIGN SUPPORT
- TRAFFIC CONTROL SIGN ON POST
- (A) TYPE A WARNING LIGHT
- (C) TYPE C WARNING LIGHT
- DIRECTION OF TRAFFIC
- WORK AREA
- TEMPORARY ASPHALTIC PAVEMENT
- PCMS PORTABLE CHANGEABLE MESSAGE BOARD PLACE 7 DAYS PRIOR TO ROAD WORK MESSAGE: HWY 80 ROAD WORK / BEGINS XX/XX

PROJECT NO: 5235-03-70	HWY: STH 80	COUNTY: GRANT	TRAFFIC CONTROL - RAB - PRE STAGE 1	SHEET 84	E

FILE NAME : X:\PROJECTS\GRANT\200050MW - 5235-03-00 STH 80\DESIGN\C3D\SHEETSPLAN\025104-P1.DWG
LAYOUT NAME - 25104-p102
PLOT DATE : 6/29/2022 5:00 PM PLOT BY : MICHAEL LISKA PLOT NAME : PLOT SCALE : 1 IN:40 FT

2

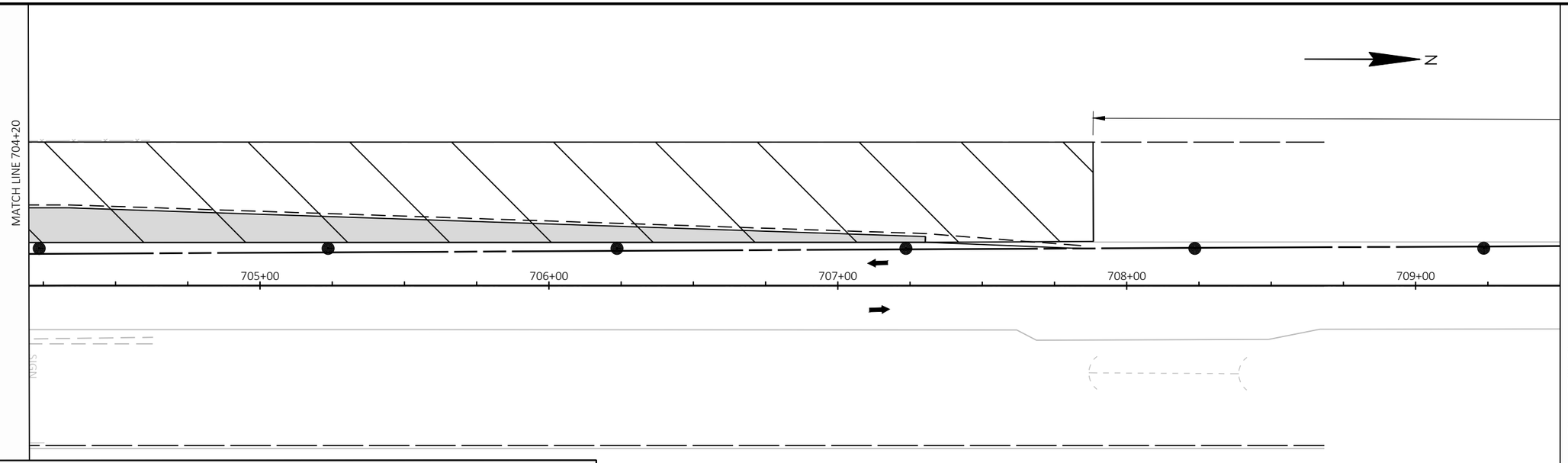

TRAFFIC CONTROL LEGEND

- TYPE III BARRICADE
- TYPE III BARRICADE WITH ATTACHED SIGN
- TRAFFIC CONTROL DRUM
- TRAFFIC CONTROL DRUM WITH TYPE C LIGHT
- TRAFFIC CONTROL SIGN ON PORTABLE SIGN SUPPORT
- TRAFFIC CONTROL SIGN ON POST
- Ⓐ TYPE A WARNING LIGHT
- Ⓒ TYPE C WARNING LIGHT
- DIRECTION OF TRAFFIC
- WORK AREA
- TEMPORARY ASPHALTIC PAVEMENT
- PCMS — PORTABLE CHANGEABLE MESSAGE BOARD PLACE 7 DAYS PRIOR TO ROAD WORK MESSAGE: HWY 80 ROAD WORK / BEGINS XX/XX

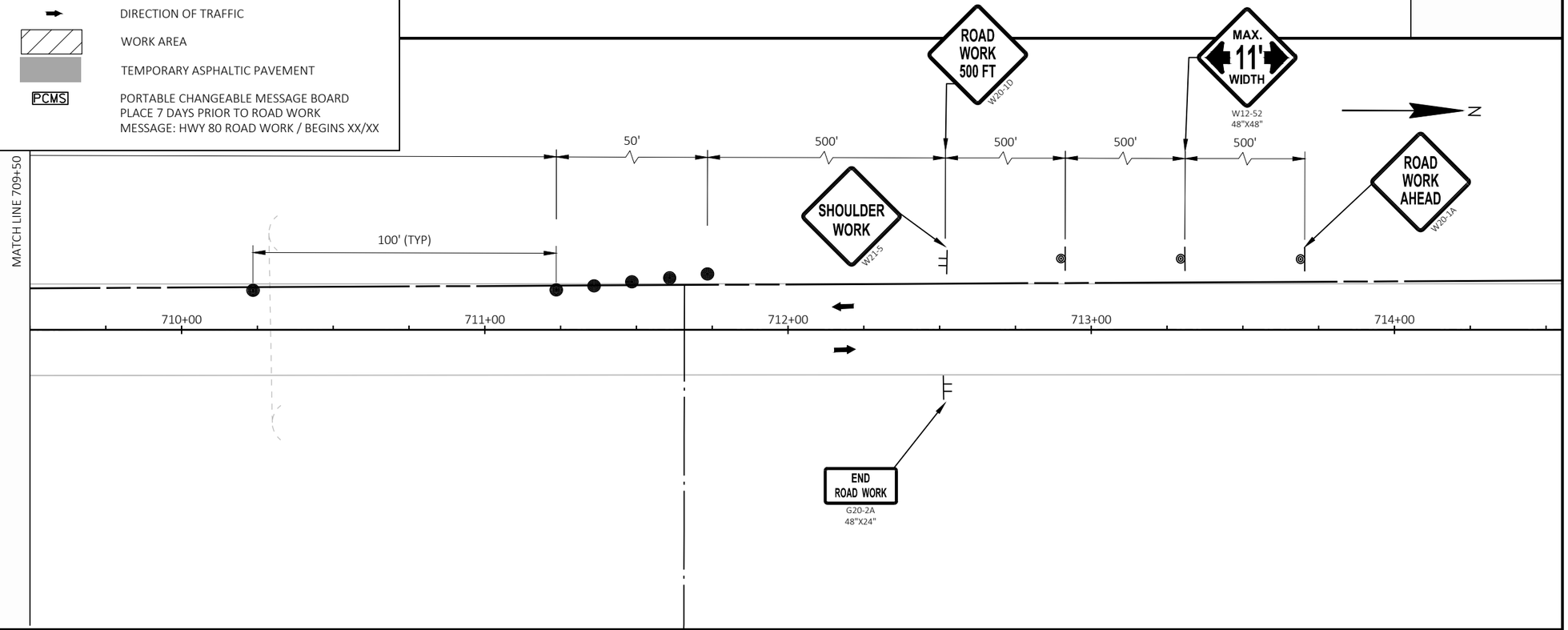

2

PROJECT NO: 5235-03-70	HWY: STH 80	COUNTY: GRANT	TRAFFIC CONTROL - RAB - PRE STAGE 1	SHEET 85	E

FILE NAME : X:\PROJECTS\GRANT\200050MW - 5235-03-00 STH 80\DESIGN\C3D\SHEETSPLAN\025104-P1.DWG
LAYOUT NAME - 25104-p103
PLOT DATE : 6/29/2022 5:00 PM
PLOT BY : MICHAEL LISKA
PLOT NAME :
PLOT SCALE : 1 IN:40 FT
WISDOT/CADDS SHEET 44

STAGE 1 OVERVIEW PAGE

WORK ZONE STAGE 1

N

685 690 695 705 710

15'PA'

20'PA'

30'PA'

BLDG

POST

TRAFFIC CONTROL TYPICAL SECTION - STH 80

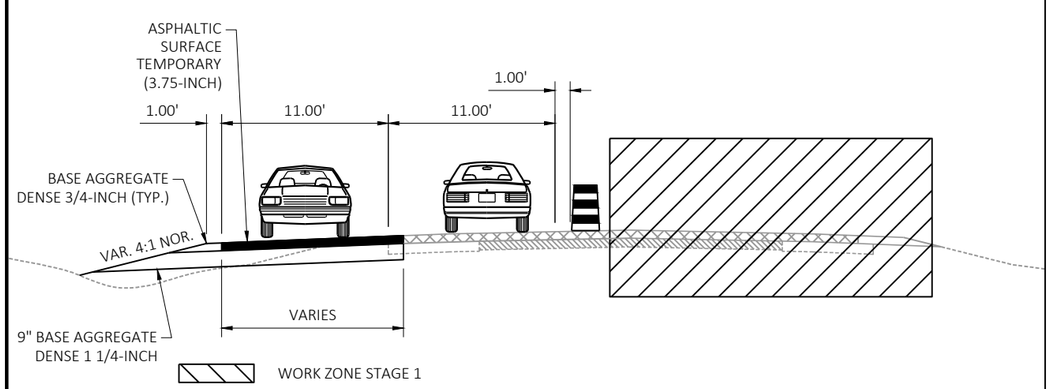

PROJECT NO: 5235-03-70	HWY: STH 80	COUNTY: GRANT	TRAFFIC CONTROL - RAB - STAGE 1	SHEET 86	E

FILE NAME : X:\PROJECTS\GRANT\200050MW - 5235-03-00 STH 80\DESIGN\C3D\SHEETSPLAN\025104-S1O.DWG
LAYOUT NAME - 025104-s1o
PLOT DATE : 7/7/2022 9:15 PM PLOT BY : MICHAEL LISKA PLOT NAME : PLOT SCALE : 1 IN:200 FT

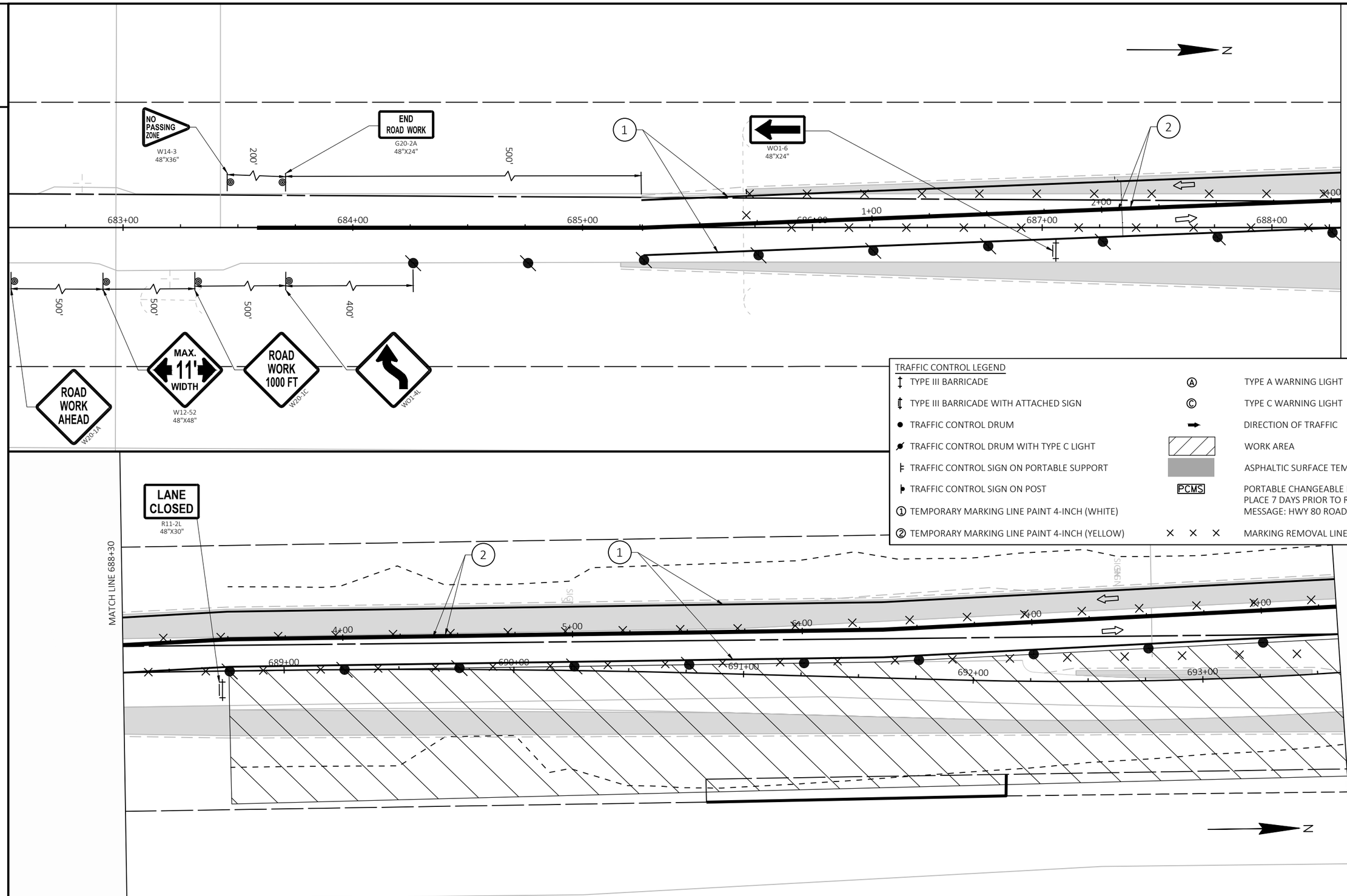

TRAFFIC CONTROL LEGEND

- TYPE III BARRICADE
- TYPE III BARRICADE WITH ATTACHED SIGN
- TRAFFIC CONTROL DRUM
- TRAFFIC CONTROL DRUM WITH TYPE C LIGHT
- TRAFFIC CONTROL SIGN ON PORTABLE SUPPORT
- TRAFFIC CONTROL SIGN ON POST
- (1) TEMPORARY MARKING LINE PAINT 4-INCH (WHITE)
- (2) TEMPORARY MARKING LINE PAINT 4-INCH (YELLOW)
- (A) TYPE A WARNING LIGHT
- (C) TYPE C WARNING LIGHT
- DIRECTION OF TRAFFIC
- WORK AREA
- ASPHALTIC SURFACE TEMPORARY
- PCMS — PORTABLE CHANGEABLE MESSAGE BOARD PLACE 7 DAYS PRIOR TO ROAD WORK MESSAGE: HWY 80 ROAD WORK / BEGINS XX/XX
- MARKING REMOVAL LINE

PROJECT NO: 5235-03-70	HWY: STH 80	COUNTY: GRANT	TRAFFIC CONTROL - RAB - STAGE 1	SHEET 87	E

FILE NAME : X:\PROJECTS\GRANT\200050MW - 5235-03-00 STH 80\DESIGN\C3D\SHEETSPLAN\025104-S1.DWG
LAYOUT NAME - S1- 1
PLOT DATE : 6/29/2022 5:04 PM
PLOT BY : MICHAEL LISKA
PLOT NAME :
PLOT SCALE : 1 IN:40 FT

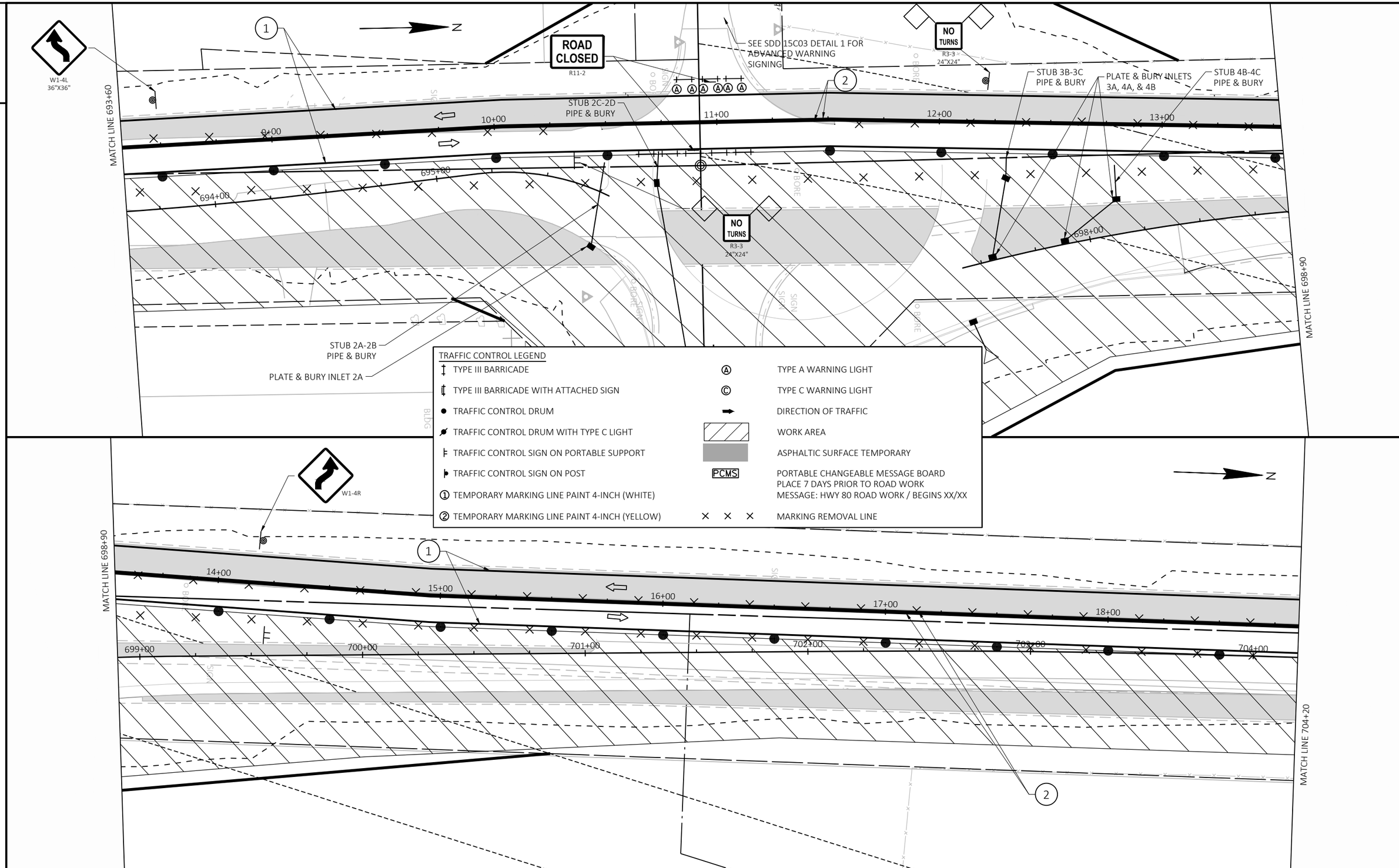

PROJECT NO: 5235-03-70	HWY: STH 80	COUNTY: GRANT	TRAFFIC CONTROL - RAB - STAGE 1	SHEET 88	E

FILE NAME : X:\PROJECTS\GRANT\200050MW - 5235-03-00 STH 80\DESIGN\C3D\SHEETSPLAN\025104-S1.DWG
LAYOUT NAME - S1-2
PLOT DATE : 6/29/2022 5:04 PM
PLOT BY : MICHAEL LISKA
PLOT NAME :
PLOT SCALE : 1 IN:40 FT

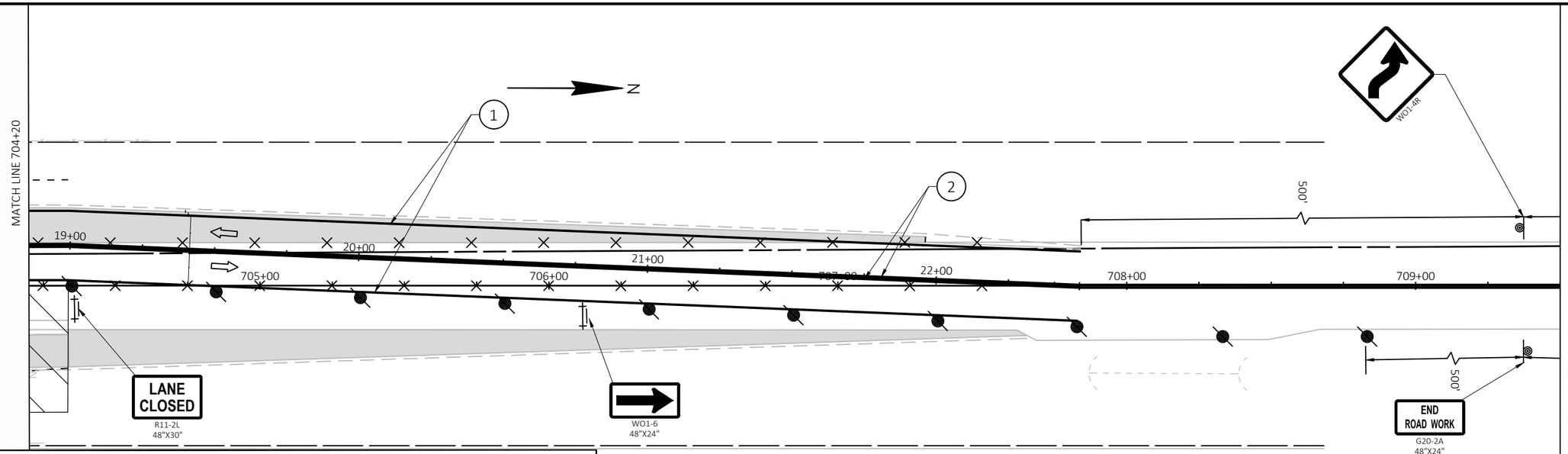

TRAFFIC CONTROL LEGEND

TYPE III BARRICADE	Ⓐ	TYPE A WARNING LIGHT
TYPE III BARRICADE WITH ATTACHED SIGN	Ⓒ	TYPE C WARNING LIGHT
TRAFFIC CONTROL DRUM	➡	DIRECTION OF TRAFFIC
TRAFFIC CONTROL DRUM WITH TYPE C LIGHT		WORK AREA
TRAFFIC CONTROL SIGN ON PORTABLE SUPPORT		ASPHALTIC SURFACE TEMPORARY
TRAFFIC CONTROL SIGN ON POST	PCMS	PORTABLE CHANGEABLE MESSAGE BOARD PLACE 7 DAYS PRIOR TO ROAD WORK MESSAGE: HWY 80 ROAD WORK / BEGINS XX/XX
① TEMPORARY MARKING LINE PAINT 4-INCH (WHITE)		
② TEMPORARY MARKING LINE PAINT 4-INCH (YELLOW)	× × ×	MARKING REMOVAL LINE

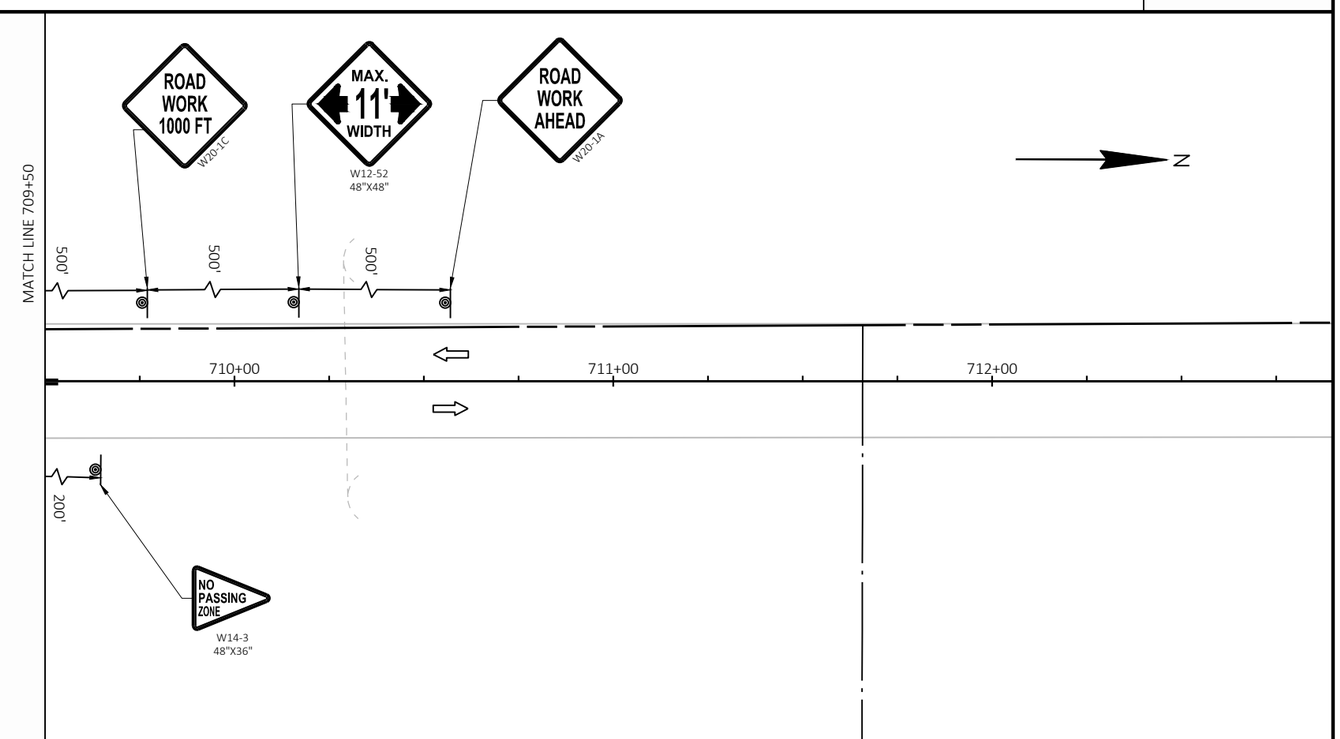

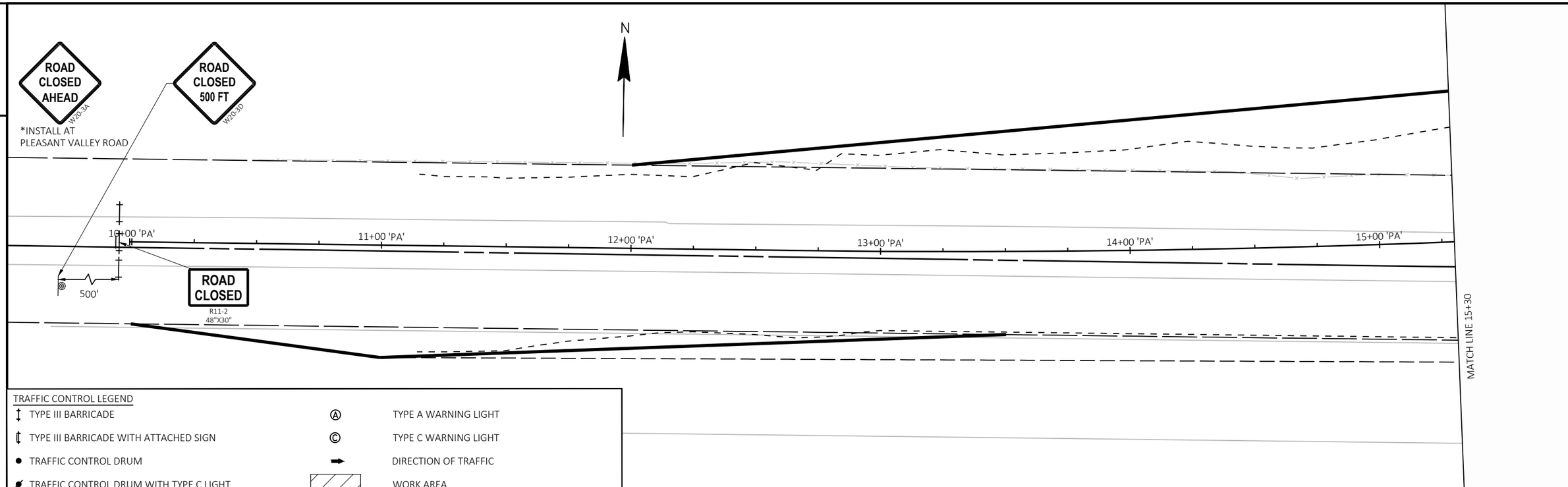

TRAFFIC CONTROL LEGEND

- TYPE III BARRICADE
- TYPE III BARRICADE WITH ATTACHED SIGN
- TRAFFIC CONTROL DRUM
- TRAFFIC CONTROL DRUM WITH TYPE C LIGHT
- TRAFFIC CONTROL SIGN ON PORTABLE SUPPORT
- TRAFFIC CONTROL SIGN ON POST
- ① TEMPORARY MARKING LINE PAINT 4-INCH (WHITE)
- ② TEMPORARY MARKING LINE PAINT 4-INCH (YELLOW)
- Ⓐ TYPE A WARNING LIGHT
- Ⓒ TYPE C WARNING LIGHT
- DIRECTION OF TRAFFIC
- WORK AREA
- ASPHALTIC SURFACE TEMPORARY
- PCMS — PORTABLE CHANGEABLE MESSAGE BOARD PLACE 7 DAYS PRIOR TO ROAD WORK MESSAGE: HWY 80 ROAD WORK / BEGINS XX/XX
- × × × MARKING REMOVAL LINE

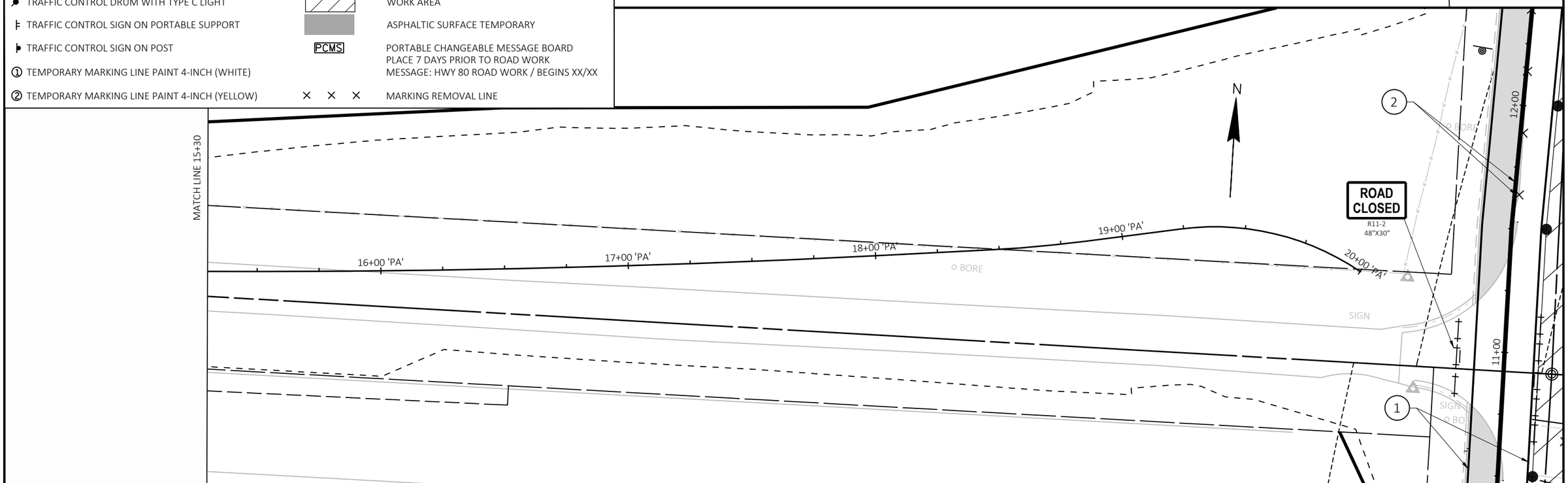

PROJECT NO: 5235-03-70	HWY: STH 80	COUNTY: GRANT	TRAFFIC CONTROL - RAB - STAGE 1	SHEET 90	E

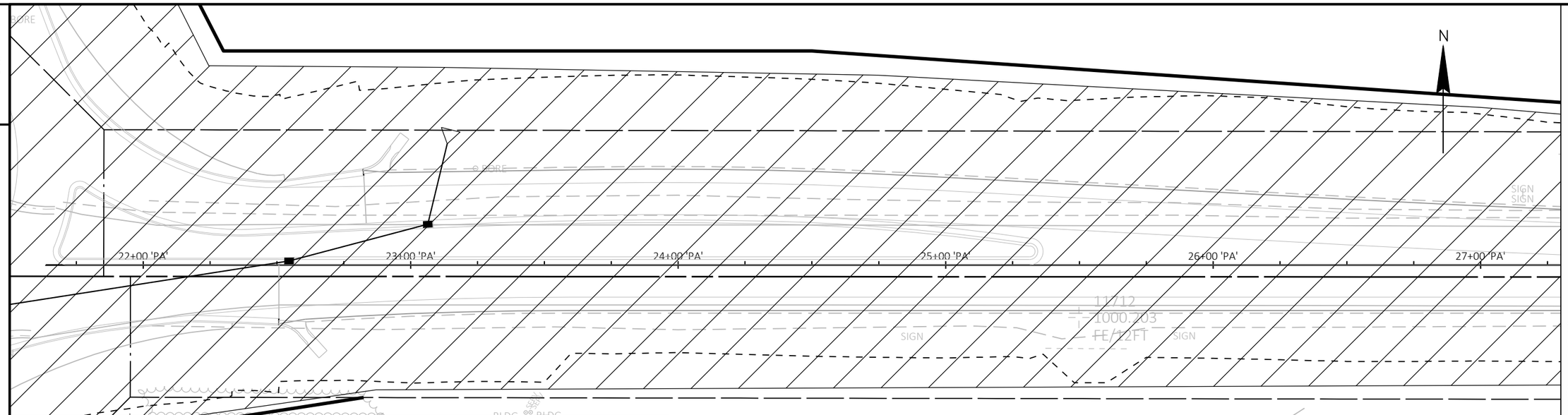

TRAFFIC CONTROL LEGEND

TYPE III BARRICADE	Ⓐ	TYPE A WARNING LIGHT
TYPE III BARRICADE WITH ATTACHED SIGN	Ⓒ	TYPE C WARNING LIGHT
TRAFFIC CONTROL DRUM	➡	DIRECTION OF TRAFFIC
TRAFFIC CONTROL DRUM WITH TYPE C LIGHT		WORK AREA
TRAFFIC CONTROL SIGN ON PORTABLE SUPPORT		ASPHALTIC SURFACE TEMPORARY
TRAFFIC CONTROL SIGN ON POST	PCMS	PORTABLE CHANGEABLE MESSAGE BOARD PLACE 7 DAYS PRIOR TO ROAD WORK MESSAGE: HWY 80 ROAD WORK / BEGINS XX/XX
① TEMPORARY MARKING LINE PAINT 4-INCH (WHITE)		
② TEMPORARY MARKING LINE PAINT 4-INCH (YELLOW)	× × ×	MARKING REMOVAL LINE

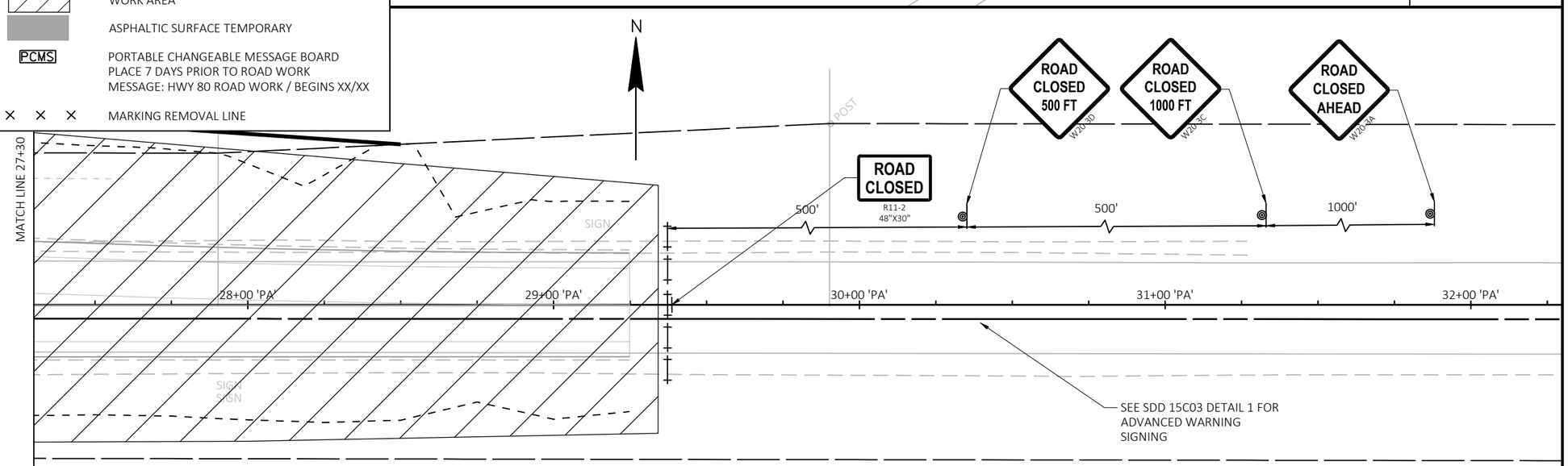

PROJECT NO: 5235-03-70	HWY: STH 80	COUNTY: GRANT	TRAFFIC CONTROL - RAB - STAGE 1	SHEET 91	E

2

STAGE 2 OVERVIEW PAGE

WORK ZONE STAGE 2

N

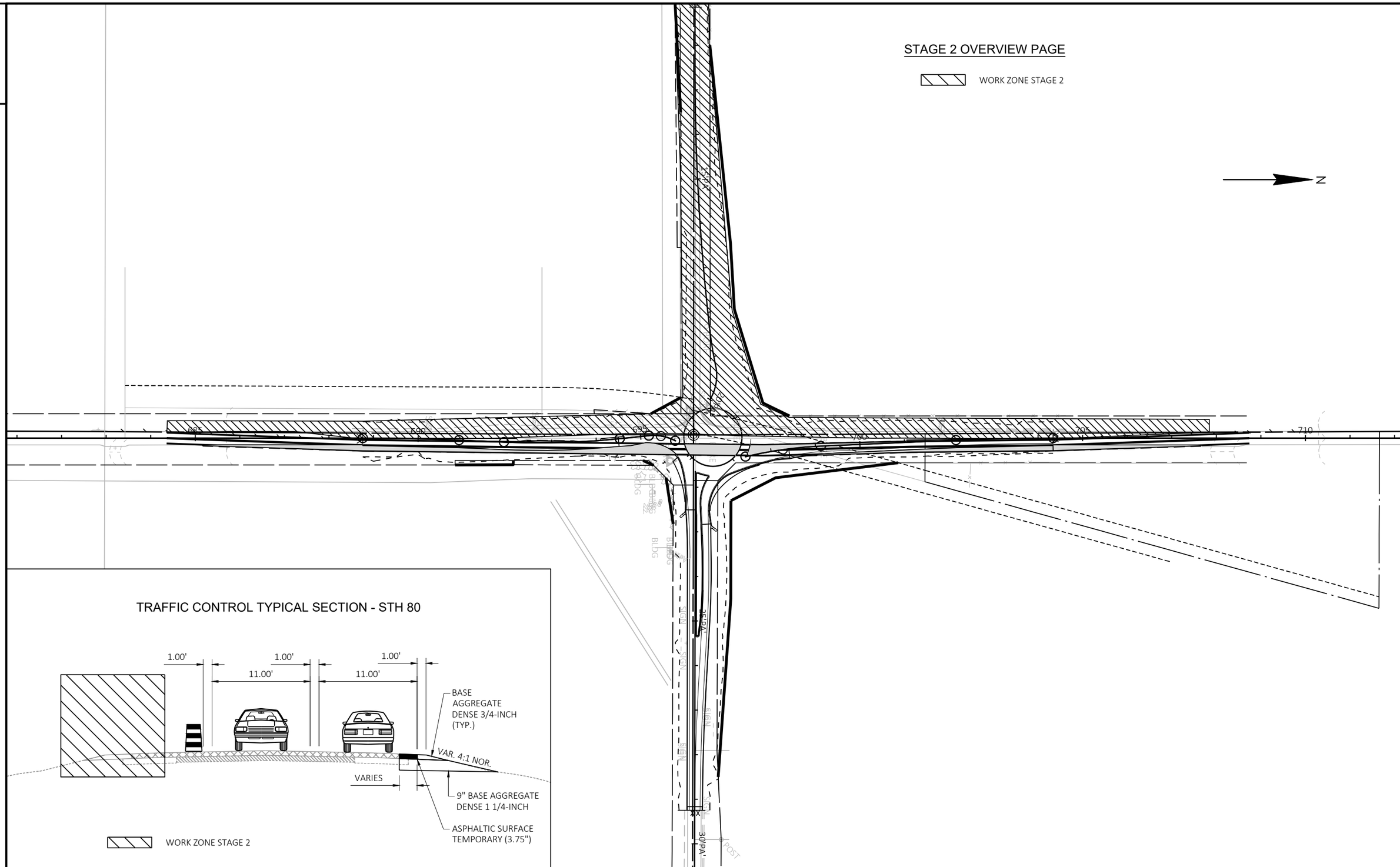

TRAFFIC CONTROL TYPICAL SECTION - STH 80

PROJECT NO: 5235-03-70	HWY: STH 80	COUNTY: GRANT	TRAFFIC CONTROL - RAB - STAGE 2	SHEET 92	E

FILE NAME : X:\PROJECTS\GRANT\200050MW - 5235-03-00 STH 80\DESIGN\C3D\SHEETSPLAN\025104-S2O.DWG
LAYOUT NAME - 025104-s2o
PLOT DATE : 6/29/2022 5:06 PM PLOT BY : MICHAEL LISKA PLOT NAME : PLOT SCALE : 1 IN:200 FT

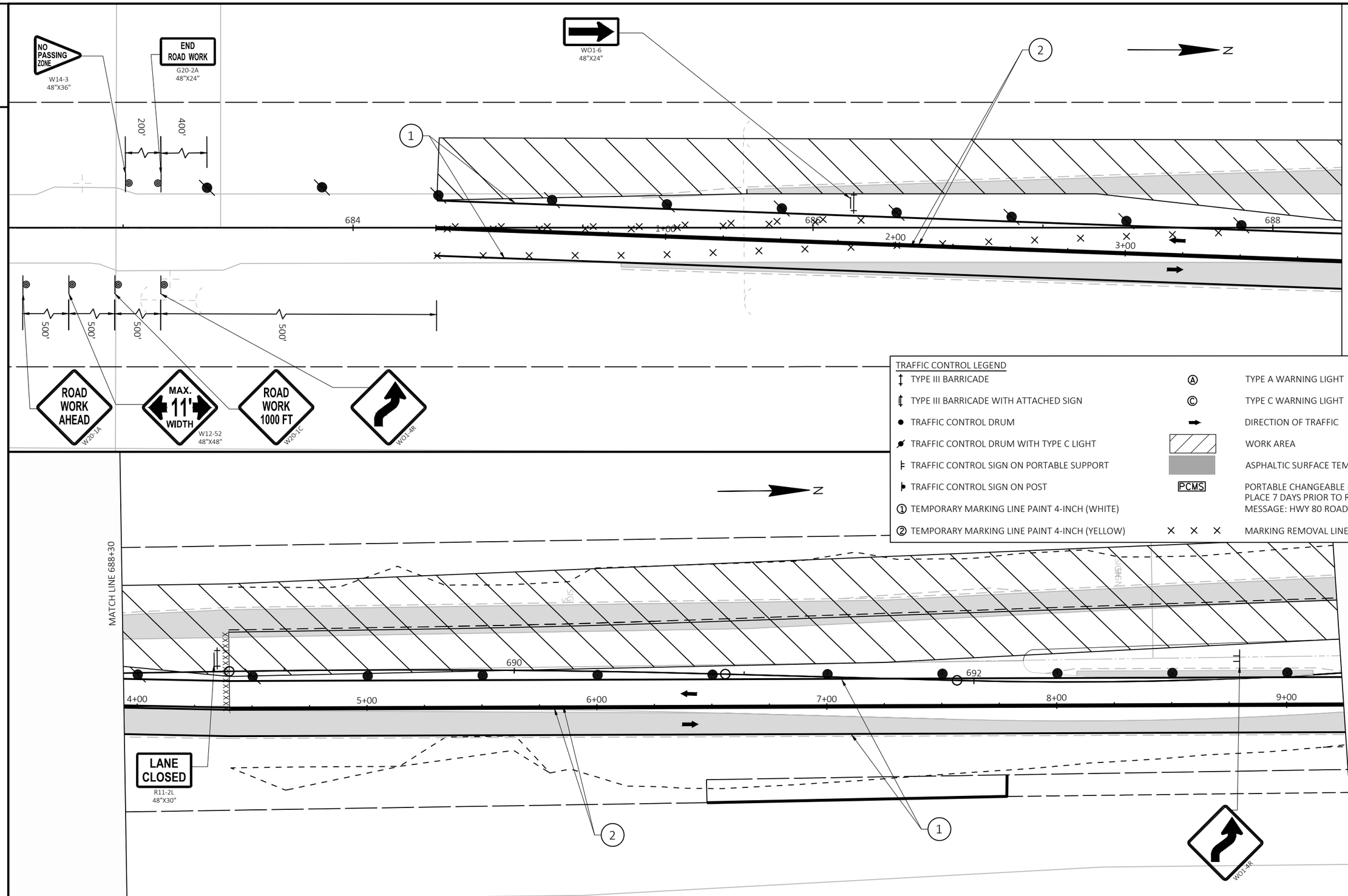

TRAFFIC CONTROL LEGEND

- TYPE III BARRICADE
- TYPE III BARRICADE WITH ATTACHED SIGN
- TRAFFIC CONTROL DRUM
- TRAFFIC CONTROL DRUM WITH TYPE C LIGHT
- TRAFFIC CONTROL SIGN ON PORTABLE SUPPORT
- TRAFFIC CONTROL SIGN ON POST
- ① TEMPORARY MARKING LINE PAINT 4-INCH (WHITE)
- ② TEMPORARY MARKING LINE PAINT 4-INCH (YELLOW)
- Ⓐ TYPE A WARNING LIGHT
- Ⓒ TYPE C WARNING LIGHT
- DIRECTION OF TRAFFIC
- WORK AREA
- ASPHALTIC SURFACE TEMPORARY
- PCMS — PORTABLE CHANGEABLE MESSAGE BOARD PLACE 7 DAYS PRIOR TO ROAD WORK MESSAGE: HWY 80 ROAD WORK / BEGINS XX/XX
- MARKING REMOVAL LINE

PROJECT NO: 5235-03-70	HWY: STH 80	COUNTY: GRANT	TRAFFIC CONTROL - RAB - STAGE 2	SHEET 93	E

FILE NAME : X:\PROJECTS\GRANT\200050MW - 5235-03-00 STH 80\DESIGN\C3D\SHEETSPLAN\025104-S2.DWG
LAYOUT NAME - S2 - 1
PLOT DATE : 6/29/2022 5:08 PM PLOT BY : MICHAEL LISKA PLOT NAME : PLOT SCALE : 1 IN:40 FT

WISDOT/CADDS SHEET 44

2

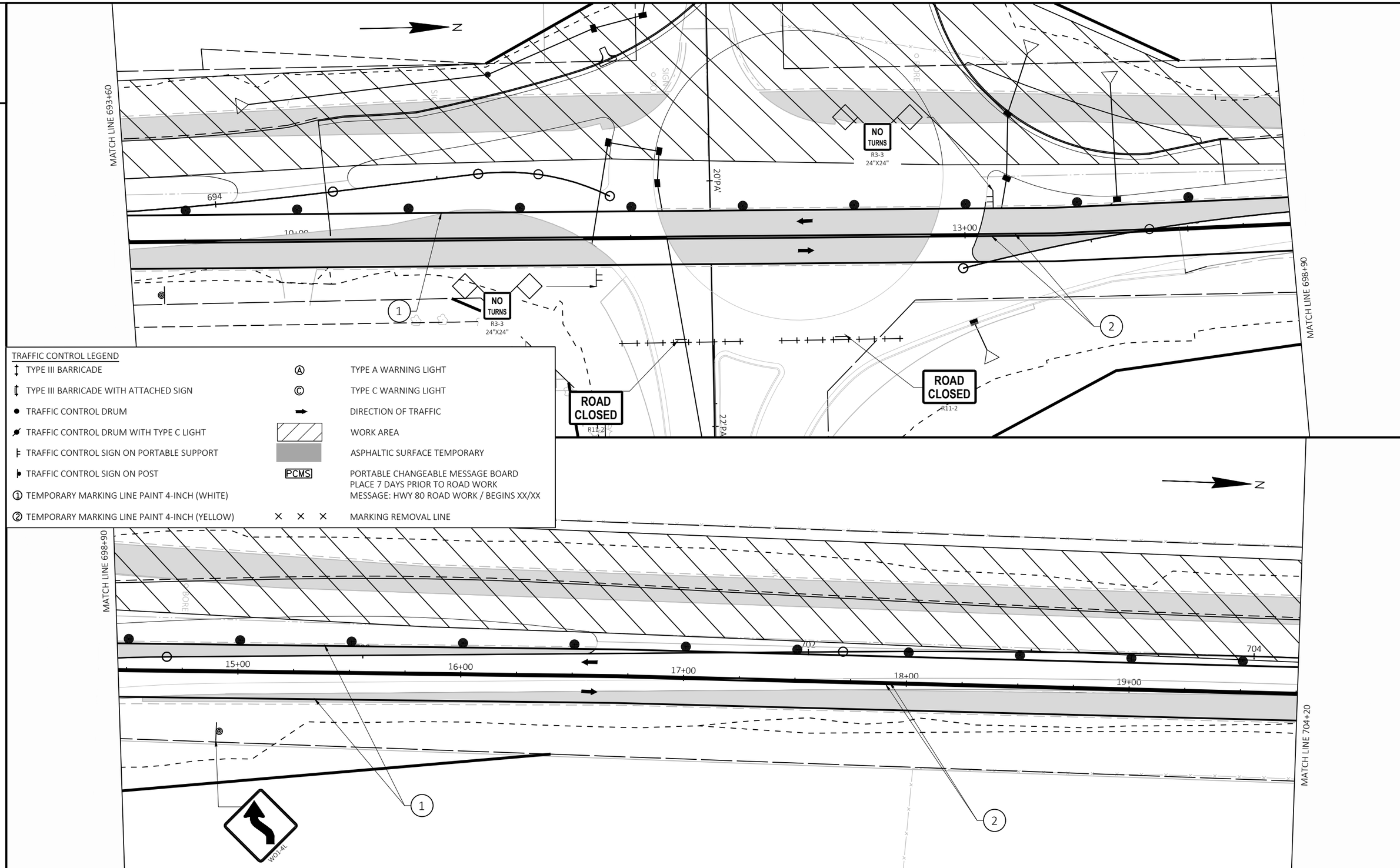

TRAFFIC CONTROL LEGEND

- TYPE III BARRICADE
- TYPE III BARRICADE WITH ATTACHED SIGN
- TRAFFIC CONTROL DRUM
- TRAFFIC CONTROL DRUM WITH TYPE C LIGHT
- TRAFFIC CONTROL SIGN ON PORTABLE SUPPORT
- TRAFFIC CONTROL SIGN ON POST
- ① TEMPORARY MARKING LINE PAINT 4-INCH (WHITE)
- ② TEMPORARY MARKING LINE PAINT 4-INCH (YELLOW)
- Ⓐ TYPE A WARNING LIGHT
- Ⓒ TYPE C WARNING LIGHT
- DIRECTION OF TRAFFIC
- WORK AREA
- ASPHALTIC SURFACE TEMPORARY
- PCMS — PORTABLE CHANGEABLE MESSAGE BOARD PLACE 7 DAYS PRIOR TO ROAD WORK MESSAGE: HWY 80 ROAD WORK / BEGINS XX/XX
- × × × MARKING REMOVAL LINE

2

PROJECT NO: 5235-03-70	HWY: STH 80	COUNTY: GRANT	TRAFFIC CONTROL - RAB - STAGE 2	SHEET 94	E

FILE NAME : X:\PROJECTS\GRANT\200050MW - 5235-03-00 STH 80\DESIGN\C3D\SHEETSPLAN\025104-S2.DWG
LAYOUT NAME - S2 - 2
PLOT DATE : 6/29/2022 5:08 PM PLOT BY : MICHAEL LISKA PLOT NAME : PLOT SCALE : 1 IN:40 FT

2

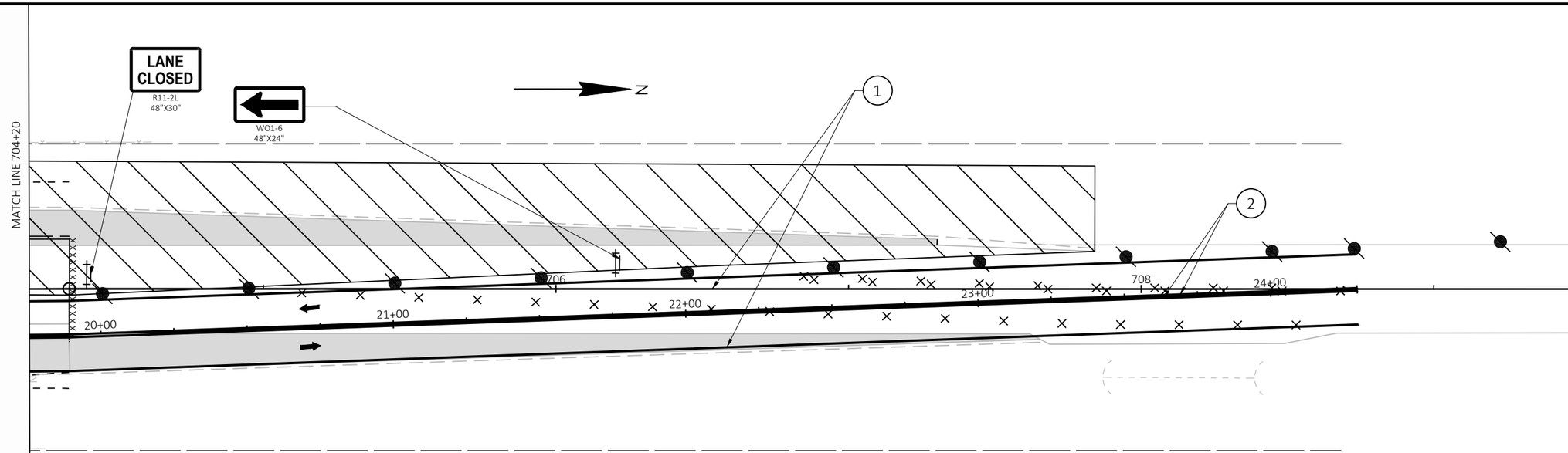

2

TRAFFIC CONTROL LEGEND

- TYPE III BARRICADE
- TYPE III BARRICADE WITH ATTACHED SIGN
- TRAFFIC CONTROL DRUM
- TRAFFIC CONTROL DRUM WITH TYPE C LIGHT
- TRAFFIC CONTROL SIGN ON PORTABLE SUPPORT
- TRAFFIC CONTROL SIGN ON POST
- ① TEMPORARY MARKING LINE PAINT 4-INCH (WHITE)
- ② TEMPORARY MARKING LINE PAINT 4-INCH (YELLOW)
- Ⓐ TYPE A WARNING LIGHT
- Ⓒ TYPE C WARNING LIGHT
- DIRECTION OF TRAFFIC
- WORK AREA
- ASPHALTIC SURFACE TEMPORARY
- PCMS — PORTABLE CHANGEABLE MESSAGE BOARD PLACE 7 DAYS PRIOR TO ROAD WORK MESSAGE: HWY 80 ROAD WORK / BEGINS XX/XX
- × × × MARKING REMOVAL LINE

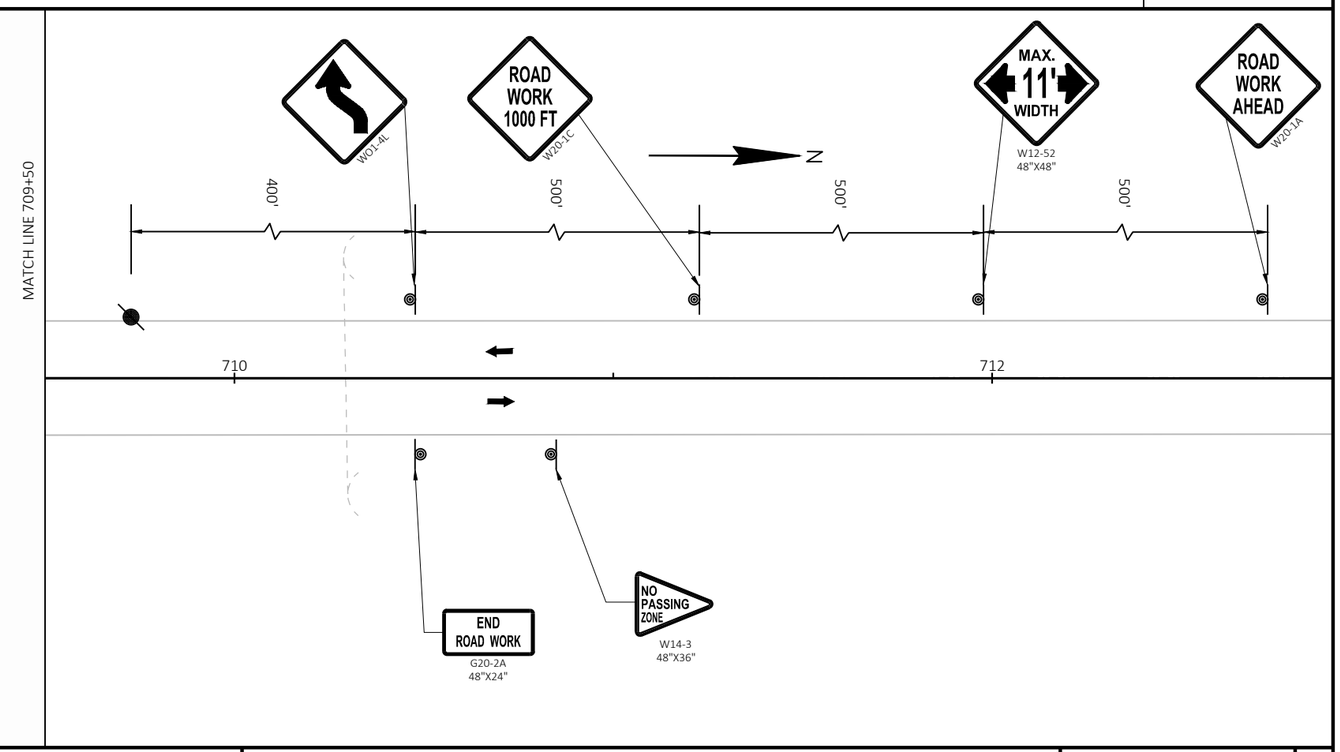

PROJECT NO: 5235-03-70	HWY: STH 80	COUNTY: GRANT	TRAFFIC CONTROL - RAB - STAGE 2	SHEET 95	E

2

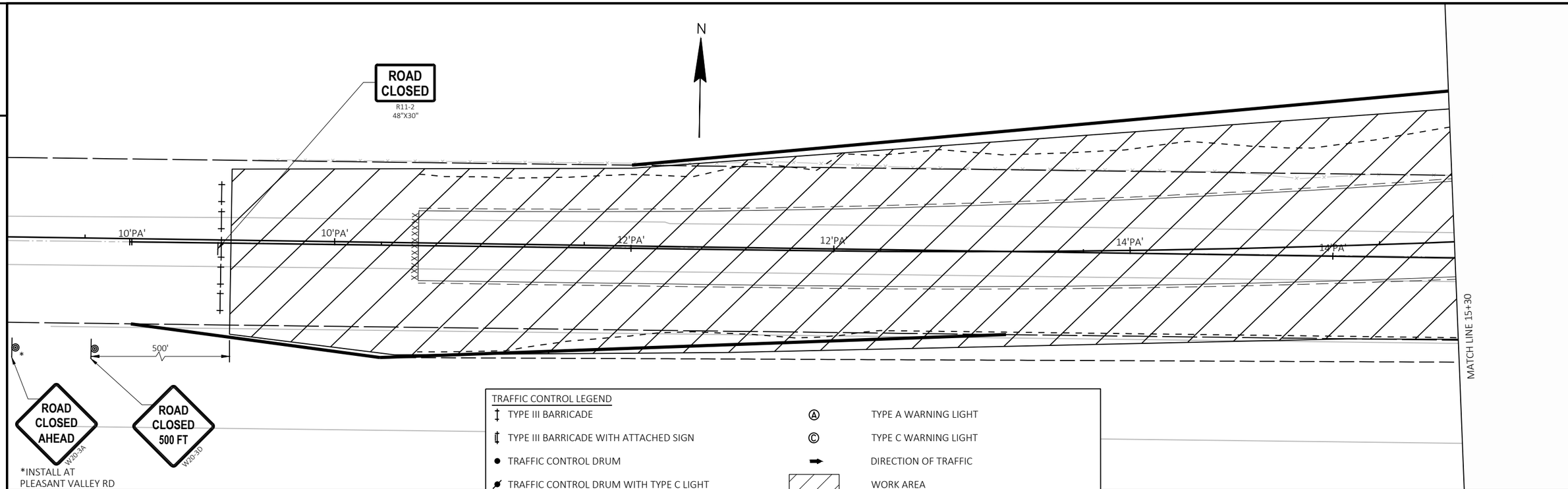

TRAFFIC CONTROL LEGEND

- TYPE III BARRICADE
- TYPE III BARRICADE WITH ATTACHED SIGN
- TRAFFIC CONTROL DRUM
- TRAFFIC CONTROL DRUM WITH TYPE C LIGHT
- TRAFFIC CONTROL SIGN ON PORTABLE SUPPORT
- TRAFFIC CONTROL SIGN ON POST
- ① TEMPORARY MARKING LINE PAINT 4-INCH (WHITE)
- ② TEMPORARY MARKING LINE PAINT 4-INCH (YELLOW)
- Ⓐ TYPE A WARNING LIGHT
- Ⓒ TYPE C WARNING LIGHT
- DIRECTION OF TRAFFIC
- WORK AREA
- ASPHALTIC SURFACE TEMPORARY
- PCMS — PORTABLE CHANGEABLE MESSAGE BOARD PLACE 7 DAYS PRIOR TO ROAD WORK MESSAGE: HWY 80 ROAD WORK / BEGINS XX/XX
- × × × MARKING REMOVAL LINE

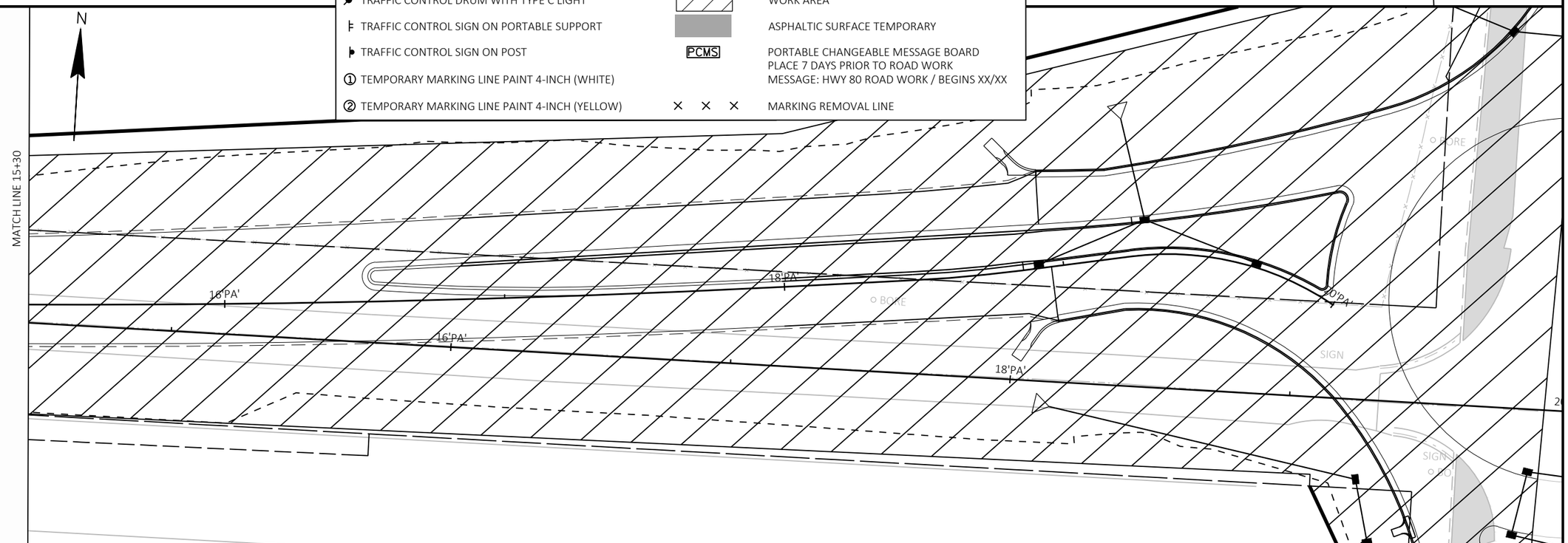

PROJECT NO: 5235-03-70	HWY: STH 80	COUNTY: GRANT	TRAFFIC CONTROL - RAB - STAGE 2	SHEET 96	E

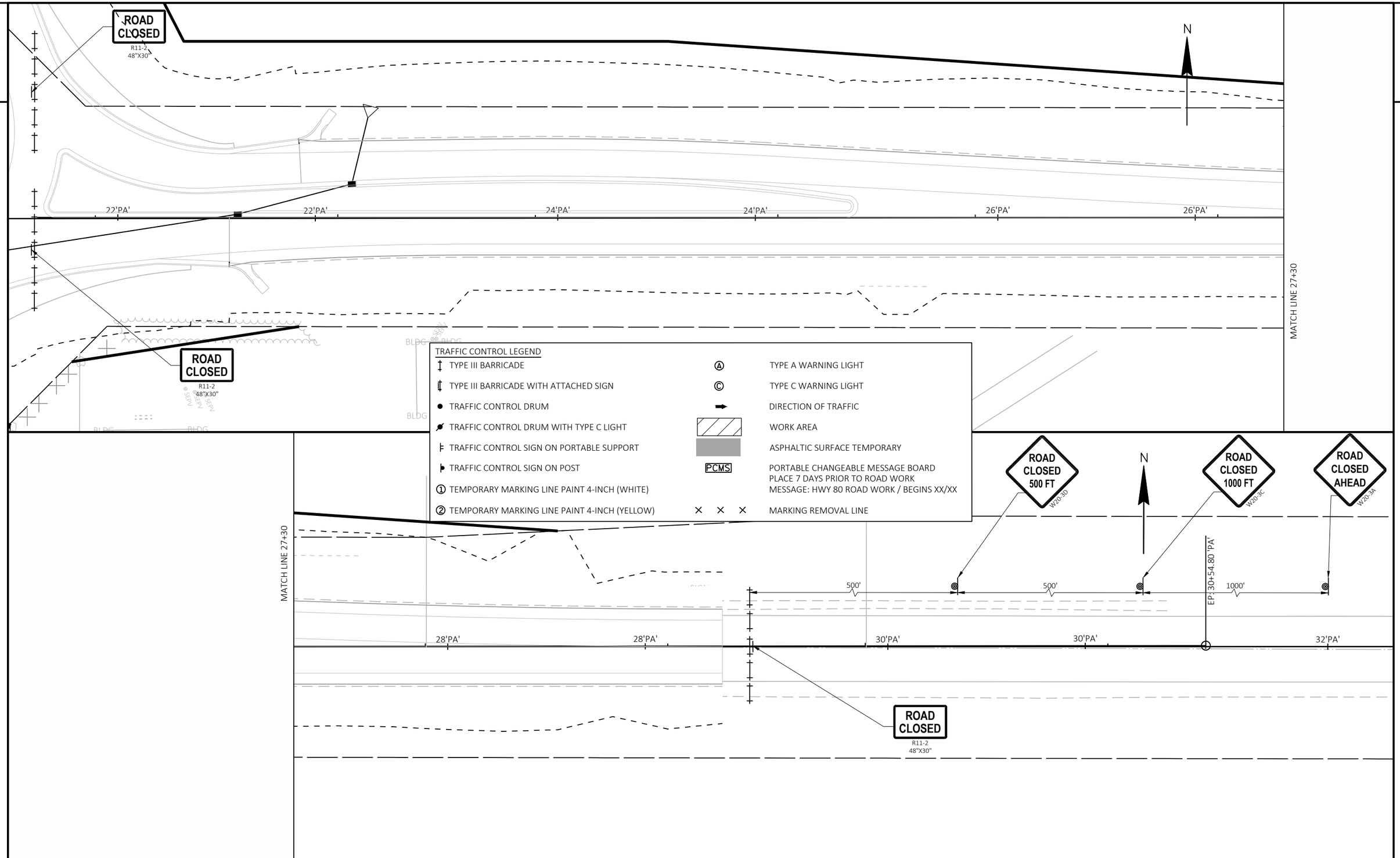

PROJECT NO: 5235-03-70	HWY: STH 80	COUNTY: GRANT	TRAFFIC CONTROL - RAB - STAGE 2	SHEET 97	E

FILE NAME : X:\PROJECTS\GRANT\200050MW - 5235-03-00 STH 80\DESIGN\C3D\SHEETSPLAN\025104-S2.DWG
LAYOUT NAME - S2 - 5
PLOT DATE : 6/29/2022 5:09 PM PLOT BY : MICHAEL LISKA PLOT NAME : PLOT SCALE : 1 IN:40 FT
WISDOT/CADDS SHEET 44

STAGE 3 OVERVIEW PAGE

WORK ZONE STAGE 3

GENERAL NOTES: ALL PERMANENT SIGNING THAT DOES NOT CONFLICT WITH STAGE 3 WORK MUST BE IN PLACE PRIOR TO OPENING ROUNDABOUT TRAFFIC CONFIGURATION. LIGHTING MUST ALSO BE OPERATIONAL.

WORK ON MEDIAN AND ROUNDABOUT ISLANDS SHALL NOT OCCUR AT THE SAME TIME AS OUTSIDE SHOULDER. DRUMS NOT IN USE MUST BE PULLED BACK AND NOT LIMIT TRAVEL WAY WIDTH. REMOVE ADVANCED WARNING WIDTH RESTRICTIONS SIGNAGE.

PLACE PCMS 500' AHEAD OF ADVANCE WARNING.

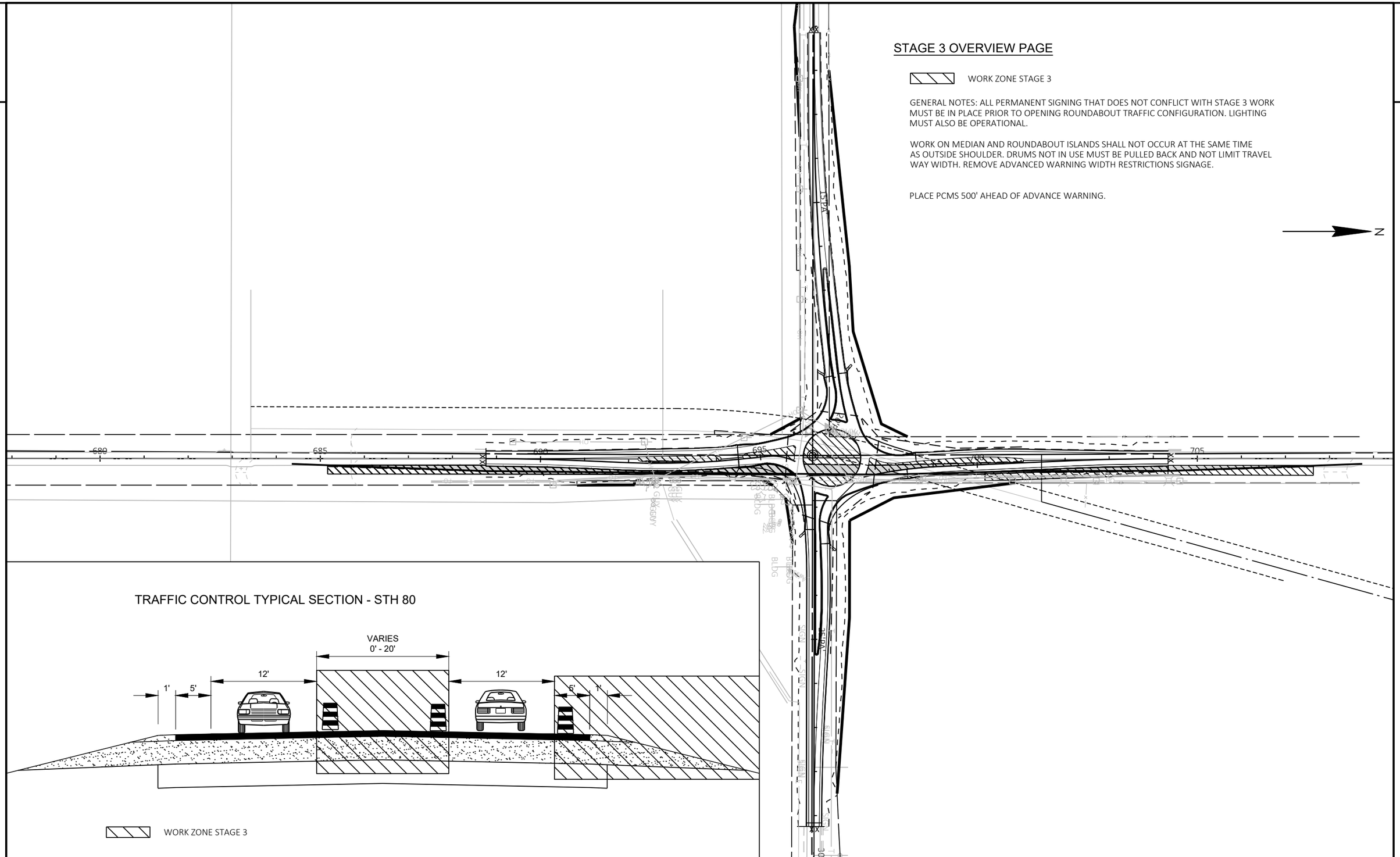

PROJECT NO: 5235-03-70	HWY: STH 80	COUNTY: GRANT	TRAFFIC CONTROL - RAB - STAGE 3	SHEET 98	E

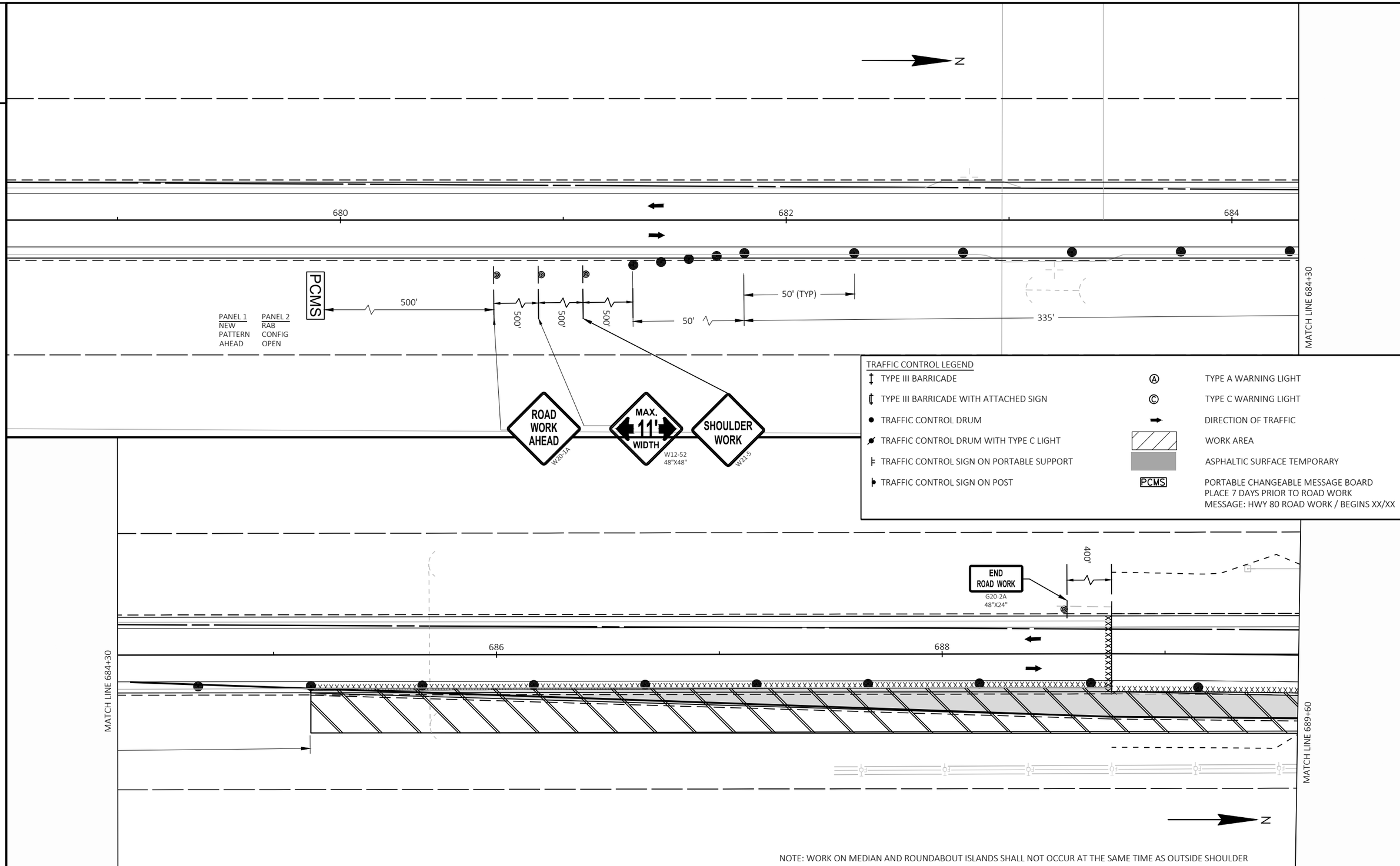

NOTE: WORK ON MEDIAN AND ROUNDABOUT ISLANDS SHALL NOT OCCUR AT THE SAME TIME AS OUTSIDE SHOULDER

PROJECT NO: 5235-03-70	HWY: STH 80	COUNTY: GRANT	TRAFFIC CONTROL - RAB - STAGE 3	SHEET 99	E

FILE NAME : X:\PROJECTS\GRANT\200050MW - 5235-03-00 STH 80\DESIGN\C3D\SHEETSPLAN\025104-S3.DWG
LAYOUT NAME - S3 - 1
PLOT DATE : 6/29/2022 5:14 PM PLOT BY : MICHAEL LISKA PLOT NAME : PLOT SCALE : 1 IN:40 FT

2

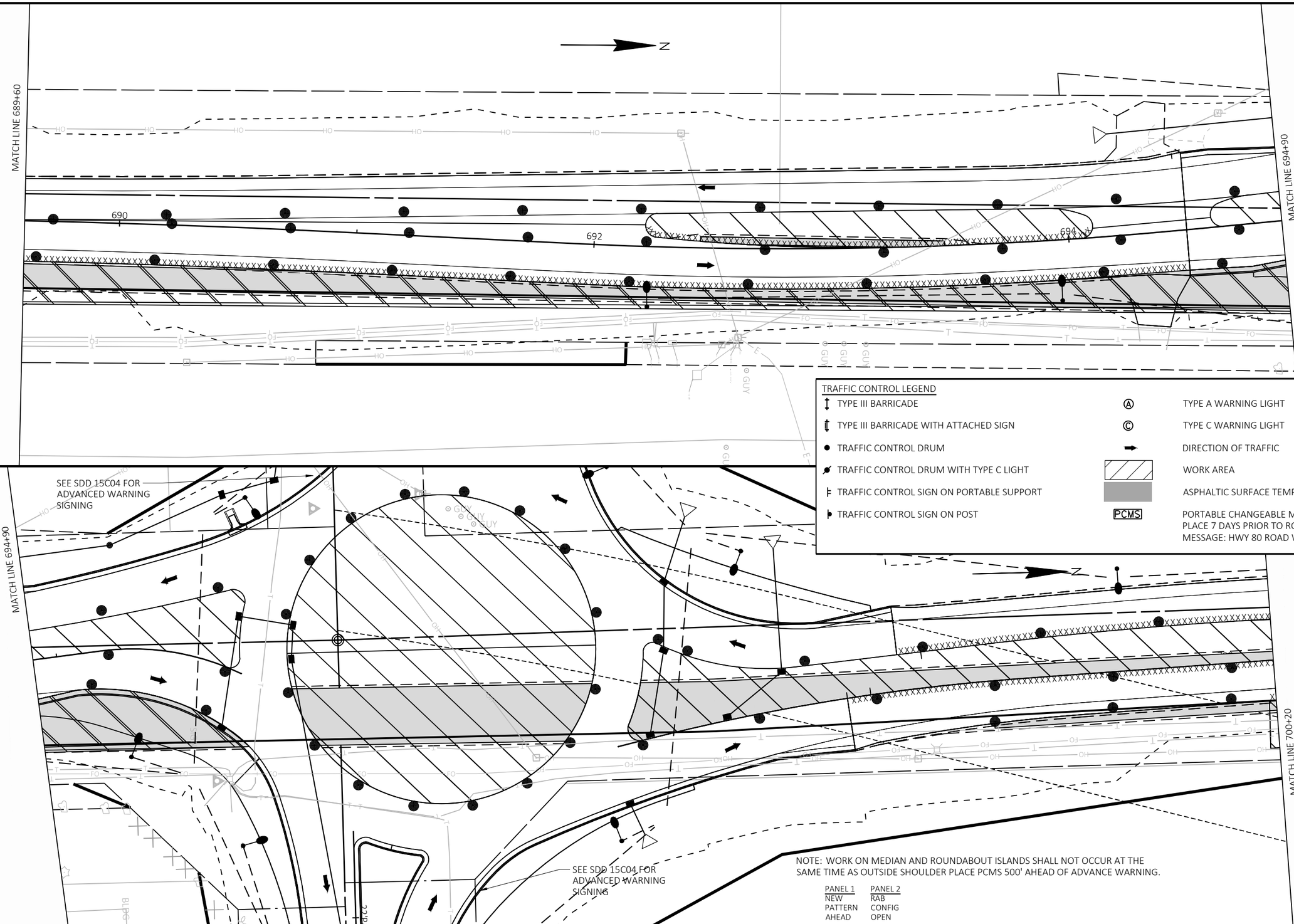

TRAFFIC CONTROL LEGEND

- TYPE III BARRICADE
- TYPE III BARRICADE WITH ATTACHED SIGN
- TRAFFIC CONTROL DRUM
- TRAFFIC CONTROL DRUM WITH TYPE C LIGHT
- TRAFFIC CONTROL SIGN ON PORTABLE SUPPORT
- TRAFFIC CONTROL SIGN ON POST
- Ⓐ TYPE A WARNING LIGHT
- Ⓒ TYPE C WARNING LIGHT
- DIRECTION OF TRAFFIC
- WORK AREA
- ASPHALTIC SURFACE TEMPORARY
- PCMS PORTABLE CHANGEABLE MESSAGE BOARD PLACE 7 DAYS PRIOR TO ROAD WORK MESSAGE: HWY 80 ROAD WORK / BEGINS XX/XX

NOTE: WORK ON MEDIAN AND ROUNDABOUT ISLANDS SHALL NOT OCCUR AT THE SAME TIME AS OUTSIDE SHOULDER PLACE PCMS 500' AHEAD OF ADVANCE WARNING.

PANEL 1	PANEL 2
NEW	RAB
PATTERN	CONFIG
AHEAD	OPEN

PROJECT NO: 5235-03-70	HWY: STH 80	COUNTY: GRANT	TRAFFIC CONTROL - RAB - STAGE 3	SHEET 100	E

2

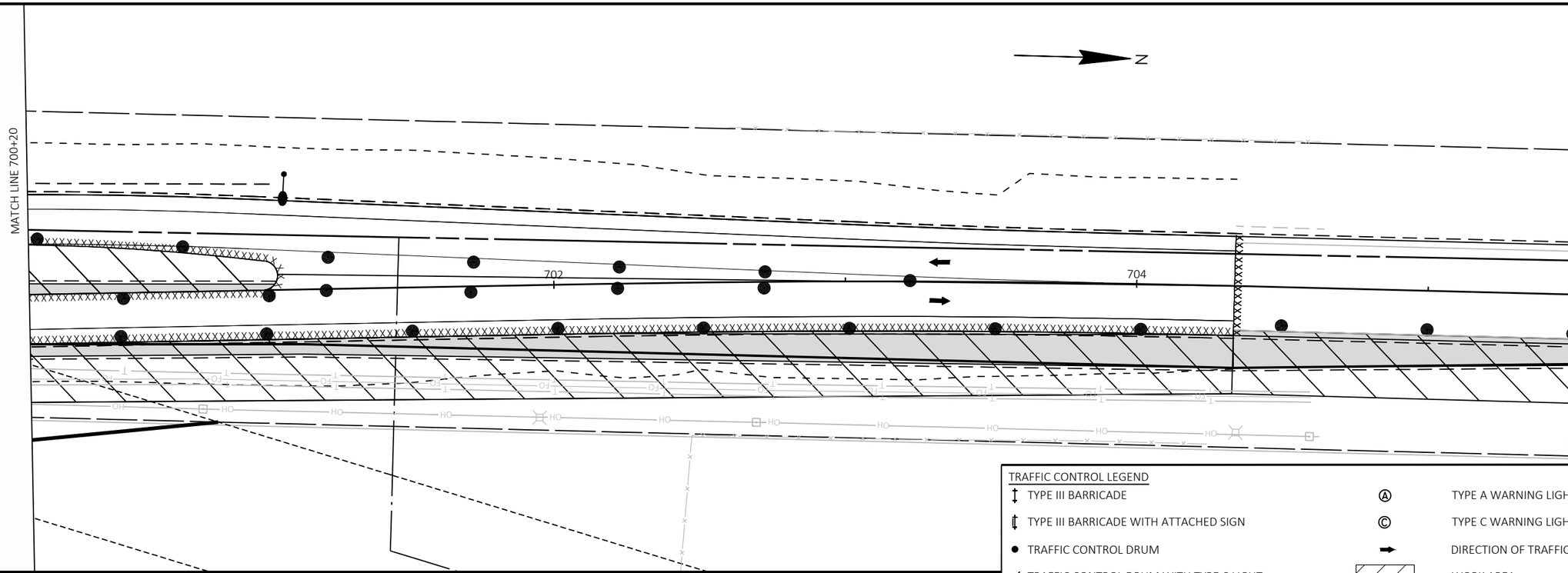

TRAFFIC CONTROL LEGEND

- TYPE III BARRICADE
- TYPE III BARRICADE WITH ATTACHED SIGN
- TRAFFIC CONTROL DRUM
- TRAFFIC CONTROL DRUM WITH TYPE C LIGHT
- TRAFFIC CONTROL SIGN ON PORTABLE SUPPORT
- TRAFFIC CONTROL SIGN ON POST
- Ⓐ TYPE A WARNING LIGHT
- Ⓒ TYPE C WARNING LIGHT
- DIRECTION OF TRAFFIC
- WORK AREA
- ASPHALTIC SURFACE TEMPORARY
- PCMS PORTABLE CHANGEABLE MESSAGE BOARD PLACE 7 DAYS PRIOR TO ROAD WORK MESSAGE: HWY 80 ROAD WORK / BEGINS XX/XX

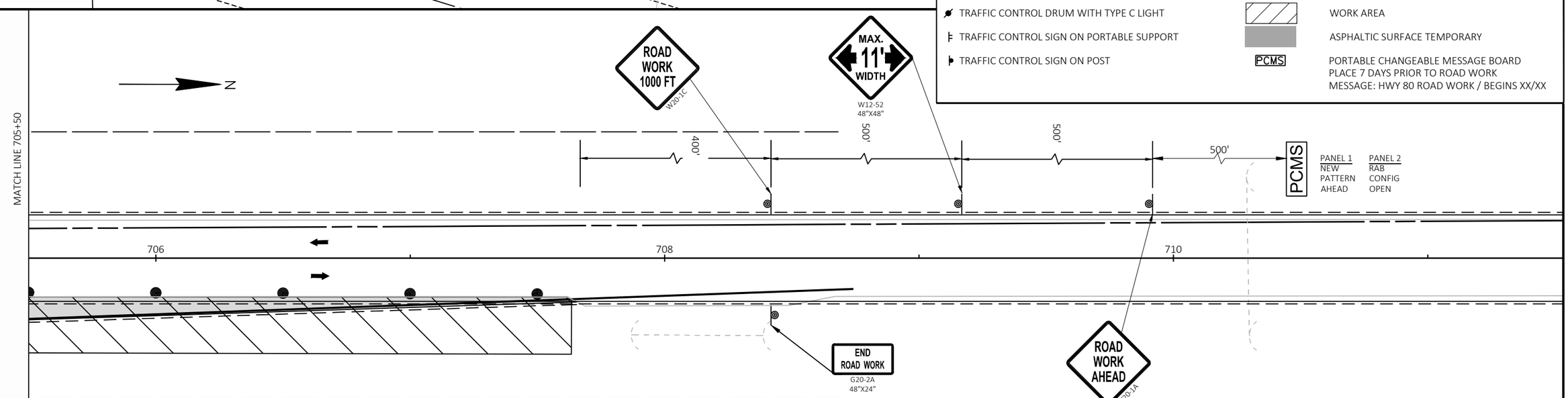

NOTE: WORK ON MEDIAN AND ROUNDABOUT ISLANDS SHALL NOT OCCUR AT THE SAME TIME AS OUTSIDE SHOULDER

PROJECT NO: 5235-03-70	HWY: STH 80	COUNTY: GRANT	TRAFFIC CONTROL - RAB - STAGE 3	SHEET 101	E

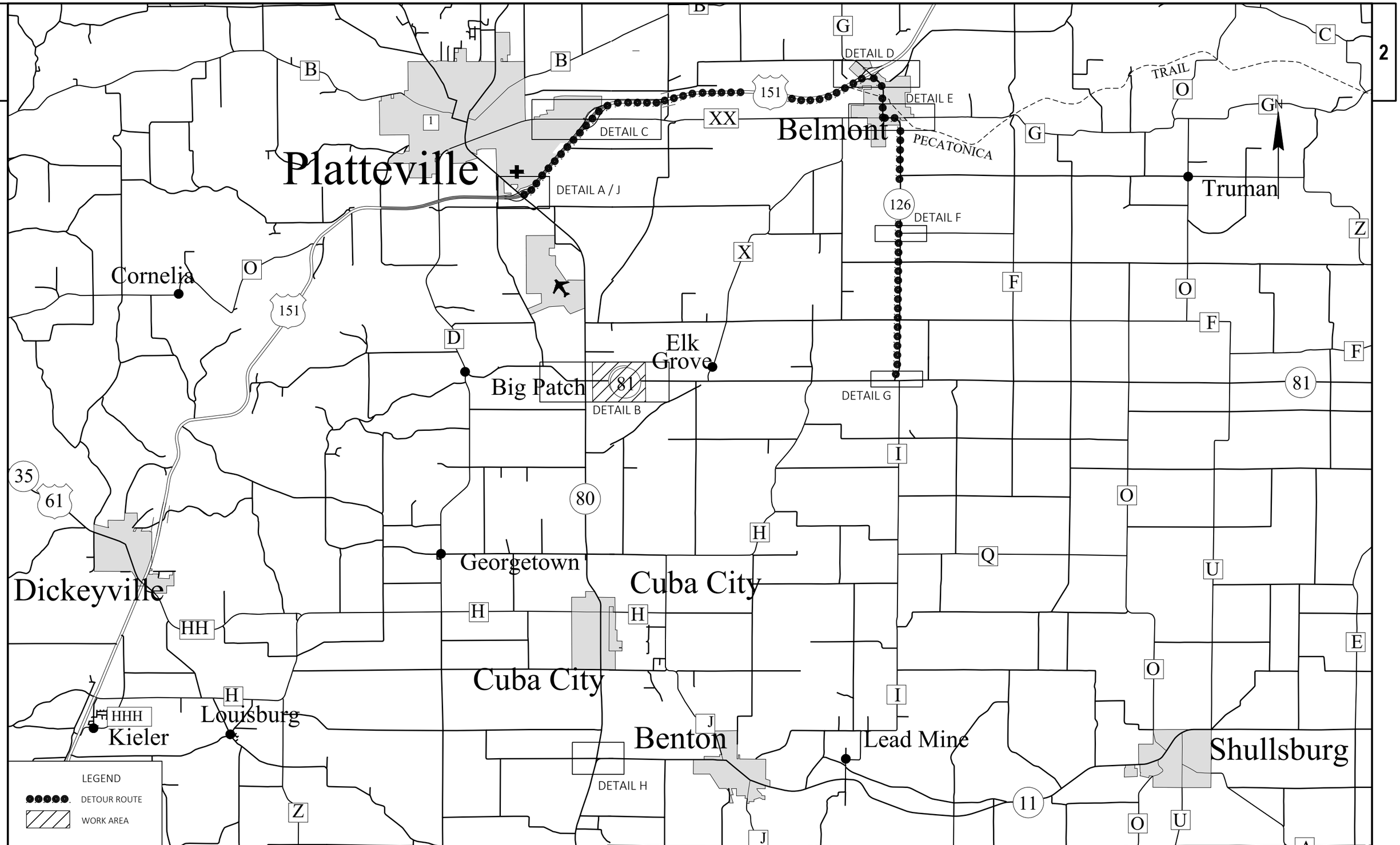

PROJECT NO: 5235-03-70	HWY: STH 80	COUNTY: GRANT	DETOUR - STH 81 CLOSURE & STH 80/81 WIDTH RESTRICTION- OVERVIEW	SHEET 102	E

FILE NAME : X:\PROJECTS\GRANT\200050MW - 5235-03-00 STH 80\DESIGN\C3D\SHEETSPLAN\027011-DT_DETAILS.DWG
LAYOUT NAME - 027005-dt
PLOT DATE : 6/29/2022 5:15 PM PLOT BY : MICHAEL LISKA PLOT NAME : PLOT SCALE : 1 IN: 1.5 MI
WISDOT/CADDS SHEET 42

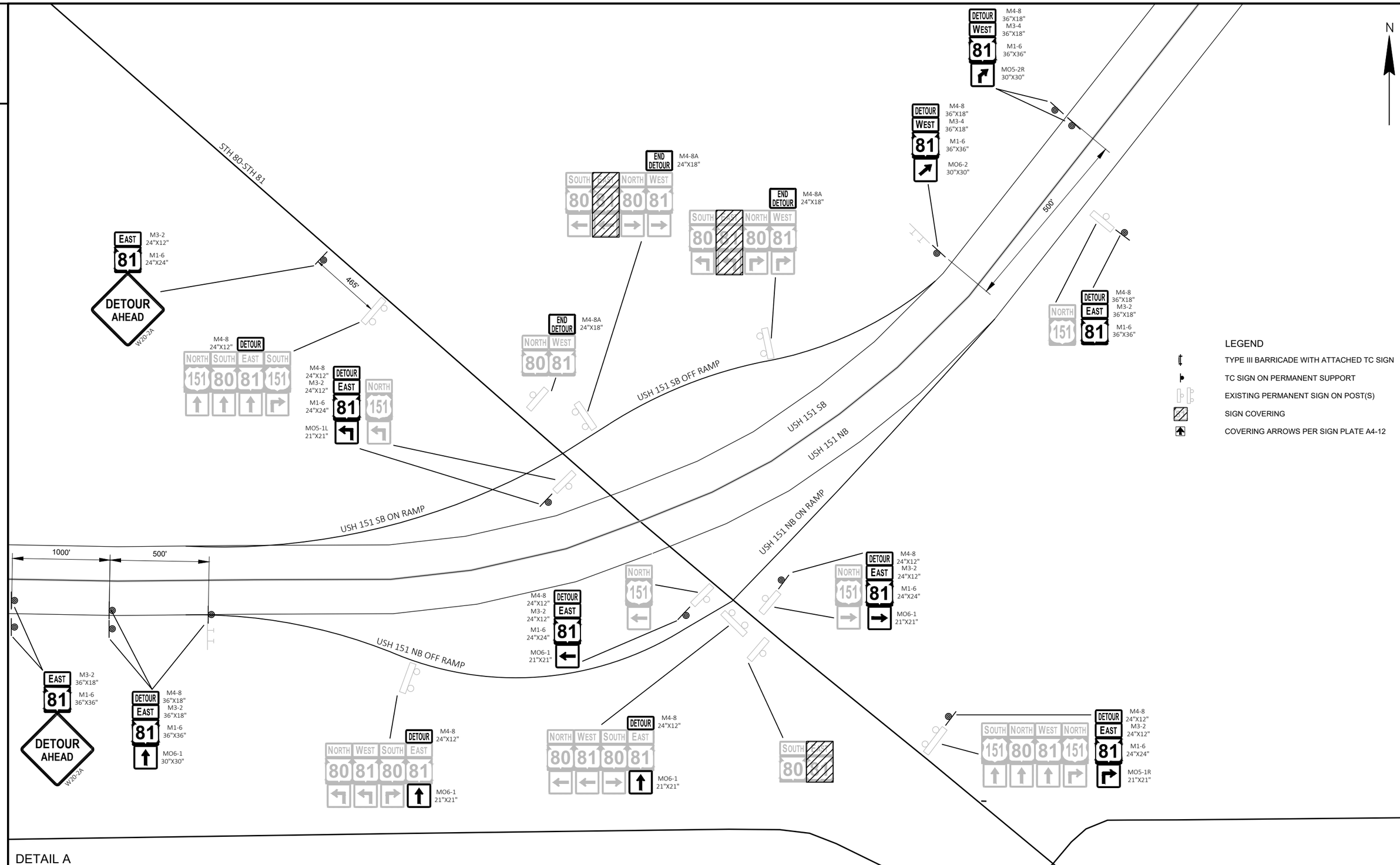

DETAIL A

PROJECT NO: 5235-03-70	HWY: STH 80	COUNTY: GRANT	DETOUR - STH 81 CLOSURE - DETAIL A	SHEET 103	E

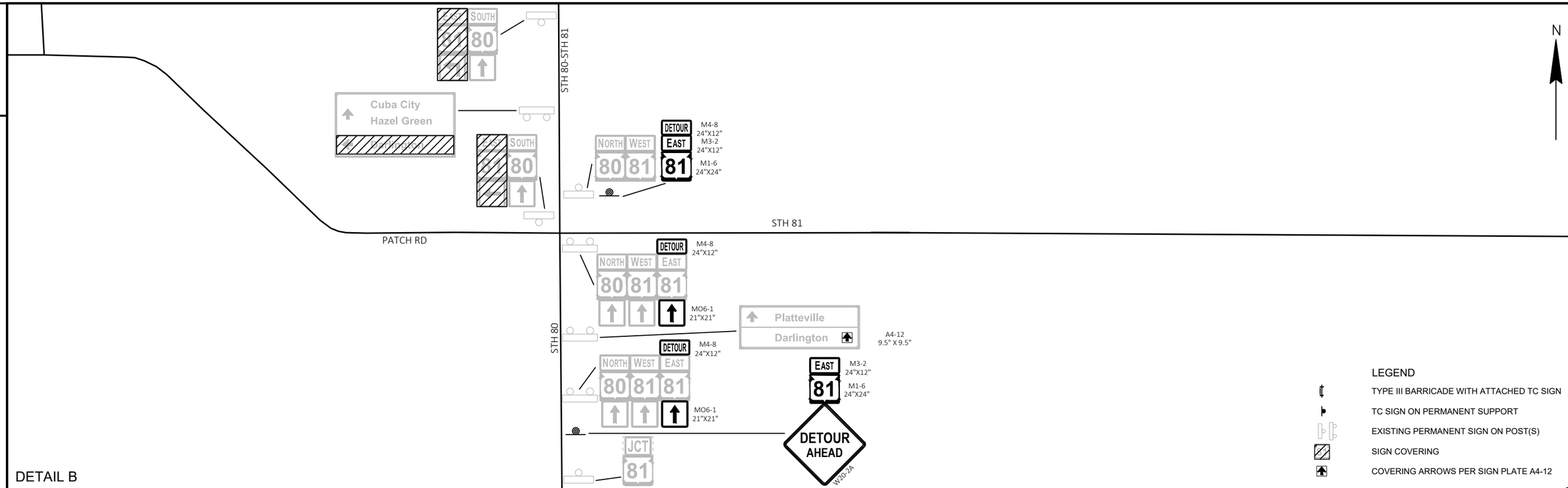

DETAIL B

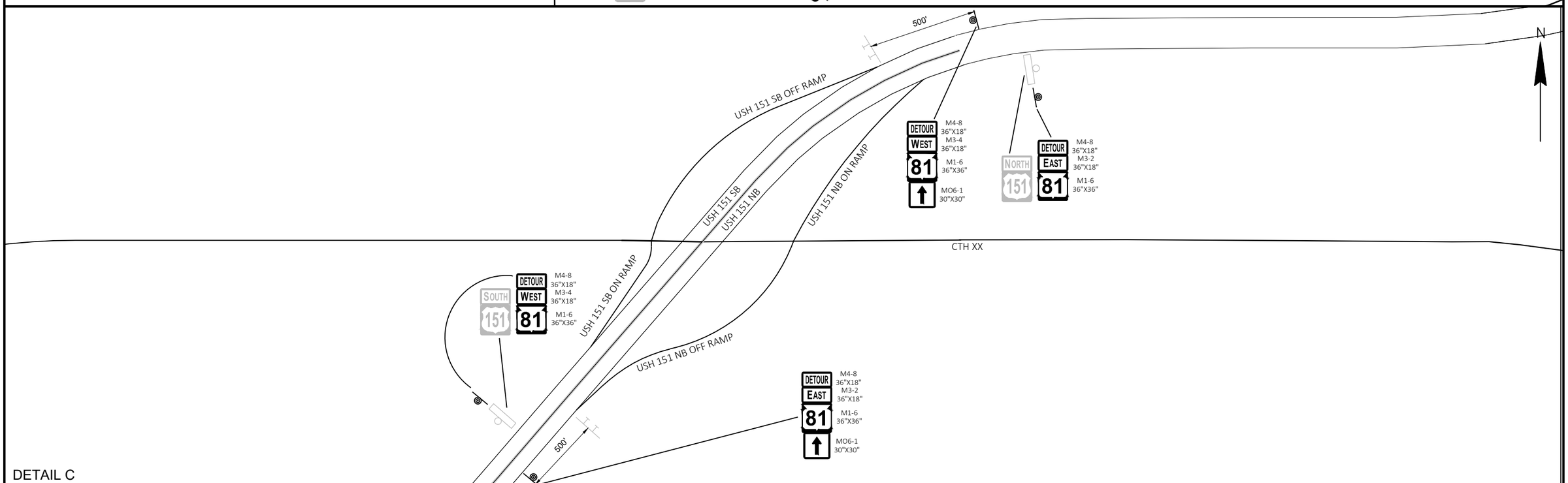

DETAIL C

PROJECT NO: 5235-03-70	HWY: STH 80	COUNTY: GRANT	DETOUR - STH 81 CLOSURE - DETAILS B AND C	SHEET 104	E

FILE NAME : X:\PROJECTS\GRANT\200050MW - 5235-03-00 STH 80\DESIGN\C3D\SHEETSPLAN\027011-DT_DETAILS.DWG
LAYOUT NAME - 01
PLOT DATE : 6/29/2022 5:15 PM
PLOT BY : MICHAEL LISKA
PLOT NAME :
PLOT SCALE : 1 IN:750 FT
WISDOT/CADDS SHEET 44

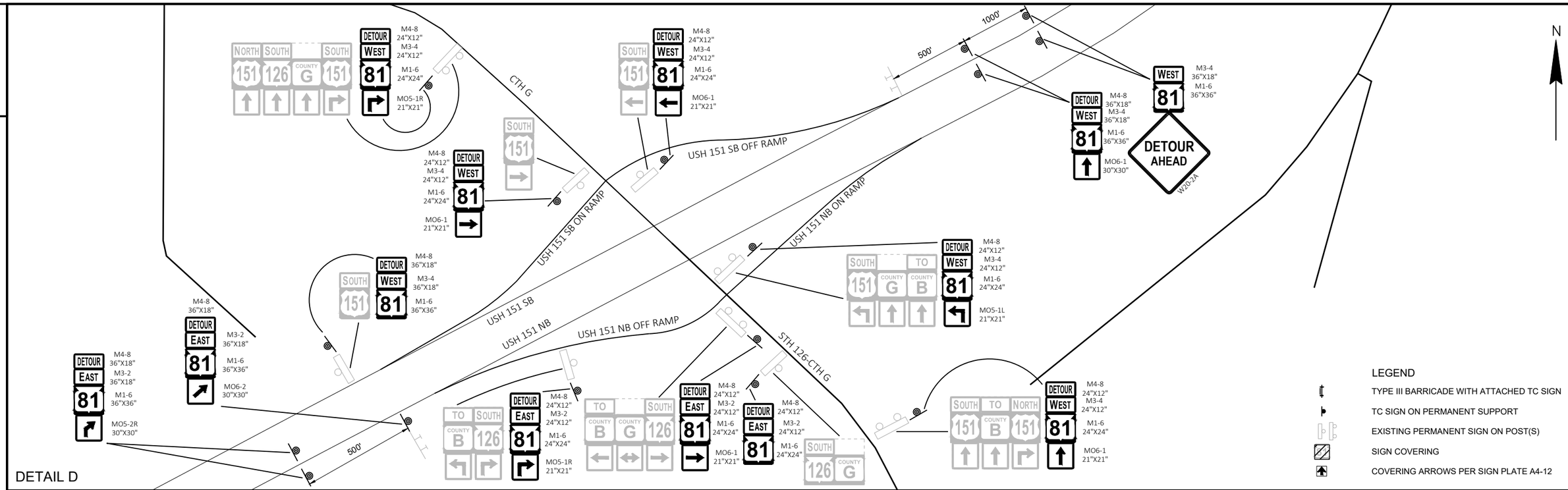

DETAIL D

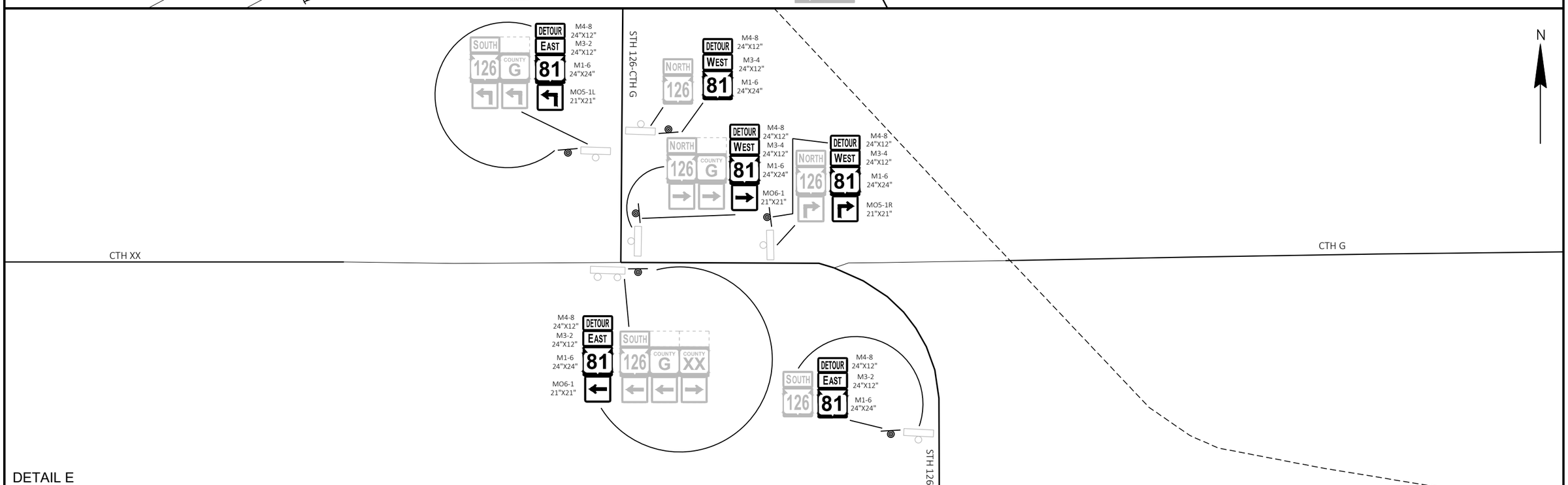

DETAIL E

PROJECT NO: 5235-03-70	HWY: STH 80	COUNTY: GRANT	DETOUR - STH 81 CLOSURE - DETAILS D AND E	SHEET 105	E

FILE NAME : X:\PROJECTS\GRANT\200050MW - 5235-03-00 STH 80\DESIGN\C3D\SHEETSPLAN\027011-DT_DETAILS.DWG
LAYOUT NAME - 02
PLOT DATE : 6/29/2022 5:15 PM PLOT BY : MICHAEL LISKA PLOT NAME : PLOT SCALE : 1 IN:500 FT
WISDOT/CADDS SHEET 44

2

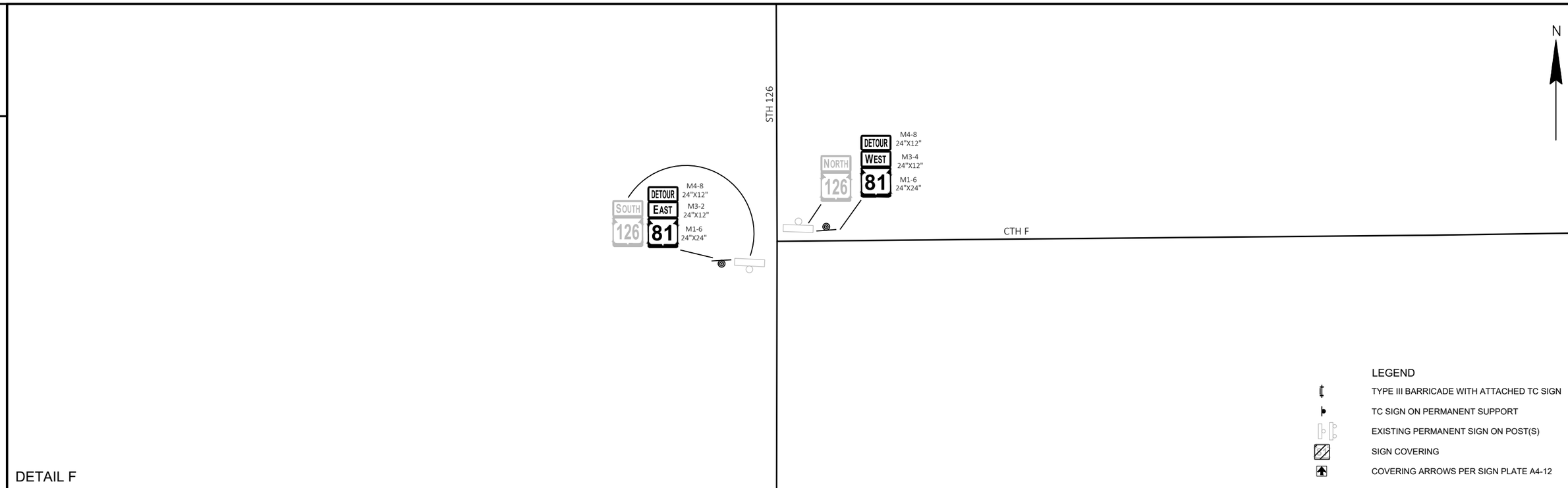

DETAIL F

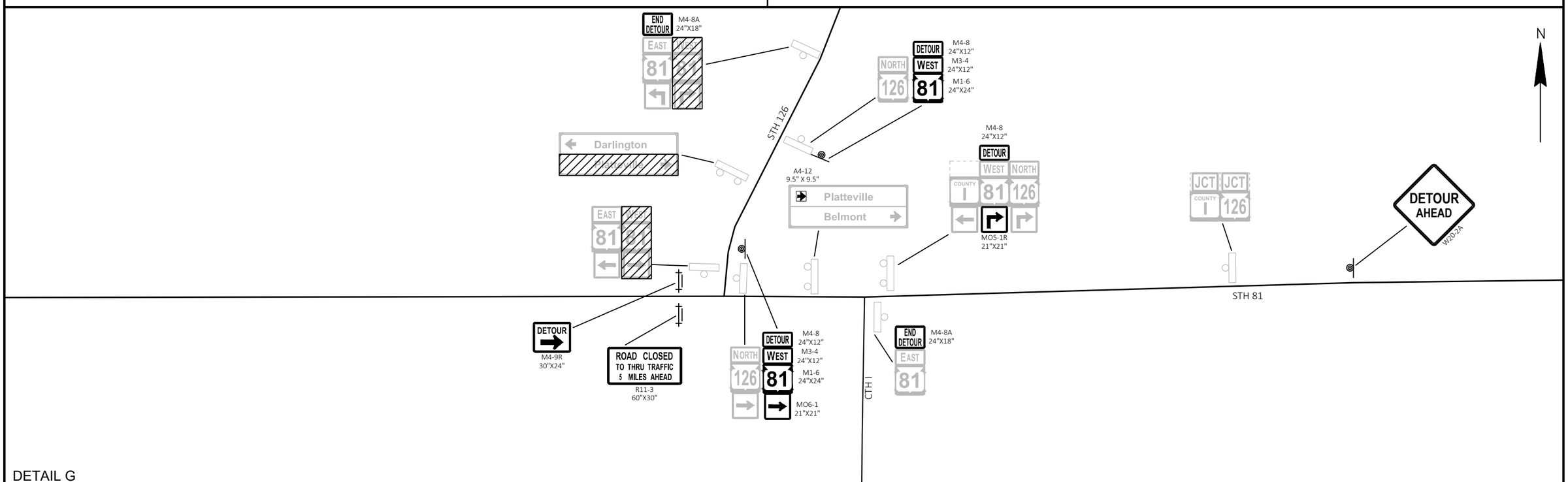

DETAIL G

PROJECT NO: 5235-03-70	HWY: STH 80	COUNTY: GRANT	DETOUR - STH 81 CLOSURE - DETAILS F AND G	SHEET 106	E

FILE NAME : X:\PROJECTS\GRANT\200050MW - 5235-03-00 STH 80\DESIGN\C3D\SHEETSPLAN\027011-DT_DETAILS.DWG
LAYOUT NAME - 03
PLOT DATE : 6/29/2022 5:15 PM
PLOT BY : MICHAEL LISKA
PLOT NAME :
PLOT SCALE : 1 IN:300 FTt
WISDOT/CADDS SHEET 44

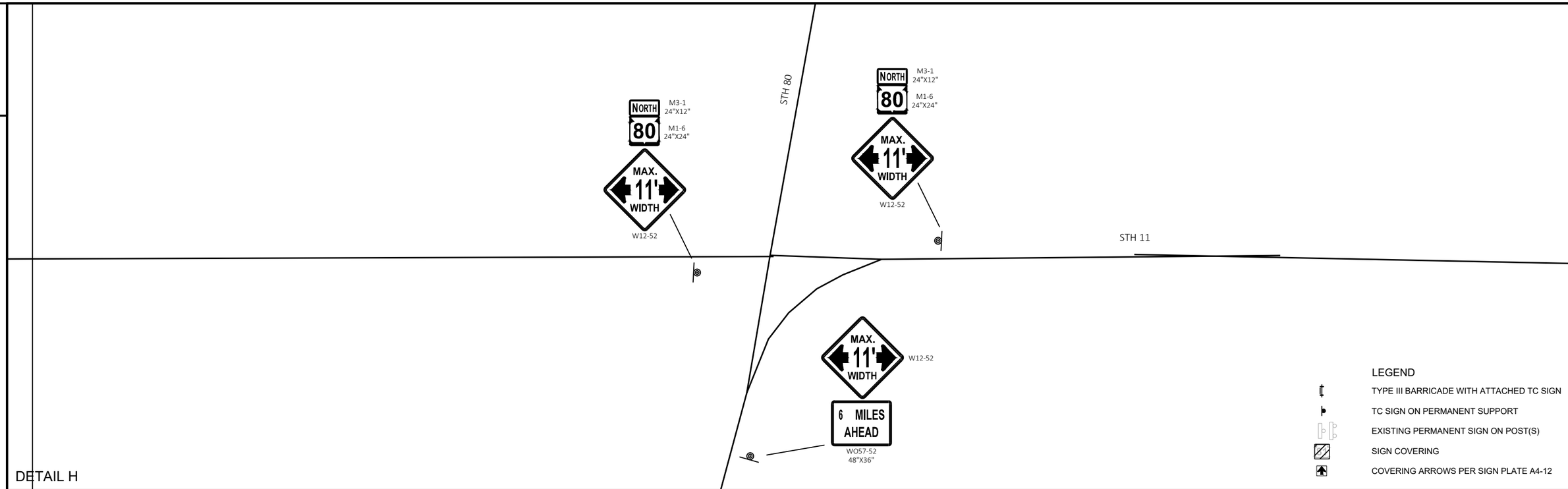

DETAIL H

2

PROJECT NO: 5235-03-70	HWY: STH 80	COUNTY: GRANT	DETOUR - STH 80 WIDTH RESTRICTION - DETAIL H	SHEET 107	E

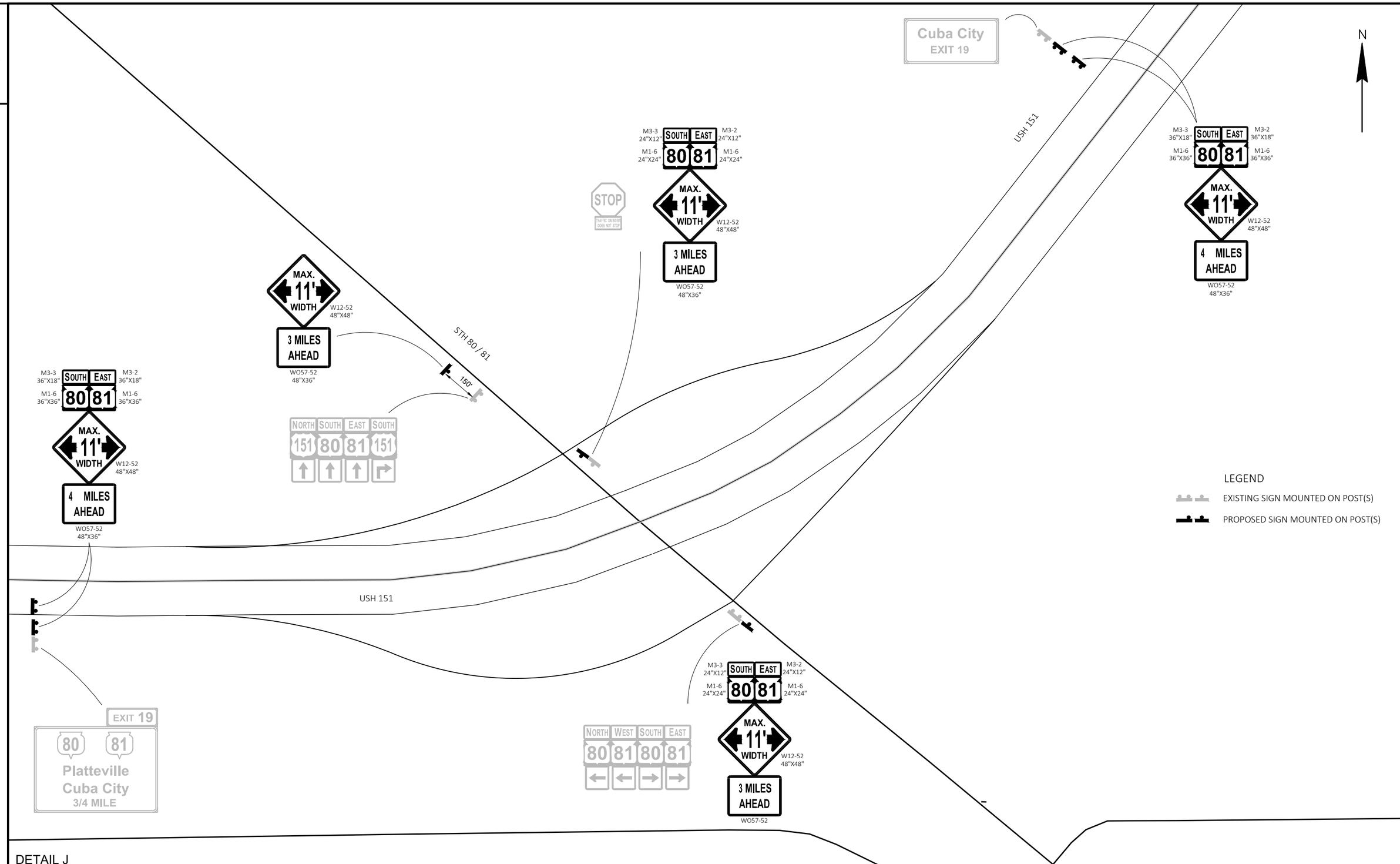

DETAIL J

PROJECT NO: 5235-03-70	HWY: STH 80	COUNTY: GRANT	DETOUR - STH 81 CLOSURE - DETAIL J	SHEET 108	E

FILE NAME : X:\PROJECTS\GRANT\200050MW - 5235-03-00 STH 80\DESIGN\C3D\SHEETSPLAN\027011-DT_DETAILS.DWG
LAYOUT NAME - 06
PLOT DATE : 6/29/2022 5:15 PM PLOT BY : MICHAEL LISKA PLOT NAME : PLOT SCALE : 1 IN:300 FTt

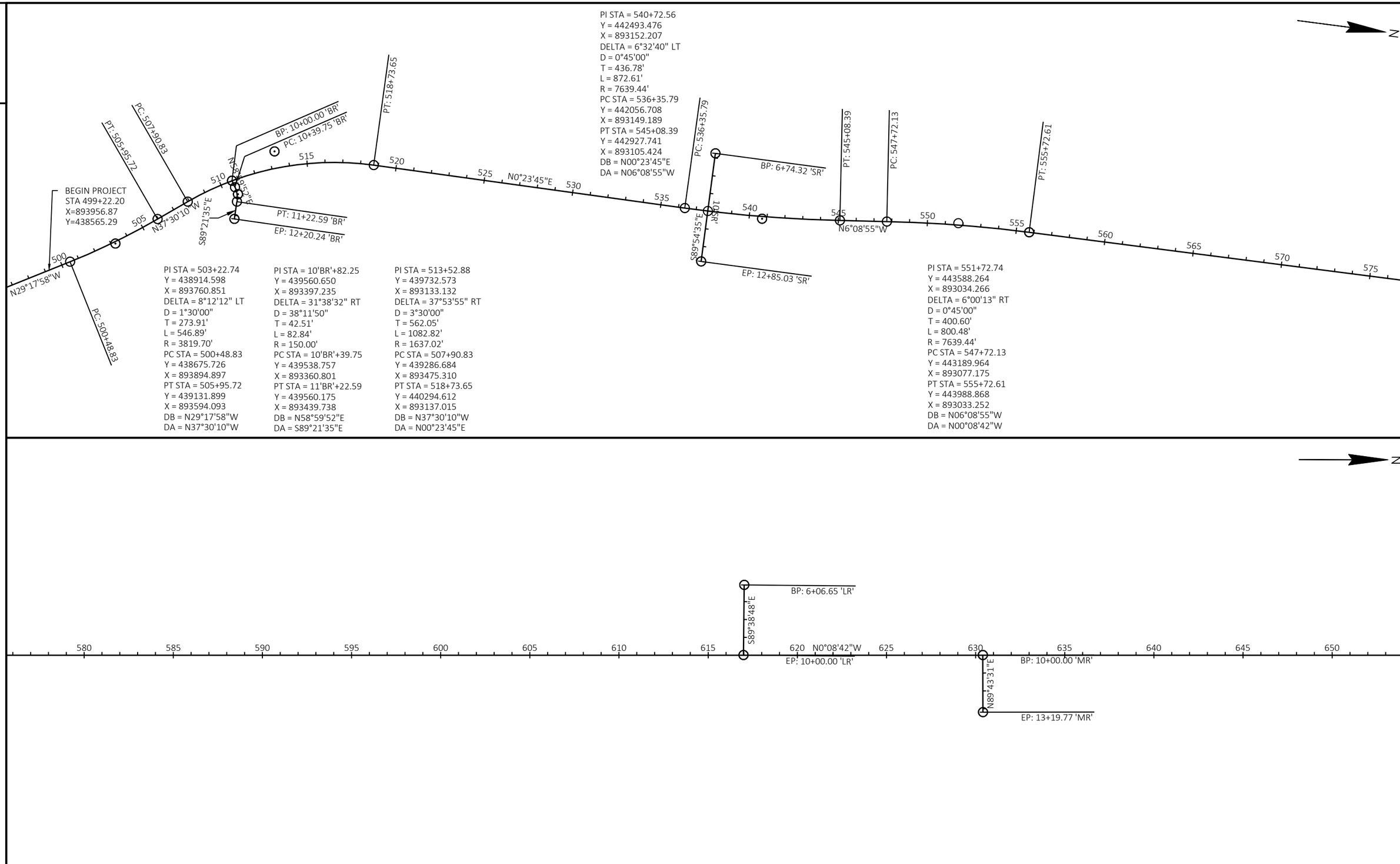

PROJECT NO: 5235-03-70	HWY: STH 80	COUNTY: GRANT	ALIGNMENT DIAGRAM	SHEET 109	E

2

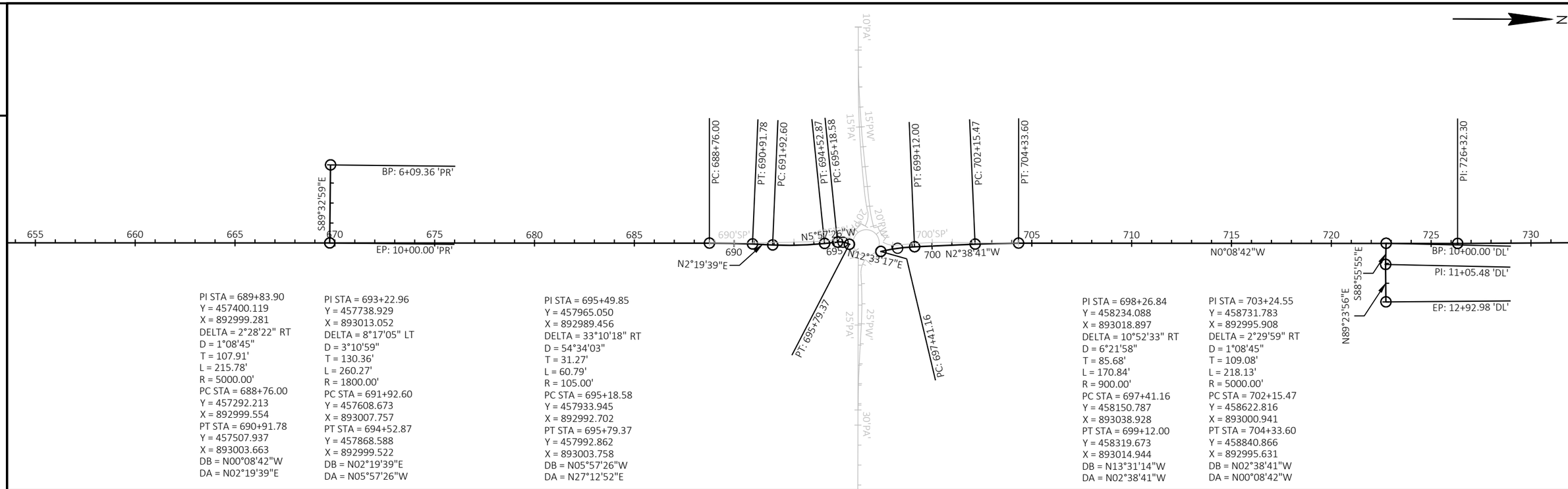

PI STA = 689+83.90
Y = 457400.119
X = 892999.281
DELTA = 2°28'22" RT
D = 1°08'45"
T = 107.91'
L = 215.78'
R = 5000.00'
PC STA = 688+76.00
Y = 457292.213
X = 892999.554
PT STA = 690+91.78
Y = 457507.937
X = 893003.663
DB = N00°08'42"W
DA = N02°19'39"E

PI STA = 693+22.96
Y = 457738.929
X = 893013.052
DELTA = 8°17'05" LT
D = 3°10'59"
T = 130.36'
L = 260.27'
R = 1800.00'
PC STA = 691+92.60
Y = 457608.673
X = 893007.757
PT STA = 694+52.87
Y = 457868.588
X = 892999.522
DB = N02°19'39"E
DA = N05°57'26"W

PI STA = 695+49.85
Y = 457965.050
X = 892989.456
DELTA = 33°10'18" RT
D = 54°34'03"
T = 31.27'
L = 60.79'
R = 105.00'
PC STA = 695+18.58
Y = 457933.945
X = 892992.702
PT STA = 695+79.37
Y = 457992.862
X = 893003.758
DB = N05°57'26"W
DA = N27°12'52"E

PI STA = 698+26.84
Y = 458234.088
X = 893018.897
DELTA = 10°52'33" RT
D = 6°21'58"
T = 85.68'
L = 170.84'
R = 900.00'
PC STA = 697+41.16
Y = 458150.787
X = 893038.928
PT STA = 699+12.00
Y = 458319.673
X = 893014.944
DB = N13°31'14"W
DA = N02°38'41"W

PI STA = 703+24.55
Y = 458731.783
X = 892995.908
DELTA = 2°29'59" RT
D = 1°08'45"
T = 109.08'
L = 218.13'
R = 5000.00'
PC STA = 702+15.47
Y = 458622.816
X = 893000.941
PT STA = 704+33.60
Y = 458840.866
X = 892995.631
DB = N02°38'41"W
DA = N00°08'42"W

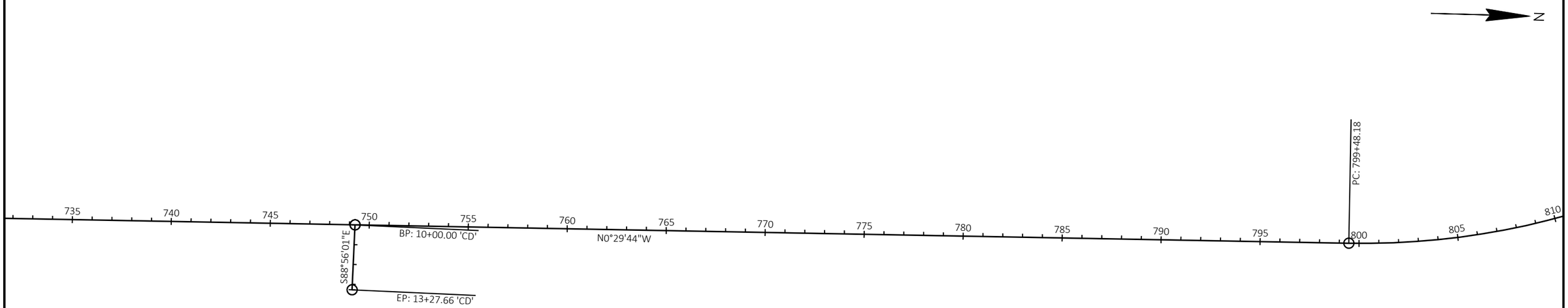

PROJECT NO: 5235-03-70	HWY: STH 80	COUNTY: GRANT	ALIGNMENT DIAGRAM	SHEET 110	E

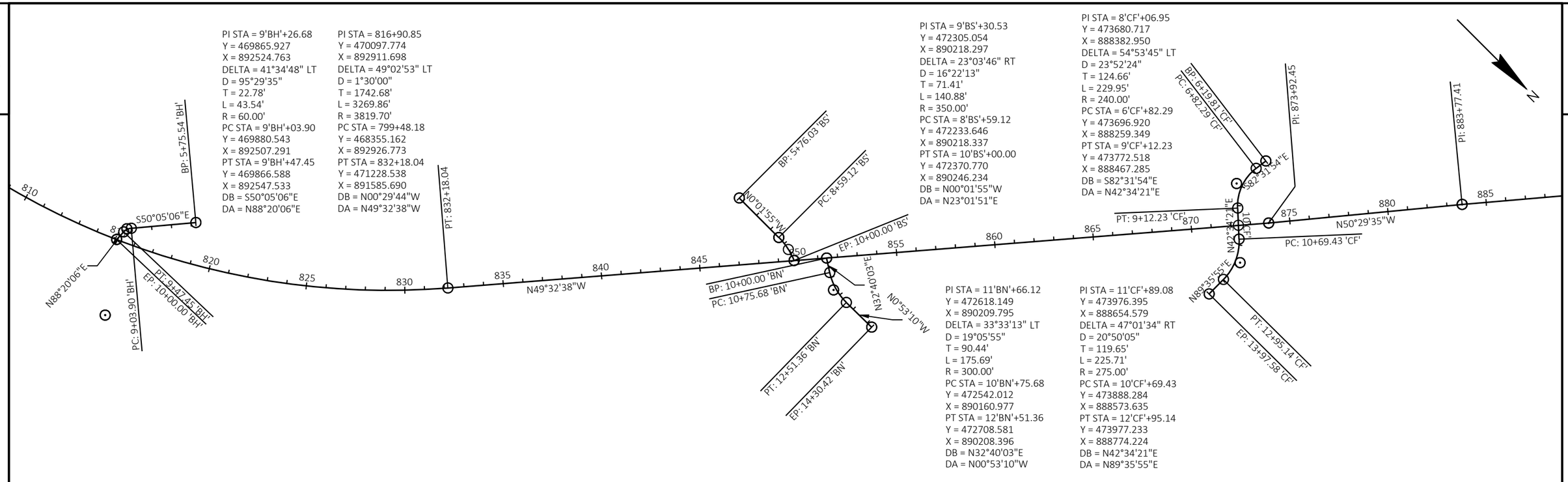
PI STA = 9'BH'+26.68
Y = 469865.927
X = 892524.763
DELTA = 41°34'48" LT
D = 95°29'35"
T = 22.78'
L = 43.54'
R = 60.00'
PC STA = 9'BH'+03.90
Y = 469880.543
X = 892507.291
PT STA = 9'BH'+47.45
Y = 469866.588
X = 892547.533
DB = S50°05'06"E
DA = N88°20'06"E
PI STA = 816+90.85
Y = 470097.774
X = 892911.698
DELTA = 49°02'53" LT
D = 1°30'00"
T = 1742.68'
L = 3269.86'
R = 3819.70'
PC STA = 799+48.18
Y = 468355.162
X = 892926.773
PT STA = 832+18.04
Y = 471228.538
X = 891585.690
DB = N00°29'44"W
DA = N49°32'38"W
PI STA = 9'BS'+30.53
Y = 472305.054
X = 890218.297
DELTA = 23°03'46" RT
D = 16°22'13"
T = 71.41'
L = 140.88'
R = 350.00'
PC STA = 8'BS'+59.12
Y = 472233.646
X = 890218.337
PT STA = 10'BS'+00.00
Y = 472370.770
X = 890246.234
DB = N00°01'55"W
DA = N23°01'51"E
PI STA = 8'CF'+06.95
Y = 473680.717
X = 888382.950
DELTA = 54°53'45" LT
D = 23°52'24"
T = 124.66'
L = 229.95'
R = 240.00'
PC STA = 6'CF'+82.29
Y = 473696.920
X = 888259.349
PT STA = 9'CF'+12.23
Y = 473772.518
X = 888467.285
DB = S82°31'54"E
DA = N42°34'21"E
PI STA = 11'BN'+66.12
Y = 472618.149
X = 890209.795
DELTA = 33°33'13" LT
D = 19°05'55"
T = 90.44'
L = 175.69'
R = 300.00'
PC STA = 10'BN'+75.68
Y = 472542.012
X = 890160.977
PT STA = 12'BN'+51.36
Y = 472708.581
X = 890208.396
DB = N32°40'03"E
DA = N00°53'10"W
PI STA = 11'CF'+89.08
Y = 473976.395
X = 888654.579
DELTA = 47°01'34" RT
D = 20°50'05"
T = 119.65'
L = 225.71'
R = 275.00'
PC STA = 10'CF'+69.43
Y = 473888.284
X = 888573.635
PT STA = 12'CF'+95.14
Y = 473977.233
X = 888774.224
DB = N42°34'21"E
DA = N89°35'55"E
BP: 5+75.54 'BH'
S50°05'06"E
N88°20'06"E
PC: 9+03.90 'BH'
PT: 9+47.45 'BH'
EP: 10+00.00 'BH'
PT: 832+18.04
BP: 5+76.03 'BS'
PC: 8+59.12 'BS'
N00°01'55"W
EP: 10+00.00 'BS'
BP: 10+00.00 'BN'
PC: 10+75.68 'BN'
N32°40'03"E
N00°53'10"W
PT: 12+51.36 'BN'
EP: 14+30.42 'BN'
N49°32'38"W
BP: 6+19.81 'CF'
PC: 6+82.29 'CF'
PI: 873+92.45
S82°31'54"E
PT: 9+12.23 'CF'
N42°34'21"E
N89°35'55"E
PC: 10+69.43 'CF'
N50°29'35"W
PT: 12+95.14 'CF'
EP: 13+97.58 'CF'
PI: 883+77.41
N
810
820
825
830
835
840
845
850
855
860
865
870
875
880
885

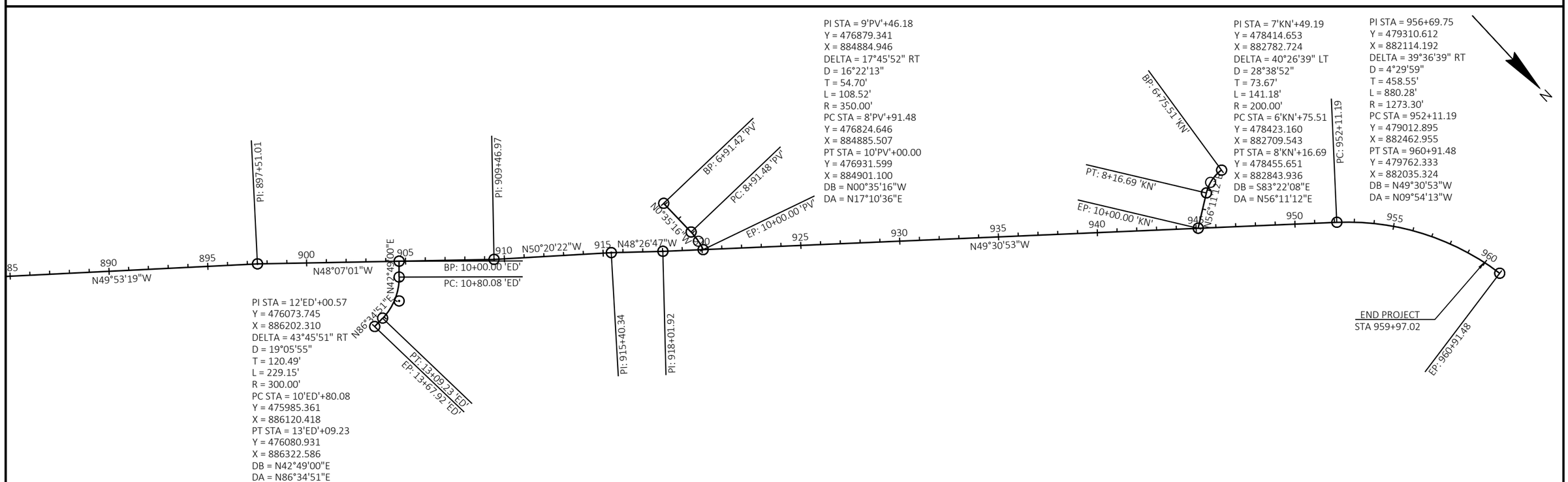
PI STA = 9'PV'+46.18
Y = 476879.341
X = 884884.946
DELTA = 17°45'52" RT
D = 16°22'13"
T = 54.70'
L = 108.52'
R = 350.00'
PC STA = 8'PV'+91.48
Y = 476824.646
X = 884885.507
PT STA = 10'PV'+00.00
Y = 476931.599
X = 884901.100
DB = N00°35'16"W
DA = N17°10'36"E
PI STA = 7'KN'+49.19
Y = 478414.653
X = 882782.724
DELTA = 40°26'39" LT
D = 28°38'52"
T = 73.67'
L = 141.18'
R = 200.00'
PC STA = 6'KN'+75.51
Y = 478423.160
X = 882709.543
PT STA = 8'KN'+16.69
Y = 478455.651
X = 882843.936
DB = S83°22'08"E
DA = N56°11'12"E
PI STA = 956+69.75
Y = 479310.612
X = 882114.192
DELTA = 39°36'39" RT
D = 4°29'59"
T = 458.55'
L = 880.28'
R = 1273.30'
PC STA = 952+11.19
Y = 479012.895
X = 882462.955
PT STA = 960+91.48
Y = 479762.333
X = 882035.324
DB = N49°30'53"W
DA = N09°54'13"W
PI: 897+51.01
PI: 909+46.97
BP: 6+91.42 'PV'
PC: 8+91.48 'PV'
N00°35'16"W
EP: 10+00.00 'PV'
BP: 6+75.51 'KN'
PT: 8+16.69 'KN'
EP: 10+00.00 'KN'
N56°11'12"E
PC: 952+11.19
N49°53'19"W
N48°07'01"W
N42°49'00"E
BP: 10+00.00 'ED'
PC: 10+80.08 'ED'
N50°20'22"W
N48°26'47"W
N49°30'53"W
N86°34'51"E
PI STA = 12'ED'+00.57
Y = 476073.745
X = 886202.310
DELTA = 43°45'51" RT
D = 19°05'55"
T = 120.49'
L = 229.15'
R = 300.00'
PC STA = 10'ED'+80.08
Y = 475985.361
X = 886120.418
PT STA = 13'ED'+09.23
Y = 476080.931
X = 886322.586
DB = N42°49'00"E
DA = N86°34'51"E
PT: 13+09.23 'ED'
EP: 13+67.92 'ED'
PI: 915+40.34
PI: 918+01.92
END PROJECT
STA 959+97.02
EP: 960+91.48
N
885
890
895
900
905
910
915
920
925
930
935
940
945
950
955
960

2

PI STA = 15'PA'+32.88
Y = 458036.298
X = 892449.291
DELTA = 6°06'37" LT
D = 1°08'45"
T = 266.86'
L = 533.22'
R = 5000.00'
PC STA = 12'PA'+66.02
Y = 458035.454
X = 892182.432
PT STA = 17'PA'+99.23
Y = 458065.541
X = 892714.544
DB = N89°49'08"E
DA = N83°42'31"E

PI STA = 18'PA'+65.45
Y = 458072.797
X = 892780.364
DELTA = 4°28'04" LT
D = 11°27'33"
T = 19.50'
L = 38.99'
R = 500.00'
PC STA = 18'PA'+45.95
Y = 458070.660
X = 892760.977
PT STA = 18'PA'+84.94
Y = 458076.439
X = 892799.526
DB = N83°42'31"E
DA = N79°14'27"E

PI STA = 19'PA'+63.76
Y = 458091.155
X = 892876.969
DELTA = 41°27'12" RT
D = 54°34'03"
T = 39.73'
L = 75.97'
R = 105.00'
PC STA = 19'PA'+24.03
Y = 458083.737
X = 892837.936
PT STA = 20'PA'+00.00
Y = 458070.873
X = 892911.135
DB = N79°14'27"E
DA = S59°18'21"E

PI STA = 13'PW'+99.73
Y = 458035.877
X = 892316.142
DELTA = 6°31'19" LT
D = 1°08'45"
T = 284.88'
L = 569.14'
R = 5000.00'
PC STA = 11'PW'+14.85
Y = 458034.976
X = 892031.265
PT STA = 16'PW'+83.99
Y = 458069.128
X = 892599.073
DB = N89°49'08"E
DA = N83°17'49"E

PI STA = 19'PW'+50.43
Y = 458100.227
X = 892863.686
DELTA = 8°56'02" LT
D = 7°38'22"
T = 58.59'
L = 116.94'
R = 750.00'
PC STA = 18'PW'+91.84
Y = 458093.388
X = 892805.496
PT STA = 20'PW'+08.78
Y = 458116.020
X = 892920.108
DB = N83°17'49"E
DA = N74°21'47"E

PI STA = 22'PW'+13.41
Y = 458049.849
X = 893111.311
DELTA = 40°05'37" LT
D = 54°34'03"
T = 38.31'
L = 73.48'
R = 105.00'
PC STA = 21'PW'+75.10
Y = 458072.964
X = 893080.756
PT STA = 22'PW'+48.57
Y = 458051.844
X = 893149.573
DB = S52°53'32"E
DA = N87°00'52"E

PI STA = 24'PW'+03.67
Y = 458059.923
X = 893304.466
DELTA = 6°03'10" RT
D = 3°10'59"
T = 95.17'
L = 190.15'
R = 1800.00'
PC STA = 23'PW'+08.51
Y = 458054.966
X = 893209.430
PT STA = 24'PW'+98.66
Y = 458054.831
X = 893399.495
DB = N87°00'52"E
DA = S86°55'58"E

PI STA = 27'PW'+96.30
Y = 458038.906
X = 893696.707
DELTA = 3°06'55" LT
D = 1°08'45"
T = 135.97'
L = 271.87'
R = 5000.00'
PC STA = 26'PW'+60.34
Y = 458046.181
X = 893560.936
DB = S86°55'58"E
DA = N89°57'06"E

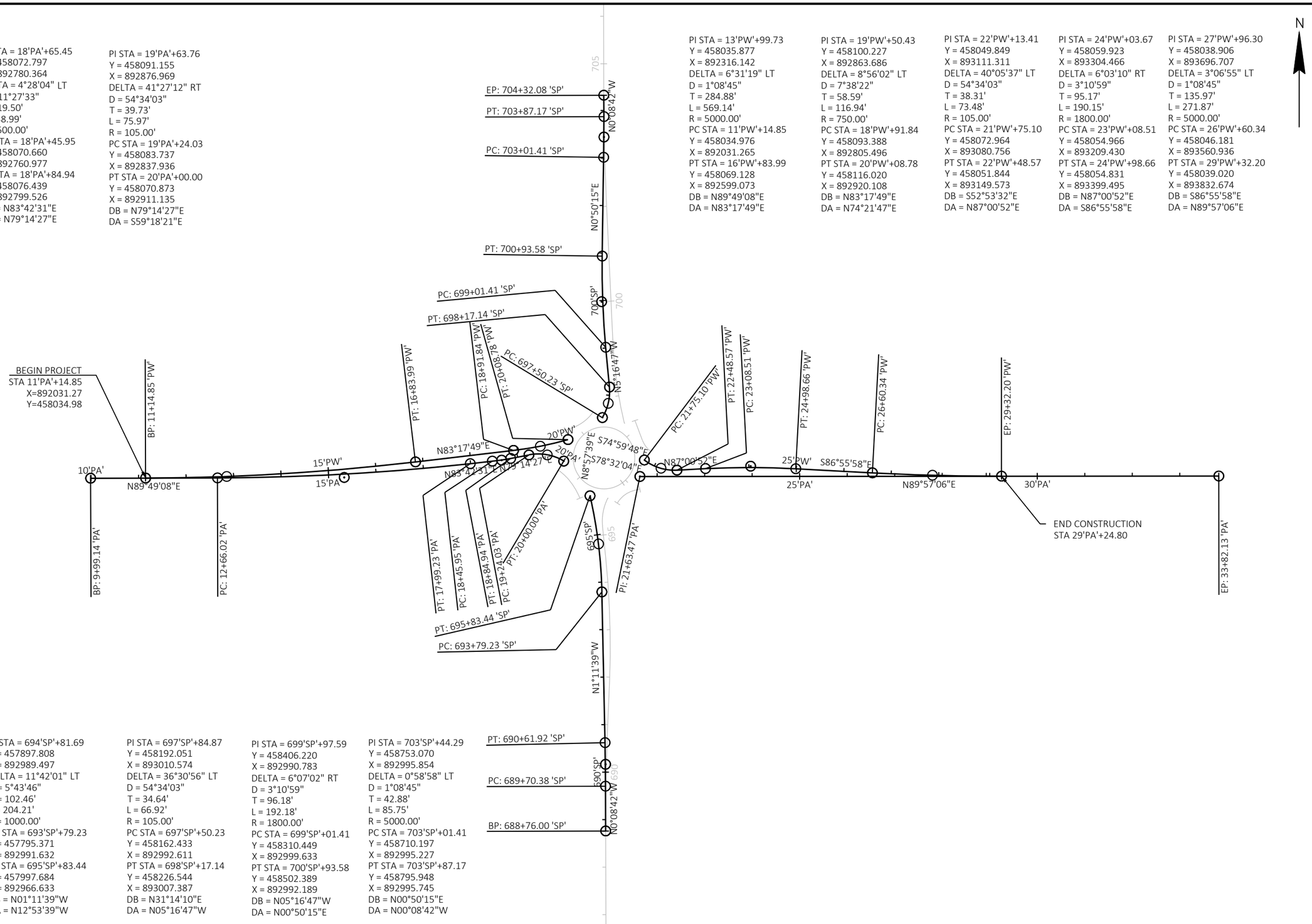

PI STA = 690'SP'+16.15
Y = 457432.363
X = 892999.199
DELTA = 1°02'56" LT
D = 1°08'45"
T = 45.77'
L = 91.54'
R = 5000.00'
PC STA = 689'SP'+70.38
Y = 457386.591
X = 892999.315
PT STA = 690'SP'+61.92
Y = 457478.125
X = 892998.245
DB = N00°08'42"W
DA = N01°11'39"W

PI STA = 694'SP'+81.69
Y = 457897.808
X = 892989.497
DELTA = 11°42'01" LT
D = 5°43'46"
T = 102.46'
L = 204.21'
R = 1000.00'
PC STA = 693'SP'+79.23
Y = 457795.371
X = 892991.632
PT STA = 695'SP'+83.44
Y = 457997.684
X = 892966.633
DB = N01°11'39"W
DA = N12°53'39"W

PI STA = 697'SP'+84.87
Y = 458192.051
X = 893010.574
DELTA = 36°30'56" LT
D = 54°34'03"
T = 34.64'
L = 66.92'
R = 105.00'
PC STA = 697'SP'+50.23
Y = 458162.433
X = 892992.611
PT STA = 698'SP'+17.14
Y = 458226.544
X = 893007.387
DB = N31°14'10"E
DA = N05°16'47"W

PI STA = 699'SP'+97.59
Y = 458406.220
X = 892990.783
DELTA = 6°07'02" RT
D = 3°10'59"
T = 96.18'
L = 192.18'
R = 1800.00'
PC STA = 699'SP'+01.41
Y = 458310.449
X = 892999.633
PT STA = 700'SP'+93.58
Y = 458502.389
X = 892992.189
DB = N05°16'47"W
DA = N00°50'15"E

PI STA = 703'SP'+44.29
Y = 458753.070
X = 892995.854
DELTA = 0°58'58" LT
D = 1°08'45"
T = 42.88'
L = 85.75'
R = 5000.00'
PC STA = 703'SP'+01.41
Y = 458710.197
X = 892995.227
PT STA = 703'SP'+87.17
Y = 458795.948
X = 892995.745
DB = N00°50'15"E
DA = N00°08'42"W

2

PROJECT NO: 5235-03-70	HWY: STH 80	COUNTY: GRANT	ALIGNMENT DIAGRAM	SHEET 112	E

PI STA = 0+29.75
Y = 458150.058
X = 892955.862
DELTA = 34°46'42" RT
D = 60°18'41"
T = 29.75'
L = 57.66'
R = 95.00'
PC STA = -0+-00.00
Y = 458174.133
X = 892973.341
PT STA = 0+57.66
Y = 458140.253
X = 892927.772
DB = S35°58'49"W
DA = S70°45'31"W

PI STA = 0+64.63
Y = 458137.957
X = 892921.195
DELTA = 0°56'21" RT
D = 6°44'26"
T = 6.97'
L = 13.93'
R = 850.00'
PC STA = 0+57.66
Y = 458140.253
X = 892927.772
PT STA = 0+71.60
Y = 458135.769
X = 892914.580
DB = S70°45'31"W
DA = S71°41'52"W

PI STA = 0+04.26
Y = 458093.668
X = 893091.126
DELTA = 5°08'02" RT
D = 60°18'41"
T = 4.26'
L = 8.51'
R = 95.00'
PC STA = 0+00.00
Y = 458090.865
X = 893094.332
PT STA = 0+08.51
Y = 458096.748
X = 893088.184
DB = N48°49'41"W
DA = N43°41'39"W

PI STA = 0+19.31
Y = 458104.558
X = 893080.721
DELTA = 22°13'25" RT
D = 104°10'27"
T = 10.80'
L = 21.33'
R = 55.00'
PC STA = 0+08.51
Y = 458096.748
X = 893088.184
PT STA = 0+29.85
Y = 458114.611
X = 893076.767
DB = N43°41'39"W
DA = N21°28'14"W

PI STA = 0+52.04
Y = 458135.164
X = 893068.381
DELTA = 3°39'18" RT
D = 8°14'07"
T = 22.20'
L = 44.38'
R = 695.73'
PC STA = 0+29.85
Y = 458114.611
X = 893076.767
PT STA = 0+74.23
Y = 458156.210
X = 893061.321
DB = N22°11'52"W
DA = N18°32'34"W

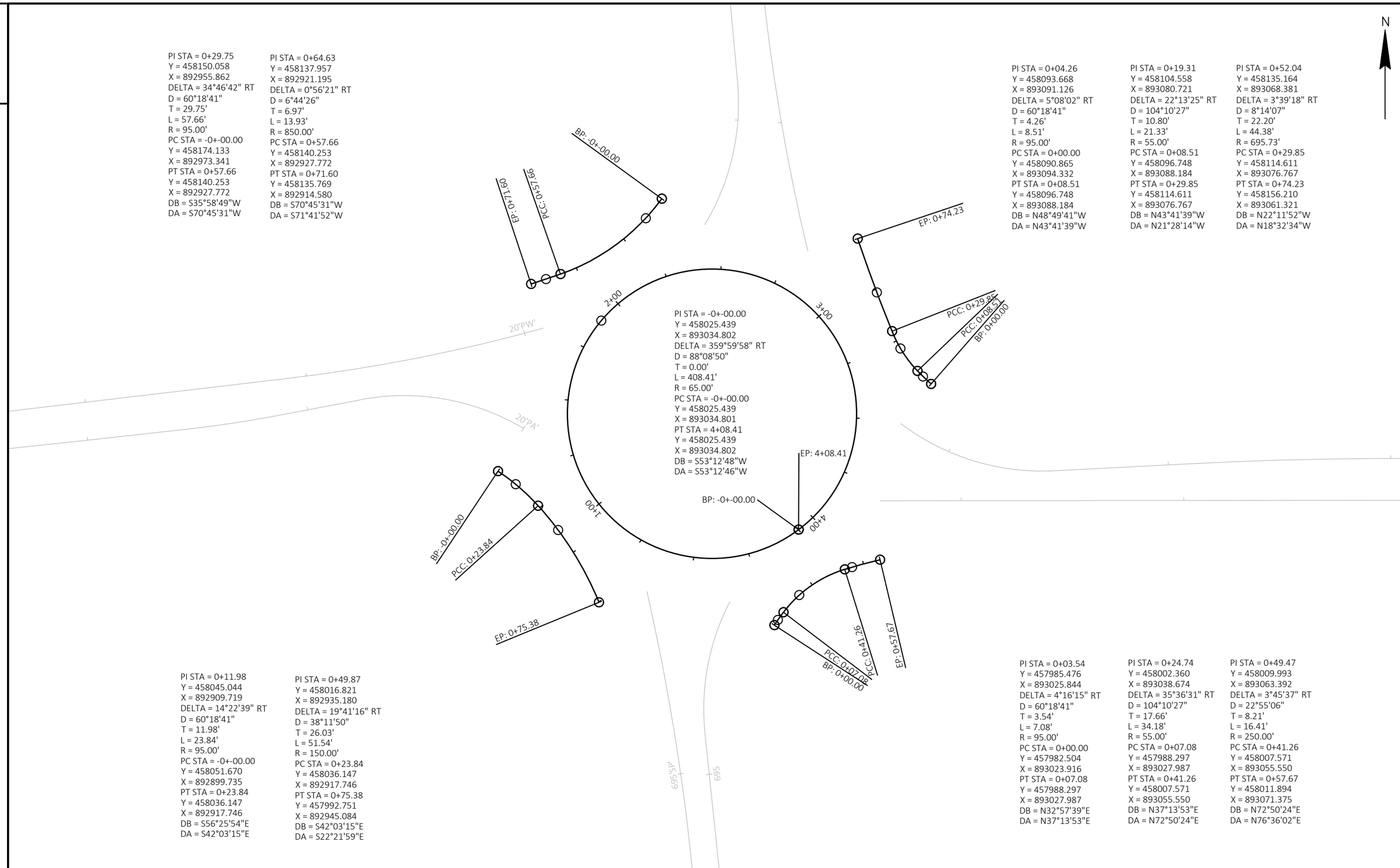

PI STA = 0+11.98
Y = 458045.044
X = 892909.719
DELTA = 14°22'39" RT
D = 60°18'41"
T = 11.98'
L = 23.84'
R = 95.00'
PC STA = -0+-00.00
Y = 458051.670
X = 892899.735
PT STA = 0+23.84
Y = 458036.147
X = 892917.746
DB = S56°25'54"E
DA = S42°03'15"E

PI STA = 0+49.87
Y = 458016.821
X = 892935.180
DELTA = 19°41'16" RT
D = 38°11'50"
T = 26.03'
L = 51.54'
R = 150.00'
PC STA = 0+23.84
Y = 458036.147
X = 892917.746
PT STA = 0+75.38
Y = 457992.751
X = 892945.084
DB = S42°03'15"E
DA = S22°21'59"E

PI STA = 0+03.54
Y = 457985.476
X = 893025.844
DELTA = 4°16'15" RT
D = 60°18'41"
T = 3.54'
L = 7.08'
R = 95.00'
PC STA = 0+00.00
Y = 457982.504
X = 893023.916
PT STA = 0+07.08
Y = 457988.297
X = 893027.987
DB = N32°57'39"E
DA = N37°13'53"E

PI STA = 0+24.74
Y = 458002.360
X = 893038.674
DELTA = 35°36'31" RT
D = 104°10'27"
T = 17.66'
L = 34.18'
R = 55.00'
PC STA = 0+07.08
Y = 457988.297
X = 893027.987
PT STA = 0+41.26
Y = 458007.571
X = 893055.550
DB = N37°13'53"E
DA = N72°50'24"E

PI STA = 0+49.47
Y = 458009.993
X = 893063.392
DELTA = 3°45'37" RT
D = 22°55'06"
T = 8.21'
L = 16.41'
R = 250.00'
PC STA = 0+41.26
Y = 458007.571
X = 893055.550
PT STA = 0+57.67
Y = 458011.894
X = 893071.375
DB = N72°50'24"E
DA = N76°36'02"E

PROJECT NO: 5235-03-70	HWY: STH 80	COUNTY: GRANT	ALIGNMENT DIAGRAM	SHEET 113	E

5235-03-70

Line	Item	Item Description	Unit	Total	Qty
0002	201.0120	Clearing	ID	25.000	25.000
0004	201.0220	Grubbing	ID	25.000	25.000
0006	203.0220	Removing Structure (structure) 01. C-22-14	EACH	1.000	1.000
0008	204.0115	Removing Asphaltic Surface Butt Joints	SY	712.000	712.000
0010	204.0120	Removing Asphaltic Surface Milling	SY	160,839.000	160,839.000
0012	204.0150	Removing Curb & Gutter	LF	514.000	514.000
0014	204.0165	Removing Guardrail	LF	2,415.000	2,415.000
0016	204.0185	Removing Masonry	CY	16.000	16.000
0018	205.0100	Excavation Common	CY	18,771.000	18,771.000
0020	206.2001	Excavation for Structures Culverts (structure) 01. C-22-14	EACH	1.000	1.000
0022	206.5001	Cofferdams (structure) 01. C-22-14	EACH	1.000	1.000
0024	208.0100	Borrow	CY	538.000	538.000
0026	210.2500	Backfill Structure Type B	TON	165.000	165.000
0028	211.0101	Prepare Foundation for Asphaltic Paving (project) 01. 5235-03-70	EACH	1.000	1.000
0030	211.0400	Prepare Foundation for Asphaltic Shoulders	STA	779.000	779.000
0032	213.0100	Finishing Roadway (project) 01. 5235-03-70	EACH	1.000	1.000
0034	305.0110	Base Aggregate Dense 3/4-Inch	TON	358.000	358.000
0036	305.0120	Base Aggregate Dense 1 1/4-Inch	TON	15,500.000	15,500.000
0038	311.0115	Breaker Run	CY	15.000	15.000
0040	312.0110	Select Crushed Material	TON	17,950.000	17,950.000
0042	405.0100	Coloring Concrete WisDOT Red	CY	489.000	489.000
0044	415.0085	Concrete Pavement 8 1/2-Inch	SY	3,166.000	3,166.000
0046	415.4100	Concrete Pavement Joint Filling	SY	4,577.000	4,577.000
0048	416.0512	Concrete Truck Apron 12-Inch	SY	1,468.000	1,468.000
0050	455.0605	Tack Coat	GAL	21,952.000	21,952.000
0052	460.0105.S	HMA Percent Within Limits (PWL) Test Strip Volumetrics	EACH	1.000	1.000
0054	460.0110.S	HMA Percent Within Limits (PWL) Test Strip Density	EACH	2.000	2.000
0056	460.2000	Incentive Density HMA Pavement	DOL	2,030.000	2,030.000
0058	460.2005	Incentive Density PWL HMA Pavement	DOL	22,765.000	22,765.000
0060	460.2007	Incentive Density HMA Pavement Longitudinal Joints	DOL	43,557.000	43,557.000
0062	460.2010	Incentive Air Voids HMA Pavement	DOL	34,429.000	34,429.000
0064	460.6223	HMA Pavement 3 MT 58-28 S	TON	1,865.000	1,865.000
0066	460.6224	HMA Pavement 4 MT 58-28 S	TON	34,429.000	34,429.000
0068	460.6424	HMA Pavement 4 MT 58-28 H	TON	1,291.000	1,291.000
0070	465.0105	Asphaltic Surface	TON	180.000	180.000
0072	465.0120	Asphaltic Surface Driveways and Field Entrances	TON	91.000	91.000
0074	465.0125	Asphaltic Surface Temporary	TON	1,037.000	1,037.000
0076	465.0315	Asphaltic Flumes	SY	47.000	47.000
0078	465.0425	Asphaltic Shoulder Rumble Strips 2-Lane Rural	LF	59,390.000	59,390.000
0080	465.0475	Asphalt Centerline Rumble Strips 2-Lane Rural	LF	28,976.000	28,976.000
0082	502.3200	Protective Surface Treatment	SY	211.000	211.000
0084	502.4205	Adhesive Anchors No. 5 Bar	EACH	30.000	30.000
0086	504.0100	Concrete Masonry Culverts	CY	28.000	28.000
0088	505.0400	Bar Steel Reinforcement HS Structures	LB	1,870.000	1,870.000
0090	505.0600	Bar Steel Reinforcement HS Coated Structures	LB	770.000	770.000
0092	509.0301	Preparation Decks Type 1	SY	15.000	15.000
0094	509.0302	Preparation Decks Type 2	SY	5.000	5.000
0096	509.0500	Cleaning Decks	SY	211.000	211.000
0098	509.1500	Concrete Surface Repair	SF	253.000	253.000

5235-03-70

Line	Item	Item Description	Unit	Total	Qty
0100	509.2000	Full-Depth Deck Repair	SY	3.000	3.000
0102	509.2500	Concrete Masonry Overlay Decks	CY	14.000	14.000
0104	511.1200	Temporary Shoring (structure) 01. C-22-14	SF	484.000	484.000
0106	513.7051	Railing Steel Type W	LF	31.000	31.000
0108	516.0500	Rubberized Membrane Waterproofing	SY	22.000	22.000
0110	517.1801.S	Structure Repainting Recycled Abrasive (structure) 01. B-22-7	EACH	1.000	1.000
0112	517.4501.S	Negative Pressure Containment and Collection of Waste Materials (structure) 01. B-22-7	EACH	1.000	1.000
0114	517.6001.S	Portable Decontamination Facility	EACH	1.000	1.000
0116	520.1018	Apron Endwalls for Culvert Pipe 18-Inch	EACH	4.000	4.000
0118	520.3418	Culvert Pipe Class III-A Non-metal 18-Inch	LF	33.000	33.000
0120	522.1012	Apron Endwalls for Culvert Pipe Reinforced Concrete 12-Inch	EACH	5.000	5.000
0122	522.1015	Apron Endwalls for Culvert Pipe Reinforced Concrete 15-Inch	EACH	1.000	1.000
0124	601.0409	Concrete Curb & Gutter 30-Inch Type A	LF	826.000	826.000
0126	601.0413	Concrete Curb & Gutter 6-Inch Sloped 30-Inch Type G	LF	1,197.000	1,197.000
0128	601.0553	Concrete Curb & Gutter 4-Inch Sloped 36-Inch Type D	LF	1,890.000	1,890.000
0130	601.0580	Concrete Curb & Gutter 4-Inch Sloped 36-Inch Type R	LF	396.000	396.000
0132	602.0410	Concrete Sidewalk 5-Inch	SF	26,510.000	26,510.000
0134	603.8000	Concrete Barrier Temporary Precast Delivered	LF	624.000	624.000
0136	603.8125	Concrete Barrier Temporary Precast Installed	LF	624.000	624.000
0138	606.0100	Riprap Light	CY	11.000	11.000
0140	606.0300	Riprap Heavy	CY	188.000	188.000
0142	608.0312	Storm Sewer Pipe Reinforced Concrete Class III 12-Inch	LF	381.000	381.000
0144	608.0315	Storm Sewer Pipe Reinforced Concrete Class III 15-Inch	LF	265.000	265.000
0146	608.0412	Storm Sewer Pipe Reinforced Concrete Class IV 12-Inch	LF	295.000	295.000
0148	608.0512	Storm Sewer Pipe Reinforced Concrete Class V 12-Inch	LF	14.000	14.000
0150	611.0530	Manhole Covers Type J	EACH	1.000	1.000
0152	611.0600	Inlet Covers Type A	EACH	9.000	9.000
0154	611.0627	Inlet Covers Type HM	EACH	1.000	1.000
0156	611.0630	Inlet Covers Type HM-GJ	EACH	3.000	3.000
0158	611.0642	Inlet Covers Type MS	EACH	2.000	2.000
0160	611.0652	Inlet Covers Type T	EACH	2.000	2.000
0162	611.3003	Inlets 3-FT Diameter	EACH	1.000	1.000
0164	611.3004	Inlets 4-FT Diameter	EACH	15.000	15.000
0166	611.3901	Inlets Median 1 Grate	EACH	2.000	2.000
0168	614.0010	Barrier System Grading Shaping Finishing	EACH	13.000	13.000
0170	614.0305	Steel Plate Beam Guard Class A	LF	50.000	50.000
0172	614.0370	Steel Plate Beam Guard Energy Absorbing Terminal	EACH	5.000	5.000
0174	614.0905	Crash Cushions Temporary	EACH	4.000	4.000
0176	614.2300	MGS Guardrail 3	LF	1,714.000	1,714.000
0178	614.2310	MGS Guardrail 3 HS	LF	264.000	264.000
0180	614.2350	MGS Guardrail Short Radius	LF	234.000	234.000
0182	614.2500	MGS Thrie Beam Transition	LF	157.600	157.600
0184	614.2610	MGS Guardrail Terminal EAT	EACH	16.000	16.000
0186	618.0100	Maintenance And Repair of Haul Roads (project) 01. 5235-03-70	EACH	1.000	1.000
0188	619.1000	Mobilization	EACH	1.000	1.000
0190	620.0300	Concrete Median Sloped Nose	SF	140.000	140.000
0192	624.0100	Water	MGAL	238.000	238.000
0194	625.0100	Topsoil	SY	2,410.000	2,410.000

5235-03-70

Line	Item	Item Description	Unit	Total	Qty
0196	625.0500	Salvaged Topsoil	SY	24,100.000	24,100.000
0198	627.0200	Mulching	SY	15,900.000	15,900.000
0200	628.1504	Silt Fence	LF	8,617.000	8,617.000
0202	628.1520	Silt Fence Maintenance	LF	8,617.000	8,617.000
0204	628.1905	Mobilizations Erosion Control	EACH	9.000	9.000
0206	628.1910	Mobilizations Emergency Erosion Control	EACH	7.000	7.000
0208	628.2002	Erosion Mat Class I Type A	SY	8,419.000	8,419.000
0210	628.2006	Erosion Mat Urban Class I Type A	SY	1,024.000	1,024.000
0212	628.7010	Inlet Protection Type B	EACH	3.000	3.000
0214	628.7015	Inlet Protection Type C	EACH	19.000	19.000
0216	628.7504	Temporary Ditch Checks	LF	111.000	111.000
0218	628.7555	Culvert Pipe Checks	EACH	102.000	102.000
0220	628.7570	Rock Bags	EACH	169.000	169.000
0222	629.0210	Fertilizer Type B	CWT	15.000	15.000
0224	630.0110	Seeding Mixture No. 10	LB	320.000	320.000
0226	630.0180	Seeding Mixture No. 80	LB	4.000	4.000
0228	630.0500	Seed Water	MGAL	541.000	541.000
0230	633.5200	Markers Culvert End	EACH	6.000	6.000
0232	634.0614	Posts Wood 4x6-Inch X 14-FT	EACH	4.000	4.000
0234	634.0616	Posts Wood 4x6-Inch X 16-FT	EACH	8.000	8.000
0236	634.0618	Posts Wood 4x6-Inch X 18-FT	EACH	2.000	2.000
0238	634.0622	Posts Wood 4x6-Inch X 22-FT	EACH	7.000	7.000
0240	634.0808	Posts Tubular Steel 2x2-Inch X 8-FT	EACH	10.000	10.000
0242	634.0809	Posts Tubular Steel 2x2-Inch X 9.5-FT	EACH	6.000	6.000
0244	634.0811	Posts Tubular Steel 2x2-Inch X 11-FT	EACH	8.000	8.000
0246	637.2210	Signs Type II Reflective H	SF	374.290	374.290
0248	637.2230	Signs Type II Reflective F	SF	61.000	61.000
0250	638.2102	Moving Signs Type II	EACH	20.000	20.000
0252	638.2602	Removing Signs Type II	EACH	10.000	10.000
0254	638.3000	Removing Small Sign Supports	EACH	14.000	14.000
0256	638.4000	Moving Small Sign Supports	EACH	22.000	22.000
0258	642.5201	Field Office Type C	EACH	1.000	1.000
0260	643.0300	Traffic Control Drums	DAY	11,885.000	11,885.000
0262	643.0420	Traffic Control Barricades Type III	DAY	4,040.000	4,040.000
0264	643.0705	Traffic Control Warning Lights Type A	DAY	7,862.000	7,862.000
0266	643.0715	Traffic Control Warning Lights Type C	DAY	2,364.000	2,364.000
0268	643.0900	Traffic Control Signs	DAY	46,471.000	46,471.000
0270	643.0910	Traffic Control Covering Signs Type I	EACH	10.000	10.000
0272	643.0920	Traffic Control Covering Signs Type II	EACH	20.000	20.000
0274	643.1050	Traffic Control Signs PCMS	DAY	84.000	84.000
0276	643.3105	Temporary Marking Line Paint 4-Inch	LF	11,400.000	11,400.000
0278	643.3120	Temporary Marking Line Epoxy 4-Inch	LF	42,780.000	42,780.000
0280	643.3150	Temporary Marking Line Removable Tape 4-Inch	LF	9,720.000	9,720.000
0282	643.5000	Traffic Control	EACH	1.000	1.000
0284	645.0105	Geotextile Type C	SY	56.000	56.000
0286	645.0120	Geotextile Type HR	SY	471.000	471.000
0288	645.0130	Geotextile Type R	SY	53.000	53.000
0290	646.1020	Marking Line Epoxy 4-Inch	LF	64,310.000	64,310.000
0292	646.1040	Marking Line Grooved Wet Ref Epoxy 4-Inch	LF	90,530.000	90,530.000

5235-03-70

Line	Item	Item Description	Unit	Total	Qty
0294	646.3020	Marking Line Epoxy 8-Inch	LF	599.000	599.000
0296	646.3040	Marking Line Grooved Wet Ref Epoxy 8-Inch	LF	1,719.000	1,719.000
0298	646.4520	Marking Line Same Day Epoxy 4-Inch	LF	7,530.000	7,530.000
0300	646.5020	Marking Arrow Epoxy	EACH	26.000	26.000
0302	646.5120	Marking Word Epoxy	EACH	12.000	12.000
0304	646.6320	Marking Dotted Extension Epoxy 18-Inch	LF	82.000	82.000
0306	646.7120	Marking Diagonal Epoxy 12-Inch	LF	302.000	302.000
0308	646.8020	Marking Corrugated Median Epoxy	SF	1,270.000	1,270.000
0310	646.8120	Marking Curb Epoxy	LF	655.000	655.000
0312	646.8220	Marking Island Nose Epoxy	EACH	14.000	14.000
0314	646.9000	Marking Removal Line 4-Inch	LF	5,116.000	5,116.000
0316	646.9100	Marking Removal Line 8-Inch	LF	100.000	100.000
0318	648.0100	Locating No-Passing Zones	MI	7.710	7.710
0320	650.4000	Construction Staking Storm Sewer	EACH	24.000	24.000
0322	650.4500	Construction Staking Subgrade	LF	6,727.000	6,727.000
0324	650.5000	Construction Staking Base	LF	5,171.000	5,171.000
0326	650.5500	Construction Staking Curb Gutter and Curb & Gutter	LF	2,151.000	2,151.000
0328	650.7000	Construction Staking Concrete Pavement	LF	1,556.000	1,556.000
0330	650.8000	Construction Staking Resurfacing Reference	LF	44,527.000	44,527.000
0332	650.8501	Construction Staking Electrical Installations (project) 01. 5235-03-70	EACH	1.000	1.000
0334	650.9500	Construction Staking Sidewalk (project) 01. 5235-03-70	EACH	1.000	1.000
0336	650.9911	Construction Staking Supplemental Control (project) 01. 5235-03-70	EACH	1.000	1.000
0338	650.9920	Construction Staking Slope Stakes	LF	6,727.000	6,727.000
0340	652.0225	Conduit Rigid Nonmetallic Schedule 40 2-Inch	LF	1,570.000	1,570.000
0342	652.0235	Conduit Rigid Nonmetallic Schedule 40 3-Inch	LF	785.000	785.000
0344	653.0154	Pull Boxes Non-Conductive 24x36-Inch	EACH	8.000	8.000
0346	653.0164	Pull Boxes Non-Conductive 24x42-Inch	EACH	9.000	9.000
0348	654.0105	Concrete Bases Type 5	EACH	16.000	16.000
0350	654.0230	Concrete Control Cabinet Bases Type L30	EACH	1.000	1.000
0352	655.0610	Electrical Wire Lighting 12 AWG	LF	12,410.000	12,410.000
0354	655.0615	Electrical Wire Lighting 10 AWG	LF	6,240.000	6,240.000
0356	656.0201	Electrical Service Meter Breaker Pedestal (location) 01. Cabinet A	EACH	1.000	1.000
0358	657.0255	Transformer Bases Breakaway 11 1/2-Inch Bolt Circle	EACH	16.000	16.000
0360	657.0322	Poles Type 5-Aluminum	EACH	16.000	16.000
0362	657.0610	Luminaire Arms Single Member 4 1/2-Inch Clamp 6-FT	EACH	16.000	16.000
0364	659.1115	Luminaires Utility LED A	EACH	16.000	16.000
0366	659.2130	Lighting Control Cabinets 120/240 30-Inch	EACH	1.000	1.000
0368	690.0150	Sawing Asphalt	LF	1,220.000	1,220.000
0370	715.0720	Incentive Compressive Strength Concrete Pavement	DOL	950.000	950.000
0372	740.0440	Incentive IRI Ride	DOL	34,900.000	34,900.000
0374	ASP.1T0A	On-the-Job Training Apprentice at $5.00/HR	HRS	1,600.000	1,600.000
0376	ASP.1T0G	On-the-Job Training Graduate at $5.00/HR	HRS	1,200.000	1,200.000
0378	SPV.0035	Special 01. Scour Repair Grout	CY	22.000	22.000
0380	SPV.0035	Special 02. Scour Repair Grout Bags	CY	14.000	14.000
0382	SPV.0035	Special 03. Matrix Riprap	CY	96.000	96.000
0384	SPV.0060	Special 01. Verify Landmark Reference Monuments	EACH	4.000	4.000
0386	SPV.0090	Special 01. Flashing Stainless Steel	LF	65.000	65.000
0388	SPV.0090	Special 02. Sawing Pavement Railing Post Replacement	LF	10.000	10.000
0390	SPV.0090	Special 03. Concrete Curb & Gutter 2-Inch Sloped 36-Inch	LF	261.000	261.000

5235-03-70

Line	Item	Item Description	Unit	Total	Qty
0392	SPV.0090	Special 04. Pipe Underdrain (6-Inch) with Geotextile Fabric and Aggregate	LF	306.000	306.000
0394	SPV.0180	Special 01. Removing Distressed Pavement Milling	SY	1,610.000	1,610.000

3

CLEARING AND GRUBBING

CATEGORY	STATION	-	STATION	LOCATION	201.0120 CLEARING ID	201.0220 GRUBBING ID	REMARKS
0050	21'PA'+98	-	22'PA'+33	RT	25	25	
				TOTAL	**25**	**25**	

REMOVING ASPHALTIC SURFACE MILLING

STATION		STATION	HWY	LOCATION	204.0115 REMOVING ASPHALTIC SURFACE BUTT JOINTS SY	204.0120 REMOVING ASPHALTIC SURFACE MILLING SY	SPV.0180.01 REMOVING DISTRESSED PAVEMENT MILLING SY	REMARKS
499+18	-	510+63	STH 80	SOUTH PROJECT LIMIT TO BREWER LN	50	3,817	38	
510+63	-	537+62	STH 80	BREWER LN TO ST ROSE RD	40	10,097	101	
537+62	-	616+95	STH 80	ST ROSE RD TO LONE RD	19	26,782	268	
616+95	-	630+37	STH 80	LONE RD TO MINE RD	24	5,303	53	
630+37	-	669+71	STH 80	MINE RD TO PRAIRIE RD	19	13,455	135	
669+71	-	696+18	STH 80	PRAIRIE RD TO PATCH RD	58	10,252	103	
696+18	-	722+61	STH 80	PATCH RD TO DEBUHR LN	16	8,967	90	
722+61	-	749+15	STH 80	DEBUHR LN TO CENTER DRIVE RD	22	9,348	93	
749+15	-	814+94	STH 80	CENTER DRIVE RD TO BLOCKHOUSE RD WEST	21	22,377	224	
814+94	-	849+66	STH 80	BLOCKHOUSE RD WEST TO BLOCKHOUSE RD SOUTH	20	11,884	119	
849+66	-	851+31	STH 80	BLOCKHOUSE RD SOUTH TO BLOCKHOUSE RD NORTH	20	793	8	
851+31	-	872+26	STH 80	BLOCKHOUSE RD NORTH TO COLLEGE FARM RD	47	8,364	84	
872+26	-	885+45	STH 80	COLLEGE FARM RD TO USH 151	42	4,688	47	
894+28	-	904+54	STH 80	USH 151 TO ENTERPRISE DR	102	3,623	36	
904+54	-	919+93	STH 80	ENTERPRISE DR TO PLEASANT VALLEY RD	21	7,199	72	
919+93	-	944+97	STH 80	PLEASANT VALLEY RD TO KNOLL WOOD WAY	28	8,584	86	
944+97	-	957+11	STH 80	KNOLL WOOD WAY TO B-22-007	76	4,379	44	
957+80	-	959+85	STH 80	B-22-007 TO BUSINESS 151	87	927	9	
				TOTAL	**712**	**160,839**	**1,610**	

ALL ITEMS CATEGORY 0010 UNLESS NOTED

REMOVING CURB & GUTTER

CATEGORY	INTERSECTION	LOCATION	204.0150 REMOVING CURB & GUTTER LF	REMARKS
0010	BLOCKHOUSE RD SOUTH	RT	54	
0010	BLOCKHOUSE RD SOUTH	LT	70	
0010	BLOCKHOUSE RD NORTH	RT	73	
0010	BLOCKHOUSE RD NORTH	LT	50	
	CATEGORY 0010 SUBTOTAL		247	
0050	STH 81	RT	63	
0050	STH 81	LT	79	
0050	PATCH RD	RT	57	
0050	PATCH RD	LT	68	
	CATEGORY 0050 SUBTOTAL		267	
		TOTAL	**514**	

REMOVING GUARDRAIL

STATION		STATION	LOCATION	204.0165 REMOVING GUARDRAIL LF	REMARKS
666+70	-	667+70	RT	50.0	
801+42	-	802+67	RT	325.0	
815+28	-	817+15	RT	100.0	
816+99	-	817+61	LT	100.0	
847+33	-	8'BS'+50	LT	392.5	
		8'BS'+75	RT	205.0	
		11'BN'+75	RT	267.5	
928+04	-	934+10	LT	425.0	
956+96	-	957+15	RT	175.0	
957+80	-	958+70	RT	200.0	
956+94	-	957+15	LT	87.5	
957+78	-	958+68	LT	87.5	
			TOTAL	**2,415.0**	

ALL ITEMS CATEGORY 0010 UNLESS NOTED

3

3

EARTHWORK SUMMARY

LOCATION	205.0100 EXCAVATION COMMON (1) CUT (2) CY	EBS EXCAV. (3) CY	SALVAGED/UNUSABLE PAVEMENT MATERIAL (2) CY	AVAILABLE MATERIAL (4) CY	REDUCED EBS IN FILL (5) FACTOR 0.80 CY	EBS BACKFILL (5) FACTOR 1.33 CY	205.0200 EXCAVATION ROCK (5) CY	EXPANDED ROCK (6) FACTOR 1.10 CY	UNEXPANDED FILL CY	EXPANDED FILL (7) FACTOR 1.3 CY	MASS ORDINATE +/- (8) CY	WASTE CY	208.0100 BORROW CY	REMARKS
PRE-STAGE 1 WIDENING	525	0	0	525	0	0	0	0	818	1,063	-538	0	538	
SUBTOTAL	525	0	0	525	0	0	0	0	818	1,063	-538	0	538	
STH 80/STH 81 RAB	16,332	224	2,507	13,825	0	0	0	0	4,263	5,542	8,283	8,283	0	
STAGE 1 WIDENING	533	0	0	533	0	0	0	0	339	441	92	92	0	
STAGE 2 WIDENING REMOVALS	818	0	0	818	0	0	0	0	0	0	818	818	0	
STAGE 3 WIDENING REMOVALS	339	0	0	339	0	0	0	0	0	0	339	339	0	
SUBTOTAL	18,022	224	2,507	15,515	0	0	0	0	4,602	5,983	9,532	9,532	0	
TOTAL	**18,771**		**2,507**	**16,040**	**0**	**0**	**0**	**0**	**5,420**	**7,046**	**8,994**	**9,532**	**538**	

1) COMMON EXCAVATION IS THE SUM OF THE CUT AND EBS EXCAVATION COLUMNS.
2) SALVAGED/UNUSABLE PAVEMENT MATERIAL IS INCLUDED IN CUT.
3) EBS EXCAVATION IS TO BE BACKFILLED WITH SELECT CRUSHED MATERIAL. MATERIAL EXCAVATED FROM EBS IS NOT TO BE USED AS FILL ELSEWHERE ON THE PROJECT.
4) AVAILABLE MATERIAL = CUT - SALVAGED/UNUSABLE PAVEMENT MATERIAL.
5) ROCK EXCAVATION ITEM NUMBER 205.0200.
6) EXPANDED ROCK: FACTOR = 1.10
7) EXPANDED FILL: FACTOR = 1.30; EXPANDED FILL = (UNEXPANDED FILL - ROCK * ROCK FACTOR) * FILL FACTOR
8) THE MASS ORDINATE + OR - QTY CALCULATED FOR THE DIVISION. PLUS QUANTITY INDICATES AN EXCESS OF MATERIAL WITHIN THE DIVISION. MINUS INDICATES A SHORTAGE OF MATERIAL WITHIN THE DIVISION.

3

PREPARING FOUNDATION ITEMS

CATEGORY	STA	STA	LOCATION	211.0101 PREPARE FOUNDATION FOR ASPHALTIC PAVING (PROJECT) EACH	211.04 PREPARE FOUNDATION FOR ASPHALTIC SHOULDERS STA	REMARKS
0010	499+22 - 880+73			1	--	
	911+97 - 919+25					
	CATEGORY 0010 SUBTOTAL			1	0	
0030	500+21 - 534+89		RT	--	35	
0030	499+96 - 534+87		LT	--	35	
0030	540+14 - 628+24		RT	--	88	
0030	540+51 - 615+99		LT	--	75	
0030	617+68 - 628+12		LT	--	10	
0030	631+14 - 688+72		RT	--	58	
0030	632+79 - 699+04		LT	--	66	
0030	670+64 - 688+72		LT	--	18	
0030	704+12 - 813+97		LT	--	110	
0030	704+12 - 722+20		RT	--	18	
0030	723+32 - 747+50		RT	--	24	
0030	749+76 - 847+74		RT	--	98	
0030	822+42 - 848+08		LT	--	26	
0030	852+37 - 871+01		LT	--	19	
0030	851+88 - 868+67		RT	--	17	
0030	875+82 - 884+68		LT	--	9	
0030	873+41 - 882+58		RT	--	9	
0030	920+72 - 944+53		LT	--	24	
0030	917+39 - 953+94		RT	--	37	
0030	945+84 - 948+36		LT	--	3	
	CATEGORY 0030 SUBTOTAL			**0**	**779**	
			TOTAL	**1**	**779**	

BASE AGGREGATE SUMMARY

CATEGORY	STATION	STATION	HWY	LOCATION	305.0110 BASE AGGREGATE DENSE 3/4-INCH TON	305.0120 BASE AGGREGATE DENSE 1 1/4-INCH TON	312.0110 SELECT CRUSHED MATERIAL TON	REMARKS
0050	692+18	- 700+92	STH 80	ROUNDABOUT	183	12,500	13,440	
0050			STH 80	PRE-STAGE 1 WIDENING	86	1,500	--	
0050			STH 80	STAGE 1 WIDENING	89	1,500	--	
0050	UNDISTRIBUTED		STH 80	EBS LOCATIONS	--	--	4,510	
				CATEGORY 0050 SUBTOTAL	358	15,500	17,950	
				TOTAL	**358**	**15,500**	**17,950**	

3

3

ASPHALT PAVEMENT SUMMARY

CATEGORY	STATION		STATION	HWY	LOCATION	AREA SY	LOWER LAYER DEPTH IN	UPPER LAYER DEPTH IN	455.0605 TACK COAT GAL	460.6223 HMA PAVEMENT 3 S MT 58-28 TON	460.6224 HMA PAVEMENT 4 S MT 58-28 TON	460.6424 HMA PAVEMENT 4 H MT 58-28 TON	465.0315 ASPHALTIC FLUMES SY	465.0120 ASPHALTIC SURFACE DRIVEWAYS AND FIELD ENTRANCES TON	465.0105 ASPHALTIC SURFACE TON	465.0125 ASPHALTIC SURFACE TEMPORARY TON	465.0425 ASPHALTIC SHOULDER RUMBLE STRIPS 2-LANE RURAL* LF	465.0475 ASPHALT CENTER LINE RUMBLE STRIPS 2-LANE RURAL LF	REMARKS
0010	499+18	-	510+63	STH 80	SOUTH PROJECT LIMIT TO BREWER LN	3,817	1.75	1.75	458	--	748	--	--	11	--	--	--	--	
0010	510+63	-	537+62	STH 80	BREWER LN TO ST ROSE RD	10,096	1.75	1.75	1,212	--	1,979	--	--	--	--	--	--	2,299	
0010	537+62	-	616+95	STH 80	ST ROSE RD TO LONE RD	26,783	1.75	1.75	3,214	--	5,249	--	--	11	--	--	--	6,973	
0010	616+95	-	630+37	STH 80	LONE RD TO MINE RD	5,304	1.75	1.75	636	--	1,040	--	--	--	--	--	--	942	
0010	630+37	-	669+71	STH 80	MINE RD TO PRAIRIE RD	13,595	1.75	1.75	1,631	--	2,665	--	--	5	--	--	--	3,134	
0010	669+71	-	688+76	STH 80	PRAIRIE RD TO ROUNDABOUT	7,779	1.75	1.75	933	--	1,525	--	--	5	--	--	--	--	
0010	704+34	-	722+61	STH 80	ROUNDABOUT TO DEBUHR LN	6,247	1.75	1.75	750	--	1,224	--	--	--	--	--	--	--	
0010	722+61	-	749+15	STH 80	DEBUHR LN TO CENTER DRIVE RD	9,348	1.75	1.75	1,122	--	1,832	--	--	22	--	--	--	2,254	
0010	749+15	-	814+94	STH 80	CENTER DRIVE RD TO BLOCKHOUSE RD WEST	22,615	1.75	1.75	2,714	--	4,433	--	--	11	--	--	--	5,979	
0010	814+94	-	849+66	STH 80	BLOCKHOUSE RD WEST TO BLOCKHOUSE RD SOUTH	12,216	1.75	1.75	1,466	--	2,394	--	--	--	--	--	--	3,072	
0010	849+66	-	851+31	STH 80	BLOCKHOUSE RD SOUTH TO BLOCKHOUSE RD NORTH	867	1.75	1.75	104	--	170	--	--	--	--	--	--	--	
0010	851+31	-	872+26	STH 80	BLOCKHOUSE RD NORTH TO COLLEGE FARM RD	8,668	1.75	1.75	1,040	--	1,699	--	--	--	--	--	--	1,695	
0010	872+26	-	885+45	STH 80	COLLEGE FARM RD TO USH 151	4,773	1.75	1.75	573	--	935	--	--	--	--	--	--	--	
0010	894+28	-	904+54	STH 80	USH 151 TO ENTERPRISE DR	4,079	1.75	1.75	490	--	800	--	--	--	--	--	--	--	
0010	904+54	-	919+93	STH 80	ENTERPRISE DR TO PLEASANT VALLEY RD	7,883	1.75	1.75	946	--	1,545	--	--	--	--	--	--	--	
0010	919+93	-	944+97	STH 80	PLEASANT VALLEY RD TO KNOLL WOOD WAY	8,583	1.75	1.75	1,030	--	1,682	--	--	11	--	--	--	1,504	
0010	944+97	-	957+11	STH 80	KNOLL WOOD WAY TO B-22-007	4,649	1.75	1.75	558	--	911	--	--	5	--	--	--	1,124	
0010	957+80	-	959+85	STH 80	B-22-007 TO BUSINESS 151	1,018	1.75	1.75	122	--	200	--	--	--	--	--	--	--	
0010					UNDISTRIBUTED	1,610	--	--	113	--	--	--	--	--	180	--	--	--	
	CATEGORY 0010 SUBTOTAL								19,112	0	31,031	0	0	81	180	0	0	28,976	
0030	499+18	-	510+63	STH 80	SOUTH PROJECT LIMIT TO BREWER LN	509	1.75	1.75	61		100	--	--	--	--	--	1,584	--	
0030	510+63	-	537+62	STH 80	BREWER LN TO ST ROSE RD	1,200	1.75	1.75	144	--	235	--	--	--	--	--	3,012	--	
0030	537+62	-	616+95	STH 80	ST ROSE RD TO LONE RD	3,526	1.75	1.75	423	--	691	--	--	--	--	--	11,536	--	
0030	616+95	-	630+37	STH 80	LONE RD TO MINE RD	596	1.75	1.75	72	--	117	--	--	--	--	--	1,647	--	
0030	630+37	-	669+71	STH 80	MINE RD TO PRAIRIE RD	1,748	1.75	1.75	210	--	343	--	--	--	--	--	5,795	--	
0030	669+71	-	688+76	STH 80	PRAIRIE RD TO ROUNDABOUT	847	1.75	1.75	102	--	166	--	--	--	--	--	1,388	--	
0030	704+34	-	722+61	STH 80	ROUNDABOUT TO DEBUHR LN	812	1.75	1.75	97	--	159	--	--	--	--	--	2,602	--	
0030	722+61	-	749+15	STH 80	DEBUHR LN TO CENTER DRIVE RD	1,180	1.75	1.75	142	--	231	--	--	--	--	--	3,430	--	
0030	749+15	-	814+94	STH 80	CENTER DRIVE RD TO BLOCKHOUSE RD WEST	2,686	1.75	1.75	322	--	527	--	--	--	--	--	9,637	--	
0030	814+94	-	849+66	STH 80	BLOCKHOUSE RD WEST TO BLOCKHOUSE RD SOUTH	1,212	1.75	1.75	145	--	238	--	--	--	--	--	4,297	--	
0030	849+66	-	851+31	STH 80	BLOCKHOUSE RD SOUTH TO BLOCKHOUSE RD NORTH	0	1.75	1.75	0	--	0	--	--	--	--	--	188	--	
0030	851+31	-	872+26	STH 80	BLOCKHOUSE RD NORTH TO COLLEGE FARM RD	628	1.75	1.75	75	--	123	--	--	--	--	--	2,297	--	
0030	872+26	-	885+45	STH 80	COLLEGE FARM RD TO USH 151	501	1.75	1.75	60	--	98	--	--	--	--	--	2,110	--	
0030	894+28	-	904+54	STH 80	USH 151 TO ENTERPRISE DR	0	1.75	1.75	0	--	0	--	--	--	--	--	340	--	
0030	904+54	-	919+93	STH 80	ENTERPRISE DR TO PLEASANT VALLEY RD	0	1.75	1.75	0	--	0	--	--	--	--	--	2,167	--	
0030	919+93	-	944+97	STH 80	PLEASANT VALLEY RD TO KNOLL WOOD WAY	1,525	1.75	1.75	183	--	299	--	--	--	--	--	3,262	--	
0030	944+97	-	957+11	STH 80	KNOLL WOOD WAY TO B-22-007	270	1.75	1.75	32	--	53	--	--	--	--	--	1,759	--	
0030	957+80	-	959+85	STH 80	B-22-007 TO BUSINESS 151	91	1.75	1.75	11	--	18	--	--	--	--	--	--	--	
	CATEGORY 0030 SUBTOTAL								2,079	0	3,398	0	0	0	0	0	57,054	0	
0050	688+76	-	694+50	STH 80	S ROUNDABOUT APPROACH	2,270	3.25	2.25	114	413	--	286	4	10	--	--	1,148	--	
0050	698+40	-	704+34	STH 80	N ROUNDABOUT APPROACH	2,811	3.25	2.25	141	512	--	354	--	--	--	--	1,188	--	
0050	11'PA'+15	-	18'PA+17	PATCH RD	WEST ROUNDABOUT APPROACH	2,431	3.25	2.25	122	442	--	306	24	--	--	--	--	--	
0050	22'PA'+51	-	29'PA'+25	STH 81	EAST ROUNDABOUT APPROACH	2,738	3.25	2.25	137	498	--	345	19	--	--	--	--	--	
0050				STH 80	ROUNDABOUT PRESTAGE 1	2,456	2.00	1.75	123	--	--	--	--	--	--	516	--	--	
0050				STH 80	ROUNDABOUT STAGE 1	2,482	2.00	1.75	124	--	--	--	--	--	--	521	--	--	
	CATEGORY 0050 SUBTOTAL								761	1,865	0	1,291	47	10	0	1,037	2,336	0	
					TOTAL	**158,319**			**21,952**	**1,865**	**34,429**	**1,291**	**47**	**91**	**180**	**1,037**	**59,390**	**28,976**	

*ALL SHOULDER RUMBLE STRIPS ARE TYPE 1

3

3

PWL MIXTURE USE TABLE

THE FOLLOWING ACCEPTANCE CRITERIA ARE APPLICABLE FOR THIS PROJECT:

LOCATION	STATION	MIXTURE USE	UNDERLYING SURFACE	BID ITEMS	TONS	THICKNESS	QUALITY MANAGEMENT PROGRAM TO BE USED FOR: MIXTURE ACCEPTANCE	DENSITY ACCEPTANCE
FIRST LIFT								
12' DRIVING LANE	499+18 TO 688+76 704+34 TO 885+45 894+28 TO 957+11 957+80 TO 959+85	LOWER LAYER	MILLED EXISTING HMA SURFACE	4 MT 58-28 S	11,180	1.75"	PWL INCENTIVE AIR VOIDS HMA PAVEMENT 460.2010	INCENTIVE DENSITY PWL HMA PAVEMENT 460.2005
5' SHOULDER	499+18 TO 688+76 704+34 TO 885+45 894+28 TO 957+11 957+80 TO 959+85	LOWER LAYER	MILLED EXISTING HMA SURFACE	4 MT 58-28 S	4,658	1.75"	PWL INCENTIVE AIR VOIDS HMA PAVEMENT 460.2010	ACCEPTANCE TESTING BY THE DEPARTMENT; NOT ELIGIBLE FOR INCENTIVE
12' DRIVING LANE	688+76 TO 694+60 698+60 TO 704+34	LOWER LAYER	BASE AGGREGATE DENSE	4 MT 58-28 H	382	2.25"	QMP AS PER SS 460	INCENTIVE DENSITY HMA PAVEMENT 460.2000
5' SHOULDER	688+76 TO 694+60 698+60 TO 704+34	LOWER LAYER	BASE AGGREGATE DENSE	4 MT 58-28 H	159	2.25"	QMP AS PER SS 460	INCENTIVE DENSITY HMA PAVEMENT 460.2000
12' DRIVING LANE	11'PA'+16 TO 18'PA'+96 22'PA'+83 TO 29'PA'+25	LOWER LAYER	BASE AGGREGATE DENSE	4 MT 58-28 S	235	2.25"	QMP AS PER SS 460	INCENTIVE DENSITY HMA PAVEMENT 460.2000
5' SHOULDER	11'PA'+16 TO 18'PA'+96 22'PA'+83 TO 29'PA'+25	LOWER LAYER	BASE AGGREGATE DENSE	4 MT 58-28 S	98	2.25"	QMP AS PER SS 460	INCENTIVE DENSITY HMA PAVEMENT 460.2000

PWL MIXTURE USE TABLE (CONTINUED)

THE FOLLOWING ACCEPTANCE CRITERIA ARE APPLICABLE FOR THIS PROJECT:

LOCATION	STATION	MIXTURE USE	UNDERLYING SURFACE	BID ITEMS	TONS	THICKNESS	QUALITY MANAGEMENT PROGRAM TO BE USED FOR: MIXTURE ACCEPTANCE	DENSITY ACCEPTANCE
SECOND LIFT								
12' DRIVING LANE	499+18 TO 688+76 704+34 TO 885+45 894+28 TO 957+11 957+80 TO 959+85	SURFACE LAYER	4 MT 58-28 S	4 MT 58-28 S	11,180	1.75"	PWL INCENTIVE AIR VOIDS HMA PAVEMENT 460.2010	INCENTIVE DENSITY PWL HMA PAVEMENT 460.2005
5' SHOULDER	499+18 TO 688+76 704+34 TO 885+45 894+28 TO 957+11 957+80 TO 959+85	SURFACE LAYER	4 MT 58-28 S	4 MT 58-28 S	4,658	1.75"	PWL INCENTIVE AIR VOIDS HMA PAVEMENT 460.2010	ACCEPTANCE TESTING BY THE DEPARTMENT; NOT ELIGIBLE FOR INCENTIVE
12' DRIVING LANE	688+76 TO 694+60 698+60 TO 704+34	LOWER LAYER	BASE AGGREGATE DENSE	3 MT 58-28 S	552	3.25"	QMP AS PER SS 460	INCENTIVE DENSITY HMA PAVEMENT 460.2000
5' SHOULDER	688+76 TO 694+60 698+60 TO 704+34	LOWER LAYER	BASE AGGREGATE DENSE	3 MT 58-28 S	230	3.25"	QMP AS PER SS 460	INCENTIVE DENSITY HMA PAVEMENT 460.2000
12' DRIVING LANE	11'PA'+16 TO 18'PA'+96 22'PA'+83 TO 29'PA'+25	LOWER LAYER	BASE AGGREGATE DENSE	3 MT 58-28 S	339	3.25"	QMP AS PER SS 460	INCENTIVE DENSITY HMA PAVEMENT 460.2000
5' SHOULDER	11'PA'+16 TO 18'PA'+96 22'PA'+83 TO 29'PA'+25	LOWER LAYER	BASE AGGREGATE DENSE	3 MT 58-28 S	141	3.25"	QMP AS PER SS 460	INCENTIVE DENSITY HMA PAVEMENT 460.2000

3

CONCRETE PAVEMENT ITEMS

CATEGORY	STATION		STATION	415.0085 CONCRETE PAVEMENT 8 1/2-INCH SY	416.0512 CONCRETE TRUCK APRON 12-INCH SY	405.0100 COLORING CONCRETE WISDOT RED CY	415.4100 CONCRETE PAVEMENT JOINT FILLING SY	REMARKS
0050	692+18	-	700+92	3166	1468	489	4577	ROUNDABOUT
			TOTAL	**3,166**	**1,468**	**489**	**4,577**	

HMA PAVEMENT PWL, TEST STRIP

STATION	TO	STATION	LOCATION	460.0105.S HMA PAVEMENT PWL TEST STRIP VOLUMETRICS EACH	460.0110.S HMA PAVEMENT PWL TEST STRIP DENSITY EACH	REMARKS
499+18	-	959+85	BINDER LIFT ON MILLED SURFACE	1	1	
499+18	-	959+85	SURFACE LIFT ON MILLED SURFACE	--	1	
			ITEM TOTALS	**1**	**2**	

ALL ITEMS CATEGORY 0010 UNLESS NOTED

3

CURB & GUTTER ITEMS

CATEGORY	STATION		STATION	601.0409 CONCRETE CURB & GUTTER 30-INCH TYPE A LF	601.0413 CONCRETE CURB & GUTTER 6-INCH SLOPED 30-INCH TYPE G LF	601.0553 CONCRETE CURB & GUTTER 4-INCH SLOPED 36-INCH TYPE D LF	601.0580 CONCRETE CURB & GUTTER 4-INCH SLOPED 36-INCH TYPE R LF	SPV.0090.03 CONCRETE CURB & GUTTER 2-INCH SLOPED 36-INCH LF	REMARKS
0010	BLOCKHOUSE RD SOUTH			--	--	--	--	135	
0010	BLOCKHOUSE RD NORTH			--	--	--	--	126	
	CATEGORY 0010 SUBTOTAL			0	0	0	0	261	
0050	692+18	-	694+11	--	--	349	--	--	
0050	694+58	-	695+80	240	--	--	--	--	
0050	0'CIR'+00	-	4'CIR'+08	--	--	--	396	--	
0050	21'PA'+69	-	25'PA'+37	122	90	526	--	--	
0050	16'PA'+48	-	20'PA'+02	238	--	475	--	--	
0050	697+46	-	701+05	226	--	540	--	--	
0050	NE QUAD ROUNDABOUT			--	270	--	--	--	
0050	NW QUAD ROUNDABOUT			--	281	--	--	--	
0050	SE QUAD ROUNDABOUT			--	261	--	--	--	
0050	SW QUAD ROUNDABOUT			--	295	--	--	--	
	CATEGORY 0050 SUBTOTAL			826	1197	1890	396	0	
			TOTAL	**826**	**1,197**	**1,890**	**396**	**261**	

CONCRETE SIDEWALK

CATEGORY	STATION		STATION	602.0410 CONCRETE SIDEWALK 5-INCH SF	REMARKS
0050	692+18	-	700+92	26,510	ROUNDABOUT
			TOTAL	**26,510**	

CONCRETE MEDIAN NOSE ITEMS

CATEGORY	STATION	LOCATION	620.0300 CONCRETE MEDIAN SLOPED NOSE SF	REMARKS
0050	692+28	LT	70	TYPE 1
0050	694+03	LT	70	TYPE 1
0050	694+67	LT	70	TYPE 1
0050	695+74	LT	22	TYPE 2
0050	697+50	LT	22	TYPE 2
0050	700+98	LT	70	TYPE 1
0050	695'SP'+77	RT	22	TYPE 2
0050	697'SP'+56	RT	22	TYPE 2
0050	16'PA'+56	LT	70	TYPE 1
0050	19'PA'+94	LT	22	TYPE 2
0050	21'PA'+70	LT	22	TYPE 2
0050	25'PA'+29	LT	70	TYPE 1
0050	20'PW'+00	RT	22	TYPE 2
0050	21'PW'+81	RT	22	TYPE 2
		TOTAL	**140**	

3

CRASH CUSHIONS

LOCATION	STAGE	614.0905 CRASH CUSHIONS TEMPORARY EACH	BACK WIDTH FEET	OBJECT MARKING PATTERN	CRASH TEST LEVEL	TRAFFIC DIRECTION	TRAFFIC LOCATION	CRASH CUSHION SHIELDS
849+89.15	2	2	2	OM-3R	TL-3	UNDIRECTIONAL	RT	TEMPORARY BARRIER, SIGN PLATE W05-58L
851+51.82	2	2	2	OM-3R	TL-3	UNDIRECTIONAL	LT	TEMPORARY BARRIER, SIGN PLATE W05-58L
	TOTAL	**4**						

ALL ITEMS CATEGORY 0010 UNLESS NOTED

CONCRETE BARRIER TEMPORARY ITEMS

STA	TO	STA	OFFSET ALIGN	603.8000 CONCRETE BARRIER TEMPORARY PRECAST DELIVERED LF	603.8125 CONCRETE BARRIER TEMPORARY PRECAST INSTALLED LF	REMARKS
STAGE: BOX CULVERT						
84650		851+36	RT	486	486	BOX CULVERT
849+96.5		852+00	LT	138	138	BOX CULVERT
STAGE: BOX CULVERT TOTAL				624	624	
PROJECT TOTAL				**624**	**624**	

ALL ITEMS CATEGORY 0010 UNLESS NOTED

3

GUARDRAIL ITEMS

STATION	TO	STATION	LOCATION	614.0010 BARRIER SYSTEM GRADING SHAPING FINISHING EACH	614.0305 STEEL PLATE BEAM GUARD CLASS A LF	614.0370 STEEL PLATE BEAM GUARD ENERGY ABSORBING TERMINAL EACH	614.2300 MGS GUARDRAIL 3 LF	614.2350 MGS GUARDRAIL SHORT RADIUS LF	614.2500 MGS THRIE BEAM TRANSITION LF	614.2610 MGS GUARDRAIL TERMINAL EAT EACH	614.2310 MGS GUARDRAIL 3 HS LF	FOR INFORMATION ONLY COMMON EXCAVATION CY	BORROW CY	SALVAGED TOPSOIL SY	EROSION MAT CLASS 1 TYPE A SY	EROSION MAT URBAN CLASS 1 TYPE A SY	FERTILIZER TYPE B CWT	SEEDING MIXTURE NO. 30 LB	SEEDING MIXTURE NO. 75 LB	SEEDING TEMPORARY LB	SEED WATER MGAL	REMARKS
666+70	-	667+70	RT	1	50	1	--	--	--	--		51	33	250	250	--	0.16	5	--	7	6	
799+12	-	802+66	RT	1	--	--	249.0	--	--	2		113	243	757	757	--	0.48	14	--	20	17	
816+71	-	821+27	RT	1	--	2	--	--	--	--		38	136	504	504	--	0.32	9	--	14	11	
817+25	-	822+03	LT	1	--	2	--	--	--	--		39	35	348	348	--	0.22	6	--	9	8	
847+46	-	8'BS'+54	LT	1	--	--	151.5	50	--	2		67	126	577	577	--	0.36	10	--	16	13	
846+76	-	11'BN'+29	RT	1	--	--	178.0	63	--	2	209.5	83	263	982	749	233	0.62	13	1	27	22	
11'BN'+50	-	854+38	RT	1	--	--	200.5	75	--	2		115	28	719	719	--	0.45	13	--	19	16	
7'BS'+90	-	851+95	LT	1	--	--	233.5	46	--	2	54.5	67	51	466	342	124	0.29	6	1	13	10	
928+14	-	934+20	LT	1	--	--	500.0	--	--	2		53	361	1563	1563	--	0.98	28	--	42	35	
955+33	-	957+26	RT	1	--	--	101.0	--	39.4	1		48	56	526	526	--	0.33	9	--	14	12	
957+91	-	958+96	RT	1	--	--	13.0	--	39.4	1		15	21	243	243	--	0.15	4	--	7	5	
955+48	-	957+24	LT	1	--	--	87.5	--	39.4	1		31	36	393	393	--	0.25	7	--	11	9	
957+91	-	958+80	LT	1	--	--	--	--	39.4	1		14	4	37	37	--	0.02	1	--	1	1	
			TOTAL	**13**	**50**	**5**	**1,714.00**	**234.00**	**157.60**	**16**	**264**	**734**	**1393**	**7366**	**7009**	**357**	**4.64**	**125**	**2**	**200**	**165**	

ALL ITEMS CATEGORY 0010 UNLESS NOTED

3

PIPE UNDERDRAINS

CATEGORY	STATION	TO	STATION	OFFSET	SPV.0090.04 PIPE UNDERDRAIN (6-INCH) WITH GEOTEXTILE FABRIC AND AGGREGATE LF	REMARKS
0050	1'CIR'+12	-	4'CIR'+4	LT	106	
0050	697'SB'+22	-	698'SB'+11	LT	100	
0050	697+12	-	697+91	RT	100	
				TOTAL	**306**	

WATER SUMMARY

CATEGORY	LOCATION	624.0100 WATER MGAL	REMARKS
0050	UNDISTRIBUTED	238	
CATEGORY 0050 SUBTOTAL		238	
	TOTAL	**238**	

3

STORM SEWER STRUCTURE SCHEDULE

STRUCTURE	STATION	OFFSET	ALIGN	CASTING HEIGHT INCHES	ADJUSTING RINGS HEIGHT INCHES	RIM ELEVATION	522.1012 APRON ENDWALLS FOR CULVERT PIPE REINFORCED CONCRETE 12-INCH EACH	522.1015 APRON ENDWALLS FOR CULVERT PIPE REINFORCED CONCRETE 15-INCH EACH	611.3901 INLETS MEDIAN 1 GRATE EACH	611.3003 INLETS 3-FT DIAMETER EACH	611.3004 INLETS 4-FT DIAMETER EACH	611.0530 MANHOLE COVERS TYPE J EACH	611.0600 INLET COVERS TYPE A EACH	611.0627 INLET COVERS TYPE HM EACH	611.0633 INLET COVERS TYPE HM-GJ-S EACH	611.0652 INLET COVERS TYPE T EACH	611.0642 INLET COVERS TYPE MS EACH	633.5200 MARKERS CULVERT END EACH	650.4000 CONSTRUCTION STAKING STORM SEWER EACH	REMARKS
1A	18+91.25	1.5 LT	PA	10	6	1010.88	--	--	--	--	1	--	1	--	--	--	--	--	1	
1B	19+69.25	1.5 LT	PA	10	6	1011.81	--	--	--	--	1	--	1	--	--	--	--	--	1	
1C	19+28.73	1.5 RT	PW	10	6	1011.33	--	--	--	--	1	--	1	--	--	--	--	--	1	
1D	19+23.81	35.23' LT	PW			1006.48	1	--	--	--	--	--	--	--	--	--	--	1	1	
2A	0+02.75	1.0 RT	SE FLANGE	10	6	1011.64	--	--	--	--	1	--	--	--	1	--	--	--	1	
2B	0+54.00	21.3 LT	CIR	10	6	1011.91	--	--	--	--	1	--	1	--		--	--	--	1	
2C	0+54.00	1.7 RT	CIR	10	6	1011.86	--	--	--	--	1	--	--	--	--	1	--	--	1	
2D	0+39.25	1.7 RT	CIR	10	6	1011.87	--	--	--	--	1	--	--	--	--	1	--	--	1	
2E	22+54.50	1.5 LT	PA	10	6	1010.80	--	--	--	--	1	--	1	--	--	--	--	--	1	
2F	23+13.23	1.5 RT	PW	10	6	1009.90	--	--	--	--	1	--	--	1	--	--	--	--	1	
2G	23+21.86	28.21 LT	PW			1005.61	--	1	--	--	--	--	--	--	--	--	--	1	1	
3A	697+55.5	1.5 LT	NB	10	6	1012.61	--	--	--	--	1	--	1	--	--	--	--	--	1	
3B	697+60.75	1.5 RT	SB	10	6	1012.60	--	--	--	--	1	--	1	--	--	--	--	--	1	
3C	0+03.75	1.0 RT	NW FLANGE	10	6	1012.32	--	--	--	--	1	--	--	--	1	--	--	--	1	
3D	0+16.83	27.59 RT	NW FLANGE			1007.36	1	--	--	--	--	--	--	--	--	--	--	1	1	
4A	697+88.75	1.5 LT	NB	10	6	1012.76	--	--	--	--	1	--	1	--	--	--	--	--	1	
4B	698+11.00	1.5 RT	SB	10	6	1012.83	--	--	--	--	1	--	1	--	--	--	--	--	1	
4C	698+10.21	50.42 LT	SB			1008.19	1	--	--	--	--	--	--	--	--	--	--	1	1	
5A	0+72.75	1.0 RT	NE FLANGE	10	6	1012.30	--	--	--	--	1	--	--		1	--	--	--	1	
5B	0+74.04	15.11 RT	NE FLANGE			1008.95	1	--	--	--	--	--	--	--	--	--	--	1	1	
6A	694+17.15	30.44 LT	SB			1010.62	1	--	--	--	--	--	--	--	--	--	--	1	1	
6B	695+28.73	29.5 LT	SB	8.875	6	1011.50	--	--	--	1	--	1	--	--	--	--	--	--	1	
6C	695+81.39	39.7 LT	SB			1007.28	--	--	1	--	--	--	--	--	--	--	1	--	1	
6D	0+49.61	12.3 RT	SW FLANGE	8.875	6	1010.32	--	--	1	--	--	--	--	--	--	--	1	--	1	
6E	18+88.35	30.44 LT	PA			1008.69														
						PROJECT TOTAL	5	1	2	1	15	1	9	1	3	2	2	6	24	

ALL STORM SEWER CAT 0050

3

STORM SEWER PIPE SCHEDULE

CATEGORY	FROM -	TO	LOCATION	INLET ELEV.	OUTLET ELEV.	SLOPE (%)	608.0312 STORM SEWER PIPE REINFORCED CONCRETE CLASS III 12-INCH LF	608.0315 STORM SEWER PIPE REINFORCED CONCRETE CLASS III 15-INCH LF	608.0412 STORM SEWER PIPE REINFORCED CONCRETE CLASS IV 12-INCH LF	608.0512 STORM SEWER PIPE REINFORCED CONCRETE CLASS V 12-INCH LF	JOINT TIES* EACH	REMARKS
0050	1A	1C	PATCH RD	1006.07	1005.87	0.49	41	--	--	--	--	
0050	1B	1C	PATCH RD	1006.16	1005.95	0.49	43	--	--	--	--	
0050	1C	1D	PATCH RD	1005.5	1005.31	0.51	37	--	--	--	6	
0050	2A	2B	STH 80	1006.23	1005.99	0.50	47	--	--	--	--	
0050	2B	2C	STH 80	1005.85	1005.73	0.50	23	--	--	--	--	
0050	2C	2D	STH 80	1005.58	1005.51	0.50	14	--	--	--	--	
0050	2D	2E	STH 81	1005.35	1004.69	0.40	--	166	--	--	--	
0050	2E	2F	STH 81	1004.54	1004.33	0.40	--	54	--	--	--	
0050	2F	2G	STH 81	1004.33	1004.17	0.50	--	31	--	--	6	
0050	3A	3B	STH 80/81	1007.26	1007.08	0.50	36	--	--	--	--	
0050	3B	3C	STH 80/81	1006.88	1006.72	0.56	29	--	--	--	--	
0050	3C	3D	STH 80/81	1006.47	1006.2	0.96	29	--	--	--	6	
0050	4A	697+88.75	STH 80/81	1007.42	1007.28	0.47	30	--	--	--	--	
0050	4B	698+11.00	STH 80/81	1007.28	1007.02	0.5	52	--	--	--	--	
0050	5A	5B	STH 80/81	1007.87	1007.79	0.57	--	14	--	14	6	
0050	6A	6B	STH 80	1009.45	1009.06	0.36	--	--	108	--	6	
0050	6B	6C	STH 80	1008.8	1008.54	0.50	--	--	52	--	--	
0050	6C	6D	SW FLANGE	1008.11	1008	0.50	--	--	23	--	--	
0050	6D	6E	PATCH RD	1007.95	1007.52	0.38	--	--	112	--	6	
						PROJECT TOTAL	381	265	295	14	36	

ALL STORM SEWER CAT 0050

*FOR BID INFORMATION ONLY

DRIVEWAY CULVERT SUMMARY

CATEGORY	FROM STATION	- TO STATION	LOCATION	INLET ELEV.	INLET OFFSET	OUTLET ELEV.	OUTLET OFFSET	SLOPE (%)	520.1018 APRON ENDWALLS FOR CULVERT PIPE 18-INCH EACH	520.3418 CULVERT PIPE CLASS III-A NON-METAL 18-INCH LF	REMARKS
0050	25'PA'+45	25'PA'+60	PATCH RD	998.15	34.8' RT	997.62	34.7' RT	3.53	2	15	
0050	28'PA'+39	28'PA'+57	PATCH RD	984.31	40.2' LT	983.79	39.6' LT	2.89	2	18	
								PROJECT TOTAL	4	33	

3

EROSION CONTROL SUMMARY

CATEGORY	LOCATION	627.0200 MULCHING SY	628.1905 MOBILIZATIONS EROSION CONTROL EACH	628.1910 MOBILIZATIONS EMERGENCY EROSION CONTROL EACH	628.1504 SILT FENCE LF	628.1520 SILT FENCE MAINTENANCE LF	628.2002 EROSION MAT CLASS I TYPE A SY	628.2006 EROSION MAT URBAN CLASS I TYPE A SY	628.7010 INLET PROTECTION TYPE B EACH	628.7015 INLET PROTECTION TYPE C EACH	628.7504 TEMPORARY DITCH CHECKS LF	628.7555 CULVERT PIPE CHECKS EACH	628.7570 ROCK BAGS EACH	REMARKS
0010	666+03 - 668+54	--	--	--	225	225	291	--	--	--	--	--	--	RT
0010	797+96 - 803+12	--	--	--	526	526	804	--	--	--	--	9	--	RT
0010	816+13 - 817+63	--	--	--	153	153	184	--	--	--	--	--	--	RT
0010	817+12 - 817+75	--	--	--	63	63	77	--	--	--	--	--	--	LT
0010	820+63 - 821+71	--	--	--	113	113	255	--	--	--	--	--	--	RT
0010	821+52 - 822+25	--	--	--	77	77	115	--	--	--	--	--	--	LT
0010	846+63 - 851+85	--	--	--	511	511	239	509	--	--	--	--	--	RT
0010	846+84 - 849+41	--	--	--	374	374	453	--	--	--	--	--	--	LT
0010	848+51 - 852+25	--	--	--	416	416	284	188	--	--	--	--	--	LT
0010	851+72 - 855+50	--	--	--	398	398	400	122	--	--	--	--	--	RT
0010	927+14 - 934+61	--	--	--	739	739	704	--	--	--	--	18	--	LT
0010	955+12 - 957+15	--	--	--	184	184	276	--	--	--	--	--	--	RT
0010	955+36 - 957+24	--	--	--	173	173	255	--	--	--	--	--	--	LT
0010	958+02 - 958+82	--	--	--	99	99	96	--	--	--	--	--	--	RT
0010	958+03 - 958+82	--	--	--	79	79	38	--	--	--	--	--	--	LT
0010	UNDISTRIBUTED	0	3	2	1,037	1,037	1,118	205	0	0	0	7	90	
	CATEGORY 0010 SUBTOTAL	0	3	2	5,167	5,167	5,589	1,024	0	0	0	34	90	
0050	NE RAB QUADRANT	3,900	--	--	844	844	--	--	--	4	--	18	27	
0050	NW RAB QUADRANT	3,000	--	--	1,136	1,136	545	--	--	4	44	27	27	
0050	SW RAB QUADRANT	2,400	--	--	200	200	1,719	--	2	4	45	--	--	
0050	SE RAB QUADRANT	3,100	--	--	576	576	--	--	--	3	--	9	9	
0050	CIRCULATORY	400	--	--	--	--	--	--	--	--	--	--	--	
0050	UNDISTRIBUTED	3,100	6	5	694	694	566	--	1	4	22	14	16	
	CATEGORY 0050 SUBTOTAL	15,900	6	5	3,450	3,450	2,830	--	3	19	111	68	79	
	TOTAL	**15,900**	**9**	**7**	**8,617**	**8,617**	**8,419**	**1,024**	**3**	**19**	**111**	**102**	**169**	

LANDSCAPING SUMMARY

CATEGORY	LOCATION	625.0500 SALVAGED TOPSOIL SY	625.0100 TOPSOIL SY	629.0210 FERTILIZER TYPE B CWT	630.0110 SEEDING MIXTURE NO. 10 LB	630.0180 SEEDING MIXTURE NO. 80 LB	630.0500 SEED WATER MGAL	REMARKS
0050	688+76 - 704+32	19,300	1,930	12	256	3	433	
0050	UNDISTRIBUTED	4,800	480	3	64	1	108	
	TOTAL	**24,100**	**2,410**	**15**	**320**	**4**	**541**	

RIPRAP

CATEGORY	LOCATION	OFFSET	ALIGN	606.0100 RIPRAP LIGHT CY	645.0130 GEOTEXTILE TYPE R SY	REMARKS
0050	18+83	82.3 RT	PA	0.7	4.0	
0050	19+23.8	35.2 LT	PW	1.6	8.0	
0050	23+21.9	28.2 LT	PW	3.6	16.0	
0050	0+16.8	27.6 RT	NW FLANGE	1.2	6.0	
0050	0+74.0	15.1 RT	NE FLANGE	1.8	9.0	
0050	698+09.9	57.17 LT	SP	2.1	10.0	
			TOTAL	**11.0**	**53.0**	

3

SIGNING ITEMS

SIGN NO	SIGN CODE	MESSAGE	SIZE W	SIZE H	634.0614 POSTS WOOD 4X6-INCH X 14-FT EACH	634.0616 POSTS WOOD 4X6-INCH X 16-FT EACH	634.0618 POSTS WOOD 4X6-INCH X 18-FT EACH	634.0622 POSTS WOOD 4X6-INCH X 22-FT EACH	634.0808 POSTS TUBULAR STEEL 2X2-INCH X 8-FT EACH	634.0809 POSTS TUBULAR STEEL 2X2-INCH X 9.5-FT EACH	634.0811 POSTS TUBULAR STEEL 2X2-INCH X 11-FT EACH	637.2210 SIGNS TYPE II REFLECTIVE H SF	637.2230 SIGNS TYPE II REFLECTIVE F SF	638.2102 MOVING SIGNS TYPE II EACH	638.2602 REMOVING SIGNS TYPE II EACH	638.3000 REMOVING SMALL SIGN SUPPORTS EACH	638.4000 MOVING SMALL SIGN SUPPORTS EACH	REMARKS
1M-1	J1-1	JCT 81	-	-	-	1	-	-	-	-	-	-	-	1	-	-	-	
2R-1		NORTH WEST EAST 80 81 81 [UA] [UA] [RT]	-	-	-	-	-	-	-	-	-	-	-	-	1	2	-	
2-2	W2-6	ROUNDABOUT AHEAD	30	30	-	1	-	-	-	-	-	-	6.25	-	-	-	-	
2-3	W15-1	20 MPH	18	18	-	-	-	-	-	-	-	-	2.25	-	-	-	-	INSTALL BELOW 2-2
2-4	D1-62	NORTH WEST 80 81 PATCH RD EAST 81	108	84	-	-	-	2	-	-	-	63.00	-	-	-	-	-	
3M-1	W14-3	NO PASSING ZONE	-	-	-	-	-	-	-	-	-	-	-	1	-	-	1	
3M-2	R2-1	SPEED LIMIT 55	-	-	-	1	-	-	-	-	-	-	-	1	-	-		
3M-3	D2-2	CUBA CITY 4 HAZEL GREEN 9	-	-	-	-	-	-	-	-	-	-	-	1	-	-	2	
3M-4	D1-2	[UA] PLATTEVILLE [LA] DARLINGTON	-	-	-	-	-	-	-	-	-	-	-	1	-	-	2	
3-5	R5-1	DO NOT ENTER	30	30	-	-	-	-	-	-	-	6.25	-	-	-	-	-	INSTALL BEHIND 3M-2
3-6	W3-2	YIELD AHEAD	36	36	-	-	1	-	-	-	-	-	9.00	-	-	-	-	
3-7	R4-7	KEEP RIGHT	24	30	1	-	-	-	-	-	-	5.00	-	-	-	-	-	
3-8	W5-54	IN ROAD OBJECT MARKER	18	18	-	-	-	-	-	-	-	-	2.25	-	-	-	-	INSTALL BELOW 3-7
4M-1	J4-1	SOUTH 80	-	-	-	-	-	-	-	-	-	-	-	1	-	-	1	
4R-2		STOP	-	-	-	-	-	-	-	-	-	-	-	-	1	1	-	
4M-3	R12-53	WIEGHT LIMIT CLASS B	-	-	-	-	-	-	-	-	-	-	-	1	-	-	1	
4R-4		EAST SOUTH 81 80 [LA] [UA]	-	-	-	-	-	-	-	-	-	-	-	-	1	1	-	
4R-5		NORTH WEST EAST 80 81 81 [UA] [UA] [RA]	-	-	-	-	-	-	-	-	-	-	-	-	1	2	-	
4R-6		STOP	-	-	-	-	-	-	-	-	-	-	-	-	1	1	-	
4R-7		SOUTH NORTH WEST 80 80 81 [LA] [RA] [RA]	-	-	-	-	-	-	-	-	-	-	-	-	1	2	-	
4M-8	J4-2	NORTH WEST 80 81	-	-	-	-	-	-	-	-	-	-	-	1	-	-	1	
4-9	R5-1A	WRONG WAY	36	24	-	-	-	-	-	-	-	6.00	-	-	-	-	-	INSTALL BEHIND 4M-1
4-10	D1-2	SOUTH 80 [TR]	48	30	-	-	-	-	-	2	-	10.00	-	-	-	-	-	5' MOUNTING HEIGHT
4-11	R6-1R	ONE WAY	36	12	-	-	-	-	-	-	-	3.00	-	-	-	-	-	INSTALL ABOVE 4-12
4-12	R6-4B	ROUNDABOUT CHEVRON BANK	60	24	-	-	-	-	2	-	-	10.00	-	-	-	-	-	4' MOUNTING HEIGHT

ADDITIONAL QUANTITIES ON NEXT PAGE; ALL SIGNS CAT 0050

3

3

SIGNING ITEMS (CONTINUED)

SIGN NO	SIGN CODE	MESSAGE	SIZE W	SIZE H	634.0614 POSTS WOOD 4X6-INCH X 14-FT EACH	634.0616 POSTS WOOD 4X6-INCH X 16-FT EACH	634.0618 POSTS WOOD 4X6-INCH X 18-FT EACH	634.0622 POSTS WOOD 4X6-INCH X 22-FT EACH	634.0808 POSTS TUBULAR STEEL 2X2-INCH X 8-FT EACH	634.0809 POSTS TUBULAR STEEL 2X2-INCH X 9.5-FT EACH	634.0811 POSTS TUBULAR STEEL 2X2-INCH X 11-FT EACH	637.2210 SIGNS TYPE II REFLECTIVE H SF	637.2230 SIGNS TYPE II REFLECTIVE F SF	638.2102 MOVING SIGNS TYPE II EACH	638.2602 REMOVING SIGNS TYPE II EACH	638.3000 REMOVING SMALL SIGN SUPPORTS EACH	638.4000 MOVING SMALL SIGN SUPPORTS EACH	REMARKS
4-13	R1-2	YIELD	36	31	-	-	-	-	-	-	1	3.88	-	-	-	-	-	7'3" MOUNTING HEIGHT TEMPORARY FLAGS REQ'D
4-15	R1-2	YIELD	36	31	-	-	-	-	-	-	1	3.88	-	-	-	-	-	7'3" MOUNTING HEIGHT TEMPORARY FLAGS REQ'D
4-17	D1-1	PATCH RD [TR]	60	15	-	-	-	-	2	-	-	6.25	-	-	-	-	-	5' MOUNTING HEIGHT
4-18	R6-1R	ONE WAY	36	12	-	-	-	-		-	-	3.00	-	-	-	-	-	INSTALL ABOVE 4-19
4-19	R6-4B	ROUNDABOUT CHEVRON BANK	60	24	-	-	-	-	2	-	-	10.00	-	-	-	-	-	4' MOUNTING HEIGHT
4-20	R1-2	YIELD	36	31	-	-	-	-	-	-	1	3.88	-	-	-	-	-	7'3" MOUNTING HEIGHT TEMPORARY FLAGS REQ'D
4-22	R1-2	YIELD	36	31	-	-	-	-	-	-	1	3.88	-	-	-	-	-	7'3" MOUNTING HEIGHT TEMPORARY FLAGS REQ'D
4-24	R1-2	YIELD	36	31	-	-	-	-	-	-	1	3.88	-	-	-	-	-	7'3" MOUNTING HEIGHT TEMPORARY FLAGS REQ'D
4-26	R1-2	YIELD	36	31	-	-	-	-	-	-	1	3.88	-	-	-	-	-	7'3" MOUNTING HEIGHT TEMPORARY FLAGS REQ'D
4-28	R6-1R	ONE WAY	36	12	-	-	-	-	-	-	-	3.00	-	-	-	-	-	INSTALL ABOVE 4-29
4-29	R6-4B	ROUNDABOUT CHEVRON BANK	60	24	-	-	-	-	2	-	-	10.00	-	-	-	-	-	4' MOUNTING HEIGHT
4-30	D1-2	EAST 81 [TR]	48	30	-	-	-	-	-	2	-	10.00	-	-	-	-	-	5' MOUNTING HEIGHT
4-31	R1-2	YIELD	36	31	-	-	-	-	-	-	1	3.88	-	-	-	-	-	7'3" MOUNTING HEIGHT TEMPORARY FLAGS REQ'D
4-33	R1-2	YIELD	36	31	-	-	-	-	-	-	1	3.88	-	-	-	-	-	7'3" MOUNTING HEIGHT TEMPORARY FLAGS REQ'D
4-35	R6-1R	ONE WAY	36	12	-	-	-	-	-	-	-	3.00	-	-	-	-	-	INSTALL ABOVE 4-36
4-36	R6-4B	ROUNDABOUT CHEVRON BANK	60	24	-	-	-	-	2	-	-	10.00	-	-	-	-	-	4' MOUNTING HEIGHT
4-37	D1-2	NORTH WEST 80 81 [TR]	72	30	-	-	-	-	-	2	-	15.00	-	-	-	-	-	5' MOUNTING HEIGHT

ADDITIONAL QUANTITIES ON NEXT PAGE; ALL SIGNS CAT 0050

3

SIGNING ITEMS (CONTINUED)

SIGN NO	SIGN CODE	MESSAGE	SIZE W	SIZE H	634.0614 POSTS WOOD 4X6-INCH X 14-FT EACH	634.0616 POSTS WOOD 4X6-INCH X 16-FT EACH	634.0618 POSTS WOOD 4X6-INCH X 18-FT EACH	634.0622 POSTS WOOD 4X6-INCH X 22-FT EACH	634.0808 POSTS TUBULAR STEEL 2X2-INCH X 8-FT EACH	634.0809 POSTS TUBULAR STEEL 2X2-INCH X 9.5-FT EACH	634.0811 POSTS TUBULAR STEEL 2X2-INCH X 11-FT EACH	637.2210 SIGNS TYPE II REFLECTIVE H SF	637.2230 SIGNS TYPE II REFLECTIVE F SF	638.2102 MOVING SIGNS TYPE II EACH	638.2602 REMOVING SIGNS TYPE II EACH	638.3000 REMOVING SMALL SIGN SUPPORTS EACH	638.4000 MOVING SMALL SIGN SUPPORTS EACH	REMARKS
4-38	R5-1A	WRONG WAY	36	24	-	-	-	-	-	-	-	6.00	-	-	-	-	-	INSTALL BEHIND 4M-8
5M-1	D1-3	[UA] CUBA CITY [UA] HAZEL GREEN [LA] DARLINGTON]	-	-	-	-	-	-	-	-	-	-	-	1	-	-	2	
5M-2	D2-1	PLATTEVILLE 5	-	-	-	-	-	-	-	-	-	-	-	1	-	-	2	
5M-3	W14-3	NO PASSING ZONE	-	-	-	1	-	-	-	-	-	-	-	1	-	-	-	
5M-4	R2-1	SPEED LIMIT 55	-	-	-	-	-	-	-	-	-	-	-	1	-	-	1	
5-5	R4-7	KEEP RIGHT	24	30	1	-	-	-	-	-	-	5.00	-	-	-	-	-	
5-6	W5-54	IN ROAD OBJECT MARKER	18	18	-	-	-	-	-	-	-	-	2.25	-	-	-	-	INSTALL BELOW 5-5
5-8	R5-1	DO NOT ENTER	30	30	-	-	-	-	-	-	-	6.25	-	-	-	-	-	INSTALL BEHIND 5M-4
6R-1		EAST SOUTH 81 80 [LT] [UA]	-	-	-	-	-	-	-	-	-	-	-	-	1	1	-	
6-2	D1-62	SOUTH 80 EAST 81 PATCH RD	108	84	-	-	-	2	-	-	-	63.00	-	-	-	-	-	
6-3	W2-6	ROUNDABOUT AHEAD	30	30	-	1	-	-	-	-	-	-	6.25	-	-	-	-	
6-4	W13-1	20 MPH	18	18	-	-	-	-	-	-	-	-	2.25	-	-	-	-	INSTALL BELOW 6-3
6R-6	W14-3	NO PASSING ZONE			-	-	-	-	-	-	-	-	-	1	-	-	-	MIN DIST. BTWN PASSING ZONES 792'
7-1	W2-6	ROUNDABOUT AHEAD	30	30	-	1	-	-	-	-	-	-	6.25	-	-	-	-	
7-2	W13-1	20 MPH	18	18	-	-	-	-	-	-	-	-	2.25	-	-	-	-	INSTALL BELOW 7-1
8-1	R5-1	DO NOT ENTER	30	30	-	1	-	-	-	-	-	6.25	-	-	-	-	-	
8-2	R5-1A	WRONG WAY	36	24	-	-	-	-	-	-	-	6.00	-	-	-	-	-	INSTALL BEHIND 4M-3
8-3	R4-7	KEEP RIGHT	24	30	1	-	-	-	-	-	-	5.00	-	-	-	-	-	
8-4	W5-54	IN ROAD OBJECT MARKER	18	18	-	-	-	-	-	-	-	-	2.25	-	-	-	-	INSTALL BELOW 8-3
9M-1	D1-2	[LA] CUBA CITY PLATTEVILLE [RA]	-	-	-	-	-	-	-	-	-	-	-	1	-	-	2	
9R-2		SOUTH NORTH WEST 80 80 81 [LT] [RT] [RT]	-	-	-	-	-	-	-	-	-	-	-	-	1	2	-	
9M-3	J4-1	EAST 81	-	-	-	-	-	-	-	-	-	-	-	1	-	-	1	
9M-4	I55-56	ADOPT A HIGHWAY	-	-	-	-	-	-	-	-	-	-	-	1	-	-	1	
9M-5	I55-56P	SPONSOR NAME	-	-	-	-	-	-	-	-	-	-	-	-	-	-	-	MOVE WITH 9M-4
9M-6	R2-1	SPEED LIMIT 55	-	-	-	-	-	-	-	-	-	-	-	1	-	-	1	
9M-7	D2-1	DARLINGTON 17	-	-	-	-	-	-	-	-	-	-	-	1	-	-	2	
9-8	R4-7	KEEP RIGHT	24	30	1	-	-	-	-	-	-	5.00	-	-	-	-	-	
9-9	W5-54	IN ROAD OBJECT MARKER	18	18	-	-	-	-	-	-	-	-	2.25	-	-	-	-	INSTALL BELOW 9-8
9-10	R5-1A	WRONG WAY	36	24	-	-	-	-	-	-	-	6.00	-	-	-	-	-	INSTALL BEHIND 9M-3

ADDITIONAL QUANTITIES ON NEXT PAGE; ALL SIGNS CAT 0050

3

SIGNING ITEMS (CONTINUED)

SIGN NO	SIGN CODE	MESSAGE	SIZE W	SIZE H	634.0614 POSTS WOOD 4X6-INCH X 14-FT EACH	634.0616 POSTS WOOD 4X6-INCH X 16-FT EACH	634.0618 POSTS WOOD 4X6-INCH X 18-FT EACH	634.0622 POSTS WOOD 4X6-INCH X 22-FT EACH	634.0808 POSTS TUBULAR STEEL 2X2-INCH X 8-FT EACH	634.0809 POSTS TUBULAR STEEL 2X2-INCH X 9.5-FT EACH	634.0811 POSTS TUBULAR STEEL 2X2-INCH X 11-FT EACH	637.2210 SIGNS TYPE II REFLECTIVE H SF	637.2230 SIGNS TYPE II REFLECTIVE F SF	638.2102 MOVING SIGNS TYPE II EACH	638.2602 REMOVING SIGNS TYPE II EACH	638.3000 REMOVING SMALL SIGN SUPPORTS EACH	638.4000 MOVING SMALL SIGN SUPPORTS EACH	REMARKS
9-11	R5-1	DO NOT ENTER	30	30								6.25	-					INSTALL BEHIND 9M-6
10R-1		STOP AHEAD	-	-	-	-	-	-	-	-	-	-	-	-	1	1	-	
10M-2	J1-1	JCT 80	-	-	-	-	-	-	-	-	-	-	-	1	-	-	1	
10R-3		STOP AHEAD	-	-	-	-	-	-	-	-	-	-	-	-	1	1	-	
10M-4	W14-3	NO PASSING ZONE	-	-	-	-	-	-	-	-	-	-	-	1	-	-	1	
10-5	W3-2	YIELD AHEAD	36	36	-	-	1	-	-	-	-	-	9.00	-	-	-	-	
10-6	D1-62	PATCH RD SOUTH NORTH EAST 80 80 81	132	60	-	-	-	3	-	-	-	55.00	-	-	-	-	-	
10-7	W2-6	ROUNDABOUT AHEAD	30	30	-	1	-	-	-	-	-	-	6.25	-	-	-	-	
10-8	W13-1	20 MPH	18	18	-	-	-	-	-	-	-	-	2.25	-	-	-	-	INSTALL BELOW 10-7
		TOTAL			**4**	**8**	**2**	**7**	**10**	**6**	**8**	**374**	**61**	**20**	**10**	**14**	**22**	

ALL SIGNS CAT 0050

3

TRAFFIC CONTROL

CATEGORY	STAGE	DESCRIPTION	EST. SERVICE PERIOD DAYS	643.0300 TRAFFIC CONTROL DRUMS NO	643.0300 TRAFFIC CONTROL DRUMS DAYS	643.0420 TRAFFIC CONTROL BARRICADES TYPE III NO	643.0420 TRAFFIC CONTROL BARRICADES TYPE III DAYS	643.0705 TRAFFIC CONTROL WARNING LIGHTS TYPE A NO	643.0705 TRAFFIC CONTROL WARNING LIGHTS TYPE A DAYS	643.0715 TRAFFIC CONTROL WARNING LIGHTS TYPE C NO	643.0715 TRAFFIC CONTROL WARNING LIGHTS TYPE C DAYS	643.0900 TRAFFIC CONTROL SIGNS NO	643.0900 TRAFFIC CONTROL SIGNS DAYS	643.0910 TRAFFIC CONTROL COVERING SIGNS TYPE I CYCLE	643.0910 TRAFFIC CONTROL COVERING SIGNS TYPE I EACH	643.0920 TRAFFIC CONTROL COVERING SIGNS TYPE II CYCLE	643.0920 TRAFFIC CONTROL COVERING SIGNS TYPE II EACH	643.1050 TRAFFIC CONTROL SIGNS PCMS NO	643.1050 TRAFFIC CONTROL SIGNS PCMS DAYS	643.5000 TRAFFIC CONTROL EACH	646.9000 MARKING REMOVAL LINE 4-INCH LF	646.9100 MARKING REMOVAL LINE 8-INCH LF	643.3105 TEMPORARY MARKING LINE PAINT 4-INCH (W) LF	643.3105 TEMPORARY MARKING LINE PAINT 4-INCH (Y) LF	643.3150 TEMPORARY MARKING LINE REMOVABLE TAPE 4-INCH (Y) LF	643.3150 TEMPORARY MARKING LINE REMOVABLE TAPE 4-INCH (W) LF	REMARKS
0050	PRE-1	SB WIDENING	11	40	440	5	55	6	66	--	--	7	77	--	--	--	--	2	14	--	--	--	--	--	--	--	
0050		SDD 15C03 DETAIL 1/15C02 DETAIL D	11	--	--	5	55	6	66	--	--	3	33	--	--	--	--	--	--	--	--	--	--	--	--	--	
0050	1	NB ROUNDABOUT WORK	51	55	2,805	14	714	44	2,244	20	1,020	20	1,020	--	--	--	--	2	14	--	3575	100	4500	6,900	--	--	
0050		WIDTH RESTRICTION - STH 11	51	--	--	--	--	--	--	--	--	7	357	--	--	--	--	--	--	--	--	--	--	--	--	--	
0050		WIDTH RESTRICTION - USH 151	51	--	--	--	--	--	--	--	--	26	1,326	--	--	--	--	--	--	--	--	--	--	--	--	--	
0050		STH 81 DETOUR - DETAIL A	51	--	--	--	--	--	--	--	--	60	3,060	--	--	--	--	--	--	--	--	--	--	--	--	--	
0050		STH 81 DETOUR - DETAIL B	51	--	--	--	--	--	--	--	--	11	561	--	--	1	3	--	--	--	--	--	--	--	--	--	
0050		STH 81 DETOUR - DETAIL C	51	--	--	--	--	--	--	--	--	14	714	--	--	--	--	--	--	--	--	--	--	--	--	--	
0050		STH 81 DETOUR - DETAIL D	51	--	--	--	--	--	--	--	--	60	3,060	--	--	--	--	--	--	--	--	--	--	--	--	--	
0050		STH 81 DETOUR - DETAIL E	51	--	--	--	--	--	--	--	--	22	1,122	--	--	--	--	--	--	--	--	--	--	--	--	--	
0050		STH 81 DETOUR - DETAIL F	51	--	--	--	--	--	--	--	--	6	306	--	--	--	--	--	--	--	--	--	--	--	--	--	
0050		STH 81 DETOUR - DETAIL G	51	--	--	2	102	2	102	--	--	15	765	--	--	1	3	--	--	--	--	--	--	--	--	--	
0050		SDD 15C02 DETAIL C	51	--	--	7	357	10	510	--	--	6	306	--	--	--	--	--	--	--	--	--	--	--	--	--	
0050		SDD 15C03 DETAIL 1	51	--	--	5	255	6	306	--	--	3	153	--	--	--	--	--	--	--	--	--	--	--	--	--	
0010	2	BRIDGE CLOSURE	56	--	--	14	784	16	896	--	--	10	560	--	--	--	--	2	14	--	--	--	--	--	--	--	
0010		BRIDGE CLOSURE DETOUR - DETAIL A	56	--	--	--	--	--	--	--	--	118	6,608	1	2	--	--	--	--	--	--	--	--	--	--	--	
0010		BRIDGE CLOSURE DETOUR - DETAIL B	56	--	--	--	--	--	--	--	--	78	4,368	1	8	1	8	--	--	--	--	--	--	--	--	--	
0010		BRIDGE CLOSURE DETOUR - DETAIL C	56	--	--	--	--	--	--	--	--	69	3,864	--	--	1	6	--	--	--	--	--	--	--	--	--	
0050		SB ROUNDABOUT WORK	56	60	3,360	14	784	44	2,464	24	1,344	20	1,120	--	--	--	--	2	14	--	1541	--	--	--	4860	4860	
0050		SDD 15C03 DETAIL 1	56	--	--	5	280	6	336	--	--	3	168	--	--	--	--	--	--	--	--	--	--	--	--	--	
0050		WIDTH RESTRICTION - STH 11	56	--	--	--	--	--	--	--	--	7	392	--	--	--	--	--	--	--	--	--	--	--	--	--	
0050		WIDTH RESTRICTION - USH 151	56	--	--	--	--	--	--	--	--	26	1,456	--	--	--	--	--	--	--	--	--	--	--	--	--	
0050		STH 81 DETOUR - DETAIL A	56	--	--	--	--	--	--	--	--	56	3,136	--	--	--	--	--	--	--	--	--	--	--	--	--	
0050		STH 81 DETOUR - DETAIL B	56	--	--	--	--	--	--	--	--	11	616	--	--	--	--	--	--	--	--	--	--	--	--	--	
0050		STH 81 DETOUR - DETAIL C	56	--	--	--	--	--	--	--	--	22	1,232	--	--	--	--	--	--	--	--	--	--	--	--	--	
0050		STH 81 DETOUR - DETAIL D	56	--	--	--	--	--	--	--	--	60	3,360	--	--	--	--	--	--	--	--	--	--	--	--	--	
0050		STH 81 DETOUR - DETAIL E	56	--	--	--	--	--	--	--	--	22	1,232	--	--	--	--	--	--	--	--	--	--	--	--	--	
0050		STH 81 DETOUR - DETAIL F	56	--	--	--	--	--	--	--	--	6	336	--	--	--	--	--	--	--	--	--	--	--	--	--	
0050		STH 81 DETOUR - DETAIL G	56	--	--	2	112	2	112	--	--	16	896	--	--	--	--	--	--	--	--	--	--	--	--	--	
0050		SDD 15C02 DETAIL C	56	--	--	7	392	10	560	--	--	6	336	--	--	--	--	--	--	--	--	--	--	--	--	--	
0050	3	CIRCLE/ISLAND RAB WORK	23	120	2,760	--	--	--	--	--	--	5	115	--	--	--	--	2	14	--	--	--	--	--	--	--	
0050		WIDTH RESTRICTION - STH 11	23	--	--	--	--	--	--	--	--	7	161	--	--	--	--	--	--	--	--	--	--	--	--	--	
0050		WIDTH RESTRICTION - STH 81	23	--	--	--	--	--	--	--	--	5	115	--	--	--	--	--	--	--	--	--	--	--	--	--	
0010	4	MILL AND OVERLAY	65	--	--	--	--	--	--	--	--	24	1,560	--	--	--	--	--	--	1	--	--	--	--	--	--	
0010		BOX CULVERT WORK	25	--	--	6	150	8	200	--	--	14	350	--	--	--	--	2	14	--	--	--	--	--	--	--	
0010		WIDTH RESTRICTION - STH 81	25	--	--	--	--	--	--	--	--	14	350	--	--	--	--	--	--	--	--	--	--	--	--	--	
0010		WIDTH RESTRICTION - USH 151	25	--	--	--	--	--	--	--	--	26	650	--	--	--	--	--	--	--	--	--	--	--	--	--	
0010		BEAM GUARD	14	180	2,520	--	--	--	--	--	--	45	630	--	--	--	--	--	--	--	--	--	--	--	--	--	
		CATEGORY 0010 SUBTOTAL			2,520		934		1,096		0		18,940		10		14		28	1	0	0	0	0	0	0	
		CATEGORY 0050 SUBTOTAL			9,365		3,106		6,766		2,364		27,531		0		6		56	0	5,116	100	4,500	6,900	4,860	4,860	
		TOTAL			**11,885**		**4,040**		**7,862**		**2,364**		**46,471**		**10**		**20**		**84**	**1**	**5,116**	**100**	**11,400**		**9,720**		

3

3

PAVEMENT MARKING SUMMARY

CATEGORY	STATION		STATION	LOCATION	646.1020 MARKING LINE EPOXY 4-INCH (YELLOW) LF	646.1020 MARKING LINE EPOXY 4-INCH (WHITE) LF	646.1040 MARKING LINE GROOVED WET REF EPOXY 4-INCH (WHITE) LF	646.3020 MARKING LINE EPOXY 8-INCH (WHITE) LF	646.3040 MARKING LINE GROOVED WET REF EPOXY 8-INCH (WHITE) LF	646.4520 MARKING LINE SAME DAY EPOXY 4-INCH (YELLOW) LF	646.5020 MARKING ARROW EPOXY (TYPE 2) EACH	646.5120 MARKING WORD EPOXY (YIELD) EACH	646.5120 MARKING WORD EPOXY (ONLY) EACH	646.6320 MARKING DOTTED EXTENSION EPOXY 18-INCH (WHITE) LF	646.7120 MARKING DIAGONAL EPOXY 12-INCH (YELLOW) LF	646.8020 MARKING CORRUGATED MEDIAN EPOXY (YELLOW) SF	646.8120 MARKING CURB EPOXY (YELLOW) LF	646.8220 MARKING ISLAND NOSE EPOXY (YELLOW) EACH	648.0100 LOCATING NO-PASSING ZONES MI	643.3120 TEMPORARY MARKING LINE EPOXY 4-INCH (YELLOW) LF	REMARKS
0010	499+22	-	510+63	STH 80	2280	--	2280	--	--	2280	2	--	--	--	--	--	--	--	0.22	--	
0010	510+63	-	537+67	STH 80	3650	--	5410	--	87	--	--	--	--	--	--	--	--	--	0.51	3650	
0010	537+67	-	616+98	STH 80	7910	--	15860	--	92	--	2	--	--	--	--	--	--	--	1.50	7910	
0010	616+98	-	688+76	STH 80	5990	--	14420	--	97	--	2	--	--	--	--	--	--	--	1.36	5990	
0010	704+33	-	749+27	STH 80	4610	--	8990	--	90	--	2	--	--	--	--	--	--	--	0.85	4610	
0010	749+27	-	815+30	STH 80	8100	--	13210	--	--	--	--	--	--	--	--	--	--	--	1.25	8100	
0010	815+30	-	886+25	STH 80	12520	--	14190	--	608	--	6	--	3	--	--	641	60	2	1.18	12520	
0010	886+25	-	893+50	STH 80	1450	1450	--	314	--	--	4	--	1	--	--	--	20	2	--	--	
0010	893+50	-	955+59	STH 80	4030	--	12420	--	745	4030	8	--	4	--	--	629	96	4	0.76	--	
0010	955+59	-	959+97	STH 80	1220	880	--	--	--	1220	--	--	--	--	--	--	--	--	0.08	--	
			CATEGORY 0010 SUBTOTAL		51760	2330	86780	314	1719	7530	26	0	8	0	0	1270	176	8	7.71	42780	
0050	688+76	-	704+33	STH 80	3780	--	2400	142	--	--	--	2	--	41	124	--	275	4	--	--	
0050	11'PW'+15	-	20'PW'+09	PATCH RD	2690	1610	--	78	--	--	--	1	--	21	109	--	95	1	--	--	
0050	21'PW'+75	-	39'PW'+32	STH 81	2140	--	1350	65	--	--	--	1	--	20	69	--	109	1	--	--	
			CATEGORY 0050 SUBTOTAL		8610	1610	3750	285	0	0	0	4	0	82	302	0	479	6	0.00	0	
				TOTAL	**64,310**		**90530**	**599**	**1719**	**7530**	**26**	**12**		**82**	**302**	**1270**	**655**	**14**	**7.71**	**42780**	

CONSTRUCTION STAKING SUMMARY

CATEGORY	STATION		STATION	HWY	650.4500 CONSTRUCTION STAKING SUBGRADE LF	650.5000 CONSTRUCTION STAKING BASE LF	650.5500 CONSTRUCTION STAKING CURB GUTTER AND CURB & GUTTER LF	650.7000 CONSTRUCTION STAKING CONCRETE PAVEMENT LF	650.8000 CONSTRUCTION STAKING RESURFACING REFERENCE LF	650.8501 CONSTRUCTION STAKING ELECTRICAL INSTALLATIONS (PROJECT) EACH	650.9500 CONSTRUCTION STAKING SIDEWALK (PROJECT) EACH	650.9911 CONSTRUCTION STAKING SUPPLEMENTAL CONTROL (PROJECT) EACH	650.9920 CONSTRUCTION STAKING SLOPE STAKES LF	REMARKS
0010	499+18	-	688+72	STH 80	--	--	--	--	18954	--	--	1	--	
0010	704+12		959+85	STH 80	--	--	261	--	25573	--	--	--	--	
			CATEGORY 0010 SUBTOTAL		0	0	261	0	44527	0	0	1		
0050	688+72	-	704+12	STH 80	3100	2298	889	802	--	1	1	--	3100	
0050	11'PA'+15	-	29'PA'+25	STH 81/PATCH RD	3627	2873	1001	754	--	--	--	--	3627	
			CATEGORY 0050 SUBTOTAL		6727	5171	1890	1556	0	1	1	0	6727	
				TOTAL	**6,727**	**5,171**	**2,151**	**1,556**	**44,527**	**1**	**1**	**1**	**6,727**	

3

CONDUIT

CATEGORY	FROM	TO	652.0225 CONDUIT RIGID NONMETALLIC SCHEDULE 40 2-INCH LF	652.0235 CONDUIT RIGID NONMETALLIC SCHEDULE 40 3-INCH LF	REMARKS
0050	CABINET	PB01	--	15	
0050	PB01	PB02	130	--	
0050	PB02	LB02	5	--	
0050	PB02	PB03	170	--	
0050	PB03	LB03	5	--	
0050	PB01	PB04	--	85	
0050	PB04	LB04	50	--	
0050	PB04	PB05	--	90	
0050	PB05	LB05	30	--	
0050	LB05	PB06	165	--	
0050	PB06	LB06	5	--	
0050	PB06	PB07	180	--	
0050	PB07	LB07	5	--	
0050	PB05	PB08	--	110	
0050	PB08	LB08	25	--	
0050	PB08	PB09	--	85	
0050	PB09	LB09	25	--	
0050	PB09	PB10	165	--	
0050	PB10	LB10	5	--	
0050	PB10	PB11	170	--	
0050	PB11	LB11	5	--	
0050	PB09	PB12	--	100	
0050	PB12	LB12	25	--	
0050	PB12	PB13	--	70	
0050	PB13	LB13	25	--	
0050	PB13	PB14	180	--	
0050	PB14	LB14	5	--	
0050	PB14	PB15	155	--	
0050	PB15	LB15	5	--	
0050	PB13	PB16	--	125	
0050	PB16	LB16	25	--	
0050	PB16	PB17	--	85	
0050	PB17	LB01	10	--	
0050	PB17	CABINET	--	20	
		TOTAL	**1,570**	**785**	

PULL BOXES

CATEGORY	LOCATION	653.0154 PULL BOXES NON-CONDUCTIVE 24X36-INCH EACH	653.0164 PULL BOXES NON-CONDUCTIVE 24X42-INCH EACH	REMARKS
0050	PB01	--	1	
0050	PBO2	1	--	
0050	PBO3	1	--	
0050	PB04	--	1	
0050	PB05	--	1	
0050	PB06	1	--	
0050	PB07	1	--	
0050	PB08	--	1	
0050	PB09	--	1	
0050	PB10	1	--	
0050	PB11	1	--	
0050	PB12	--	1	
0050	PB13	--	1	
0050	PB14	1	--	
0050	PB15	1	--	
0050	PB16	--	1	
0050	PB17	--	1	
	TOTAL	**8**	**9**	

GROUNDING CONDUCTOR

CATEGORY	FROM	TO	655.0615 ELECTRICAL WIRE LIGHTING 10 AWG LF	REMARKS
0050	CABINET	LB02	200	
0050	LB02	LB03	450	
0050	LB01	LB04	420	
0050	LB04	LB05	420	
0050	LB05	LB06	480	
0050	LB06	LB07	460	
0050	LB05	LB08	400	
0050	CABINET	LB01	140	
0050	LB01	LB16	330	
0050	LB16	LB13	420	
0050	LB13	LB14	500	
0050	LB14	LB15	410	
0050	LB13	LB12	310	
0050	LB12	LB09	380	
0050	LB09	LB10	470	
0050	LB10	LB11	450	
		TOTAL	**6,240**	

CONTROL CABINET SUMMARY

CATEGORY	LOCATION	654.0230 CONCRETE CONTROL CABINET BASES TYPE L30 EACH	656.0201 ELECTRICAL SERVICE METER BREAKER PEDESTAL (LOCATION) EACH	659.2130 LIGHTING CONTROL CABINETS 120/240 30-INCH EACH	REMARKS
0050	CABINET A	1	1	1	
		1	**1**	**1**	

3

LIGHT POLE SUMMARY

CATEGORY	LOCATION	654.0105 CONCRETE BASES TYPE 5 EACH	655.0610 ELECTRICAL WIRE LIGHTING 12 AWG LF	657.0255 TRANSFORMER BASES BREAKAWAY 11 1/2-INCH BOLT CIRCLE EACH	657.0322 POLES TYPE 5-ALUMINUM EACH	657.0610 LUMINAIRE ARMS SINGLE MEMBER 4 1/2-INCH CLAMP 6-FT EACH	659.1115 LUMINAIRES UTILITY LED A EACH	REMARKS
0050	LB01	1	165	1	1	1	1	
0050	LB02	1	165	1	1	1	1	
0050	LB03	1	165	1	1	1	1	
0050	LB04	1	165	1	1	1	1	
0050	LB05	1	165	1	1	1	1	
0050	LB06	1	165	1	1	1	1	
0050	LB07	1	165	1	1	1	1	
0050	LB08	1	165	1	1	1	1	
0050	LB09	1	165	1	1	1	1	
0050	LB10	1	165	1	1	1	1	
0050	LB11	1	165	1	1	1	1	
0050	LB12	1	165	1	1	1	1	
0050	LB13	1	165	1	1	1	1	
0050	LB14	1	165	1	1	1	1	
0050	LB15	1	165	1	1	1	1	
0050	LB16	1	165	1	1	1	1	
	TOTAL	**16**	**2,640 ***	**16**	**16**	**16**	**16**	

*ADDITIONAL QUANTITIES LISTED ELSEWHERE

3

CIRCUIT WIRING

CATEGORY	FROM	TO	CIRCUIT	655.0610 ELECTRICAL WIRE LIGHTING 12 AWG LF	REMARKS
0050	CABINET	LB02	1,3	410	
0050	LB02	LB04	1,3	650	
0050	LB04	LB06	1,3	740	
0050	LB04	LB08	1,3	660	
0050	CABINET	LB16	1,3	330	
0050	LB16	LB12	1,3	600	
0050	LB12	LB14	1,3	670	
0050	LB12	LB10	1,3	710	
0050	CABINET	LB03	2,4	770	
0050	CABINET	LB05	2,4	560	
0050	LB05	LB07	2,4	850	
0050	CABINET	LB01	2,4	140	
0050	LB01	LB13	2,4	470	
0050	LB13	LB15	2,4	830	
0050	LB13	LB09	2,4	530	
0050	LB09	LB11	2,4	850	
			TOTAL	**9,770 ***	

*ADDITIONAL QUANTITIES LISTED ELSEWHERE

3

SAWING SUMMARY

CATEGORY	LOCATION		690.0150 SAWING ASPHALT LF	REMARKS
0010	499+18	LT & RT	30	
0010	537+62	LT	25	
0010	537+62	RT	22	
0010	616+95	LT	21	
0010	630+37	RT	28	
0010	669+71	LT	22	
0010	696+18	LT	21	
0010	696+18	RT	45	
0010	722+61	RT	18	
0010	749+15	RT	26	
0010	814+94	LT	25	
0010	849+66	LT	22	
0010	851+31	RT	24	
0010	872+26	LT	27	
0010	872+26	RT	28	
0010	885+45	LT & RT	73	
0010	894+28	LT & RT	71	
0010	904+54	LT	37	
0010	904+54	RT	30	
0010	919+93	LT	24	
0010	944+97	LT	33	
0010	957+11	LT & RT	34	
0010	957+80	LT & RT	34	
0010	959+84	LT & RT	76	
0010	DRIVEWAYS	LT & RT	300	
	CATEGORY 0010 SUBTOTAL		1096	
0050	668+72	LT & RT	30	
0050	704+12	LT & RT	30	
0050	11'PA'+15	LT & RT	20	
0050	29'PA'+25	LT & RT	30	
0540	DRIVEWAY	RT	14	
	CATEGORY 0050 SUBTOTAL		124	
	TOTAL		**1220**	

VERIFY LANDMARK REFERENCE MONUMENTS

CATEGORY	LOCATION	OFFSET	SPV.0060.01 VERIFY LANDMARK REFERENCE MONUMENTS EACH	REMARKS
0010	STA 590+55	5' LT	1	
0010	STA 696+17	21' LT	1	STH 81/PATCH ROAD INTERSECTION
0010	STA 749+32	20' LT	1	
0010	STA 802+41	10' RT	1	
	TOTAL		**4**	

3

5

5

PROJECT NO: 5235-03-70	HWY: STH 80	COUNTY: GRANT	PLAN DETAILS	SHEET 138	E

FILE NAME : X:\PROJECTS\GRANT\200050MW - 5235-03-00 STH 80\DESIGN\C3D\SHEETSPLAN\050101-PN.DWG
LAYOUT NAME - 050101 - (47)
PLOT DATE : 6/29/2022 5:22 PM
PLOT BY : MICHAEL LISKA
PLOT NAME :
PLOT SCALE : 1 IN:100 FT
WISDOT/CADDS SHEET 44

PROJECT NO: 5235-03-70	HWY: STH 80	COUNTY: GRANT	PLAN DETAILS	SHEET 139	E

FILE NAME : X:\PROJECTS\GRANT\200050MW - 5235-03-00 STH 80\DESIGN\C3D\SHEETSPLAN\050101-PN.DWG
LAYOUT NAME - 050101 - (48)
PLOT DATE : 6/29/2022 5:22 PM
PLOT BY : MICHAEL LISKA
PLOT NAME :
PLOT SCALE : 1 IN:100 FT
WISDOT/CADDS SHEET 44

5

5

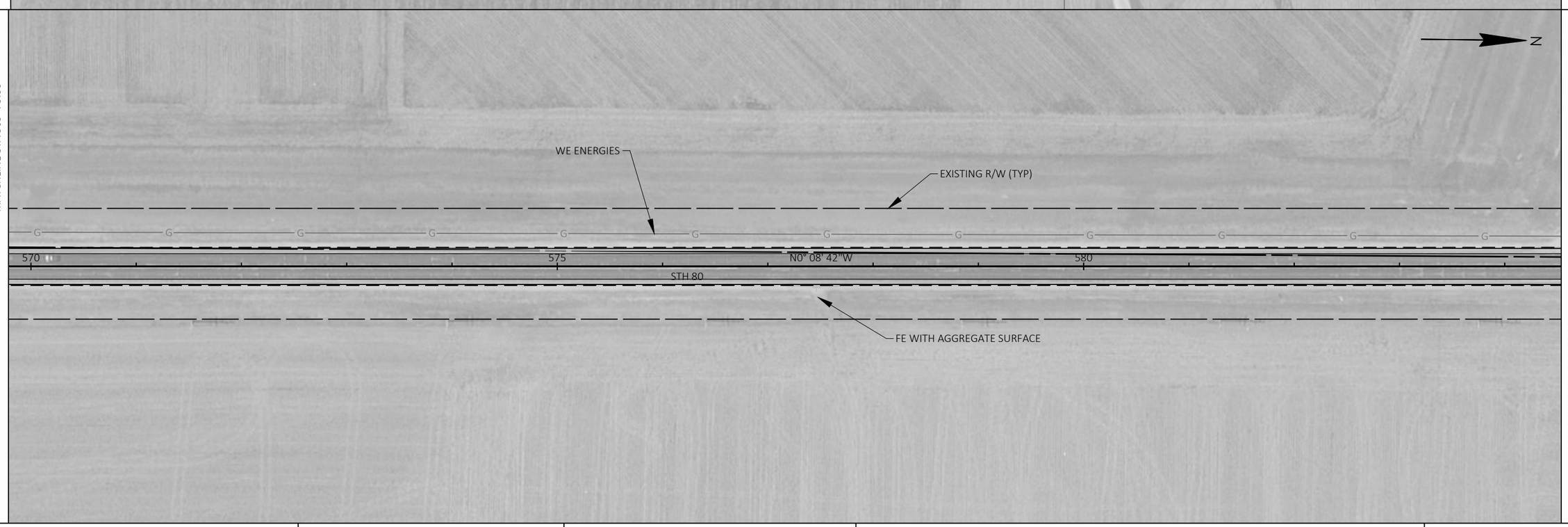

PROJECT NO: 5235-03-70	HWY: STH 80	COUNTY: GRANT	PLAN DETAILS	SHEET 140	E

FILE NAME : X:\PROJECTS\GRANT\200050MW - 5235-03-00 STH 80\DESIGN\C3D\SHEETSPLAN\050101-PN.DWG
LAYOUT NAME - 050101 - (49)
PLOT DATE : 6/29/2022 5:22 PM
PLOT BY : MICHAEL LISKA
PLOT NAME :
PLOT SCALE : 1 IN:100 FT
WISDOT/CADDS SHEET 44

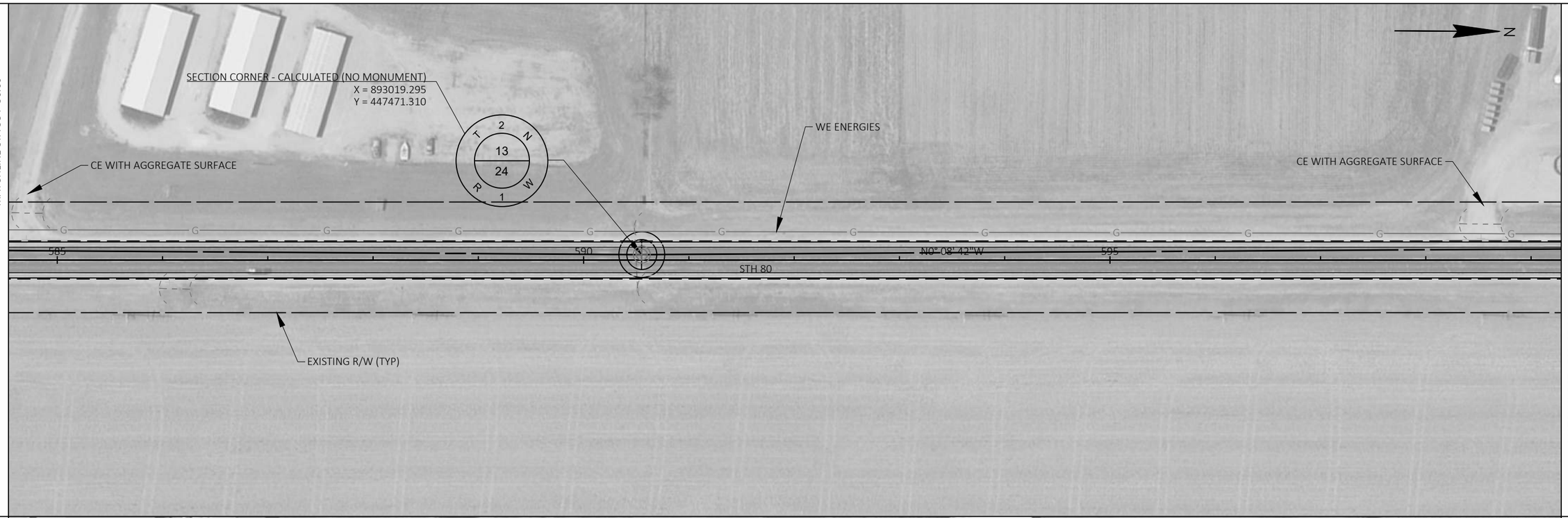

5

5

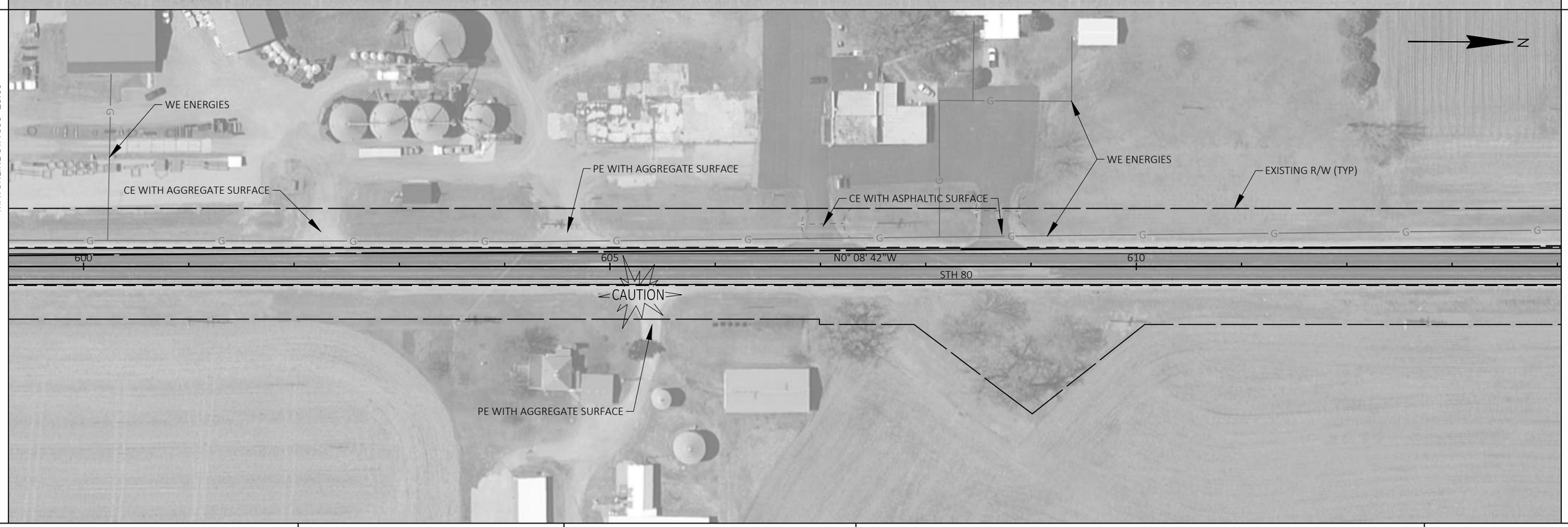

PROJECT NO: 5235-03-70	HWY: STH 80	COUNTY: GRANT	PLAN DETAILS	SHEET 141	E

FILE NAME : X:\PROJECTS\GRANT\200050MW - 5235-03-00 STH 80\DESIGN\C3D\SHEETSPLAN\050101-PN.DWG
LAYOUT NAME - 050101 - (50)
PLOT DATE : 6/29/2022 5:22 PM PLOT BY : MICHAEL LISKA PLOT NAME : PLOT SCALE : 1 IN:100 FT

WISDOT/CADDS SHEET 44

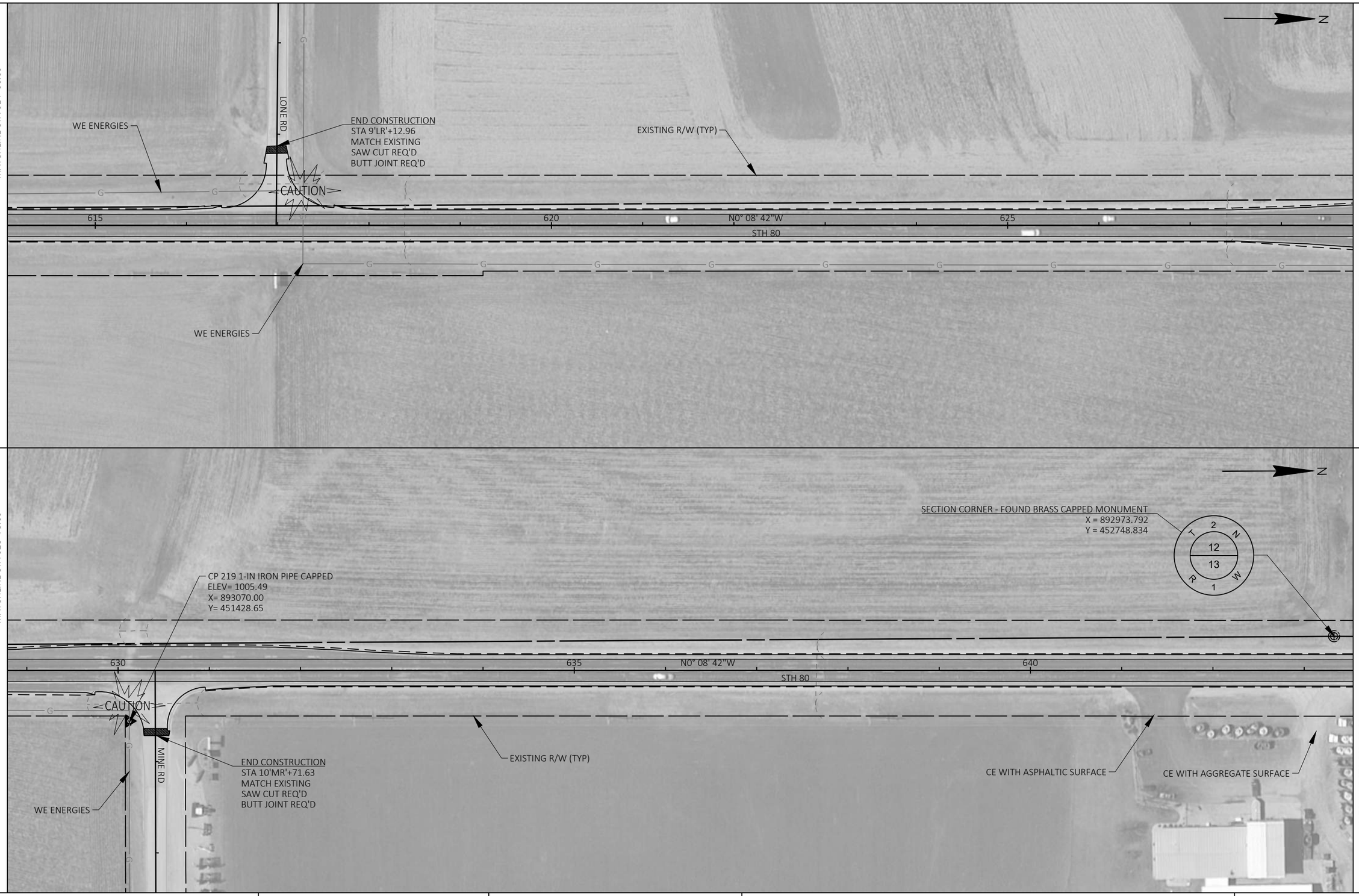

PROJECT NO: 5235-03-70	HWY: STH 80	COUNTY: GRANT	PLAN DETAILS	SHEET 142	E

FILE NAME : X:\PROJECTS\GRANT\200050MW - 5235-03-00 STH 80\DESIGN\C3D\SHEETSPLAN\050101-PN.DWG
LAYOUT NAME - 050101 - (51)
PLOT DATE : 6/29/2022 5:22 PM
PLOT BY : MICHAEL LISKA
PLOT NAME :
PLOT SCALE : 1 IN:100 FT
WISDOT/CADDS SHEET 44

5

5

PROJECT NO: 5235-03-70	HWY: STH 80	COUNTY: GRANT	PLAN DETAILS	SHEET 143	E

FILE NAME : X:\PROJECTS\GRANT\200050MW - 5235-03-00 STH 80\DESIGN\C3D\SHEETSPLAN\050101-PN.DWG
LAYOUT NAME - 050101 - (52)
PLOT DATE : 6/29/2022 5:23 PM
PLOT BY : MICHAEL LISKA
PLOT NAME :
PLOT SCALE : 1 IN:100 FT
WISDOT/CADDS SHEET 44

PROJECT NO: 5235-03-70	HWY: STH 80	COUNTY: GRANT	PLAN DETAILS	SHEET 144	E

FILE NAME : X:\PROJECTS\GRANT\200050MW - 5235-03-00 STH 80\DESIGN\C3D\SHEETSPLAN\050101-PN.DWG
LAYOUT NAME - 050101 - (53)
PLOT DATE : 6/29/2022 5:23 PM PLOT BY : MICHAEL LISKA PLOT NAME : PLOT SCALE : 1 IN:100 FT

5

5

PROJECT NO: 5235-03-70	HWY: STH 80	COUNTY: GRANT	PLAN DETAILS	SHEET 145	E

FILE NAME : X:\PROJECTS\GRANT\200050MW - 5235-03-00 STH 80\DESIGN\C3D\SHEETSPLAN\050101-PN.DWG
LAYOUT NAME - 050101 - (54)
PLOT DATE : 6/29/2022 5:23 PM
PLOT BY : MICHAEL LISKA
PLOT NAME :
PLOT SCALE : 1 IN:100 FT
WISDOT/CADDS SHEET 44

PROJECT NO: 5235-03-70	HWY: STH 80	COUNTY: GRANT	PLAN DETAILS	SHEET 146	E

FILE NAME : X:\PROJECTS\GRANT\200050MW - 5235-03-00 STH 80\DESIGN\C3D\SHEETSPLAN\050101-PN.DWG
LAYOUT NAME - 050101 - (55)
PLOT DATE : 6/29/2022 5:23 PM PLOT BY : MICHAEL LISKA PLOT NAME : PLOT SCALE : 1 IN:100 FT

WISDOT/CADDS SHEET 44

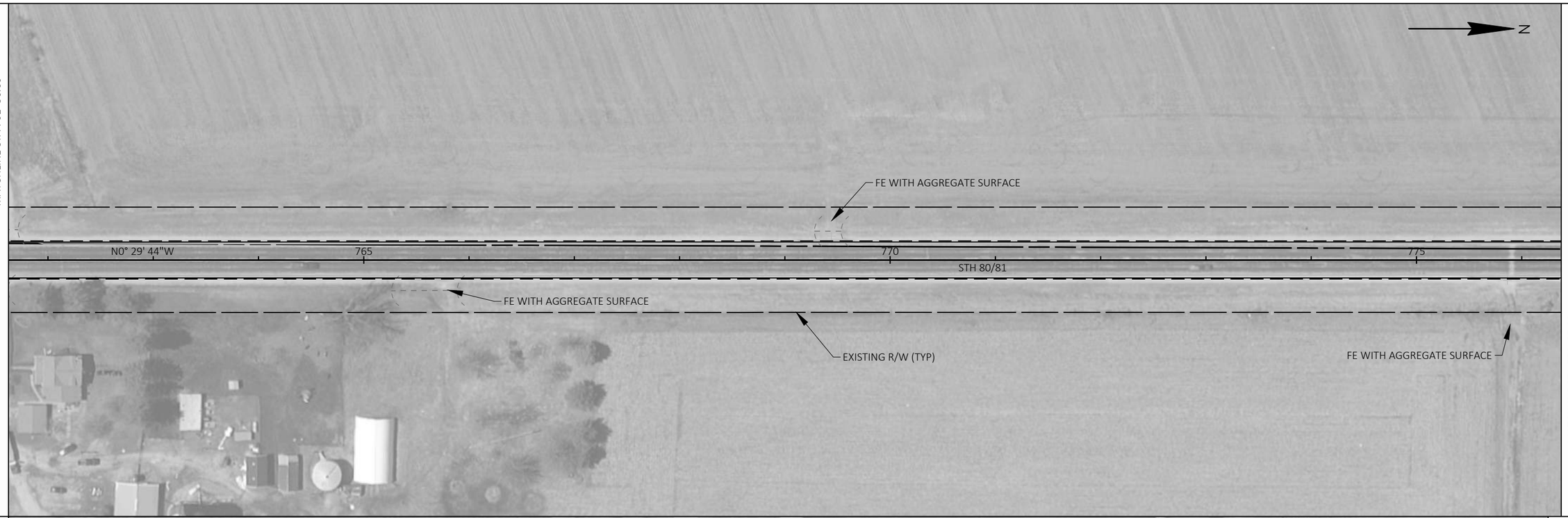

5

5

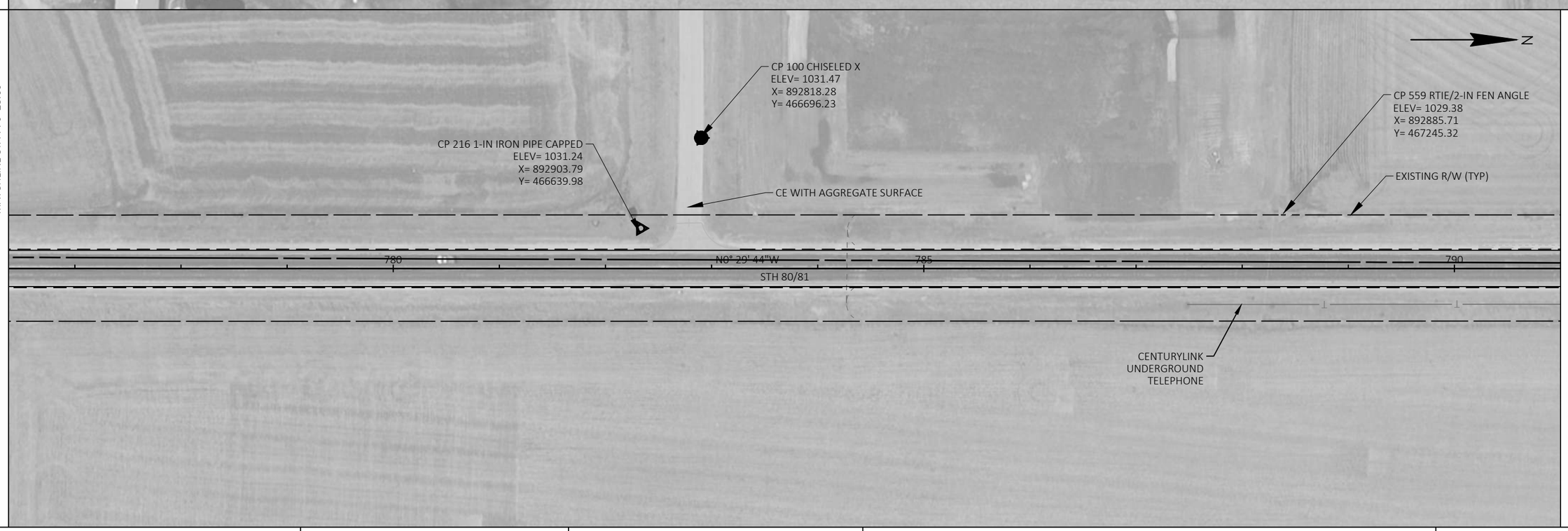

PROJECT NO: 5235-03-70	HWY: STH 80	COUNTY: GRANT	PLAN DETAILS	SHEET 147	E

FILE NAME : X:\PROJECTS\GRANT\200050MW - 5235-03-00 STH 80\DESIGN\C3D\SHEETSPLAN\050101-PN.DWG
LAYOUT NAME - 050101 - (56)
PLOT DATE : 6/29/2022 5:24 PM PLOT BY : MICHAEL LISKA PLOT NAME : PLOT SCALE : 1 IN:100 FT

WISDOT/CADDS SHEET 44

5

5

PROJECT NO: 5235-03-70	HWY: STH 80	COUNTY: GRANT	PLAN DETAILS	SHEET 148	E

FILE NAME : X:\PROJECTS\GRANT\200050MW - 5235-03-00 STH 80\DESIGN\C3D\SHEETSPLAN\050101-PN.DWG
LAYOUT NAME - 050101 - (57)
PLOT DATE : 6/29/2022 5:24 PM
PLOT BY : MICHAEL LISKA
PLOT NAME :
PLOT SCALE : 1 IN:100 FT

PROJECT NO: 5235-03-70	HWY: STH 80	COUNTY: GRANT	PLAN DETAILS	SHEET 149	E

FILE NAME : X:\PROJECTS\GRANT\200050MW - 5235-03-00 STH 80\DESIGN\C3D\SHEETSPLAN\050101-PN.DWG
LAYOUT NAME - 050101 - (58)
PLOT DATE : 6/29/2022 5:24 PM
PLOT BY : MICHAEL LISKA
PLOT NAME :
PLOT SCALE : 1 IN:100 FT

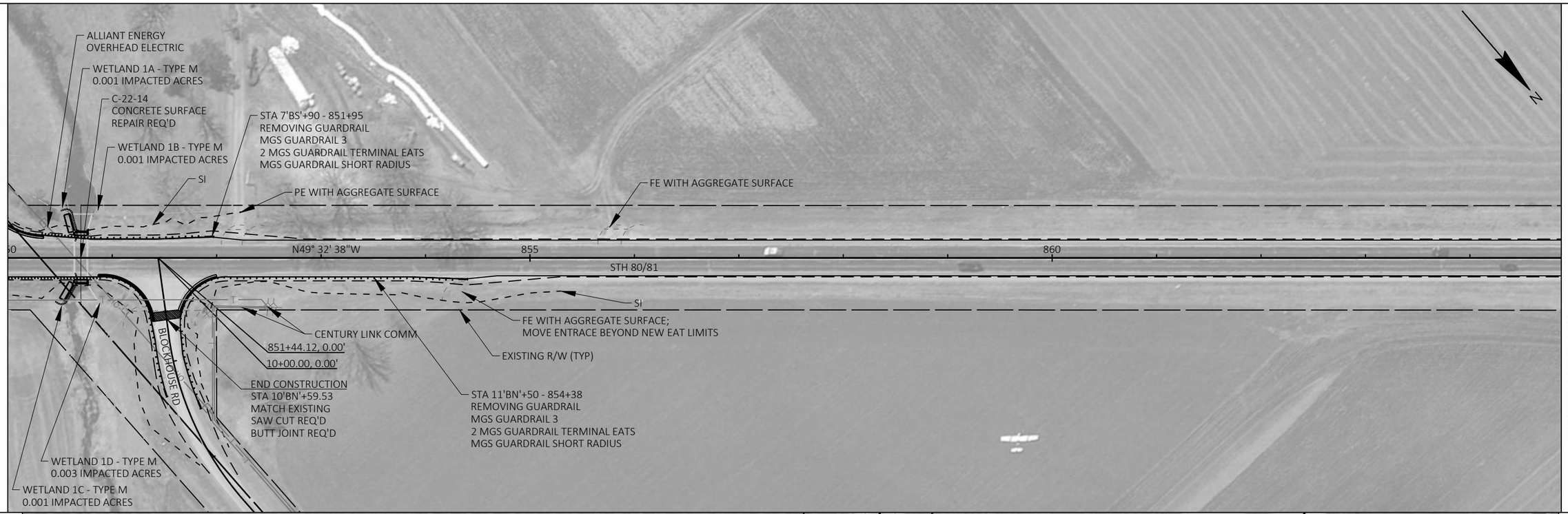

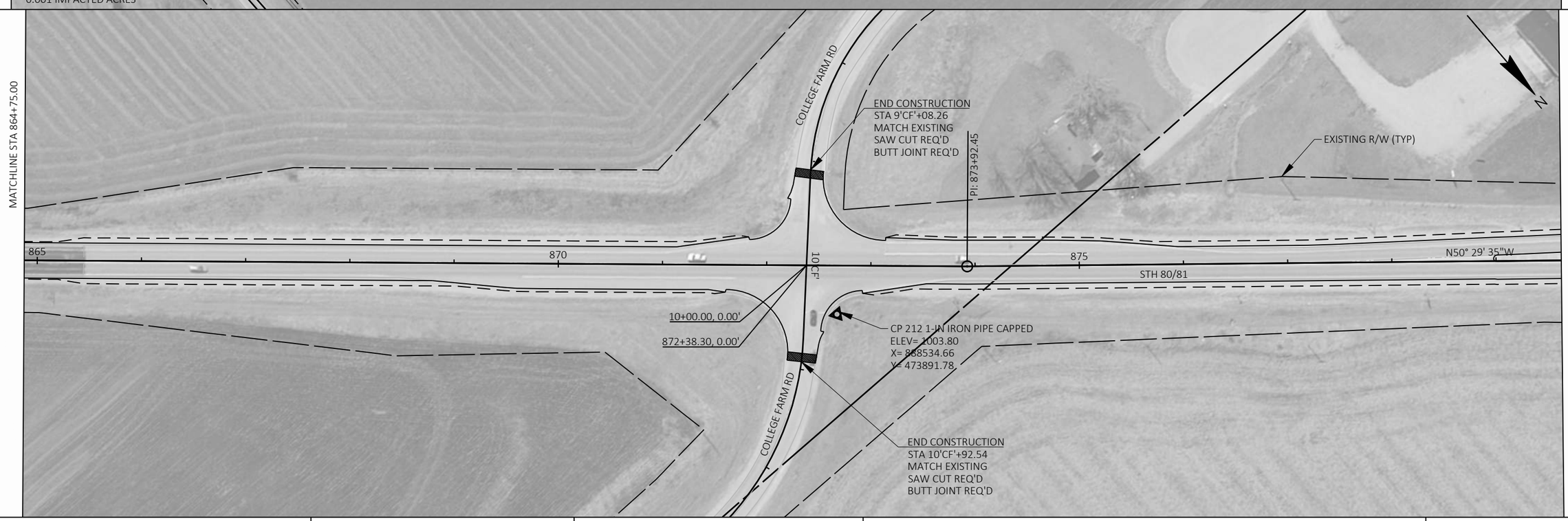

PROJECT NO: 5235-03-70	HWY: STH 80	COUNTY: GRANT	PLAN DETAILS	SHEET 150	E

FILE NAME : X:\PROJECTS\GRANT\200050MW - 5235-03-00 STH 80\DESIGN\C3D\SHEETSPLAN\050101-PN.DWG
LAYOUT NAME - 050101 - (59)
PLOT DATE : 6/29/2022 5:24 PM
PLOT BY : MICHAEL LISKA
PLOT NAME :
PLOT SCALE : 1 IN:100 FT
WISDOT/CADDS SHEET 44

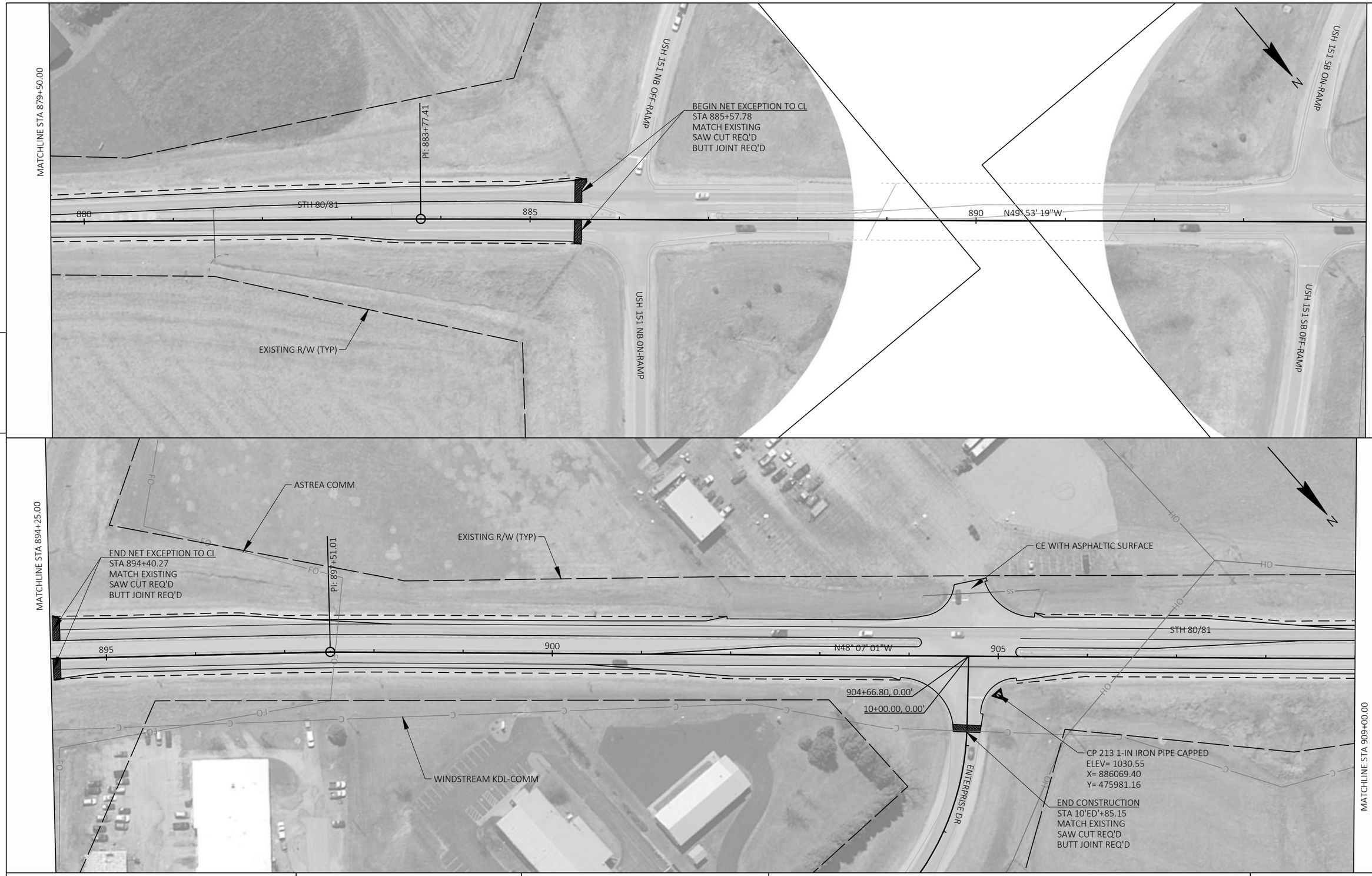

5

5

PROJECT NO: 5235-03-70	HWY: STH 80	COUNTY: GRANT	PLAN DETAILS	SHEET 151	E

FILE NAME : X:\PROJECTS\GRANT\200050MW - 5235-03-00 STH 80\DESIGN\C3D\SHEETSPLAN\050101-PN.DWG
LAYOUT NAME - 050101 - (60)
PLOT DATE : 6/29/2022 5:25 PM
PLOT BY : MICHAEL LISKA
PLOT NAME :
PLOT SCALE : 1 IN:100 FT
WISDOT/CADDS SHEET 44

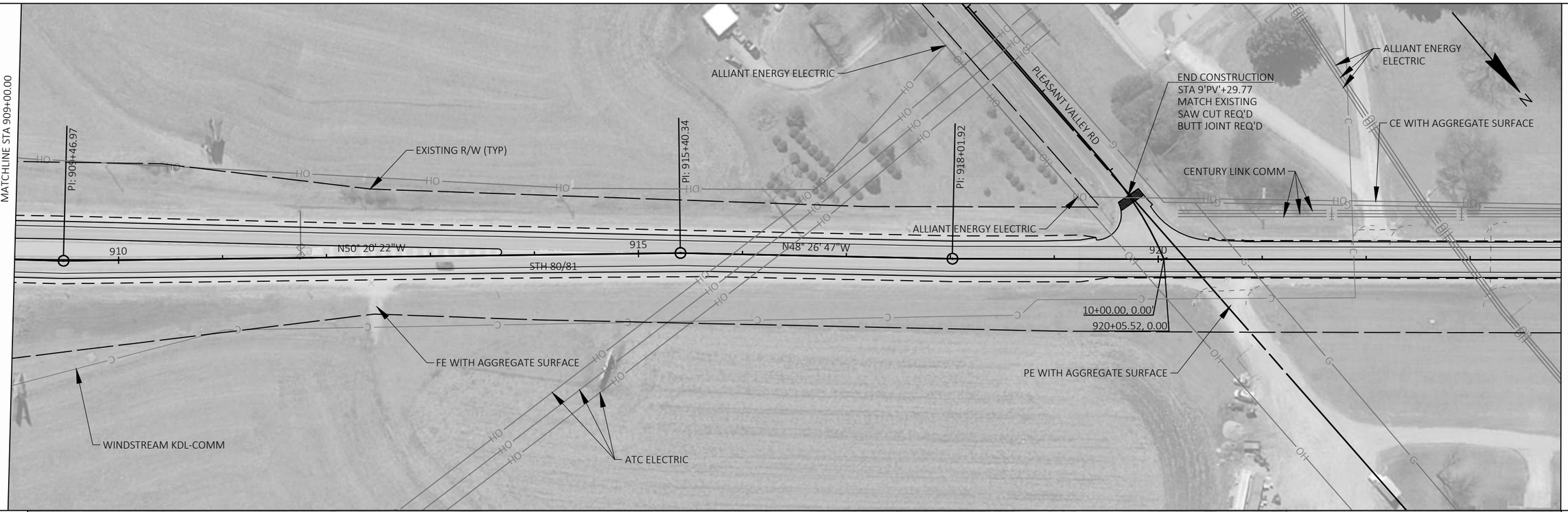

5

5

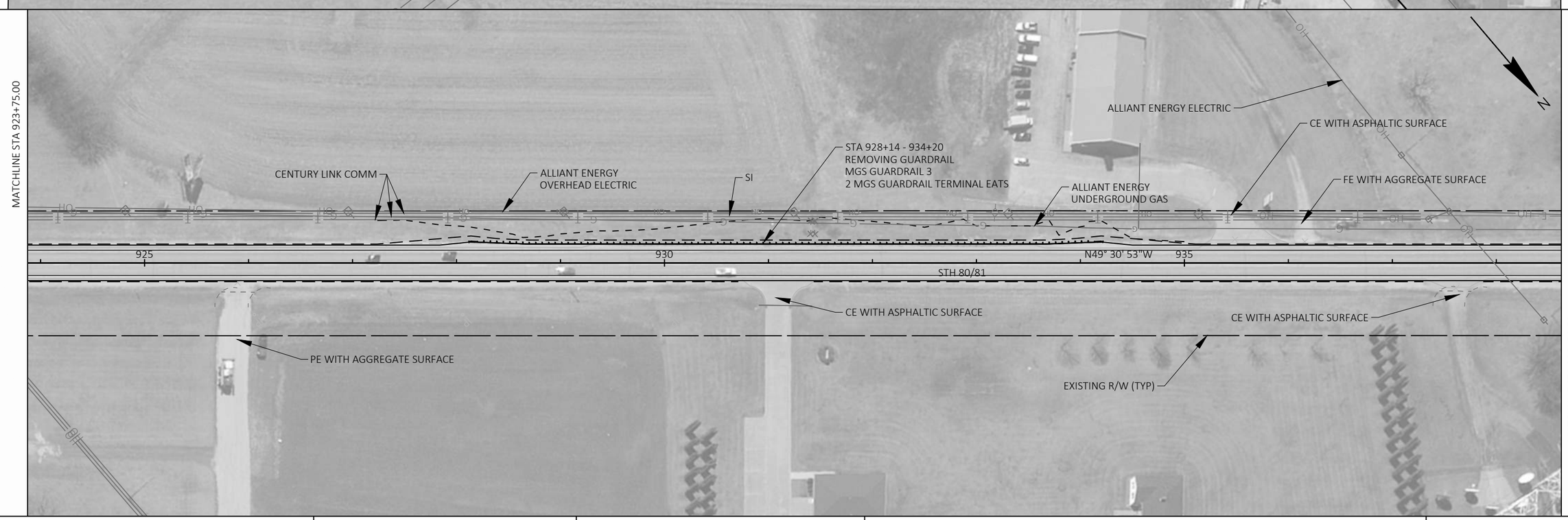

PROJECT NO: 5235-03-70	HWY: STH 80	COUNTY: GRANT	PLAN DETAILS	SHEET 152	E

FILE NAME : X:\PROJECTS\GRANT\200050MW - 5235-03-00 STH 80\DESIGN\C3D\SHEETSPLAN\050101-PN.DWG
LAYOUT NAME - 050101 - (61)
PLOT DATE : 6/29/2022 5:25 PM
PLOT BY : MICHAEL LISKA
PLOT NAME :
PLOT SCALE : 1 IN:100 FT
WISDOT/CADDS SHEET 44

5

MATCHLINE STA 938+50.00

PE WITH AGGREGATE SURFACE

END CONSTRUCTION
STA 9'KN'+18.59
MATCH EXISTING
SAW CUT REQ'D
BUTT JOINT REQ'D

KNOLL WOOD WAY

PT: 8'KN'+16.69

EP: 10'KN'+00.00

CAUTION

940

945

N49° 30' 53"W

950

STH 80/81

945+10.03, 0.00'

ALLIANT ENERGY ELECTRIC

PC: 952+11.19

CP 43 3/8-IN SPIKE
ELEV= 895.89
X= 882401.76
Y= 479041.12

CP 212 1-IN IRON PIPE CAPPED
ELEV= 934.57
X= 883121.86
Y= 478481.49

ENVIRONMENTALLY
SENSITIVE AREA (CEMETERY)

PE WITH AGGREGATE SURFACE

EXISTING R/W (TYP)

MATCHLINE STA 953+25.00

N

5

ALLIANT ENERGY ELECTRIC

STA 955+48 - 957+24
REMOVING GUARDRAIL
MGS GUARDRAIL 3
MGS GUARDRAIL TERMINAL EAT
MGS THRIE BEAM TRANSITION

ALLIANT ENERGY
OVERHEAD ELECTRIC

CP 42 3/8-IN SPIKE
ELEV= 875.25
X= 882035.18
Y= 479400.91

CP 40 3/8-IN SPIKE
ELEV= 888.76
X= 882078.98
Y= 479470.92

STA 957+90 - 958+80
REMOVING GUARDRAIL
MGS GUARDRAIL TERMINAL EAT
MGS THRIE BEAM TRANSITION

ALLIANT ENERGY
UNDERGROUND GAS

CE WITH CONCRETE SURFACE

CENTURY LINK COMM

MATCHLINE STA 953+25.00

SI

SAW CUT REQ'D
BUTT JOINT REQ'D

CE WITH CONCRETE SURFACE

ALLIANT ENERGY GAS

EP: 960+91.48

955

STH 80/81

960

END PROJECT 5235-03-70
STA 959+97.02
MATCH EXISTING
SAW CUT REQ'D

CE WITH ASPHALTIC SURFACE

CE WITH ASPHALTIC SURFACE

SI

STA 957+91 - 958+96
REMOVING GUARDRAIL
MGS GUARDRAIL 3
MGS GUARDRAIL TERMINAL EAT
MGS THRIE BEAM TRANSITION

MINOR PROPERTY
LOT LINE

SI

STA 955+32 - 957+26
REMOVING GUARDRAIL
MGS GUARDRAIL 3
MGS GUARDRAIL TERMINAL EAT
MGS THRIE BEAM TRANSITION

STRUCTURE B-22-0007
SEE STRUCTURE PLANS FOR DETAILS
ON PROPOSED WORK

CP 211 1-IN IRON PIPE CAPPED
ELEV= 894.04
X= 882120.93
Y= 479693.11

EXISTING R/W (TYP)

CP 41 3/8-IN SPIKE
ELEV= 892.04
X= 892171.53
Y= 479411.07

ENVIRONMENTALLY
SENSITIVE AREA (CEMETERY)

N

PROJECT NO: 5235-03-70	HWY: STH 80	COUNTY: GRANT	PLAN DETAILS	SHEET 153	E

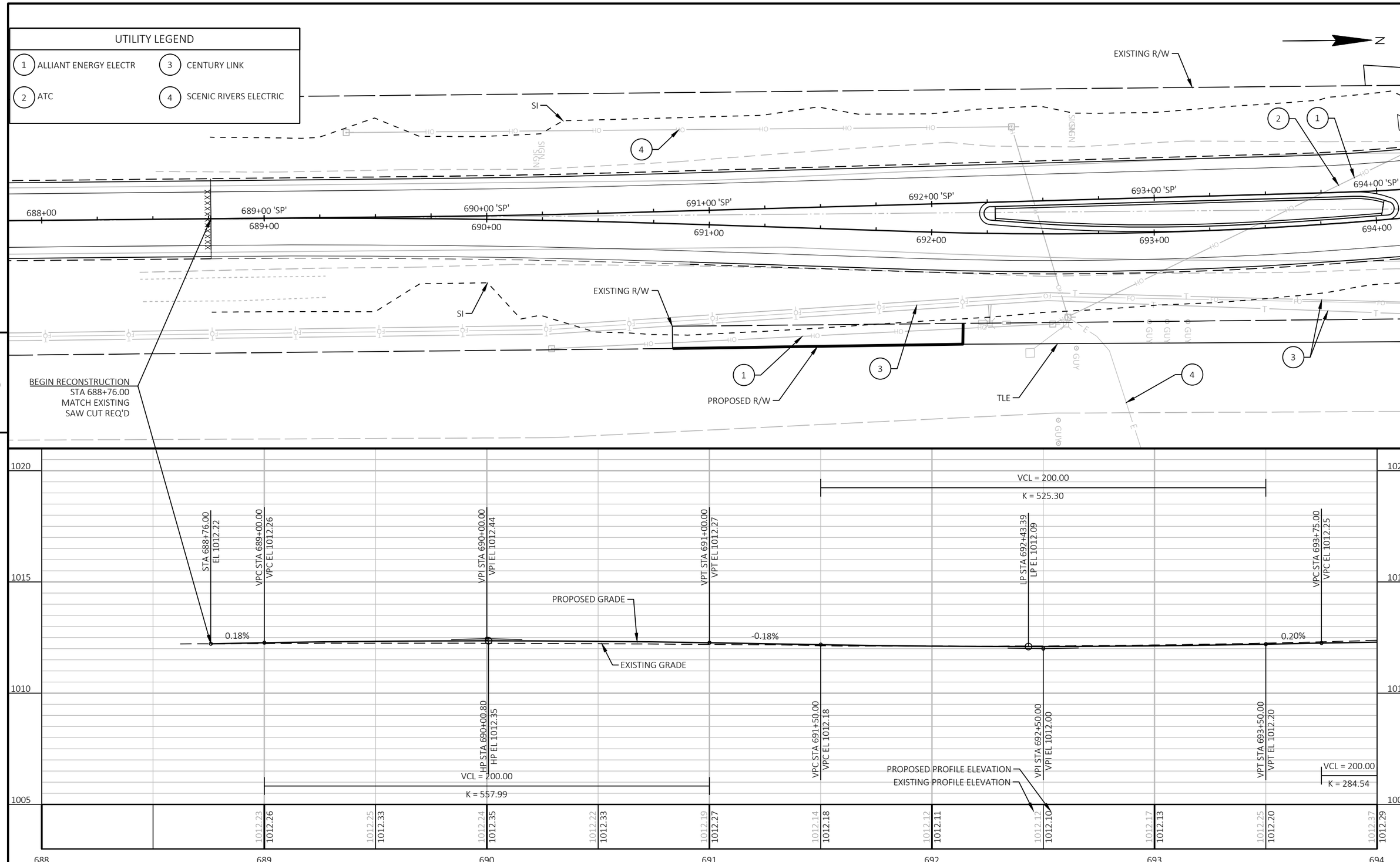

PROJECT NO: 5235-03-70	HWY: STH 80	COUNTY: GRANT	PLAN AND PROFILE: STH 80 NB	SHEET 154	E

FILE NAME : X:\PROJECTS\GRANT\200050MW - 5235-03-00 STH 80\DESIGN\C3D\SHEETSPLAN\050101-PP.DWG
LAYOUT NAME - 01
PLOT DATE : 6/29/2022 5:28 PM
PLOT BY : MICHAEL LISKA
PLOT NAME :
PLOT SCALE : 1 IN:40 FT
WISDOT/CADDS SHEET 44

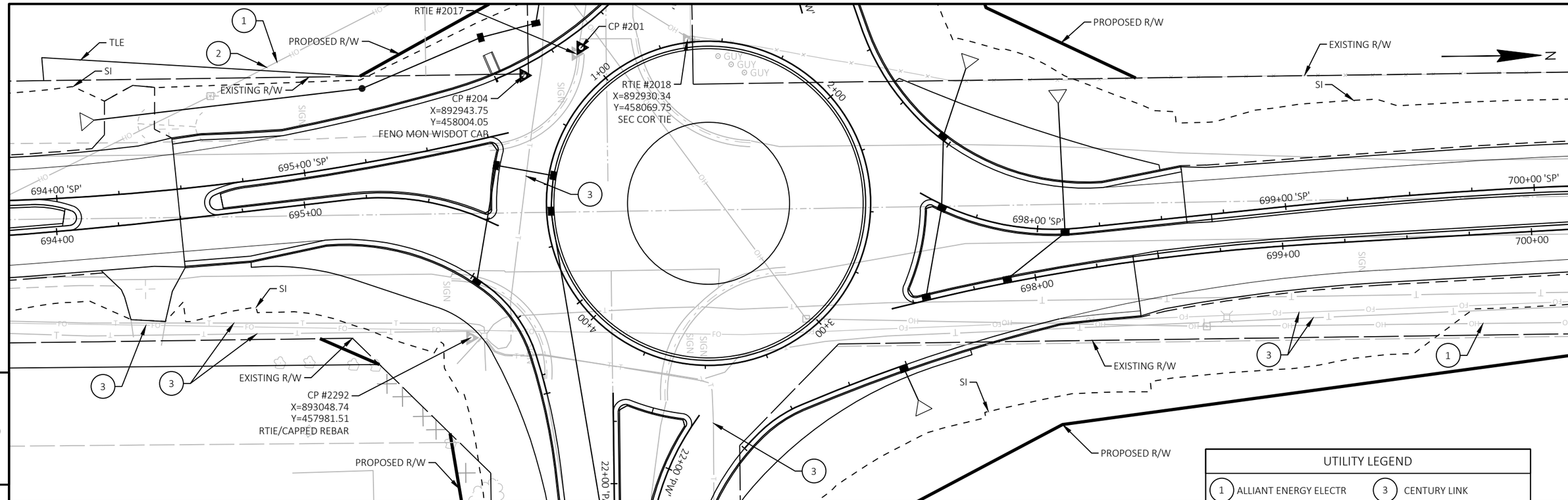

UTILITY LEGEND

1 ALLIANT ENERGY ELECTR	3 CENTURY LINK
2 ATC	4 SCENIC RIVERS ELECTRIC

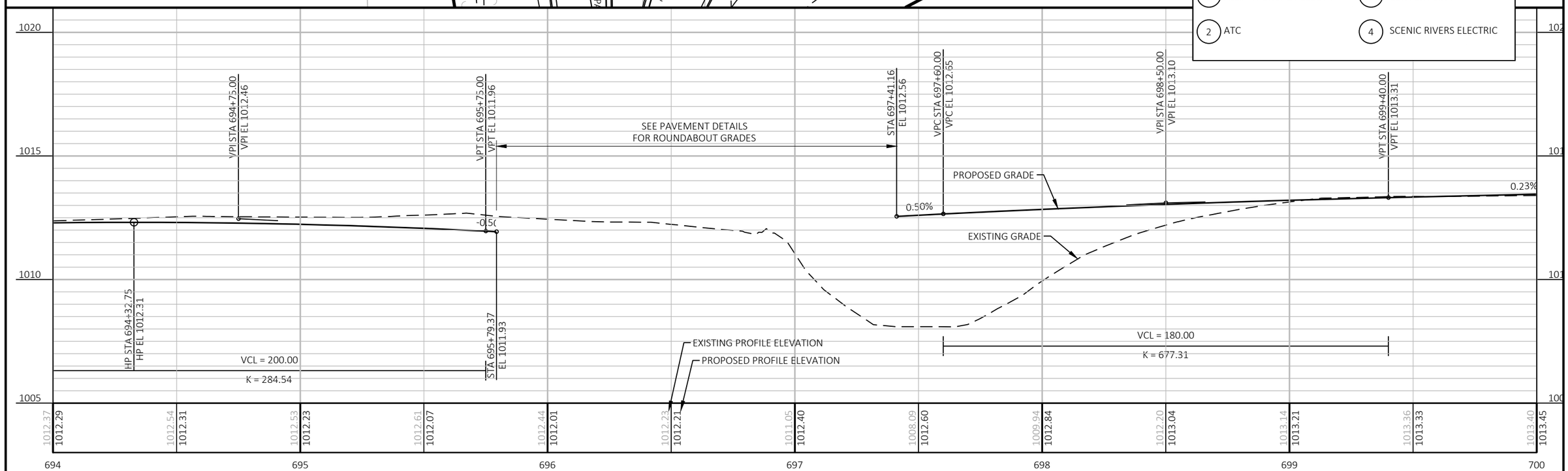

PROJECT NO: 5235-03-70	HWY: STH 80	COUNTY: GRANT	PLAN AND PROFILE: STH 80 NB	SHEET 155	E

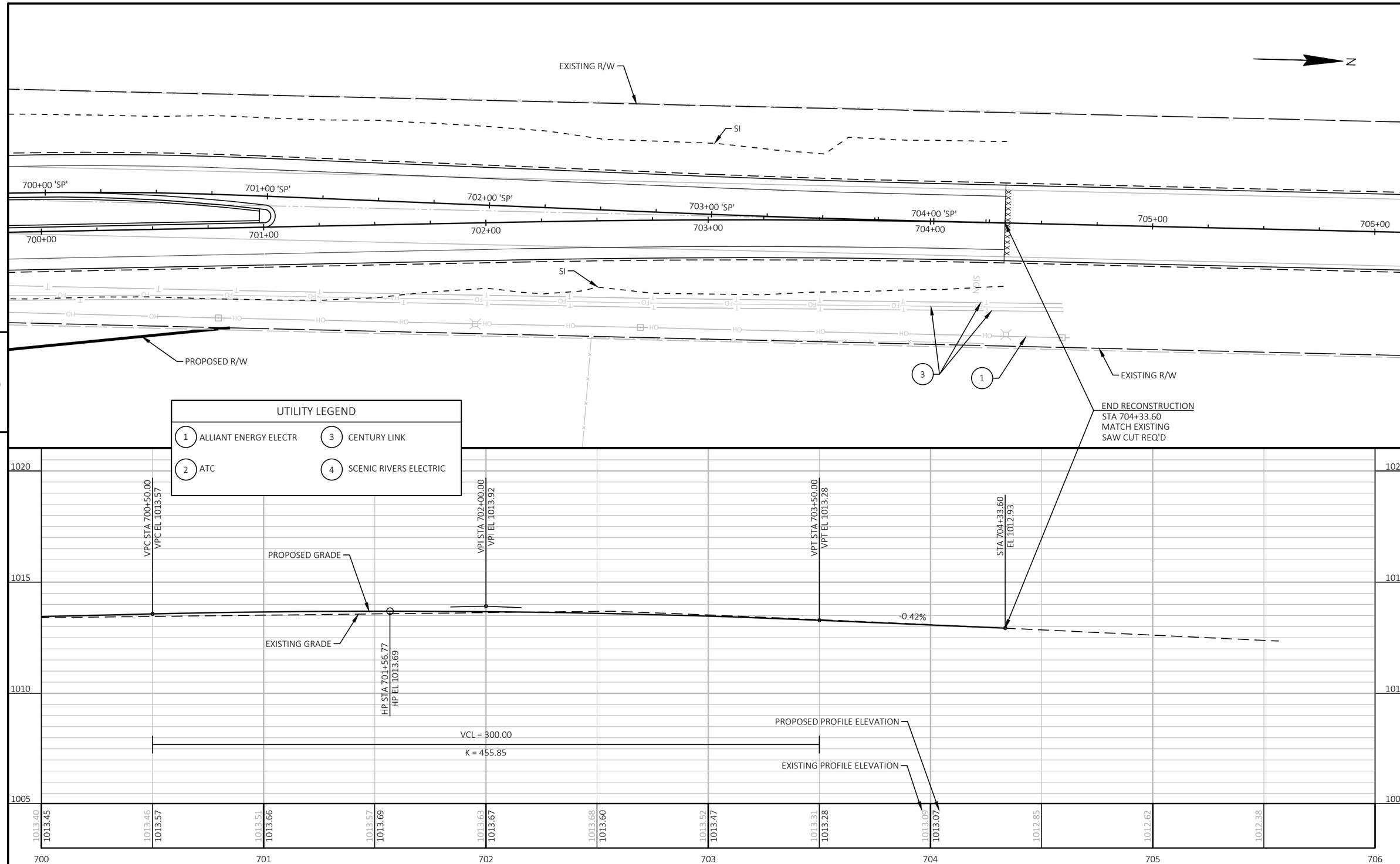

PROJECT NO: 5235-03-70	HWY: STH 80	COUNTY: GRANT	PLAN AND PROFILE: STH 80 NB	SHEET 156	E

FILE NAME : X:\PROJECTS\GRANT\200050MW - 5235-03-00 STH 80\DESIGN\C3D\SHEETSPLAN\050101-PP.DWG
LAYOUT NAME - 03
PLOT DATE : 6/29/2022 5:28 PM
PLOT BY : MICHAEL LISKA
PLOT NAME :
PLOT SCALE : 1 IN:40 FT
WISDOT/CADDS SHEET 44

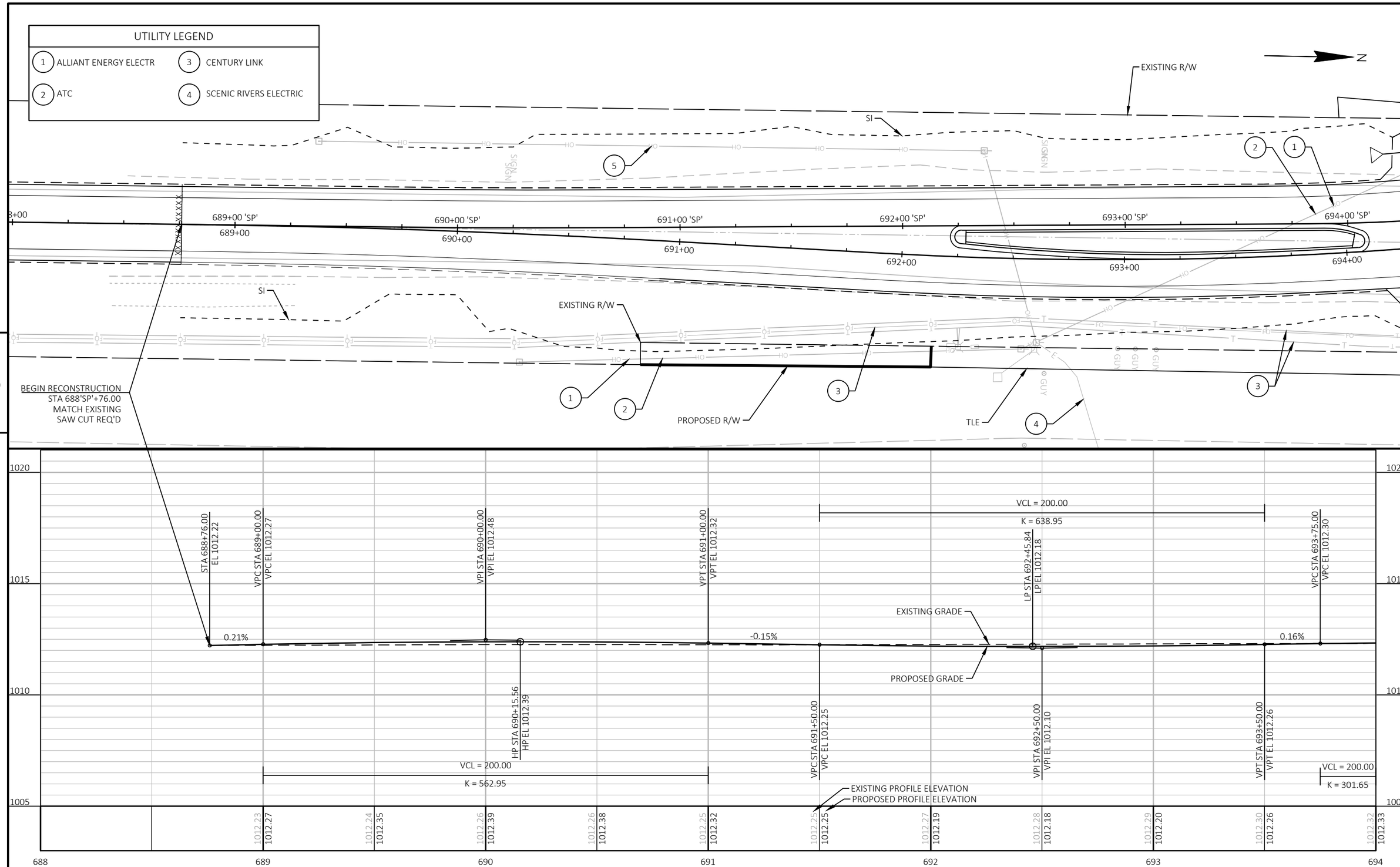

PROJECT NO: 5235-03-70	HWY: STH 80	COUNTY: GRANT	PLAN AND PROFILE: STH 80 SB	SHEET 157	E

FILE NAME : X:\PROJECTS\GRANT\200050MW - 5235-03-00 STH 80\DESIGN\C3D\SHEETSPLAN\050101-PP.DWG
LAYOUT NAME - 04
PLOT DATE : 6/29/2022 5:28 PM
PLOT BY : MICHAEL LISKA
PLOT NAME :
PLOT SCALE : 1 IN:40 FT

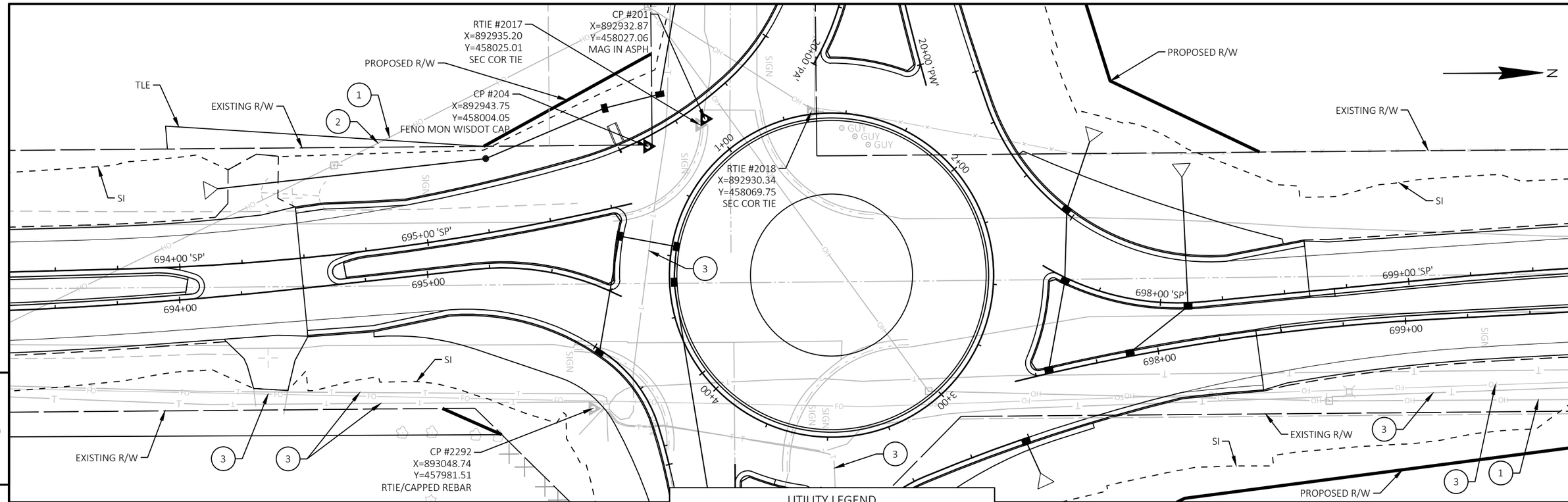

5

5

UTILITY LEGEND

1 ALLIANT ENERGY ELECTR	3 CENTURY LINK
2 ATC	4 SCENIC RIVERS ELECTRIC

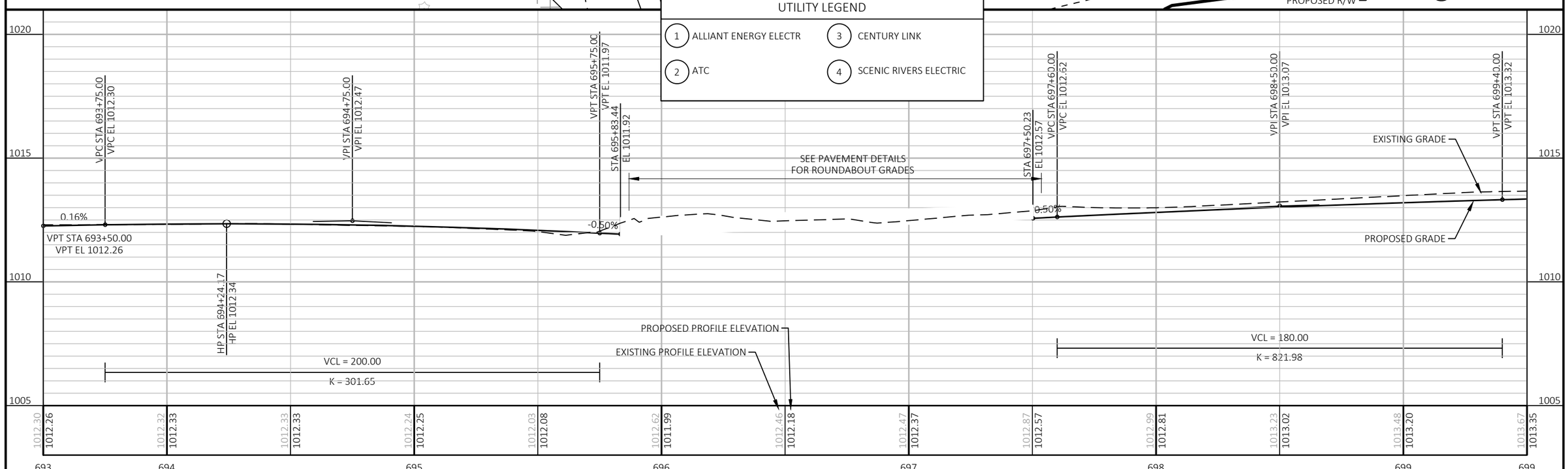

PROJECT NO: 5235-03-70	HWY: STH 80	COUNTY: GRANT	PLAN AND PROFILE: STH 80 SB	SHEET 158	E

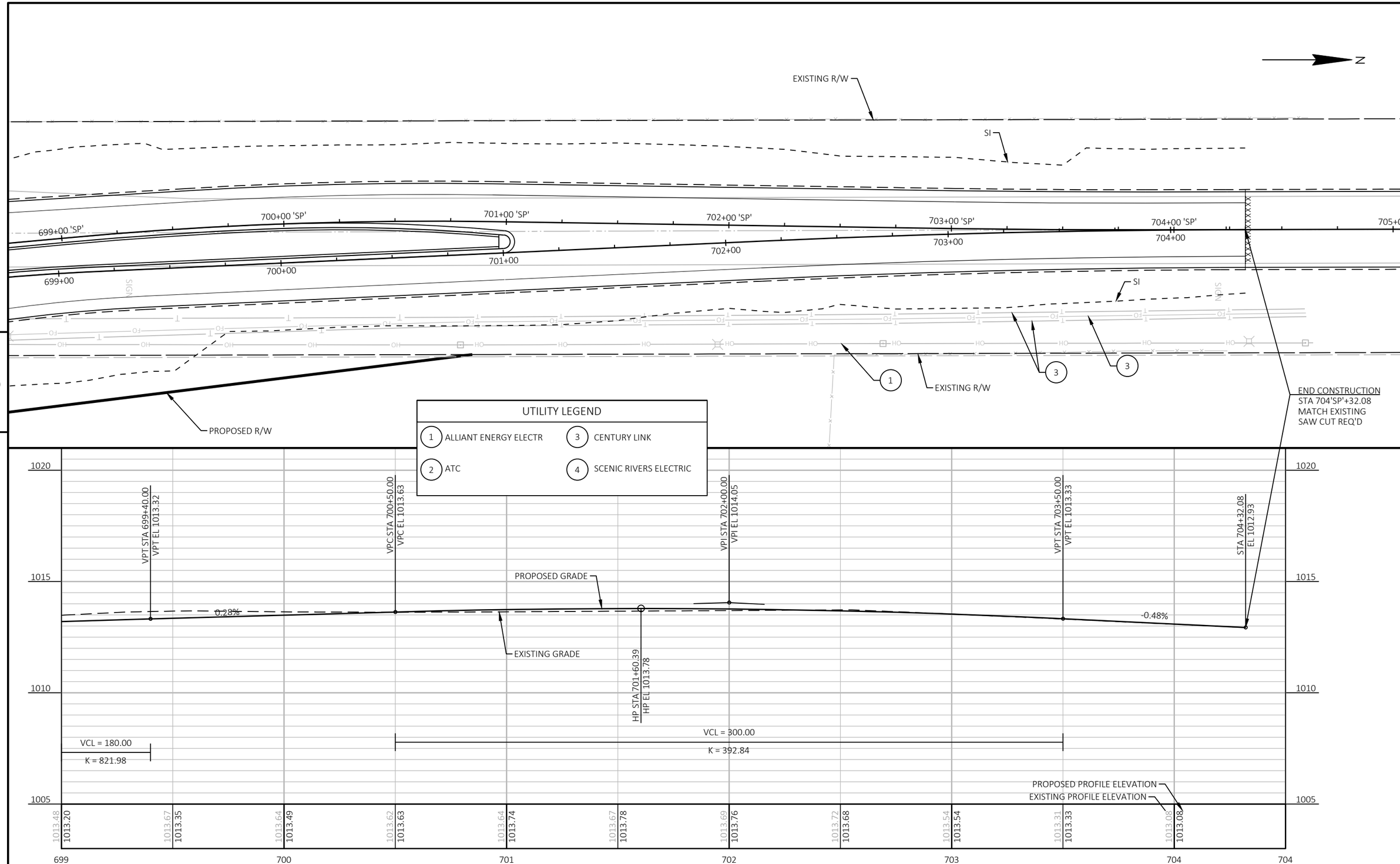

PROJECT NO: 5235-03-70	HWY: STH 80	COUNTY: GRANT	PLAN AND PROFILE: STH 80 SB	SHEET 159	E

FILE NAME : X:\PROJECTS\GRANT\200050MW - 5235-03-00 STH 80\DESIGN\C3D\SHEETSPLAN\050101-PP.DWG
LAYOUT NAME - 06
PLOT DATE : 6/29/2022 5:28 PM
PLOT BY : MICHAEL LISKA
PLOT NAME :
PLOT SCALE : 1 IN:40 FT

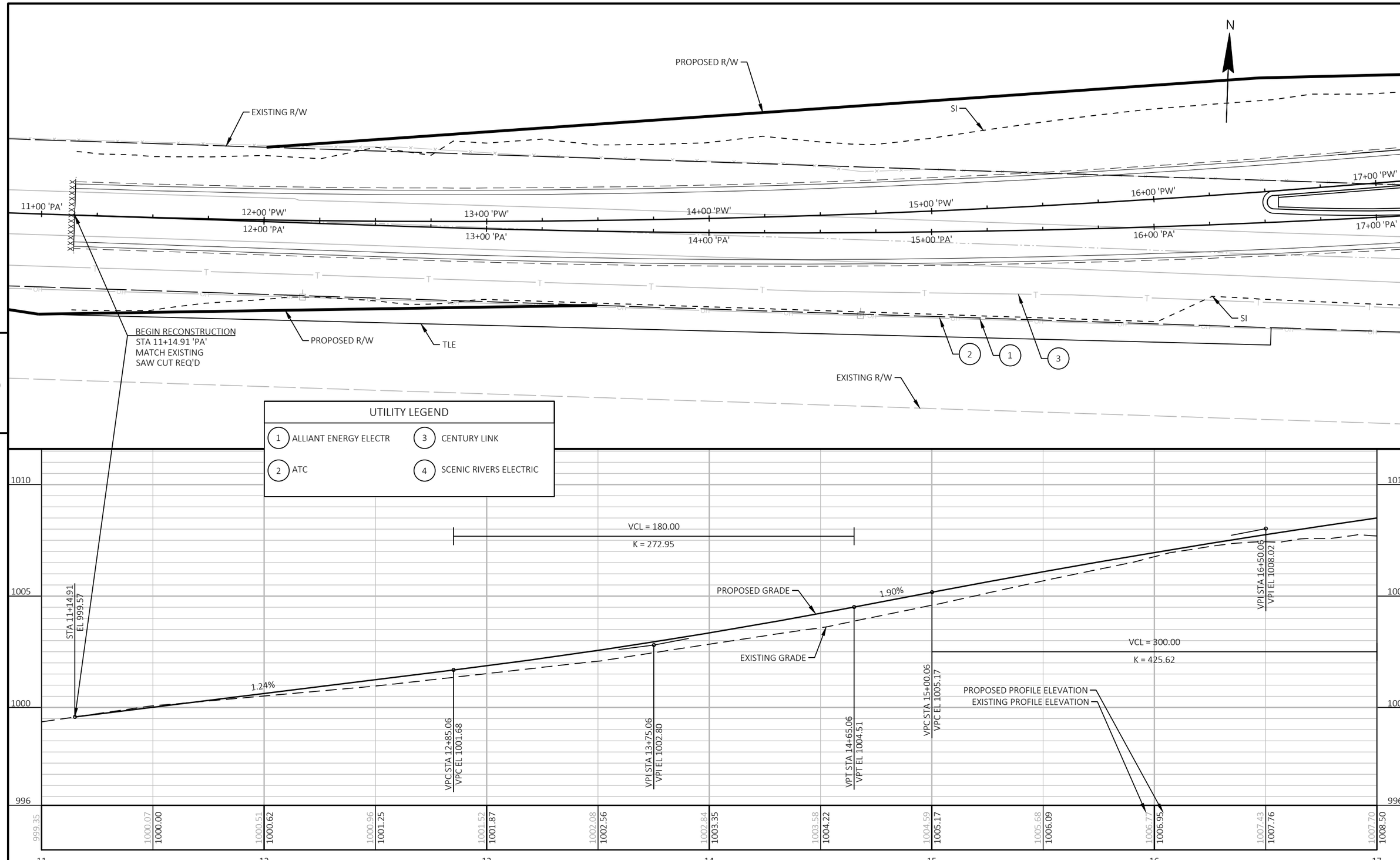

PROJECT NO: 5235-03-70	HWY: STH 80	COUNTY: GRANT	PLAN AND PROFILE: PATCH RD AND STH 81 EB	SHEET 160	E

FILE NAME : X:\PROJECTS\GRANT\200050MW - 5235-03-00 STH 80\DESIGN\C3D\SHEETSPLAN\050101-PP.DWG
LAYOUT NAME - 07
PLOT DATE : 6/29/2022 5:29 PM
PLOT BY : MICHAEL LISKA
PLOT NAME :
PLOT SCALE : 1 IN:40 FT
WISDOT/CADDS SHEET 44

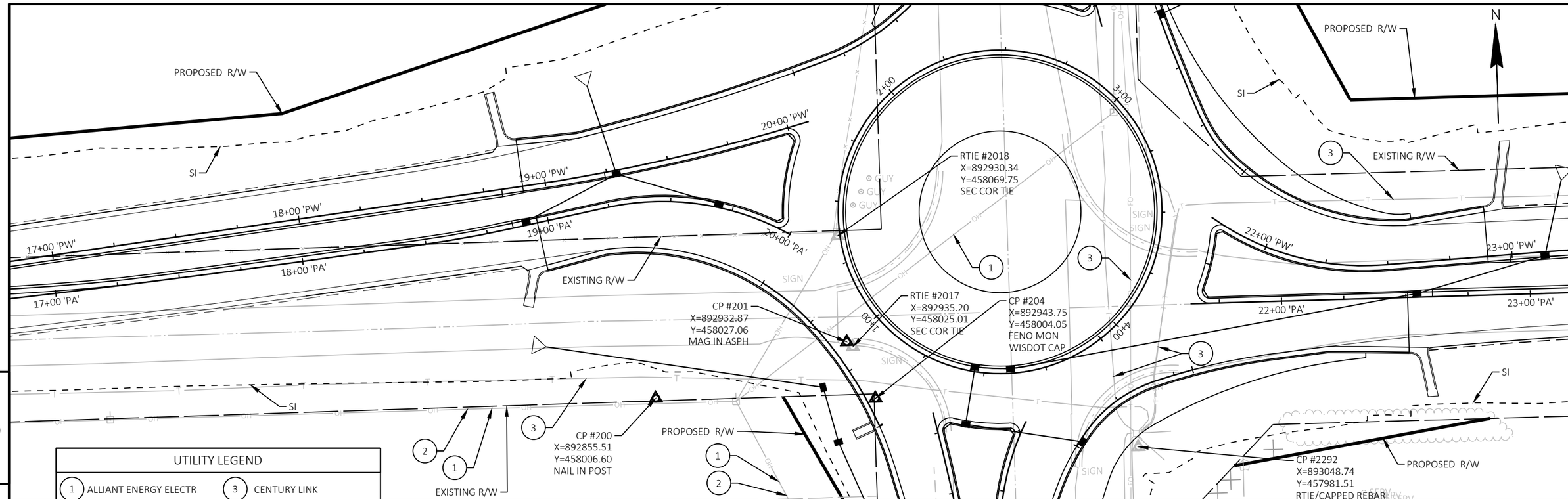

5

5

UTILITY LEGEND	
1 ALLIANT ENERGY ELECTR	3 CENTURY LINK
2 ATC	4 SCENIC RIVERS ELECTRIC

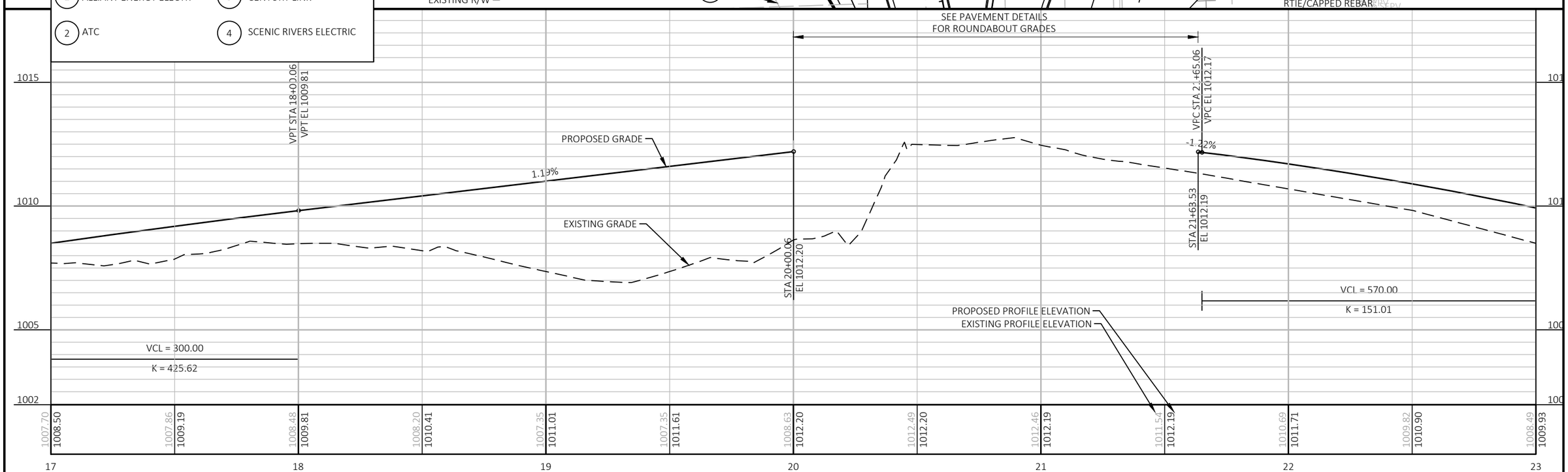

PROJECT NO: 5235-03-70	HWY: STH 80	COUNTY: GRANT	PLAN AND PROFILE: PATCH RD AND STH 81 EB	SHEET 161	E

FILE NAME : X:\PROJECTS\GRANT\200050MW - 5235-03-00 STH 80\DESIGN\C3D\SHEETSPLAN\050101-PP.DWG
LAYOUT NAME - 08
PLOT DATE : 6/29/2022 5:29 PM
PLOT BY : MICHAEL LISKA
PLOT NAME :
PLOT SCALE : 1 IN:40 FT

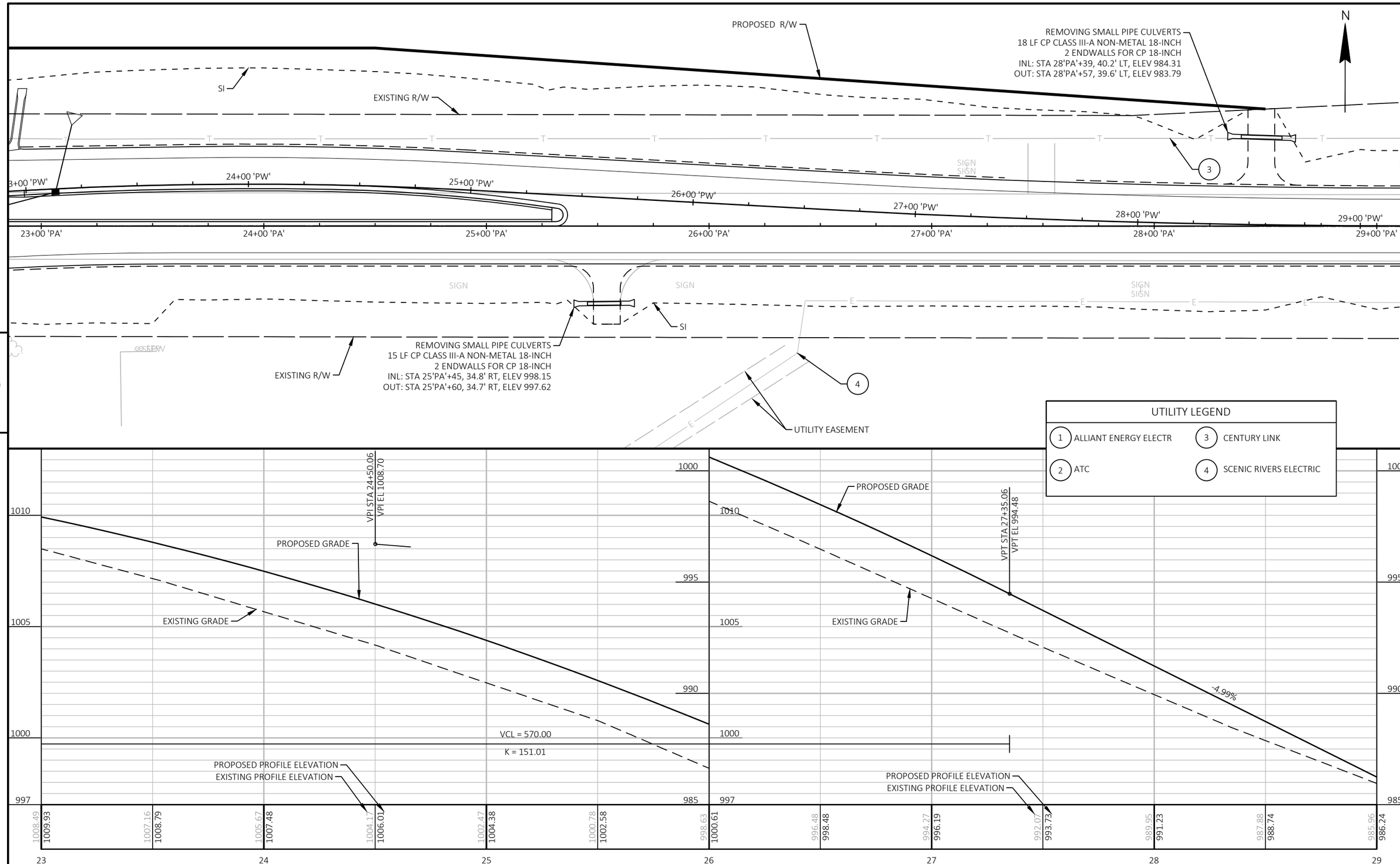

PROJECT NO: 5235-03-70	HWY: STH 80	COUNTY: GRANT	PLAN AND PROFILE: PATCH RD AND STH 81 EB	SHEET 162	E

FILE NAME : X:\PROJECTS\GRANT\200050MW - 5235-03-00 STH 80\DESIGN\C3D\SHEETSPLAN\050101-PP.DWG
LAYOUT NAME - 09
PLOT DATE : 6/29/2022 5:29 PM
PLOT BY : MICHAEL LISKA
PLOT NAME :
PLOT SCALE : 1 IN:40 FT
WISDOT/CADDS SHEET 44

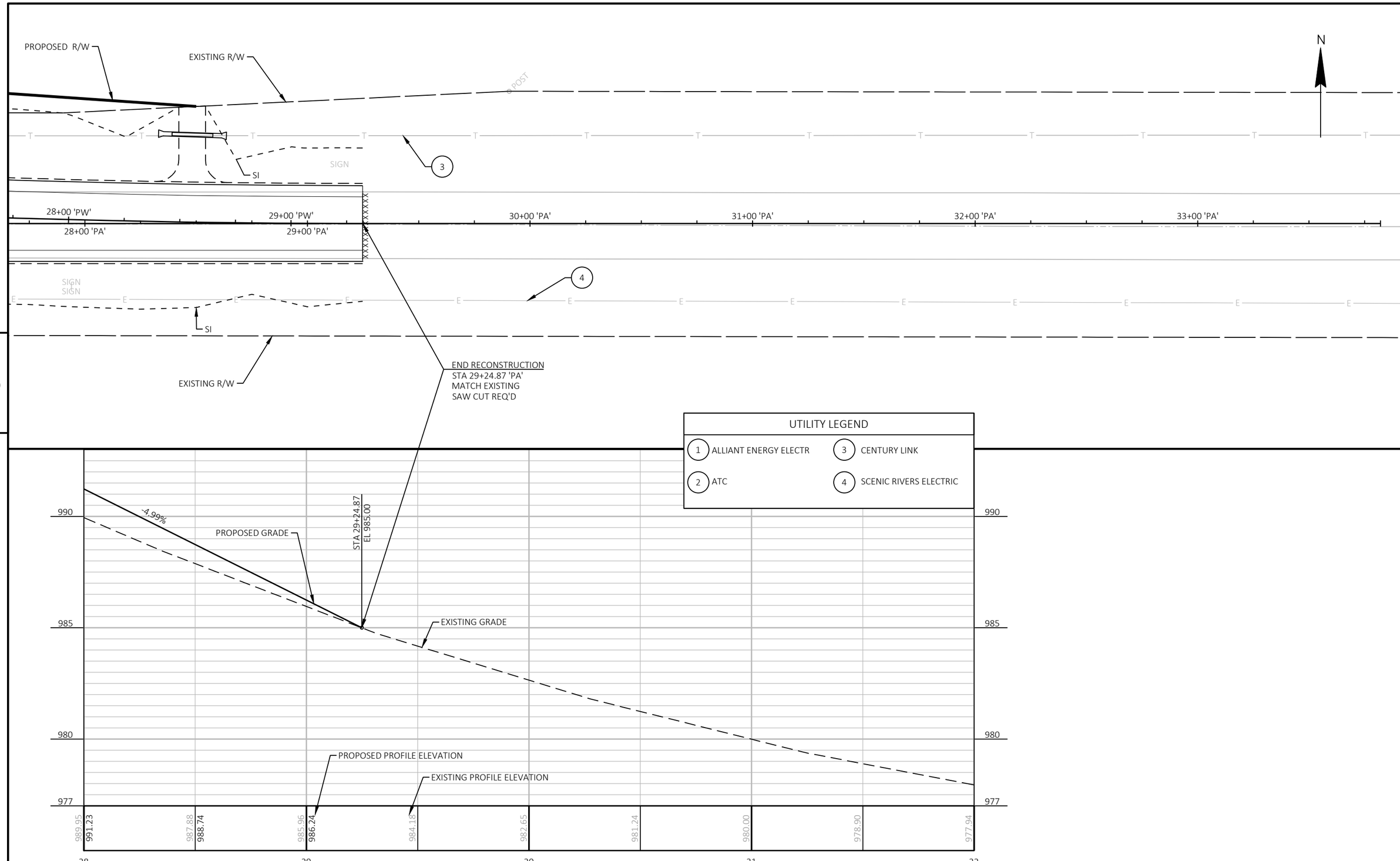

PROJECT NO: 5235-03-70	HWY: STH 80	COUNTY: GRANT	PLAN AND PROFILE: PATCH RD AND STH 81 EB	SHEET 163	E

FILE NAME : X:\PROJECTS\GRANT\200050MW - 5235-03-00 STH 80\DESIGN\C3D\SHEETSPLAN\050101-PP.DWG
LAYOUT NAME - 10
PLOT DATE : 6/29/2022 5:29 PM
PLOT BY : MICHAEL LISKA
PLOT NAME :
PLOT SCALE : 1 IN:40 FT
WISDOT/CADDS SHEET 44

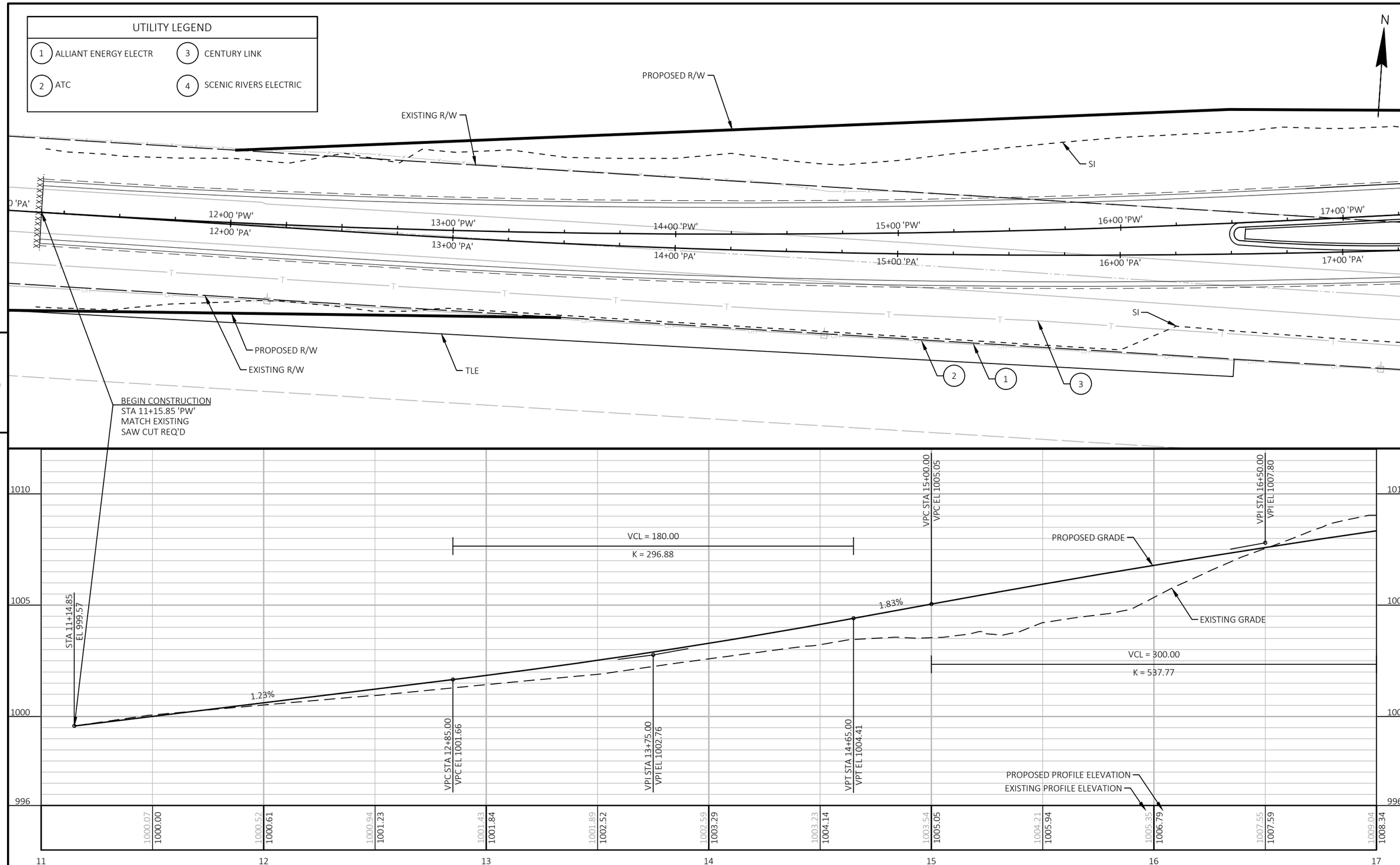

PROJECT NO: 5235-03-70	HWY: STH 80	COUNTY: GRANT	PLAN AND PROFILE: PATCH RD AND STH 81 WB	SHEET 164	E

FILE NAME : X:\PROJECTS\GRANT\200050MW - 5235-03-00 STH 80\DESIGN\C3D\SHEETSPLAN\050101-PP.DWG
LAYOUT NAME - 11
PLOT DATE : 6/29/2022 5:29 PM
PLOT BY : MICHAEL LISKA
PLOT NAME :
PLOT SCALE : 1 IN:40 FT
WISDOT/CADDS SHEET 44

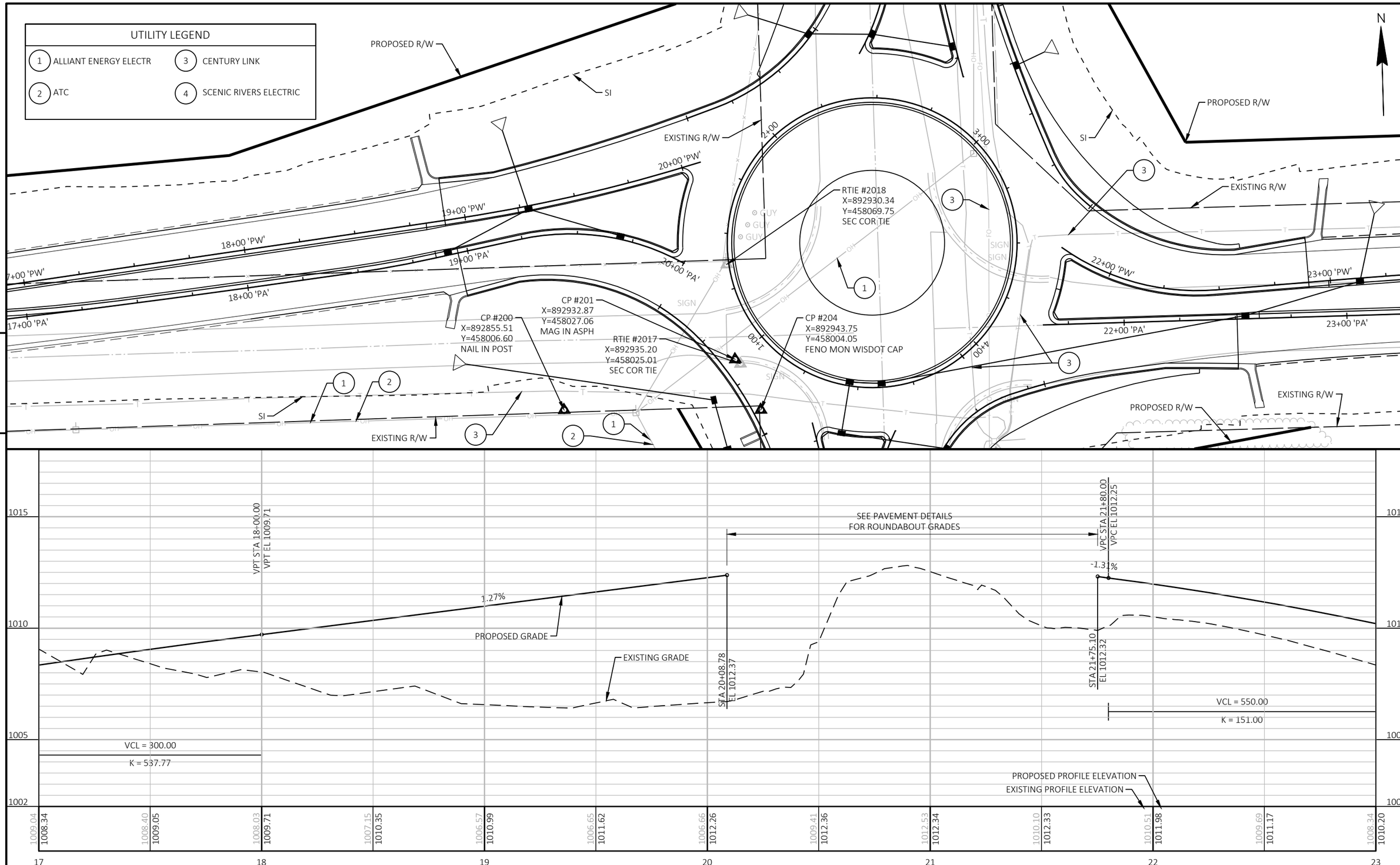

PROJECT NO: 5235-03-70	HWY: STH 80	COUNTY: GRANT	PLAN AND PROFILE: PATCH RD AND STH 81 WB	SHEET 165	E

FILE NAME : X:\PROJECTS\GRANT\200050MW - 5235-03-00 STH 80\DESIGN\C3D\SHEETSPLAN\050101-PP.DWG
LAYOUT NAME - 12
PLOT DATE : 6/29/2022 5:29 PM
PLOT BY : MICHAEL LISKA
PLOT NAME :
PLOT SCALE : 1 IN:40 FT
WISDOT/CADDS SHEET 44

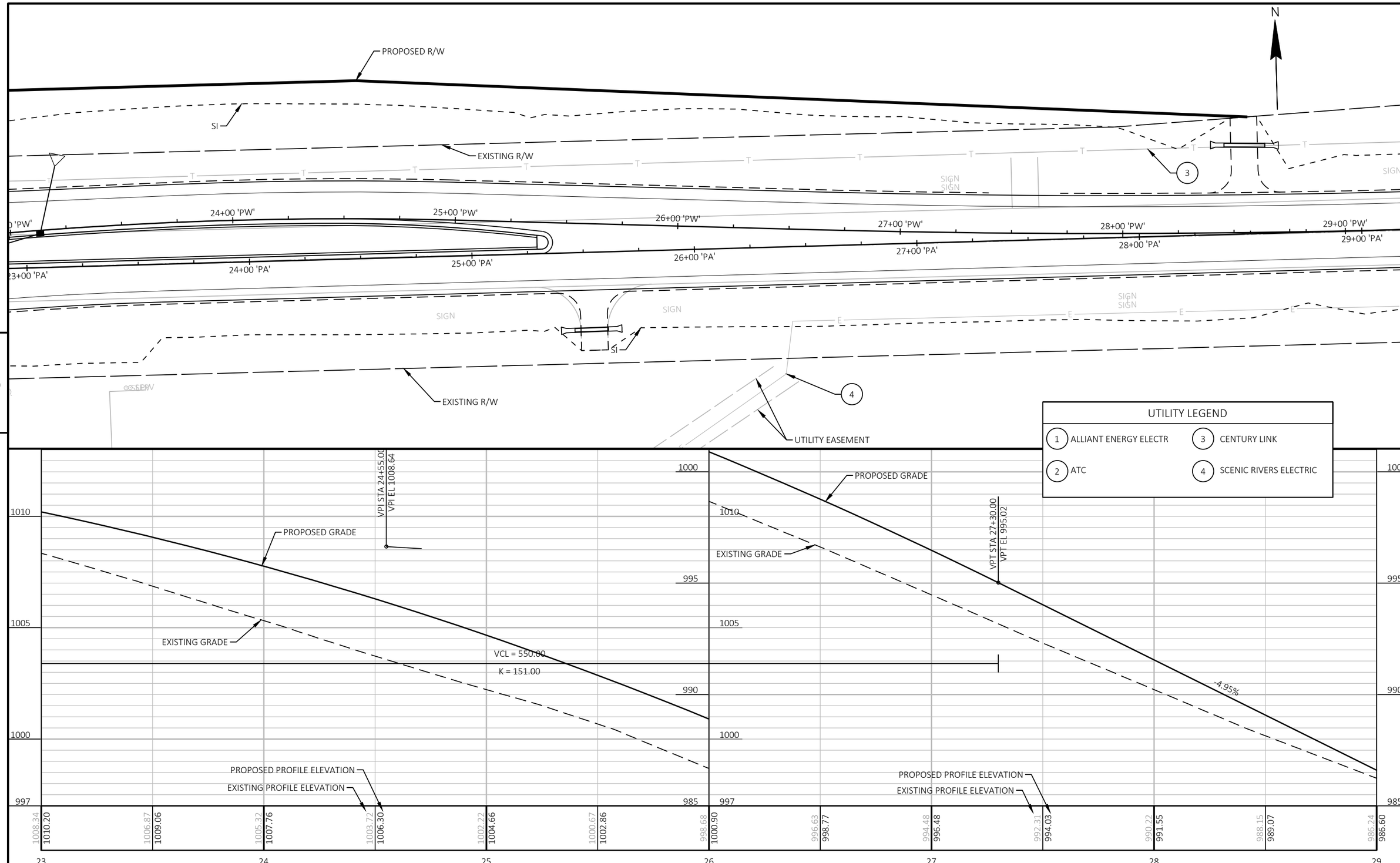

PROJECT NO: 5235-03-70	HWY: STH 80	COUNTY: GRANT	PLAN AND PROFILE: PATCH RD AND STH 81 WB	SHEET 166	E

FILE NAME : X:\PROJECTS\GRANT\200050MW - 5235-03-00 STH 80\DESIGN\C3D\SHEETSPLAN\050101-PP.DWG
LAYOUT NAME - 13
PLOT DATE : 6/29/2022 5:30 PM
PLOT BY : MICHAEL LISKA
PLOT NAME :
PLOT SCALE : 1 IN:40 FT
WISDOT/CADDS SHEET 44

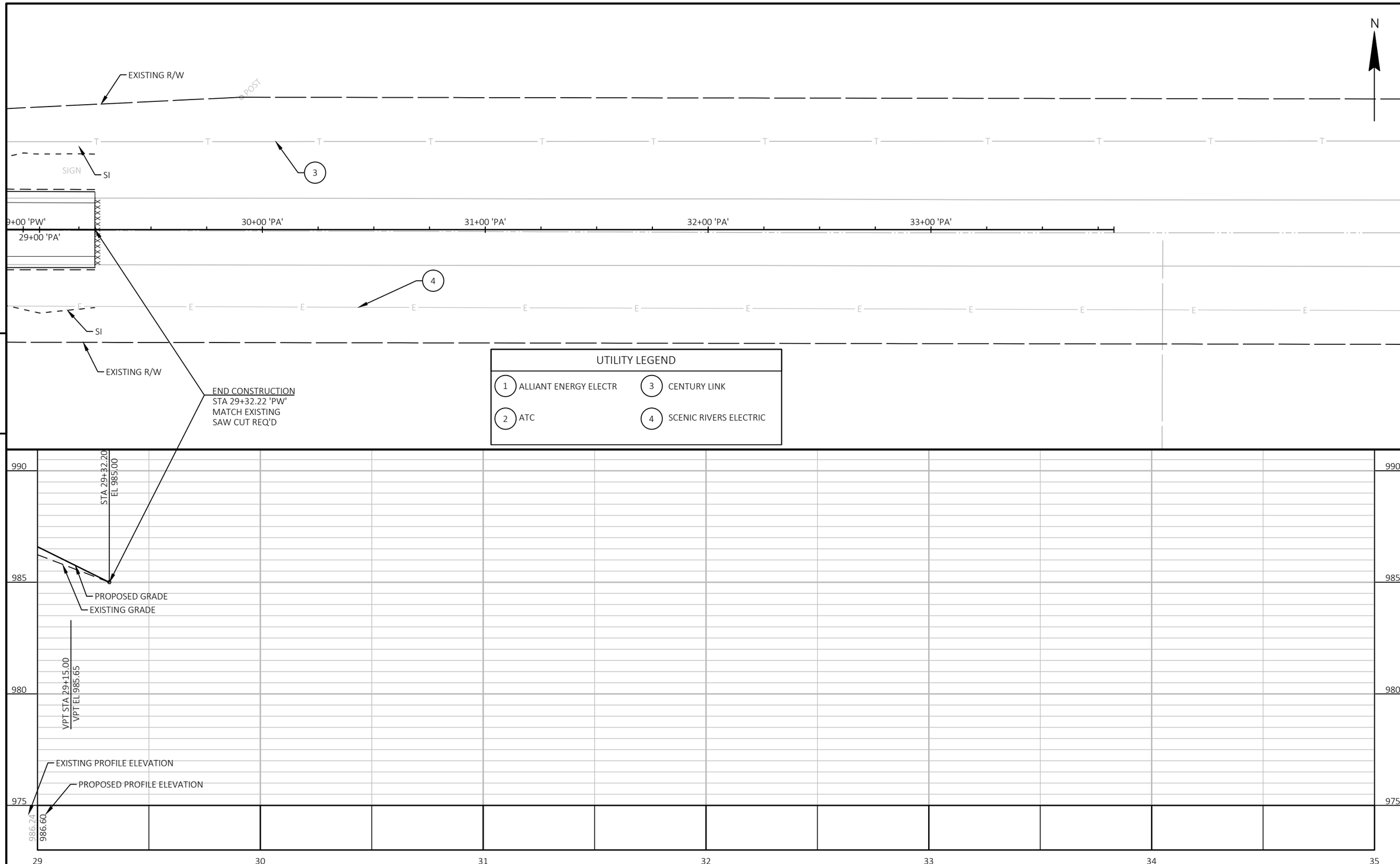

PROJECT NO: 5235-03-70	HWY: STH 80	COUNTY: GRANT	PLAN AND PROFILE: PATCH RD AND STH 81 WB	SHEET 167	E

FILE NAME : X:\PROJECTS\GRANT\200050MW - 5235-03-00 STH 80\DESIGN\C3D\SHEETSPLAN\050101-PP.DWG
LAYOUT NAME - 14
PLOT DATE : 6/29/2022 5:30 PM PLOT BY : MICHAEL LISKA PLOT NAME : PLOT SCALE : 1 IN:40 FT

WISDOT/CADDS SHEET 44

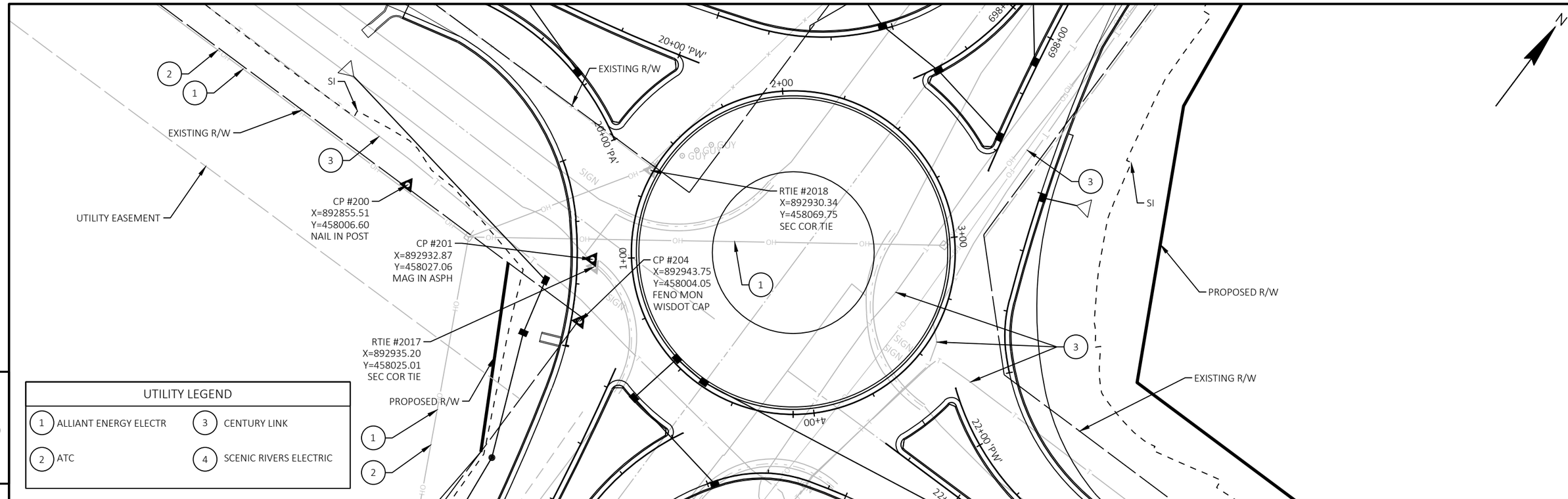

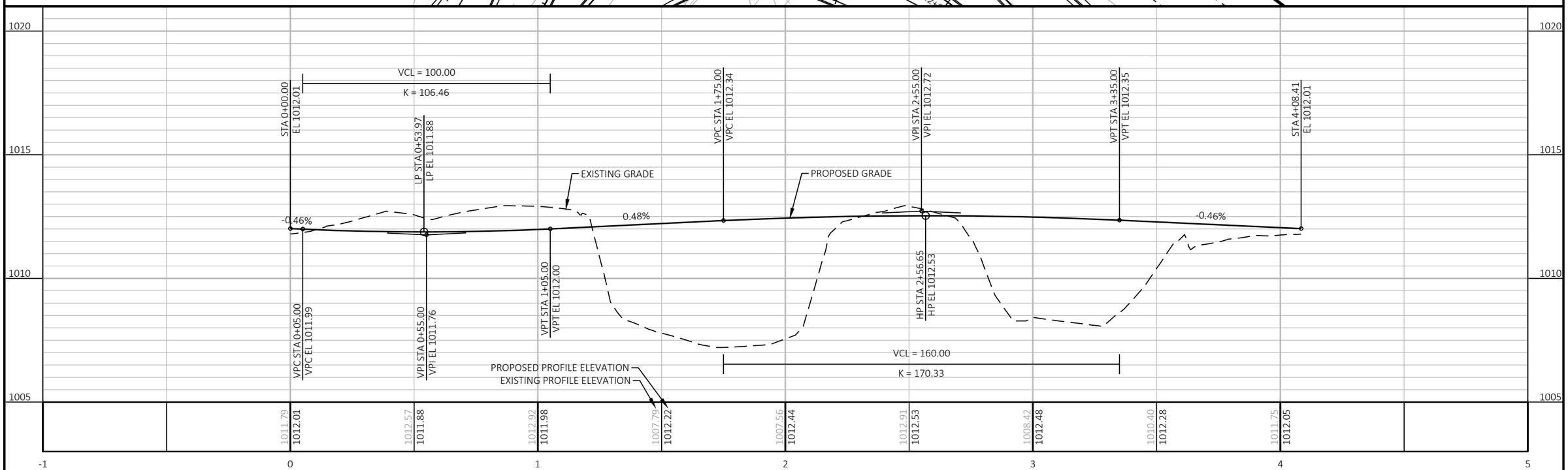

PROJECT NO: 5235-03-70	HWY: STH 80	COUNTY: GRANT	PLAN AND PROFILE: CIRCLE	SHEET 168	E

FILE NAME : X:\PROJECTS\GRANT\200050MW - 5235-03-00 STH 80\DESIGN\C3D\SHEETSPLAN\050101-PP.DWG
LAYOUT NAME - 15
PLOT DATE : 6/29/2022 5:30 PM
PLOT BY : MICHAEL LISKA
PLOT NAME :
PLOT SCALE : 1 IN:40 FT
WISDOT/CADDS SHEET 44

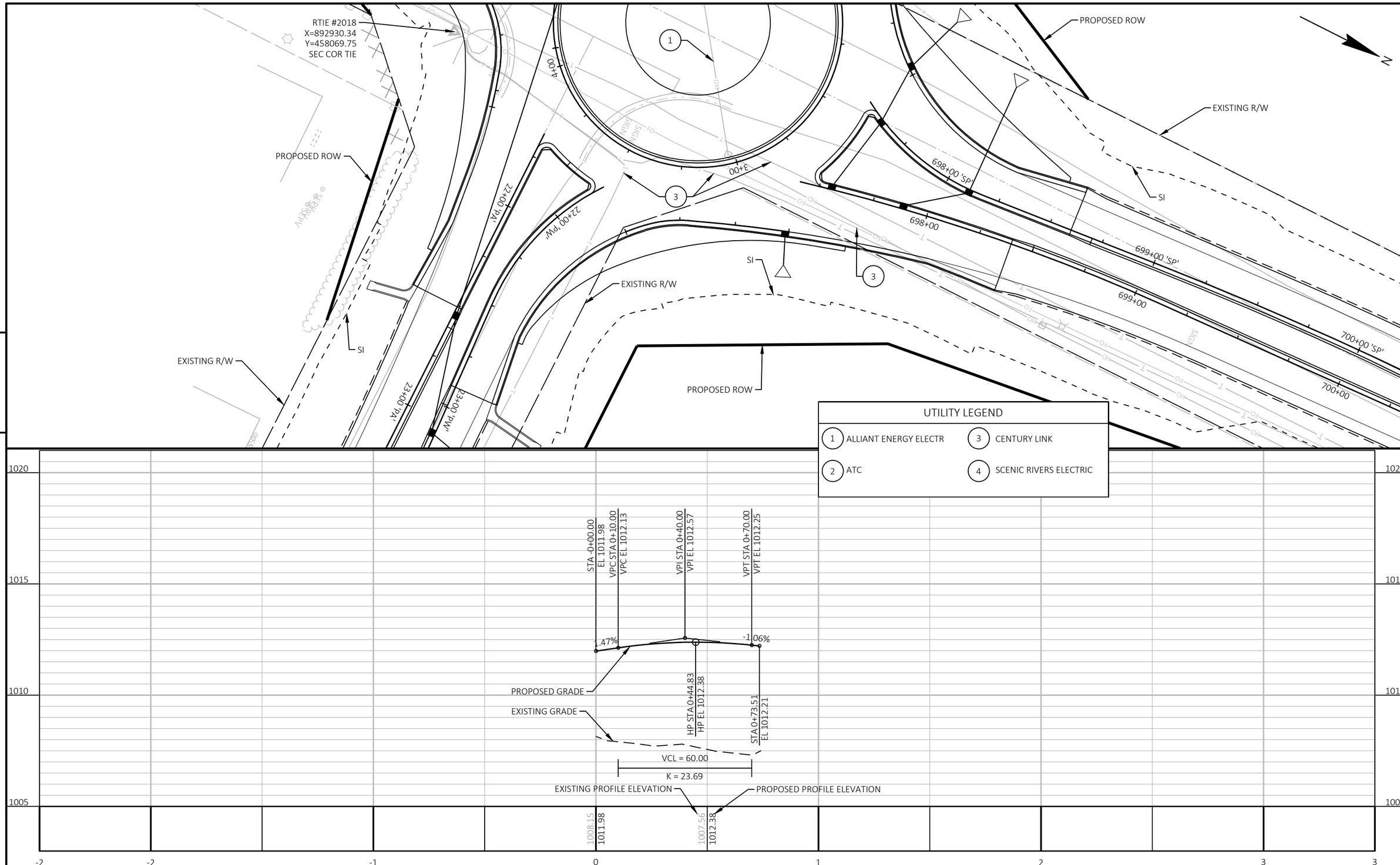

PROJECT NO: 5235-03-70	HWY: STH 80	COUNTY: GRANT	PLAN AND PROFILE: NE RADIUS	SHEET 169	E

FILE NAME : X:\PROJECTS\GRANT\200050MW - 5235-03-00 STH 80\DESIGN\C3D\SHEETSPLAN\050101-PP.DWG
LAYOUT NAME - 16
PLOT DATE : 6/29/2022 5:30 PM PLOT BY : MICHAEL LISKA PLOT NAME : PLOT SCALE : 1 IN:40 FT

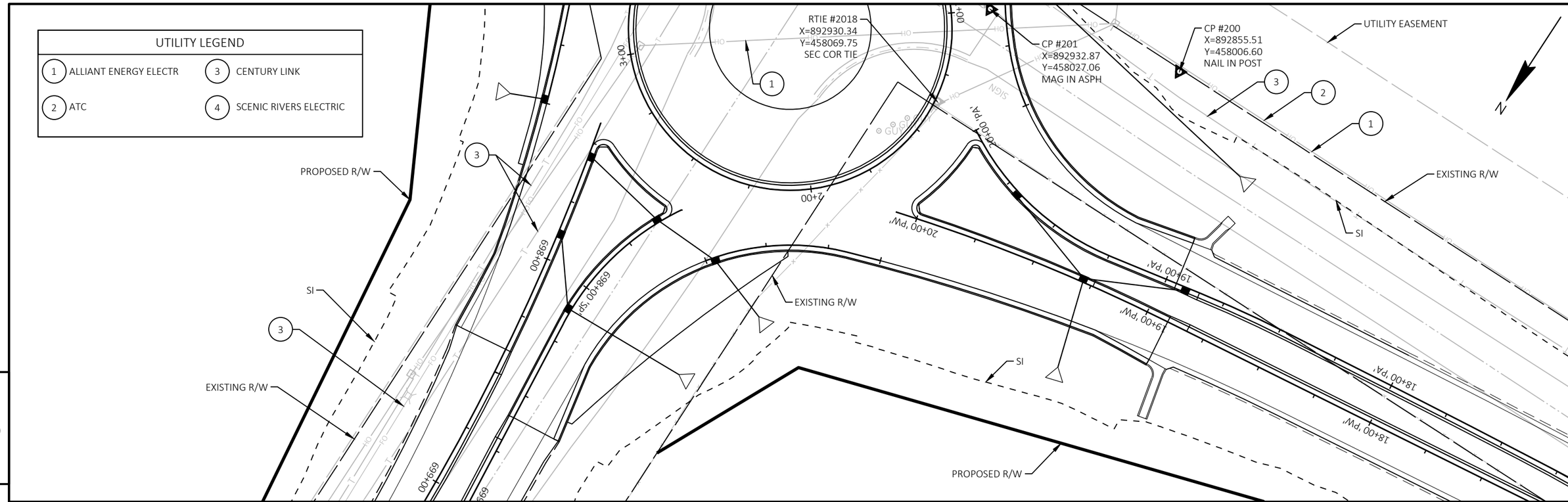

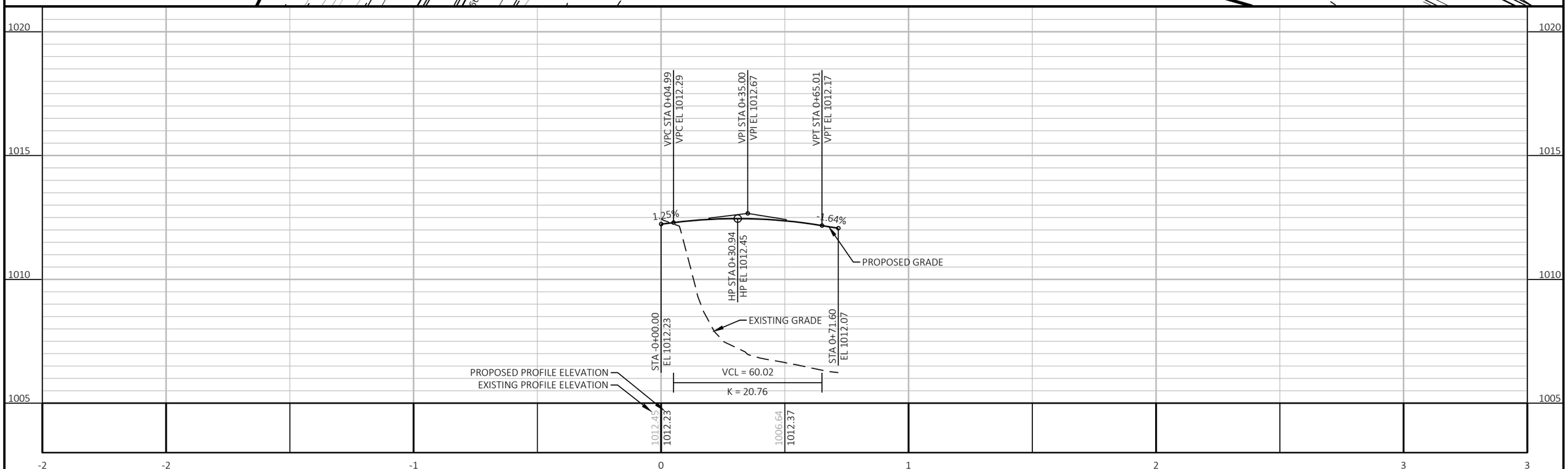

PROJECT NO: 5235-03-70	HWY: STH 80	COUNTY: GRANT	PLAN AND PROFILE: NW RADIUS	SHEET 170	E

FILE NAME : X:\PROJECTS\GRANT\200050MW - 5235-03-00 STH 80\DESIGN\C3D\SHEETSPLAN\050101-PP.DWG
LAYOUT NAME - 17
PLOT DATE : 6/29/2022 5:30 PM
PLOT BY : MICHAEL LISKA
PLOT NAME :
PLOT SCALE : 1 IN:40 FT
WISDOT/CADDS SHEET 44

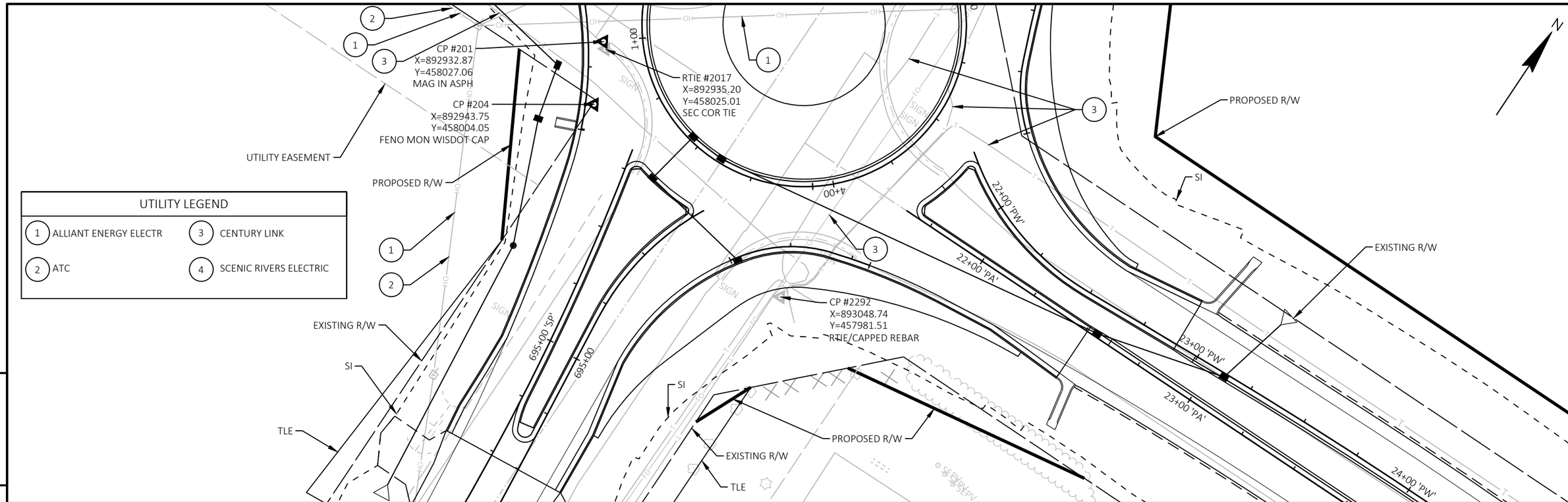

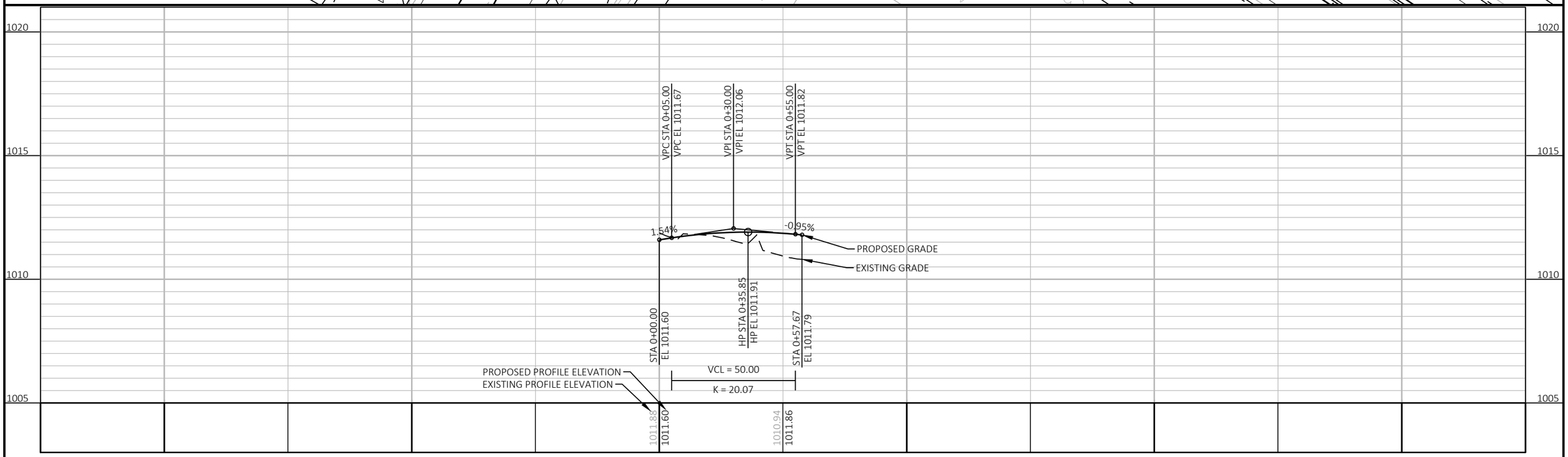

PROJECT NO: 5235-03-70	HWY: STH 80	COUNTY: GRANT	PLAN AND PROFILE: SE RADIUS	SHEET 171	E

FILE NAME : X:\PROJECTS\GRANT\200050MW - 5235-03-00 STH 80\DESIGN\C3D\SHEETSPLAN\050101-PP.DWG
LAYOUT NAME - 18
PLOT DATE : 6/29/2022 5:31 PM
PLOT BY : MICHAEL LISKA
PLOT NAME :
PLOT SCALE : 1 IN:40 FT
WISDOT/CADDS SHEET 44

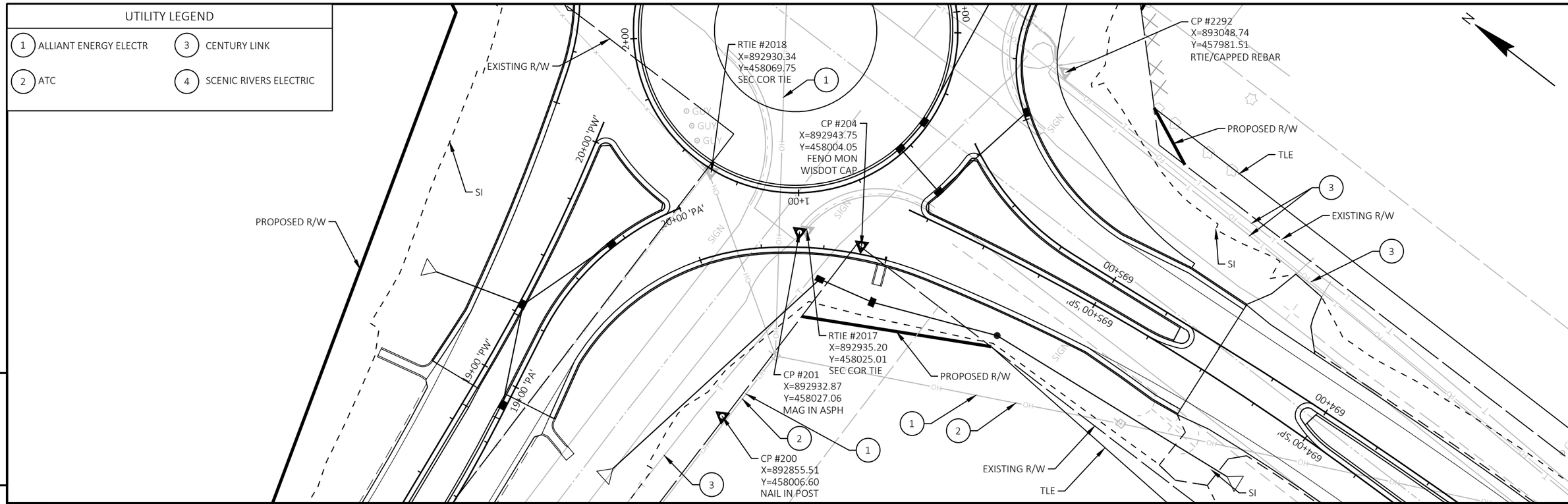

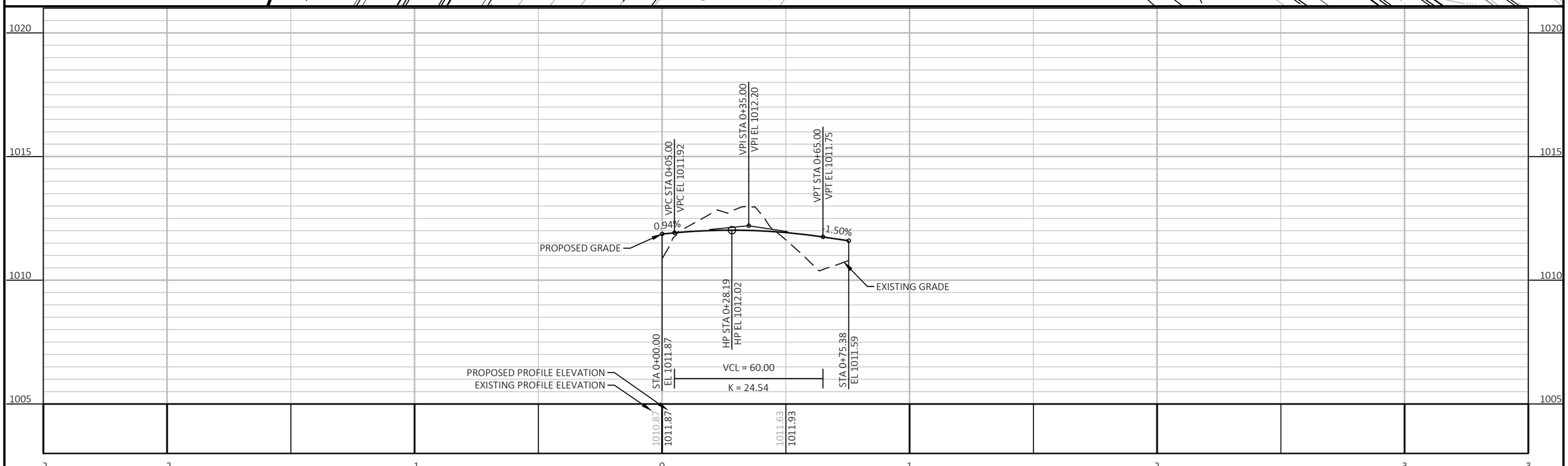

PROJECT NO: 5235-03-70	HWY: STH 80	COUNTY: GRANT	PLAN AND PROFILE: SW RADIUS	SHEET 172	E

FILE NAME : X:\PROJECTS\GRANT\200050MW - 5235-03-00 STH 80\DESIGN\C3D\SHEETSPLAN\050101-PP.DWG
LAYOUT NAME - 19
PLOT DATE : 7/18/2022 9:01 AM
PLOT BY : MICHAEL LISKA
PLOT NAME :
PLOT SCALE : 1 IN:40 FT
WISDOT/CADDS SHEET 44

Standard Detail Drawing List

08A05-19A	INLET COVERS TYPE A, H, A-S, H-S & Z
08A05-19B	INLET COVERS TYPE B, B-A, C, MS, MS-A, & WM
08A05-19C	INLET COVERS TYPE F, HM, HM-S, S, T, V, HM-GJ, & HM-GJ-S
08A05-19D	INLET COVER TYPE BW, MANHOLE COVERS, TYPE K, J, J-S, L & M
08B09-03	MANHOLES 3-FT, 4-FT, 5-FT, 6-FT, 7-FT, 8-FT, 9-FT, 10-FT DIAMETER
08C06-02	INLETS 3-FT AND 4-FT DIAMETER
08C08-02	INLETS MEDIAN 1 AND 2 GRATE
08D01-22A	CONCRETE CURB & GUTTER
08D01-22B	CONCRETE CURB, TIES AND CURB AND GUTTER APPLICATIONS
08D04-06	CONCRETE SURFACE DRAINS & ASPHALTIC FLUMES
08D22-01	DRIVEWAYS WITHOUT CURB & GUTTER RESURFACING PROJECTS RURAL
08E08-03	TYPICAL INSTALLATIONS OF EROSION BALES / TEMPORARY DITCH CHECKS
08E09-06	SILT FENCE
08E10-02	INLET PROTECTION TYPE A, B, C AND D
08E15-01	CULVERT PIPE CHECK
08F01-11	APRON ENDWALLS FOR CULVERT PIPE
08F04-08	JOINT TIES FOR CONCRETE PIPE AND CONCRETE COLLAR DETAIL
09B02-10	CONDUIT
09B16-02	PULL BOX NON-CONDUCTIVE
09C02-09	CONCRETE BASES, TYPES 1, 2, 5, & 6
09C03-04	TRANSFORMER/PEDESTAL BASES
09C14-03	CONCRETE CONTROL CABINET BASE, TYPE L
09D04-03	LIGHTING CONTROL CABINET 120/240 VOLT
09E01-15D	POLE MOUNTINGS FOR LIGHTING UNITS, TYPE 5 (30 FEET)
09E01-15G	HARDWARE DETAILS FOR POLE MOUNTINGS
09E03-06	NON-FREEWAY LIGHTING UNIT POLE WIRING
11B02-02	CONCRETE MEDIAN NOSE
12A03-10	NAME PLATE (STRUCTURES)
13A10-02A	2-LANE RURAL SHOULDER RUMBLE STRIP, MILLING
13A10-02B	2-LANE RURAL SHOULDER RUMBLE STRIP, MILLING
13A10-02C	2-LANE RURAL SHOULDER RUMBLE STRIP, MILLING
13A10-02D	2-LANE RURAL SHOULDER RUMBLE STRIP, MILLING
13A11-03A	2-LANE RURAL CENTER LINE RUMBLE STRIP, MILLING
13A11-03B	2-LANE RURAL CENTER LINE RUMBLE STRIP, MILLING
13C01-19	CONCRETE PAVEMENT LONGITUDINAL JOINTS AND TIES
13C11-13A	RURAL DOWELED CONCRETE PAVEMENT
13C11-13B	RURAL DOWELED CONCRETE PAVEMENT
13C18-07A	CONCRETE PAVEMENT JOINTING
13C18-07B	CONCRETE PAVEMENT STEEL REINFORCEMENT
13C18-07C	CONCRETE PAVEMENT JOINT TYPES
13C18-07D	CONCRETE PAVEMENT JOINT TYPES AT UTILITY FIXTURES
13C18-07E	CONCRETE PAVEMENT JOINTING AND STEEL REINFORCEMENT IN ROUNDABOUTS
13C18-07F	CONCRETE PAVEMENT INTERSECTION BOXOUT FOR INTEGRAL CURB AND GUTTER
13C19-03	HMA LONGITUDINAL JOINTS
14B07-16A	CONCRETE BARRIER TEMPORARY PRECAST, 12'-6"
14B07-16B	CONCRETE BARRIER TEMPORARY PRECAST, 12'-6"
14B07-16C	CONCRETE BARRIER TEMPORARY PRECAST, 12'-6"
14B07-16D	CONCRETE BARRIER TEMPORARY PRECAST, 12'-6"
14B07-16E	CONCRETE BARRIER TEMPORARY PRECAST, 12'-6"
14B07-16F	CONCRETE BARRIER TEMPORARY PRECAST, 12'-6"
14B07-16G	CONCRETE BARRIER TEMPORARY PRECAST, 12'-6"
14B07-16H	CONCRETE BARRIER TEMPORARY PRECAST, 12'-6"
14B07-16I	CONCRETE BARRIER TEMPORARY PRECAST, 12'-6"
14B07-16J	CONCRETE BARRIER TEMPORARY PRECAST, 12'-6"
14B07-16K	CONCRETE BARRIER TEMPORARY PRECAST, 12'-6"
14B07-16L	CONCRETE BARRIER TEMPORARY PRECAST, 12'-6"
14B07-16M	CONCRETE BARRIER TEMPORARY PRECAST, 12'-6"
14B08-02A	CRASH CUSHION/SAND BARREL ARRAY AND OTHER TEMPORARY BARRIER LAYOUT DETAILS
14B15-11A	STEEL PLATE BEAM GUARD, CLASS "A" INSTALLATION & ELEMENTS
14B15-11B	STEEL PLATE BEAM GUARD, CLASS "A" INSTALLATION & ELEMENTS
14B15-11C	STEEL PLATE BEAM GUARD, CLASS "A", INSTALLATION & ELEMENTS
14B24-09A	STEEL PLATE BEAM GUARD ENERGY ABSORBING TERMINAL
14B24-09B	STEEL PLATE BEAM GUARD ENERGY ABSORBING TERMINAL
14B24-09C	STEEL PLATE BEAM GUARD ENERGY ABSORBING TERMINAL
14B42-07A	MIDWEST GUARDRAIL SYSTEM (MGS) GUARDRAIL
14B42-07B	MIDWEST GUARDRAIL SYSTEM (MGS) GUARDRAIL
14B42-07C	MIDWEST GUARDRAIL SYSTEM (MGS) GUARDRAIL

6

Standard Detail Drawing List

14B42-07D	MIDWEST GUARDRAIL SYSTEM (MGS) GUARDRAIL
14B44-04A	MIDWEST GUARDRAIL SYSTEM ENERGY ABSORBING TERMINAL (MGS)
14B44-04B	MIDWEST GUARDRAIL SYSTEM ENERGY ABSORBING TERMINAL (MGS)
14B44-04C	MIDWEST GUARDRAIL SYSTEM ENERGY ABSORBING TERMINAL (MGS)
14B45-05A	MIDWEST GUARDRAIL SYSTEM THRIE BEAM TRANSITION (MGS)
14B45-05B	MIDWEST GUARDRAIL SYSTEM THRIE BEAM TRANSITION (MGS)
14B45-05C	MIDWEST GUARDRAIL SYSTEM THRIE BEAM TRANSITION (MGS)
14B45-05G	MIDWEST GUARDRAIL SYSTEM THRIE BEAM TRANSITION (MGS)
14B53-02A	SHORT RADIUS BEAM GUARD (MGS) SHORT RADIUS TERMINAL (MGS)
14B53-02B	SHORT RADIUS BEAM GUARD (MGS) SHORT RADIUS TERMINAL (MGS)
14B53-02C	SHORT RADIUS BEAM GUARD (MGS) SHORT RADIUS TERMINAL (MGS)
14B53-02D	SHORT RADIUS BEAM GUARD (MGS) SHORT RADIUS TERMINAL (MGS)
14B53-02E	SHORT RADIUS BEAM GUARD (MGS) SHORT RADIUS TERMINAL (MGS)
14B53-02F	SHORT RADIUS BEAM GUARD (MGS) SHORT RADIUS TERMINAL (MGS)
14B53-02G	SHORT RADIUS BEAM GUARD (MGS) SHORT RADIUS TERMINAL (MGS)
14B53-02H	SHORT RADIUS BEAM GUARD (MGS) SHORT RADIUS TERMINAL (MGS)
14B53-02I	SHORT RADIUS BEAM GUARD (MGS) SHORT RADIUS TERMINAL (MGS)
15A03-02A	FLEXIBLE MARKER POST FOR CULVERT END
15A03-02B	FLEXIBLE MARKER POST FOR CULVERT END
15C02-08A	BARRICADES AND SIGNS FOR MAINLINE CLOSURES
15C02-08B	BARRICADES AND SIGNS FOR VARIOUS CLOSURES
15C02-08F	ADVANCED WIDTH RESTRICTION SIGNING
15C03-05	BARRICADES AND SIGNS FOR SIDEROAD CLOSURES
15C04-05	TRAFFIC CONTROL, ADVANCE WARNING SIGNS 45 M.P.H. OR GREATER TWO-WAY UNDIVIDED ROAD OPEN TO TRAFFIC
15C07-15B	PAVEMENT MARKING WORDS
15C07-15C	PAVEMENT MARKING ARROWS
15C08-21A	LONGITUDINAL MARKING (MAINLINE)
15C08-21B	TEMPORARY LONGITUDINAL PAVEMENT MARKING
15C08-21D	PAVEMENT MARKING (TURN LANES)
15C11-09B	CHANNELIZING DEVICES DRUMS, CONES, BARRICADES AND VERTICAL PANELS
15C12-09A	TRAFFIC CONTROL FOR LANE CLOSURE WITH FLAGGING OPERATION
15C18-06A	MEDIAN ISLAND MARKING PAVEMENT MARKINGS
15C18-06B	MEDIAN ISLAND MARKING MEDIAN ISLAND NOSE
15C19-07A	MOVING PAVEMENT MARKING OPERATION TWO-LANE TWO-WAY ROADWAY
15C35-05A	PAVEMENT MARKING (INTERSECTIONS)
15D28-04	TRAFFIC CONTROL, WORK ON SHOULDER OR PARKING LANE, UNDIVIDED ROADWAY
15D37-03	TRAFFIC CONTROL, 2-LANE ROUNDABOUT
15D39-02	TRAFFIC CONTROL, DROP-OFF SIGNING
15D44-02	TRAFFIC CONTROL, SIGNING ON ROADWAYS WITH MILLED SURFACES
15D51-01	TRAFFIC CONTROL, MOBILE OPERATIONS ON AN UNDIVIDED ROADWAY

6

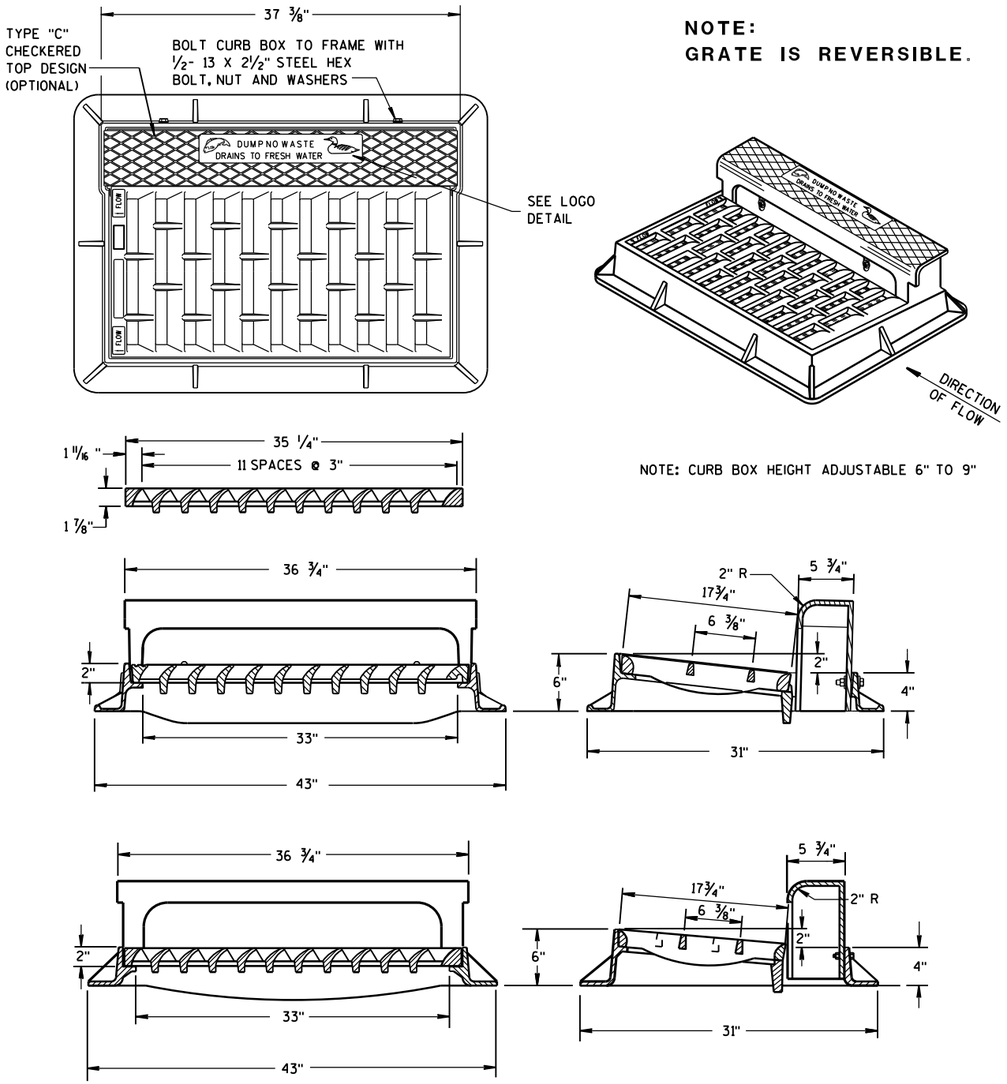

NOTE:
GRATE IS REVERSIBLE.

NOTE: CURB BOX HEIGHT ADJUSTABLE 6" TO 9"

TYPE "H"

NOTE: EITHER CASTING IS ACCEPTABLE

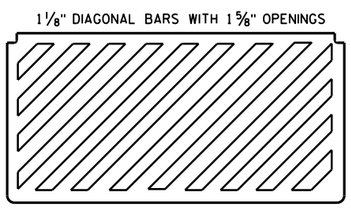

SPECIAL GRATE FOR TYPE "H" COVER

(MEASURES 35 1/4" X 17 3/4" X 2")

(NOTED AS TYPE H-S ON DRAINAGE TABLE)

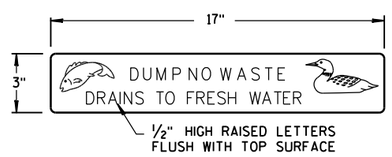

LOGO DETAIL

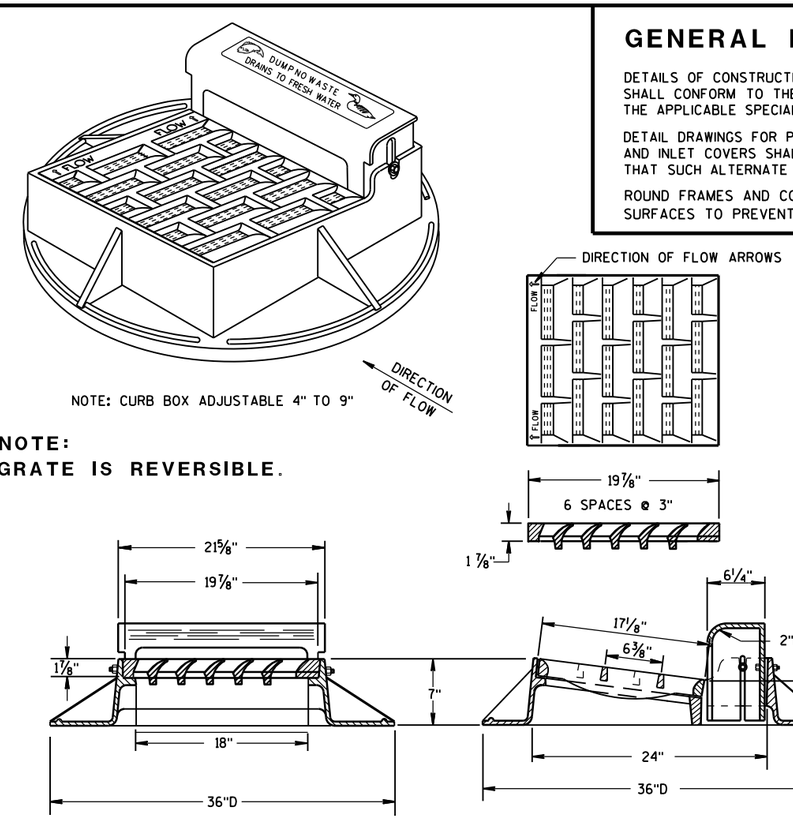

NOTE: CURB BOX ADJUSTABLE 4" TO 9"

NOTE:
GRATE IS REVERSIBLE.

TYPE "A"

GENERAL NOTES

DETAILS OF CONSTRUCTION, MATERIALS AND WORKMANSHIP NOT SHOWN ON THIS DRAWING SHALL CONFORM TO THE PERTINENT REQUIREMENTS OF THE STANDARD SPECIFICATIONS AND THE APPLICABLE SPECIAL PROVISIONS.

DETAIL DRAWINGS FOR PROPOSED ALTERNATE DESIGNS FOR CATCH BASIN, MANHOLE AND INLET COVERS SHALL BE SUBMITTED TO THE ENGINEER FOR APPROVAL PROVIDING THAT SUCH ALTERNATE DESIGNS MAKE PROVISION FOR EQUIVALENT CAPACITY AND STRENGTH.

ROUND FRAMES AND COVERS SHALL HAVE CONTINUOUSLY MACHINED BEARING SURFACES TO PREVENT ROCKING AND RATTLING.

SPECIAL GRATE FOR TYPE "A" COVER

(MEASURES 19 3/4" X 17" X 1 7/8")

(NOTED AS TYPE A-S ON DRAINAGE TABLE)

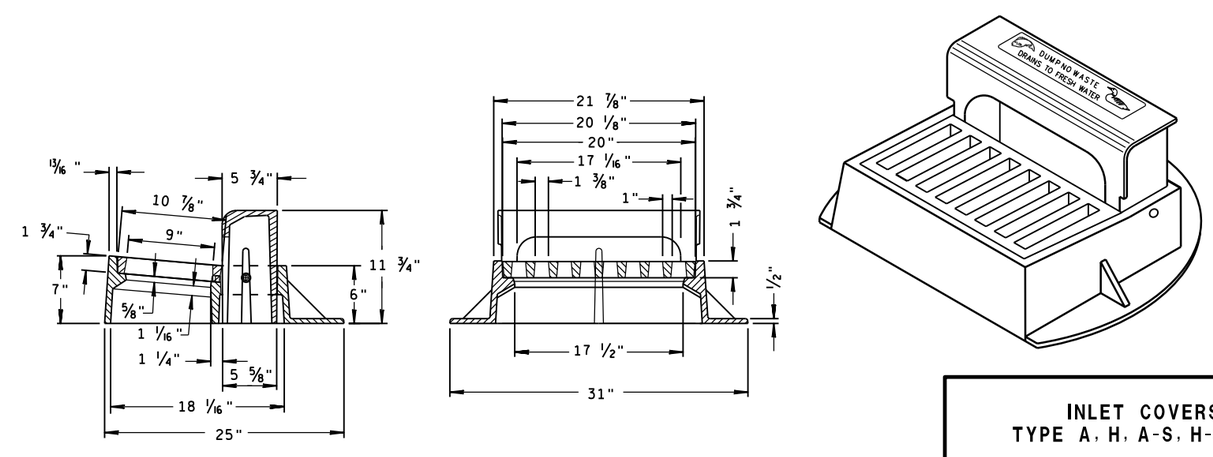

TYPE "Z"

INLET COVERS
TYPE A, H, A-S, H-S & Z

STATE OF WISCONSIN
DEPARTMENT OF TRANSPORTATION

APPROVED
11-27-13 /S/ Jerry H. Zogg
DATE ROADWAY STANDARDS DEVELOPMENT ENGINEER
FHWA

6

S.D.D. 8 A 5-19a

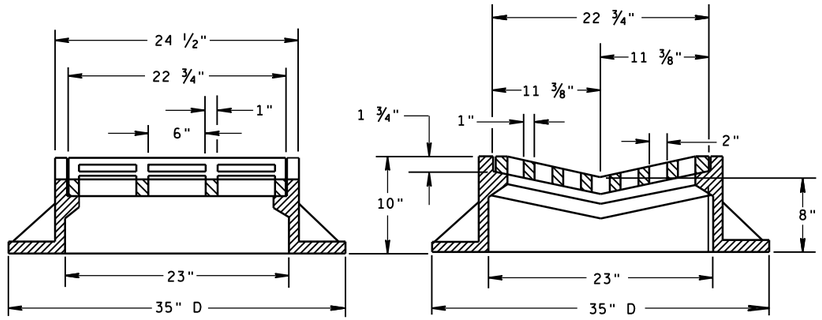

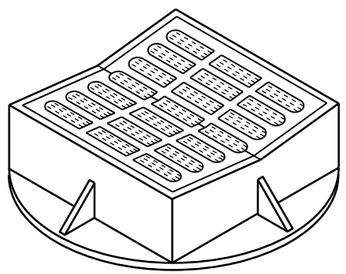

TYPE "B"

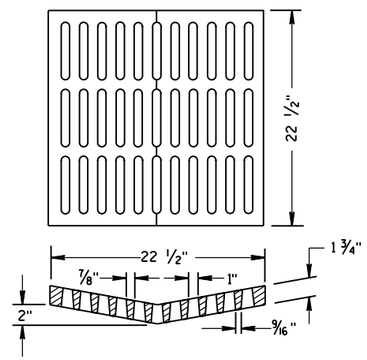

ALTERNATIVE GRATE FOR TYPE "B" COVER

USE WHERE PEDESTRIAN OR BICYCLE TRAFFIC IS POSSIBLE.

NOTED AS TYPE B-A ON THE DRAINAGE TABLE

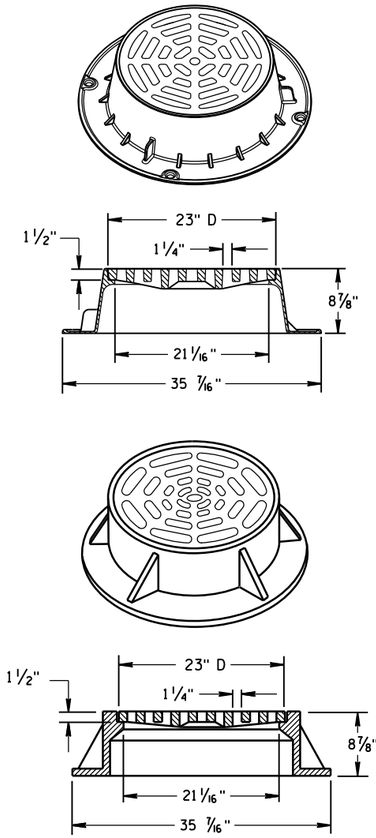

TYPE "C"

NOTE: EITHER CASTING IS ACCEPTABLE

GENERAL NOTES

DETAILS OF CONSTRUCTION, MATERIALS AND WORKMANSHIP NOT SHOWN ON THIS DRAWING SHALL CONFORM TO THE PERTINENT REQUIREMENTS OF THE STANDARD SPECIFICATIONS AND THE APPLICABLE SPECIAL PROVISIONS.

DETAIL DRAWINGS FOR PROPOSED ALTERNATE DESIGNS FOR CATCH BASIN, MANHOLE AND INLET COVERS SHALL BE SUBMITTED TO THE ENGINEER FOR APPROVAL PROVIDING THAT SUCH ALTERNATE DESIGNS MAKE PROVISION FOR EQUIVALENT CAPACITY AND STRENGTH.

ROUND FRAMES AND COVERS SHALL HAVE CONTINUOUSLY MACHINED BEARING SURFACES TO PREVENT ROCKING AND RATTLING.

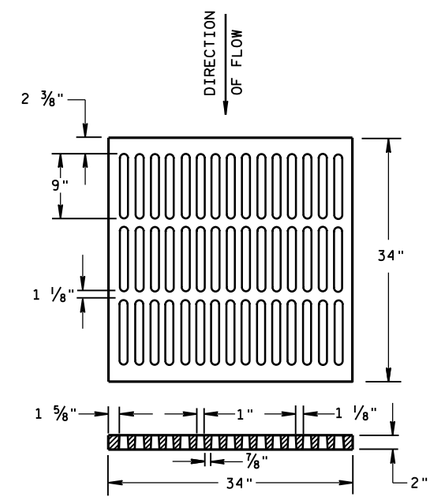

ALTERNATIVE TYPE "MS"

USE WHERE PEDESTRIAN OR BICYCLE TRAFFIC IS PERMITTED

NOTED AS TYPE MS-A ON THE DRAINAGE TABLE

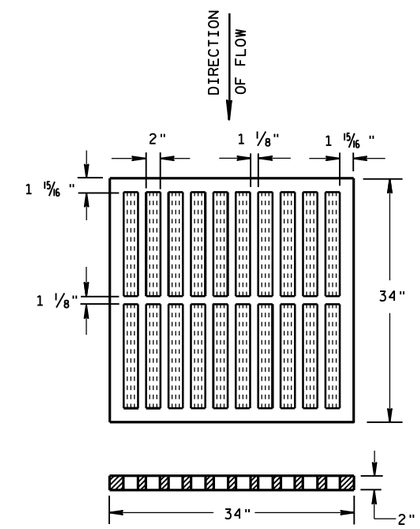

TYPE "MS"

USE ON FREEWAYS AND EXPRESSWAYS

NOTED AS TYPE MS ON DRAINAGE TABLE

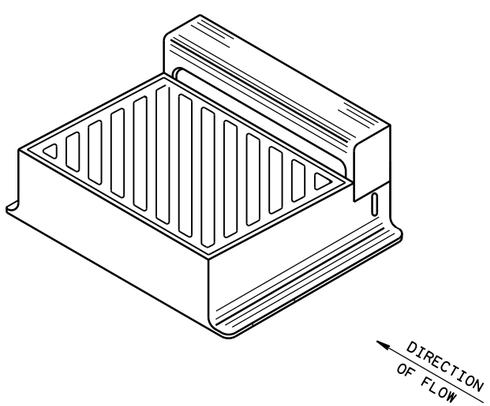

DIAGONAL SLOTS, SHALL BE ORIENTED TO THE DIRECTION OF FLOW AS ILLUSTRATED. GRATES ARE MANUFACTURED TO BE REVERSIBLE.

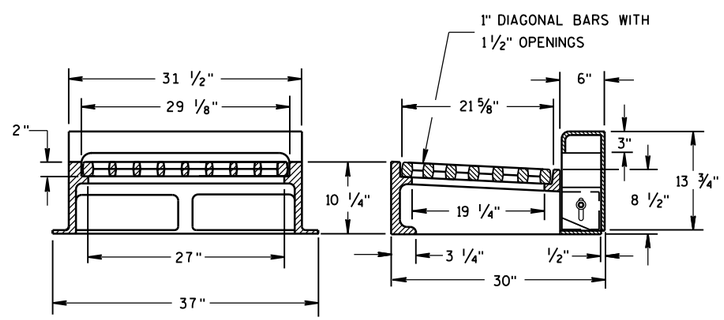

NOTE: CURB BOX HEIGHT ADJUSTABLE 6" TO 9"

TYPE "WM"

6

6

S.D.D. 8 A 5-19b

S.D.D. 8 A 5-19b

INLET COVERS
TYPE B, B-A, C, MS, MS-A, & WM

STATE OF WISCONSIN
DEPARTMENT OF TRANSPORTATION

APPROVED

11/27/2013 — DATE

/S/ Jerry H. Zogg — ROADWAY STANDARDS DEVELOPMENT ENGINEER

FHWA

GENERAL NOTES

DETAILS OF CONSTRUCTION, MATERIALS AND WORKMANSHIP NOT SHOWN ON THIS DRAWING SHALL CONFORM TO THE PERTINENT REQUIREMENTS OF THE STANDARD SPECIFICATIONS AND THE APPLICABLE SPECIAL PROVISIONS.

DETAIL DRAWINGS FOR PROPOSED ALTERNATE DESIGNS FOR INLET COVERS SHALL BE SUBMITTED TO THE ENGINEER FOR APPROVAL PROVIDING THAT SUCH ALTERNATE DESIGNS MAKE PROVISION FOR EQUIVALENT CAPACITY AND STRENGTH.

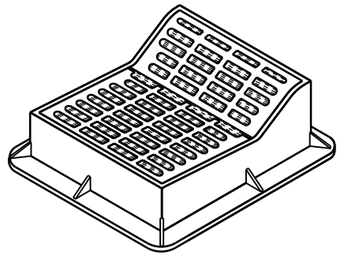

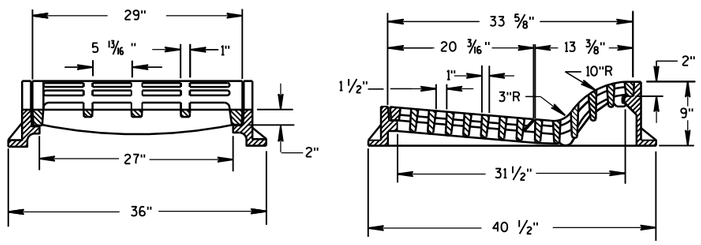

TYPE "F"

USE WITH TYPES A & D CONCRETE CURB & GUTTER, 36 INCH.

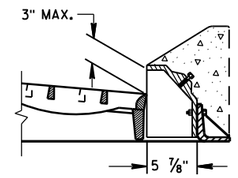

ALTERNATIVE CURB BOX FOR TYPE "HM" COVER

USE WITH TYPES G & J CONCRETE CURB & GUTTER, 30 INCH
NOTED AS TYPE HM-GJ ON DRAINAGE TABLE

NOTE:
SPECIAL GRATE FOR THE
TYPE "H" COVER MAY ALSO BE
USED FOR THE TYPE "HM-GJ" COVER
NOTED AS TYPE HM-GJ-S ON DRAINAGE TABLE

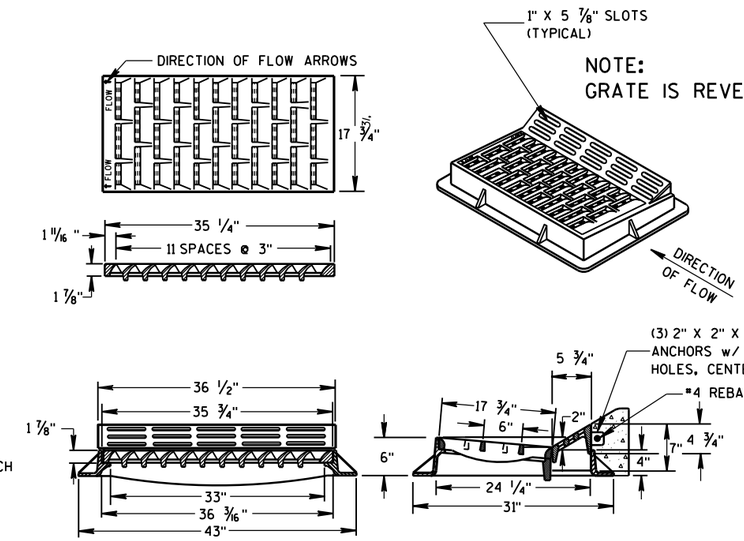

TYPE "HM"

USE WITH TYPES A & D CONCRETE CURB & GUTTER, 36 INCH.

NOTE:
SPECIAL GRATE FOR THE
TYPE "H" COVER MAY ALSO BE
USED FOR THE TYPE "HM" COVER
NOTED AS TYPE HM-S ON DRAINAGE TABLE

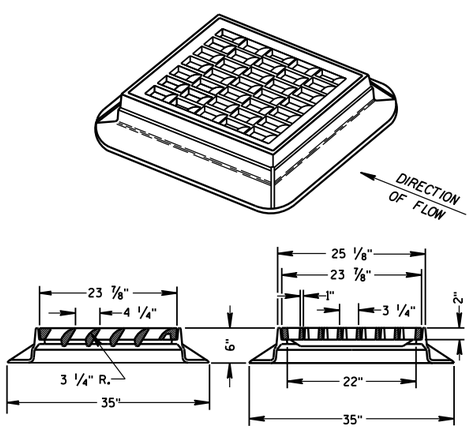

TYPE "S"

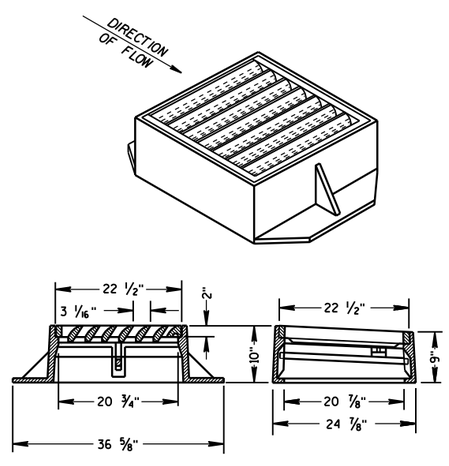

TYPE "V"

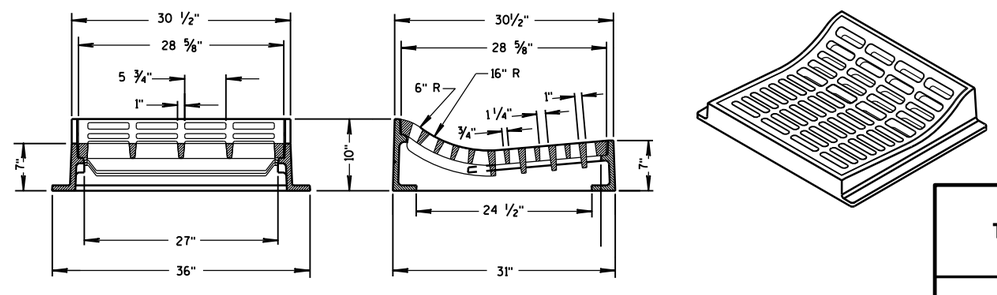

TYPE "T"

USE WITH TYPES R & T CONCRETE CURB & GUTTER, 36 INCH.

INLET COVERS
TYPE F, HM, HM-S, S, T, V, HM-GJ, & HM-GJ-S

STATE OF WISCONSIN
DEPARTMENT OF TRANSPORTATION

APPROVED
11/27/2013 — DATE
/S/ Jerry H. Zogg — ROADWAY STANDARDS DEVELOPMENT ENGINEER
FHWA

6

S.D.D. 8 A 5-19c

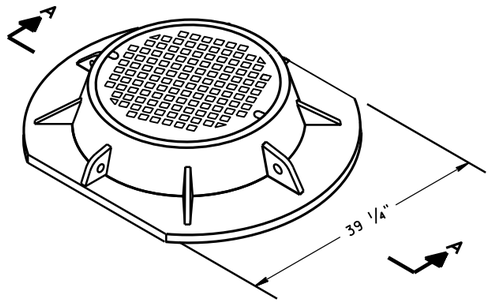

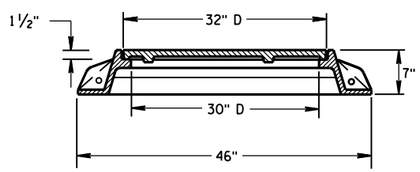

SECTION A-A
TYPE "K"

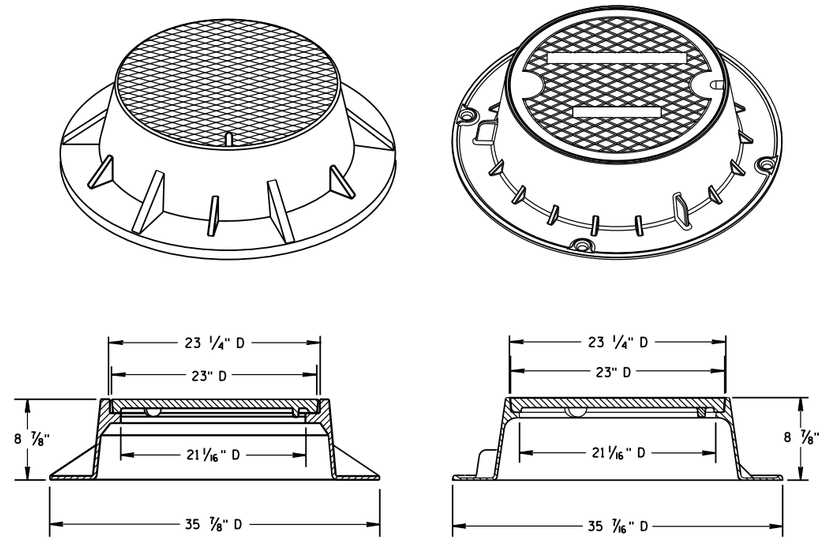

TYPE "J"
NOTE: EITHER CASTING IS ACCEPTABLE

GENERAL NOTES

DETAILS OF CONSTRUCTION, MATERIALS AND WORKMANSHIP NOT SHOWN ON THIS DRAWING SHALL CONFORM TO THE PERTINENT REQUIREMENTS OF THE STANDARD SPECIFICATIONS AND THE APPLICABLE SPECIAL PROVISIONS.

DETAIL DRAWINGS FOR PROPOSED ALTERNATE DESIGNS FOR MANHOLE COVERS SHALL BE SUBMITTED TO THE ENGINEER FOR APPROVAL PROVIDING THAT SUCH ALTERNATE DESIGNS MAKE PROVISION FOR EQUIVALENT CAPACITY AND STRENGTH.

ROUND FRAMES AND COVERS SHALL HAVE CONTINUOUSLY MACHINED BEARING SURFACES TO PREVENT ROCKING AND RATTLING.

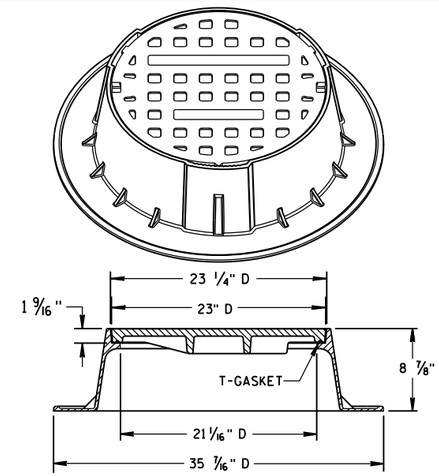

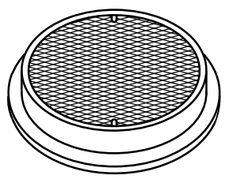

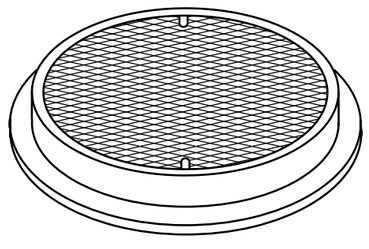

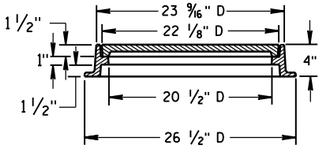

TYPE "L"

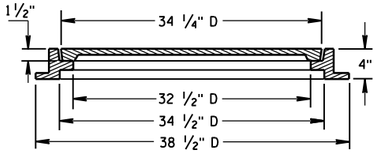

TYPE "M"

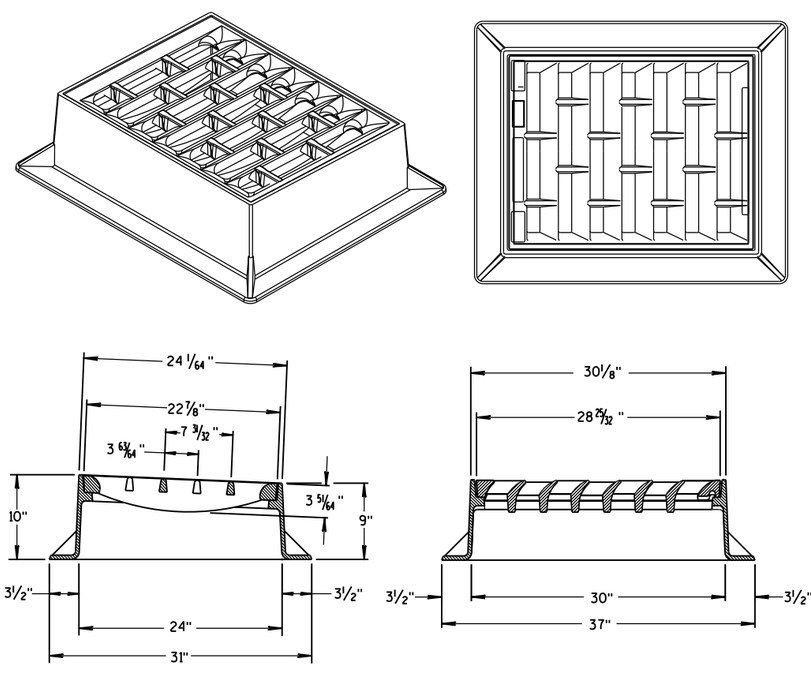

INLET COVER TYPE "BW"

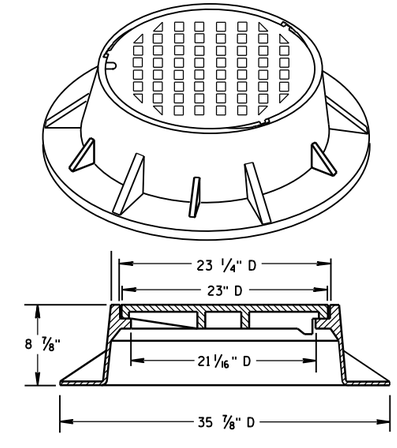

TYPE "J" SPECIAL
TYPE "B" NON-ROCKING SELF-SEAL LID
(NOTED AS TYPE J-S ON THE DRAINAGE TABLE)
NOTE: EITHER CASTING IS ACCEPTABLE

INLET COVER TYPE BW MANHOLE COVERS, TYPE K, J, J-S, L & M	
STATE OF WISCONSIN DEPARTMENT OF TRANSPORTATION	
APPROVED 11/27/2013 DATE FHWA	/S/ Jerry H. Zogg ROADWAY STANDARDS DEVELOPMENT ENGINEER

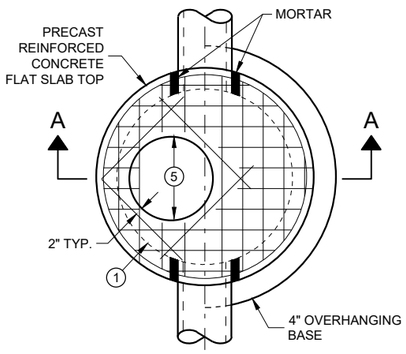

PLAN VIEW
CIRCULAR OPENING

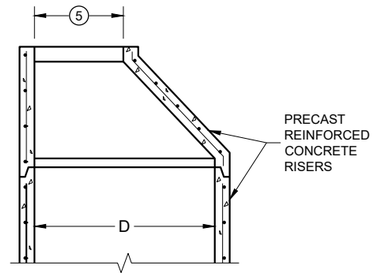

OPTIONAL PRECAST REINFORCED CONCRETE ECCENTRIC TOP

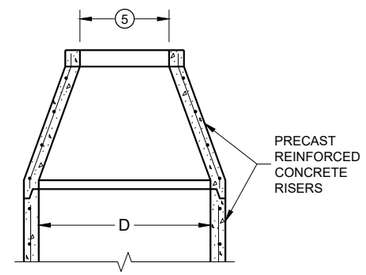

OPTIONAL PRECAST REINFORCED CONCRETE CONCENTRIC TOP

MANHOLE COVER OPENING MATRIX

OPENING SIZE (FT.) \ MANHOLE COVER TYPE	C	ALL J'S	K	L	M
2 DIA.	X	X		X	
3 DIA.			X		X

PIPE MATRIX

MANHOLE SIZE (DIA.)	MAXIMUM INSIDE PIPE DIAMETER FOR TWO PIPES		MINIMUM WALL THICKNESS (IN)	MINIMUM PRECAST FLAT SLAB TOP AND BASE THICKNESS
	180° SEPARATION (IN)	90° SEPARATION (IN)		
3-FT	15	12	4	6
4-FT	24	18	4	6
5-FT	36	24	5	8
6-FT	42	36	6	8
7-FT	48	36/42*	7	8
8-FT	60	42	8	8
9-FT	66	54	9	10
10-FT	72	60	10	10

*A 36" PIPE AND A 42" PIPE CAN BE PLACED WITHIN 90 DEGREES. SEE MINIMUM HORIZONTAL PIPE SEPARATION DETAIL.

GENERAL NOTES

DETAILS OF CONSTRUCTION, MATERIALS AND WORKMANSHIP NOT SHOWN ON THIS DRAWING SHALL CONFORM TO THE PERTINENT REQUIREMENTS OF THE STANDARD SPECIFICATIONS AND THE APPLICABLE SPECIAL PROVISIONS.

UNLESS OTHERWISE AUTHORIZED IN WRITING BY THE ENGINEER, THE CONTRACTOR SHALL NOT ORDER AND DELIVER PRECAST MANHOLE UNITS REQUIRED FOR THE PROJECT UNTIL A LIST OF SIZES IS FURNISHED BY THE ENGINEER.

DETAILED DRAWINGS FOR PROPOSED ALTERNATE DESIGNS FOR UNDERGROUND DRAINAGE STRUCTURES SHALL BE SUBMITTED TO THE ENGINEER FOR APPROVAL PROVIDING THAT SUCH ALTERNATE DESIGNS MAKE PROVISION FOR EQUIVALENT CAPACITY AND STRENGTH.

ALL DRAINAGE STRUCTURES ARE DESIGNATED ON THE PLANS AS "MANHOLES 3X3-L", "CATCH BASINS 4-B", "INLETS 2X3-H", ETC. THE FIRST NUMBERS DESIGNATE THE SIZE OF THE STRUCTURE, AND THE FOLLOWING LETTER DESIGNATES THE TYPE OF COVER TO BE USED TO COMPRISE THE COMPLETE UNIT.

BASES SHALL BE PLACED ON A BED OF MATERIAL AT LEAST 6 INCHES IN DEPTH, WHICH MEETS THE REQUIREMENTS OF FOUNDATION BACKFILL. THIS BEDDING SHALL BE COMPACTED AND PROVIDE UNIFORM SUPPORT FOR THE ENTIRE AREA OF THE BASE.

PRECAST REINFORCED CONCRETE CONE TOPS (ECCENTRIC OR CONCENTRIC) OR PRECAST REINFORCED CONCRETE FLAT SLAB TOPS MAY BE USED ON CONCRETE BLOCK STRUCTURES.

ECCENTRIC CONE TOPS MAY BE USED ON ALL STRUCTURES. CONCENTRIC CONE TOPS SHALL BE USED ONLY ON STRUCTURES 5 FEET OR LESS IN DEPTH UNLESS OTHERWISE DIRECTED BY THE ENGINEER.

STEPS MEETING AASHTO M199 AND THE FOLLOWING REQUIREMENTS SHALL BE INSTALLED IN ALL STRUCTURES OVER 5 FEET IN DEPTH: 16 INCH C-C MAXIMUM SPACING; PROJECT A MINIMUM CLEAR DISTANCE OF 4 INCHES FROM THE WALL AT THE POINT OF EMBEDMENT; MINIMUM LENGTH OF 10 INCHES; MINIMUM WALL EMBEDMENT OF 3 INCHES. FERROUS METAL STEPS NOT PAINTED OR TREATED TO RESIST CORROSION SHALL HAVE A MINIMUM CROSS SECTIONAL DIMENSION OF 1 INCH.

STEPS OF APPROVED POLYPROPYLENE PLASTIC COATED REINFORCEMENT BAR ARE ACCEPTABLE. REINFORCING BAR MUST BE A MINIMUM OF ½ INCH AND MEET THE REQUIREMENTS OF ASTM A615.

CERTIFICATION SHALL BE PROVIDED THAT INSTALLED STEPS WHEN TESTED IN ACCORDANCE WITH SECTION 10 OF AASHTO T280 CAN WITHSTAND A VERTICAL LOAD OF 800 LBS. AND A HORIZONTAL LOAD OF 400 LBS.

ALL BAR STEEL REINFORCEMENT SHALL BE EMBEDDED 2 INCHES CLEAR UNLESS OTHERWISE SHOWN OR NOTED.

ALL PRECAST MANHOLE UNITS SHALL CONFORM TO THE PERTINENT REQUIREMENTS OF AASHTO DESIGNATION M199.

PRECAST REINFORCED RISERS SHALL HAVE A TONGUE AND GROOVE JOINT WITH TONGUE UP OR DOWN.

CONCRETE BLOCK WILL NOT BE PERMITTED FOR STRUCTURES GREATER THAN 4 FEET IN DIAMETER.

4" OVERHANGING BASES ARE REQUIRED FOR ALL CONCRETE BLOCK INSTALLATIONS. 4" OVERHANG IS REQUIRED WHEN SEPARATE PRECAST BASE IS PROVIDED. OVERHANG IS NOT REQUIRED ON PRECAST STRUCTURES WITH AN INTEGRAL OR MONOLITHIC BASE.

FOR ADDITIONAL CONFIGURATIONS, MAINTAIN A MINIMUM OF 12 INCHES AS MEASURED FROM THE INSIDE OF THE STRUCTURE WALL BETWEEN THE OUTSIDE PIPE WALLS OF ADJACENT PIPES. SEE DETAIL "D".

1. FOR PRECAST MANHOLES PROVIDE REINFORCING STEEL IN ACCORDANCE TO AASHTO M199.
2. SEE PIPE MATRIX TABLE FOR MINIMUM WALL THICKNESS FOR PRECAST MANHOLES
3. SEE PIPE MATRIX TABLE FOR MINIMUM THICKNESS OF PRECAST FLAT SLAB TOPS AND BASES.
4. JOINTS TO BE SEALED WITH A BUTYL RUBBER SEAL PER SEALANT MANUFACTURERS RECOMMENDATIONS CONFORMING TO ASTM C 990 (TYP.).
5. SEE MANHOLE COVER OPENING MATRIX.

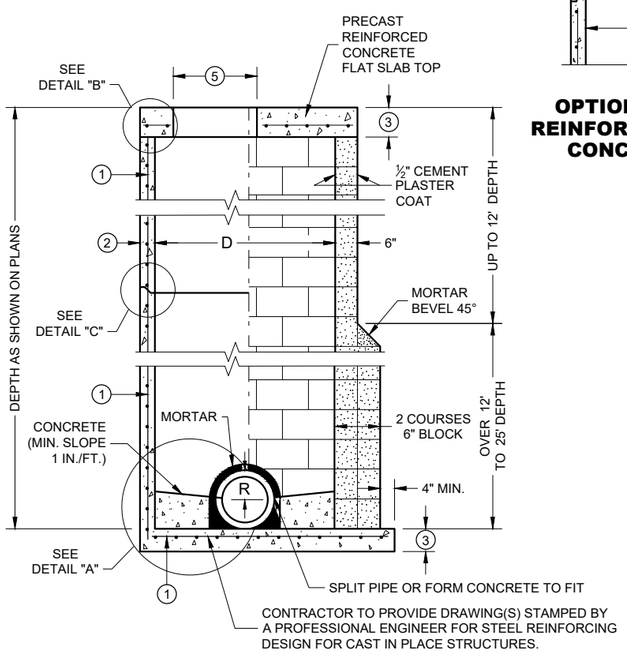

SECTION A - A

PRECAST REINFORCED CONCRETE WITH MONOLITHIC BASE

CONCRETE BLOCK WITH CAST IN PLACE OR PRECAST REINFORCED CONCRETE BASE 1

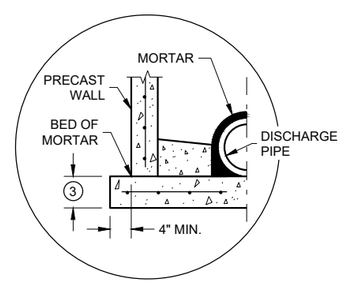

SEPARATE PRECAST REINFORCED CONCRETE BASE OPTION

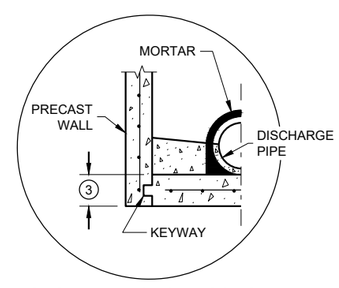

PRECAST REINFORCED CONCRETE WITH INTEGRAL BASE OPTION

DETAIL "A"

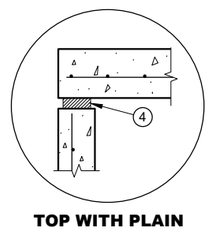

TOP WITH PLAIN END JOINT

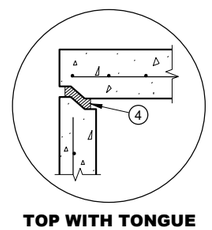

TOP WITH TONGUE AND GROOVE JOINT

DETAIL "B"

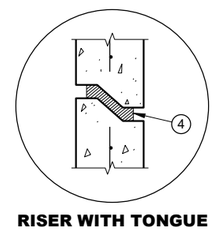

RISER WITH TONGUE AND GROOVE JOINT

DETAIL "C"

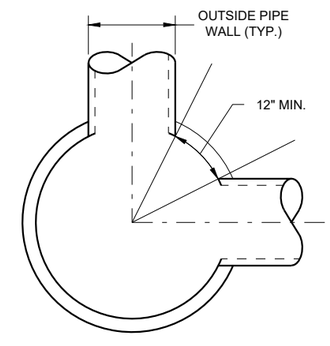

MINIMUM HORIZONTAL PIPE SEPARATION

MANHOLES 3-FT, 4-FT, 5-FT, 6-FT, 7-FT, 8-FT, 9-FT AND 10-FT DIAMETER

MANHOLES, 3-FT, 4-FT 5-FT, 6-FT, 7-FT, 8-FT, 9-FT AND 10-FT DIAMETER

STATE OF WISCONSIN
DEPARTMENT OF TRANSPORTATION

APPROVED
November 2021 — DATE
/S/ Rodney Taylor — ROADWAY STANDARDS DEVE ENGINEER
FHWA

6

SDD 08B09 - 03

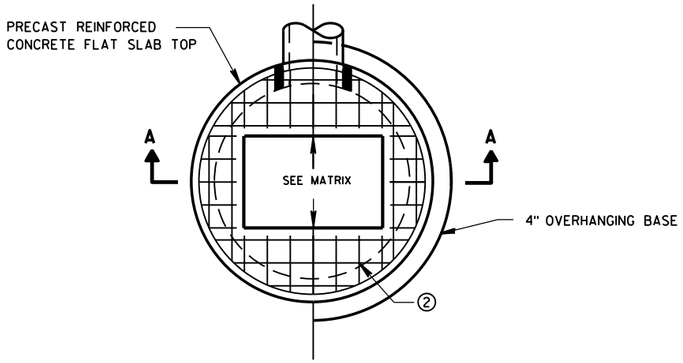

PLAN VIEW RECTANGULAR OPENING

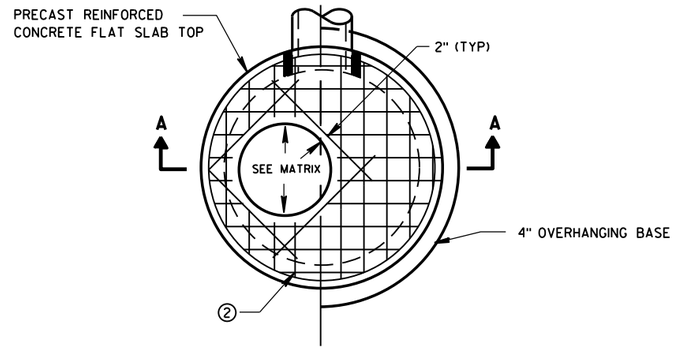

PLAN VIEW CIRCULAR OPENING

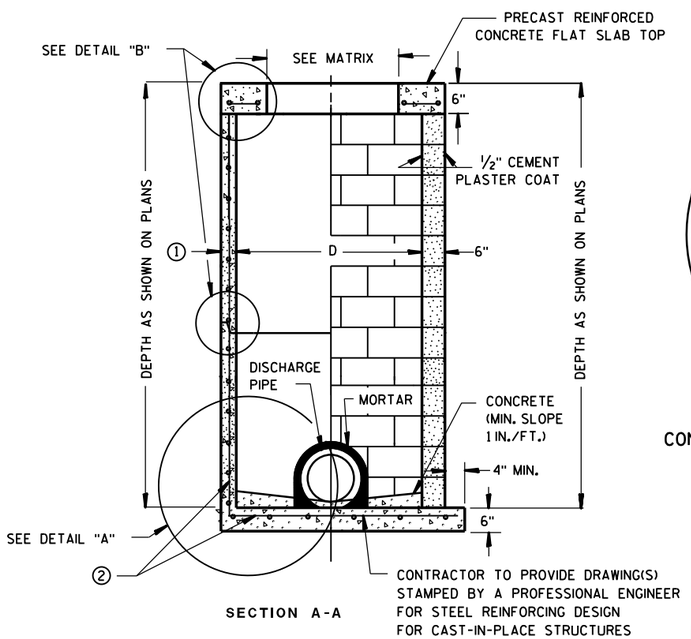

SECTION A-A

PRECAST REINFORCED CONCRETE WITH MONOLITHIC BASE

CONCRETE BLOCK WITH CAST-IN-PLACE OR PRECAST REINFORCED CONCRETE BASE ②

CIRCULAR INLETS W/ FLAT TOP

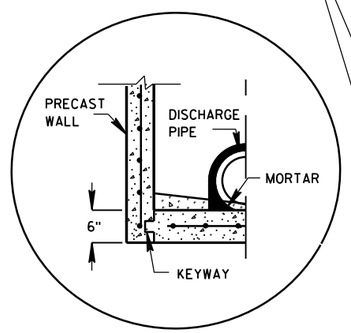

PRECAST REINFORCED CONCRETE WITH INTEGRAL BASE OPTION

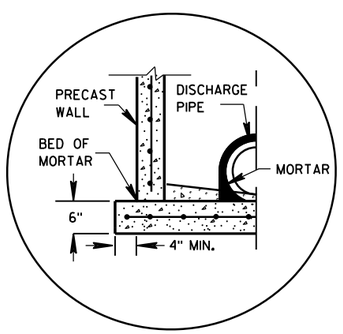

SEPARATE PRECAST REINFORCED CONCRETE BASE OPTION

DETAIL "A"

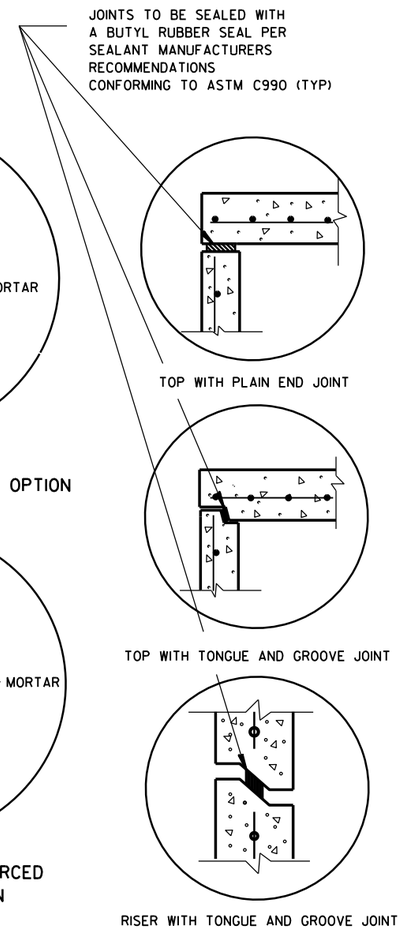

DETAIL "B"

GENERAL NOTES

DETAILS OF CONSTRUCTION, MATERIALS AND WORKMANSHIP NOT SHOWN ON THIS DRAWING SHALL CONFORM TO THE PERTINENT REQUIREMENTS OF THE STANDARD SPECIFICATIONS AND THE APPLICABLE SPECIAL PROVISIONS.

UNLESS OTHERWISE AUTHORIZED IN WRITING BY THE ENGINEER, THE CONTRACTOR SHALL NOT ORDER AND DELIVER PRECAST INLET UNITS REQUIRED FOR THE PROJECT UNTIL A LIST OF SIZES IS FURNISHED BY THE ENGINEER.

DETAILED DRAWINGS FOR PROPOSED ALTERNATE DESIGNS FOR UNDERGROUND DRAINAGE STRUCTURES SHALL BE SUBMITTED TO THE ENGINEER FOR APPROVAL PROVIDING THAT SUCH ALTERNATE DESIGNS MAKE PROVISION FOR EQUIVALENT CAPACITY AND STRENGTH.

ALL DRAINAGE STRUCTURES ARE DESIGNATED ON THE PLANS AS "MANHOLES 3X3-L", "CATCH BASINS 4-B", "INLETS 2X3-H", ETC. THE FIRST NUMBERS DESIGNATE THE SIZE OF THE STRUCTURE, AND THE FOLLOWING LETTER DESIGNATES THE TYPE OF COVER TO BE USED TO COMPRISE THE COMPLETE UNIT.

BASES SHALL BE PLACED ON A BED OF MATERIAL AT LEAST 6 INCHES IN DEPTH, WHICH MEETS THE REQUIREMENTS OF FOUNDATION BACKFILL. THIS BEDDING SHALL BE COMPACTED AND PROVIDE UNIFORM SUPPORT FOR THE ENTIRE AREA OF THE BASE.

ALL BAR STEEL REINFORCEMENT SHALL BE EMBEDDED 2 INCHES CLEAR UNLESS OTHERWISE SHOWN OR NOTED.

ALL PRECAST INLET UNITS SHALL CONFORM TO THE PERTINENT REQUIREMENTS OF AASHTO DESIGNATION M199.

PRECAST REINFORCED RISERS SHALL HAVE A TONGUE AND GROOVE JOINT WITH TONGUE UP OR DOWN.

4" OVERHANGING BASES ARE REQUIRED FOR ALL CONCRETE BLOCK INSTALLATIONS. 4" OVERHANG IS REQUIRED WHEN SEPARATE PRECAST BASE IS PROVIDED. OVERHANG IS NOT REQUIRED ON PRECAST STRUCTURES WITH AN INTEGRAL OR MONOLITHIC BASE.

FOR ADDITIONAL CONFIGURATIONS, MAINTAIN A MINIMUM OF 12 INCHES AS MEASURED FROM THE INSIDE OF THE STRUCTURE WALL BETWEEN THE OUTSIDE PIPE WALLS OF ADJACENT PIPES. SEE DETAIL "C".

① MINIMUM WALL THICKNESS SHALL BE 4-IN FOR 3-FT DIAMETER AND 5-IN FOR 4-FT DIAMETER PRECAST INLETS.

② FOR PRECAST CATCH BASINS PROVIDE REINFORCING STEEL IN ACCORDANCE TO AASHTO M199.

INLET COVER OPENING MATRIX

	INLET COVER TYPE	ALL A'S	ALL B'S	BW	C	F	ALL H'S	S	T	V	WM	Z
INLET SIZE	OPENING SIZE (FT)											
3-FT	2 DIA.				X							X
	2X2	X	X					X		X		
4-FT	2 DIA.				X							X
	2X2	X	X					X		X		
	2X2.5			X				X	X	X	X	
	2X3						X					
	2.5X3					X						

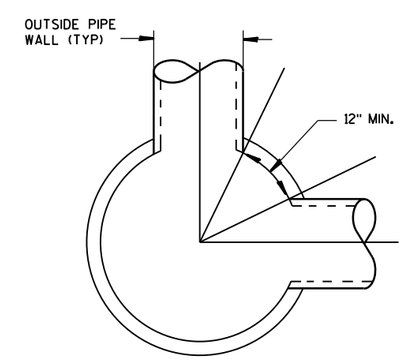

DETAIL "C"

PIPE MATRIX

INLET SIZE	MAXIMUM INSIDE PIPE DIAMETER FOR TWO PIPES	
	180° SEPARATION (IN)	90° SEPARATION (IN)
3-FT	15	12
4-FT	24	18

INLETS 3-FT AND 4-FT DIAMETER

INLETS 3-FT
AND 4-FT DIAMETER

STATE OF WISCONSIN
DEPARTMENT OF TRANSPORTATION

APPROVED
Sept., 2016 — /S/ Rodney Taylor
DATE — ROADWAY STANDARDS DEVELOPMENT UNIT SUPERVISOR
FHWA

6

6

S.D.D. 8 C 6-2

S.D.D. 8 C 6-2

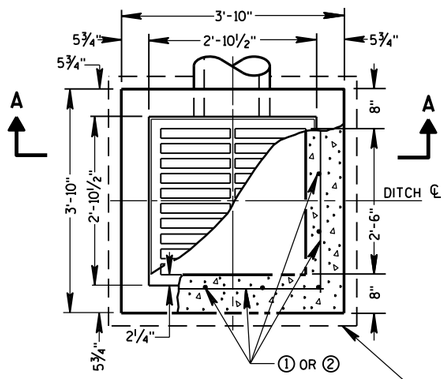

PLAN VIEW

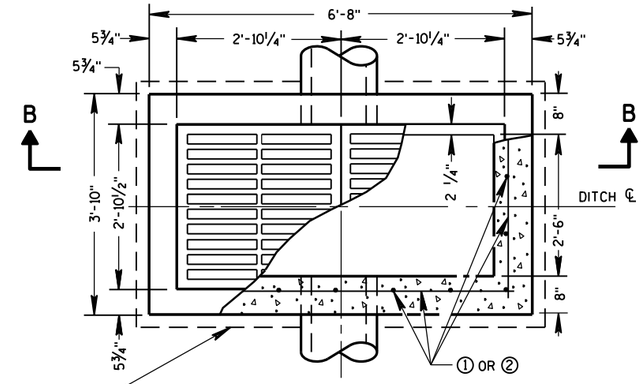

PLAN VIEW

4" OVERHANGING BASE ON REINFORCED CAST-IN-PLACE CONCRETE INLETS

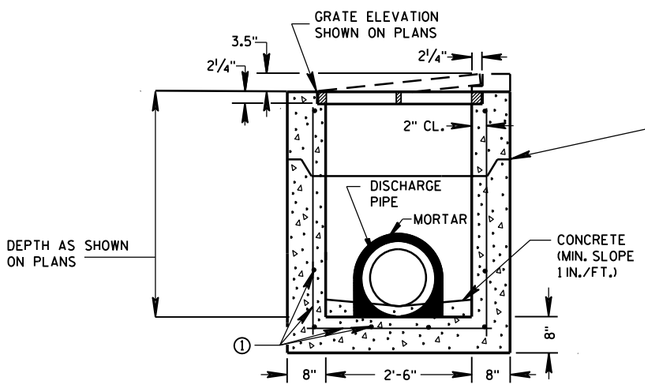

PRECAST REINFORCED CONCRETE SECTION A-A

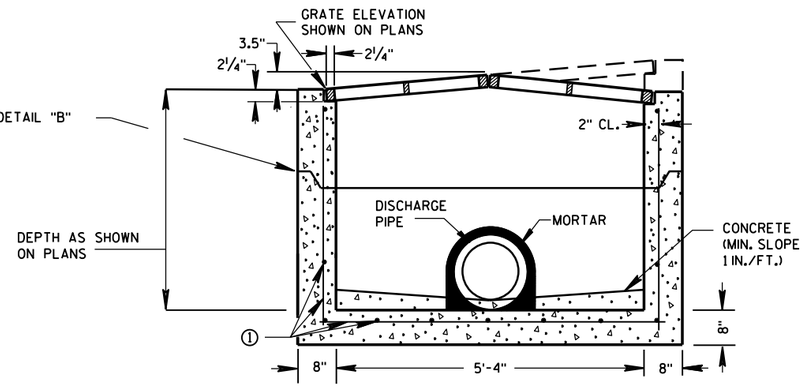

PRECAST REINFORCED CONCRETE SECTION B-B

GENERAL NOTES

DETAILS OF CONSTRUCTION, MATERIALS AND WORKMANSHIP NOT SHOWN ON THIS DRAWING SHALL CONFORM TO THE PERTINENT REQUIREMENTS OF THE STANDARD SPECIFICATIONS AND THE APPLICABLE SPECIAL PROVISIONS.

UNLESS OTHERWISE AUTHORIZED IN WRITING BY THE ENGINEER, THE CONTRACTOR SHALL NOT ORDER AND DELIVER PRECAST INLET UNITS REQUIRED FOR THE PROJECT UNTIL A LIST OF SIZES IS FURNISHED BY THE ENGINEER.

DETAILED DRAWINGS FOR PROPOSED ALTERNATE DESIGNS FOR INLETS WHICH MAY INCLUDE PRECAST REINFORCED CONCRETE INLETS, SHALL BE SUBMITTED TO THE ENGINEER FOR APPROVAL PROVIDING THAT SUCH ALTERNATE DESIGNS MAKE PROVISION FOR EQUIVALENT CAPACITY AND STRENGTH.

ALL MEDIAN INLETS ARE DESIGNATED ON THE PLANS AS "INLETS, 1G-MS", ETC. THE FIRST NUMBER AND LETTER DESIGNATE THE TYPE OF STRUCTURE, AND THE FOLLOWING LETTERS DESIGNATE THE TYPE OF COVER TO BE USED TO COMPRISE THE COMPLETE UNIT.

BASES SHALL BE PLACED ON A BED OF MATERIAL AT LEAST 6 INCHES IN DEPTH, WHICH MEETS THE REQUIREMENTS OF FOUNDATION BACKFILL. THIS BEDDING SHALL BE COMPACTED AND PROVIDE UNIFORM SUPPORT FOR THE ENTIRE AREA OF THE BASE.

ALL BAR STEEL REINFORCEMENT SHALL BE EMBEDDED 2 INCHES CLEAR UNLESS OTHERWISE SHOWN OR NOTED.

PRECAST REINFORCED RISERS SHALL HAVE A TONGUE AND GROOVE JOINT WITH TONGUE UP OR DOWN.

ALL PRECAST INLET UNITS SHALL CONFORM TO THE PERTINENT REQUIREMENTS OF ASTM C 913.

MAXIMUM INSIDE PIPE DIAMETER DETERMINED BY 3" CLEARANCE ON EACH SIDE OF THE OUTSIDE WALL OF THE PIPE. SEE DETAIL "A". ASSUMES PIPE ENTERS PERPENDICULAR TO THE STRUCTURE.

① FOR PRECAST INLETS PROVIDE REINFORCING STEEL IN ACCORDANCE TO ASTM C 913.

② CONTRACTOR TO PROVIDE DRAWING(S) STAMPED BY A PROFESSIONAL ENGINEER FOR STEEL REINFORCING DESIGN FOR CAST-IN-PLACE STRUCTURES.

PIPE MATRIX

	MAXIMUM INSIDE PIPE DIAMETER	
INLET SIZE	WIDTH (IN)	LENGTH (IN)
1 GRATE	18	18
2 GRATE	18	42

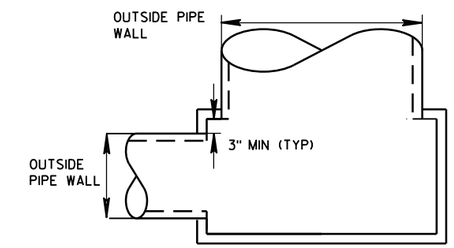

DETAIL "A"

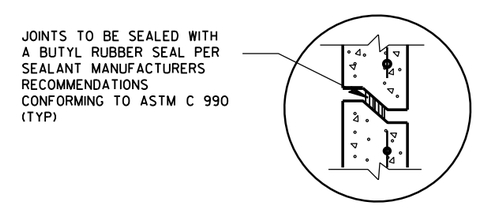

DETAIL "B"

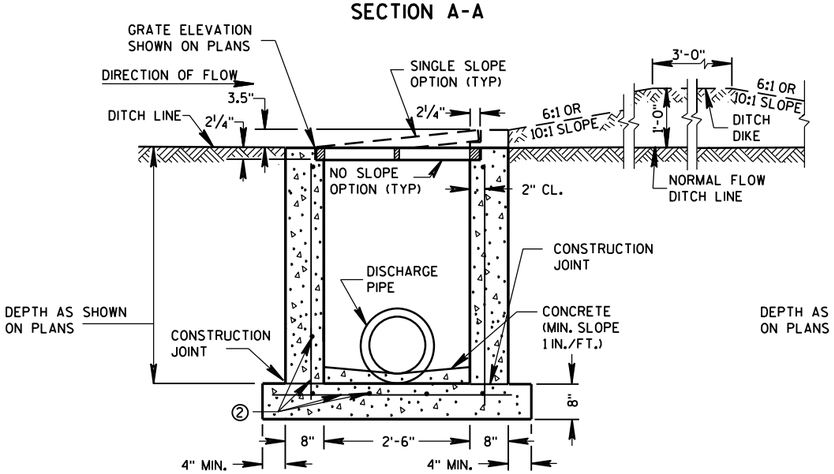

REINFORCED CAST-IN-PLACE CONCRETE SECTION A-A

INLETS MEDIAN 1 GRATE

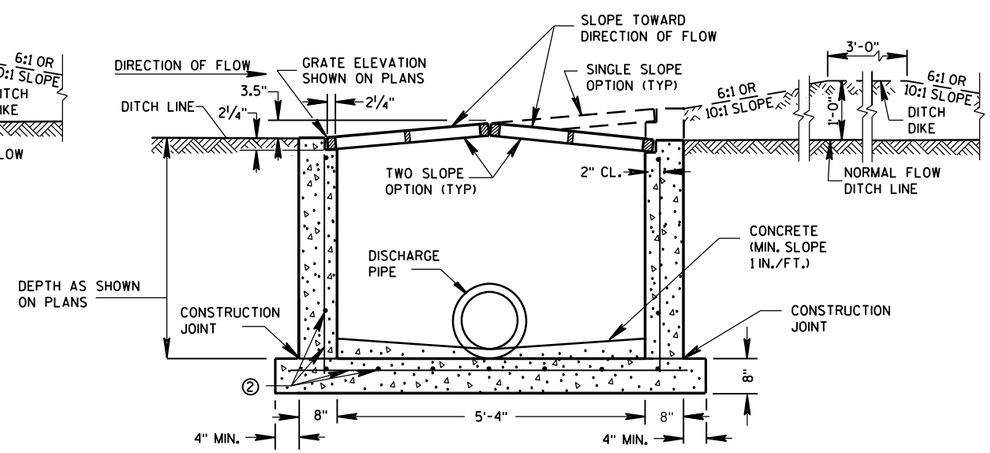

REINFORCED CAST-IN-PLACE CONCRETE SECTION B-B

INLETS MEDIAN 2 GRATE

INLETS MEDIAN 1 AND 2 GRATE

STATE OF WISCONSIN
DEPARTMENT OF TRANSPORTATION

APPROVED
Sept., 2016 — DATE
/S/ Rodney Taylor — ROADWAY STANDARDS UNIT SUPERVI ENT
FHWA

6

6

S.D.D. 8 C 8-2

S.D.D. 8 C 8-2

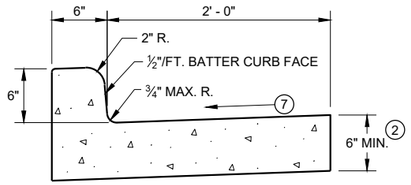

TYPES A[1] & D

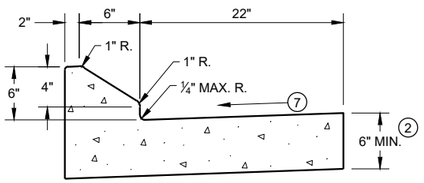

6" SLOPED CURB TYPES G[1] & J

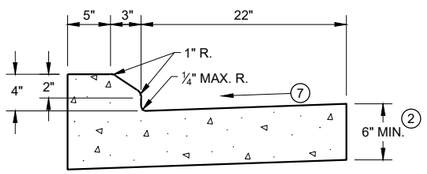

4" SLOPED CURB TYPES G[1] & J

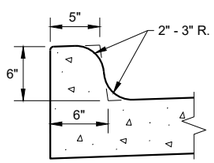

TYPES K[1] & L
(OPTIONAL CURB SHAPE)

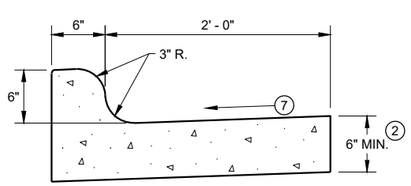

TYPES K[1] & L

CONCRETE CURB AND GUTTER 30"

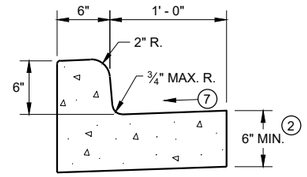

TYPES A[1] & D

CONCRETE CURB AND GUTTER 18"

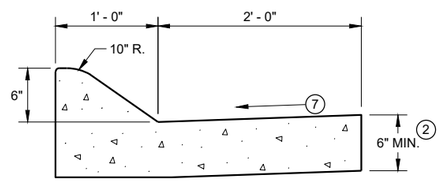

6" SLOPED CURB TYPES A[1] & D

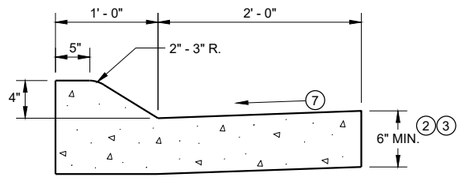

4" SLOPED CURB TYPES A[1] & D

CONCRETE CURB AND GUTTER 36"

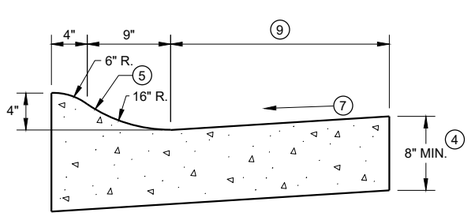

4" SLOPED CURB TYPES R[1] & T

TBT & TBTT	X
30"	22"
36"	28"

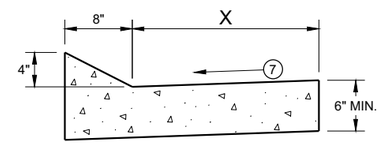

TYPES TBT & TBTT[1]

CONCRETE CURB AND GUTTER

GENERAL NOTES

DETAILS OF CONSTRUCTION AND WORKMANSHIP NOT SHOWN ON THIS DRAWING SHALL CONFORM TO THE PERTINENT REQUIREMENTS OF THE CONTRACT.

PAVEMENT TIES AND TIE BARS SHALL BE EPOXY COATED IN CONFORMANCE WITH SUBSECTION 505.2.6.2 OF THE STANDARD SPECIFICATIONS.

INTEGRAL CURB AND GUTTER SHALL CONFORM TO THE DETAILS SHOWN FOR CONCRETE CURB AND GUTTER INCLUDING THE TRANSVERSE GUTTER SLOPE.

UNLESS OTHERWISE SHOWN ON THE TYPICAL CROSS SECTIONS, THE BASE AGGREGATE AND COMMON EXCAVATION LIMITS ARE 2' - 0" BEHIND THE BACK OF CURBS.

1. TIE BARS ARE REQUIRED FOR CURB AND GUTTERS TYPES A, G, K, R, AND TBTT.
2. THE BOTTOM OF CURB AND GUTTER MAY BE CONSTRUCTED EITHER LEVEL OR PARALLEL TO THE SLOPE OF THE SUBGRADE OR BASE AGGREGATE PROVIDED A 6" MINIMUM GUTTER THICKNESS IS MAINTAINED.
3. USE 8" MINIMUM GUTTER THICKNESS WHEN USED WITH AN ADJACENT CONCRETE TRUCK APRON PLACED BEHIND BACK OF CURB.
4. THE BOTTOM OF CURB AND GUTTER MAY BE CONSTRUCTED EITHER LEVEL OR PARALLEL TO THE SLOPE OF THE SUBGRADE OR BASE AGGREGATE PROVIDED A 8" MINIMUM GUTTER THICKNESS IS MAINTAINED.
5. UNLESS OTHERWISE NOTED, FOR STAKING PURPOSES THE FACE OF CURB IS 6" FROM THE BACK OF CURB.
6. WHEN REVERSE SLOPE GUTTER IS REQUIRED, THE LOCATION(S) WILL BE SHOWN ELSEWHERE IN THE PLAN.
7. USE 4% GUTTER CROSS SLOPE UNLESS OTHERWISE NOTED IN THE PLANS.
8. INCLUDE LONGITUDINAL JOINT AND TIE BARS ALONG LANE EDGE WHEN CONCRETE PANEL WIDTH EXCEEDS THE MAXIMUM WIDTH PER TABLE BELOW. LONGITUDINAL JOINT(S) ARE NOT ALLOWED WITHIN TRAFFIC LANES AND BIKE LANES. LONGITUDINAL JOINT MAY BE SAWED.
9. CONCRETE CURB AND GUTTER 4-INCH SLOPED 30-INCH TYPE "R" AND "T" = 17 INCHES
   CONCRETE CURB AND GUTTER 4-INCH SLOPED 36-INCH TYPE "R" AND "T" = 23 INCHES

PAVEMENT THICKNESS AND MAXIMUM CONCRETE PANEL WIDTH TABLE

PAVEMENT THICKNESS	MAXIMUM PANEL WIDTH
LESS THAN 10"	12'
10" & ABOVE	15'

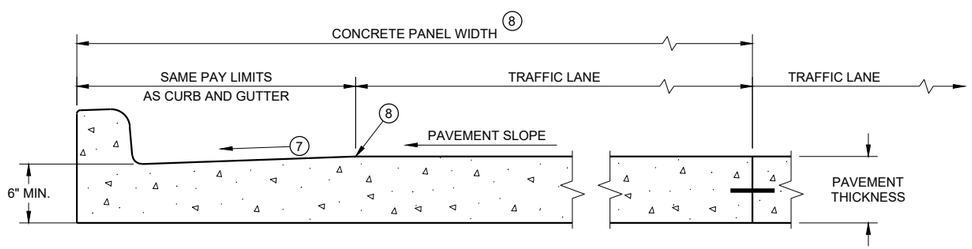

PARTIAL SECTION OF PAVEMENT *
WITH INTEGRAL CURB AND GUTTER

* BIKE LANE IS NOT SHOWN

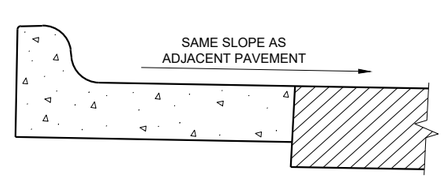

REVERSE SLOPE GUTTER[6]
(TYPICAL FOR ALL CURB & GUTTER TYPES)

CONCRETE CURB AND GUTTER

STATE OF WISCONSIN
DEPARTMENT OF TRANSPORTAT

6

SDD 08D01 - 22a

GENERAL NOTES

DETAILS OF CONSTRUCTION AND WORKMANSHIP NOT SHOWN ON THIS DRAWING SHALL CONFORM TO THE PERTINENT REQUIREMENTS OF THE CONTRACT.

PAVEMENT TIES AND TIE BARS SHALL BE EPOXY COATED IN CONFORMANCE WITH SUBSECTION 505.2.6.2 OF THE STANDARD SPECIFICATIONS.

UNLESS OTHERWISE SHOWN ON THE TYPICAL CROSS SECTIONS, THE BASE AGGREGATE AND COMMON EXCAVATION LIMITS ARE 2' - 0" BEHIND THE BACK OF CURBS.

(1) TIE BARS ARE REQUIRED FOR CURB AND GUTTERS TYPES A, G, K, R, AND TBTT.

(2) THE BOTTOM OF CURB AND GUTTER MAY BE CONSTRUCTED EITHER LEVEL OR PARALLEL TO THE SLOPE OF THE SUBGRADE OR BASE AGGREGATE PROVIDED A 6" MINIMUM GUTTER THICKNESS IS MAINTAINED.

(9) REFER TO SDD 08D18 AND 08D19 FOR ADDITIONAL DRIVEWAY ENTRANCE CURB DETAILS.

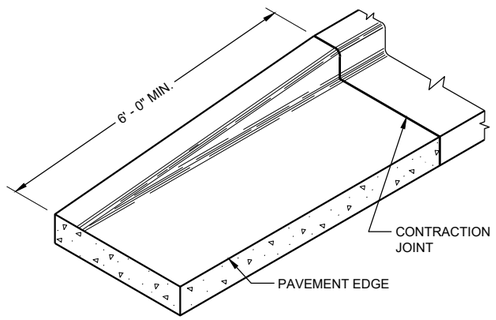

END SECTIONCURB AND GUTTER

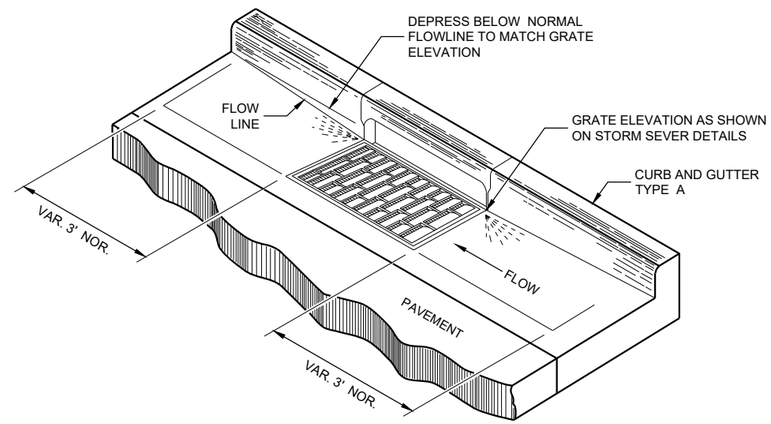

DETAIL OF CURB AND GUTTER AT INLETS
(TYPICAL H INLET COVER SHOWN)

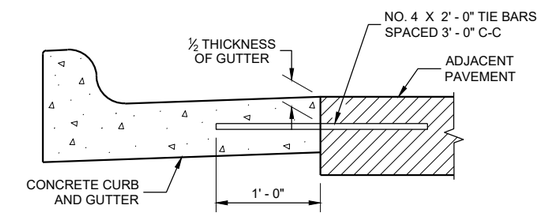

TYPICAL TIE BAR LOCATION (1)

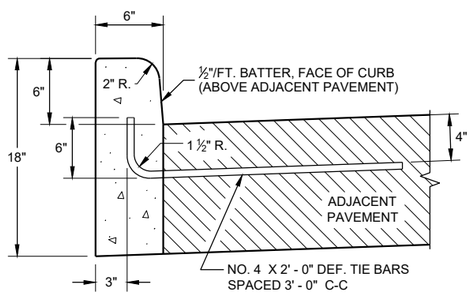

TYPES A (1) & D

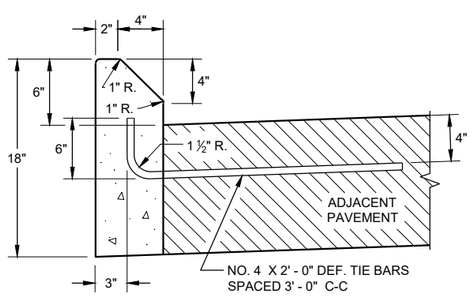

TYPES G (1) & J

CONCRETE CURB

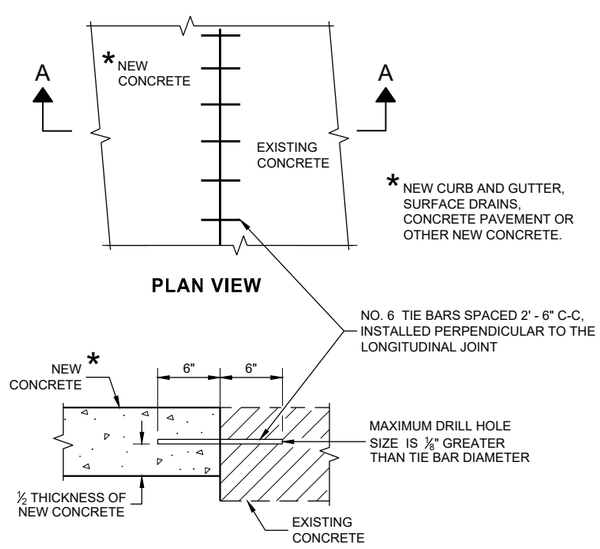

PLAN VIEW

SECTION A - A

TIE BARS DRILLED INTO EXISTING PAVEMENT

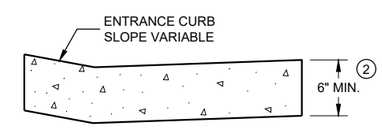

DRIVEWAY ENTRANCE CURB (9)
(WHEN DIRECTED BY THE ENGINEER)

CONCRETE CURB, TIES AND CURB AND GUTTER APPLICATIONS

STATE OF WISCONSIN
DEPARTMENT OF TRANSPORTATION

APPROVED
February 2021 — DATE
/S/ Rodnery Taylor — ROADWAY STANDARDS DEVE ENGINEER
FHWA

6

SDD 08D01 - 22b

NOTE: TAPER CURB ENDS TO GUTTER IN 1' - 0"

ASPHALTIC FLUME

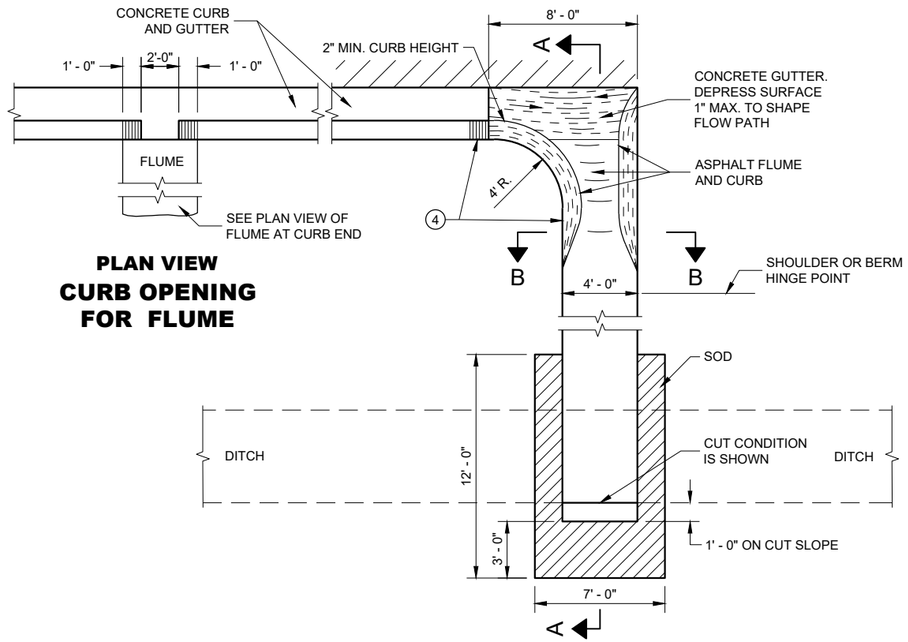

PLAN VIEW
CURB OPENING FOR FLUME

PLAN VIEW
FLUME AT CURB END

GENERAL NOTES

DETAILS OF CONSTRUCTION, MATERIALS AND WORKMANSHIP NOT SHOWN ON THIS DRAWING SHALL CONFORM TO PERTINENT REQUIREMENTS OF THE STANDARD SPECIFICATIONS AND APPLICABLE SPECIAL PROVISIONS.

4" X 4" - W3.0 X W3.0 CONCRETE REINFORCEMENT SHALL BE IN ACCORDANCE WITH AASHTO SPECIFICATION M55.

1. JOINTS SHALL BE ⅛" TO ¼" WIDE BY 1½" DEEP AND SPACED AT UNIFORM INTERVALS OF APPROXIMATELY 4 FEET.
2. GEOTEXTILE TYPE "R" SHALL UNDERLAY THE FULL LENGTH AND WIDTH OF THE CONCRETE SURFACE DRAIN AND RIPRAP.
3. CONCRETE SURFACE DRAIN WITHOUT CURB AND GUTTER MAY BE USED ON BACKSLOPES WHEN SPECIFIED.
4. ANGLE OF FLUME IN RELATION TO BACK OF CURB TO BE CONSTRUCTED PER THE PLAN DETAILS OR AS DIRECTED BY THE ENGINEER. ANGLE OF FLUME MAY BE OTHER THAN 90 DEGREES AS SHOWN.

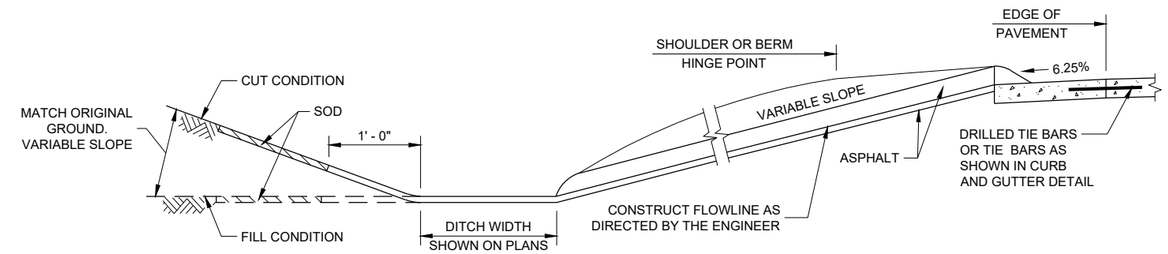

SECTION A - A

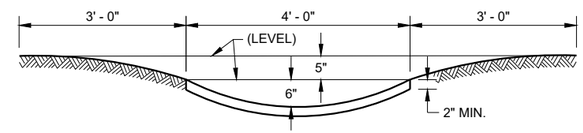

SECTION B - B

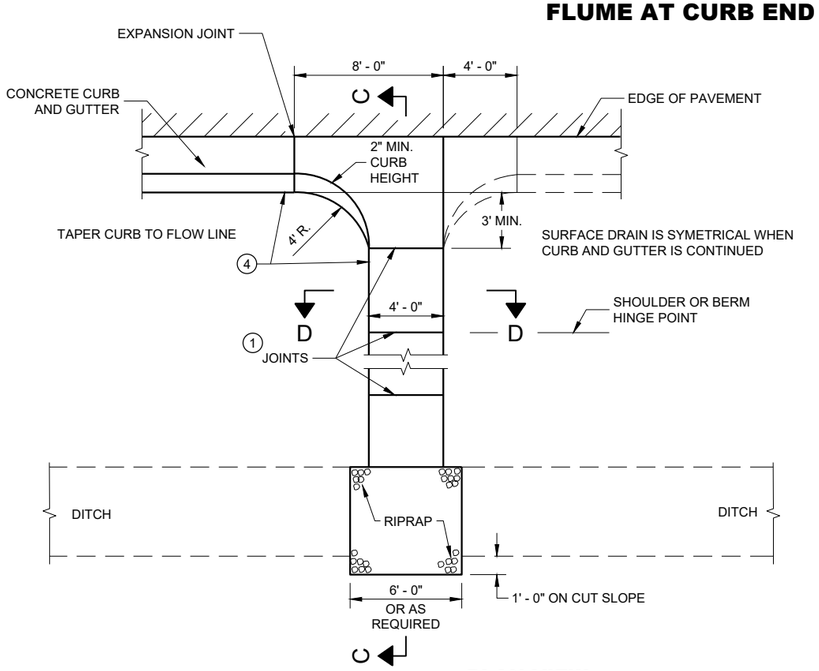

PLAN VIEW
CONCRETE SURFACE DRAIN

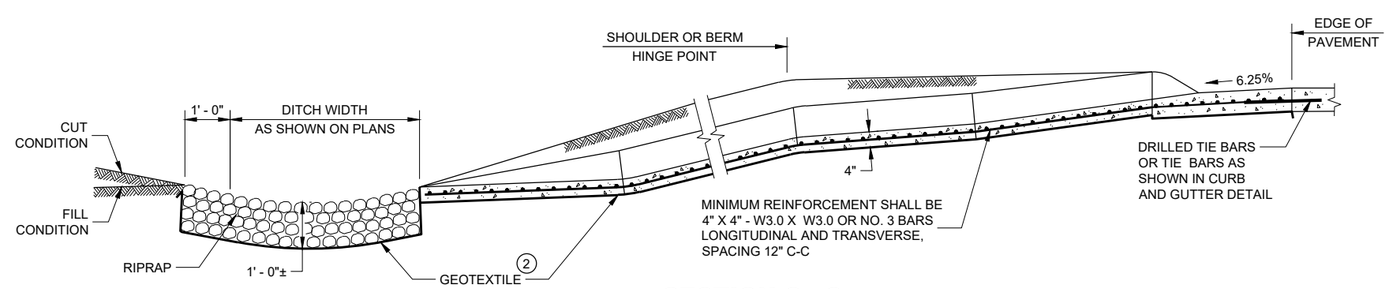

SECTION C - C

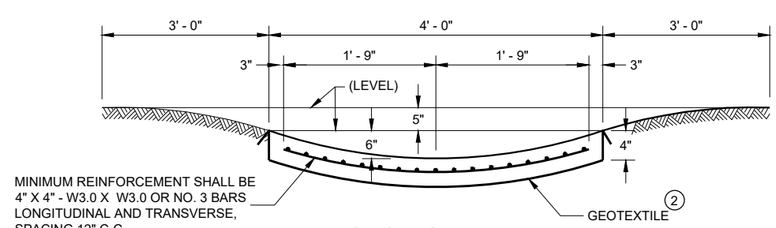

SECTION D - D

CONCRETE SURFACE DRAINS AND ASPHALTIC FLUMES

STATE OF WISCONSIN
DEPARTMENT OF TRANSPORTATION

APPROVED
November 2021 — DATE
/S/ Rodney Taylor — ROADWAY STANDARDS DEVE ENGINEER
FHWA

6

SDD 08D04 - 06

GENERAL NOTES

1. DESIGN WILL DETERMINE FINAL DRIVEWAY ASPHALTIC THICKNESS BASED ON TYPE OF USAGE AND LOADINGS.

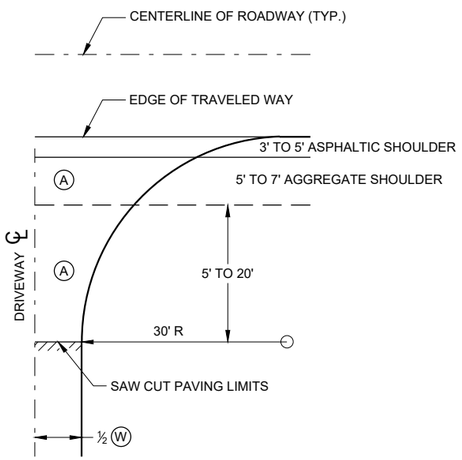

PLAN VIEW

A : PAID FOR AS ASPHALTIC SURFACE DRIVEWAYS AND FIELD ENTRANCES. (TON)

B : PAID FOR AS BASE AGGREGATE DENSE 1 ¼" (TON)

W : DRIVEWAY WIDTH 16' MIN. - 24' MAX.

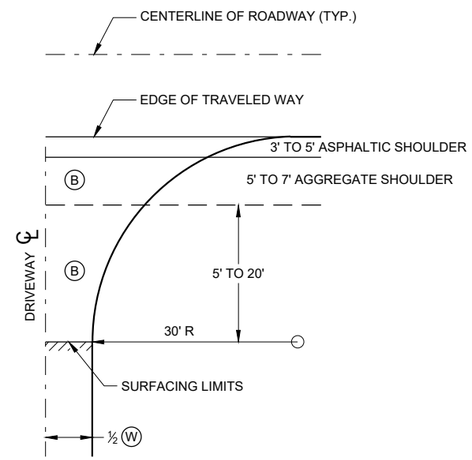

PLAN VIEW

HALF SECTION

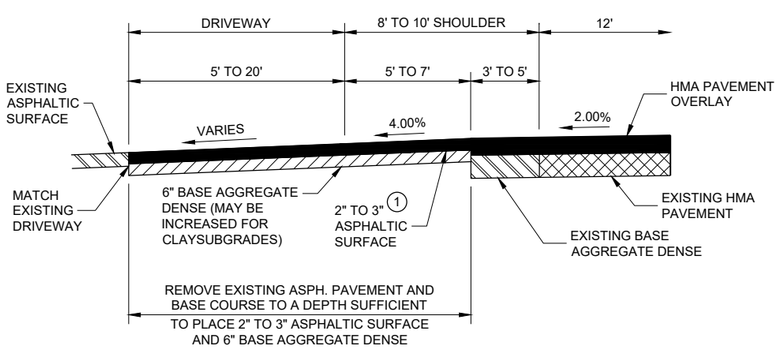

PROFILE VIEW

RURAL ENTRANCE WITH ASPHALTIC SURFACE

RESURFACING PROJECTS

PLAN VIEW

HALF SECTION

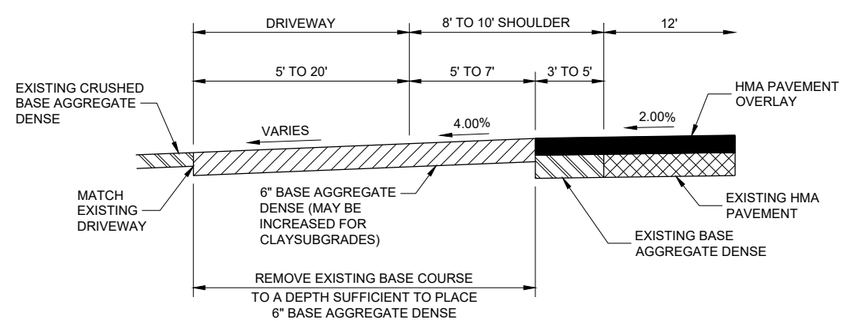

PROFILE VIEW

RURAL ENTRANCE WITH AGGREGATE SURFACE

6" BASE AGGREGATE DENSE RESURFACING PROJECTS

DRIVEWAYS WITHOUT CURB AND GUTTER RESURFACING PROJECTS RURAL

STATE OF WISCONSIN
DEPARTMENT OF TRANSPORTATION

APPROVED
December 2016 — DATE
/S/ Rodney Taylor — ROADWAY STANDARDS DEVE ENGINEER
FHWA

6

SDD 08D22 - 01

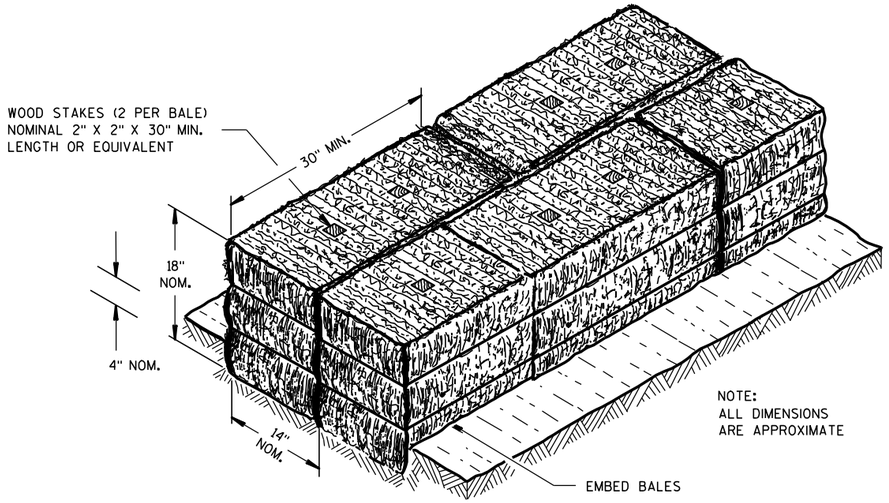

SECTION A-A

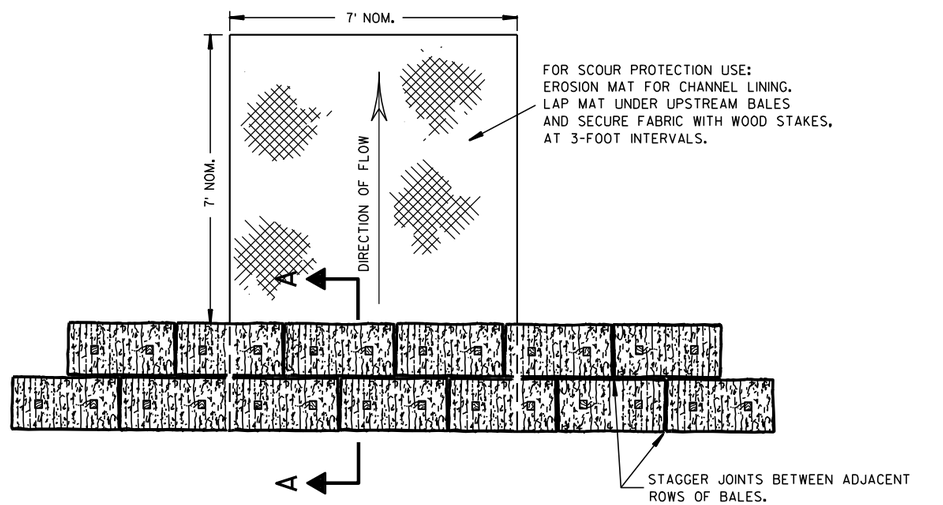

PLAN VIEW

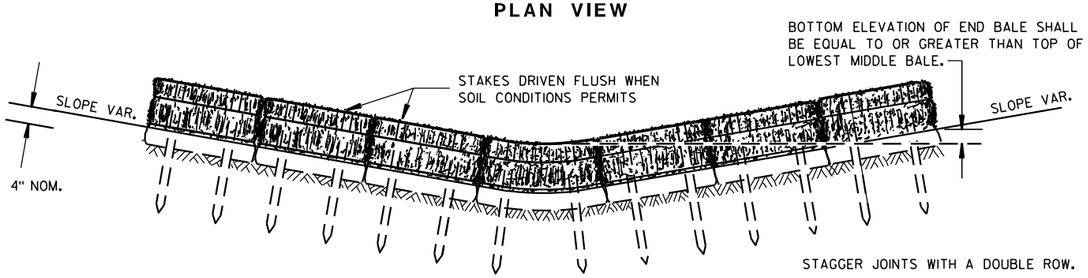

FRONT ELEVATION

TEMPORARY DITCH CHECK USING EROSION BALES ①

GENERAL NOTES

DETAILS OF CONSTRUCTION, MATERIALS AND WORKMANSHIP NOT SHOWN ON THIS DRAWING SHALL CONFORM TO THE PERTINENT REQUIREMENTS OF THE STANDARD SPECIFICATIONS AND THE APPLICABLE SPECIAL PROVISIONS.

① TEMPORARY DITCH CHECKS EITHER EROSION BALES OR MANUFACTURED SHALL BE PAID FOR UNDER THE BID ITEM OF TEMPORARY DITCH CHECK. THE DEPARTMENT WILL NOT PAY FOR TEMPORARY DITCH CHECKS CONSTRUCTED OF A SINGLE ROW OF EROSION BALES.

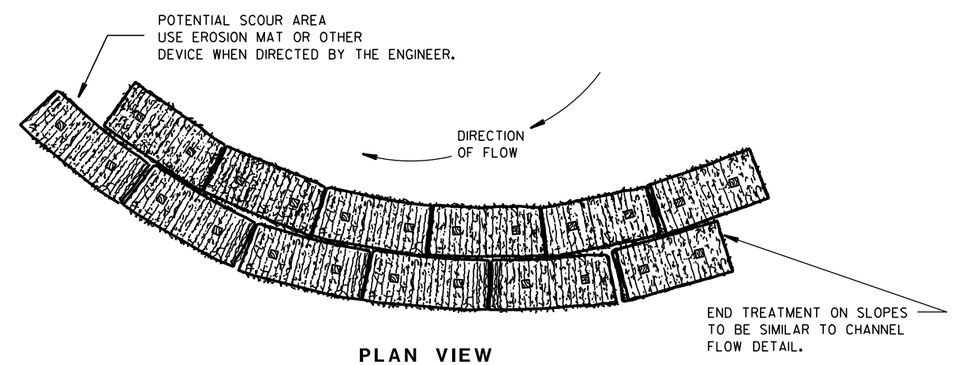

PLAN VIEW

WHEN ALTERING THE DIRECTION OF FLOW

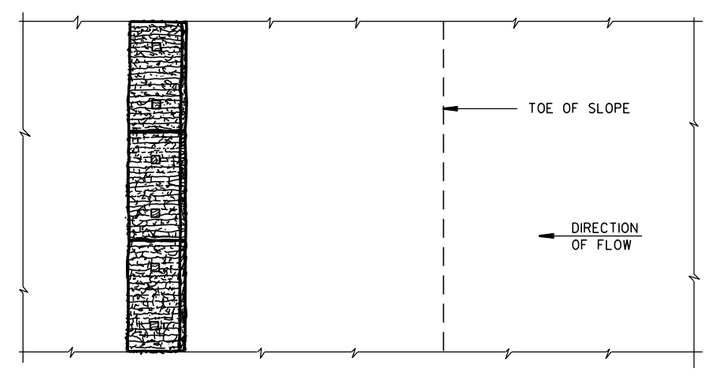

PLAN VIEW

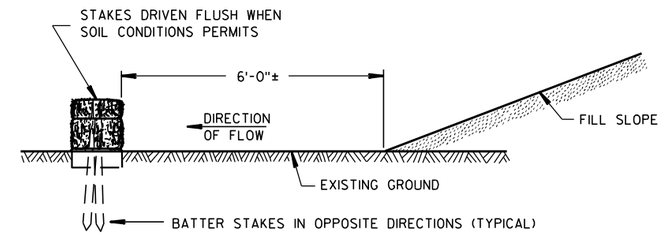

FRONT ELEVATION

WHEN EXISTING GROUND SLOPES AWAY FROM FILL SLOPE

EROSION BALES FOR SHEET FLOW

TYPICAL INSTALLATIONS OF EROSION BALES / TEMPORARY DITCH CHECKS

STATE OF WISCONSIN
DEPARTMENT OF TRANSPORTATION

APPROVED
6/04/02 — DATE
/S/ Beth Cann — CHIEF ROADWAY DEVELOP ENGINEER
FHWA

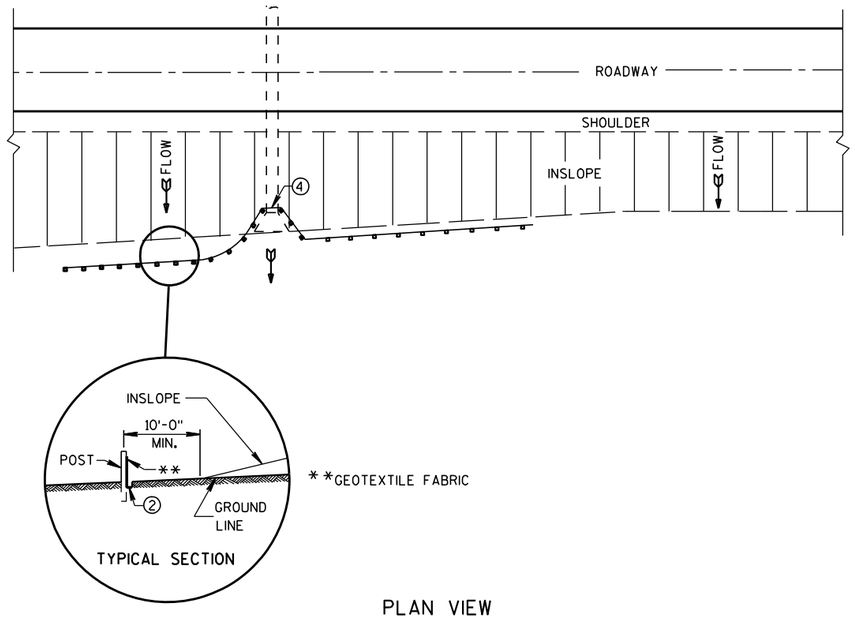

PLAN VIEW

TYPICAL APPLICATION OF SILT FENCE

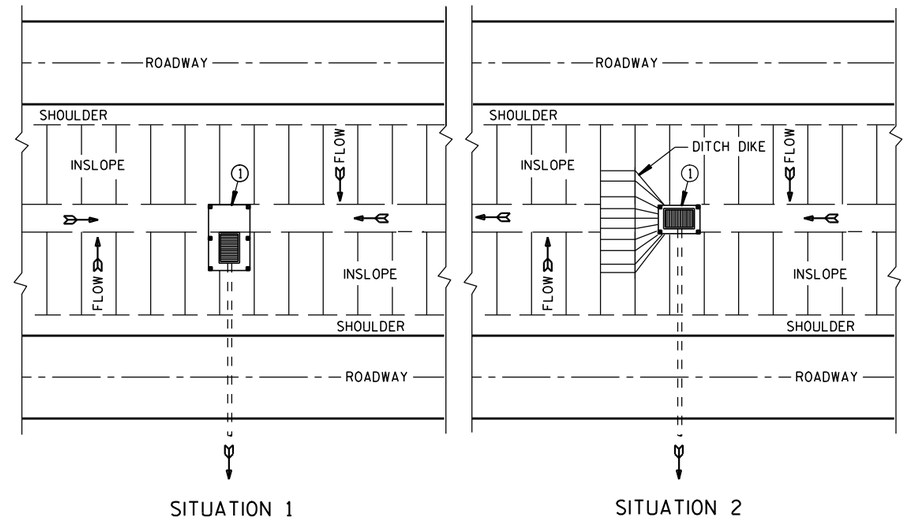

PLAN VIEW

SILT FENCE AT MEDIAN SURFACE DRAINS

GENERAL NOTES

DETAILS OF CONSTRUCTION NOT SHOWN ON THIS DRAWING SHALL CONFORM TO THE PERTINENT REQUIREMENTS OF THE STANDARD SPECIFICATIONS AND APPLICABLE SPECIAL PROVISIONS.

① HORIZONTAL BRACE REQUIRED WITH 2" X 4" WOODEN FRAME OR EQUIVALENT AT TOP OF POSTS.

② FOR MANUAL INSTALLATIONS THE TRENCH SHALL BE A MINIMUM OF 4" WIDE & 6" DEEP TO BURY AND ANCHOR THE GEOTEXTILE FABRIC. FOLD MATERIAL TO FIT TRENCH AND BACKFILL & COMPACT TRENCH WITH EXCAVATED SOIL.

③ WOOD POSTS SHALL BE A MINIMUM SIZE OF 1⅛" X 1⅛" OF OAK OR HICKORY.

④ SILT FENCE TO EXTEND ACROSS THE TOP OF THE PIPE.

⑤ CONSTRUCT SILT FENCE FROM A CONTINUOUS ROLL IF POSSIBLE BY CUTTING LENGTHS TO AVOID JOINTS. IF A JOINT IS NECESSARY USE ONE OF THE FOLLOWING TWO METHODS; A) OVERLAP THE END POSTS AND TWIST, OR ROTATE, AT LEAST 180 DEGREES. B) HOOK THE END OF EACH SILT FENCE LENGTH.

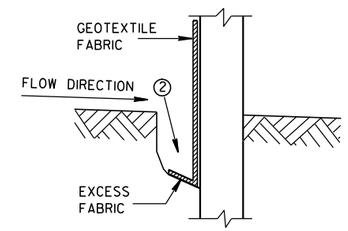

TRENCH DETAIL

NOTE: ADDITIONAL POST DEPTH OR TIE BACKS MAY BE REQUIRED IN UNSTABLE SOILS

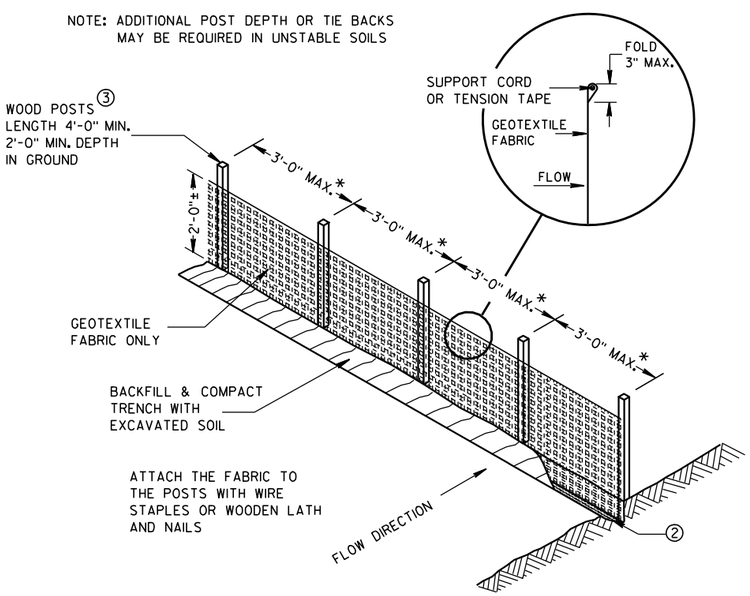

*NOTE: 8'-0" POST SPACING ALLOWED IF A WOVEN GEOTEXTILE FABRIC IS USED.

SILT FENCE

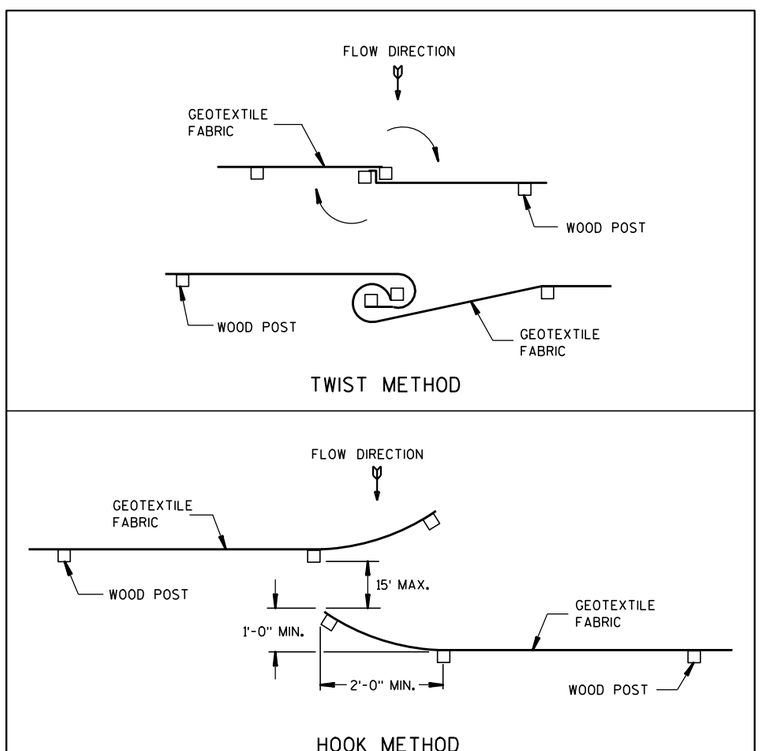

JOINING TWO LENGTHS OF SILT FENCE ⑤

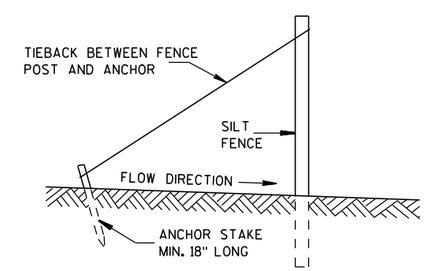

SILT FENCE TIE BACK

(WHEN REQUIRED BY THE ENGINEER)

SILT FENCE	
STATE OF WISCONSIN DEPARTMENT OF TRANSPORTATION	
APPROVED 4-29-05 DATE	/S/ Beth Cann-- CHIEF ROADWAY DEVELOP ENGINEER
FHWA	

6

6

S.D.D. 8 E 9-6

S.D.D. 8 E 9-6

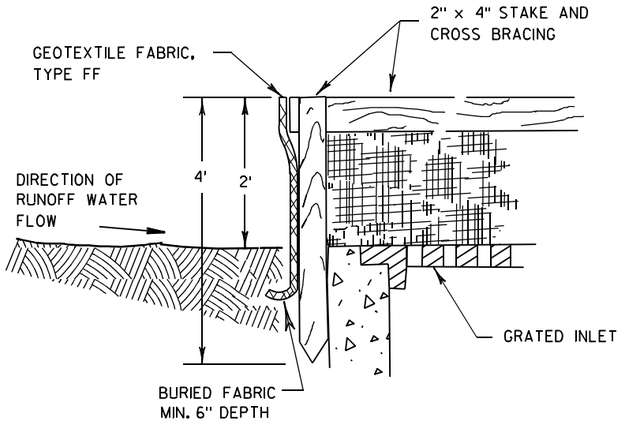

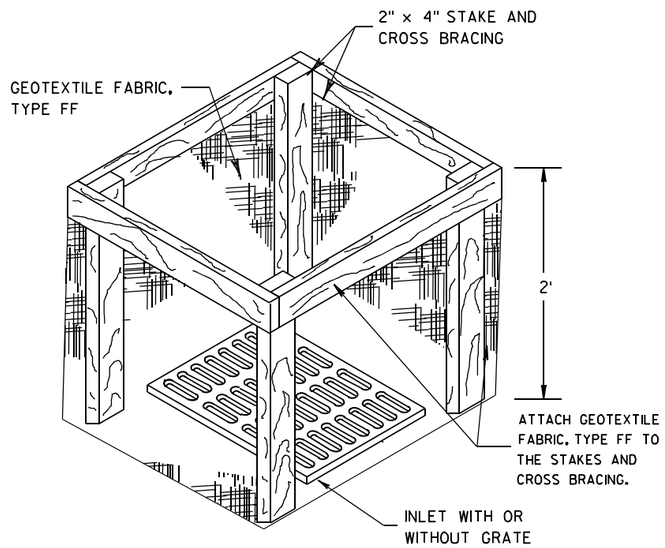

INLET PROTECTION, TYPE A

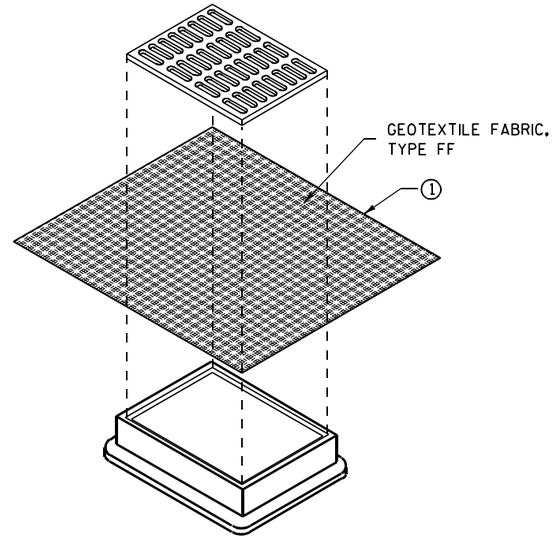

INLET PROTECTION, TYPE B (WITHOUT CURB BOX)

(CAN BE INSTALLED IN ANY INLET WITHOUT A CURB BOX)

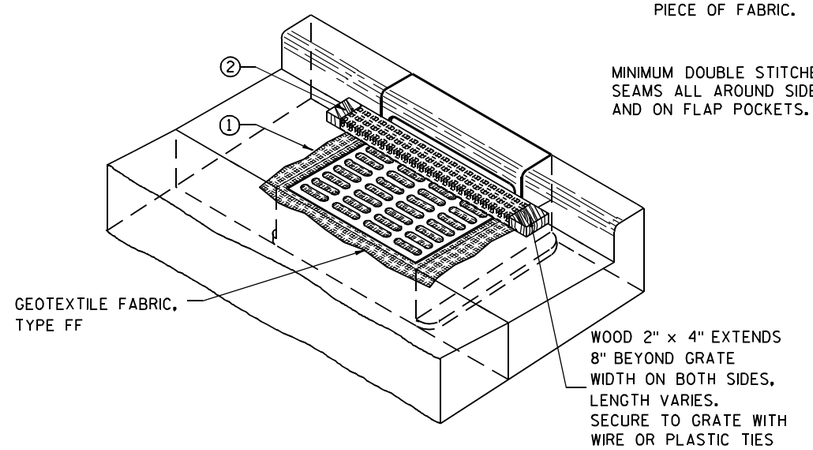

INLET PROTECTION, TYPE C (WITH CURB BOX)

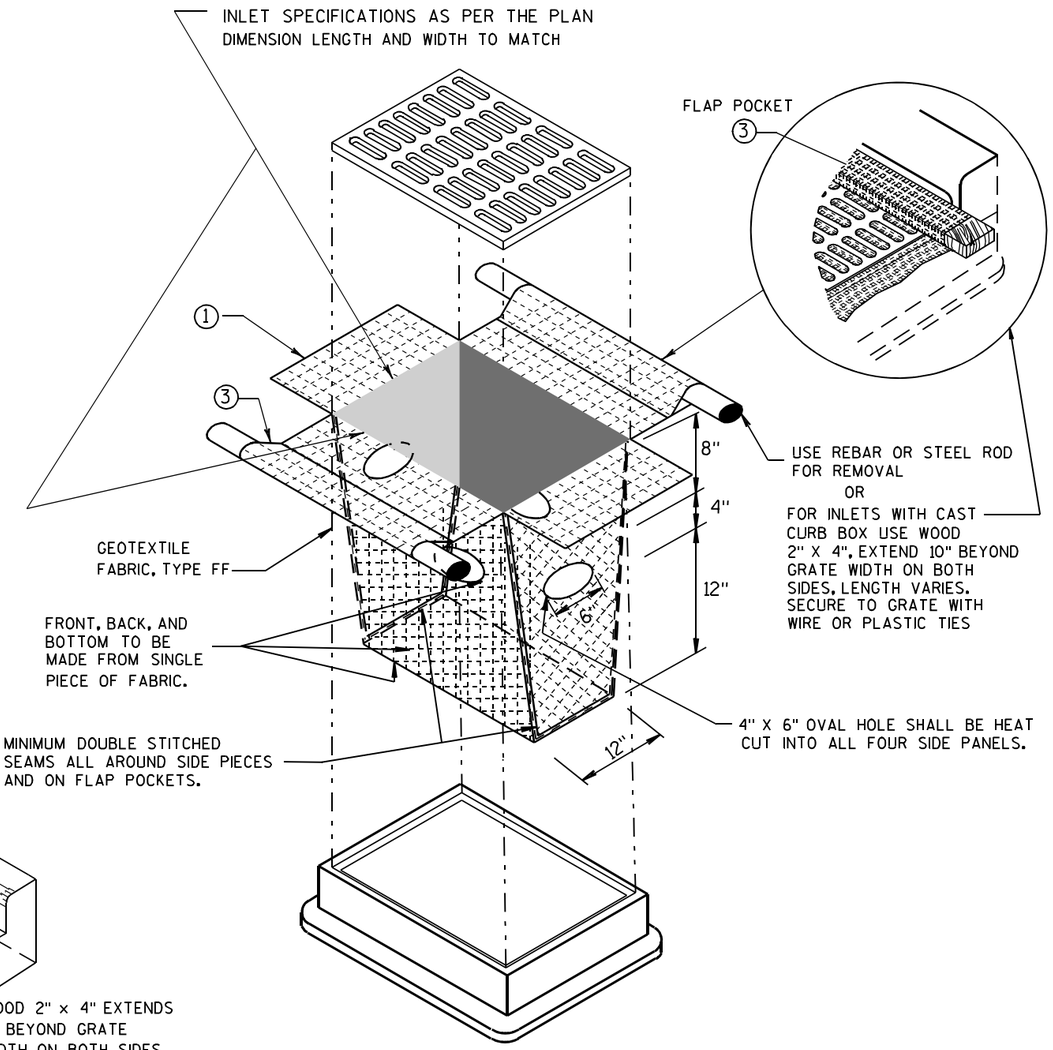

INLET PROTECTION, TYPE D

(CAN BE INSTALLED IN ANY INLET TYPE WITH OR WITHOUT A CURB BOX AS PER NOTE 2)

GENERAL NOTES

INLET PROTECTION DEVICES SHALL BE MAINTAINED OR REPLACED AT THE DIRECTION OF THE ENGINEER.

MANUFACTURED ALTERNATIVES APPROVED AND LISTED ON THE DEPARTMENT'S EROSION CONTROL PRODUCT ACCEPTABILITY LIST MAY BE SUBSTITUTED.

WHEN REMOVING OR MAINTAINING INLET PROTECTION, CARE SHALL BE TAKEN SO THAT THE SEDIMENT TRAPPED ON THE GEOTEXTILE FABRIC DOES NOT FALL INTO THE INLET. ANY MATERIAL FALLING INTO THE INLET SHALL BE REMOVED IMMEDIATELY.

1 FINISHED SIZE, INCLUDING FLAP POCKETS WHERE REQUIRED, SHALL EXTEND A MINIMUM OF 10" AROUND THE PERIMETER TO FACILITATE MAINTENANCE OR REMOVAL.

2 FOR INLET PROTECTION, TYPE C (WITH CURB BOX), AN ADDITIONAL 18" OF FABRIC IS WRAPPED AROUND THE WOOD AND SECURED WITH STAPLES. THE WOOD SHALL NOT BLOCK THE ENTIRE HEIGHT OF THE CURB BOX OPENING.

3 FLAP POCKETS SHALL BE LARGE ENOUGH TO ACCEPT WOOD 2X4.

INSTALLATION NOTES

TYPE B & C

TRIM EXCESS FABRIC IN THE FLOW LINE TO WITHIN 3" OF THE GRATE.

THE CONTRACTOR SHALL DEMONSTRATE A METHOD OF MAINTENANCE, USING A SEWN FLAP, HAND HOLDS OR OTHER METHOD TO PREVENT ACCUMULATED SEDIMENT FROM ENTERING THE INLET.

TYPE D

DO NOT INSTALL INLET PROTECTION TYPE D IN INLETS SHALLOWER THAN 30", MEASURED FROM THE BOTTOM OF THE INLET TO THE TOP OF THE GRATE.

TRIM EXCESS FABRIC IN THE FLOW LINE TO WITHIN 3" OF THE GRATE.

THE INSTALLED BAG SHALL HAVE A MINIMUM SIDE CLEARANCE, BETWEEN THE INLET WALLS AND THE BAG, MEASURED AT THE BOTTOM OF THE OVERFLOW HOLES, OF 3". WHERE NECESSARY THE CONTRACTOR SHALL CINCH THE BAG, USING PLASTIC ZIP TIES, TO ACHIEVE THE 3" CLEARANCE. THE TIES SHALL BE PLACED AT A MAXIMUM OF 4" FROM THE BOTTOM OF THE BAG.

INLET PROTECTION TYPE A, B, C, AND D

STATE OF WISCONSIN
DEPARTMENT OF TRANSPORTATION

APPROVED
10/16/02 — DATE
/S/ Beth Cannestra — CHIEF ROADWAY DEVELOPMENT ENGINEER
FHWA

6

S.D.D. 8 E 10-2

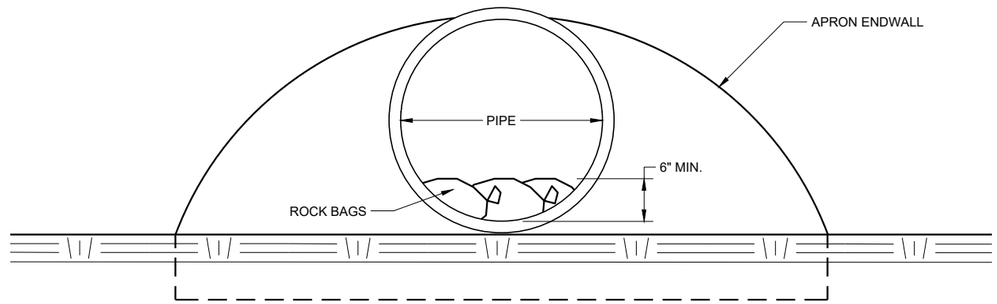

END VIEW

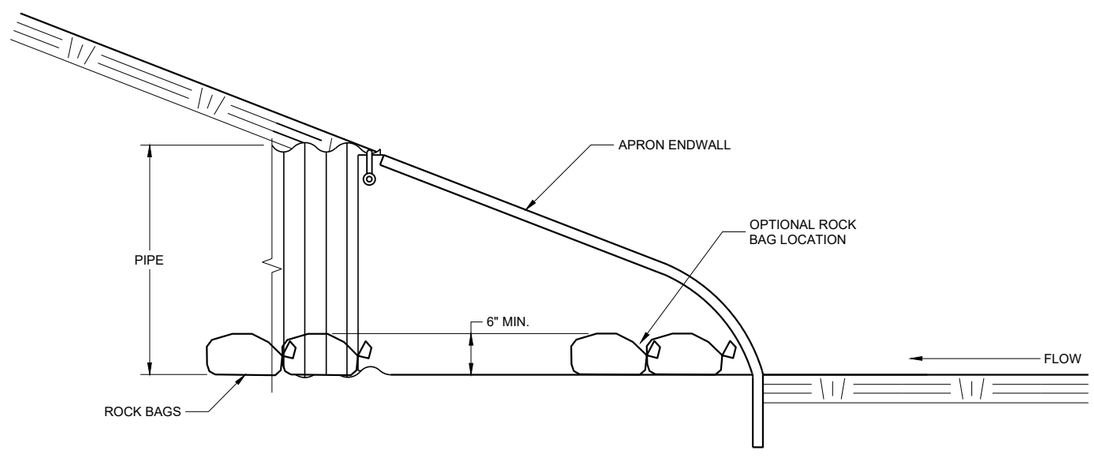

SIDE VIEW

CULVERT PIPE CHECK

(INSTALL ON INLET END ONLY)

CULVERT PIPE CHECK

STATE OF WISCONSIN
DEPARTMENT OF TRANSPORTATION

APPROVED
May 2019 — DATE
/S/ Daniel Schave — EROSION CONTROL ENGI
FHWA

6

6

SDD 08E15 - 01

SDD 08E15 - 01

METAL APRON ENDWALLS

PIPE DIA. (IN.)	MIN. THICK. (Inches) STEEL	MIN. THICK. (Inches) ALUM.	DIMENSIONS (Inches) A (±1")	B (MAX.)	H (±1")	L (±1 1/2")	L1 ①	L2 ①	W (±2")	APPROX. SLOPE	BODY
12	.064	.060	6	6	6	21	12	17 1/2	24	2 1/2 to 1	1 Pc.
15	.064	.060	7	8	6	26	14	21 3/4	30	2 1/2 to 1	1 Pc.
18	.064	.060	8	10	6	31	15	28 1/4	36	2 1/2 to 1	1 Pc.
21	.064	.060	9	12	6	36	18	29 5/8	42	2 1/2 to 1	1 Pc.
24	.064	.075	10	13	6	41	18	37 1/4	48	2 1/2 to 1	1 Pc.
30	.079	.075	12	16	8	51	18	52 1/4	60	2 1/2 to 1	1 Pc.
36	.079	.105	14	19	9	60	24	59 3/4	72	2 1/2 to 1	2 Pc.
42	.109	.105	16	22	11	69	24	75 5/8	84	2 1/2 to 1	2 Pc.
48	.109	.105	18	27	12	78	24	81	90	2 1/4 to 1	3 Pc.
54	.109	.105	18	30	12	84	30	85 1/2	102	2 1/4 to 1	3 Pc.
60	.109×	.105×	18	33	12	87	—	—	114	2 to 1	3 Pc.
66	.109×	.105×	18	36	12	87	—	—	120	2 to 1	3 Pc.
72	.109×	.105×	18	39	12	87	—	—	126	2 to 1	3 Pc.
78	.109×	.105×	18	42	12	87	—	—	132	1 1/2 to 1	3 Pc.
84	.109×	.105×	18	45	12	87	—	—	138	1 1/2 to 1	3 Pc.
90	.109×	.105×	18	37	12	87	—	—	144	1 1/2 to 1	3 Pc.
96	.109×	.105×	18	35	12	87	—	—	150	1 1/2 to 1	3 Pc.

× EXCEPT CENTER PANEL
SEE GENERAL NOTES

REINFORCED CONCRETE APRON ENDWALLS

PIPE DIA. (IN.)	DIMENSIONS (Inches) T	A	B	C	D	E	G	APPROX. SLOPE
12	2	4	24	48 7/8	72 7/8	24	2	3 to 1
15	2 1/4	6	27	46	73	30	2 1/4	3 to 1
18	2 1/2	9	27	46	73	36	2 1/2	3 to 1
21	2 3/4	9	36	37 1/2	73 1/2	42	2 3/4	3 to 1
24	3	9 1/2	43 1/2	30	73 1/2	48	3	3 to 1
27	3 1/4	10 1/2	49 1/2	24	73 1/2	54	3 1/4	3 to 1
30	3 1/2	12	54	19 3/4	73 1/2	60	3 1/2	3 to 1
36	4	15	63	34 3/4	97 3/4	72	4	3 to 1
42	4 1/2	21	63	35	98	78	4 1/2	3 to 1
48	5	24	72	26	98	84	5	3 to 1
54	5 1/2	27	65	*33 1/4-**35	*98 1/4-**100	90	5 1/2	2 2/5 to 1
60	6	*30-**35	60	39	99	96	5	2 to 1
66	6 1/2	*24-**30	*72-**78	*21-**27	99	102	5 1/2	2 to 1
72	7	*24-**36	78	21	99	108	6	2 to 1
78	7 1/2	*24-**36	78	21	99	114	6 1/2	2 to 1
84	8	36	90 1/2	21	111 1/2	120	6 1/2	1 1/2 to 1
90	8 1/2	41	87 1/2	24	111 1/2	132	6 1/2	1 1/2 to 1

*MINIMUM
**MAXIMUM

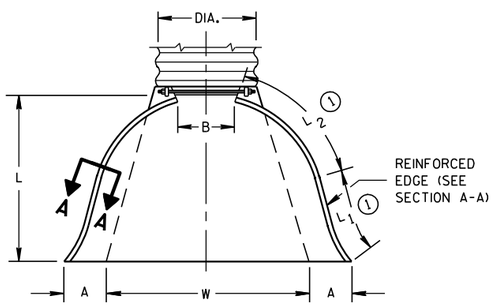

PLAN VIEW

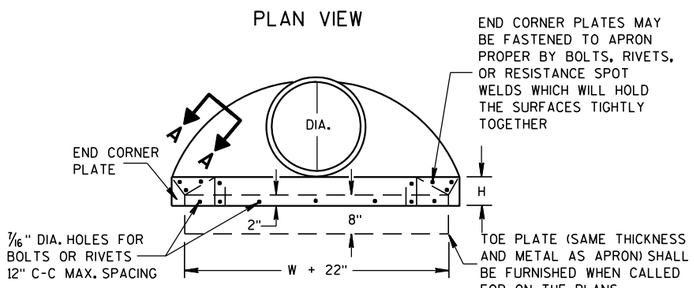

END VIEW

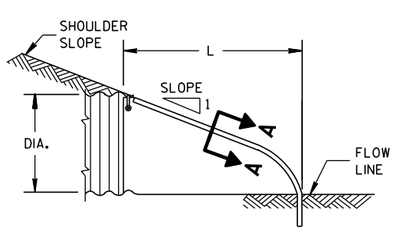

SIDE ELEVATION

METAL ENDWALLS

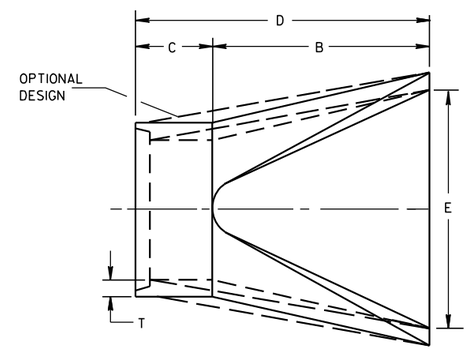

PLAN

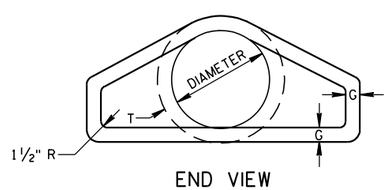

END VIEW

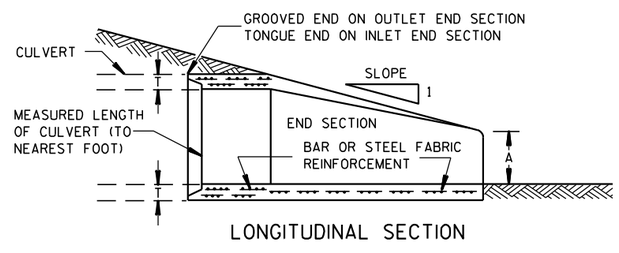

LONGITUDINAL SECTION

CONCRETE ENDWALLS

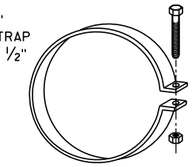

ALTERNATE FOR TYPE 1 CONNECTION

END SECTION CONNECTOR STRAP

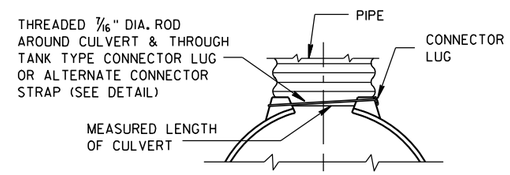

TYPE 1
FOR 12" THRU 24" CORR. PIPE

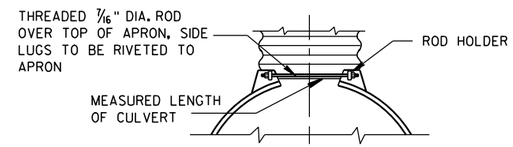

TYPE 2
FOR 30" THRU 96" CORR. PIPE

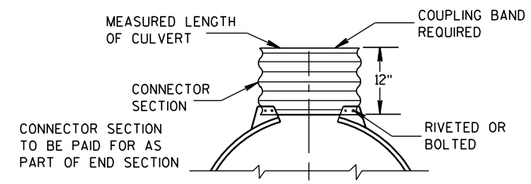

TYPE 3
FOR 42" THRU 96" CORR. PIPE

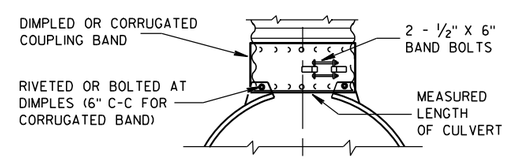

TYPE 5
ALTERNATE FOR:
ALL SIZES CORRUGATED CIRCULAR PIPE

NOTE: DIMPLED BAND FITS OVER OUTSIDE OF ENDWALL, AND CORRUGATED BAND FITS INSIDE ENDWALL. DIMPLED BAND MAY BE USED WITH HELICALLY CORRUGATED PIPE.

FOR CIRCUMFERENTIALLY CORRUGATED PIPE USE ENDWALL CONNECTION DETAILS 1, 2, 3 OR 5 AS APPLICABLE.

FOR HELICALLY CORRUGATED PIPE USE ENDWALL CONNECTION DETAILS 1, 2 OR 5.

FOR HELICALLY CORRUGATED PIPES WITH TWO CIRCUMFERENTIAL CORRUGATIONS AT EACH END USE ENDWALL CONNECTION DETAILS 1, 2 OR 3.

CONNECTION DETAILS

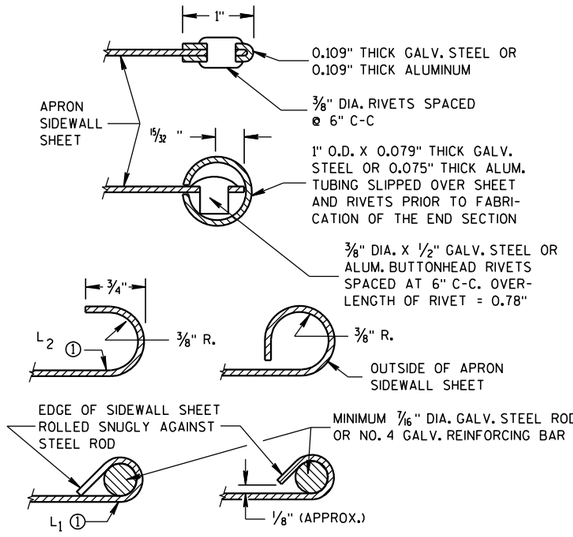

SECTION A-A

GENERAL NOTES

DETAILS OF CONSTRUCTION, MATERIALS AND WORKMANSHIP NOT SHOWN ON THIS DRAWING SHALL CONFORM TO THE PERTINENT REQUIREMENTS OF THE STANDARD SPECIFICATIONS AND THE APPLICABLE SPECIAL PROVISIONS.

CONCRETE CULVERT ENDWALLS MAY NOT BE USED WITH GALVANIZED STEEL OR ALUMINUM CULVERT PIPE OR VISE VERSA. GALVANIZED STEEL OR ALUMINUM ENDWALLS SHALL NORMALLY BE INSTALLED ON CULVERT PIPE OF THE SAME METAL.

ALL THREE PIECE STEEL APRON ENDWALLS FOR 60" DIAMETER PIPE AND LARGER SHALL HAVE 0.109" SIDES AND 0.138" CENTER PANELS. ALL THREE PIECE ALUMINUM APRON ENDWALLS FOR 60" DIAMETER PIPE AND LARGER SHALL HAVE 0.105" SIDES AND 0.134" CENTER PANELS. THE WIDTH OF CENTER PANELS SHALL BE GREATER THAN 20 PERCENT OF THE PIPE PERIMETER.

LAP SEAMS SHALL BE TIGHTLY JOINED BY GALVANIZED RIVETS OR BOLTS FOR STEEL UNITS AND ALUMINUM RIVETS AND BOLTS FOR ALUMINUM UNITS. FOR THE 60" THROUGH 96" DIAMETER APRON ENDWALL SIZES, THE REINFORCED EDGES AND CENTER PANEL SEAMS SHALL BE FURTHER REINFORCED WITH GALVANIZED STEEL OR ALUMINUM STIFFENER ANGLES. THE ANGLES SHALL BE ATTACHED BY GALVANIZED NUTS AND BOLTS FOR STEEL UNITS AND ALUMINUM NUTS AND BOLTS FOR ALUMINUM UNITS.

WHERE TWO OR MORE PIPES WITH APRON ENDWALLS ARE LAID ADJACENT TO EACH OTHER, THEY SHALL BE SEPARATED BY A DISTANCE SUFFICIENT TO PROVIDE A MINIMUM CLEARANCE OF 6 INCHES BETWEEN APRON ENDWALLS.

① FOR PIPE SIZES UP TO 60" DIAMETER, A 180° ROLLED EDGE MAY BE USED INSTEAD OF STEEL ROD REINFORCEMENT. SEE SECTION A-A.

APRON ENDWALLS FOR CULVERT PIPE

STATE OF WISCONSIN
DEPARTMENT OF TRANSPORTATION

APPROVED
11/30/94 — DATE
/S/ Rory L. Rhinesmith — CHIEF ROADWAY DEVELOPMENT ENGINEER
FHWA

6
S.D.D. 8 F 1-11

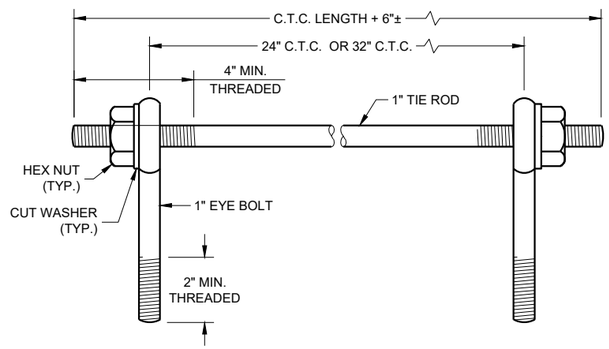

EYE BOLTS AND TIE ROD

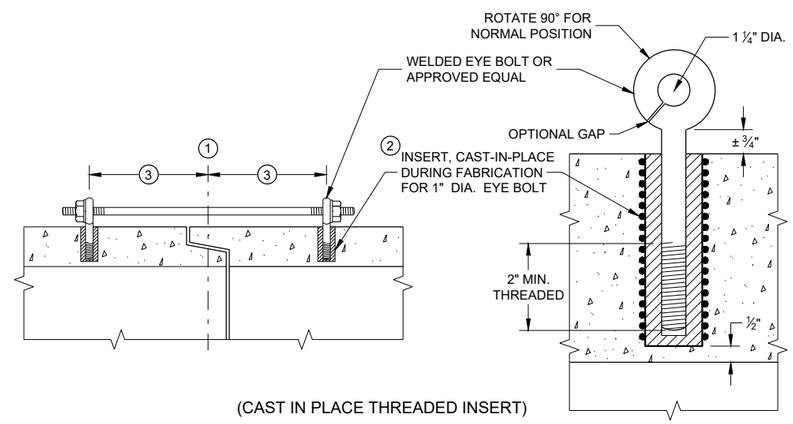

(CAST IN PLACE THREADED INSERT)

LONGITUDINAL SECTIONS

EYE BOLT AND TIE ROD ASSEMBLY (ALTERNATE NO. 1)

GENERAL NOTES

DETAILS OF CONSTRUCTION, MATERIALS, AND WORKMANSHIP NOT SHOWN ON THIS DRAWING SHALL CONFORM TO THE PERTINENT REQUIREMENTS OF THE STANDARD SPECIFICATIONS AND APPLICABLE SPECIAL PROVISIONS.

CONCRETE CULVERT AND STORM SEWER PIPE SHALL BE TIED TOGETHER IN THE MANNER ILLUSTRATED BY THIS DETAIL AT LOCATIONS DESIGNATED IN THE STANDARD SPECIFICATIONS AND THE PLAN. THE CONTRACTOR MAY USE EITHER ALTERNATE 1, 2 OR 3 FOR DRAINAGE STRUCTURES. ONLY ALTERNATE 1 AND 3 MAY BE USED FOR CATTLE PASSES, UNLESS OTHERWISE STATED IN THE CONTRACT. THE MATERIALS, FABRICATION AND WORK NECESSARY TO TIE THE PIPE BY THIS DETAIL WILL BE CONSIDERED INCIDENTAL TO THE PIPE AND APRON ENDWALLS IF REQUIRED.

DETAILED DRAWINGS FOR PROPOSED ALTERNATE DESIGNS FOR JOINT TIES SHALL BE SUBMITTED TO THE ENGINEER FOR APPROVAL.

JOINT TIES TO BE HOT-DIP GALVANIZED PER ASTM A 153.

1. CENTER LINE OF TONGUE AND GROOVE OR BELL AND SPIGOT JOINTS.
2. THE INSIDE OF THE THREADED INSERTS SHALL BE CLEAN TO ALLOW THE INSERTION OF THREADED EYE BOLTS.
3. HOLES SHALL BE CAST-IN-PLACE OR DRILLED PER THE APPLICABLE DETAIL, AND EQUAL DISTANCE FROM THE CENTERLINE OF THE JOINT.
4. BOLT PROJECTION INSIDE OF PIPE SHALL NOT EXCEED 2 INCHES.
5. OPENING TO BE ROD DIAMETER PLUS 1 INCH.
6. LENGTH ADEQUATE TO EXTEND TO WITHIN ½ INCH OF THE INNER SURFACE OF THE PIPE.
7. EYE BOLT LENGTH DETERMINED BY WALL THICKNESS, BELL THICKNESS AND BOLT PROJECTION INSIDE PIPE.

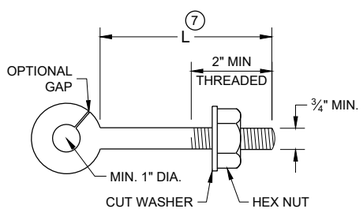

EYE BOLT 7

NOTE: TWO EYE BOLTS MAY BE USED WITH A 30" OR 38" LONG THREADED ROD IN LIEU OF THE 90° BENT TIE ROD.

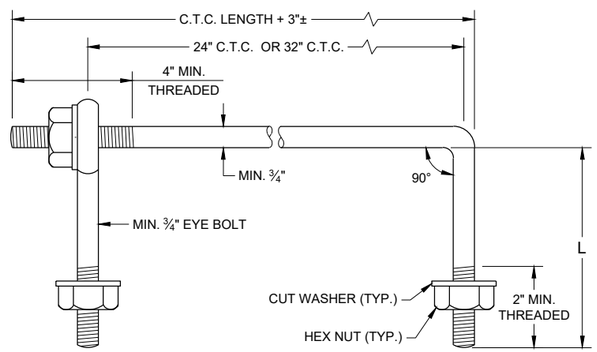

EYE BOLT AND TIE ROD

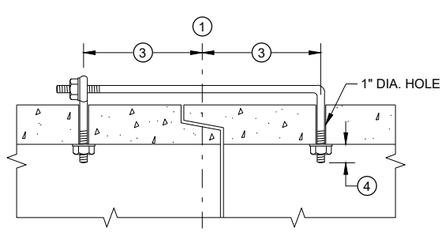

(TONGUE AND GROOVE PIPE)

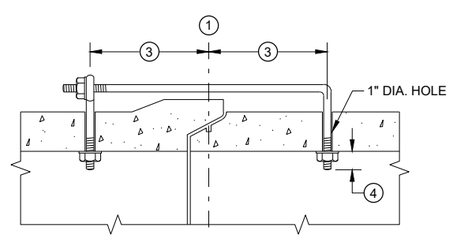

(MODIFIED BELL PIPE)

LONGITUDINAL SECTION

(JOINT TIES FOR 18" TO 66" DIA. CONCRETE PIPE)

EYE BOLT AND TIE ROD ASSEMBLY (ALTERNATE NO. 2)

ADJUSTABLE TIE ROD TABLE

PIPE DIAMETER	TIE ROD DIAMETER	D	L_1	N
12 - 60	⅝	⅝	5	½
66 - 84	¾	¾	5	½
90 - 144	1	1	7	1 7/16

DIMENSIONS SHOWN ARE IN INCHES

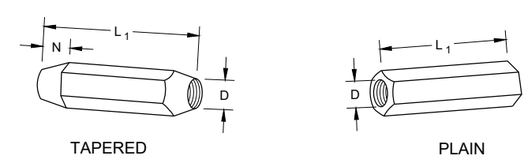

RIGHT AND LEFT THREADS

SLEEVE NUTS

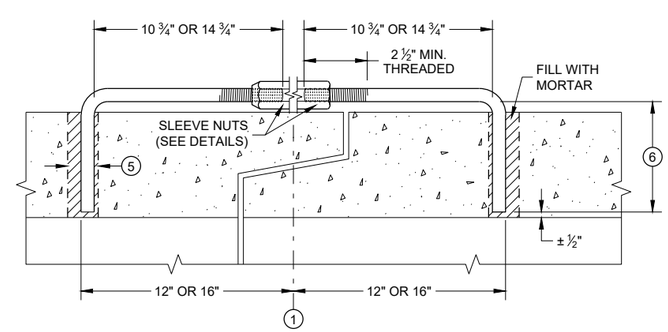

LONGITUDINAL SECTION

ADJUSTABLE TIE ROD (ALTERNATE NO. 3)

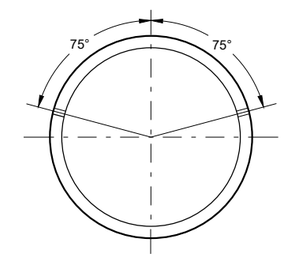

PLACEMENT OF (2) CAST-IN-PLACE INSERTS OR HOLES DURING FABRICATION FOR PIPE SECTIONS REQUIRING TIE RODS

TRANSVERSE SECTION

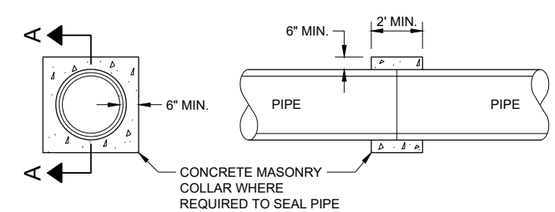

SECTION A - A

CONCRETE COLLAR DETAIL

JOINT TIES FOR CONCRETE PIPE AND CONCRETE COLLAR DETAIL

STATE OF WISCONSIN
DEPARTMENT OF TRANSPORTATION

APPROVED
November 2021 — DATE
/S/ Rodney Taylor — ROADWAY STANDARDS DEVE ENGINEER
FHWA

6

SDD 08F04 - 08

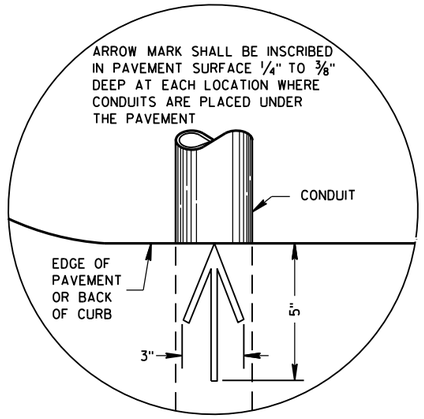

PLAN VIEW

ARROW MARK

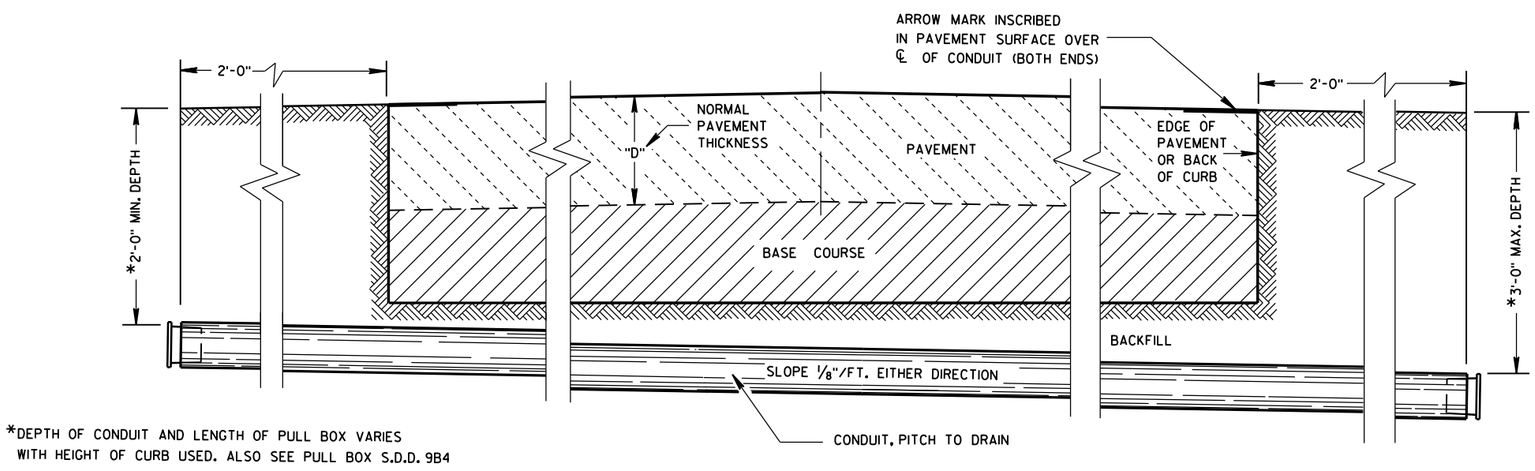

*DEPTH OF CONDUIT AND LENGTH OF PULL BOX VARIES WITH HEIGHT OF CURB USED. ALSO SEE PULL BOX S.D.D. 9B4

SIDE ELEVATION

DETAIL FOR CONDUIT UNDER PAVED HIGHWAYS

GENERAL NOTES

DETAILS OF CONSTRUCTION, MATERIALS AND WORKMANSHIP NOT SHOWN ON THIS DRAWING SHALL CONFORM TO THE PERTINENT REQUIREMENTS OF THE CONTRACT.

METALLIC (STANDARD SPECIFICATION 652.2.2) OR NONMETALLIC (STANDARD SPECIFICATION 652.2.3) CONDUIT SHALL BE FURNISHED AND PLACED AS SHOWN.

DEPTH OF CONDUIT INSTALLED BELOW THE TRAVELED WAY SHALL BE 24 INCHES MINIMUM AND 36 INCHES MAXIMUM.

DEPTH OF CONDUIT INSTALLED THAT IS NOT BELOW THE TRAVELED WAY SHALL BE 18 INCHES MINIMUM AND 36 INCHES MAXIMUM.

ANY EXCEPTION TO THE MAXIMUM DEPTH SHALL BE ONLY WITH THE WRITTEN APPROVAL OF THE ENGINEER.

THE TRENCH SHALL NOT BE BACKFILLED PRIOR TO INSPECTION OF THE CONDUIT.

ALL METALLIC CONDUIT RACEWAY ENDS SHALL BE REAMED AND THREADED.

ALL METALLIC CONDUIT IN WHICH WIRE OR CABLE IS TO BE INSTALLED SHALL BE BUSHED WITH APPROVED THREADED BUSHINGS BEFORE INSTALLATION OF THE WIRE OR CABLE.

ALL METALLIC CONDUITS IN WHICH WIRE OR CABLE IS NOT TO BE INSTALLED SHALL BE CAPPED WITH THREADED PROTECTIVE CAPS, AS APPROVED BY THE ENGINEER.

ALL NONMETALLIC CONDUIT SHALL BE CAPPED OR PLUGGED IMMEDIATELY AFTER INSTALLATION AND SHALL REMAIN CAPPED OR PLUGGED UNTIL WIRE/CABLES ARE INSTALLED.

NONMETALLIC CONDUITS IN WHICH WIRE OR CABLE IS NOT BEING INSTALLED SHALL REMAIN CAPPED OR PLUGGED.

BENDING OF PVC ELECTRICAL CONDUIT SHALL BE ACCOMPLISHED BY USING A BLANKET OR EMERSION TYPE TANK DESIGNED FOR THE PURPOSE OF BENDING PVC ELECTRICAL CONDUIT.

ALL CUT ENDS SHALL BE TRIMMED INSIDE AND OUTSIDE TO REMOVE ALL ROUGH EDGES ON NONMETALLIC CONDUIT. (SEE NEC 347.5)

WHEN REQUIRED TO CONNECT NONMETALLIC CONDUIT TO METALLIC CONDUIT, ONLY U.L. LISTED ADAPTER FITTINGS SHALL BE USED.

PRIOR TO CONDUIT ACCEPTANCE, CONDUIT CAPS OR PLUGS SHALL BE REMOVED, AND THE CAPS, PLUGS AND CONDUIT ENDS SHALL BE THOROUGHLY CLEANED AND THEN THE CAPS OR PLUGS REINSTALLED TO ENSURE THAT THE CAPS OR PLUGS CAN BE EASILY REMOVED IN THE FUTURE.

ALL CONDUIT BEING FURNISHED AND INSTALLED SHALL HAVE THE U.L. LABEL FIRMLY ATTACHED.

CONDUIT RUNS SHALL BE THE SAME SIZE OF CONDUIT FROM ONE END TO THE OTHER (FROM PULL BOX TO PULL BOX-OR-JUNCTION BOX TO JUNCTION BOX-OR-BASE TO BASE, ETC.).

TRACER WIRE SHALL BE INSTALLED AS STATED IN THE STANDARD SPECIFICATION, ITEM 652.3.1.1.

ALL CONDUIT RUNS SHALL BE STRAIGHT (WITHOUT BENDS) FROM PULL BOX TO PULL BOX, PULL BOX TO BASE AND BASE TO BASE AS SHOWN ON THE PLANS.

CONDUIT

STATE OF WISCONSIN
DEPARTMENT OF TRANSPORTATION

APPROVED
March, 2017 — DATE
/S/ Ahmet Demirbilek — STATE ELECTRICAL
FHWA

TABLE OF NOMINAL DIMENSIONS AND WEIGHTS

DIMENSION IN INCHES		NON- CONDUCTIVE PULL BOX	
BOX DIAMETER ** (INSIDE)	A	24	24
BOX OVERALL OUTSIDE DIAMETER	B	27	27
BOX LENGTH	C	36	42
FRAME OPENING	D	22 ½	22 ½
WEIGHT IN POUNDS *			
COVER		50	50
BOX ONLY		75	85

*THE ACTUAL WEIGHT OF THE COVER OR BOX ONLY MAY VARY NOT TO EXCEED 100 LBS INDIVIDUALLY.

**DIAMETER VARIES FROM TOP TO BOTTOM WITH THE DIAMETER LARGER AT THE BOTTOM TO PREVENT FROST HEAVE.

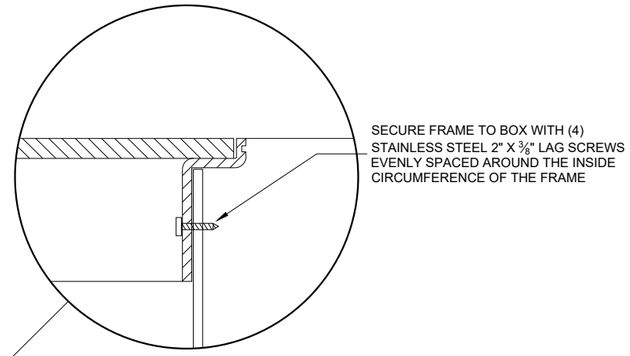

INSTALLED IN SOD OR CRUSHED AGGREGATE

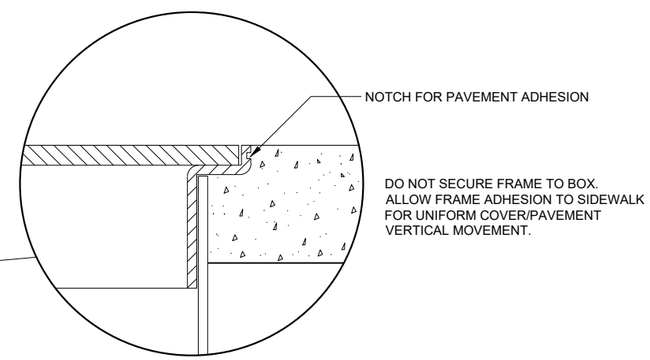

INSTALLED IN SIDEWALK

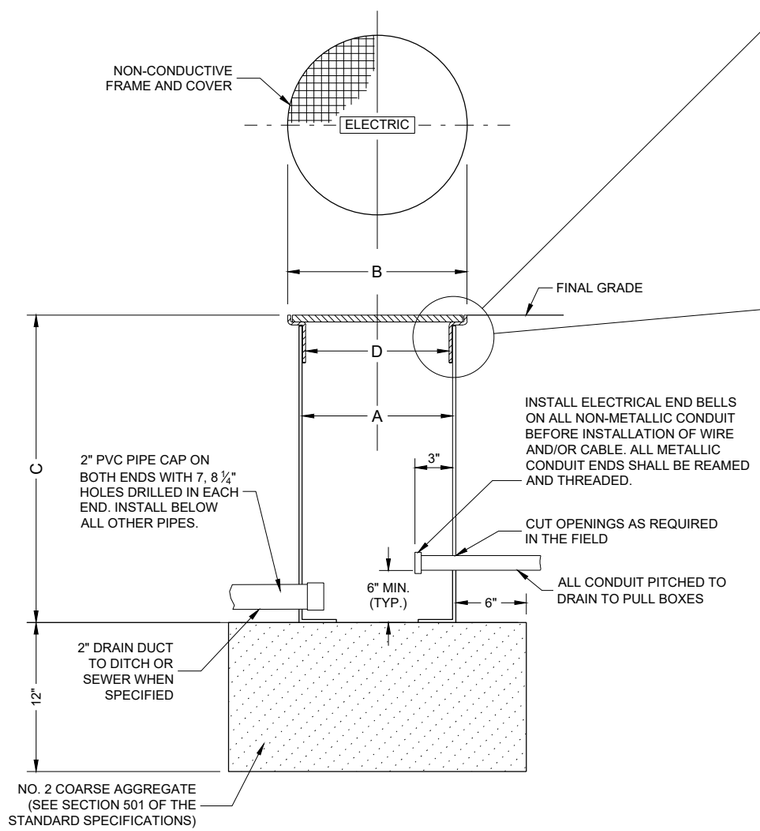

NON-CONDUCTIVE PULL BOX

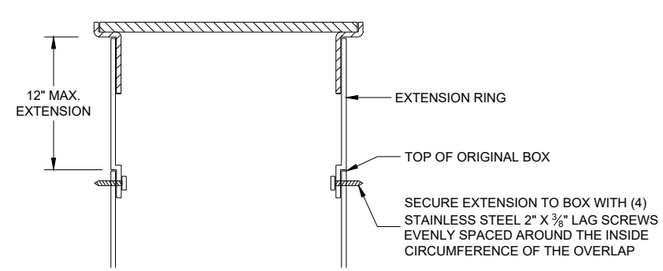

BOX EXTENSION

GENERAL NOTES

DETAILS OF CONSTRUCTION, MATERIALS AND WORKMANSHIP NOT SHOWN ON THIS DRAWING SHALL CONFORM TO THE PERTINENT REQUIREMENTS OF THE CONTRACT.

ALL BOXES, FRAMES AND COVERS SHALL BE SUITABLE FOR TIER 15 LOADING AS SPECIFIED IN ANSI/SCTE 77.

PROVIDE AN OPENING FOR TOOL ASSISTED COVER REMOVAL NOT LARGE ENOUGH TO PERMIT PASSAGE OF A SPHERE MORE THAN ½" DIAMETER

ENSURE COVER SURFACE IS SKID RESISTANT WITH A COEFFICIENT OF FRICTION OF AT LEAST 0.5 AND VERTICAL SURFACE DICONTINUITIES LESS THAN ¼".

COVER SHALL BE MAGNETICALLY LOCATABLE.

BOXES AND EXTENSIONS ARE TRIMMABLE FOR CUSTOM LENGTHS. TRIMMED PIECES SHALL MAINTAIN A UNIFORM LENGTH.

ENTRANCE HOLES INTO PULL BOXES SHALL BE CUT WITH A CIRCULAR HOLE SAW OR HYDRAULIC CONDUIT PUNCH. HOLE SIZE SHALL BE THE OUTSIDE DIAMETER OF THE CONDUIT THAT IS TO FIT IN THE OPENING PLUS NO MORE THAN ¼".

THE CONTRACTOR SHALL NOT INSTALL WIRE IN ANY PULL BOX UNTIL ITS INSTALLATION HAS BEEN INSPECTED AND ACCEPTED BY THE ENGINEER.

ALL METALLIC CONDUIT IN WHICH WIRE AND/OR CABLE IS TO BE INSTALLED, SHALL BE BUSHED BEFORE INSTALLATION OF THE WIRE AND/OR CABLE.

ENTIRE BOX MUST BE CONSTRUCTED OF NON-CONDUCTIVE MATERIALS WITH THE EXCEPTION OF STAINLESS STEEL FASTENERS AND MAGNETIC LOCATABLE DEVICE.

WHEN A PULL BOX IS INSTALLED IN CRUSHED AGGREGATE SHOULDERS, PLACE IT 2-3 INCHES BELOW GRADE AND COVER IT WITH 2-3 INCHES OF CRUSHED AGGREGATE.

LABEL ON COVER SHALL READ "ELECTRIC" FOR SIGNAL AND LIGHTING SYSTEMS, "WISDOT ITS" FOR COMMUNICATIONS AND ITS EQUIPMENT SYSTEMS.

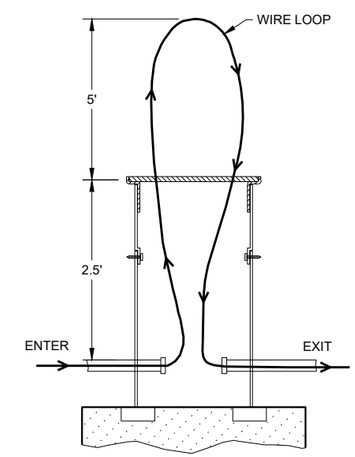

MEASUREMENT DETAIL FOR WIRE/CABLE IN THE PULL BOX

PULL BOXES NON-CONDUCTIVE

STATE OF WISCONSIN
DEPARTMENT OF TRANSPORTATION

APPROVED
May 2022 — DATE
/S/ Ahmet Demirbilek — STATE ELECTRICAL ENGI
FHWA

FORM DEPTH SHALL BE NO MORE THAN 6" BELOW GRADE ON THE LOWER SIDE OF BASE

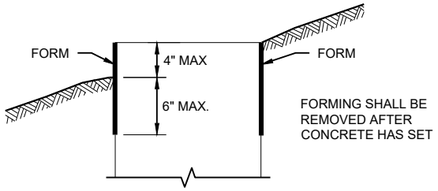

FORMING DETAIL

QUANTITY REQUIREMENTS	CONCRETE BASE TYPE		
	1	2	5 & 6
APPROX. CUBIC YARDS OF CONCRETE	0.40	0.57	0.40
LBS. OF HOOP BAR STEEL	NONE	23	16
LBS. OF VERTICAL BAR STEEL	NONE	60	18

GENERAL NOTES

DETAILS OF CONSTRUCTION, MATERIALS AND WORKMANSHIP NOT SHOWN ON THIS DRAWINGSHALL CONFORM TO THE PERTINENT REQUIREMENTS OF THE CONTRACT.

BASES SHALL BE EXCAVATED BY USE OF A CIRCULAR AUGER.

TOP SURFACES OF CONCRETE BASES SHALL BE TROWEL FINISHED SMOOTH AND LEVEL.

CONDUIT SIZES AND LOCATIONS SHALL BE SHOWN ON THE PLANS

THE FINAL OR TERMINATING CONCRETE BASE IN A CONDUIT RUN SHALL HAVE A 6" EXIT STUB INSTALLED FOR FUTURE CABLING USE. THE EXIT STUB SHALL BE SIZED AS USED THROUGHOUT THE CONDUIT RUN AS SHOWN A THE ENTRANCE OF THE BASE.

ENDS OF CONDUIT INSTALLED BELOW GRADE FRO FUTURE USE SHALL BE CAPPED IF METALLIC OR PLUGGED IF NON-METALLIC.

MINIMUM BENDING RADIUS OF CONDUIT IS EQUAL TO 6X THE DIAMETER.

CONDUIT HEIGHT ABOVE CONCRETE BASES SHALL BE 1 INCH. ALL METALLIC CONDUIT ENDS SHALL BE REAMED AND THREADED.

ALL CONDUIT ENDS AT THE TOP OF CONCRETE BASES SHALL BE CAPPED IF METALLIC OR PLUGGED IF NON-METALLIC IMMEDIATELY AFTER PLACEMENT AND BEFORE CONCRETE IS POURED. CONDUITS IN WHICH WIRE OR CABLE IS NOT INSTALLED SHALL REMAIN CAPPED OR PLUGGED.

BELL ENDS SHALL BE INSTALLED ON ALL PVC CONDUIT EXPOSED AT THE TOP OF CONCRETE BASES BEFORE INSTALLATION.

WHEN REQUIRED TO CONNECT NON-METALLIC CONDUIT TO METALLIC CONDUIT, ONLY ADAPTER FITTINGS, U.L. LISTED FOR ELECTRICAL USE, SHALL BE USED.

IF A BASE REQUIRES A DEEP FORM BECAUSE OF LOOSE DIRT OR FILL, THE FORM SHALL BE REMOVED BEFORE BACKFILLING AROUND THE BASE. BACKFILL SHALL BE TAMPED TIGHT AGAINST THE BARE CONCRETE BASE IN LAYERS OF 1 FOOT OR LESS.

A NO. 4 AWG STRANDED COPPER EQUIPMENT GROUNDING CONDUCTOR SHALL BE EXOTHERMICALLY WELDED TO THE EQUIPMENT GROUNDING ELECTRODE (GROUND ROD) FOR TYPE 2, TYPE 5 AND TYPE 6 BASES.

THE EQUIPMENT GROUNDING CONDUCTOR SHALL BE FURNISHED AND INSTALLED TO ENTER ALL BASE TYPES THROUGH A 1 INCH CONDUIT INSTALLED FOR GROUNDING PURPOSES, LEAVING A 4 FOOT COIL OF WIRE ABOVE THE CONCRETE BASE. THE EQUIPMENT GROUNDING CONDUCTOR SHALL BE NEATLY COILED AND THE COILS TIED TOGETHER.

ANCHOR RODS SHALL BE THREADED 12" IN LENGTH ON EACH END OF THE ROD. ANCHOR RODS SHALL BE MANUFACTURED IN ACCORDANCE WITH SECTION 654.2.1 OF THE STANDARD SPECIFICATIONS.

WASHERS AND LOCK WASHERS ARE REQUIRED ON ALL ANCHOR RODS.

WHEN ANCHOR RODS USING THE ALTERNATE "L" BEND ARE FURNISHED, THE 4 INCH"L" BEND SHALL BE IN ADDITION TO THE SPECIFIED ANCHOR ROD BAR LENGTH. THE "L" BEND SHALL NOT BE THREADED.

ANCHOR RODS SHALL BE INSTALLED WITH MISALIGNMENTS OF LESS THAN 1:40 FROM VERTICAL.

WELDING OF THE ANCHOR RODS TO THE CAGE IS UNACCEPTABLE. TIE WIRES SHALL BE USED.

BAR STEEL REINFORCEMENT SHALL BE COATED WITH POWDERED EPOXY RESIN IN ACCORDANCE WITH SECTION 505 OF THE STANDARD SPECIFICATIONS (LATEST EDITION).

(1) THE MINIMUM DEPTH OF CONDUIT EXITING THE CONCRETE BASE AND INSTALLED BELOW THE TRAVELED WAY SHALL BE 24 INCHES. THE MINIMUM DEPTH OF CONDUIT EXITING THE CONCRETE BASE THAT IS NOT INSTALLED BELOW THE TRAVELED WAY SHALL BE 18 INCHES. THE MAXIMUM DEPTH OF ALL CONDUIT SHALL BE 36 INCHES EXCEPT WITH WRITTEN APPROVAL OF THE ENGINEER.

(2) (4) 1" DIA. X 3' - 6" ANCHOR RODS.

(3) (4) 1" DIA. X 5' - 0" ANCHOR RODS.

(4) (6) NO. 6 X 6' - 8" BAR STEEL REINFORCEMENT.

(5) (7) NO. 4 X 5' - 1" BAR STEEL REINFORCEMENT @ 1' - 0" C - C.

(6) (4) 1" DIA. X 3' - 6" ANCHOR RODS.

(7) (6) NO. 4 X 4' - 8" BAR STEEL REINFORCEMENT.

(8) (5) NO. 4 X 5' - 1" BAR STELL REINFORCEMENT @ 1' - 0" C -C.

(9) EXOTHERMIC CONNECTION TO EUIPMENT GROUNDING CONDUCTOR

(10) ⅝" DIA. X 8' -0" COPPERCLAD EQUIPMENT GROUNDING ELECTRODE REQUIRED

(11) ANY ANCHOR ROD PROJECTION SHORTER THAN 2 ¾" OR LONGER THAN 3 ¼" SHALL REQUIRE THE BASE TO BE REMOVED AND REPLACED AT THE CONTRACTORS EXPENSE.

(12) FOR NON - BREAKAWAY INSTALLATIONS, 4 ½" ± ANCHOR ROD PROJECTION WITH THE USE OF LEVELING NUTS. RODENT SCREEN REQUIRED.

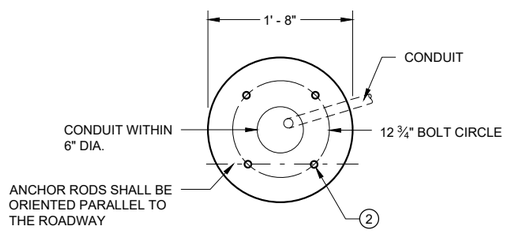

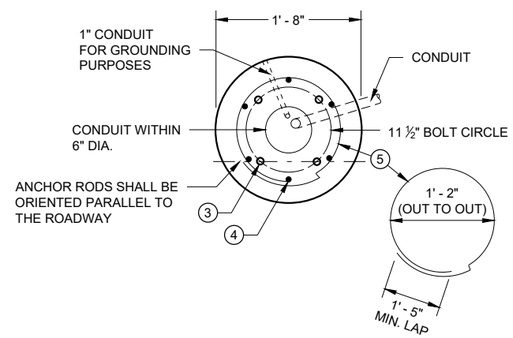

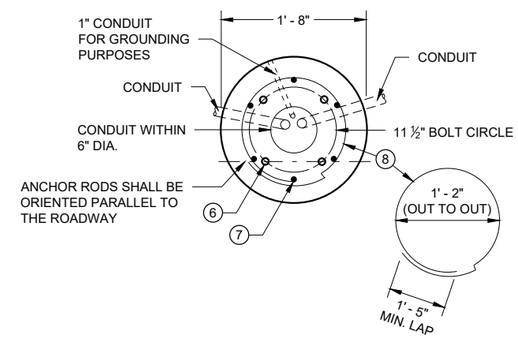

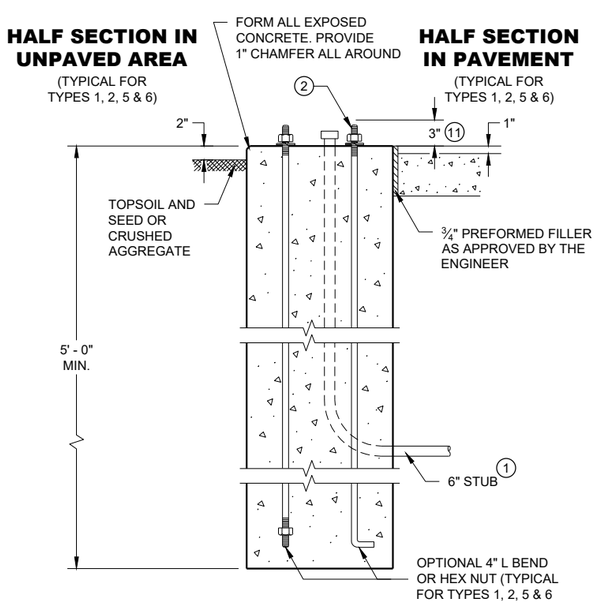

TYPE 1

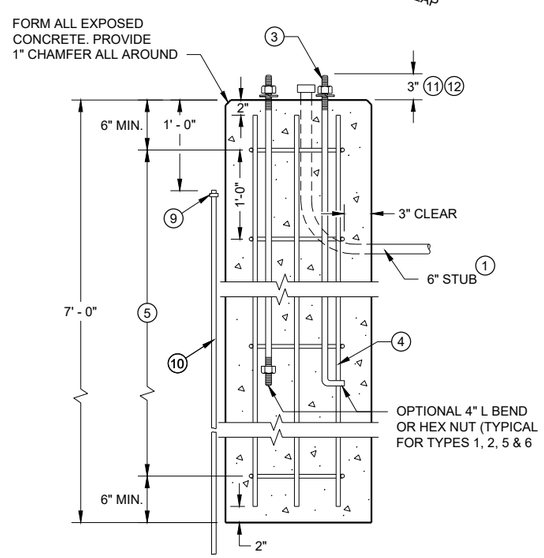

TYPE 2

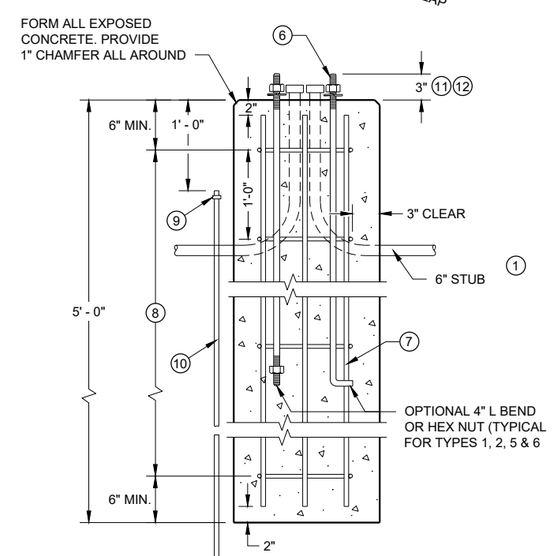

TYPE 5 & 6

CONCRETE BASES

CONCRETE BASES TYPES 1, 2, 5, & 6

STATE OF WISCONSIN
DEPARTMENT OF TRANSPORTATION

APPROVED
May 2019 — DATE
/S/ Ahmet Demirbilek — STATE ELECTRICAL ENGI
FHWA

6

SDD 09C02 - 09

GENERAL NOTES

DETAILS OF CONSTRUCTION, MATERIALS AND WORKMANSHIP NOT SHOWN ON THIS DRAWING SHALL CONFORM TO THE PERTINENT REQUIREMENTS OF THE CONTRACT.

FOUR (4) BOLTS SHALL BE FURNISHED WITH EACH TRANSFORMER BASE. BOLTS SHALL BE 1" DIAMETER, 4" IN LENGTH, WITH WASHERS, LOCK WASHERS AND NUTS. BOLTS, NUTS AND WASHERS SHALL BE MANUFACTURED IN ACCORDANCE WITH SECTION 531.2.2 OF THE STANDARD SPECIFICATIONS.

LEVELING SHIMS, IF NEEDED, SHALL BE DESIGNED FOR THE PURPOSE AND USED UNDER CAST BASES WHEN PLUMBING POLES OR STANDARDS DURING INSTALLATION. THE USE OF WASHERS IN LIEU OF PROPER LEVELING SHIMS IS NOT ACCEPTABLE.

SHIM LENGTH SHALL BE LONG ENOUGH TO COMPLETELY COVER THE AREA UNDER THE LENGTH AND WIDTH OF THE BASE MOUNTING FLANGE.

DOUBLE NUTTING IS NOT ACCEPTABLE FOR LEVELING OR MOUNTING PURPOSES.

A NEMA APPROVED, U.L. LISTED, COPPER WITH BRASS OR STAINLESS STEEL SET SCREW, DIRECT BURY RATED, MECHANICAL CONNECTOR (LUG), SIZED TO ACCEPT AWG. #10 TO #4 COPPER STRANDED WIRE SHALL BE FURNISHED AND INSTALLED IN THE PEDESTAL AND TRANSFORMER BASES.

THE MECHANICAL CONNECTOR SHALL BE INSTALLED USING A 1/4" - 20 (TPI) STAINLESS STEEL HEX HEAD BOLT OF SUFFICIENT LENGTH TO FIRMLY ATTACH THE LUG TO THE BASE.

SHOULD THE MANNER OF ATTACHMENT OF THE LUG REQUIRE WASHERS, HEX NUTS, LOCK WASHER - THEY SHALL BE STAINLESS STEEL AS IS THE BOLT. THE MANNER OF ATTACHMENT SHALL NOT BLOCK ACCESSIBILITY TO WIRE PLACEMENT IN THE CONNECTOR.

PEDESTAL BASE COLLAR THREADING SHALL BE TAPERED AND IN ACCORDANCE WITH NATIONAL PIPE THREADING DIMENSIONS.

BASE COLLAR THREADING SHALL EXTEND INTO THE BASE COLLAR WITH SUFFICIENT DEPTH TO ACCEPT THE INSTALLATION OF TRAFFIC SIGNAL STANDARDS TO A DEPTH OF 1 1/2", THEN TIGHTENING TO A POINT OF BEING IMMOVABLE.

THE ACCESS DOOR SHALL BE OF THE SAME MATERIAL AS THE BASE.

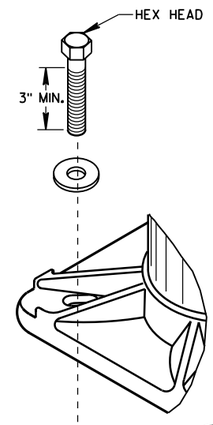

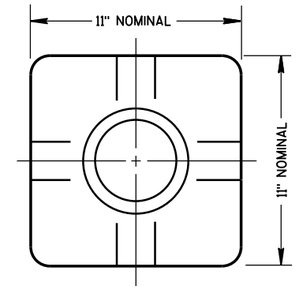

TOP VIEW
(PEDESTAL BASE)

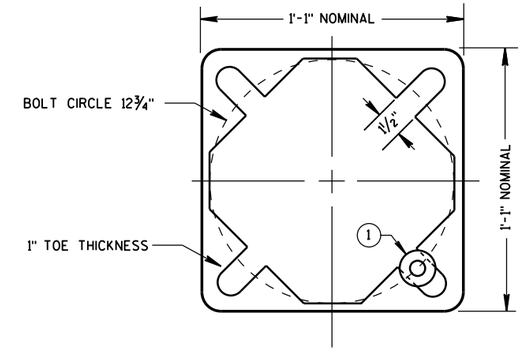

BOTTOM VIEW
(PEDESTAL BASE)

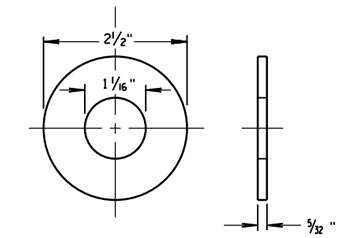

ZINC COATED STEEL WASHER
TO BE PROVIDED BY THE CONTRACTOR

PEDESTAL BASE WASHER (1)

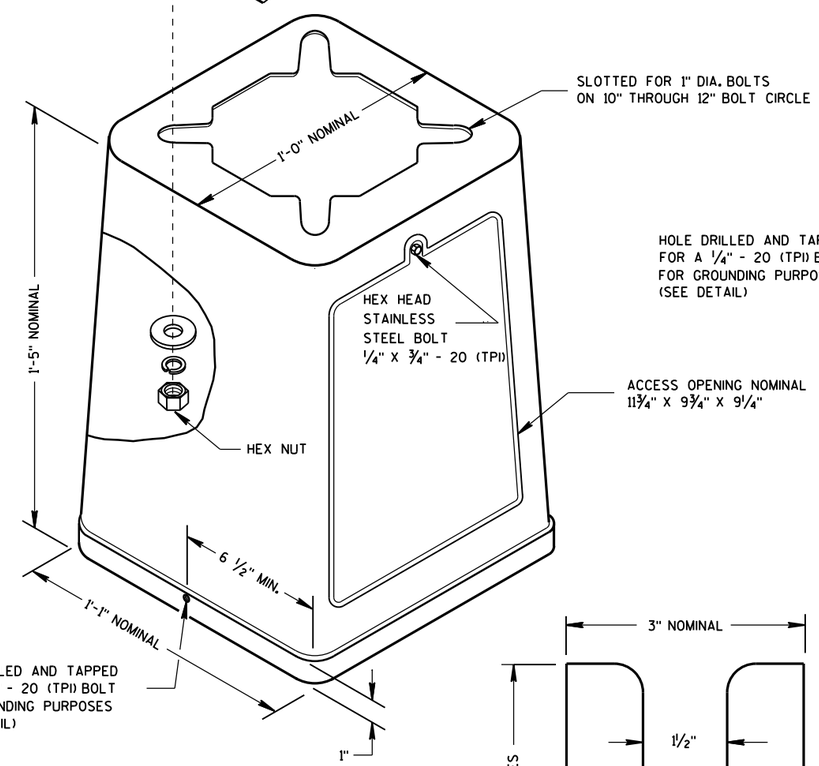

ISOMETRIC VIEW

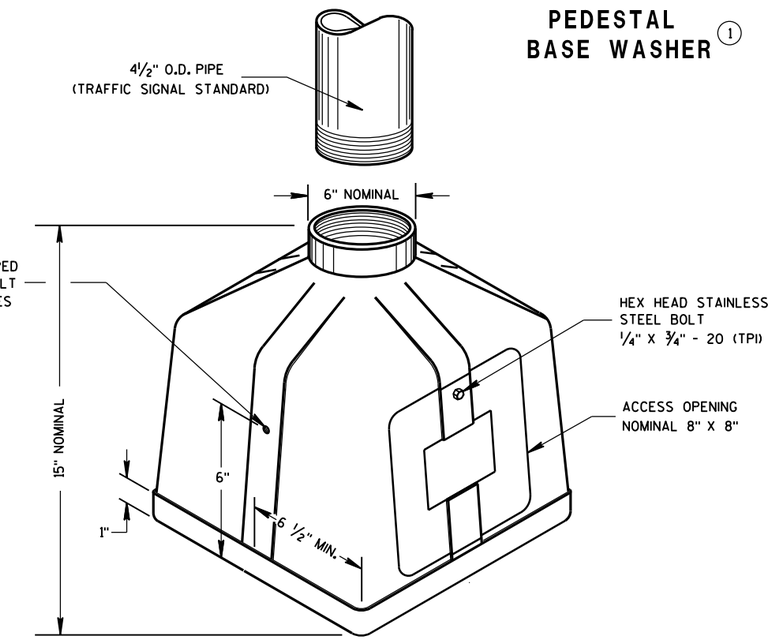

ISOMETRIC VIEW
PEDESTAL BASE

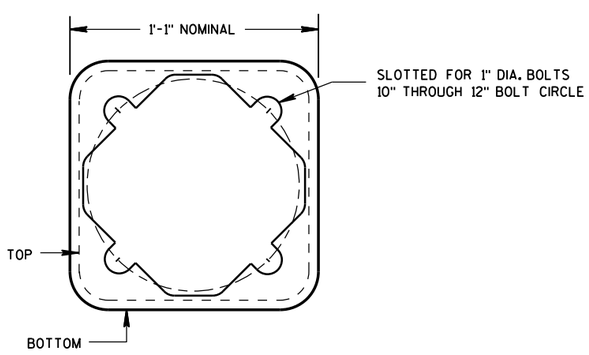

BOTTOM VIEW
(TRANSFORMER BASE)

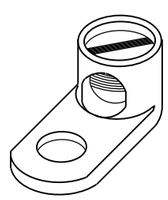

TYPICAL MECHANICAL CONNECTOR LUG

TO BE FURNISHED WITH EACH BASE

TRANSFORMER BASE

INTENDED FOR USE WITH TYPE 2, 3, 4, 5 & 6 POLES

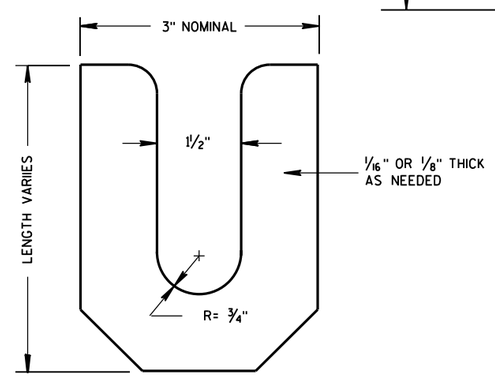

LEVELING SHIM

TRANSFORMER/PEDESTAL BASES	
STATE OF WISCONSIN DEPARTMENT OF TRANSPORTATION	
APPROVED Sept. 2014 DATE	/S/ Ahmet Demirbilek STATE ELECTRICAL
FHWA	

6

6

S.D.D. 9 C 3-4

S.D.D. 9 C 3-4

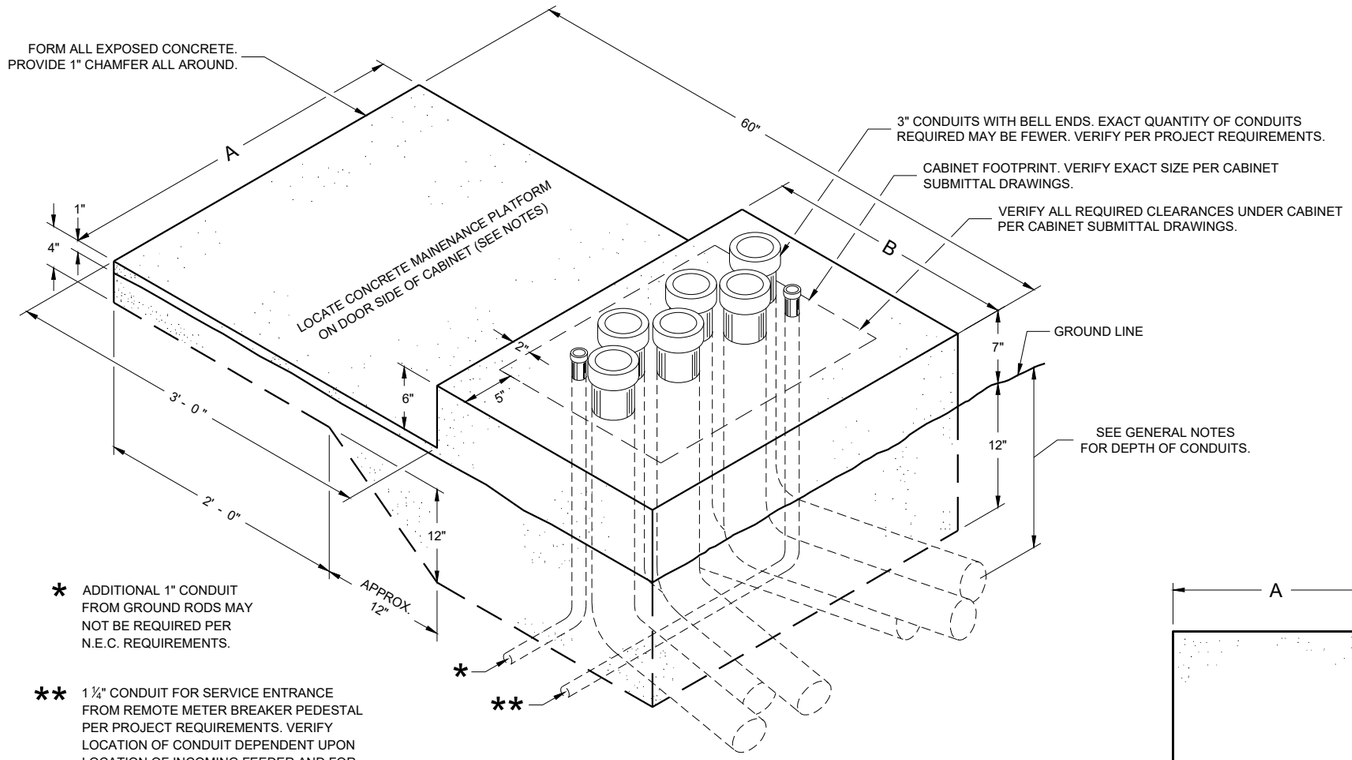

* ADDITIONAL 1" CONDUIT FROM GROUND RODS MAY NOT BE REQUIRED PER N.E.C. REQUIREMENTS.

** 1 ¼" CONDUIT FOR SERVICE ENTRANCE FROM REMOTE METER BREAKER PEDESTAL PER PROJECT REQUIREMENTS. VERIFY LOCATION OF CONDUIT DEPENDENT UPON LOCATION OF INCOMING FEEDER AND FOR EASE OF CONNECTION TO LOAD CENTER.

ISOMETRIC VIEW

CONCRETE CONTROL CABINET BASE, TYPE L

(C.Y. CONCRETE = APPROX. 0.4)

CONCRETE BASE TYPE	CABINET WIDTH	DIMENSIONS		MAXIMUM 3" CONDUITS
		A	B	
L24	24"	34"	24"	4
L30	30"	40"	24"	6

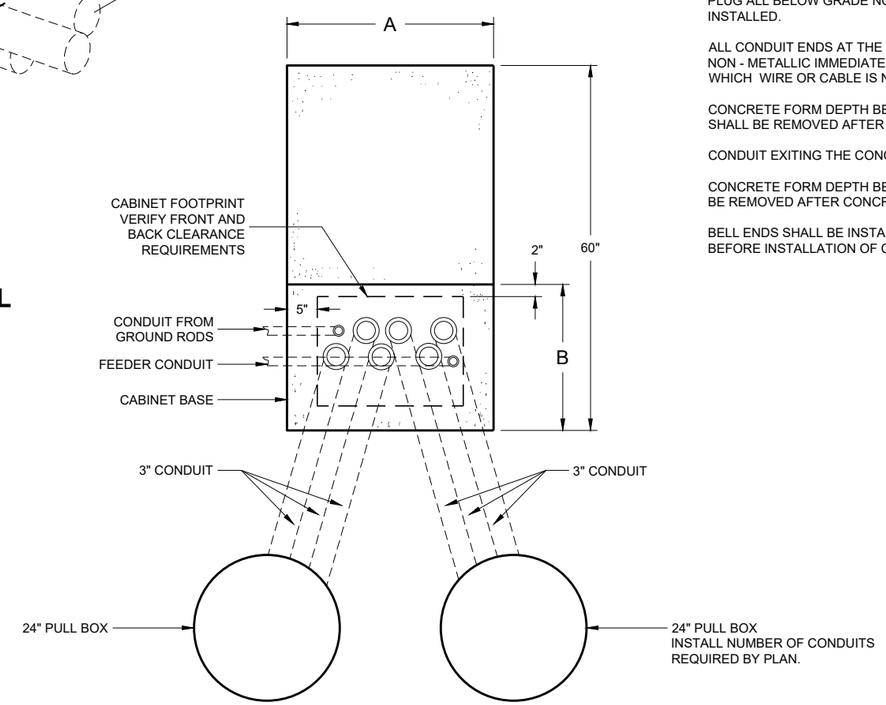

PLAN VIEW

CONCRETE CONTROL CABINET BASE, TYPE L

GENERAL NOTES

DETAILS OF CONSTRUCTION, MATERIALS AND WORKMANSHIP NOT SHOWN ON THIS DRAWING SHALL CONFORM TO THE PERTINENT REQUIREMENTS OF THE CONTRACT.

INSTALL FOUR STAINLESS STEEL APPROVED CONCRETE MASONRY ANCHORS TO ANCHOR THE CABINET BASES. THE ANCHORS SHALL BE LOCATED AS DIRECTED BY THE ENGINEER TO PROPERLY ANCHOR THE CONTROL CABINET TO THE BASE.

WHEN REQUIRED TO CONNECT NON - METALLIC CONDUIT TO METALLIC CONDUIT, ONLY ADAPTER FITTINGS, U. L. LISTED FOR ELECTRICAL USE, SHALL BE USED.

CONDUIT HEIGHT ABOVE THE CONCRETE BASE SHALL BE 1 INCH.

DEPTH OF CONDUIT INSTALLED BELOW THE TRAVELED WAY SHALL BE 24 INCHES MINIMUM AND 36 INCHES MAXIMUM.

DEPTH OF CONDUIT INSTALLED THAT IS NOT BELOW THE TRAVELED WAY SHALL BE 18 INCHES MINIMUM AND 36 INCHES MAXIMUM.

ANY EXCEPTION TO THE MAXIMUM DEPTH SHALL BE ONLY WITH THE WRITTEN APPROVAL OF THE ENGINEER.

LOCATIONS SHALL BE AS SHOWN ON THE PLANS UNLESS DETERMINED BY THE ENGINEER IN THE FIELD.

CONTROL CABINET BASE TOP SURFACE SHALL BE TROWEL FINISHED SMOOTH AND LEVEL.

MAINTENANCE PLATFORM SHALL BE FLOAT OR BROOM FINISHED AND LEVEL.

MAINTENANCE PLATFORMS ARE NOT REQUIRED WHEN THE SURROUNDING AREA IS PAVED.

MINIMUM BENDING RADIUS OF CONDUIT EQUALS 6 TIMES THE DIAMETER.

ALL METALLIC CONDUIT ENDS SHALL BE REAMED AND THREADED.

CAP ALL BELOW GRADE METALLIC CONDUIT ENDS IN WHICH WIRE OR CABLE IS NOT BEING INSTALLED.

PLUG ALL BELOW GRADE NON - METALLIC CONDUIT ENDS IN WHICH WIRE OR CABLE IS NOT BEING INSTALLED.

ALL CONDUIT ENDS AT THE TOP OF CONCRETE BASES SHALL BE CAPPED IF METALLIC OR PLUGGED IF NON - METALLIC IMMEDIATELY AFTER PLACEMENT AND BEFORE CONCRETE IS POURED. CONDUITS IN WHICH WIRE OR CABLE IS NOT BEING INSTALLED SHALL REMAIN CAPPED OR PLUGGED.

CONCRETE FORM DEPTH BELOW FINISHED GRADE SHALL BE 6 INCHES MAXIMUM. CONCRETE FORMS SHALL BE REMOVED AFTER CONCRETE HAS SET.

CONDUIT EXITING THE CONCRETE BASE SHALL TERMINATE IN PULL BOXES AS SHOWN ON THE PLANS.

CONCRETE FORM DEPTH BELOW FINISHED GRADE SHALL BE 6 INCH MAXIMUM. CONCRETE FORMS SHALL BE REMOVED AFTER CONCRETE HAS SET.

BELL ENDS SHALL BE INSTALLED ON ALL PVC CONDUIT EXPOSED AT THE TOP OF THE CONCRETE BASE BEFORE INSTALLATION OF CABLE OR WIRE.

CONCRETE CONTROL CABINET BASE, TYPE L

STATE OF WISCONSIN
DEPARTMENT OF TRANSPORTATION

APPROVED
November 2018 /S/ Ahmet Demirbilek
DATE STATE ELECTRICAL ENGI

FHWA

6
SDD 09C14 - 03

GENERAL NOTES

DETAILS OF CONSTRUCTION, MATERIALS AND WORKMANSHIP NOT SHOWN ON THIS DRAWING SHALL CONFORM TO THE PERTINENT REQUIREMENTS OF THE STANDARD SPECIFICATIONS AND APPLICABLE SPECIAL PROVISIONS.

ALL INTERNAL ELECTRICAL COMPONENTS WILL BE PRE - WIRED BY THE CABINENT MANUFACTURER.

ALL CONDUIT ENTRIES SHALL BE SEALED WITH AN APPROPRIATE DUCT SEALING COMPOUND.

ORIENT PHOTOCELL AWAY FROM AMBIENT LIGHT SOURCES AND ONCOMING TRAFFIC HEADLIGHTS, UNLESS OTHERWISE CALLED FOR IN THE SPECIAL PROVISION.

THE CONTRACTOR SHALL TOUCH UP ANY DAMAGE TO THE ANODIZED FINISH CAUSED BY THE INSTALLATION PROCESS. COLOR MATCH PAINT SHALL BE USED.

A COMPLETE LIGHTING OR ELECTRICAL PLAN SHALL BE SECURELY PLACED IN THE DOCUMENT HOLDER ATTACHED TO THE DOOR.

FRONT INTERIOR ELEVATION

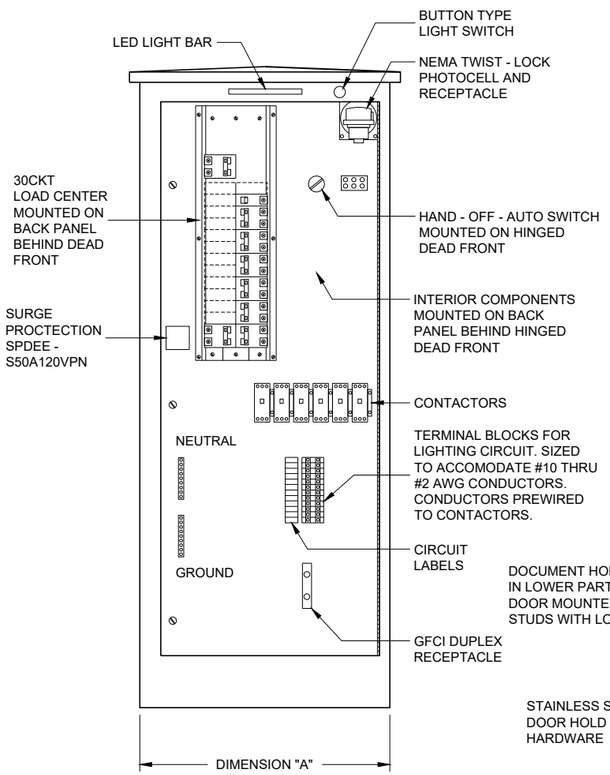

SIDE VIEW

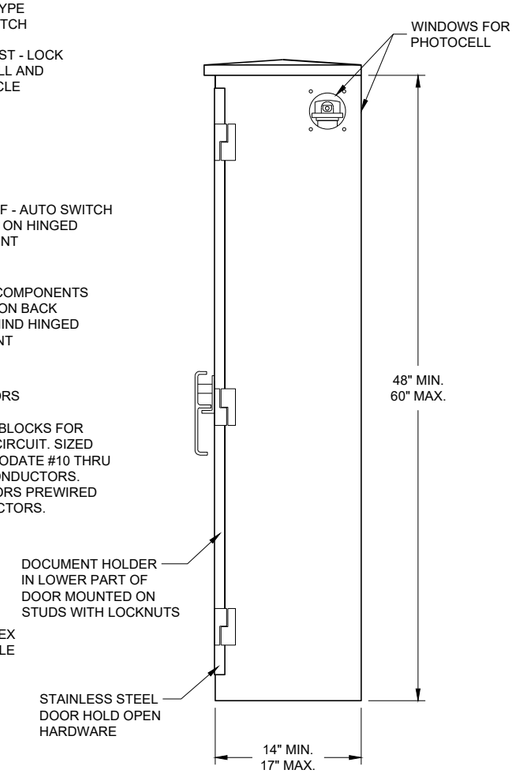

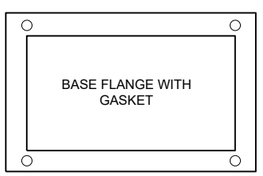

TABLE OF DIMENSIONS (INCHES)		
CONCRETE BASE TYPE	CABINET WIDTH	DIMENSION "A"
L24	24"	24"
L30	30"	30"

LIGHTING CONTROL CABINET

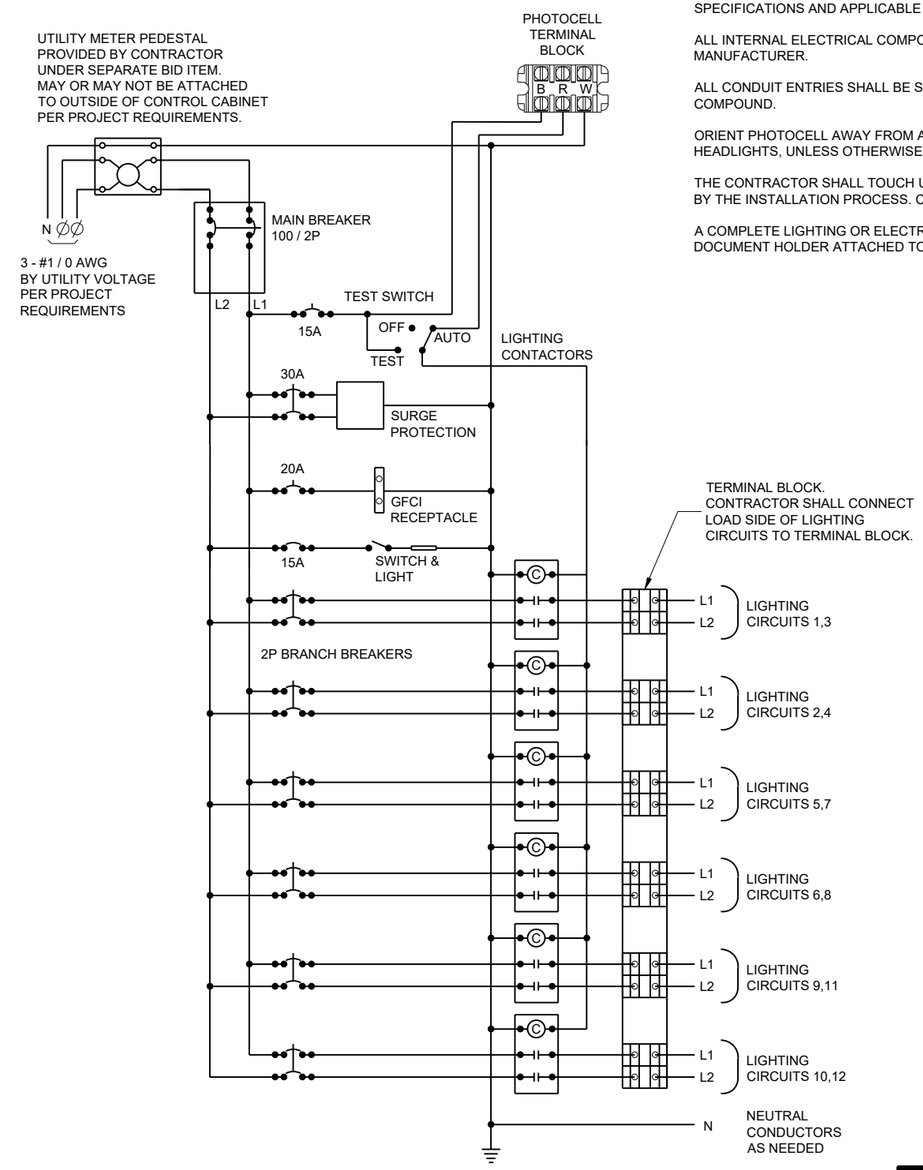

CONTROL CABINET SCHEMATIC

LIGHTING CONTROL CABINET
120 / 240 VOLT

STATE OF WISCONSIN
DEPARTMENT OF TRANSPORTATION

APPROVED
November 2018 /S/ Ahmet Demirbilek
DATE STATE ELECTRICAL ENGI
FHWA

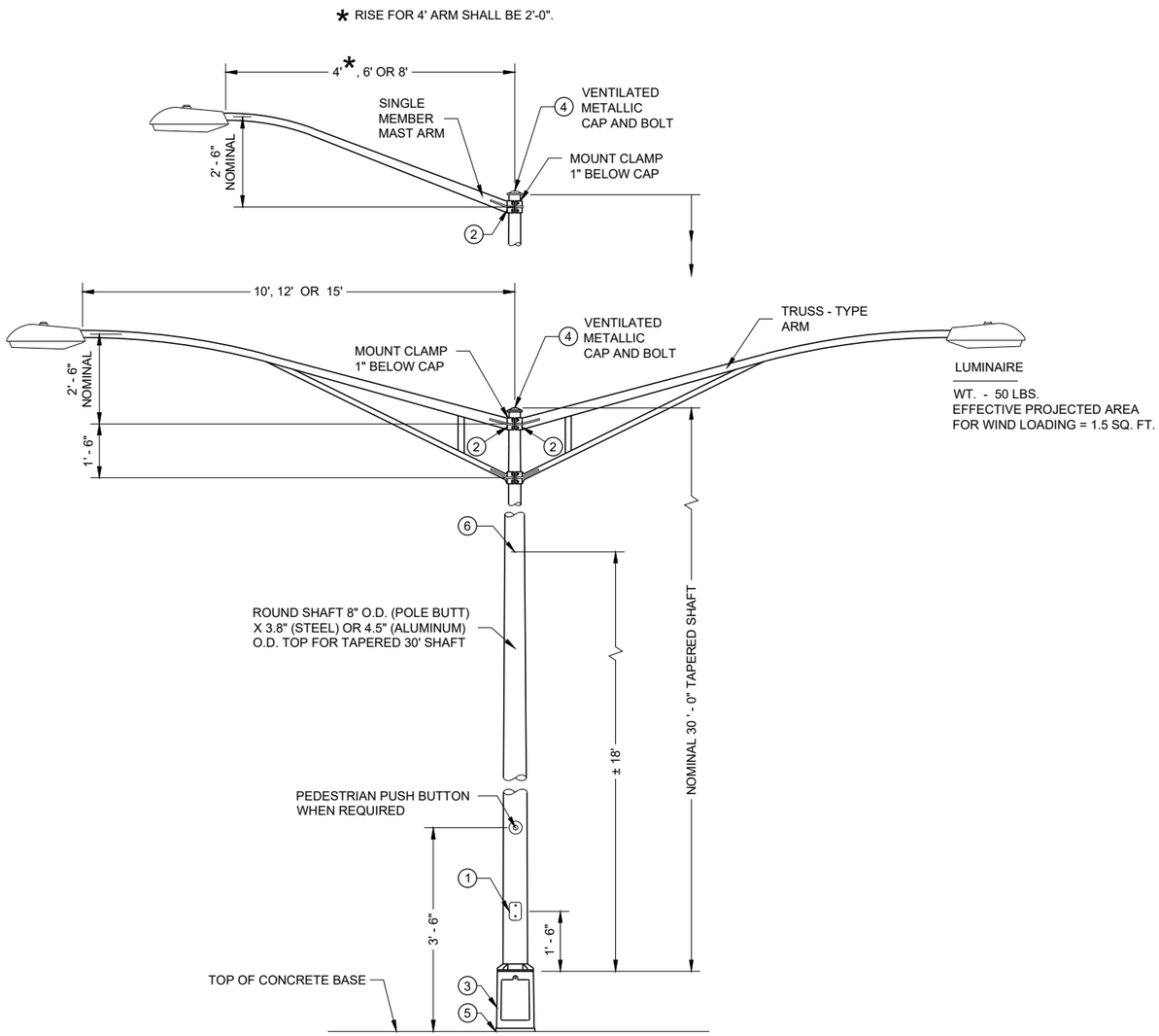

TYPE 5 POLE MOUNTING CONFIGURATION

(MAXIMUM LOAD)

LIGHTING ONLY

GENERAL NOTES

DETAILS OF CONSTRUCTION, MATERIALS AND WORKMANSHIP NOT SHOWN ON THIS DRAWING SHALL CONFORM TO THE PERTINENT REQUIREMENTS OF THE CONTRACT.

SECTION 657, POLES, OF THE STANDARD SPECIFICATIONS SHALL APPLY TO THIS DRAWING.

ALL TYPE 5 POLE MOUNTINGS SHALL BE DESIGNED TO INCLUDE TWIN 15' ARMS WITH LUMINAIRES.

POLES SHALL BE GALVANIZED STEEL OR ALUMINUM, AS CALLED FOR IN THE CONTRACT.

TYPE 5 ALUMINUM POLES SHALL BE CONSTRUCTED OF 6063 - T6 ALUMINUM ALLOY. SLEEVING INSIDE THE POLE IS NOT ACCEPTABLE.

TYPE 5 ALUMINUM POLES SHALL HAVE A MINIMUM WALL THICKNESS OF 0.1888".

TYPE 5 STEEL POLES SHALL HAVE A MINIMUM WALL THICKNESS OF U.S. STANDARD 11 GAGE (0.1196").

THE SLIPFITTER END OF THE LUMINAIRE MAST ARM SHALL BE A NOMINAL 2 ⅜ INCHES IN OUTSIDE DIAMETER. THE STRAIGHT PORTION OF THE SLIPFITTER END OF THE LUMINAIRE MAST ARM SHALL BE A NOMINAL 12 INCHES IN LENGTH.

WHEN TRANSFORMER BASES ARE USED, WIRE CONNECTIONS SHALL BE MADE IN THE TRANSFORMER BASE.

1. 4" X 6" REINFORCED HANDHOLE AND COVER ASSEMBLY WITH TWO (2) ¼" X ¾" - 20 TPI , STAINLESS STEEL, HEX HEAD BOLTS.
2. GROMMETS. 1" CHASE NIPPLES OR 1" CLOSE CONDUIT NIPPLES WITH BUSHINGS SHALL BE PROVIDED FOR 1 ⅜" HOLE IN POLE SHAFT FOR WIRING.
3. CAST ALUMINUM TRANSFORMER BASE, WHEN REQUIRED.
4. FURNISH AND INSTALL VENTILATED, CAST METALLIC (ALUMINUM ALLOY) CAPS. FASTEN CAPS WITH ONE (1) ¼" X ¾" - 20 TPI STAINLESS STEEL, HEX HEAD BOLT.
5. SHIMMING, IF NEEDED, SHALL BE LOCATED BETWEEN THE CONCRETE FOUNDATION AND POLE.
6. INTERNAL DUMBBELL - TYPE VIBRATION DAMPER.

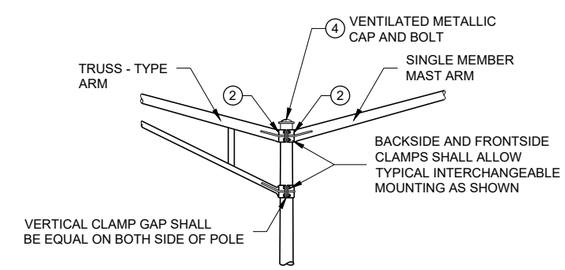

INTERCHANGEABLE MOUNTING DETAIL

6

6

POLE MOUNTINGS FOR LIGHTING UNITS, TYPE 5 (30 FEET)

STATE OF WISCONSIN
DEPARTMENT OF TRANSPORTAT

SDD 09E01 - 15d

SDD 09E01 - 15d

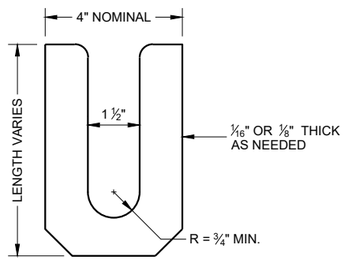

LEVELING SHIM (1)
SHALL BE ALUMINUM

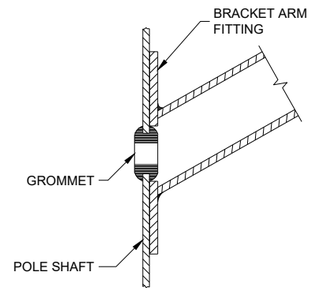

TYPICAL APPLICATION OF GROMMET IN POLE SHAFT

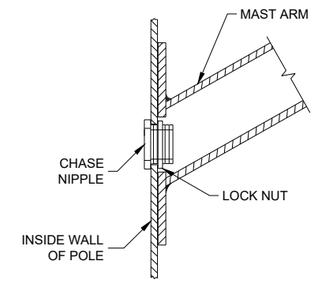

TYPICAL APPLICATION OF CHASE NIPPLE IN POLE SHAFT

GENERAL NOTES

CLAMP BOLT-NUT TIGHTENING TORQUE SHALL BE INDICATED BY INDENT STAMPING (1/2 INCH NUMERALS AND LETTERS) OR WEATHERPROOF PRINTING ON THE INSIDE OF THE CLAMP THAT IS WELDED TO THE ARM MEMBER.

(1) 4.5" I.D. FOR LUMINAIRE MAST ARM CLAMP. 6.625" I.D. FOR TROMBONE MAST ARM CLAMP.

(2) INDIVIDUAL BASE PLATE ANCHOR ROD COVERS. (4 REQUIRED)

(3) BASE PLATE SLOTTED TO ACCEPT 11" THROUGH 12" BOLT CIRCLE USING 1" DIAMETER ANCHOR RODS.

(4) LEVELING SHIMS, DESIGNED FOR THE PURPOSE, SHALL BE USED WHEN PLUMBING POLES. THE USE OF WASHERS IN LIEU OF PROPER LEVELING SHIMS IS NOT ACCEPTABLE. LEVELING SHIMS SHALL BE USED ONLY BETWEEN THE TOP OF THE CONCRETE BASE AND A METALLIC BASE PLATE.

SHIMS SHALL BE LONG ENOUGH AND WIDE ENOUGH TO COMPLETELY COVER THE AREA UNDER THE LENGTH AND WIDTH OF THE BASE MOUNTING FLANGE.

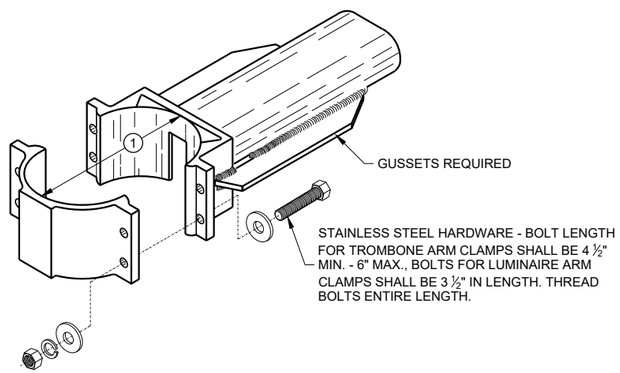

TYPICAL TROMBONE MAST ARM AND SINGLE LUMINAIRE MAST ARM MOUNTING CLAMP

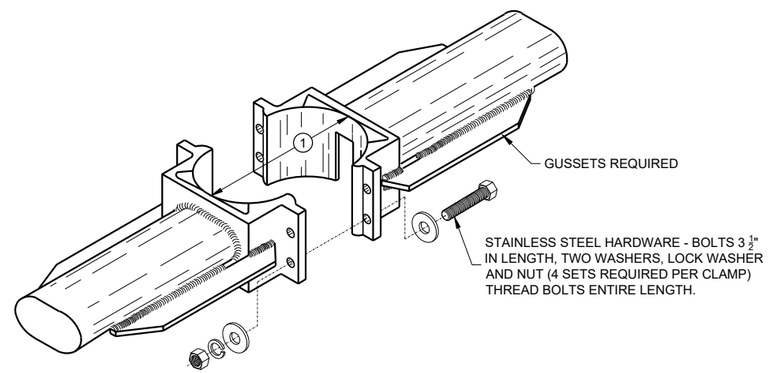

TYPICAL LUMINAIRE MAST ARM (DOUBLE) MOUNTING BRACKETS

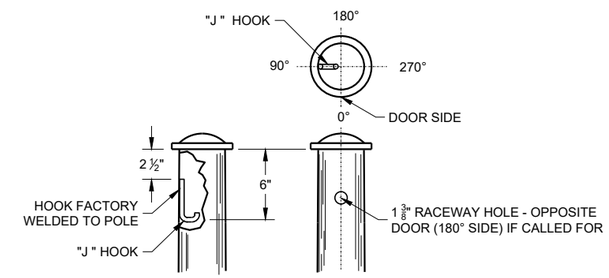

TYPICAL "J" HOOK LOCATION

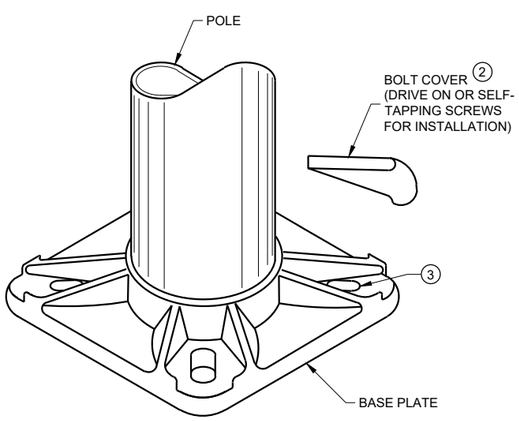

BASE PLATE

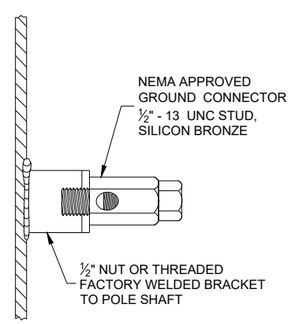

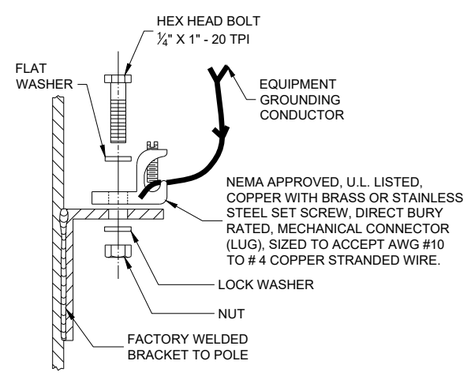

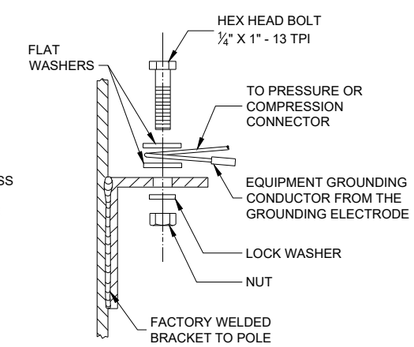

TYPICAL GROUNDING CONNECTIONS
NUT, BOLT AND WASHERS SHALL BE STAINLESS STEEL

HARDWARE DETAILS FOR POLE MOUNTING

STATE OF WISCONSIN
DEPARTMENT OF TRANSPORTATION

APPROVED
November 2018 /S/ Ahmet Demirbilek
DATE STATE ELECTRICAL ENGI 199
FHWA

6
SDD 09E01 - 15g

GENERAL NOTES

DETAILS OF CONSTRUCTION, MATERIALS AND WORKMANSHIP NOT SHOWN ON THIS DRAWING SHALL CONFORM TO THE PERTINENT REQUIREMENTS OF THE CONTRACT.

THE EQUIPMENT GROUND CONNECTOR SHALL BE TAPED WITH 3 WRAPS (MINIMUM) OF APPROVED RUBBER TAPE AND 3 WRAPS (MINIMUM) OF APPROVED VINYL TAPE TO COVER SHARP WIRE ENDS AFTER THE CONNECTION IS COMPLETED.

WHEN TRANSFORMER BASES ARE USED, ALL WIRING CONNECTIONS SHALL OCCUR WITHIN THE TRANSFORMER BASES.

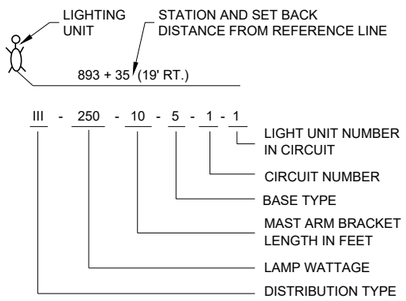

LIGHTING UNIT CODE
(TYPICAL)

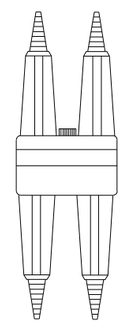

DETAIL "A"
BREAKAWAY DOUBLE POLE WITH WATERPROOF INSULATING BOOT

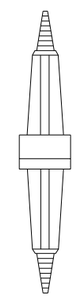

DETAIL "B"
BREAKAWAY SINGLE POLE WITH WATERPROOF INSULATING BOOT

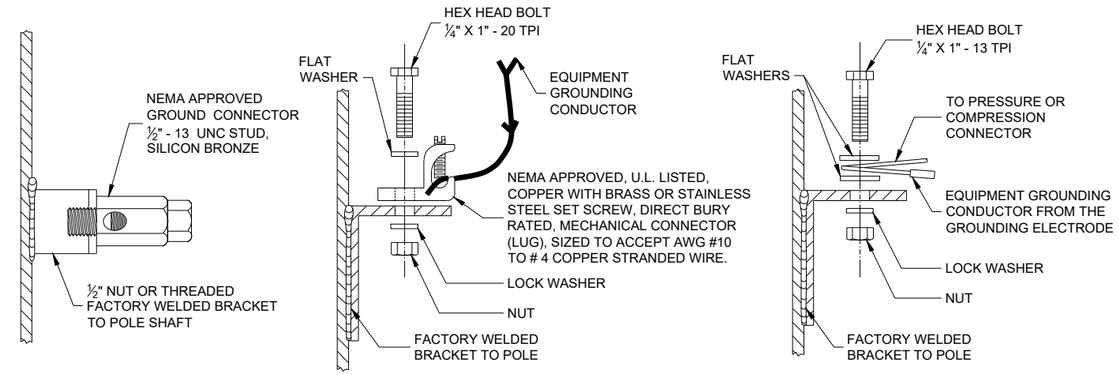

TYPICAL GROUNDING CONNECTIONS
NUT, BOLT AND WASHERS SHALL BE STAINLESS STEEL

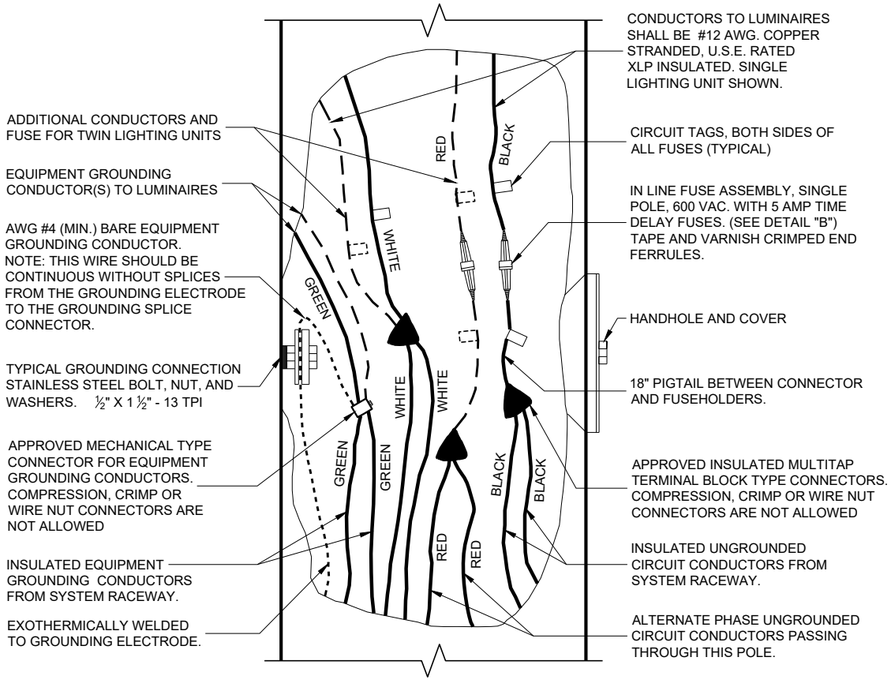

3 WIRE - 120, 240 OR 480 VAC (UNGROUNDED CONDUCTORS) WITH GROUNDING CONDUCTOR AND EQUIPMENT GROUNDING CONDUCTOR

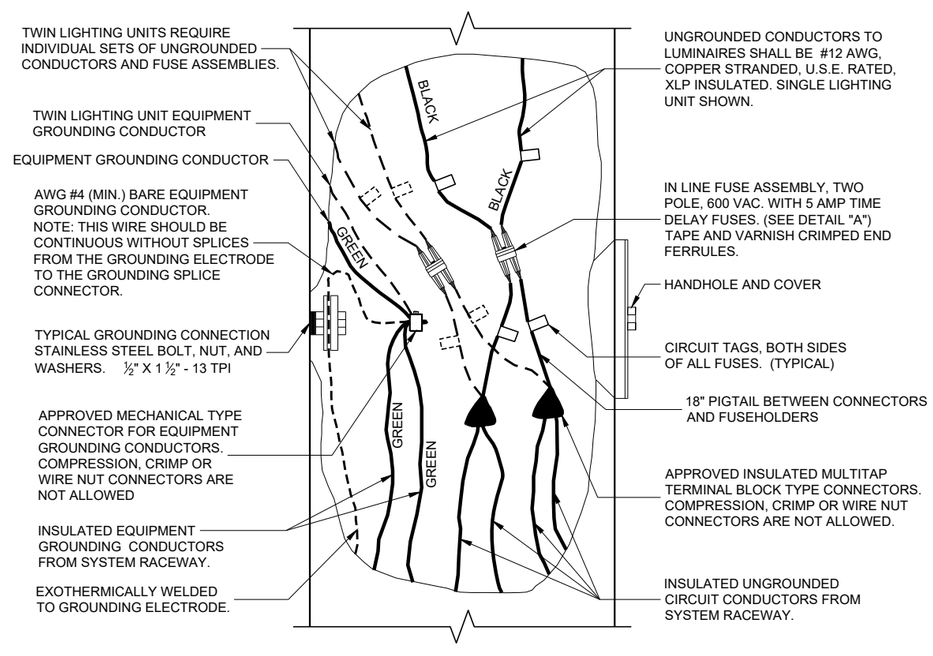

2 WIRE - 240 OR 480 VAC (UNGROUNDED CONDUCTORS) WITH EQUIPMENT GROUNDING CONDUCTOR

6

6

NON - FREEWAY LIGHTING UNIT POLE WIRING

STATE OF WISCONSIN
DEPARTMENT OF TRANSPORTATION

APPROVED
November 2018 /S/ Ahmet Demirbilek
DATE STATE ELECTRICAL ENGI 200
FHWA

SDD 09E03 - 06

SDD 09E03 - 06

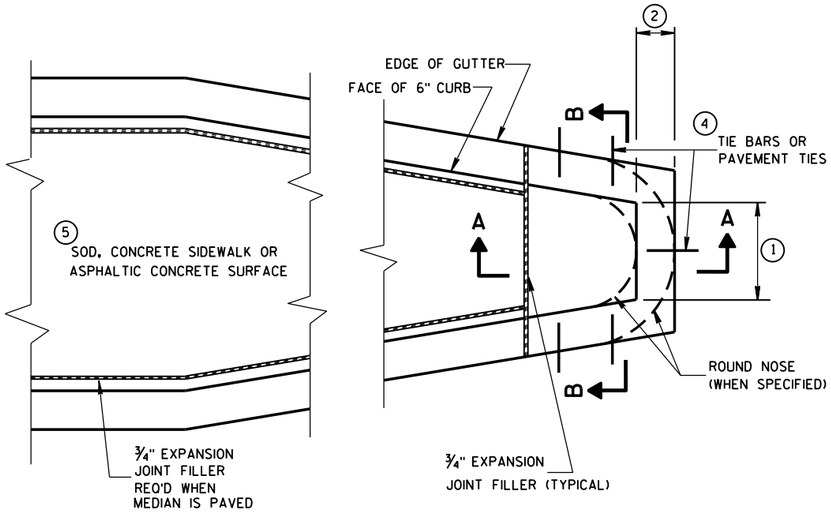

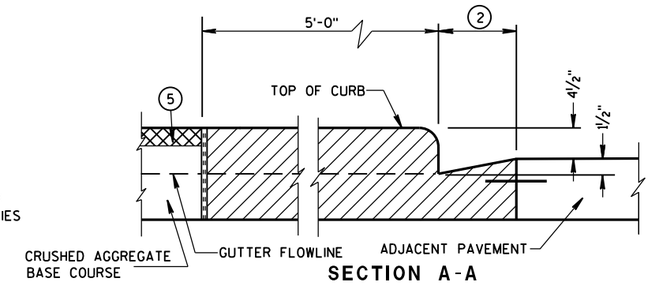

SECTION A-A

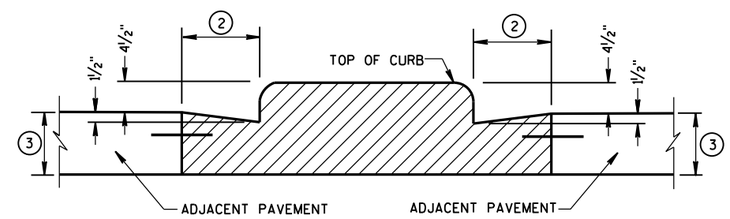

SECTION B-B

CONCRETE MEDIAN BLUNT NOSE DETAIL

GENERAL NOTES

DETAILS OF CONSTRUCTION, MATERIALS AND WORKMANSHIP NOT SHOWN ON THIS DRAWING SHALL CONFORM TO THE PERTINENT REQUIREMENTS OF THE STANDARD SPECIFICATIONS AND THE APPLICABLE SPECIAL PROVISIONS.

1. SEE PLAN FOR MEDIAN NOSE WIDTH AND RADIUS (FOR ROUND NOSE ALTERNATE).
2. WIDTH OF GUTTER TO MATCH EXISTING ADJACENT GUTTER OR AS SPECIFIED ELSEWHERE IN THE PLAN.
3. DEPTH EQUAL TO ADJACENT PAVEMENT. ADJACENT PAVEMENT STRUCTURE DETAILS ARE SHOWN ON THE PLAN. TYPICAL OPTIONS ARE:
   (1) NEW OR EXISTING CONCRETE PAVEMENT.
   (2) ASPHALTIC CONCRETE PAVEMENT OVER NEW OR EXISTING CONCRETE BASE COURSE.
   (3) ASPHALTIC CONCRETE PAVEMENT OVER CRUSHED AGGREGATE BASE COURSE.
4. TIE BARS OR PAVEMENT TIES REQUIRED IN NEW CONCRETE PAVEMENT OR CONCRETE BASE COURSE. TIE BARS SHALL BE NO. 4 X 2'-0" SPACED AT 2'-0" C-C.

   PAVEMENT TIES REQUIRED IN EXISTING CONCRETE BASE COURSE. PAVEMENT TIES SHALL BE NO. 6 X 1'-0" SPACED AT 3'-0" C-C INSTALLED ON A HORIZONTAL SKEW OF 6:1. THE DIRECTION OF SKEW SHALL ALTERNATE AFTER EVERY ONE OR TWO BARS.
5. SURFACE TYPE AND DETAILS ARE SHOWN ELSEWHERE IN THE PLAN.

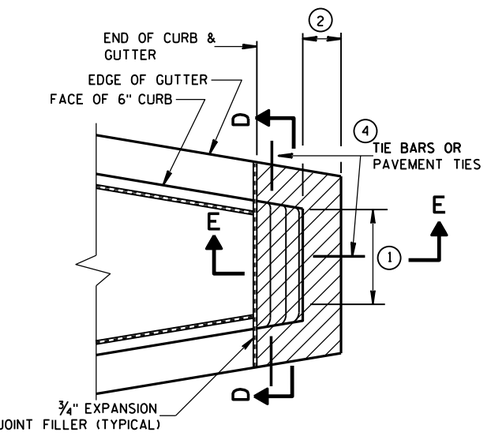

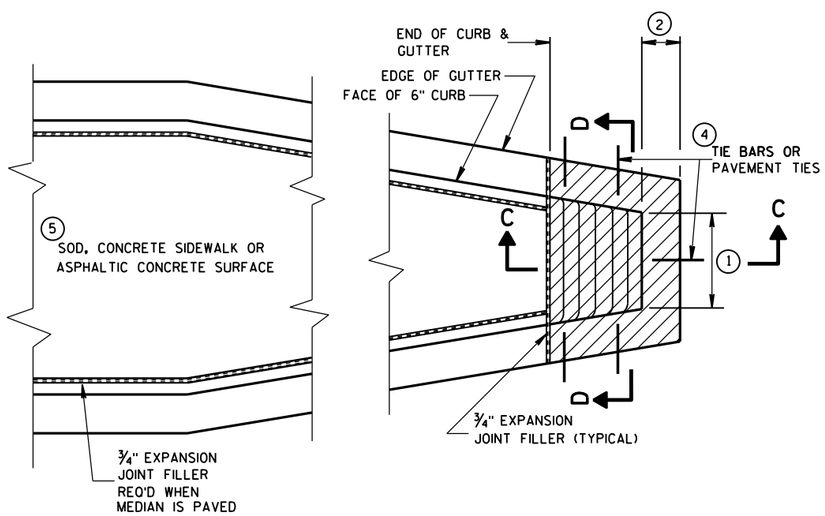

CONCRETE MEDIAN SLOPED NOSE TYPE 1

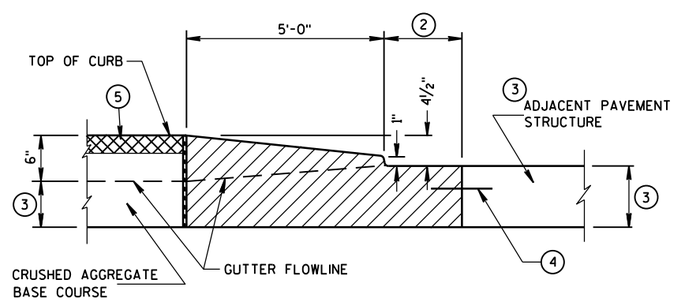

SECTION C-C

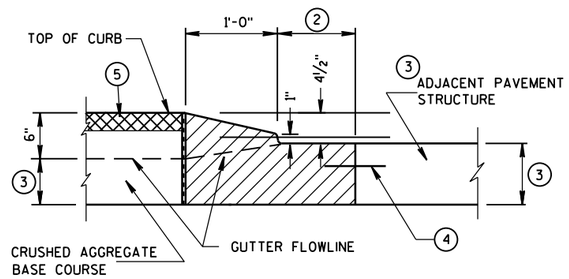

SECTION E-E

CONCRETE MEDIAN SLOPED NOSE TYPE 2

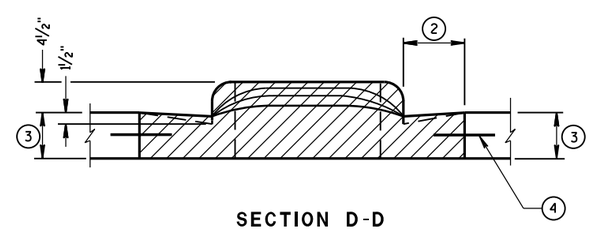

SECTION D-D

CONCRETE MEDIAN NOSE

STATE OF WISCONSIN
DEPARTMENT OF TRANSPORTATION

APPROVED
6/8/2006 — DATE
/S/ Jerry H. Zogg — ROADWAY STANDARDS DEVELOPMENT ENGINEER
FHWA

6

S.D.D. 11 B 2-2

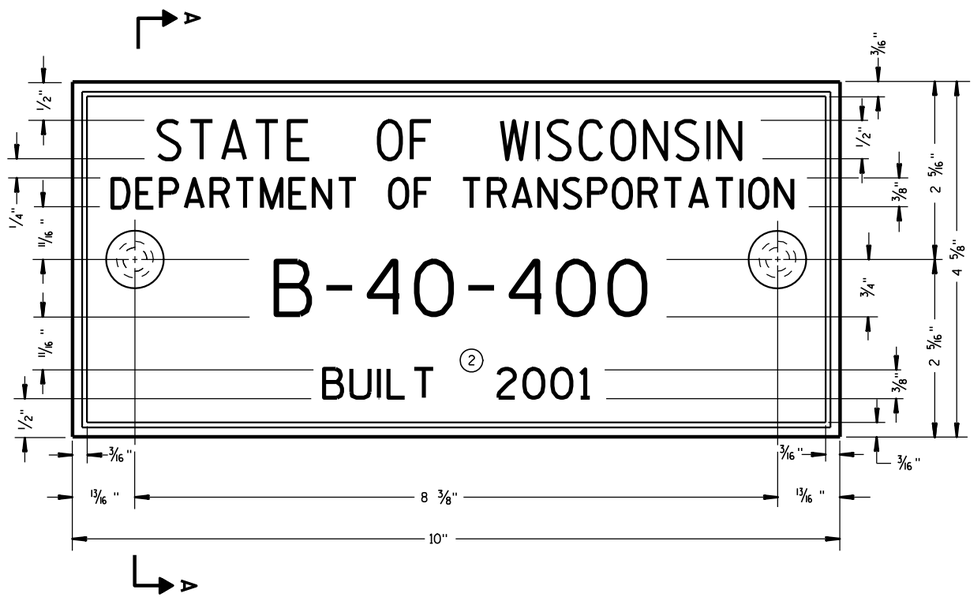

TYPICAL NAME PLATE

(BRIDGES, CULVERTS, AND RETAINING WALLS)

GENERAL NOTES

NAME PLATES TO BE INSTALLED ON BRIDGES, CULVERTS, AND RETAINING WALLS SHALL CONFORM TO THE REQUIREMENTS OF SECTION 502.3.11 OF THE STANDARD SPECIFICATIONS.

THE BRIDGE NUMBER AND YEAR BUILT SHOWN ON THIS DRAWING ARE EXAMPLES ONLY. SEE CONSTRUCTION PLANS FOR INDIVIDUAL NUMBERING AND YEAR BUILT.

(1) EPOXY RESIN SHALL BE FROM AN APPROVED MANUFACTURER AND USED IN ACCORDANCE WITH MANUFACTURER'S RECOMMENDATIONS.

(2) REHABILITATION OF AN EXISTING STRUCTURE SHOULD USE THE DATE OF ORIGINAL STRUCTURE CONSTRUCTION.

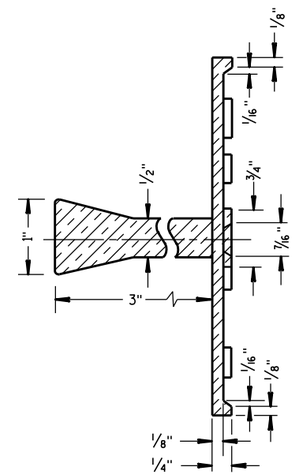

SECTION A-A

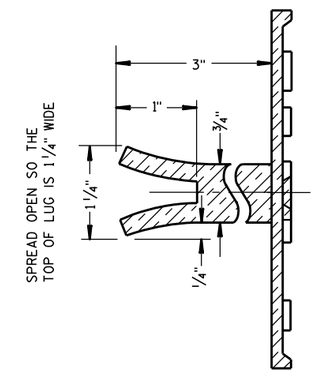

ALTERNATE LUG

6

FOR MULTI-UNIT STRUCTURES
LINE 3 ABOVE SHALL READ

B = BRIDGE
C = CULVERT
R = RETAINING WALL

COUNTY NO.

BRIDGE NO.

UNIT NO. FOR MULTIPLE
UNIT BRIDGE

B-40-400-1A

NUMBERING DESIGNATION
MULTI-UNIT STRUCTURES

(1) ADHERE ANCHOR LUG TO PRECAST RETAINING WALL WITH EPOXY RESIN.

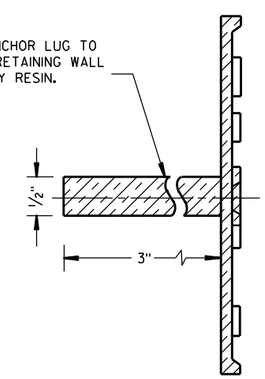

ALTERNATE LUG

(FOR ATTACHMENT TO PRECAST STRUCTURES)

NAME PLATE (STRUCTURES)	
STATE OF WISCONSIN DEPARTMENT OF TRANSPORTATION	
APPROVED	
3/26/10 DATE	/S/ Scot Beck -- CHIEF STRUCTURAL DEVELOPER
FHWA	

S.D.D. 12 A 3-10

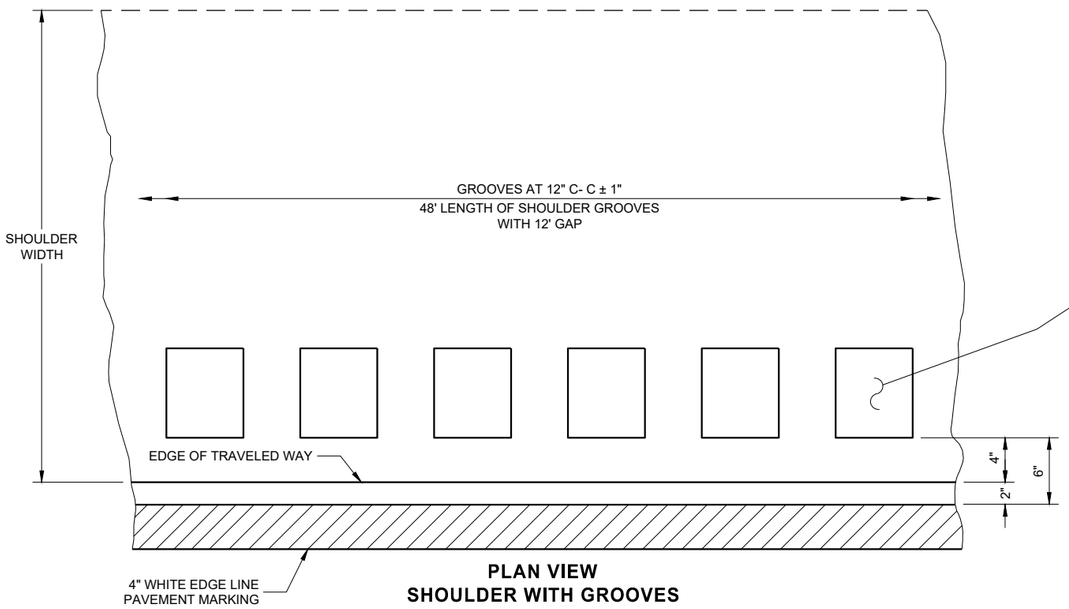

PLAN VIEW
SHOULDER WITH GROOVES

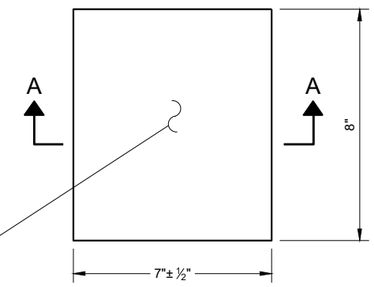

PLAN VIEW
(SINGLE GROOVE)

GENERAL NOTES

DETAILS OF CONSTRUCTION NO SHOWN ON THIS DRAWING SHALL CONFORM TO THE PERTINENT REQUIREMENTS OF THE STANDARD SPECIFICATIONS AND APPLICABLE SPECIAL PROVISIONS.

DO NOT MILL SHOULDER GROOVES THROUGH ANY INTERSECTION, MARKED CROSSWALK, NON-MOTORIZED PATH CROSSING, OR SNOWMOBILE CROSSING.

(1) SHOULDER GROOVES MAY BE OMITTED IN AREAS WITH HIGH CONCENTRATIONS OF DRIVEWAYS. WHEN DIRECTED BY THE ENGINEER.

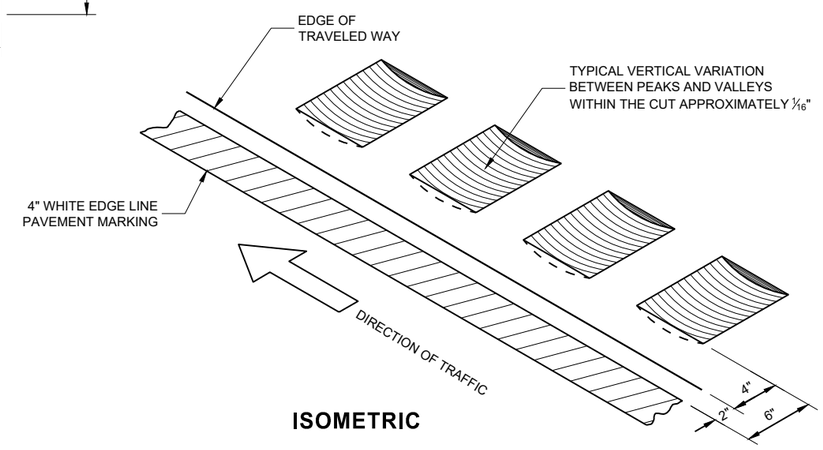

ISOMETRIC

PLACEMENT DETAIL FOR TYPE 1 MILLED RUMBLE STRIP

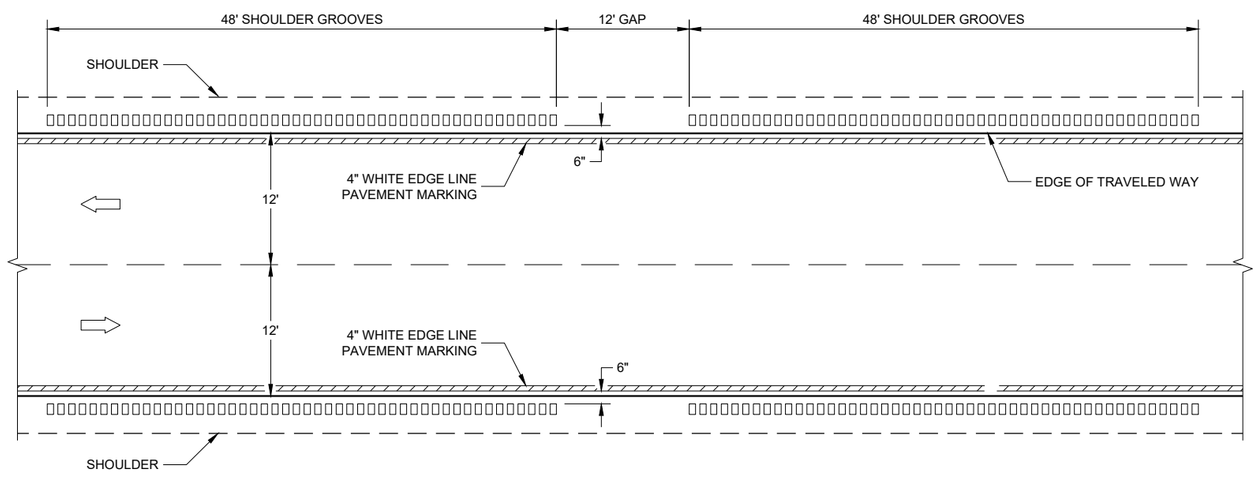

TYPE 1
2 - LANE SHOULDER RUMBLE STRIP

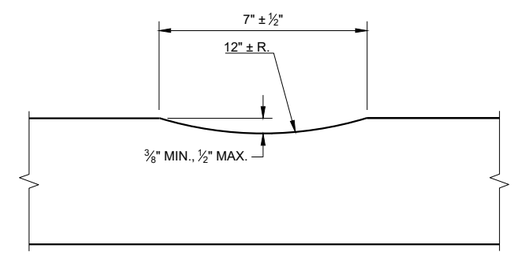

SECTION A - A

2-LANE RURAL SHOULDER RUMBLE STRIP, MILLING

STATE OF WISCONSIN
DEPARTMENT OF TRANSPORTATION

6

SDD 13A10 - 02a

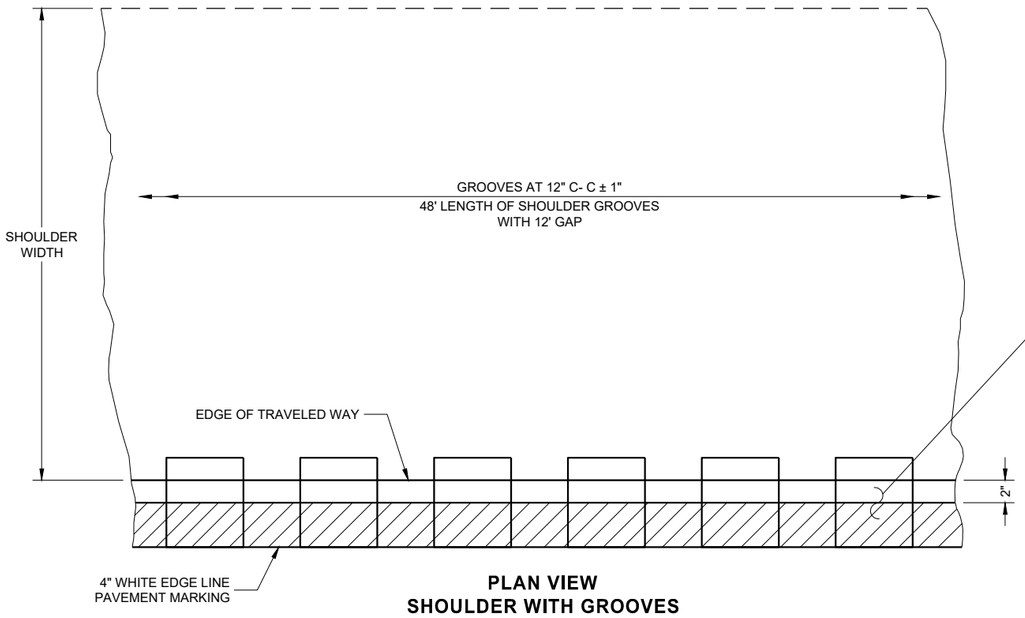

PLAN VIEW
SHOULDER WITH GROOVES

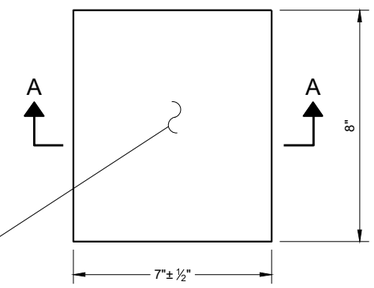

PLAN VIEW
(SINGLE GROOVE)

GENERAL NOTES

DETAILS OF CONSTRUCTION NO SHOWN ON THIS DRAWING SHALL CONFORM TO THE PERTINENT REQUIREMENTS OF THE STANDARD SPECIFICATIONS AND APPLICABLE SPECIAL PROVISIONS.

DO NOT MILL SHOULDER GROOVES THROUGH ANY INTERSECTION, MARKED CROSSWALK, NON-MOTORIZED PATH CROSSING, OR SNOWMOBILE CROSSING.

(1) SHOULDER GROOVES MAY BE OMITTED IN AREAS WITH HIGH CONCENTRATIONS OF DRIVEWAYS. WHEN DIRECTED BY THE ENGINEER.

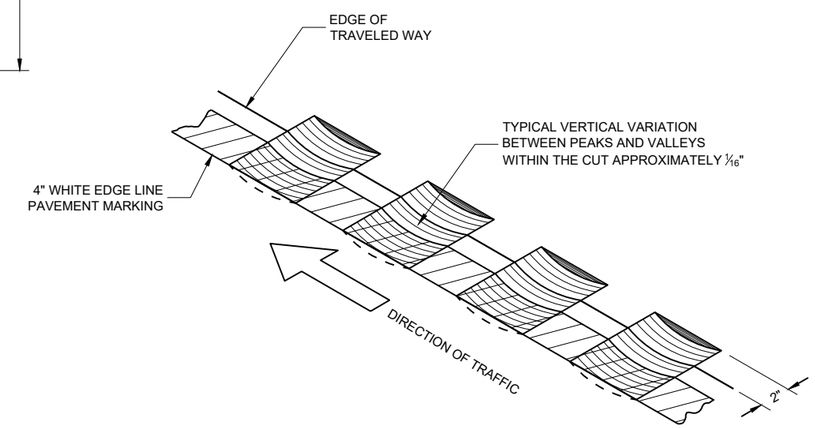

ISOMETRIC

PLACEMENT DETAIL FOR TYPE 2 MILLED RUMBLE STRIP

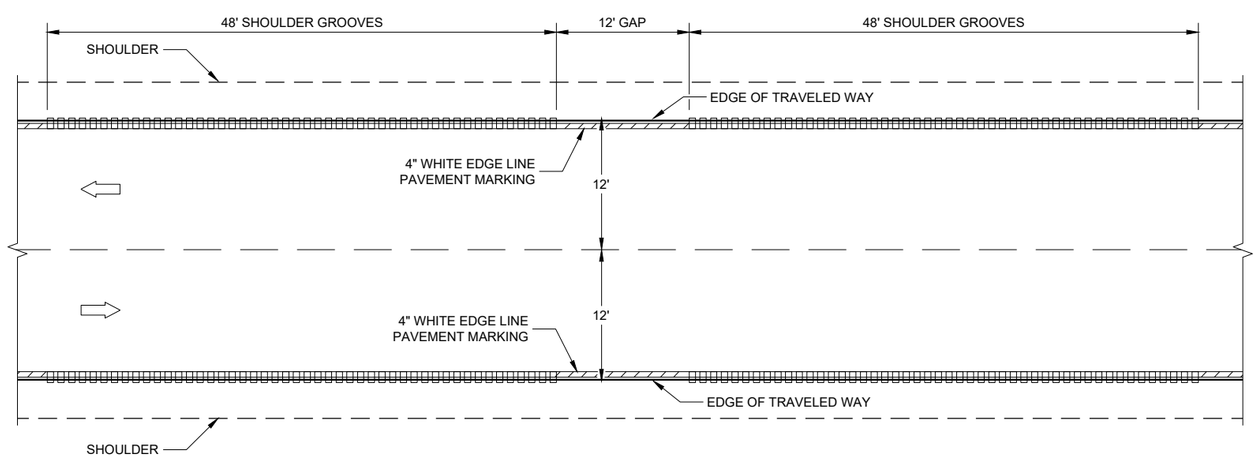

TYPE 2
2 - LANE SHOULDER RUMBLE STRIP

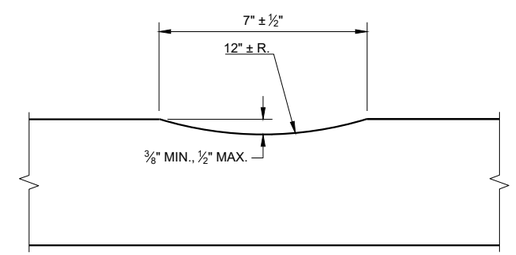

SECTION A - A

2-LANE RURAL SHOULDER RUMBLE STRIP, MILLING

STATE OF WISCONSIN
DEPARTMENT OF TRANSPORTAT

6

6

SDD 13A10 - 02b

SDD 13A10 - 02b

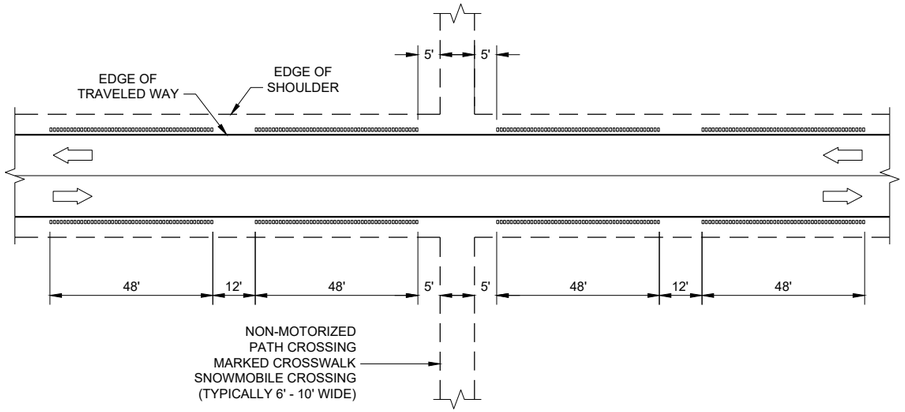

SHOULDER GROOVES AT MISCELLANEOUS CROSSINGS

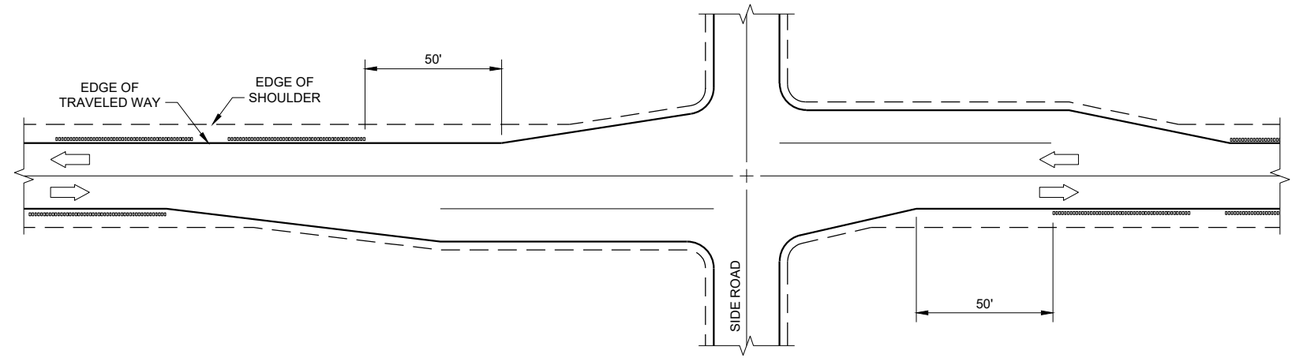

SHOULDER GROOVES AT RIGHT TURN LANE

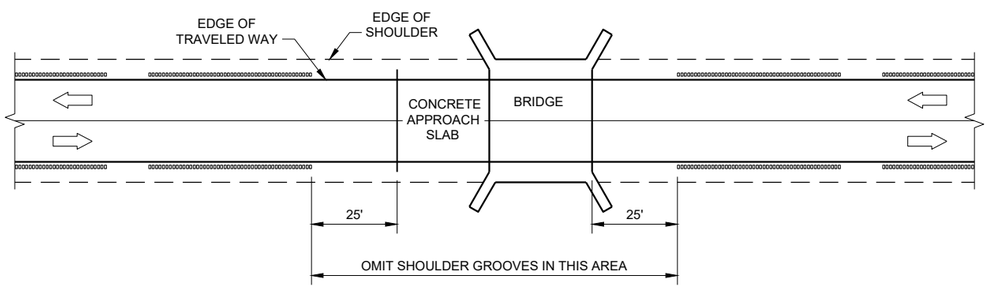

SHOULDER GROOVES AT BRIDGES

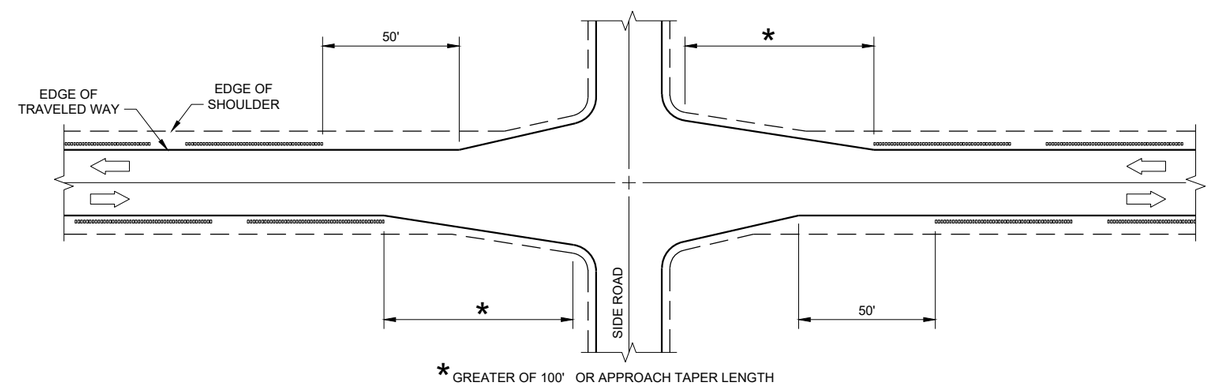

SHOULDER GROOVES AT INTERSECTIONS WITH APPROACH TAPER

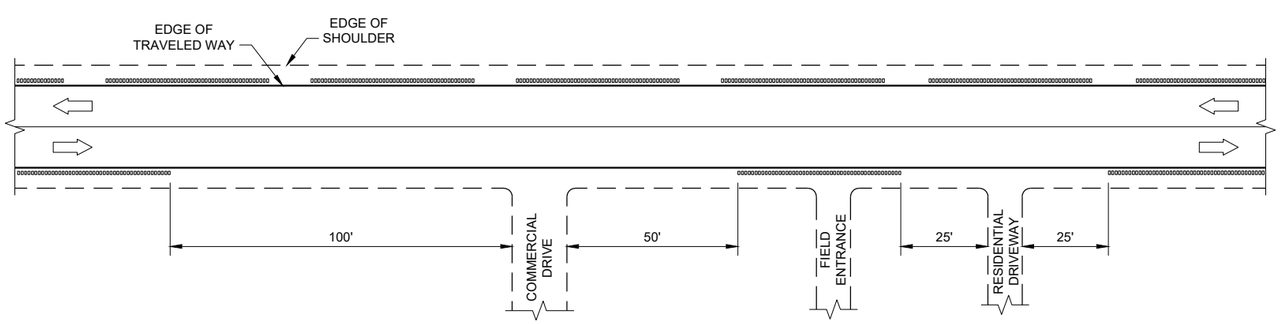

SHOULDER GROOVES AT DRIVEWAYS (1)

GENERAL NOTES

(1) SHOULDER GROOVES MAY BE OMITTED IN AREAS WITH HIGH CONCENTRATIONS OF DRIVEWAYS. WHEN DIRECTED BY THE ENGINEER.

2-LANE RURAL SHOULDER RUMBLE STRIP, MILLING

STATE OF WISCONSIN
DEPARTMENT OF TRANSPORTA

6

SDD 13A10 - 02c

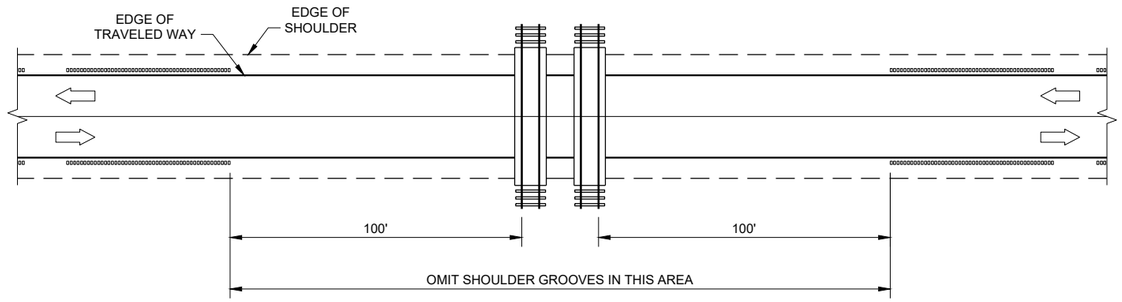

SHOULDER GROOVES AT RAILROADS

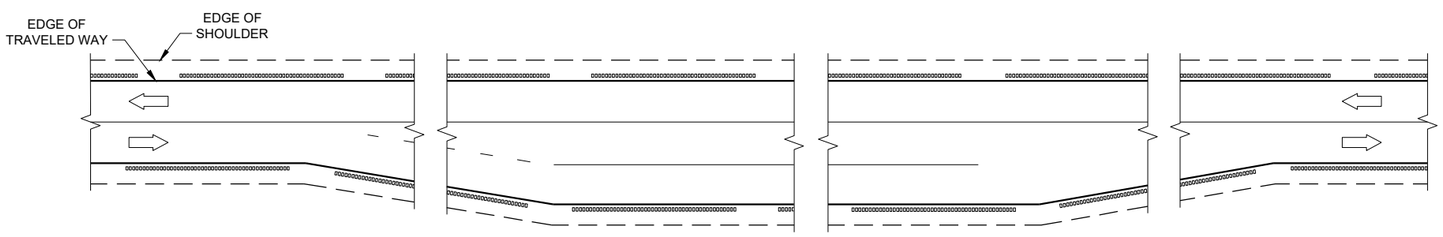

SHOULDER GROOVES AT PASSING AND CLIMBING LANES

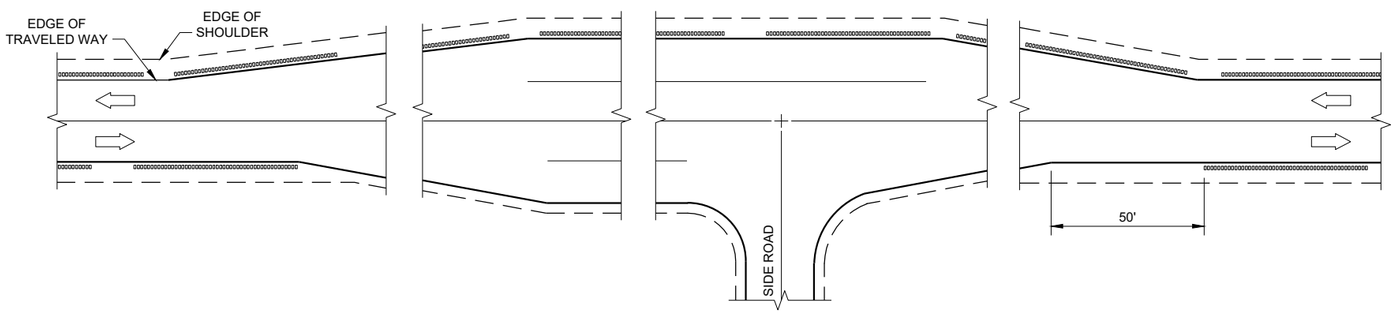

SHOULDER GROOVES AT BYPASS LANES

6

6

SDD 13A10 - 02d

SDD 13A10 - 02d

2-LANE RURAL SHOULDER RUMBLE STRIP, MILLING

STATE OF WISCONSIN
DEPARTMENT OF TRANSPORTATION

APPROVED

7/2018	/S/ Rodney Taylor
DATE	ROADWAY STANDARDS DEVE ENGINEER

FHWA

GENERAL NOTES

DETAILS OF CONSTRUCTION NO SHOWN ON THIS DRAWING SHALL CONFORM TO THE PERTINENT REQUIREMENTS OF THE STANDARD SPECIFICATIONS AND APPLICABLE SPECIAL PROVISIONS.

DO NOT MILL CENTERLINE GROOVES THROUGH ANY INTERSECTION, MARKED CROSSWALK, NON-MOTORIZED PATH CROSSING, OR SNOWMOBILE CROSSING.

INSTALL PAVEMENT MARKING AFTER THE GROOVES ARE INSTALLED.

SEE SIGNING PLAN FOR SIGN REQUIREMENTS THAT MAY BE NEEDED.

(1) CENTERLINE GROOVES MAY BE OMITTED IN AREAS WITH HIGH CONCENTRATIONS OF DRIVEWAYS. WHEN DIRECTED BY THE ENGINEER.

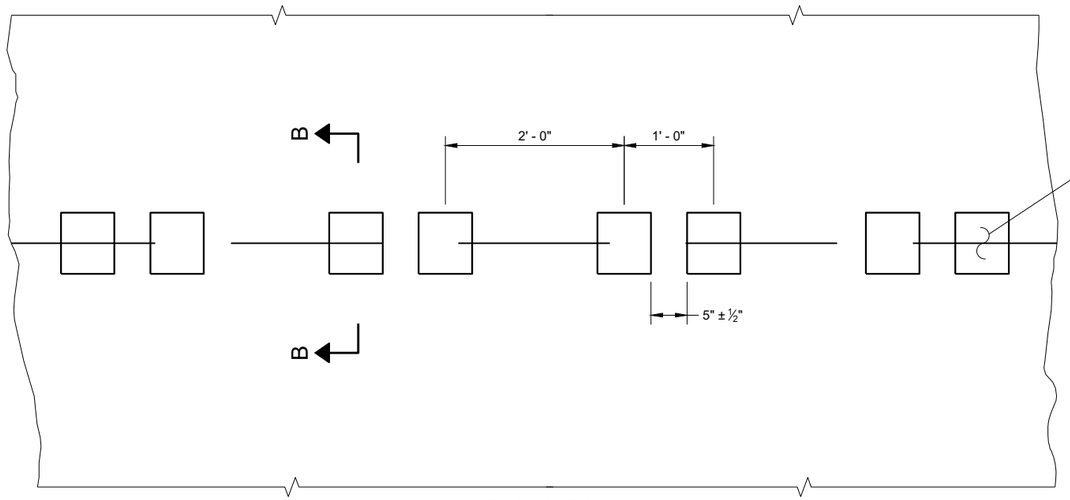

PLAN VIEW
SHOULDER WITH GROOVES

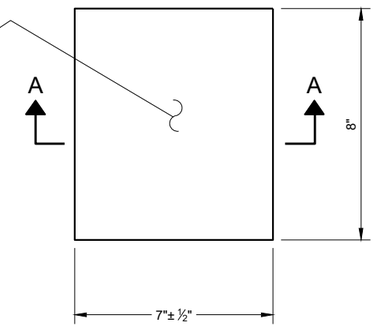

PLAN VIEW
(SINGLE GROOVE)

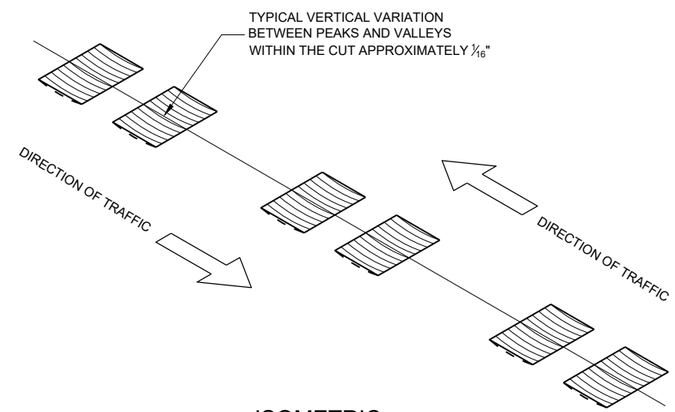

ISOMETRIC

PLACEMENT DETAIL FOR TYPE 1 MILLED RUMBLE STRIP

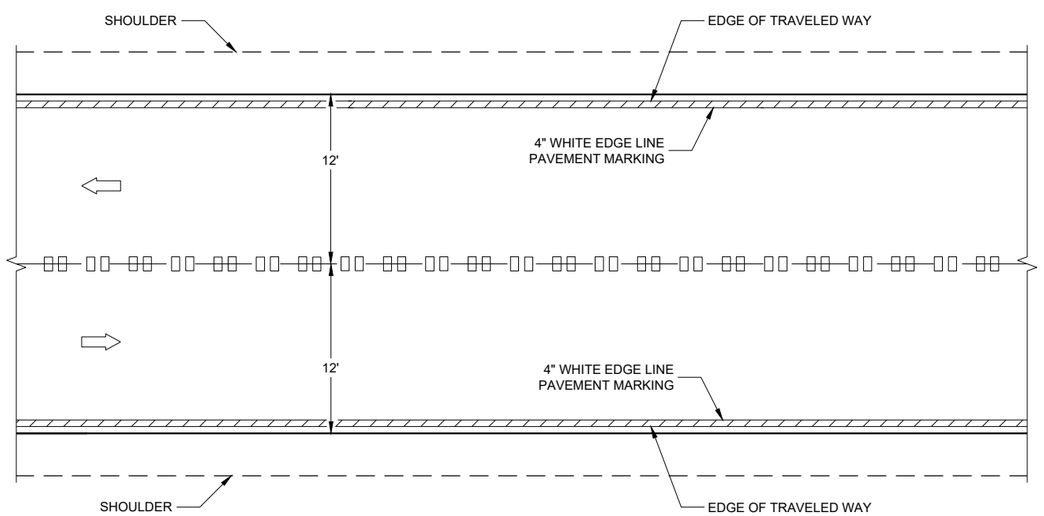

CENTERLINE GROOVES ON TWO-WAY ROADWAYS

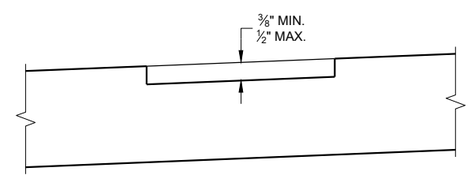

SECTION B - B
SUPERELEVATED ROADWAY

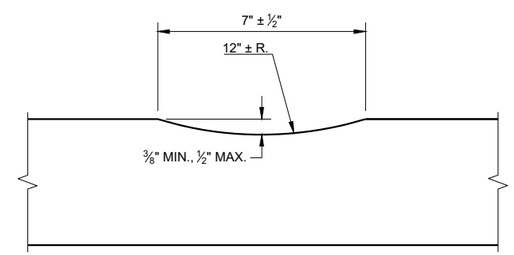

SECTION A - A

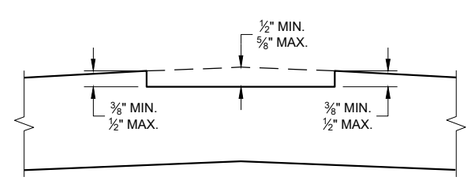

SECTION B - B
CROWNED ROADWAY

2-LANE RURAL
CENTER LINE RUMBLE STRIP, MILLING

STATE OF WISCONSIN
DEPARTMENT OF TRANSPORTAT

6

6

SDD 13A11 - 03a

SDD 13A11 - 03a

GENERAL NOTES

1. CENTERLINE GROOVES MAY BE OMITTED IN AREAS WITH HIGH CONCENTRATIONS OF DRIVEWAYS. WHEN DIRECTED BY THE ENGINEER.

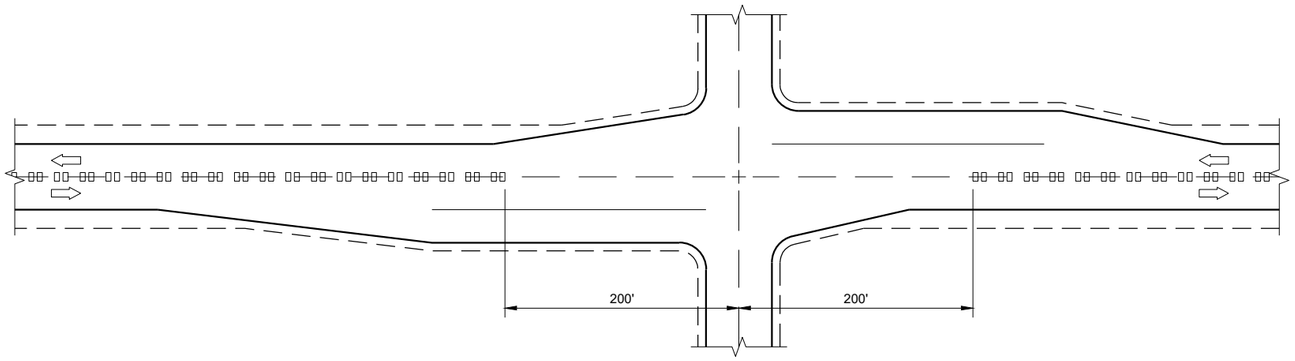

CENTERLINE GROOVES AT INTERSECTIONS

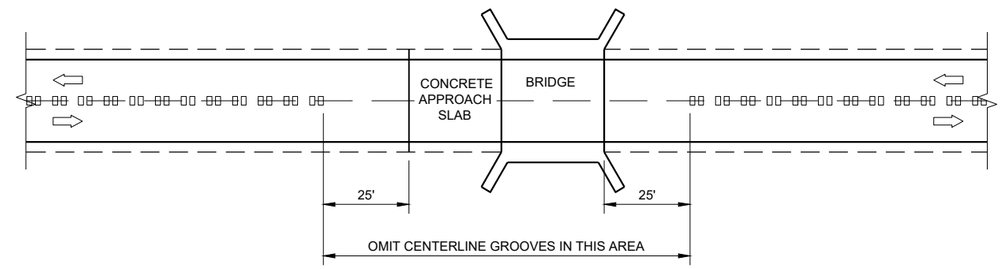

CENTERLINE GROOVES AT BRIDGES

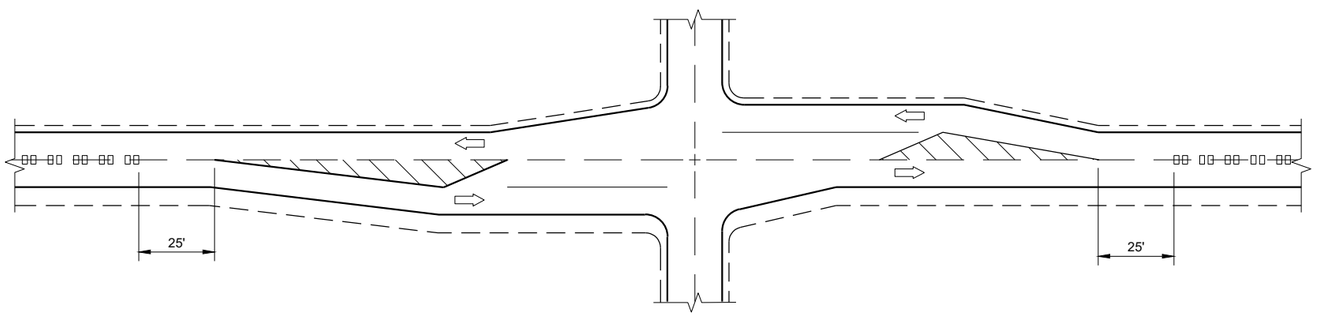

CENTERLINE GROOVES AT INTERSECTIONS (WITH LEFT TURN LANES)

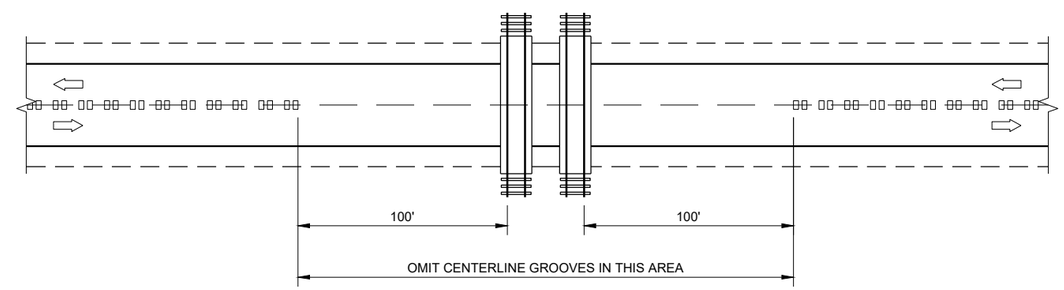

CENTERLINE GROOVES AT RAILROADS

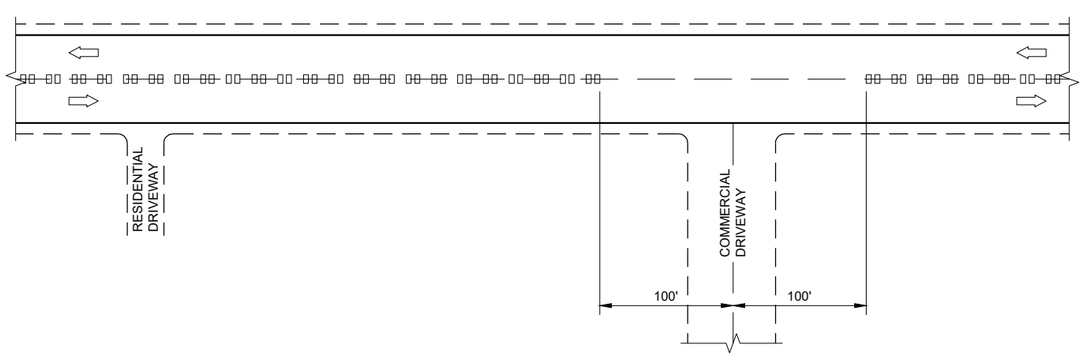

CENTERLINE GROOVES AT DRIVEWAYS (1)

6

6

SDD 13A11 - 03b

SDD 13A11 - 03b

2-LANE RURAL CENTERLINE RUMBLE STRIP, MILLING

STATE OF WISCONSIN
DEPARTMENT OF TRANSPORTATION

APPROVED

7/2018 — DATE

/S/ Rodney Taylor — ROADWAY STANDARDS DEVE ENGINEER

FHWA

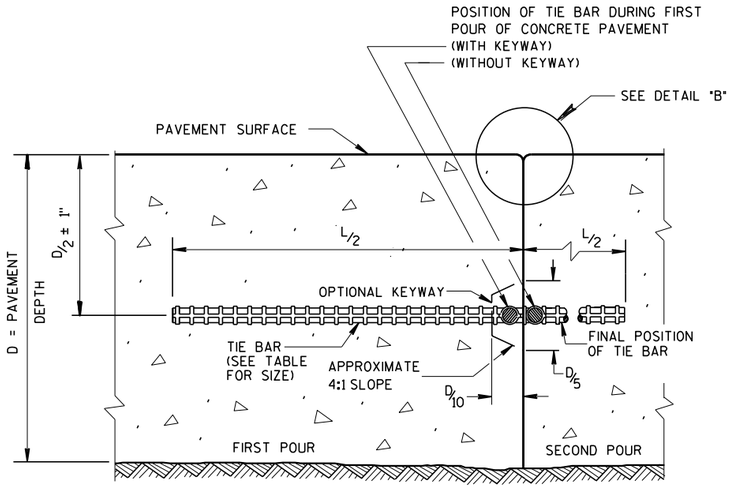

CONSTRUCTION JOINT

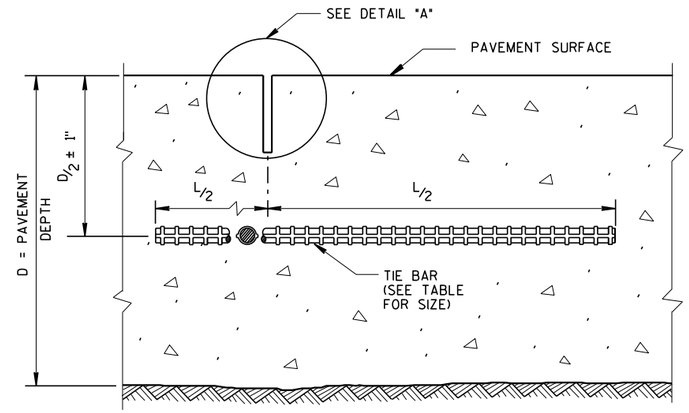

SAWED JOINT

GENERAL NOTES

CREATE A LONGITUDINAL JOINT FOR PAVEMENT WIDTHS GREATER THAN 15 FEET.

CORRELATE LONGITUDINAL JOINTS WITH LANE LINES WHEN POSSIBLE.

1. ANCHOR TIE BARS INTO DRILLED HOLES WITH AN EPOXY.
2. PAVEMENT THAT WAS IN PLACE PRIOR TO THE CONTRACT.

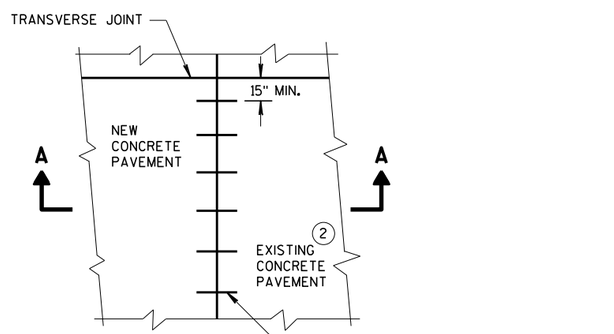

PLAN VIEW

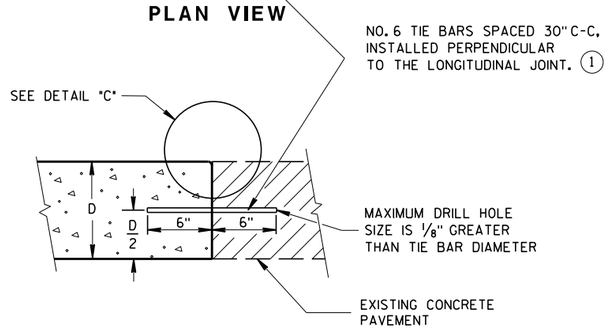

SECTION A-A
LONGITUDINAL CONSTRUCTION JOINT TIE BARS ANCHORED INTO EXISTING PAVEMENT

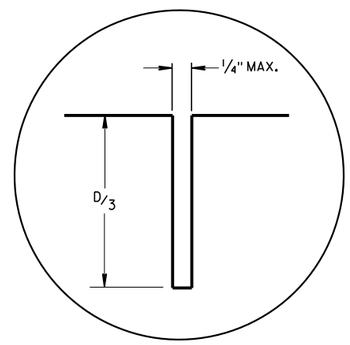

DETAIL "A"

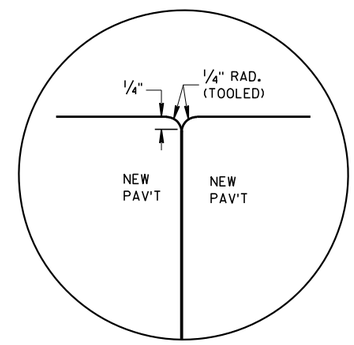

DETAIL "B"

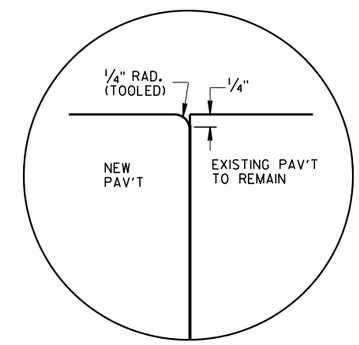

DETAIL "C"

TIE BAR TABLE

PAVEMENT DEPTH (D)	TIE BAR SIZE	TIE BAR LENGTH (L)	MAX. TIE BAR SPACING
< 10 1/2"	NO. 4	30"	36"
≥ 10 1/2"	NO. 5	36"	36"
	NO. 4 *	30"	24" **

* SUBSTITUTE BENT BARS AT LONGITUDINAL JOINTS WHEN EQUIPMENT LIMITATIONS DURING CONSTRUCTION WARRANT (e.g. AUXILIARY LANES OR TURN LANES)

** CONFORM TO 15" MINUMUM SPACING FROM TRANSVERSE JOINTS; SPACING BETWEEN TIE BARS WILL BE 30" AT TRANSVERSE JOINTS.

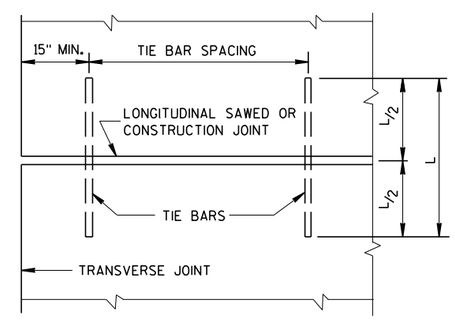

PLAN VIEW
SHOWING LOCATION OF TIE BARS

CONCRETE PAVEMENT
LONGITUDINAL JOINTS AND TIES

STATE OF WISCONSIN
DEPARTMENT OF TRANSPORTATION

APPROVED
March 2018 — DATE
/S/ Peter Kerr — PAVEMENT SUPE
FHWA

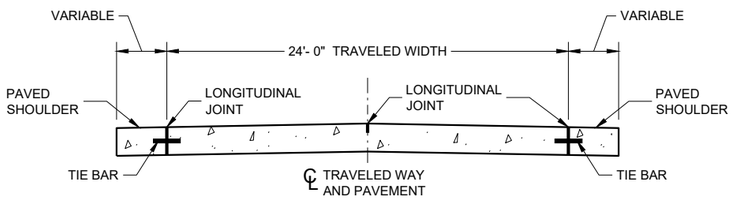

SECTION A - A

TWO-LANE TWO-WAY HIGHWAY (1)

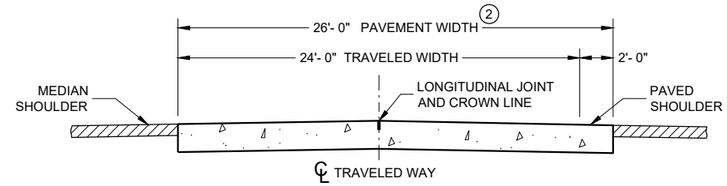

SECTION B - B

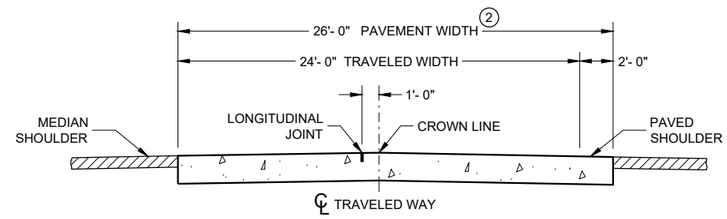

ALTERNATIVE SECTION B - B

DIVIDED HIGHWAY (1)

GENERAL NOTES

CONTRACTION JOINTS

CONSTRUCT TRANSVERSE CONTRACTION JOINTS NORMAL TO THE CENTERLINE. SHOW THE LOCATION OF CONTRACTION JOINTS THROUGH INTERSECTIONS ON THE PLANS OR AS DIRECTED BY THE ENGINEER.

INSTALL DOWEL BARS PARALLEL TO THE PAVEMENT CENTERLINE AND PAVEMENT SURFACE.

FOR PAVEMENT SLABS OF VARYING WIDTHS, LOCATE THE OUTER MOST DOWEL BAR SO THAT THE CENTER OF THE BAR IS A MINIMUM OF 6 INCHES FROM AND A MAXIMUM OF 18 INCHES FROM THE FREE EDGE OF PAVEMENT.

CONSTRUCTION JOINTS

LOCATE CONSTRUCTION JOINTS A MINIMUM OF 6 FEET FROM THE NEAREST CONTRACTION JOINT AND ALIGN PARALLEL TO THE CONTRACTION JOINTS.

(1) REFER TO TYPICAL CROSS SECTIONS FOR ADDITIONAL DETAILS.

(2) MEASURE THE ENTIRE PAVED WIDTH INCLUDING THE PORTION(S) LABELED "PAVED SHOULDER" AS CONCRETE PAVEMENT.

PAVEMENT DEPTH, DOWEL BAR SIZE AND JOINT SPACING TABLE

PAVEMENT DEPTH (D)	DOWEL BAR DIAMETER	CONTRACTION JOINT SPACING
5 ½", 6", 6 ½"	NONE	12'
7", 7 ½"	1"	14'
8", 8 ½"	1 ¼"	15'
9" & ABOVE	1 ¼"	15'

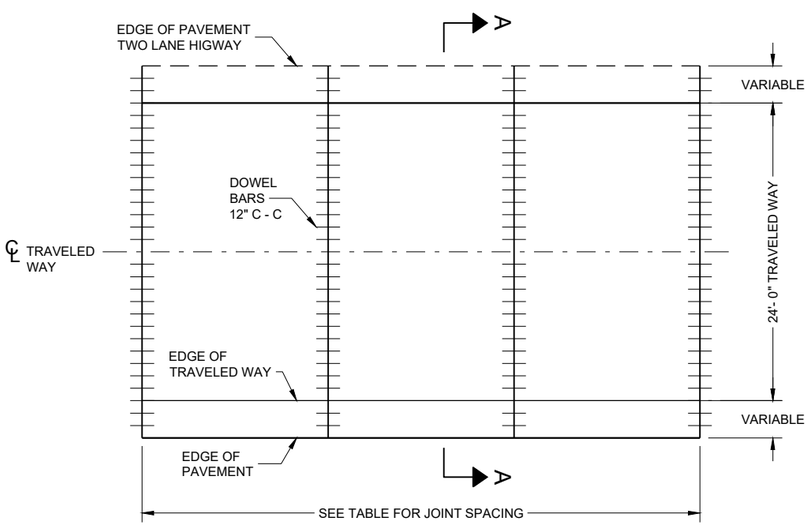

CONTRACTION JOINT LAYOUT FOR TWO-LANE TWO-WAY HIGHWAY

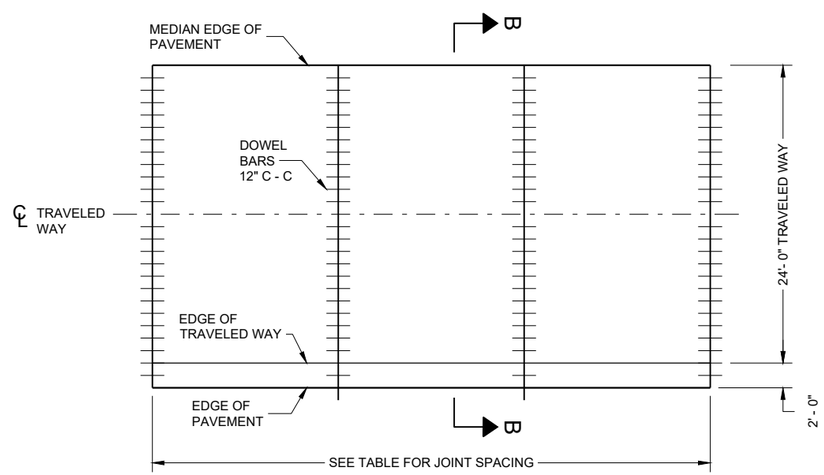

CONTRACTION JOINT LAYOUT FOR DIVIDED HIGHWAY

RURAL DOWELED CONCRETE PAVEMENT

STATE OF WISCONSIN
DEPARTMENT OF TRANSPORTA

6

SDD 13C11 - 13a

GENERAL NOTES

1. OBTAIN THE ENGINEER'S APPROVAL FOR THE USE OF ALTERNATIVE DESIGNS OF THE DOWEL ASSEMBLY. USE MECHANICAL DOWEL BAR INSERTERS OR DOWEL ASSEMBLIES WHEN CONSTRUCTION CONTRACTION JOINTS.
2. SECURE BASKETS WITH ANCHORS TO HOLD DOWEL BARS IN THE CORRECT POSITION AND ALIGNMENT. TYPE, LOCATION, NUMBER AND LENGTH OF ANCHORS ARE DEPENDENT UPON FIELD CONDITIONS.
3. FORM OR SAW CONSTRUCTION JOINTS. PROVIDE A ¼" RADIUS AT FORMED JOINTS.
4. PROVIDE A SMOOTH VERTICAL FACE FOR THE ENTIRE DEPTH OF THE PAVEMENT WHEN FORMING CONSTRUCTION JOINTS.
5. INSTALL DOWEL BARS AT CONSTRUCTION JOINTS BY FORMING OR DRILLING. INSTALL FORMED DOWEL BARS 12 INCHES C - C AND 12 INCHES FROM PAVEMENT EDGE. REMOVE EXCESS CONCRETE FROM THE FREE END OF THE DOWEL BAR IF DOWEL BARS ARE FORMED THROUGH A HEADER BOARD. INSTALL DRILLED DOWEL BARS ACCORDING TO THE "DRILLED DOWEL BAR CONSTRUCTION JOINT" DETAIL.
6. APPLY A THIN UNIFORM COATING OF SURFACE TREATMENT TO THE FREE END OF DOWEL BARS TO PREVENT BONDING.
7. ANCHOR DOWEL BARS AND TIE BARS INTO DRILLED HOLES WITH AN EPOXY. MAXIMUM DRILLED HOLE SIZE IS ⅛" GREATER THAN DOWEL BAR DIAMETER, 9 INCHES IN LENGTH.

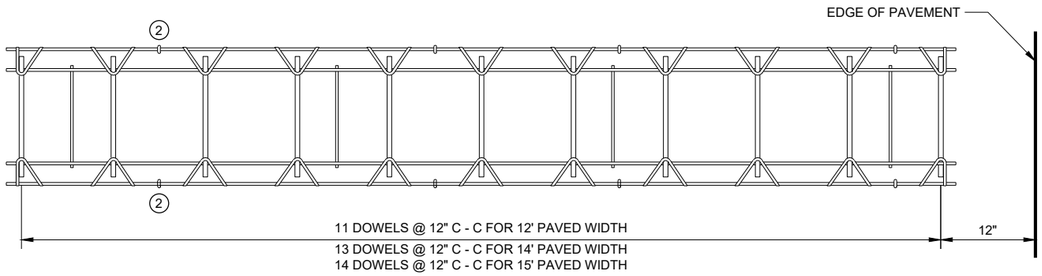

PLAN VIEW

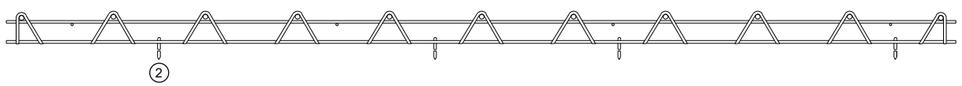

SIDE VIEW

(NORMAL TO CENTERLINE)

CONTRACTION JOINT DOWEL ASSEMBLY (1)

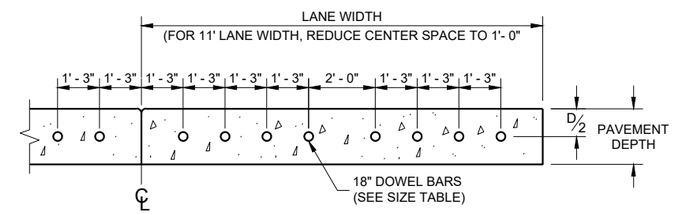

DRILLED DOWEL BAR CONSTRUCTION JOINT (7)

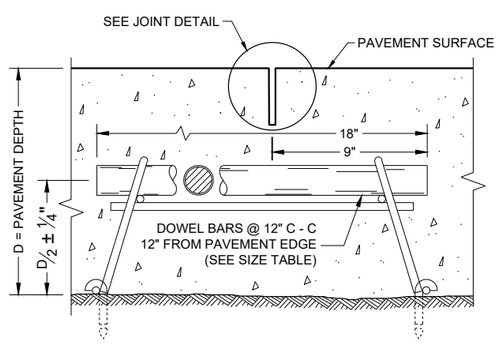

DOWELED CONTRACTION JOINT

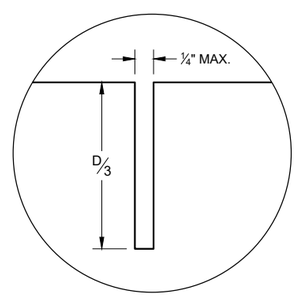

JOINT DETAIL

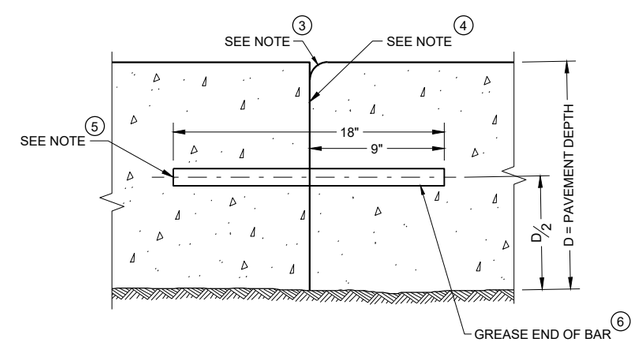

TRANSVERSE CONSTRUCTION JOINT

RURAL DOWELED CONCRETE PAVEMENT

STATE OF WISCONSIN
DEPARTMENT OF TRANSPORTATION

APPROVED
00-00-00 — DATE
/S/ <AUTHOR> — PAVEMENT SUPERVISOR
FHWA

6

SDD 13C11 - 13b

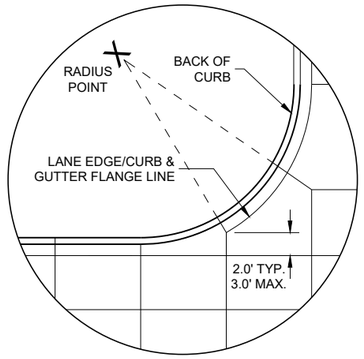

DETAIL "A"

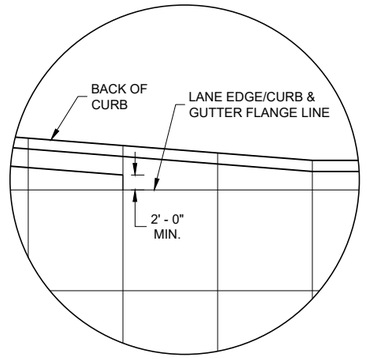

DETAIL "B"

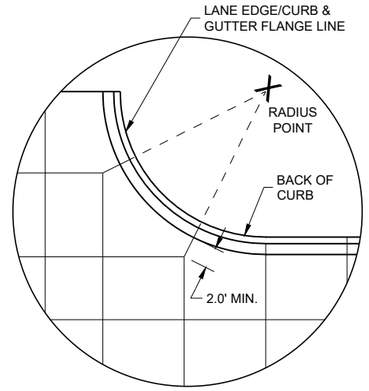

DETAIL "C"

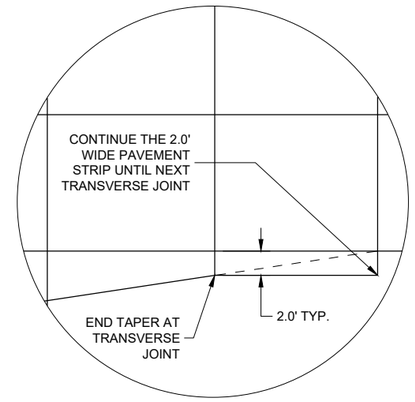

DETAIL "D"

GENERAL NOTES

THE PRIMARY ROADWAY CONTROLS THE TRANSVERSE JOINT PATTERN.

ALIGN NEW JOINTS WITH EXISTING JOINTS OR CRACKS.

CONSTRUCT TRANSVERSE JOINTS PERPENDICULAR TO THE ROADWAY.

ADJUST TRANSVERSE JOINTS TO ALIGN WITH UTILITY FIXTURES (E.G MANHOLES AND INLETS) IN THE PAVEMENT STRUCTURE WHEN POSSIBLE. WATER VALVES DO NOT REQUIRE JOINT ADJUSTMENT.

AVOID SLABS LESS THAN 2 FEET WIDE OR GREATER THAN 15 FEET WIDE.

SEE TABLE FOR TRANSVERSE JOINT SPACING. JOINT SPACING SPECIFIED IS MAXIMUM AND ACTUAL SPACING CAN BE ADJUSTED TO ACCOMMODATE INTERSECTIONS.

AVOID ANGLES LESS THAN 60° BY DOGLEGGING JOINTS THROUGH CURVE RADIUS POINTS. USE 90° ANGLES WHEN POSSIBLE.

CORRELATE LONGITUDINAL JOINTS WITH LANE LINES WHEN POSSIBLE.

1. PROVIDE TRANSVERSE JOINTS AT ALL PAVEMENT WIDTH CHANGES.
2. CONSTRUCT DOWELED EXPANSION JOINT ON THE SIDE ROAD OF AN INTERSECTION IF THE SIDE ROAD IS CONCRETE PAVEMENT AND GREATER THAN 300 FEET IN LENGTH. ALIGN EXPANSION JOINT WITHEDGE OF RADIUS.
3. THE ENGINEER MAY APPROVE SLIGHT VARIATIONS FROM THESE JOINTING DETAILS.

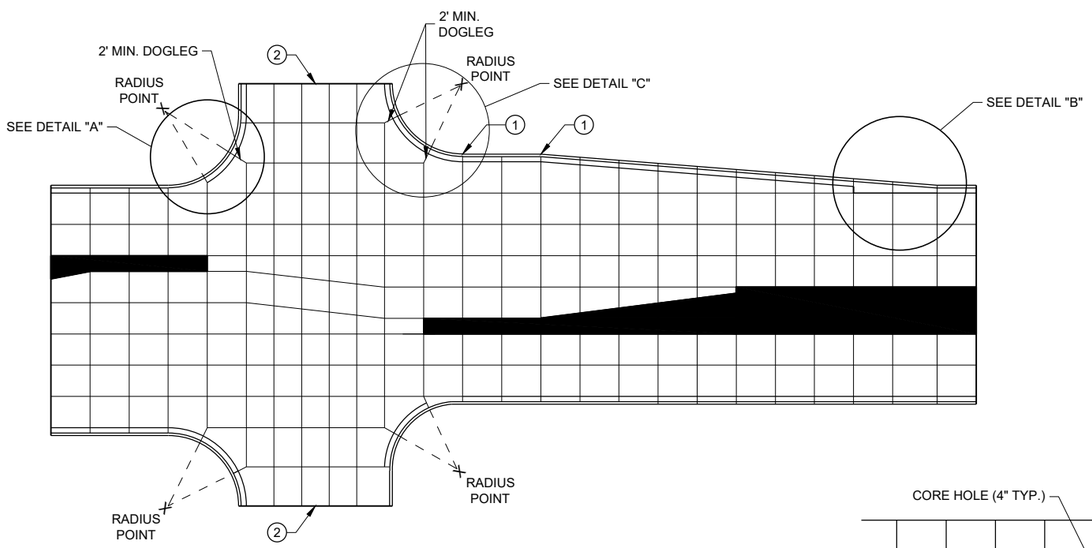

STANDARD INTERSECTION

PAVEMENT DEPTH AND JOINT SPACING TABLE

PAVEMENT DEPTH (D)	CONTRACTION JOINT SPACING
6", 6 ½"	12'
7", 7 ½"	14'
8" & ABOVE	15'

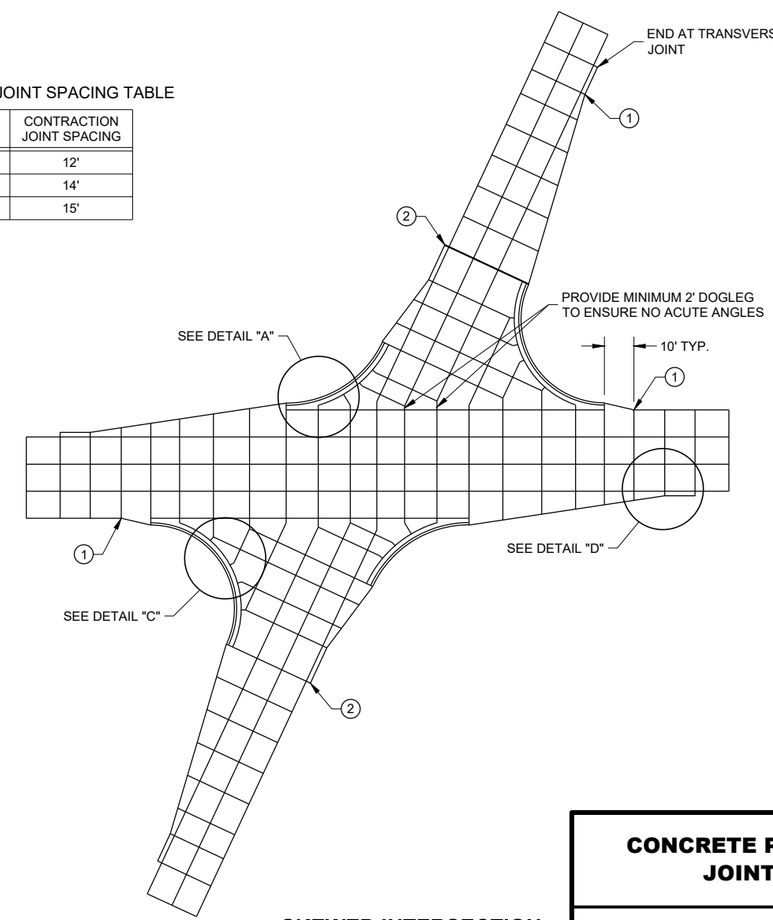

SKEWED INTERSECTION

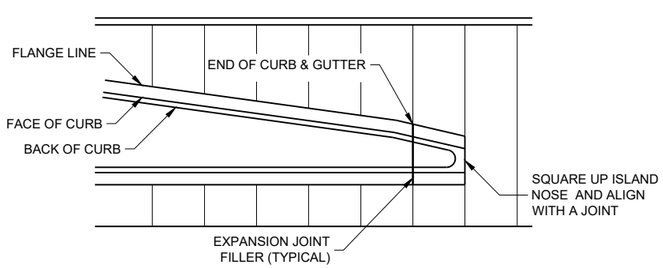

APPROACH TO MEDIAN

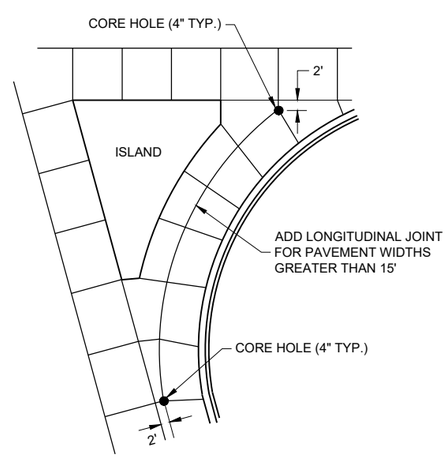

LARGE RIGHT TURN

CONCRETE PAVEMENT JOINTING

STATE OF WISCONSIN
DEPARTMENT OF TRANSPORTAT

6

SDD 13C18 - 07a

LEGEND

POTENTIAL DOWELED EXPANSION JOINT

DOWELED JOINT

TIED JOINT

GENERAL NOTES

USE AN EXPANSION JOINT FILLER MEETING THE REQUIREMENTS OF STANDARD SPECIFICATION 415.

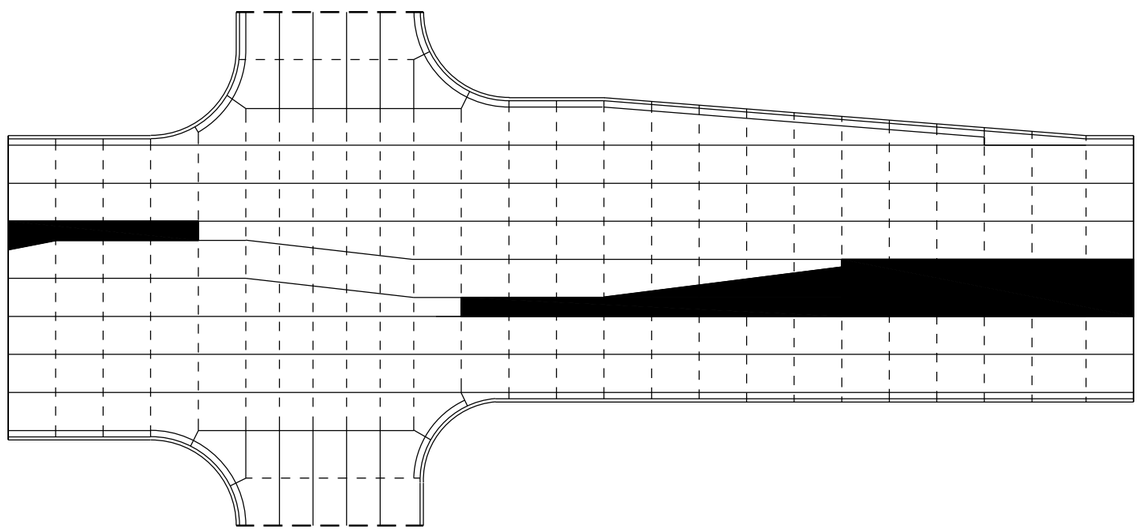

STANDARD INTERSECTION

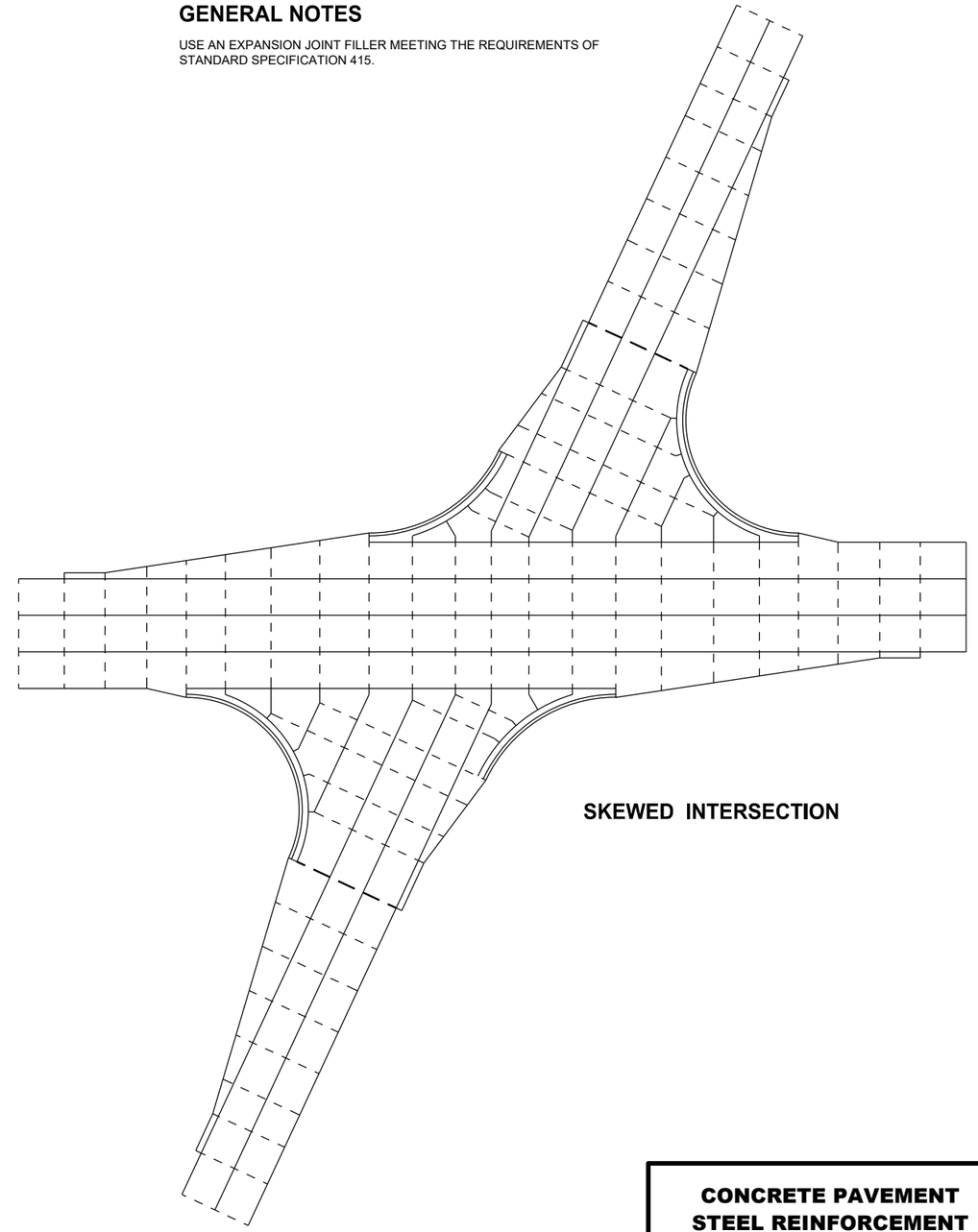

SKEWED INTERSECTION

CONCRETE PAVEMENT STEEL REINFORCEMENT

STATE OF WISCONSIN
DEPARTMENT OF TRANSPORTAT

6

SDD 13C18 - 07b

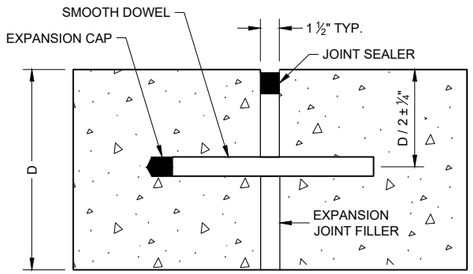

DOWELED TRANSVERSE (1)

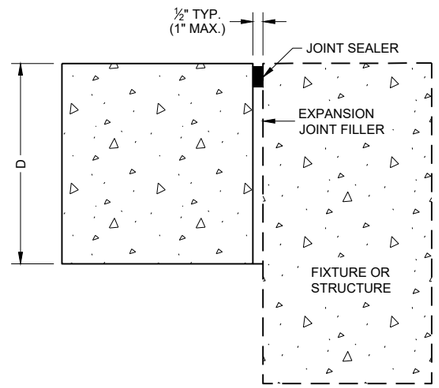

UNTIED - LONGITUDINAL

EXPANSION JOINTS

TIE BAR TABLE

PAVEMENT DEPTH (D)	TIE BAR SIZE	TIE BAR LENGTH (L)	MAX. TIE BAR SPACING
< 10 ½"	NO. 4	30"	36"
≥ 10 ½"	NO. 5	36"	36"
	NO. 4*	30"	24"**

* SUBSTITUTE BENT BARS AT LONGITUDINAL JOINTS WHEN EQUIPMENT LIMITATIONS DURING CONSTRUCTION WARRANT (e.g. AUXILIARY LANES OR TURN LANES)

** CONFORM TO 15" MINIMUM SPACING FROM TRANSVERSE JOINTS; SPACING BETWEEN TIE BARS WILL BE 30" AT TRANSVERSE JOINTS.

GENERAL NOTES

1. USE DOWELED EXPANSION JOINTS ON SIDE ROADS AT INTERSECTIONS (TO ISOLATETHE SIDE ROAD FROM THE THROUGH STREET) IF THE SIDE ROAD IS CONCRETE PAVEMENT AND GREATER THAN 300 FEET IN LENGTH.
2. SPACE CONTRACTION JOINTS IN ACCORDANCE WITH SDD 13C4, 13C11 OR 13C13.
3. LOCATE CONSTRUCTION JOINTS A MINIMUM OF 6 FEET FROM THE NEAREST CONTRACTION JOINT AND ALIGN PARALLEL TO CONTRACTION JOINTS.
4. CONSTRUCTION JOINTS CAN BE FORMED OR SAWED.
5. IF JOINT IS FORMED, PROVIDE A ¼" RADIUS.
6. ANCHOR TIE BARS INTO DRILLED HOLES WITH AN EPOXY.

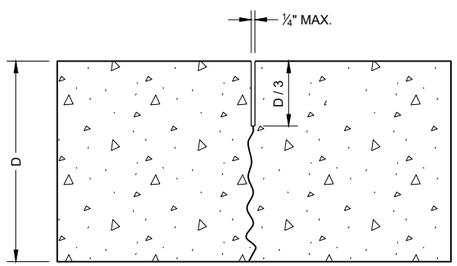

UNDOWELED TRANSVERSE

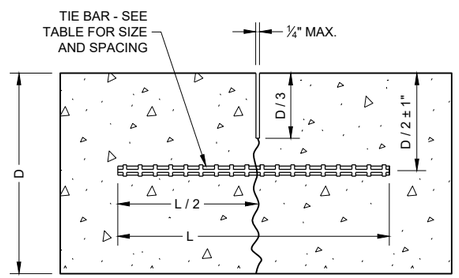

TIED LONGITUDINAL

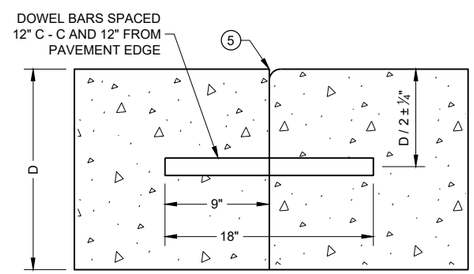

DOWELED TRANSVERSE (3)

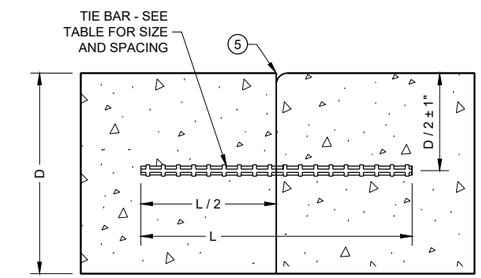

TIED LONGITUDINAL

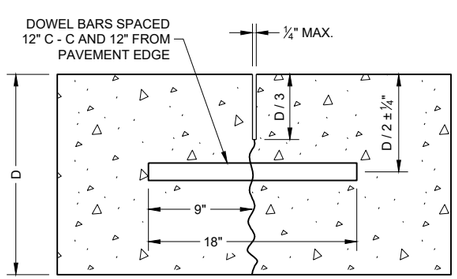

DOWELED TRANSVERSE

CONTRACTION JOINTS (2)

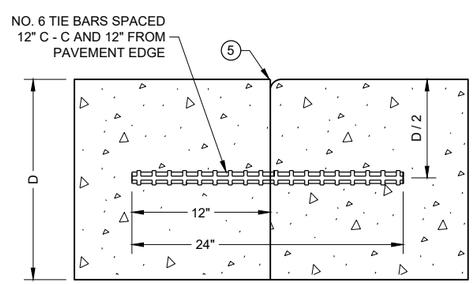

TIED TRANSVERSE (3)
(FOR USE ON NON-DOWELED PAVEMENTS ONLY)

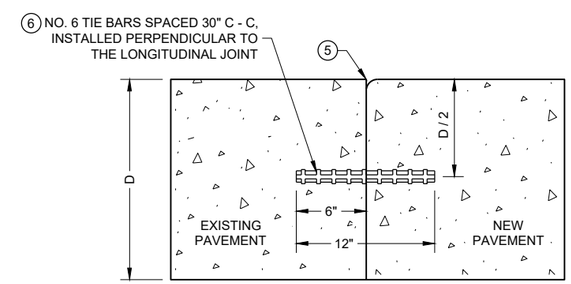

TIED LONGITUDINAL TO EXISTING

CONSTRUCTION JOINTS (4)

CONCRETE PAVEMENT JOINT TYPES

STATE OF WISCONSIN
DEPARTMENT OF TRANSPORTATION

6

SDD 13C18 - 07c

GENERAL NOTES

1. USE BOXOUTS WHEN UTILITY STRUCTURE IS IN THE PATH OF CONSTRUCTION JOINTS. PROVIDE A 1 FOOT MINIMUM CLEARANCE BETWEEN THE EXTERIOR LIMIT OF THE STRUCTURE TO THE DIAMOND BOXOUT.
2. ADJUST TRANSVERSE JOINT TO INTERSECT MANHOLE IF POSSIBLE.
3. IF DISTANCE BETWEEN THE LONGITUDINAL JOINT AND THE EDGE OF MANHOLE IS 2 FEET OR LESS, DIVERT THE LONGITUDINAL JOINT AT A 2:1 TAPER RATE TO THE CENTER OF THE MANHOLE. IF THE DISTANCE IS GREATER THAN 2 FEET, DO NOT DIVERT THE JOINT AND SAW AS NORMAL. PLACE REINFORCEMENT REBAR AROUND THE MANHOLE.
4. IF THE DISTANCE FROM THE EDGE OF THE MANHOLE TO THE NEAREST TRANSVERSE JOINT IS LESS 4 FEET OR LESS, REDIRECT JOINT TO INTERSECT THE CENTER OF THE MANHOLE. IF DISTANCE IS GREATER THAN 4 FEET, DO NOT DIVERT THE JOINT AND SAW AS NORMAL. PLACE REINFORCEMENT REBAR AROUND THE MANHOLE.
5. ALIGN TRANSVERSE JOINT WITH ONE EDGE OF INLET WHEN PRACTICAL.

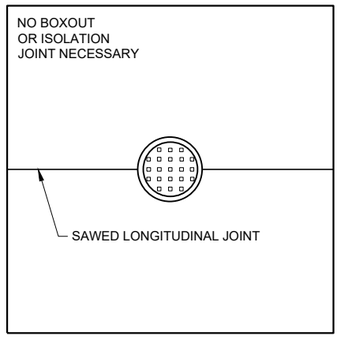

MANHOLE WITH LONGITUDINAL JOINT

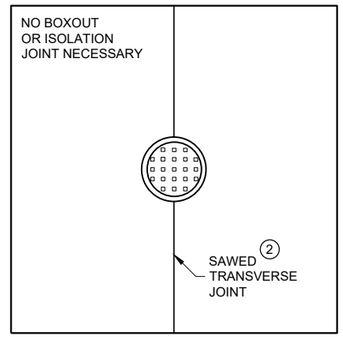

MANHOLE WITH TRANSVERSE JOINT

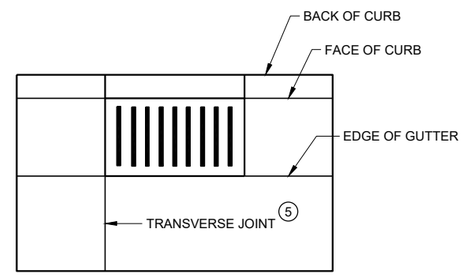

INLET WITH TRANSVERSE JOINT

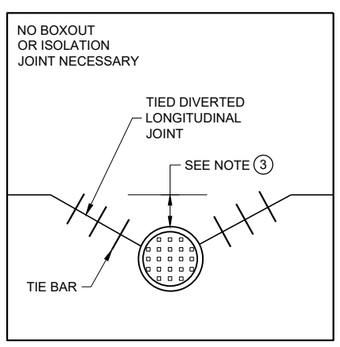

MANHOLE WITH DIVERTED LONGITUDINAL CONTRACTION JOINT

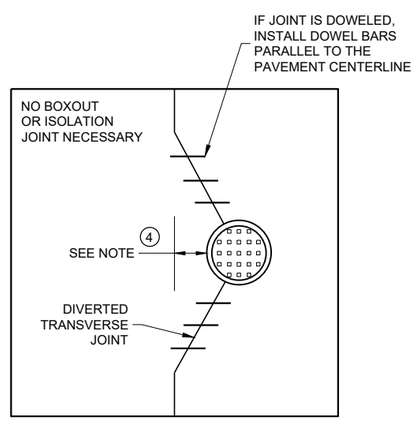

MANHOLE WITH DIVERTED TRANSVERSE CONTRACTION JOINT

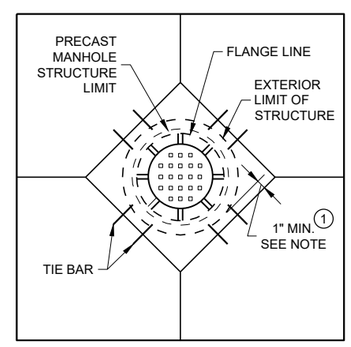

DIAGONAL MANHOLE BOXOUT FOR CONSTRUCTION JOINTS

CONCRETE PAVEMENT JOINTING AT UTILITY FIXTURES

STATE OF WISCONSIN
DEPARTMENT OF TRANSPORTATION

APPROVED
November 2018 /S/ Peter Kemp P.E.
DATE PAVEMENT SUPERVISO
FHWA

6

SDD 13C18 - 07d

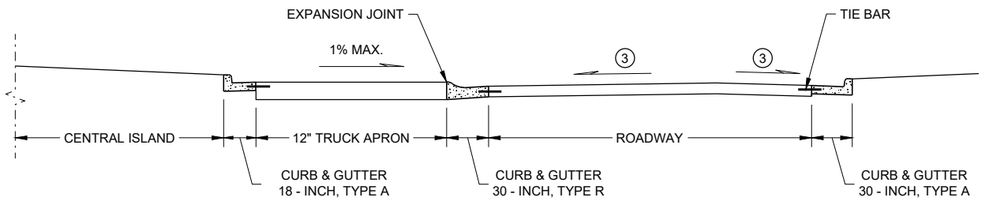

SECTION A - A

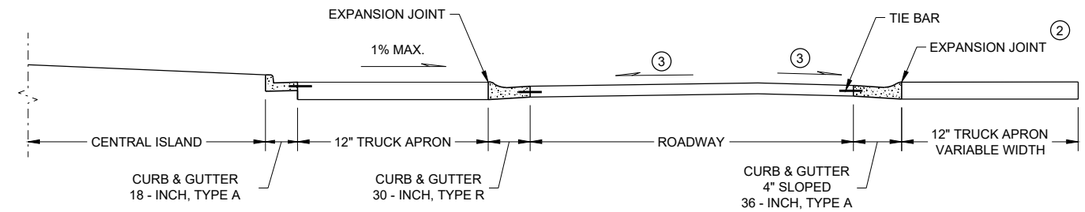

SECTION B - B

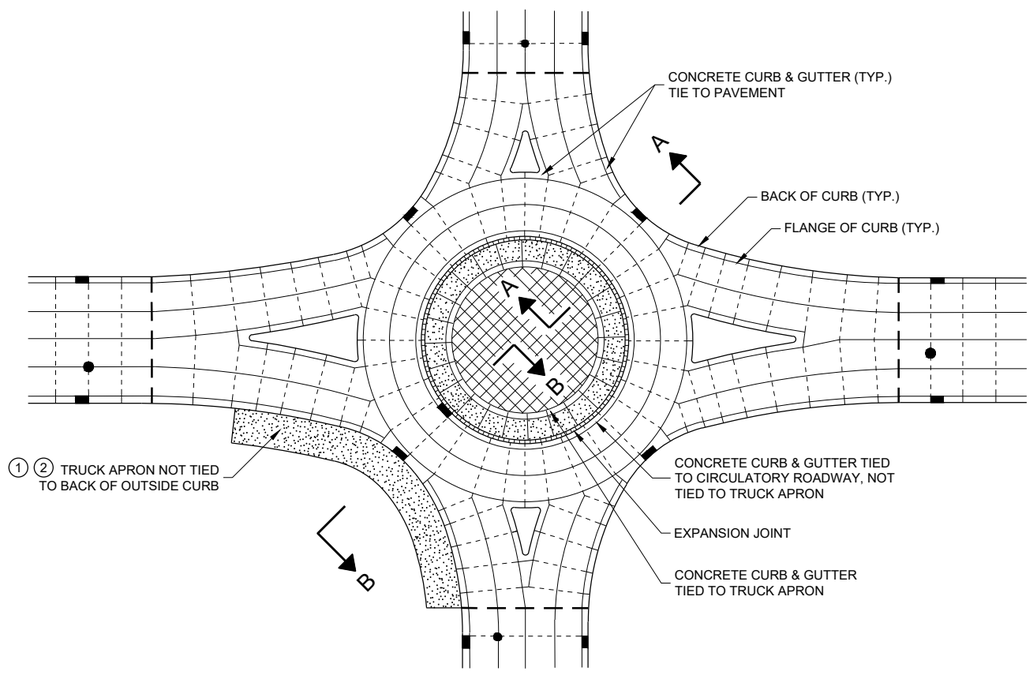

ISOLATED CIRCLE JOINT LAYOUT FOR ROUNDABOUTS

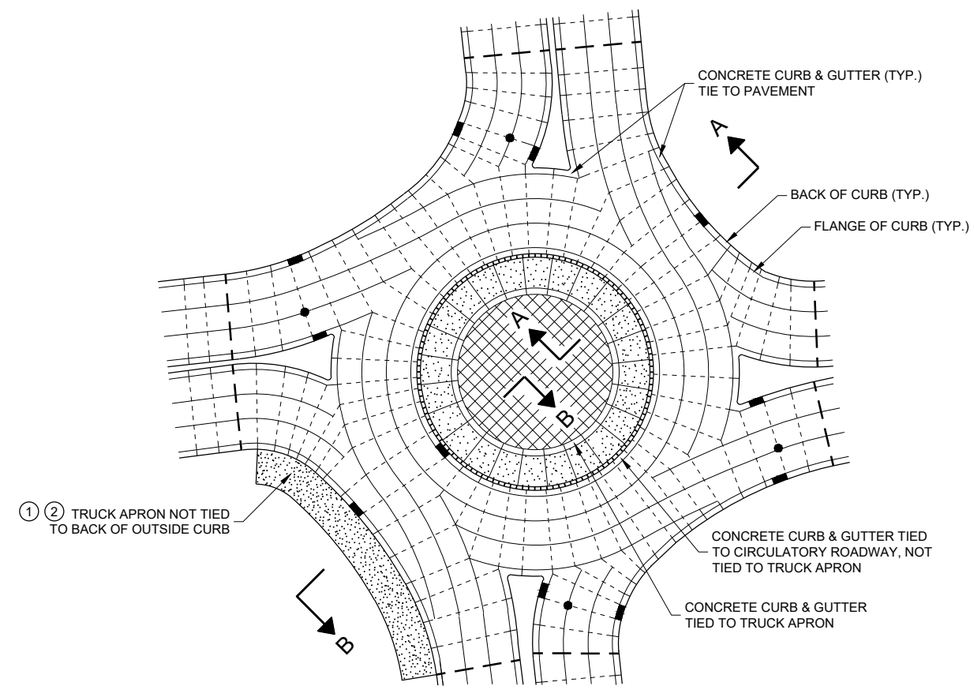

PINWHEEL JOINT LAYOUT FOR ROUNDABOUTS

GENERAL NOTES

MAXIMUM JOINT SPACING IS IN ACCORDANCE WITH THE TABLE SHOWN ON SDD 13C18 - SHEET "a"

USE EXPANSION JOINT FILLER MEETING THE REQUIREMENTS OF STANDARD SPECIFICATION 415.

DO NOT DOWEL OR TIE THE TRUCK APRON TRANSVERSE JOINTS.

1. DESIGNER DETERMINES SIZE AND LOCATION(S) OF TRUCK APRON TO ACCOMODATE TRACKING OF OVERSIZE / OVERWEIGHT VEHICLES.
2. TIE THE OUTSIDE TRUCK APRON TO THE BACK SIDE OF CURB ONLY WHEN ENTIRE TRUCK APRON IS LESS THAN 3 FEET.
3. CONFORM TO PLAN CONSTRUCTION DETAILS FOR CIRCULATORY ROADWAY CROSS SLOPE.

LEGEND

- DOWELED JOINT
- TIED JOINT
- EXPANSION JOINT
- POTENTIAL DOWELED EXPANSION JOINT
- TRUCK APRON
- CENTRAL ISLAND
- UTILITY STRUCTURES

CONCRETE PAVEMENT JOINTING AND STEEL REINFORCEMENT IN ROUNDABOUTS

STATE OF WISCONSIN
DEPARTMENT OF TRANSPORTATION

APPROVED
November 2018 /S/ Peter Kemp P.E.
DATE PAVEMENT SUPERVISOR
FHWA

6

SDD 13C18 - 07e

LEGEND

- - - - - - DOWELED JOINT
——— TIED JOINT
EXPANSION JOINT
— — POTENTIAL DOWELED EXPANSION JOINT (1)
DIRECTION OF TRAFFIC

GENERAL NOTES

(1) CONSTRUCT DOWELED EXPANSION JOINT ON THE SIDE ROAD OF AN INTERSECTION IF THE SIDE ROAD IS CONCRETE PAVEMENT AND GREATER THAN 300 FEET IN LENGTH. ALIGN EXPANSION JOINT WITH THE EDGE OF RADIUS.

(2) PROVIDE TIED JOINT AT THE FLANGE OF SCAB ON CURB IF SCAB ON CURB AND GUTTER IS USE.

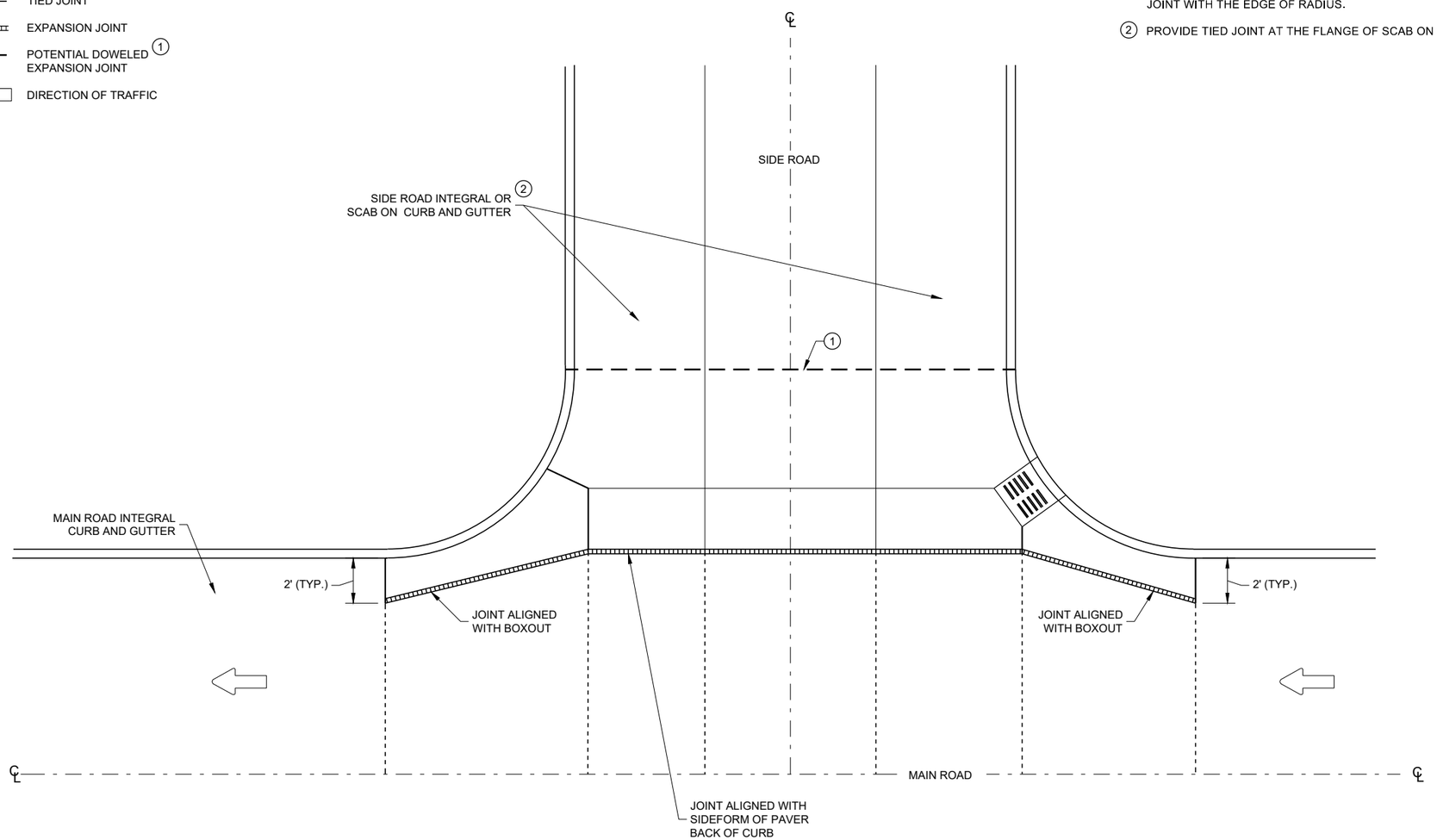

INTERSECTION BOXOUT FOR INTEGRAL CURB AND GUTTER

CONCRETE PAVEMENT INTERSECTION BOXOUT FOR INTEGRAL CURB AND GUTTER

STATE OF WISCONSIN
DEPARTMENT OF TRANSPORTATION

APPROVED
November 2018 — DATE
/S/ Peter Kemp P.E. — ROADWAY STANDARDS DEVE ENGINEER
FHWA

6

SDD 13C18 - 07f

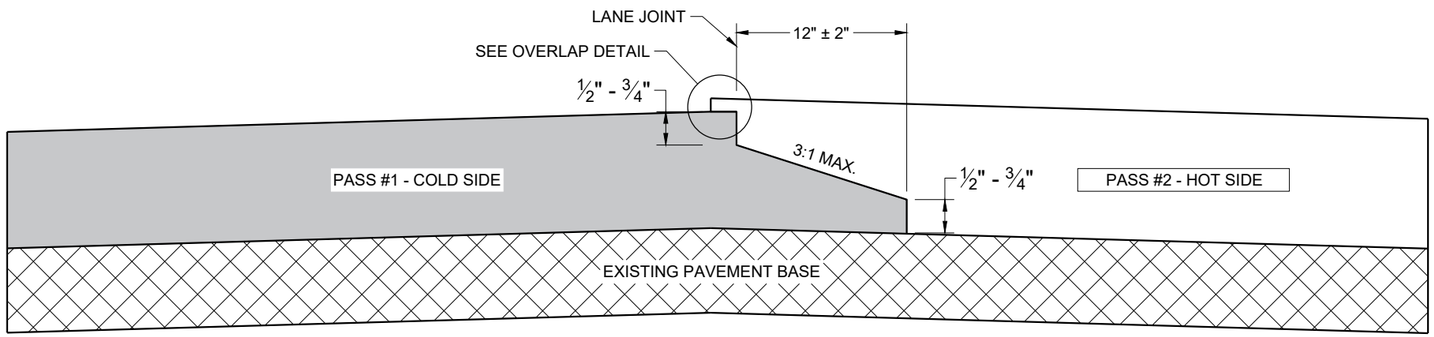

TYPICAL PAVEMENT CROSS SECTION
NOTCHED WEDGE JOINT

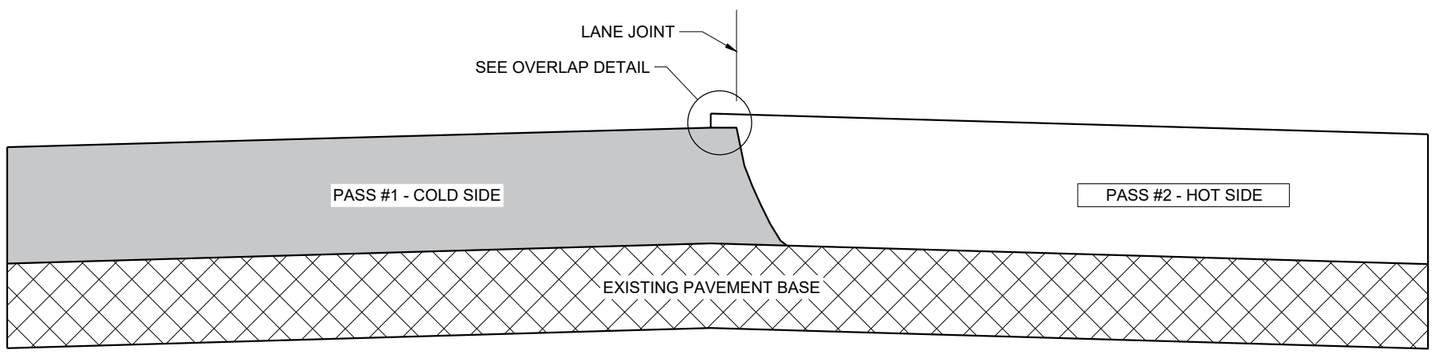

TYPICAL PAVEMENT CROSS SECTION
VERTICAL JOINT

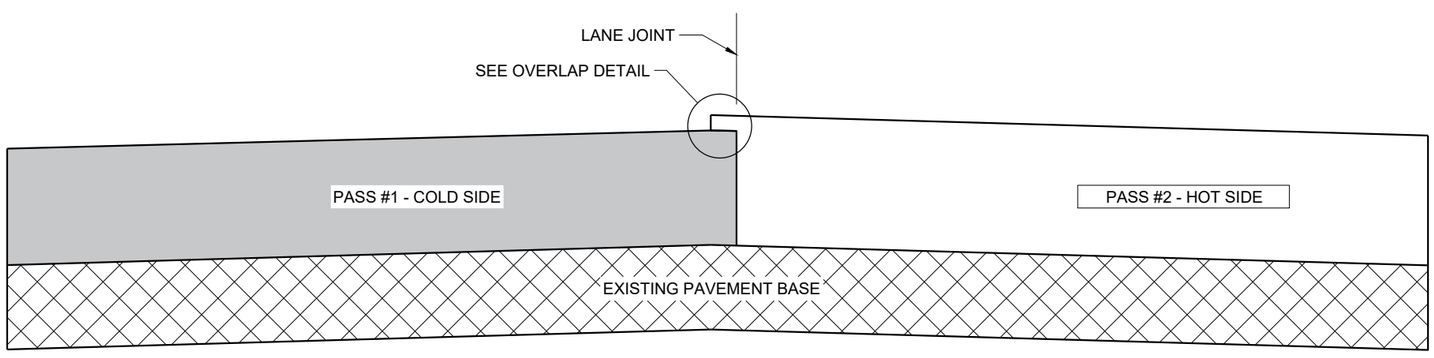

TYPICAL PAVEMENT CROSS SECTION
VERTICAL JOINT (MILLED)

GENERAL NOTES

IN ADDITION TO THE DETAILS PROVIDED IN THIS DRAWING, CONFORM TO STANDARD SPECIFICATION 450.3.2.8 FOR WHEN A NOTCHED WEDGE JOINT IS REQUIRED AND FOR GENERAL JOINT CONSTRUCTION REQUIREMENTS.

FOR ALL LONGITUDINAL JOINTS, ENSURE THE PAVER SCREED OVERLAPS THE PREVIOUSLY PLACED PAVEMENT BY 1" ± 0.5" AND THE HOT SIDE OF THE JOINT REMAINS HIGHER THAN THE COLD SIDE BY APPROXIMATELY 0.1" AFTER FINAL COMPACTION. (IT WILL BE FLUSH WHEN PAVING IN ECHELON.)

ONLY REMOVE THE LONGITUDINAL NOTCHED WEDGE JOINT FOR SMA PAVEMENT OR AS DIRECTED BY THE ENGINEER TO ADDRESS SPECIFIC LENGTHS OF JOINT DAMAGED BY TRAFFIC.

WHEN MILLING BACK OR REMOVING ANY LONGITUDINAL JOINT, LIMIT THE MATERIAL REMOVED TO 2" FROM THE TOP NOTCH OR FROM THE VERTICAL JOINT EDGE ON THE COLD SIDE OF THE JOINT.

USE LONGITUDINAL MILLED JOINT AS PLANS SHOW OR THE AS THE ENGINEER DIRECTS.

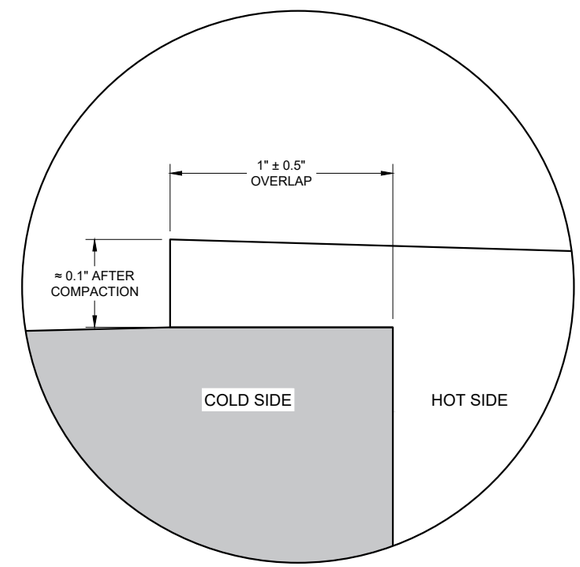

OVERLAP DETAIL (TYPICAL)

6

6

SDD 13C19 - 03

SDD 13C19 - 03

HMA LONGITUDINAL JOINTS

STATE OF WISCONSIN
DEPARTMENT OF TRANSPORTATION

APPROVED
November 2020 /S/ Steven Hefel
DATE HMA PAVEMENT ENGIN

FHWA

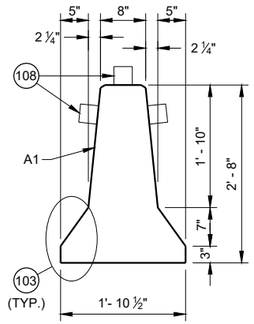

CROSS SECTION

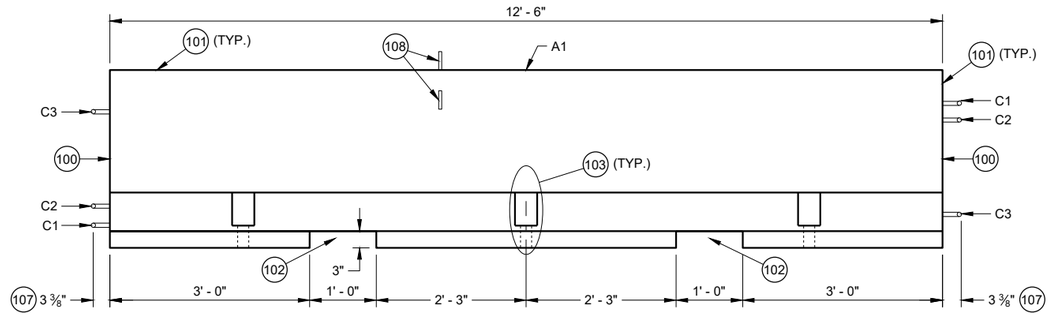

PROFILE VIEW

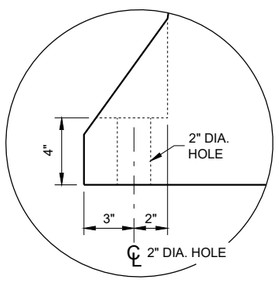

ANCHOR BLOCK DETAIL

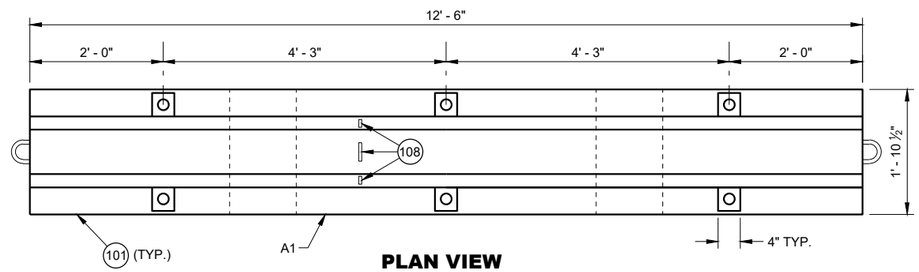

PLAN VIEW

TEMPORARY BARRIER

GENERAL NOTES

PLACE BARRIER ON PAVED SURFACE. BEFORE PLACEMENT OF TEMPORARY BARRIER, REMOVE ALL LOOSE MATERIAL FROM PAVED SURFACE.

LOOP BARS C1, C2 AND C3 ARE NOT FOR PLACEMENT OR MOVEMENT OF BARRIER.

100 PERMANENTLY FORM INTO ONE END OF BARRIER THE FOLLOWING INFORMATION:
- A. TYPE OF BARRIER: WI-CBTP
- B. MANUFACTURER
- C. DATE OF MANUFACTURE (MONTH AND YEAR)

101 1" OPTIONAL CHAMFER

102 SEE LIFTING SLOT DETAIL

103 SEE ANCHOR BLOCK DETAIL

104 1 ¾" MIN. CLEAR COVER

105 2" MIN. CLEAR COVER

106 1" MIN. CLEAR COVER

107 ± ⅛" MEASURED FROM FACE OF CONCRETE BARRIER TO OUTSIDE OF LOOP BAR (TYP.)

108 USE DELINEATORS CONFORMING TO SECTION 633 OF THE STANDARD SPECIFICATIONS. CONTRACTOR MY USE ALTERNATE SHAPES AND HOUSING. INSTALL DELINEATORS ACCORDING TO MANUFACTURERS INSTRUCTION. INSTALL YELLOW REFLECTORS WHEN BARRIER IS LOCATED LEFT OF TRAFFIC AND WHITE WHEN BARRIER IS LOCATED RIGHT OF TRAFFIC. SPACE DELINEATORS A MAXIMUM OF 25 FEET APART, PROVIDE TO MOUNTED DELINEATORS IN ADDITION TO SIDE MOUNTED DELINEATORS ON BARRIER INSTALLATIONS LOCATED ON A CURVED ALIGNMENT LONGER THAT 200 FEET AND ON BARRIERS USED TO SEPARATE OPPOSING TRAFFIC.

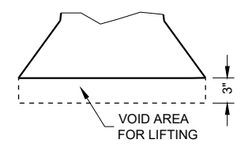

LIFTING SLOT DETAIL (TYP.)

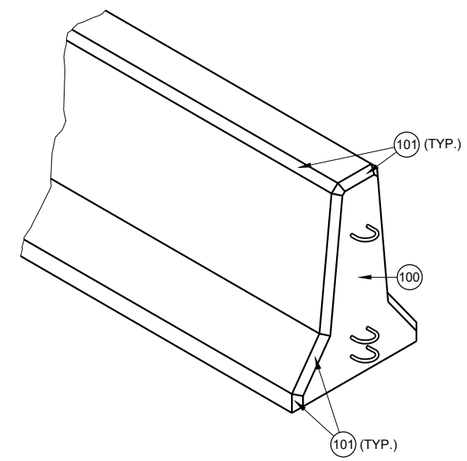

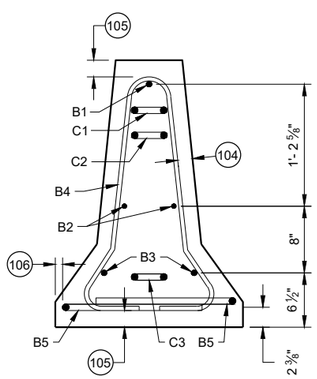

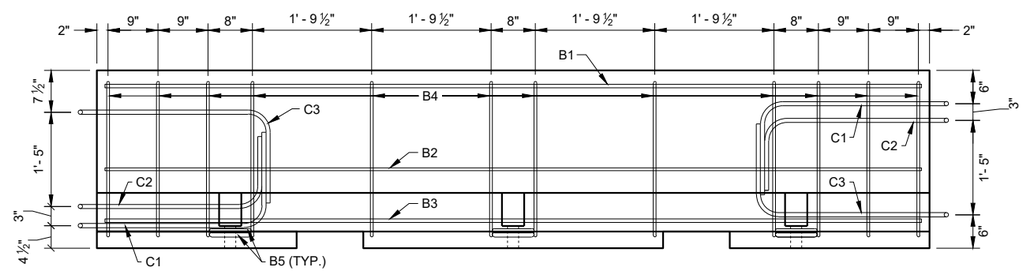

PROFILE VIEW

TEMPORARY BARRIER REINFORCEMENT

CONCRETE BARRIER TEMPORARY PRECAST, 12' - 6"

STATE OF WISCONSIN
DEPARTMENT OF TRANSPORTAT

6

SDD 14B07 - 16a

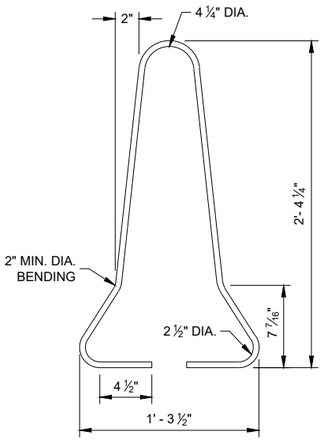

B4 BAR DETAIL

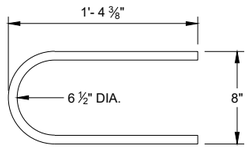

B5 BAR DETAIL

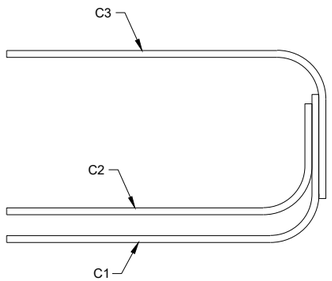

PROFILE VIEW

LOOP BAR ASSEMBLY

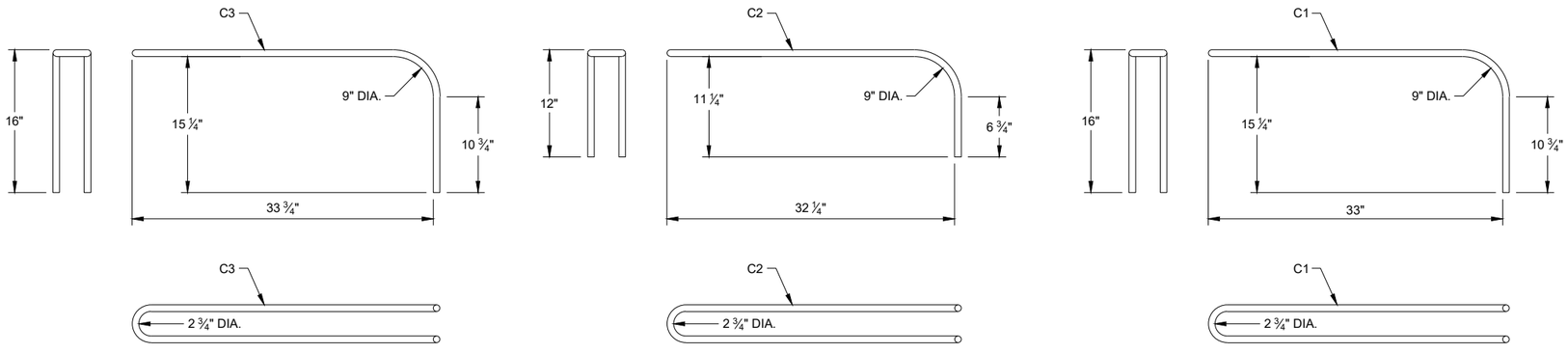

C BAR DETAILS

CONCRETE BARRIER TEMPORARY PRECAST, 12' - 6"

STATE OF WISCONSIN
DEPARTMENT OF TRANSPORTAT

6

SDD 14B07 - 16b

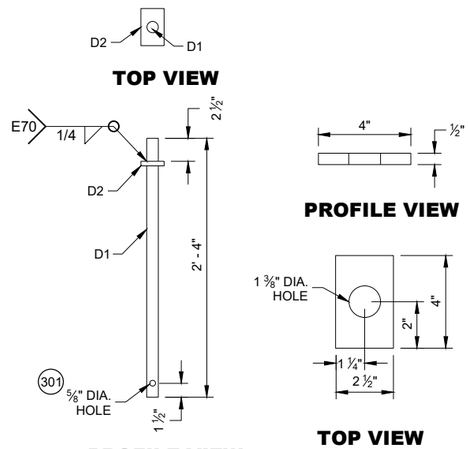

CONNECTOR PIN ASSEMBLY

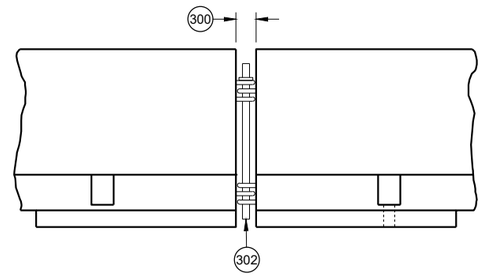

CONNECTING TEMPORARY BARRIER SECTIONS

GENERAL NOTES

300 SET WITH 3 ⅝" WOOD BLOCK.

301 HOLE IS OPTIONAL.

302 CONNECTOR PIN ASSEMBLY.

303 CONCRETE PAVEMENT, APPROACH SLAB, OR DECK.

304 CONCRETE DECK.

305 DO NOT USE ON CONCRETE BRIDGE DECK WITH ASPHALT OVERLAY OR CONCRETE PAVEMENT WITH ASPHALT OVERLAY.

306 MINIMUM OF 2" OF ASPHALT.

307 ASPHALT ANCHOR PIN ASSEMBLY

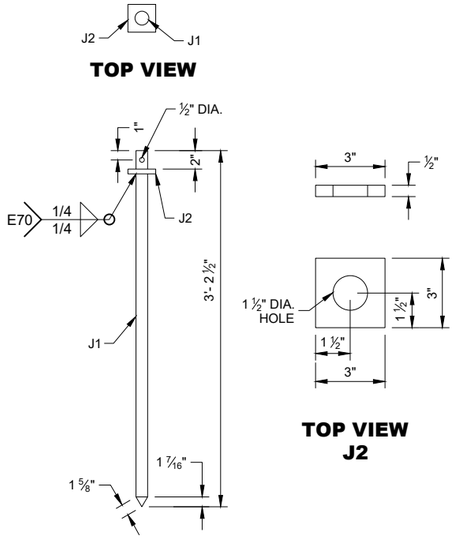

PROFILE VIEW

ASPHALT ANCHOR PIN ASSEMBLY

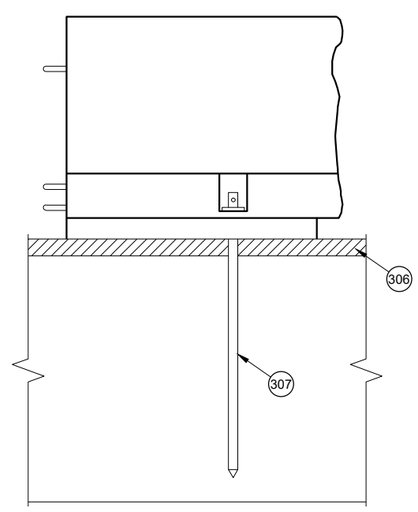

SIDE VIEW

ASPHALT ANCHOR INSTALLATION

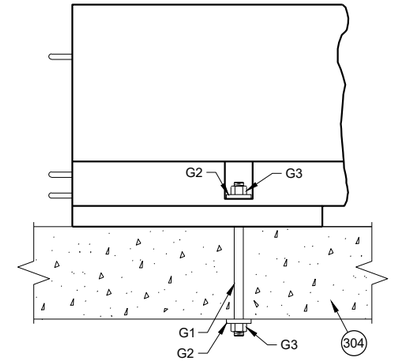

SIDE VIEW

THROUGH BOLT ANCHOR INSTALLATION 305

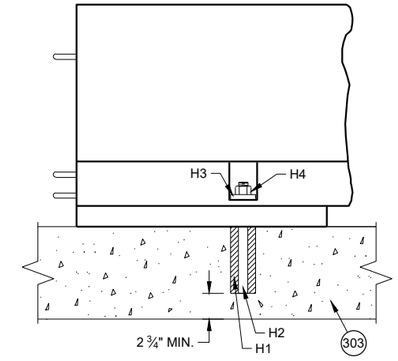

SIDE VIEW

ADHESIVE ANCHOR INSTALLATION 305

6

6

SDD 14B07 - 16c

SDD 14B07 - 16c

CONCRETE BARRIER TEMPORARY PRECAST, 12' - 6"

STATE OF WISCONSIN
DEPARTMENT OF TRANSPORTAT

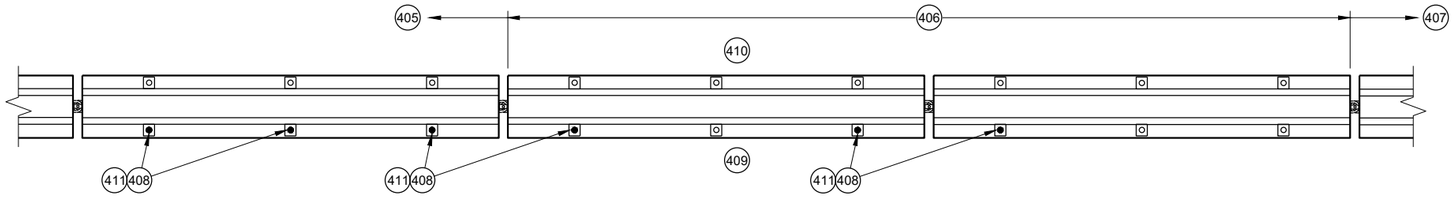

PLAN VIEW

TRANSITION FROM FREE STANDING TO ANCHORED BARRIER

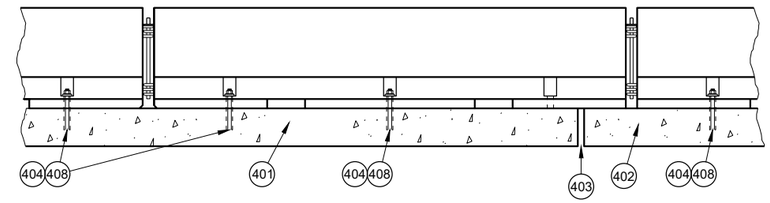

PROFILE VIEW

ANCHORED BARRIER NEAR EXPANSION JOINT (400)

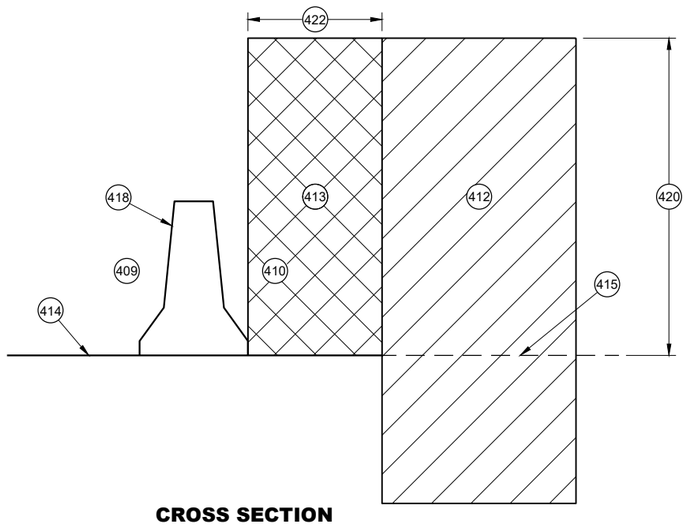

CROSS SECTION

FREE STANDING BARRIER

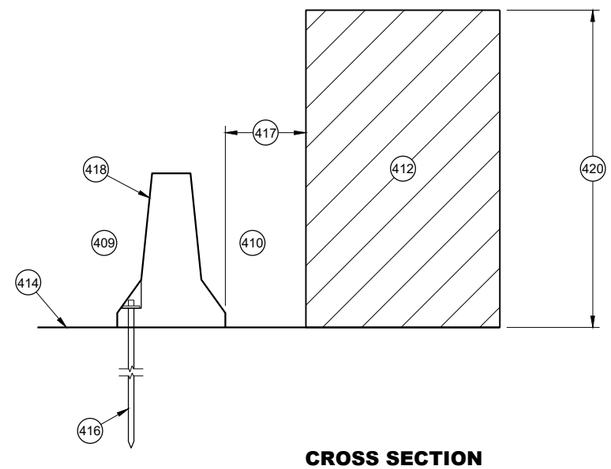

CROSS SECTION

ANCHORED BARRIER FOR OBJECTS ABOVE THE GRADE LINE AND NEAR THE BARRIER

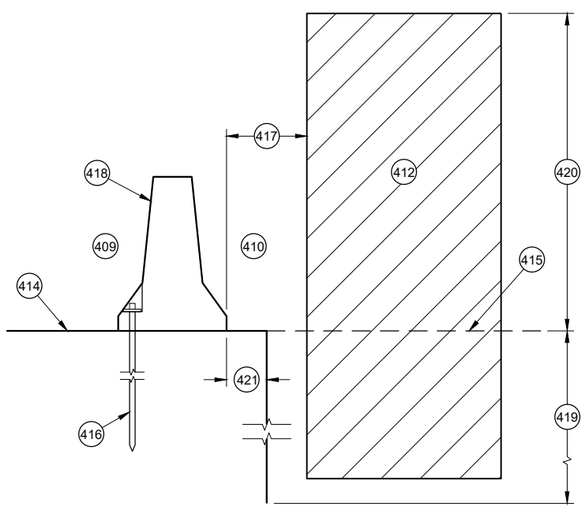

CROSS SECTION

ANCHORED BARRIER NEAR VERTICAL DROP OFF

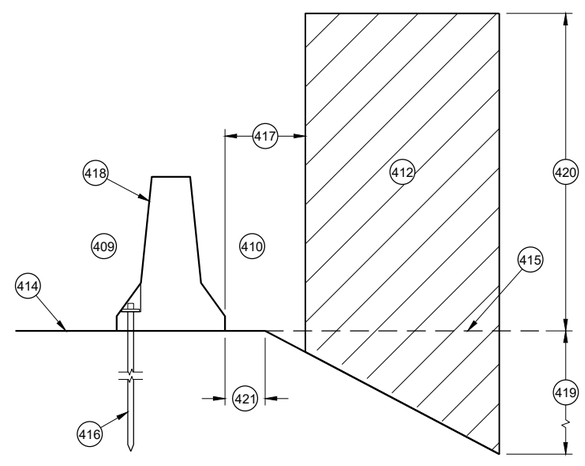

CROSS SECTION

ANCHORED BARRIER NEAR A SLOPE

GENERAL NOTES

(400) NO SINGLE CONCRETE BARRIER SECTION SHALL BE ANCHORED TO BOTH THE BRIDGE DECK AND THE APPROACH SLAB. ALL ANCHOR BOLT LOCATIONS SHALL BE ANCHORED TO THE DECK IN ACCORDANCE WITH THE DETAIL. NO MORE THAN ONE ANCHOR BOLT SHALL BE ELIMINATED FROM A BARRIER SECTION WHEN SPANNING AN EXPANSION JOINT.

(401) CONCRETE DECK

(402) CONCRETE DECK OR APPROACH SLAB.

(403) EXPANSION JOINT

(404) ADHESIVE ANCHOR SHOWN. SEE ANCHOR DETAILS.

(405) ANCHORED TEMPORARY BARRIER

(406) TRANSITION FROM ANCHORED TEMPORARY BARRIER TO FREE STANDING

(407) FREE STANDING BARRIER

(408) REMOVE ALL ANCHORS WHEN NO LONGER NEEDED. FILL CONCRETE PAVEMENTS, DECKS AND APPROACH SLABS WITH NON-SHRINK COMMERCIAL GROUT FROM THE APPROVED PRODUCT LIST. FILL ASPHALT PAVEMENTS WITH ASTM D6690 TYPE II RUBBERIZED CRACK FILLER.

(409) TRAFFIC SIDE

(410) NON-TRAFFIC SIDE

(411) ANCHOR LOCATION. SEE ANCHORING DETAILS.

(412) WORK AREA

(413) AREA FREE OF OBJECTS AND WORKERS

(414) GRADE LINE

(415) EXTENDED GRADE LINE

(416) ANCHORED TEMPORARY BARRIER. SEE BOLT THROUGH DECK, REMOVABLE ADHESIVE ANCHOR, OR AN ASPHALT ANCHOR ROD DETAILS FOR MORE INFORMATION. ASPHALT ANCHOR ROD SHOWN.

(417) WHEN OBJECTS EXTEND ABOVE THE GRADE. A MINIMUM OF 1 FOOT IS REQUIRED FROM BACK OF BARRIER TO OBJECT.

(418) OBJECTS ARE NOT TO BE PLACED ON, MOUNTED TO, OR ALLOWED TO LEAN AGAINST THE BARRIER WITHOUT WRITTEN PERMISSION OF THE PROJECT ENGINEER.

(419) DEPTHS OF 3 FEET OR MORE.

(420) Y = 6.5'

(421) OFFSET FROM BACK OF BARRIER EDGE:

CONCRETE PAVEMENT	0.5'
ASPHALT	0.5'

(422) POSTED SPEED (MPH):

45 OR GREATER	4.0'
40 OR LOWER	2.0'

CONCRETE BARRIER TEMPORARY PRECAST, 12' - 6"

STATE OF WISCONSIN
DEPARTMENT OF TRANSPORTATION

6

SDD 14B07 - 16d

GENERAL NOTES

500 EXISTING RIGID BARRIERS (VARIES)

501 TEMPORARY BARRIER

502 SEE OTHER DETAIL ON HOW TO ANCHOR TEMPORARY BARRIER (BARRIER ASPHALT ANCHOR SHOWN).

503 ANCHORS ARE REQUIRED ON BOTH SIDE OF THE TEMPORARY BARRIER.

504 NESTED RAILS ARE REQUIRED ON BOTH SIDES OF THE TEMPORARY BARRIER FOR ALL INSTALLATIONS.

505 TRAFFIC TRAVELS FROM PERMANENT BARRIER TO TEMPORARY BARRIER.

506 TRAFFIC TRAVELS FROM TEMPORARY BARRIER TO PERMANENT BARRIER.

507 VERTICAL BARRIER

508 SAFETY SHAPE BARRIER

509 SINGLE SLOPE BARRIER

510 CAP END PLATE PLACED FLUSH WITH UPSTREAM END OF RIGID BARRIER.

511 BENT THRIE BEAM TO FIT.

512 THRIE BEAM PIECES ARE OFFSET 15 ¼" TO PREVENT INTERFERENCE FROM THE ANCHORS ON OPPOSING SIDES.

513 TWO (2) P1, P2 AND P3 ARE REQUIRED

514 FIVE (5) N1, N2 AND N3 ARE REQUIRED

515 TWO (2) R1, R2 AND R3 ARE REQUIRED

516 CUT WOOD BLOCK TO FIT.

517 SEE THRIE BEAM RAIL TERMINAL CONNECTOR DETAIL ASSEMBLY.

518 CAP ASSEMBLY

519 4" MAX. GAP BETWEEN TEMPORARY BARRIER AND RIGID BARRIER.

520 ALL TWELVE SPLICE HOLES REQUIRE M1 AND M2

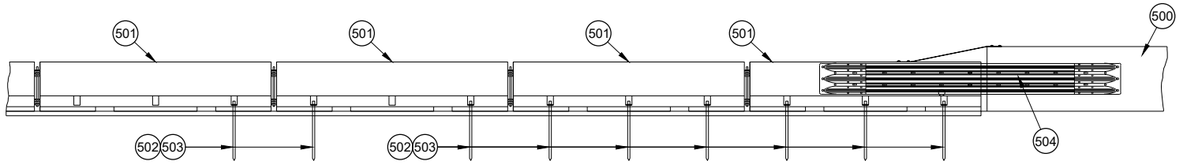

PROFILE VIEW

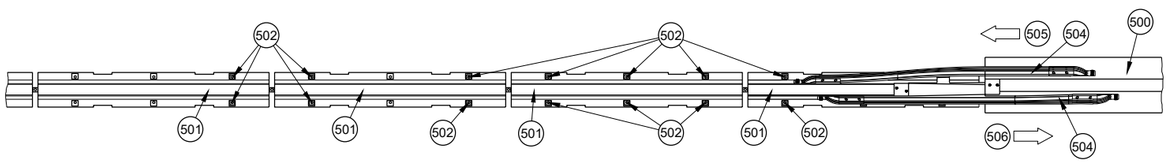

PLAN VIEW
TRANSITION TO RIGID BARRIER

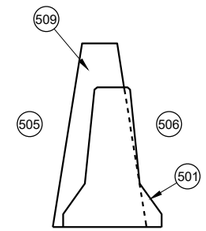

CROSS SECTION TEMPORARY BARRIER PLACEMENT SINGLE SLOPE

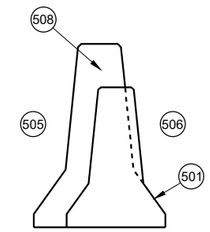

CROSS SECTION TEMPORARY BARRIER PLACEMENT SAFETY SHAPE

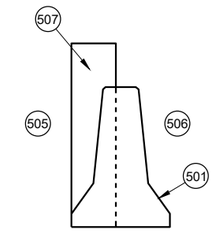

CROSS SECTION TEMPORARY BARRIER PLACEMENT VERTICAL

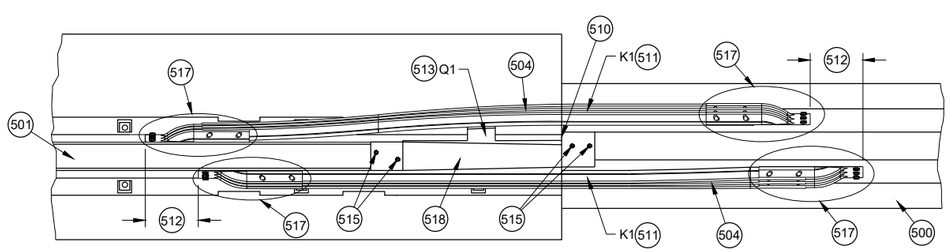

PLAN DETAIL VIEW
TRANSITION TO RIGID BARRIER

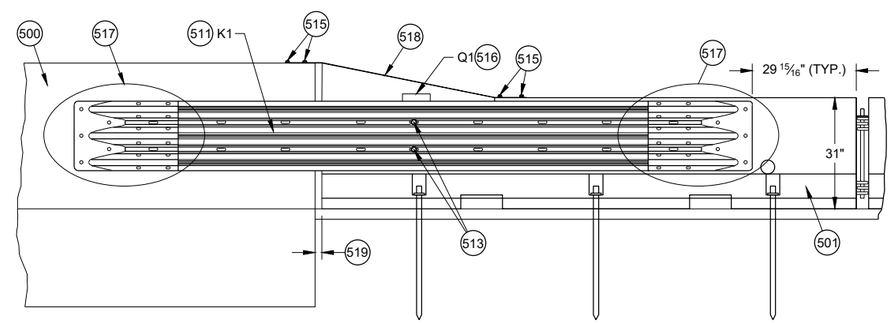

BACK DETAIL VIEW
TRANSITION TO RIGID BARRIER

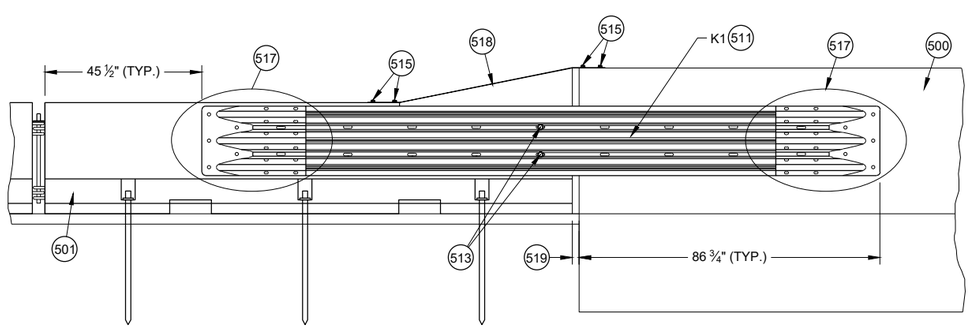

FRONT DETAIL VIEW
TRANSITION TO RIGID BARRIER

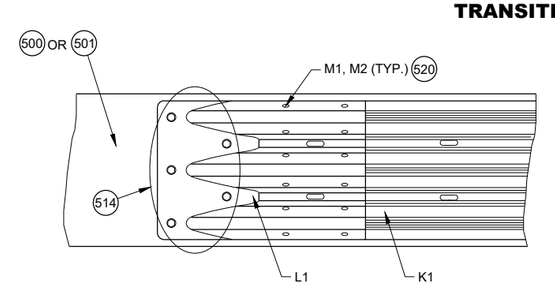

517 DETAIL PLAN VIEW
THRIE BEAM RAIL TERMINAL CONNECTOR ASSEMBLY

CONCRETE BARRIER TEMPORARY PRECAST, 12' - 6"

STATE OF WISCONSIN
DEPARTMENT OF TRANSPORTAT

6

SDD 14B07 - 16e

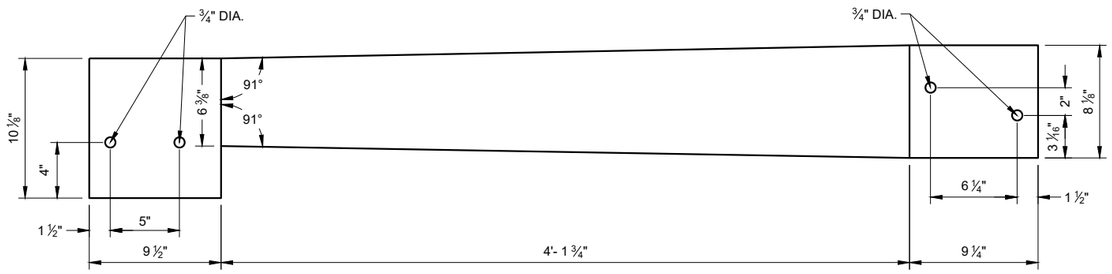

TOP VIEW
S1

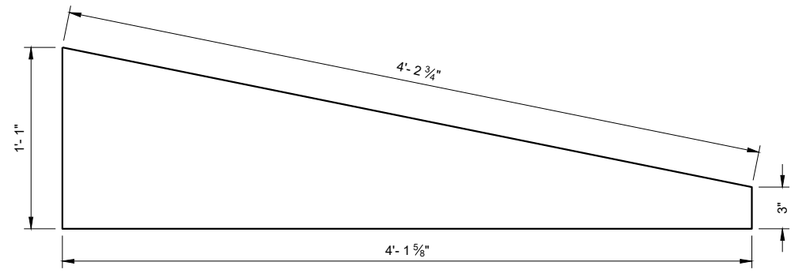

SIDE VIEW
S3

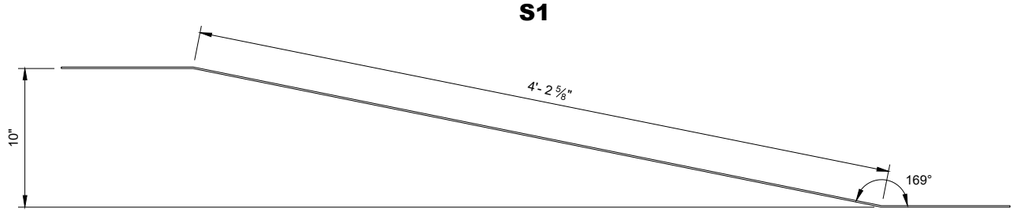

ELEVATION VIEW
S1

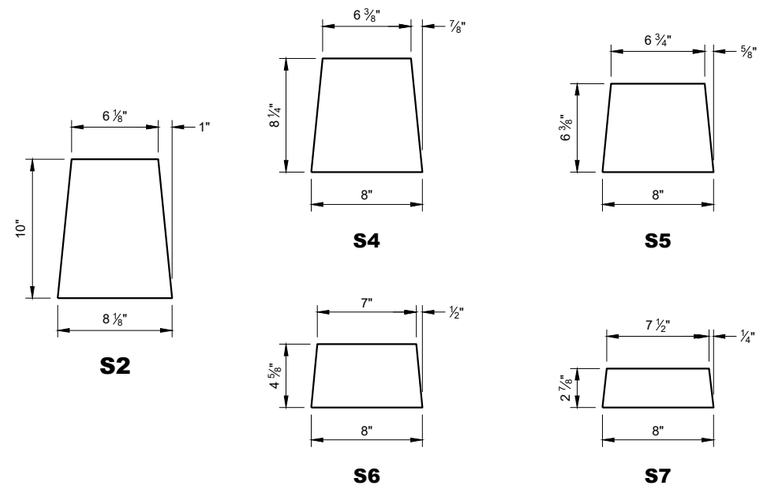

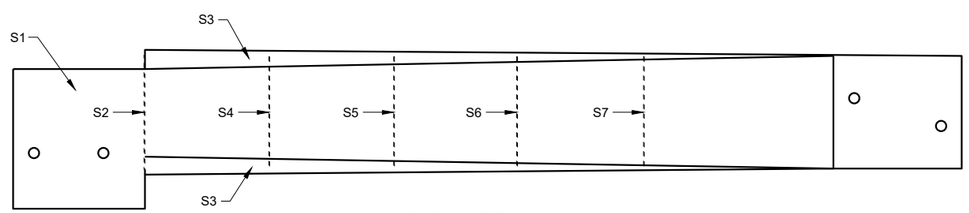

PLAN VIEW

GENERAL NOTES

STITCH WELD GUSSET PLATES AND END PLATES ON THREE SIDES

STITCH WELD TWO SIDE PLATES TO TOP PLATE, END PLATE AND GUSSETS.

600 SIDE PLATES (S3) NOT SHOWN FOR CLARITY.

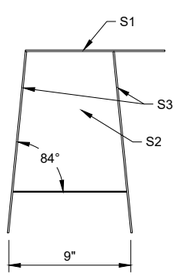

BACK VIEW

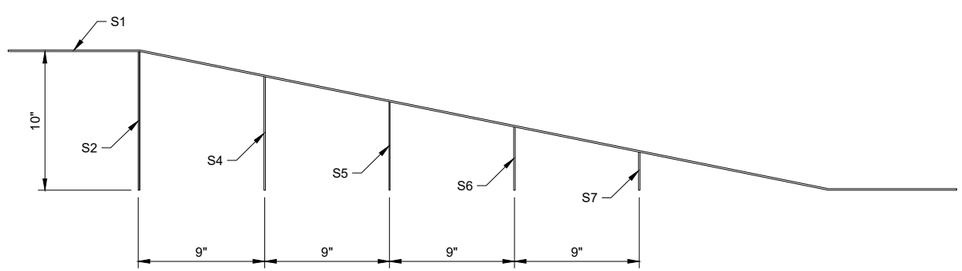

SIDE VIEW 600

42" TOP CAP ASSEMBLY

CONCRETE BARRIER TEMPORARY PRECAST, 12' - 6"

STATE OF WISCONSIN
DEPARTMENT OF TRANSPORTAT

6

SDD 14B07 - 16f

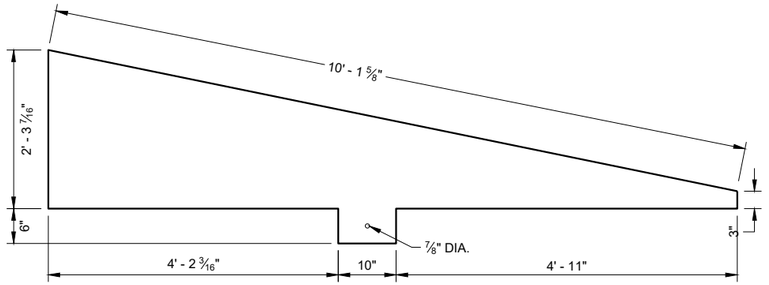

SIDE VIEW
T4

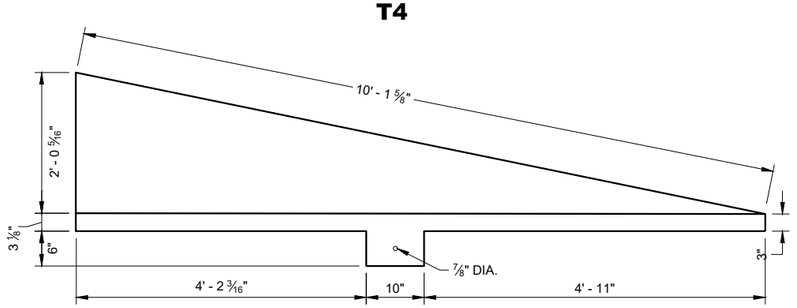

SIDE VIEW
T3

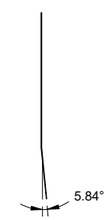

END VIEW

GENERAL NOTES

STITCH WELD GUSSET PLATES AND END PLATES ON THRIE SIDES

STITCH WELD TWO SIDE PLATES TO TOP PLATE, END PLATE AND GUSSETS.

SIDE PLATES, TOP PLATE, END PLATE AND GUSSETS ARE 12 GAUGE ASTM A36 GALVANIZED STEEL.

700 SIDE PLATES (T3 AND T4) NOT SHOWN FOR CLARITY.

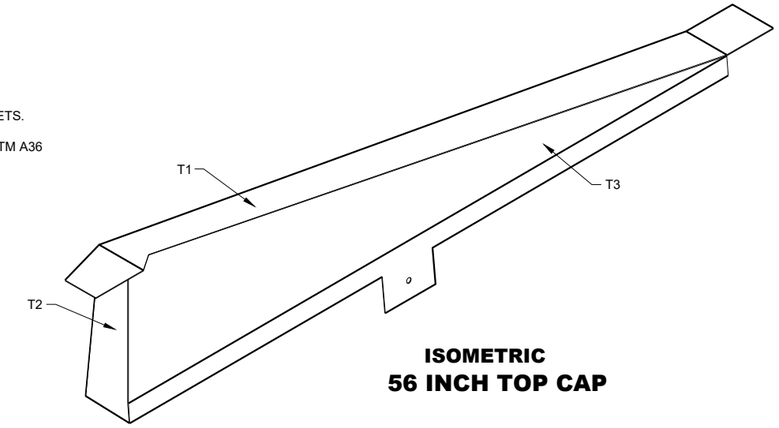

ISOMETRIC
56 INCH TOP CAP

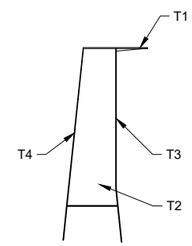

END VIEW
56 INCH TOP CAP

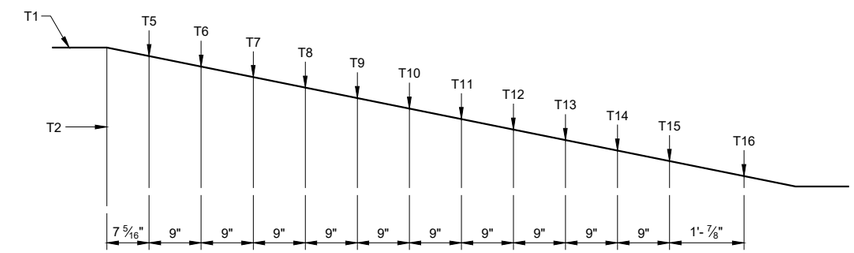

SIDE VIEW
56 INCH TOP CAP 700

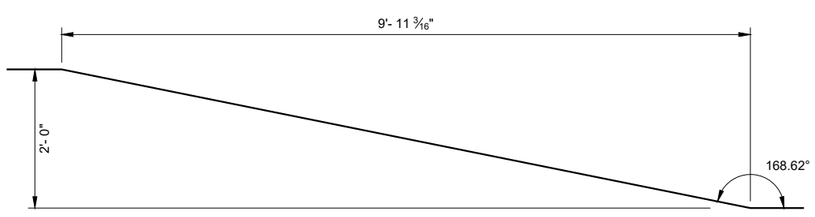

SIDE VIEW
TOP PLATE T1

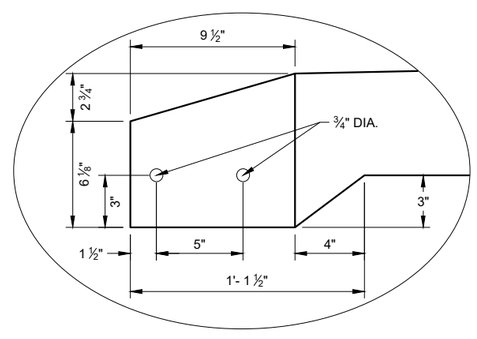

DETAIL "A"

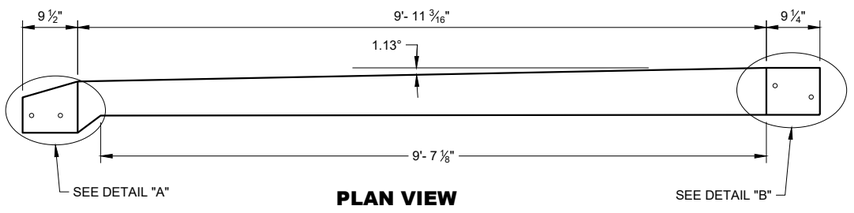

PLAN VIEW
TOP PLATE T1

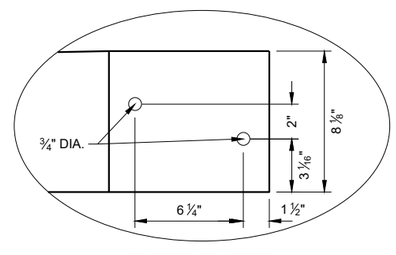

DETAIL "B"

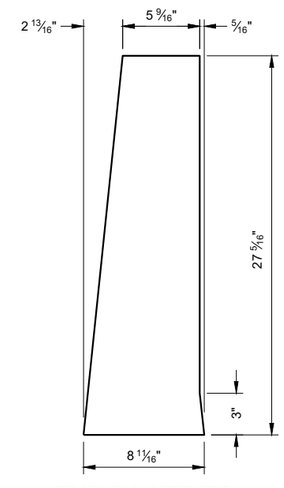

END PLATE T2

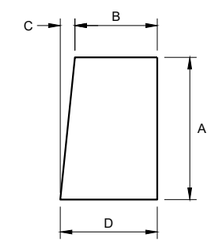

GUSSET PLATES
T5 - T16

GUSSET DIMENSIONS				
GUSSET NO.	A	B	C	D
T5	22 13/16"	5 11/16"	2 5/16"	8 1/16"
T6	21"	5 7/8"	2 3/16"	8 1/16"
T7	19 3/16"	6 1/16"	1 15/16"	8 1/16"
T8	17 3/8"	6 1/4"	1 13/16"	8 1/16"
T9	15 5/16"	6 7/16"	1 9/16"	8 1/16"
T10	13 3/4"	6 5/8"	1 7/16"	8 1/16"
T11	11 15/16"	6 13/16"	1 1/4"	8 1/16"
T12	10 1/8"	7"	1 1/16"	8 1/16"
T13	8 5/16"	7 3/16"	7/8"	8 1/16"
T14	6 1/2"	7 3/8"	11/16"	8 1/16"
T15	4 11/16"	7 9/16"	1/2"	8"
T16	2 7/8"	7 3/4"	1/4"	8"

CONCRETE BARRIER TEMPORARY PRECAST, 12' - 6"

STATE OF WISCONSIN
DEPARTMENT OF TRANSPORTATION

6

SDD 14B07 - 16g

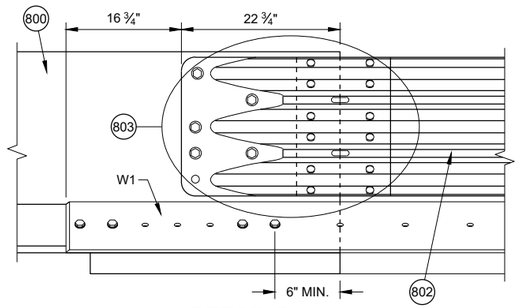

DETAIL D

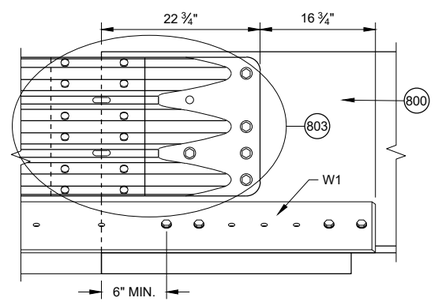

DETAIL E

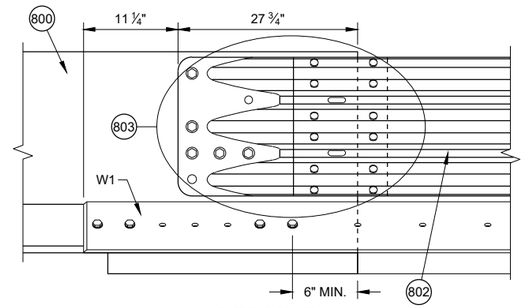

DETAIL F

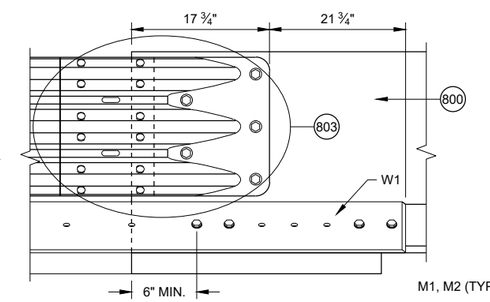

DETAIL G

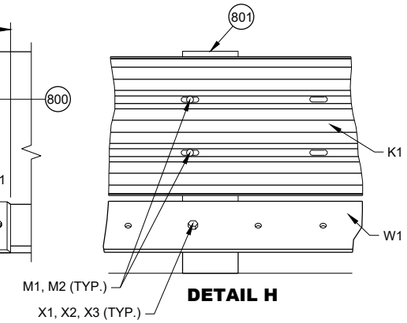

DETAIL H

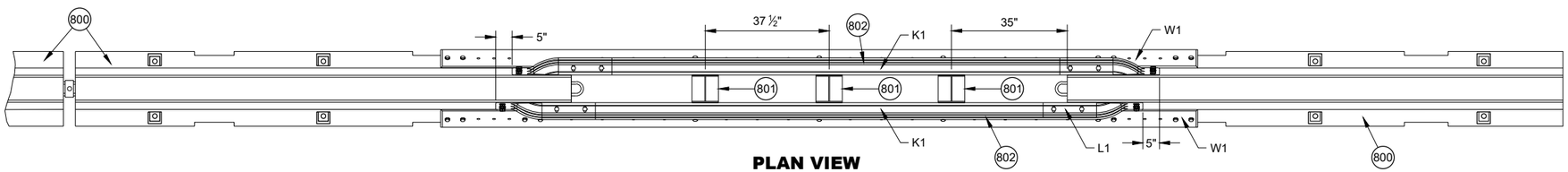

PLAN VIEW

GENERAL NOTES

(800) FREE STANDING TEMPORARY BARRIER

(801) GAP STIFFENER ASSEMBLY

(802) THRIE BEAMS ARE NESTED ON BOTH SIDES OF THE TEMPORARY BARRIER.

(803) SEE THRIE BEAM RAIL TERMINAL CONNECTOR DETAIL

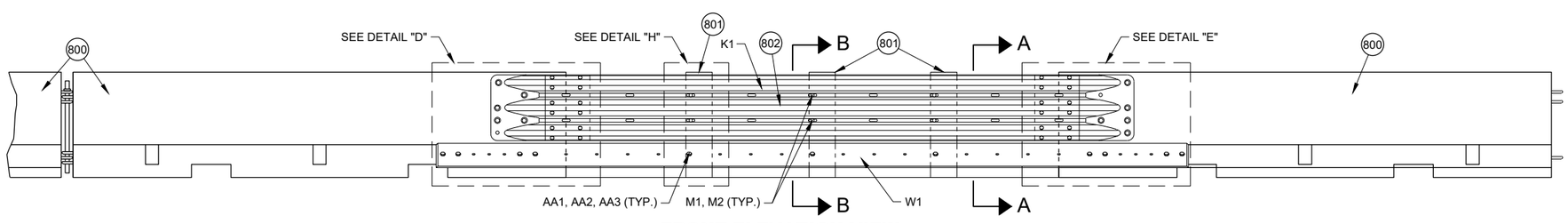

FRONT ELEVATION VIEW

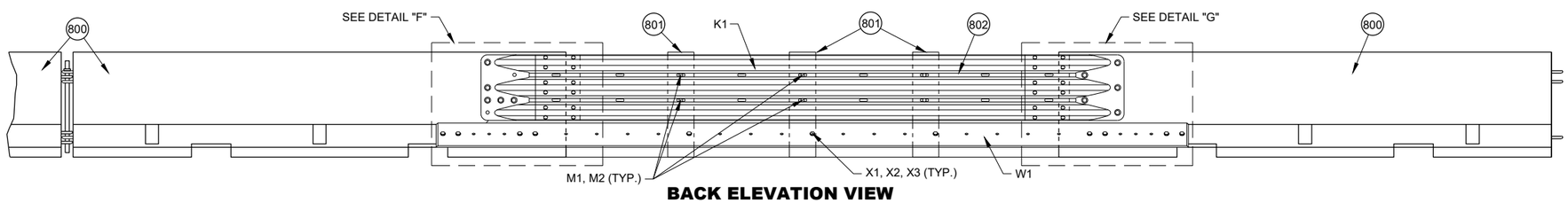

BACK ELEVATION VIEW

PORTABLE CONCRETE BARRIER GAP THRIE BEAM COVER

CONCRETE BARRIER TEMPORARY PRECAST, 12' - 6"

STATE OF WISCONSIN
DEPARTMENT OF TRANSPORTA

6

SDD 14B07 - 16h

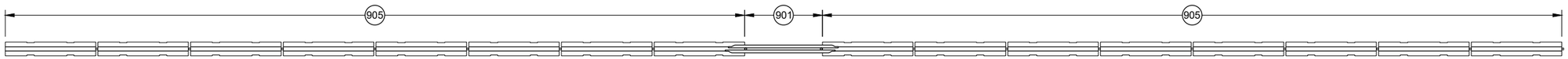

PLAN VIEW
GAP WITHIN SPACING

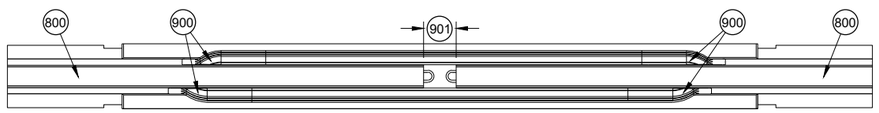

PLAN VIEW
TEMPORARY BARRIER GAP OVER 4" TO 1' MAX. 904

GENERAL NOTES

900 SEE OTHER DETAILS FOR TEMPORARY GAP HARDWARE (TYP.)

901 TEMPORARY BARRIER GAP

902 GAP STIFFENER ASSEMBLY CENTERED IN THE GAP.

903 GAP STIFFENER ASSEMBLY IS OFFSET 18 ¾" FROM CENTER

904 MINIMUM NUMBER OF GAP STIFFENERS SHOWN FOR THE GAP RANGE SHOWN.

905 MINIMUM OF 8 CONTINUOUS FREE STANDING TEMPORARY BARRIERS

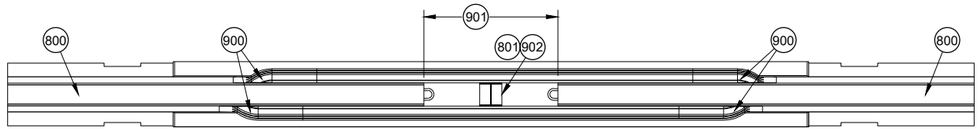

PLAN VIEW
TEMPORARY BARRIER GAP OVER 1' TO 4' MAX. 904

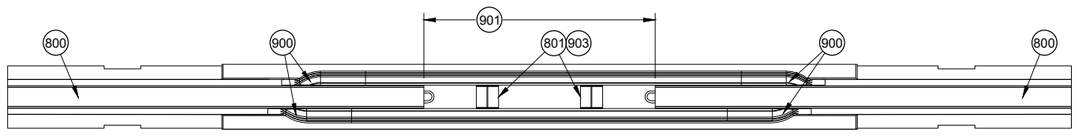

PLAN VIEW
TEMPORARY BARRIER GAP OVER 4' TO 7' MAX. 904

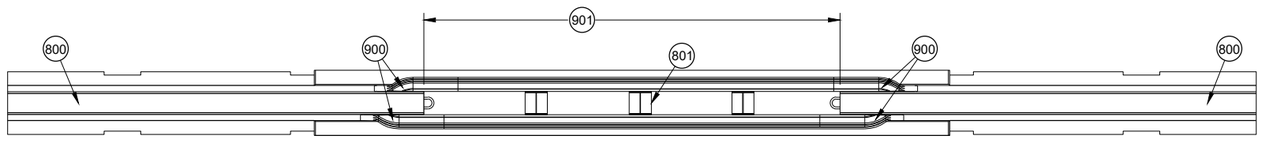

PLAN VIEW
TEMPORARY BARRIER GAP OVER 7' TO 12.5' MAX. 904

CONCRETE BARRIER TEMPORARY PRECAST, 12' - 6"

STATE OF WISCONSIN
DEPARTMENT OF TRANSPORTAT

6

SDD 14B07 - 16i

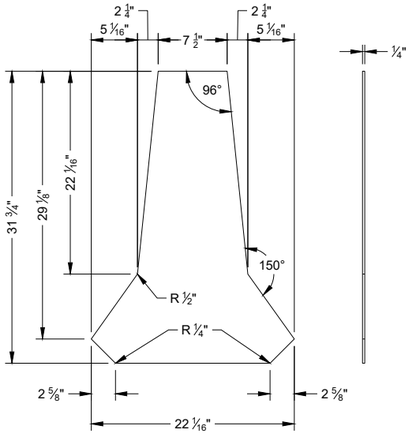

PROFILE VIEW

SIDE VIEW

STIFFENER ASSEMBLY CENTER PANEL U1

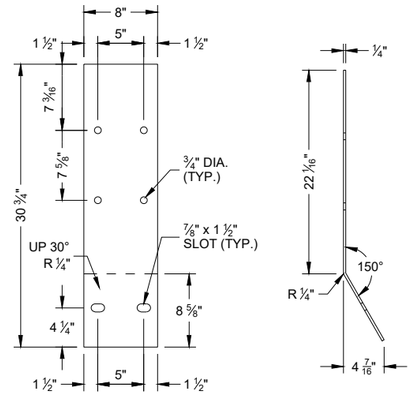

FLAT PATTERN

SIDE VIEW

STIFFENER ASSEMBLY SIDE PANEL U2

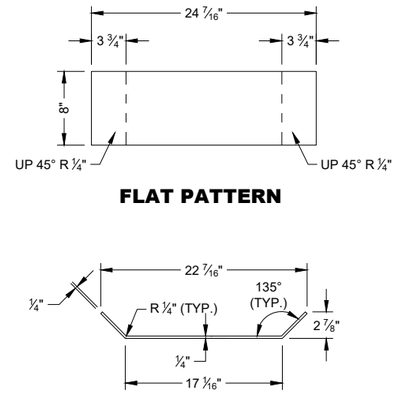

FLAT PATTERN

PROFILE VIEW

STIFFENER ASSEMBLY BOTTOM PANEL U3

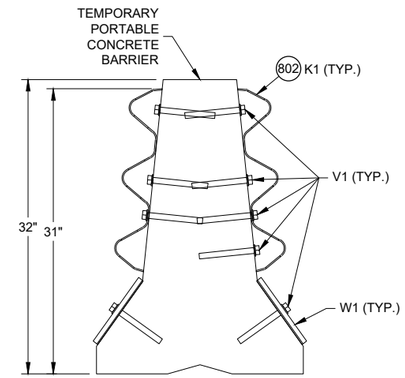

SECTION A - A

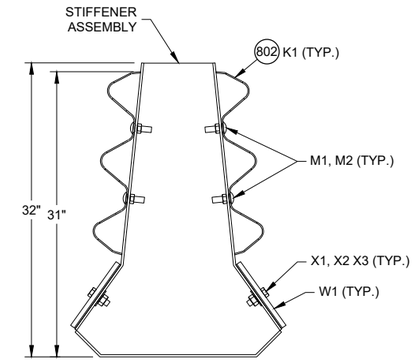

SECTION B - B

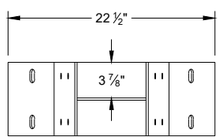

PLAN VIEW

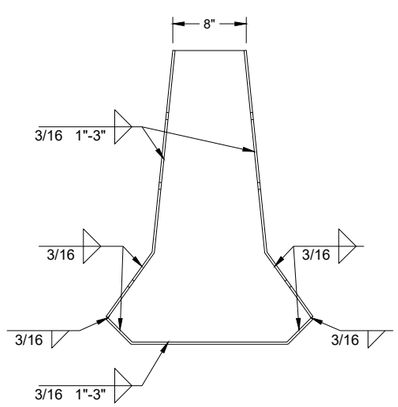

PROFILE VIEW

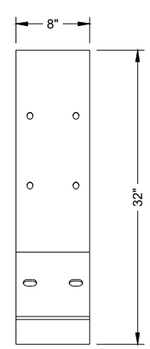

SIDE VIEW

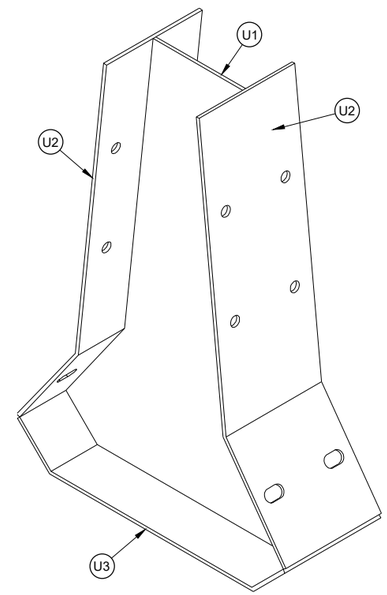

ISOMETRIC

GAP STIFFENER ASSEMBLY

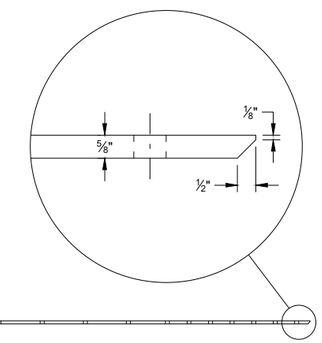

PLAN VIEW

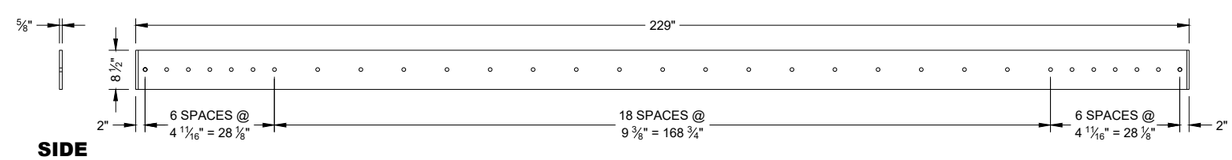

SIDE VIEW

ELEVATION VIEW

W1 TOE PLATE

6

6

SDD 14B07 - 16j

SDD 14B07 - 16j

CONCRETE BARRIER TEMPORARY PRECAST, 12' - 6"

STATE OF WISCONSIN
DEPARTMENT OF TRANSPORTAT

GENERAL NOTES

(1100) 1" DIA. HOLE

(1101) ¾" DIA. HOLE

(1102) PROVIDE HOLES IN THRIE BEAM TERMINAL CONNECTOR TO LIMIT STEEL REINFORCEMENT OR LOOP BAR CONFLICT. CONTRACTOR MAY FIELD DRILL ADDITIONAL HOLE OR PROVIDE THRIE BEAM TERMINAL CONNECTOR WITH ADDITIONAL HOLES FROM SUPPLIER.

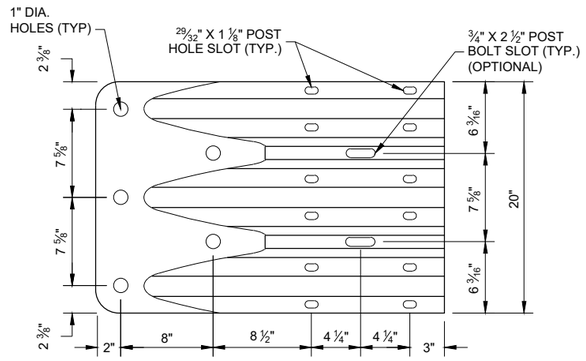

ELEVATION VIEW

THRIE BEAM TERMINAL CONNECTOR

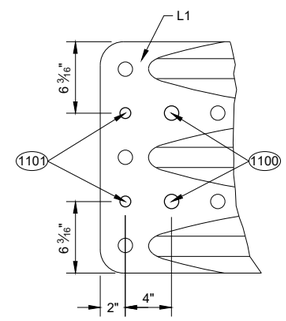

ELEVATION VIEW

ADDITIONAL THRIE BEAM (1102) TERMINAL CONNECTOR HOLE DETAIL

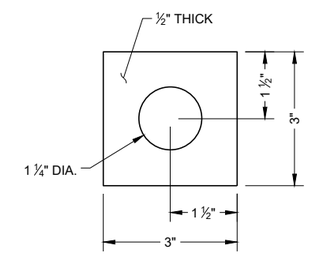

PLATE WASHER DETAIL G2, H3

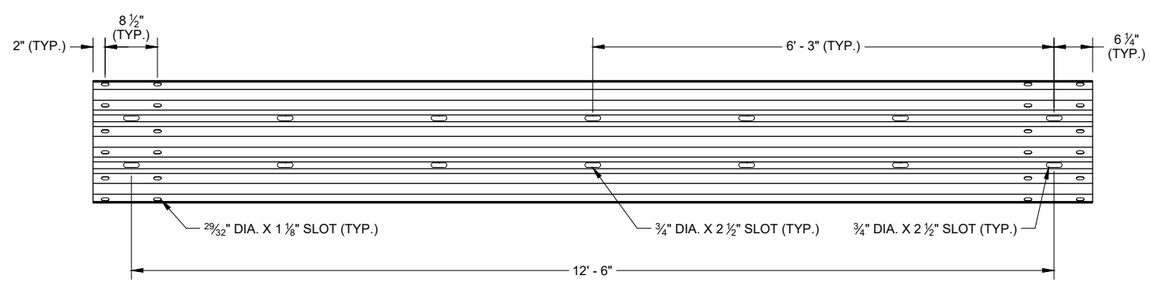

SLOTTED THRIE BEAM RAIL K1

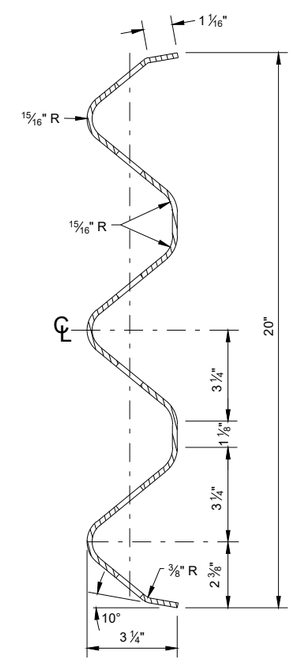

SECTION THROUGH BEAM K1

CONCRETE BARRIER TEMPORARY PRECAST, 12' - 6"

STATE OF WISCONSIN
DEPARTMENT OF TRANSPORTAT

6

SDD 14B07 - 16k

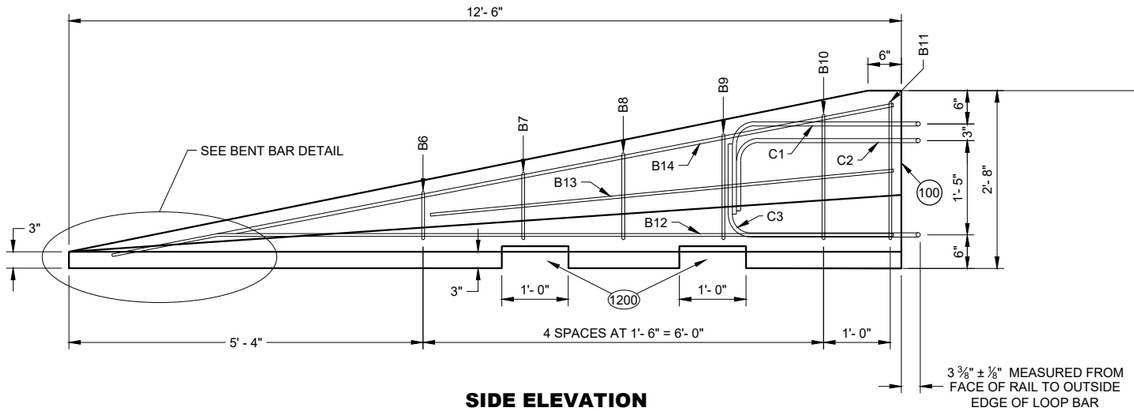

SIDE ELEVATION
(FOR CONNECTION TO LEFT END OF BARRIER)

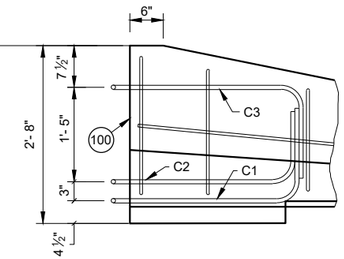

SIDE ELEVATION
LOOP BAR ASSEMBLY INVERTED FOR OPPOSITE END
(FOR CONNECTION TO RIGHT END OF BARRIER)

GENERAL NOTES

1200 SEE LIFTING SLOT DETAIL. LOCATION OF LIFTING SLOTS DETERMINED BY CONTRACTOR.

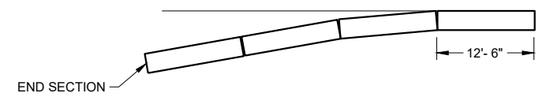

FLARE AT BARRIER END

POSTED SPEED, (MPH)	FLARE RATE
40 OR LESS	6:1
45 OR GREATER	8:1

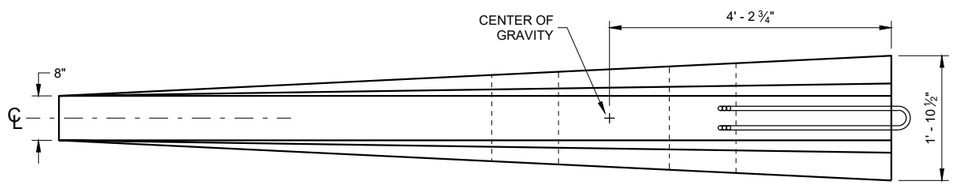

PLAN VIEW

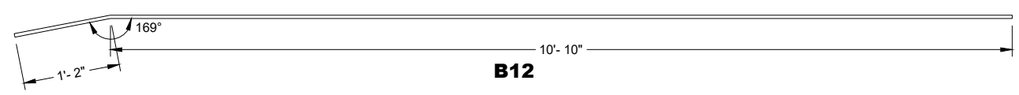

B12

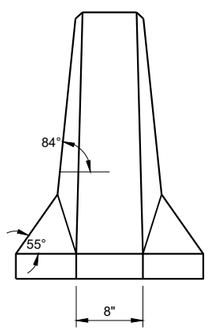

FRONT ELEVATION

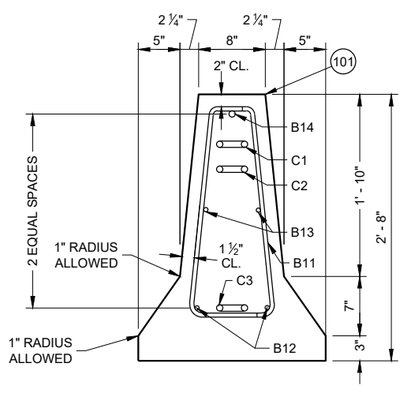

END SECTION

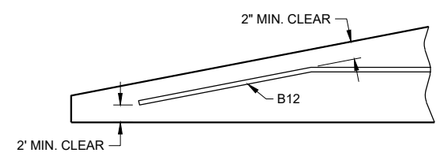

BENT BAR DETAIL

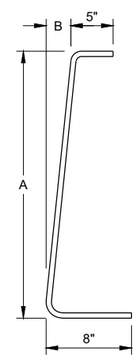

BAR	A	B
B6	10"	1"
B7	1'- 1"	1 1/4"
B8	1'- 5"	1 5/8"
B9	1'- 8"	1 7/8"
B10	2'- 0 1/2"	2 3/8"
B11	2'- 3"	2 3/4"

B BARS
2 OF EACH SIZE REQUIRED FOR STIRRUP ASSEMBLY

DETAILS OF BARRIER TAPER SECTION

CONCRETE BARRIER TEMPORARY PRECAST, 12' - 6"

STATE OF WISCONSIN
DEPARTMENT OF TRANSPORTAT 230

6

6

SDD 14B07 - 16I

SDD 14B07 - 16I

BILL OF MATERIALS - CONCRETE BARRIER PRECAST

PART	DESCRIPTION	MATERIALS SPECIFICATIONS	NOTES
A1	PRECAST TEMPORARY BARRIER - CONCRETE	MIN. = f'c 5000 PSI	
B1	REBAR	STANDARD SPEC. 505.2 GRADE 60 UNCOATED REBAR	#5 REBAR, LENGTH 12'-2"
B2	REBAR	STANDARD SPEC. 505.2 GRADE 60 UNCOATED REBAR	#4 REBAR, LENGTH 12'-2"
B3	REBAR	STANDARD SPEC. 505.2 GRADE 60 UNCOATED REBAR	#5 REBAR, LENGTH 12'-2"
B4	REBAR	STANDARD SPEC. 505.2 GRADE 60 UNCOATED REBAR	#4 REBAR, LENGTH 6'-0"
B5	REBAR	STANDARD SPEC. 505.2 GRADE 60 UNCOATED REBAR	#6 REBAR, LENGTH 2'-11"
B6	REBAR	STANDARD SPEC. 505.2 GRADE 60 UNCOATED REBAR	#4 REBAR, LENGTH 1'-11"
B7	REBAR	STANDARD SPEC. 505.2 GRADE 60 UNCOATED REBAR	#4 REBAR, LENGTH 2'-2"
B8	REBAR	STANDARD SPEC. 505.2 GRADE 60 UNCOATED REBAR	#4 REBAR, LENGTH 2'-6"
B9	REBAR	STANDARD SPEC. 505.2 GRADE 60 UNCOATED REBAR	#4 REBAR, LENGTH 2'-9"
B10	REBAR	STANDARD SPEC. 505.2 GRADE 60 UNCOATED REBAR	#4 REBAR, LENGTH 3'-2"
B11	REBAR	STANDARD SPEC. 505.2 GRADE 60 UNCOATED REBAR	#4 REBAR, LENGTH 3'-4"
B12	REBAR	STANDARD SPEC. 505.2 GRADE 60 UNCOATED REBAR	#4 REBAR, LENGTH 12'-0"
B13	REBAR	STANDARD SPEC. 505.2 GRADE 60 UNCOATED REBAR	#4 REBAR, LENGTH 7'-9"
B14	REBAR	STANDARD SPEC. 505.2 GRADE 60 UNCOATED REBAR	#5 REBAR, LENGTH 11'-9"
C1	LOOP BAR	ASTM A709 GRADE 70 SMOOTH BAR OR ASTM A706 GRADE 60 REBAR UNCOATED	¾" DIA.
C2	LOOP BAR	ASTM A709 GRADE 70 SMOOTH BAR OR ASTM A706 GRADE 60 REBAR UNCOATED	¾" DIA.
C3	LOOP BAR	ASTM A709 GRADE 70 SMOOTH BAR OR ASTM A706 GRADE 60 REBAR UNCOATED	¾" DIA.
D1	CONNECTION PIN - ROD	ASTM A36 MIN. STRENGTH 36 KSI / ASTM A529 MAX. STRENGTH 50 KSI / ASTM A572 MAX STRENGTH 50 KSI / ASTM A709 MAX STRENGTH 50 KSI / ASTM A992 MAX STRENGTH 50 KSI	1 ¼" DIA.
D2	CONNECTION PIN - TOP PLATE	ASTM A36 MIN. STRENGTH 36 KSI / ASTM A529 MAX. STRENGTH 50 KSI / ASTM A572 MAX STRENGTH 50 KSI / ASTM A709 MAX STRENGTH 50 KSI / ASTM A992 MAX STRENGTH 50 KSI	
G1	BOLT THROUGH ANCHOR - THREADED ROD	HOT DIP AASHTO M232 CLASS / ASTM A153 CLASS C / ASTM F2329 C OR MECHANICAL GALVANIZE TO AASHTO M298 CLASS 55 TYPE 2 / ASTM B695 CLASS 55 TYPE 2 A307 GRADE A OR SAE J429 GRADE 2 UNC	1 ⅛" DIA.
G2	BOLT THROUGH ANCHOR - WASHER, SQUARE	ASTM A36 MIN. STRENGTH 36 KSI / ASTM A529 MAX. STRENGTH 50 KSI / ASTM A572 MAX STRENGTH 50 KSI / ASTM A709 MAX STRENGTH 50 KSI / ASTM A992 MAX STRENGTH 50 KSI	
G3	BOLT THROUGH ANCHOR - NUT	HOT DIP AASHTO M232 CLASS / ASTM A153 CLASS C / ASTM F2329 C OR MECHANICAL GALVANIZE TO AASHTO M298 CLASS 55 TYPE 2 / ASTM B695 CLASS 55 UNC OVER TAP NUTS AS SPECIFIED IN AASHTO 291 / ASTM A 563 HEAVY HEX HEAD ASTM A563DH OR SAE J995 GRADE 5	
H1	ADHESIVE ANCHOR - ADHESIVE	ICC-ES-AC308 5 ¼" EMBEDMENT WITH A MIN. STRENGTH OF 1,800 PSI. SEE 603.2 AND 603.3.1.2 OF THE WISCONSIN STANDARD SPECIFICATIONS FOR MORE INFORMATION ON ADHESIVE ANCHORS.	
H2	ADHESIVE ANCHOR - THREADED ROD	HOT DIP AASHTO M232 CLASS / ASTM A153 CLASS C / ASTM F2329 C OR MECHANICAL GALVANIZE TO AASHTO M298 CLASS 55 TYPE 2 / ASTM B695 CLASS 55 TYPE 2 A307 GRADE A / SAE J429 GRADE 2 UNC	1 ⅛" DIA.
H3	ADHESIVE ANCHOR - WASHER, SQUARE	ASTM A36 MIN. STRENGTH 36 KSI / ASTM A529 MAX. STRENGTH 50 KSI / ASTM A572 MAX STRENGTH 50 KSI / ASTM A709 MAX STRENGTH 50 KSI / ASTM A992 MAX STRENGTH 50 KSI	
H4	ADHESIVE ANCHOR - NUT	HOT DIP AASHTO M232 CLASS / ASTM A153 CLASS C / ASTM F2329 C OR MECHANICAL GALVANIZE TO AASHTO M298 CLASS 55 TYPE 2 / ASTM B695 CLASS 55 UNC OVER TAP NUTS AS SPECIFIED IN AASHTO 291 / ASTM A 563 HEAVY HEX HEAD ASTM A563DH OR SAE J995 GRADE 5	
J1	ASPHALT ANCHOR PIN - ROD	ASTM A36 MIN. STRENGTH 36 KSI / ASTM A529 MAX. STRENGTH 50 KSI / ASTM A572 MAX STRENGTH 50 KSI / ASTM A709 MAX STRENGTH 50 KSI / ASTM A992 MAX STRENGTH 50 KSI	1 ½" DIA.
J2	ASPHALT ANCHOR PIN - STOP PLATE	ASTM A36 MIN. STRENGTH 36 KSI / ASTM A529 MAX. STRENGTH 50 KSI / ASTM A572 MAX STRENGTH 50 KSI / ASTM A709 MAX STRENGTH 50 KSI / ASTM A992 MAX STRENGTH 50 KSI	
K1	THRIE BEAM RAIL	AASHTO M180 CLASS A TYPE 2 APPROVED PRODUCER	12 GAUGE
L1	THRIE BEAM RAIL - TERMINAL	AASHTO M180 CLASS A TYPE 2 APPROVED PRODUCER	12 GAUGE

PART	DESCRIPTION	MATERIALS SPECIFICATIONS	NOTES
M1	SPLICE BOLT	HOT DIP AASHTO M232 CLASS / ASTM A153 CLASS C / ASTM F2329 C OR MECHANICAL GAL. TO AASHTO M298 CLASS 55 TYPE 2 / ASTM B695 CLASS 55 TYPE 2 UNC AASHTO M180 HEAD ASTM A307 GRADE B OR SAE J429 GRADE 2 OR ASTM F1554 GRADE 36	⅝" DIA.
M2	SPLICE BOLT - NUT	HOT DIP AASHTO M232 CLASS / ASTM A153 CLASS C / ASTM F2329 C OR MECHANICAL GALVANIZE TO AASHTO M298 CLASS 55 TYPE 2 / ASTM B695 CLASS 55 UNC OVER TAP NUTS AS SPECIFIED IN AASHTO 291 / ASTM A 563 AASHTO M180 RECESSED HEAVY HEX HEAD ASTM A563DH OR SAE J995 GRADE 5	
N1	THRIE BEAM RAIL TERMINAL - MECHANICAL ANCHOR	HOT DIP AASHTO M232 CLASS / ASTM A153 CLASS C / ASTM F2329 C OR MECHANICAL GALVANIZE TO AASHTO M298 CLASS 55 TYPE 2 / ASTM B695 CLASS 55 UNC OVER TAP NUTS AS SPECIFIED IN AASHTO 291 / ASTM A 563 AASHTO M180 RECESSED HEAVY HEX HEAD ASTM A563DH OR SAE J995 GRADE 5	¾" DIA. LENGTH 6"
N2	THRIE BEAM RAIL TERMINAL - WASHER	HOT DIP AASHTO M232 CLASS / ASTM A153 CLASS C / ASTM F2329 C OR MECHANICAL GALVANIZE TO AASHTO M298 CLASS 55 TYPE 2 / ASTM B695 CLASS 55 TYPE 2 F436 TYPE 1	
N3	THRIE BEAM RAIL TERMINAL MECHANICAL OR ADHESIVE ANCHOR	MINIMUM MECHANICAL OR ADHESIVE ANCHOR STRENGTH REQUIREMENTS: ULTIMATE TENSILE LOAD 17.9 KIPS AND ULTIMATE SHEAR LOAD 21.96 KIPS. SEE 603.2 AND 603.3.1.2 OF THE WISCONSIN STANDARD SPECIFICATIONS FOR MORE INFORMATION ON ADHESIVE ANCHORS.	
P1	THRIE BEAM RAIL CONNECTION 1-BOLT	HOT DIP AASHTO M232 CLASS / ASTM A153 CLASS C / ASTM F2329 C OR MECHANICAL GALVANIZE TO AASHTO M298 CLASS 55 TYPE 2 / ASTM B695 CLASS 55 UNC OVER TAP NUTS AS SPECIFIED IN AASHTO 291 / ASTM A 563 AASHTO M180 RECESSED HEAVY HEX HEAD ASTM A563DH OR SAE J995 GRADE 5	¾" DIA.
P2	THRIE BEAM RAIL CONNECTION 1-WASHER	HOT DIP AASHTO M232 CLASS / ASTM A153 CLASS C / ASTM F2329 C OR MECHANICAL GAL. TO AASHTO M298 CLASS 55 TYPE 2 / ASTM B695 CLASS 55 TYPE 2 F436 TYPE 1	
P3	THRIE BEAM RAIL CONNETION 1- MECHANICAL OR ADHESIVE ANCHOR	MINIMUM MECHANICAL OR ADHESIVE ANCHOR STRENGTH REQUIREMENTS: ULTIMATE TENSILE LOAD 9.48 KIPS AND ULTIMATE SHEAR LOAD 10.48 KIPS. SEE 603.2 AND 603.3.1.2 OF THE WISCONSIN STANDARD SPECIFICATIONS FOR MORE INFORMATION ON ADHESIVE ANCHORS.	
Q1	BLOCK WOOD	SEE STANDARD SPEC. 614	
R1	CAP - BOLT	HOT DIP AASHTO M232 CLASS / ASTM A153 CLASS C / ASTM F2329 C OR MECHANICAL GALVANIZE TO AASHTO M298 CLASS 55 TYPE 2 / ASTM B695 CLASS 55 UNC OVER TAP NUTS AS SPECIFIED IN AASHTO 291 / ASTM A 563 AASHTO M180 RECESSED HEAVY HEX HEAD ASTM A563DH OR SAE J995 GRADE 5	⅝" DIA.
R2	CAP- BOLT - WASHER	HOT DIP AASHTO M232 CLASS / ASTM A153 CLASS C / ASTM F2329 C OR MECHANICAL GAL. TO AASHTO M298 CLASS 55 TYPE 2 / ASTM B695 CLASS 55 TYPE 2 F436 TYPE 1	
R3	CAP - BOLT - MECHANICAL ANCHOR	MINIMUM MECHANICAL OR ADHESIVE ANCHOR STRENGTH REQUIREMENTS ULTIMATE TENSILE LOAD 12.14 KIPS AND ULTIMATE SHEAR LOAD 17.5 KIPS.SEE 603.2 AND 603.3.1.2 OF THE WISCONSIN STANDARD SPECIFICATIONS FOR MORE INFORMATION ON ADHESIVE ANCHORS.	12 GAUGE
S1	CAP 42-INCH TOP PLATE	AASHTO M111 / ASTM A123 ASTM A36 MIN. STRENGTH 36 KSI, OR ASTM A529 MAX. STRENGTH 50 KSI, OR ASTM A572 MAX. STRENGTH 50 KSI, OR ASTM A709 MAX. STRENGTH 50 KSI, OR ASTM A992 MAX. STRENGTH 50 KSI	12 GAUGE
S2	CAP 42-INCH END PLATE	AASHTO M111 / ASTM A123 ASTM A36 MIN. STRENGTH 36 KSI, OR ASTM A529 MAX. STRENGTH 50 KSI, OR ASTM A572 MAX. STRENGTH 50 KSI, OR ASTM A709 MAX. STRENGTH 50 KSI, OR ASTM A992 MAX. STRENGTH 50 KSI	12 GAUGE
S3	CAP 42-INCH SIDE PLATE	AASHTO M111 / ASTM A123 ASTM A36 MIN. STRENGTH 36 KSI, OR ASTM A529 MAX. STRENGTH 50 KSI, OR ASTM A572 MAX. STRENGTH 50 KSI, OR ASTM A709 MAX. STRENGTH 50 KSI, OR ASTM A992 MAX. STRENGTH 50 KSI	12 GAUGE
S4	CAP 42-INCH GUSSET 1	AASHTO M111 / ASTM A123 ASTM A36 MIN. STRENGTH 36 KSI, OR ASTM A529 MAX. STRENGTH 50 KSI, OR ASTM A572 MAX. STRENGTH 50 KSI, OR ASTM A709 MAX. STRENGTH 50 KSI, OR ASTM A992 MAX. STRENGTH 50 KSI	12 GAUGE
S5	CAP 42-INCH GUSSET 2	AASHTO M111 / ASTM A123 ASTM A36 MIN. STRENGTH 36 KSI, OR ASTM A529 MAX. STRENGTH 50 KSI, OR ASTM A572 MAX. STRENGTH 50 KSI, OR ASTM A709 MAX. STRENGTH 50 KSI, OR ASTM A992 MAX. STRENGTH 50 KSI	12 GAUGE
S6	CAP 42-INCH GUSSET 3	AASHTO M111 / ASTM A123 ASTM A36 MIN. STRENGTH 36 KSI, OR ASTM A529 MAX. STRENGTH 50 KSI, OR ASTM A572 MAX. STRENGTH 50 KSI, OR ASTM A709 MAX. STRENGTH 50 KSI, OR ASTM A992 MAX. STRENGTH 50 KSI	12 GAUGE
S7	CAP 42-INCH GUSSET 4	AASHTO M111 / ASTM A123 ASTM A36 MIN. STRENGTH 36 KSI, OR ASTM A529 MAX. STRENGTH 50 KSI, OR ASTM A572 MAX. STRENGTH 50 KSI, OR ASTM A709 MAX. STRENGTH 50 KSI, OR ASTM A992 MAX. STRENGTH 50 KSI	12 GAUGE

6

SDD14B07 - 16m

MIDWEST GUARDRAIL SYSTEM (MGS) TYPE 2 TERMINAL

STATE OF WISCONSIN
DEPARTMENT OF TRANSPORTAT

6

SDD14B07 - 16m

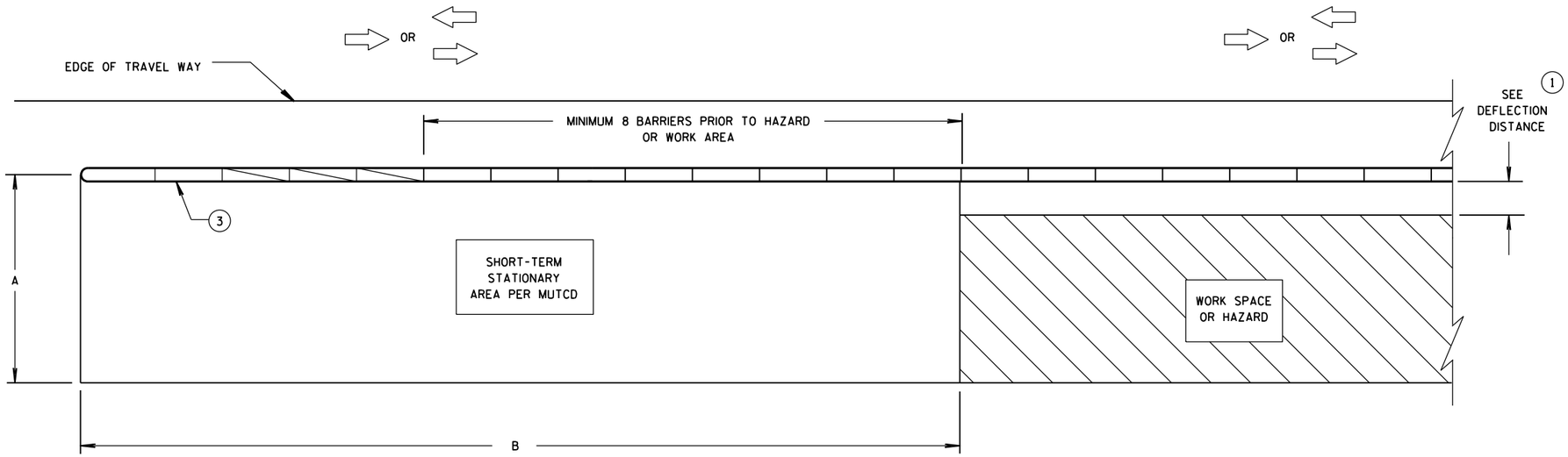

CRASH CUSHION/SAND BARREL ARRAY AND TEMPORARY BARRIER INSTALLATION FOR TRAFFIC ON ONE SIDE OF BARRIER

DIMENSION A TABLE (2)

FACILITY	POSTED SPEED MPH	DIMENSION A MIN. FT	DIMENSION A MAX. FT
FREEWAY/EXPRESSWAY	ALL	15	20
NON-FREEWAY/EXPRESSWAY	GREATER THAN OR EQUAL TO 45	10	15
NON-FREEWAY/EXPRESSWAY	LESS THAN 45	8	10
AADT LESS THAN 1,500	ALL	8	10

DIMENSION B TABLE (2)

POSTED SPEEDS MPH	DIMENSION B FT
20	115
25	155
30	200
35	250
40	305
45	360
50	425
55	495
60	570
65	645

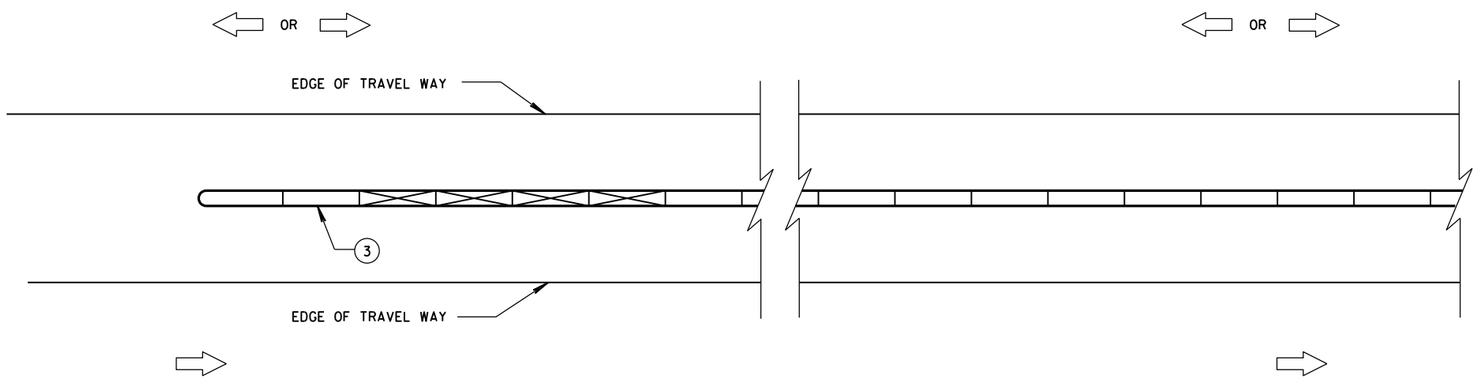

CRASH CUSHION/SAND BARREL ARRAY AND TEMPORARY BARRIER INSTALLATION FOR TRAFFIC ON BOTH SIDES OF BARRIER

LEGEND

- DIRECTION OF TRAVEL
- CRASH CUSHION OR SAND BARREL ARRAY
- SEE FREE STANDING TRANSITION TO TIED-DOWN SYSTEM DETAILS
- SEE BI-DIRECTIONAL TRANSITION TO TIED-DOWN SYSTEM DETAILS
- 3 PINS PLACED ON TRAFFIC SIDE OF BARRIER
- PERMANENT CONCRETE BARRIER OR CONCRETE PARAPET
- FREE STANDING TEMPORARY BARRIER

GENERAL NOTES

SEE STANDARD DETAIL DRAWING 14B7 FOR MORE INFORMATION.

DETAILS PROVIDE A GENERAL LAYOUT OF TEMPORARY CONCRETE BARRIER, CRASH CUSHIONS, SAND BARREL ARRAYS AND TIE DOWN TRANSITIONS. DETAILS PROVIDED MAY NOT FIT ALL POSSIBLE SITUATIONS OR SITE CONDITIONS. SEE OTHER SECTIONS OF THE CONTRACT OR PROJECT ENGINEER FOR MORE DETAILS.

ADDITIONAL TEMPORARY BARRIER MAY BE REQUIRED TO PROTECT TRAVELING PUBLIC FROM HAZARDS, CONTRACTOR'S OPERATIONS OR TO CONTROL TRAFFIC.

TEMPORARY BARRIER MAY BE REQUIRED TO BE ANCHORED TO PAVEMENT OR BRIDGE DECK.

FOR DETAILS ON CRASH CUSHION OR SAND BARREL ARRAYS SEE OTHER SECTIONS OF THE PLAN AND MANUFACTURE'S DETAILS.

SLOPES LEADING TO TEMPORARY BARRIER, CRASH CUSHION OR SAND BARREL ARRAY ARE 10:1 OR LESS.

(1) FOR DEFLECTION INFORMATION SEE STANDARD DETAIL DRAWING 14B7.

(2) VALUES PROVIDED MAY NOT FIT ALL POSSIBLE SITUATIONS OR SITE CONDITIONS. SEE OTHER SECTIONS OF THE CONTRACT OR PROJECT ENGINEER FOR MORE DETAILS.

(3) ANCHOR TEMPORARY BARRIER ACCORDING TO CRASH CUSHION OR SAND BARREL MANUFACTURER'S RECOMMENDATIONS. IF MANUFACTURER'S RECOMMENDATIONS ARE NOT PROVIDED, ANCHOR 3 PINS ON TRAFFIC SIDE.

CRASH CUSHION/SAND BARREL ARRAY AND OTHER TEMPORARY BARRIER LAYOUT DETAILS

STATE OF WISCONSIN
DEPARTMENT OF TRANSPOR

6

S.D.D. 14 B 8-2a

GENERAL NOTES

1. W6 X 9 OR W6 X 8.5 STEEL POSTS AND NOTCHED PLASTIC BLOCKOUTS ARE ACCEPTABLE ALTERNATIVES FOR 6" X 8" WOOD POSTS WITH WOOD OR PLASTIC BLOCKOUTS. USE APPROVED NOTCHED PLASTIC BLOCKOUTS WITH STEEL POSTS. APPROVED PLASTIC BLOCKOUT DESIGNS MAY VARY FROM THIS TYPICAL DETAIL WHEN USED IN CONJUNCTION WITH STEEL POSTS.

   DO NOT MIX STEEL POSTS AND WOOD POSTS IN A SINGLE INSTALLATION.
2. USE STRUCTURAL STEEL POSTS CONFORMING TO ASTM A 36. GALVANIZED POSTS ACCORDING TO AASHTO M 111. EITHER SET THE POSTS IN DRILLED HOLES OR DRIVE TO GRADE. REMOVE MUSHROOMING CAUSED BY DRIVING AND REPAIR DAMAGED SPELTER COATING ON GALVANIZED POSTS.
3. INSTALL STEEL POSTS WITH HOLES ON APPROACHING TRAFFIC SIDE.
4. USE EITHER WOOD OR APPROVED PLASTIC BLOCKOUTS ON WOOD POSTS.
5. IF THE DISTANCE FROM BACK OF POST TO SHOULDER HINGE POINT IS LESS THAN 2 FEET INSTALL LONGER POST AT HALF POST SPACING, W BEAM (LHW).
6. IF ROCK IS ENCOUNTERED DURING EXCAVATION, THE ENGINEER MAY APPROVE USING A 12 INCH DIAMETER POST HOLE EXTENDING 20 INCHES DEEP INTO THE ROCK. PLACE GRANULAR MATERIAL IN THE BOTTOM OF THE HOLE APPROXIMATELY 2½ INCHES DEEP. CUT THE POSTS TO LENGTH AND PLACE IN YHE HOLE. BACKFILL WITH MATERIAL EXCAVATED FROM THE HOLE AND COMPACT ADEQUATEY.
7. WHEN USING STEEL POSTS AND WOOD BLOCKOUTS INSTALL FOUR 16D GALVANIZED NAILS. INSTALL NAILS AT THE BACK CORNERS OF THE BLOCK AND BEND THE NAILS OVER THE FLANGE OF THE STEEL POST.

INSTALL BEAM GUARD SECTIONS AND ALL NECESSARY HARDWARE ACCORDING TO THE APPLICABLE PLAN AND CURRENT STANDARD AND SUPPLEMENTAL SPECIFICATIONS.

ALL DIMENSIONS ARE SUBJECT TO MANUFACTURER'S TOLERANCES EXCEPT WHERE ALLOWABLE TOLERANCES ARE SHOWN.

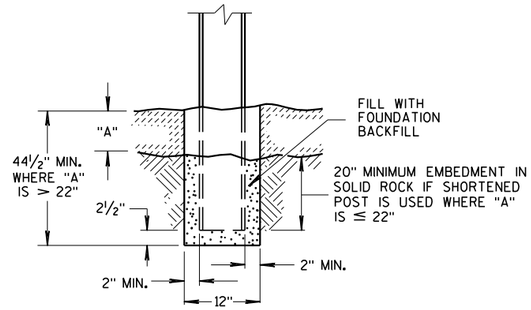

END VIEW
SETTING STEEL OR WOOD POST IN ROCK (6)

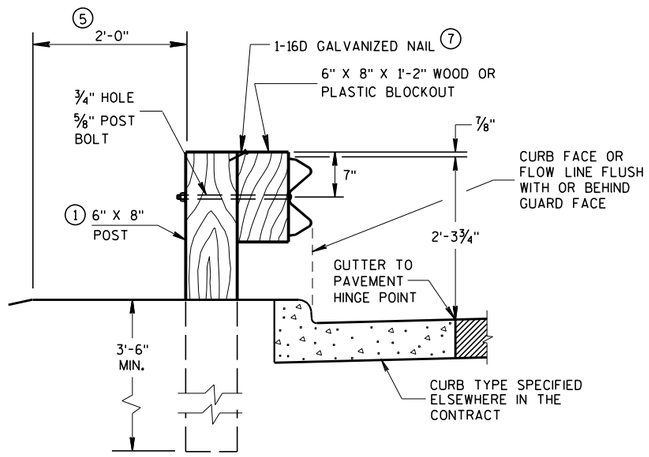

END VIEW
LOCATED ALONG A CURBED ROADWAY

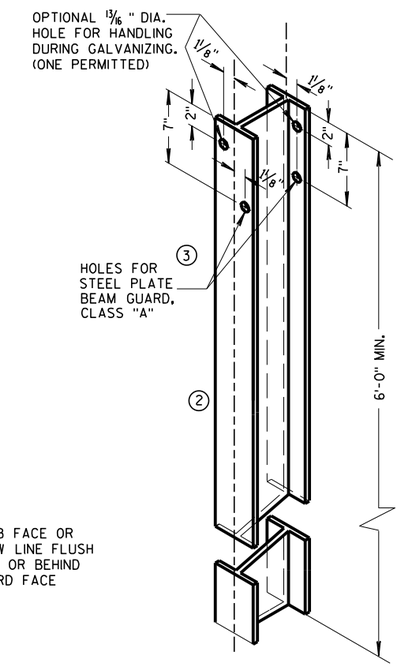

STEEL POST &
HOLE PUNCHING DETAIL
(W6 X 9) (1)

ALL HOLES 13/16" DIAMETER EXCEPT AS NOTED

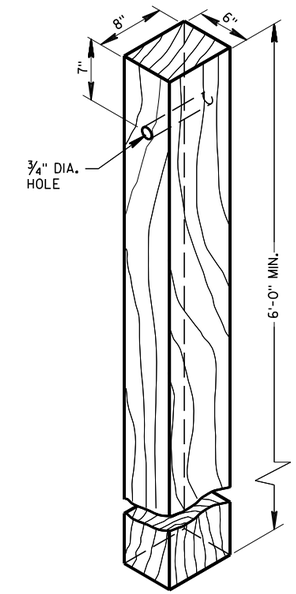

WOOD POST
(6"X8") NOMINAL

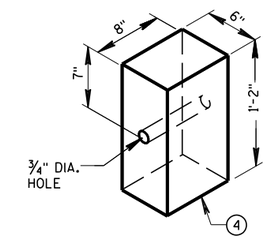

WOOD OR PLASTIC
BLOCKOUT FOR
WOOD POSTS

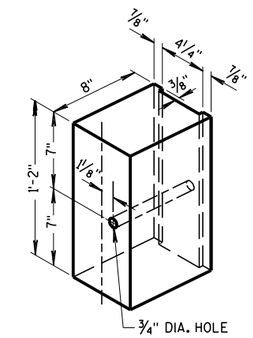

TYPICAL NOTCHED (1)
PLASTIC BLOCKOUT
FOR STEEL POSTS

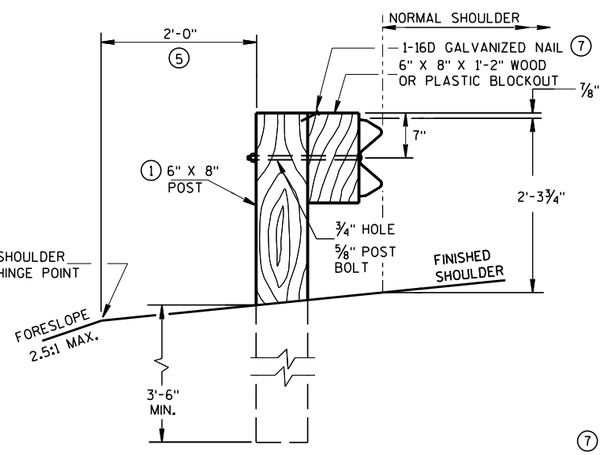

END VIEW
LOCATED ALONG A ROADWAY SHOULDER
STANDARD INSTALLATION

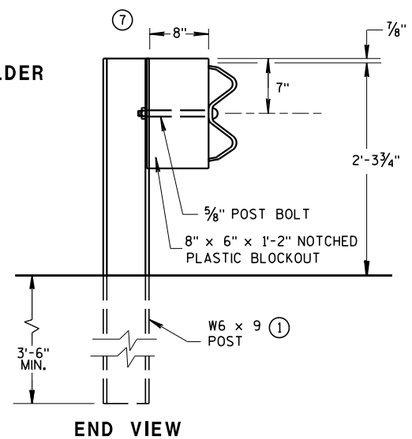

END VIEW
STEEL POST & NOTCHED
PLASTIC BLOCKOUT ALTERNATIVE
STANDARD INSTALLATION

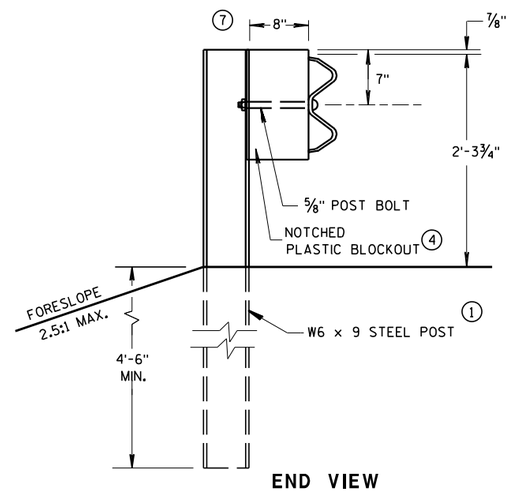

END VIEW
LONGER POST AT HALF
POST SPACING W BEAM
(LHW)

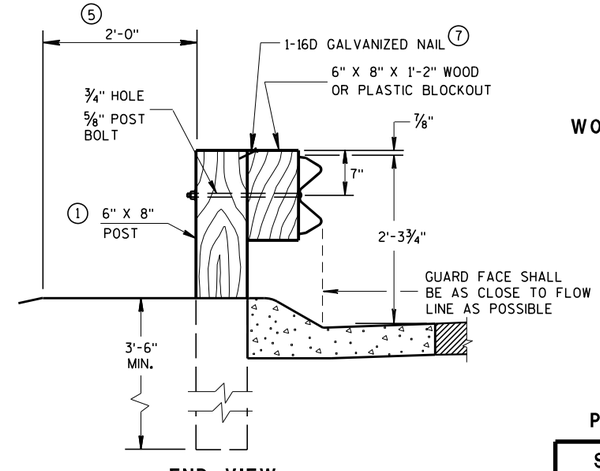

END VIEW
LOCATED ALONG A
MOUNTABLE CURBED ROADWAY

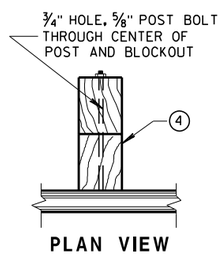

PLAN VIEW
WOOD POST, BLOCKOUT & BEAM

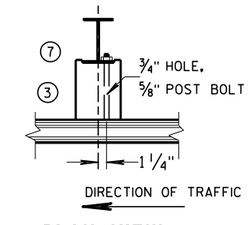

PLAN VIEW
STEEL POST, NOTCHED
PLASTIC BLOCKOUT & BEAM

TYPICAL INSTALLATION OF STEEL PLATE BEAM GUARD

STEEL PLATE BEAM GUARD,
CLASS "A"
INSTALLATION & ELEMENTS

STATE OF WISCONSIN
DEPARTMENT OF TRANSPORTATION

6

6

S.D.D. 14 B 15-11a

S.D.D. 14 B 15-11a

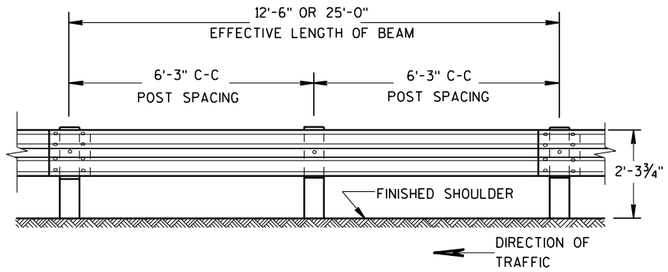

FRONT VIEW

POST SPACING STANDARD INSTALLATION

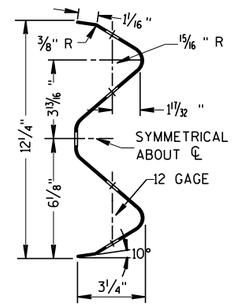

SECTION THRU W BEAM

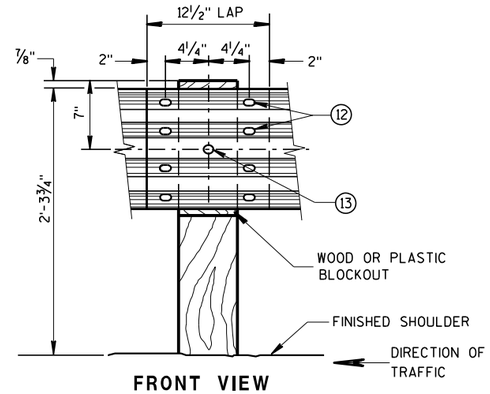

FRONT VIEW

BEAM SPLICE AT WOOD POST AND POST MOUNTING DETAIL

GENERAL NOTES

FURNISH GUARDRAIL DEFLECTORS FROM APPROVED PRODUCTS LIST.

(9) DO NOT INSTALL REFLECTORS ON THE FIRST 50 FEET OF THE APPROACH END OF THE ENERGY ABSORBING TERMINA. START REFLECTORS AT POST #9 AND SPACE EVENLY EVERY 100 FEET (MAX.) TO THE END OF GUARDRAIL RUN, USING A MINIMUM OF 3 REFLECTORS.

(12) 8 -5/8" Φ X 2" BUTTON HEAD BOLTS WITH OVAL SHOULDERS & RECESS NUTS.

(13) 5/8" DIA. BUTTON HEAD BOLT AND RECESS NUT WITH 5/8" DIA. F844 FLAT WASHER UNDER NUT.

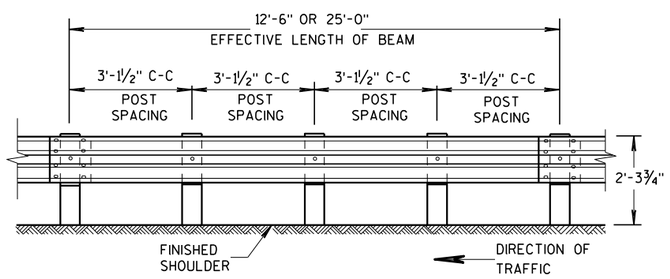

FRONT VIEW

POST SPACING FOR LONGER POST AT HALF POST SPACING W BEAM (LHW)

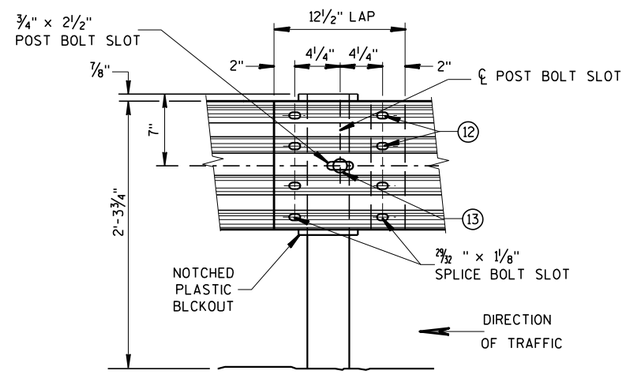

FRONT VIEW
BEAM SPLICE AT STEEL POST

TYPICAL SPLICING DETAILS OF STEEL PLATE BEAM GUARD

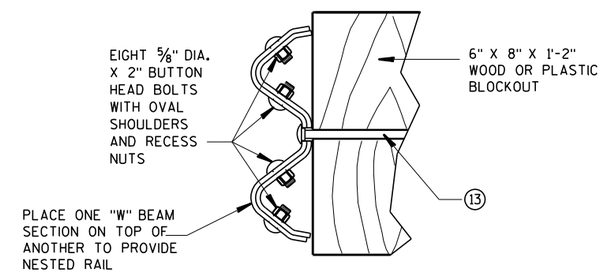

NESTED W BEAM (NW)

USE ALL OTHER STANDARD BEAM GUARD DETAILS FOR CONSTRUCTING NESTED W BEAM (NW)

* USE DOUBLE SIDED WHITE GUADRAIL REFLECTORS ON ROADWAYS WITH BI-DIRECTIONAL TRAFFIC (NO MEDIAN). USE SINGLE SIDED WHITE (RIGHT SIDE) AND SINGLE SIDED YELLOW (LEFT SIDE) ON ROADWAYS WITH MEDIAN SEPARATION.

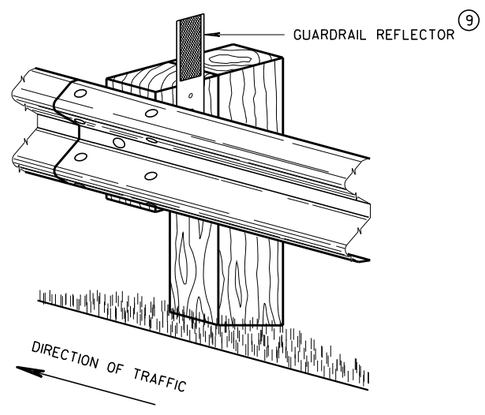

4" X 12" GUARDRAIL REFLECTOR DETAIL AND TYPICAL INSTALLATION *

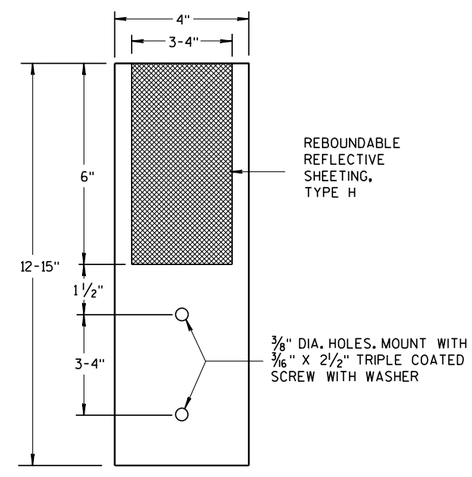

4"x 12" GUARDRAIL REFLECTOR

STEEL PLATE BEAM GUARD, CLASS "A", INSTALLATION & ELEMENTS

STATE OF WISCO 234
DEPARTMENT OF TRANSPORTATION

6

6

S.D.D. 14 B 15-11b

S.D.D. 14 B 15-11b

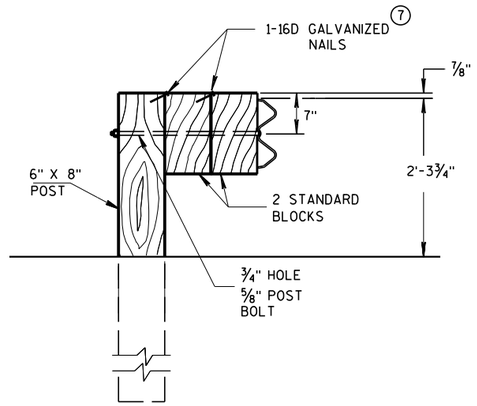

DETAIL FOR DOUBLE BLOCKS

THE NUMBER OF DOUBLE BLOCK POSTS WITHIN A BARRIER RUN IS UNLIMITED

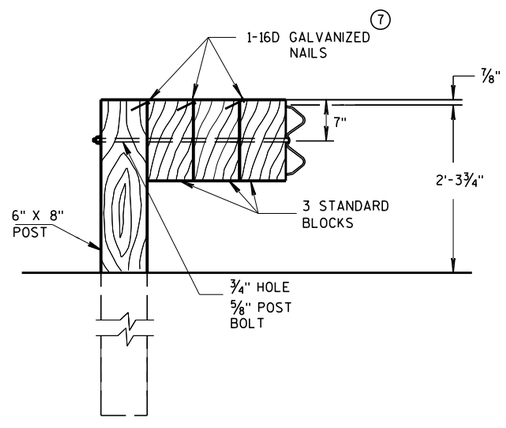

DETAIL FOR TRIPLE BLOCKS

TRIPLE BLOCK DETAIL IS LIMITED TO ONE LOCATION WITHIN A BEAM GUARD RUN.

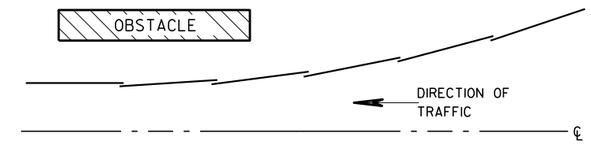

PLAN VIEW
BEAM LAPPING DETAIL

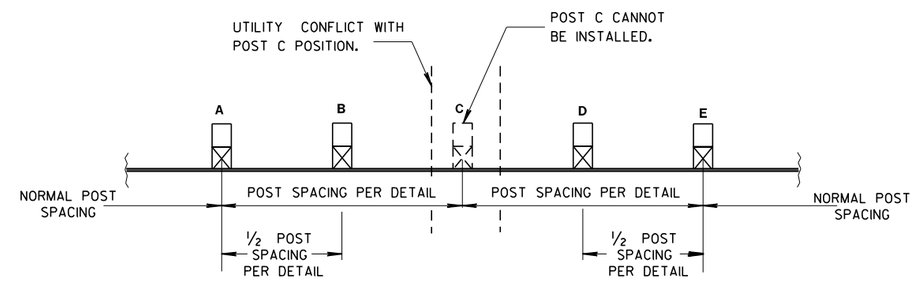

POST DRIVING FOR CONTINUOUS UNDERGROUND OBSTRUCTION

NOTES: USE DOUBLE OR TRIPLE BLOCKS WHEN UNDERGROUND OBSTACLES PREVENT THE POST FROM BEING INSTALLED.

DO NOT USE EXTRA BLOCKOUTS IF IT CAUSES THE POST TO BE DRIVEN BEYOND SHOULDER HINGE POINT OR CAUSES A FIXED OBJECT TO BE WITHIN THE DEFLECTION DISTANCE OF THE BARRIER.

STEEL PLATE BEAM GUARD, CLASS "A", INSTALLATION & ELEMENTS

STATE OF WISCONSIN
DEPARTMENT OF TRANSPORTATION

APPROVED
June 2017 — DATE
/S/ Rodney Taylor — ROADWAY STANDARDS UNIT SUPERVISOR
FHWA

6

S.D.D. 14 B 15-11c

BILL OF MATERIALS

NOTE NO.	DESCRIPTION
1	WOOD BREAKAWAY TERMINAL POST: 5½" X 7½" X 3'-9"
2	STEEL TUBE TS 8" X 6" X 0.188", 6'-0"
4	WOOD BREAKAWAY CRT POST: 6" X 8" X 6'-0"
5	WOOD OFFSET BLOCKS: 6' X 8" X 1'-2"
6	PIPE SLEEVE: 2" X 5 ½" STANDARD PIPE
7	BEARING PLATE
8	BCT CABLE ASSEMBLY
9	CABLE ANCHOR BOX
10	STRUT & YOKE
11	STEEL PLATE BEAM, END PANEL 12 GA.
12	STEEL PLATE BEAM: 12 GA. 13'-6½"
13	IMPACT HEAD
14	0.040" ALUMINUM SHEET WITH REFLECTIVE SHEETING TYPE F PER SECTION 637 OF THE STANDARD SPECIFICATIONS

GENERAL NOTES

FOLLOW MANUFACTURE'S BOLTING RECOMMENDATIONS.

(A) THE SLOPE IN THE AREA BOUNDED BY THE GRADELINE, THE HINGE POINT LINE (HPL), AND THE CLEAR ZONE LIMITS (CZL) SHALL BE 4:1 OR FLATTER.

(B) AFTER FINAL ASSEMBLY, RECHECK CABLE TO BE SURE IT IS TAUT AND HAS NOT RELAXED.

(D) THE TOP OF THE STEEL TUBE ON POSTS 1 AND 2 SHALL NOT BE MORE THAN 3" ABOVE THE FINISH GROUND ELEVATION.

(E) THE CENTER OF THE UPPER 3½" DIAMETER HOLE ON POST 3 THROUGH 8 SHALL BE ¾" ABOVE THE FINISHED GROUND LINE.

(F) ATTACH ALUMINUM SHEET TO E.A.T. HEAD USING 4 STAINLESS STEEL SELF-TAPPING SCREWS. ONE SCREW PER CORNER.

STEEL POSTS SHALL NOT BE ALLOWED FOR USE WITH ENERGY ABSORBING TERMINALS.

DO NOT INSTALL REFLECTORS ON THE FIRST 50 FEET OF THE APPROACH END OF THE ENERGY ABSORBING TERMINAL.

* DO NOT ATTACH BLOCKOUTS TO POSTS 1 AND 2.

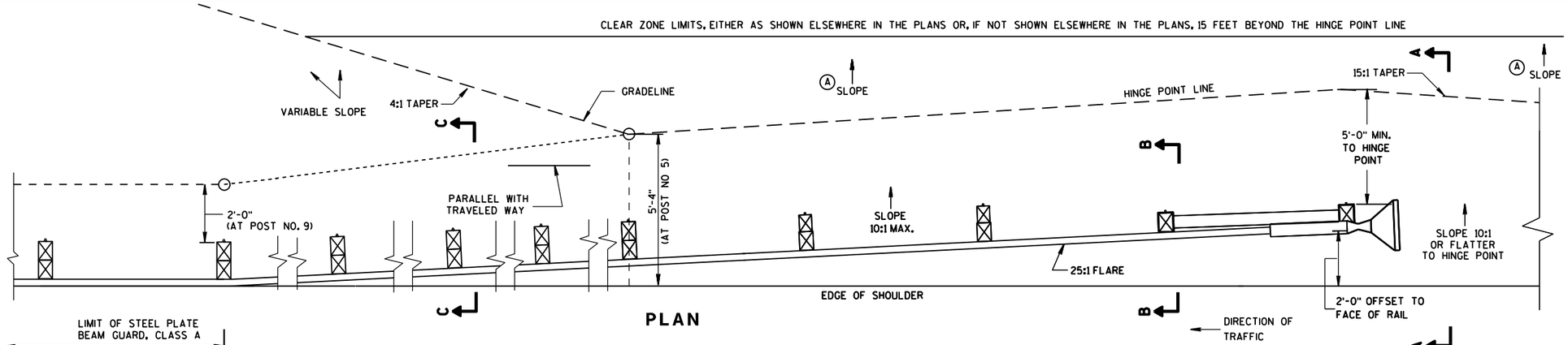

PLAN

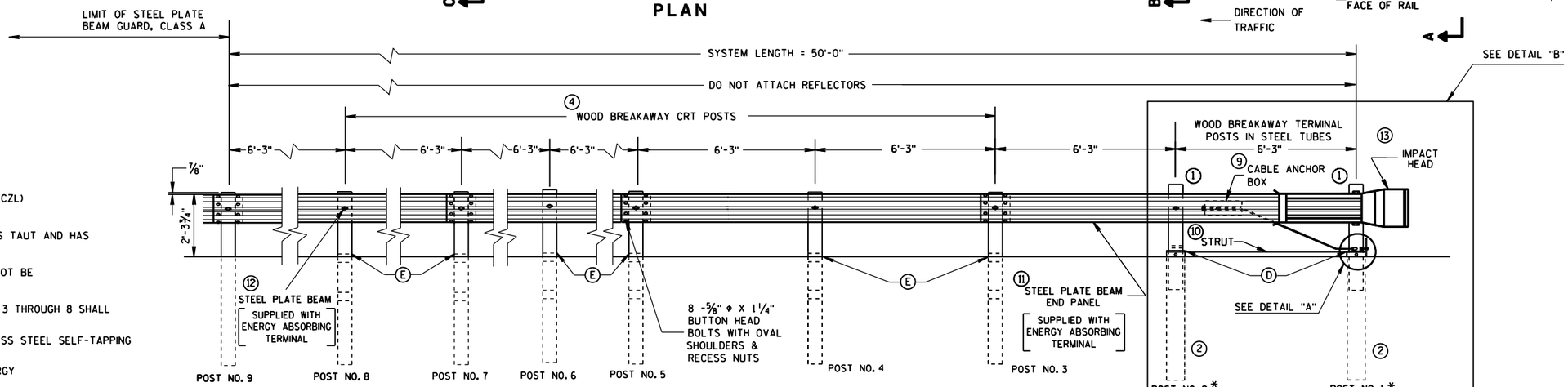

ELEVATION

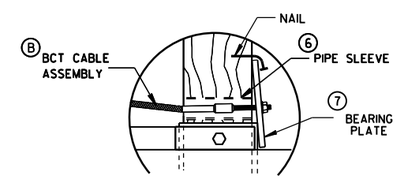

DETAIL "A"

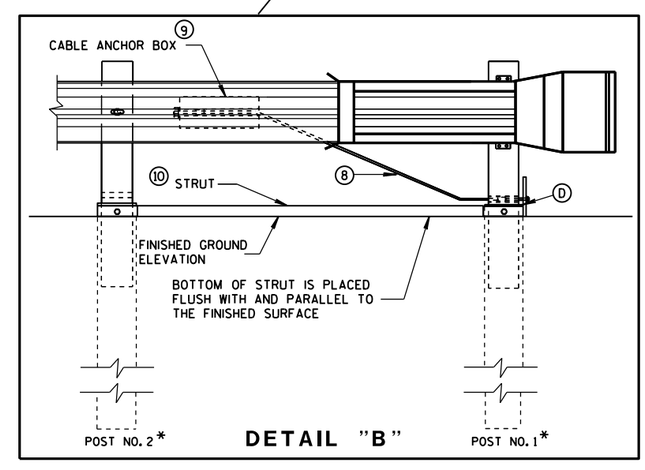

DETAIL "B"

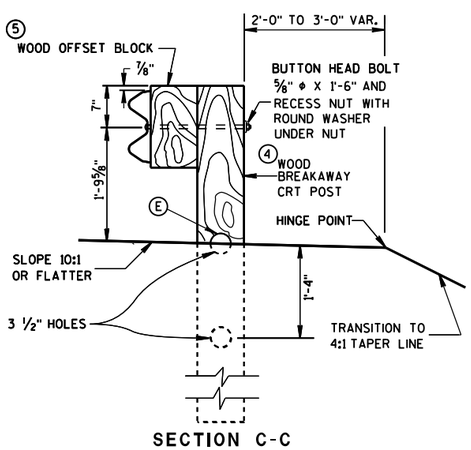

SECTION C-C
TYPICAL AT POST NOS. 6, 8

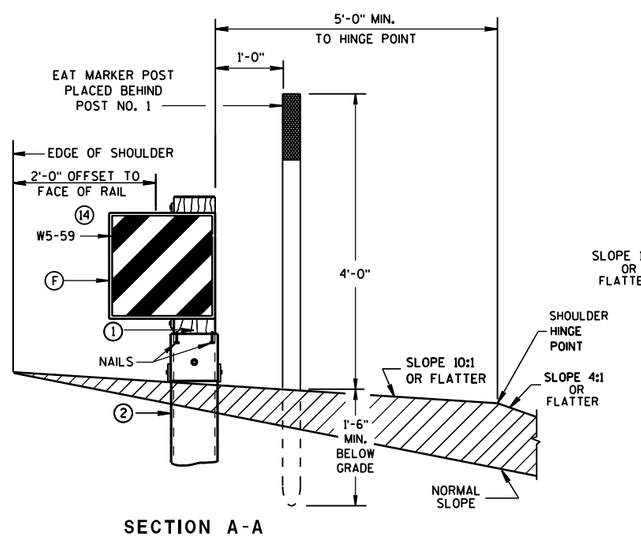

SECTION A-A
TYPICAL AT POST NO. 1*

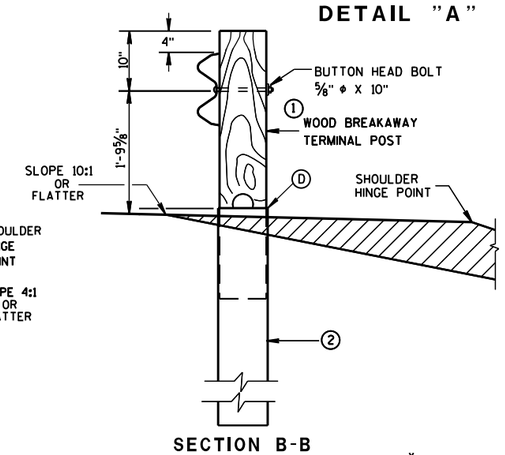

SECTION B-B
TYPICAL AT POST NO. 2*

STEEL PLATE BEAM GUARD
ENERGY ABSORBING TERMINAL

STATE OF WISCONSIN
DEPARTMENT OF TRANSPORTATION

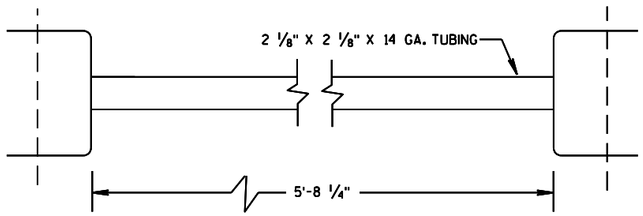

⑩ STRUT DETAIL

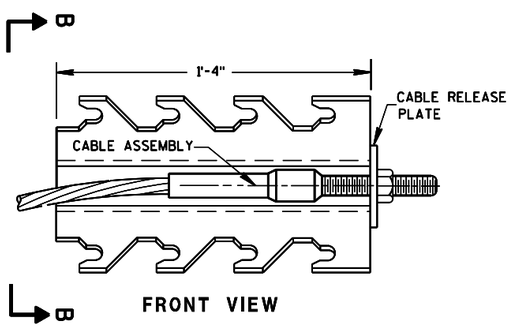

FRONT VIEW

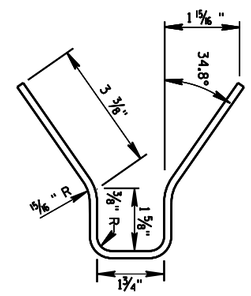

SECTION B-B

⑨ CABLE ANCHOR BOX

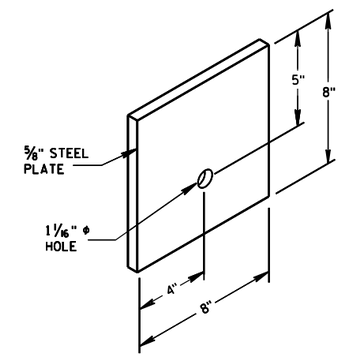

⑦ STEEL BEARING PLATE

6

6

S.D.D. 14 B 24-9b

S.D.D. 14 B 24-9b

STEEL PLATE BEAM GUARD
ENERGY ABSORBING TERMINAL

STATE OF WISCONSIN
DEPARTMENT OF TRANSPO

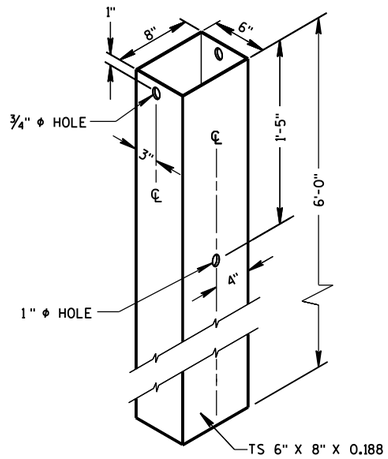

② 72" STEEL TUBE
(POSTS NO. 1-2

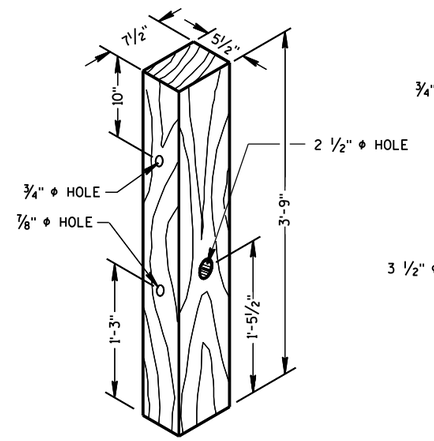

① TERMINAL POST

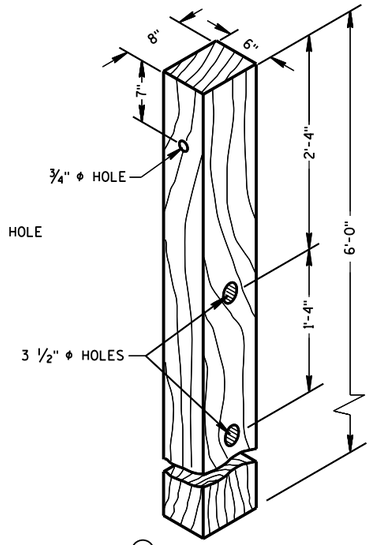

④ CRT POST
(POSTS NO'S 5-8

WOOD BREAKAWAY POSTS

GENERAL NOTES

WHEN ROCK IS ENCOUNTERED DURING EXCAVATION, A 12 INCH DIA. POST HOLE EXTENDING 20 INCHES DEEP INTO THE ROCK MAY BE USED IF APPROVED BY THE ENGINEER. GRANULAR MATERIAL SHALL BE PLACED IN THE BOTTOM OF THE HOLE APPROXIMATELY 2 1/2" INCHES DEEP TO PROVIDE DRAINAGE. THE SOIL TUBES SHALL BE FIELD CUT TO LENGTH, PLACED IN THE HOLE AND BACKFILLED WITH ADEQUATELY COMPACTED MATERIAL EXCAVATED FROM THE HOLE.

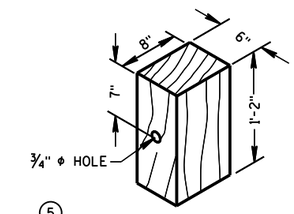

⑤ WOOD OFFSET BLOCK
REQ'D. AT ALL POSTS EXCEPT POST NO'S 1 & 2

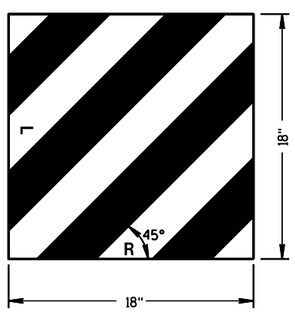

⑭ REFLECTIVE SHEETING DETAILS

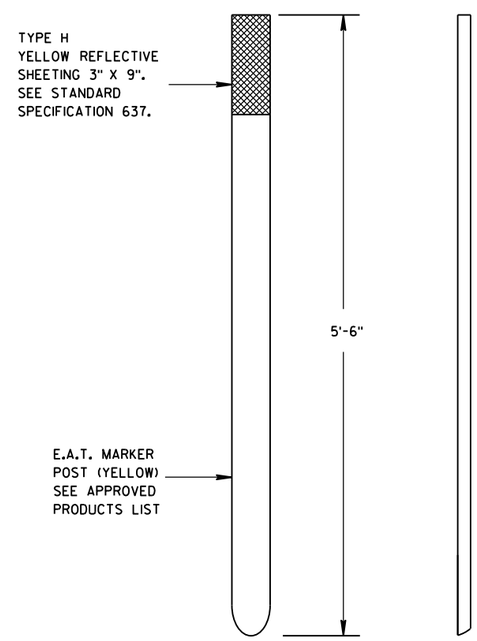

E.A.T. MARKER POST

STEEL PLATE BEAM GUARD
ENERGY ABSORBING TERMINAL

STATE OF WISCONSIN
DEPARTMENT OF TRANSPORTATION

APPROVED
June 2017 — DATE
/S/ Rodney Taylor — ROADWAY STANDARDS UNIT SUPERV
ENT
FHWA

6

6

S.D.D. 14 B 24-9c

S.D.D. 14 B 24-9c

1. WOOD OR STEEL POSTS (w6X9 OR w6X8.5) MAY BE USED. DO NOT INTERMIX WOOD AND STEEL POSTS. INSTALL STEEL POSTS WITH HOLES ON APPROACHING TRAFFIC SIDE.
2. USE WOOD OR APPROVED PLASTIC BLOCKOUTS. WOOD BLOCKOUTS MAY BE CONSTRUCTED OUT OF TWO OR MORE WOOD BLOCKOUTS. SEE ALTERNATE WOOD BLOCKOUT DETAIL. DIMENSIONS OF APPROVED PLASTIC BLOCKOUTS MAY VARY.
3. IF ROCK IS ENCOUNTERED DURING EXCAVATION, PROVIDE A HOLE 12 INCHES IN DIAMETER EXTENDING 20 INCHES DEEP INTO THE ROCK. PLACE APPROXIMATELY 2 1/2" INCHES OF GRANULAR MATERIAL IN THE BOTTOM OF THE HOLE. CUT THE POSTS THE TO LENGTH AMD INSTALL. BACKFILL WITH EXCAVATED MATERIAL AND COMPACT. BACKFILL IS TO BE FREE OF LARGE ROCKS.
4. WHEN THE DISTANCE FROM BACK OF POST TO SHOULDER HINGE POINT IS LESS THAN 2 FEET INSTALL LONGER POST AT HALF POST SPACING (K).
5. FOR NEW MGS INSTALLATION TOP OF W-BEAM RAIL TOLERANCE IS ±1". FOR EXISTING MGS INSTALLATION TOP OF W-BEAM IS BETWEEN 27 ¾" TO 32".
6. WHEN USING STEEL POST AND WOOD BLOCKOUTS INSTALL FOUR 16D GALVANIZED NAILS. INSTALL NAILS AT THE BACK CORNERS OF THE BLOCK AND BEND THE NAILS OVER THE FLANGE OF THE STEEL POST.
7. TOTAL POST LENGTH FOR TYPE K IS 7' - 0". TOTAL POST LENGTH FOR OTHER MGS TYPES IS 6' - 0".

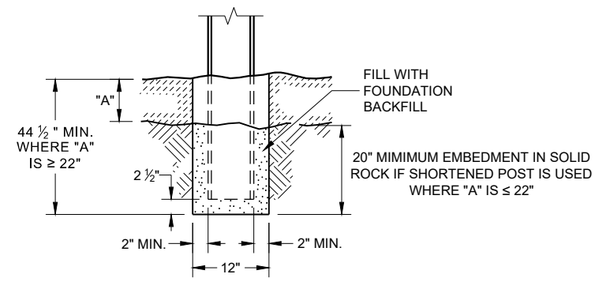

END VIEW
SETTING STEEL OR WOOD POST IN ROCK (3)

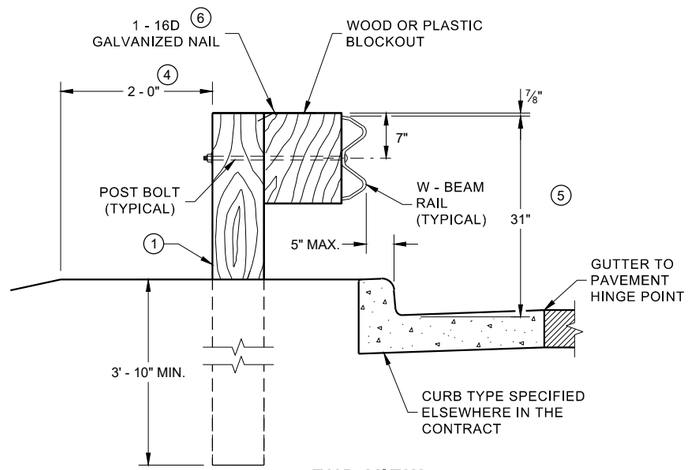

END VIEW
LOCATED ALONG A CURBED ROADWAY

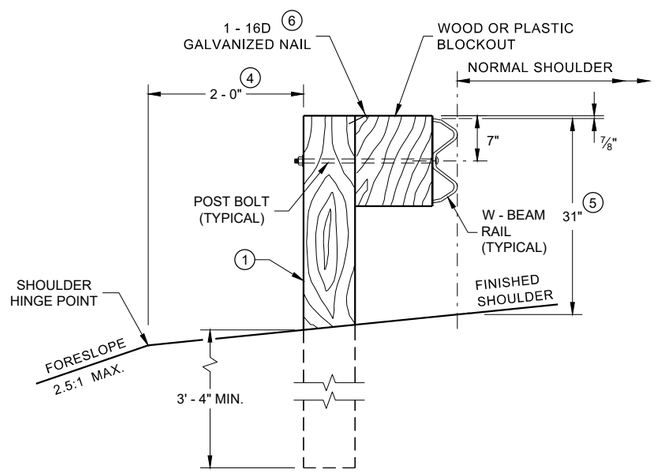

END VIEW
LOCATED ALONG A ROADWAY SHOULDER STANDARD INSTALLATION

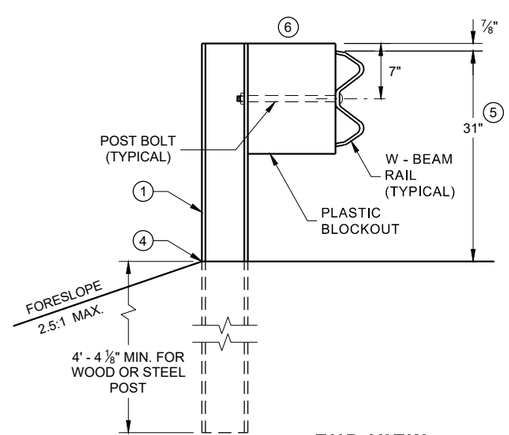

END VIEW
MGS LONGER POST AT HALFPOST SPACING W BEAM (K)

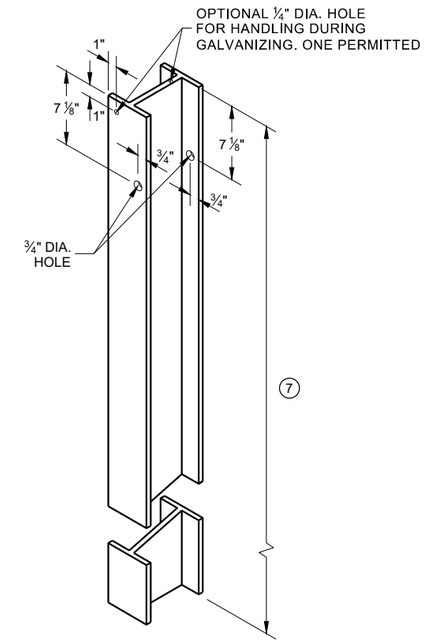

STEEL POST & HOLE PUNCHING DETAIL (W 6 X 9) (1)

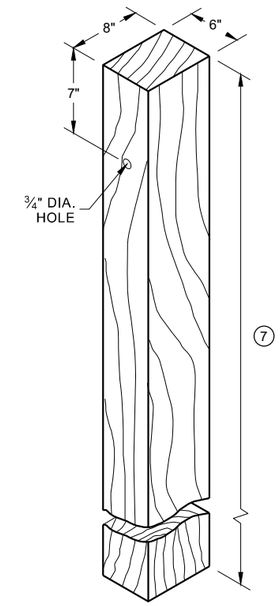

WOOD POST (6" X 8") NOMINAL (1)

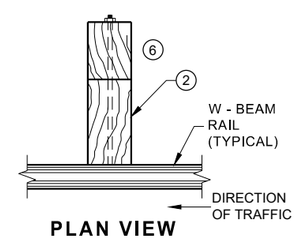

PLAN VIEW WOOD POST, BLOCKOUT & BEAM

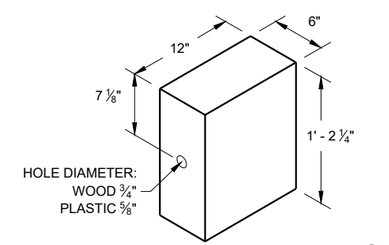

WOOD OR PLASTIC BLOCKOUT (2)

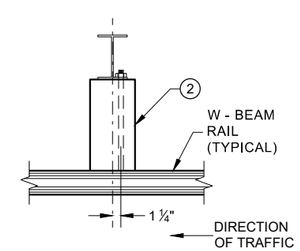

PLAN VIEW STEEL POST, PLASTIC BLOCKOUT & BEAM

MIDWEST GUARDRAIL SYSTEM (MGS) GUARDRAIL

STATE OF WISCONSIN
DEPARTMENT OF TRANSPORTA

6

SDD 14B42 - 07a

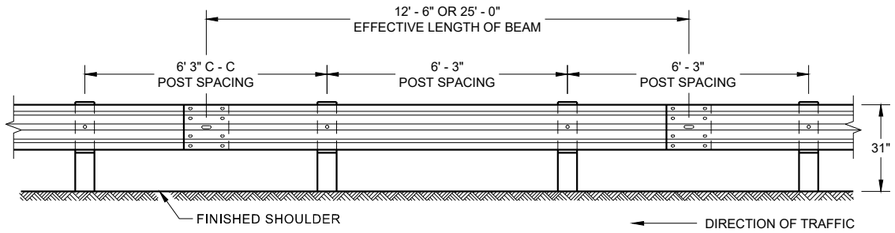

FRONT VIEW
POST SPACING STANDARD INSTALLATION

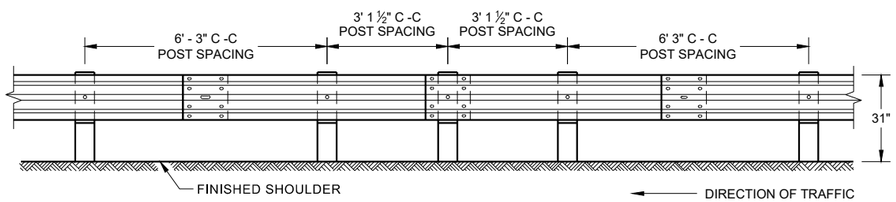

FRONT VIEW
HALF POST SPACING (HS) AND HALF POST SPACING WITH LONGER POSTS (K)

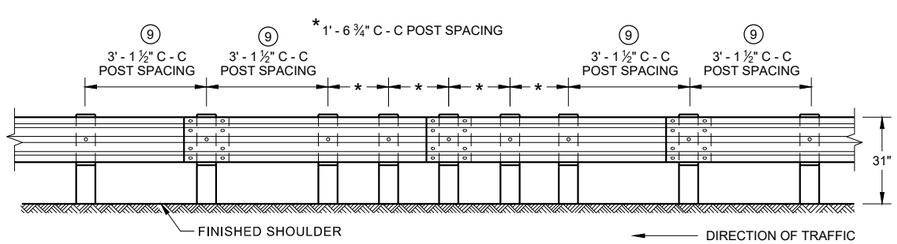

FRONT VIEW
QUARTER POST SPACING (QS)

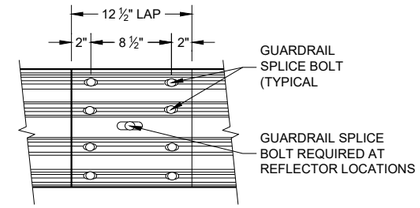

FRONT VIEW
MID-SPAN BEAM SPLICE

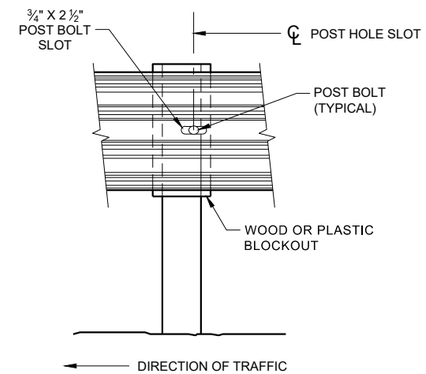

FRONT VIEW AT STEEL POST

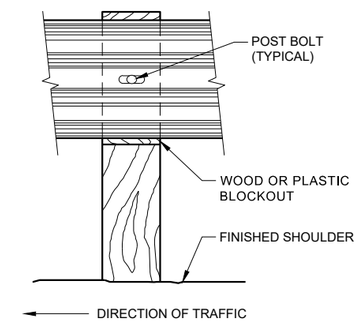

FRONT VIEW AT WOOD POST

GENERAL NOTES

8. DO NOT INSTALL REFLECTORS ON THE FIRST 50 FEET OF THE APPROACH END OF THE ENERGY ABSORBING TERMINAL.

9. 25 FEET OF HALF POST SPACING IS REQUIRED ON APPROACH AND DEPARTURE ENDS OF QUARTER POST SPACING.

POST BOLTS ARE A ⅝" DIAMETER ASTM A307 GUARDRAIL BOLT. A POST BOLT REQUIRES ⅝" DIAMETER A563A DOUBLE RECESSED (DR) HEAVY HEX NUT AND ⅝" DIAMETER F844 FLAT WASHER. POST BOLTS MAY BE LONGER IF MULTIPLE BLOCKOUTS ARE BEING USED.

GUARD RAIL SPLICE BOLTS ARE A ⅝" DIAMETER ASTM A307 GUARDRAIL HEAD BOLT. A GUARDRAIL SPLICE BOLT REQUIRES ⅝" DIAMETER A563A DOUBLE RECESSED (DR) HEAVY HEX NUT.

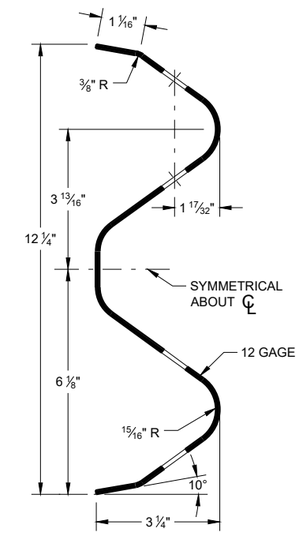

SECTION THRU W-BEAM RAIL

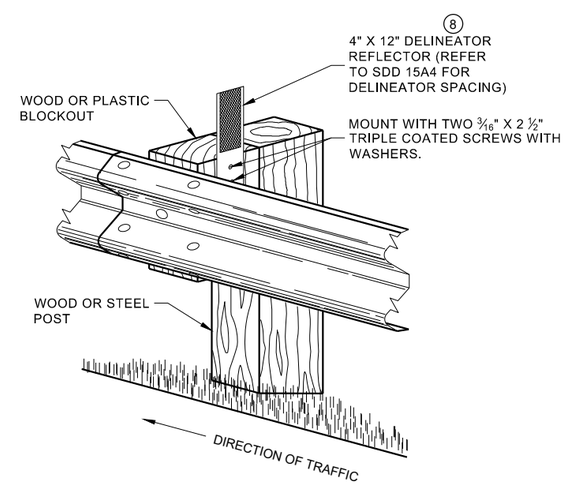

ONE SIDED REFLECTOR DETAIL AND TYPICAL INSTALLATION

MIDWEST GUARDRAIL SYSTEM (MGS) GUARDRAIL

STATE OF WISCONSIN
DEPARTMENT OF TRANSPORTAT

6

SDD 14B42 - 07b

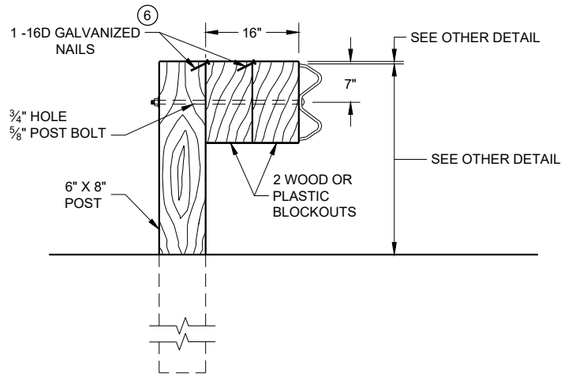

DETAIL FOR 16" BLOCKOUT DEPTH

IT IS ACCEPTABLE TO USE BLOCKOUTS UP TO 16" DEEP TO INCREASE THE POST OFFSET TO AVOID UNDERGROUND OBSTACLES. THERE IS NO LIMIT TO THE NUMBER OF POSTS THAT CAN HAVE ADDITIONAL BLOCKOUTS UP TO 16" DEEP.

NOTE:

1. ALL FILLETS SHALL HAVE A MINIMUM RADIUS OF 3/16".
2. IF THE BOLT EXTENDS MORE THAN ¼" FROM THE NUT THE BOLT SHOULD BE TRIMMED BACK.

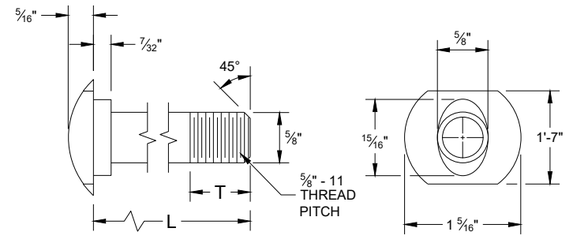

POST BOLT TABLE

L	T (MIN.)
1 ¼"	1 ⅛"
2"	1 ¾"
10"	4"
14"	4 1/16"
18"	4"
21"	4 1/16"
25"	4"

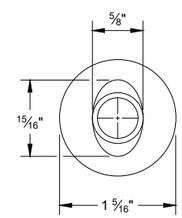

ALTERNATE BOLT HEAD

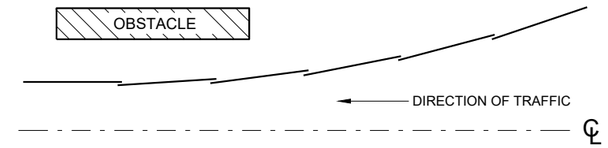

PLAN VIEW
BEAM LAPPING DETAIL

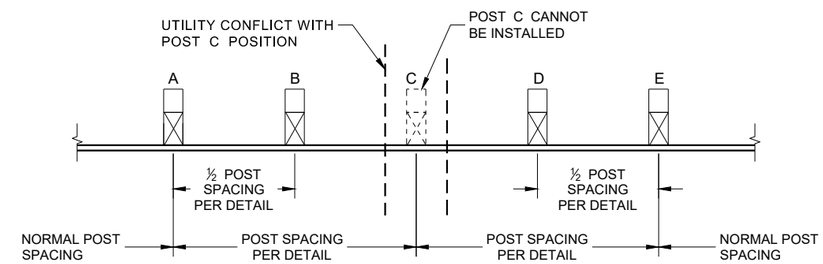

POST DRIVING FOR CONTINUOUS UNDERGROUND OBSTRUCTION

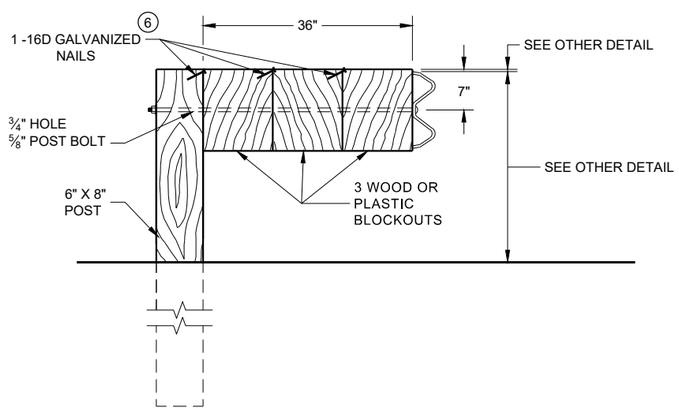

DETAIL FOR 36" BLOCKOUT DEPTH

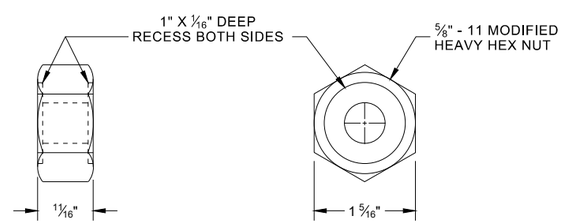

POST BOLT, SPLICE BOLT AND RECESS NUT

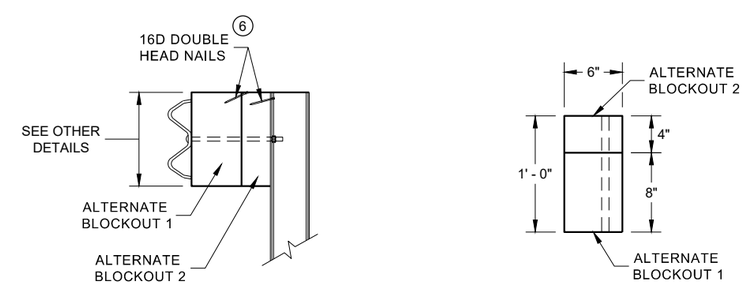

SIDE VIEW

PLAN VIEW

ALTERNATE WOOD BLOCKOUT DETAIL

NOTES: UNDER SPECIAL CIRCUMSTANCES, SUCH AS AVOIDING OBSTACLES THAT ARE NOT RELOCATED, IT IS ACCEPTABLE TO INSTALL ADDITIONAL BLOCKOUTS TO OBTAIN UP TO 36" DEPTH FOR ONE OR TWO POSTS IN A SECTION OF GUARDRAIL.

DO NOT USE 16" OR 36" BLOCKOUTS IF IT CAUSES THE POST TO BE DRIVEN BEYOND SHOULDER HINGE POINT OR CAUSES A FIXED OBJECT TO BE WITHIN THE DEFLECTION DISTANCE OF THE BARRIER.

(6) WHEN USING STEEL POST AD WOOD BLOCKOUTS, INSTALL FOUR 16D GALVANIZED NAILS. INSTALL NAILS AT THE BACK CORNERS OF THE BLOCK AND BEND THE NAILS OVER THE FLANGE OF THE STEEL POST.

MIDWEST GUARDRAIL SYSTEM (MGS) GUARDRAIL

STATE OF WISCONSIN
DEPARTMENT OF TRANSPORTA

6

SDD 14B42 - 07c

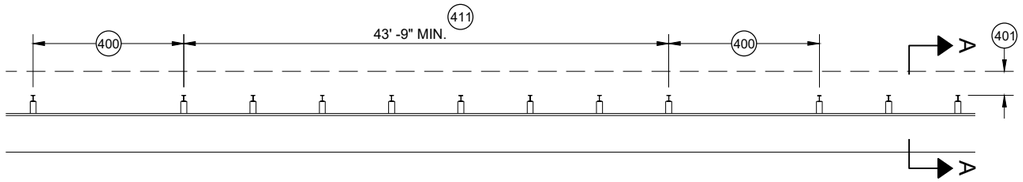

MISSING POST IN MGS GUARDRAIL

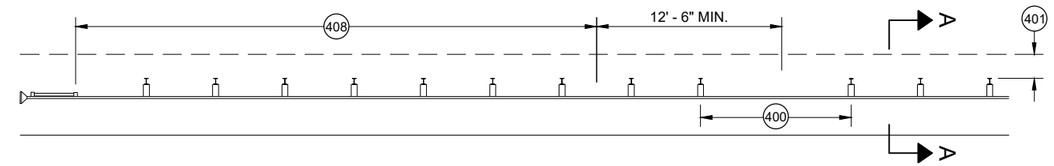

MISSING POST IN MGS GUARDRAIL NEAR EAT

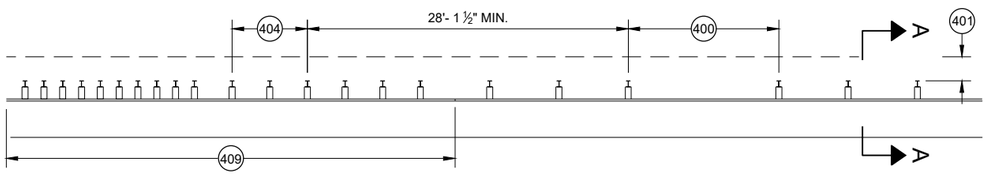

MISSING POST IN MGS GUARDRAIL NEAR AN APPROACH TRANSITION

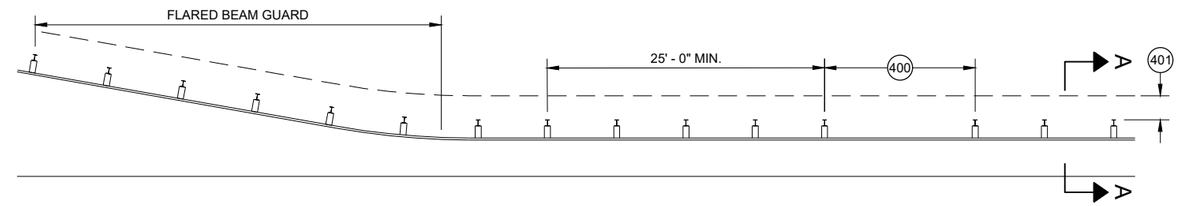

MISSING POST IN MGS GUARDRAIL NEAR FLARED BEAM GUARD

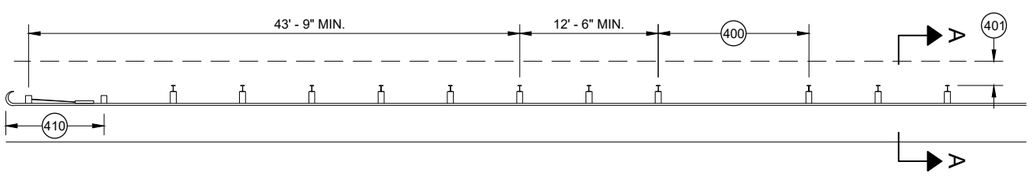

MISSING POST IN MGS GUARDRAIL NEAR A TYPE 2 END TERMINAL

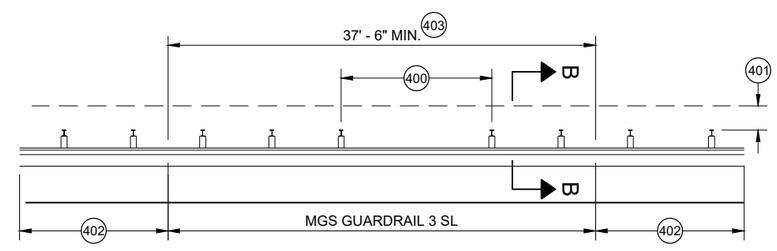

MISSING POST IN SHORT SPAN MGS GUARDRAIL NEAR CURB (SL) 407

400 MAX SPAN 12' - 6"
401 2' MIN.
402 MGS GUARDRAIL 3
403 NESTING BEAM GUARD
404 ASYMMETRIC TRANSITION
405 SOIL WELL DRAINED AND COMPACTED
406 SEE OTHER DRAWINGS IN THIS SDD
407 SEE OTHER DRAWINGS FOR MIN. SPACING BETWEEN SPANS
408 SEE SDD 14B44
409 SEE SDD 14B45
410 SEE SDD 14B47
411 MINIMUM DISTANCE BETWEEN MISSING POST SPANS.

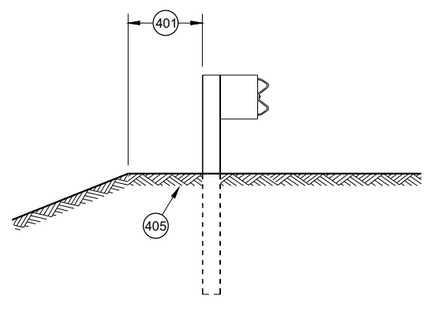

SECTION A - A 406

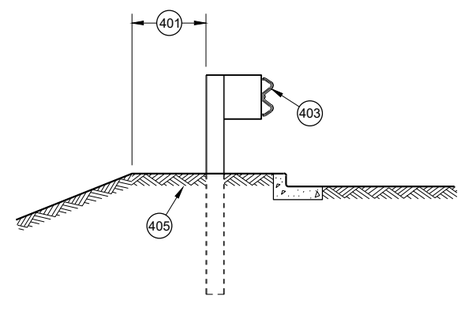

SECTION B - B 406

MIDWEST GUARDRAIL SYSTEM (MGS) GUARDRAIL

STATE OF WISCONSIN
DEPARTMENT OF TRANSPORTATION

APPROVED
May 2021 — DATE
/S/ Rodney Taylor — ROADWAY STANDARDS DEVE UNIT SUPERVISOR
FHWA

6

SDD 14B42 - 07d

GENERAL NOTES

(A) THE SLOPE IN THE AREA BOUNDED BY THE GRADELINE, THE HINGE POINT LINE (HPL) AND THE CLEAR ZONE LIMITS (CZL) SHALL BE 4:1 OR FLATTER.

(B) AFTER FINAL ASSEMBLY, RECHECK CABLE TO BE SURE IT IS TAUT AND HAS NOT RELAXED

(C) DIFFERENT MANUFACTURERS REQUIRE DIFFERENT PERFORATED W - BEAM RAIL END PANELS. SEE MANUFACTURER'S INFORMATION.

(D) ATTACH ALUMINUM SHEET TO E.A.T. HEAD USING 4 STAINLESS STEEL SELF - TAPPING SCREWS. ONE SCREW PER CORNER.

(E) HARDWARE MAY VARY BETWEEN MANUFACTURER. SEE MANUFACTURER'S DRAWING FOR INFORMATION.

DIMENSIONS MAY VARY, MANUFACTURER'S INFORMATION.

SEE SDD 14B42 FOR MORE INFORMATION.

* DO NOT ATTACH BLOCKOUTS TO POST 1 AND 2.

DO NOT INSTALL REFLECTORS ON THE FIRST 50 FEET OF THE APPROACH END OF THE ENERGY ABSORBING TERMINAL.

SEE MANUFACTURER'S DRAWING FOR SPLICE LOCATION, HARDWARE DIMENSIONS AND INSTALLATION INSTRUCTIONS.

THE CENTER OF THE UPPER 3 ½" DIAMETER HOLE ON POST NUMBER 3 THROUGH POST 9 IS TO BE FLUSH WITH THE GROUND LINE UP TO A MAXIMUM OF 2" ABOVE GROUND LINE. WOOD BLOCKS ON POSTS NUMBERED 3 THROUGH 9 MAY BE ADJUSTED UP TO 3" ABOVE THE TOP OF POST.

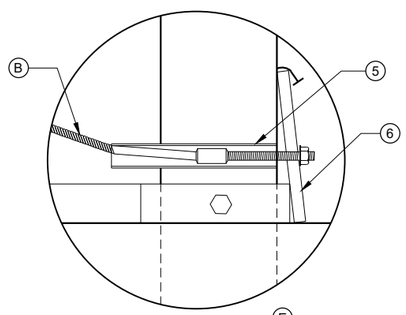

DETAIL "A" (E)

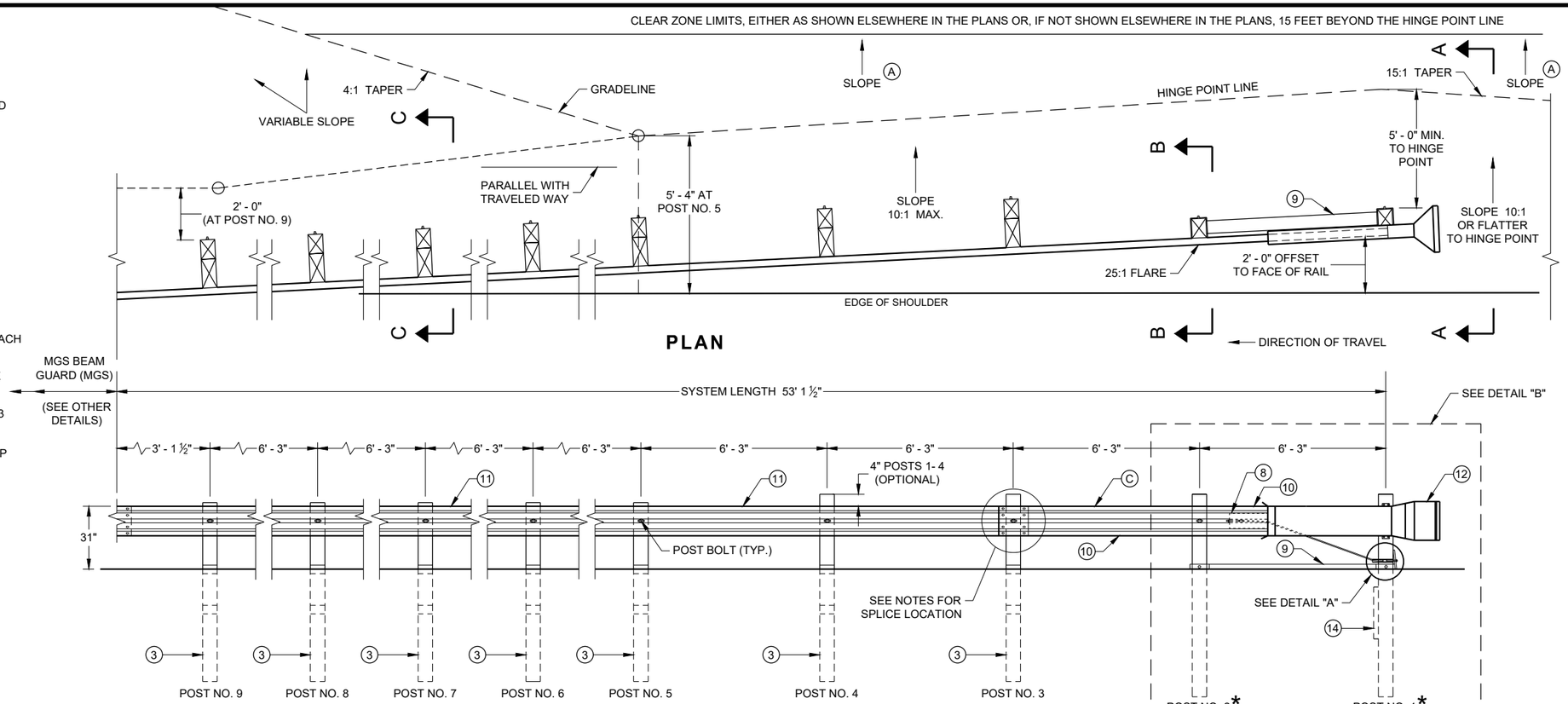

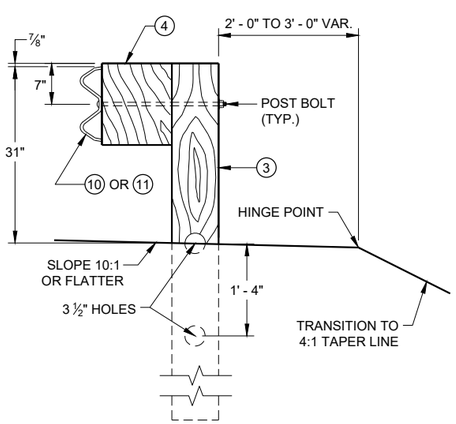

SECTION C - C
TYPICAL AT POST NOS. 3 - 9

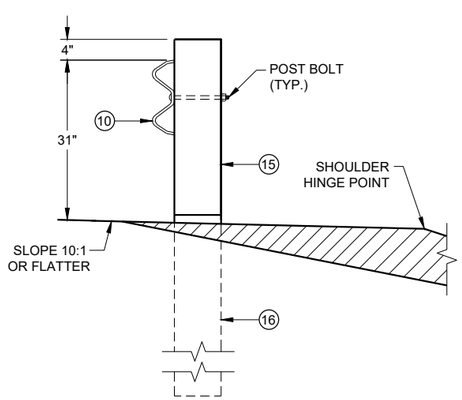

SECTION B - B
TYPICAL AT POST NO. 2*

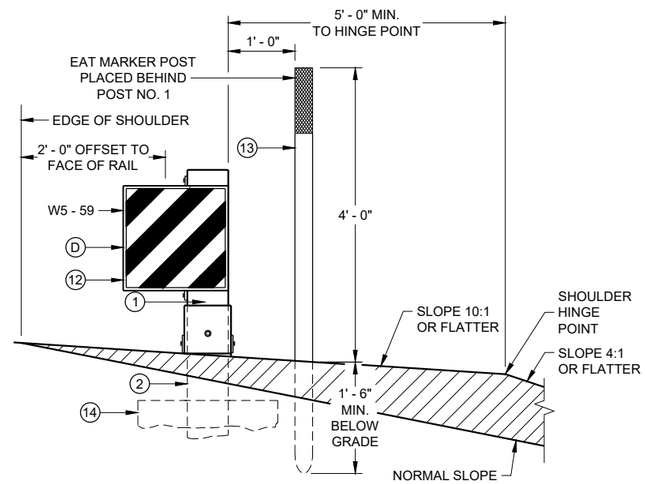

SECTION A - A
TYPICAL AT POST NO. 1*

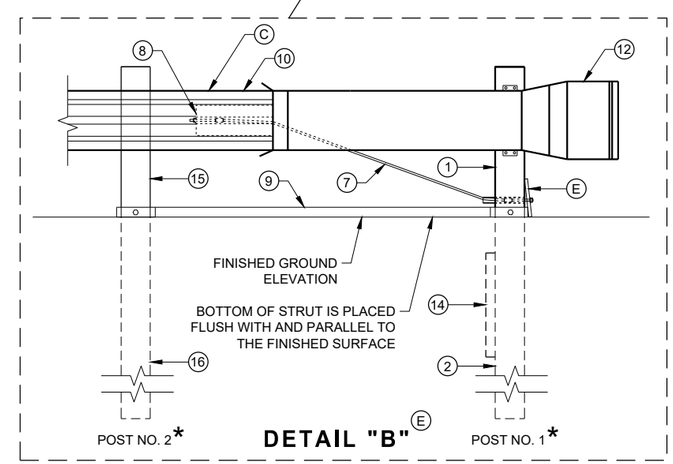

DETAIL "B" (E)

MIDWEST GUARDRAIL SYSTEM ENERGY ABSORBING TERMINAL (MGS)

STATE OF WISCONSIN
DEPARTMENT OF TRANSPORTAT

BILL OF MATERIALS

PART NO.	DESCRIPTION MATERIALS PROVIDED BY MGS EAT MANUFACTURER. SEE MANUGACTURER'S DETAILS FOR MORE INFORMATION.
1	UPPER POST NO. 1 6" X 6" TUBE
2	LOWER POST NO. 1
3	WOOD CRT
4	WOOD BLOCKOUT
5	PIPE SLEEVE
6	BEARING PLATE
7	BCT CABLE ASSEMBLY
8	ANCHOR CABLE BOX
9	GROUND STRUT
10	PERFORATED W-BEAM RAIL END PANEL, 12'-6" LONG.
11	STANDARD W-BEAM RAIL. MULTIPLE SECTIONS REQUIRED. SECTIONS VARY IN LENGTH.
12	IMPACT HEAD
13	EAT MARKER POST - YELLOW (SEE APPROVED PRODUCTS LIST)
14	SOIL PLATE
15	UPPER POST NO. 2
16	LOWER POST NO. 2

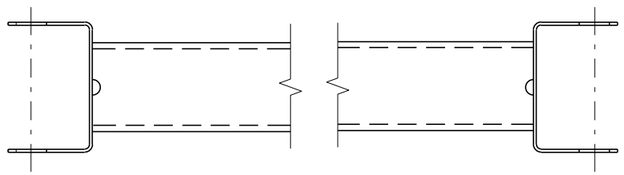

GENERIC GROUND STRUT 9 E

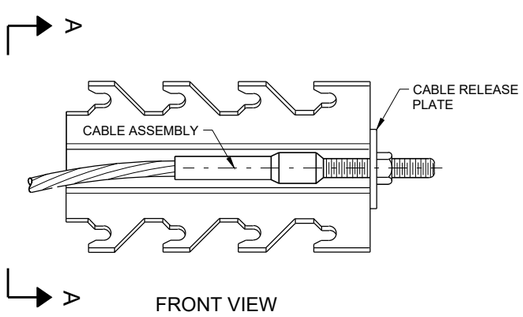

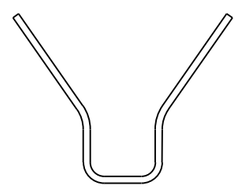

SECTION A - A

GENERIC ANCHOR CABLE BOX 9 E

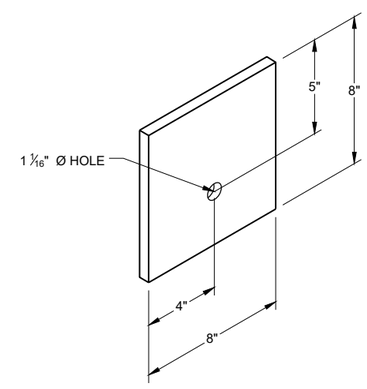

BEARING PLATE 6 E

6

6

SDD 14B44 - 04b

SDD 14B44 - 04b

MIDWEST GUARDRAIL SYSTEM ENERGY ABSORBING TERMINAL (MGS)

STATE OF WISCONSIN
DEPARTMENT OF TRANSPORTAT

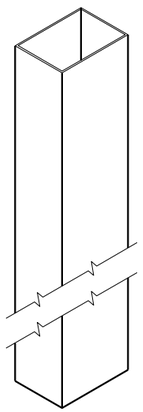

UPPER POST NO. 1 (1) (E)

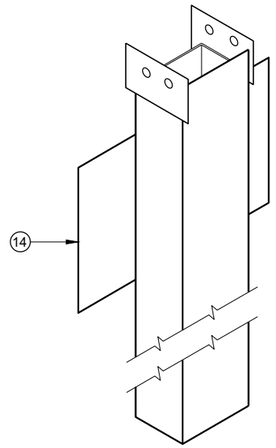

LOWER POST NO. 1 (2) (E)

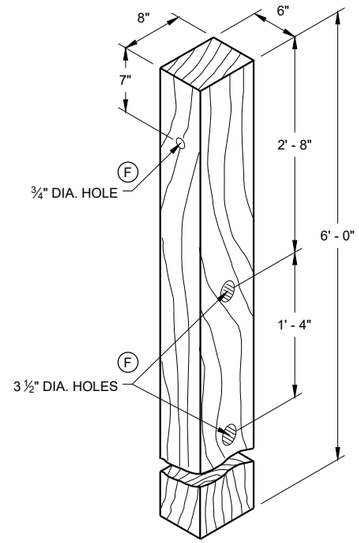

WOOD CRT POST (3) (E)

POSTS NUMBER 3-9

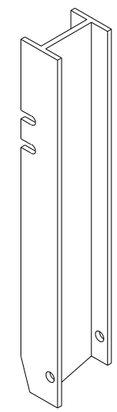

UPPER POST NO. 2 (15) (E)

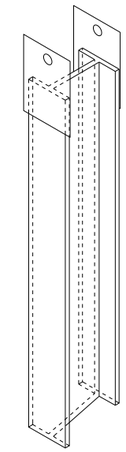

LOWER POST NO. 2 (16) (E)

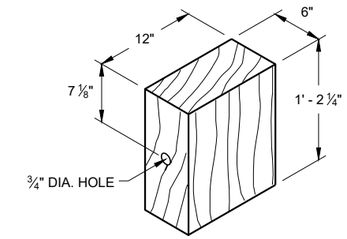

WOOD BLOCKOUT (4)

REQ'D. AT ALL POSTS EXCEPT POST NO'S 1 & 2

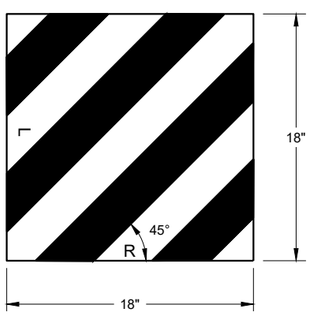

W5 - 59

REFLECTIVE SHEETING DETAIL (E)

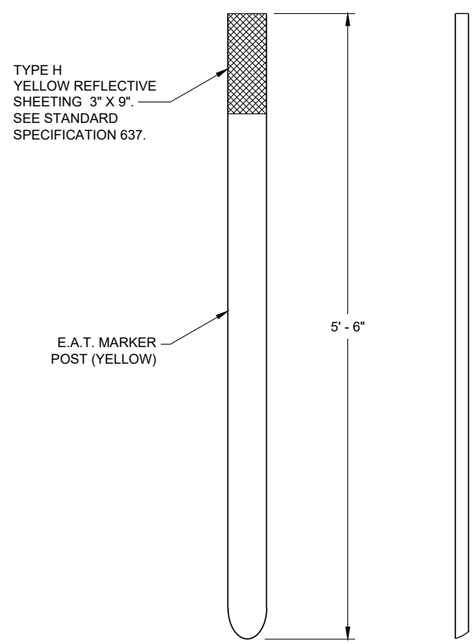

FRONT VIEW SIDE VIEW

E.A.T. MARKER POST (13)

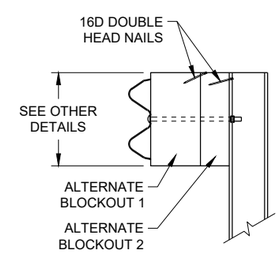

SIDE VIEW

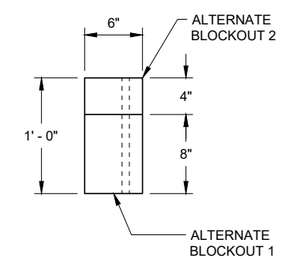

TOP VIEW

ALTERNATE WOOD BLOCKOUT DETAIL

MIDWEST GUARDRAIL SYSTEM ENERGY ABSORBING TERMINAL (MGS)

STATE OF WISCONSIN
DEPARTMENT OF TRANSPORTATION

APPROVED
7/2018 — DATE
/S/ Rodney Taylor — ROADWAY STANDARDS DEVE UNIT SUPERVISOR
FHWA

6

SDD 14B44 - 04c

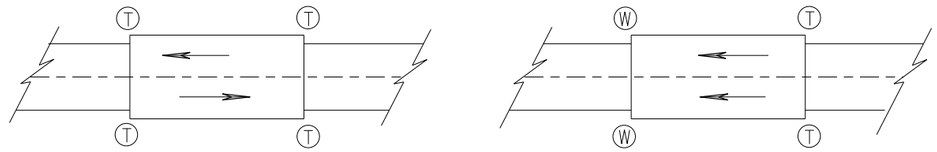

TWO WAY TRAFFIC **ONE WAY TRAFFIC**

(T) THRIE BEAM CONNECTION

(W) W-BEAM CONNECTION WHEN REQUIRED

TYPICAL LOCATIONS OF THRIE BEAM AND W-BEAM CONNECTIONS TO BRIDGE

GENERAL NOTES

IF ROCK IS ENCOUNTERED, REMOVE ROCK TO FULL DEPTH OF POST PLUS 2½", AND 12" DIAMETER AROUND POST. SEE 14B42 FOR MORE DETAILS.

TRANSITION USES STEEL POSTS ONLY.

SEE STANDARD DETAIL DRAWING 14 B 42 FOR MORE INFORMATION.

POST 2 THROUGH 17 USES STEEL POST ONLY

(1) BRIDGE RAILING TYPE "W" DOES NOT REQUIRE A TERMINAL CONNECTOR.

(2) OPTIONAL CURB AND GUTTER OR DRAINAGE FEATURE SEE PLAN FOR INFORMATION.

(13) STEEL OR WOOD POST IS ACCEPTABLE AT POST 1. SEE SDD14B42

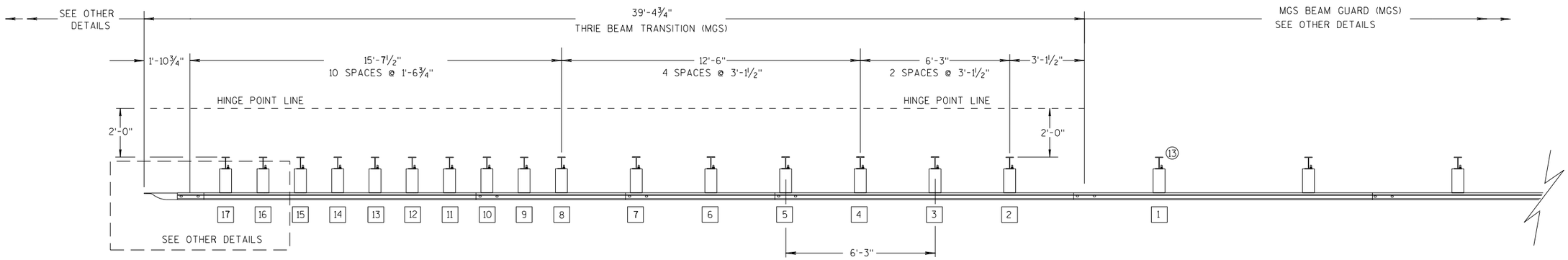

PLAN VIEW

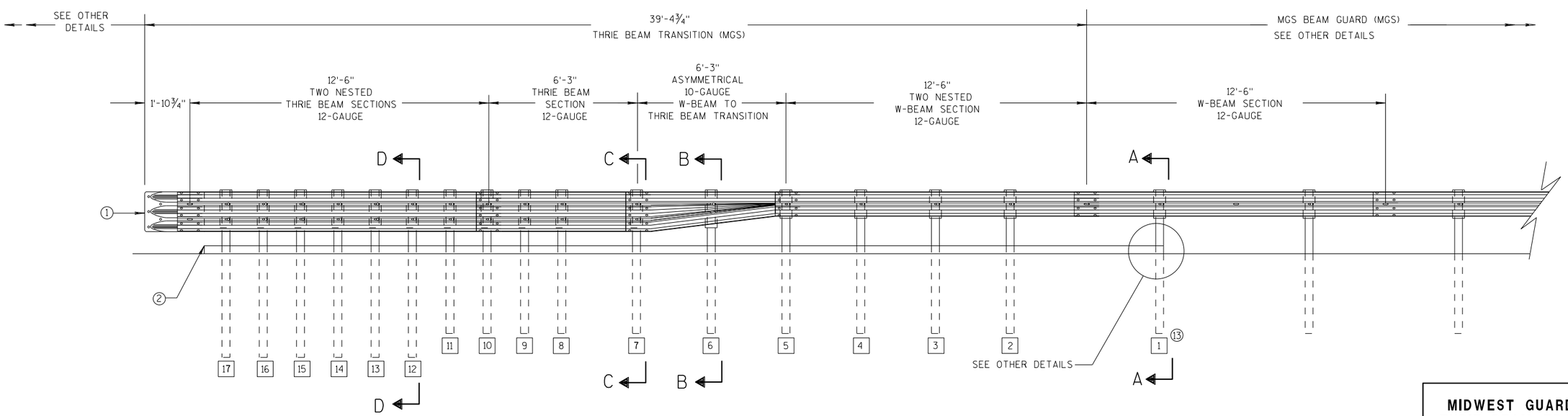

ELEVATION VIEW

MIDWEST GUARDRAIL SYSTEM THRIE BEAM TRANSITION

MIDWEST GUARDRAIL SYSTEM THRIE BEAM TRANSITION (MGS)

STATE OF WISCONSIN
DEPARTMENT OF TRANSPOR

6

S.D.D. 14 B 45-5a

GENERAL NOTES

(2) OPTIONAL CURB AND GUTTER OR DRAINAGE FEATURE SEE PLAN FOR INFORMATION.

(3) WHEN USING STEEL POSTS AND WOOD BLOCKOUTS INSTALL FOUR 10D GALVANIZED NAILS. INSTALL NAILS AT THE BACK CORNERS OF THE BLOCK AND BEND THE NAILS OVER THE FLANGE OF THE STEEL POST.

(4) TOLERANCE FOR TOP OF W-BEAM RAIL IS ± 1".

(13) STEEL OR WOOD POST IS ACCEPTABLE AT POST 1. SEE SDD 14B42

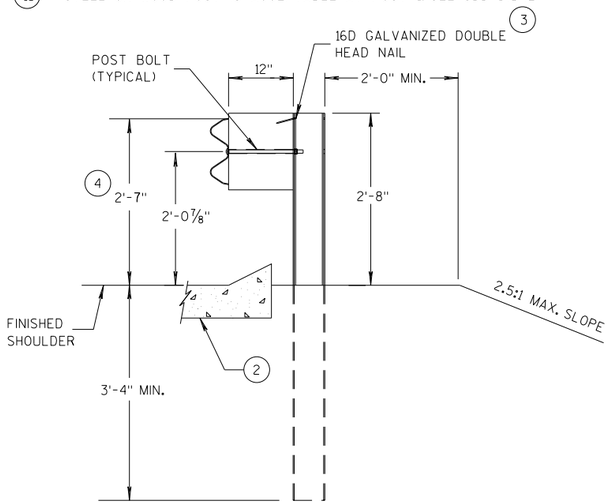

SECTION A-A (13)

POSTS 1-5

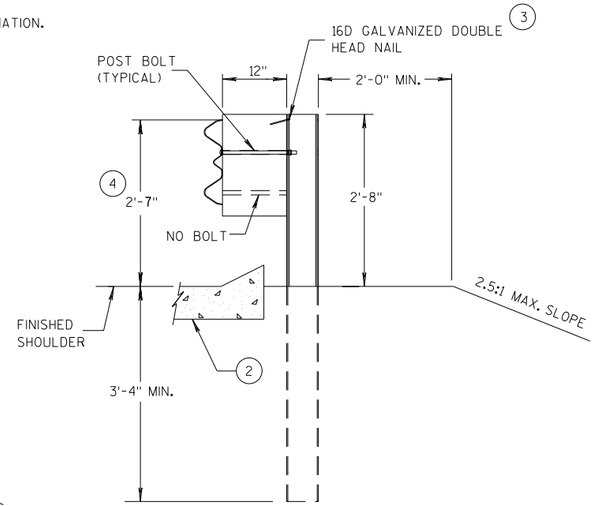

SECTION B-B

POST 6

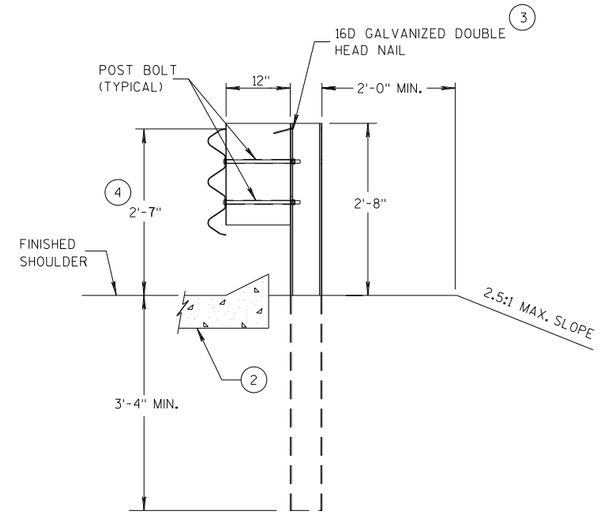

SECTION C-C

POSTS 7-11

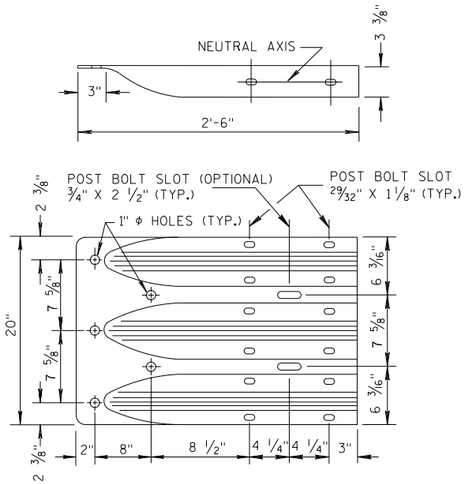

THRIE BEAM TERMINAL CONNECTOR

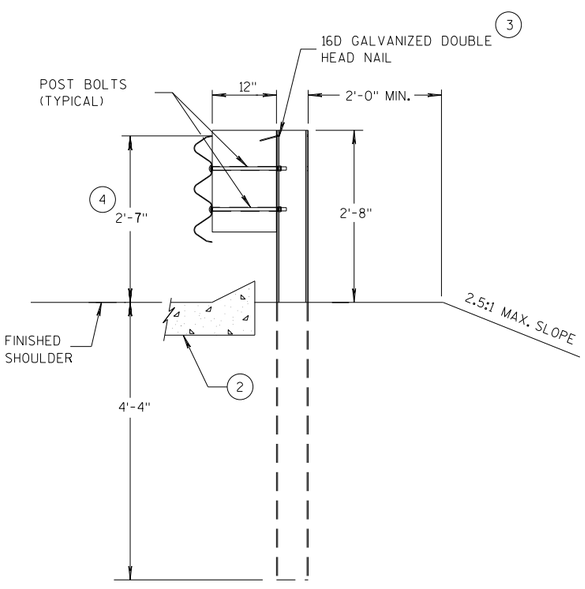

SECTION D-D

POSTS 12-17

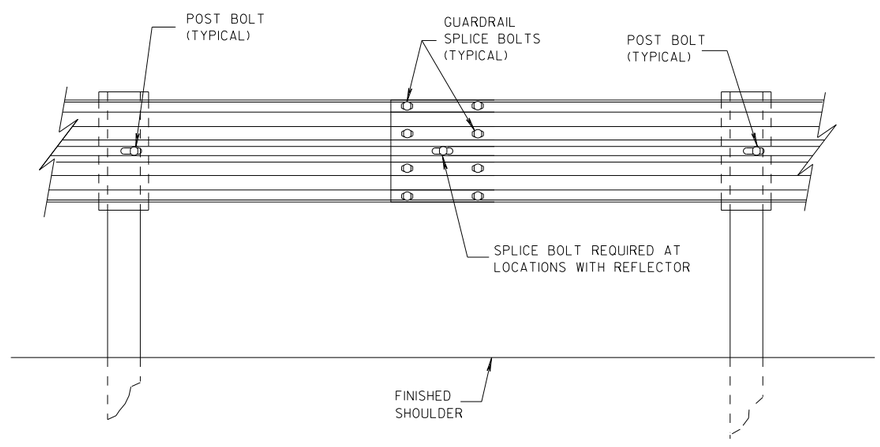

SPLICE DETAIL

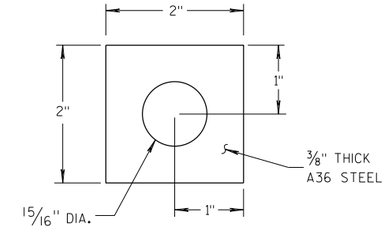

PLATE WASHER DETAIL

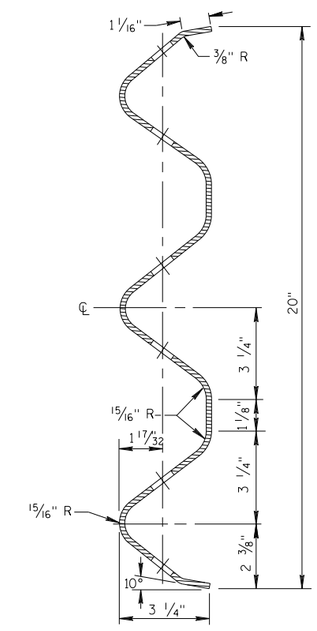

SECTION THRU THRIE BEAM RAIL ELEMENT

MIDWEST GUARDRAIL SYSTEM
THRIE BEAM TRANSITION (MGS)

STATE OF WISCONSIN
DEPARTMENT OF TRANSPOR

6

S.D.D. 14 B 45-5b

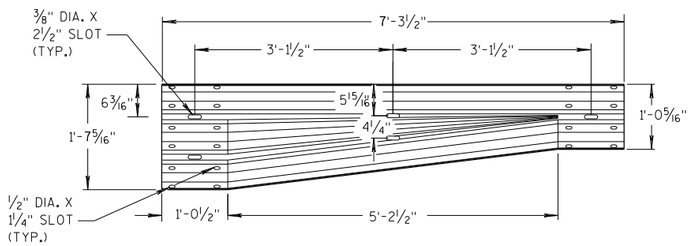

W-BEAM TO THRIE BEAM TRANSITION SECTION

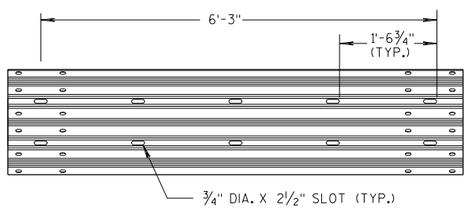

6'-3" THRIE BEAM SECTION

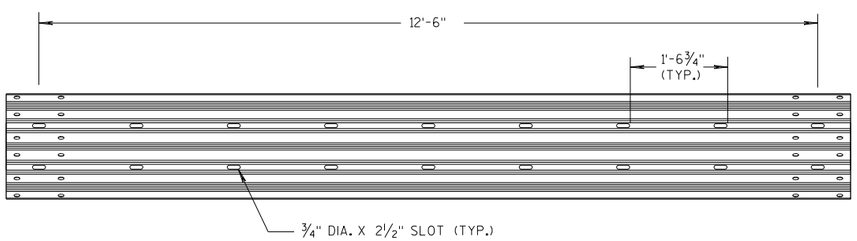

12'-6" THRIE BEAM SECTION

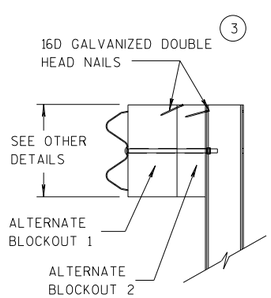

SIDE VIEW

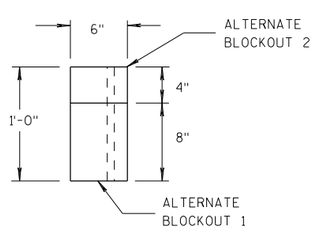

TOP VIEW

ALTERNATE WOOD BLOCKOUT DETAIL

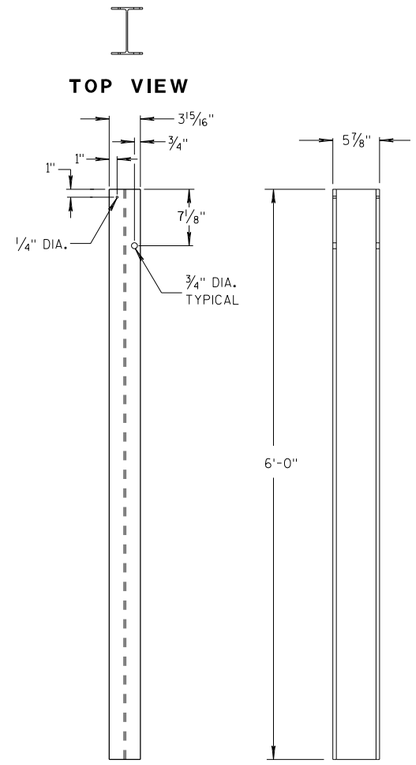

STEEL POSTS 1-5 (13)

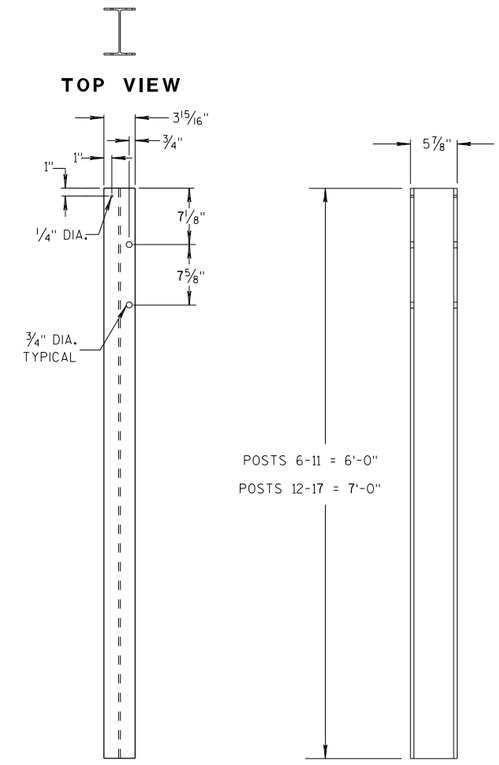

STEEL POSTS 6-17

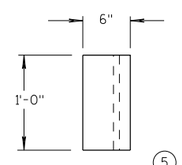

TOP VIEW (5)

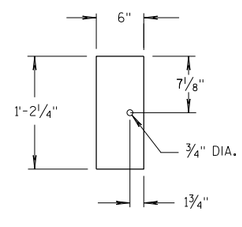

FRONT VIEW

BLOCKOUT POSTS 1-5

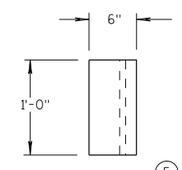

TOP VIEW (5)

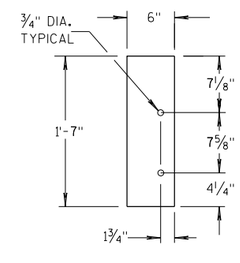

FRONT VIEW

BLOCKOUT POSTS 6-17

GENERAL NOTES

STEEL POSTS ARE W6X9 OR W6X8.5.

BOLT HOLES FOR POST ARE ON FRONT AND OF SIDE OF POST.

(3) WHEN USING STEEL POSTS AND WOOD BLOCKOUTS INSTALL FOUR 16D GALVANIZED NAILS. INSTALL NAILS AT THE BACK CORNERS OF THE BLOCK AND BEND THE NAILS OVER THE FLANGE OF THE STEEL POST.

(5) WOOD BLOCKS MAY BE CONSTRUCTED OUT OF 2 WOOD BLOCKS. SEE ALTERNATE WOOD BLOCK DETAIL.

(13) STEEL OR WOOD POST IS ACCEPTABLE AT POST 1. SEE SDD 14B42.

MIDWEST GUARDRAIL SYSTEM THRIE BEAM TRANSITION (MGS)

STATE OF WISCONSIN
DEPARTMENT OF TRANSPOR

6

S.D.D. 14 B 45-5c

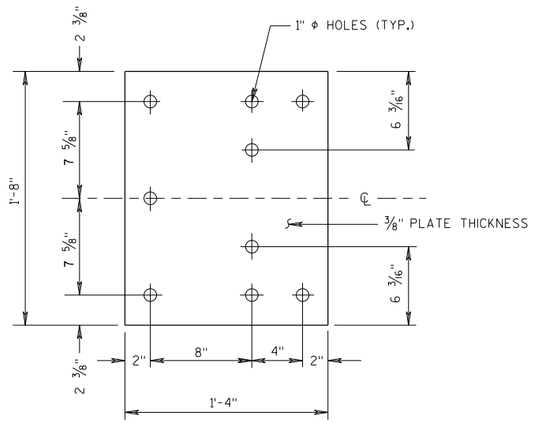

BACK-UP PLATE DETAIL

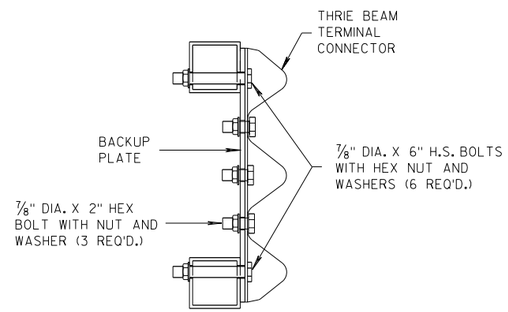

SECTION J-J

GENERAL NOTES

(4) TOLERANCE FOR TOP OF BEAM IS ± 1".

(6) DRILLING HOLES THROUGH THE PAPRPET, BOLTS, NUTS, WASHERS AND REPAIRING DAMAGED CONCRETE ARE INCIDENTAL TO THE CONTRACT.

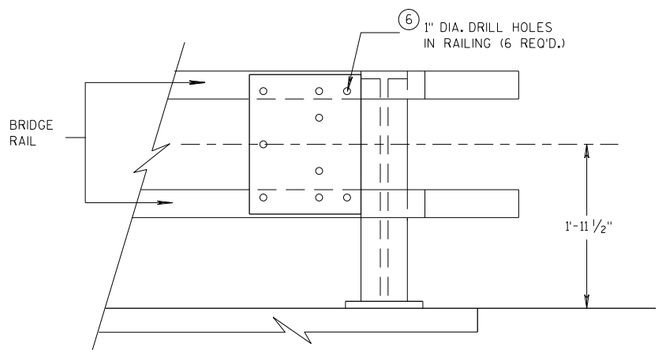

BACK-UP PLATE MOUNTING ONTO BRIDGE RAILING

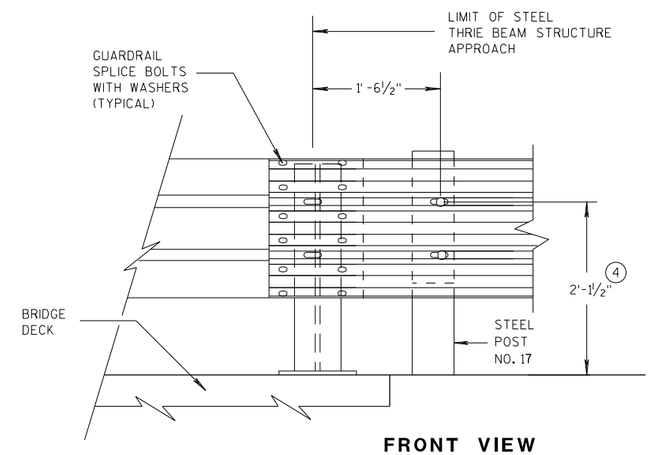

FRONT VIEW

THRIE BEAM CONNECTION TO STEEL RAILING TYPE "W"

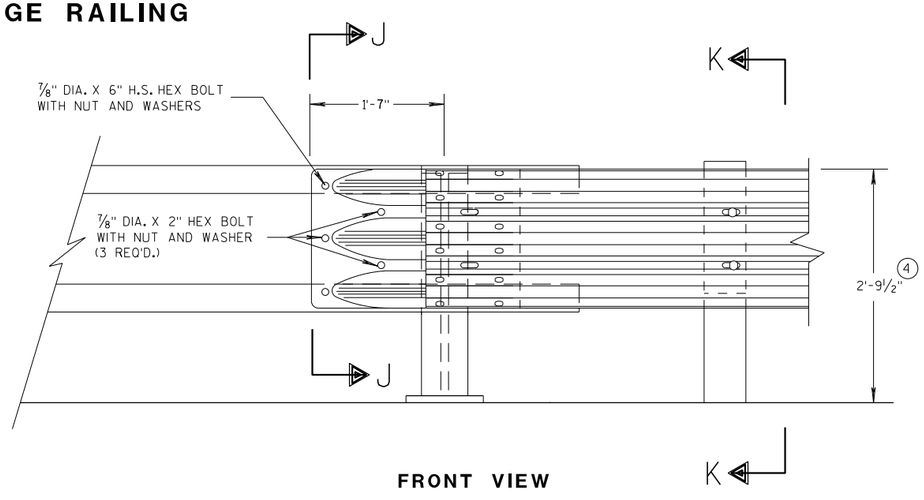

FRONT VIEW

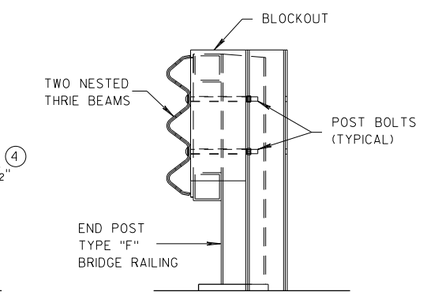

SECTION K-K

THRIE BEAM CONNECTION TO TUBULAR RAILING TYPE "F"

MIDWEST GUARDRAIL SYSTEM THRIE BEAM TRANSITION (MGS)

STATE OF WISCONSIN
DEPARTMENT OF TRANSPORTATION

APPROVED 07/2018 — DATE — FHWA

/S/ Rodney Taylor — ROADWAY STANDARDS DEVELOPMENT UNIT SUPERVISOR

6

S.D.D. 14 B 45-5g

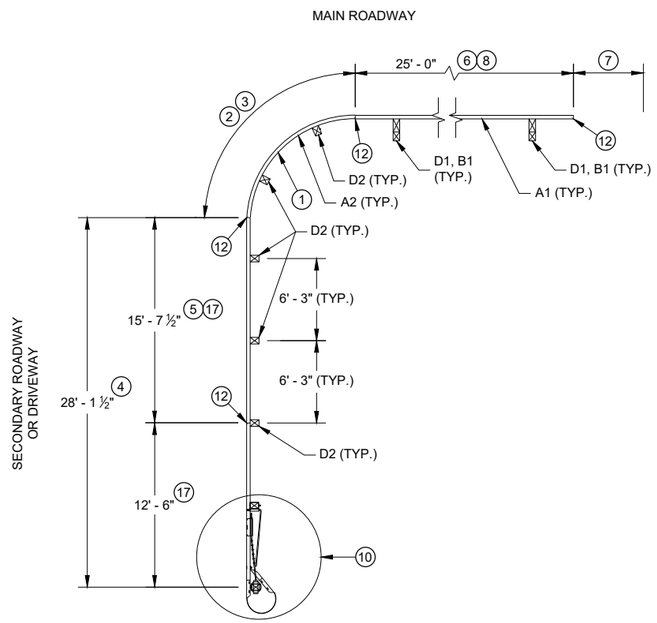

PLAN VIEW

SHORT RADIUS BEAM GUARD WITH SHORT RADIUS TERMINAL ON SECONDARY ROAD OR DRIVEWAY

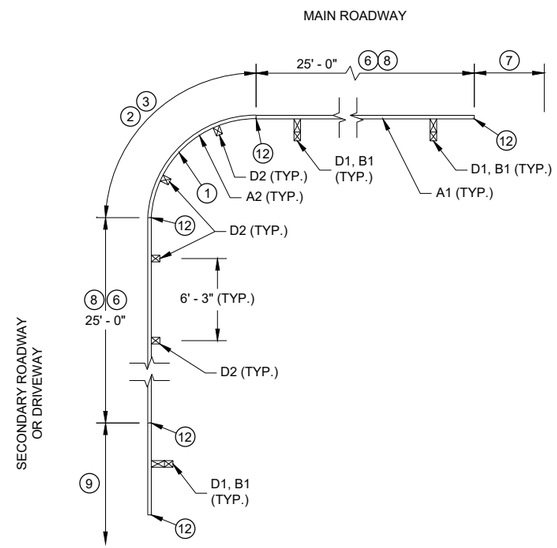

PLAN VIEW

SHORT RADIUS BEAM GUARD WITH EAT, ADDITIONAL BEAM GUARD OR TRANSITION TO RIGID BARRIER ON SECONDARY ROAD OR DRIVEWAY

TABLE FOR RADIUS OF 32' AND LESS

RADIUS (FT)	LENGTH (FT)	WIDTH (FT)
8	25	15
16	30	15
24	40	20
32	50	30

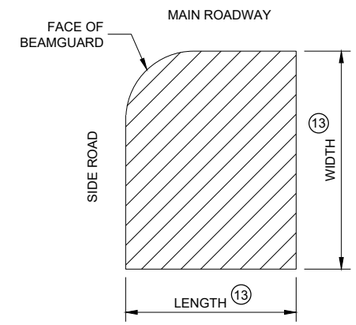

AREA FREE OF FIXED OBJECTS FOR RADIUS 32' AND LESS 16

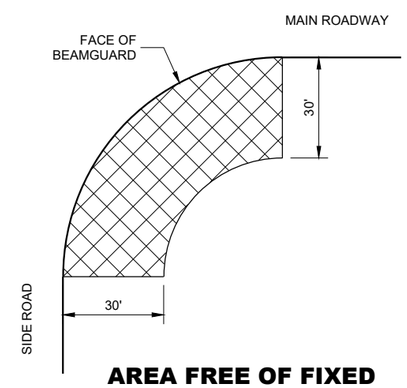

AREA FREE OF FIXED OBJECTS FOR RADIUS GREATER THAN 32'

GENERAL NOTES

SEE PLANS FOR OTHER BARRIER SYSTEM AND LOCATION SPECIFICS.

SEE SDD 14B42 FOR MORE INFORMATION ON BEAM GUARD INSTALLATION, PARTS, MATERIALS, AND INSTALLATION INFORMATION.

GALVANIZE PARTS AFTER FABRICATION.

WELDING TO FOLLOW CURRENT REQUIREMENTS OF THE AMERICAN WELDING SOCIETY STRUCTURAL WELDING CODE ANSI / AWS D1.1.

UNLESS NOTED OTHERWISE, ALL PLATES ARE FLAT AND FREE OF WARP.

UNLESS NOTED OTHERWISE, ALL EDGES ARE SMOOTH, STRAIGHT AND VERTICAL.

ALL CUTS AND HOLES, EXCEPT IN BEAM GUARD RAIL ARE TO BE MACHINED OR MACHINE FLAME CUT.

UNLESS NOTED OTHERWISE, CUT OR PROVIDE BOLTS THAT ARE ¼" TO ½" BEYOND THE NUT.

DRAWINGS ARE NOT TO SCALE.

1. RADIUS MEASURE FROM INSIDE OF RAIL. LENGTH OF BEAM GUARD SHORT RADIUS GUARD MEASURED ALONG TRAFFIC SIDE OF RAIL. RADIUS BETWEEN 8 FEET TO 150 FEET. SEE PLAN FOR REQUIRED RADIUS. BEAM GUARD RAIL IN RADIUS IS SHOP BENT. ODD RAIL LENGTH OR FIELD CUTS MAY BE REQUIRED.
2. CONTROLLED RELEASE TERMINAL (CRT) POSTS ARE USED IN THE RADIUS. CONTROLLED RELEASE TERMINAL (CRT) POSTS ARE SPACED 6' - 3". SEE PLAN FOR NUMBER OF CONTROLLED RELEASE (CRT) POSTS.
3. WITHIN RADIUS BEAM GUARD RAILS ARE NOT BOLTED TO POSTS. BEAM GUARD RAIL IS RESTED ON TOP OF LAG SCREW.
4. MINIMUM LENGTH OF BEAM GUARD ALONG SIDE ROAD OR DRIVEWAY TO INSTALL SHORT RADIUS TERMINAL. BEAM GUARD IS PAID WITH BEAM GUARD ITEM.
5. ODD LENGTH OF BEAM GUARD REQUIRED TO INSTALL SHORT RADIUS TERMINAL.
6. MINIMUM AMOUNT OF BEAM GUARD TO BE INSTALLED PRIOR TO TRANSITION TO RIGID BARRIER. ADDITIONAL BEAM GUARD, OR EAT. BEAM GUARD PAID FOR WITH BEAM GUARD ITEM. SEE PLANS FOR MORE DETAIL.
7. BEAM GUARD, EAT, OR TRANSITION TO RIGID BARRIER. SEE PLAN.
8. TOP OF BEAM GUARD BY THE RADIUS IS 27". HEIGHT OF BEAM GUARD IS 31" BY TRANSITION TO RIGID BARRIER, ADDITIONAL BEAM GUARD OR EAT.
9. ADDITIONAL BEAM GUARD, EAT OR TRANSITION TO RIGID BARRIER. BEAM GUARD SHOWN. SEE PLAN FOR DETAILS.
10. SHORT RADIUS TERMINAL (SEE OTHER DETAILS).
11. HEIGHT VARIES. SEE NOTE 8 AND 8.
12. BEAM GUARD RAIL SPLICE LOCATION. SPLICE LOCATION REQUIRES PART F1 AND F2. SEE SDD 14B42 FOR DETAILS.
13. SEE TABLE FOR VALUES.
14. MAXIMUM HEIGHT FOR CENTER OF HOLE IS ¾" ABOVE FINISHED GROUND ±1".
15. DRILL POST $^{15}/_{64}$" DIA. PILOT HOLE. DO NOT HAMMER LAG SCREW INTO POST.
16. SMALL SIGNS ON BREAKAWAY HARDWARE ARE ACCEPTABLE.
17. TOP OF RAIL HEIGHT IS 27" WHEN USING A SHORT RADIUS TERMINAL (CRT).

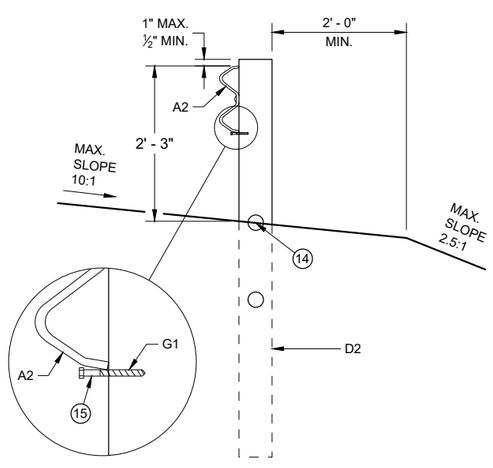

CONTROLLED RELEASE TERMINAL POST (CRT) IN RADIUS

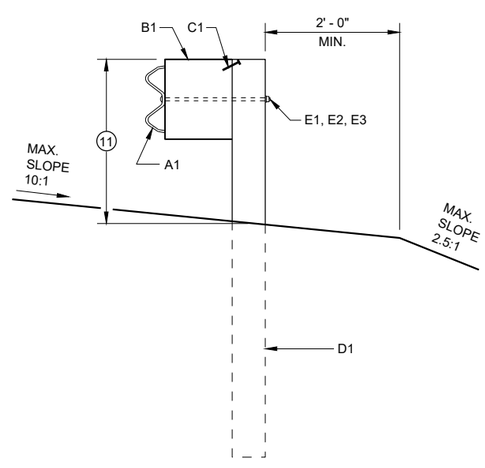

BEAM GUARD POSTS IN HEIGHT TRANSITION

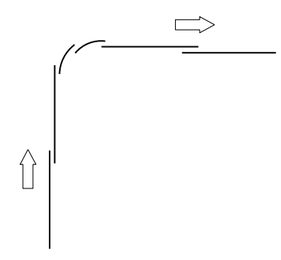

LAP SPLICE DETAIL

SHORT RADIUS BEAM GUARD (MGS) SHORT RADIUS TERMINAL (MGS)

STATE OF WISCONSIN
DEPARTMENT OF TRANSPORTAT 250

6

6

SDD 14B53 - 02a

SDD 14B53 - 02a

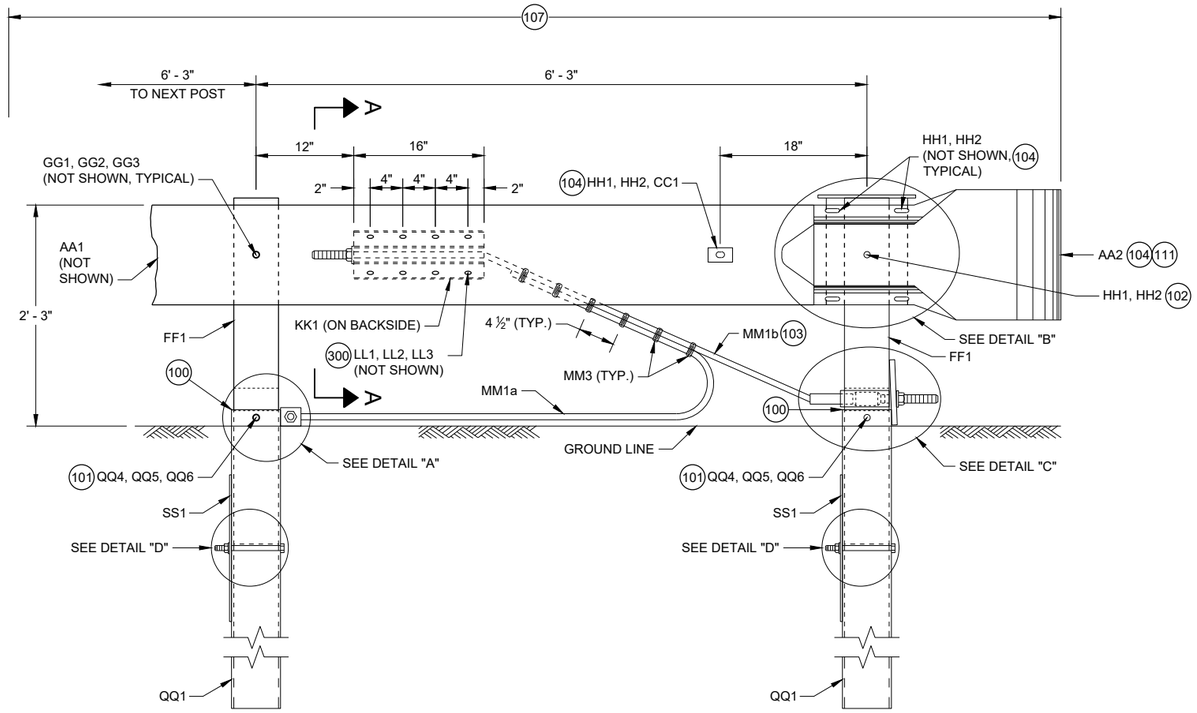

PROFILE VIEW

SHORT RADIUS TERMINAL

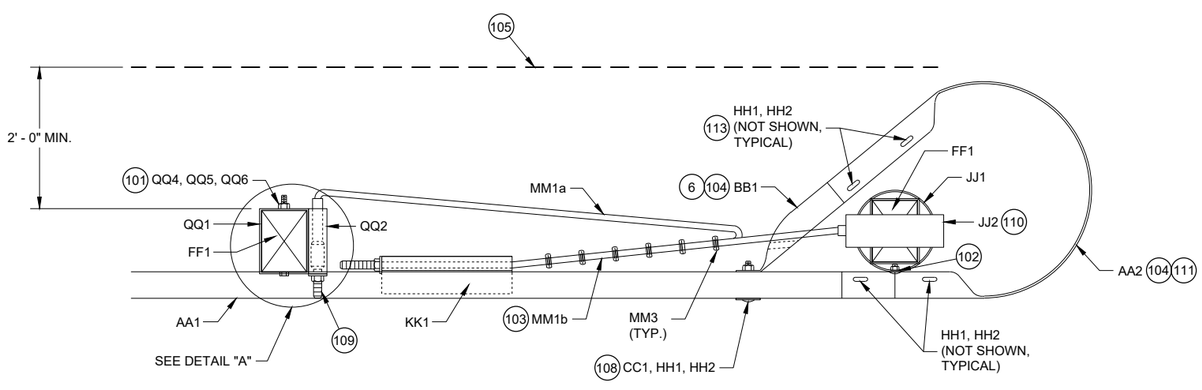

TOP VIEW

SHORT RADIUS TERMINAL

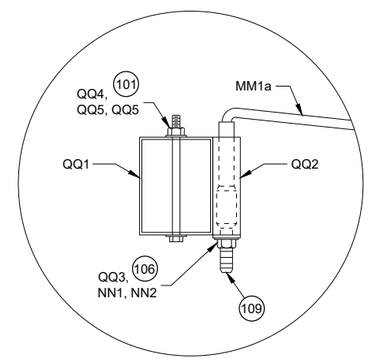

TOP VIEW

DETAIL "A"

(WOOD BREAKAWAY AND BEAM GUARD RAIL POSTS NOT SHOWN)

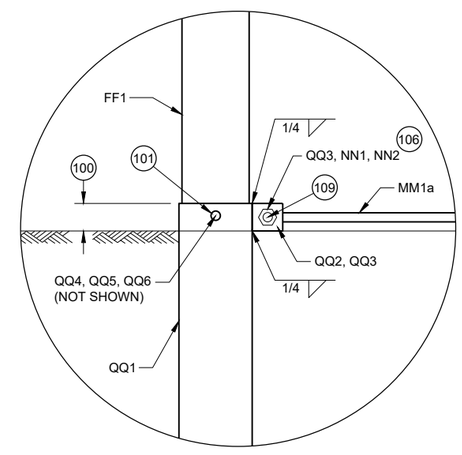

PROFILE VIEW

DETAIL "A"

GENERAL NOTES

100 TOP OF FOUNDATION TUBE 2 INCHES MAXIMUM ABOVE FINISHED GROUND.

101 WASHERS REQUIRED BETWEEN BOLT HEAD AND FOUNDATION TUBE AND BETWEEN NUT AND FOUNDATION TUBE.

102 SPLICE BOLT AND NUT CONNECTS BEAM GUARD RAIL, W-BEAM SECTION BUFFER, AND STEEL PIPE ASSEMBLY. NO WASHER REQUIRED. SEE DETAIL "B".

103 CABLE IS TAUT.

104 ADJUST AA2 AND BB1 TO FIT.

105 BREAK POINT OF SHOULDER.

106 TACK WELD CABLE CONNECTOR TUBE PLATE TO CABLE CONNECTION TUBE. SEE DETAIL "A" PROFILE VIEW.

107 PAY LIMIT FOR BEAM GUARD.

108 SQUARE WASHER BETWEEN HEAD OF BOLT AND TRAFFIC FACE OF BEAM GUARD. ROUND WASHER REQUIRED BETWEEN NUT AND BB1.

109 CUT OR PROVIDE THREADED STUD THAT IS FLUSH WITH FACE OF BEAM GUARD RAIL KK1 (PLUS OR MINUS ½" TOLERANCE). DEBURR AFTER CUTTING.

110 SEE STEEL PIPE ASSEMBLY DETAILS.

111 ATTACH UU2 WITH UU3. SHOP APPLY UU1 TO UU2.

112 FOUR (4) HH1 AND HH2 REQUIRED TO ATTACH AA1 TO AA2.

113 FOUR (4) HH1 AND HH2 REQUIRED TO ATTACH AA2 TO BB1.

6

6

SDD 14B53 - 02b

SDD 14B53 - 02b

SHORT RADIUS BEAM GUARD (MGS) SHORT RADIUS TERMINAL (MGS)

STATE OF WISCONSIN
DEPARTMENT OF TRANSPORTAT

GENERAL NOTES

(200) TWO (2) NAILS SPACED 4 INCHES CENTER TO CENTER.

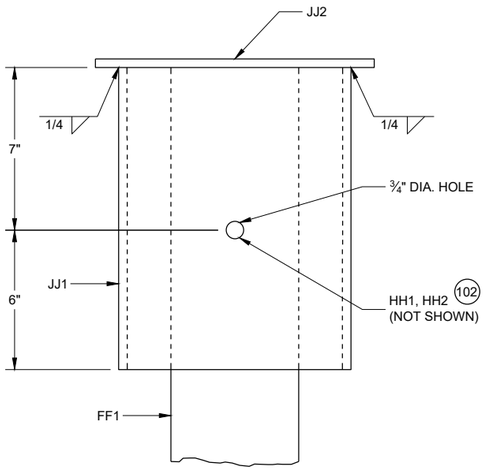

PROFILE VIEW

DETAIL "B"
STEEL PIPE ASSEMBLY
(BEAM GUARD AND W BEAM END SECTION NOT SHOWN)

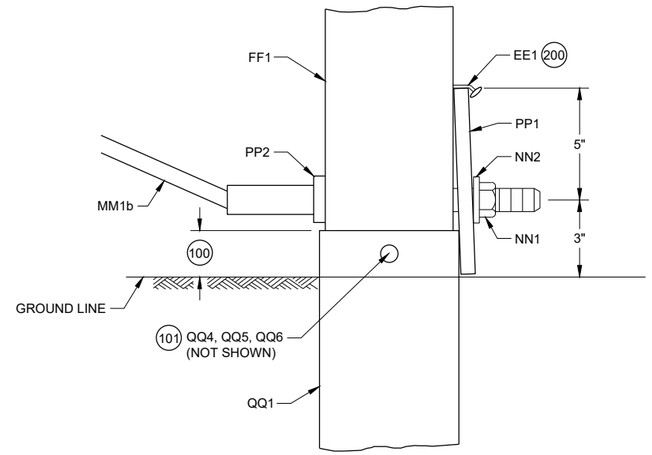

PROFILE VIEW

DETAIL "C"

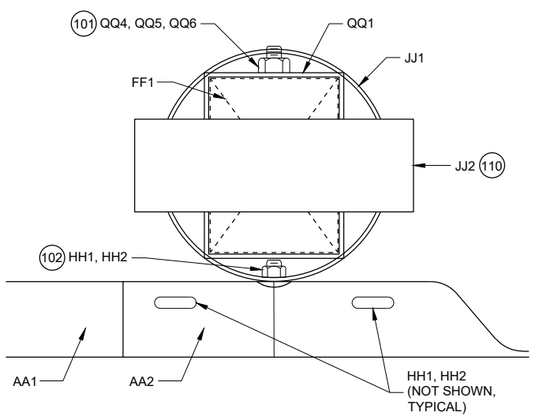

PLAN VIEW

DETAIL "B"
STEEL PIPE ASSEMBLY

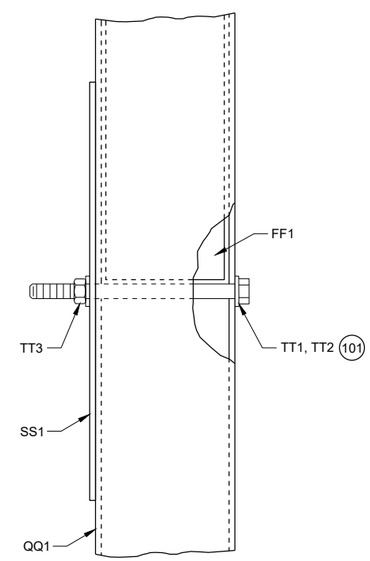

PROFILE VIEW

DETAIL "D"

SHORT RADIUS BEAM GUARD (MGS) SHORT RADIUS TERMINAL (MGS)

STATE OF WISCONSIN
DEPARTMENT OF TRANSPORTAT

6

SDD 14B53 - 02c

GENERAL NOTES

300 WASHERS REQUIRED BETWEEN BOLT HEAD AND BEAM GUARD RAIL AND BETWEEN NUT AND ANCHOR BRACKET. EIGHT (8) LL1 AND LL3 REQUIRED. SIXTEEN (16) LL2 REQUIRED.

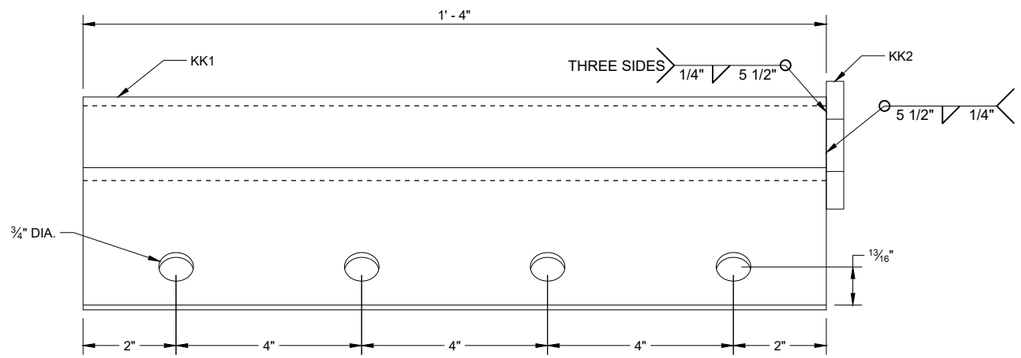

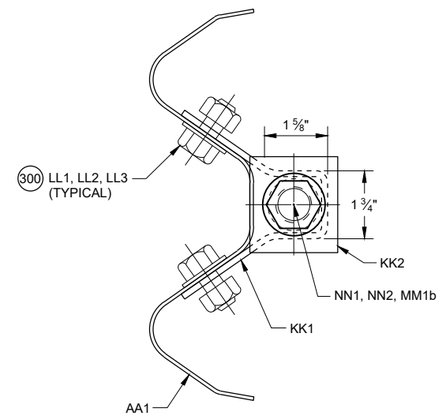

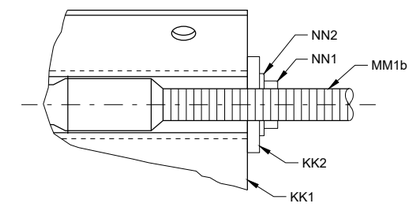

SECTION A - A

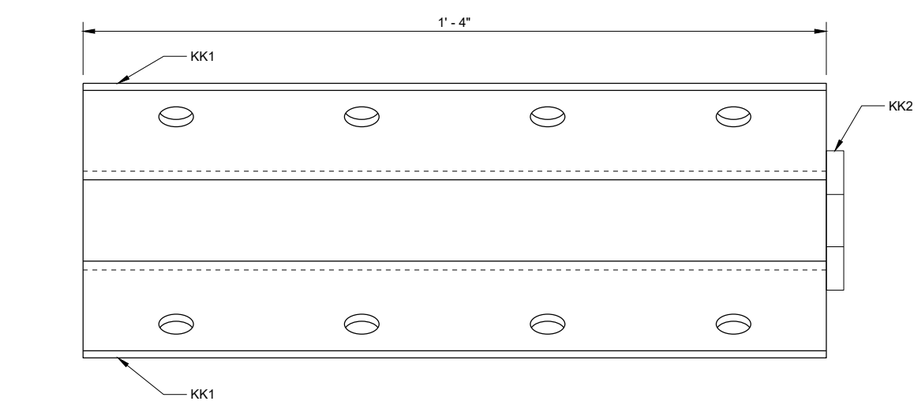

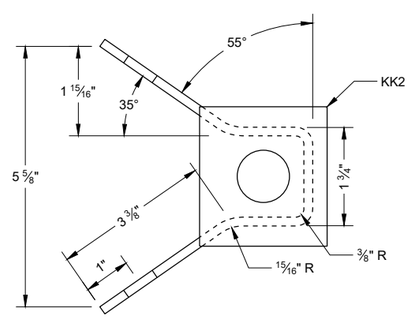

ANCHOR BRACKET (KK1, KK2)

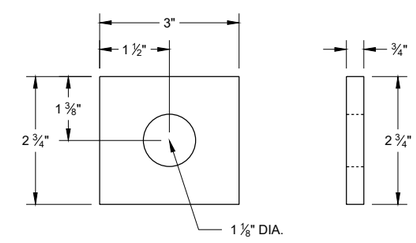

ANCHOR BRACKET BEARING PLATE (KK2)

6

6

SDD 14B53 - 02d

SDD 14B53 - 02d

SHORT RADIUS BEAM GUARD (MGS) SHORT RADIUS TERMINAL (MGS)

STATE OF WISCONSIN
DEPARTMENT OF TRANSPORTAT

GENERAL NOTES

(400) CROSS SECTION OF PART IS TO FIT OVER AA1 .

(401) CROSS SECTION OF PART IS TO FIT OVER OR UNDER AA1 .

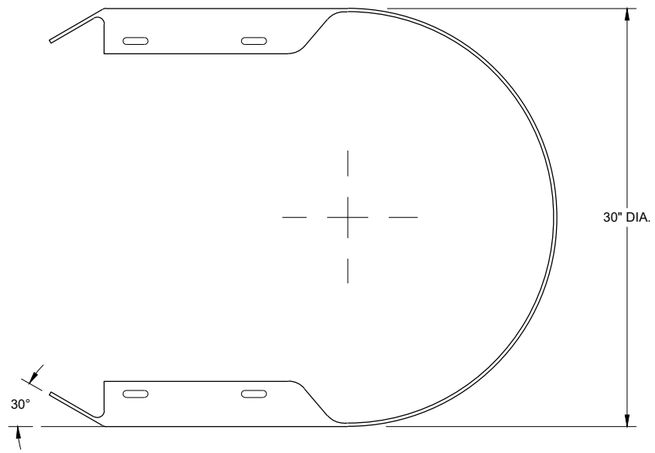

TOP VIEW

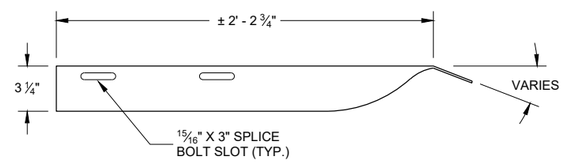

TOP VIEW

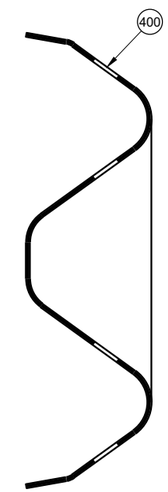

SECTION B -B

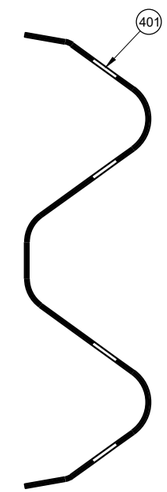

SECTION C -C

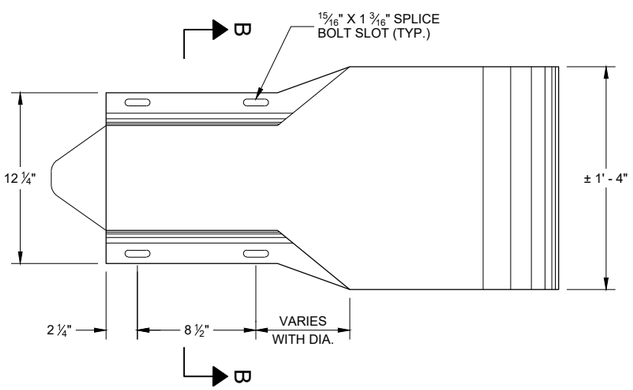

PROFILE VIEW

W BEAM
END SECTION BUFFER (AA2)

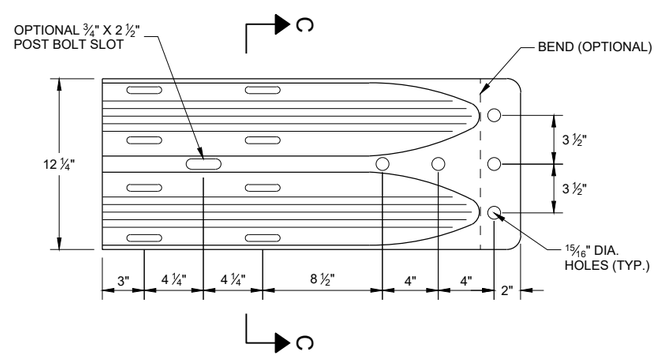

PROFILE VIEW

W BEAM
TERMINAL CONNECTOR (BB1)

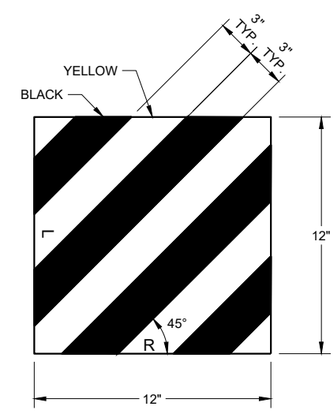

REFLECTIVE SHEETING (UU1, UU2)

SHORT RADIUS BEAM GUARD (MGS) SHORT RADIUS TERMINAL (MGS)

STATE OF WISCONSIN
DEPARTMENT OF TRANSPORTAT 254

6

6

SDD 14B53 - 02e

SDD 14B53 - 02e

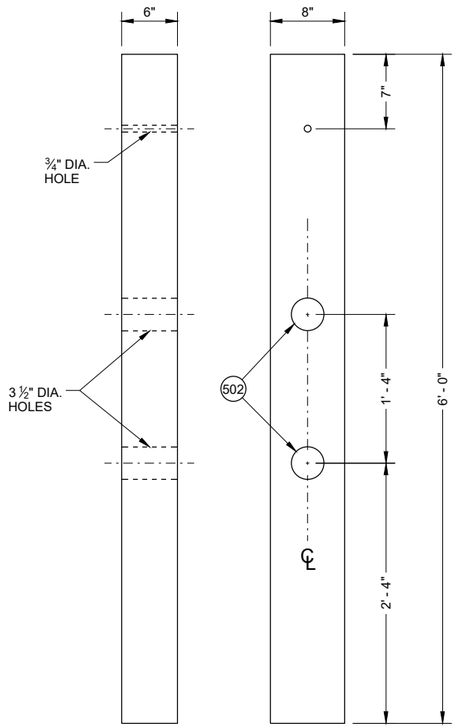

FRONT VIEW SIDE VIEW

CONTROLLED RELEASE POST (CRT) (DD2)

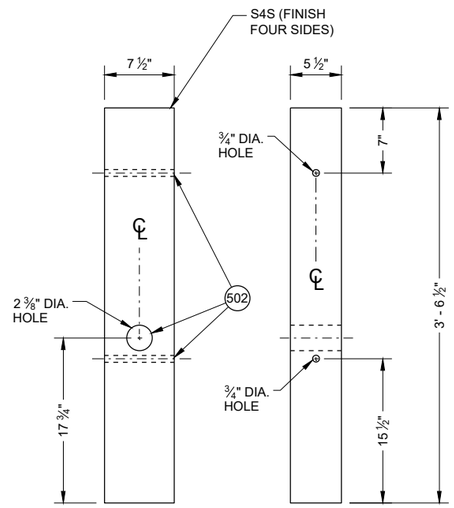

FRONT VIEW SIDE VIEW

WOOD BREAKAWAY POST (FF1)

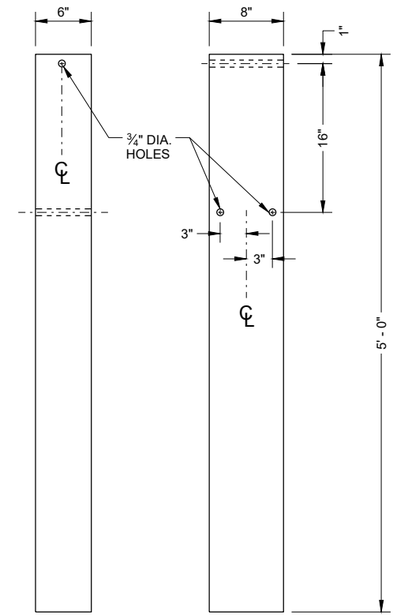

FRONT VIEW SIDE VIEW

FOUNDATION TUBE (QQ1) 500

GENERAL NOTES

500 SEE DETAIL "D" FOR LOCATION AND ATTACHMENT OF SS1.

501 FOR MM1a THREADED STUD ONLY REQUIRED ON ONE END. SWAGED FITTING REQUIRED.

502 LOCATE HOLES ON THE CENTERLINE OF THE SIDE OF THE POST.

503 MM1a MAY HAVE ONE THREADED STUD 4 INCHES LONG. SEE NOTE 109.

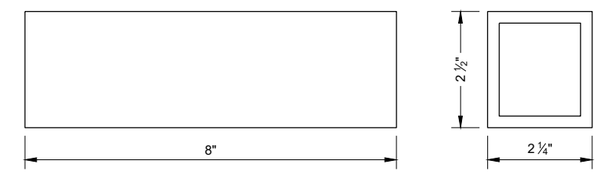

FOUNDATION TUBE - ANCHOR CABLE TUBE (QQ2)

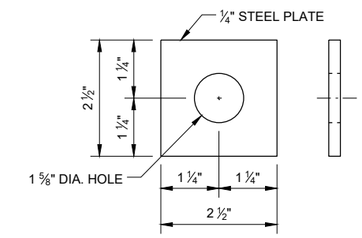

ANCHOR CABLE TUBE END PLATE (QQ3)

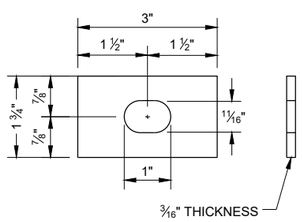

RECTANGULAR PLATE WASHER (CC1)

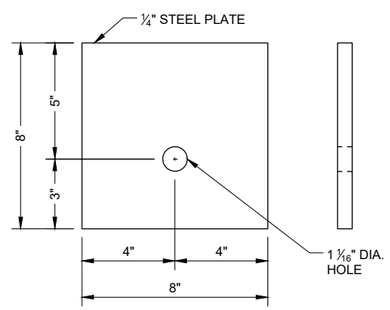

BEARING PLATE (PP1)

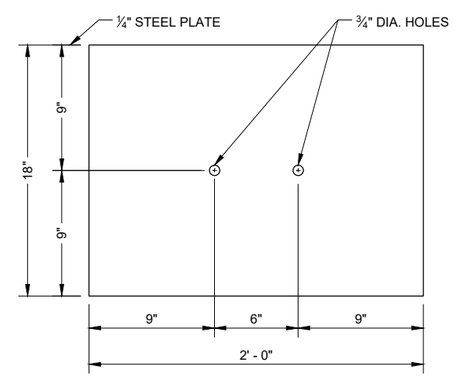

SOIL PLATE (SS1)

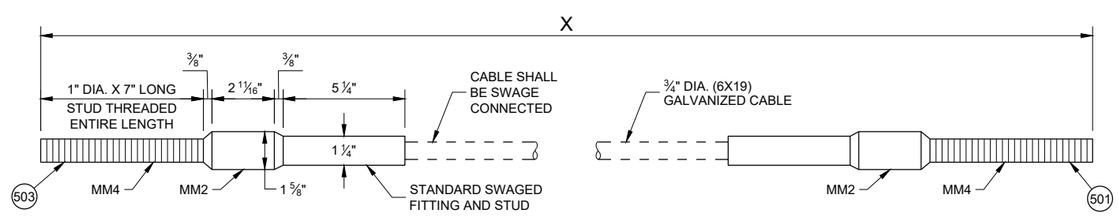

CABLE ASSEMBLY (MM1a, MM1b)

"X" LENGTH

MM1b	9' - 0"
MM1b	6' - 8"

SHORT RADIUS BEAM GUARD (MGS) SHORT RADIUS TERMINAL (MGS)

STATE OF WISCONSIN
DEPARTMENT OF TRANSPORTAT

6

SDD 14B53 - 02f

BILL OF MATERIALS - SHORT RADIUS BEAM GUARD (MGS)

PART	DESCRIPTION	MATERIALS SPECIFICATIONS	NOTES
A1	BEAM GUARD RAIL	AASHTO M180, CLASS A, TYPE 2	
		APPROVED PRODUCER	
A2	BEAM GUARD RAIL - SHOP BENT	INDICATE ON BACK OF RAIL THE RADIUS THAT RAIL WAS BENT TO. SHOP BEND RADIUS IS TO THE NEAREST FOOT. FOLLOW AASHTO M180 ON HOW TO MARK RADIUS INFORMATION.	
		AASHTO M180, CLASS A, TYPE 2	
		APPROVED PRODUCER	
B1	BLOCK - WOOD	WISDOT SPEC. 614	SEE SDD 14B42
C1	NAIL	ASTM A153 HOT DIP CLASS D	
		ASTM F1667 TYPE 1 STYLE 12 (16 DOUBLE HEAD)	
D1	POST-STRONG POST-WOOD	WISDOT SPEC. 614	SEE SDD 14B42
D2	POST-CRT-WOOD	WISDOT SPEC. 614	
E1	POST BOLT	ASTM A307 GRADE A OR SAE J429 GRADE 2	5/8" DIA. SEE SDD 14B42 FOR BOLT GEOMETRY
		AASHTO M180	
		GALV. HOT DIP TO AASHTO M232 CLASS C / ASTM A153 CLASS C / ASTM F2329 OR GALV. MECHANICALLY TO AASHTO M298 CLASS 50, TYPE 1 / ASTM B695 CLASS 50, TYPE 1	
		UNC	
E2	POST BOLT - WASHER	ASTM F436 TYPE 1 (HARDEN TYPICALLY USED WITH STEEL) OR ASTM F844 (UNHARDENED TYPICALLY WITH WOOD)	5/8" DIA.
		GALV. AASHTO M111 / ASTM A 123 OR GALV. HOT DIP. TO AASHTO M232 CLASS C / ASTM A153 CLASS C / ASTM F2329	
E3	POST BOLT - NUT	AASHTO M180 DOUBLE RECESSED HEAVY HEX HEAD	5/8" DIA. SEE SDD 14B42 FOR BOLT GEOMETRY
		GALV. HOT DIP TO AASHTO M232 CLASS C / ASTM A153 CLASS C / ASTM F2329 OR GALV. MECHANICALLY TO AASHTO M298 CLASS 50, TYPE 1 / ASTM B695 CLASS 50, TYPE 1	
		UNC	
		OVER TAPPED NUTS OVER-SIZE AS SPECIFIED IN AASHTO 291 / ASTM A 563	
		ASTM A563 GRADE A HEAVY HEX HEAD	
F1	SPLICE BOLT	GALV. HOT DIP TO AASHTO M232 CLASS C / ASTM A153 CLASS C / ASTM F2329 OR GALV. MECHANICALLY TO AASHTO M298 CLASS 50, TYPE 1 / ASTM B695 CLASS 50, TYPE 1	5/8" DIA. SEE SDD 14B42 FOR BOLT GEOMETRY
		ASTM A307 GRADE A OR SAE J429 GRADE 2	
		UNC	
		AASHTO M180	

PART	DESCRIPTION	MATERIALS SPECIFICATIONS	NOTES
F2	SPLICE BOLT - NUT	ASTM A563 GRADE A	5/8" DIA. SEE SDD 14B42 FOR BOLT GEOMETRY
		AASHTO M180 DOUBLE RECESSED HEAVY HEX HEAD	
		GALV. HOT DIP TO AASHTO M232 CLASS C/ASTM A153 CLASS C/ASTM F2329 OR GALV. MECHANICALLY TO AASHTO M298 CLASS 50, TYPE 1/ASTM B695 CLASS 50, TYPE 1	
		OVER TAPPED NUTS OVER-SIZE AS SPECIFIED IN AASHTO 291 / ASTM A 563	
		UNC	
G1	LAG SCREW	ASTM A308 GRADE A ASTM A153 CLASS D	1/2" DIA. 6" LONG
H1	DELINEATOR - BEAM GUARD		SEE SDD 14B42 FOR MORE INFORMATION
H2	DELINEATION - SHEETING	YELLOW OR WHITE	
		WISDOT SPEC 637 TYPE SH	
		APPROVED PRODUCT LIST	
J1	FOUNDATION BACKFILL	STANDARD SPEC. 614	
AA1	BEAM GUARD RAIL - PUNCHED	AASHTO M180, CLASS A, TYPE 2	
		APPROVED PRODUCER	
AA2	BEAM GUARD RAIL - END SECTION BUFFER	AASHTO M180, CLASS A, TYPE 2	
		APPROVED PRODUCER	
BB1	BEAM GUARD RAIL - TERMINAL CONNECTOR MODIFIED	AASHTO M180, CLASS A, TYPE 2	
		APPROVED PRODUCER	
CC1	SHORT RADIUS - SQUARE WASHER	AASHTO M180	
		GALV. AASHTO M111 / ASTM A123	
EE1	NAIL	ASTM A153 HOT DIP CLASS D	
		ASTM F1667 TYPE 1 STYLE 12 (16 DOUBLE HEADED)	
FF1	POST - BCT - WOOD	S4S FINISH ON 4 SIDES	
		WISDOT SPEC. 614	
GG1	POST BOLT	ASTM A307 GRADE A OR SAE J429 GRADE 2	3/8" DIA. SEE SDD 14B42 FOR BOLT GEOMETRY
		AASHTO M180	
		GALV. HOT DIP TO AASHTO M232 CLASS C/ASTM A153 CLASS C/ASTM F2329 OR GALV. MECHANICALLY TO AASHTO M298 CLASS 50, TYPE 1/ASTM B695 CLASS 50, TYPE 1	
		UNC	
GG2	POST BOLT - WASHER	ASTM F436 TYPE 1 (HARDEN TYPICALLY USED WITH STEEL) OR ASTM F844 (UNHARDENED TYPICALLY WITH WOOD)	3/8" DIA.
		GALV. AASHTO M111 / ASTM A 123 OR GALV. HOT DIP. TO AASHTO M232 CLASS C/ASTM A153 CLASS C / ASTM F2329	

SHORT RADIUS BEAM GUARD (MGS) SHORT RADIUS TERMINAL (MGS)

STATE OF WISCONSIN
DEPARTMENT OF TRANSPORTAT

6

SDD 14B53 - 02g

BILL OF MATERIALS - SHORT RADIUS BEAM GUARD (MGS)

PART	DESCRIPTION	MATERIALS SPECIFICATIONS	NOTES
GG3	POST BOLT - NUT	ASTM A563 GRADE A	⅜" DIA. SEE 14B42 FOR GEOMETRY
		AASHTO M180 DOUBLE RECESSED HEAVY HEX HEAD	
		GALV. HOT DIP TO AASHTO M232 CLASS C / ASTM A153 CLASS C / ASTM F2329 OR GALV. MECHANICALLY TO AASHTO M298 CLASS 50, TYPE 1 / ASTM B695 CLASS 50, TYPE 1	
		UNC	
		OVER TAPPED NUTS OVER-SIZE AS SPECIFIED IN AASHTO 291 / ASTM A 563	
		ASTM A563 GRADE A HEAVY HEX HEAD	
HH1	SPLICE BOLT	GALV. HOT DIP TO AASHTO M232 CLASS C / ASTM A153 CLASS C / ASTM F2329 OR GALV. MECHANICALLY TO AASHTO M298 CLASS 50, TYPE 1 / ASTM B695 CLASS 50, TYPE 1	⅜" DIA. SEE SDD 14B42 FOR BOLT GEOMETRY
		ASTM A307 GRADE A OR SAE J429 GRADE 2	
		UNC	
		AASHTO M180 HEAD GEOMETRY	
HH2	SPLICE BOLT - NUT	ASTM A563 GRADE A	⅜" DIA. SEE SDD 14B42 FOR BOLT GEOMETRY
		AASHTO M180 DOUBLE RECESSED HEAVY HEX HEAD	
		GALV. HOT DIP TO AASHTO M232 CLASS C / ASTM A153 CLASS C / ASTM F2329 OR GALV. MECHANICALLY TO AASHTO M298 CLASS 50, TYPE 1 / ASTM B695 CLASS 50, TYPE 1	
		OVER TAPPED NUTS OVER-SIZE AS SPECIFIED IN AASHTO 291 / ASTM A 563	
		UNC	
JJ1	PIPE - STEEL	ASTM A53 GALVANIZED GRADE B SCHEDULE 40	10" O.D.
JJ2	TOP PLATE	ASTM A36 MIN. STRENGTH 36 KSI, OR ASTM A529 MAX. STRENGTH 50 KSI, OR ASTM A572 MAX STRENGTH 50 KSI OR ASTM A709 MAX STRENGTH 50 KSI OR ASTM A992 MAX STRENGTH 50 KSI	DIMENSIONS ⅜" X 4" X 1' - 0"
		GALV. AASHTO M111 / ASTM A123	
KK1	ANCHOR BRACKET	ASTM A36 MIN. STRENGTH 36 KSI, OR ASTM A529 MAX. STRENGTH 50 KSI, OR ASTM A572 MAX STRENGTH 50 KSI OR ASTM A709 MAX STRENGTH 50 KSI OR ASTM A992 MAX STRENGTH 50 KSI	
		GALV. AASHTO M111 / ASTM A123	
KK2	ANCHOR BRACKET - BEARING PLATE	ASTM A36 MIN. STRENGTH 36 KSI, OR ASTM A529 MAX. STRENGTH 50 KSI, OR ASTM A572 MAX STRENGTH 50 KSI OR ASTM A709 MAX STRENGTH 50 KSI OR ASTM A992 MAX STRENGTH 50 KSI	
		GALV. AASHTO M111 / ASTM A123	
LL1	ANCHOR BRACKET - BOLT	ASTM A307 GRADE B HEAVY HEX HEAD OR SAE J429 GRADE 2 HEAVY HEX HEAD	⅝" DIA.
		GALV. HOT DIP TO AASHTO M232 CLASS C / ASTM A153 CLASS C / ASTM F2329 OR GALV. MECHANICALLY TO AASHTO M298 CLASS 50, TYPE 1 / ASTM B695 CLASS 50, TYPE 1	
		UNC	

PART	DESCRIPTION	MATERIALS SPECIFICATIONS	NOTES
LL2	ANCHOR BRACKET - WASHER	ASTM F436 TYPE 1 (HARDEN WASHER ONLY)	⅝" DIA.
		GALV. AASHTO M111 / ASTM A123 OR GALV. HOT DIP TO AASHTO M232 CLASS C / ASTM A153 CLASS C / ASTM F2329	
LL3	ANCHOR BRACKET - NUT	ASTM A563 GRADE A	⅝" DIA.
		GALV. HOT DIP TO AASHTO M232 CLASS C / ASTM A153 CLASS C / ASTM F2329 OR GALV. MECHANICALLY TO AASHTO M298 CLASS 50, TYPE 1 / ASTM B695 CLASS 50, TYPE 1	
		OVER TAPPED NUTS OVER-SIZE AS SPECIFIED IN AASHTO 291 / ASTM A 563	
		UNC	
MM1a	ANCHOR CABLE	AASHTO M30 / ASTM A741 INDEPENDENT WIRE CORE (IWRC) OR WIRE STRAND CORE (WCS), IMPROVED PLOW STEEL (IPS), 6X19, TYPE II OR IIc CLASS C ZINC COATED	
MM1b	ANCHOR CABLE	AASHTO M30 / ASTM A741 INDEPENDENT WIRE CORE (IWRC) OR WIRE STRAND CORE (WCS), IMPROVED PLOW STEEL (IPS), 6X19, TYPE II OR IIc CLASS C ZINC COATED	
MM2	ANCHOR CABLE - SWAGE FITTING	ASTM A576 GRADE 1035	
		SWAGE FITTINGS ARE TO BE FACTORY SWEDGED. WITH A BREAKING STRENGTH 40,000 LBS.	
		GALV. AASHTO M111 / ASTM A123	
		ASME B30.26 FORGED, CAST, OR DIE STAMPED WITH THE FOLLOWING INTO CONNECTION: NAME OF MANUFACTURER OR TRADEMARK OF CONNECTION'S MANUFACTURER, SIZE OR RATED LOAD, GRADE.	
MM3	WIRE ROPE CABLE CLAMPS	FF-C-450D TYPE 1 CLASS 1	¾"
		ASTM A153 HOT DIP CLASS D	
MM4	ANCHOR CABLE - SWAGE FITTING - STUD	ASTM F3125 GRADE A325 TYPE 1 OR SAE GRADE 5 OR ASTM A449 TYPE 1 HEAVY HEX HEAD	
		GALV. HOT DIP TO AASHTO M232 CLASS C / ASTM A153 CLASS C / ASTM F2329 OR GALV. MECHANICALLY TO AASHTO M298 CLASS 50, TYPE 1 / ASTM B695 CLASS 50, TYPE 1	
		UNC	
NN1	ANCHOR CABLE - NUT	ASTM A563 GRADE A	1" DIA.
		AASHTO M180 DOUBLE RECESSED HEAVY HEX HEAD	
		GALV. HOT DIP TO AASHTO M232 CLASS C / ASTM A153 CLASS C / ASTM F2329 OR GALV. MECHANICALLY TO AASHTO M298 CLASS 50, TYPE 1 / ASTM B695 CLASS 50, TYPE 1	
		OVER TAPPED NUTS OVER-SIZE AS SPECIFIED IN AASHTO 291 / ASTM A 563	
		UNC	
NN2	ANCHOR CABLE - NUT - WASHER	ASTM F436 TYPE 1 (HARDEN WASHER ONLY)	1" DIA.
		GALV. AASHTO M111 / ASTM A123 OR GALV. HOT DIP TO AASHTO M232 CLASS C / ASTM A153 CLASS C / ASTM F2329	

SHORT RADIUS BEAM GUARD (MGS) SHORT RADIUS TERMINAL (MGS)

STATE OF WISCONSIN
DEPARTMENT OF TRANSPORTAT

6

SDD 14B53 - 02h

BILL OF MATERIALS - SHORT RADIUS BEAM GUARD (MGS)

PART	DESCRIPTION	MATERIALS SPECIFICATIONS	NOTES
PP1	BEARING PLATE AT POST	ASTM A36 MIN. STRENGTH 36 KSI, OR ASTM A529 MAX. STRENGTH 50 KSI, OR ASTM A572 MAX STRENGTH 50 KSI OR ASTM A709 MAX STRENGTH 50 KSI OR ASTM A992 MAX STRENGTH 50 KSI	
		GALV. AASHTO M111 / ASTM A123	
PP2	PIPE - STEEL	ASTM A53 GALVANIZED GRADE B SCHEDULE 40	2" DIA. x 6" LONG
QQ1	FOUNDATION TUBE	ASTM A500 GRADE B	8" X 6" X 3/16"
		GALV. AASHTO M111 / ASTM A123	
QQ2	SHORT RADIUS - FOUNDATION TUBE - ANCHOR CABLE - TUBE	ASTM A500 GRADE B	DIMENSIONS 2 1/2" X 2 1/4" X 1/4" X 8"
		GALV. AASHTO M111 / ASTM A123	
QQ3	SHORT RADIUS - SOIL TUBE - ANCHOR CABLE - TUBE - END PLATE	ASTM A36 MIN. STRENGTH 36 KSI, OR ASTM A529 MAX. STRENGTH 50 KSI, OR ASTM A572 MAX STRENGTH 50 KSI OR ASTM A709 MAX STRENGTH 50 KSI OR ASTM A992 MAX STRENGTH 50 KSI	DIMENSIONS 2 1/2" X 2 1/2" X 1/4"
		GALV. AASHTO M111 / ASTM A123	
QQ4	GROUND STRUT AND YOKE - BOLT	GALV. HOT DIP TO AASHTO M232 CLASS C / ASTM A153 CLASS C / ASTM F2329 OR GALV. MECHANICALLY TO AASHTO M298 CLASS 50, TYPE 1 / ASTM B695 CLASS 50, TYPE 1	5/8 DIA.
		ASTM A307 GRADE B HEAVY HEX HEAD OR SAE J429 GRADE 2 HEAVY HEX HEAD	
		UNC	
QQ5	GROUND PLATE AND YOKE - WASHER	ASTM F436 TYPE 1 (HARDEN WASHER ONLY)	5/8 DIA.
		GALV. AASHTO M111 / ASTM A123 OR GALV. HOT DIP TO AASHTO M232 CLASS C / ASTM A153 CLASS C / ASTM F2329	
QQ6	GROUND STRUT AND YOKE - NUT	HEAVY HEX	5/8 DIA.
		UNC	
		ASTM A563 GRADE A	
		OVER TAPPED NUTS AS SPECIFIED IN AASHTO 291 / ASTM A 563	
		GALV. HOT DIP TO AASHTO M232 CLASS C / ASTM A153 CLASS C / ASTM F2329 OR GALV. MECHANICALLY TO AASHTO M298 CLASS 50, TYPE 1 / ASTM B695 CLASS 50, TYPE 1	

PART	DESCRIPTION	MATERIALS SPECIFICATIONS	NOTES
SS1	SOIL PLATE	ASTM A36 MIN. STRENGTH 36 KSI, OR ASTM A529 MAX. STRENGTH 50 KSI, OR ASTM A572 MAX STRENGTH 50 KSI OR ASTM A709 MAX STRENGTH 50 KSI OR ASTM A992 MAX STRENGTH 50 KSI	
		GALV. AASHTO M111 / A123	
TT1	SOIL PLATE - BOLT	ASTM A307 GRADE B HEAVY HEX HEAD OR SAE J429 GRADE 2 HEAVY HEX HEAD	5/8 DIA.
		GALV. HOT DIP TO AASHTO M232 CLASS C / ASTM A153 CLASS C / ASTM F2329 OR GALV. MECHANICALLY TO AASHTO M298 CLASS 50, TYPE 1 / ASTM B695 CLASS 50, TYPE 1	
		UNC	
TT2	SOIL PLATE - WASHER	ASTM F436 TYPE 1 (HARDEN WASHER ONLY)	5/8 DIA.
		GALV. AASHTO M111 / ASTM A123 OR GALV. HOT DIP TO AASHTO M232 CLASS C / ASTM A153 CLASS C / ASTM F2329	
TT3	SOIL PLATE - NUT	GALV. HOT DIP TO AASHTO M232 CLASS C / ASTM A153 CLASS C / ASTM F2329 OR GALV. MECHANICALLY TO AASHTO M298 CLASS 50, TYPE 1 / ASTM B695 CLASS 50, TYPE 1	5/8 DIA.
UU1	OBJECT MARKER - SHEETING	MUTCD / WISDOT OBJECT MARKER TYPE 3	PATTERN AND COLOR FOR SHEETING. SHEETING TYPE FOR MARKER.
		WISDOT SPEC 637 TYPE F	
		APPROVED PRODUCT LIST	
UU2	OBJECT MARKER - ALUMINUM PLATE	WISDOT SPEC 637 ALUMINUM PLATE	MATERIAL AND THICKNESS OF MATERIALS
UU3	OBJECT MARKER - SCREWS	STAINLESS SELF-TAPPING SCREWS	
VV1	FOUNDATION BACKFILL	WISDOT SPEC 614	

SHORT RADIUS BEAM GUARD (MGS) SHORT RADIUS TERMINAL (MGS)

STATE OF WISCONSIN
DEPARTMENT OF TRANSPORTATION

APPROVED
May 2022 — DATE
/S/ Rodney Taylor — ROADWAY STANDARDS DEVE ENGINEER
FHWA

6
SDD 14B53 - 02i

GENERAL NOTES

DETAILS OF CONSTRUCTION, MATERIALS AND WORKMANSHIP NOT SHOWN ON THIS DRAWING SHALL CONFORM TO THE PERTINENT REQUIREMENTS OF THE STANDARD SPECIFICATIONS AND THE APPLICABLE SPECIAL PROVISIONS.

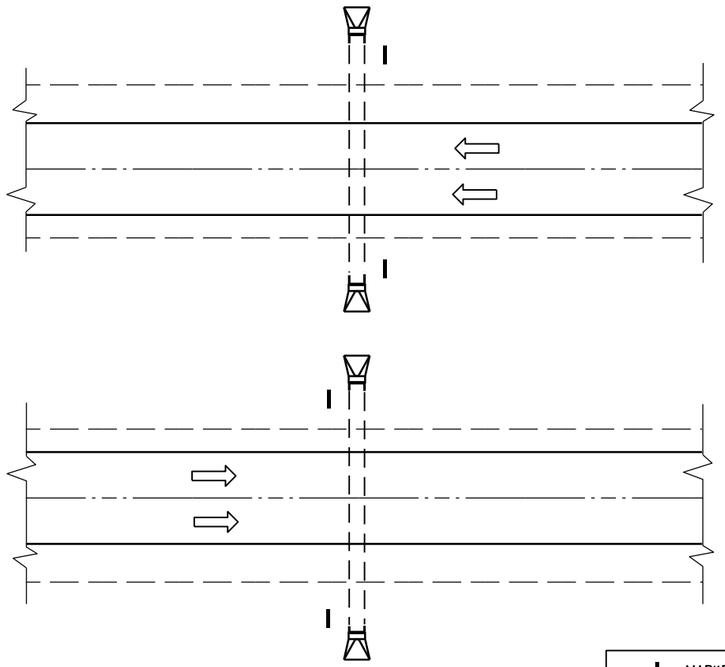

PLAN VIEW

DIVIDED HIGHWAY

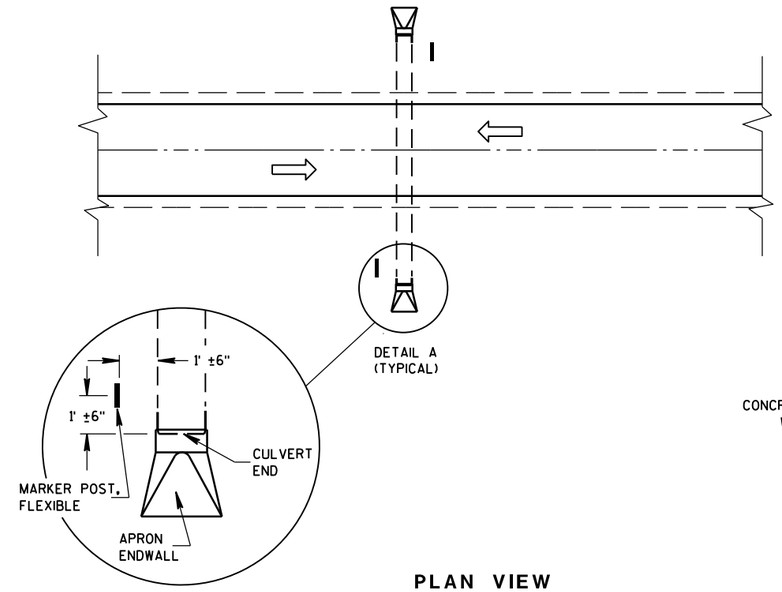

DETAIL A
(TYPICAL)

PLAN VIEW

UNDIVIDED HIGHWAY

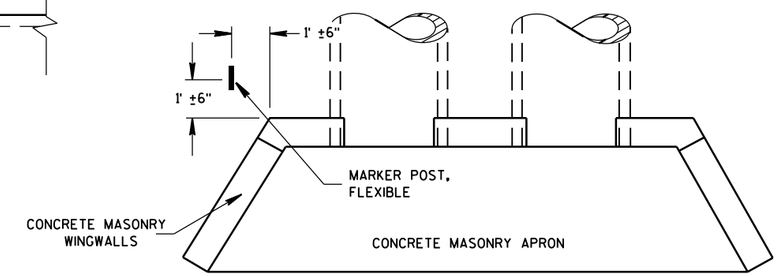

PLAN VIEW

CONCRETE MASONRY ENDWALLS FOR CULVERT PIPE AND PIPE ARCH

MARKER POST, FLEXIBLE

DIRECTION OF TRAFFIC FLOW

FLEXIBLE MARKER POST LOCATION

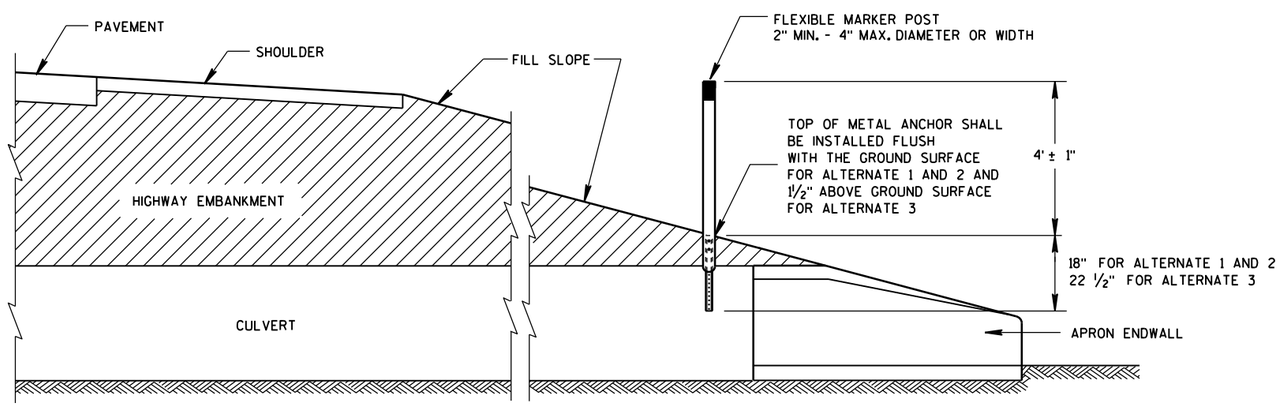

CROSS SECTION

FLEXIBLE MARKER POST

FLEXIBLE MARKER POST FOR CULVERT END

STATE OF WISCONSIN
DEPARTMENT OF TRANSPORTATION

6

S.D.D. 15 A 3-2a

6

S.D.D. 15 A 3-2a

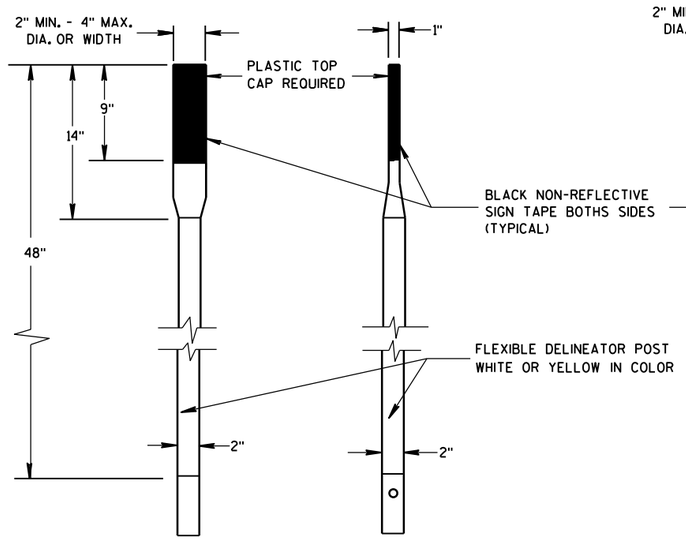

FRONT VIEW SIDE VIEW

ALTERNATE 1

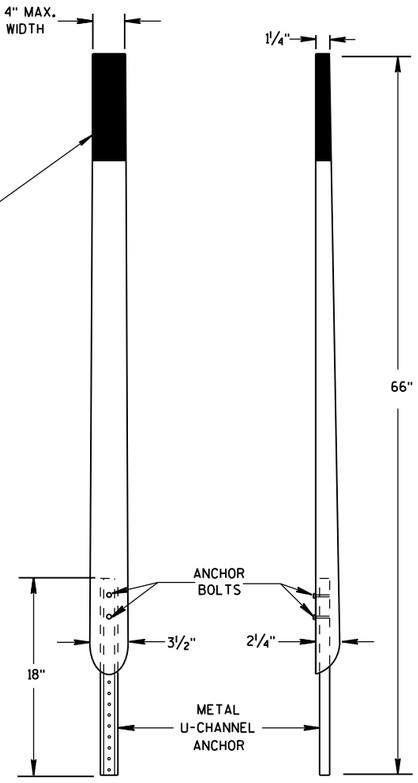

FRONT VIEW SIDE VIEW

ALTERNATE 2

FLEXIBLE MARKER POSTS

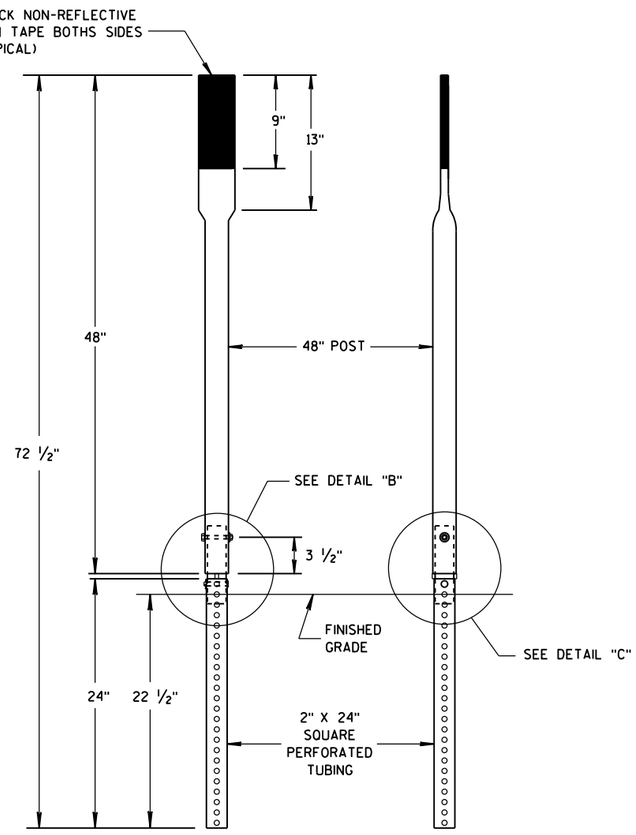

FRONT VIEW SIDE VIEW

ALTERNATE 3

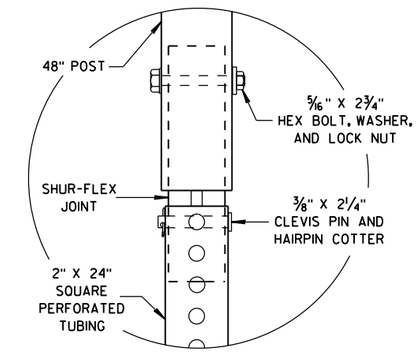

DETAIL B

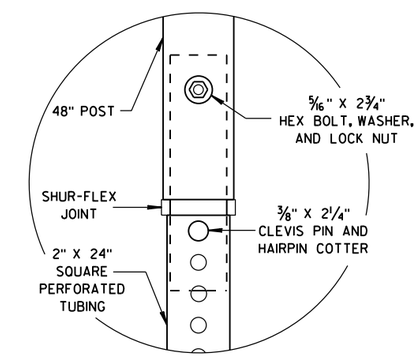

DETAIL C

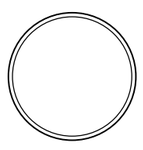

SECTION A-A

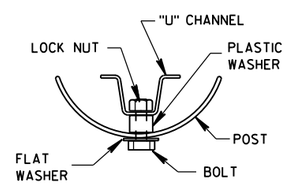

SECTION B-B

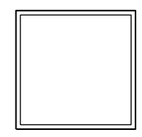

SECTION C-C

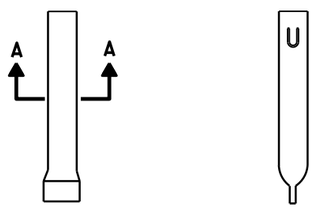

FRONT VIEW SIDE VIEW

ALTERNATE 1

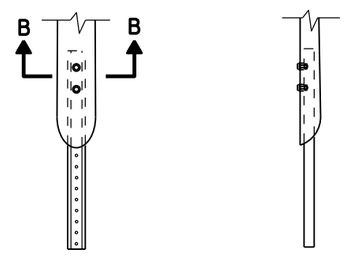

FRONT VIEW SIDE VIEW

ALTERNATE 2

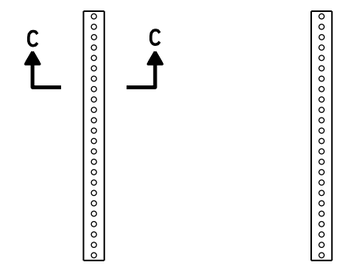

FRONT VIEW SIDE VIEW

ALTERNATE 3

FLEXIBLE MARKER POST ANCHORS

FLEXIBLE MARKER POST
FOR CULVERT END

STATE OF WISCONSIN
DEPARTMENT OF TRANSPORTATION

APPROVED
10/1/2012 /S/ Travis Feltes
DATE STATE TRAFFIC ENGINEER
FHWA

6

6

S.D.D. 15 A 3-2b

S.D.D. 15 A 3-2b

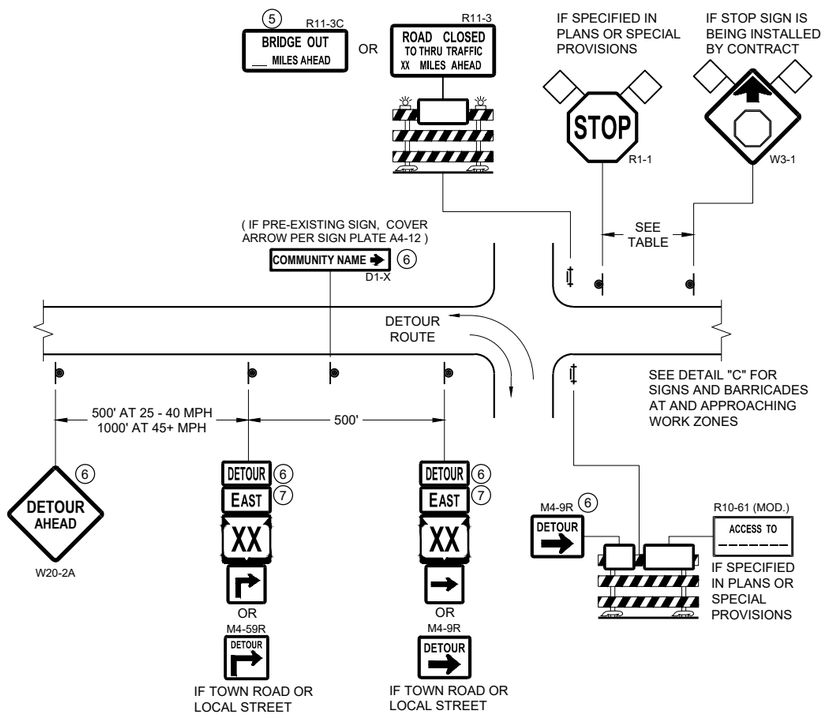

DETAIL A
MAINLINE CLOSURE WITH POSTED DETOUR

WORK ZONE GREATER THAN OR EQUAL TO ½ MILE FROM DETOUR ROUTE (1000 FEET IF URBAN)

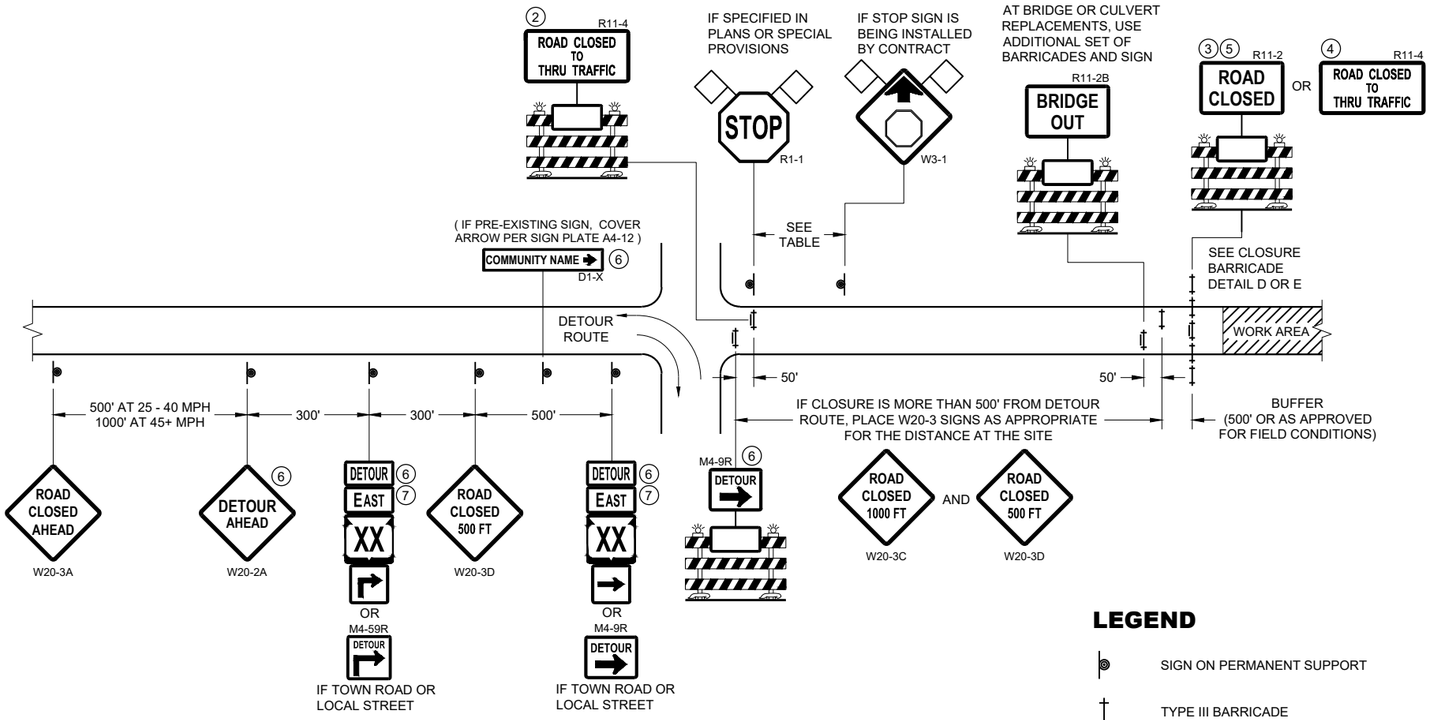

DETAIL B
MAINLINE CLOSURE WITH POSTED DETOUR

WORK ZONE LESS THAN ½ MILE FROM DETOUR ROUTE (1000 FEET IF URBAN)

LEGEND

- SIGN ON PERMANENT SUPPORT
- TYPE III BARRICADE
- TYPE III BARRICADE WITH ATTACHED SIGN
- TYPE "A" WARNING LIGHT (FLASHING)
- WORK AREA
- FLAGS, 16" X 16" MIN. (ORANGE)
- DETOUR — M4 - 8
- EAST — M3 - X
- XX (M1 - 4) OR XX (M1 - 6) OR COUNTY X (M1 - 5A)
- M05 - 1 OR M06 - 1

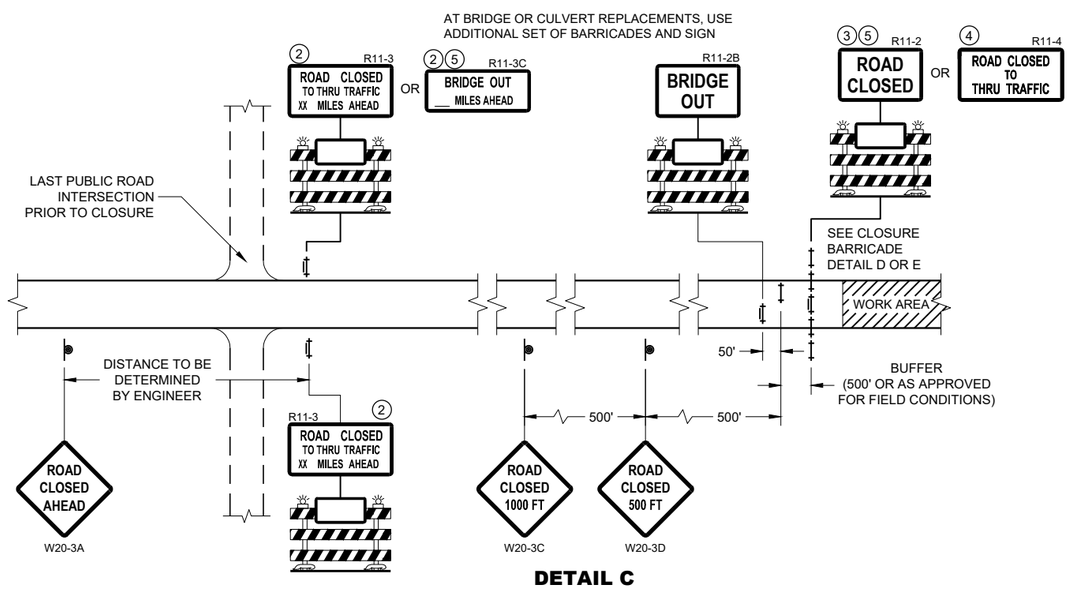

DETAIL C
MAINLINE CLOSURE, NO POSTED DETOUR

SPEED LIMIT (MPH)	"STOP AHEAD" ADVANCE WARNING DISTANCE (FT)
25	200
30	200
35	350
40	350
45	500
50	550
55	750

SEE SDD 15C2-SHEET "b" FOR GENERAL NOTES AND FOOTNOTES 1 THROUGH 7

BARRICADES AND SIGNS FOR MAINLINE CLOSURES

STATE OF WISCONSIN
DEPARTMENT OF TRANSPORTATION

APPROVED
February 2020 /S/ Andrew Heidtke
DATE WORK ZONE ENGINEER
FHWA

6

SDD 15C02 - 08a

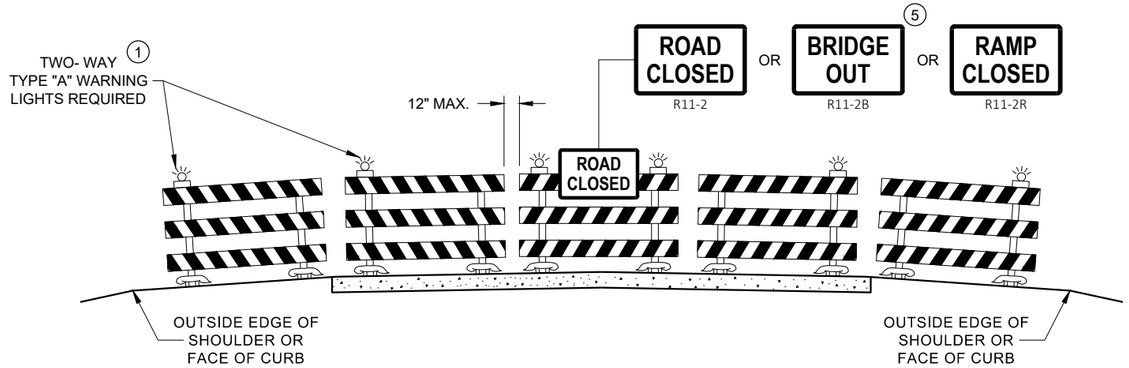

DETAIL D
ROAD CLOSURE BARRICADE DETAIL
APPROACH VIEW

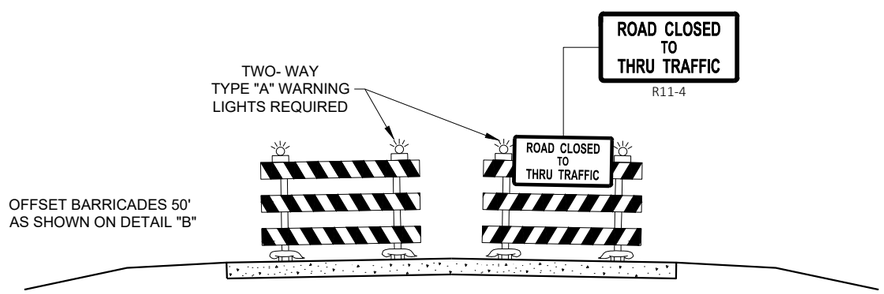

DETAIL E
LANE CLOSURE BARRICADE DETAIL
APPROACH VIEW

SEE SDD 15C2 - SHEET "a" FOR LEGEND

GENERAL NOTES

THE EXACT NUMBER, LOCATION, AND SPACING OF ALL SIGNS AND BARRICADES SHALL BE ADJUSTED TO FIT FIELD CONDITIONS AS APPROVED BY THE ENGINEER.

ANY SIGNS TEMPORARY OR EXISTING, WHICH CONFLICT WITH TRAFFIC CONTROL "IN USE", SHALL BE REMOVED OR COVERED AS NEEDED AND AS APPROVED BY THE ENGINEER.

THE SPACING BETWEEN TRAFFIC CONTROL SIGNS SHOULD BE ADJUSTED TO NOT CONFLICT WITH AND SHOULD PROVIDE A DESIRABLE MINIMUM OF 200 FEET CLEARANCE TO EXISTING SIGNS THAT WILL REMAIN IN PLACE.

BARRICADES THAT MUST BE MOVED FOR A WORK OPERATION SHALL BE IMMEDIATELY RE-ESTABLISHED UPON COMPLETION OF THE OPERATION, OR FOR CONTINUING OPERATIONS, AT THE END OF EACH WORKING DAY.

SIGNS THAT WILL BE IN PLACE LESS THAN 7 CONTINUOUS DAYS AND NIGHTS MAY BE MOUNTED ON PORTABLE SUPPORTS.

ALL TYPE III BARRICADES SHALL HAVE RAILS REFLECTORIZED ON BOTH FACES. STRIPES SHALL BE PROPERLY SLOPED DOWN TOWARD THE TRAFFIC SIDE OR AS SHOWN IN THE ROAD CLOSURE BARRICADE DETAIL "D" FOR FULL ROAD CLOSURES.

TYPE "A" LOW - INTENSITY FLASHING WARNING LIGHTS SHALL BE VISIBLE ON BOTH SIDES OF THE BARRICADE.

THE R11 - 2, R11 - 3, M4 - 9, R11 - 4, AND R10 - 61 SIGNS PLACED ON THE BARRICADES SHALL COVER NO MORE THAN THE TOP RAIL. THE SIGNS SHALL NOT COVER ANY PORTION OF THE MIDDLE RAIL OR BOTTOM RAILS.

"WO" AND "MO" SIGNS ARE THE SAME AS "W" AND "M" SIGNS EXCEPT THE BACKGROUND IS ORANGE.

ALL SIGNS SHALL BE 48" X 48" UNLESS OTHERWISE NOTED BELOW:
- R11 - 2 SHALL BE 48" X 30"
- R11 - 3 SHALL, R11 - 4 AND R10 - 61 SHALL BE 60 " X 30"
- M4 - 9 SHALL BE 30" X 24"
- M3 - X SHALL BE 24" X 12" (36" X 18" IF NEEDED TO MATCH EXISTING SIGNS)
- M4 - 8 SHALL BE 24" X 12" (36" X 18" IF NEEDED TO MATCH EXISTING SIGNS)
- M1 - 4, M1 - 5A AND M1 - 6 SHALL BE 24" X 24" (36" X 36" IF NEEDED TO MATCH EXISTING SIGNS)
- MO5 - 1 AND MO6 - 1 SHALL BE 21" X 21" (30" X 30" IF NEEDED TO MATCH EXISTING SIGNS)
- D1 - X SHALL BE AS SHOWN ON SPECIFIC PROJECT SIGNING DETAIL SHEETS.
- R1 - 1 SHALL BE 36" X 36"

1. TWO WARNING LIGHTS SHALL BE PROVIDED ON THE CENTER BARRICADE AND A MINIMUM OF ONE WARNING LIGHT SHALL BE PROVIDED ON EACH OF THE OTHER BARRICADES WITHIN THE ROADWAY LIMITS. SPACING OF THE WARNING LIGHTS SHALL BE UNIFORM TO THE EDGE OF ROADWAY AS SHOWN (APPROX. 8 FOOT LIGHT SPACING.
2. THESE SIGNS AND BARRICADES ARE NOT REQUIRED IF ROAD CLOSURE BEGINS AT AN INTERSECTION.
3. FOR ROAD CLOSURE WITHOUT LOCAL ACCESS TO PROJECT, SEE ROAD CLOSURE BARRICADE DETAIL "D".
4. FOR ROAD CLOSURE WITH LOCAL ACCESS TO PROJECT, SEE ROAD CLOSURE BARRICADE DETAIL "E".
5. FOR BRIDGE OR CULVERT REPLACEMENTS, SUBSTITUTE "BRIDGE OUT" INSTEAD OF "ROAD CLOSED" ON R11 - 2 AND R11 - 3 SIGNS.
6. INSTALL DETOUR AND COMMUNITY GUIDE SIGNS AND ARROWS ONLY IF SPECIFIED IN THE CONTRACT. IF THERE ARE EXISTING ROUTE MARKER ASSEMBLIES THAT WILL REMAIN IN PLACE, ADJUST THE LOCATION OF THE DETOUR ROUTE SIGNS TO CORRESPOND WITH THE EXISTING ASSEMBLIES. MODIFY EXISTING SIGNS WHERE POSSIBLE. SEE SPECIFIC PROJECT DETOUR SIGNING DETAIL SHEETS. IF DETOUR SIGNS ARE BEING INSTALLED BY OTHERS, PLACE THE CONTRACTED TRAFFIC CONTROL SIGNS TO ALLOW FOR PLACEMENT OF ALL WARNING, DETOUR AND GUIDE SIGNS AS SHOWN.
7. "EAST" CARDINAL DIRECTION MARKERS AND RIGHT TURN ARROWS ARE SHOWN. USE OTHER CARDINAL DIRECTIONS AND ARROWS AS APPROPRIATE.

BARRICADES AND SIGNS FOR VARIOUS CLOSURES

STATE OF WISCONSIN
DEPARTMENT OF TRANSPORTATION

APPROVED
February 2020 — DATE
/S/ Andrew Heidtke — WORK ZONE ENGINEE
FHWA

6

SDD 15C02 - 08b

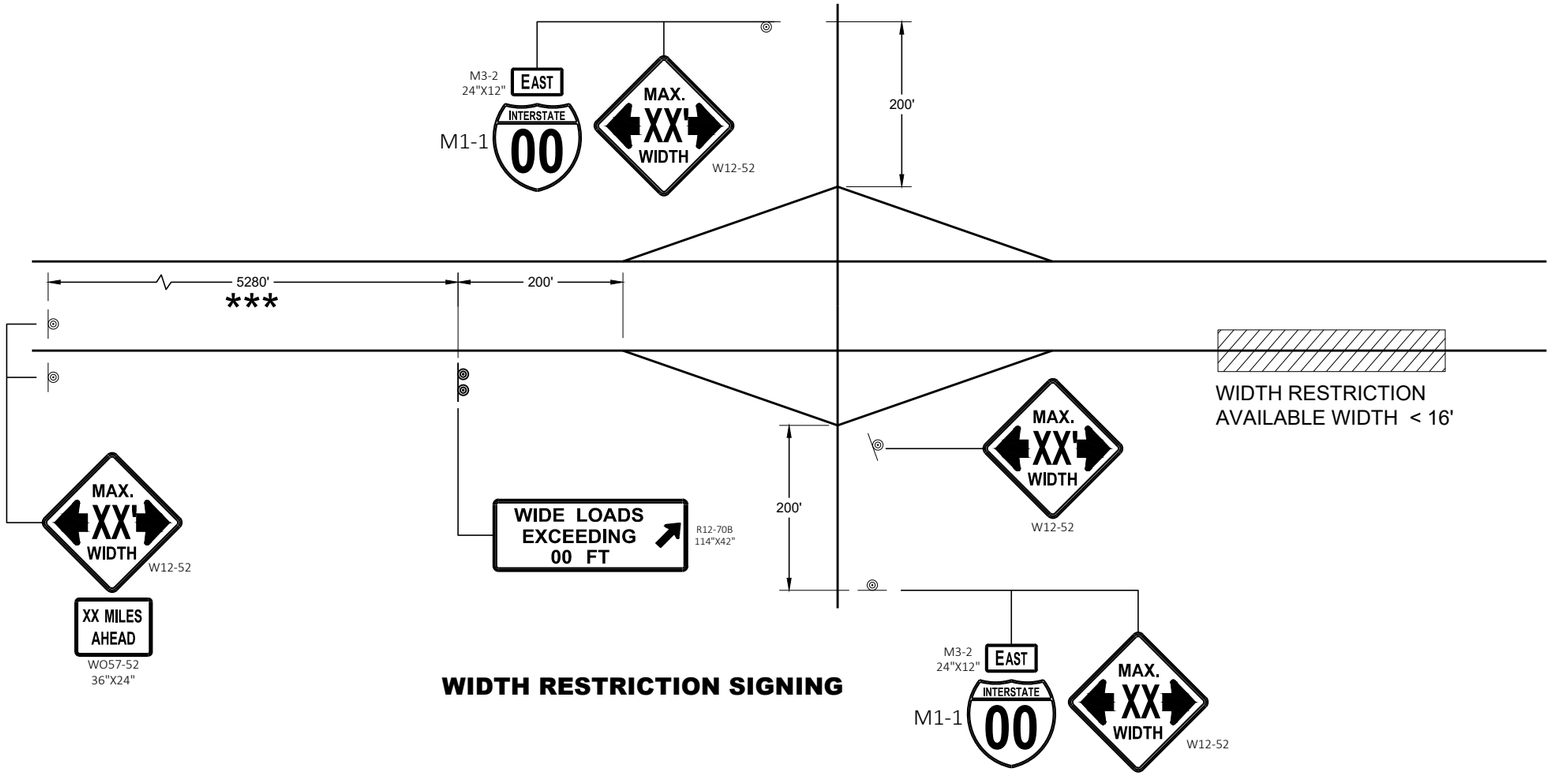

WIDTH RESTRICTION SIGNING

LEGEND

◎ SIGN ON PERMANENT SUPPORT

GENERAL NOTES

THE EXACT NUMBER, LOCATION AND SPACING OF ALL SIGNS SHALL BE ADJUSTED TO FIT FIELD CONDITIONS AS APPROVED BY THE ENGINEER.

THE SPACING BETWEEN SIGNS SHOULD BE ADJUSTED TO NOT CONFLICT WITH AND TO PROVIDE A DESIRABLE MINIMUM OF 200 FEET CLEARANCE TO EXISTING SIGNS THAT WILL REMAIN IN PLACE.

ANY SIGNS TEMPORARY OR EXISTING, WHICH CONFLICT WITH TRAFFIC CONTROL " IN USE" SHALL BE REMOVED OR COVERED AS NEEDED AND AS APPROVED BY THE ENGINEER.

ALL SIGNS ARE 48" X 48" UNLESS OTHERWISE NOTED.

"WO" SIGNS ARE THE SAME AS "W" SIGNS EXCEPT THE BACKGROUND IS ORANGE.

WIDTH ON SIGN TO BE APPROXIMATELY ONE FOOT LESS THAN AVAILABLE WIDTH.

* PLACE 500 FEET AFTER THE W20 - 1A AND 500 FEET BEFORE ADDITIONAL SIGNS FOR ROADWAYS WITH A PRE - CONSTRUCTION SPEED LIMIT OF 45 MPH OR MORE. FOR 35-40 MPH, USE 350 FOOT TYPICAL SPACING. FOR 25-30 MPH, USE 200 FOOT TYPICAL SPACING.

** SIGN SHALL BE VISIBLE FROM ROADWAY.

*** ADDITIONAL SIGNS NEEDED IF THERE IS AN ON RAMP BETWEEN SIGNS.

WIDTH ON SIGN TO BE APPROX. 1 - FOOT LESS THAN AVAILABLE WIDTH

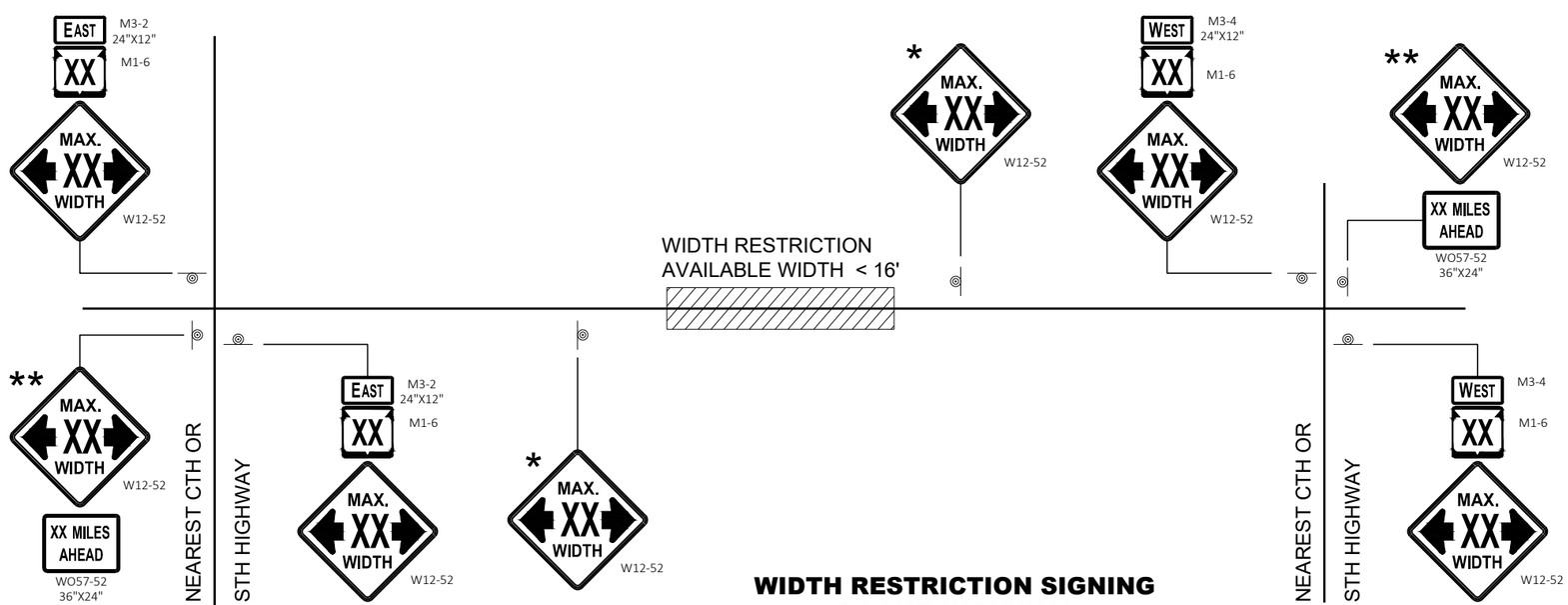

WIDTH RESTRICTION SIGNING
2 LANE HIGHWAY

ADVANCED WIDTH RESTRICTION SIGNING

STATE OF WISCONSIN
DEPARTMENT OF TRANSPORTATION

APPROVED
February 2020 — DATE
/S/ Andrew Heidtke — WORK ZONE ENGINEER
FHWA

6

SDD 15C02 - 08f

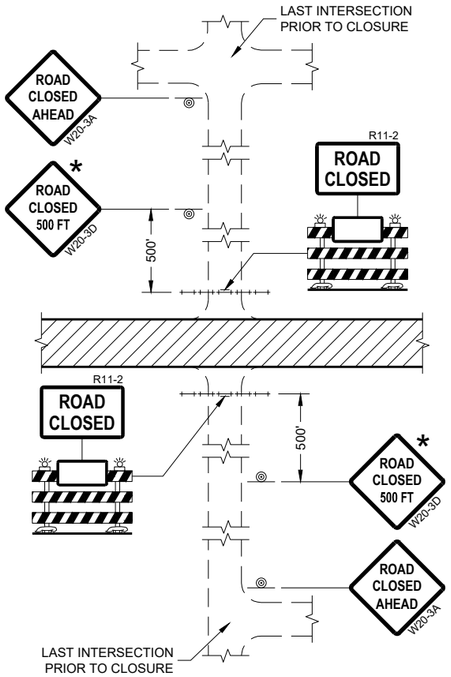

DETAIL 1
(NO ACCESS TO PROJECT)

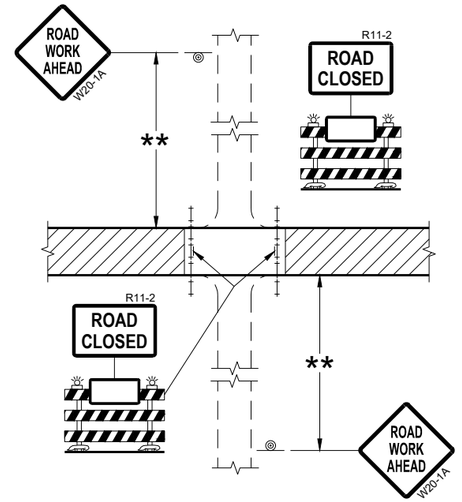

DETAIL 2
(PUBLIC CROSS-TRAFFIC MAINTAINED.
NO ACCESS TO PROJECT)

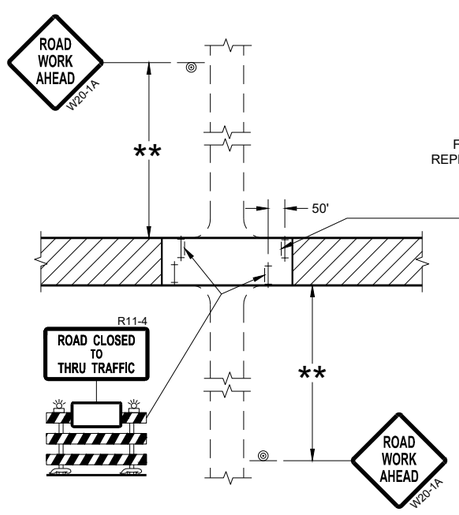

DETAIL 3
(PUBLIC CROSS-TRAFFIC MAINTAINED.
CONTRACTOR, LOCAL BUSINESS AND
RESIDENT ACCESS TO PROJECT)

FOR BRIDGE OR CULVERT
REPLACEMENT, USE ADDITIONAL
SIGN ON BARRICADE

BRIDGE OUT
XX MILES AHEAD
R11-3C

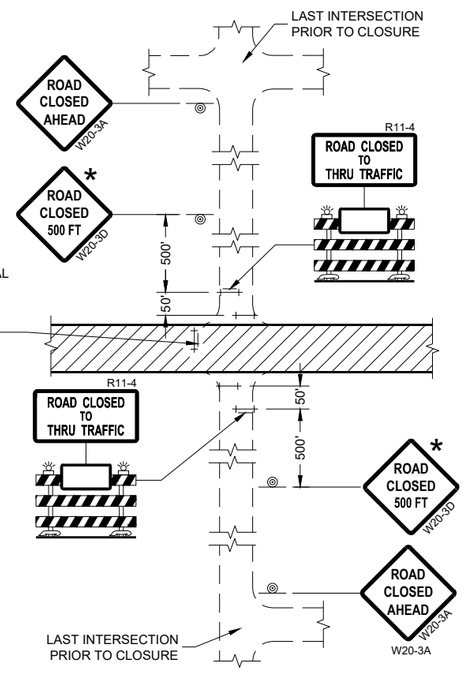

DETAIL 4
(CONTRACTOR, LOCAL BUSINESS AND
RESIDENT ACCESS TO PROJECT)

GENERAL NOTES

THE EXACT NUMBER, LOCATION, AND SPACING OF ALL SIGNS AND BARRICADES SHALL BE ADJUSTED TO FIT FIELD CONDITIONS AS APPROVED BY THE ENGINEER.

ANY SIGNS TEMPORARY OR EXISTING, WHICH CONFLICT WITH TRAFFIC CONTROL "IN USE" SHALL BE REMOVED OR COVERED AS NEEDED AND AS APPROVED BY THE ENGINEER.

THE SPACING BETWEEN TRAFFIC CONTROL SIGNS SHOULD BE ADJUSTED TO NOT CONFLICT WITH AND SHOULD PROVIDE A DESIRABLE MINIMUM OF 200 FEET CLEARANCE (500 FEET DESIRABLE) TO EXISTING SIGNS THAT WILL REMAIN IN PLACE.

IF A "STOP" SIGN MUST BE REMOVED FOR A WORK OPERATION, A TEMPORARY "STOP" SIGN SHALL BE PLACED PRIOR TO THE SIGN REMOVAL, OR A FLAGGER SHALL BE PROVIDED UNTIL THE SIGN IS REESTABLISHED.

BARRICADES THAT MUST BE MOVED FOR A WORK OPERATION SHALL BE IMMEDIATELY REESTABLISHED UPON COMPLETION OF THE OPERATION OR FOR CONTINUING OPERATIONS, AT THE END OF EACH WORKING DAY.

SIGNS THAT WILL BE IN PLACE LESS THAN SEVEN CONTINUOUS DAYS AND NIGHTS MAY BE MOUNTED ON PORTABLE SUPPORTS.

ALL TYPE III BARRICADES SHALL HAVE RAILS REFLECTORIZED ON BOTH FACES. STRIPES SHALL BE PROPERLY SLOPED DOWN TOWARD THE TRAFFIC SIDE OR AS SHOWN IN THE ROAD CLOSURE BARRICADE DETAIL "D" FOR FULL ROAD CLOSURES.

TYPE "A" LOW-INTENSITY FLASHING WARNING LIGHTS SHALL BE VISIBLE ON BOTH SIDES OF THE BARRICADE.

THE R11-2, R11-3, AND R11-4 SIGNS PLACED ON BARRICADES SHALL COVER NO MORE THAN THE TOP RAIL. THE SIGNS SHALL NOT COVER ANY PORTION OF THE MIDDLE OR BOTTOM RAILS.

ALL SIGNS SHALL BE 48" X 48" UNLESS OTHERWISE NOTED BELOW:
R11-2 SHALL BE 48" X 30".
R11-4 AND R11-3 SHALL BE 60" X 30".

* OMIT THE "ROAD CLOSED 500 FT." SIGN IF THE LAST INTERSECTION IS 500 FEET OR LESS FROM THE WORK ZONE.

** 500' MAX. OR AT LAST INTERSECTION, WHICHEVER IS CLOSEST.

LEGEND

- SIGN ON PERMANENT SUPPORT
- TYPE III BARRICADE
- TYPE III BARRICADE WITH ATTACHED SIGN
- TYPE "A" WARNING LIGHT (FLASHING)
- WORK AREA

BARRICADES AND SIGNS FOR SIDEROAD CLOSURES

STATE OF WISCONSIN
DEPARTMENT OF TRANSPORTATION

APPROVED
July 2018 — DATE
/S/ Andrew Heidtke — WORK ZONE ENGINEE
FHWA

6
SDD 15C03 - 05

GENERAL NOTES

THE EXACT NUMBER, LOCATION, AND SPACING OF ALL SIGNS AND DEVICES SHALL BE ADJUSTED TO FIT FIELD CONDITIONS.

THE SPACING BETWEEN TRAFFIC CONTROL SIGNS SHOULD BE ADJUSTED TO NOT CONFLICT WITH AND SHOULD PROVIDE A MINIMUM OF 200 FEET (500 FEET DESIRABLE) CLEARANCE TO EXISTING SIGNS THAT WILL REMAIN IN PLACE.

ALL SIGNS ARE 48" X 48" UNLESS OTHERWISE NOTED.

SIGNS THAT WILL BE IN PLACE LESS THAN SEVEN CONTINUOUS DAYS AND NIGHTS MAY BE MOUNTED ON PORTABLE SUPPORTS.

IF A "STOP" SIGN MUST BE REMOVED FOR A WORK OPERATION, A TEMPORARY "STOP" SIGN SHALL BE PLACED PRIOR TO THE SIGN REMOVAL, OR A FLAGGER SHALL BE PROVIDED UNTIL THE SIGN IS REESTABLISHED.

* OMIT G20-1 SIGNS IF LENGTH OF WORK AREA IS 2 MILES OR LESS

** PLACE AN ADDITIONAL W20-1A "ROAD WORK AHEAD" SIGN IF WORK AREA WITHIN THE PROJECT IS SEPARATED BY MORE THAN 2 MILES FROM PREVIOUS WORK AREA.

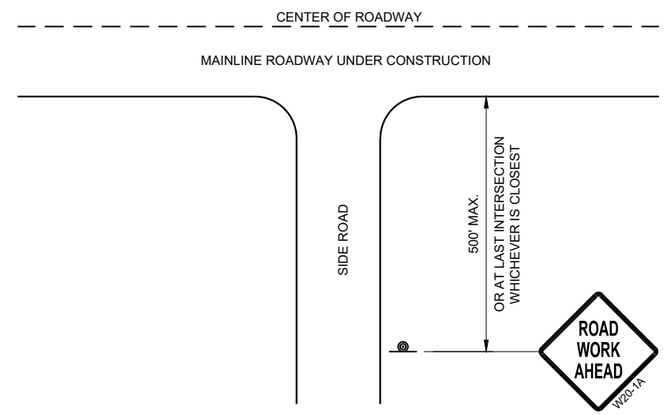

TYPICAL SIDE ROAD APPROACH WARNING SIGN DETAIL

LEGEND

- SIGN ON PERMANENT SUPPORT
- DIRECTION OF TRAFFIC
- WORK AREA

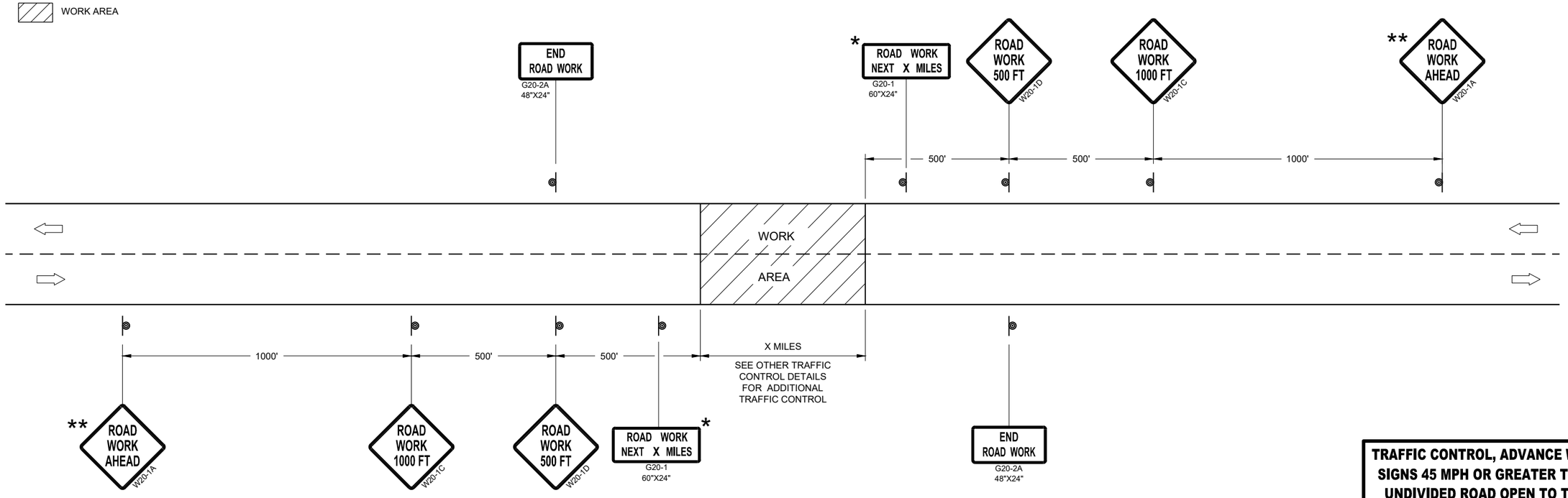

TRAFFIC CONTROL, ADVANCE WARNING SIGNS 45MPH OR GREATER

TRAFFIC CONTROL, ADVANCE WARNING SIGNS 45 MPH OR GREATER TWO-WAY UNDIVIDED ROAD OPEN TO TRAFFIC

STATE OF WISCONSIN
DEPARTMENT OF TRANSPORTATION

APPROVED
July 2018 — DATE
/S/ Andrew Heidtke — WORK ZONE ENGINEE
FHWA

6
SDD 15C04 - 05

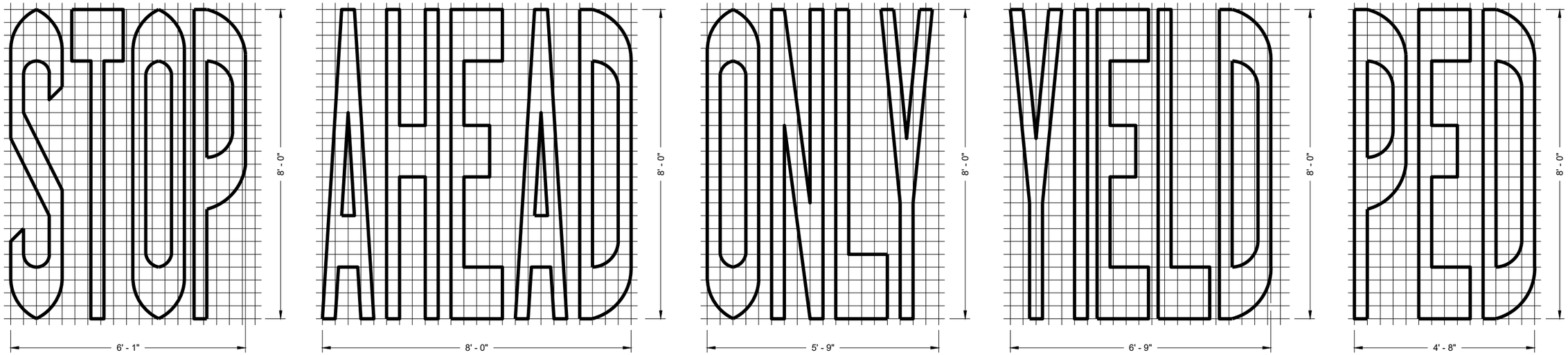

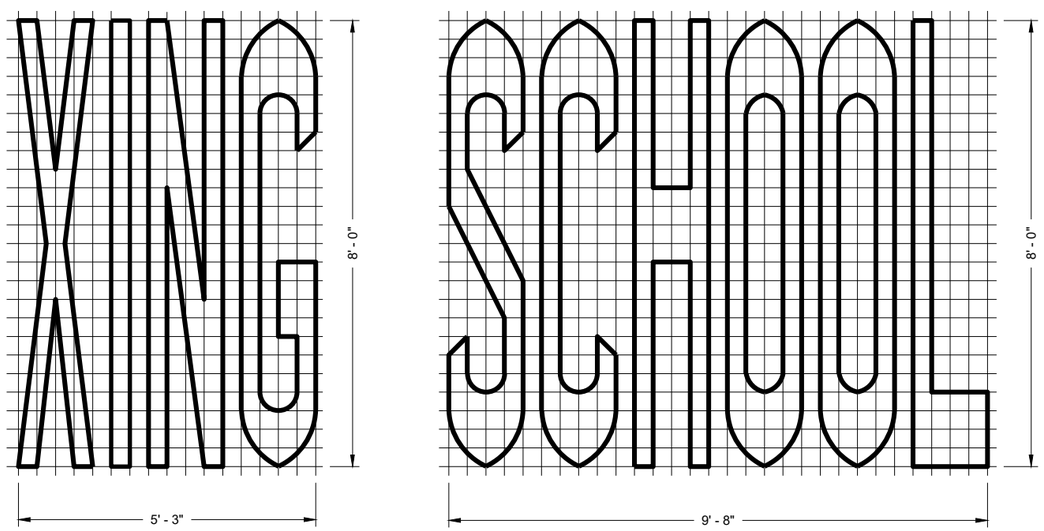

SINGLE LANE

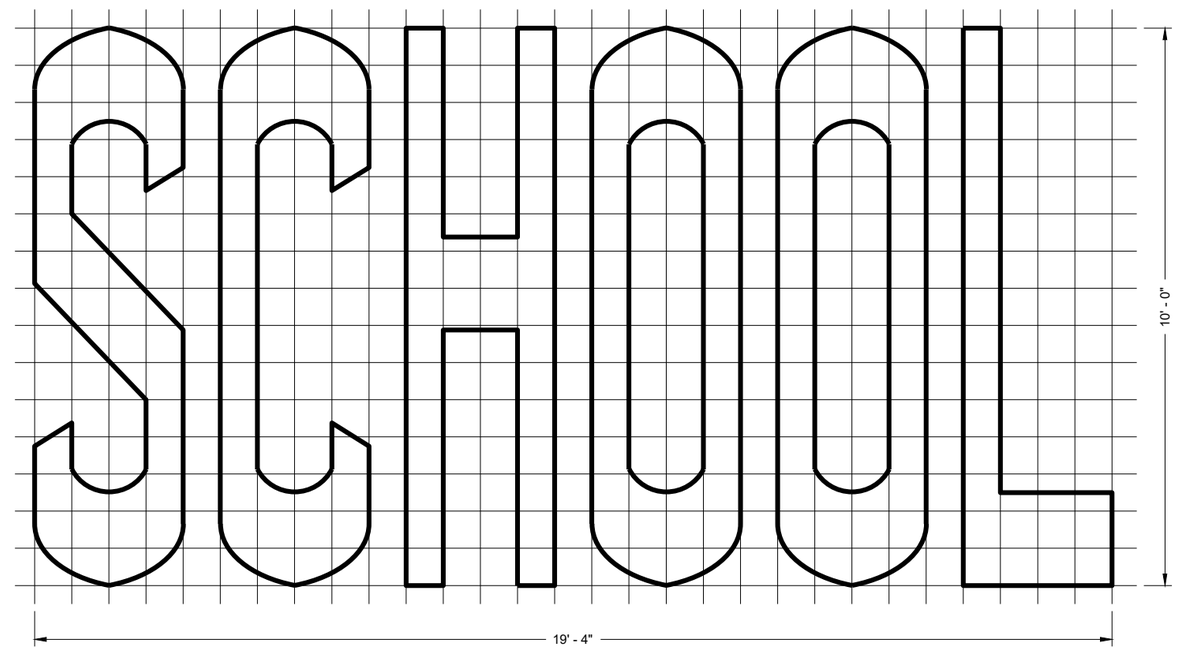

TWO - LANE

6

6

GENERAL NOTES

DETAILS OF INSTALLATION, MATERIALS AND WORKMANSHIP NOT SHOWN ON THIS DRAWING SHALL CONFORM TO THE PERTINENT REQUIREMENTS OF THE STANDARD SPECIFICATIONS AND APPLICABLE SPECIAL PROVISIONS.

PAVEMENT MARKING WORDS

STATE OF WISCONSIN
DEPARTMENT OF TRANSPORTATION

APPROVED

November 2019
DATE

/S/ Matthew Rauch
STATE SIGNING AND MAF
ENGINEER

FHWA

SDD 15C07 - 15b

SDD 15C07 - 15b

GENERAL NOTES

DETAILS OF INSTALLATION, MATERIALS AND WORKMANSHIP NOT SHOWN ON THIS DRAWING SHALL CONFORM TO THE PERTINENT REQUIREMENTS OF THE STANDARD SPECIFICATIONS AND APPLICABLE SPECIAL PROVISIONS.

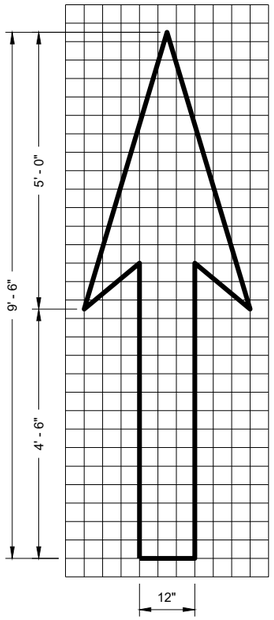

TYPE 1

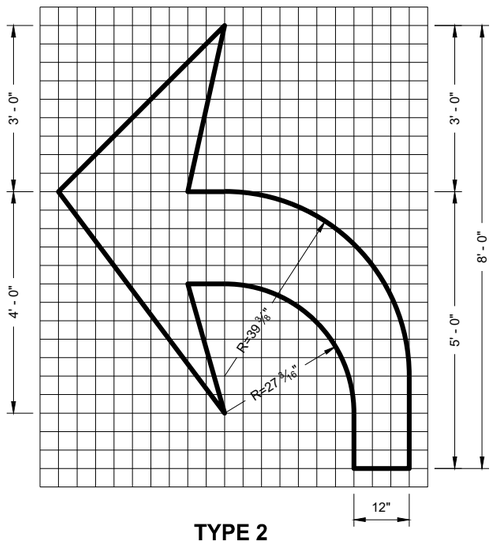

TYPE 2

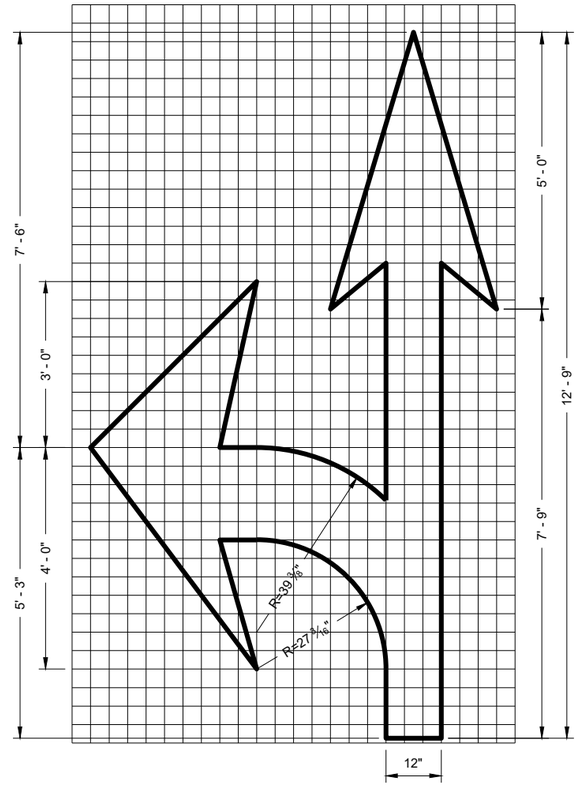

TYPE 3

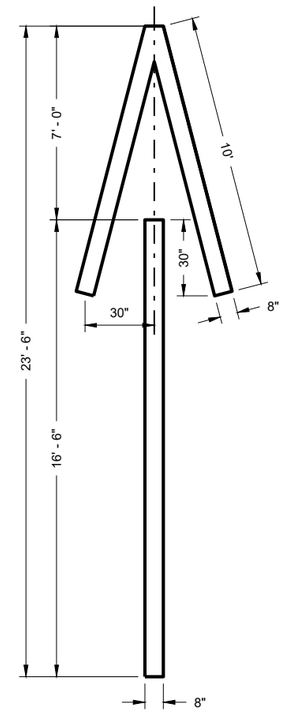

TYPE 4

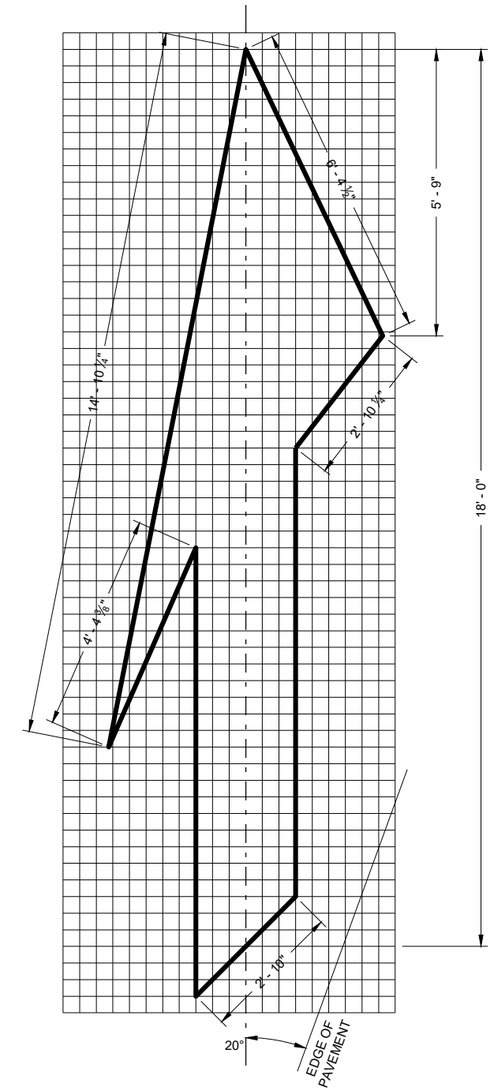

TYPE 5 LANE DROP ARROW

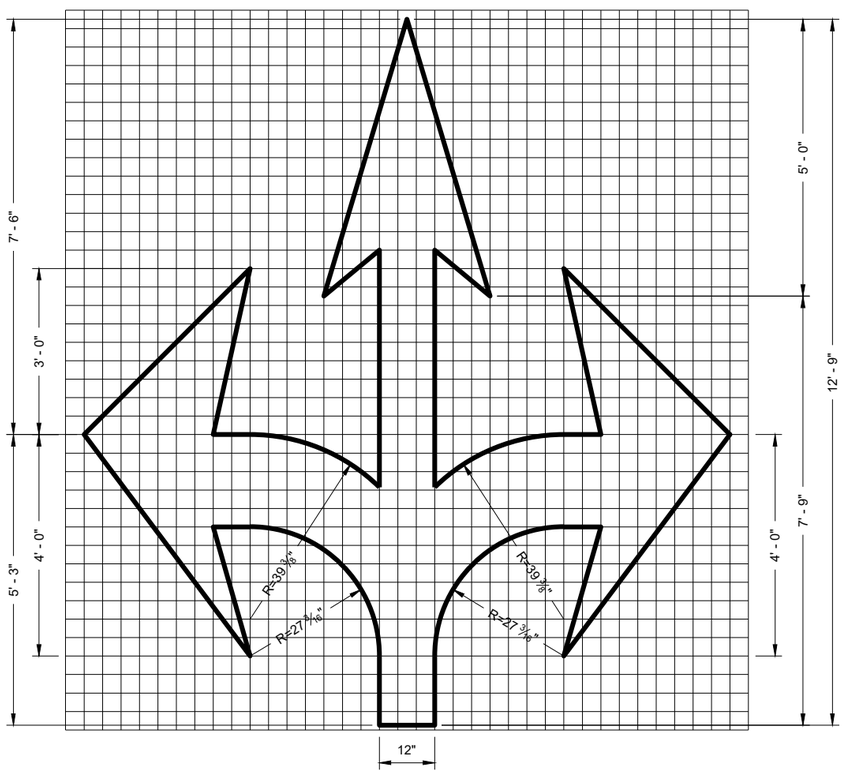

TYPE 6

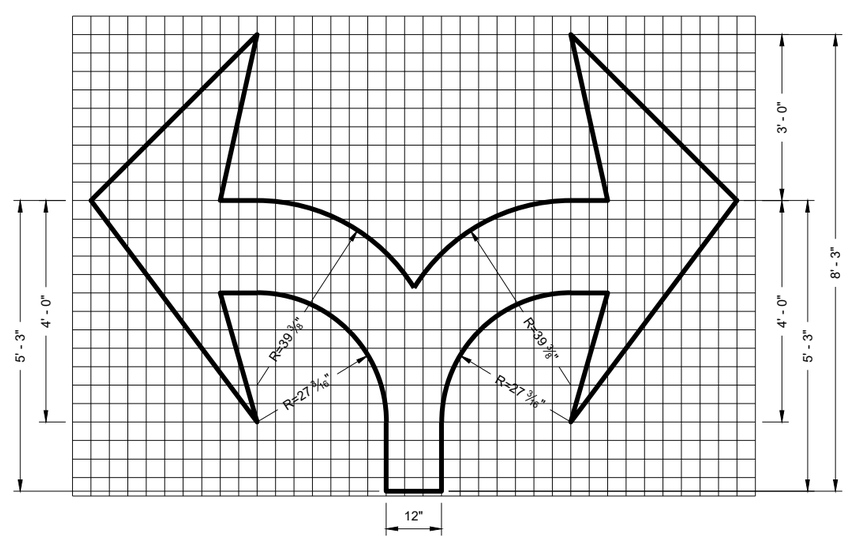

TYPE 7

6

6

PAVEMENT MARKING ARROWS

STATE OF WISCONSIN
DEPARTMENT OF TRANSPORTATION

APPROVED
November 2019 — DATE
/S/ Matthew Rauch — STATE SIGNING AND MAR ENGINEER
FHWA

SDD 15C07 - 15c

SDD 15C07 - 15c

GENERAL NOTES

DETAILS OF CONSTRUCTION NOT SHOWN ON THIS DRAWING SHALL CONFORM TO STANDARD SPECIFICATIONS AND SPECIAL PROVISIONS.

1. LOCATE THE NO PASSING ZONE W14-3 SIGN WITHIN 50 FEET OF THE "T" MARKING
2. MEASURE FROM EDGE OF MARKING TO JOINT LINE. THIS DOES NOT INCLUDE SPACE NEEDED FOR GROOVING OPERATIONS.

LEGEND

"T" MARKING

SIGN ON PERMANENT SUPPORT

DIRECTION OF TRAFFIC

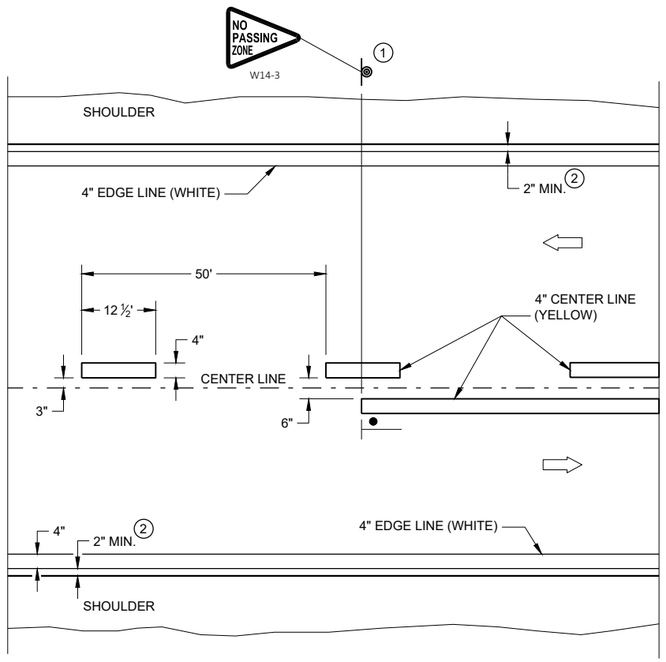

TWO WAY TRAFFIC

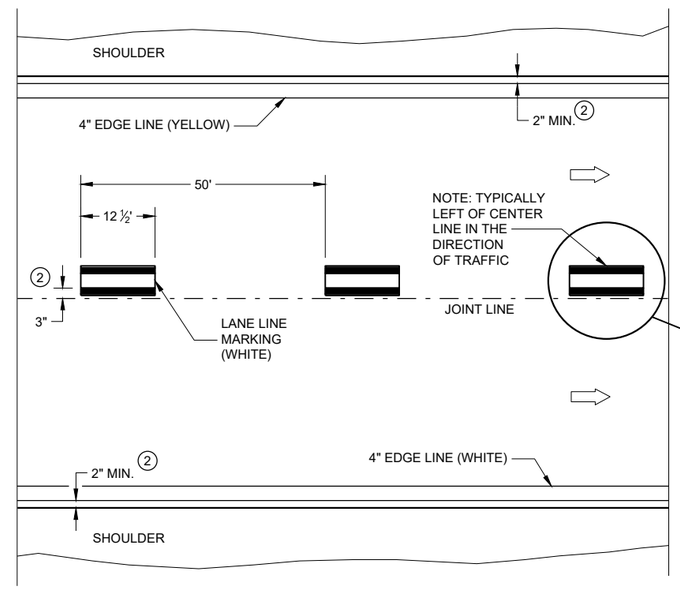

ONE WAY TRAFFIC

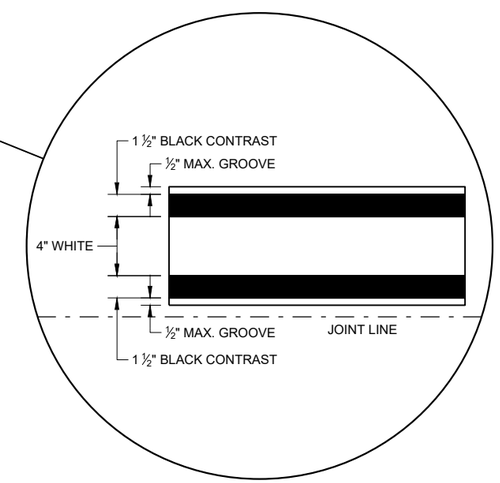

PERMANENT PAVEMENT MARKING

6

6

SDD 15C08 - 21a

SDD 15C08 - 21a

PERMANENT LONGITUDINAL PAVEMENT MARKINGS

STATE OF WISCONSIN
DEPARTMENT OF TRANSPORTATION

APPROVED
May 2022 — DATE
/S/ Jeannie Silver — STATEWIDE SIGNING AND M ENGINEER

FHWA

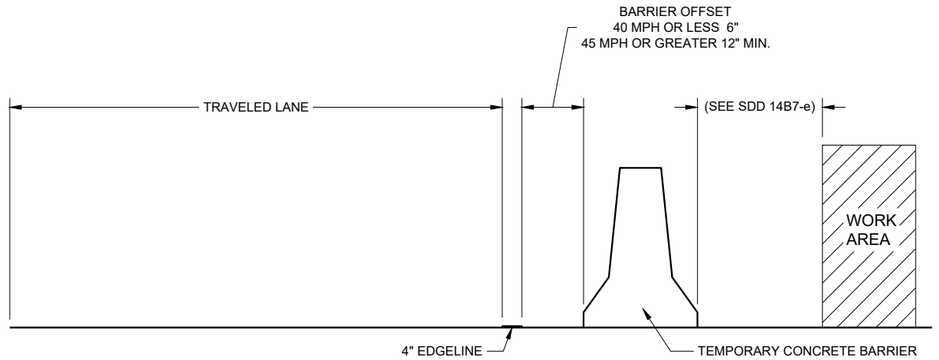

TEMPORARY BARRIER OFFSET FROM EDGELINE

GENERAL NOTES

DETAILS OF CONSTRUCTION NOT SHOWN ON THIS DRAWING SHALL CONFORM TO STANDARD SPECIFICATIONS AND SPECIAL PROVISIONS.

LEGEND

⇨ DIRECTION OF TRAFFIC

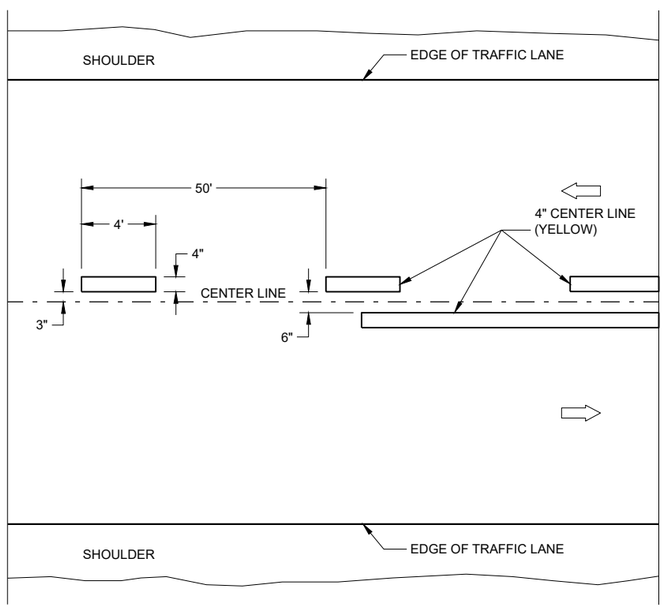

TWO WAY TRAFFIC

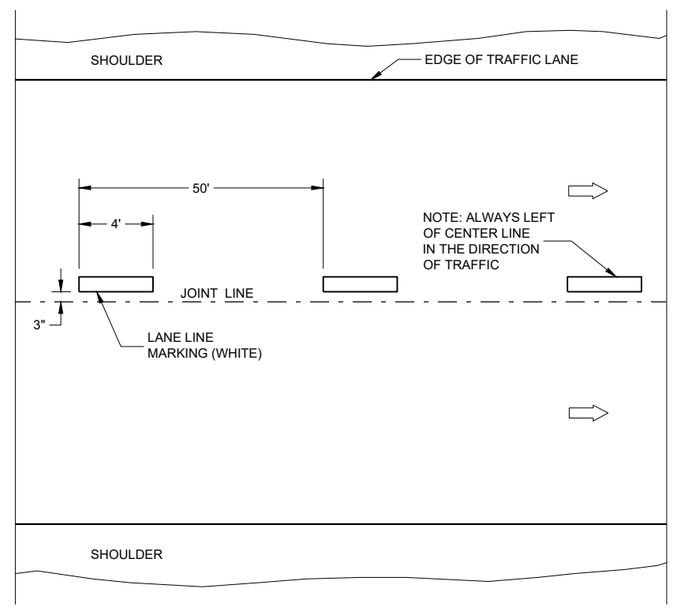

ONE WAY TRAFFIC

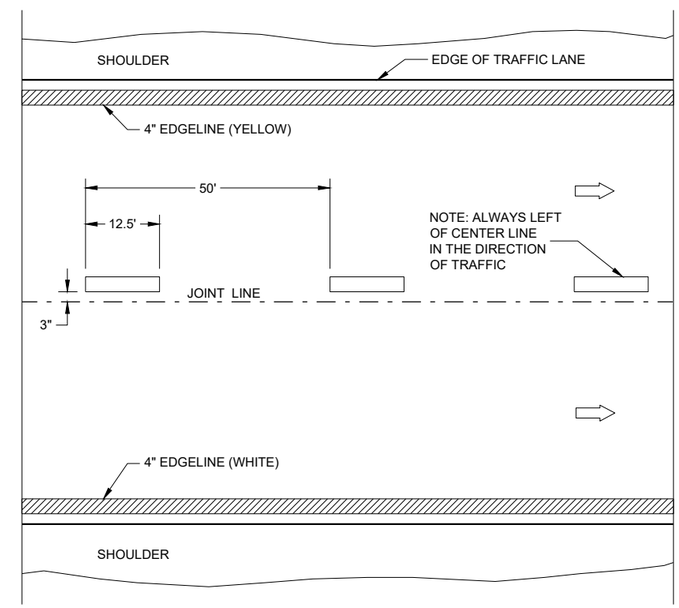

FREEWAYS AND EXPRESSWAYS

TEMPORARY PAVEMENT MARKING

TEMPORARY LONGITUDINAL PAVEMENT MARKING

STATE OF WISCONSIN
DEPARTMENT OF TRANSPORTATION

APPROVED
May 2022 — DATE
/S/ Jeannie Silver — STATEWIDE SIGNING AND M ENGINEER
FHWA

6

SDD 15C08 - 21b

6

SDD 15C08 - 21b

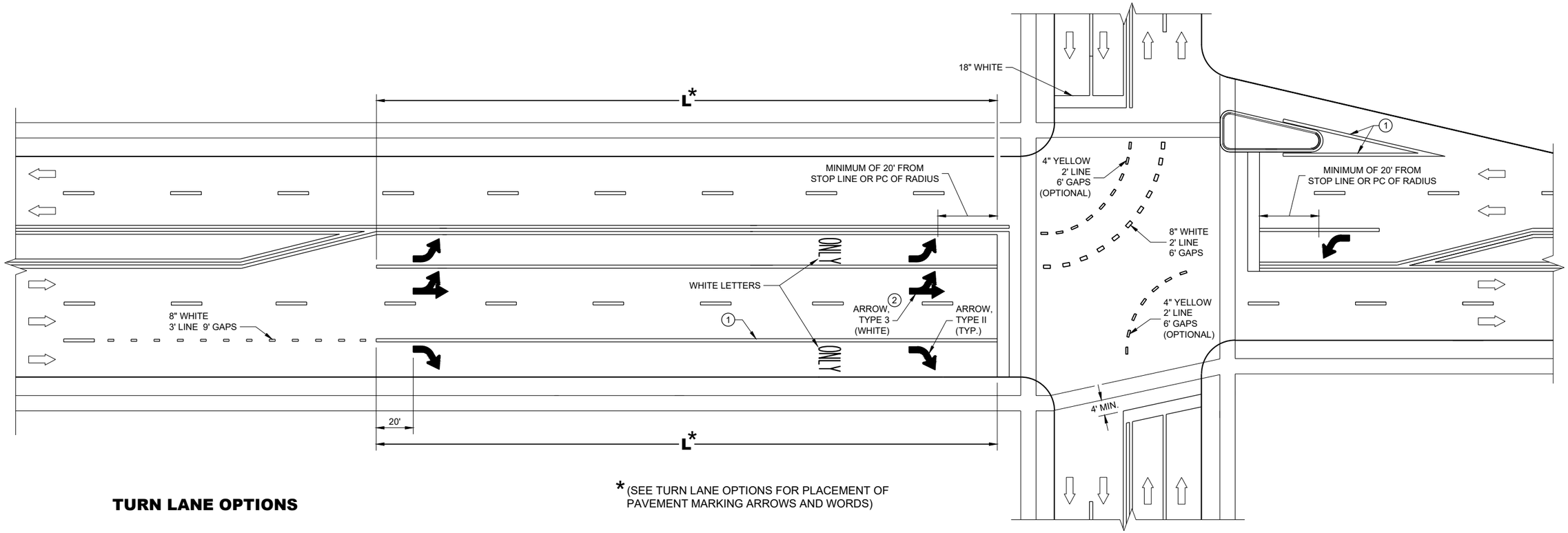

* (SEE TURN LANE OPTIONS FOR PLACEMENT OF PAVEMENT MARKING ARROWS AND WORDS)

TURN LANE OPTIONS

LENGTH OF TURN BAY (**L**) OF 0 - 47' DOES NOT REQUIRE PAVEMENT MARKING ARROWS OR WORDS

L = 48 - 87'

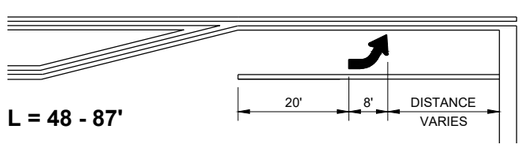

L = 88 - 166'

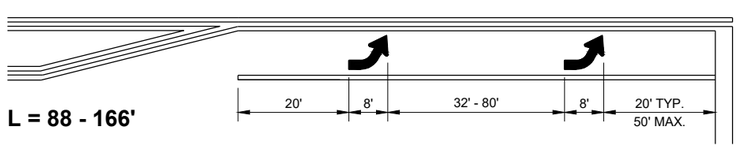

L = >166'

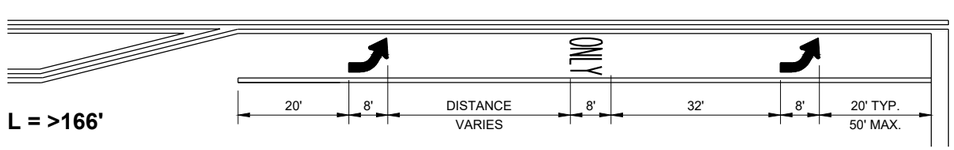

GENERAL NOTES

1. 8" WHITE
2. QUANTITY AND LOCATION OF TYPE 3 ARROWS ARE THE SAME AS THE TYPE II ARROWS IN THE ADJACENT TURN LANE. FOR TURN LANES WITH A PHYSICAL SEPARATION IN THE SAME DIRECTION OF TRAVEL, THE ARROWS AND "ONLY" MARKING MAY BE ELIMINATED.

⇨ DIRECTION OF TRAFFIC

L = LENGTH OF TURN BAY

PAVEMENT MARKING (TURN LANES)

STATE OF WISCONSIN
DEPARTMENT OF TRANSPORTAT

6

SDD 15C08 - 21d

GENERAL NOTES

1. REFLECTIVE SHEETING SHALL FOLLOW THE REQUIREMENTS IN THE APPROVED PRODUCTS LISTING FOR SIGN SHEETING.
2. LOCATION OF WARNING LIGHTS WHEN SHOWN ON THE PLAN.

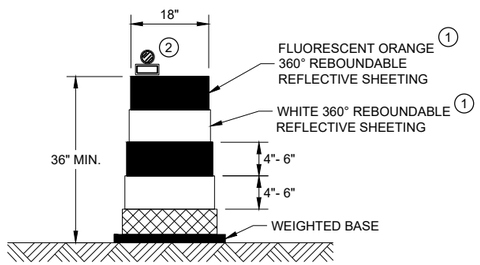

DRUM

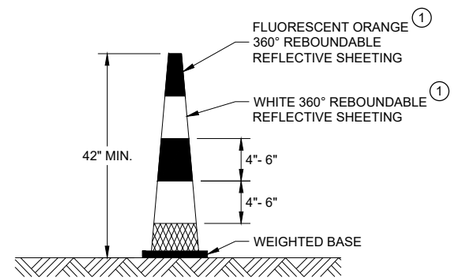

42" CONE

DO NOT USE IN TAPERS
½ SPACING OF DRUMS

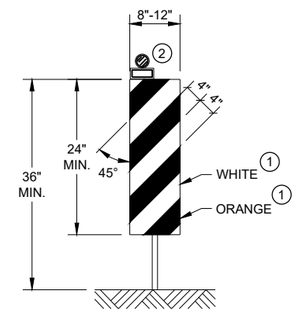

VERTICAL PANEL

THE STRIPES SHALL SLOPE DOWNWARD TO
THE TRAFFIC SIDE FOR CHANNELIZATION.

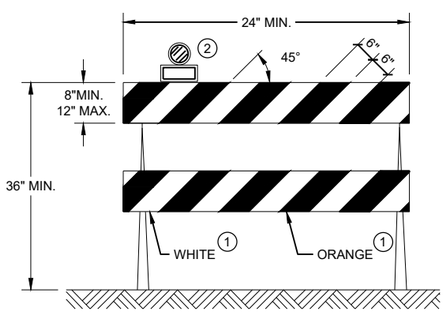

TYPE II BARRICADE

FOR RAILS LESS THAN 36" LONG, 4" WIDE STRIPES
MAY BE USED. ALL STRIPES SHALL SLOPE DOWNWARD
TO THE TRAFFIC SIDE FOR CHANNELIZATION.

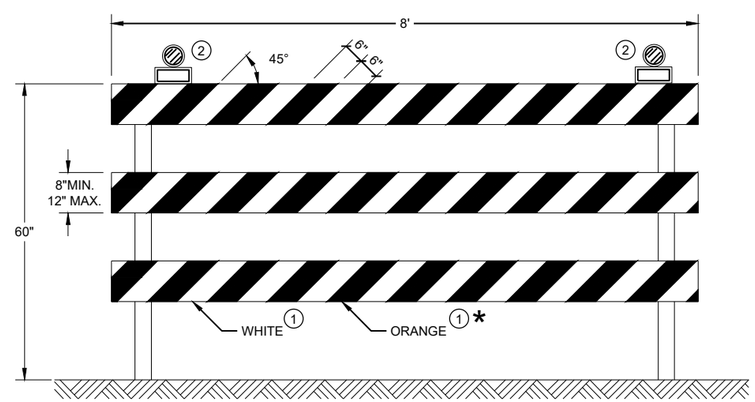

TYPE III BARRICADE

IF SIGN MOUNTED, DO NOT COVER MORE THAN 50% OF THE TOP
TWO RAILS OR 33% OF THE TOTAL AREA OF THE THREE RAILS.

* IF USED FOR A PERMANENT APPLICATION USE RED SHEETING.

CHANNELIZING DEVICES DRUMS, CONES, BARRICADES AND VERTICAL PANELS

STATE OF WISCONSIN
DEPARTMENT OF TRANSPORTATION

APPROVED
May 2021 — DATE
/S/ Andrew Heidtke — WORK ZONE ENGINEE
FHWA

6
SDD 15C11 - 09b

LEGEND

SIGN ON PORTABLE OR PERMANENT SUPPORT

TEMPORARY PORTABLE RUMBLE STRIP ARRAY

DIRECTION OF TRAFFIC

WORK AREA

FLAGGER, EQUIPPED WITH STOP/SLOW PADDLE FASTENED ON SUPPORT STAFF

GENERAL NOTES

DETAILS OF TRAFFIC CONTROL DEVICES AND INSTALLATION NOT SHOWN ON THIS DRAWING SHALL CONFORM TO THE PERTINENT REQUIREMENTS OF THE STANDARD SPECIFICATIONS, THE SPECIAL PROVISIONS, AND THE MANUAL ON UNIFORM TRAFFIC CONTROL DEVICES.

ALL SIGNS ARE 48" X 48" UNLESS OTHERWISE NOTED.

"WO" SIGNS ARE THE SAME AS "W" SIGNS EXCEPT THE BACKGROUND IS ORANGE.

THE EXACT NUMBER, LOCATION AND SPACING OF ALL SIGNS, DEVICES, AND LOCATION OF ALL FLAGGERS SHALL BE ADJUSTED TO FIT FIELD CONDITIONS AS APPROVED BY THE ENGINEER.

THE FIRST ADVANCE WARNING SIGN SHOULD TYPICALLY BE LOCATED IN ADVANCE OF THE ANTICIPATED TRAFFIC BACKUP OR QUEUE.

WHEN A SIDE ROAD OR RAMP INTERSECTS THE FACILITY ON WHICH THE WORK IS BEING PERFORMED, ADDITIONAL TRAFFIC CONTROLS SHALL BE PROVIDED AS SPECIFIED IN THE PLANS AND/OR THE SPECIAL PROVISIONS OR AS APPROVED BY THE ENGINEER.

FLAGGING

FLAGGERS SHALL BE IN SIGHT OF EACH OTHER OR IN DIRECT COMMUNICATION AT ALL TIMES. THEY SHALL BE EQUIPPED WITH STOP/SLOW PADDLES FASTENED ON SUPPORT STAFFS. WHEN THE FLAGGING OPERATION IS NOT IN EFFECT REMOVE TEMPORARY PORTABLE RUMBLE STRIPS PRIOR TO COVERING OR REMOVING ALL ADVANCE SIGNING.

(1) FOR MOVING WORK OPERATIONS, POST ADDITIONAL W20-7A FLAGGER SIGNS AT APPROXIMATELY 3,500' INTERVALS IN THE MOVING WORK OPERATION OR AS APPROVED BY THE ENGINEER.

(2) SIGN NOT REQUIRED IF FLAGGING OPERATION OCCURS WITHIN A SIGNED ROAD WORK ZONE AREA.

WHEN THE DISTANCE BETWEEN FLAGGERS EXCEEDS 2 MILES, A PILOT CAR IS REQUIRED. WHEN CURVES REDUCE SIGHT DISTANCE BELOW 400', A PILOT CAR IS REQUIRED.

TEMPORARY PORTABLE RUMBLE STRIPS

UTILIZE TEMPORARY PORTABLE RUMBLE STRIPS ON ALL FLAGGING OPERATIONS.

(3) EACH TEMPORARY PORTABLE RUMBLE STRIP ARRAY CONSISTS OF THREE RUMBLE STRIPS PLACED TRANSVERSE ACROSS THE LANE AT THE LOCATIONS SHOWN. WITHIN EACH ARRAY, SPACING BETWEEN RUMBLE STRIPS SHALL BE 15 FEET ON CENTER

ONLY USE TEMPORARY PORTABLE RUMBLE STRIPS FROM THE APPROVED PRODUCTS LIST.

INSTALL TEMPORARY RUMBLE STRIPS PER MANUFACTURER'S RECOMMENDATIONS.

PLACE ADVANCE SIGNING PRIOR TO INSTALLING TEMPORARY RUMBLE STRIPS.

DO NOT INSTALL TEMPORARY PORTABLE RUMBLE STRIPS ON GRAVEL, MILLED SURFACES, OR ASPHALT THAT HAS BEEN PAVED LESS THAN 12 HOURS.

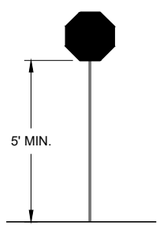

STOP/SLOW PADDLE ON SUPPORT STAFF

SIGN AND TEMPORARY RUMBLE STRIP ARRAY SPACING TABLE

SPEED LIMIT	SPACING "A"
25-30 MPH	200'
35-40 MPH	350'
45-55 MPH	500'

WO3-4

USE OF WO3-4 SIGN IS OPTIONAL. WHEN USED, THIS SIGN SHALL BE LOCATED BETWEEN THE W20-7A AND W20-4A SIGNS, USING SPACING "A".

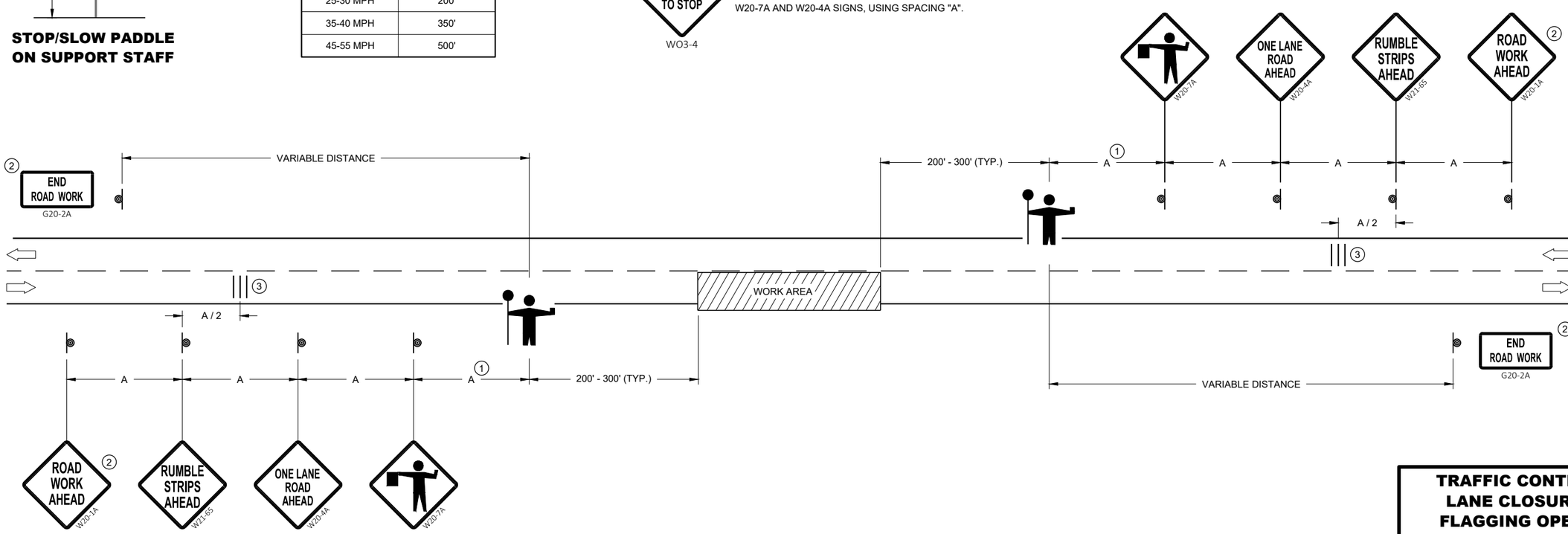

TRAFFIC CONTROL FOR LANE CLOSURE WITH FLAGGING OPERATION

STATE OF WISCONSIN
DEPARTMENT OF TRANSPORTATION

APPROVED
May 2022 — DATE
/S/ Andrew Heidtke — WORK ZONE ENGINEE
FHWA

6

SDD 15C12 - 09a

GENERAL NOTES

(1) DIAGONALS ARE OPTIONAL WHEN PAINTED ISLAND IS LESS THAN 6 FEET AT THE WIDEST POINT. OMIT DIAGONALS IF WIDTH IS LESS THAN 4 FEET.

DIRECTION OF TRAVEL

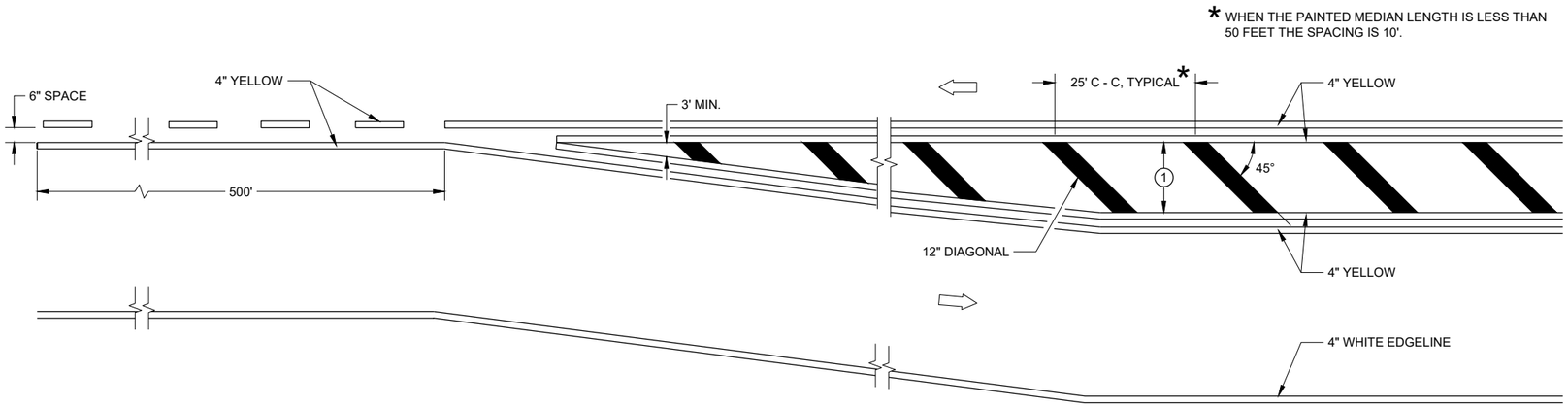

MEDIAN ISLAND DETAIL

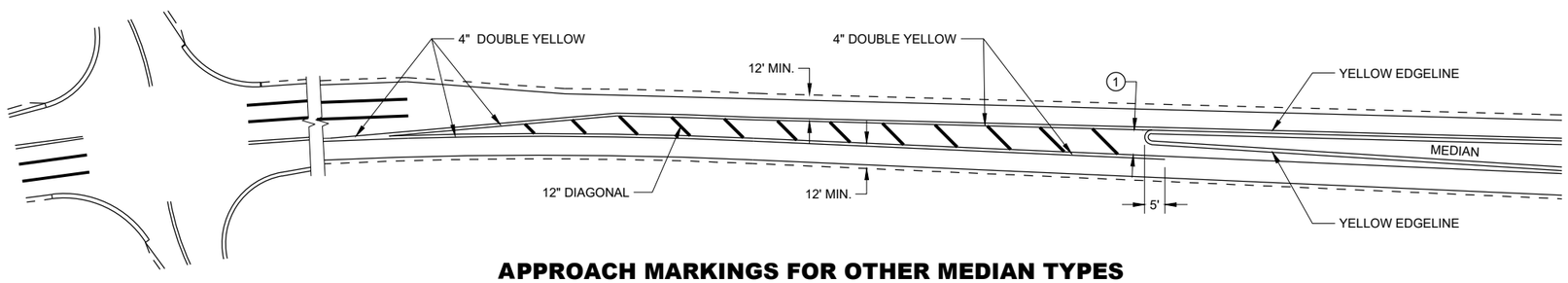

APPROACH MARKINGS FOR OTHER MEDIAN TYPES

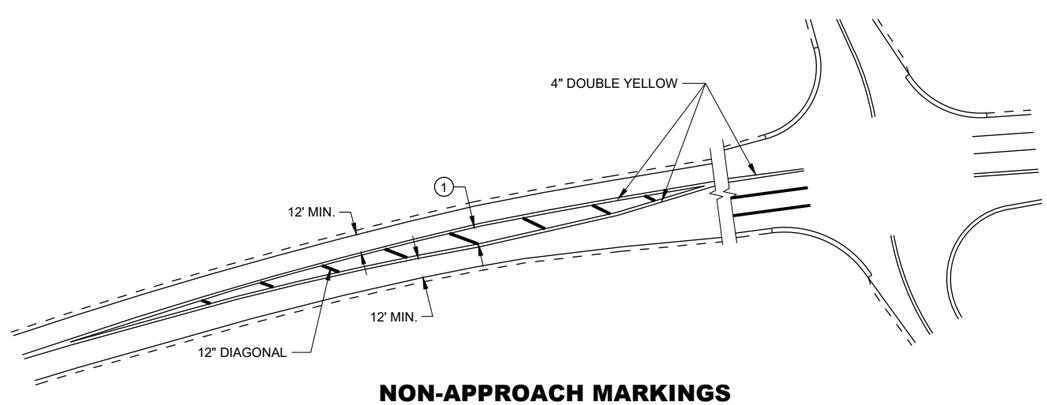

NON-APPROACH MARKINGS

MEDIAN ISLAND PAVEMENT MARKINGS

STATE OF WISCONSIN
DEPARTMENT OF TRANSPORTATION

APPROVED
May 2022 — DATE
/S/ Jeannie Silver — STATE SIGNING AND MAF ENGINEER
FHWA

6

SDD 15C18 - 06a

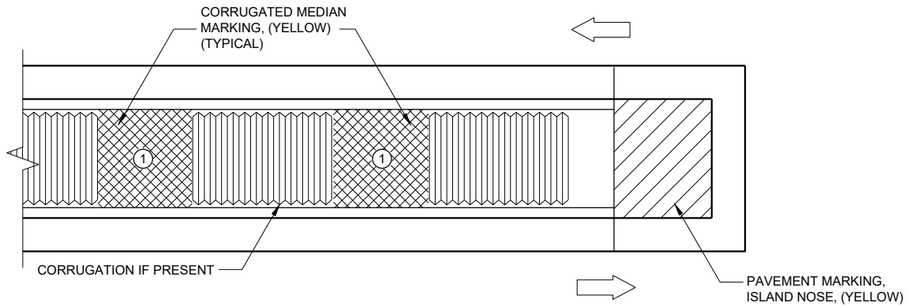

MEDIAN ISLAND WITH SQUARE BLUNT NOSE

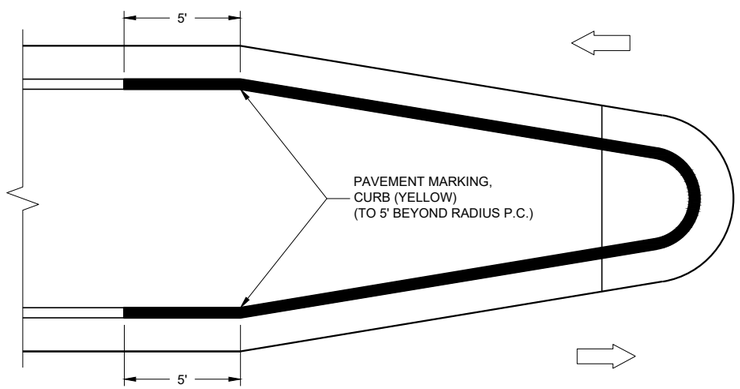

MEDIAN ISLAND WITH ROUND BLUNT NOSE

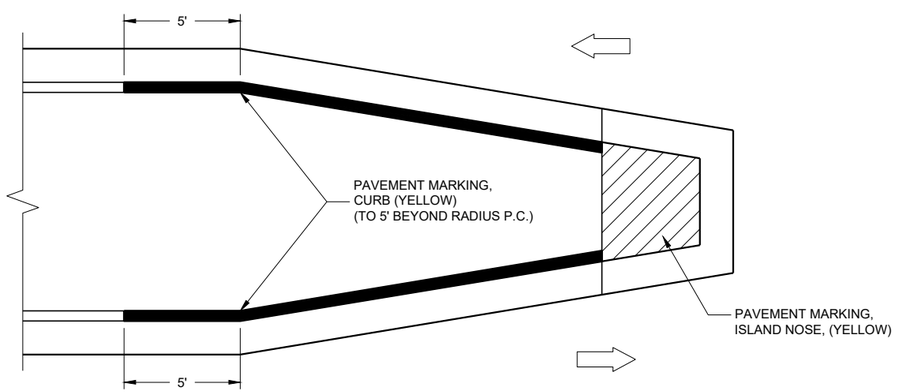

MEDIAN ISLAND WITH SLOPED NOSE

**TYPICAL PLACEMENT OF
PAVEMENT MARKING ON MEDIAN ISLANDS**

GENERAL NOTES

WHEN CONCRETE CORRUGATED MEDIAN IS CONSTRUCTED TO SEPARATE TRAFFIC OPERATING IN THE OPPOSING DIRECTION, YELLOW PAVEMENT MARKING SHALL BE APPLIED TO THE FLAT PORTION OF THE CONCRETE CORRUGATED MEDIAN. THE ITEM OF PAVEMENT MARKING, CONCRETE CORRUGATED MEDIAN, WILL BE MEASURED IN PLACE AND ACCEPTED IN ACCORDANCE WITH THE CONTRACT AND PAID FOR AT THE CONTRACT UNIT PRICE PER SQUARE FOOT.

(1) APPLY PAVEMENT MARKING TO THE FLAT PORTION OF CORRUGATED MEDIAN.

ISLAND NOSE MARKING

CURB MARKING

CORRUGATED MEDIAN MARKING

DIRECTION OF TRAVEL

6

6

SDD 15C18 - 06b

SDD 15C18 - 06b

**PAVEMENT MARKINGS,
MEDIAN ISLAND NOSE**

STATE OF WISCONSIN
DEPARTMENT OF TRANSPORTATION

APPROVED

May 2022
DATE

/S/ Jeannie Silver
STATE SIGNING AND MAR
ENGINEER

FHWA

LEGEND

V1 LEAD VEHICLE

V2 MARKING VEHICLE

V3 SHADOW VEHICLE

TRUCK MOUNTED ATTENUATOR (TMA)

SIGN ON TEMPORARY SUPPORT

DIRECTION OF TRAFFIC

FLASHING ARROW PANEL (CAUTION)

GENERAL NOTES

ALL VEHICLES SHALL BE EQUIPPED WITH TWO 360 DEGREE HIGH INTENSITY YELLOW FLASHING LIGHTS OR STROBE LIGHTS AND OPERATED WITH HEADLIGHTS TURNED ON.

ALL VEHICLES SHALL BE EQUIPPED WITH REAR FACING TYPE B OR C FLASHING ARROW PANEL OPERATING IN CAUTION MODE. SIGNS PLACED ON VEHICLES MUST NOT OBSCURE THE ARROW PANEL.

ALL SIGNS ARE 48" X 48" UNLESS OTHERWISE SPECIFIED.

DISTANCE BETWEEN VEHICLES MAY VARY ACCORDING TO TERRAIN, SIGHT DISTANCE, PAINT DRYING TIME, AND OTHER FACTORS. WHENEVER ADEQUATE STOPPING SIGHT DISTANCE EXISTS TO THE REAR, SHADOW VEHICLES SHOULD MAINTAIN THE MINIMUM DISTANCE FROM THE WORK VEHICLE AND PROCEED AT THE SAME SPEED AS THE WORK VEHICLE. SHADOW VEHICLES SHOULD SLOW DOWN IN ADVANCE OF VERTICAL AND HORIZONTAL CURVES THAT RESTRICT SIGHT DISTANCE.

THE WORK AND SHADOW VEHICLES SHOULD PULL OVER PERIODICALLY TO ALLOW TRAFFIC TO PASS.

WHEN NO WORK ACTIVITY IS TAKING PLACE, REMOVE OR LAY STATIONARY SIGNS AND SUPPORTS FLAT ON THE GRADE WITH UPRIGHTS ORIENTED PARALLEL TO AND DOWNSTREAM FROM TRAFFIC.

CONES SHOULD BE USED BETWEEN THE MARKING AND SHADOW VEHICLE AT 100 FOOT SPACING. CONES MAY BE OMITTED ON PAINTED LINE IF APPROVED BY THE ENGINEER. CONSIDER PAVEMENT MARKING DRY OR CURE TIMES AND TRAFFIC VOLUME.

CONES SHALL BE A MINIMUM OF 28" FOR WET PAVEMENT MARKING .

1. SIGNS SHALL BE REPEATED APPROXIMATELY EVERY THREE MILES.
2. IF CONSTRUCTION WORK ZONE SIGNS ARE IN PLACE, W20-1A OR W21-63 ARE NOT REQUIRED.
3. V1 AND V2 CAN BE SWITCHED SO THAT THE MARKER IS THE LEAD VEHICLE.

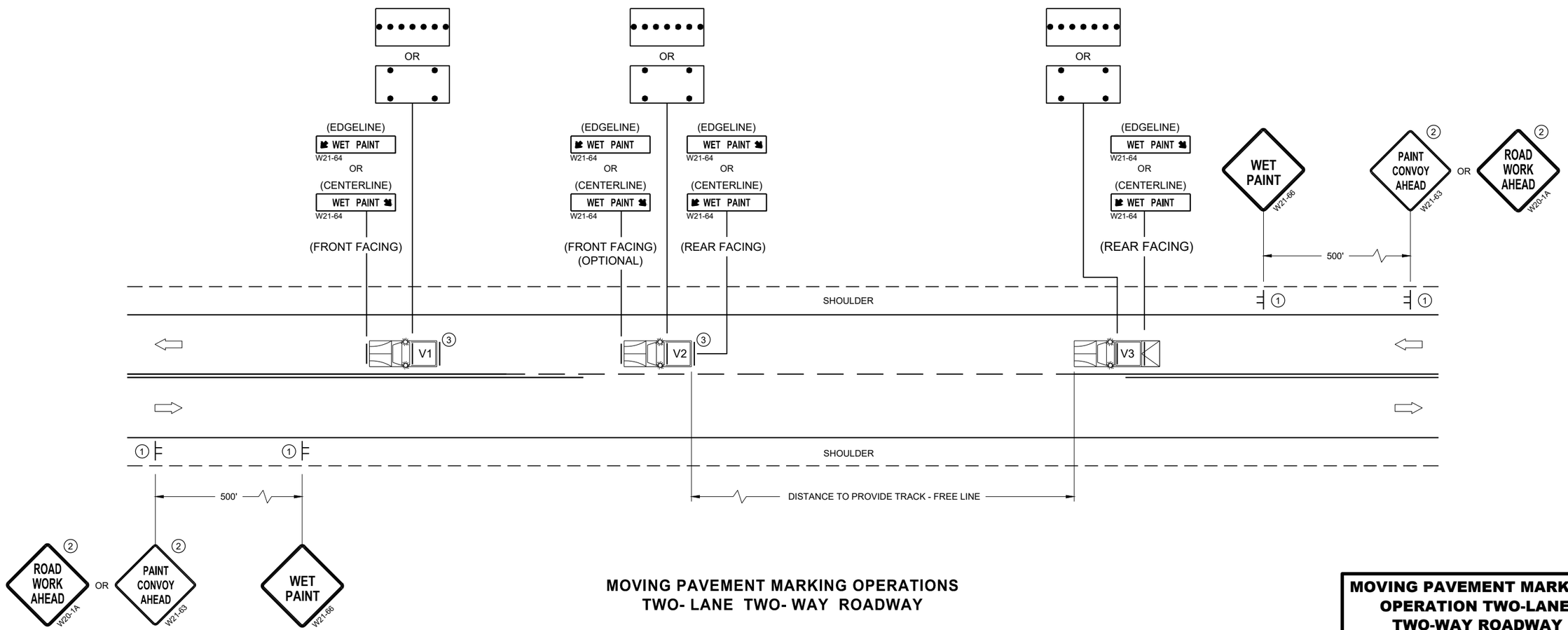

MOVING PAVEMENT MARKING OPERATIONS
TWO- LANE TWO- WAY ROADWAY

MOVING PAVEMENT MARKING OPERATION TWO-LANE TWO-WAY ROADWAY

STATE OF WISCONSIN
DEPARTMENT OF TRANSPORTATION

APPROVED
May 2022 — DATE
/S/ Andrew Heidtke — WORK ZONE ENGINEE
FHWA

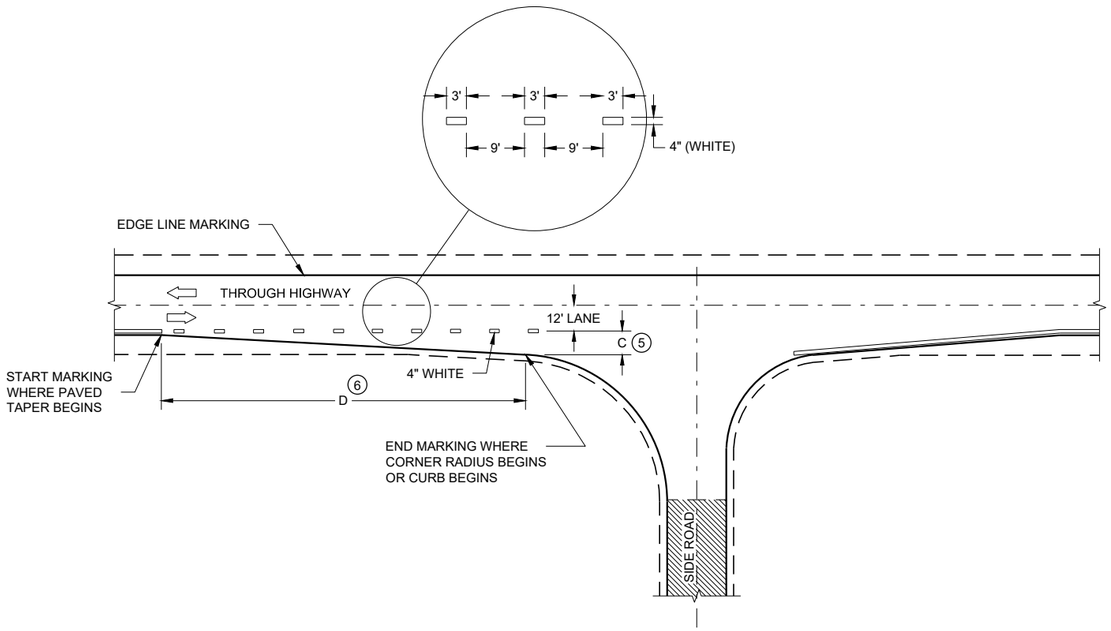

MINOR INTERSECTION

GENERAL NOTES

OMIT EDGE LINES THROUGH INTERSECTIONS. CONTINUE EDGE LINES THROUGH DRIVEWAYS.

1. WHEN DISTANCE "A" IS LESS THAN 250 FEET, OMIT LANE LINE.
2. WHEN DISTANCE "B" IS LESS THAN 100 FEET, OMIT CHANNELIZING LANE LINE.
3. BARRIER LINE ENDS AT SIDE ROAD PAVEMENT / SURFACE EDGE EXTENSION.
4. BARRIER LINE STARTS 500 FEET PRIOR TO THE BYPASS TAPER.
5. WHEN DISTANCE "C" IS LESS THAN 4 FEET, OMIT DOTTED EXTENSION.
6. WHEN DISTANCE "D" IS LESS THAN 50 FEET, OMIT DOTTED EXTENSION.

LEGEND

DIRECTION OF TRAVEL

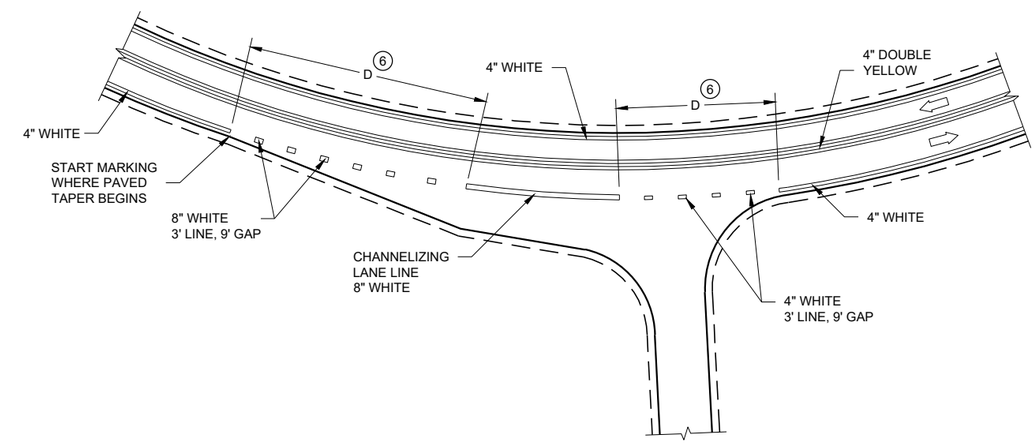

INTERSECTION ON OUTSIDE OF CURVE

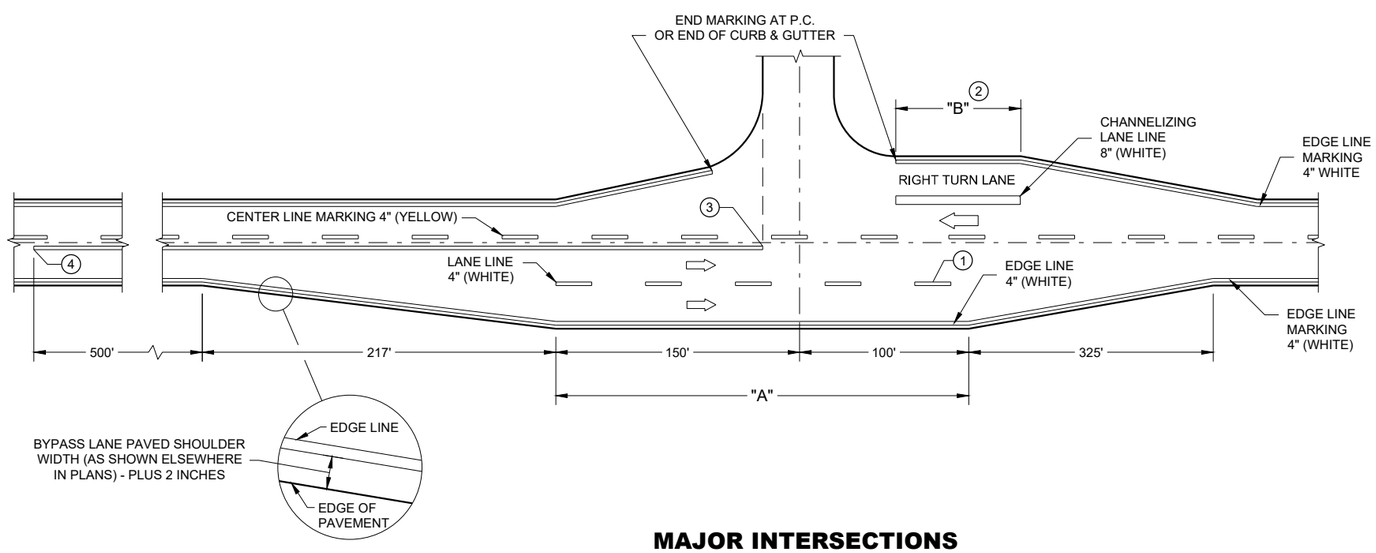

MAJOR INTERSECTIONS

(INTERSECTION WITH FULL RIGHT TURN LANE OR BYPASS LANE)

PAVEMENT MARKING (INTERSECTIONS)

STATE OF WISCONSIN
DEPARTMENT OF TRANSPORTA

6

SDD 15C35 - 05a

LEGEND

SIGN ON PERMANENT SUPPORT

TRAFFIC CONTROL DRUM

DIRECTION OF TRAFFIC

WORK ZONE

GENERAL NOTES

ALL SIGNS ARE 48"X48" UNLESS OTHERWISE NOTED. IF NECESSARY DUE TO SPACE CONSTRAINTS IN URBAN AREAS, 36" X 36" SIGNS MAY BE USED IF APPROVED BY THE REGIONAL TRAFFIC UNIT.

"WO" SIGN IS THE SAME AS "W" SIGN EXCEPT THE BACKGROUND IS ORANGE.

ANY SIGNS TEMPORARY OR EXISTING, WHICH CONFLICT WITH THE TRAFFIC CONTROL "IN USE" SHALL BE REMOVED OR COVERED AS NEEDED AND AS APPROVED BY THE ENGINEER.

THE EXACT NUMBER, LOCATION, AND SPACING OF ALL SIGNS AND DEVICES SHALL BE ADJUSTED TO FIT FIELD CONDITIONS AS APPROVED BY THE ENGINEER.

CHANNELIZING DEVICES PLACED ADJACENT TO WORK AREA SHALL BE PULLED BACK FROM THE TRAVEL LANE WHEN WORK IS NOT IN PROGRESS.

SIGNS THAT WILL BE IN PLACE LESS THAN 7 CONTINUOUS DAYS AND NIGHTS MAY BE MOUNTED ON PORTABLE SUPPORTS.

W20-1A AND G20-2A SIGNS ARE NOT REQUIRED IF THE WORK AREA IS WITHIN A LARGER WORK ZONE WHERE THESE SIGNS ARE ALREADY PRESENT. G20-2A SIGNS MAY ALSO BE OMITTED IF DURATION OF WORK IS LESS THAN 7 CONTINUOUS DAYS AND NIGHTS.

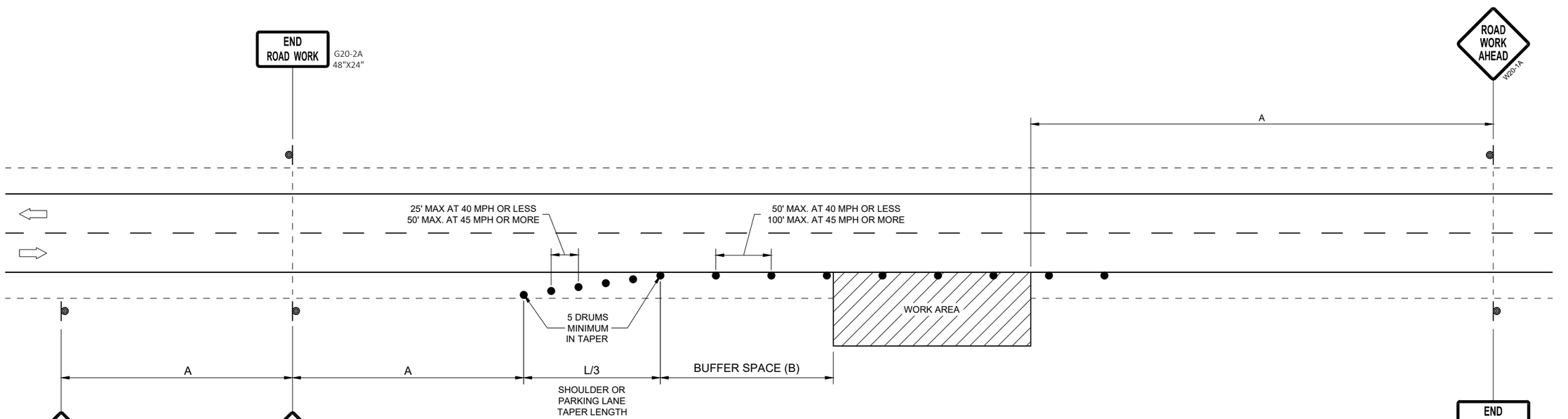

OR
IF TRAFFIC CONTROL DEVICES
ENCROACH ONTO TRAVELED WAY, USE

POSTED SPEED LIMIT PRIOR TO WORK STARTING (MPH)	ADVANCE WARNING SIGN SPACING (A) FEET	SHOULDER TAPER L / 3 W, LATERAL OFFSET (FT)						BUFFER SPACE (B) FEET
		3	4	5	6	7	8	
25	200'	10	14	17	21	24	28	55
30	200'	15	20	25	30	35	40	85
35	350'	20	27	34	40	47	54	120
40	350'	26	35	44	53	62	70	170
45	500'	45	59	74	89	104	119	220
50	500'	50	66	83	99	116	132	280
55	500'	54	73	91	109	127	145	335'

TRAFFIC CONTROL, WORK ON SHOULDER OR PARKING LANE, UNDIVIDED ROADWAY

STATE OF WISCONSIN
DEPARTMENT OF TRANSPORTATION

APPROVED
May 2020 — DATE
/S/ Andrew Heidtke — STATEWIDE WORK ZONE T SAFETY ENGINEER
FHWA

6

SDD 15D28 - 04

LEGEND

- SIGN ON PERMANENT SUPPORT
- TRAFFIC CONTROL DRUM
- TYPE III BARRICADE WITH ATTACHED SIGN
- DIRECTION OF TRAFFIC
- WORK AREA
- FLAGGER, EQUIPPED WITH STOP/SLOW PADDLE FASTENED ON SUPPORT STAFF

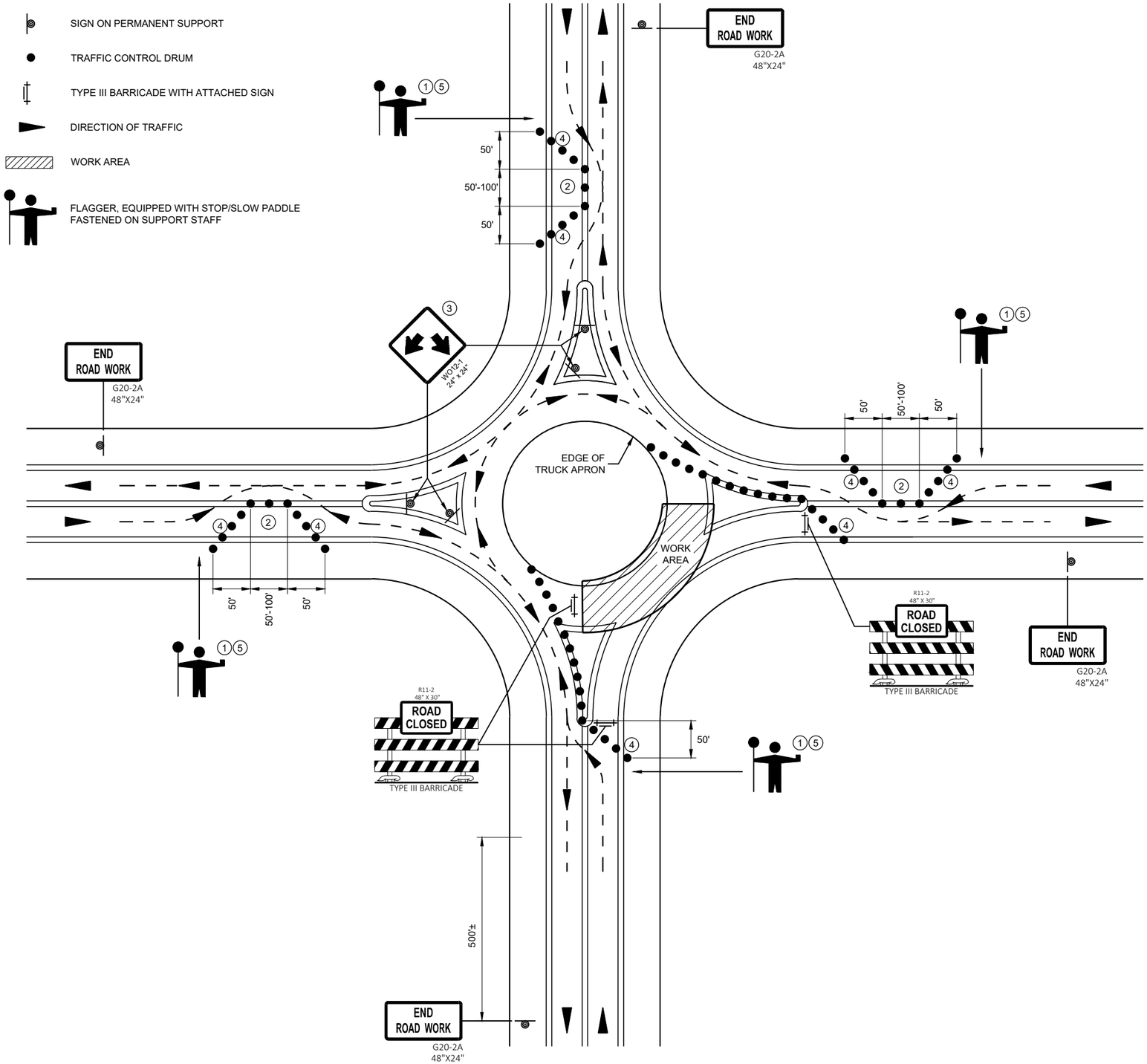

GENERAL NOTES

ALL SIGNS ARE 48"X48" BLACK ON ORANGE UNLESS OTHERWISE NOTED. IF NECESSARY DUE TO SPACE CONSTRAINTS, 36" X 36" SIGNS MAY BE USED IF APPROVED BY THE REGIONAL TRAFFIC UNIT.

"WO" SIGN IS THE SAME AS "W" SIGN EXCEPT THE BACKGROUND IS ORANGE

ANY SIGNS TEMPORARY OR EXISTING, WHICH CONFLICT WITH THE TRAFFIC CONTROL "IN USE" SHALL BE REMOVED OR COVERED AS NEEDED AND AS APPROVED BY THE ENGINEER.

THE EXACT NUMBER, LOCATION, AND SPACING OF ALL SIGNS AND DEVICES SHALL BE ADJUSTED TO FIT FIELD CONDITIONS AS APPROVED BY THE ENGINEER.

ONLY ONE QUADRANT OF TRAFFIC SHALL BE RELEASED AT A TIME.

FLAGGERS SHALL CONTROL TRAFFIC ON ALL APPROACHES OF THE ONE-LANE ROUNDABOUT. ONE FLAGGER SHALL BE DESIGNATED LEAD FLAGGER.

NIGHT TIME WORK REQUIRES ADDITIONAL LIGHTING AT FLAGGER STATION(S).

1. FLAGGERS SHALL BE IN DIRECT RADIO CONTACT AT ALL TIMES. THEY SHALL BE EQUIPPED WITH STOP/SLOW PADDLES FASTENED ON SUPPORT STAFFS. WHEN THE FLAGGING IS NOT IN EFFECT, COVER OR REMOVE ALL TEMPORARY TRAFFIC CONTROL SIGNS.
2. ADJUST CHANNELIZING DEVICES TO ACCOMMODATE FOR TURNING RADIUS OF LARGE VEHICLES AS DIRECTED BY THE ENGINEER.
3. GUIDE SIGN WITH ROAD NAMES MAY BE USED IN LIEU OF THE DOUBLE ARROW (WO12-1) SIGN.
4. THE TWO- WAY TAPER SHOULD BE 50 FEET USING 5 EQUALLY SPACED DRUMS.
5. FOLLOW SDD 15C12 FOR FLAGGING AND ADVANCE WARNING.

RECOMMENDED REDUCED DRUM SPACING WITHIN ROUNDABOUT

MPH	DRUM SPACING (FT)
0-40	25
45-55	50

TRAFFIC CONTROL, FLAGGING OPERATION, ROUNDABOUT

STATE OF WISCONSIN
DEPARTMENT OF TRANSPORTATION

APPROVED
May 2020 — DATE
/S/ Andrew Heidtke — STATEWIDE WORK ZONE T SAFETY ENGINEER
FHWA

6

SDD 15D37 - 03

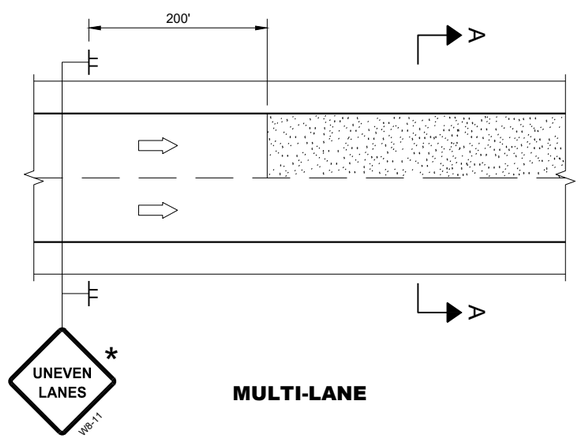

MULTI-LANE

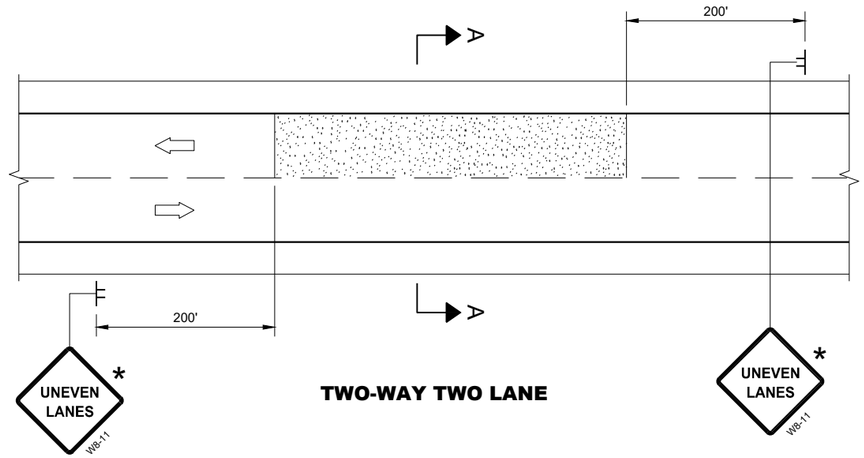

TWO-WAY TWO LANE

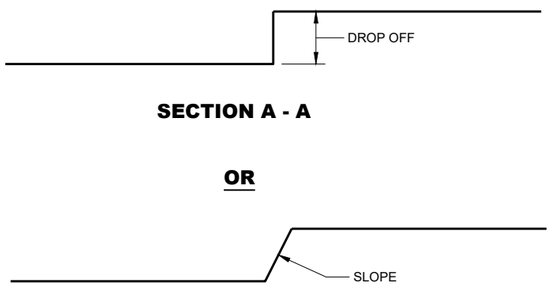

SECTION A - A

OR

SECTION A - A

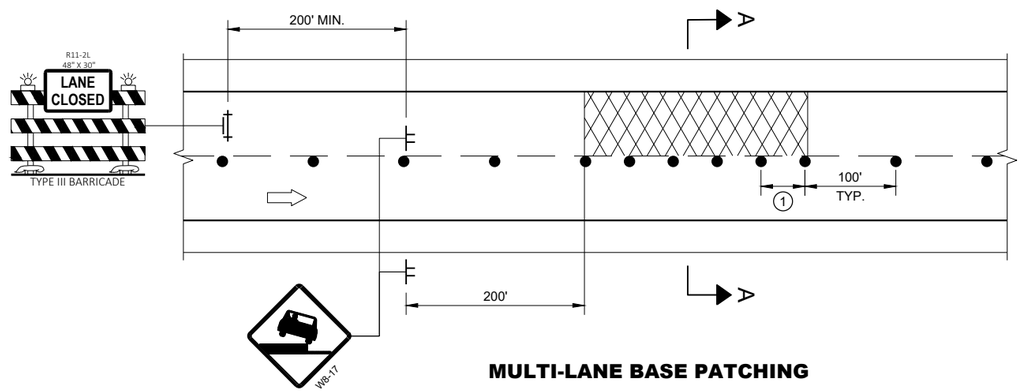

MULTI-LANE BASE PATCHING

ADJACENT LANE DROP-OFFS

GENERAL NOTES

FOR SPOT LOCATIONS USE ENGINEERING JUDGEMENT WHEN PLACING ADDITIONAL SIGNS.

ALL SIGNS ARE 48" X 48" UNLESS OTHERWISE NOTED.

"WO" SIGNS ARE THE SAME AS "W" SIGNS EXCEPT THE BACKGROUND IS ORANGE.

WARNING LIGHTS ARE NOT REQUIRED IF THE LANE CLOSURE IS A DAYTIME ONLY OPERATION.

* IF THE DROP-OFF IS CONTINUOUS ALONG THE PROJECT, PLACE ADDITIONAL SIGNS EVERY 1 MILE AND AFTER EVERY ENTRANCE RAMP.

(1) USE CLOSER SPACING WHEN DELINEATING DROP-OFF.

LEGEND

- SIGN ON TEMPORARY SUPPORT
- TRAFFIC CONTROL DRUM
- TYPE III BARRICADE WITH ATTACHED SIGN
- TYPE "A" WARNING LIGHT (FLASHING)
- DIRECTION OF TRAFFIC
- WORK AREA WITH DROP-OFF
- MILLED SURFACE

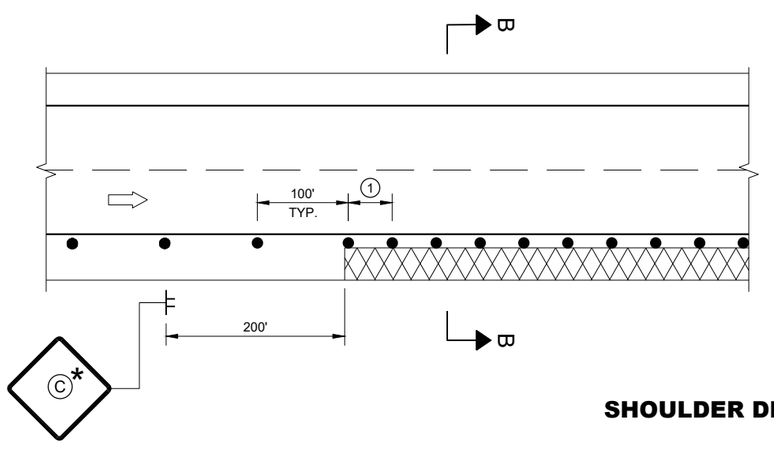

SHOULDER DROP-OFFS

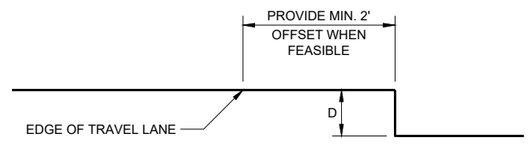

SECTION B - B

D	SIGN (C)
< 2" WITH A SLOPE STEEPER THAN 3:1	LOW SHOULDER WO8-9
2" < 6" WITH A SLOPE STEEPER THAN 3:1	SHOULDER DROP - OFF W8-9A PROVIDE A 3:1 OR FLATTER SLOPE OF MATERIAL ADJACENT TO THE PAVEMENT

TRAFFIC CONTROL, DROP-OFF SIGNING

STATE OF WISCONSIN
DEPARTMENT OF TRANSPORTATION

APPROVED
March 2018 — DATE
/S/ Andrew Heidtke — WORK ZONE ENGINEE
FHWA

GENERAL NOTES

DRAWING NOT TO SCALE. ALL SIGNS AND POSTS ON THIS SHEET SHALL BE PAID FOR WITH 'TRAFFIC CONTROL SIGNS' BID ITEM. ALL SIDE ROADS WHICH ARE UNDER CONSTRUCTION OF CURB AND GUTTER AND/OR GRADING SHALL BE ADEQUATELY SIGNED.

ALL SIGNS AND DEVICES SHALL BE IN CONFORMANCE WITH THE WISCONSIN MANUAL OF UNIFORM TRAFFIC CONTROL DEVICES (WMUTCD). SIGN LAYOUTS SHALL BE IN ACCORDANCE WITH THE WISDOT STANDARD SIGN PLATES.

"WO" SIGNS ARE THE SAME AS "W" SIGNS EXCEPT THAT THE BACKGROUND IS ORANGE.

ALL SIGNS ARE 48" X 48" UNLESS OTHERWISE NOTED.

THE EXACT NUMBER, LOCATION AND SPACING OF ALL SIGNS AND DEVICES SHALL BE ADJUSTED TO FIT FIELD CONDITIONS AS DIRECTED BY THE ENGINEER.

ALL SIGNS INAPPROPRIATE TO THE STATUS OF THE CONTROL ZONE, INCLUDING PRE-EXISTING SIGNS IN THE VICINITY, SHALL BE COVERED OR REMOVED AS DIRECTED BY THE ENGINEER.

SEE 15C34 FOR ADDITIONAL TRAFFIC CONTROL SIGNING WHEN CENTERLINE PAVEMENT MAKINGS ARE MISSING. 'DO NOT PASS' SIGNS MUST BE INSTALLED ON THE SAME DAY AS MILLING OPERATIONS.

(1) PLACE SIGNS 350' IN ADVANCE OF MILLED SURFACES AND AT 1 MILE INTERVALS, OR AS DIRECTED BY THE ENGINEER.

(2) PLACE SIGN 200' MIN. FROM INTERSECTION AND 200' MIN. AFTER ADVANCE WARNING SIGN SHOWN IN SDD 15C04.

LEGEND

SIGN ON TEMPORARY SUPPORT

DIRECTION OF TRAFFIC

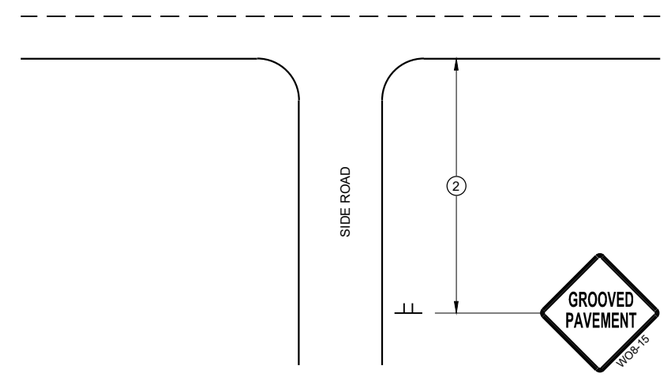

TYPICAL SIDE ROAD APPROACH SIGN DETAIL

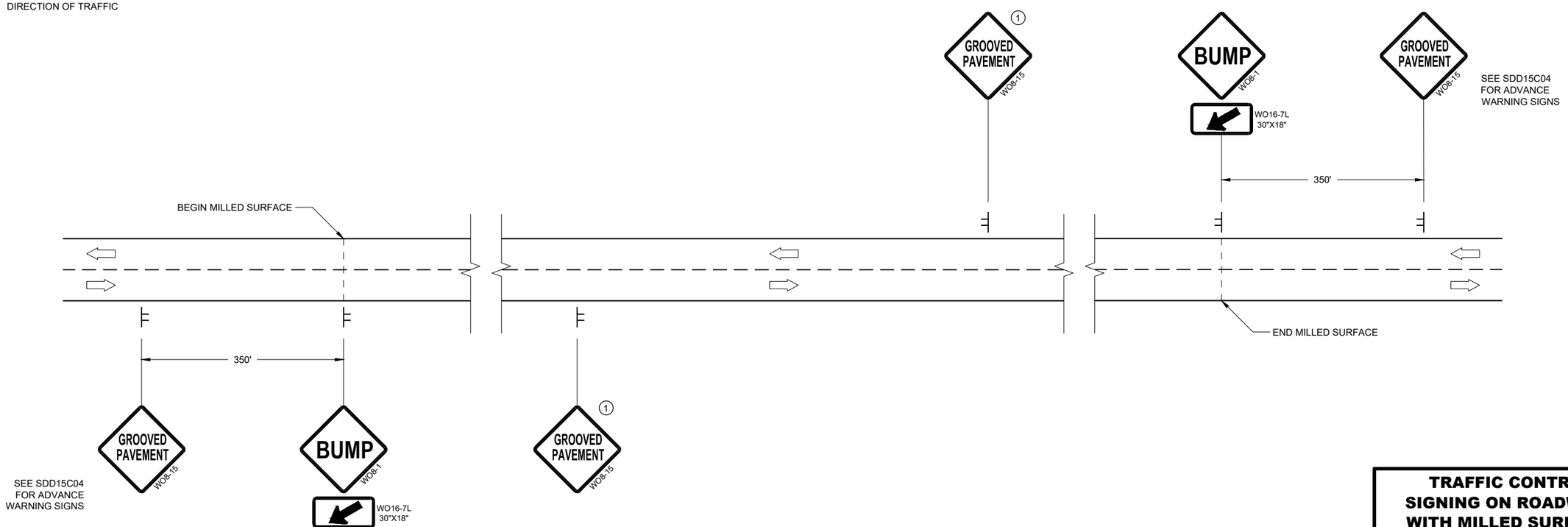

DETAIL FOR SIGNING ON MILLED SURFACES

TRAFFIC CONTROL, SIGNING ON ROADWAYS WITH MILLED SURFACES

STATE OF WISCONSIN
DEPARTMENT OF TRANSPORTATION

APPROVED
February 2020 /S/ Andrew Heidtke
DATE WORK ZONE ENGINEE
FHWA

6

SDD 15D44 - 02

6

SDD 15D44 - 02

LEGEND

V1 WORK VEHICLE

V2 SHADOW VEHICLE

TRUCK MOUNTED ATTENUATOR (TMA)

FLASHING ARROW PANEL (CAUTION)

WORK AREA

DIRECTION OF TRAFFIC

POSTED SPEED PRIOR TO WORK STARTING (MPH)	DECISION SIGHT DISTANCE (D)
0 - 25	550'
30	550'
35	700'
40	700'
45	900'
50	900'
55	1200'

GENERAL NOTES

ALL SIGNS ARE 48"X48" UNLESS OTHERWISE NOTED.

MOBILE IS WORK THAT MOVES CONTINUOUSLY OR MOVES AT LEAST THE DECISION SIGHT DISTANCE EVERY 15 MINUTES.

ALL VEHICLES SHALL BE EQUIPPED WITH TWO 360 DEGREE HIGH INTENSITY YELLOW FLASHING LIGHTS OR STROBE LIGHTS AND OPERATED WITH HEADLIGHTS TURNED ON.

ALL ARROW PANELS SHALL BE REAR FACING, TYPE "B" OR "C", AND DISPLAYING THE FLASHING CAUTION MODE. SIGNS PLACED ON VEHICLES MUST NOT OBSCURE THE ARROW PANEL.

USE AN ATTENUATOR ON THE REARMOST VEHICLE THAT BLOCKS ALL OR PART OF THE TRAFFIC LANE.

1 DISTANCE BETWEEN VEHICLES MAY INCREASE FROM THE ATTENUATOR'S ROLL AHEAD BASED ON TERRAIN, SIGHT DISTANCE, AND OTHER FACTORS. WHENEVER ADEQUATE STOPPING SIGHT DISTANCE EXISTS TO THE REAR, SHADOW VEHICLES SHOULD MAINTAIN THE MINIMUM DISTANCE FROM THE WORK VEHICLE AND PROCEED AT THE SAME SPEED AS THE WORK VEHICLE. SHADOW VEHICLES SHOULD SLOW DOWN IN ADVANCE OF VERTICAL OR HORIZONTAL CURVES THAT RESTRICT SIGHT DISTANCE.

2 ALIGN LEFT SIDE OF SHADOW VEHICLE WITH EDGE OF WORK AREA.

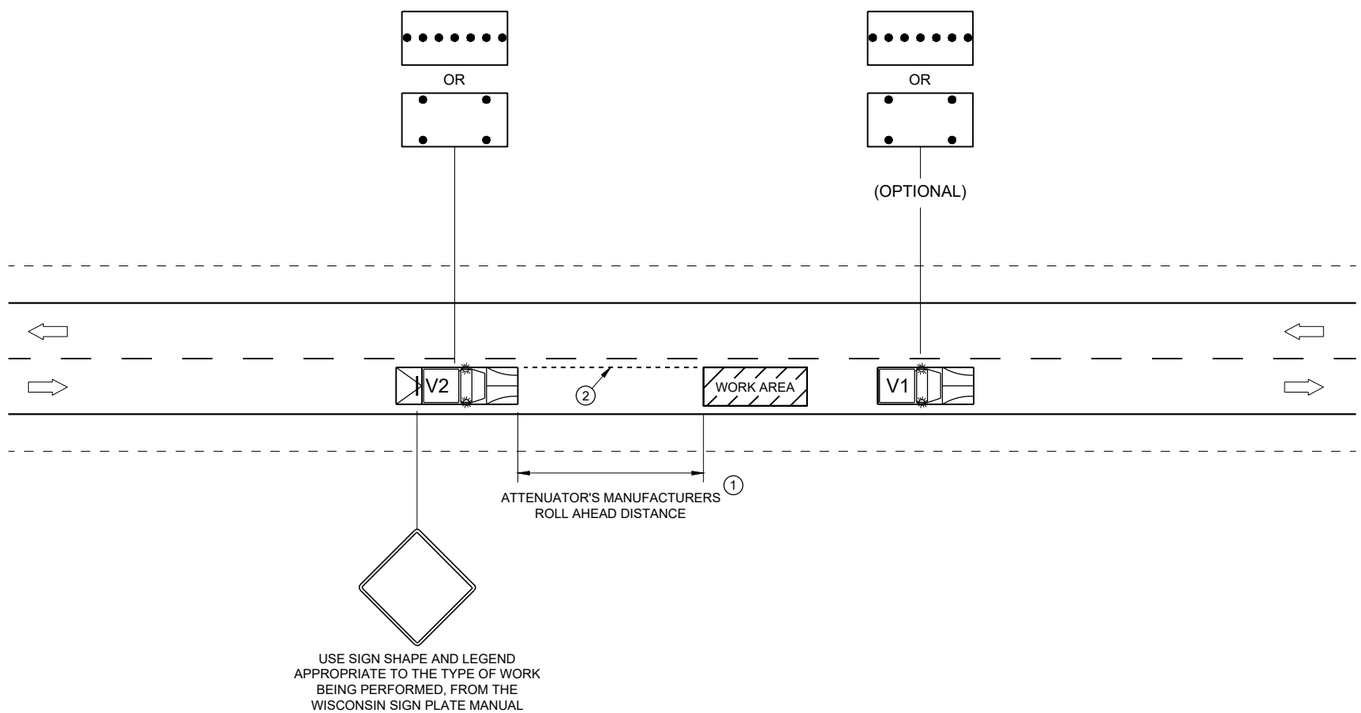

TRAFFIC CONTROL, MOBILE OPERATIONS ON AN UNDIVIDED ROADWAY

STATE OF WISCONSIN
DEPARTMENT OF TRANSPORTATION

APPROVED
February 2021 — DATE
/S/ Andrew Heidtke — STATEWIDE WORK ZONE T SAFETY ENGINEER
FHWA

6
SDD 15D51 - 01

URBAN AREA

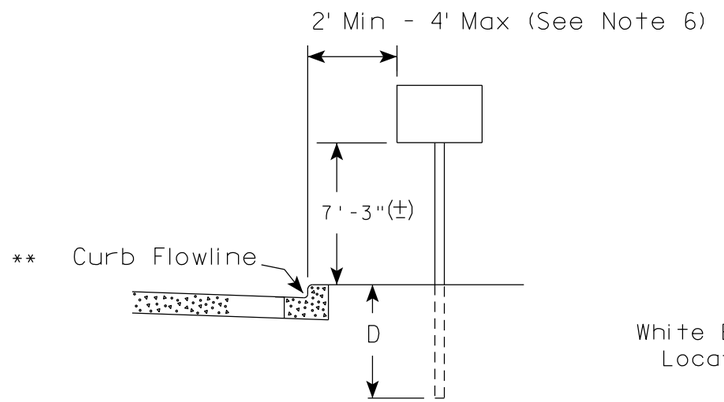

RURAL AREA (See Note 2)

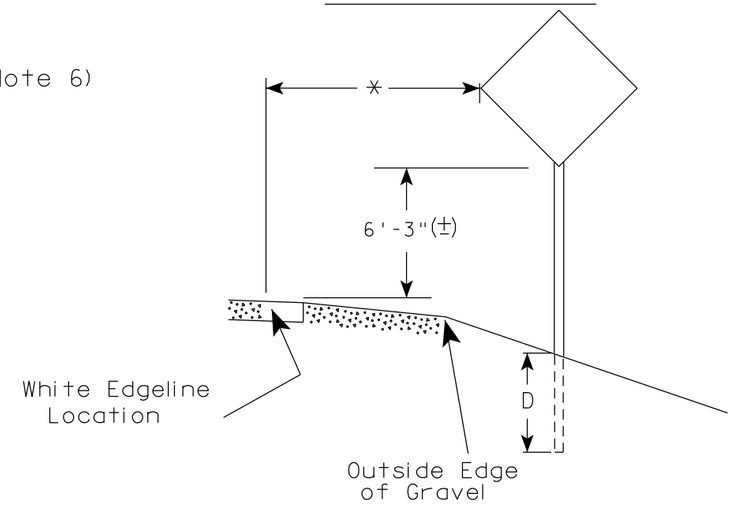

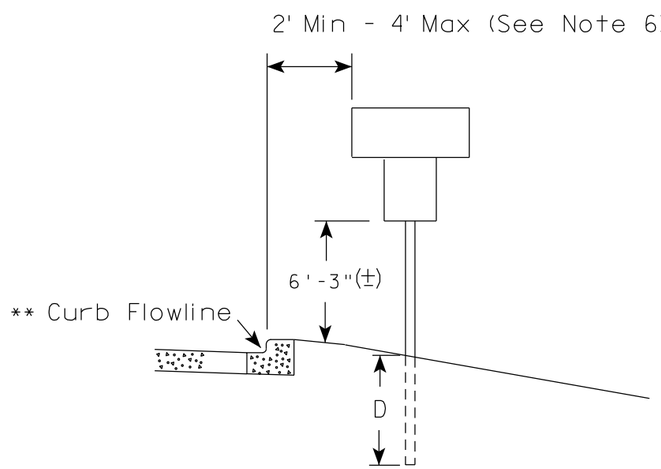

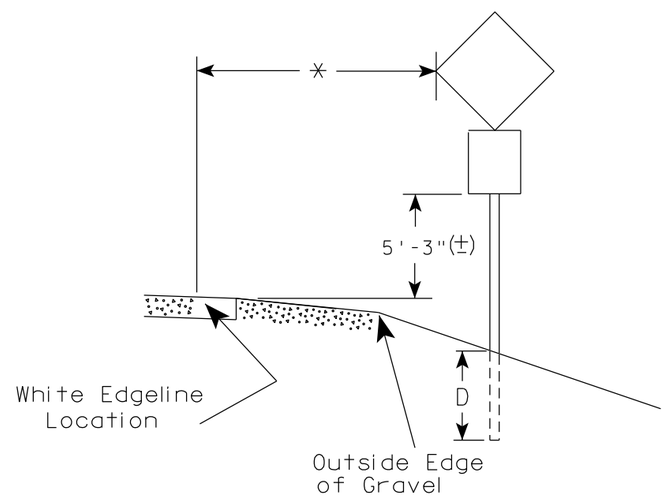

** The existence of curb and gutter does not in itself mandate the vertical clearance illustrated. That height is typically measured where there is sidewalk adjacent to the roadway or parking is permitted. In the absence of sidewalk vertical clearance is measured from the top of the curb. Offset of signs is measured from the flow line.

* 6 feet from edge of a paved shoulder or 12 feet from the edge of pavement (edge line location) or 2 feet from outside edge of gravel, whichever is greater unless directed by project engineer.

GENERAL NOTES

1. Signs wider than 4 feet or 20 sq.ft or larger, shall be mounted on multiple posts. Refer to plate A4-4.
2. If signs are mounted on or behind barrier wall, see A4-10 sign plate.
   The Double Arrow sign (W12-1D) shall be mounted at a height of 2'-3" (±). The Chevron sign (W1-8), Roundabout Chevron panel (R6-4B), Enhanced Reference Markers, Clearance Markers (W5-52), Mile Markers (D10 series), In Road Object Markers (W5-54) & End of Road Markers (W5-56) shall be mounted at a height of 4'-3" (±).
3. For expressways and freeways, mounting height is 7'- 3" (±) or 6'-3" (±) depending upon existence of a sub-sign.
4. Minimum mounting height for signs mounted on traffic signal poles is 5'- 3" (±).
5. Offset distance shall be consistent with existing signs or consistent throughout length of project.
6. The (±) tolerance for mounting height is 3 inches.
7. Folding signs shall be mounted at a height of 5'-3" (±) or as directd by the Engineer.

POST EMBEDMENT DEPTH

Area of Sign Installation (Sq.Ft.)	D (Min)
20 or Less	4'
Greater than 20	5'

TYPICAL INSTALLATION OF PERMANENT TYPE II SIGNS ON SINGLE POSTS

WISCONSIN DEPT OF TRANSPORTATION

APPROVED Matthew R Rauch for State Traffic Engineer

DATE 5/13/2020 PLATE NO. A4-3.22

7 7

PROJECT NO:	HWY:	COUNTY:		SHEET NO: 282	E

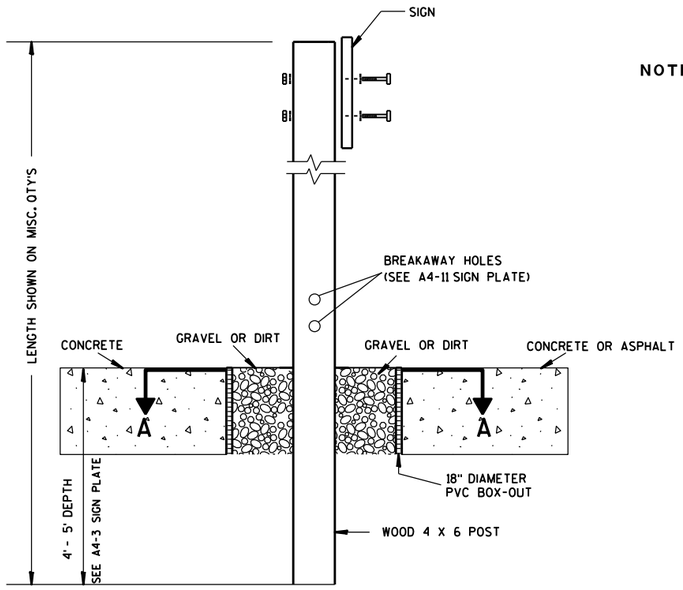

ELEVATION VIEW

DETAIL OF WOOD 4 X 6 SIGN POST IN BOX-OUT

NOTES:
1. ALL MATERIAL TO BE APPROVED BY ENGINEER PRIOR TO INSTALLATION
2. SEE SIGN PLATE A4-8 FOR SIGN HARDWARE REQUIREMENTS
3. 18 INCH X 18 INCH SQUARE BOX-OUTS MAY BE USED FOR INSTALLATIONS IN EXISTING CONCRETE OR ASPHALT LOCATIONS.

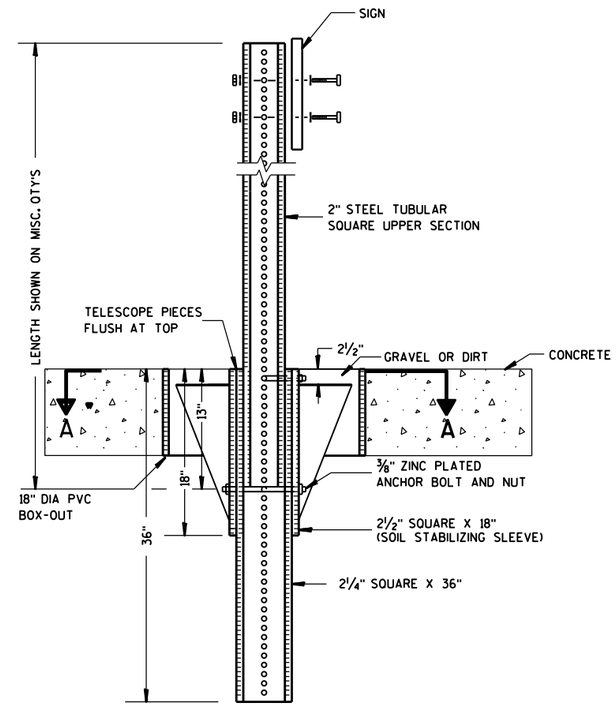

ELEVATION VIEW

DETAIL OF STEEL 2 X 2 SIGN POST IN BOX-OUT

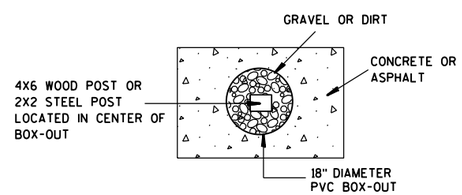

PLAN VIEW

FOR NEW CONCRETE/ASPHALT INSTALLATIONS

SIGN POST
BOX-OUTS
A4-3B

WISCONSIN DEPT OF TRANSPORTATION

APPROVED Matthew R Rauch
for State Traffic Engineer

DATE 1/27/14 PLATE NO. A4-3B.1

PROJECT NO:	HWY:	COUNTY:		SHEET NO:	E

URBAN AREA

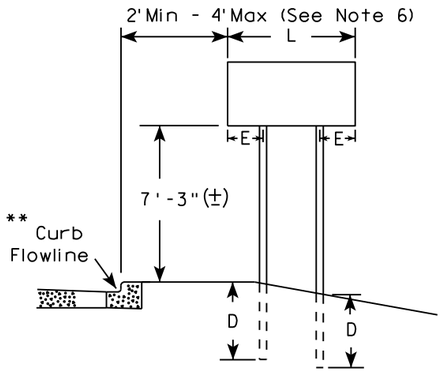

RURAL AREA (See Note 3)

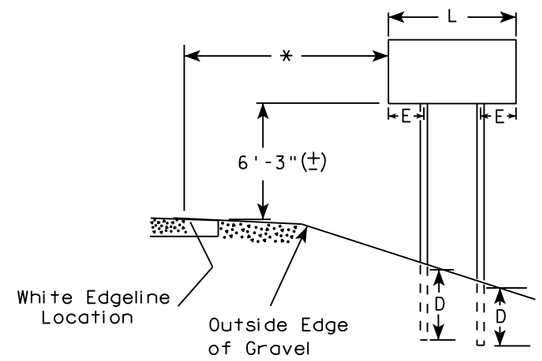

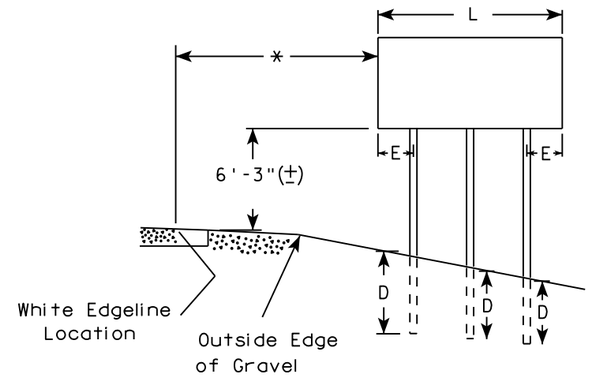

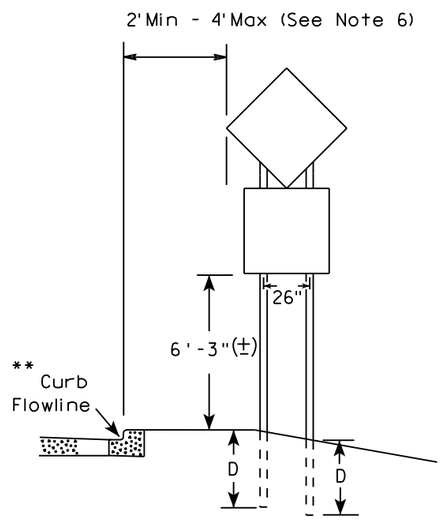

48" DIAMOND WARNING SIGN

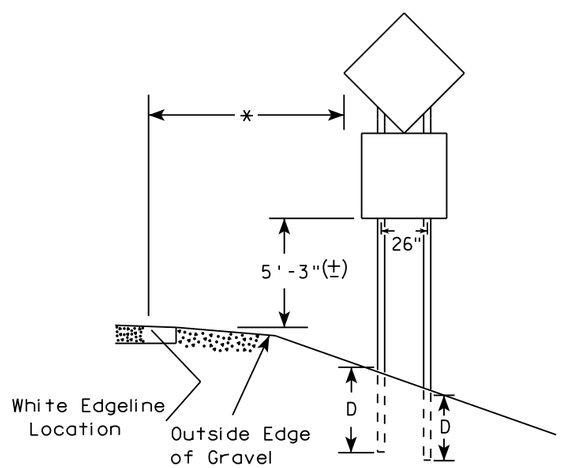

48" DIAMOND WARNING SIGN

SIGN SHAPE OTHER THAN DIAMOND (TWO POSTS REQUIRED)	
L	E
*** Greater than 48" Less than 60"	12"
60" to 108"	L/5

SIGN SHAPE OTHER THAN DIAMOND (THREE POSTS REQUIRED)	
L	E
Greater than 108" to 144"	12"

GENERAL NOTES

1. For 3 or 4 post installations, individual post spacing shall be greater than 3'-6".
2. See tables below for required number of posts.
3. For expressways and freeways, mounting height is 7'-3" (±) or 6'-3" (±) depending upon existence of sub-sign.
4. The (±) tolerance for mounting height is 3 inches.
5. J-Assemblies are considered to be one sign for mounting height.
6. Offset distance shall be consistent with existing signs or consistent throughout length of project.
7. Folding signs shall be mounted at a height of 5'-3" (±) or as directed by the engineer.
8. The Double Arrow sign (W12-1) shall be mounted at a height of 2'-3" (±). The Chevron sign (W1-8), Roundabout Chevron panel (R6-4B), Clearance Markers (W5-52), Mile Markers (D10 series), In Road Object Markers (W5-54) & End of Road Markers (W5-56) shall be mounted at a height of 4"-3" (±).

* 6 feet from edge of a paved shoulder or 12 feet from the edge of pavement (edge line location) or 2 feet from outside edge of gravel, whichever is greater unless directed by project engineer.

** The existence of curb and gutter does not in itself mandate the vertical clearance illustrated. That height is typically measured where there is sidewalk adjacent to the roadway or parking is permitted. In the absence of sidewalk vertical clearance is measured from the top of the curb. Offset of signs is measured from the flow line.

*** See A4-3 sign plate for signs 4' or less in width and less than 20 S.F. in area.

POST EMBEDMENT DEPTH

Area of Sign Installation (Sq. Ft.)	D (Min)
20 or Less	4'
Greater than 20	5'

TYPICAL INSTALLATION OF TYPE II SIGNS ON MULTIPLE POSTS

WISCONSIN DEPT OF TRANSPORTATION

APPROVED Matthew R Rauch
For State Traffic Engineer

DATE 8/21/17 PLATE NO. A4-4.15

7

7

PROJECT NO:	HWY:	COUNTY:		SHEET NO: 284	E

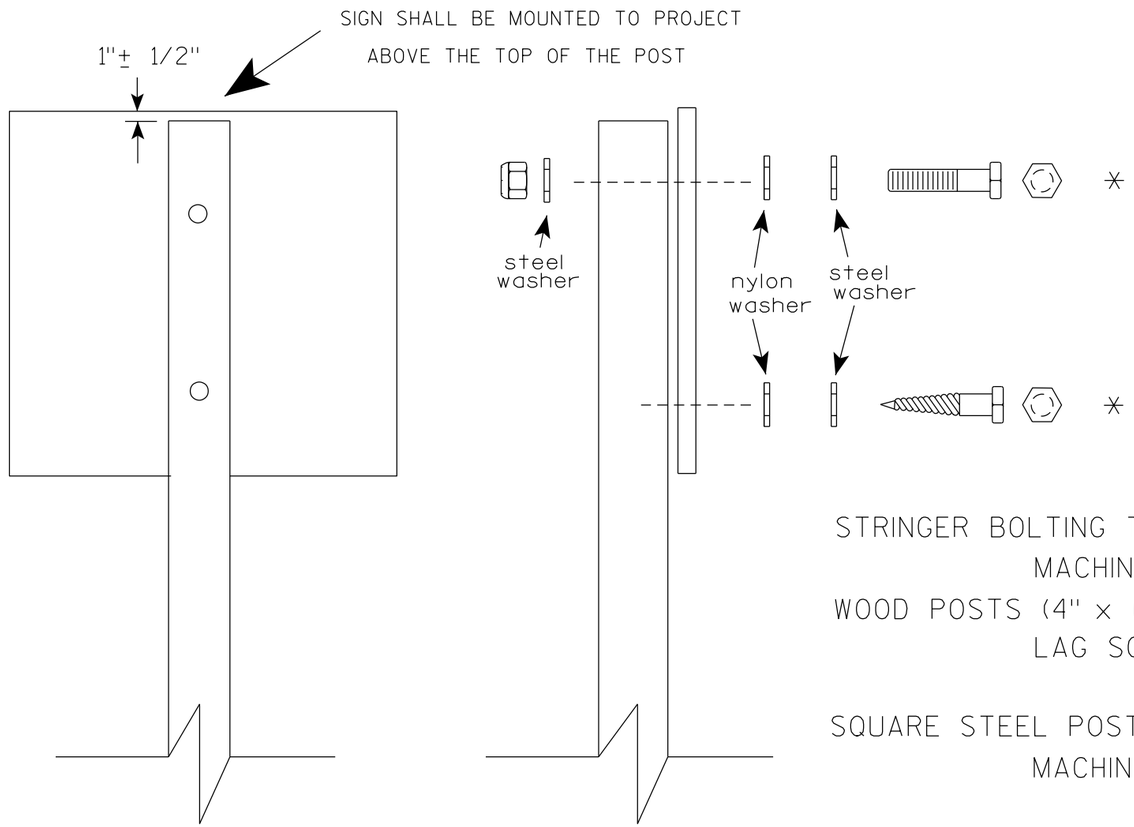

Nuts, bolts and lags used for mounting signs shall have hexagonal heads and shall be either :

a. Hot dip galvanized in accordance with ASTM Designation: A 153, Class D, or SC 3

b. Electro-galvanized in accordance with ASTM Designation : B 633, TYPE III, SC 3.

Threads on bolts and nuts shall be manufactured with sufficient allowance for the cadmium plate or galvanized coating to permit the nuts to run freely on the bolts.

STRINGER BOLTING TO ALUMINUM SIGNS (SEE SIGN PLATE A4-18)

MACHINE BOLTS - 5/16" X 1-3/4" Length w/ lock nuts

WOOD POSTS (4" x 6")

LAG SCREWS - 3/8" X 3" (NO STRINGERS ON BACK OF SIGN)
3/8" X 4" (STRINGERS ON BACK OF SIGN)

SQUARE STEEL POSTS (2" x 2")

MACHINE BOLTS - 3/8" X 3-1/4" Length w/ nuts (NO STRINGER ON BACK OF SIGN)
3/8" X 5" Length w/ nuts (STRINGERS ON BACK OF SIGN)

RIVETS - 9/32 " (6605-9-6) BULB-TITE, TRI-FOLD, ALUMINUM BODY/MANDREL
O.D. FLANGE .720-.765 INCH, GRIP RANGE .042-.375 INCH

WASHERS (ALL POSTS) -

1-1/4" O.D. X 3/8" I.D. X 1/16" STEEL
1-1/4" O.D. X 3/8" I.D. X .080 NYLON

* Two different fastening systems are shown for illustration purposes. On any individual sign, either one or the other system shall be used. Actual number of fasteners per sign varies with the sign area, but normally there are two. For a single post installation, all signs greater than 9 sq. ft. require the use of 3 fasteners.

ATTACHMENT OF SIGNS TO POSTS

WISCONSIN DEPT OF TRANSPORTATION

APPROVED Matthew R Rauch
for State Traffic Engineer

DATE 4/1/2020 PLATE NO. A4-8.9

TELESCOPIC TUBING ANCHORS
TWO PIECE SYSTEM

2 1/4 " SQUARE
12 GAUGE
PERFORATED
GALVANIZED FINISH

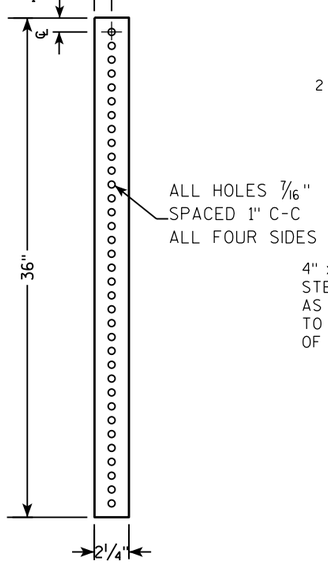

2 1/2 " SQUARE
12 GAUGE
OMNI-DIRECTIONAL
PERFORATED
SOIL STABILIZING SLEEVE
GALVANIZED FINISH

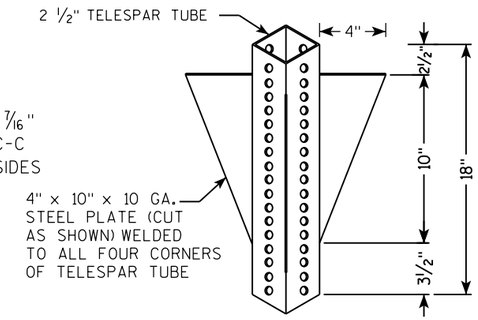

DETAIL OF TUBULAR STEEL SIGN POST
(IN POURED CONCRETE OR ASPHALT)

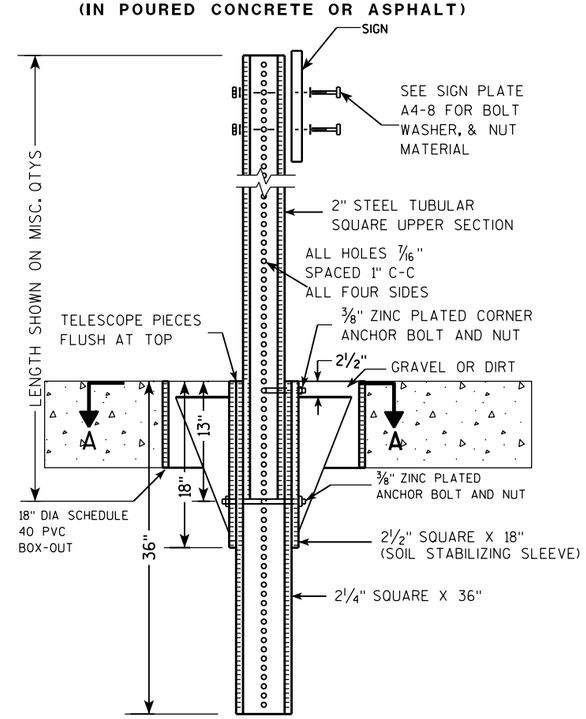

DETAIL OF TUBULAR STEEL SIGN POST
(IN LOCATIONS OTHER THAN POURED CONCRETE OR ASPHALT)

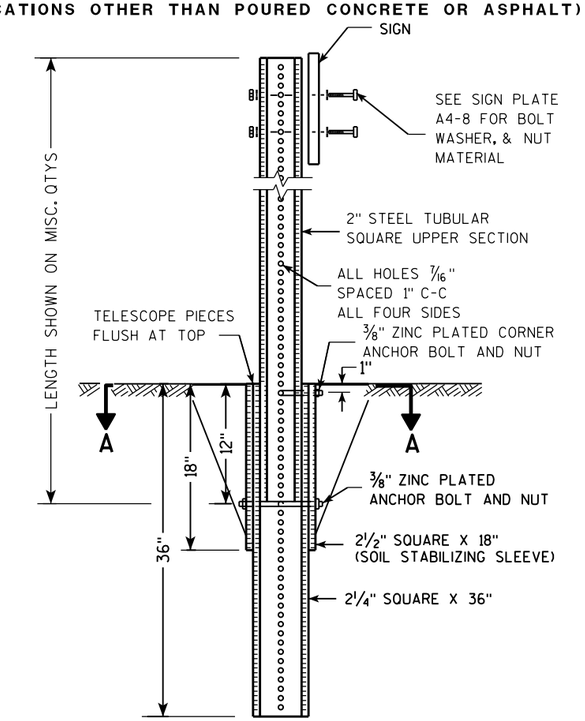

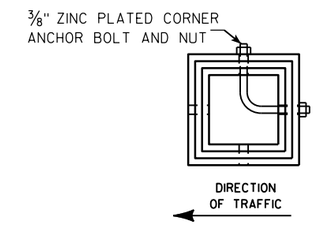

SECTION A-A

Area of Sign Installation (Sq. Ft.)	Number of Required Posts
9 or less	1
Greater than 9 less than or equal to 18	2
Greater than 18 less than or equal to 27	3

Signs wider than 3 feet or larger than 9 sq. ft shall be mounted on multiple posts (see above table).

TUBULAR STEEL
SIGN POST
A4-9

WISCONSIN DEPT OF TRANSPORTATION

APPROVED Matthew R Rauch
for State Traffic Engineer

DATE 2/05/15 PLATE A4-9.9

PROJECT NO:	HWY:	COUNTY:		SHEET NO:	E

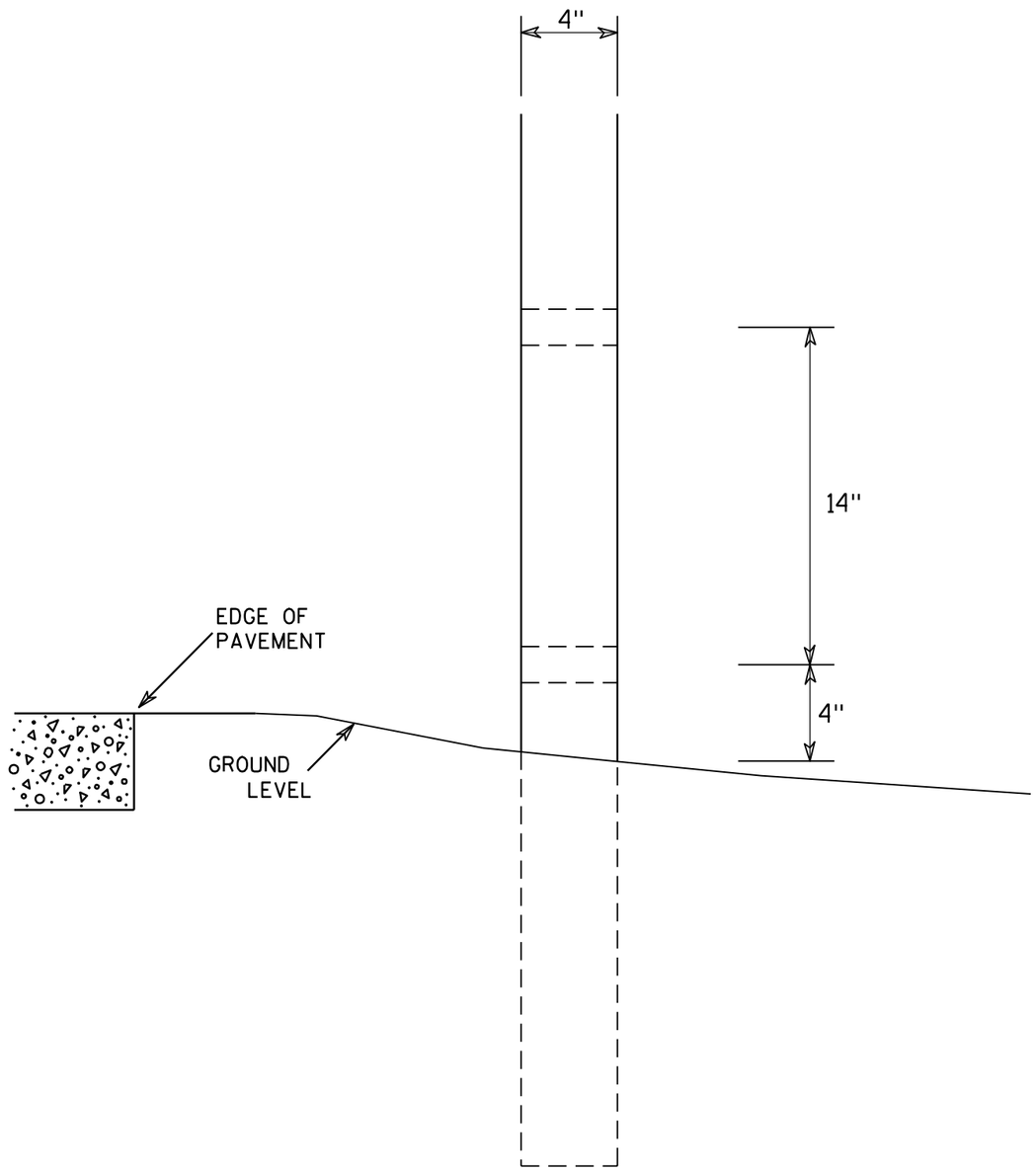

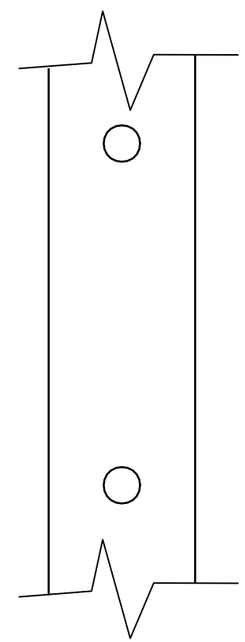

SIDE VIEW

GENERAL NOTES

1. All 4 x 6 Wood Posts shall be modified by having two 1½" diameter holes drilled perpendicular to the roadway centerline.

4 X 6 WOOD POST MODIFICATIONS

WISCONSIN DEPT OF TRANSPORTATION

APPROVED Chester J Spang for State Traffic Engineer

DATE 3/27/97 PLATE NO. A4-11.2

PROJECT NO:	HWY:	COUNTY:		SHEET NO: 287	E

SIGN LAYOUT WITH VARIOUS SIZED MESSAGES

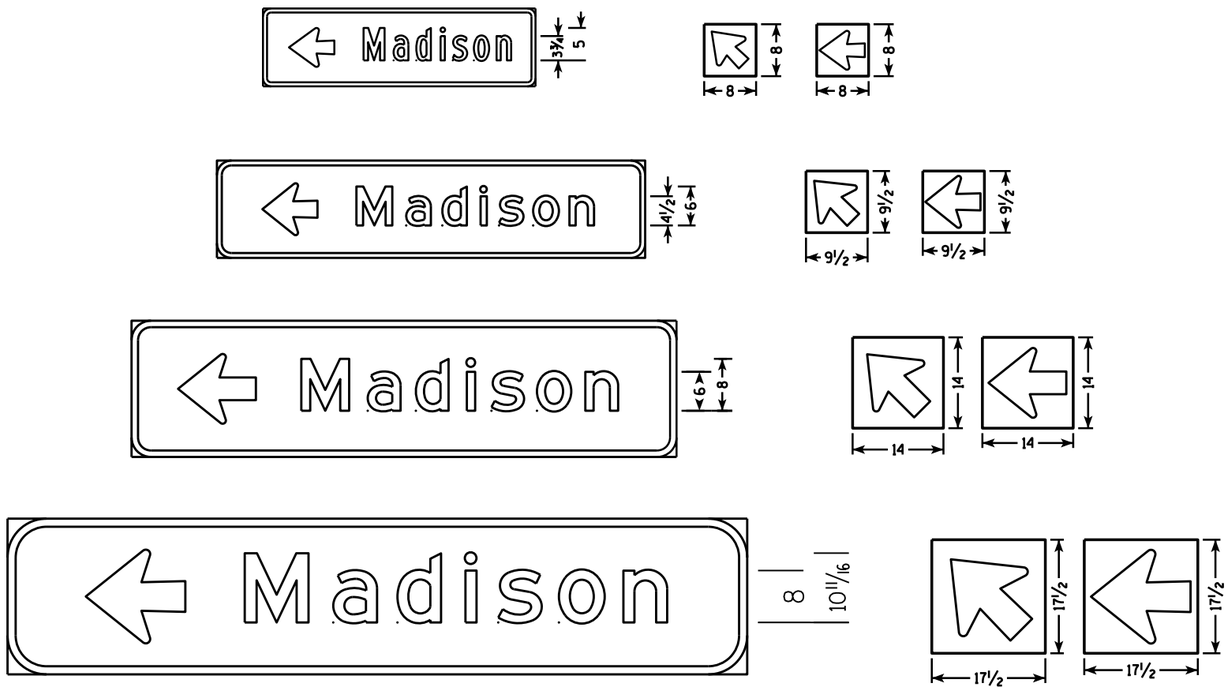

GENERAL NOTES

1. Materials shall conform to Standard Specification Section 637.
   Base - Sheet Aluminum 0.040" Thickness
   Sheeting - Orange Type F Reflective
   Arrow - Black Non-Reflective
2. Arrow signs shall be fastened to permanent sign by either aluminum rivets or aluminum self-tapping sheet metal screws. There shall be a minmum of 2 fasteners used per arrow sign.
3. There shall be a spacer consisting of a 0.08" nylon washer between the back of the arrow sign and the face of the permanent sign.
4. Arrows are per standard plate A1-2
5. Use separate arrow sign for each destination
6. Tilt arrow is always at 45 degrees
7. Arrow is centered on arrow sign

Lower Case Copy Size	Standard Width (Single Arrow)	2 Line Tilt Arrow Cover Width	3 Line Tilt Arrow Cover Width	Height
3¾" Series C	8	9 ½	14 ½	8
4½" Series D & E	9 ½	10	15	9 ½
6" Series D & E	14	16	20 ½	14
8" Series E	17 ½	20 ½	25	17 ½

BEFORE

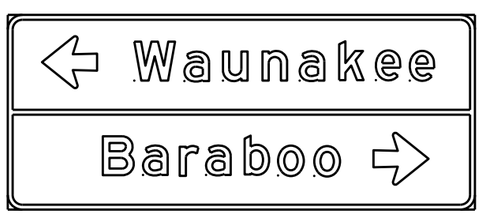

AFTER

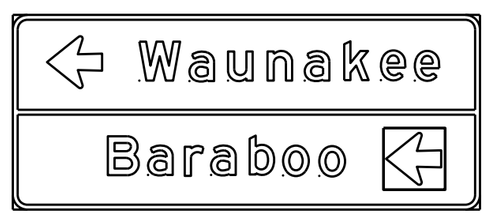

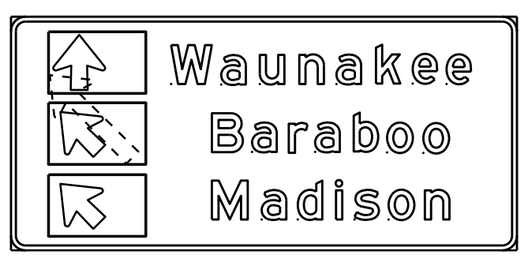

DESTINATION DIRECTIONAL ARROW FOR DETOUR SIGNS

WISCONSIN DEPT OF TRANSPORTATION

APPROVED Matthew R Rauch
for State Traffic Engineer

DATE 10/08/14

A4-12.2

PROJECT NO:

SHEET NO: E

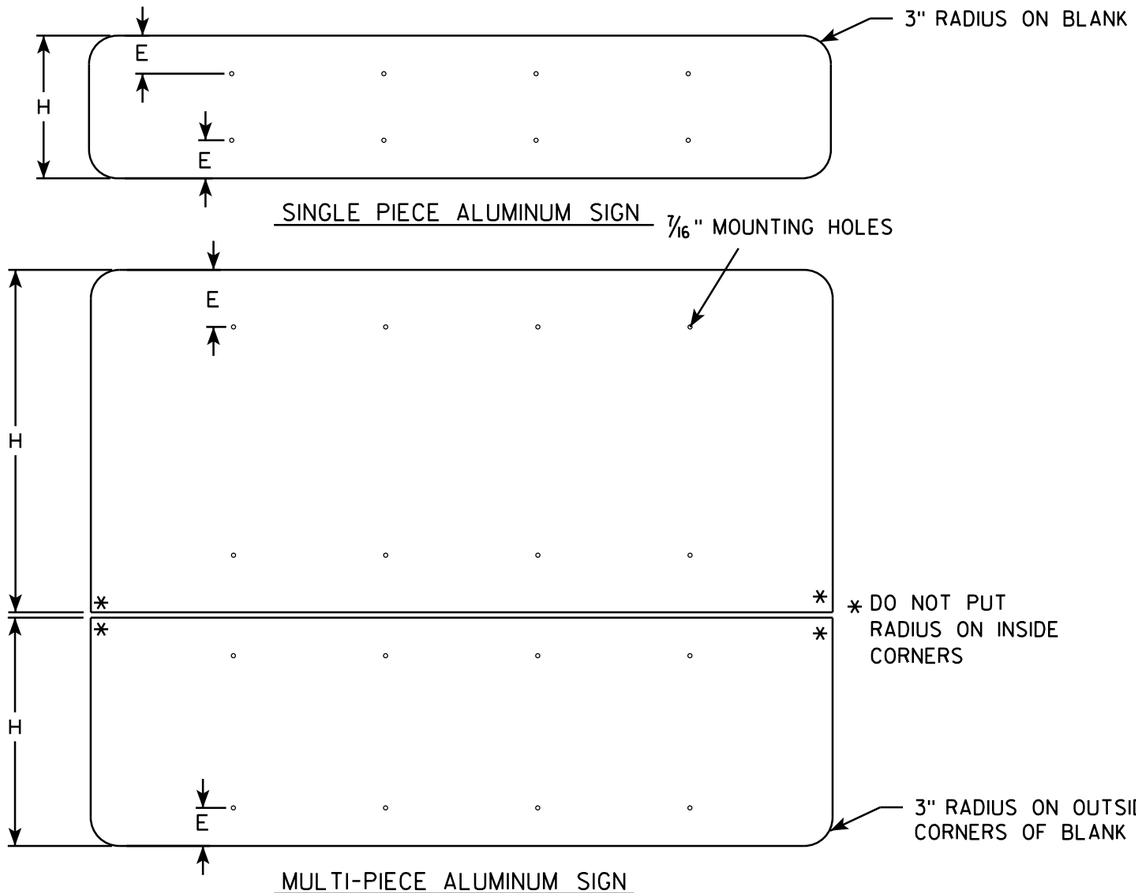

GENERAL NOTES

- ALL SIGNS OVER 60" IN WIDTH SHALL HAVE A 3" RADIUS ON THE OUTSIDE CORNERS OF THE ALUMINUM BLANK.
- MOUNTING HOLES SHALL BE 7/16" DIAMETER.
- SEE CHART FOR HOLE SPACING REQUIREMENTS
- FOR SIGN PANELS WITH DIMENSION (H) 36" AND OVER, DIMENSION E SHALL BE 6"
- FOR SIGN PANELS WITH DIMENSION (H) UNDER 36", DIMENSION E SHALL BE 4"
- SIGN STRINGER MATERIAL SHALL CONSIST OF STEEL CHANNEL POST SECTIONS, WEIGHING 1.12 LBS/FT IN ACCORDANCE WITH SECTION 633.2.1 OF THE STANDARD SPECIFICATIONS FOR HIGHWAY AND STRUCTURE CONSTRUCTION.
- SEE SIGN PLATE A4-8 FOR SIGN STRINGER BOLTING REQUIREMENTS.

SIGN WIDTH	STRINGER WIDTH	POSTS	HOLE SPACING	MOUNTING HOLES						
78"	72"	2	16"	15"	31"	47"	63"			
84"	72"	2	17"	16 1/2"	33 1/2"	50 1/2"	67 1/2"			
90"	72"	2	18"	18"	36"	54"	72"			
96"	90"	2	19"	19 1/2"	38 1/2"	57 1/2"	76 1/2"			
102"	90"	2	20"	21"	41"	61"	81"			
108"	90"	2	21"	22 1/2"	43 1/2"	64 1/2"	85 1/2"			
114"	108"	3	15"	12"	27"	42"	57"	72"	87"	102"
120"	108"	3	16"	12"	28"	44"	60"	76"	92"	108"
126"	108"	3	17"	12"	29"	46"	63"	80"	97"	114"
132"	126"	3	18"	12"	30"	48"	66"	84"	102"	120"
138"	126"	3	19"	12"	31"	50"	69"	88"	107"	126"
144"	126"	3	20"	12"	32"	52"	72"	92"	112"	132"

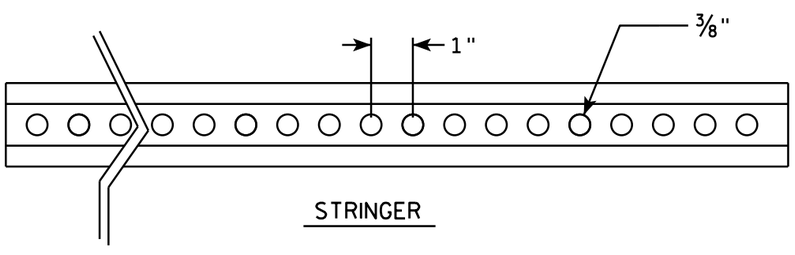

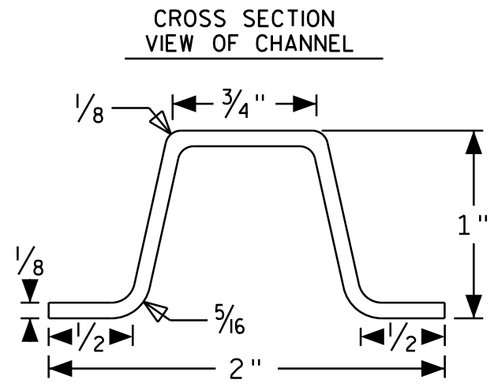

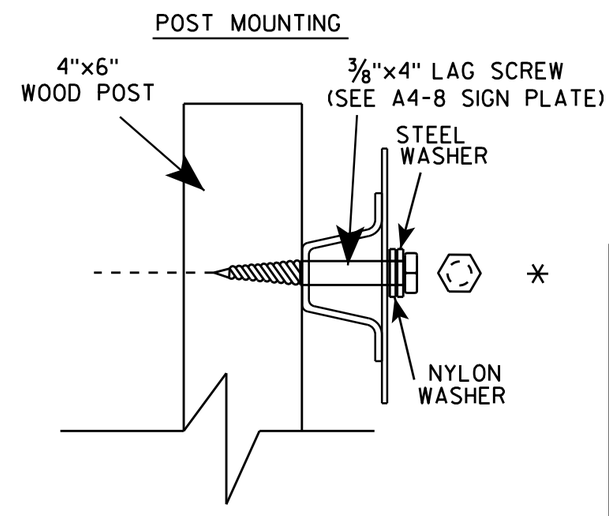

SIGN STRINGER MOUNTING REQUIREMENTS

WISCONSIN DEPT OF TRANSPORTATION

APPROVED Matthew R Rauch
for State Traffic Engineer

DATE 4/26/16 PLATE NO A4-18.1

PROJECT NO:	HWY:	COUNTY:		SHEET NO:	E

BANDING

SINGLE SIGN

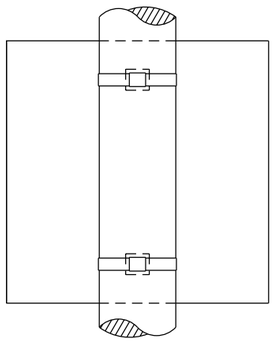

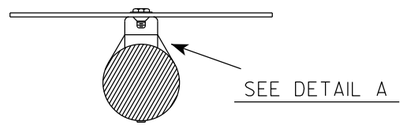

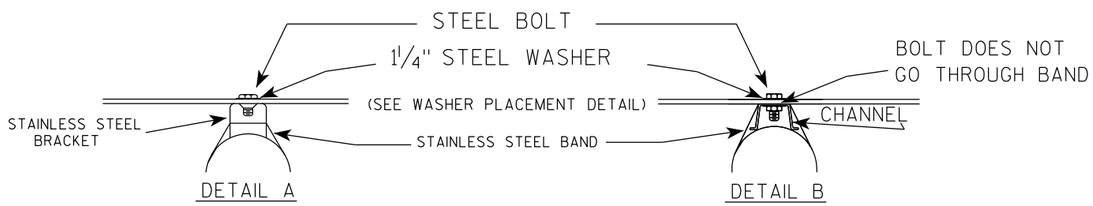

WASHER PLACEMENT

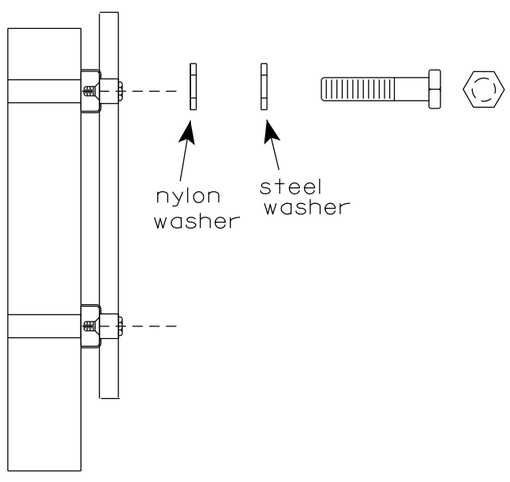

WASHERS (ALL POSTS) -
1-1/4" O.D. X 3/8" I.D. X 1/16" STEEL
1-1/4" O.D. X 3/8" I.D. X .080 NYLON
FOR ALL TYPE H SIGNS

GENERAL NOTES

1. Any sign over 3 feet in width shall use the V-Block banding method. See A5-10 standard plate.
2. Signs 3 feet or greater in height shall have three bracket bands installed. Signs less than 3 feet in height shall have two bracket bands installed.
3. Banding and assembly bracket shall be stainless steel. All bands shall be ¾" in width and 0.025" thickness.
4. ALL SIGN MOUNTING BOLTS AND WASHERS SHALL BE EITHER:
   a. Hot dip or mechanically galvanized in accordance with ASTM Designation: A 153, Class D
   b. Electro-galvanized in accordance with ASTM designation: B 633, Type III, SC 3

"J" ASSEMBLY

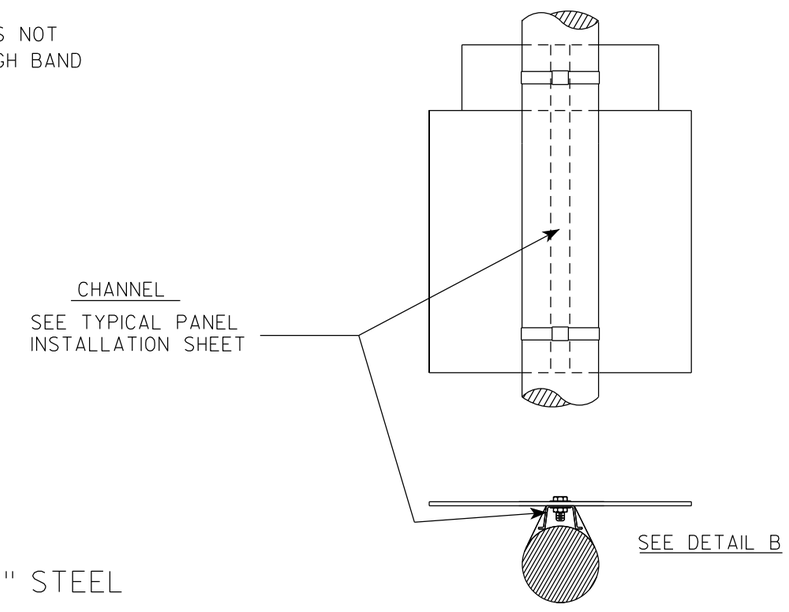

STANDARD SIGN
SIGN BANDING DETAILS

WISCONSIN DEPT OF TRANSPORTATION

APPROVED Matthew R Rauch for State Traffic Engineer

DATE 6/10/19 PLATE NO. A5-9.4

PROJECT NO:	HWY:	COUNTY:		SHEET NO: 290	E

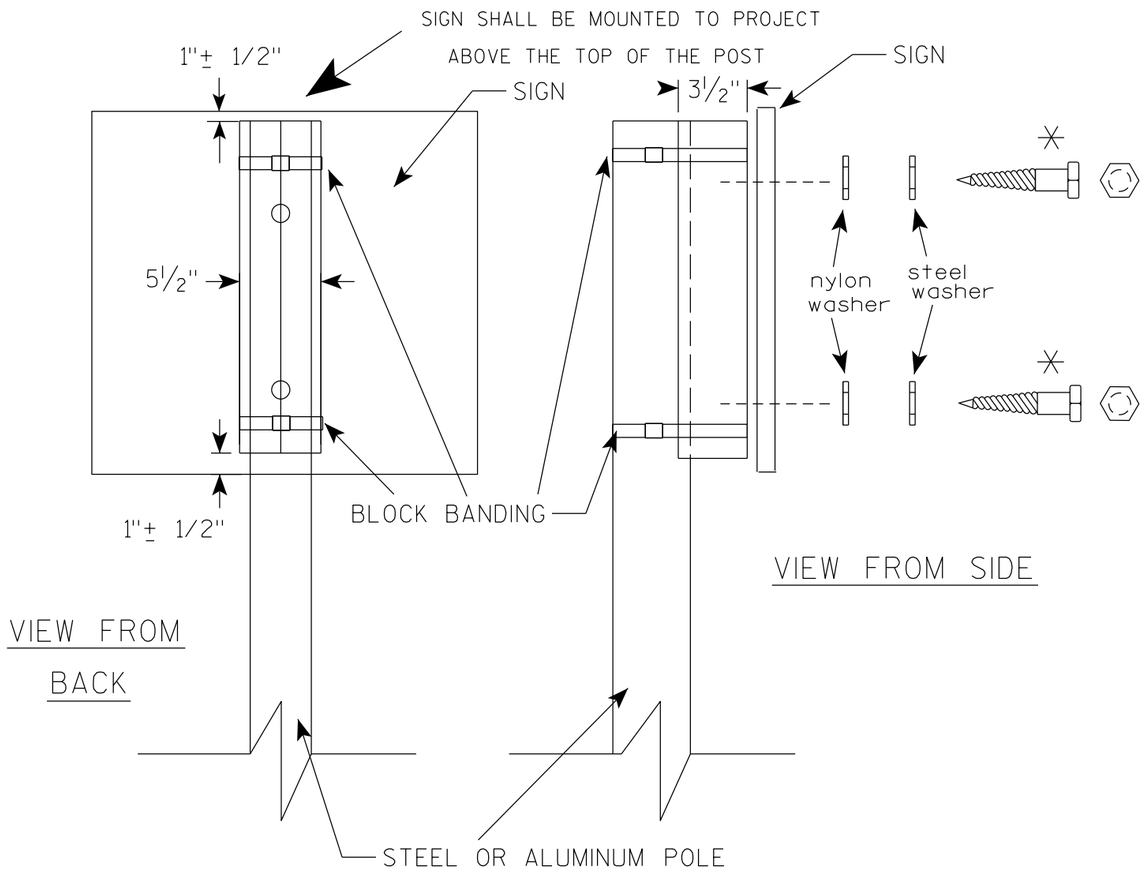

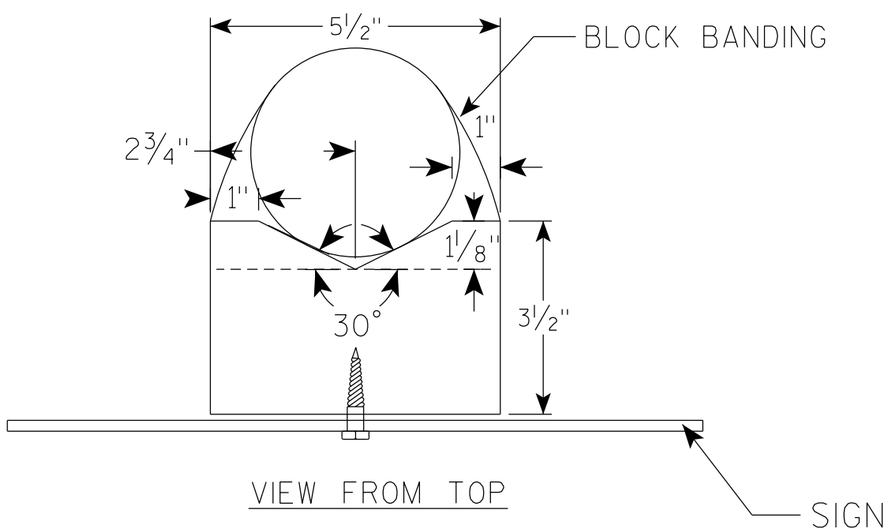

GENERAL NOTES

1. WOOD 4"X6" POST MATERIAL SHALL CONFORM TO 507.2.2 OF THE WisDOT STANDARD SPECIFICATIONS
2. BLOCK BANDING AND CLIPS SHALL BE STAINLESS STEEL, 3/4" WIDTH AND 0.025" THICKNESS
3. SIGNS 3' OR GREATER IN HEIGHT SHALL UTILIZE 3 BLOCK BANDS. SIGNS UNDER 3' IN HEIGHT SHALL UTILIZE 2 BLOCK BANDS
4. ACTUAL NUMBER OF FASTENERS PER SIGN VARIES WITH THE SIGN AREA, BUT NORNALLY THERE ARE TWO. FOR SIGNS GREATER THAN 9 S.F. 3 FASTENERS SHALL BE USED.
5. ALL SIGN MOUNTING BOLTS AND WASHERS SHALL BE EITHER:
   a. Hot dip or mechanically galvanized in accordance with ASTM Designation: A 153, Class D
   b. Electro-galvanized in accordance with ASTM Designation : B 633, TYPE III, SC 3
6. ALL BOLTS SHALL HAVE HEXAGONAL HEADS.
7. STEEL WASHERS SHALL BE 1 1/4" O.D. X 3/8" I.D. X 1/16"
8. NYLON WASHERS SHALL BE 1 1/4" O.D. X 3/8" I.D. X .080 FOR TYPE H OR TYPE F FACE SIGN

✳ LAG BOLTS SHALL BE 3/8" X 2 1/2"

7

7

BLOCK BANDING DETAIL
(V-BLOCK OPTION)

WISCONSIN DEPT OF TRANSPORTATION

APPROVED Matthew R Rauch
for State Traffic Engineer

DATE 4/19/2022 PLATE NO. A5-10.3

PROJECT NO:				SHEET NO: 291	E

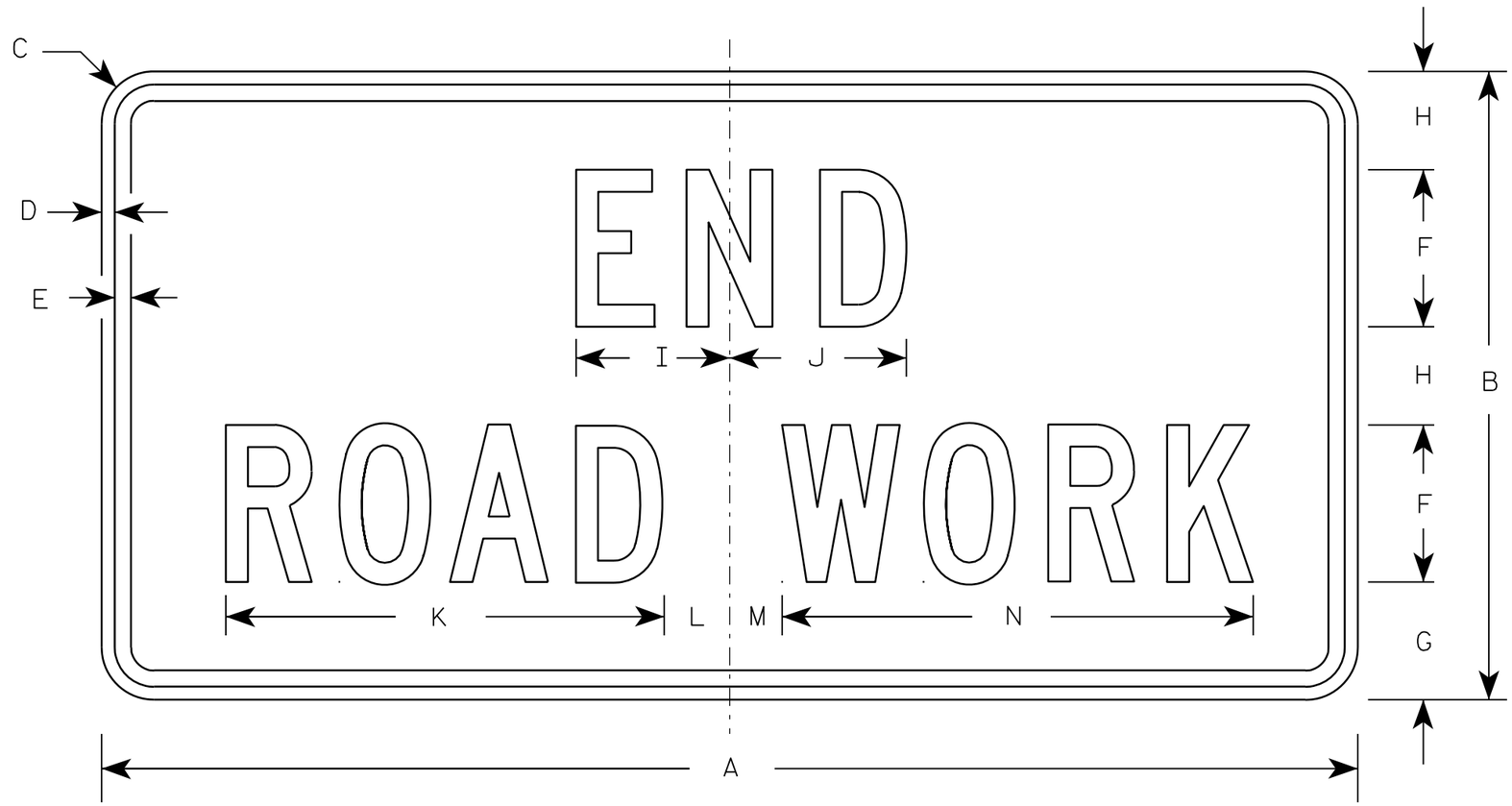

G20-2A

NOTES

1. Sign is Type II - Type F Reflective - reference WIS DOT Standard Specification for HIGHWAY and STRUCTURE CONSTRUCTION latest edition.
2. Color:
   Background - Orange
   Message - Black
3. Message Series - C
4. Corners may be square or rounded when base material is plywood but borders shall be rounded as shown. When base material is metal, the corners and borders shall be rounded.

Metric equivalent for this sign is:

SIZE	
1	900 mm X 450 mm
2	1200 mm X 600 mm
3	1200 mm X 600 mm
4	1200 mm X 600 mm
5	1200 mm X 600 mm

SIZE	A	B	C	D	E	F	G	H	I	J	K	L	M	N	O	P	Q	R	S	T	U	V	W	X	Y	Z	Area sq. ft.	Area m2
1	36	18	1 1/8	3/8	1/2	4	3 3/4	2 1/2	4 1/8	4 1/8	11 1/8	2	1	12 1/8													4.5	0.41
2	48	24	1 1/2	1/2	5/8	6	4 1/2	3 3/4	5 7/8	6 3/4	16 3/4	2 1/2	1 3/4	18 1/2													8.0	0.72
3	48	24	1 1/2	1/2	5/8	6	4 1/2	3 3/4	5 7/8	6 3/4	16 3/4	2 1/2	1 3/4	18 1/2													8.0	0.72
4	48	24	1 1/2	1/2	5/8	6	4 1/2	3 3/4	5 7/8	6 3/4	16 3/4	2 1/2	1 3/4	18 1/2													8.0	0.72
5	48	24	1 1/2	1/2	5/8	6	4 1/2	3 3/4	5 7/8	6 3/4	16 3/4	2 1/2	1 3/4	18 1/2													8.0	0.72

STANDARD SIGN

G20-2A

WISCONSIN DEPT OF TRANSPORTATION

APPROVED Matthew R Rauch
for State Traffic Engineer

DATE 9/30/09 PLATE NO. G20-2A.8

PROJECT NO:	HWY:	COUNTY:		SHEET NO: 292	E

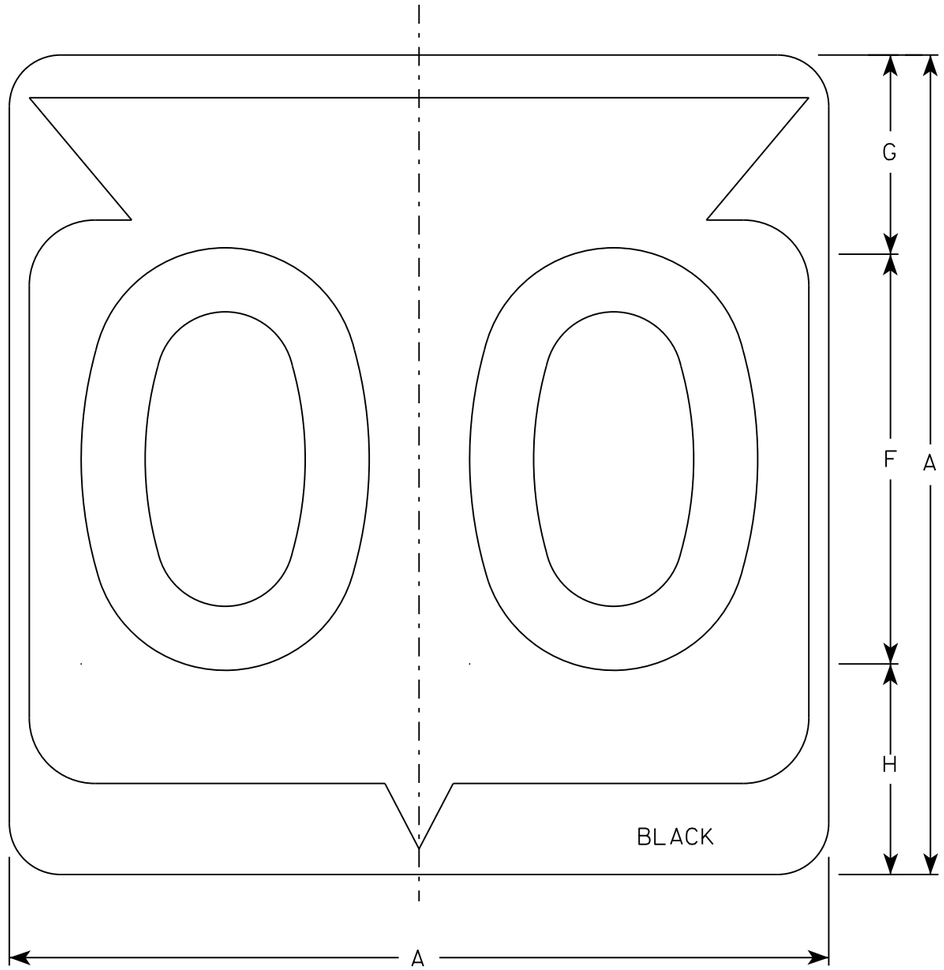

M1-6

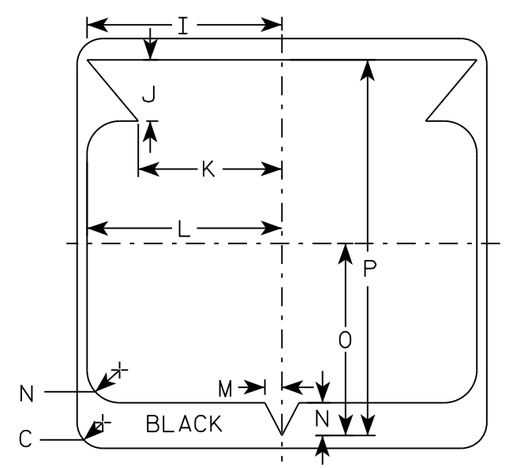

NOTES

1. Sign is Type II - Type H Reflective
2. Color:
   Background - White
   Message - Black
3. Message Series - D except 3 number signs Series C
4. Corners may be square or rounded when base material is plywood but borders shall be rounded as shown. When base material is metal, the corners and borders shall be rounded.

SIZE	A	B	C	D	E	F	G	H	I	J	K	L	M	N	O	P	Q	R	S	T	U	V	W	X	Y	Z	Area sq. ft.
1																											
2	24		1 1/2			12	5 1/2	6 1/2	10 1/4	2 1/2	8 7/8	11 1/2	1	1 7/8	11 1/4	21 7/8											4.0
3	36		2 1/4			18	8 3/4	9 1/4	15 3/8	5 3/8	12 5/8	17 1/8	1 1/2	2 7/8	16 7/8	33											9.0
4	36		2 1/4			18	8 3/4	9 1/4	15 3/8	5 3/8	12 5/8	17 1/8	1 1/2	2 7/8	16 7/8	33											9.0
5	36		2 1/4			18	8 3/4	9 1/4	15 3/8	5 3/8	12 5/8	17 1/8	1 1/2	2 7/8	16 7/8	33											9.0

STATE ROUTE MARKER
M1-6 FOR ASSEMBLIES

WISCONSIN DEPT OF TRANSPORTATION

APPROVED Matthew R Rauch
for State Traffic Engineer

DATE 3/16/18 PLATE NO. M1-6.10

PROJECT NO: | HWY: | COUNTY: | SHEET NO: 293 | E

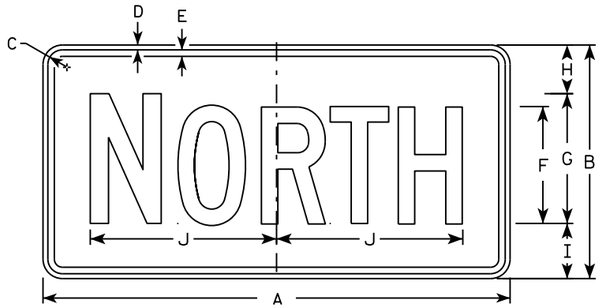

M3-1
MM3-1
MP3-1

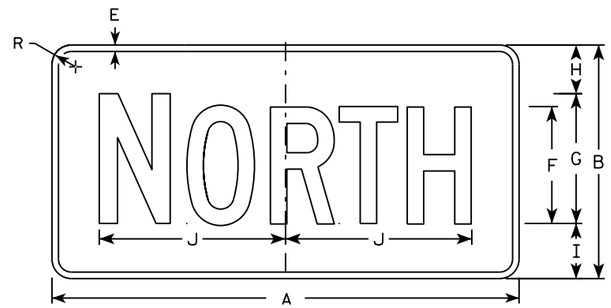

MB3-1
MK3-1
MN3-1

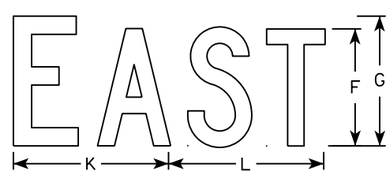

M3-2
MM3-2
MP3-2

MB3-2
MK3-2
MN3-2

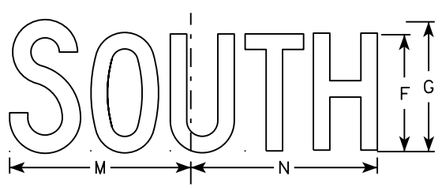

M3-3
MM3-3
MP3-3

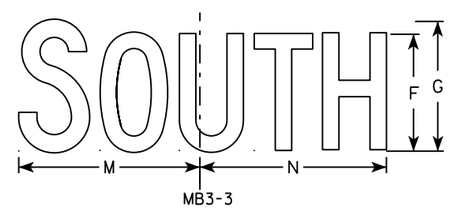

MB3-3
MK3-3
MN3-3

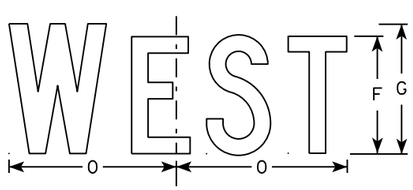

M3-4
MM3-4
MP3-4

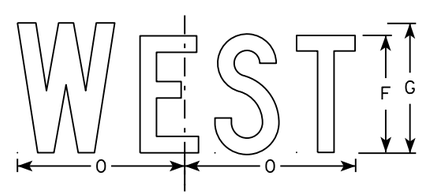

MB3-4
MK3-4
MN3-4

NOTES

1. All Signs Type II - Type H
2. Color:
   Background - See note 5
   Message - See note 5
3. Message Series - C
4. Corners may be square or rounded when base material is plywood but borders shall be rounded as shown. When base material is metal, the corners and borders shall be rounded.
5. M3-1 thru M3-4 Background - White
   Message - Black
   MB3-1 thru MB3-4 Background - Blue
   Message - White
   MK3-1 thru MK3-4 Background - Green
   Message - White
   MM3-1 thru MM3-4 Background - White
   Message - Green
   MN3-1 thru MN3-4 Background - Brown
   Message - White
   MP3-1 thru MP3-4 Background - White
   Message - Blue
6. Note the first letter of each direction is larger than the remainder of the message.

SIZE	A	B	C	D	E	F	G	H	I	J	K	L	M	N	O	P	Q	R	S	T	U	V	W	X	Y	Z	Area sq. ft.
1																											
2	24	12	1 1/8	3/8	3/8	6	7	2 1/4	2 3/4	10 1/4	7 7/8	8 3/8	10 1/4	9 3/4	8 3/4			1 1/2									2.00
3	36	18	1 1/8	3/8	1/2	9	10	3 3/4	4 1/4	14 3/8	12	12 1/8	14	14 1/8	13			1 1/2									4.5
4	36	18	1 1/8	3/8	1/2	9	10	3 3/4	4 1/4	14 3/8	12	12 1/8	14	14 1/8	13			1 1/2									4.5
5	36	18	1 1/8	3/8	1/2	9	10	3 3/4	4 1/4	14 3/8	12	12 1/8	14	14 1/8	13			1 1/2									4.5

STANDARD SIGNS
M3-1 thur M3-4
SERIES

WISCONSIN DEPT OF TRANSPORTATION

APPROVED Matthew R Rauch
for State Traffic Engineer

DATE 10/15/15 PLATE NO M3-1.14

PROJECT NO: | HWY: | COUNTY: | SHEET NO: | E

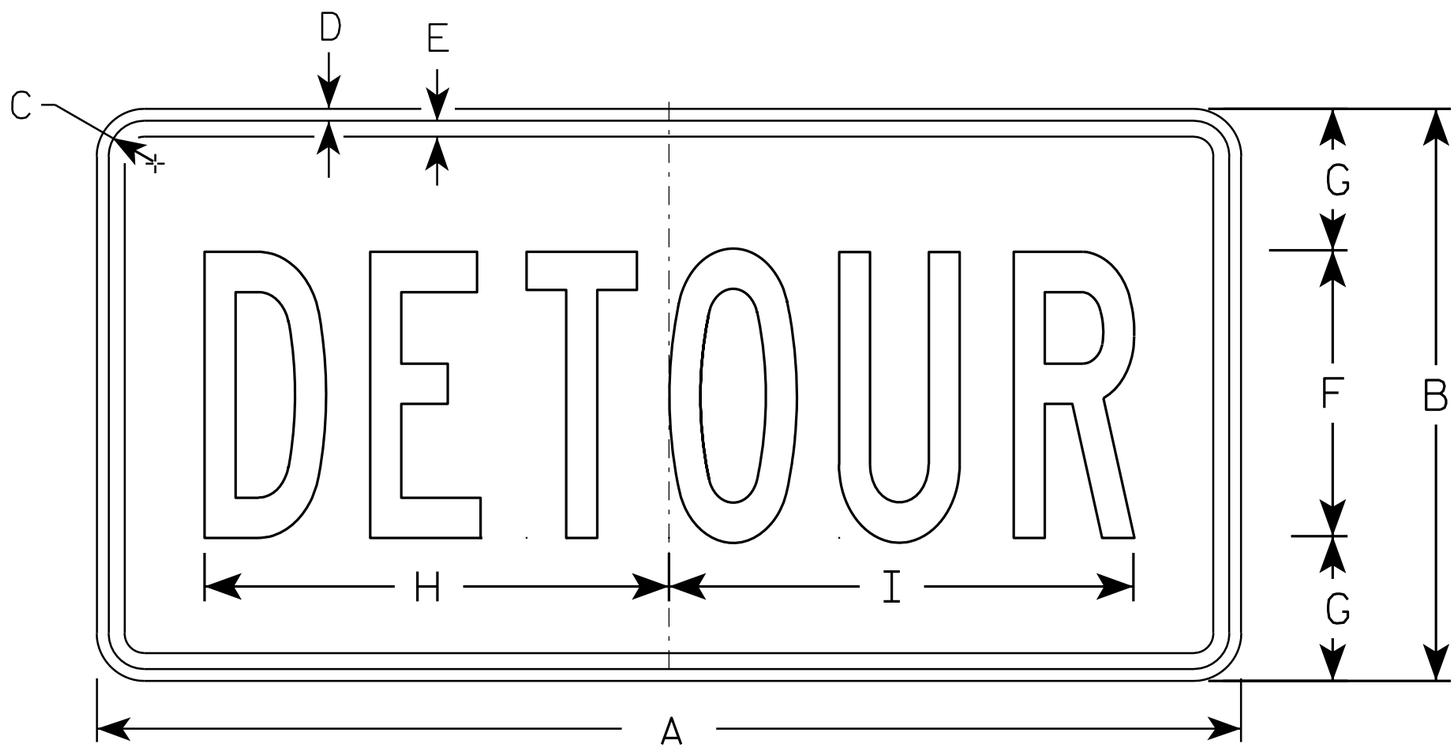

M4-8

NOTES

1. Sign is Type II - Type F Reflective - reference WIS DOT Standard Specification for HIGHWAY and STRUCTURE CONSTRUCTION latest edition.
2. Color:
   Background - Orange
   Message - Black
3. Message Series - B
4. Corners may be square or rounded when base material is plywood but borders shall be rounded as shown. When base material is metal, the corners and borders shall be rounded.

SIZE	A	B	C	D	E	F	G	H	I	J	K	L	M	N	O	P	Q	R	S	T	U	V	W	X	Y	Z	Area sq. ft.
1																											
2	24	12	1 1/8	3/8	3/8	6	3	10	10 1/4																		2.0
3	36	18	1 1/8	3/8	1/2	9	4 1/2	14 5/8	14 1/2																		4.5
4																											
5																											

STANDARD SIGN
M4-8

WISCONSIN DEPT OF TRANSPORTATION

APPROVED Matthew R Rauch
for State Traffic Engineer

DATE 11/10/10 PLATE NO. M4-8.2

PROJECT NO: | HWY: | COUNTY: | SHEET NO: 295 | E

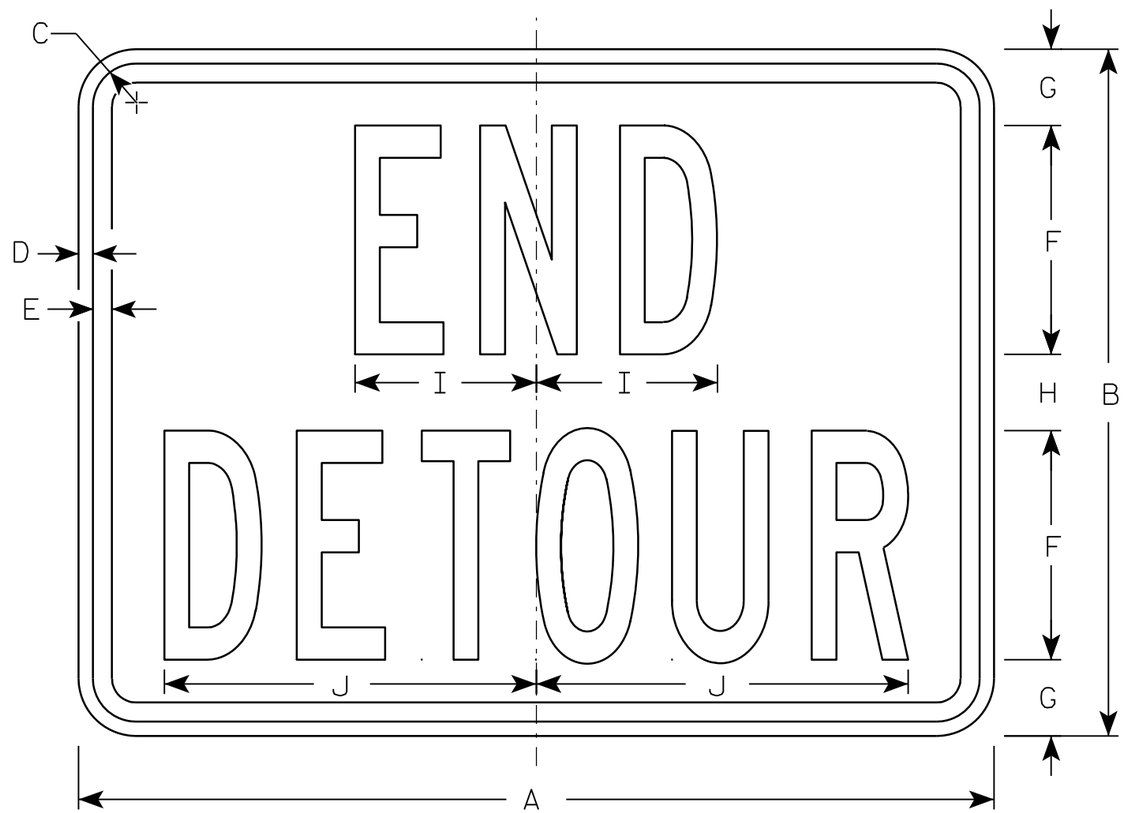

M4-8A

NOTES

1. Sign is Type II - Type F Reflective - reference WIS DOT Standard Specification for HIGHWAY and STRUCTURE CONSTRUCTION latest edition.
2. Color:
   Background - Orange
   Message - Black
3. Message Series - B
4. Corners may be square or rounded when base material is plywood but borders shall be rounded as shown. When base material is metal, the corners and borders shall be rounded.

SIZE	A	B	C	D	E	F	G	H	I	J	K	L	M	N	O	P	Q	R	S	T	U	V	W	X	Y	Z	Area sq. ft.
1																											
2	24	18	1 1/8	3/8	1/2	6	2	2	4 3/4	9 3/4																	3.0
3	30	24	1 1/8	3/8	1/2	8	2 1/2	3	6 3/4	13																	5.0
4																											
5																											

STANDARD SIGN
M4-8A

WISCONSIN DEPT OF TRANSPORTATION

APPROVED Matthew R Rauch
for State Traffic Engineer

DATE 3/9/11 PLATE NO. M4-8A.2

PROJECT NO: | HWY: | COUNTY: | SHEET NO: 296 | E

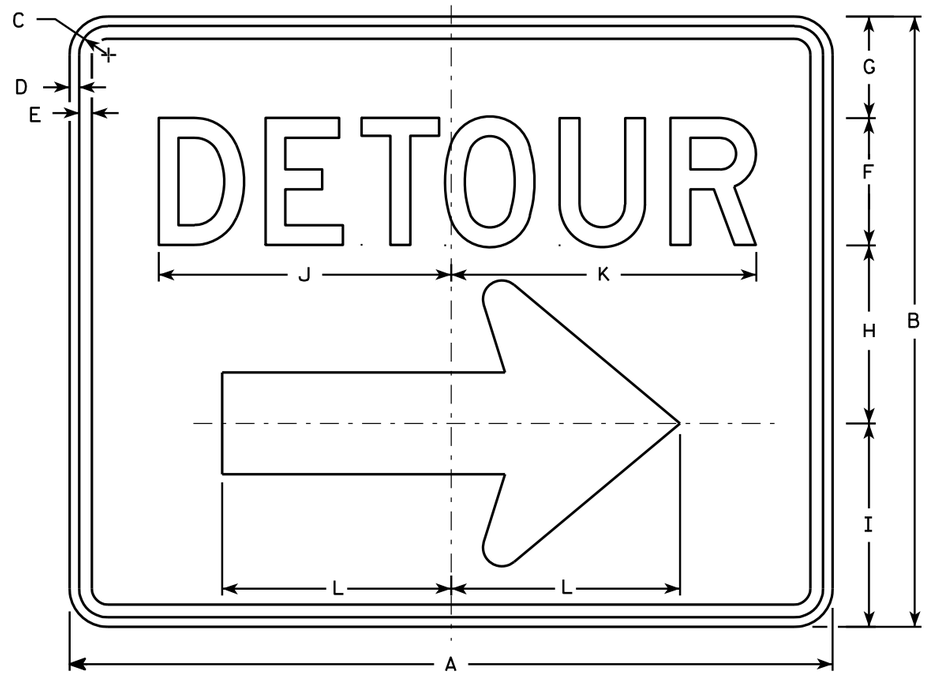

M4-9R

NOTES

1. Sign is Type II - Type F Reflective - reference WIS DOT Standard Specification for HIGHWAY and STRUCTURE CONSTRUCTION latest edition.
2. Color:
   Background - Orange
   Message - Black
3. Message Series - D
4. Corners may be square or rounded when base material is plywood but borders shall be rounded as shown. When base material is metal, the corners and borders shall be rounded.
5. M4-9L is the same as M4-9R except the arrow is reversed.

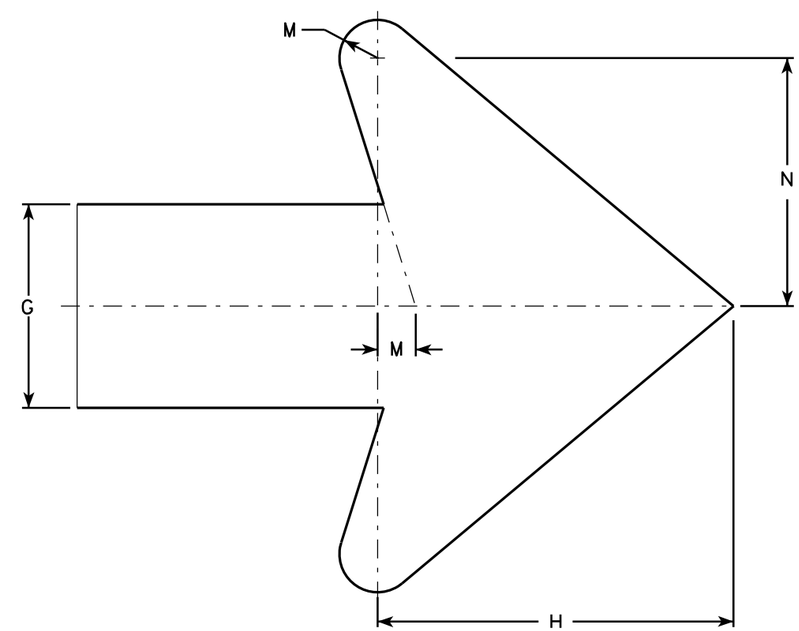

Arrow Detail

SIZE	A	B	C	D	E	F	G	H	I	J	K	L	M	N	O	P	Q	R	S	T	U	V	W	X	Y	Z	Area sq. ft.
1																											
2	30	24	1 1/8	3/8	1/2	5	4	7	8	11 1/2	12	9	3/4	4 7/8													5.00
3	30	24	1 1/8	3/8	1/2	5	4	7	8	11 1/2	12	9	3/4	4 7/8													5.00
4	48	36	1 3/8	1/2	5/8	8	6	10 1/2	11 5/8	20 5/8	20 1/2	13 1/4	1 1/8	6 7/8													12.0
5	48	36	1 3/8	1/2	5/8	8	6	10 1/2	11 5/8	20 5/8	20 1/2	13 1/4	1 1/8	6 7/8													12.0

STANDARD SIGN
M4-9 R & L

WISCONSIN DEPT OF TRANSPORTATION

APPROVED Matthew R Rauch
for State Traffic Engineer

DATE 3/9/11 PLATE NO. M4-9R.4

PROJECT NO: | HWY: | COUNTY: | SHEET NO: 297 | E

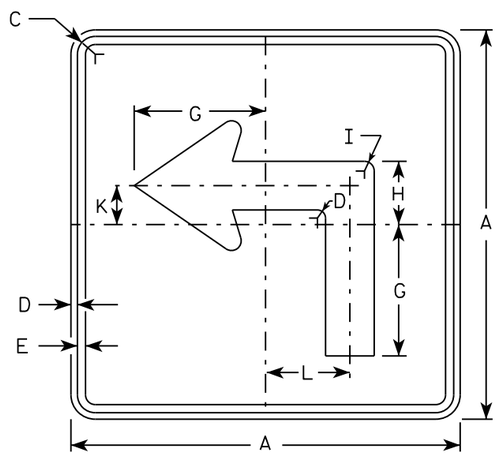

M5-1L
MM5-1L
MO5-1L
MP5-1L

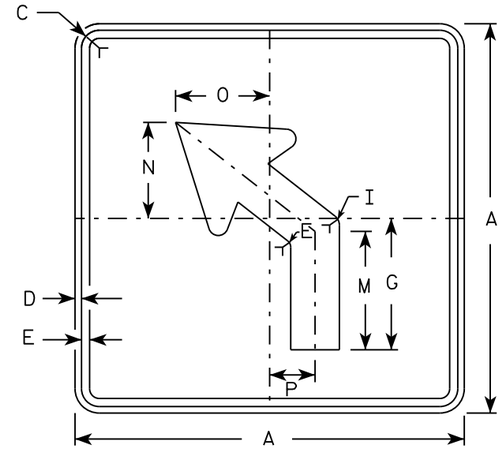

M5-2L
MM5-2L
MO5-2L
MP5-2L

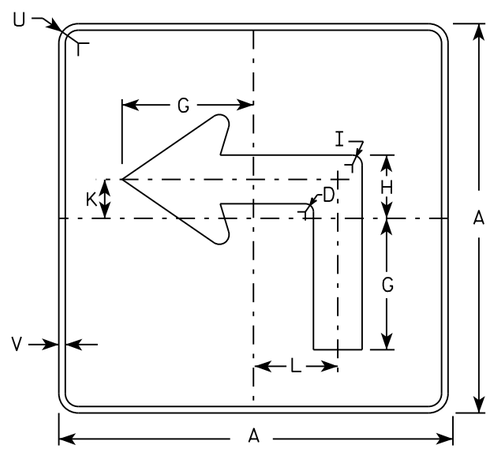

MB5-1L
MK5-1L
MN5-1L
MR5-1L

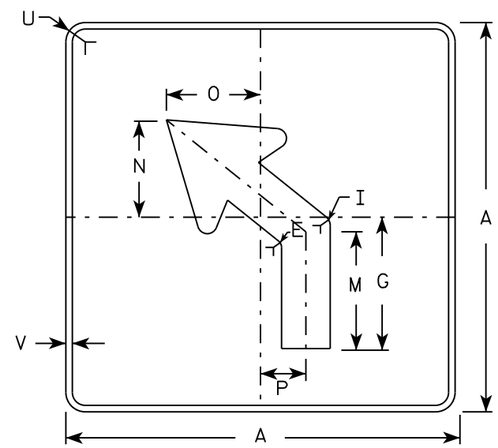

MB5-2L
MK5-2L
MN5-2L
MR5-2L

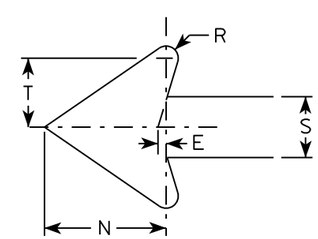

NOTES

1. Signs are Type II - Type H reflective except as shown
2. Color:
   Background - See note 4
   Message - See note 4
3. Corners may be square or rounded when base material is plywood but borders shall be rounded as shown. When base material is metal, the corners and borders shall be rounded.
4. M5-1 and M5-2 Background - White
   Message - Black
   MB5-1 and MB5-2 Background - Blue
   Message - White
   MK5-1 and MK5-2 Background - Green
   Message - White
   MM5-1 and MM5-2 Background - White
   Message - Green
   MN5-1 and MN5-2 Background - Brown
   Message - White
   MO5-1 and MO5-2 Background - Orange - Type F Reflective
   Message - Black
   MP5-1 and MP5-2 Background - White - Type H Reflective
   Message - Blue
   MR5-1 and MR5-2 Background - Brown
   Message - Yellow
5. M5-1R same as M5-1L except arrow points right.
6. M5-2R same as M5-2L except arrow tilts right.

SIZE	A	B	C	D	E	F	G	H	I	J	K	L	M	N	O	P	Q	R	S	T	U	V	W	X	Y	Z	Area sq. ft.
1																											
2	21		1 1/8	3/8	3/8		7	3 3/8	5/8		2 1/8	4 1/2	6 3/8	5 1/4	5	2 1/2		1/2	2 5/8	3	1 1/2	1/2					3.06
3	30		1 3/8	1/2	5/8		10 1/8	4 7/8	7/8		3	6 1/2	9 1/8	7 1/2	7 1/4	3 1/2		3/4	3 3/4	4 1/4	1 7/8	1/2					6.25
4	30		1 3/8	1/2	5/8		10 1/8	4 7/8	7/8		3	6 1/2	9 1/8	7 1/2	7 1/4	3 1/2		3/4	3 3/4	4 1/4	1 7/8	1/2					6.25
5	30		1 3/8	1/2	5/8		10 1/8	4 7/8	7/8		3	6 1/2	9 1/8	7 1/2	7 1/4	3 1/2		3/4	3 3/4	4 1/4	1 7/8	1/2					6.25

STANDARD SIGN
M5-1 & M5-2

WISCONSIN DEPT OF TRANSPORTATION

APPROVED Matthew R Rauch
for State Traffic Engineer

DATE 10/15/15 PLATE NO. M5-1.13

PROJECT NO:	HWY:	COUNTY:		SHEET NO:	E

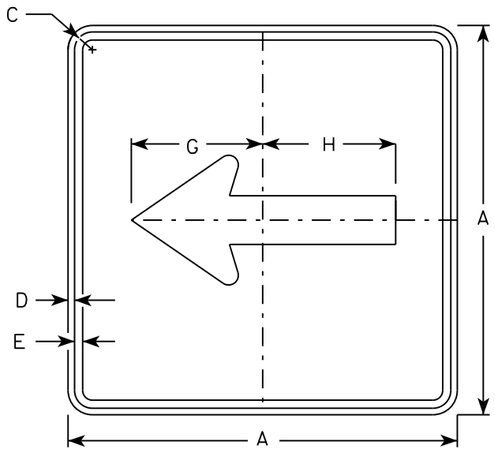

M6-1
MM6-1
MO6-1
MP6-1

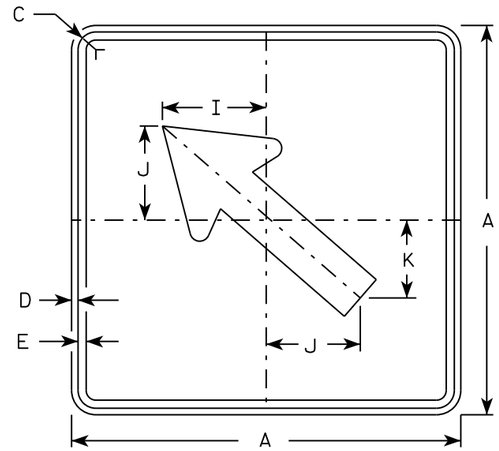

M6-2
MM6-2
MO6-2
MP6-2

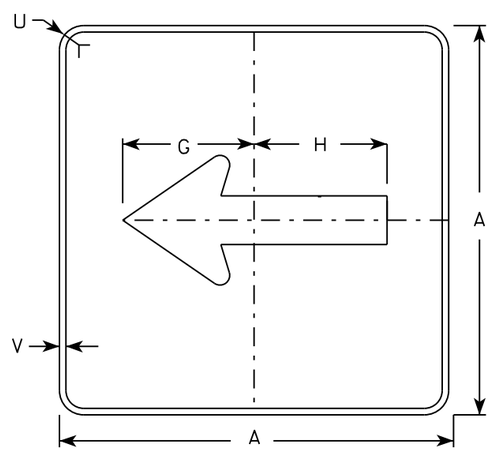

MB6-1
MK6-1
MN6-1
MR6-1

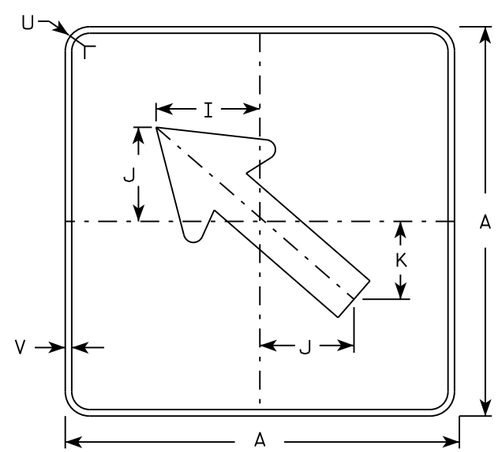

MB6-2
MK6-2
MN6-2
MR6-2

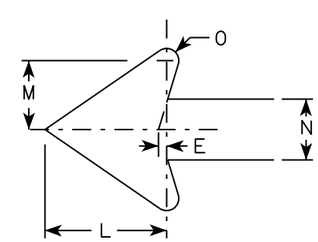

NOTES

1. Signs are Type II - Type H except as Shown
2. Color:
   Background - See note 4
   Message - See note 4
3. Corners may be square or rounded when base material is plywood but borders shall be rounded as shown. When base material is metal, the corners and borders shall be rounded.
4. M6-1 and M6-2 Background - White
   Message - Black
   MB6-1 and MB6-2 Background - Blue
   Message - White
   MK6-1 and MK6-2 Background - Green
   Message - White
   MM6-1 and MM6-2 Background - White
   Message - Green
   MN6-1 and MN6-2 Background - Brown
   Message - White
   MO6-1 and MO6-2 Background - Orange - Type F Reflective
   Message - Black
   MP6-1 and MP6-2 Background - White
   Message - Blue
   MR6-1 and MR6-2 Background - Brown
   Message - Yellow

SIZE	A	B	C	D	E	F	G	H	I	J	K	L	M	N	O	P	Q	R	S	T	U	V	W	X	Y	Z	Area sq. ft.
1																											
2	21		1 1/8	3/8	3/8		7 1/2	7 1/8	5 5/8	5	4 1/4	5 1/4	3	2 5/8	1/2						1 1/2	1/2					3.06
3	30		1 3/8	1/2	5/8		10 3/4	10 1/4	8	7 1/4	6	7 1/2	4 1/4	3 3/4	3/4						1 7/8	1/2					6.25
4	30		1 3/8	1/2	5/8		10 3/4	10 1/4	8	7 1/4	6	7 1/2	4 1/4	3 3/4	3/4						1 7/8	1/2					6.25
5	30		1 3/8	1/2	5/8		10 3/4	10 1/4	8	7 1/4	6	7 1/2	4 1/4	3 3/4	3/4						1 7/8	1/2					6.25

STANDARD SIGN
M6-1 & M6-2
SERIES

WISCONSIN DEPT OF TRANSPORTATION

APPROVED Matthew R Rauch
for State Traffic Engineer

DATE 10/15/15 PLATE 299 M6-1.15

PROJECT NO: | HWY: | COUNTY: | SHEET NO: | E

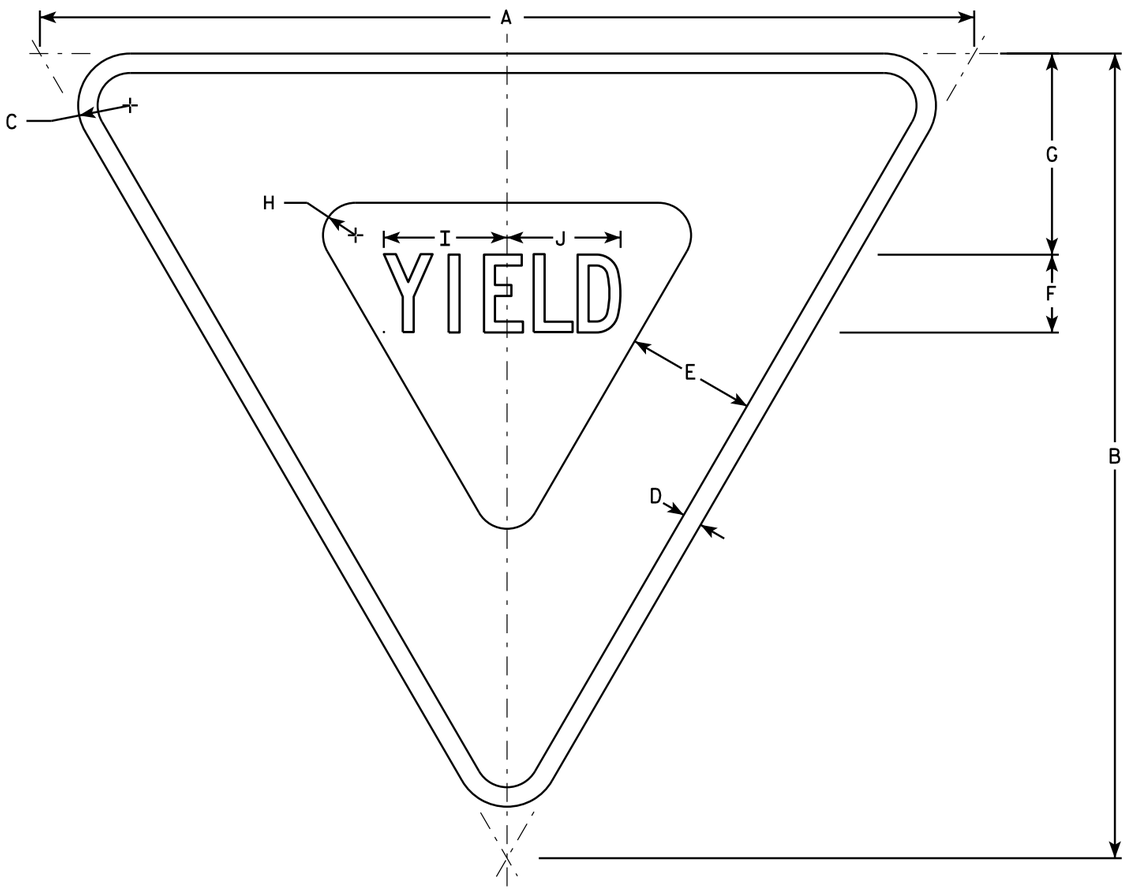

R1-2

NOTES

1. Sign is Type II - Type H Reflective - reference WIS DOT Standard Specification for HIGHWAY and STRUCTURE CONSTRUCTION latest edition.
2. Color:
   Background - White
   Message - See note 5
3. Message Series - C
4. Corners may be square or rounded when base material is plywood but borders shall be rounded as shown. When base material is metal, the corners and borders shall be rounded.
5. The border strip and word message are reflectorized red.

SIZE	A	B	C	D	E	F	G	H	I	J	K	L	M	N	O	P	Q	R	S	T	U	V	W	X	Y	Z	Area sq. ft.
1	30	26	1 1/2	5/8	4	2 1/2	6 3/8	7/8	4	3 5/8																	2.71
2S	36	31	2	3/4	5	3	7 3/4	1 1/4	4 3/4	4 3/8																	3.88
2M	48	42	3	1	6	4	9 3/4	2	6 1/4	5 7/8																	7.00
3	48	42	3	1	6	4	9 3/4	2	6 1/4	5 7/8																	7.00
4	48	42	3	1	6	4	9 3/4	2	6 1/4	5 7/8																	7.00
5	60	52	3	1 1/2	8	5	13	2 1/2	7 7/8	7 1/4																	10.83
6																											
7	18	15 1/2	1	3/8	2 1/2	1 1/2	3 7/8	5/8	2 3/8	2 1/4																	0.97

STANDARD SIGN
R1-2

WISCONSIN DEPT OF TRANSPORTATION

APPROVED Matthew R Rauch
for State Traffic Engineer

DATE 10/13/14 PLATE R1-2.12

PROJECT NO: | HWY: | COUNTY: | SHEET NO: E

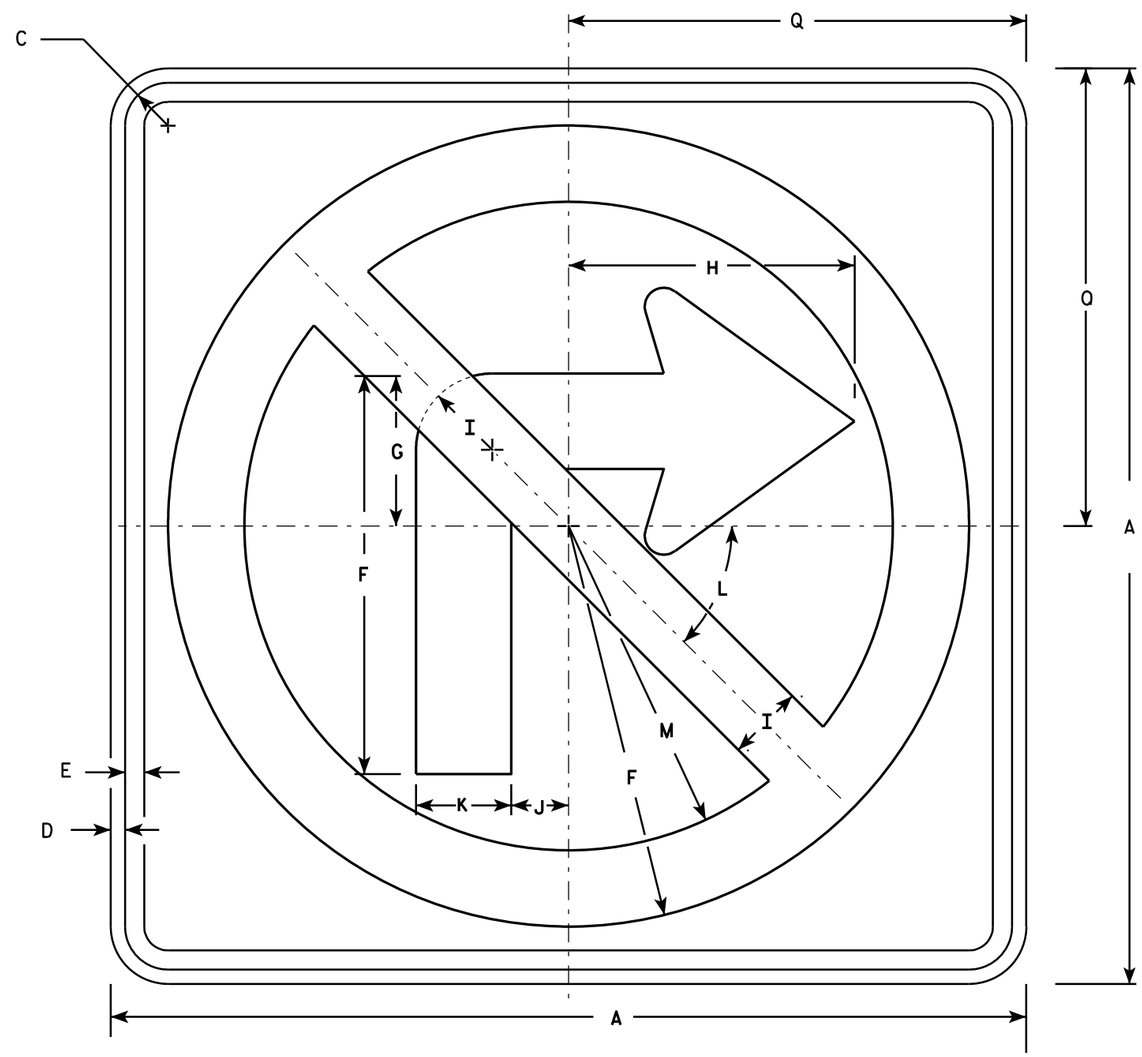

R3-1

NOTES

1. Sign is Type II - Type H Reflective - reference WIS DOT Standard Specification for HIGHWAY and STRUCTURE CONSTRUCTION latest edition.
2. Color:
   Background - White
   Message - See note 4
3. Corners may be square or rounded when base material is plywood but borders shall be rounded as shown. When base material is metal, the corners and borders shall be rounded.
4. Border & Arrow are non reflective black, the circle with diagonal bar is reflective red.

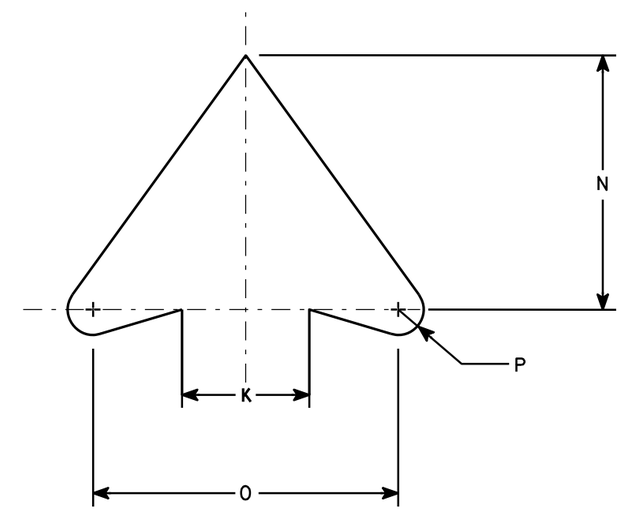

ARROW DETAIL

SIZE	A	B	C	D	E	F	G	H	I	J	K	L	M	N	O	P	Q	R	S	T	U	V	W	X	Y	Z	Area sq. ft.
1	24		1 1/8	3/8	1/2	10 1/2	4	7 1/2	2	1 1/2	2 1/2	45	8 1/2	5	6	1/2	12										4.0
2S	24		1 1/8	3/8	1/2	10 1/2	4	7 1/2	2	1 1/2	2 1/2	45°	8 1/2	5	6	1/2	12										4.0
2M	36		1 5/8	5/8	3/4	15 3/4	6	11 1/4	3	2 1/4	3 3/4	45	12 3/4	7 1/2	9	3/4	18										9.0
3	36		1 5/8	5/8	3/4	15 3/4	6	11 1/4	3	2 1/4	3 3/4	45	12 3/4	7 1/2	9	3/4	18										9.0
4	36		1 5/8	5/8	3/4	15 3/4	6	11 1/4	3	2 1/4	3 3/4	45°	12 3/4	7 1/2	9	3/4	18										9.0
5	48		2 1/4	3/4	1	21	8	15	4	3	5	45°	17	10	12	1	24										16.0

STANDARD SIGN
R3-1

WISCONSIN DEPT OF TRANSPORTATION

APPROVED Matthew R Rauch
for State Traffic Engineer

DATE 12/08/10 PLATE NO. R3-1.5

PROJECT NO:	HWY:	COUNTY:		SHEET NO: 301	E

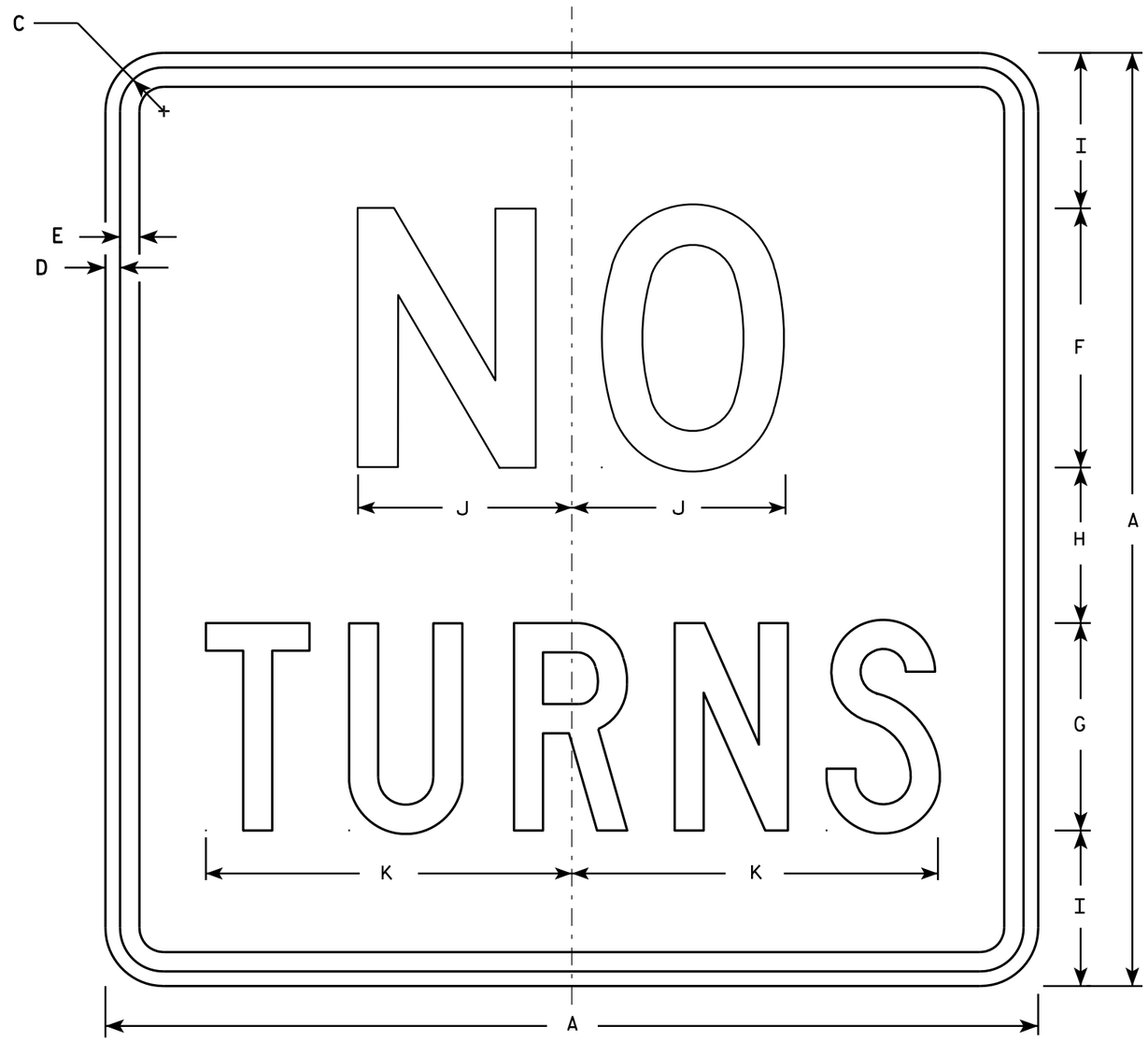

R3-3

NOTES

1. Sign is Type II - Type H Reflective - reference WIS DOT Standard Specification for HIGHWAY and STRUCTURE CONSTRUCTION latest edition.
2. Color:
   Background - White
   Message - Black
3. Message Series - See Note 5
4. Corners may be square or rounded when base material is plywood but borders shall be rounded as shown. When base material is metal, the corners and borders shall be rounded.
5. Line 1 is Series D and Line 2 is Series C.

SIZE	A	B	C	D	E	F	G	H	I	J	K	L	M	N	O	P	Q	R	S	T	U	V	W	X	Y	Z	Area sq. ft.
1																											
2S	24		1 1/8	3/8	1/2	6	5	4	4 1/2	5 1/8	8 3/4																4.0
2M	36		1 5/8	5/8	3/4	10	8	6	6	8 1/4	14 1/8																9.0
3	36		1 5/8	5/8	3/4	10	8	6	6	8 1/4	14 1/8																9.0
4	36		1 5/8	5/8	3/4	10	8	6	6	8 1/4	14 1/8																9.0
5	48		2 1/4	3/4	1	12	10	8	9	10 1/4	17 5/8																16.0

STANDARD SIGN
R3-3

WISCONSIN DEPT OF TRANSPORTATION

APPROVED Matthew R Rauch
for State Traffic Engineer

DATE 12/08/10 PLATE NO. R3-3.10

PROJECT NO: | HWY: | COUNTY: | SHEET NO: 302 | E

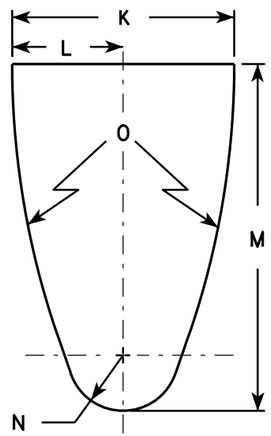

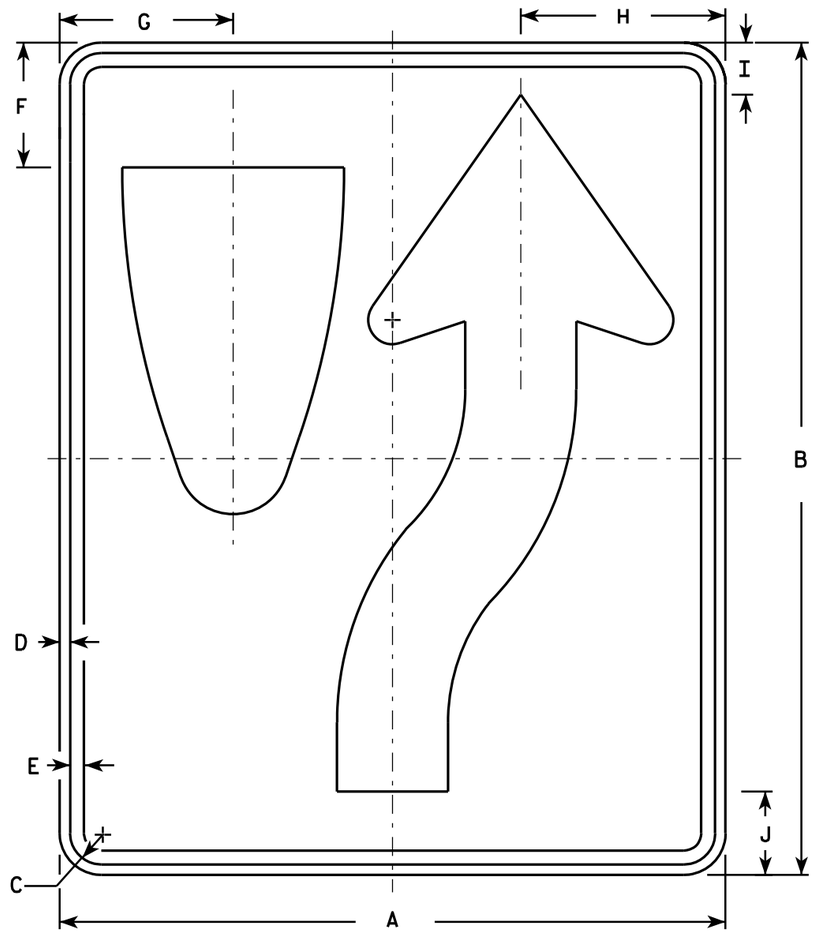

R4-7

NOTES

1. Sign is Type II - Type H Reflective - reference WIS DOT Standard Specification for HIGHWAY and STRUCTURE CONSTRUCTION latest edition. material is plywood but borders shall be rounded
2. Color:
   Background - White
   Message - Black
3. Corners may be square or rounded when base as shown. When base material is metal, the corners and borders shall be rounded.
4. R4-8 is the same as R4-7 except Legend is reversed.

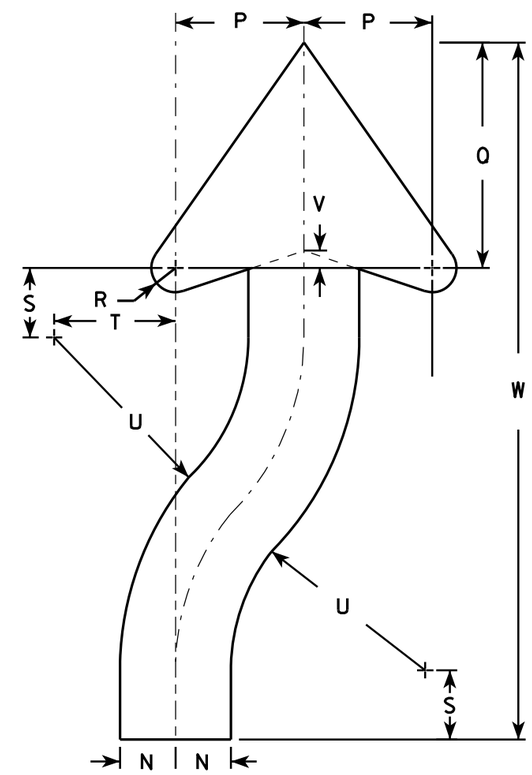

ARROW DETAIL

SIZE	A	B	C	D	E	F	G	H	I	J	K	L	M	N	O	P	Q	R	S	T	U	V	W	X	Y	Z	Area sq. ft.
1	18	24	1 1/8	3/8	1/2	3 3/8	4 3/4	5 1/2	1 3/8	2 1/4	6	3	9 3/8	1 1/2	22 1/2	3 1/2	6 1/8	5/8	1 7/8	3 1/4	6 3/4	1/2	20 3/8				3.0
2S	24	30	1 1/8	3/8	1/2	4 1/2	6 1/4	7 3/8	1 7/8	3	8	4	12 1/2	2	30	4 5/8	8 1/8	7/8	2 1/2	4 3/8	9	5/8	25 1/8				5.0
2M	24	30	1 1/8	3/8	1/2	4 1/2	6 1/4	7 3/8	1 7/8	3	8	4	12 1/2	2	30	4 5/8	8 1/8	7/8	2 1/2	4 3/8	9	5/8	25 1/8				5.0
3	36	48	1 3/4	1/2	5/8	6 3/4	9 3/8	11 1/8	2 7/8	4 1/2	12	6	18 3/4	3	45	6 7/8	12 1/4	1 1/4	3 3/4	6 5/8	13 1/2	1	40 3/4				12.0
4	36	48	1 3/4	1/2	5/8	6 3/4	9 3/8	11 1/8	2 7/8	4 1/2	12	6	18 3/4	3	45	6 7/8	12 1/4	1 1/4	3 3/4	6 5/8	13 1/2	1	40 3/4				12.0
5	48	60	2 1/4	3/4	1	9	12 1/2	14 3/4	3 3/4	6	16	8	25	4	60	9 1/4	16 1/4	1 5/8	5	8 3/4	18	1 1/4	50 1/4				20.0

STANDARD SIGN
R4-7 & R4-8

WISCONSIN DEPT OF TRANSPORTATION

APPROVED Matthew R Rauch for State Traffic Engineer

DATE 3/25/2011 PLATE NO. R4-7.8

PROJECT NO:	HWY:	COUNTY:		SHEET NO: 303	E

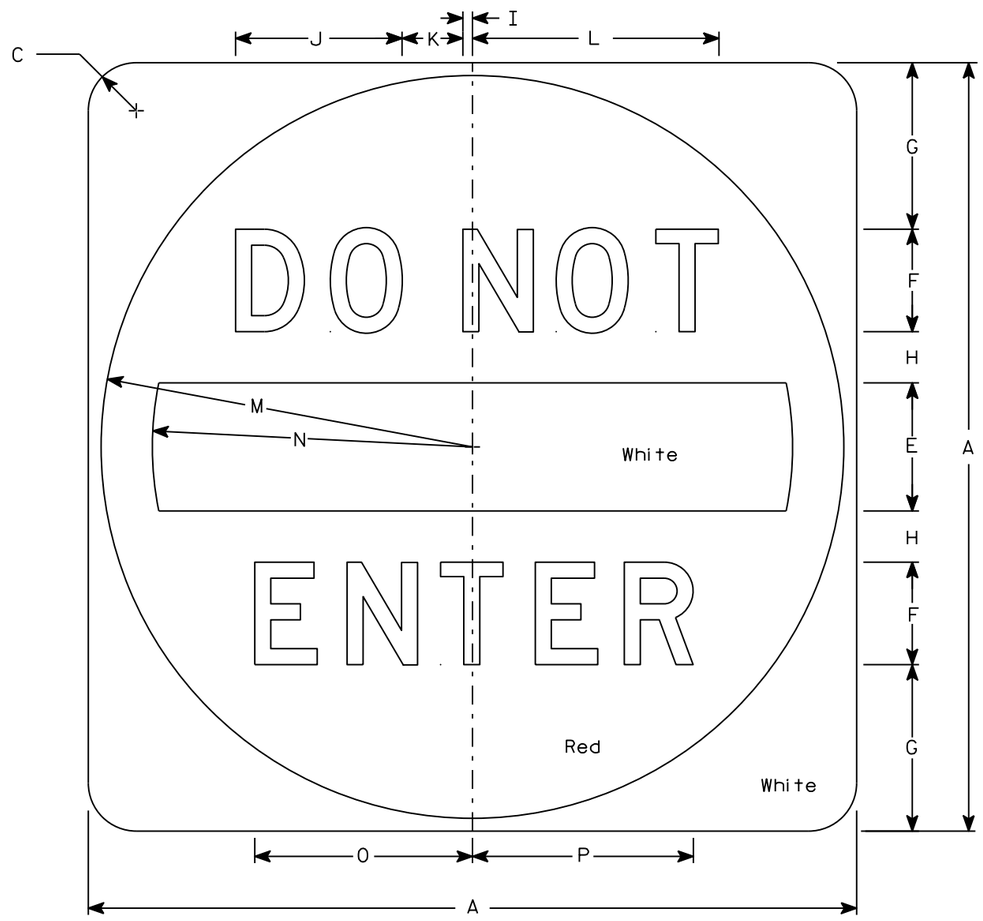

R5-1

NOTES

1. Sign is Type II - Type H Reflective
2. Color:
   Background - See detail
   Message - White
3. Message Series - D

SIZE	A	B	C	D	E	F	G	H	I	J	K	L	M	N	O	P	Q	R	S	T	U	V	W	X	Y	Z	Area sq. ft.
1																											
2S	30		1 7/8		5	4	6 1/2	2	3/8	6 1/2	2 3/8	9 5/8	14 1/2	12 1/2	8 1/2	8 5/8											6.25
2M	36		2 1/4		6	5	7 1/2	2 1/2	1/2	8 1/8	3	12 1/8	17 1/2	15	10 5/8	10 3/4											9.0
3	36		2 1/4		6	5	7 1/2	2 1/2	1/2	8 1/8	3	12 1/8	17 1/2	15	10 5/8	10 3/4											9.0
4	36		2 1/4		6	5	7 1/2	2 1/2	1/2	8 1/8	3	12 1/8	17 1/2	15	10 5/8	10 3/4											9.0
5	48		3		8	6	11	3	5/8	9 3/4	3 5/8	14 1/2	23 1/2	20	12 3/4	12 7/8											16.0

STANDARD SIGN
R5-1

WISCONSIN DEPT OF TRANSPORTATION

APPROVED Matthew R Rauch
for State Traffic Engineer

DATE 3/15/18 PLATE NO. R5-1.16

PROJECT NO: | HWY: | COUNTY: | SHEET NO: 304 | E

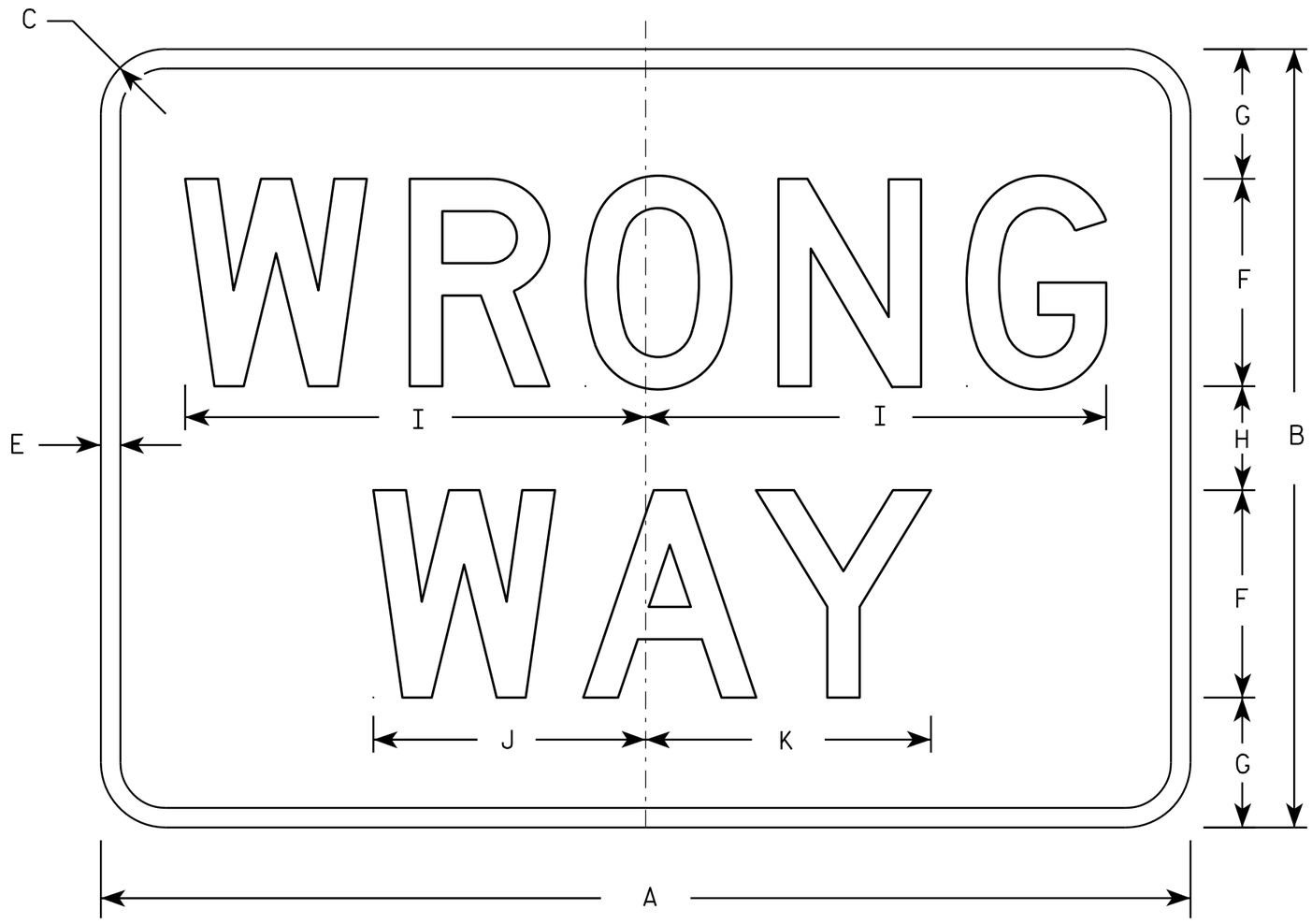

R5-1A

NOTES

1. Sign is Type II - Type H Reflective - reference WIS DOT Standard Specification for HIGHWAY and STRUCTURE CONSTRUCTION latest edition.
2. Color:
   Background - Red
   Message - White
3. Message Series - D
4. Corners may be square or rounded when base material is plywood but borders shall be rounded as shown. When base material is metal, the corners and borders shall be rounded.

SIZE	A	B	C	D	E	F	G	H	I	J	K	L	M	N	O	P	Q	R	S	T	U	V	W	X	Y	Z	Area sq. ft.
1	30	18	1 1/2		1/2	5	3	2	11	6 1/2	6 7/8																3.75
2S	36	24	2		5/8	6	4 1/2	3	13 1/4	7 7/8	8 1/4																6.00
2M	42	30	2 1/2		3/4	8	5	4	17 3/4	10 1/2	11																8.75
3	42	30	2 1/2		3/4	8	5	4	17 3/4	10 1/2	11																8.75
4	42	30	2 1/2		3/4	8	5	4	17 3/4	10 1/2	11																8.75
5	42	30	2 1/2		3/4	8	5	4	17 3/4	10 1/2	11																8.75

STANDARD SIGN
R5-1A

WISCONSIN DEPT OF TRANSPORTATION

APPROVED Matthew R Rauch
for State Traffic Engineer

DATE 12/17/10 PLATE NO. R5-1A.2

PROJECT NO: | HWY: | COUNTY: | SHEET NO: 305 | E

NOTES

1. Sign is Type II - Type H Reflective
2. Color:
   Background - BLACK
   Message - BLACK LEGEND & WHITE ARROW & BORDER
3. Message Series - D

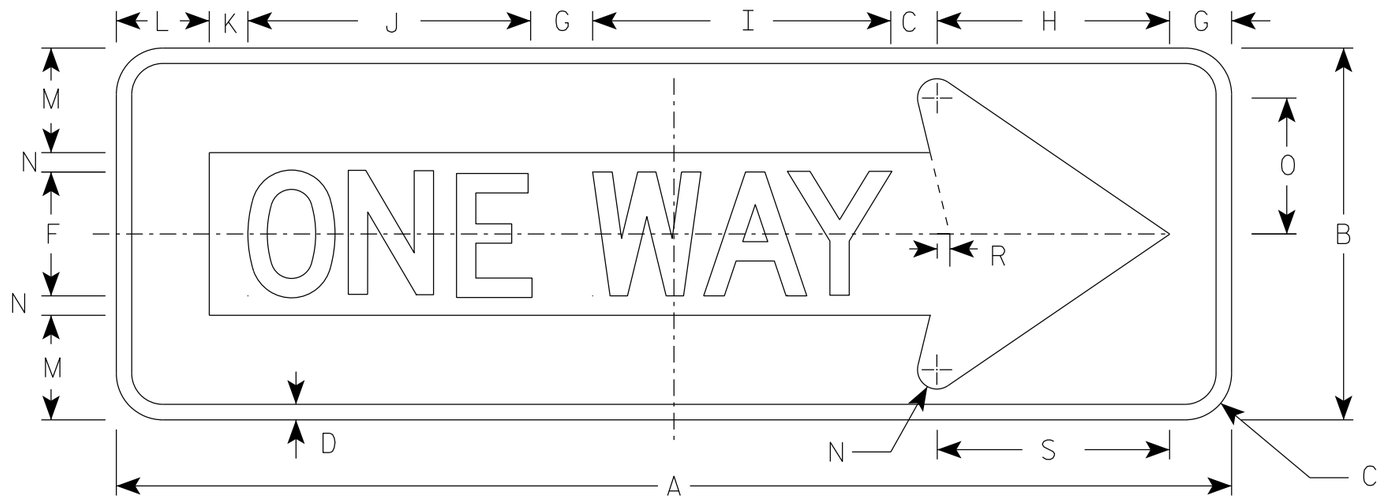

R6-1 R

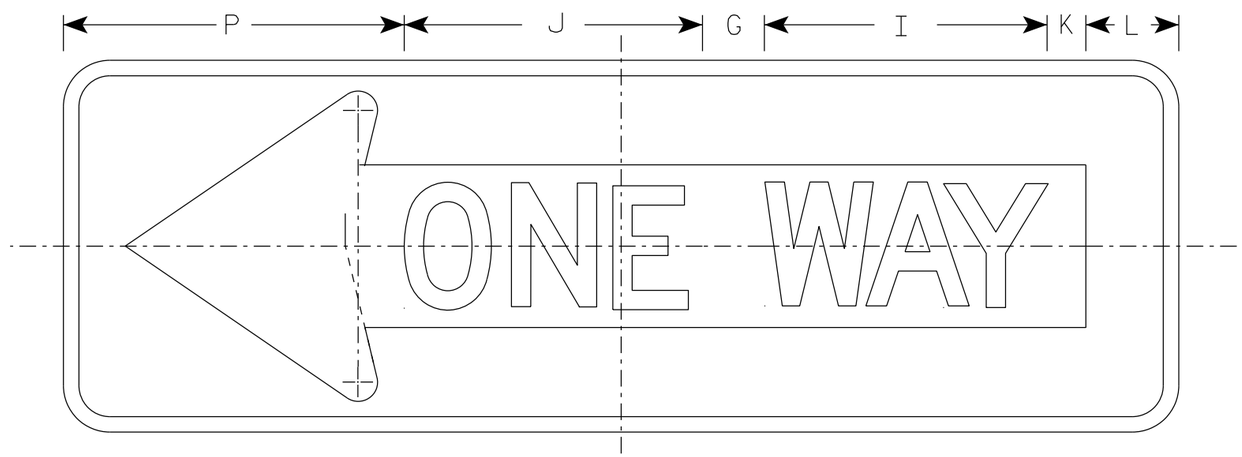

R6-1 L

SIZE	A	B	C	D	E	F	G	H	I	J	K	L	M	N	O	P	Q	R	S	T	U	V	W	X	Y	Z	Area sq. ft.
1																											
2S	36	12	1 1/2	1/2		4	2	7 1/2	9 5/8	9 1/8	1 1/4	3	3 3/8	5/8	4 3/8	11		3/8	7 1/2								3.0
2M	54	18	2 1/4	3/4		6	3	11 1/4	13 5/8	14 1/2	1 7/8	4 1/2	5	1	6 1/2	16 1/2		5/8	11 1/4								6.75
3	54	18	2 1/4	3/4		6	3	11 1/4	13 5/8	14 1/2	1 7/8	4 1/2	5	1	6 1/2	16 1/2		5/8	11 1/4								6.75
4	54	18	2 1/4	3/4		6	3	11 1/4	13 5/8	14 1/2	1 7/8	4 1/2	5	1	6 1/2	16 1/2		5/8	11 1/4								6.75
5																											

STANDARD SIGN
R6-1 L & R

WISCONSIN DEPT OF TRANSPORTATION

APPROVED Matthew R Rauch
for State Traffic Engineer

DATE 07/11/18 PLATE NO. R6-1.3

PROJECT NO:

SHEET NO: 306 E

NOTES

1. Sign is Type II - Type H Reflective
2. Color:
   Background - WHITE
   Message - BLACK
3. Corners may be square or rounded when base material is plywood but borders shall be rounded as shown. When base material is metal, the corners and borders shall be rounded.

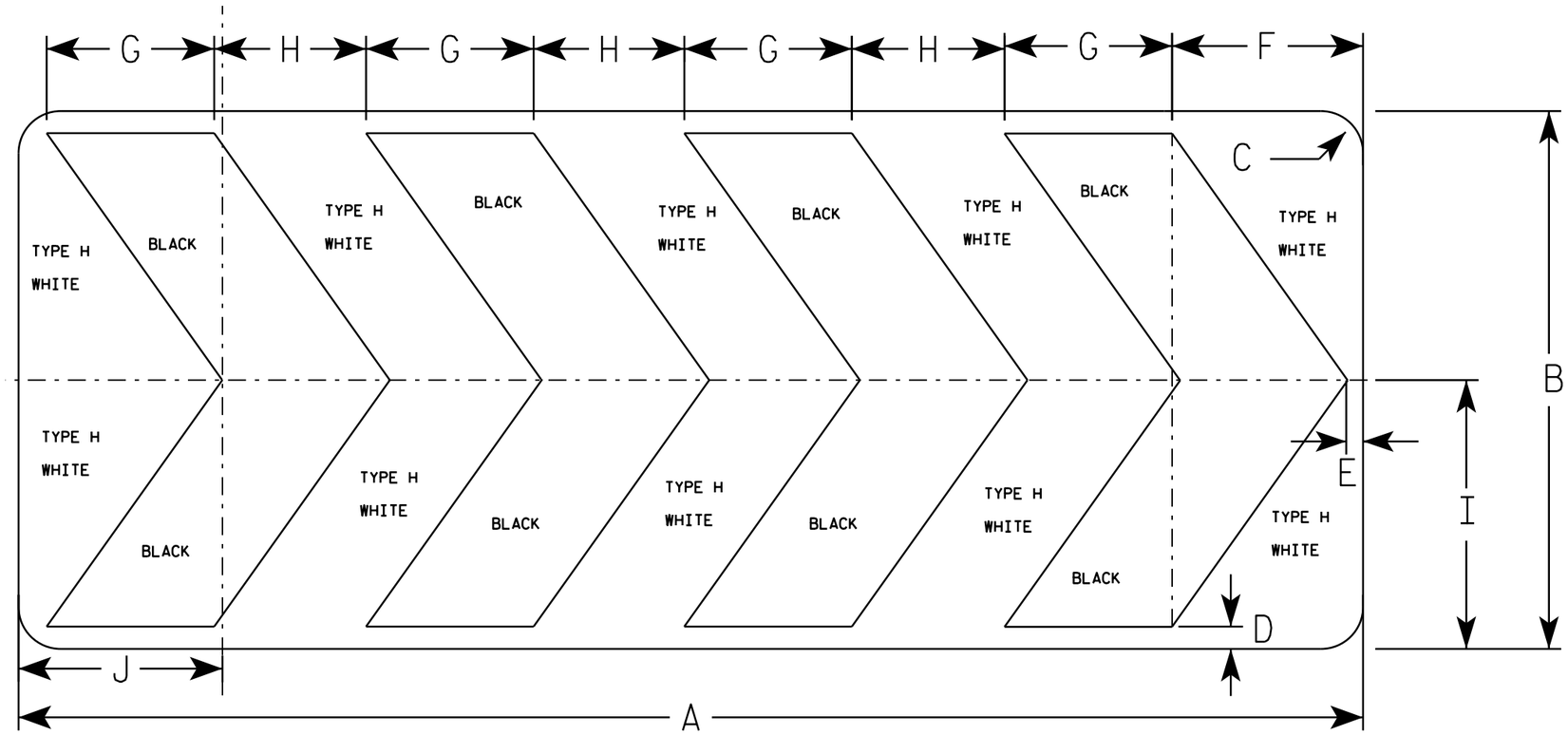

R6-4B

SIZE	A	B	C	D	E	F	G	H	I	J	K	L	M	N	O	P	Q	R	S	T	U	V	W	X	Y	Z	Area sq. ft.
1																											
2S	60	24	1 7/8	1	3/4	8 1/2	7 1/2	6 3/4	12	9 1/8																	10.0
2M	60	24	1 7/8	1	3/4	8 1/2	7 1/2	6 3/4	12	9 1/8																	10.0
3																											
4																											
5																											

STANDARD SIGN
R6-4B

WISCONSIN DEPT OF TRANSPORTATION

APPROVED Matthew R Rauch
for State Traffic Engineer

DATE 8/21/14 PLATE NO. R6-4.3

PROJECT NO: SHEET NO: E

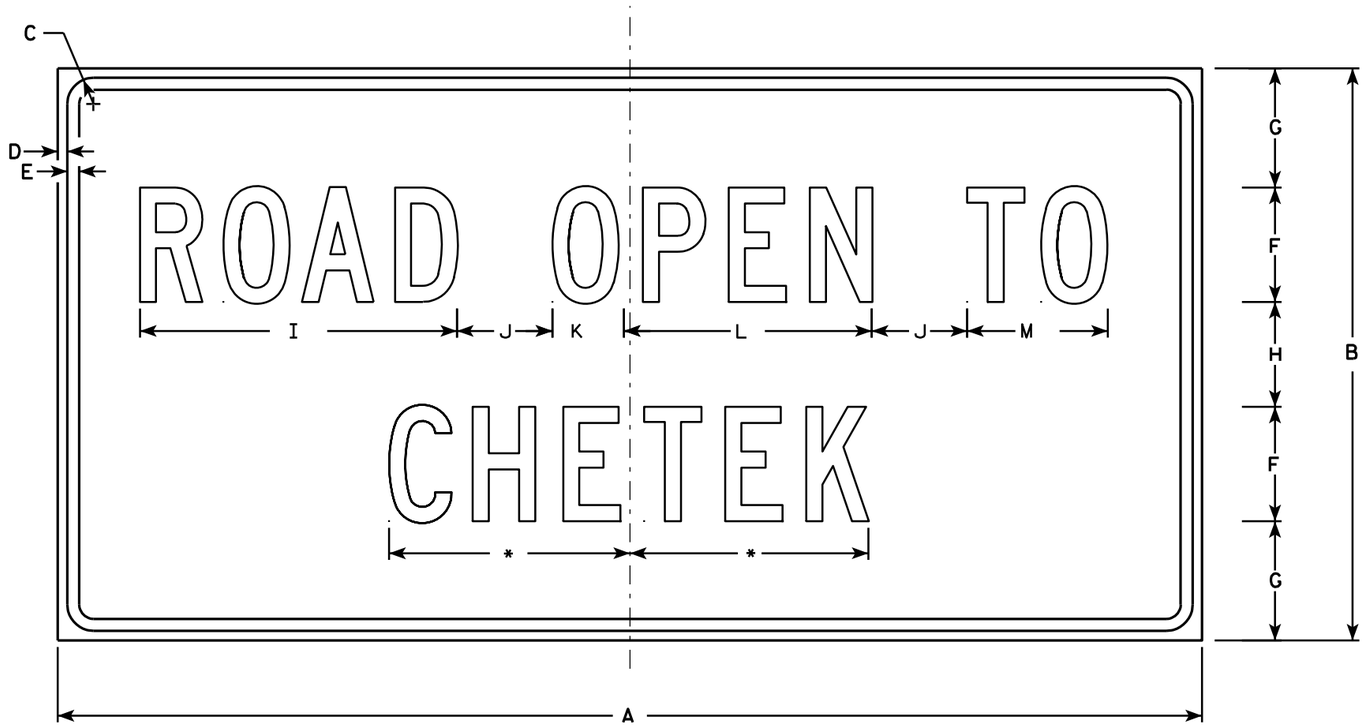

R10-61

*See note 5

NOTES

1. Sign is Type II - Type H Reflective - reference WIS DOT Standard Specification for HIGHWAY and STRUCTURE CONSTRUCTION latest edition.
2. Color:
   Background - White
   Message - Black
3. Message Series - C
4. Corners may be square or rounded when base material is plywood but borders shall be rounded as shown. When base material is metal, the corners and borders shall be rounded.
5. Substitute appropriate message and optically balance.

SIZE	A	B	C	D	E	F	G	H	I	J	K	L	M	N	O	P	Q	R	S	T	U	V	W	X	Y	Z	Area sq. ft.
1	36	24	1 3/8	1/2	5/8	4	5 1/2	5	10 3/4	2	2 1/8	8 3/8	4 5/8														6.0
2S	60	30	1 3/8	1/2	5/8	6	6 1/4	5 1/2	16 5/8	5	3 3/4	13	7 3/8														12.5
2M	60	30	1 3/8	1/2	5/8	6	6 1/4	5 1/2	16 5/8	5	3 3/4	13	7 3/8														12.5
3																											
4																											
5																											

STANDARD SIGN
R10-61

WISCONSIN DEPT OF TRANSPORTATION

APPROVED Matthew R Rauch
for State Traffic Engineer

DATE 4/4/11 PLATE NO. R10-61.5

PROJECT NO:	HWY:	COUNTY:		SHEET NO: 308	E

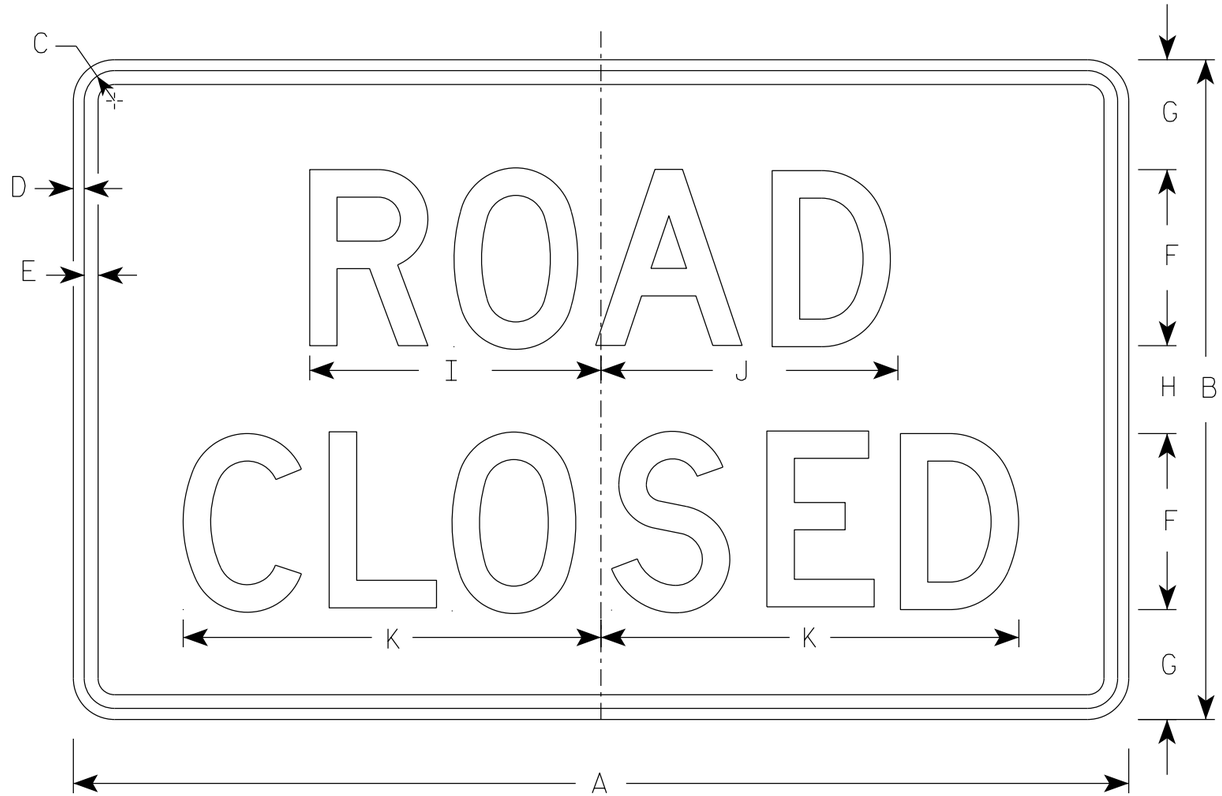

R11-2

NOTES

1. Sign is Type II - Type H Reflective
2. Color:
   Background - White
   Message - Black
3. Message Series - D
4. Corners may be square or rounded when base material is plywood but borders shall be rounded as shown. When base material is metal, the corners and borders shall be rounded.
5. Modify the message as required.

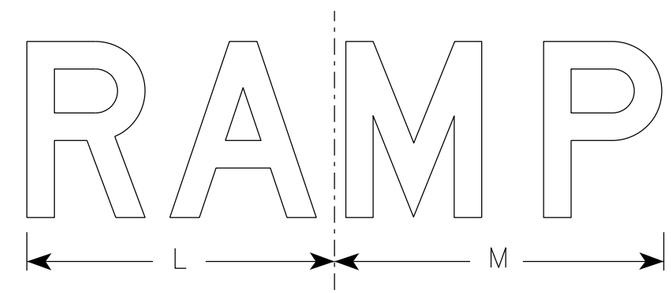

R11-2R

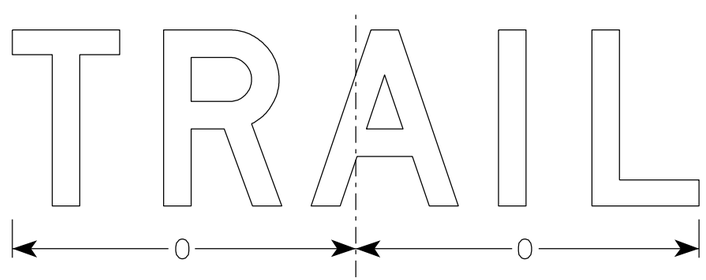

R11-2T

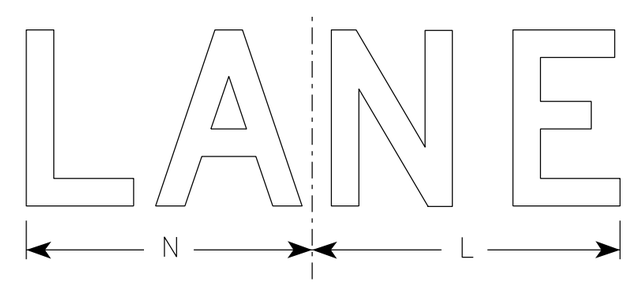

R11-2L

SIZE	A	B	C	D	E	F	G	H	I	J	K	L	M	N	O	P	Q	R	S	T	U	V	W	X	Y	Z	Area sq. ft.
1																											
2S	48	30	1 3/8	1/2	5/8	8	5	4	13 1/4	13 1/2	19	14	15	13	15 5/8												10.0
2M	48	30	1 3/8	1/2	5/8	8	5	4	13 1/4	13 1/2	19	14	15	13	15 5/8												10.0
3	48	30	1 3/8	1/2	5/8	8	5	4	13 1/4	13 1/2	19	14	15	13	15 5/8												10.0
4	48	30	1 3/8	1/2	5/8	8	5	4	13 1/4	13 1/2	19	14	15	13	15 5/8												10.0
5	48	30	1 3/8	1/2	5/8	8	5	4	13 1/4	13 1/2	19	14	15	13	15 5/8												10.0

STANDARD SIGN
R11-2

WISCONSIN DEPT OF TRANSPORTATION

APPROVED Matthew R Rauch
for State Traffic Engineer

DATE 3/29/2021 PLATE NO. R11-2.11

PROJECT NO: | HWY: | COUNTY: | SHEET NO: 309 | E

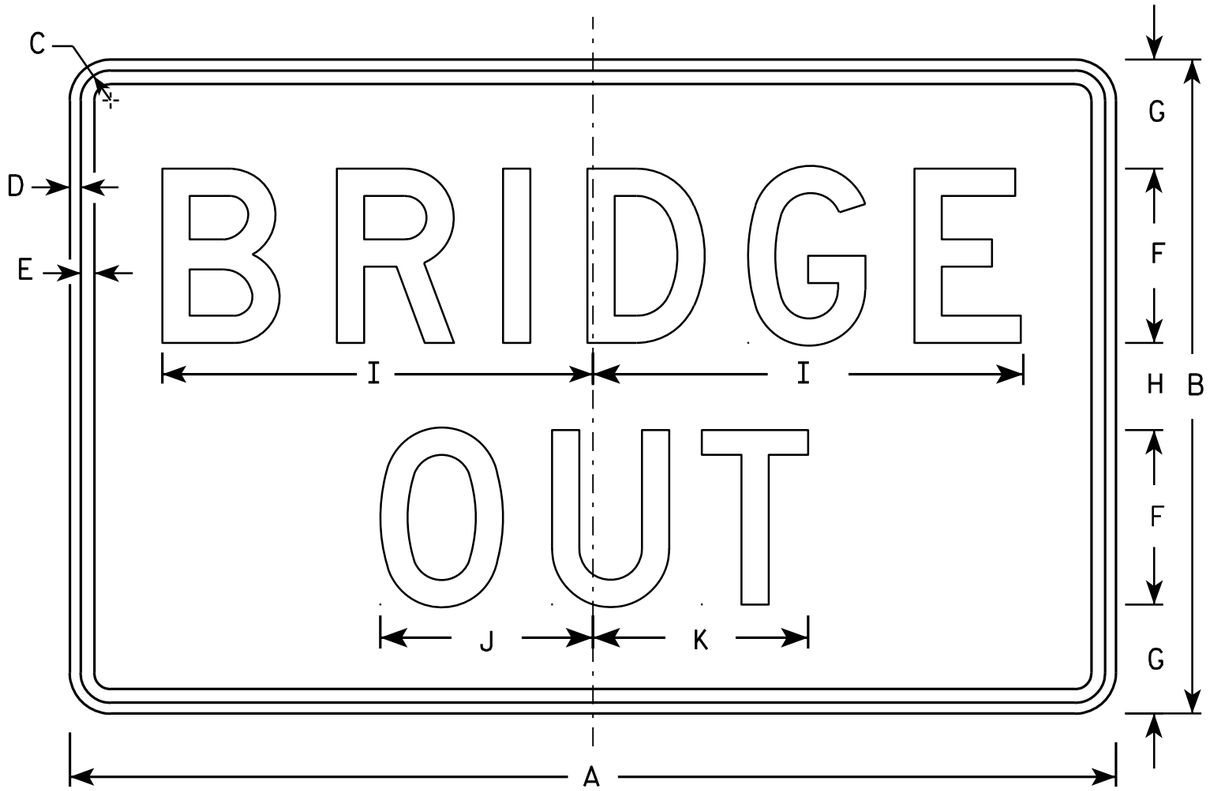

R11-2B

NOTES

1. Sign is Type II - Type H Reflective - reference WIS DOT Standard Specification for HIGHWAY and STRUCTURE CONSTRUCTION latest edition.
2. Color:
   Background - White
   Message - Black
3. Message Series - D
4. Corners may be square or rounded when base material is plywood but borders shall be rounded as shown. When base material is metal, the corners and borders shall be rounded.

SIZE	A	B	C	D	E	F	G	H	I	J	K	L	M	N	O	P	Q	R	S	T	U	V	W	X	Y	Z	Area sq. ft.
1																											
2S	48	30	1 3/8	1/2	5/8	8	5	4	19 3/4	9 3/4	9 7/8																10.0
2M	48	30	1 3/8	1/2	5/8	8	5	4	19 3/4	9 3/4	9 7/8																10.0
3	48	30	1 3/8	1/2	5/8	8	5	4	19 3/4	9 3/4	9 7/8																10.0
4	48	30	1 3/8	1/2	5/8	8	5	4	19 3/4	9 3/4	9 7/8																10.0
5	48	30	1 3/8	1/2	5/8	8	5	4	19 3/4	9 3/4	9 7/8																10.0

STANDARD SIGN
R11-2B

WISCONSIN DEPT OF TRANSPORTATION

APPROVED Matthew R Rauch
For State Traffic Engineer
DATE 4/1/11 PLATE NO. R11-2B.2

PROJECT NO:

SHEET NO: 310 E

NOTES

1. Sign is Type II - Type H Reflective
2. Color:
   Background - White
   Message - Black
3. Message Series - C
4. Corners may be square or rounded when base material is plywood but borders shall be rounded as shown. When base material is metal, the corners and borders shall be rounded.
5. Substitute appropriate numerals to nearest quarter mile and optically adjust spacing to achieve proper balance.

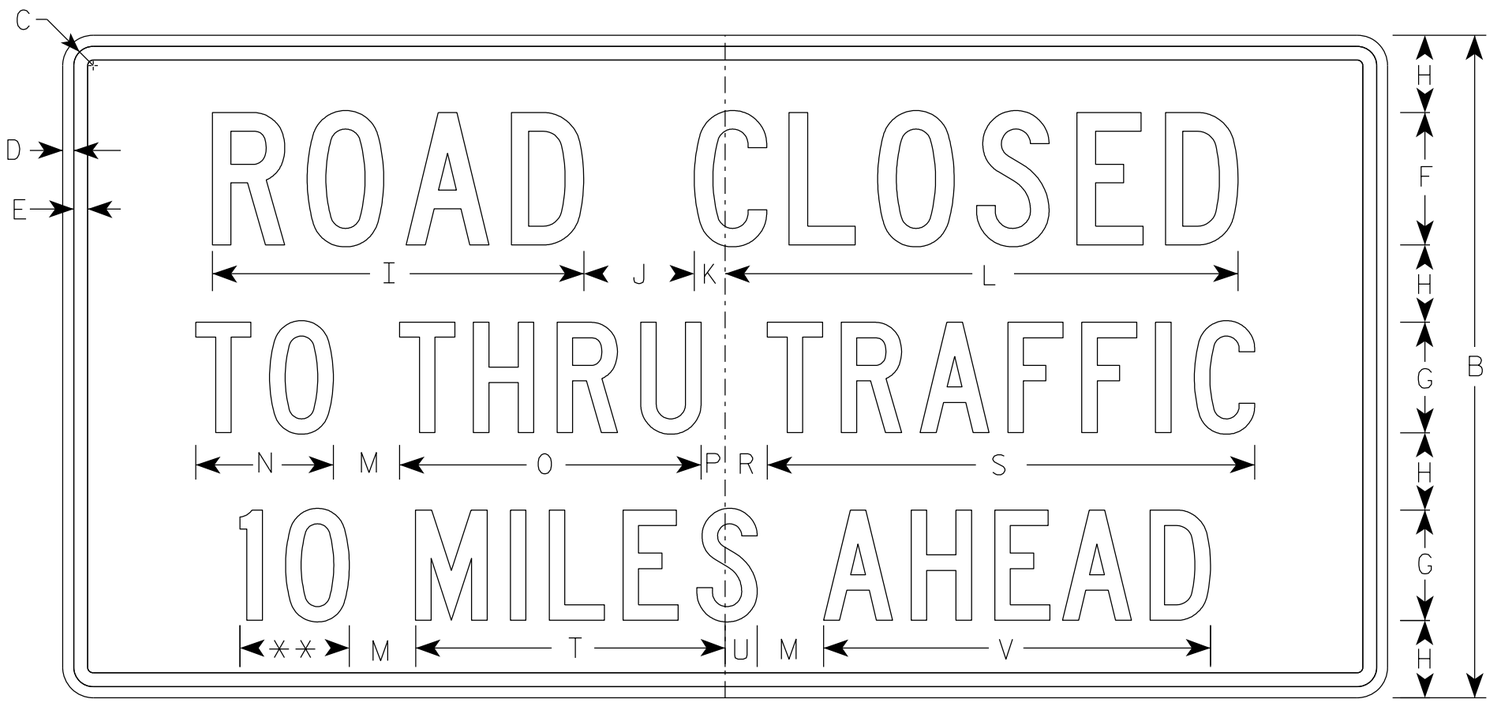

R11-3

** See Note 5

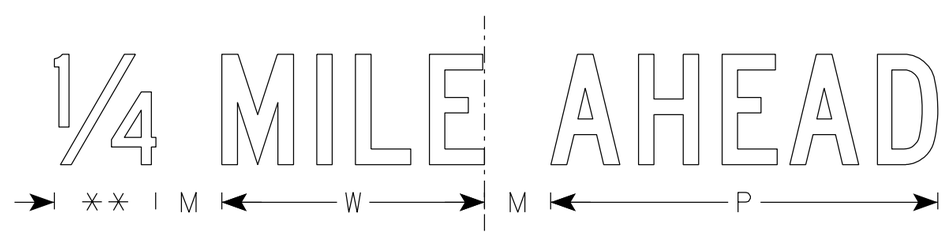

SIZE	A	B	C	D	E	F	G	H	I	J	K	L	M	N	O	P	Q	R	S	T	U	V	W	X	Y	Z	Area sq. ft.
1	36	18	1 1/4	3/8	3/8	4	3	2	11 1/4	3	1 1/8	15 3/8	2	3 3/4	8 1/4	5/8		1 3/8	13 1/4	8 3/8	7/8	10 1/2	7 1/8				4.5
2S	60	30	1 3/8	1/2	5/8	6	5	3 1/2	16 7/8	5	1 3/8	23 1/4	3	6 1/4	13 5/8	1 1/8		1 7/8	22 1/8	14	1 1/2	17 1/2	11 7/8				12.5
2M	60	30	1 3/8	1/2	5/8	6	5	3 1/2	16 7/8	5	1 3/8	23 1/4	3	6 1/4	13 5/8	1 1/8		1 7/8	22 1/8	14	1 1/2	17 1/2	11 7/8				12.5
3																											
4																											
5																											

STANDARD SIGN
R11-3

WISCONSIN DEPT OF TRANSPORTATION

APPROVED Matthew R Rauch
for State Traffic Engineer

DATE 6/14/2021 PLATE NO. R11-3.9

PROJECT NO: | HWY: | COUNTY: | SHEET NO: 311 | E

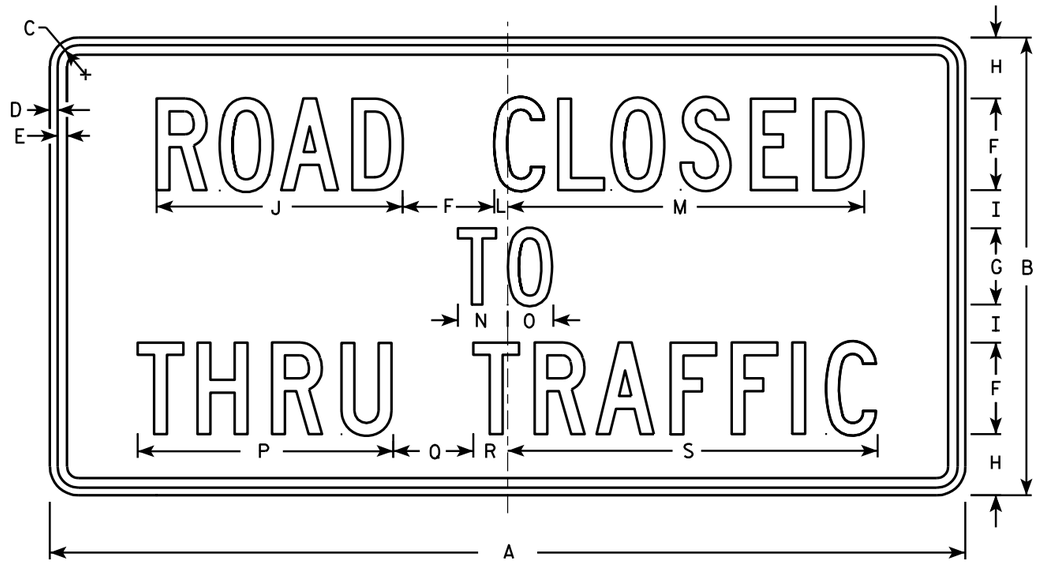

R11-4

NOTES

1. Sign is Type II - Type H Reflective - reference WIS DOT Standard Specification for HIGHWAY and STRUCTURE CONSTRUCTION latest edition.
2. Color:
   Background - White
   Message - Black
3. Message Series - C
4. Corners may be square or rounded when base material is plywood but borders shall be rounded as shown. When base material is metal, the corners and borders shall be rounded.

SIZE	A	B	C	D	E	F	G	H	I	J	K	L	M	N	O	P	Q	R	S	T	U	V	W	X	Y	Z	Area sq. ft.
1																											
2S	60	30	1 3/8	1/2	5/8	6	5	4	2 1/2	16 1/8		7/8	23 3/8	3 1/4	3	16 3/4	5 1/4	2 1/4	24 1/4								12.5
2M	60	30	1 3/8	1/2	5/8	6	5	4	2 1/2	16 1/8		7/8	23 3/8	3 1/4	3	16 3/4	5 1/4	2 1/4	24 1/4								12.5
3																											
4																											
5																											

STANDARD SIGN
R11 - 4

WISCONSIN DEPT OF TRANSPORTATION

APPROVED Matthew R Rauch
for State Traffic Engineer

DATE 4/1/11 PLATE NO. R11-4.3

PROJECT NO:	HWY:	COUNTY:		SHEET NO: 312	E

NOTES

1. Sign is Type II - Type F Reflective
2. Color:
   Background - Yellow
   Message - Black

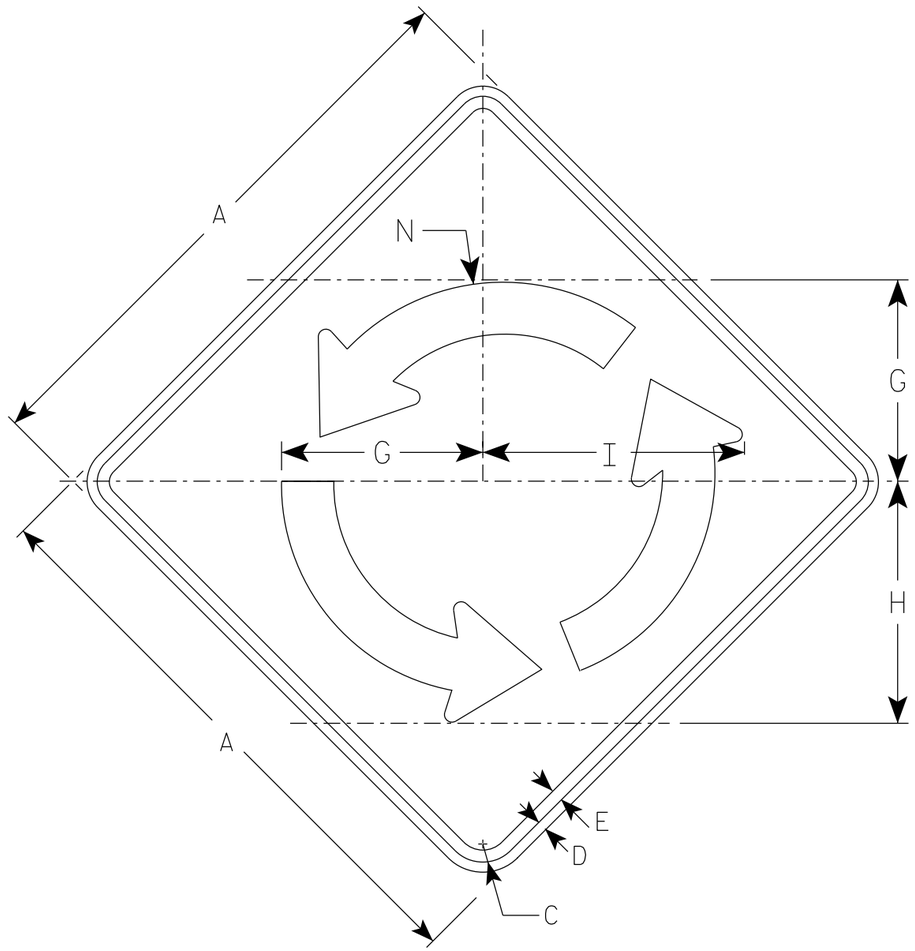

W2-6

Arrow Detail

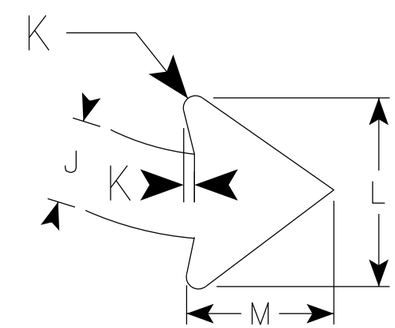

SIZE	A	B	C	D	E	F	G	H	I	J	K	L	M	N	O	P	Q	R	S	T	U	V	W	X	Area sq. ft.
1																									
2S	30		1 3/8	1/2	5/8		10 3/8	12 1/2	13 1/2	2 3/4	3/8	6	4 3/4	11 1/8											6.25
2M	30		1 3/8	1/2	5/8		10 3/8	12 1/2	13 1/2	2 3/4	3/8	6	4 3/4	11 1/8											6.25
3	36		1 5/8	5/8	3/4		12 1/2	15	16 1/4	3 1/4	1/2	7 3/8	5 3/4	13 3/8											9.00
4	48		2 1/4	3/4	1		16 5/8	20	16 1/4	4 3/8	5/8	9 3/4	7 5/8	17 7/8											16.0
5																									

STANDARD SIGN
W2-6

WISCONSIN DEPT OF TRANSPORTATION

APPROVED Matthew R Rauch
for State Traffic Engineer

DATE 3/24/21 PLATE NO. W2-6.7

PROJECT NO:

SHEET NO: 313 E

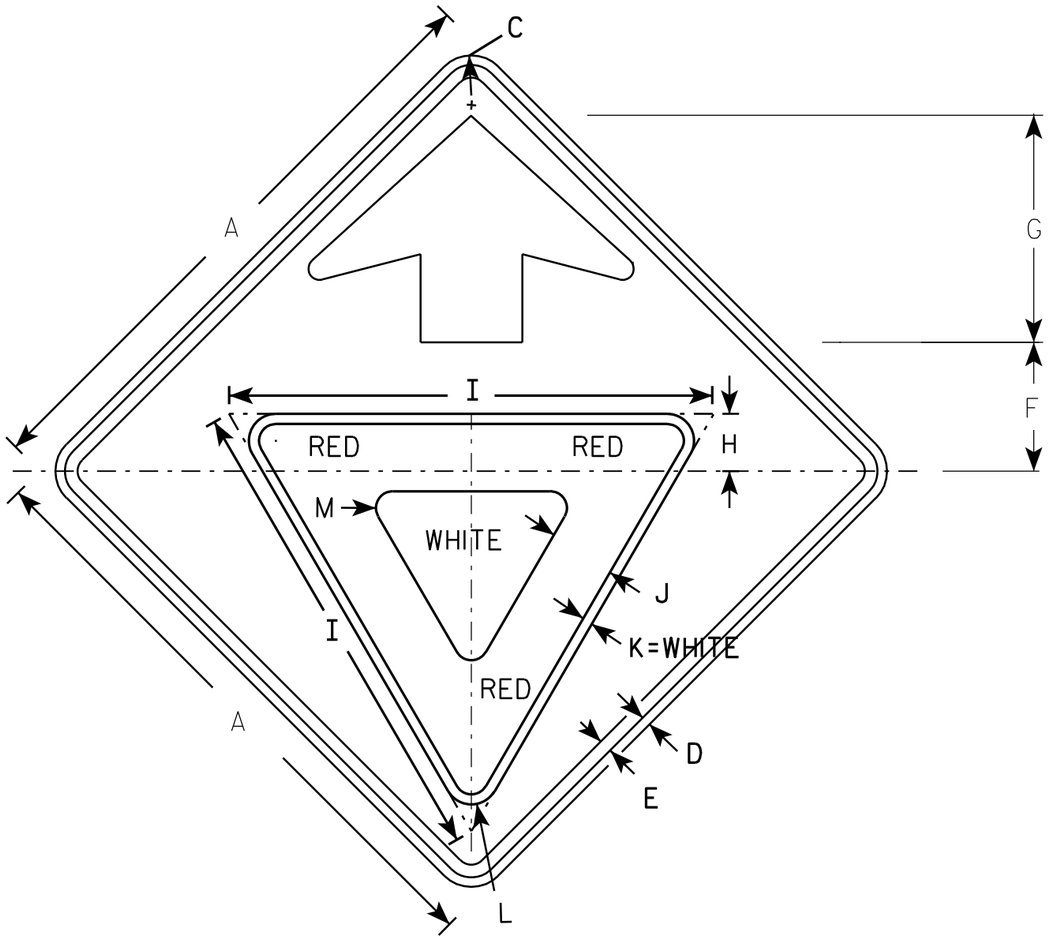

W3-2

NOTES

1. All Signs Type II - Type F Reflective - reference WIS DOT Standard Specification for HIGHWAY and STRUCTURE CONSTRUCTION latest edition.
2. Color:
   - Background - YELLOW
   - Arrow & Border - BLACK
   - Yield Symbol - WHITE BORDER ON RED BACKGROUND

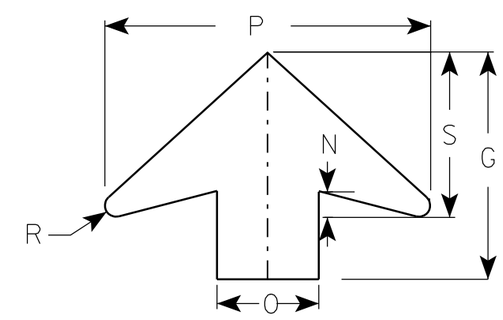

ARROW DETAIL

SIZE	A	B	C	D	E	F	G	H	I	J	K	L	M	N	O	P	Q	R	S	T	U	V	W	X	Y	Z	Area sq. ft.
1	30		1 3/8	1/2	5/8	6 1/4	11 1/4	3	25	3 3/8	1/2	1 3/8	7/8	1 1/4	5	16		1/2	8								6.25
2S	36		1 5/8	5/8	3/4	7 1/2	13 1/2	3 3/8	28	3 3/4	5/8	1 1/2	1	1 5/8	6	19 1/4		5/8	9 3/4								9.0
2M	36		1 5/8	5/8	3/4	7 1/2	13 1/2	3 3/8	28	3 3/4	5/8	1 1/2	1	1 5/8	6	19 1/4		5/8	9 3/4								9.0
3	36		1 5/8	5/8	3/4	7 1/2	13 1/2	3 3/8	28	3 3/4	5/8	1 1/2	1	1 5/8	6	19 1/4		5/8	9 3/4								9.0
4	48		2 1/4	3/4	1	10	17 7/8	4 1/2	38	5	3/4	2 1/8	1 3/8	2	8	25 5/8		7/8	13								16.0
5	48		2 1/4	3/4	1	10	17 7/8	4 1/2	38	5	3/4	2 1/8	1 3/8	2	8	25 5/8		7/8	13								16.0

STANDARD SIGN
W3-2

WISCONSIN DEPT OF TRANSPORTATION

APPROVED Matthew R Rauch
for State Traffic Engineer

DATE 6/7/10 PLATE NO. W3-2..9

PROJECT NO:

SHEET NO: 314 E

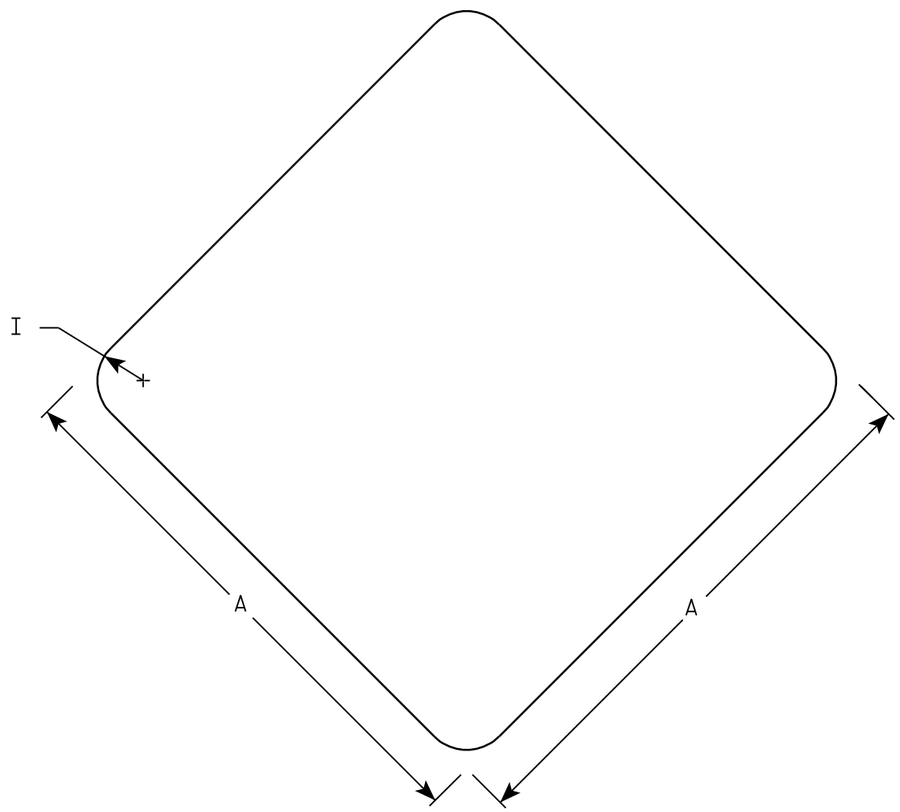

W5-54

NOTES

1. Sign is Type II - Type F Reflective - reference WIS DOT Standard Specification for HIGHWAY and STRUCTURE CONSTRUCTION latest edition.
2. Color:
   Background - Yellow
3. Corners may be square or rounded when base material is plywood. When base material is metal the corners shall be rounded.

SIZE	A	B	C	D	E	F	G	H	I	J	K	L	M	N	O	P	Q	R	S	T	U	V	W	X	Y	Z	Area sq. ft.
1	12								1																		1.0
2S	18								1 ½																		2.25
2M	18								1 ½																		2.25
3																											
4																											
5																											

STANDARD SIGN
W5-54

WISCONSIN DEPT OF TRANSPORTATION

APPROVED Matthew R Rauch
for State Traffic Engineer

DATE 11/3/10 PLATE NO. W5-54.8

PROJECT NO:	HWY:	COUNTY:		SHEET NO: 315	E

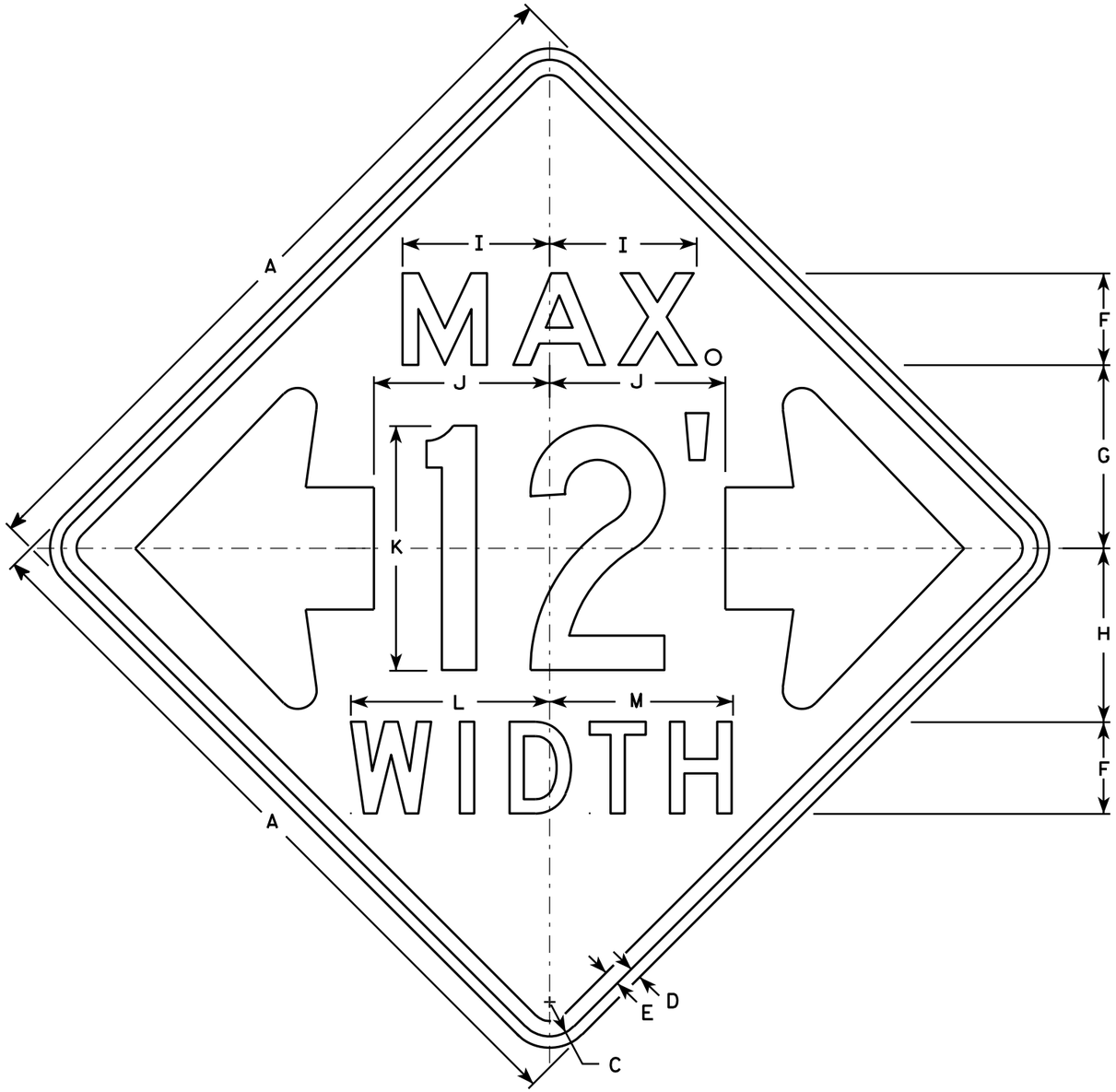

W12-52

NOTES

1. Sign is Type II - Type F Reflective - reference WIS DOT Standard Specification for HIGHWAY and STRUCTURE CONSTRUCTION latest edition.
2. Color:
   Background - Orange
   Message - Black
3. Message Series - See note 5
4. Corners may be square or rounded when base material is plywood but borders shall be rounded as shown. When base material is metal, the corners and borders shall be rounded.
5. The top line is series E, the numerals are series C, and the bottom line is series D.
6. Substitute appropriate numerals and adjust spacing as required.

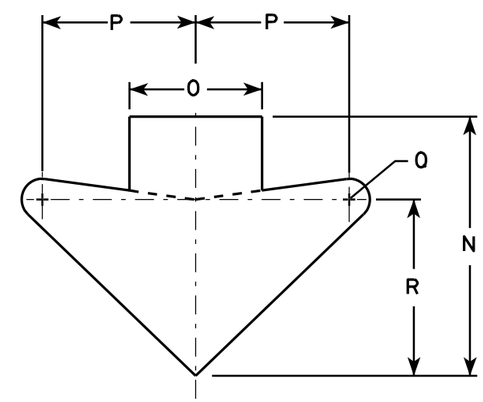

ARROW DETAIL

SIZE	A	B	C	D	E	F	G	H	I	J	K	L	M	N	O	P	Q	R	S	T	U	V	W	X	Y	Z	Area sq. ft.
1																											
2S	48		2 1/4	3/4	1	6	12	11 3/8	9 5/8	11 1/2	16	13	12	15 5/8	8	9 1/4	1 1/4	10 5/8									16.0
2M	48		2 1/4	3/4	1	6	12	11 3/8	9 5/8	11 1/2	16	13	12	15 5/8	8	9 1/4	1 1/4	10 5/8									16.0
3																											
4																											
5																											

STANDARD SIGN
W12-52

WISCONSIN DEPT OF TRANSPORTATION

APPROVED Matthew R Rauch
for State Traffic Engineer

DATE 3/16/11 PLATE NO. W12-52.7

PROJECT NO: | HWY: | COUNTY: | SHEET NO: 316 | E

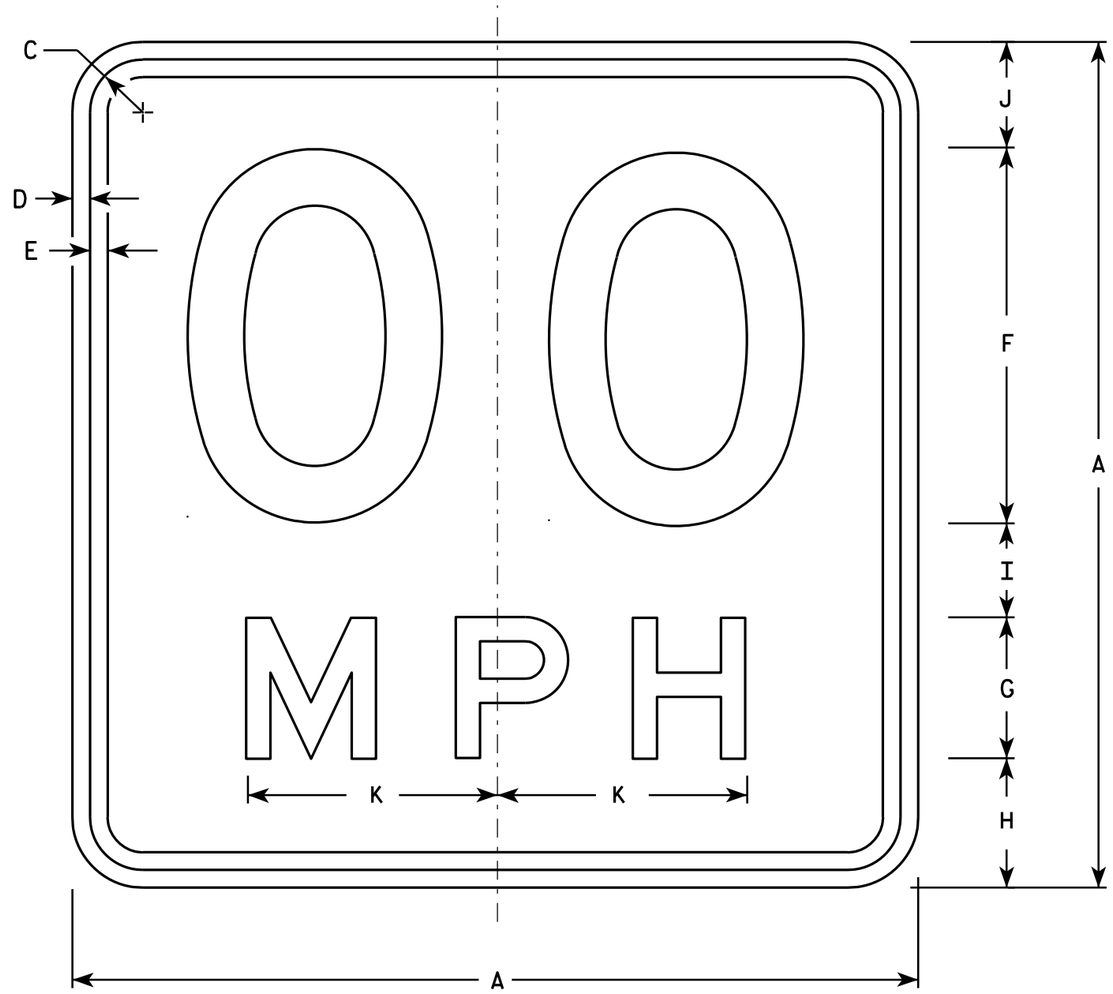

W13-1

* For 30" x 30" Warning Signs, use 18" x 18" W13-1 signs.
For 36" x 36" Warning Signs, use 24" x 24" W13-1 signs.

NOTES

1. Sign is Type II - Type F Reflective - reference WIS DOT Standard Specification for HIGHWAY and STRUCTURE CONSTRUCTION latest edition.
2. Color:
   Background - Yellow
   Message - Black
3. Message Series - See Note 6
4. Corners may be square or rounded when base material is plywood but borders shall be rounded as shown. When base material is metal, the corners and borders shall be rounded.
5. Substitute appropriate numerals and optically space about centerline to achieve proper balance.
6. Line 1 is Series D
   Line 2 is Series E

SIZE	A	B	C	D	E	F	G	H	I	J	K	L	M	N	O	P	Q	R	S	T	U	V	W	X	Y	Z	Area sq. ft.
1	18		1 1/8	3/8	3/8	8	3	2 3/4	2	2 1/4	5 3/8																2.25
* 2S	18		1 1/8	3/8	3/8	8	3	2 3/4	2	2 1/4	5 3/8																2.25
* 2M	18		1 1/8	3/8	3/8	8	3	2 3/4	2	2 1/4	5 3/8																2.25
3	24		1 1/8	3/8	1/2	10	4	4	2 3/4	3 1/4	6 5/8																4.00
4	36		1 5/8	5/8	3/4	16	6	5 1/2	4	4 1/2	10 5/8																9.00
5	36		1 5/8	5/8	3/4	16	6	5 1/2	4	4 1/2	10 5/8																9.00

STANDARD SIGN
W13-1

WISCONSIN DEPT OF TRANSPORTATION

APPROVED Matthew R Rauch
For State Traffic Engineer

DATE 5/31/12 PLATE NO. W13-1.16

PROJECT NO: | HWY: | COUNTY: | SHEET NO: 317 | E

NOTES

1. Sign is Type II- Type F Reflective
2. Color:
   Background - Yellow
   Message - Black
3. Message Series - Lines 1 and 2 are Series D.
   Line 3 is series C.
4. Corners and borders shall be rounded on all base materials for this sign.

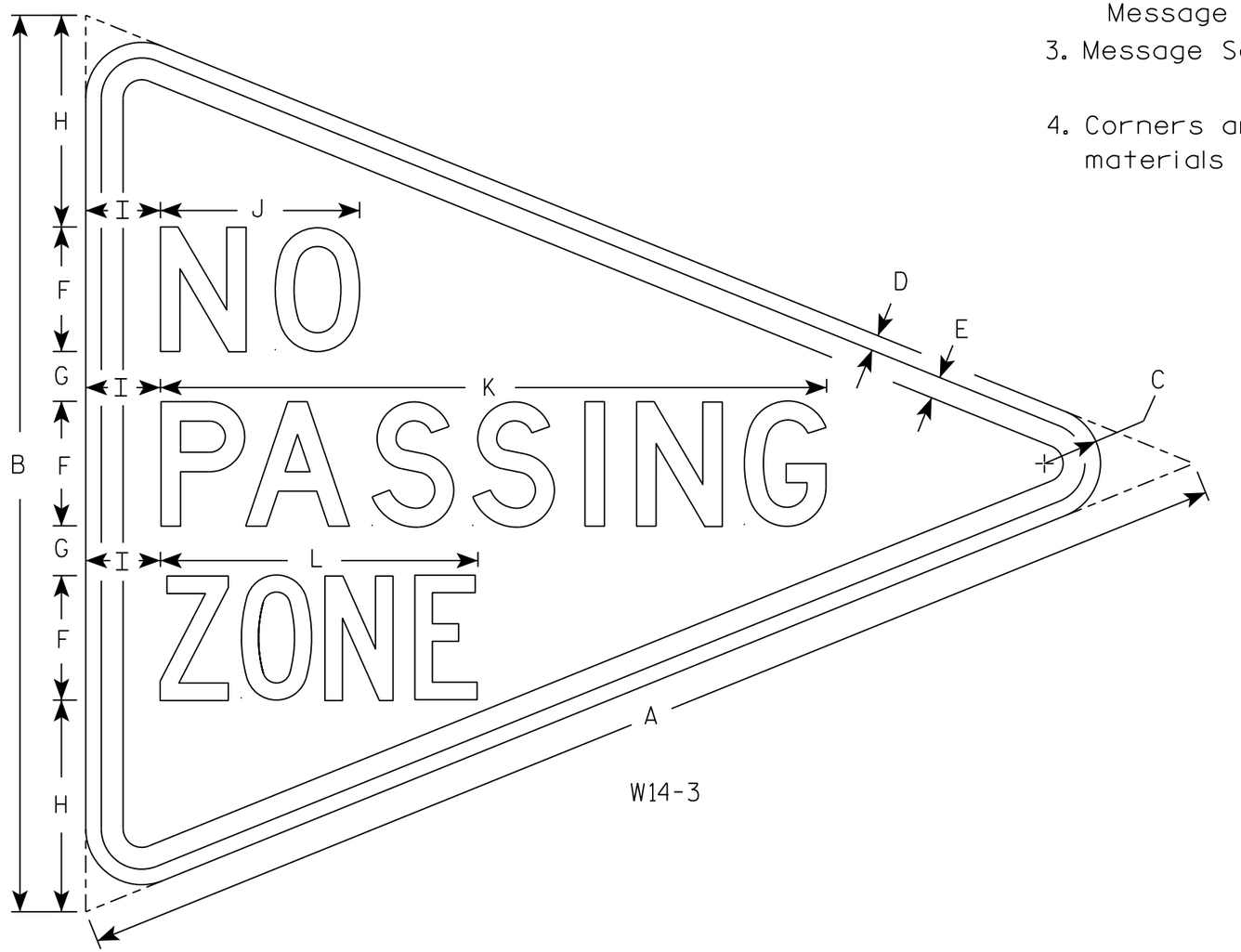

W14-3

SIZE	A	B	C	D	E	F	G	H	I	J	K	L	M	N	O	P	Q	R	S	T	U	V	W	X	Y	Z	Area sq. ft.
1																											
2S	48	36	2 1/4	5/8	7/8	5	2	8 1/2	3	8	26 3/4	12 3/4															5.56
2M																											
3																											
4																											
5																											

STANDARD SIGN
W14-3

WISCONSIN DEPT OF TRANSPORTATION

APPROVED Matthew R Rauch
for State Traffic Engineer

DATE 3/21/17 PLATE NO. W14-3.10

PROJECT NO: | HWY: | COUNTY: | SHEET NO: 318 | E

NOTES

1. Sign is Type II - Type F Reflective
2. Color:
   Background - Orange
   Message - Black
3. Message Series - C
4. Corners may be square or rounded when base material is plywood but borders shall be rounded as shown. When base material is metal, the corners and borders shall be rounded.

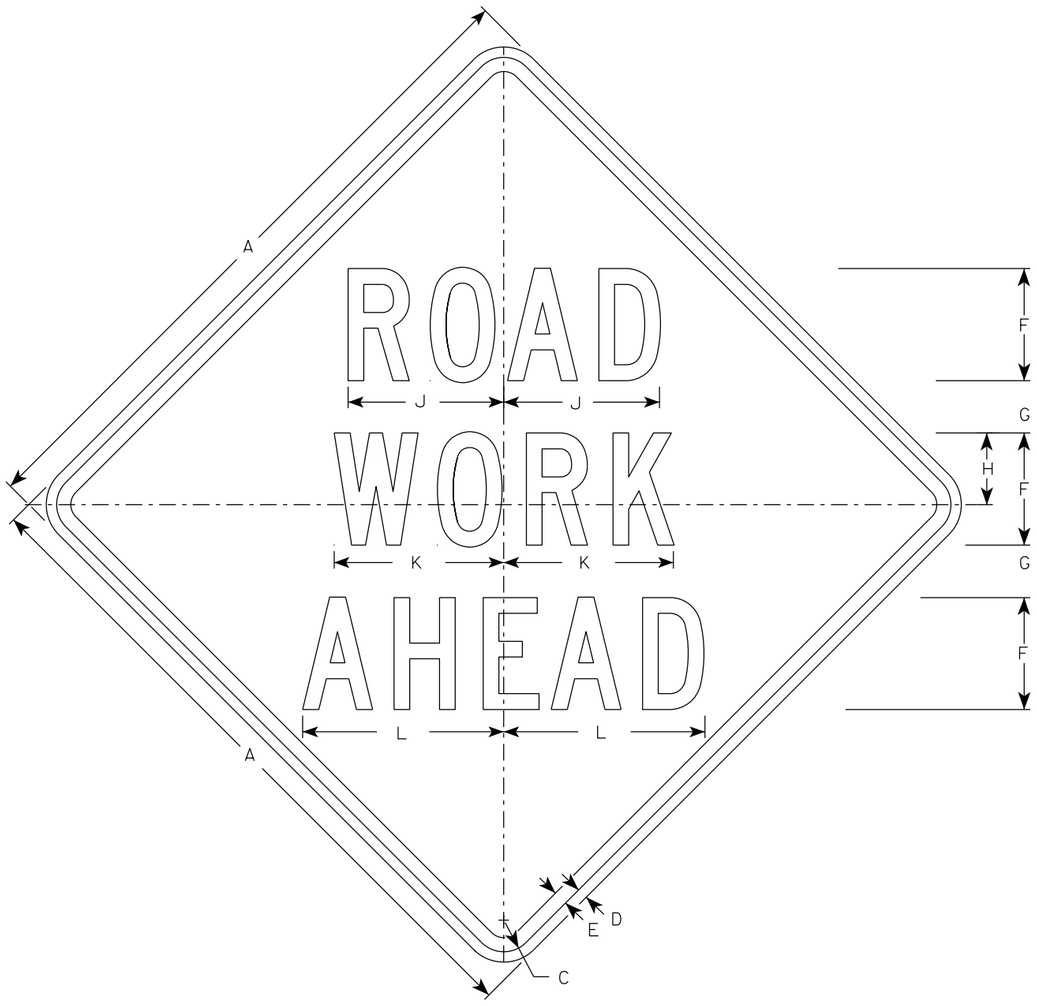

W20-1A

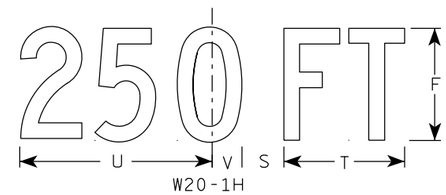

W20-1H

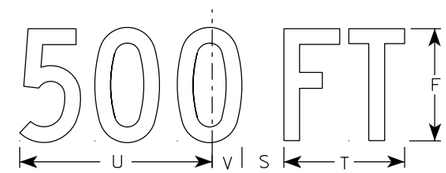

W20-1D

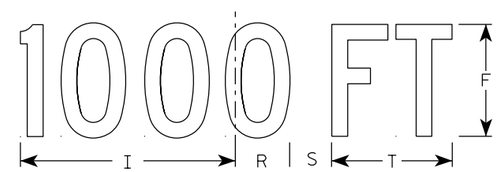

W20-1C

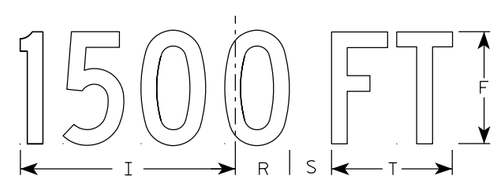

W20-1B

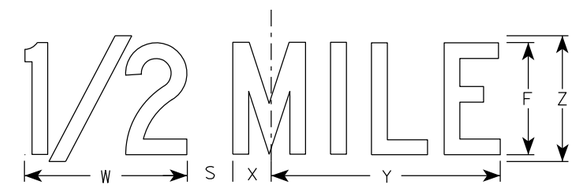

W20-1G

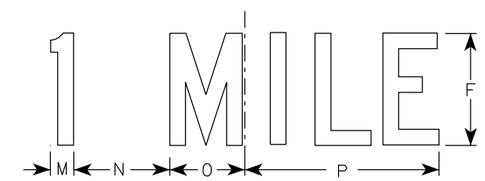

W20-1F

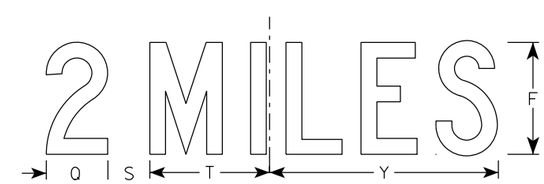

W20-1E

SIZE	A	B	C	D	E	F	G	H	I	J	K	L	M	N	O	P	Q	R	S	T	U	V	W	X	Y	Z	Area sq. ft.
1	36		1 5/8	5/8	3/4	5	2 5/8	3 1/4	10 1/8	7	7 5/8	8 7/8	1 1/8	4 1/2	3 1/2	9	3 1/4	2 1/2	2 1/4	5 5/8	9	1 3/8	8	1 3/4	10 3/4	6	9.0
2S	48		2 1/4	3/4	1	8	3 3/4	5 1/8	15 3/8	11 1/8	12 1/8	14 3/8	1 5/8	6 7/8	5 3/8	13 7/8	4 3/8	3 7/8	3	8 5/8	13 3/4	2 1/8	11 7/8	2 3/4	16 3/8	9	16.0
2M	48		2 1/4	3/4	1	8	3 3/4	5 1/8	15 3/8	11 1/8	12 1/8	14 3/8	1 5/8	6 7/8	5 3/8	13 7/8	4 3/8	3 7/8	3	8 5/8	13 3/4	2 1/8	11 7/8	2 3/4	16 3/8	9	16.0
3	48		2 1/4	3/4	1	8	3 3/4	5 1/8	15 3/8	11 1/8	12 1/8	14 3/8	1 5/8	6 7/8	5 3/8	13 7/8	4 3/8	3 7/8	3	8 5/8	13 3/4	2 1/8	11 7/8	2 3/4	16 3/8	9	16.0
4	48		2 1/4	3/4	1	8	3 3/4	5 1/8	15 3/8	11 1/8	12 1/8	14 3/8	1 5/8	6 7/8	5 3/8	13 7/8	4 3/8	3 7/8	3	8 5/8	13 3/4	2 1/8	11 7/8	2 3/4	16 3/8	9	16.0
5	48		2 1/4	3/4	1	8	3 3/4	5 1/8	15 3/8	11 1/8	12 1/8	14 3/8	1 5/8	6 7/8	5 3/8	13 7/8	4 3/8	3 7/8	3	8 5/8	13 3/4	2 1/8	11 7/8	2 3/4	16 3/8	9	16.0

STANDARD SIGN
W20-1A, B, C, D, E, F, G & H

WISCONSIN DEPT OF TRANSPORTATION

APPROVED Matthew R Rauch
For State Traffic Engineer
DATE 3/25/2020 PLATE NO. W20-1.11

PROJECT NO:

SHEET NO: 319 E

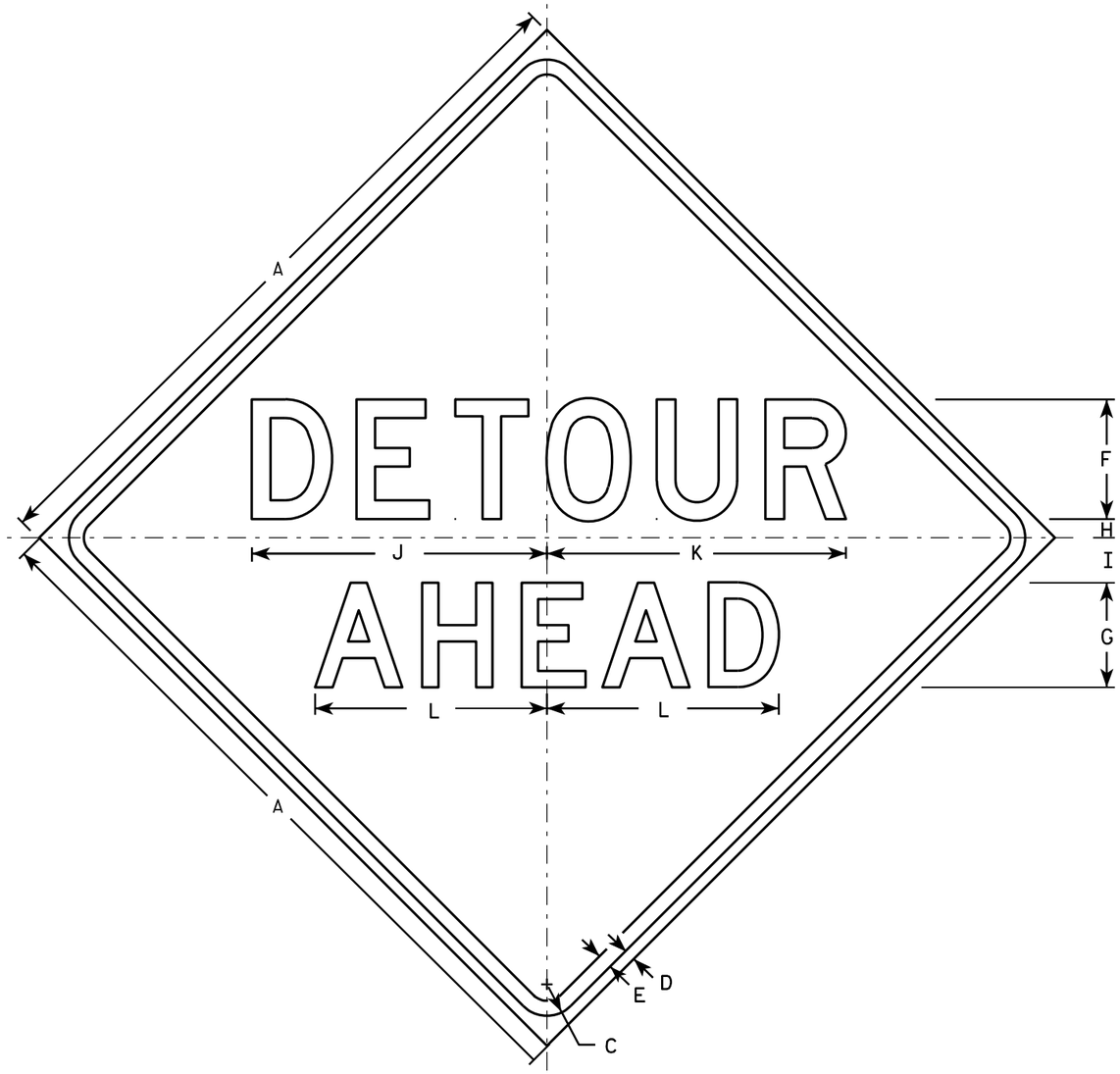

W20-2A

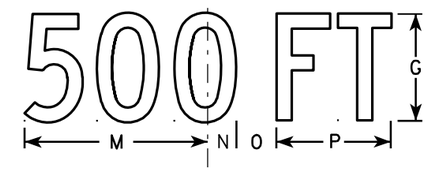

W20-2D

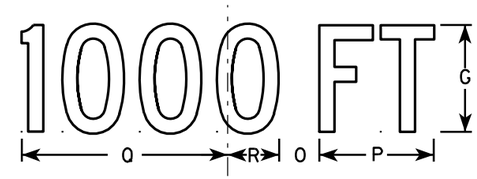

W20-2C

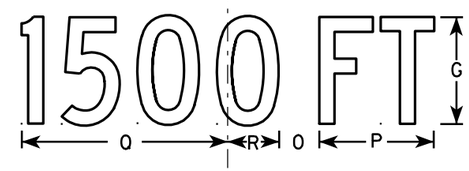

W20-2B

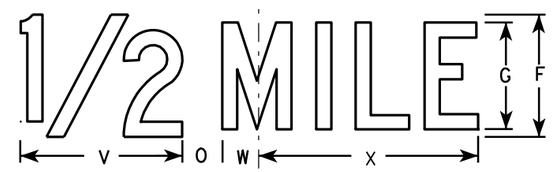

W20-2G

W20-2F

NOTES

1. Sign is Type II - Type F Reflective - reference WIS DOT Standard Specification for HIGHWAY and STRUCTURE CONSTRUCTION latest edition.
2. Color:
   Background - Orange
   Message - Black
3. Message Series - See note 5
4. Corners may be square or rounded when base material is plywood but borders shall be rounded as shown. When base material is metal, the corners and borders shall be rounded.
5. Line 1 is Series D.
   Line 2 is Series D for AHEAD and Series C for all other distances.

SIZE	A	B	C	D	E	F	G	H	I	J	K	L	M	N	O	P	Q	R	S	T	U	V	W	X	Y	Z	Area sq. ft.
1	36		1 5/8	5/8	3/4	6	5	1	2 1/4	14 3/4	15	11 5/8	9	1 3/8	1 7/8	5 5/8	10 1/8	2 1/2	1 1/8	4 1/2	3 1/2	8	1 3/4	10 3/4			9.0
2S	48		2 1/4	3/4	1	8	7	1 1/4	3	19 3/4	20	15 1/2	12	1 7/8	2 5/8	7 1/2	13 1/2	3 3/8	1 1/2	6	4 5/8	10 5/8	2 3/8	14 3/8			16.0
2M	48		2 1/4	3/4	1	8	7	1 1/4	3	19 3/4	20	15 1/2	12	1 7/8	2 5/8	7 1/2	13 1/2	3 3/8	1 1/2	6	4 5/8	10 5/8	2 3/8	14 3/8			16.0
3	48		2 1/4	3/4	1	8	7	1 1/4	3	19 3/4	20	15 1/2	12	1 7/8	2 5/8	7 1/2	13 1/2	3 3/8	1 1/2	6	4 5/8	10 5/8	2 3/8	14 3/8			16.0
4	48		2 1/4	3/4	1	8	7	1 1/4	3	19 3/4	20	15 1/2	12	1 7/8	2 5/8	7 1/2	13 1/2	3 3/8	1 1/2	6	4 5/8	10 5/8	2 3/8	14 3/8			16.0
5	48		2 1/4	3/4	1	8	7	1 1/4	3	19 3/4	20	15 1/2	12	1 7/8	2 5/8	7 1/2	13 1/2	3 3/8	1 1/2	6	4 5/8	10 5/8	2 3/8	14 3/8			16.0

STANDARD SIGN
W20-2A,B,C,D,F & G

WISCONSIN DEPT OF TRANSPORTATION

APPROVED Matthew R Rauch
for State Traffic Engineer
DATE 3/18/11 PLATE NO. W20-2.6

PROJECT NO:	HWY:	COUNTY:		SHEET NO: 320	E

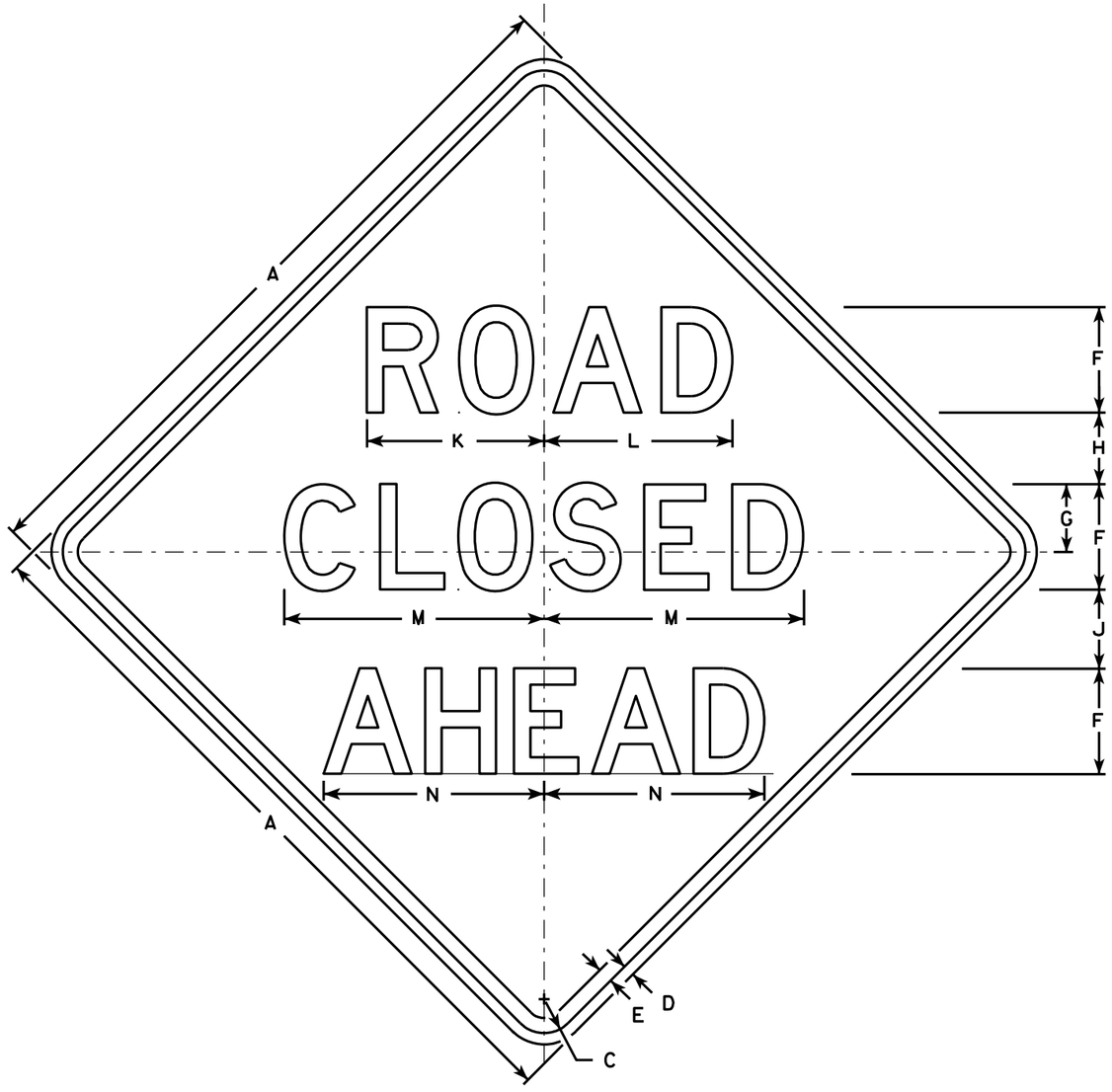

W20-3A

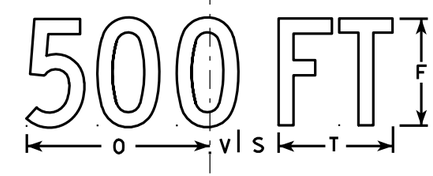

W20-3D

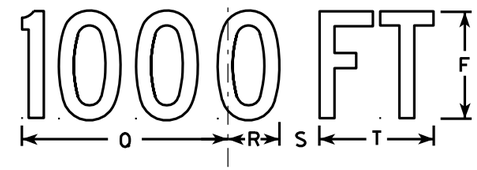

W20-3C

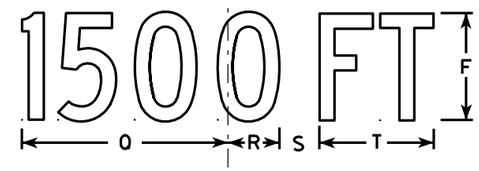

W20-3B

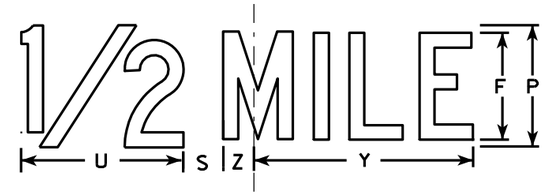

W20-3G

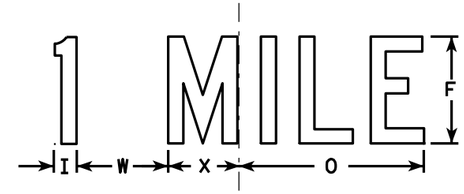

W20-3F

NOTES

1. Sign is Type II - Type F Reflective - reference WIS DOT Standard Specification for HIGHWAY and STRUCTURE CONSTRUCTION latest edition.
2. Color:
   Background - Orange
   Message - Black
3. Message Series - see note 5
4. Corners may be square or rounded when base material is plywood but borders shall be rounded as shown. When base material is metal, the corners and borders shall be rounded.
5. Lines 1 and 2 are Series D.
   Line 3 is Series D for AHEAD and Series C for all other distances.

SIZE	A	B	C	D	E	F	G	H	I	J	K	L	M	N	O	P	Q	R	S	T	U	V	W	X	Y	Z	Area sq. ft.
1	36		1 5/8	5/8	3/4	5	3 3/8	3 1/2	1 1/8	4	8 3/8	8 7/8	12 1/2	11	9	6	10 1/8	2 1/2	1 7/8	5 5/8	8	1 3/8	4 1/2	3 1/2	10 3/4	1 3/4	9.0
2S	48		2 1/4	3/4	1	7	4 1/2	4 3/4	1 1/2	5 1/4	11 3/4	12 1/2	17 1/4	14 5/8	12	8	13 1/2	3 3/8	2 5/8	7 1/2	10 5/8	1 7/8	6	4 5/8	14 3/8	2 3/8	16.0
2M	48		2 1/4	3/4	1	7	4 1/2	4 3/4	1 1/2	5 1/4	11 3/4	12 1/2	17 1/4	14 5/8	12	8	13 1/2	3 3/8	2 5/8	7 1/2	10 5/8	1 7/8	6	4 5/8	14 3/8	2 3/8	16.0
3	48		2 1/4	3/4	1	7	4 1/2	4 3/4	1 1/2	5 1/4	11 3/4	12 1/2	17 1/4	14 5/8	12	8	13 1/2	3 3/8	2 5/8	7 1/2	10 5/8	1 7/8	6	4 5/8	14 3/8	2 3/8	16.0
4	48		2 1/4	3/4	1	7	4 1/2	4 3/4	1 1/2	5 1/4	11 3/4	12 1/2	17 1/4	14 5/8	12	8	13 1/2	3 3/8	2 5/8	7 1/2	10 5/8	1 7/8	6	4 5/8	14 3/8	2 3/8	16.0
5	48		2 1/4	3/4	1	7	4 1/2	4 3/4	1 1/2	5 1/4	11 3/4	12 1/2	17 1/4	14 5/8	12	8	13 1/2	3 3/8	2 5/8	7 1/2	10 5/8	1 7/8	6	4 5/8	14 3/8	2 3/8	16.0

STANDARD SIGN
W20-3A, B, C, D, F & G

WISCONSIN DEPT OF TRANSPORTATION

APPROVED Matthew R Rauch
for State Traffic Engineer
DATE 3/18/11 PLATE NO. W20-3.7

PROJECT NO:	HWY:	COUNTY:		SHEET NO: 321	E

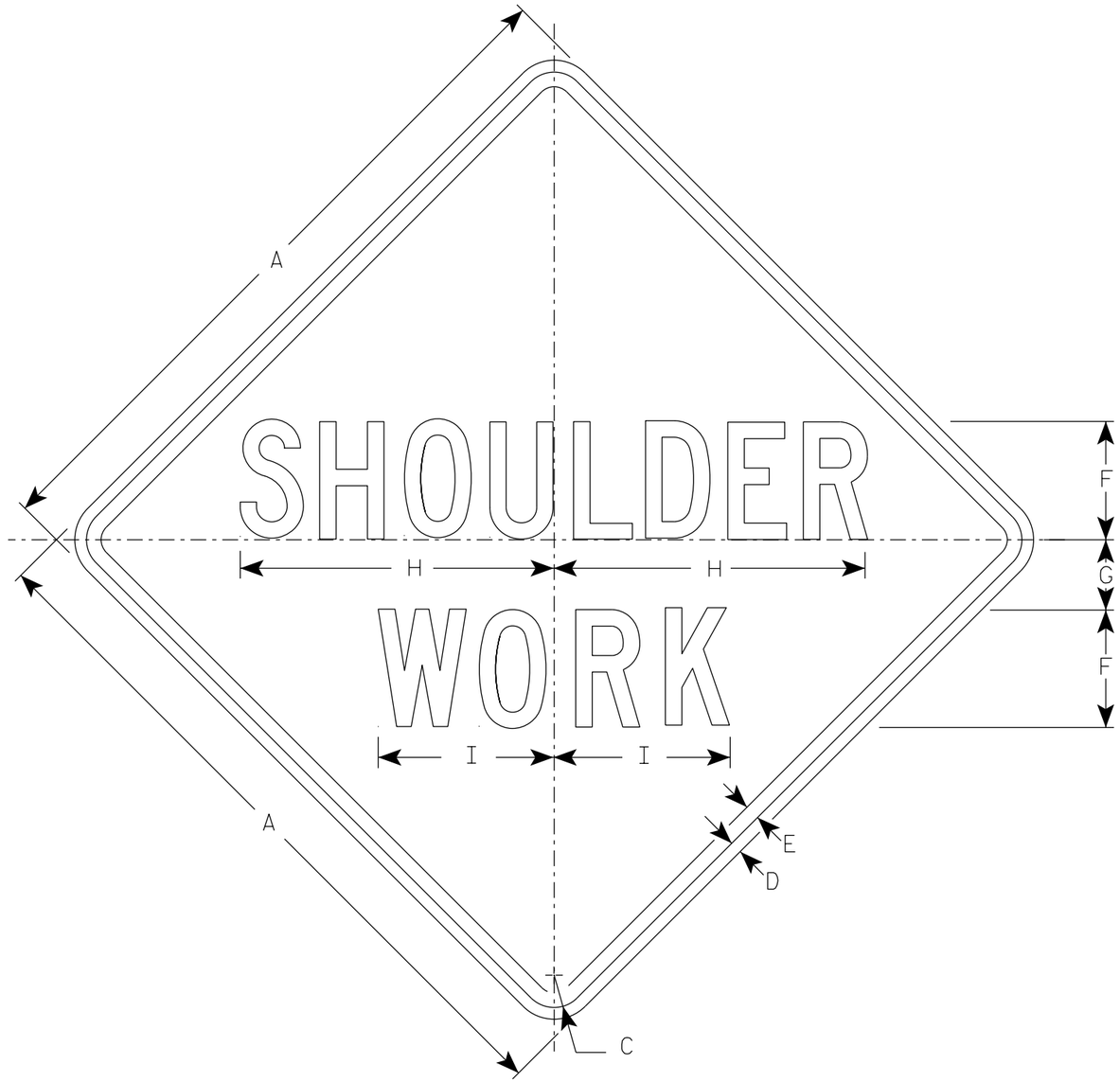

W21-5

NOTES

1. Sign is Type II - Type F Reflective
2. Color:
   Background - Orange
   Message - Black
3. Message Series - C
4. Corners may be square or rounded when base material is plywood but borders shall be rounded as shown. When base material is metal, the corners and borders shall be rounded.

SIZE	A	B	C	D	E	F	G	H	I	J	K	L	M	N	O	P	Q	R	S	T	U	V	W	X	Y	Z	Area sq. ft.
1	36		1 5/8	5/8	3/4	6	3 1/2	16	9																		9.0
2S	48		2 1/4	3/4	1	8	5	21 3/8	11 1/4																		16.0
2M	48		2 1/4	3/4	1	8	5	21 3/8	11 1/4																		16.0
3	48		2 1/4	3/4	1	8	5	21 3/8	11 1/4																		16.0
4	48		2 1/4	3/4	1	8	5	21 3/8	11 1/4																		16.0
5	48		2 1/4	3/4	1	8	5	21 3/8	11 1/4																		16.0

STANDARD SIGN
W21-5

WISCONSIN DEPT OF TRANSPORTATION

APPROVED Matthew R Rauch
for State Traffic Engineer
DATE 4/30/2020 PLATE NO. W21-5.6

PROJECT NO: | HWY: | COUNTY: | SHEET NO: 322 | E

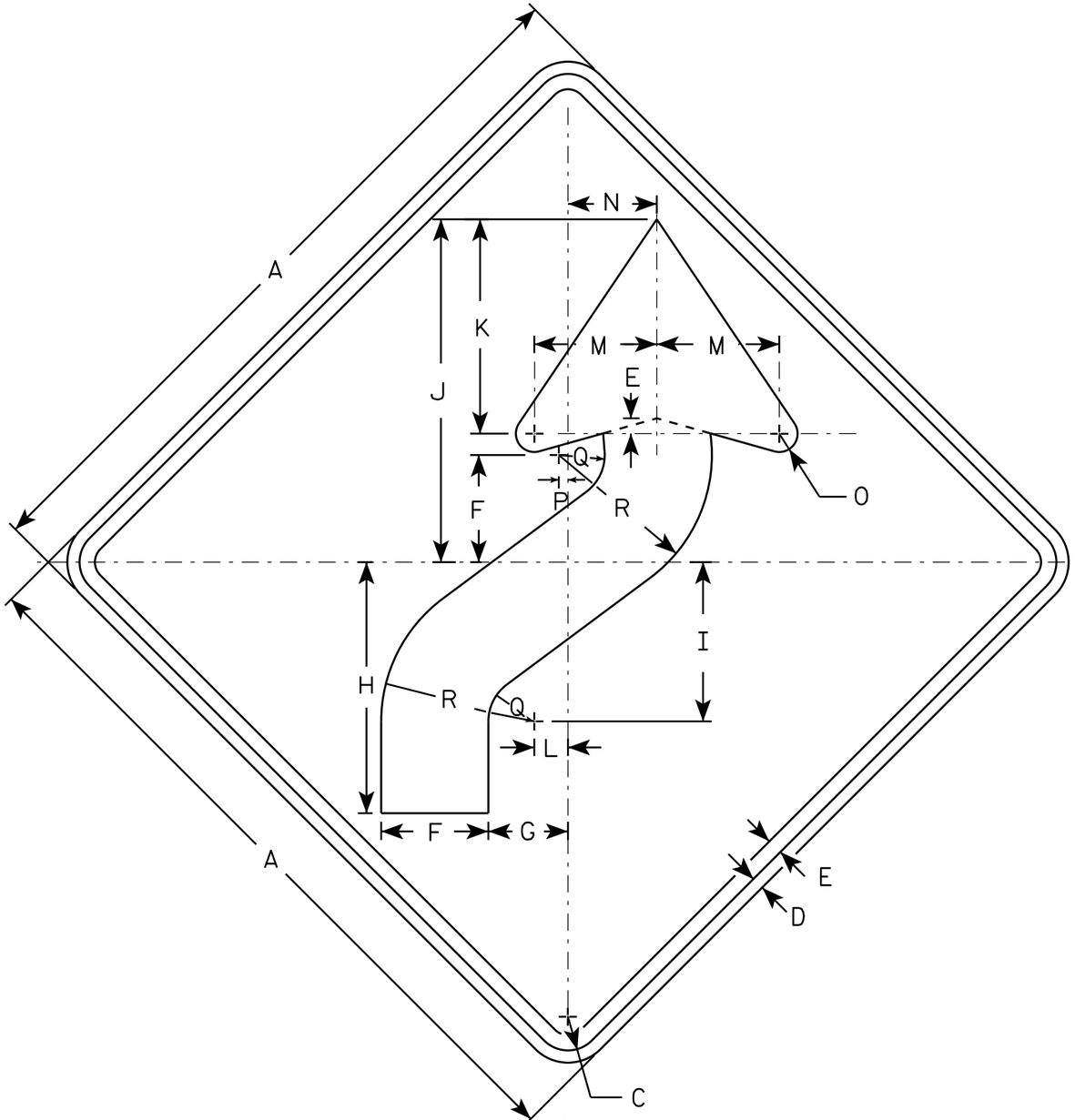

W01-4R

NOTES

1. Sign is Type II - Type F Reflective - reference WIS DOT Standard Specification for HIGHWAY and STRUCTURE CONSTRUCTION latest edition.
2. Color:
   Background - Orange
   Message - Black
3. Corners may be square or rounded when base material is plywood but borders shall be rounded as shown. When base material is metal, the corners and borders shall be rounded.
4. W01-4L is the same as W01-4R except the arrow is reversed along the vertical centerline.

SIZE	A	B	C	D	E	F	G	H	I	J	K	L	M	N	O	P	Q	R	S	T	U	V	W	X	Y	Z	Area sq. ft.
1	36		1 5/8	5/8	3/4	5 1/4	4	12 3/8	7 7/8	16 7/8	10 1/2	1 5/8	6	4 1/2	1	1/2	2 1/4	7 1/2									9.0
2S	48		2 1/4	3/4	1	7	5 1/4	16 1/2	10 1/2	22 1/2	14	2 1/4	8	6	1 1/4	5/8	3	10									16.0
2M	48		2 1/4	3/4	1	7	5 1/4	16 1/2	10 1/2	22 1/2	14	2 1/4	8	6	1 1/4	5/8	3	10									16.0
3	48		2 1/4	3/4	1	7	5 1/4	16 1/2	10 1/2	22 1/2	14	2 1/4	8	6	1 1/4	5/8	3	10									16.0
4	48		2 1/4	3/4	1	7	5 1/4	16 1/2	10 1/2	22 1/2	14	2 1/4	8	6	1 1/4	5/8	3	10									16.0
5	48		2 1/4	3/4	1	7	5 1/4	16 1/2	10 1/2	22 1/2	14	2 1/4	8	6	1 1/4	5/8	3	10									16.0

STANDARD SIGN
W01-4

WISCONSIN DEPT OF TRANSPORTATION

APPROVED Matthew R Rauch
for State Traffic Engineer

DATE 11/18/13 PLATE NO W01-4.1

PROJECT NO:	HWY:	COUNTY:		SHEET NO:	E

NOTES

1. Sign is Type II - Type F Reflective - reference WIS DOT Standard Specification for HIGHWAY and STRUCTURE CONSTRUCTION latest edition.
2. Color:
   Background - Orange
   Message - Black
3. Corners may be square or rounded when base material is plywood but borders shall be rounded as shown. When base material is metal, the corners and borders shall be rounded.

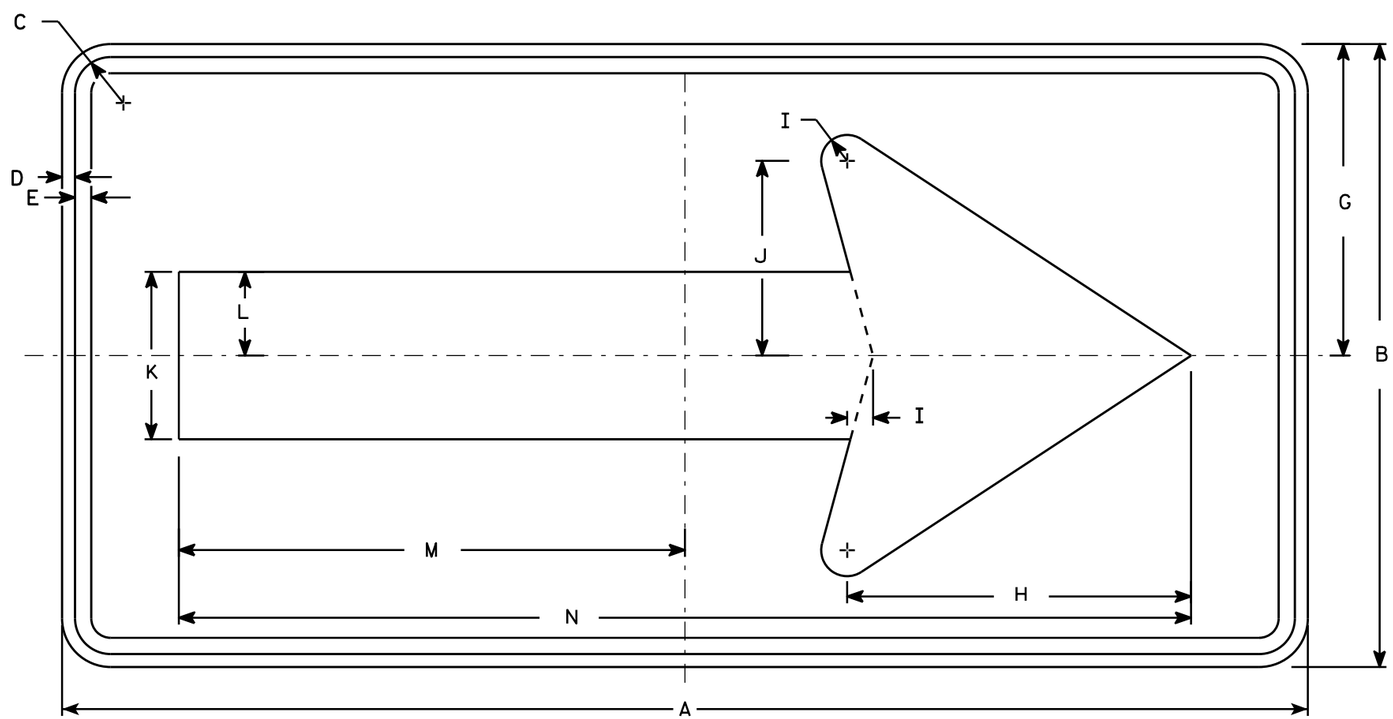

W01-6

SIZE	A	B	C	D	E	F	G	H	I	J	K	L	M	N	O	P	Q	R	S	T	U	V	W	X	Y	Z	Area sq. ft.
1																											
2S	48	24	1 3/8	1/2	5/8		12	13 1/4	1	7 1/2	6 1/2	3 1/4	19 1/2	39													8.0
2M	48	24	1 3/8	1/2	5/8		12	13 1/4	1	7 1/2	6 1/2	3 1/4	19 1/2	39													8.0
3	60	30	1 3/8	1/2	5/8		15	16 1/4	1 1/4	9 1/4	8	4	24 3/8	48 3/4													12.5
4	60	30	1 3/8	1/2	5/8		15	16 1/4	1 1/4	9 1/4	8	4	24 3/8	48 3/4													12.5
5	60	30	1 3/8	1/2	5/8		15	16 1/4	1 1/4	9 1/4	8	4	24 3/8	48 3/4													12.5

STANDARD SIGN
W01-6

WISCONSIN DEPT OF TRANSPORTATION

APPROVED Matthew R Rauch
for State Traffic Engineer

DATE 11/18/13 PLATE NO. W01-6.1

PROJECT NO: | HWY: | COUNTY: | SHEET NO: | E

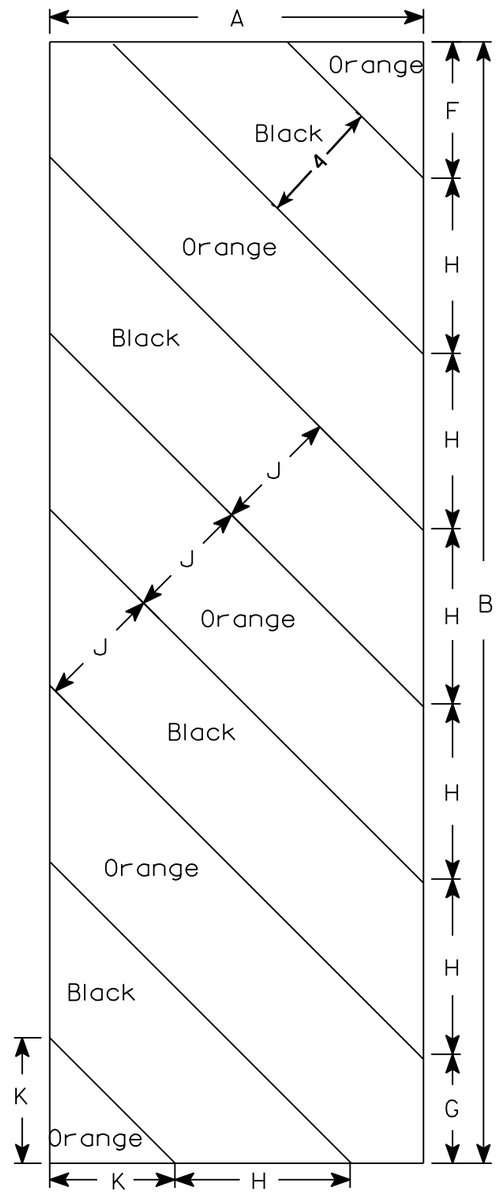

W05-52L

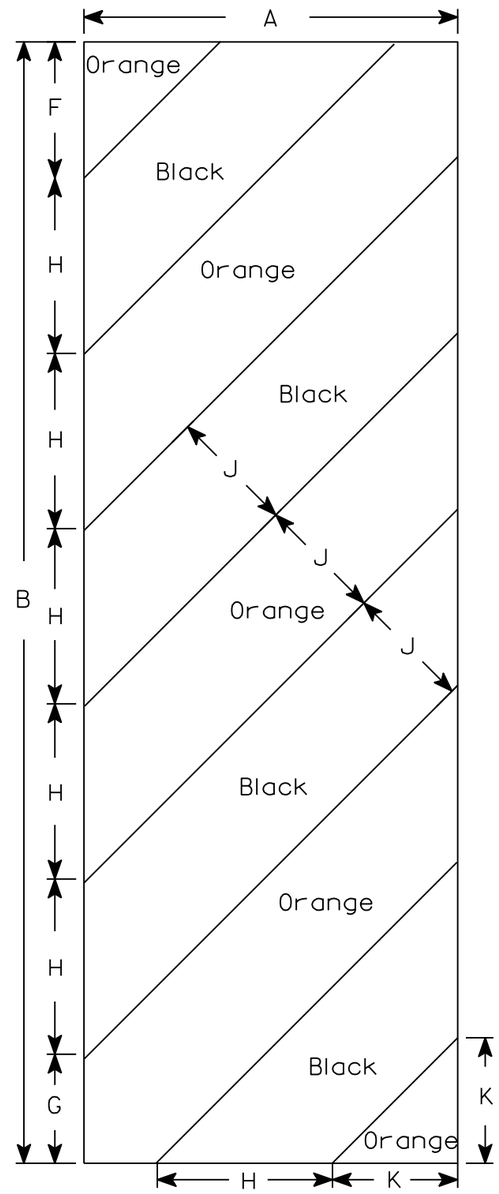

W05-52R

NOTES

1. Sign is Type II - Type F Reflective - reference WIS DOT Standard Specification for HIGHWAY and STRUCTURE CONSTRUCTION latest edition.
2. Color:
   Background - Orange
   Message - Black
3. Corners may be square or rounded when base material is plywood but borders shall be rounded as shown. When base material is metal, the corners and borders shall be rounded.
4. Alternate colors of stripes as shown.

SIZE	A	B	C	D	E	F	G	H	I	J	K	L	M	N	O	P	Q	R	S	T	U	V	W	X	Y	Z	Area sq. ft.
1																											
2S	12	36				4 3/8	3 1/2	5 5/8	45°	4	4																3.0
2M	12	36				4 3/8	3 1/2	5 5/8	45°	4	4																3.0
3	18	54				6	5 1/2	8 1/2	45°	6	6 9/16																6.75
4																											
5																											

STANDARD SIGN

W05-52L & W05-52R

WISCONSIN DEPT OF TRANSPORTATION

APPROVED Matthew R Rauch
for State Traffic Engineer

DATE 11/20/13 PLATE No. W05-52.1

PROJECT NO: | HWY: | COUNTY: | SHEET NO: E

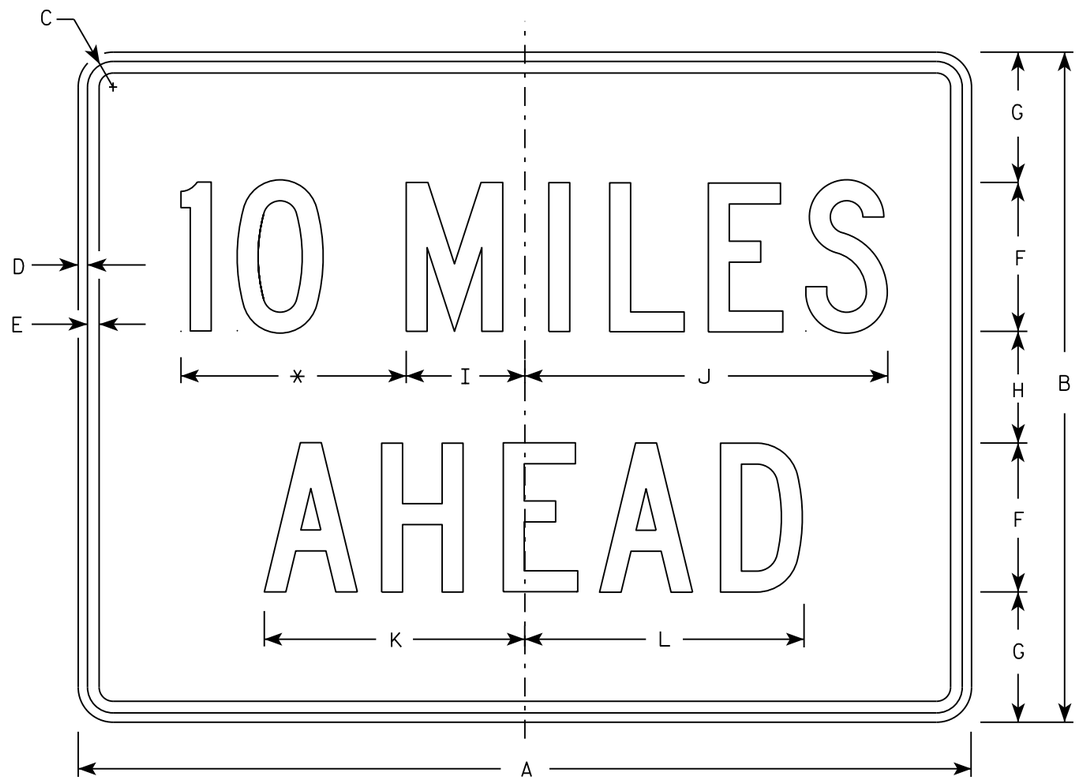

W057-52

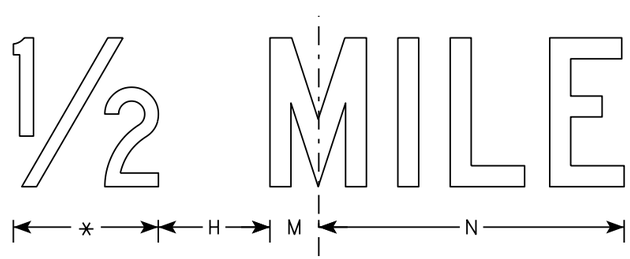

* See note 5

NOTES

1. Sign is Type II - Type F Reflective
2. Color:
   Background - Orange
   Message - Black
3. Message Series - C
4. Corners may be square or rounded when base material is plywood but borders shall be rounded as shown. When base material is metal, the corners and borders shall be rounded.
5. Substitute appropriate numerals to the nearest quarter mile and optically adjust spacing to achieve proper balance.

SIZE	A	B	C	D	E	F	G	H	I	J	K	L	M	N	O	P	Q	R	S	T	U	V	W	X	Y	Z	Area sq. ft.
1	36	24	1 1/8	3/8	1/2	6	4 1/2	3	4 3/4	14 5/8	10 5/8	11 3/8	2	12													6.0
2S	48	36	1 3/8	1/2	5/8	8	7	6	6 3/8	19 1/2	14	15	2 3/4	16 3/8													12.0
2M	48	36	1 3/8	1/2	5/8	8	7	6	6 3/8	19 1/2	14	15	2 3/4	16 3/8													12.0
3	48	36	1 3/8	1/2	5/8	8	7	6	6 3/8	19 1/2	14	15	2 3/4	16 3/8													12.0
4	48	36	1 3/8	1/2	5/8	8	7	6	6 3/8	19 1/2	14	15	2 3/4	16 3/8													12.0
5	48	36	1 3/8	1/2	5/8	8	7	6	6 3/8	19 1/2	14	15	2 3/4	16 3/8													12.0

STANDARD SIGN
W057-52

WISCONSIN DEPT OF TRANSPORTATION

APPROVED Matthew R Rauch
for State Traffic Engineer

DATE 3/21/17 PLATE NO. W057-52.2

PROJECT NO: | HWY: | COUNTY: | SHEET NO: 326 | E

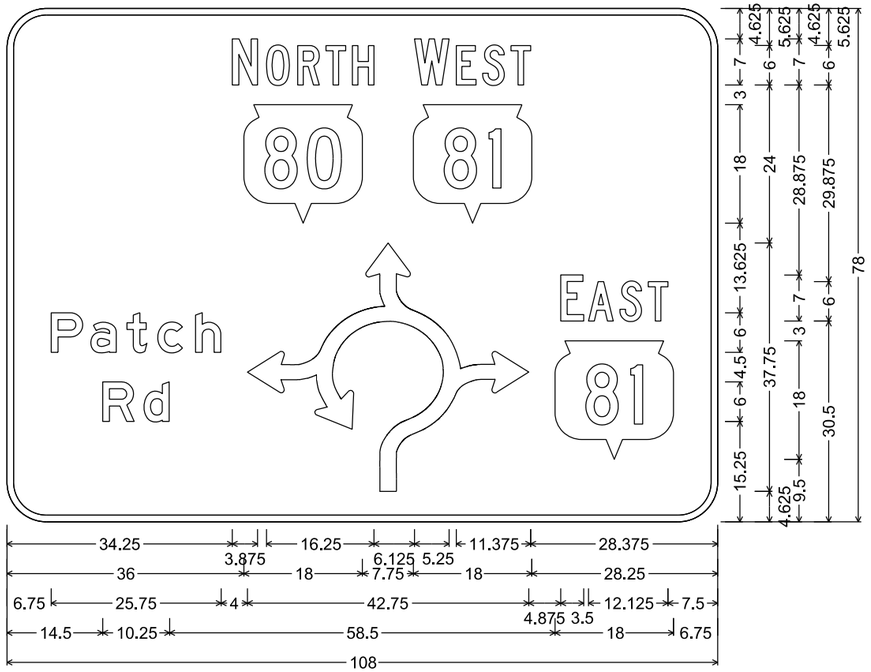

D1-62; 6.000" Radius, 1.000" Border,
"Patch", E; "Rd", E

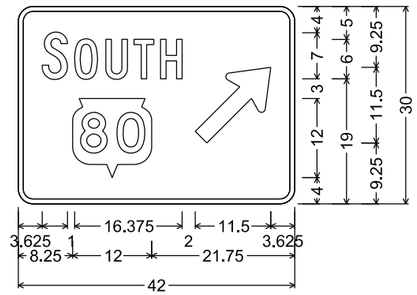

D1-1; 2.250" Radius, 0.750" Border

NOTES

1. Signs are Type II - Type H Reflective
2. Color:
   Background - Green
   Message - White
3. Message Series - C except as noted

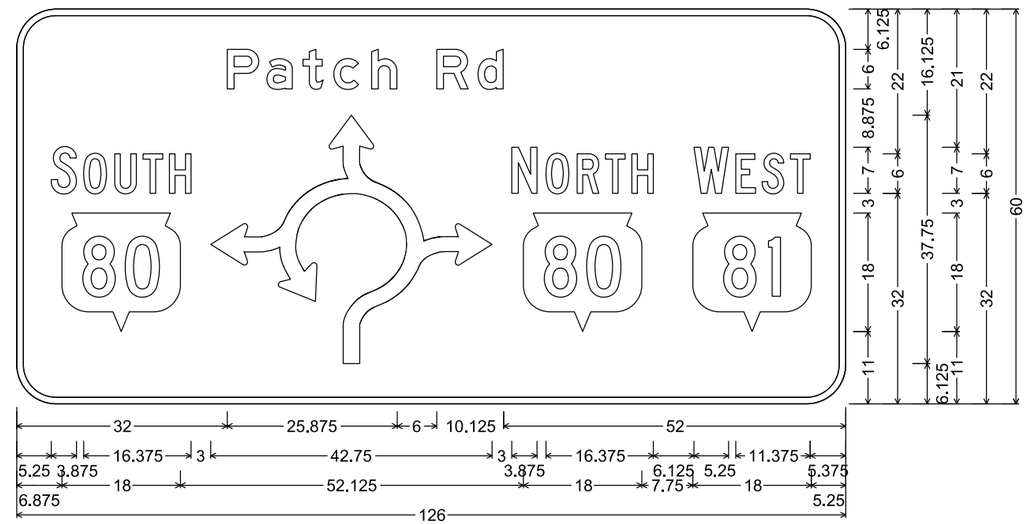

D1-62; 6.000" Radius, 1.000" Border, White on Green;
"Patch", E; "Rd", E

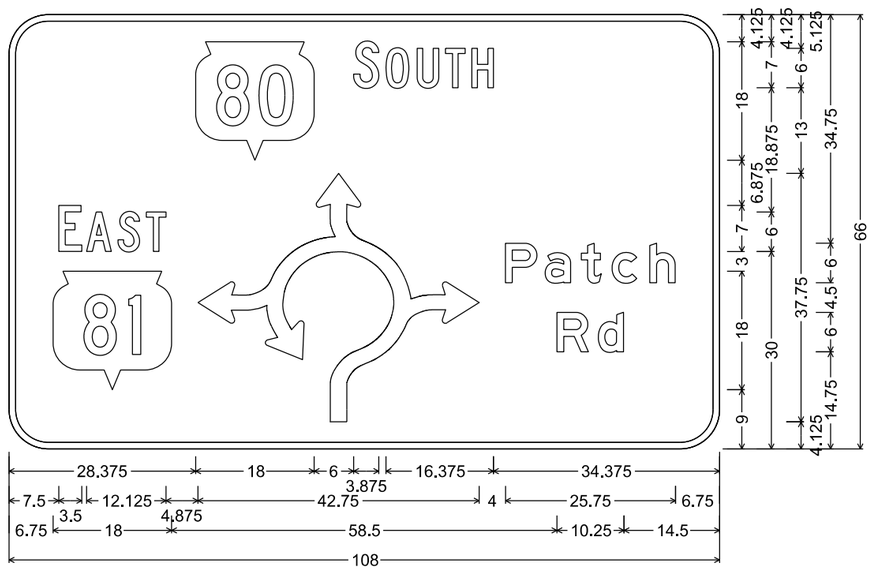

D1-62; 6.000" Radius, 1.000" Border,
"Patch", E; "Rd", E

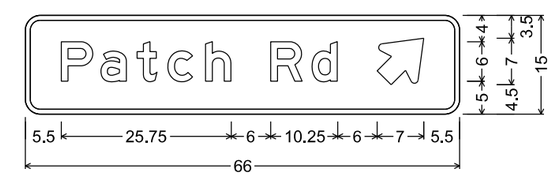

D1-1; 2.250" Radius, 0.750" Border,
"Patch", E; "Rd", E

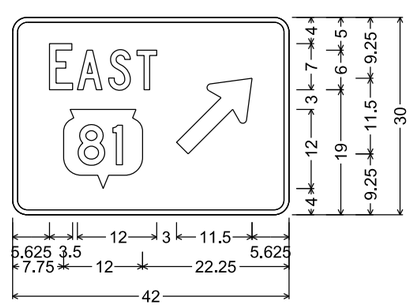

D1-1; 2.250" Radius, 0.750" Border

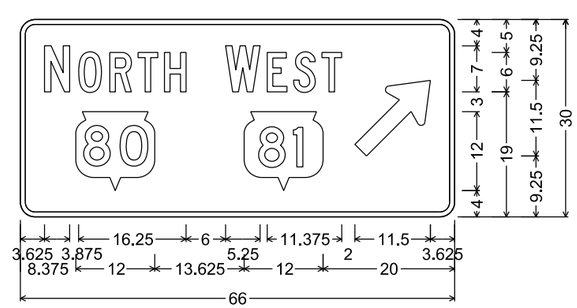

D1-1; 2.250" Radius, 0.750" Border

7

7

PROJECT NO:5235-03-70	HWY:STH 80	COUNTY:GRANT	PERMANENT SIGNING	SHEET NO: 327	E

STATE PROJECT NUMBER

5235-03-70

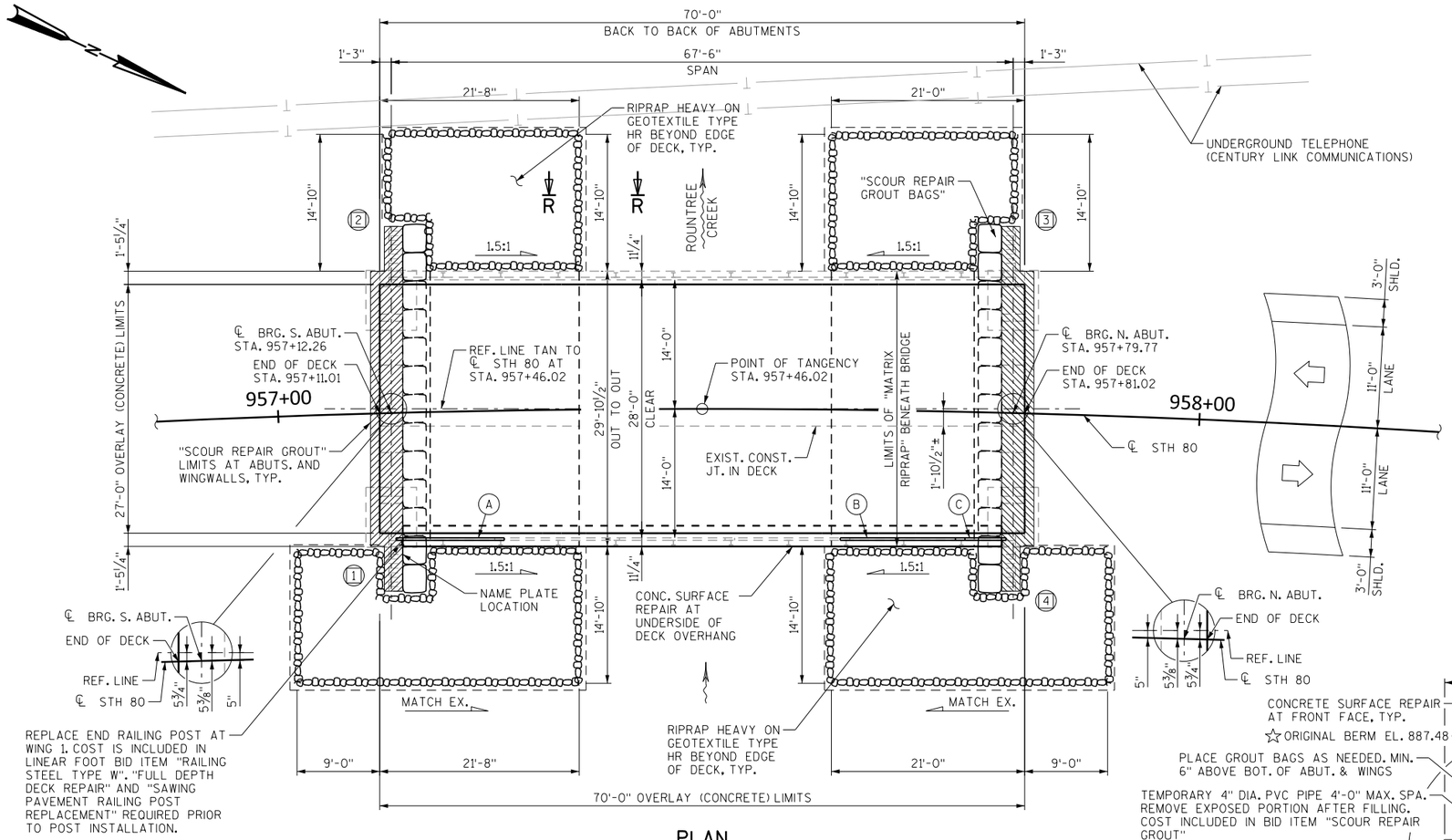

PLAN

CONCRETE OVERLAY - SINGLE SPAN STEEL DECK GIRDER BRIDGE

DESIGN DATA

LIVE LOAD:
DESIGN LOAD: HS-20
INVENTORY RATING = HS-17
OPERATING RATING = HS-28
WISCONSIN STANDARD PERMIT VEHICLE (WIS-SPV) = 230 KIPS

MATERIAL PROPERTIES:
CONCRETE MASONRY:
CONCRETE MASONRY OVERLAY DECKS.....f'c = 4,000 P.S.I.
ALL OTHER.....f'c = 3,500 P.S.I.

TRAFFIC DATA

STH 80
A.D.T. = 6,120 (2019)
A.D.T. = 7,220 (2044)
R.D.S. = 60 MPH

LEGEND

- TRAVEL DIRECTION
- (X) INDICATES WINGWALL NUMBER
- ☆ ELEVATION DATA IS BASED ON THE ORIGINAL PLAN INFORMATION (1941)
- IN LIEU OF MECHANICAL MEANS, ALTERNATIVE EXCAVATION METHODS MAY BE REQUIRED BENEATH THE DECK.
- (X) THRIE BEAM PANEL. SEE SHEET 4.
- APPROXIMATE LIMITS OF "SCOUR REPAIR GROUT".

LIST OF DRAWINGS

1. GENERAL PLAN AND ELEVATION
2. CROSS SECTION, NOTES, AND QUANTITIES
3. INFRARED THERMOGRAPHIC INVESTIGATION
4. STEEL RAILING TYPE 'W'

CURVE DATA

PI STA. = 956+57.21
Y = 479310.612
X = 882114.192
Δ = 39°36'39"
D = 4°29'59"
T = 458.55'
L = 880.28'
R = 1273.30'
PC STA. = 951+98.65
PT STA. = 960+78.94

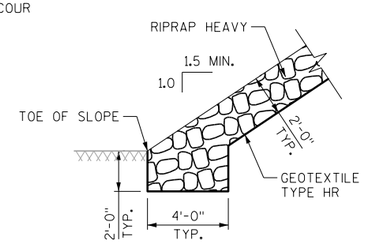

SECTION R-R

SHOWING RIPRAP TOE BEYOND EDGE OF DECK

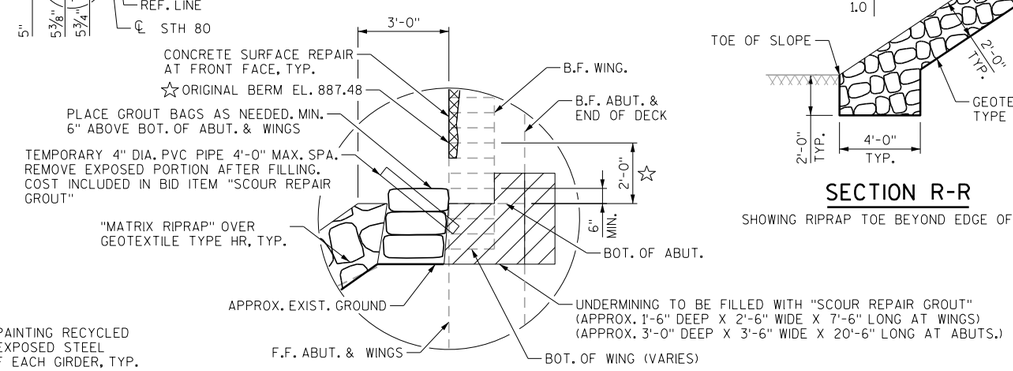

SECTION THRU ABUT.

SHOWING SCOUR REPAIRS

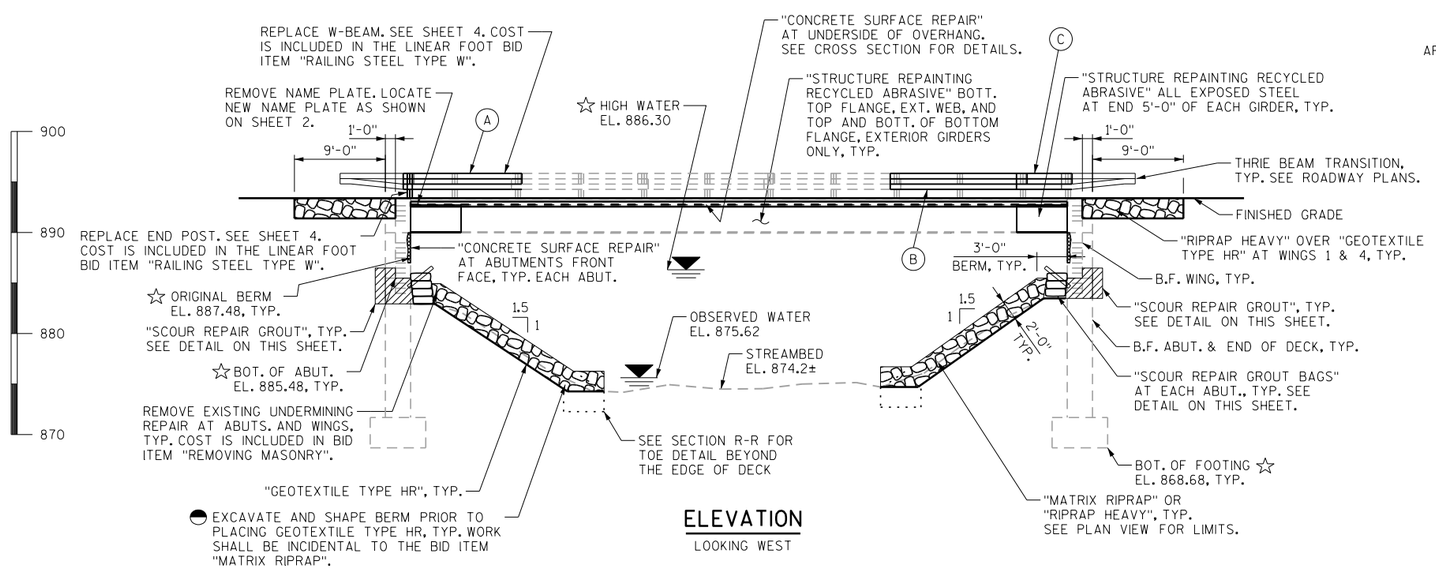

ELEVATION

LOOKING WEST

WISCONSIN VINCENT J. DIFRANCES E-45790 MILWAUKEE WI PROFESSIONAL ENGINEER

8/1/2022

STRUCTURES DESIGN CONTACTS

BRIDGE OFFICE:
AARON BONK (608) 261-0261

CONSULTANT:
VINCENT DIFRANCES, P.E. (920) 468-4771

NO.	DATE	REVISION	BY

JT ENGINEERING, INC Consultant Services

STATE OF WISCONSIN
DEPARTMENT OF TRANSPORTATION

ACCEPTED SDR 08/17/22
CHIEF STRUCTURES DESIGN ENGINEER DATE

STRUCTURE B-22-7

STH 80-STH 81-WATER ST. OVER ROUNTREE CREEK

COUNTY	CITY
GRANT	PLATTEVILLE

DESIGN SPEC. REHABILITATION N/A

DESIGNED BY	DESIGN CK'D.	DRAWN BY	PLANS CK'D.
VJD	BRS	VJD	BRS

GENERAL PLAN AND ELEVATION

SHEET 1 OF 4
328

8

8

STATE PROJECT NUMBER
5235-03-70

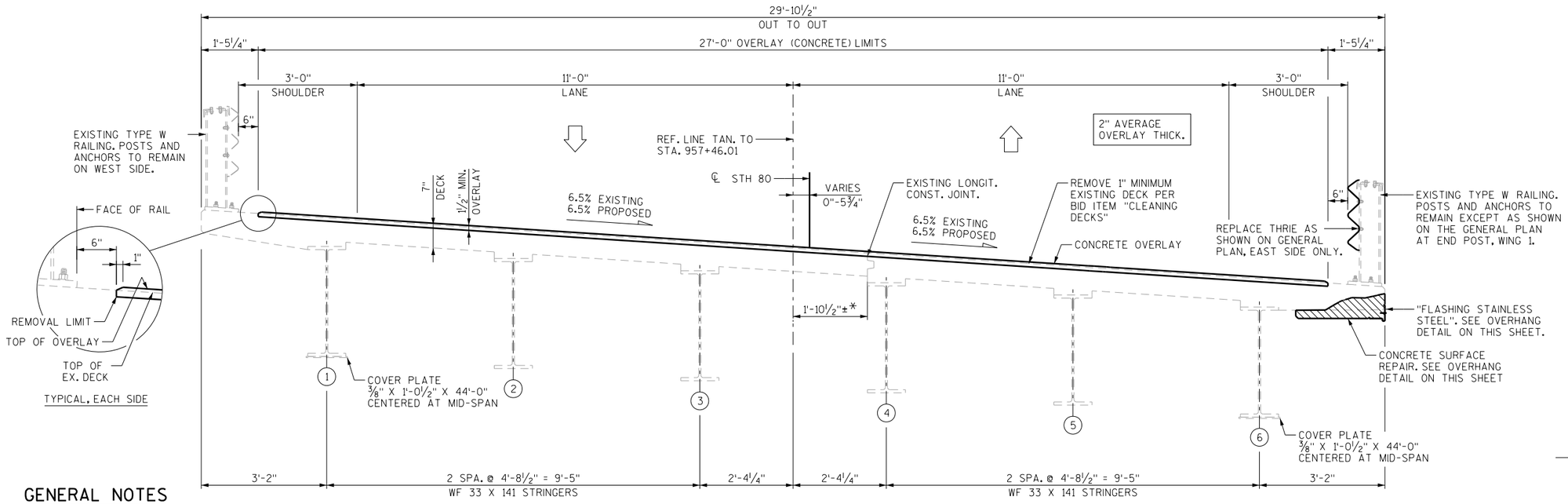

TYPICAL SECTION THRU BRIDGE

LOOKING NORTH
*DIMENSION VARIES FROM ORIGINAL PLAN

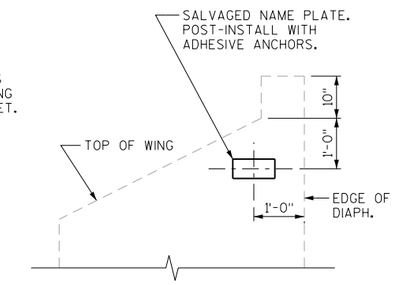

NAME PLATE DETAIL

LOOKING EAST AT FRONT FACE WING 1

GENERAL NOTES

DRAWINGS SHALL NOT BE SCALED.

DIMENSIONS SHOWN ARE BASED ON THE ORIGINAL STRUCTURE PLANS EXCEPT AS NOTED.

ALL STATIONS AND ELEVATIONS ARE IN FEET.

PROTECTIVE SURFACE TREATMENT SHALL BE APPLIED TO THE ENTIRE TOP SURFACE OF THE NEW CONCRETE OVERLAY.

SEAL OVERLAY CONSTRUCTION JOINTS ACCORDING TO SECTION 502.3.13.1 OF THE STANDARD SPECIFICATIONS. COST INCIDENTAL TO BID ITEM "CONCRETE MASONRY OVERLAY DECKS".

A MINIMUM OF 1-INCH OF CONCRETE SHALL BE REMOVED FROM THE ENTIRE BRIDGE DECK BETWEEN RAILS UNDER THE BID ITEM "CLEANING DECKS".

THE AVERAGE OVERLAY THICKNESS IS BASED ON THE MINIMUM OVERLAY THICKNESS PLUS ½-INCH TO ACCOUNT FOR VARIATIONS IN THE DECK SURFACE.

PREPARATION DECKS TYPE 1, PREPARATION DECKS TYPE 2, AND FULL-DEPTH DECK REPAIR AREAS ARE BASED ON THE PLANS AND AS DETERMINED BY THE ENGINEER. DECK PREPARATION AND FULL-DEPTH DECK REPAIRS SHALL BE FILLED WITH "CONCRETE MASONRY OVERLAY DECKS".

PROFILE GRADE LINE SHALL BE DETERMINED IN THE FIELD BASED ON A MINIMUM OVERLAY THICKNESS OF 1½" PLACED ABOVE THE DECK SURFACE AFTER SURFACE PREPARATION. EXPECTED AVERAGE OVERLAY THICKNESS IS 2". IF EXPECTED AVERAGE OVERLAY THICKNESS IS EXCEEDED BY MORE THAN ½", CONTACT THE STRUCTURE DESIGN SECTION.

ANY EXCAVATION REQUIRED TO COMPLETE THE CONCRETE MASONRY OVERLAY AT THE ABUTMENTS IS CONSIDERED INCIDENTAL TO THE BID ITEM "CONCRETE MASONRY OVERLAY DECKS".

ANY EXCAVATION AND SHAPING REQUIRED TO COMPLETE PLACEMENT OF MATRIX RIPRAP OR RIPRAP HEAVY AT THE ABUTMENTS IS CONSIDERED INCIDENTAL TO THE BID ITEMS "MATRIX RIPRAP" OR "RIPRAP HEAVY", RESPECTIVELY.

"REMOVING MASONRY" SHALL INCLUDE THE REMOVAL OF EXISTING UNDERMINING REPAIRS AT EACH ABUTMENT AND WINGS, WHICH INCLUDES CONCRETE AND ASPHALTIC MATERIALS, TO ALLOW THE INSTALLATION OF NEW SCOUR COUNTERMEASURES. ANY EXCAVATION AND SHAPING REQUIRED TO INSTALL SCOUR COUNTERMEASURES IS CONSIDERED INCIDENTAL TO THE BID ITEM "SCOUR REPAIR GROUT BAGS".

THE BID ITEM "FLASHING STAINLESS STEEL" SHALL INCLUDE PROVIDING AND INSTALLING THE STAINLESS STEEL FLASHING AND CONCRETE SCREWS, INCLUDING THE ¼" SCREWS USED TO SECURE THE CONCRETE SURFACE REPAIR.

FLASHING TO BE INSTALLED AFTER PROTECTIVE SURFACE TREATMENT APPLICATION.

CONCRETE SCREWS SHALL BE 410 STAINLESS STEEL.

EXTEND FLASHING TO FRONT FACE OF ABUTMENT DIAPHRAGM.

THE FLASHING IS TO BE A CONSTANT HEIGHT OVER THE BRIDGE LENGTH.

✪ CONCRETE SURFACE REPAIR SHALL BE USED FOR NEEDED REPAIRS ALONG THE ABUTMENT FRONT FACE AND EDGE AND BOTTOM OF DECK OVERHANG. LOCATIONS AND LIMITS OF REPAIRS AT ABUTMENTS SHALL BE DETERMINED IN THE FIELD BY THE ENGINEER. REPAIRS AT THE DECK OVERHANG SHALL BE FULL LENGTH ON THE EAST SIDE ALONG THE BRIDGE. QUANTITY LISTED IS APPROXIMATE.

"SAWING PAVEMENT RAILING POST REPLACEMENT" IS REQUIRED AT THE POST REPLACEMENT LOCATION AT WING 1 TO ENVELOPE "FULL DEPTH DECK REPAIR". PORTIONS OF THE DECK REPAIR AT THIS LOCATION WILL NOT RECEIVE AN OVERLAY.

CLEAN AND PAINT THE END 5 FEET OF STEEL GIRDERS AT BOTH ABUTMENTS AND THE OUTSIDE FACES OF EXTERIOR GIRDERS, INCLUDING THE UNDERSIDE OF THE TOP FLANGE, WEB, TOP OF BOTTOM FLANGE, AND THE UNDERSIDE OF THE BOTTOM FLANGE AND COVER PLATE. USE AMS STANDARD 595A COLOR #25240 (BLUE) FOR THE TOP COAT.

SALVAGE THE EXISTING NAME PLATE THAT IS LOCATED IN THE DETERIORATED DECK OVERHANG. REINSTALL THE NAME PLATE AS SHOWN ON THE FRONT FACE OF WING 1 WITH ADHESIVE ANCHORS. ADHESIVE ANCHORS WILL NOT BE MEASURED FOR PAYMENT AND REINSTALLATION SHALL BE CONSIDERED INCIDENTAL TO "CONCRETE SURFACE REPAIR".

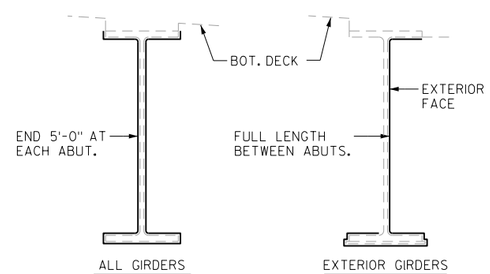

GIRDER CLEANING AND PAINTING LIMITS

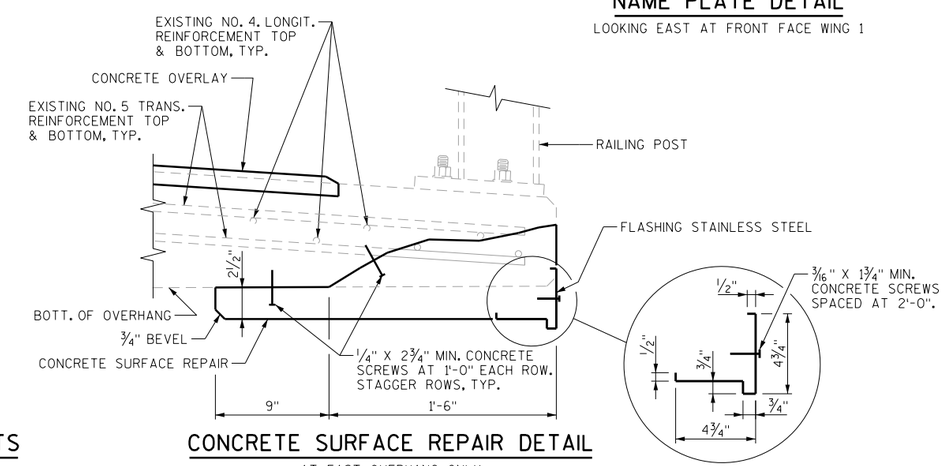

CONCRETE SURFACE REPAIR DETAIL

AT EAST OVERHANG ONLY

TOTAL ESTIMATED QUANTITIES

	BID ITEM NO.	BID ITEM	UNIT	S. ABUT.	N. ABUT.	SUPER	TOTAL
	204.0185	REMOVING MASONRY	CY	8	8	-	16
	502.3200	PROTECTIVE SURFACE TREATMENT	SY	-	-	211	211
	509.0301	PREPARATION DECKS TYPE 1	SY	-	-	15	15
	509.0302	PREPARATION DECKS TYPE 2	SY	-	-	5	5
	509.0500	CLEANING DECKS	SY	-	-	211	211
✪	509.1500	CONCRETE SURFACE REPAIR	SF	43	48	147	238
	509.2000	FULL-DEPTH DECK REPAIR	SY	-	-	3	3
	509.2500	CONCRETE MASONRY OVERLAY DECKS	CY	-	-	14	14
	513.7051	RAILING STEEL TYPE W	LF	-	-	31	31
	517.1801.S	STRUCTURE REPAINTING RECYCLED ABRASIVE B-22-7	EACH	-	-	-	1
	517.4501.S	NEGATIVE PRESSURE CONTAINMENT AND COLLECTION OF WASTE MATERIALS B-22-7	EACH	-	-	-	1
	517.6001.S	PORTABLE DECONTAMINATION FACILITY	EACH	-	-	-	1
	606.0300	RIPRAP HEAVY	CY	74	72	-	146
	645.0120	GEOTEXTILE TYPE HR	SY	205	200	-	405
	SPV.0035.01	SCOUR REPAIR GROUT	CY	11	11	-	22
	SPV.0035.02	SCOUR REPAIR GROUT BAGS	CY	7	7	-	14
△	SPV.0035.03	MATRIX RIPRAP	CY	49	47	-	96
	SPV.0090.01	FLASHING STAINLESS STEEL	LF	-	-	65	65
	SPV.0090.02	SAWING PAVEMENT RAILING POST REPLACEMENT	LF	-	-	10	10

ALL B-22-7 BID ITEMS ARE CATEGORY 0020

△ ESTIMATED QUANTITY INCLUDES 10'-0" X 10'-0" X 2'-0" TEST SECTION. REQ'D PRIOR TO PLACEMENT. SEE SPECIAL PROVISIONS.

NO.	DATE	REVISION	BY

STATE OF WISCONSIN
DEPARTMENT OF TRANSPORTATION

STRUCTURE B-22-7

DRAWN BY VJD | PLANS CK'D. BRS

CROSS SECTION, NOTES, AND QUANTITIES

SHEET 2 OF 4

329

8

STATE PROJECT NUMBER
5235-03-70

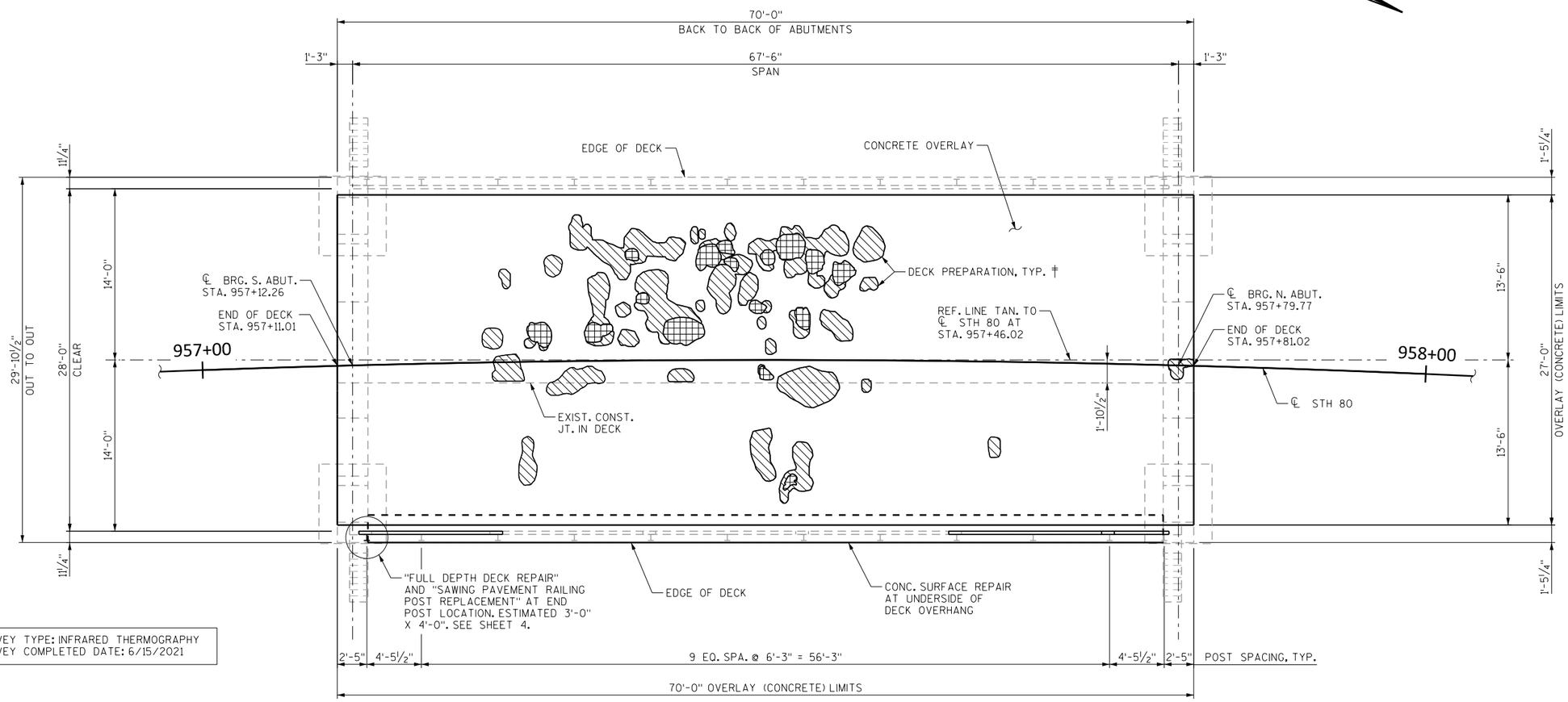

‡ SURVEY TYPE: INFRARED THERMOGRAPHY
SURVEY COMPLETED DATE: 6/15/2021

PLAN

INFRARED THERMOGRAPHIC SURVEY RESULTS

FIELD OBSERVATIONS SUMMARY	STRUCTURE B-22-7		
ITEM	UNIT	QUANT.	%
TOTAL AREA	SQ. FT.	1,960	
SHADE/DEBRIS	SQ. FT.	0	
DELAMINATION	SQ. FT.	104	5.3
SPALL	SQ. FT.	1	<0.1
DEBOND	SQ. FT.	N/A	N/A
ASPHALT PATCH	SQ. FT.	22	1.1
PCC PATCH	SQ. FT.	0	0

LEGEND
- DELAMINATION
- SPALL
- DEBOND
- ASPHALT PATCH
- PCC PATCH
- SHADE/DEBRIS

8

NO.	DATE	REVISION	BY

STATE OF WISCONSIN
DEPARTMENT OF TRANSPORTATION

STRUCTURE B-22-7

DRAWN BY VJD | PLANS CK'D. BRS

INFRARED THERMOGRAPHIC INVESTIGATION

SHEET 3 OF 4
330

STATE PROJECT NUMBER

5235-03-70

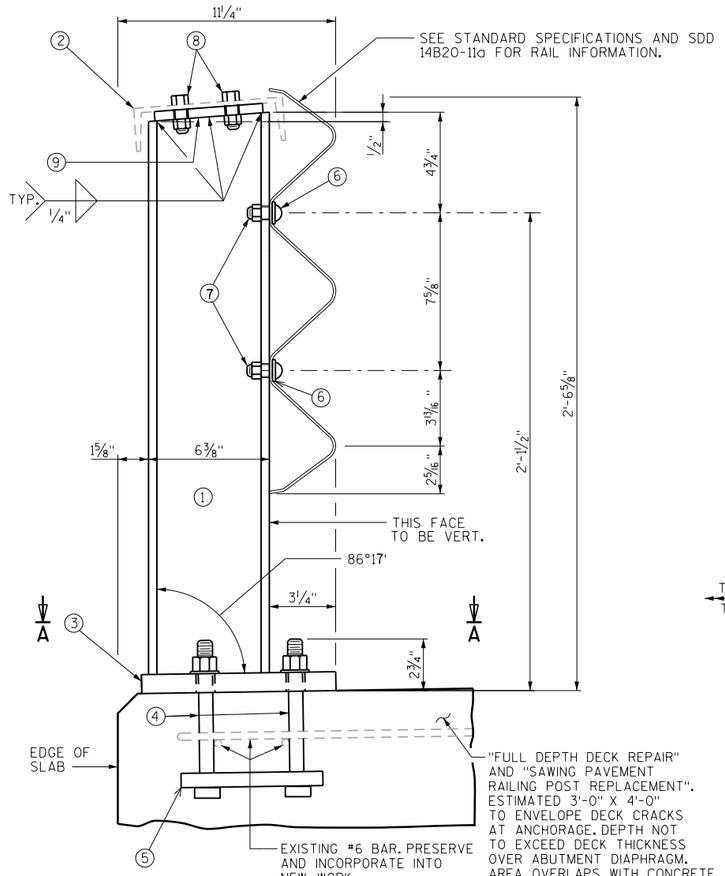

SECTION THRU RAILING

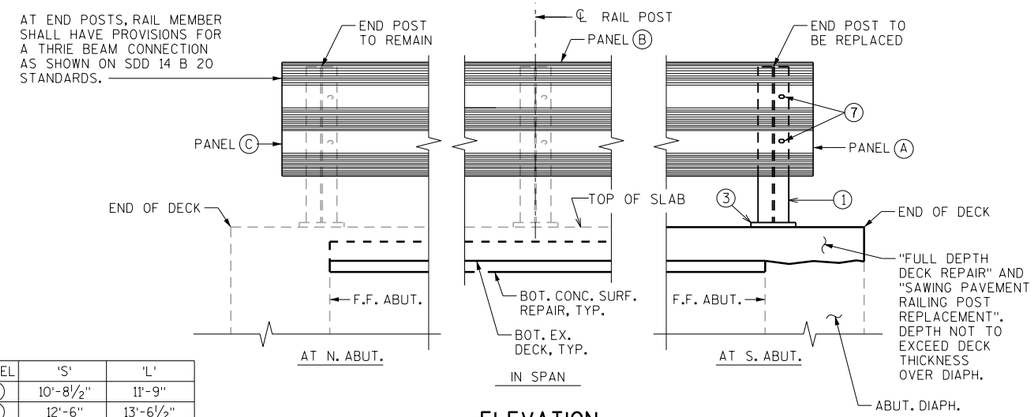

PANEL	'S'	'L'
(A)	10'-8½"	11'-9"
(B)	12'-6"	13'-6½"
(C)	4'-5½"	5'-6"

ELEVATION

LOOKING EAST AT ROADWAY FACE

LEGEND

1. W6x25 WITH 2 - ¾" x 2½" VERT. SLOTS IN FLG. (SLOT ON OTHER SIDE OF WEB IS OPTIONAL) FOR NO. 7. CUT BOTTOM OF POST TO MATCH CROSS SLOPE OF ROADWAY. PLACE POSTS VERTICAL AND NORMAL TO GRADE LINE.
2. EXISTING C8x11.5 WITH 13⁄16" DIA. HOLES FOR NO. 8. TO REMAIN.
3. BASE PLATE 1" X 9½" x 10" WITH 1 1⁄16" x 1½" SLOTTED HOLES FOR ANCHOR BOLTS NO. 4. WELD TO NO. 1 AS SHOWN.
4. A325 - ⅞" DIA. HEX BOLTS (GALVANIZED) WITH A325 NUT AND WASHER. 8½" LONG AT REPLACEMENT POST. 4 REQ'D. THREAD 3" AND PLACE NORMAL TO PLATE NO. 3. CHAMFER TOP OF BOLTS BEFORE THREADING.
5. ¼" x 8" x 8" FLAT BAR WITH 15⁄16" DIA. HOLES FOR ANCHOR BOLTS NO. 4.
6. 1¾" x 3" MOUNTING BOLT WASHER (GALVANIZED).
7. ⅝" DIA. BUTTON HEAD POST MOUNTING BOLT WITH ROUND WASHER AND NUT.
8. ⅝" DIA. x 2" HEX BOLTS WITH NUT AND TWO WASHERS EACH.
9. PLATE ½" x 5¾" x 6" AT BASIC POST CONNECTION. 1¼" DIA. HOLES IN PLATE. 13⁄16" DIA. HOLES IN CHANNEL.

NOTES

ALL ITEMS SHOWN FOR POST AND W-BEAM REPLACEMENT, AND FOR REMOVING EXISTING DAMAGED COMPONENTS, ARE INCLUDED IN THE LINEAR FOOT BID ITEM "RAILING STEEL TYPE W". "FULL DEPTH DECK REPAIR" AND "SAWING PAVEMENT RAILING POST REPLACEMENT" SHALL BE PAID SEPARATELY.

POST BASE PLATES SHALL BE FLAT WITH ALL SURFACES SMOOTH AND FREE FROM WARP AND ALL EDGES SMOOTH, STRAIGHT AND VERTICAL. ALL PLATE CUTS SHALL BE MACHINE OR MACHINE FLAME CUTS.

ALL MATERIAL EXCEPT ANCHORAGE DETAIL NO. 5 SHALL BE GALVANIZED AFTER FABRICATION.

PRIOR TO GALVANIZING, ALL STEEL RAILING POSTS AND CHANNELS SHALL BE GIVEN A NO. 6 COMMERCIAL BLAST CLEANING BY SSPC SPECS.

ALL MATERIAL USED IN FABRICATION SHALL BE MADE FROM MATERIALS CONFORMING TO ASTM DESIGNATION A709 GRADE 36 UNLESS NOTED OTHERWISE.

FILL BOLT SLOT OPENINGS IN POST SHIMS & PLATE NO. 3 WITH NON-STAINING GRAY NON-BITUMINOUS JOINT SEALER.

CHANNEL MEMBER SHALL BE ATTACHED CONTINUOUSLY TO A MINIMUM OF FOUR POSTS AND A MAXIMUM OF EIGHT (EXCEPT AT ABUTMENTS).

RAIL MEMBERS SHALL BE LAPPED IN THE DIRECTION OF TRAFFIC AND THE UPPER RAIL SHALL LAP THE LOWER RAIL.

STEEL POST SHIMS MAY BE USED UNDER POSTS WHERE REQ'D. FOR ALIGNMENT.

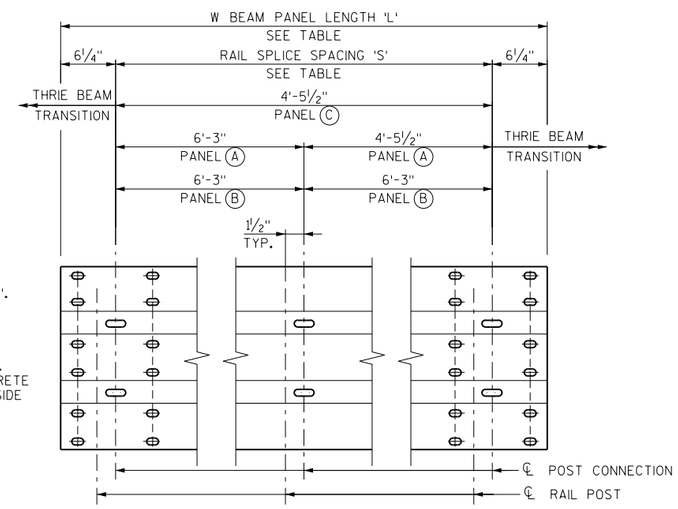

RAIL MEMBERS

LOOKING AT ROADWAY FACE

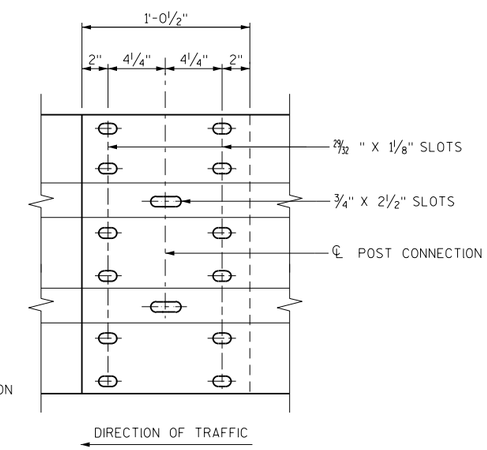

RAIL MEMBER SPLICE

LOOKING AT ROADWAY FACE

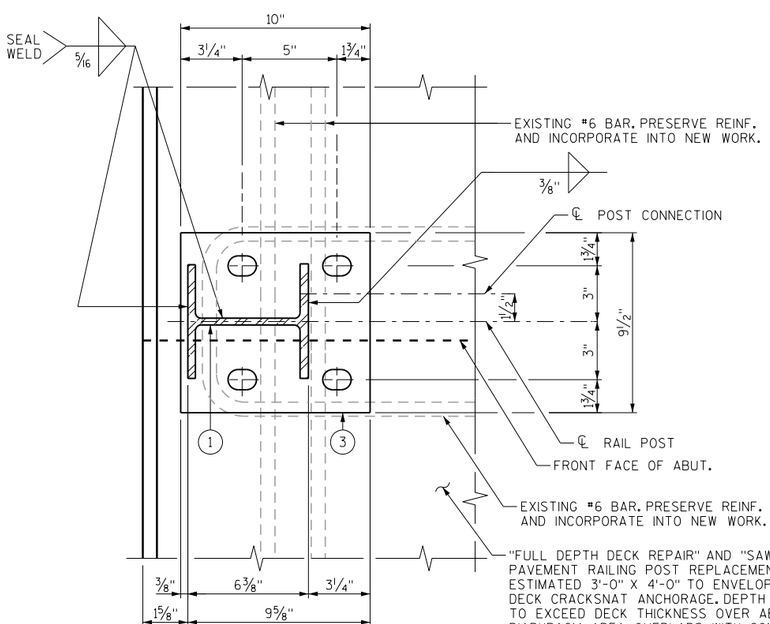

SECTION A-A

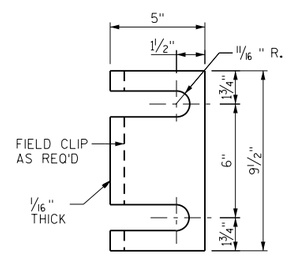

POST SHIM DETAIL

(4 PER POST)

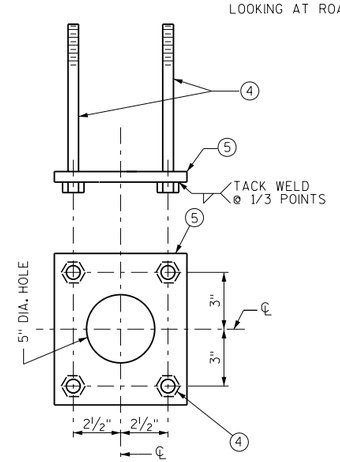

ANCHORAGE DETAIL

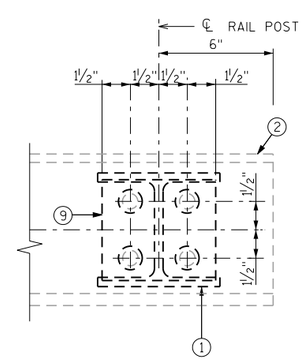

AT POST CONNECTION

CHANNEL MEMBER DETAILS

NO.	DATE	REVISION	BY

STATE OF WISCONSIN
DEPARTMENT OF TRANSPORTATION

STRUCTURE B-22-7

DRAWN BY VJD | PLANS CK'D. BRS

STEEL RAILING TYPE 'W'

SHEET 4 OF 4

331

8

8

STATE PROJECT NUMBER

5235-03-70

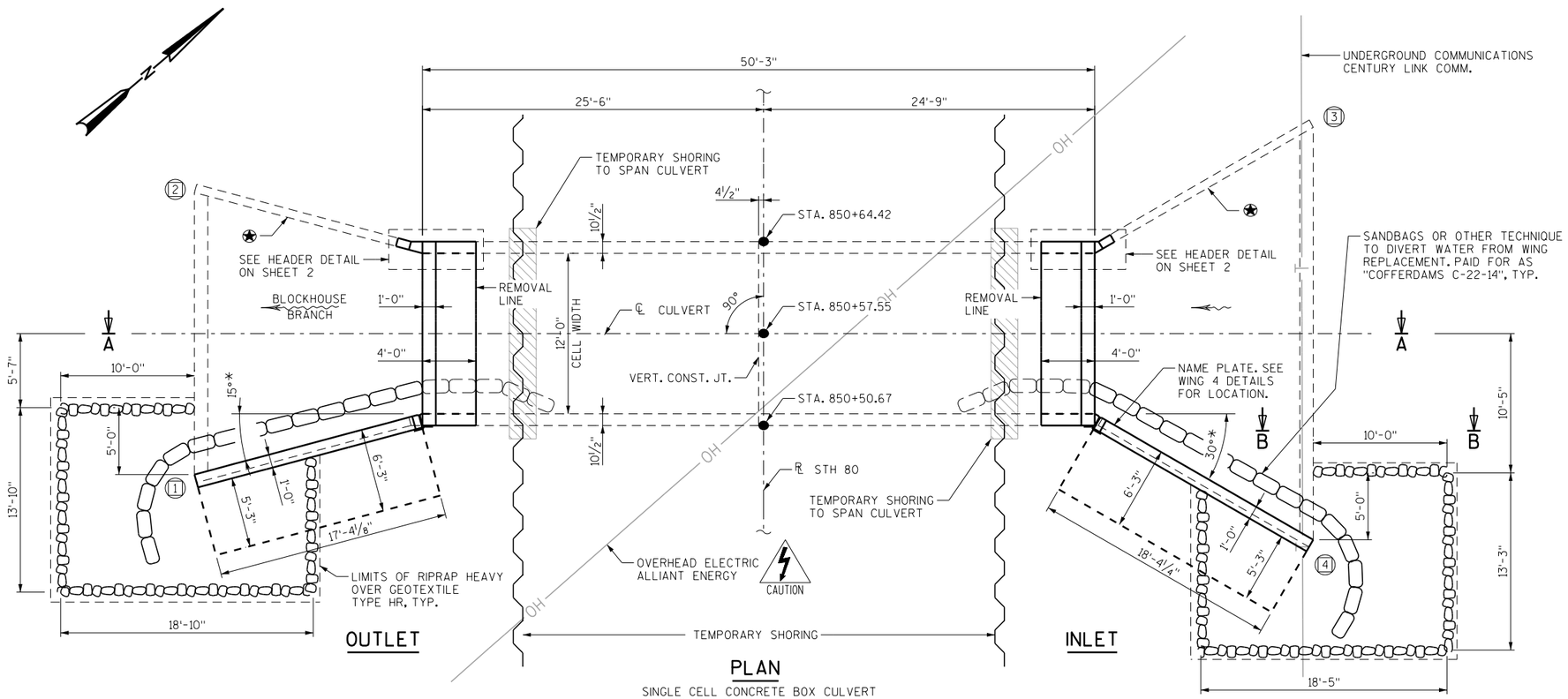

PLAN

SINGLE CELL CONCRETE BOX CULVERT
WING AND HEADER REPLACEMENT

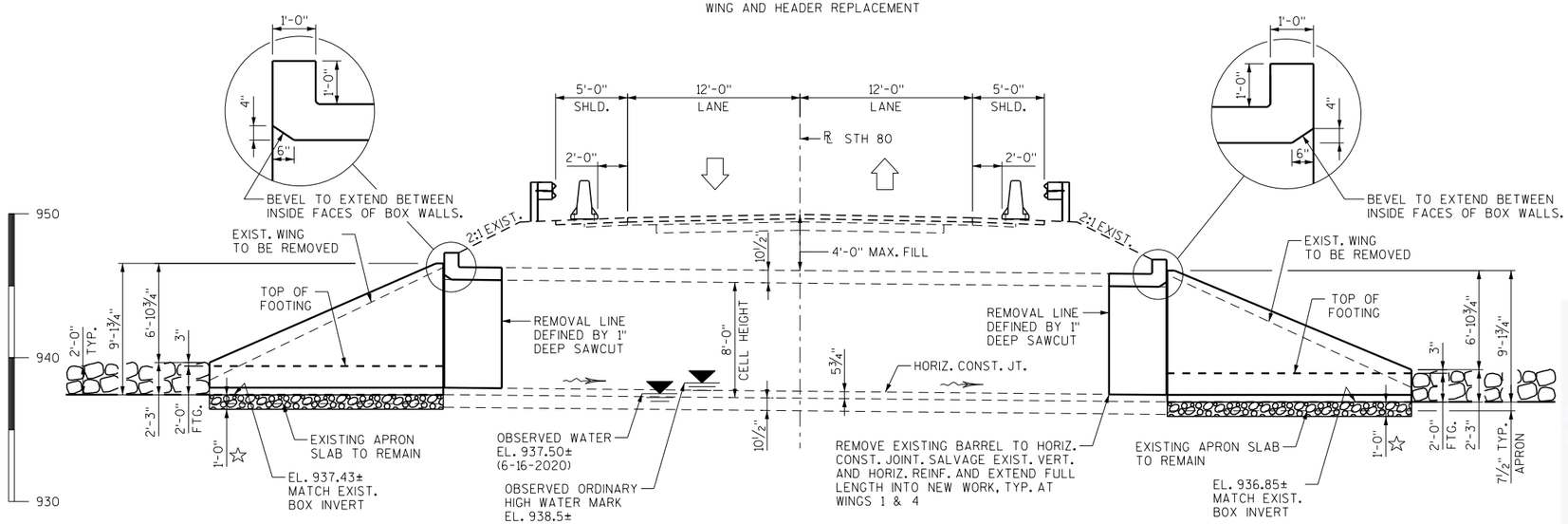

SECTION A-A

LOOKING SOUTH AT WING REPLACEMENTS
AND SHOWING TRAFFIC CONTROL CONFIGURATION

DESIGN DATA

LIVE LOAD
TAKEN FROM HSI, 7/26/2022
DESIGN LOAD: HS-20
INVENTORY RATING = HS-15
OPERATING RATING = HS-20
WISCONSIN STANDARD PERMIT VEHICLE (WIS-SPV) = 190 KIP

MATERIAL PROPERTIES:
CONCRETE MASONRY CULVERTS.....f'c = 3,500 P.S.I.
HIGH STRENGTH BAR STEEL REINFORCEMENT.....fy = 60,000 P.S.I.

TRAFFIC DATA

STH 80
A.D.T. = 6,120 (2019)
A.D.T. = 7,220 (2044)
R.D.S. = 60 MPH

LIST OF DRAWINGS

1. GENERAL PLAN
2. SECTIONS, NOTES, AND QUANTITIES
3. BARREL DETAILS
4. WING DETAILS
5. BILL OF BARS

LEGEND

- TRAVEL DIRECTION
- (X) INDICATES WING WALL NUMBER
- ☆ UNDER CUT 1'-0". EXCAVATION FOR UNDER CUT TO BE INCLUDED IN EXCAVATION FOR STRUCTURES. PLACE "GEOTEXTILE TYPE C" AND BACKFILL WITH "BREAKER RUN".
- ✪ CONCRETE SURFACE REPAIR. SEE GENERAL NOTES.
- * MATCH EXISTING FRONT FACE WING ALIGNMENT.

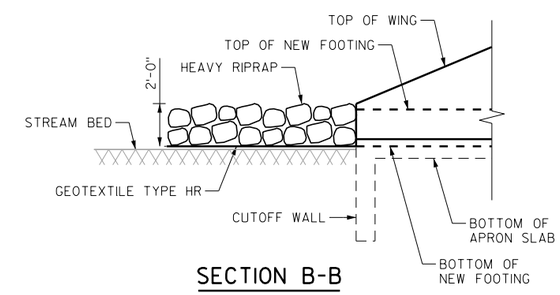

SECTION B-B

TYPICAL AT INLET AND OUTLET

NO.	DATE	REVISION	BY

JT ENGINEERING, INC
Consultant Services

STATE OF WISCONSIN
DEPARTMENT OF TRANSPORTATION

ACCEPTED SDR 08/01/22
CHIEF STRUCTURES DESIGN ENGINEER DATE

WISCONSIN VINCENT J. DIFRANCES E-45790 MILWAUKEE WI PROFESSIONAL ENGINEER
7/26/2022

STRUCTURES DESIGN CONTACTS
BRIDGE OFFICE:
AARON BONK (608) 261-0261

CONSULTANT:
VINCENT DIFRANCES, P.E. (920) 468-4771

STRUCTURE C-22-14

STH 80/81 OVER BLOCKHOUSE BRANCH

COUNTY	GRANT	TOWN	PLATTEVILLE
DESIGN SPEC.	REHABILITATION N/A		
DESIGNED BY VJD	DESIGN CK'D. BRS	DRAWN BY VJD	PLANS CK'D. BRS

GENERAL PLAN

SHEET 1 OF 5
332

8

STATE PROJECT NUMBER
5235-03-70

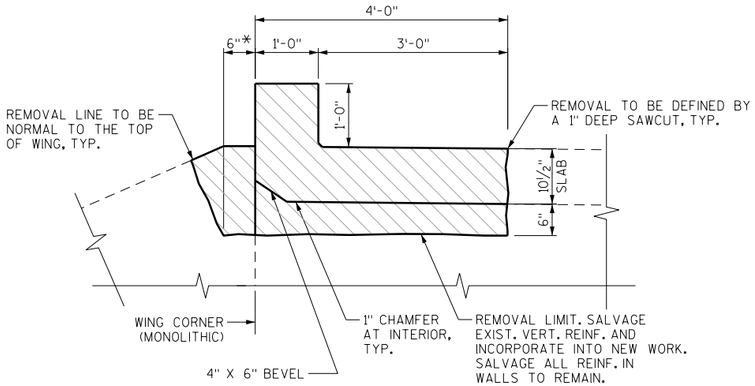

HEADER DETAIL

AT WINGS 2 AND 3
INLET HEADER SHOWN, OUTLET HEADER SIMILAR
* DIMENSION TAKEN ALONG WING FROM WORKING POINT AT B.F.

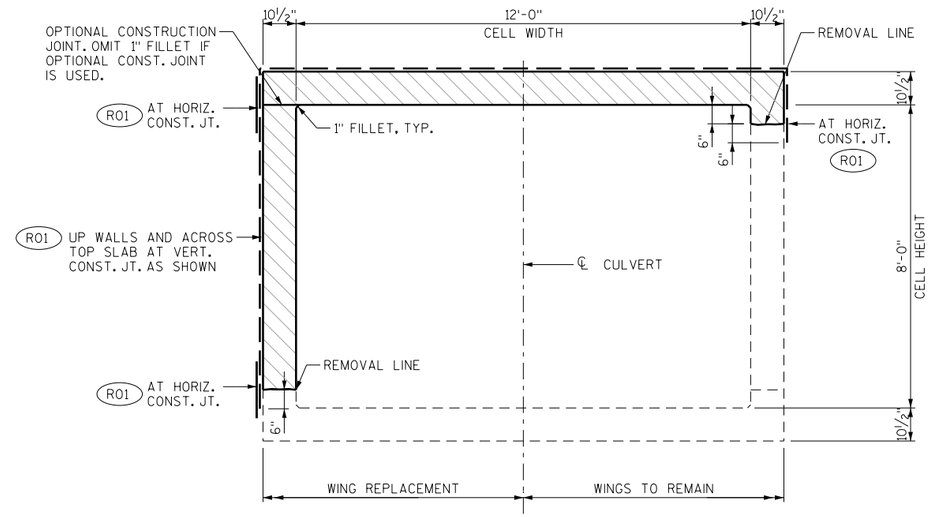

SECTION THRU BARREL

LOOKING WEST
THRU BARREL AT WING AND HEADER REPLACEMENT

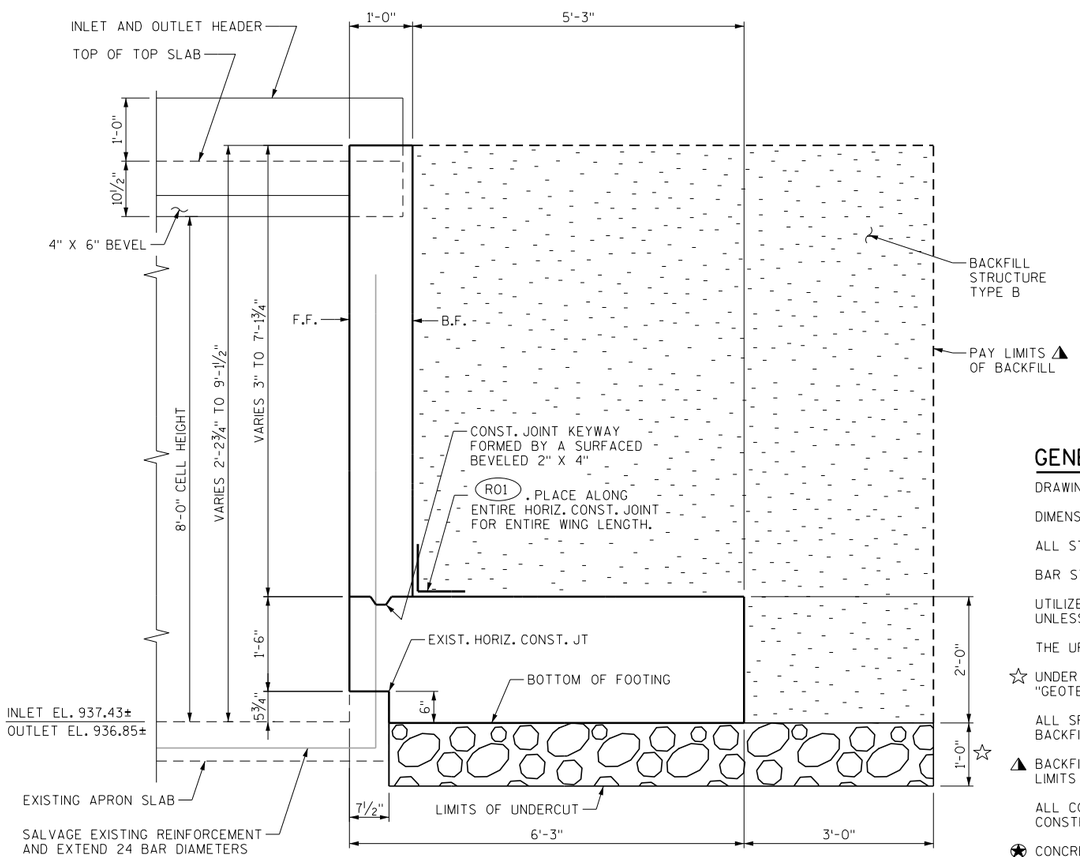

SECTION THRU WING REPLACEMENT

SHOWING DIMENSIONS AND BACKFILL LIMITS

TOTAL ESTIMATED QUANTITIES

	BID ITEM NO.	BID ITEM	UNIT	TOTAL
	203.0220	REMOVING STRUCTURE C-22-14	EACH	1
	206.2001	EXCAVATION FOR STRUCTURES CULVERTS C-22-14	EACH	1
	206.5001	COFFERDAMS C-22-14	EACH	1
	210.2500	BACKFILL STRUCTURE TYPE B	TON	165
	311.0115	BREAKER RUN	CY	15
▲	502.4205	ADHESIVE ANCHORS NO. 5 BAR	EACH	30
	504.0100	CONCRETE MASONRY CULVERTS	CY	28
	505.0400	BAR STEEL REINFORCEMENT HS STRUCTURES	LB	1,850
	505.0600	BAR STEEL REINFORCEMENT HS COATED STRUCTURES	LB	770
✪	509.1500	CONCRETE SURFACE REPAIR	SF	15
	511.1200	TEMPORARY SHORING C-22-14	SF	484
	516.0500	RUBBERIZED MEMBRANE WATERPROOFING	SY	22
	606.0300	RIPRAP HEAVY	CY	42
	645.0105	GEOTEXTILE TYPE C	SY	56
	645.0120	GEOTEXTILE TYPE HR	SY	66
		NON BID ITEMS		
		PREFORMED FILLER	SIZE	3/4"
		NAME PLATE	EACH	1

ALL C-22-14 BID ITEMS ARE CATEGORY 0040

GENERAL NOTES

DRAWINGS SHALL NOT BE SCALED.

DIMENSIONS SHOWN ARE BASED ON THE ORIGINAL STRUCTURE PLANS.

ALL STATIONS AND ELEVATIONS ARE IN FEET.

BAR STEEL REINFORCEMENT SHALL BE EMBEDDED 2" CLEAR UNLESS SHOWN OR NOTED OTHERWISE.

UTILIZE EXISTING BAR STEEL REINFORCEMENT WHERE SHOWN AND EXTEND 24 BAR DIAMETERS INTO NEW WORK, UNLESS SPECIFIED OTHERWISE.

THE UPPER LIMITS OF "EXCAVATION FOR STRUCTURES CULVERTS C-22-14" SHALL BE THE EXISTING GROUND LINE.

☆ UNDER CUT 1'-0". EXCAVATION FOR UNDER CUT TO BE INCLUDED IN EXCAVATION FOR STRUCTURES. PLACE "GEOTEXTILE TYPE C" AND BACKFILL WITH "BREAKER RUN".

ALL SPACES EXCAVATED AND NOT OCCUPIED BY THE NEW STRUCTURE SHALL BE BACKFILLED WITH STRUCTURE BACKFILL TO THE TOP OF THE WING WITHIN THE LENGTH OF THE WING WALL AND TO 1'-0" ABOVE THE BARREL.

◭ BACKFILL PAY LIMITS. BACKFILL BEYOND BACKFILL PAY LIMITS SHALL BE INCIDENTAL TO EXCAVATION FOR STRUCTURES. LIMITS OF EXCAVATION SHALL BE DETERMINED BY THE CONTRACTOR.

ALL CONCRETE REMOVAL SHALL BE DEFINED BY A 1 INCH DEEP SAW CUT UNLESS THE REMOVAL LINE IS AN EXISTING CONSTRUCTION JOINT OR SPECIFIED OTHERWISE.

✪ CONCRETE SURFACE REPAIR SHALL BE USED FOR NEEDED REPAIRS ALONG WING 2 AND WING 3. LOCATIONS AND LIMITS OF REPAIRS SHALL BE DETERMINED IN THE FIELD BY THE ENGINEER. QUANTITY LISTED IS APPROXIMATE.

THE CONTRACTOR SHALL SUPPLY A NEW NAME PLATE IN ACCORDANCE WITH SECTION 502.3.11 OF THE STANDARD SPECIFICATIONS AND THE STANDARD DETAIL DRAWINGS. NAME TO SHOW THE ORIGINAL CONSTRUCTION YEAR OF 1948.

▲ IF EXISTING BARREL REINFORCEMENT IS DAMAGED OR CORRODED, SUPPLEMENT EXISTING REINFORCEMENT WITH ADHESIVE ANCHOR NO. 5 BAR. QUANTITY SHOWN IS TENTATIVE. SEE BARREL DETAILS ON SHEET 3.

LEGEND

R01 18" RUBBERIZED MEMBRANE WATERPROOFING (RMW)

INDICATES REMOVAL AREA

F.F. = FRONT FACE

B.F. = BACK FACE

NO.	DATE	REVISION	BY

STATE OF WISCONSIN
DEPARTMENT OF TRANSPORTATION

STRUCTURE C-22-14

DRAWN BY VJD | PLANS CK'D. BRS

SECTION, NOTES, AND QUANTITIES

SHE 333 5

8

8

STATE PROJECT NUMBER

5235-03-70

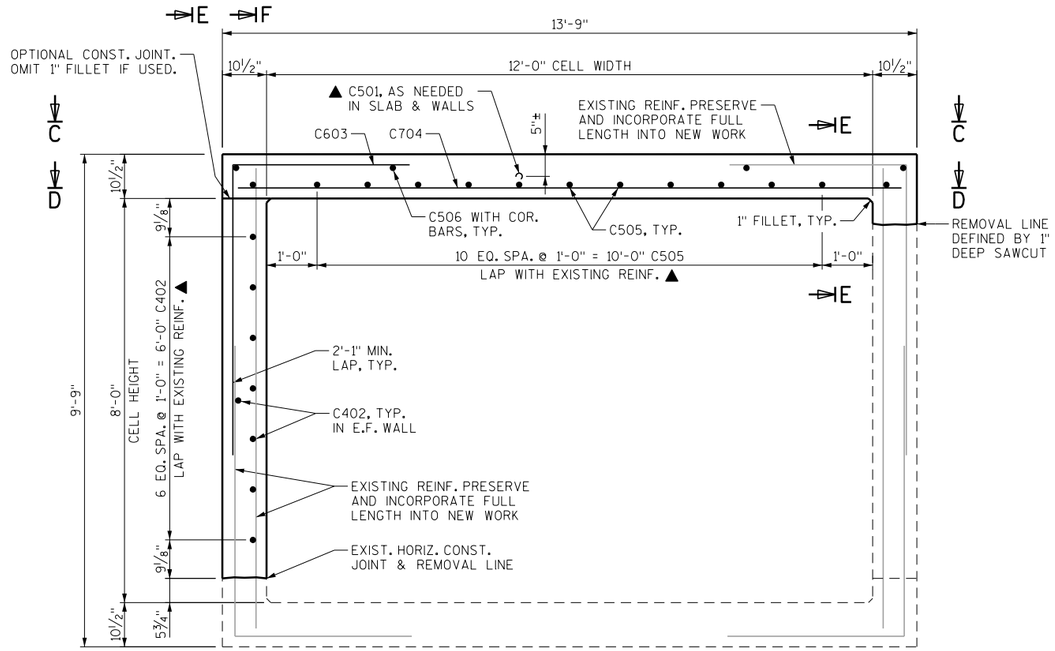

SECTION THRU BARREL

LOOKING WEST (DOWNSTREAM)
INLET AND OUTLET SIMILAR

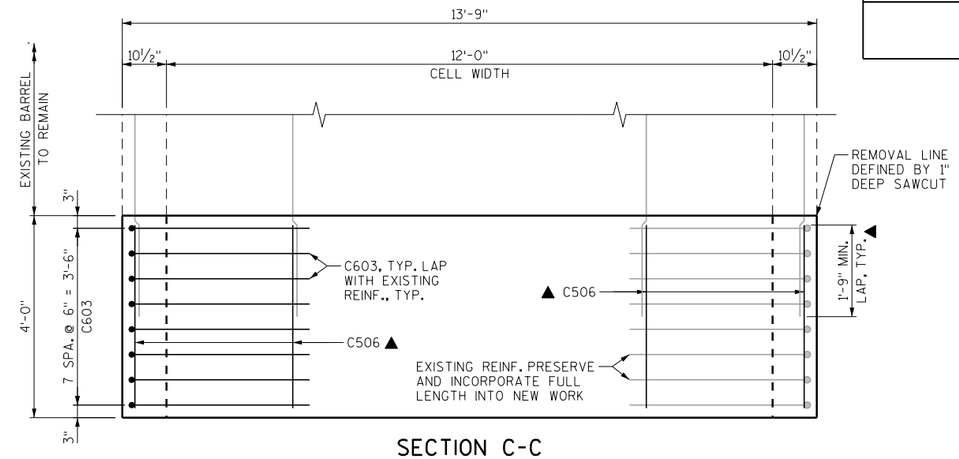

SECTION C-C

INLET AND OUTLET SIMILAR

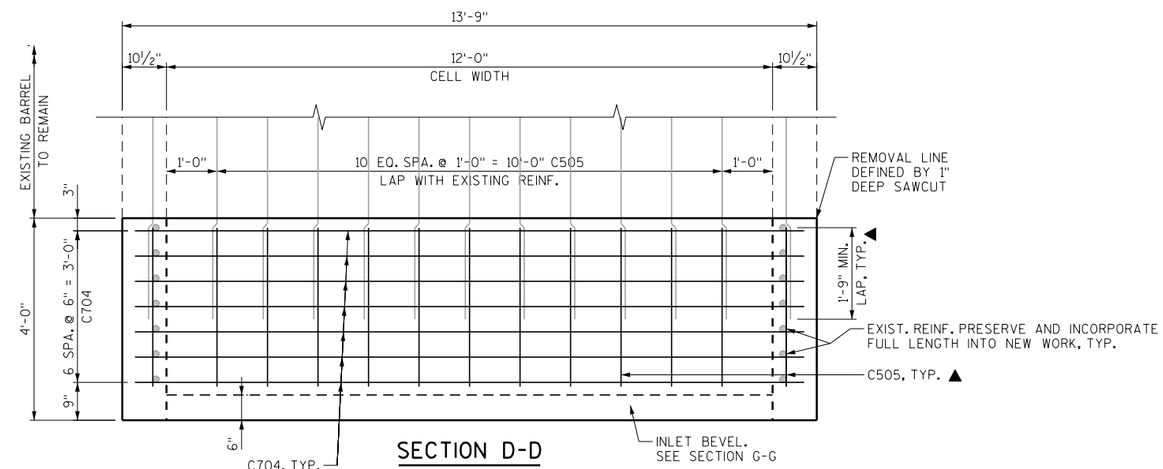

SECTION D-D

INLET AND OUTLET SIMILAR

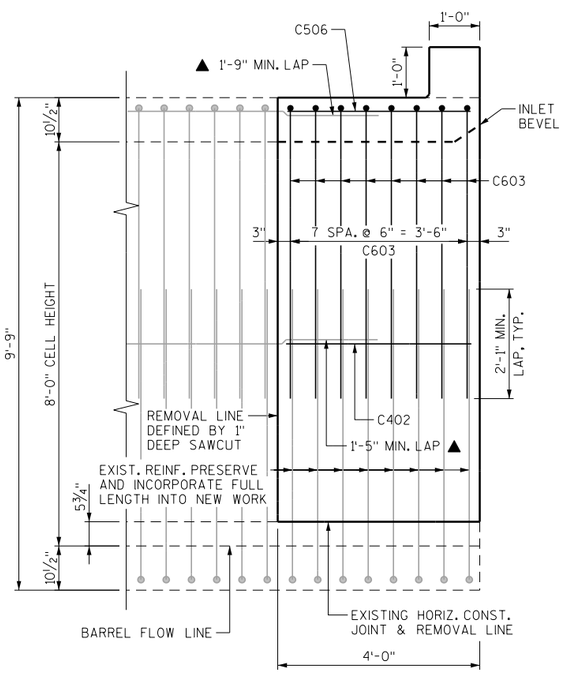

SECTION E-E

INLET AND OUTLET SIMILAR
HEADER REINFORCEMENT NOT SHOWN FOR CLARITY

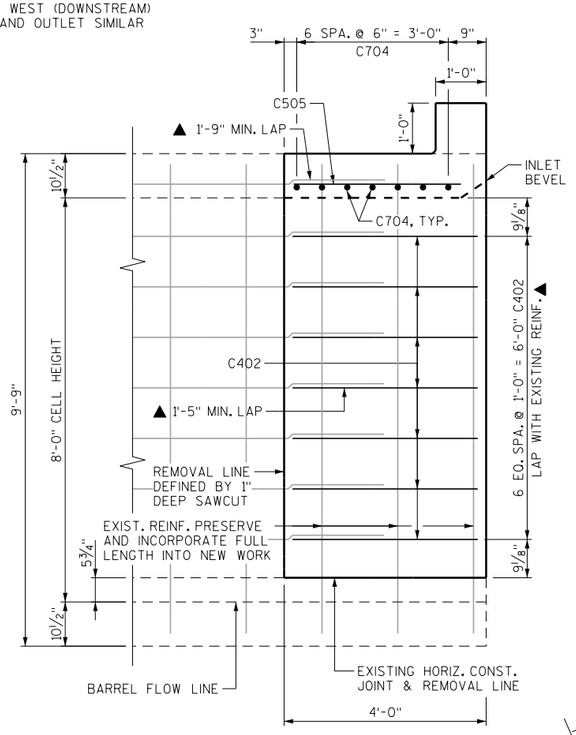

SECTION F-F

INLET AND OUTLET SIMILAR
HEADER REINFORCEMENT NOT SHOWN FOR CLARITY

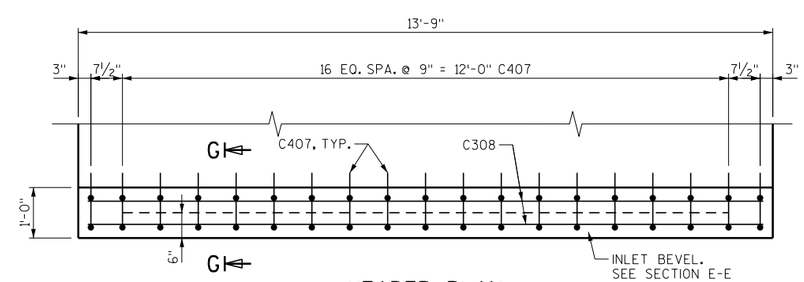

HEADER PLAN

SHOWING HEADER REINFORCEMENT
INLET AND OUTLET SIMILAR

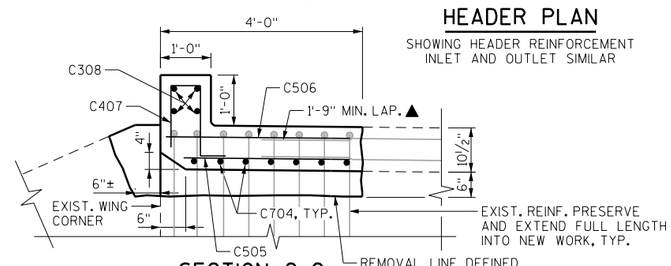

SECTION G-G

INLET AND OUTLET SIMILAR

NOTES

SEAL ALL HORIZ. AND VERT. JOINTS ON OUTSIDE FACES WITH 18" RUBBERIZED MEMBRANE WATERPROOFING. SEE CROSS SECTION ON SHEET 2 FOR LOCATIONS AND LIMITS.

SOME BARS ARE OMITTED FOR CLARITY. SEE BILL OF BARS ON SHEET 5.

LEGEND

▲ IF EXISTING REINFORCEMENT IS DAMAGED OR CORRODED, SUPPLEMENT REINFORCEMENT WITH ADHESIVE ANCHOR NO. 5 BAR AND C501. EMBED 1'-0" MIN. INTO EXISTING CONCRETE. MAINTAIN A MINIMUM EDGE DISTANCE OF 3¾". QUANTITY SHOWN IS TENTATIVE.

NO.	DATE	REVISION	BY

STATE OF WISCONSIN
DEPARTMENT OF TRANSPORTATION

STRUCTURE C-22-14

DRAWN BY VJD | PLANS CK'D. BRS

BARREL DETAILS

SHEET 3 OF 5
334

8

8

STATE PROJECT NUMBER

5235-03-70

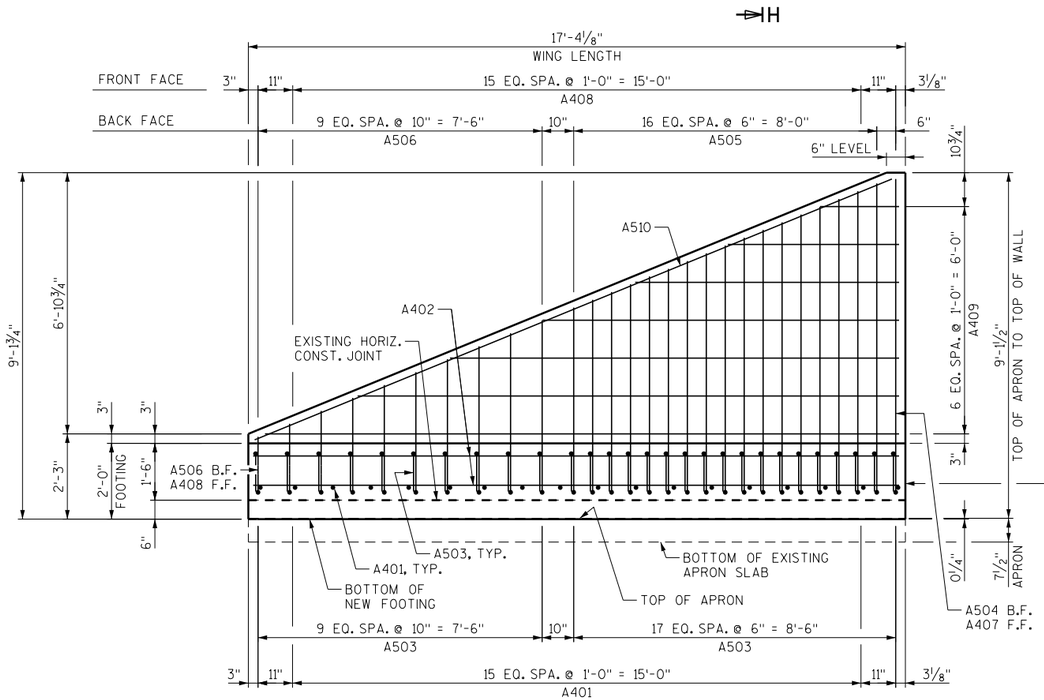

WING 1 ELEVATION

LOOKING AT BACK FACE OF WING

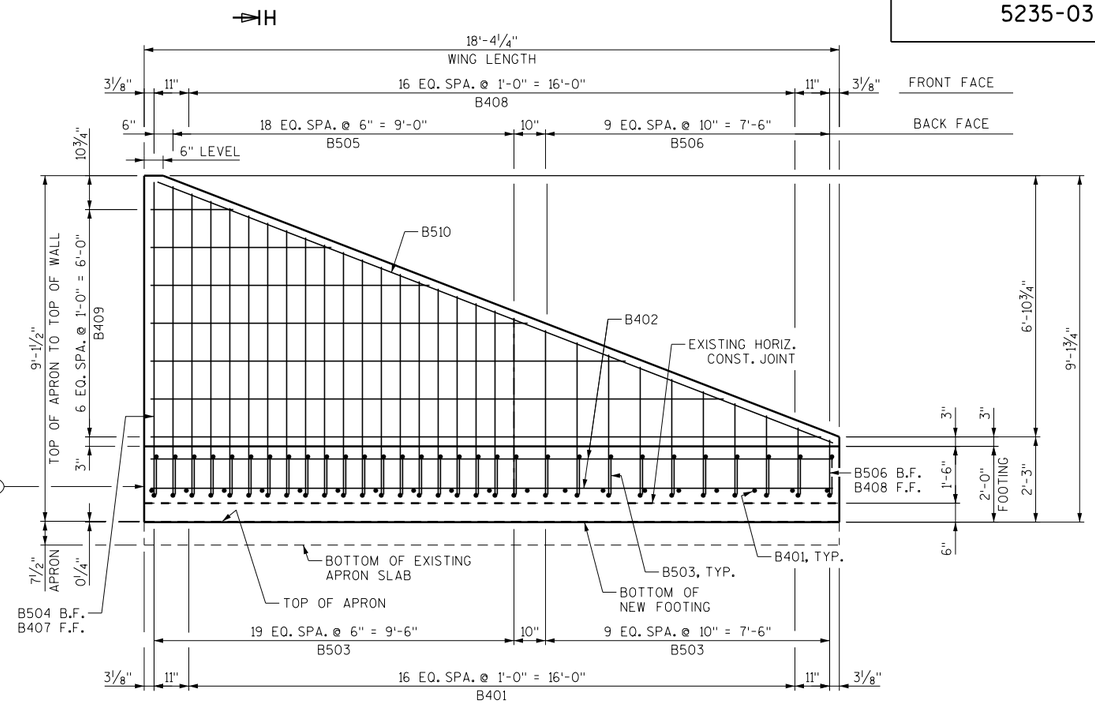

WING 4 ELEVATION

LOOKING AT BACK FACE OF WING

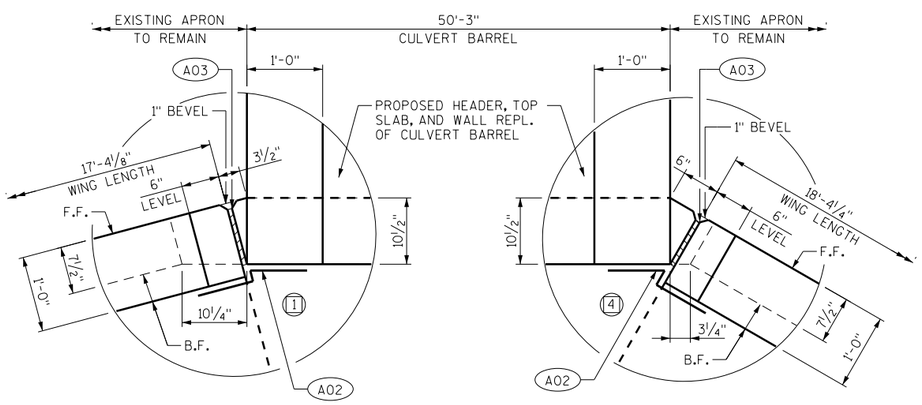

CORNER 1 DETAIL

MATCH EXISTING F.F. ALIGNMENT

CORNER 4 DETAIL

MATCH EXISTING F.F. ALIGNMENT

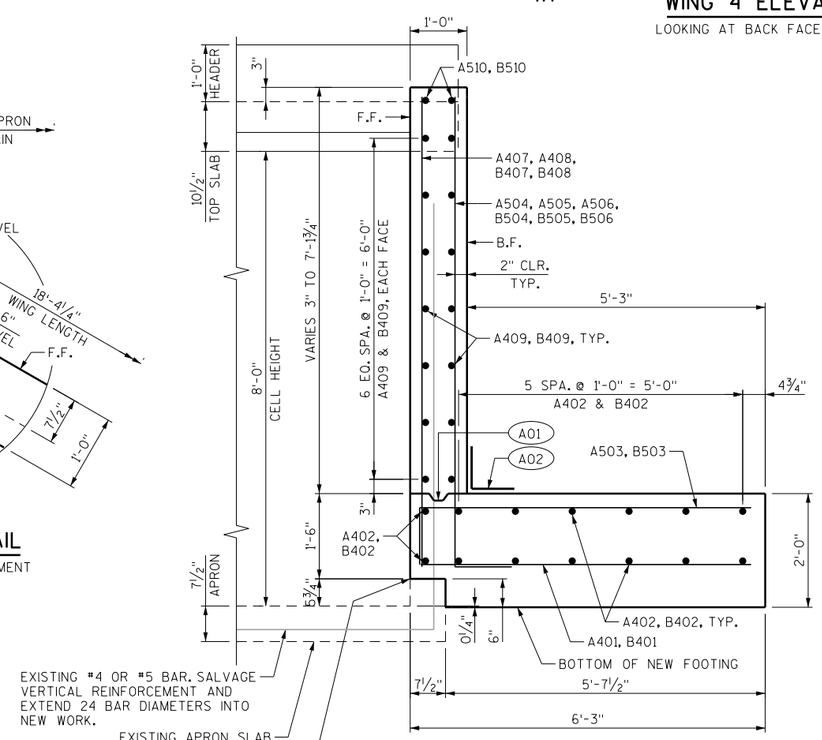

SECTION H-H

THRU WINGS, SHOWING BARREL

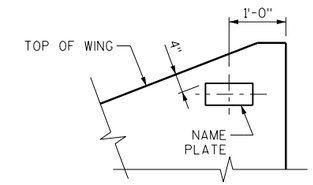

NAME PLATE DETAIL

LOOKING AT FRONT FACE WING 4

LEGEND

- A01 — CONSTRUCTION JOINT KEYWAY FORMED BY A SURFACED BEVELED 2" X 4".
- A02 — 18" WIDE RUBBERIZED MEMBRANE WATERPROOFING. SEAL ALL HORIZ. AND VERT. JOINTS AT BACK FACE.
- A03 — 3/4" FILLER. EXTEND FROM HORIZ. CONST. JOINT TO TOP OF WING.
- (X) — INDICATES WINGWALL NUMBER.

F.F. = FRONT FACE B.F. = BACK FACE

NO.	DATE	REVISION	BY

STATE OF WISCONSIN
DEPARTMENT OF TRANSPORTATION

STRUCTURE C-22-14

DRAWN BY VJD PLANS CK'D. BRS

WINGWALL DETAILS

SHEET 4 OF 5

335

8

STATE PROJECT NUMBER

5235-03-70

BILL OF BARS - BARREL						COATED: 0 LBS UNCOATED: 970 LBS
BAR MARK	COAT	NO REQ'D	LENGTH	BENT	BAR SERIES	LOCATION
C501		30	3'-0"			BARREL - SUPPLEMENTAL DOWELS
C402		16	3'-6"			BARREL - WALL - HORIZ.
C603		16	9'-1"	X		BARREL - CORNERS - VERT.
C704		14	13'-3"			BARREL - TOP SLAB - BOTT. TRANS.
C505		26	3'-1"			BARREL - TOP SLAB - BOTT. LONGIT.
C506		8	3'-6"			BARREL - TOP SLAB - TOP LONGIT.
C407		38	3'-4"	X		BARREL - HEADER - VERT.
C308		8	13'-3"			BARREL - HEADER - HORIZ.

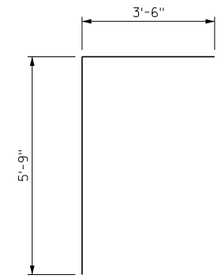

C603

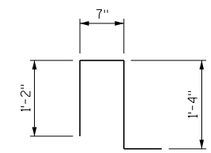

C407

BILL OF BARS - WING WALL #1						COATED: 370 LBS UNCOATED: 430 LBS
BAR MARK	COAT	NO REQ'D	LENGTH	BENT	BAR SERIES	LOCATION
A401		18	5'-9"			WING 1 - FOOTING - BOTT. TRANS.
A402		14	16'-10"			WING 1 - FOOTING - TOP & BOTT. LONGIT.
A503		28	6'-8"	X		WING 1 - FOOTING - TOP TRANS.
A504	X	1	9'-1"	X		WING 1 - STEM - VERT. - B.F.
◭ A505	X	17	7'-5"	X	X	WING 1 - STEM - VERT. - B.F.
◭ A506	X	10	3'-10"	X	X	WING 1 - STEM - VERT. B.F.
A407	X	1	8'-2"			WING 1 - STEM - VERT. - F.F.
◭ A408	X	17	4'-8"		X	WING 1 - STEM - VERT. - F.F.
◭ A409	X	14	9'-4"		X	WING 1 - STEM - HORIZ. - E.F.
A510	X	2	18'-2"			WING 1 - STEM - HORIZ. E.F. - TOP EDGE

◭ LENGTH SHOWN FOR BAR IS AN AVERAGE LENGTH AND SHOULD ONLY BE USED FOR BAR WEIGHT CALCULATIONS. SEE BAR SERIES TABLE FOR ACTUAL LENGTHS.

BAR SERIES TABLE		
BAR MARK	NO. REQ'D	LENGTH
A505	1 SERIES OF 17	5'-9" TO 9'-0"
A506	1 SERIES OF 10	2'-4" TO 5'-5"
A408	1 SERIES OF 17	1'-5" TO 7'-11"
A409	2 SERIES OF 7	2'-1" TO 16'-8"

BUNDLE AND TAG EACH SERIES SEPARATELY

A503, A504, A505, A506

BILL OF BARS - WING WALL #4						COATED: 400 LBS UNCOATED: 450 LBS
BAR MARK	COAT	NO REQ'D	LENGTH	BENT	BAR SERIES	LOCATION
B401		19	5'-9"			WING 4 - FOOTING - BOTT. TRANS.
B402		14	17'-10"			WING 4 - FOOTING - TOP & BOTT. LONGIT.
B503		30	6'-8"	X		WING 4 - FOOTING - TOP TRANS.
B504	X	1	9'-1"	X		WING 4 - STEM - VERT. - B.F.
◭ B505	X	19	7'-3"	X	X	WING 4 - STEM - VERT. - B.F.
◭ B506	X	10	3'-9"	X	X	WING 4 - STEM - VERT. B.F.
B407	X	1	8'-2"			WING 4 - STEM - VERT. - F.F.
◭ B408	X	18	4'-9"		X	WING 4 - STEM - VERT. - F.F.
◭ B409	X	14	9'-11"		X	WING 4 - STEM - HORIZ. - E.F.
B510	X	2	19'-1"			WING 4 - STEM - HORIZ. E.F. - TOP EDGE

◭ LENGTH SHOWN FOR BAR IS AN AVERAGE LENGTH AND SHOULD ONLY BE USED FOR BAR WEIGHT CALCULATIONS. SEE BAR SERIES TABLE FOR ACTUAL LENGTHS.

BAR SERIES TABLE		
BAR MARK	NO. REQ'D	LENGTH
B505	1 SERIES OF 19	5'-6" TO 9'-0"
B506	1 SERIES OF 10	2'-4" TO 5'-3"
B408	1 SERIES OF 18	1'-5" TO 8'-0"
B409	2 SERIES OF 7	2'-2" TO 17'-8"

BUNDLE AND TAG EACH SERIES SEPARATELY

B503, B504, B505, B506

8

8

NO.	DATE	REVISION	BY

STATE OF WISCONSIN
DEPARTMENT OF TRANSPORTATION

STRUCTURE C-22-14

DRAWN BY VJD | PLANS CK'D. BRS

BILL OF BARS

SHEET 5 OF 5

336

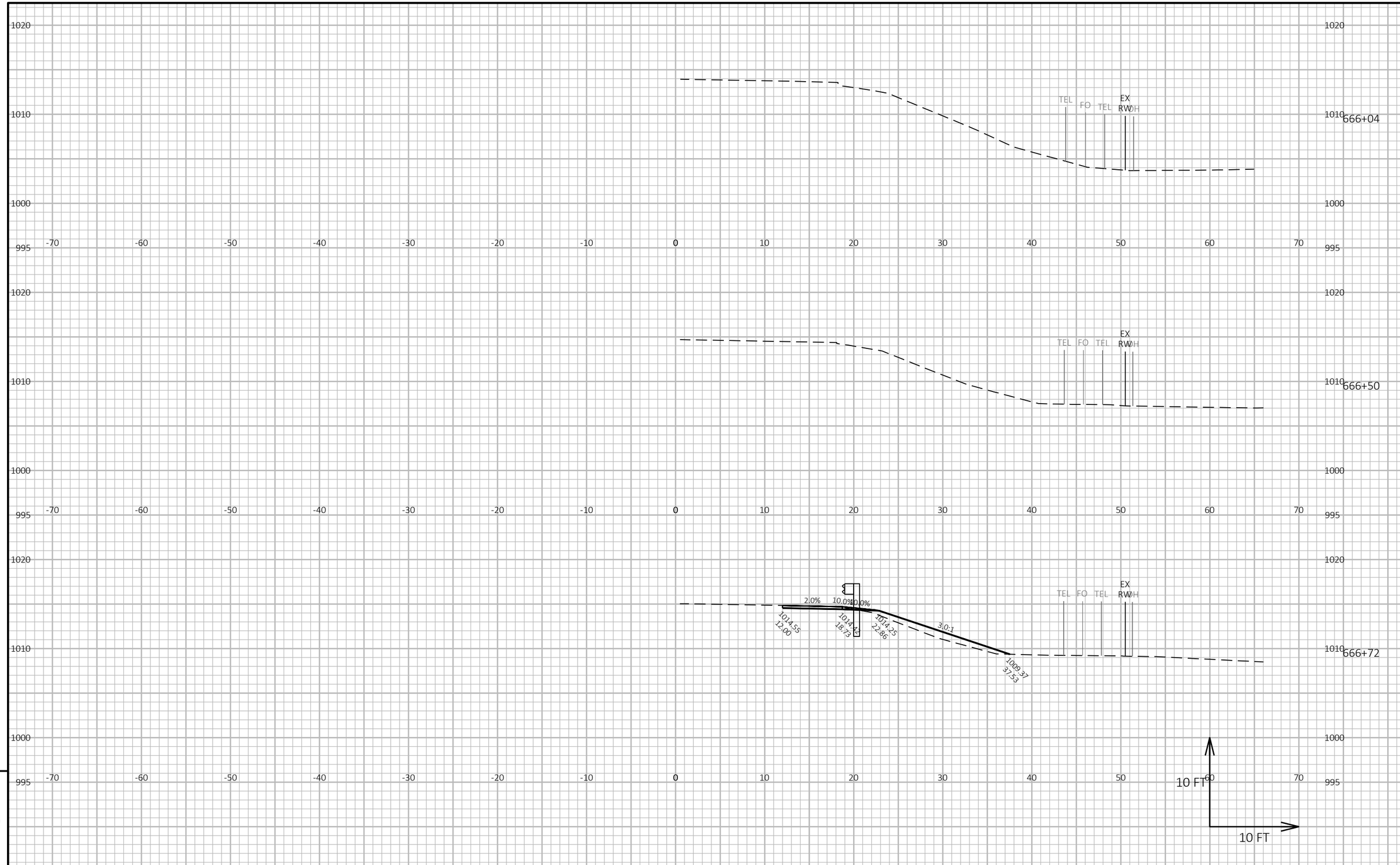

PROJECT NO: 5235-03-70	HWY: STH 80	COUNTY: GRANT	CROSS SECTIONS: STH 80 GUARDRAIL	SHEET 337	E

FILE NAME : X:\PROJECTS\GRANT\200050MW - 5235-03-00 STH 80\DESIGN\C3D\SHEETSPLAN\090202-XS.DWG
LAYOUT NAME - 090202 1
PLOT DATE : 7/15/2022 2:43 PM
PLOT BY : BRAD GROH
PLOT NAME :
PLOT SCALE : 1 IN:10 FT HORZ. / 1 IN:10 FT VERT.
WISDOT/CADDS SHEET 49

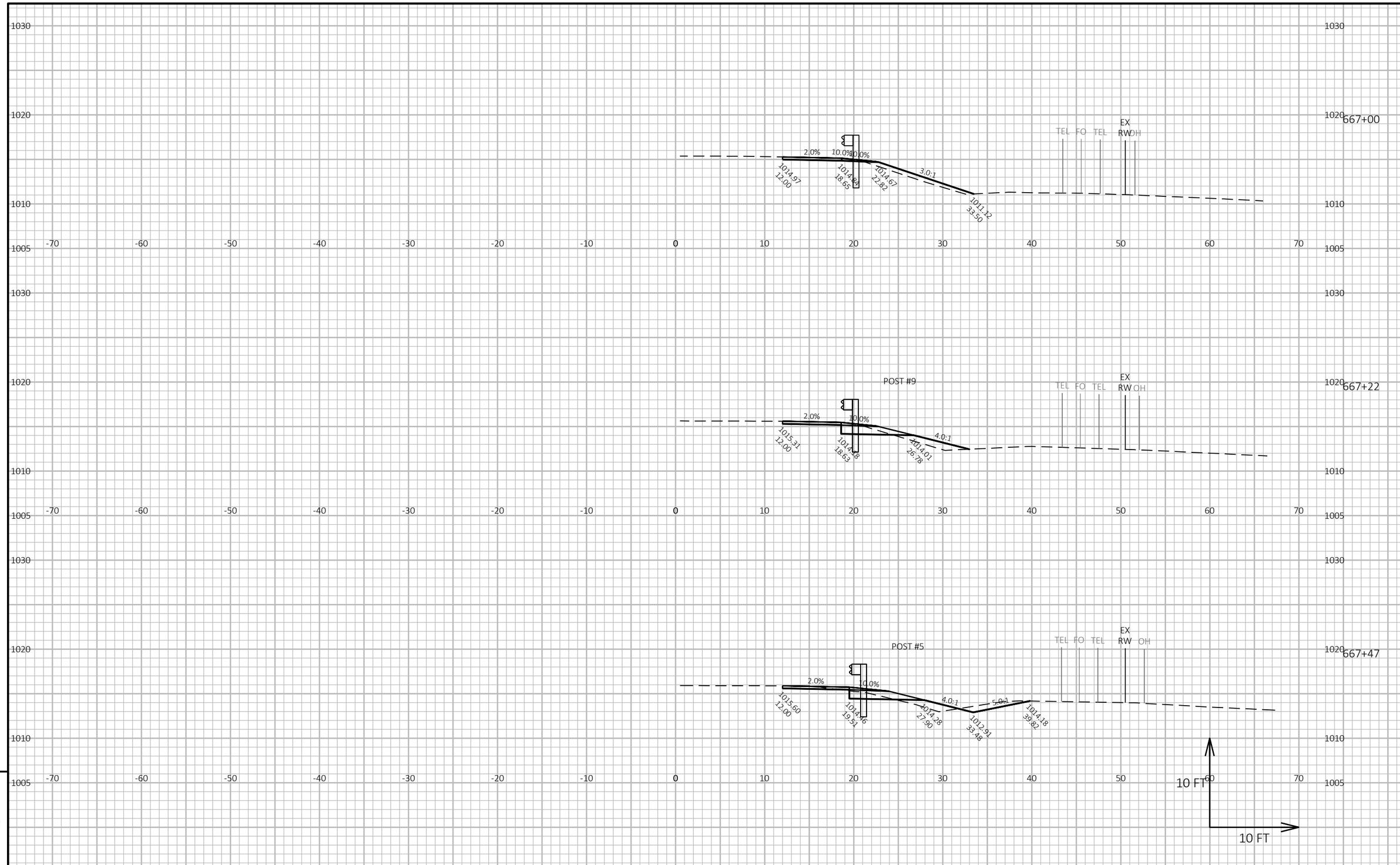

PROJECT NO: 5235-03-70	HWY: STH 80	COUNTY: GRANT	CROSS SECTIONS: STH 80 GUARDRAIL	SHEET 338	E

FILE NAME : X:\PROJECTS\GRANT\200050MW - 5235-03-00 STH 80\DESIGN\C3D\SHEETSPLAN\090202-XS.DWG
LAYOUT NAME - 090202 2
PLOT DATE : 7/15/2022 2:43 PM PLOT BY : BRAD GROH PLOT NAME : PLOT SCALE : 1 IN:10 FT HORZ. / 1 IN:10 FT VERT.

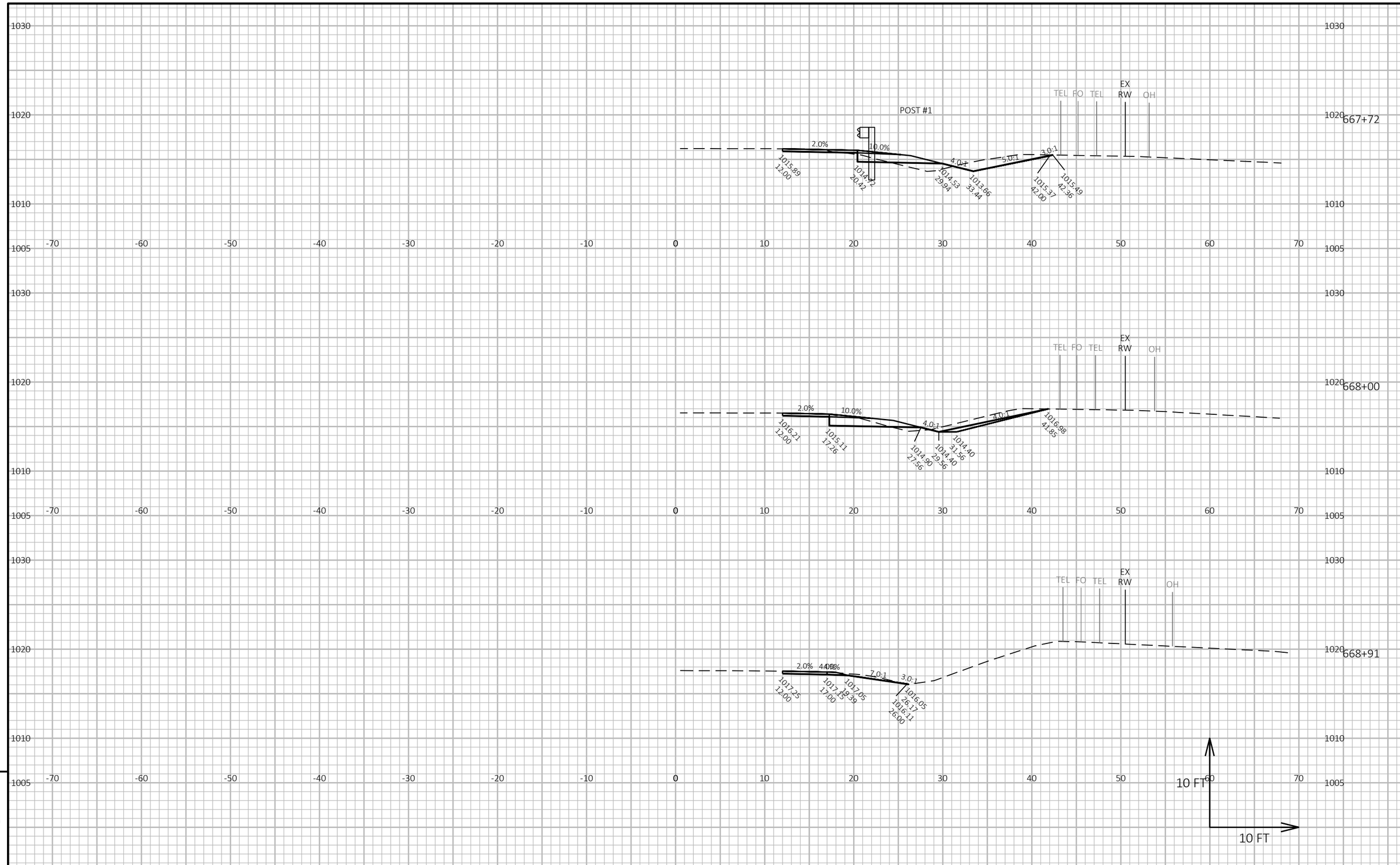

PROJECT NO: 5235-03-70	HWY: STH 80	COUNTY: GRANT	CROSS SECTIONS: STH 80 GUARDRAIL	SHEET 339	E

FILE NAME : X:\PROJECTS\GRANT\200050MW - 5235-03-00 STH 80\DESIGN\C3D\SHEETSPLAN\090202-XS.DWG
LAYOUT NAME - 090202 3
PLOT DATE : 7/15/2022 2:44 PM PLOT BY : BRAD GROH PLOT NAME : PLOT SCALE : 1 IN:10 FT HORZ. / 1 IN:10 FT VERT.

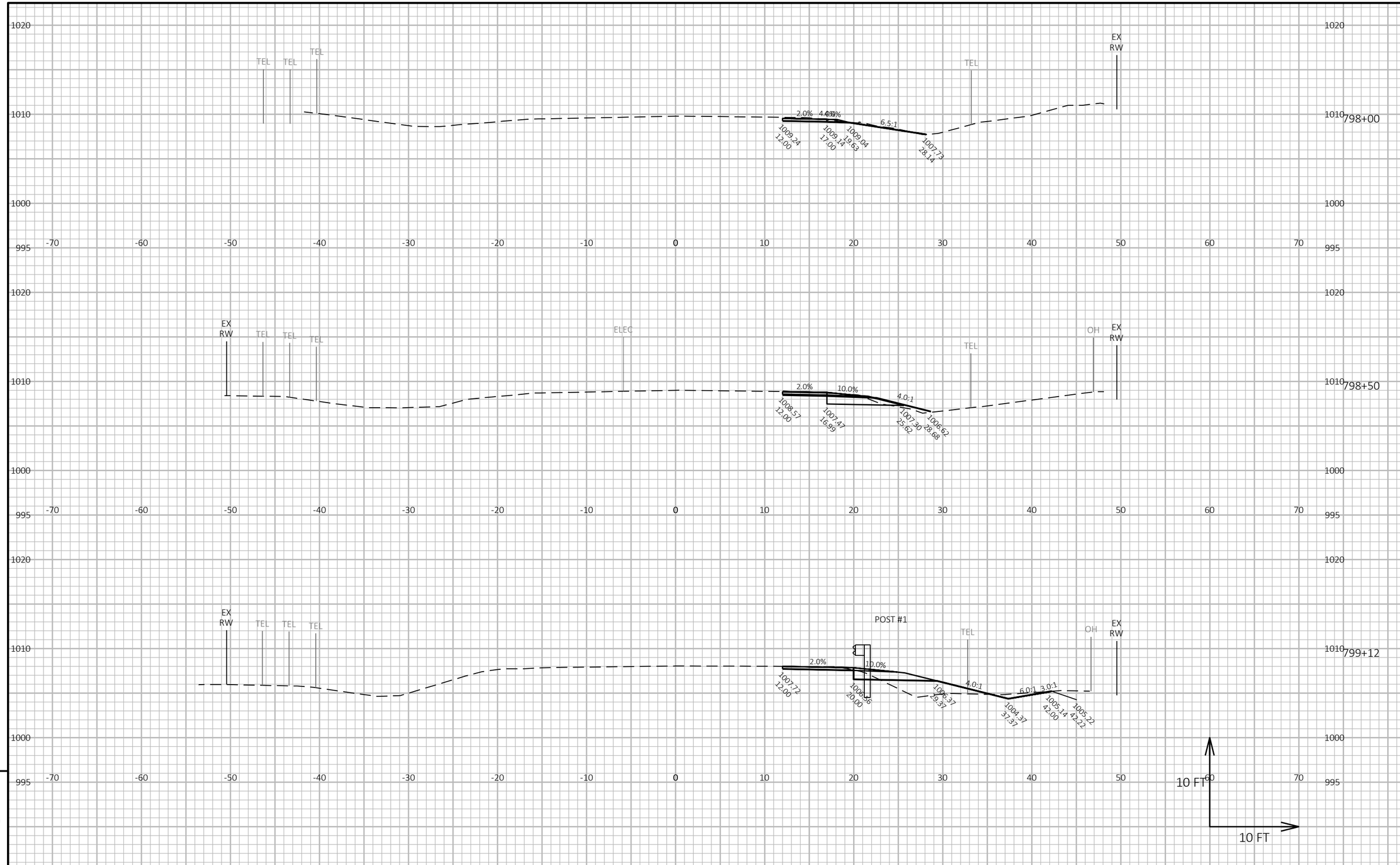

9

9

PROJECT NO: 5235-03-70	HWY: STH 80	COUNTY: GRANT	CROSS SECTIONS: STH 80 GUARDRAIL	SHEET 340	E

FILE NAME : X:\PROJECTS\GRANT\200050MW - 5235-03-00 STH 80\DESIGN\C3D\SHEETSPLAN\090202-XS.DWG
LAYOUT NAME - 090202 4
PLOT DATE : 7/15/2022 2:44 PM
PLOT BY : BRAD GROH
PLOT NAME :
PLOT SCALE : 1 IN:10 FT HORZ. / 1 IN:10 FT VERT.
WISDOT/CADDS SHEET 49

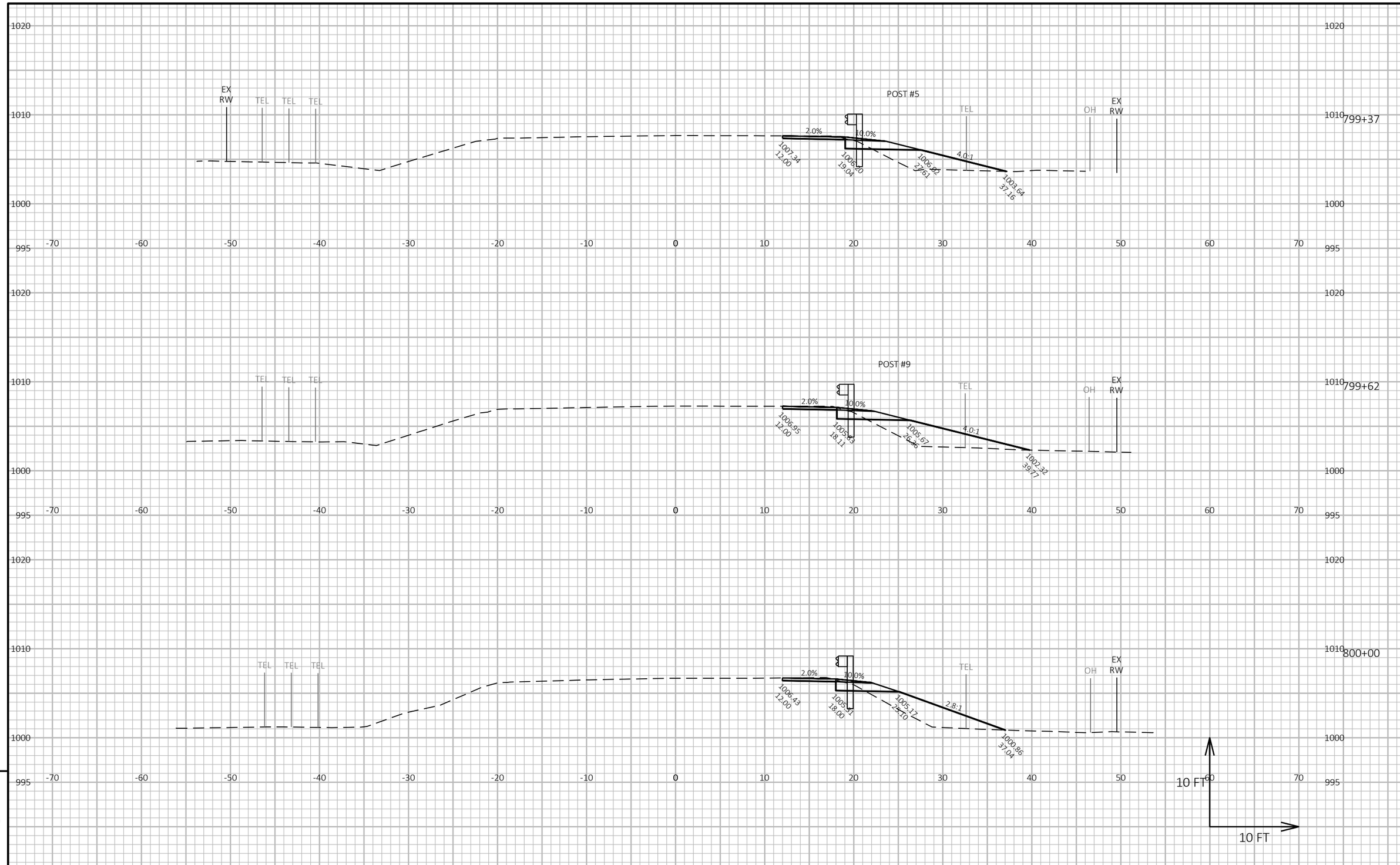

9

9

PROJECT NO: 5235-03-70	HWY: STH 80	COUNTY: GRANT	CROSS SECTIONS: STH 80 GUARDRAIL	SHEET 341	E

FILE NAME : X:\PROJECTS\GRANT\200050MW - 5235-03-00 STH 80\DESIGN\C3D\SHEETSPLAN\090202-XS.DWG
LAYOUT NAME - 090202 5
PLOT DATE : 7/15/2022 2:44 PM
PLOT BY : BRAD GROH
PLOT NAME :
PLOT SCALE : 1 IN:10 FT HORZ. / 1 IN:10 FT VERT.
WISDOT/CADDS SHEET 49

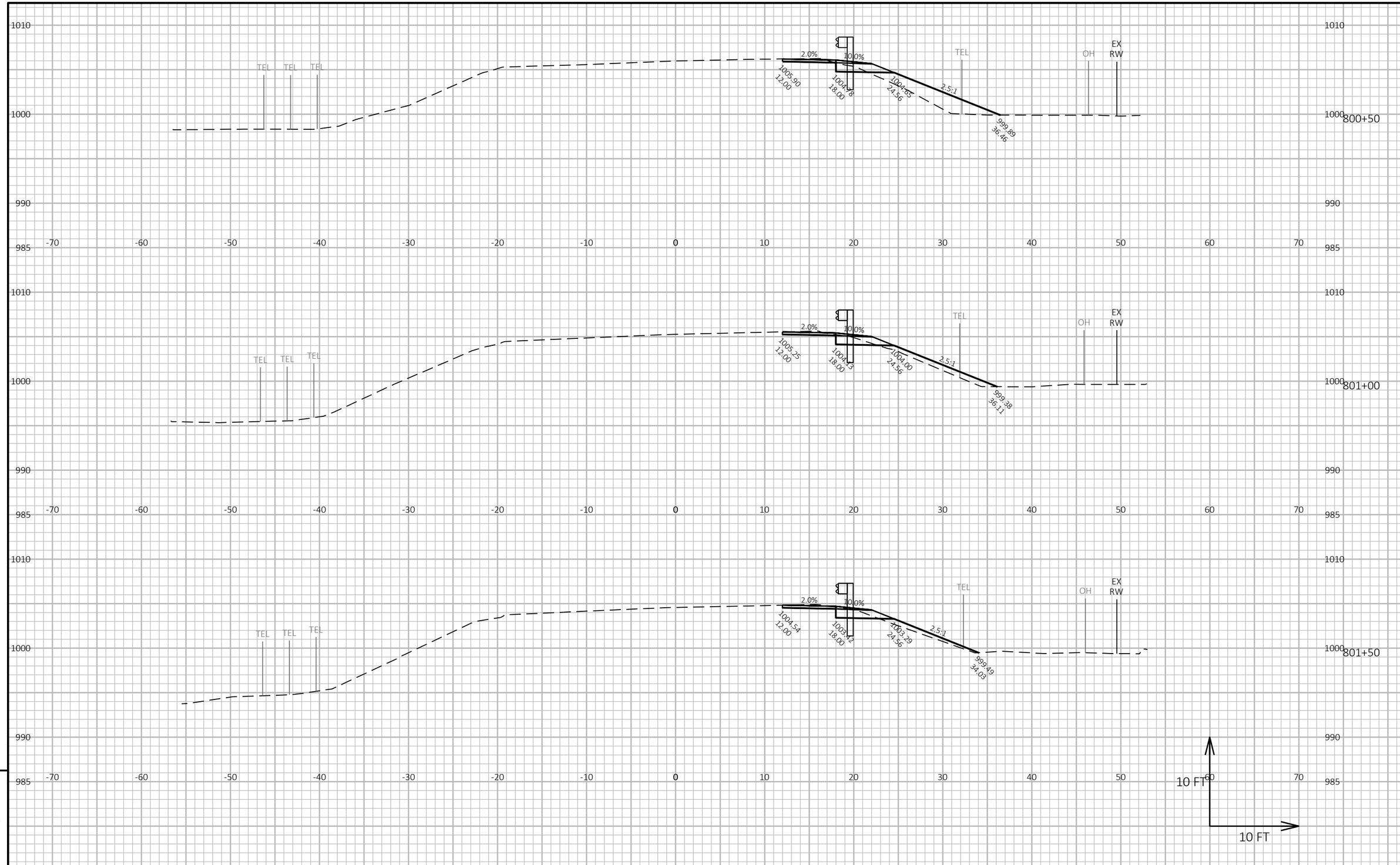

PROJECT NO: 5235-03-70	HWY: STH 80	COUNTY: GRANT	CROSS SECTIONS: STH 80 GUARDRAIL	SHEET 342	E

FILE NAME : X:\PROJECTS\GRANT\200050MW - 5235-03-00 STH 80\DESIGN\C3D\SHEETSPLAN\090202-XS.DWG
LAYOUT NAME - 090202 6
PLOT DATE : 7/15/2022 2:44 PM
PLOT BY : BRAD GROH
PLOT NAME :
PLOT SCALE : 1 IN:10 FT HORZ. / 1 IN:10 FT VERT.
WISDOT/CADDS SHEET 49

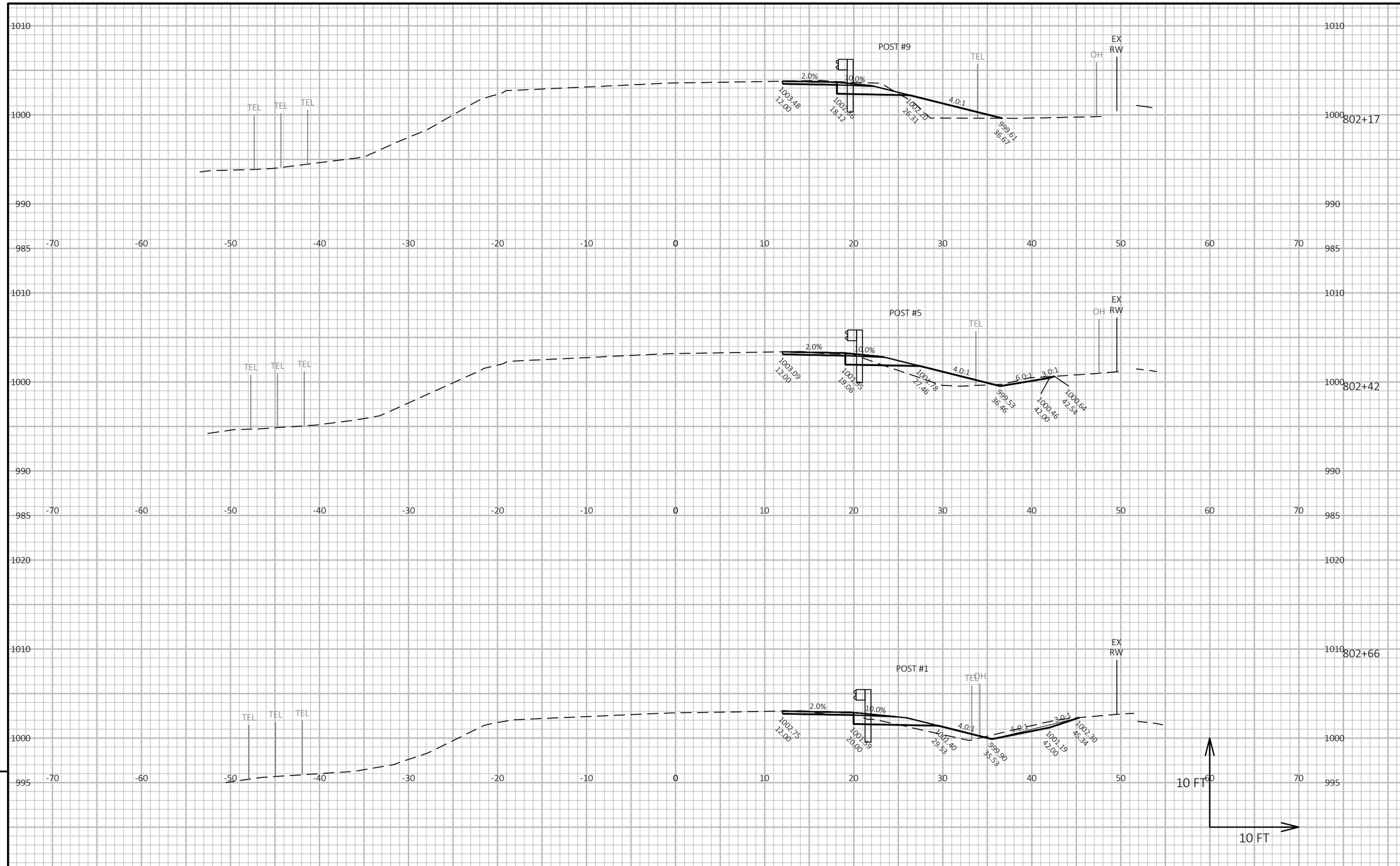

9

9

PROJECT NO: 5235-03-70	HWY: STH 80	COUNTY: GRANT	CROSS SECTIONS: STH 80 GUARDRAIL	SHEET 343	E

FILE NAME : X:\PROJECTS\GRANT\200050MW - 5235-03-00 STH 80\DESIGN\C3D\SHEETSPLAN\090202-XS.DWG
LAYOUT NAME - 090202 7
PLOT DATE : 7/15/2022 2:44 PM
PLOT BY : BRAD GROH
PLOT NAME :
PLOT SCALE : 1 IN:10 FT HORZ. / 1 IN:10 FT VERT.
WISDOT/CADDS SHEET 49

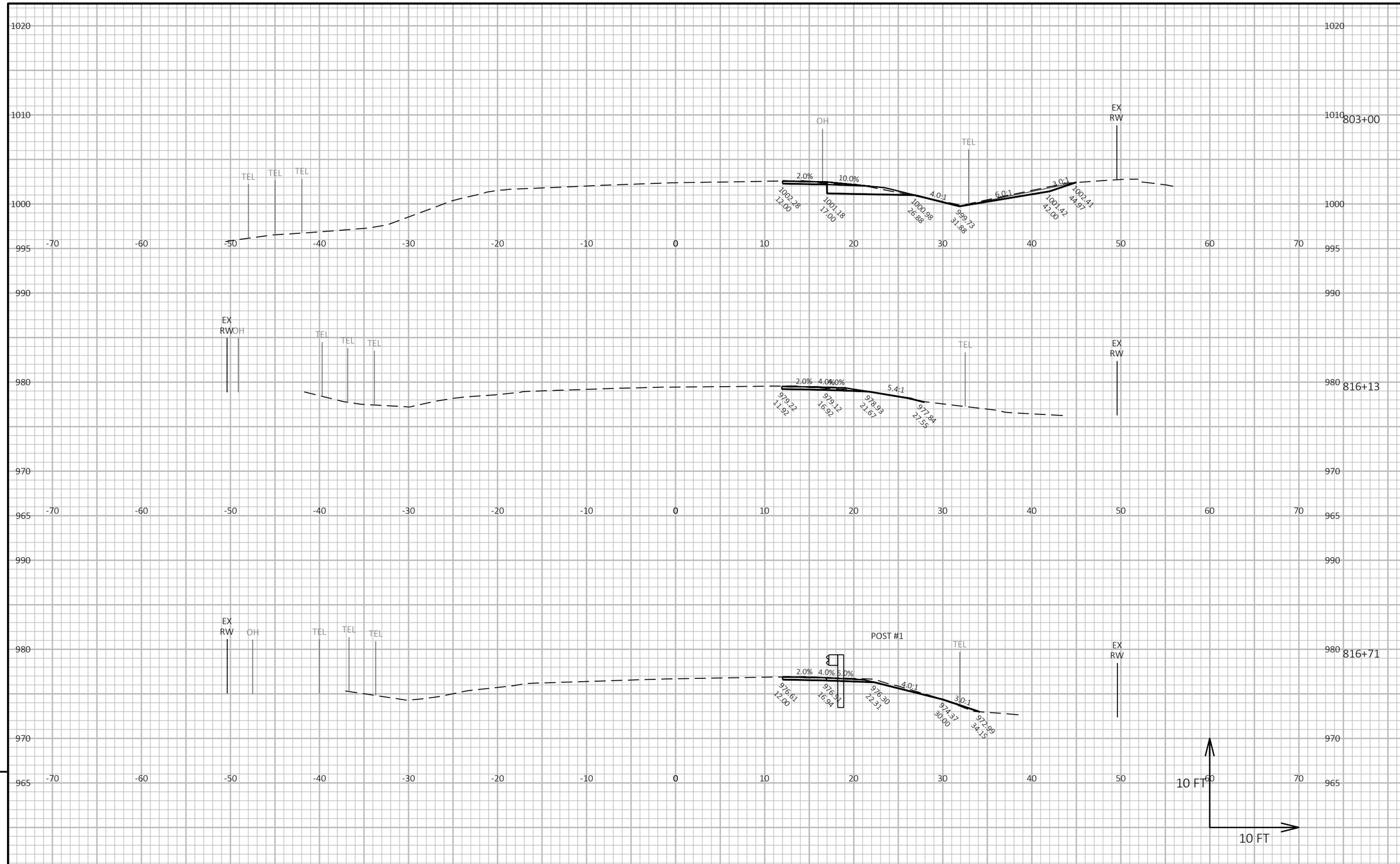

9

9

PROJECT NO: 5235-03-70	HWY: STH 80	COUNTY: GRANT	CROSS SECTIONS: STH 80 GUARDRAIL	SHEET 344	E

FILE NAME : X:\PROJECTS\GRANT\200050MW - 5235-03-00 STH 80\DESIGN\C3D\SHEETSPLAN\090202-XS.DWG
LAYOUT NAME - 090202 8
PLOT DATE : 7/15/2022 2:44 PM
PLOT BY : BRAD GROH
PLOT NAME :
PLOT SCALE : 1 IN:10 FT HORZ. / 1 IN:10 FT VERT.
WISDOT/CADDS SHEET 49

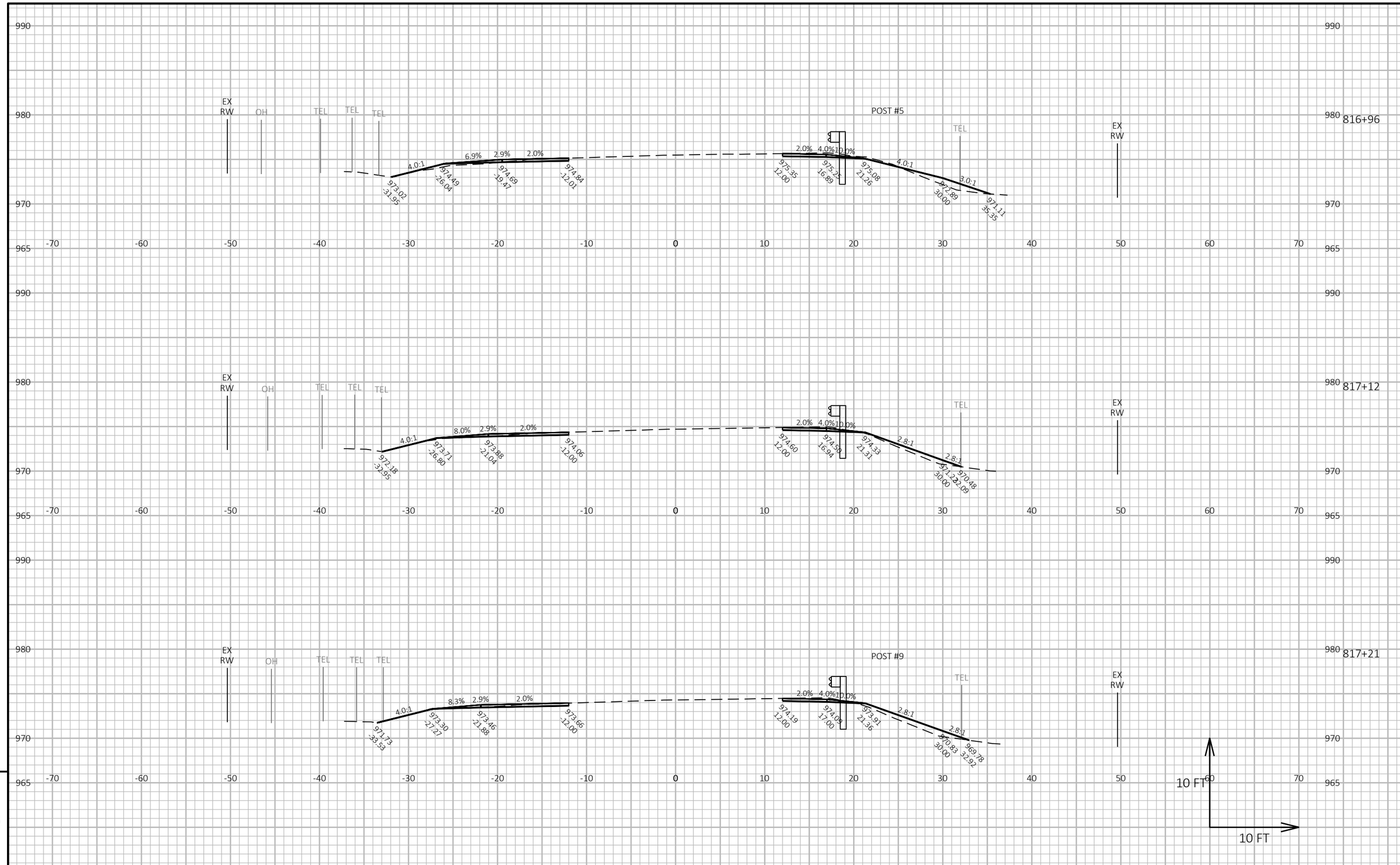

9

9

PROJECT NO: 5235-03-70	HWY: STH 80	COUNTY: GRANT	CROSS SECTIONS: STH 80 GUARDRAIL	SHEET 345	E

FILE NAME : X:\PROJECTS\GRANT\200050MW - 5235-03-00 STH 80\DESIGN\C3D\SHEETSPLAN\090202-XS.DWG
LAYOUT NAME - 090202 9
PLOT DATE : 7/15/2022 2:44 PM
PLOT BY : BRAD GROH
PLOT NAME :
PLOT SCALE : 1 IN:10 FT HORZ. / 1 IN:10 FT VERT.
WISDOT/CADDS SHEET 49

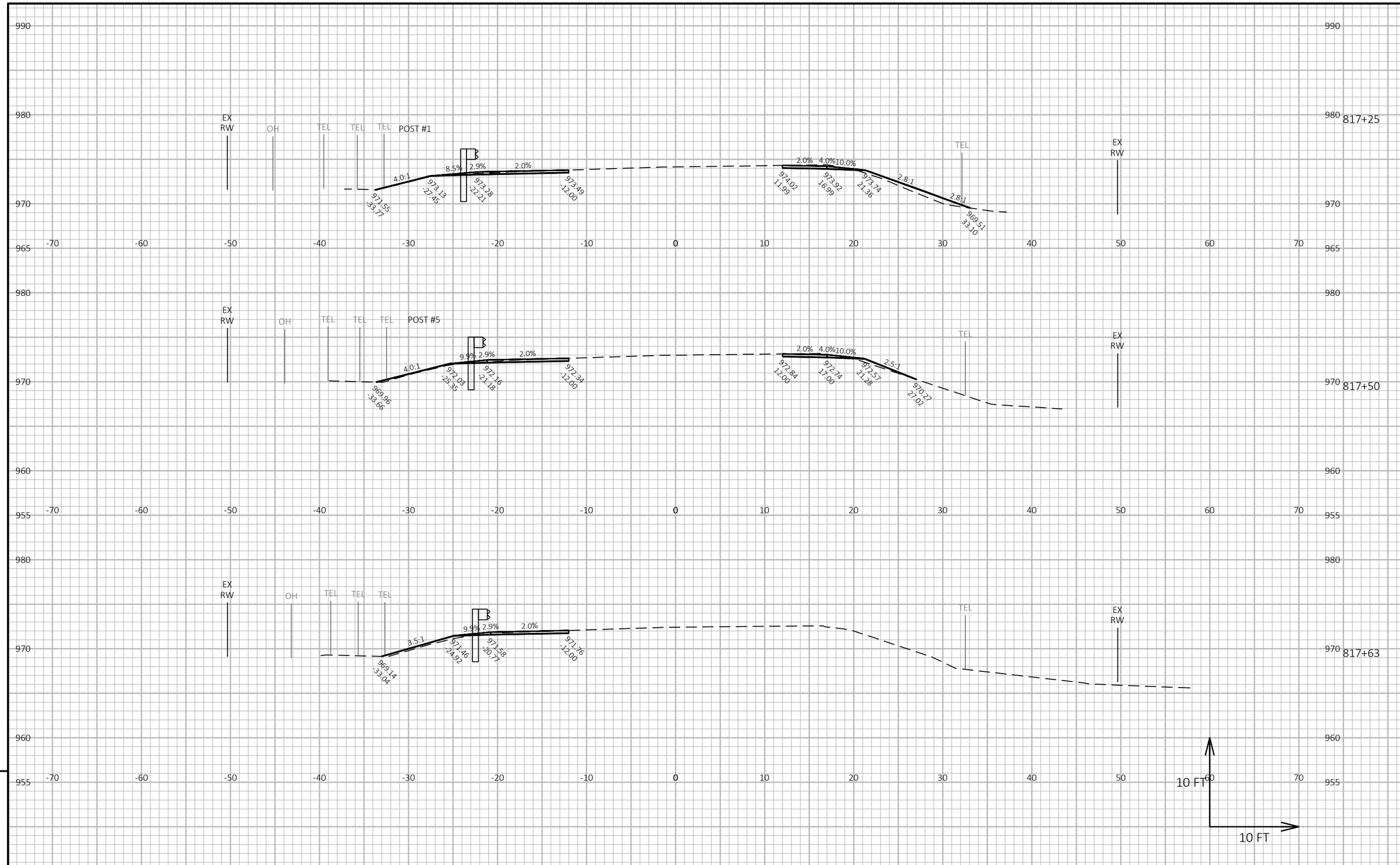

PROJECT NO: 5235-03-70	HWY: STH 80	COUNTY: GRANT	CROSS SECTIONS: STH 80 GUARDRAIL	SHEET 346	E

FILE NAME : X:\PROJECTS\GRANT\200050MW - 5235-03-00 STH 80\DESIGN\C3D\SHEETSPLAN\090202-XS.DWG
LAYOUT NAME - 090202 10
PLOT DATE : 7/15/2022 2:44 PM
PLOT BY : BRAD GROH
PLOT NAME :
PLOT SCALE : 1 IN:10 FT HORZ. / 1 IN:10 FT VERT.
WISDOT/CADDS SHEET 49

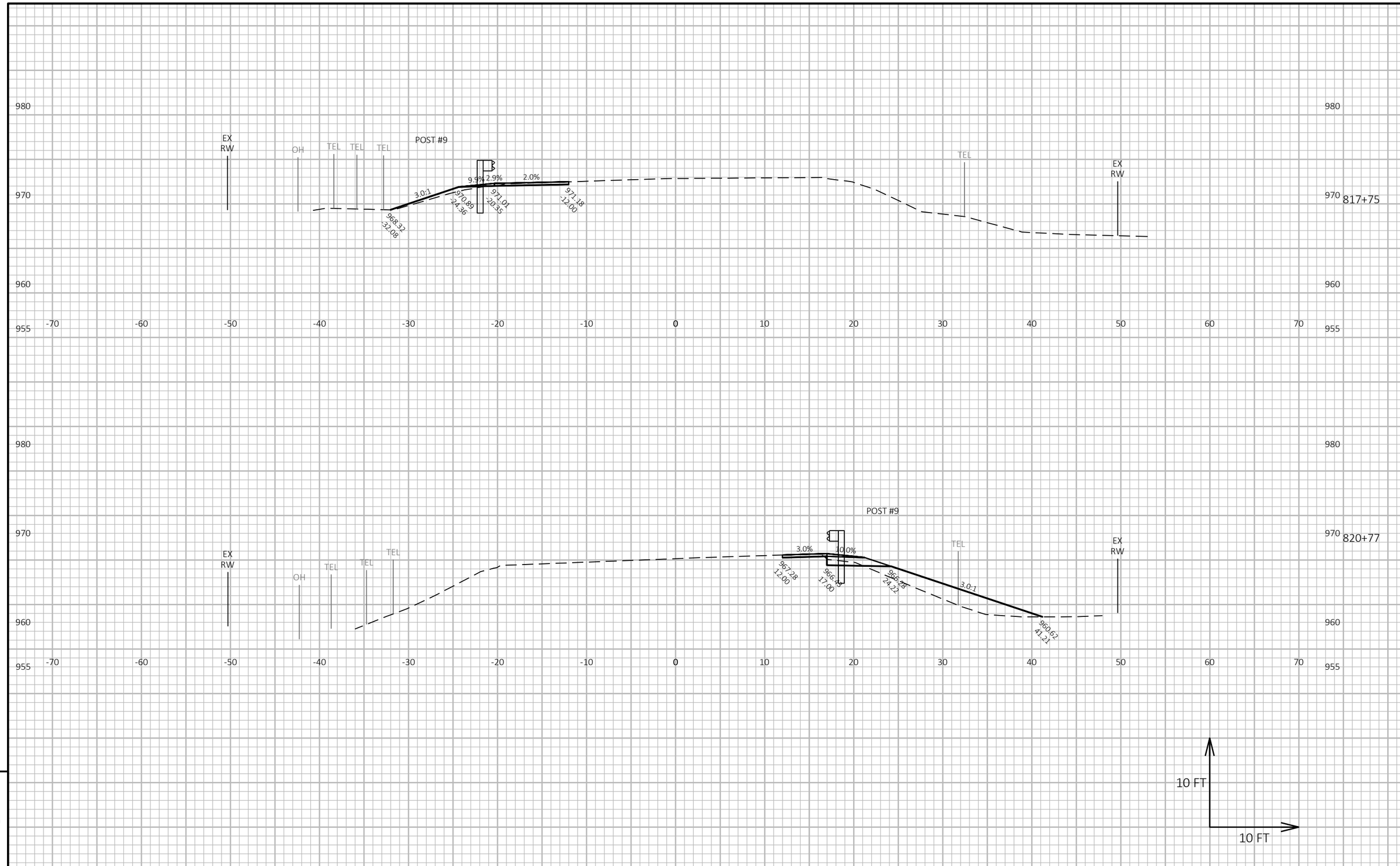

9

9

PROJECT NO: 5235-03-70	HWY: STH 80	COUNTY: GRANT	CROSS SECTIONS: STH 80 GUARDRAIL	SHEET 347	E

FILE NAME : X:\PROJECTS\GRANT\200050MW - 5235-03-00 STH 80\DESIGN\C3D\SHEETSPLAN\090202-XS.DWG
LAYOUT NAME - 090202 11
PLOT DATE : 7/15/2022 2:44 PM
PLOT BY : BRAD GROH
PLOT NAME :
PLOT SCALE : 1 IN:10 FT HORZ. / 1 IN:10 FT VERT.
WISDOT/CADDS SHEET 49

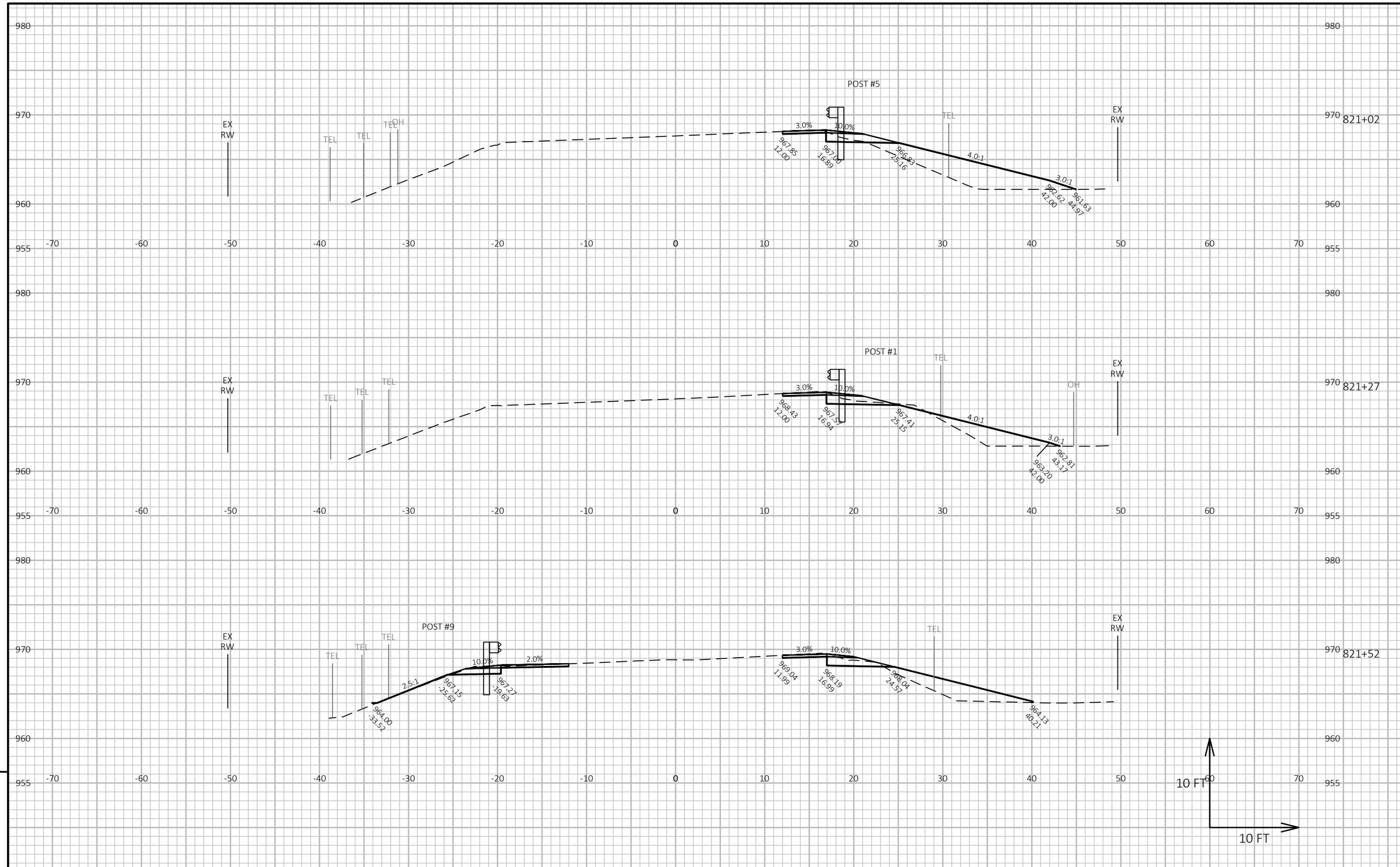

9

9

PROJECT NO: 5235-03-70	HWY: STH 80	COUNTY: GRANT	CROSS SECTIONS: STH 80 GUARDRAIL	SHEET 348	E

FILE NAME : X:\PROJECTS\GRANT\200050MW - 5235-03-00 STH 80\DESIGN\C3D\SHEETSPLAN\090202-XS.DWG
LAYOUT NAME - 090202 12
PLOT DATE : 7/15/2022 2:44 PM
PLOT BY : BRAD GROH
PLOT NAME :
PLOT SCALE : 1 IN:10 FT HORZ. / 1 IN:10 FT VERT.
WISDOT/CADDS SHEET 49

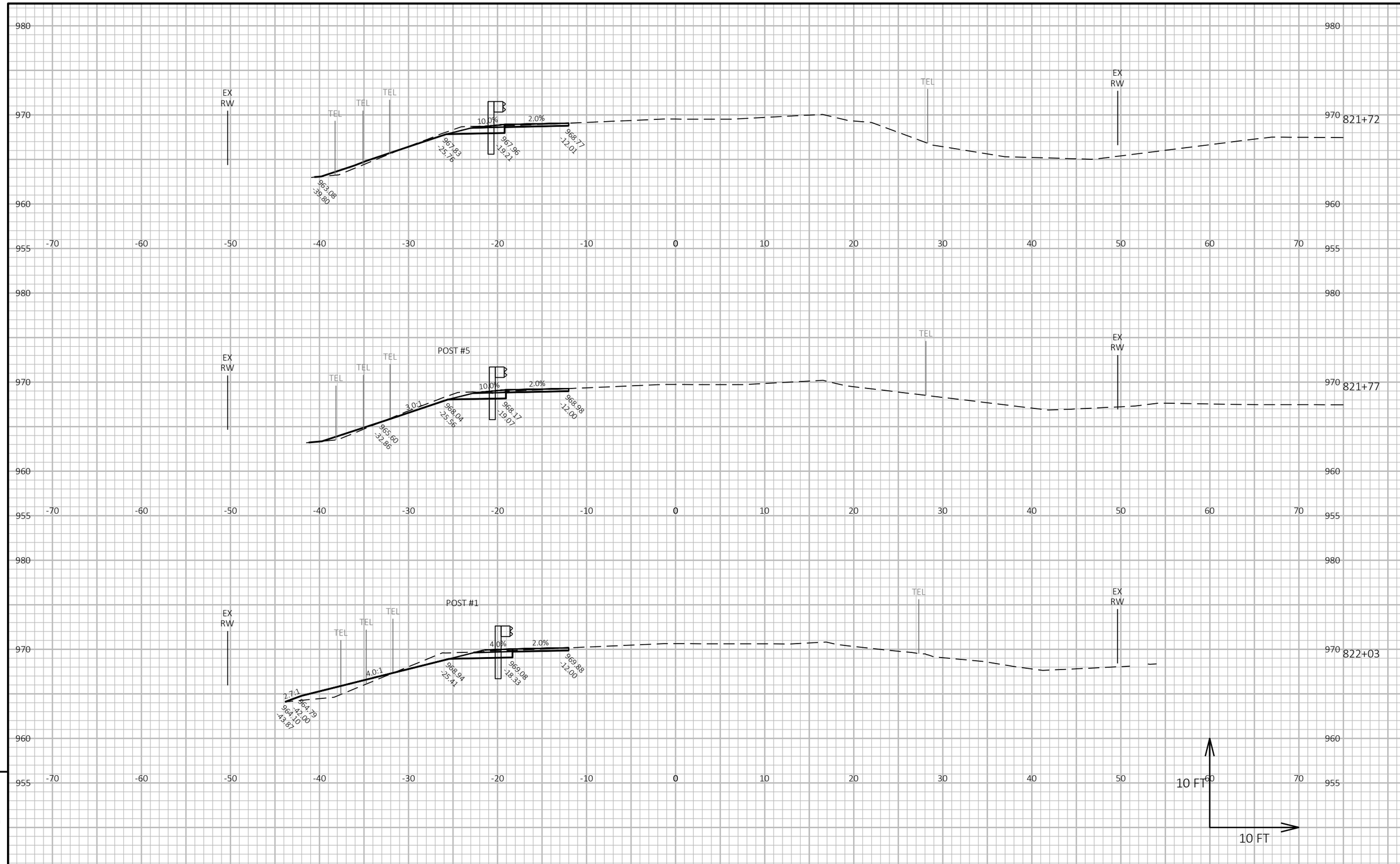

PROJECT NO: 5235-03-70	HWY: STH 80	COUNTY: GRANT	CROSS SECTIONS: STH 80 GUARDRAIL	SHEET 349	E

FILE NAME : X:\PROJECTS\GRANT\200050MW - 5235-03-00 STH 80\DESIGN\C3D\SHEETSPLAN\090202-XS.DWG
LAYOUT NAME - 090202 13
PLOT DATE : 7/15/2022 2:44 PM
PLOT BY : BRAD GROH
PLOT NAME :
PLOT SCALE : 1 IN:10 FT HORZ. / 1 IN:10 FT VERT.

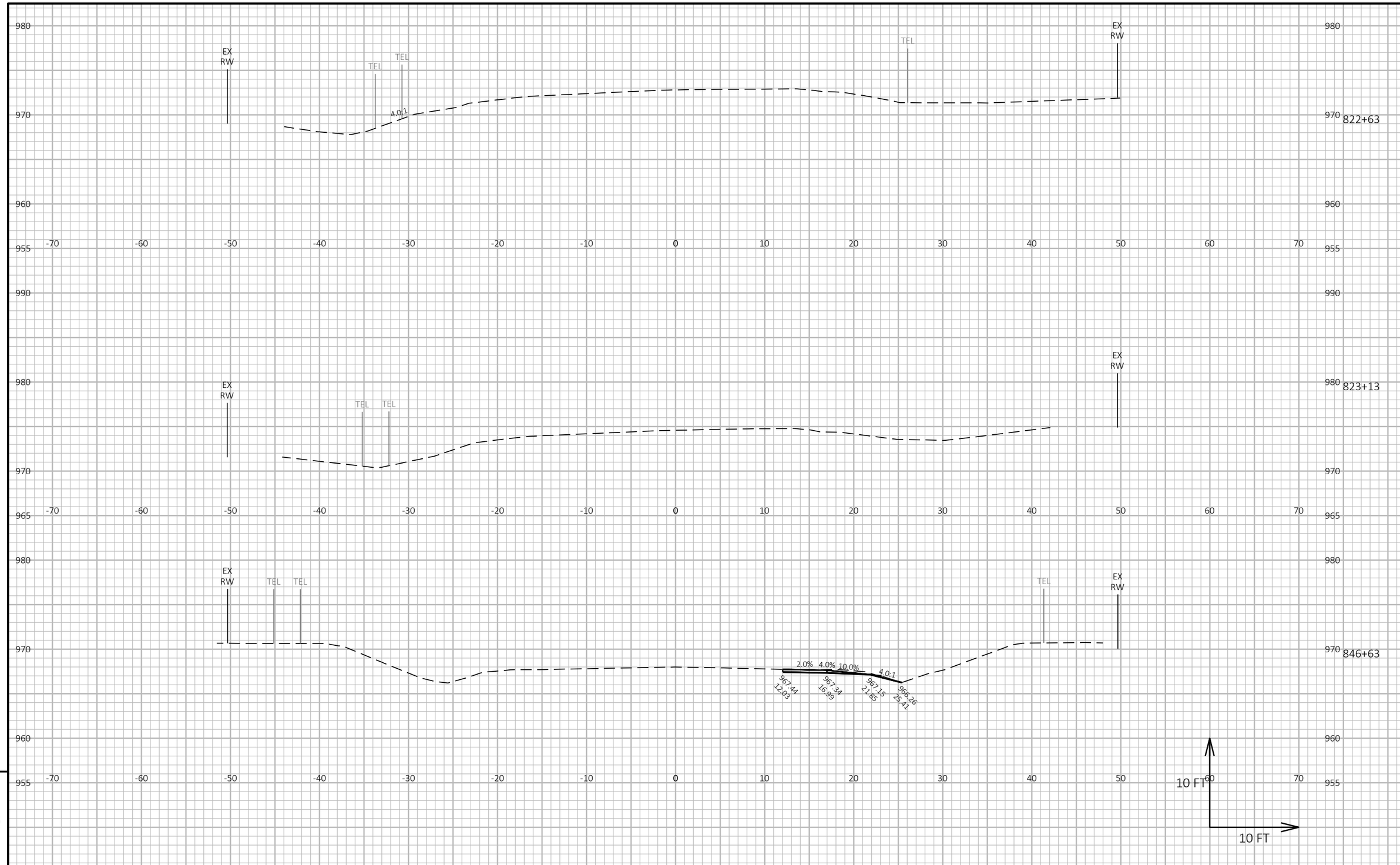

PROJECT NO: 5235-03-70	HWY: STH 80	COUNTY: GRANT	CROSS SECTIONS: STH 80 GUARDRAIL	SHEET 350	E

FILE NAME : X:\PROJECTS\GRANT\200050MW - 5235-03-00 STH 80\DESIGN\C3D\SHEETSPLAN\090202-XS.DWG
LAYOUT NAME - 090202 14
PLOT DATE : 7/15/2022 2:44 PM
PLOT BY : BRAD GROH
PLOT NAME :
PLOT SCALE : 1 IN:10 FT HORZ. / 1 IN:10 FT VERT.
WISDOT/CADDS SHEET 49

9

9

PROJECT NO: 5235-03-70	HWY: STH 80	COUNTY: GRANT	CROSS SECTIONS: STH 80 GUARDRAIL	SHEET 351	E

FILE NAME : X:\PROJECTS\GRANT\200050MW - 5235-03-00 STH 80\DESIGN\C3D\SHEETSPLAN\090202-XS.DWG
LAYOUT NAME - 090202 15
PLOT DATE : 7/15/2022 2:44 PM
PLOT BY : BRAD GROH
PLOT NAME :
PLOT SCALE : 1 IN:10 FT HORZ. / 1 IN:10 FT VERT.
WISDOT/CADDS SHEET 49

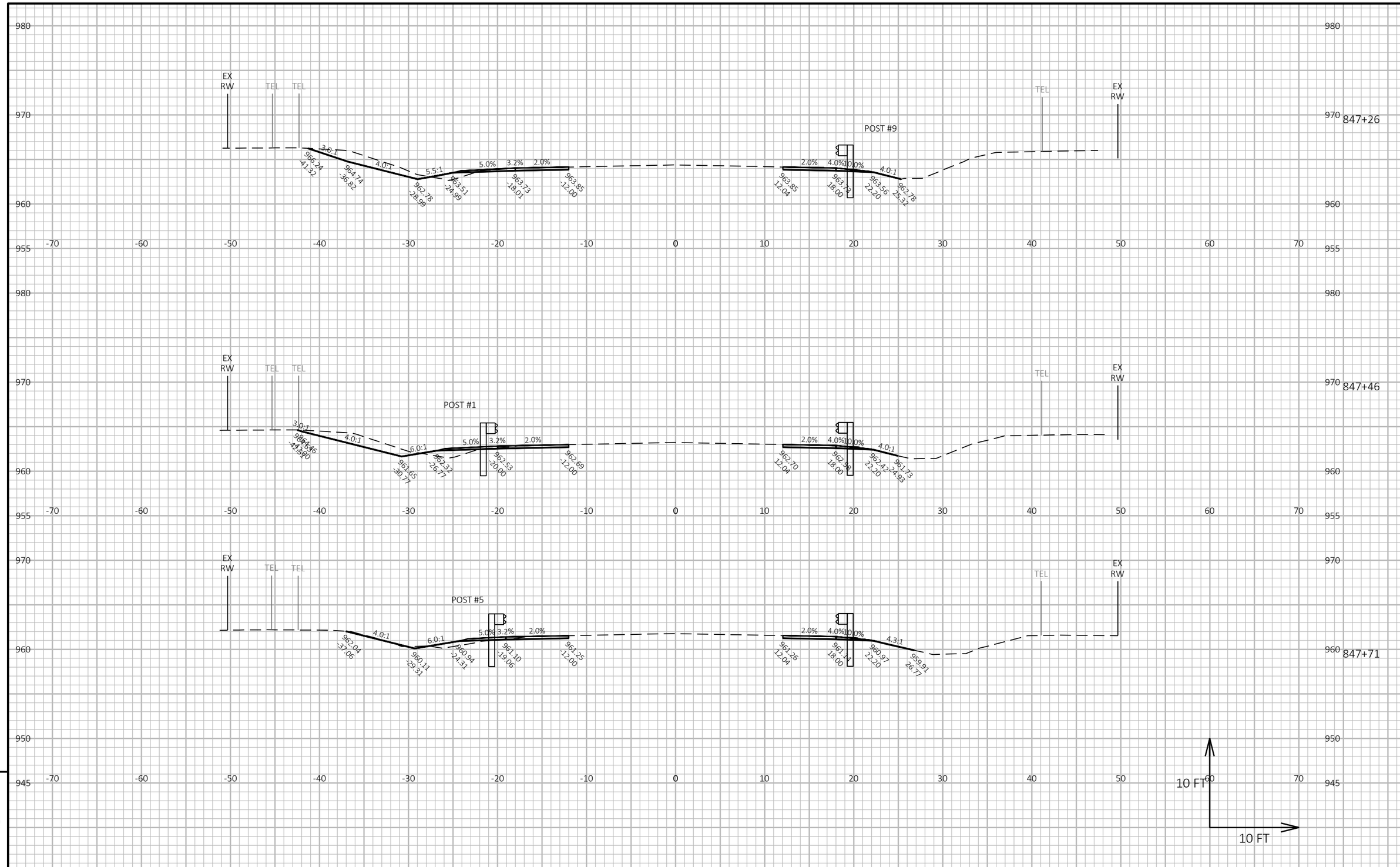

9

9

PROJECT NO: 5235-03-70	HWY: STH 80	COUNTY: GRANT	CROSS SECTIONS: STH 80 GUARDRAIL	SHEET 352	E

FILE NAME : X:\PROJECTS\GRANT\200050MW - 5235-03-00 STH 80\DESIGN\C3D\SHEETSPLAN\090202-XS.DWG
LAYOUT NAME - 090202 16
PLOT DATE : 7/15/2022 2:44 PM
PLOT BY : BRAD GROH
PLOT NAME :
PLOT SCALE : 1 IN:10 FT HORZ. / 1 IN:10 FT VERT.
WISDOT/CADDS SHEET 49

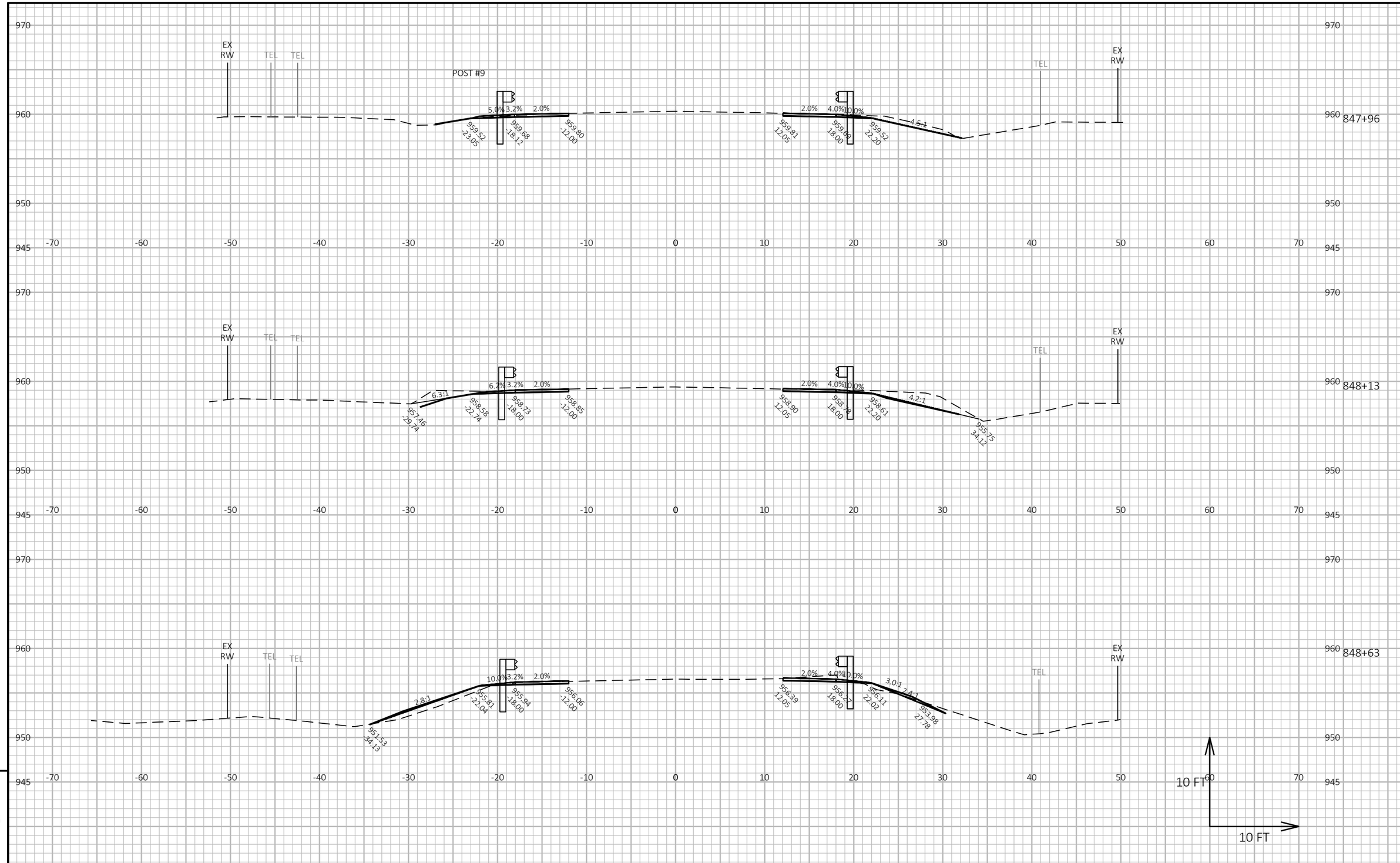

PROJECT NO: 5235-03-70	HWY: STH 80	COUNTY: GRANT	CROSS SECTIONS: STH 80 GUARDRAIL	SHEET 353	E

FILE NAME : X:\PROJECTS\GRANT\200050MW - 5235-03-00 STH 80\DESIGN\C3D\SHEETSPLAN\090202-XS.DWG
LAYOUT NAME - 090202 17
PLOT DATE : 7/15/2022 2:44 PM
PLOT BY : BRAD GROH
PLOT NAME :
PLOT SCALE : 1 IN:10 FT HORZ. / 1 IN:10 FT VERT.
WISDOT/CADDS SHEET 49

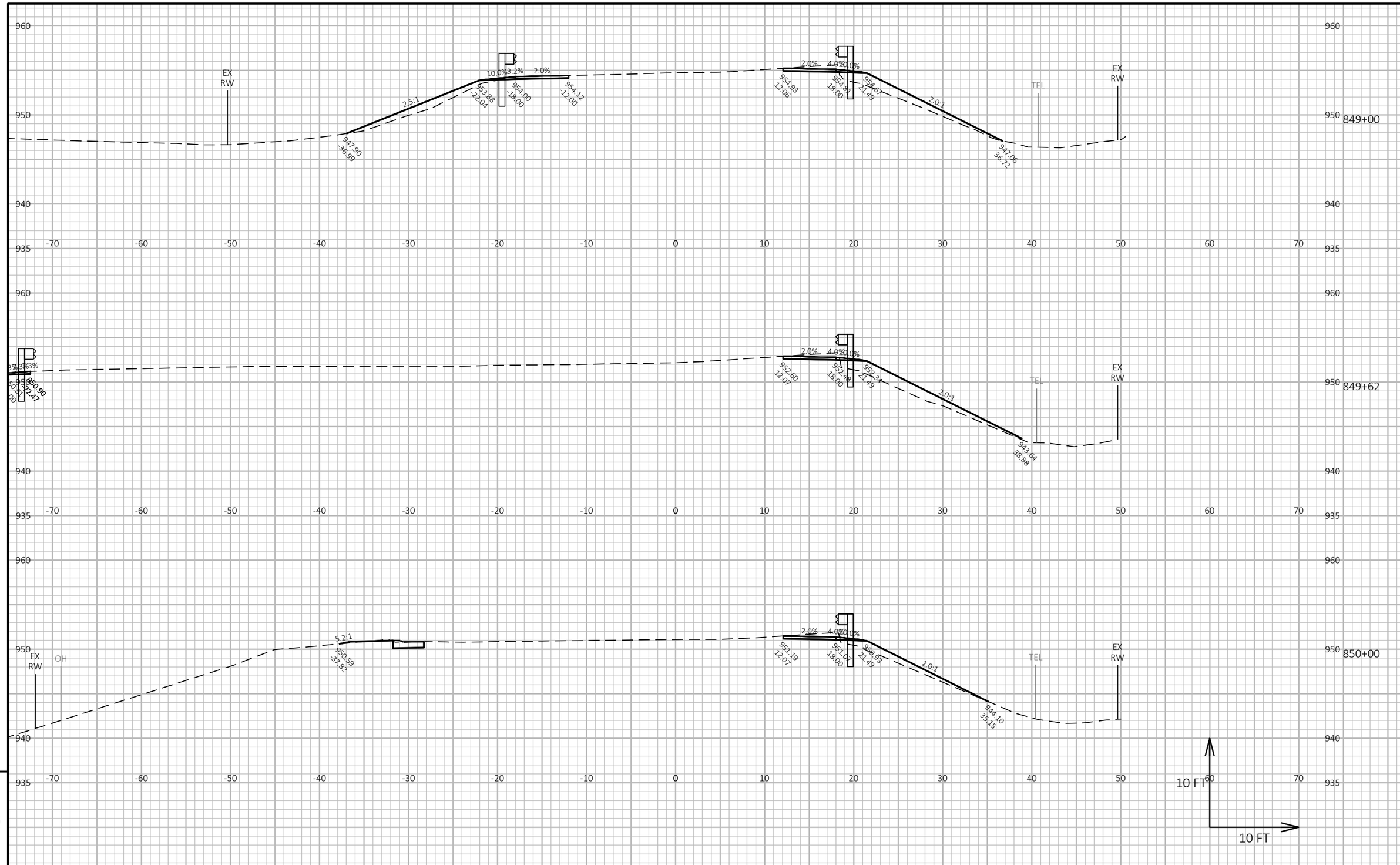

PROJECT NO: 5235-03-70	HWY: STH 80	COUNTY: GRANT	CROSS SECTIONS: STH 80 GUARDRAIL	SHEET 354	E

FILE NAME : X:\PROJECTS\GRANT\200050MW - 5235-03-00 STH 80\DESIGN\C3D\SHEETSPLAN\090202-XS.DWG
LAYOUT NAME - 090202 18
PLOT DATE : 7/15/2022 2:44 PM
PLOT BY : BRAD GROH
PLOT NAME :
PLOT SCALE : 1 IN:10 FT HORZ. / 1 IN:10 FT VERT.
WISDOT/CADDS SHEET 49

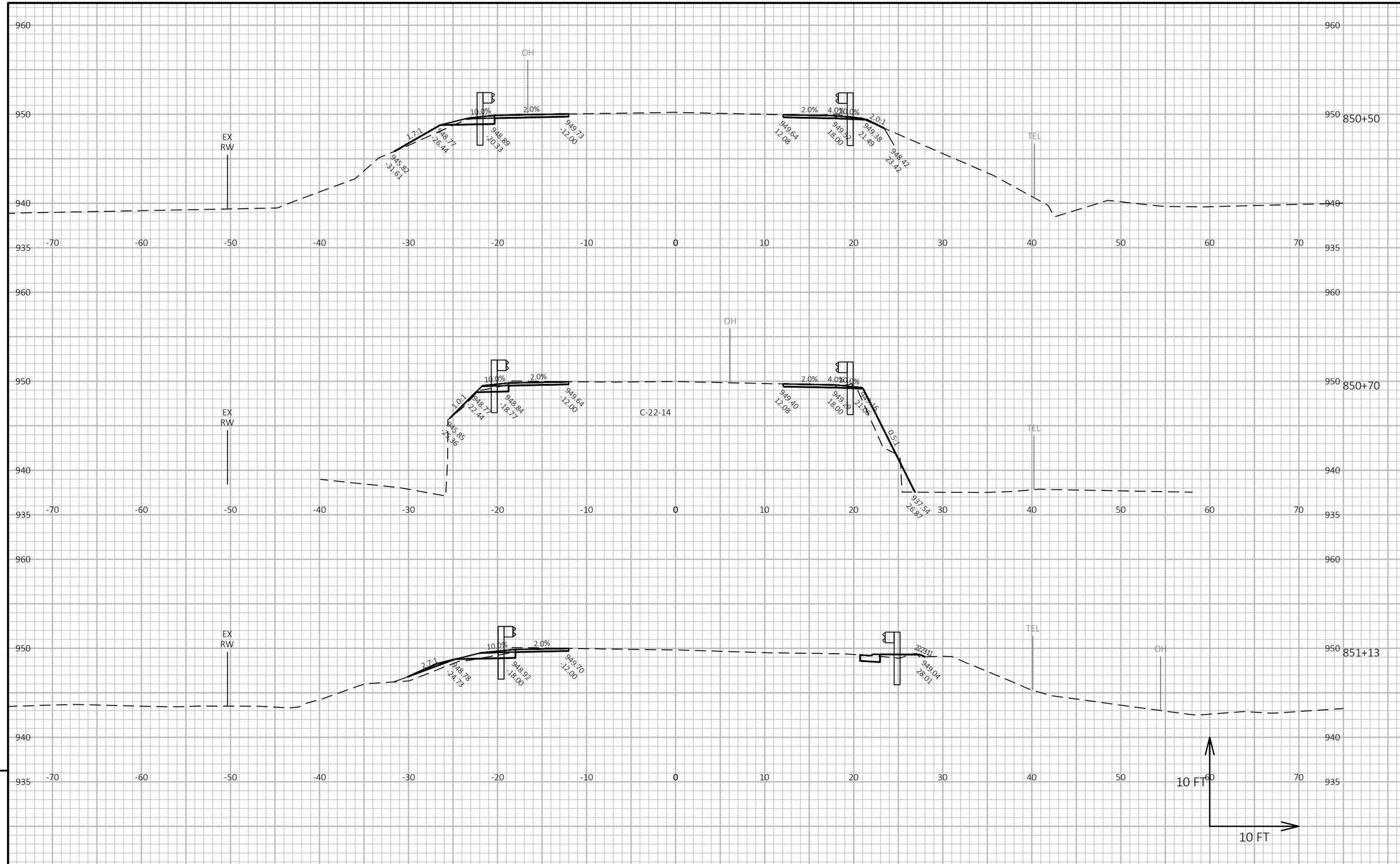

PROJECT NO: 5235-03-70	HWY: STH 80	COUNTY: GRANT	CROSS SECTIONS: STH 80 GUARDRAIL	SHEET 355	E

FILE NAME : X:\PROJECTS\GRANT\200050MW - 5235-03-00 STH 80\DESIGN\C3D\SHEETSPLAN\090202-XS.DWG
LAYOUT NAME - 090202 19
PLOT DATE : 7/15/2022 2:44 PM PLOT BY : BRAD GROH PLOT NAME : PLOT SCALE : 1 IN:10 FT HORZ. / 1 IN:10 FT VERT.

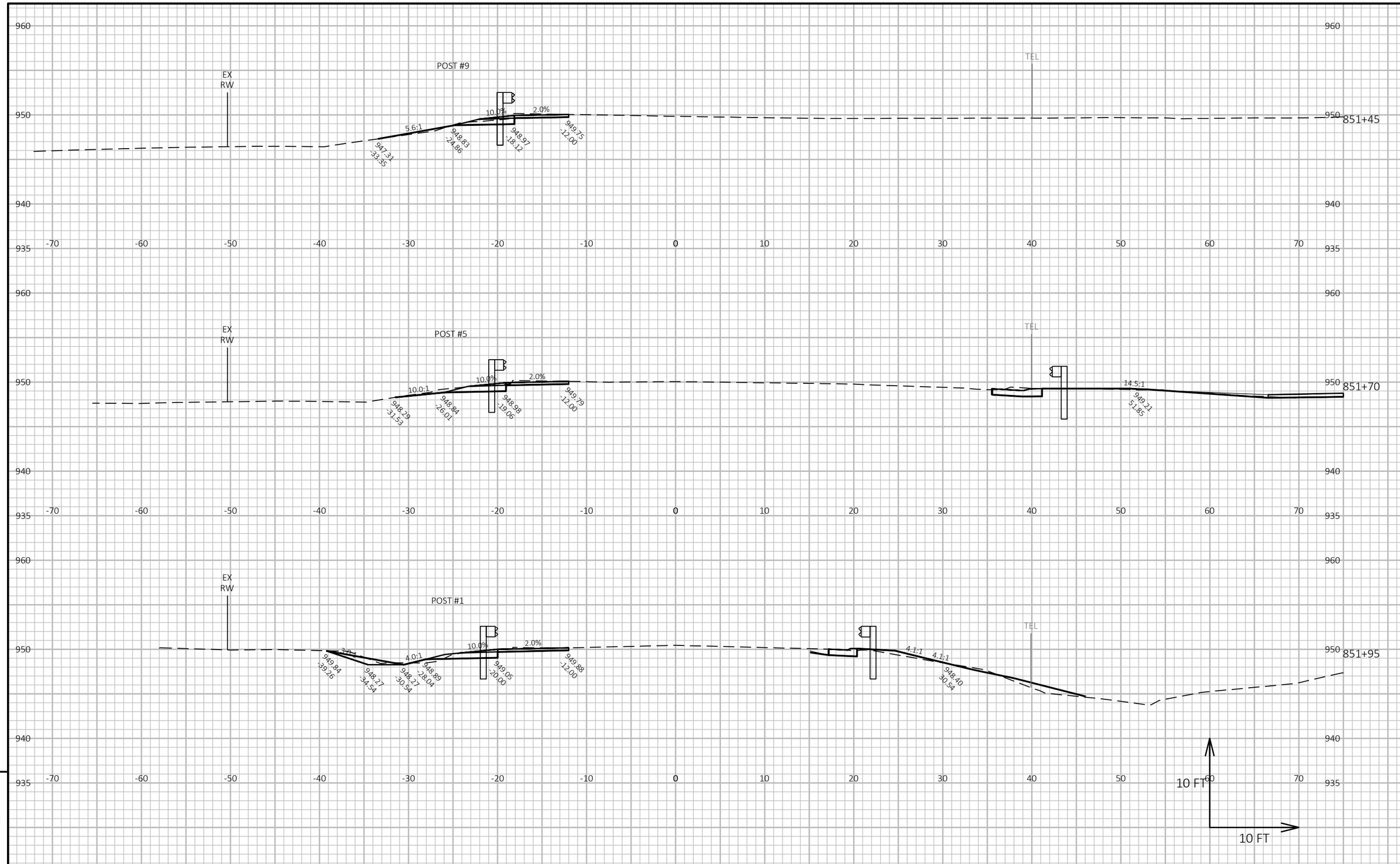

9

9

PROJECT NO: 5235-03-70	HWY: STH 80	COUNTY: GRANT	CROSS SECTIONS: STH 80 GUARDRAIL	SHEET 356	E

FILE NAME : X:\PROJECTS\GRANT\200050MW - 5235-03-00 STH 80\DESIGN\C3D\SHEETSPLAN\090202-XS.DWG
LAYOUT NAME - 090202 20
PLOT DATE : 7/15/2022 2:44 PM
PLOT BY : BRAD GROH
PLOT NAME :
PLOT SCALE : 1 IN:10 FT HORZ. / 1 IN:10 FT VERT.
WISDOT/CADDS SHEET 49

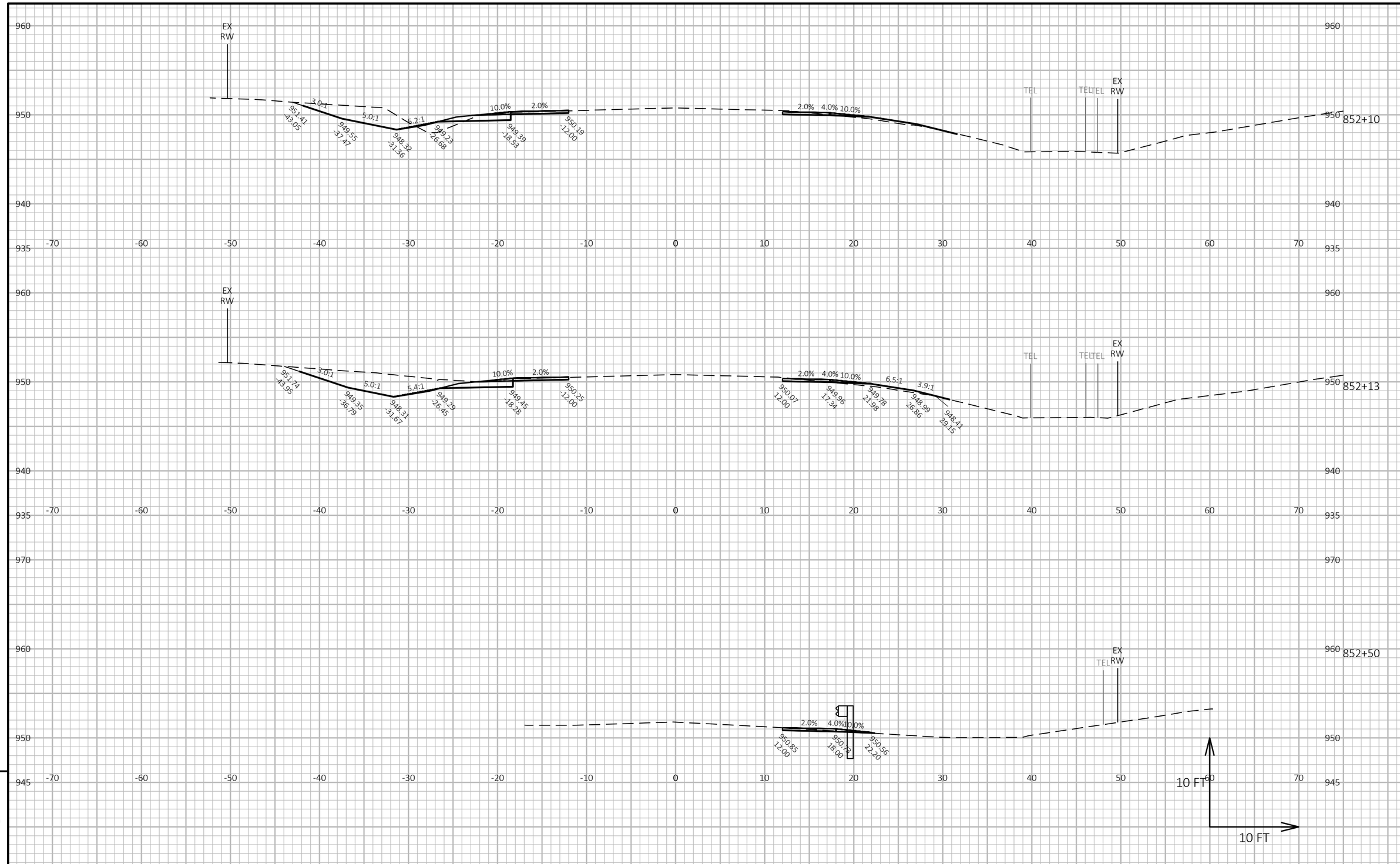

PROJECT NO: 5235-03-70	HWY: STH 80	COUNTY: GRANT	CROSS SECTIONS: STH 80 GUARDRAIL	SHEET 357	E

FILE NAME : X:\PROJECTS\GRANT\200050MW - 5235-03-00 STH 80\DESIGN\C3D\SHEETSPLAN\090202-XS.DWG
LAYOUT NAME - 090202 21
PLOT DATE : 7/15/2022 2:45 PM
PLOT BY : BRAD GROH
PLOT NAME :
PLOT SCALE : 1 IN:10 FT HORZ. / 1 IN:10 FT VERT.
WISDOT/CADDS SHEET 49

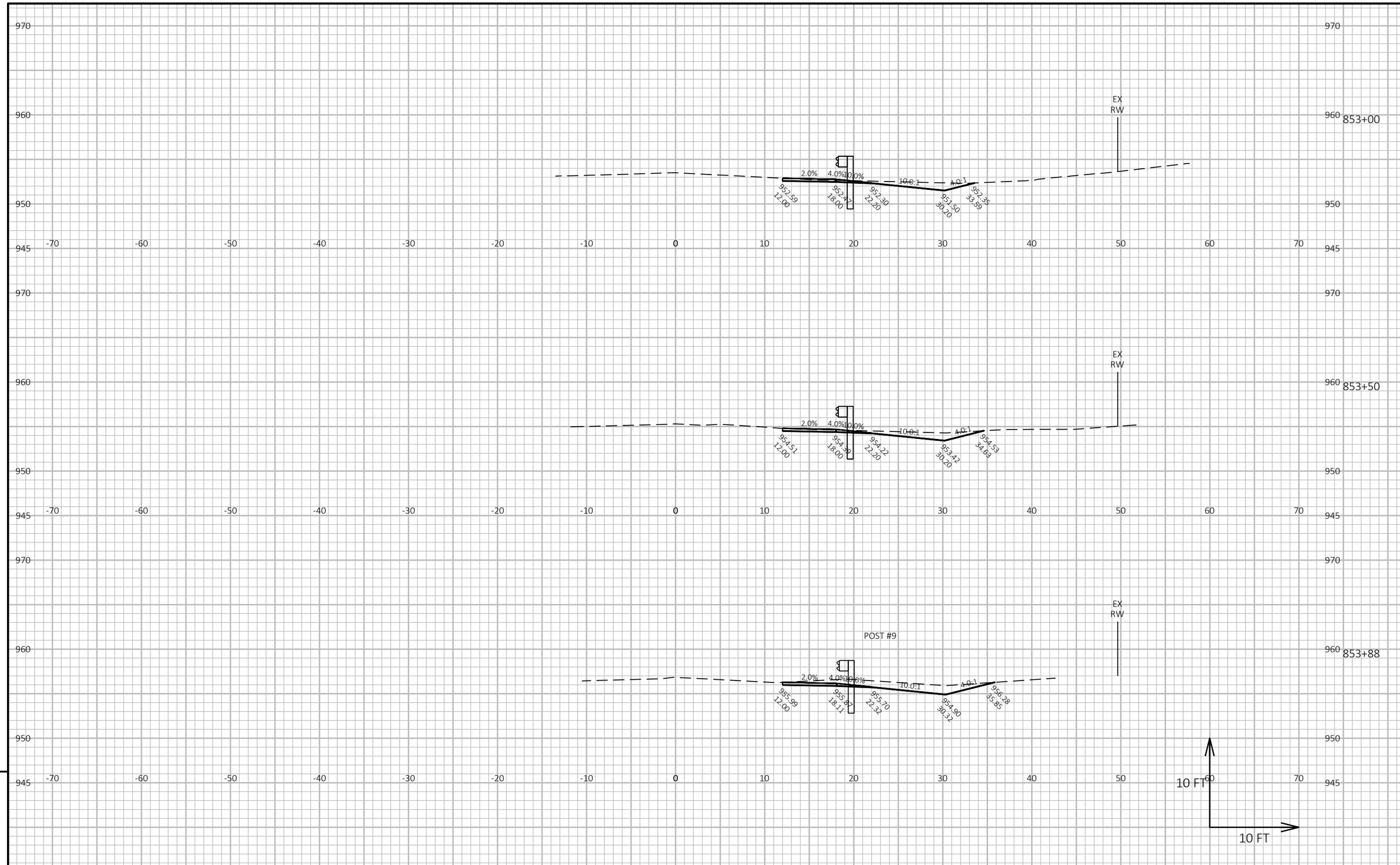

9

9

PROJECT NO: 5235-03-70	HWY: STH 80	COUNTY: GRANT	CROSS SECTIONS: STH 80 GUARDRAIL	SHEET 358	E

FILE NAME : X:\PROJECTS\GRANT\200050MW - 5235-03-00 STH 80\DESIGN\C3D\SHEETSPLAN\090202-XS.DWG
LAYOUT NAME - 090202 22
PLOT DATE : 7/15/2022 2:45 PM
PLOT BY : BRAD GROH
PLOT NAME :
PLOT SCALE : 1 IN:10 FT HORZ. / 1 IN:10 FT VERT.
WISDOT/CADDS SHEET 49

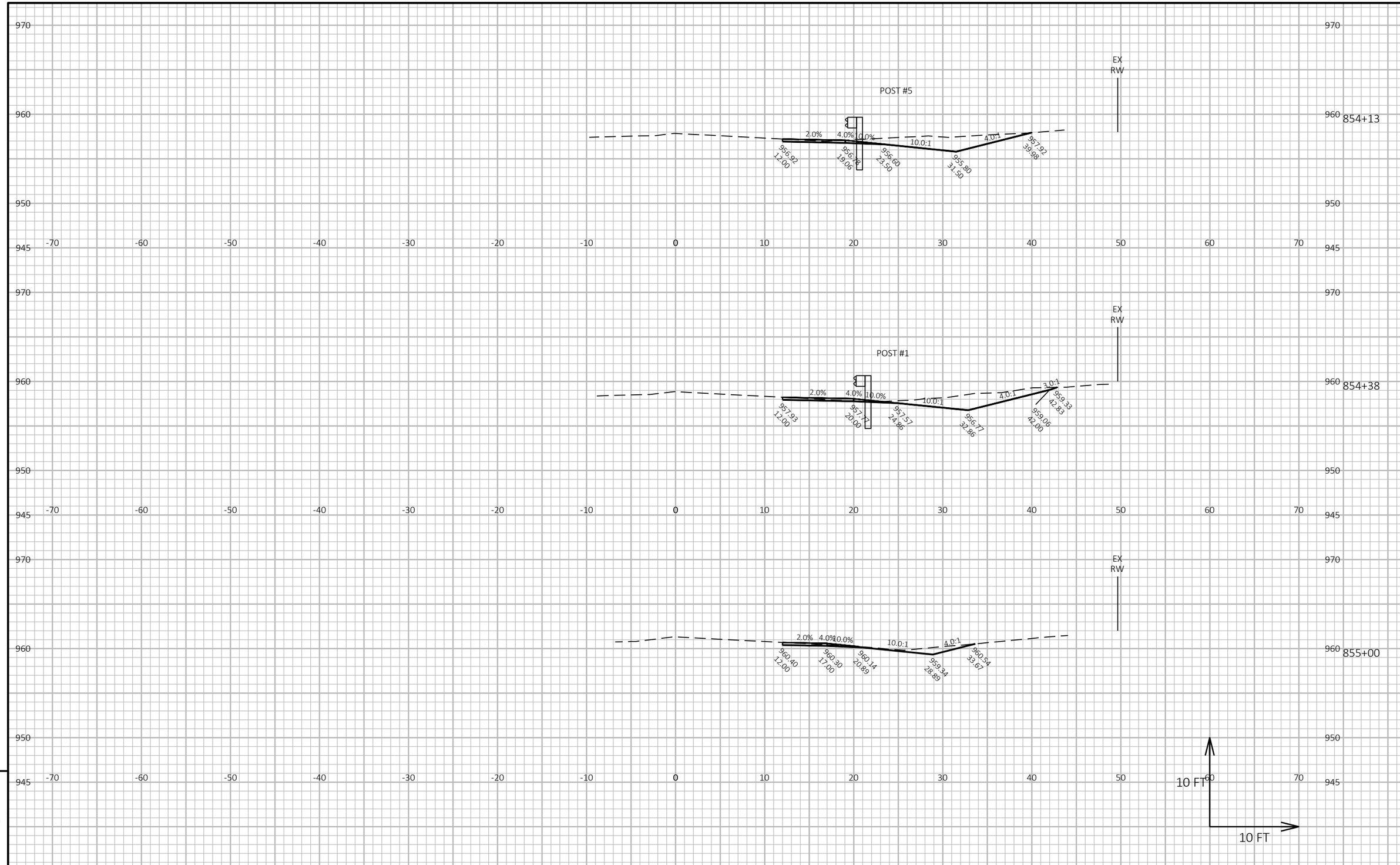

9

9

PROJECT NO: 5235-03-70	HWY: STH 80	COUNTY: GRANT	CROSS SECTIONS: STH 80 GUARDRAIL	SHEET 359	E

FILE NAME : X:\PROJECTS\GRANT\200050MW - 5235-03-00 STH 80\DESIGN\C3D\SHEETSPLAN\090202-XS.DWG
LAYOUT NAME - 090202 23
PLOT DATE : 7/15/2022 2:45 PM
PLOT BY : BRAD GROH
PLOT NAME :
PLOT SCALE : 1 IN:10 FT HORZ. / 1 IN:10 FT VERT.
WISDOT/CADDS SHEET 49

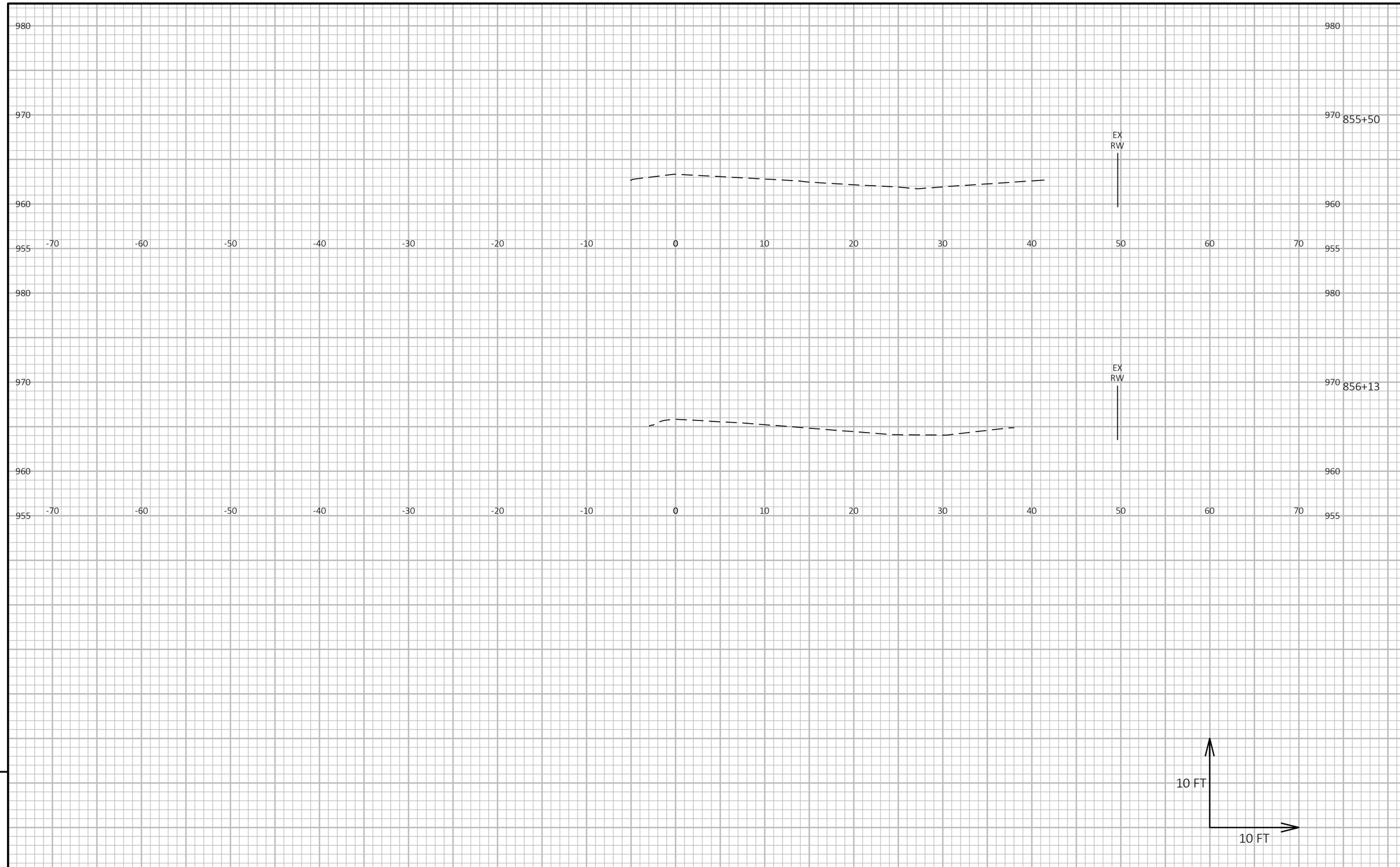

9

9

PROJECT NO: 5235-03-70	HWY: STH 80	COUNTY: GRANT	CROSS SECTIONS: STH 80 GUARDRAIL	SHEET 360	E

FILE NAME : X:\PROJECTS\GRANT\200050MW - 5235-03-00 STH 80\DESIGN\C3D\SHEETSPLAN\090202-XS.DWG
LAYOUT NAME - 090202 24

PLOT DATE : 7/15/2022 2:45 PM PLOT BY : BRAD GROH PLOT NAME : PLOT SCALE : 1 IN:10 FT HORZ. / 1 IN:10 FT VERT.

WISDOT/CADDS SHEET 49

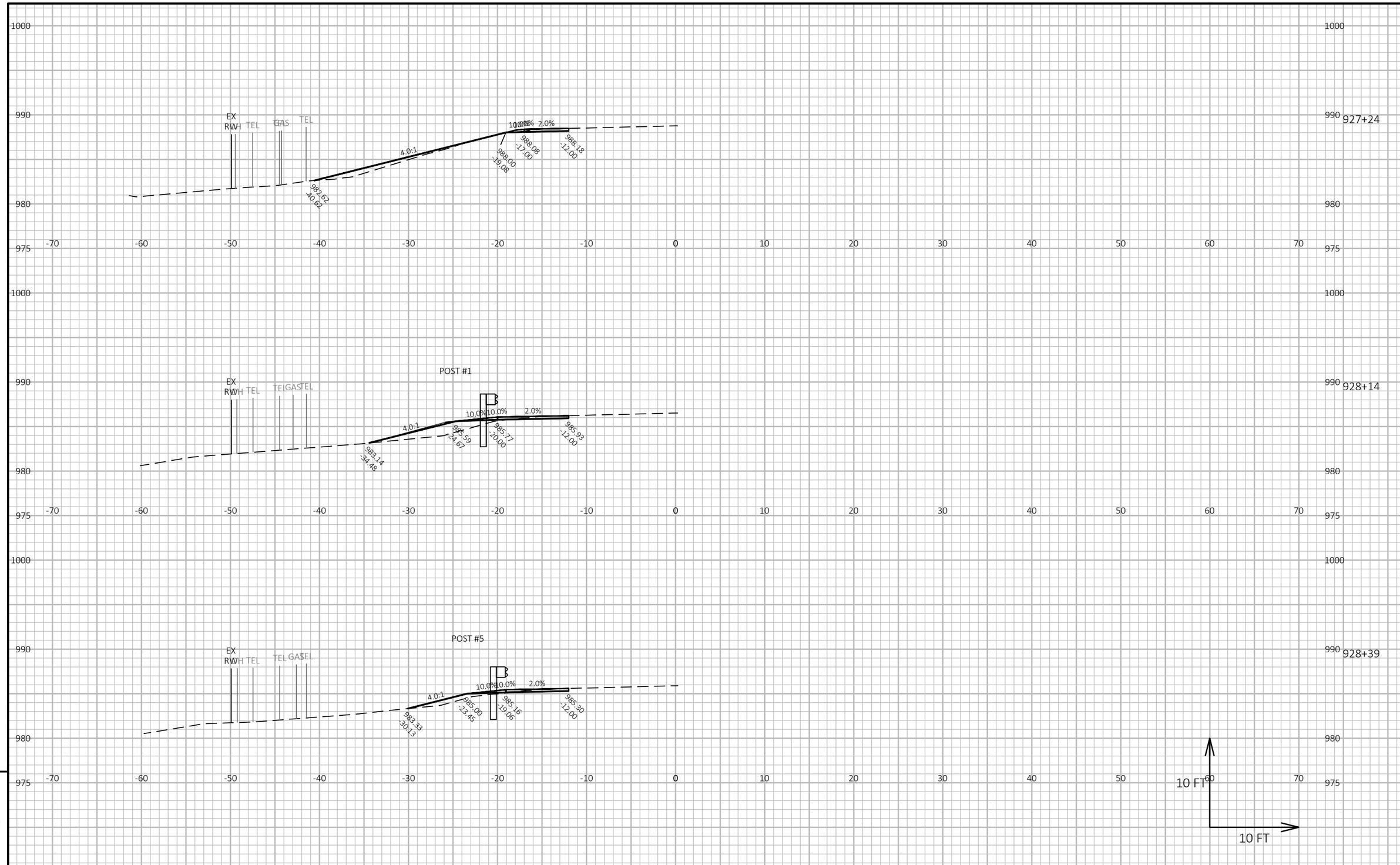

PROJECT NO: 5235-03-70	HWY: STH 80	COUNTY: GRANT	CROSS SECTIONS: STH 80 GUARDRAIL	SHEET 361	E

FILE NAME : X:\PROJECTS\GRANT\200050MW - 5235-03-00 STH 80\DESIGN\C3D\SHEETSPLAN\090202-XS.DWG
LAYOUT NAME - 090202 25
PLOT DATE : 7/15/2022 2:45 PM
PLOT BY : BRAD GROH
PLOT NAME :
PLOT SCALE : 1 IN:10 FT HORZ. / 1 IN:10 FT VERT.
WISDOT/CADDS SHEET 49

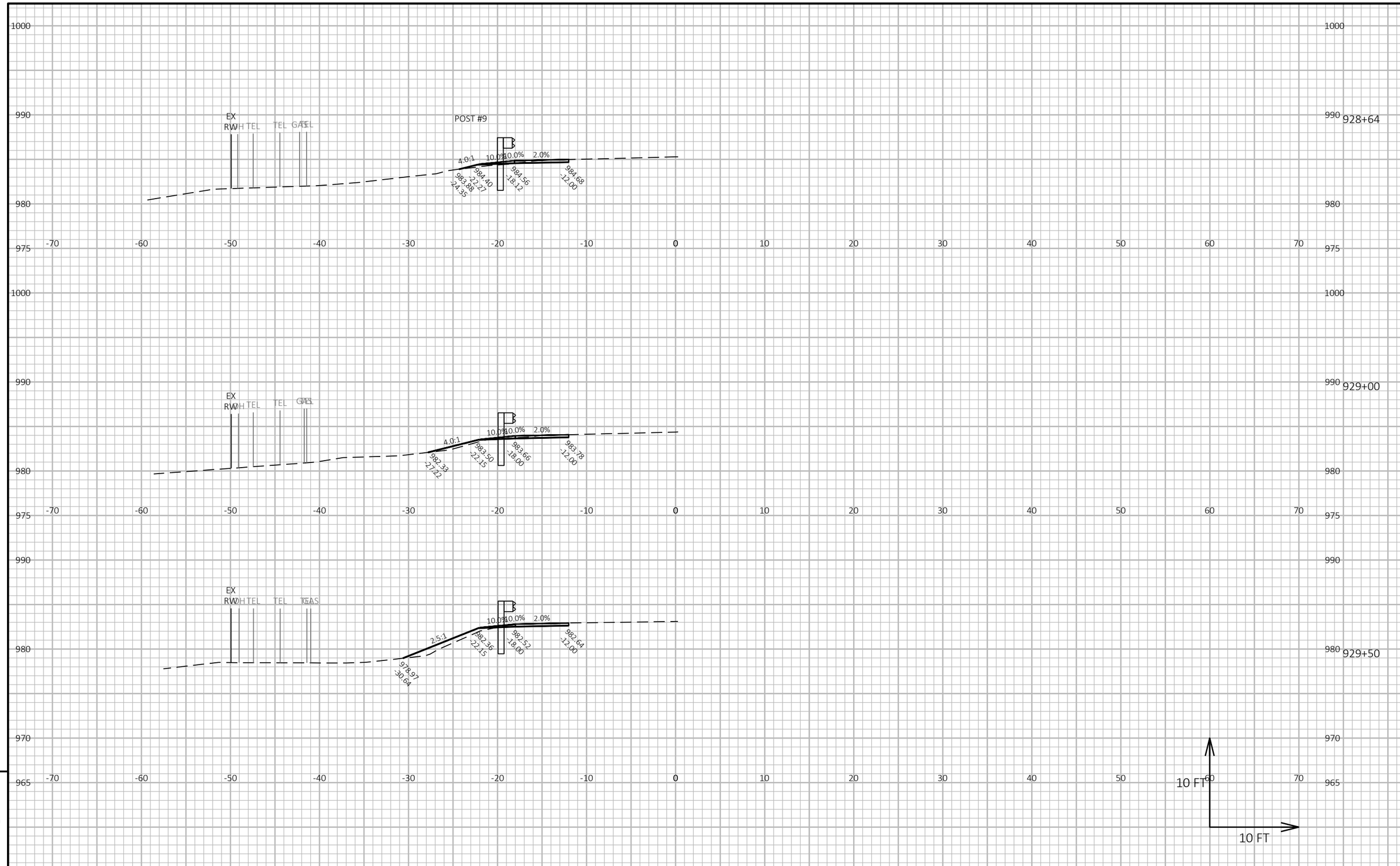

PROJECT NO: 5235-03-70	HWY: STH 80	COUNTY: GRANT	CROSS SECTIONS: STH 80 GUARDRAIL	SHEET 362	E

FILE NAME : X:\PROJECTS\GRANT\200050MW - 5235-03-00 STH 80\DESIGN\C3D\SHEETSPLAN\090202-XS.DWG
LAYOUT NAME - 090202 26
PLOT DATE : 7/15/2022 2:45 PM
PLOT BY : BRAD GROH
PLOT NAME :
PLOT SCALE : 1 IN:10 FT HORZ. / 1 IN:10 FT VERT.
WISDOT/CADDS SHEET 49

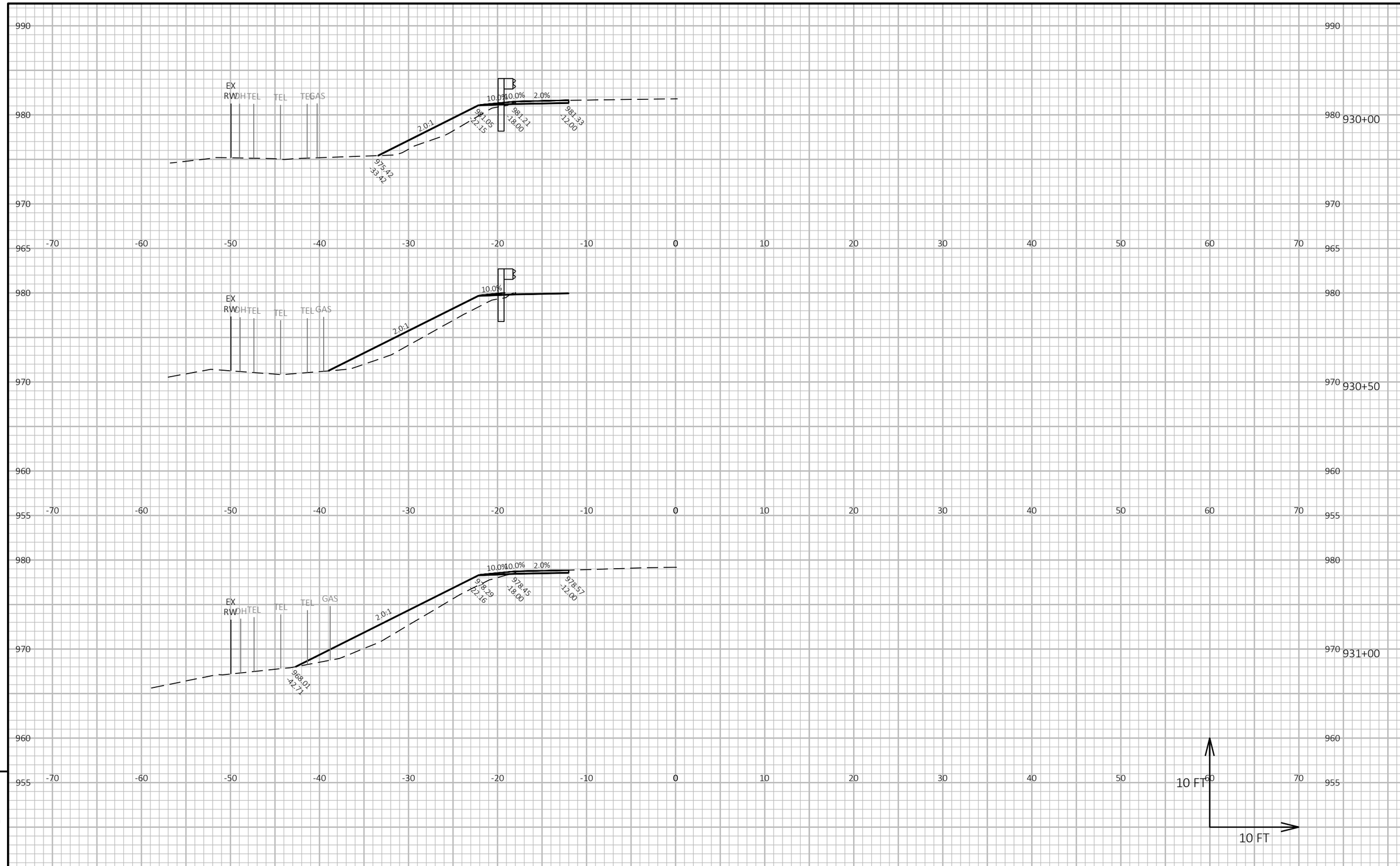

PROJECT NO: 5235-03-70	HWY: STH 80	COUNTY: GRANT	CROSS SECTIONS: STH 80 GUARDRAIL	SHEET 363	E

FILE NAME : X:\PROJECTS\GRANT\200050MW - 5235-03-00 STH 80\DESIGN\C3D\SHEETSPLAN\090202-XS.DWG
LAYOUT NAME - 090202 27
PLOT DATE : 7/15/2022 2:45 PM
PLOT BY : BRAD GROH
PLOT NAME :
PLOT SCALE : 1 IN:10 FT HORZ. / 1 IN:10 FT VERT.
WISDOT/CADDS SHEET 49

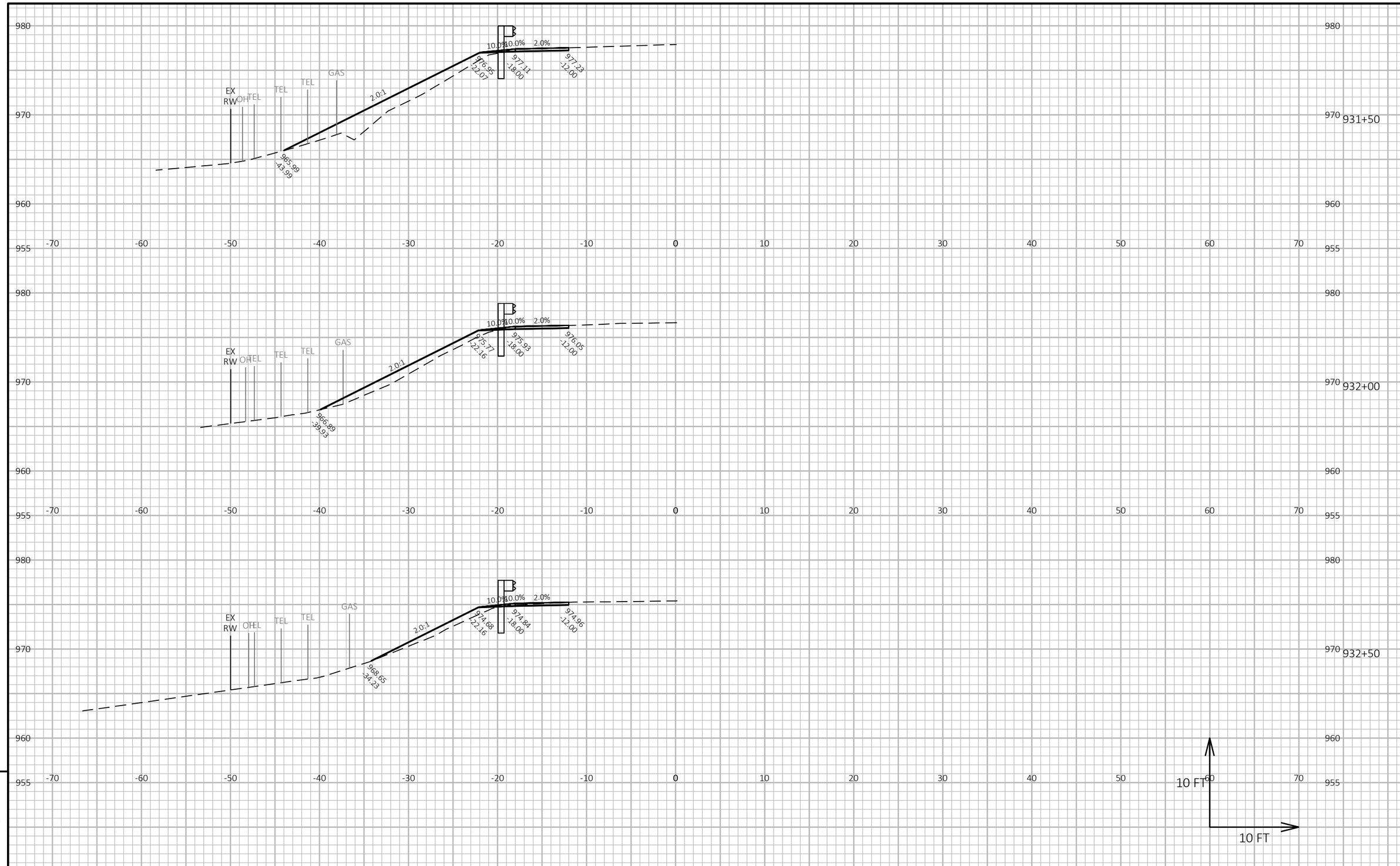

PROJECT NO: 5235-03-70	HWY: STH 80	COUNTY: GRANT	CROSS SECTIONS: STH 80 GUARDRAIL	SHEET 364	E

FILE NAME : X:\PROJECTS\GRANT\200050MW - 5235-03-00 STH 80\DESIGN\C3D\SHEETSPLAN\090202-XS.DWG
LAYOUT NAME - 090202 28
PLOT DATE : 7/15/2022 2:45 PM
PLOT BY : BRAD GROH
PLOT NAME :
PLOT SCALE : 1 IN:10 FT HORZ. / 1 IN:10 FT VERT.
WISDOT/CADDS SHEET 49

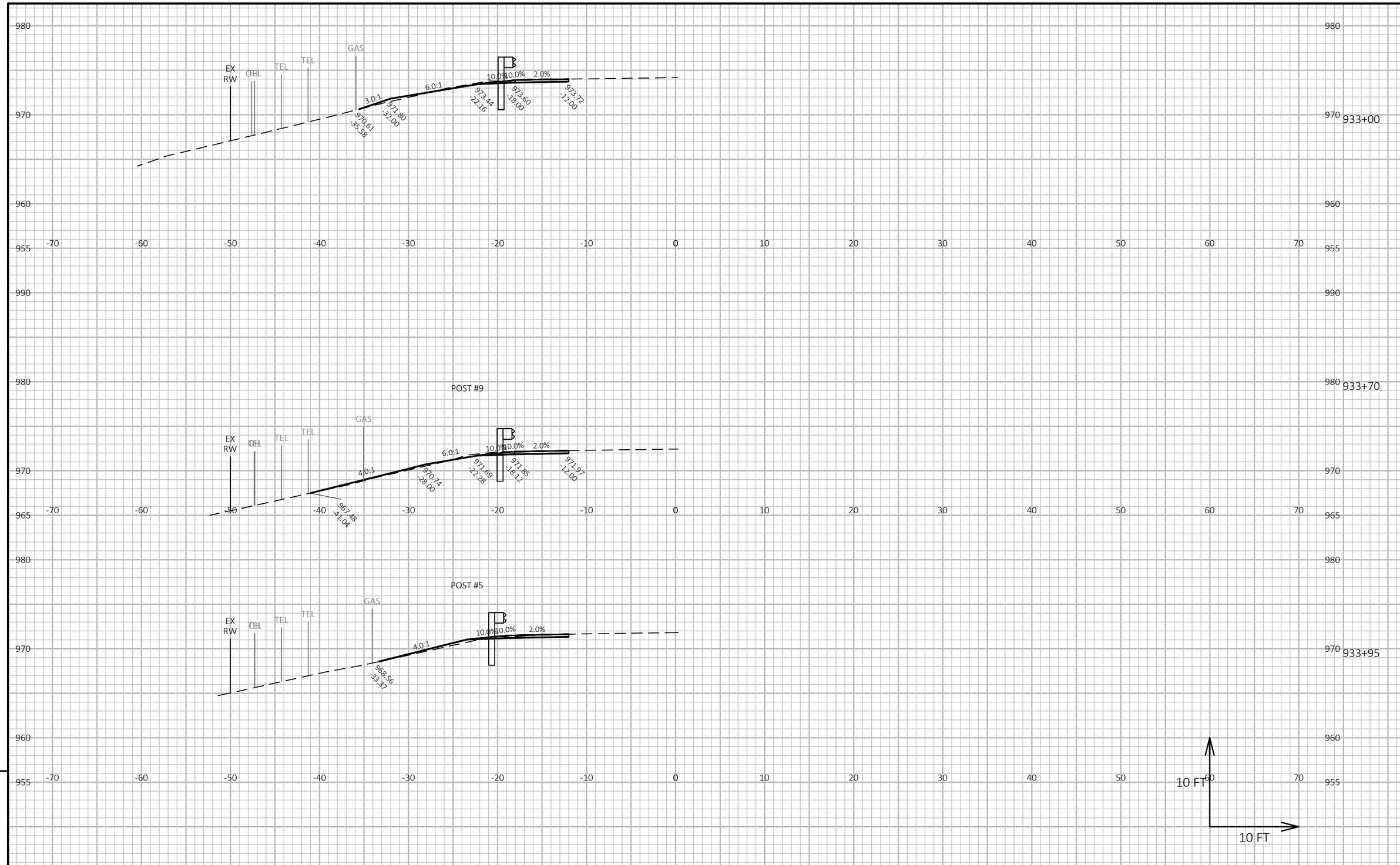

9

9

PROJECT NO: 5235-03-70	HWY: STH 80	COUNTY: GRANT	CROSS SECTIONS: STH 80 GUARDRAIL	SHEET 365	E

FILE NAME : X:\PROJECTS\GRANT\200050MW - 5235-03-00 STH 80\DESIGN\C3D\SHEETSPLAN\090202-XS.DWG
LAYOUT NAME - 090202 29
PLOT DATE : 7/15/2022 2:45 PM
PLOT BY : BRAD GROH
PLOT NAME :
PLOT SCALE : 1 IN:10 FT HORZ. / 1 IN:10 FT VERT.
WISDOT/CADDS SHEET 49

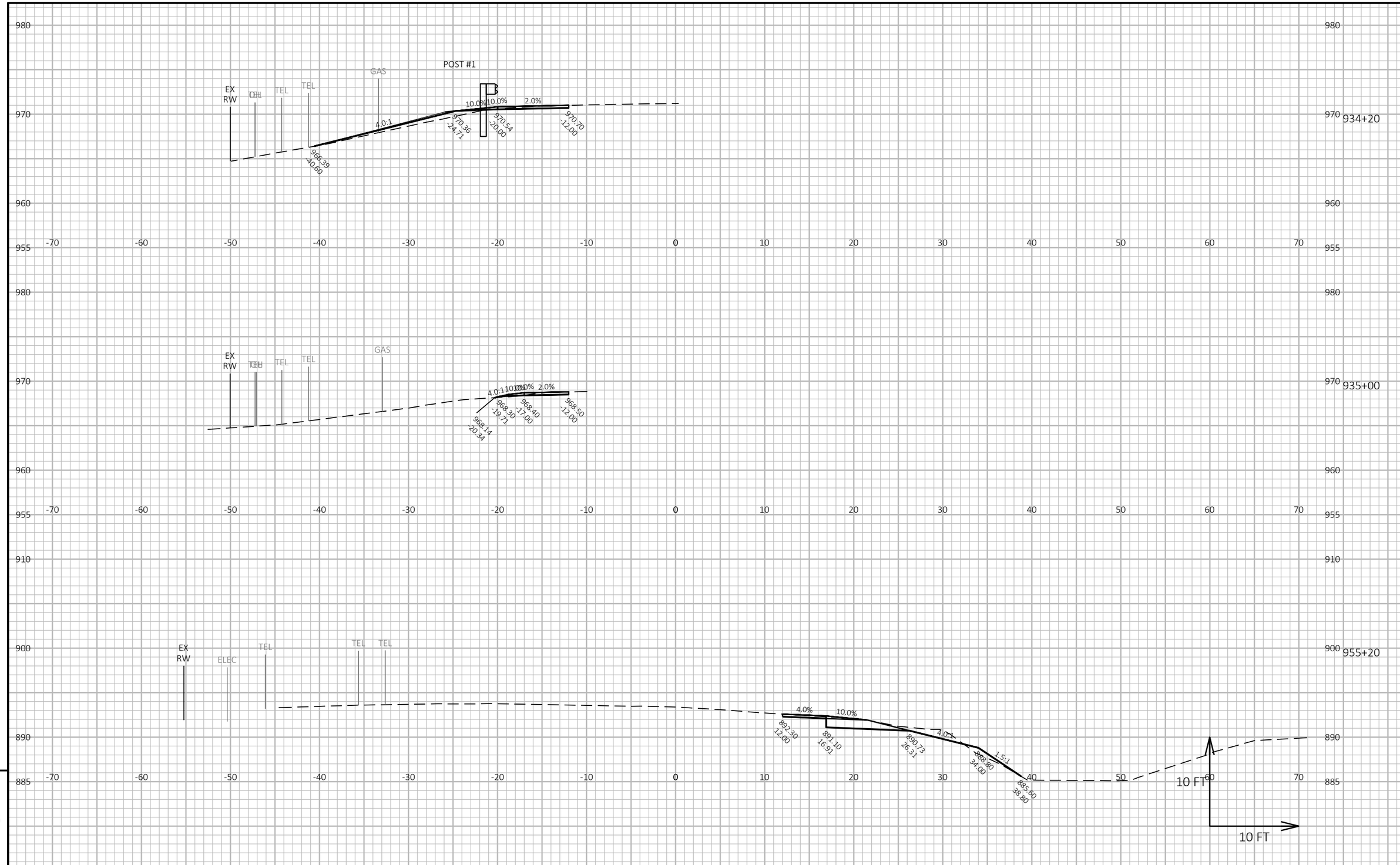

9

9

PROJECT NO: 5235-03-70	HWY: STH 80	COUNTY: GRANT	CROSS SECTIONS: STH 80 GUARDRAIL	SHEET 366	E

FILE NAME : X:\PROJECTS\GRANT\200050MW - 5235-03-00 STH 80\DESIGN\C3D\SHEETSPLAN\090202-XS.DWG
LAYOUT NAME - 090202 30
PLOT DATE : 7/15/2022 2:45 PM
PLOT BY : BRAD GROH
PLOT NAME :
PLOT SCALE : 1 IN:10 FT HORZ. / 1 IN:10 FT VERT.
WISDOT/CADDS SHEET 49

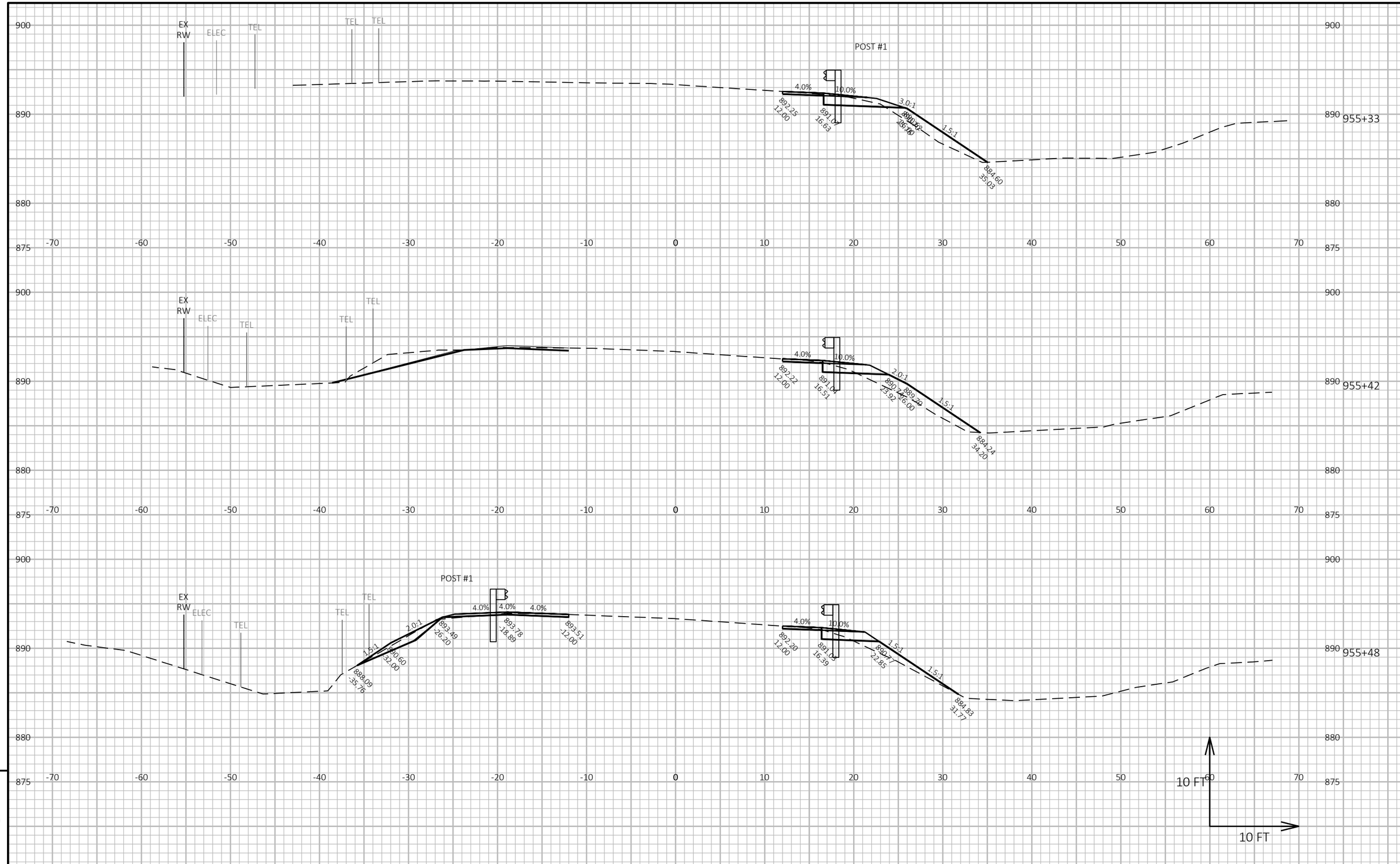

PROJECT NO: 5235-03-70	HWY: STH 80	COUNTY: GRANT	CROSS SECTIONS: STH 80 GUARDRAIL	SHEET 367	E

FILE NAME : X:\PROJECTS\GRANT\200050MW - 5235-03-00 STH 80\DESIGN\C3D\SHEETSPLAN\090202-XS.DWG
LAYOUT NAME - 090202 31
PLOT DATE : 7/15/2022 2:45 PM PLOT BY : BRAD GROH PLOT NAME : PLOT SCALE : 1 IN:10 FT HORZ. / 1 IN:10 FT VERT.

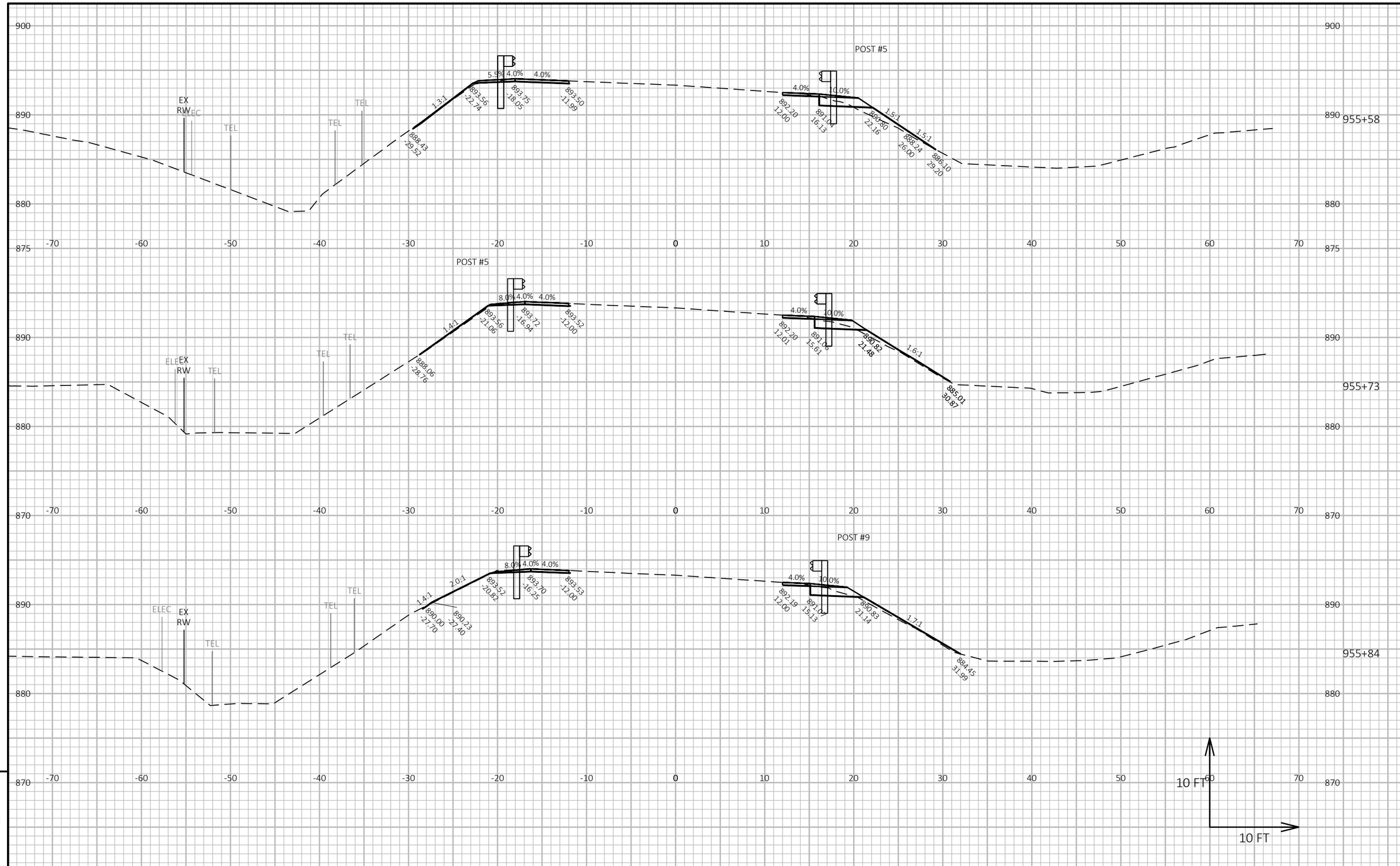

9

9

PROJECT NO: 5235-03-70	HWY: STH 80	COUNTY: GRANT	CROSS SECTIONS: STH 80 GUARDRAIL	SHEET 368	E

FILE NAME : X:\PROJECTS\GRANT\200050MW - 5235-03-00 STH 80\DESIGN\C3D\SHEETSPLAN\090202-XS.DWG
LAYOUT NAME - 090202 32
PLOT DATE : 7/15/2022 2:45 PM
PLOT BY : BRAD GROH
PLOT NAME :
PLOT SCALE : 1 IN:10 FT HORZ. / 1 IN:10 FT VERT.
WISDOT/CADDS SHEET 49

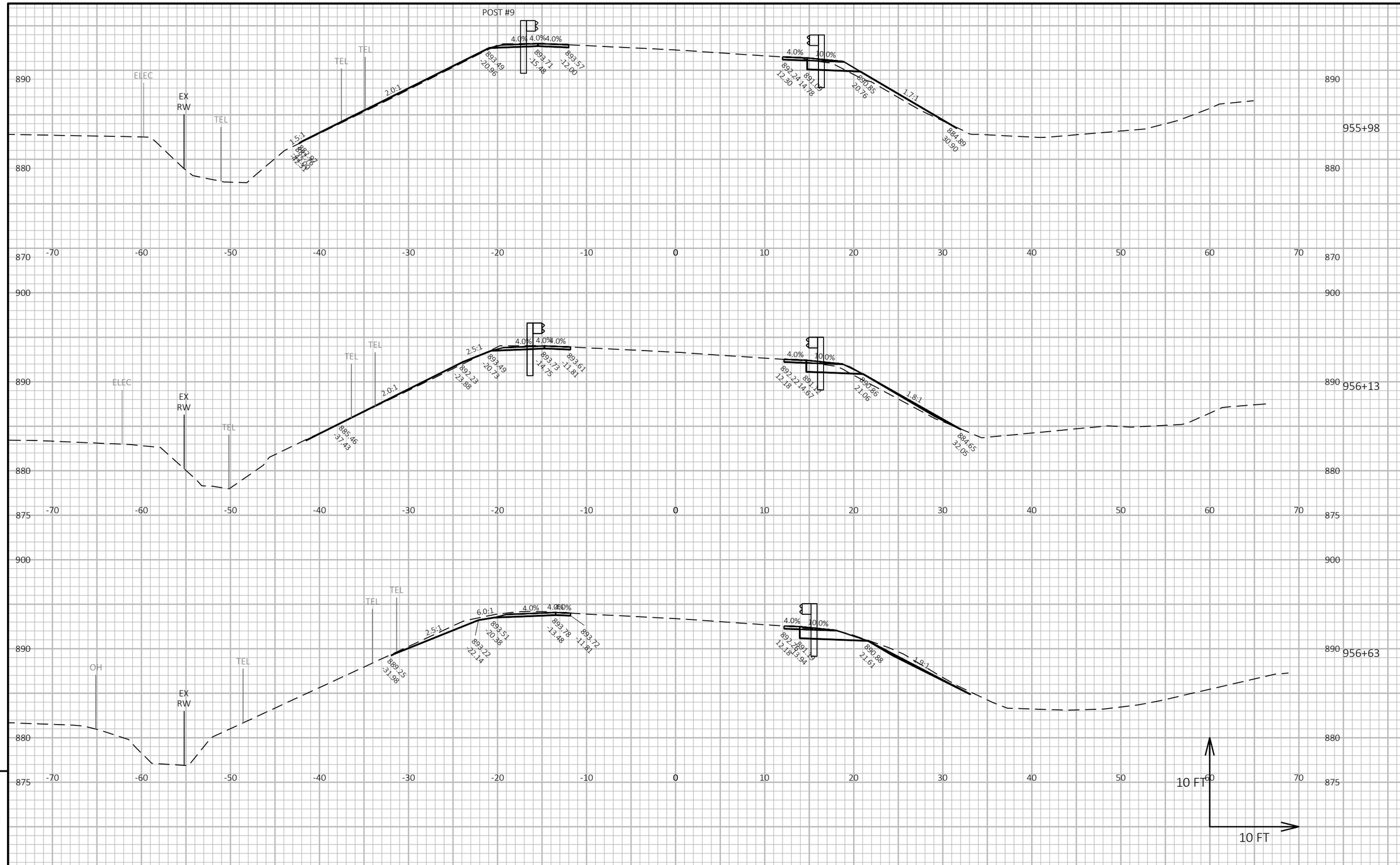

PROJECT NO: 5235-03-70	HWY: STH 80	COUNTY: GRANT	CROSS SECTIONS: STH 80 GUARDRAIL	SHEET 369	E

FILE NAME : X:\PROJECTS\GRANT\200050MW - 5235-03-00 STH 80\DESIGN\C3D\SHEETSPLAN\090202-XS.DWG
LAYOUT NAME - 090202 33
PLOT DATE : 7/15/2022 2:45 PM PLOT BY : BRAD GROH PLOT NAME : PLOT SCALE : 1 IN:10 FT HORZ. / 1 IN:10 FT VERT.
WISDOT/CADDS SHEET 49

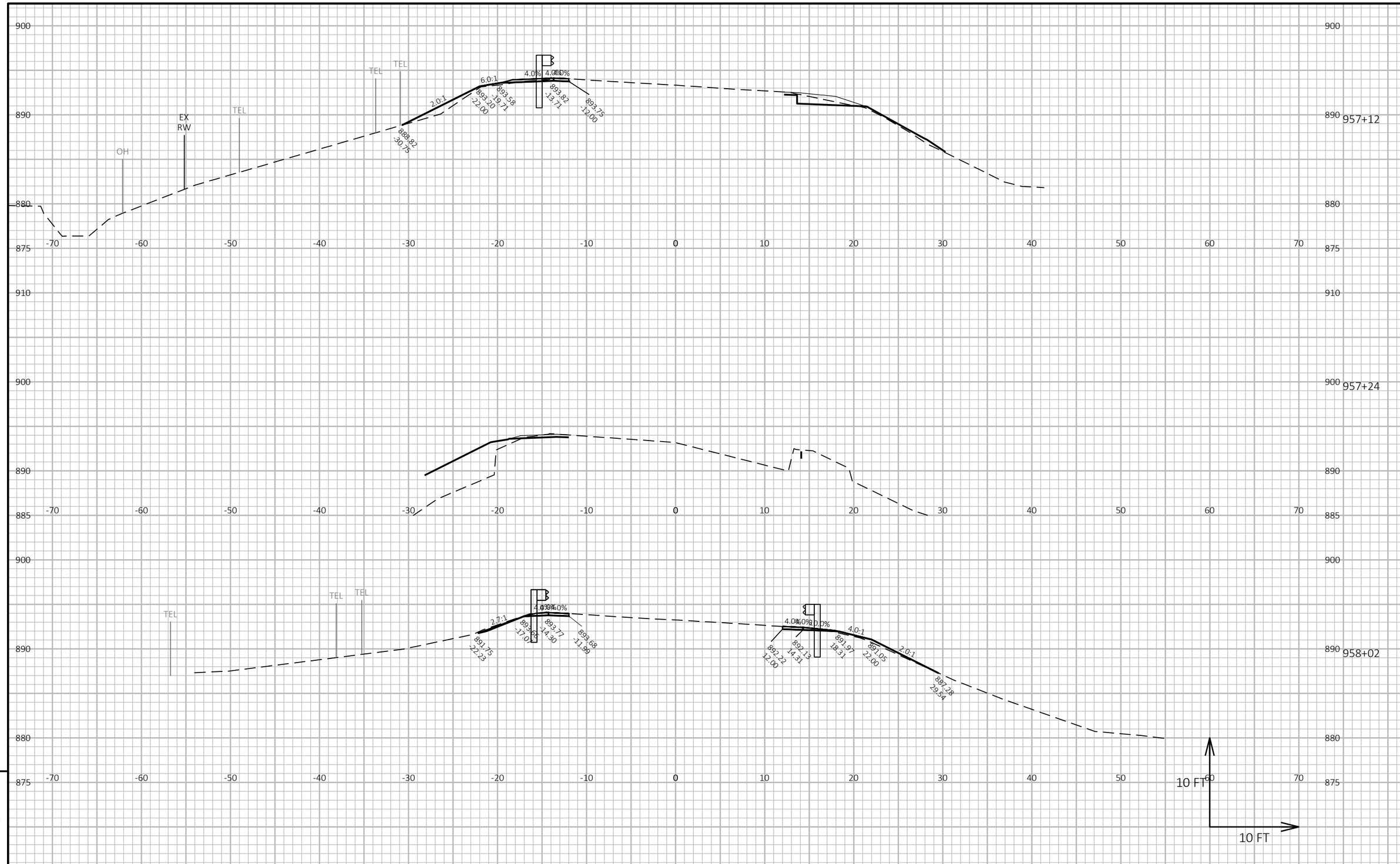

PROJECT NO: 5235-03-70	HWY: STH 80	COUNTY: GRANT	CROSS SECTIONS: STH 80 GUARDRAIL	SHEET 370	E

FILE NAME : X:\PROJECTS\GRANT\200050MW - 5235-03-00 STH 80\DESIGN\C3D\SHEETSPLAN\090202-XS.DWG
LAYOUT NAME - 090202 34
PLOT DATE : 7/15/2022 2:45 PM PLOT BY : BRAD GROH PLOT NAME : PLOT SCALE : 1 IN:10 FT HORZ. / 1 IN:10 FT VERT.

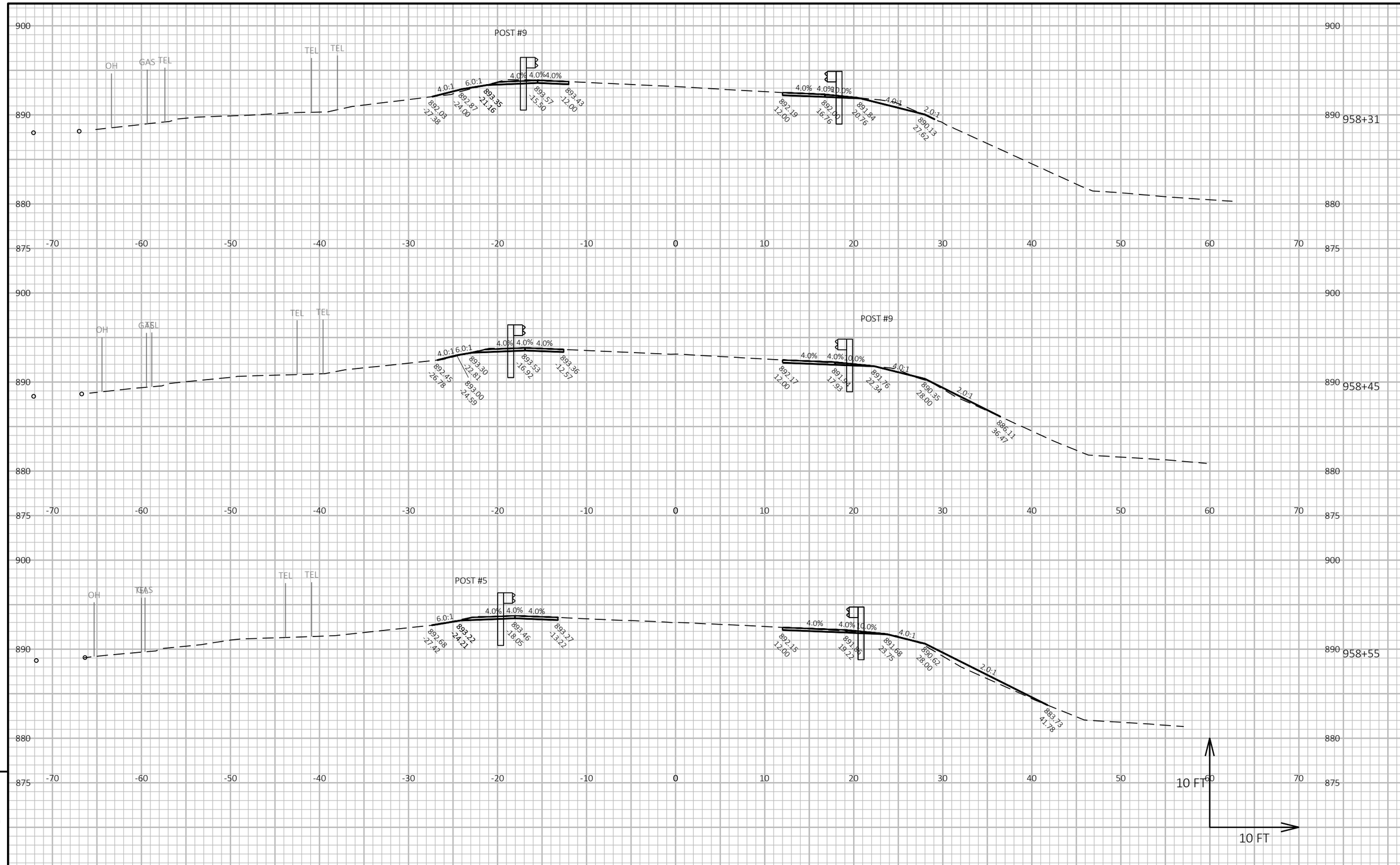

PROJECT NO: 5235-03-70	HWY: STH 80	COUNTY: GRANT	CROSS SECTIONS: STH 80 GUARDRAIL	SHEET 371	E

FILE NAME : X:\PROJECTS\GRANT\200050MW - 5235-03-00 STH 80\DESIGN\C3D\SHEETSPLAN\090202-XS.DWG
LAYOUT NAME - 090202 35
PLOT DATE : 7/15/2022 2:45 PM
PLOT BY : BRAD GROH
PLOT NAME :
PLOT SCALE : 1 IN:10 FT HORZ. / 1 IN:10 FT VERT.
WISDOT/CADDS SHEET 49

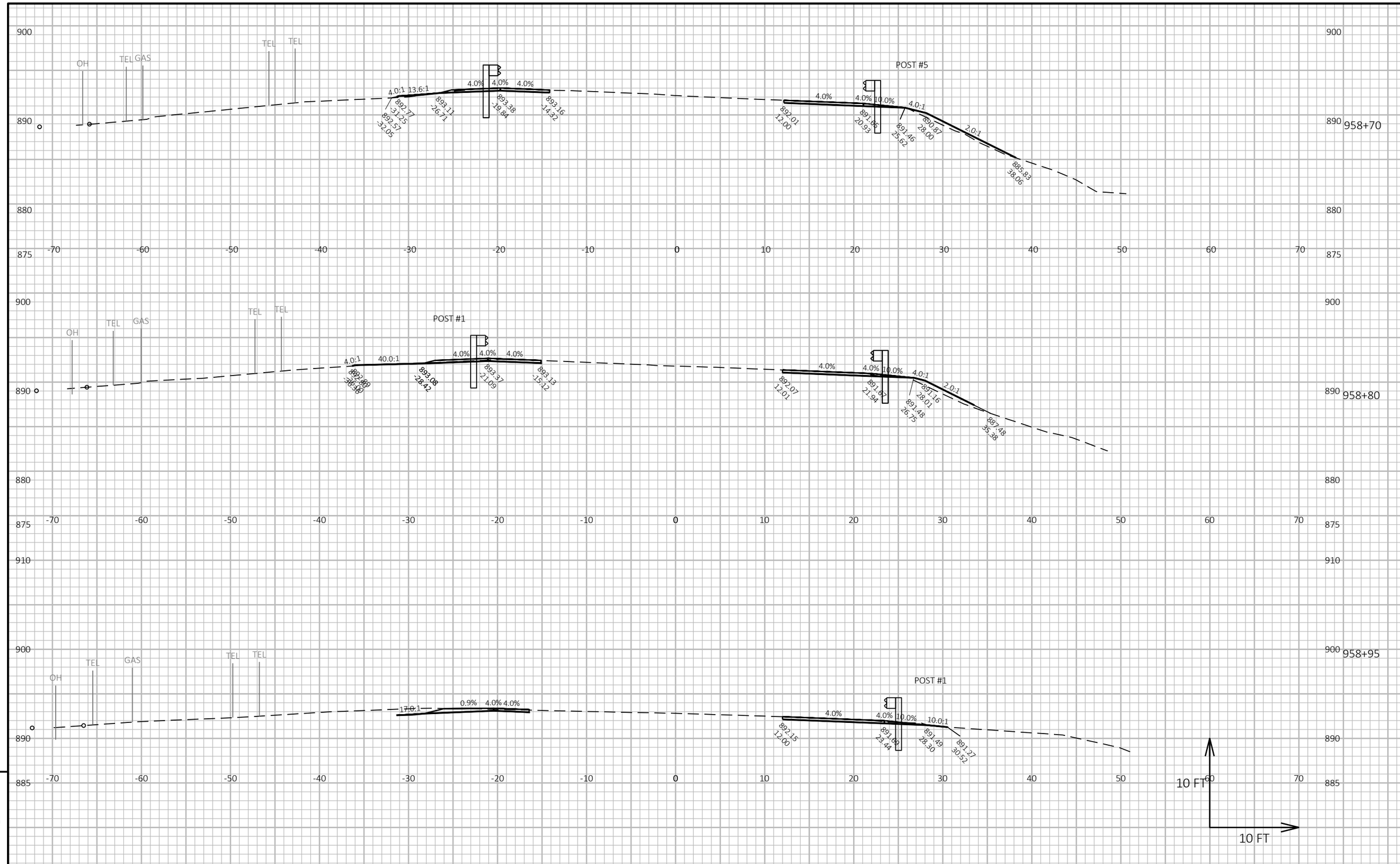

PROJECT NO: 5235-03-70	HWY: STH 80	COUNTY: GRANT	CROSS SECTIONS: STH 80 GUARDRAIL	SHEET 372	E

FILE NAME : X:\PROJECTS\GRANT\200050MW - 5235-03-00 STH 80\DESIGN\C3D\SHEETSPLAN\090202-XS.DWG
LAYOUT NAME - 090202 36
PLOT DATE : 7/15/2022 2:45 PM
PLOT BY : BRAD GROH
PLOT NAME :
PLOT SCALE : 1 IN:10 FT HORZ. / 1 IN:10 FT VERT.
WISDOT/CADDS SHEET 49

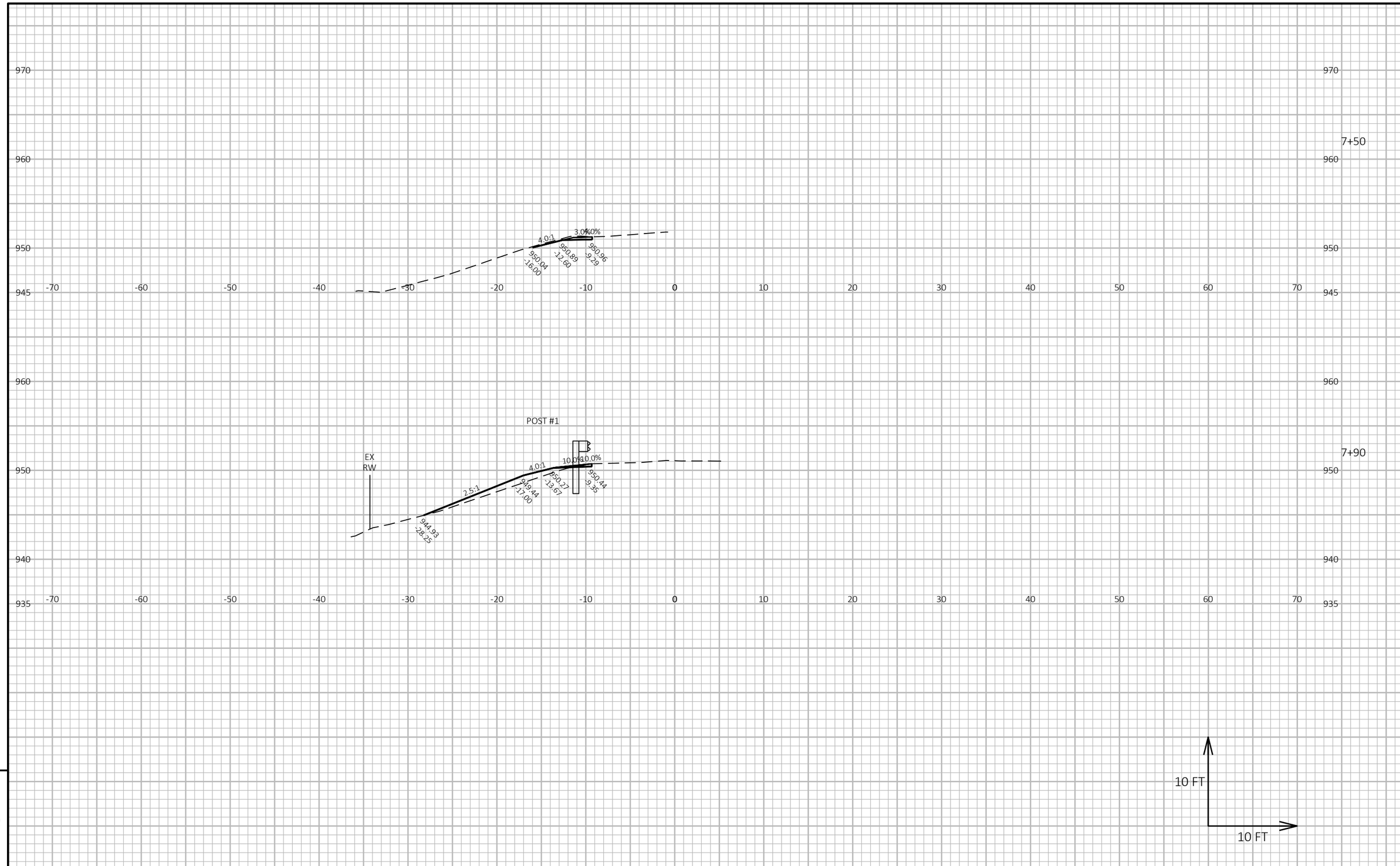

9

9

PROJECT NO: 5235-03-70	HWY: STH 80	COUNTY: GRANT	CROSS SECTIONS: S BLOCKHOUSE RD GUARDRAIL	SHEET 373	E

FILE NAME : X:\PROJECTS\GRANT\200050MW - 5235-03-00 STH 80\DESIGN\C3D\SHEETSPLAN\090202-XS.DWG
LAYOUT NAME - 090202 37

PLOT DATE : 7/15/2022 2:45 PM PLOT BY : BRAD GROH PLOT NAME : **PLOT SCALE :** 1 IN:10 FT HORZ. / 1 IN:10 FT VERT.

WISDOT/CADDS SHEET 49

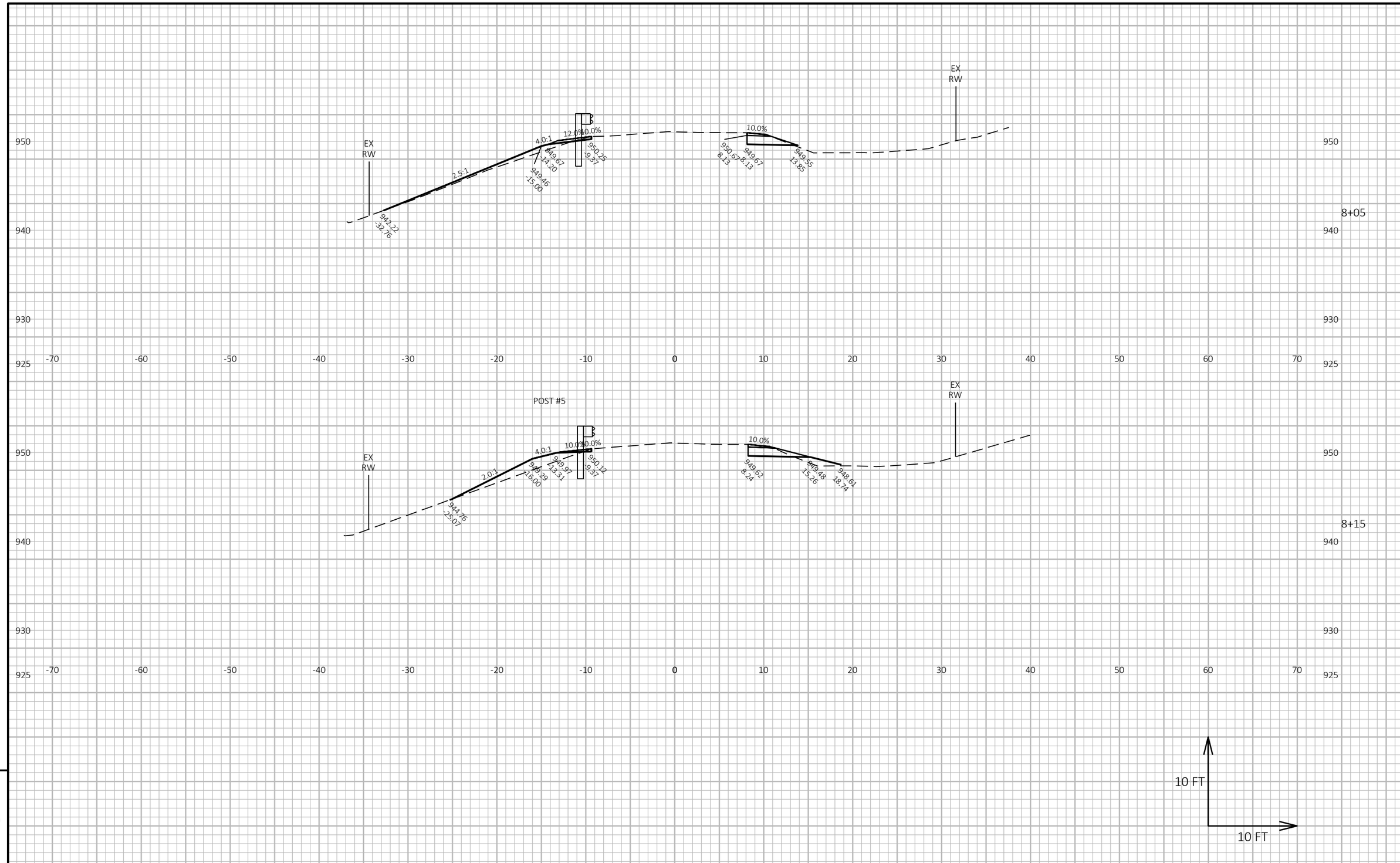

9

9

PROJECT NO: 5235-03-70	HWY: STH 80	COUNTY: GRANT	CROSS SECTIONS: S BLOCKHOUSE RD GUARDRAIL	SHEET 374	E

FILE NAME : X:\PROJECTS\GRANT\200050MW - 5235-03-00 STH 80\DESIGN\C3D\SHEETSPLAN\090202-XS.DWG
LAYOUT NAME - 090202 38
PLOT DATE : 7/15/2022 2:45 PM
PLOT BY : BRAD GROH
PLOT NAME :
PLOT SCALE : 1 IN:10 FT HORZ. / 1 IN:10 FT VERT.
WISDOT/CADDS SHEET 49

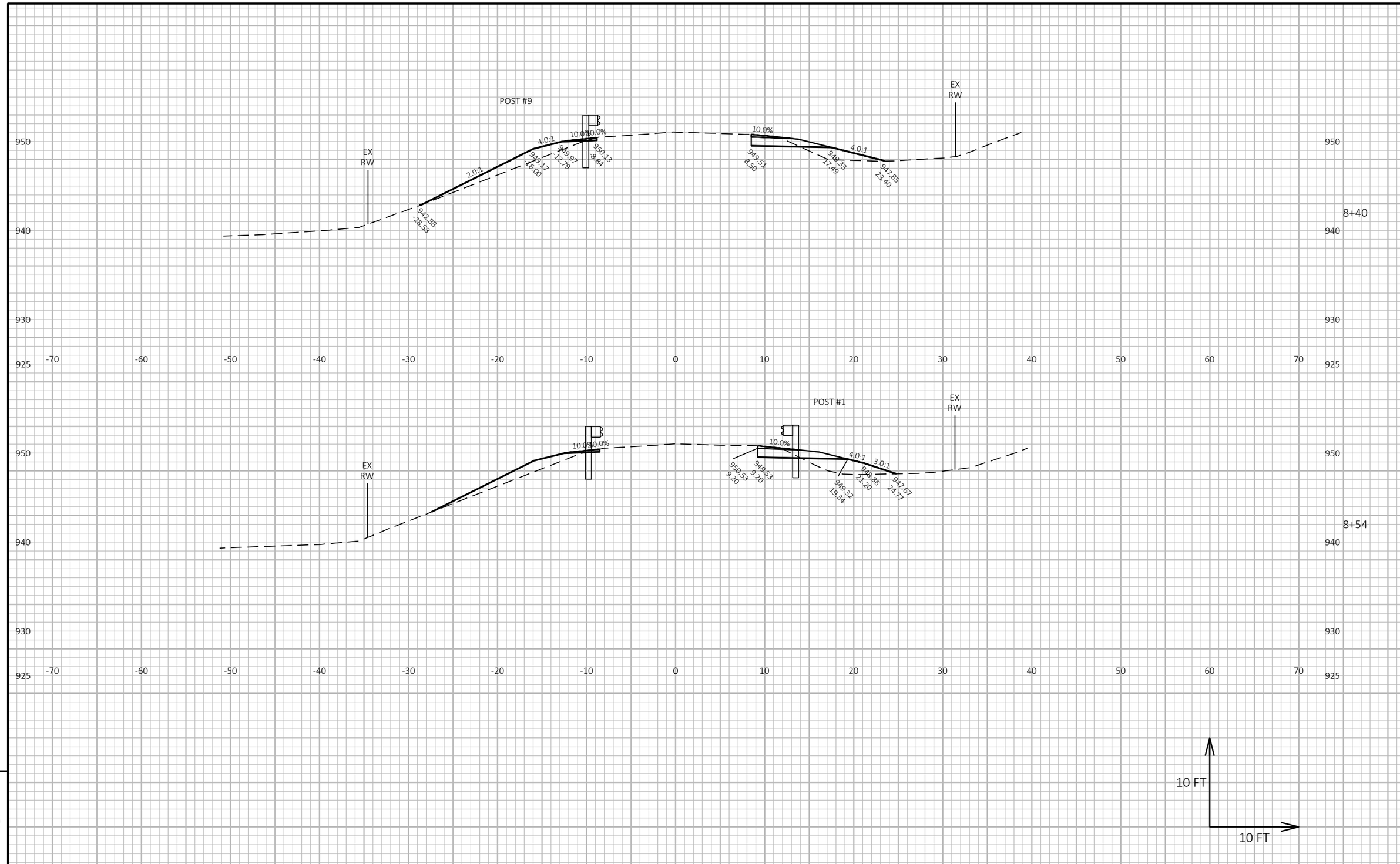

9

9

PROJECT NO: 5235-03-70	HWY: STH 80	COUNTY: GRANT	CROSS SECTIONS: S BLOCKHOUSE RD GUARDRAIL	SHEET 375	E

FILE NAME : X:\PROJECTS\GRANT\200050MW - 5235-03-00 STH 80\DESIGN\C3D\SHEETSPLAN\090202-XS.DWG
LAYOUT NAME - 090202 39
PLOT DATE : 7/15/2022 2:45 PM
PLOT BY : BRAD GROH
PLOT NAME :
PLOT SCALE : 1 IN:10 FT HORZ. / 1 IN:10 FT VERT.
WISDOT/CADDS SHEET 49

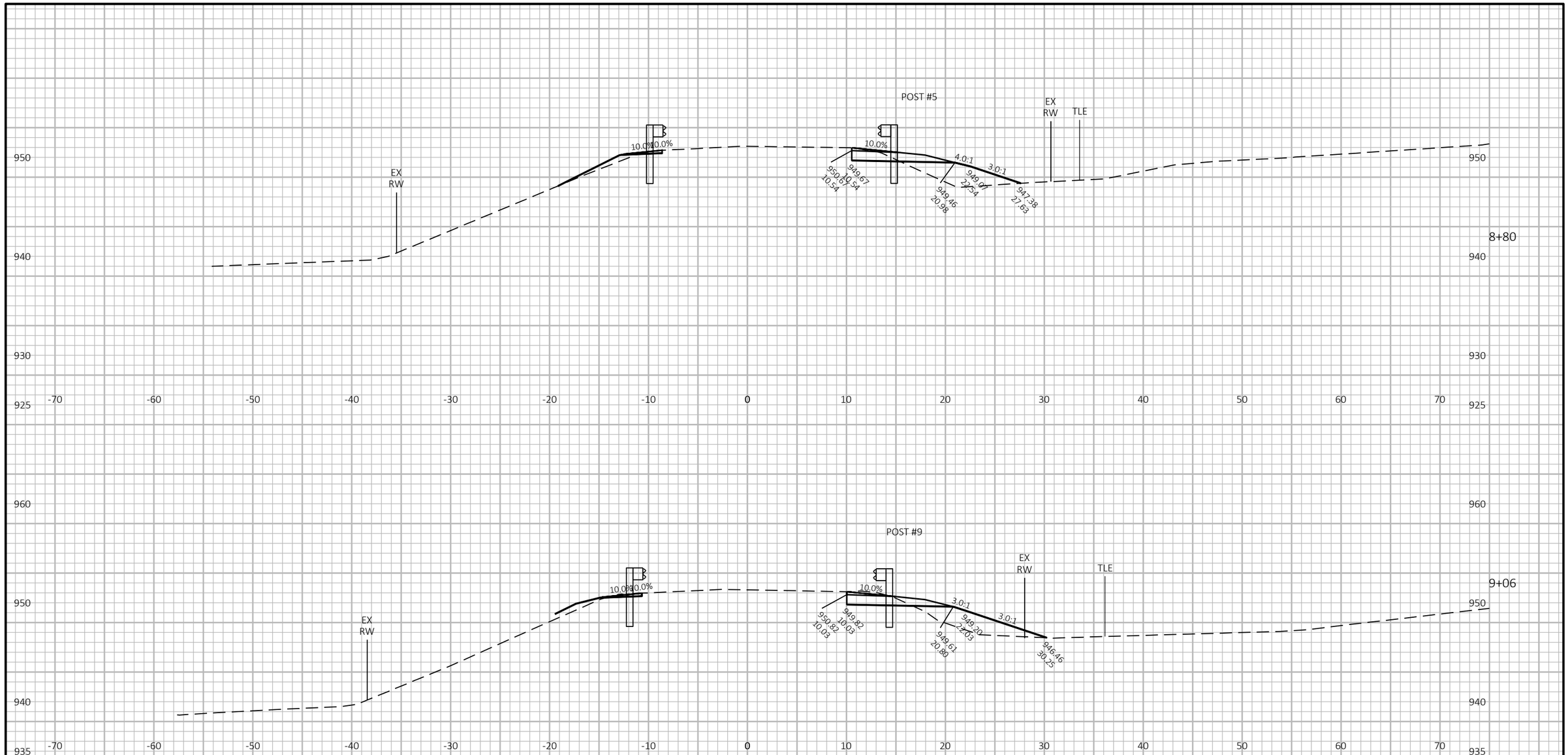

9

9

PROJECT NO: 5235-03-70	HWY: STH 80	COUNTY: GRANT	CROSS SECTIONS: S BLOCKHOUSE RD GUARDRAIL	SHEET 376	E

FILE NAME : X:\PROJECTS\GRANT\200050MW - 5235-03-00 STH 80\DESIGN\C3D\SHEETSPLAN\090202-XS.DWG
LAYOUT NAME - 090202 40

PLOT DATE : 7/15/2022 2:46 PM PLOT BY : BRAD GROH PLOT NAME : **PLOT SCALE :** 1 IN:10 FT HORZ. / 1 IN:10 FT VERT.

WISDOT/CADDS SHEET 49

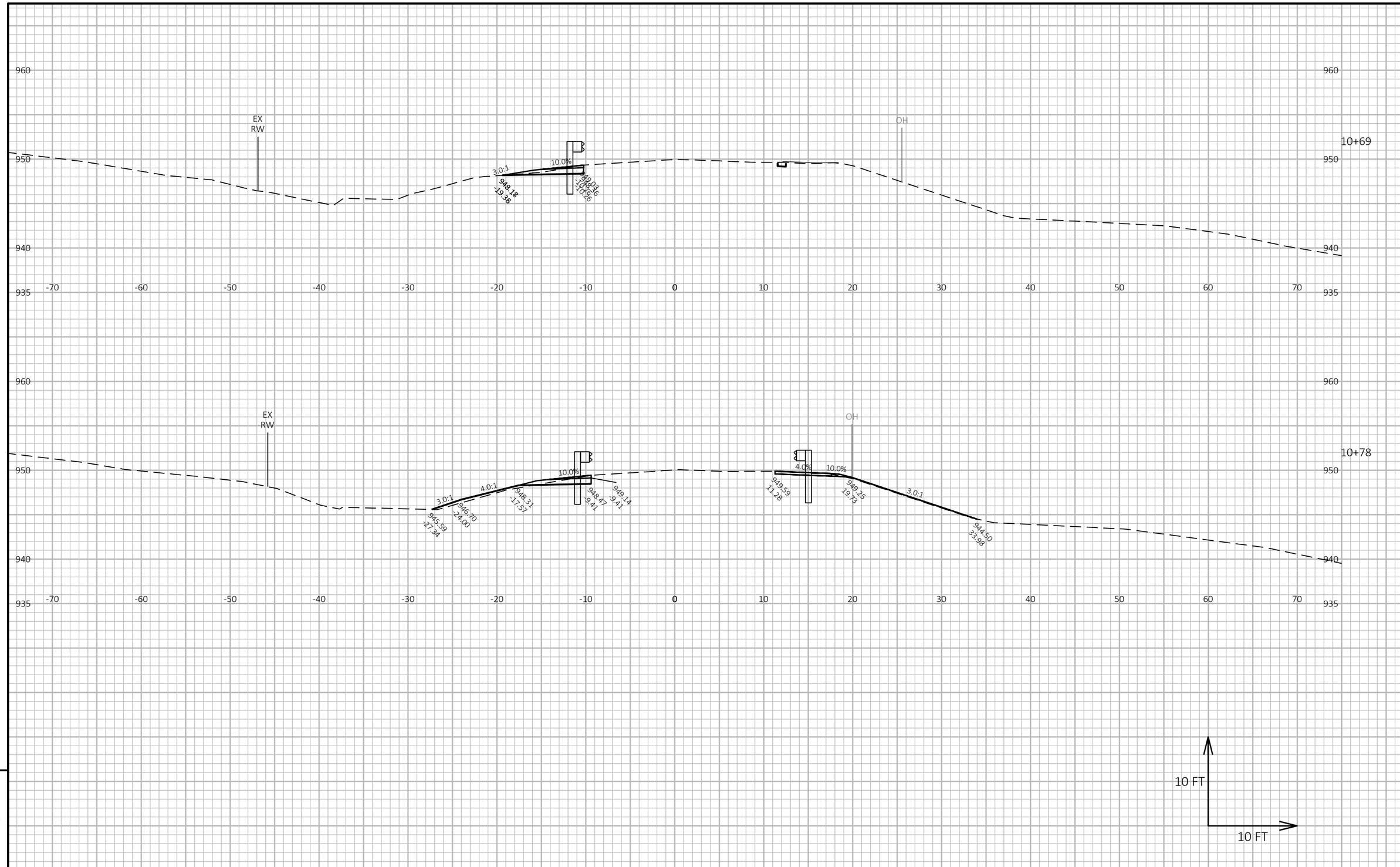

9

9

PROJECT NO: 5235-03-70	HWY: STH 80	COUNTY: GRANT	CROSS SECTIONS: N BLOCKHOUSE RD GUARDRAIL	SHEET 377	E

FILE NAME : X:\PROJECTS\GRANT\200050MW - 5235-03-00 STH 80\DESIGN\C3D\SHEETSPLAN\090202-XS.DWG
LAYOUT NAME - 090202 42

PLOT DATE : 7/15/2022 2:46 PM PLOT BY : BRAD GROH PLOT NAME : PLOT SCALE : 1 IN:10 FT HORZ. / 1 IN:10 FT VERT.

WISDOT/CADDS SHEET 49

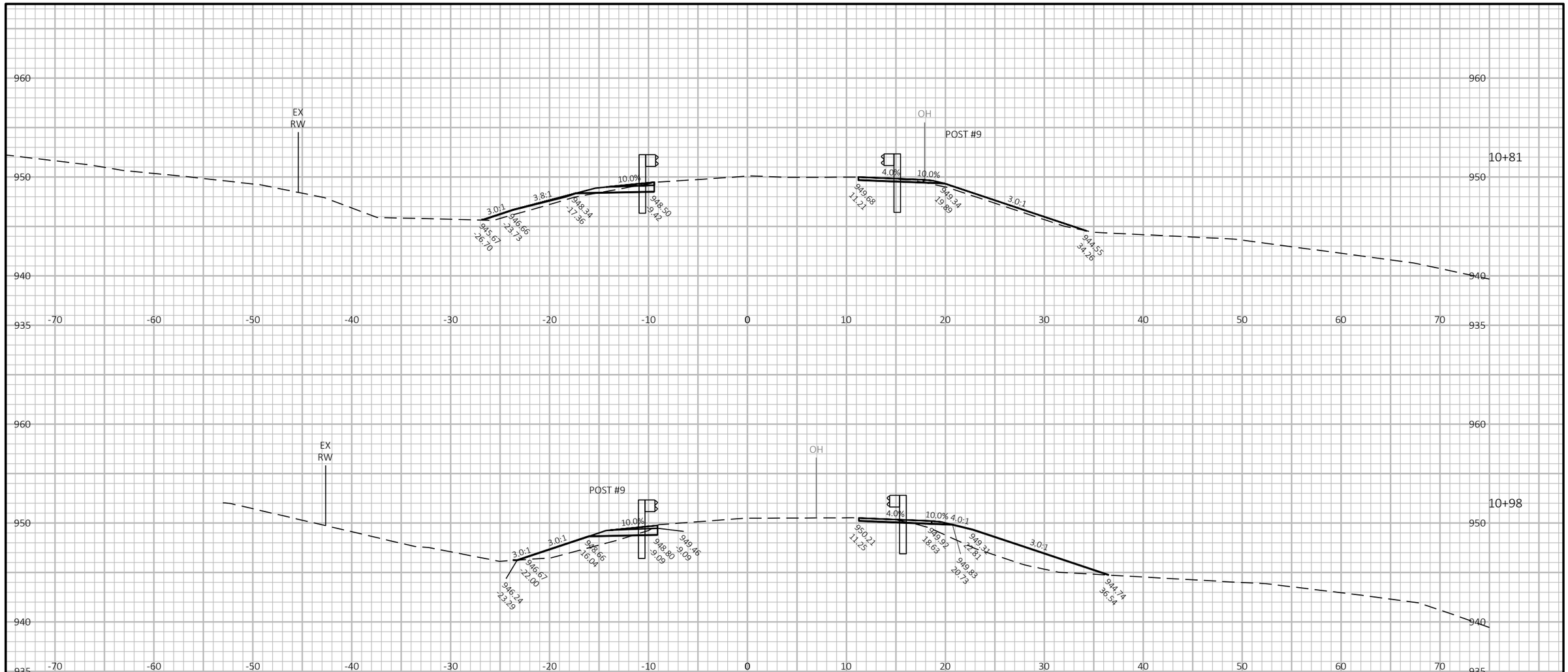

9

9

PROJECT NO: 5235-03-70	HWY: STH 80	COUNTY: GRANT	CROSS SECTIONS: N BLOCKHOUSE RD GUARDRAIL	SHEET 378	E

FILE NAME : X:\PROJECTS\GRANT\200050MW - 5235-03-00 STH 80\DESIGN\C3D\SHEETSPLAN\090202-XS.DWG
LAYOUT NAME - 090202 43
PLOT DATE : 7/15/2022 2:46 PM
PLOT BY : BRAD GROH
PLOT NAME :
PLOT SCALE : 1 IN:10 FT HORZ. / 1 IN:10 FT VERT.
WISDOT/CADDS SHEET 49

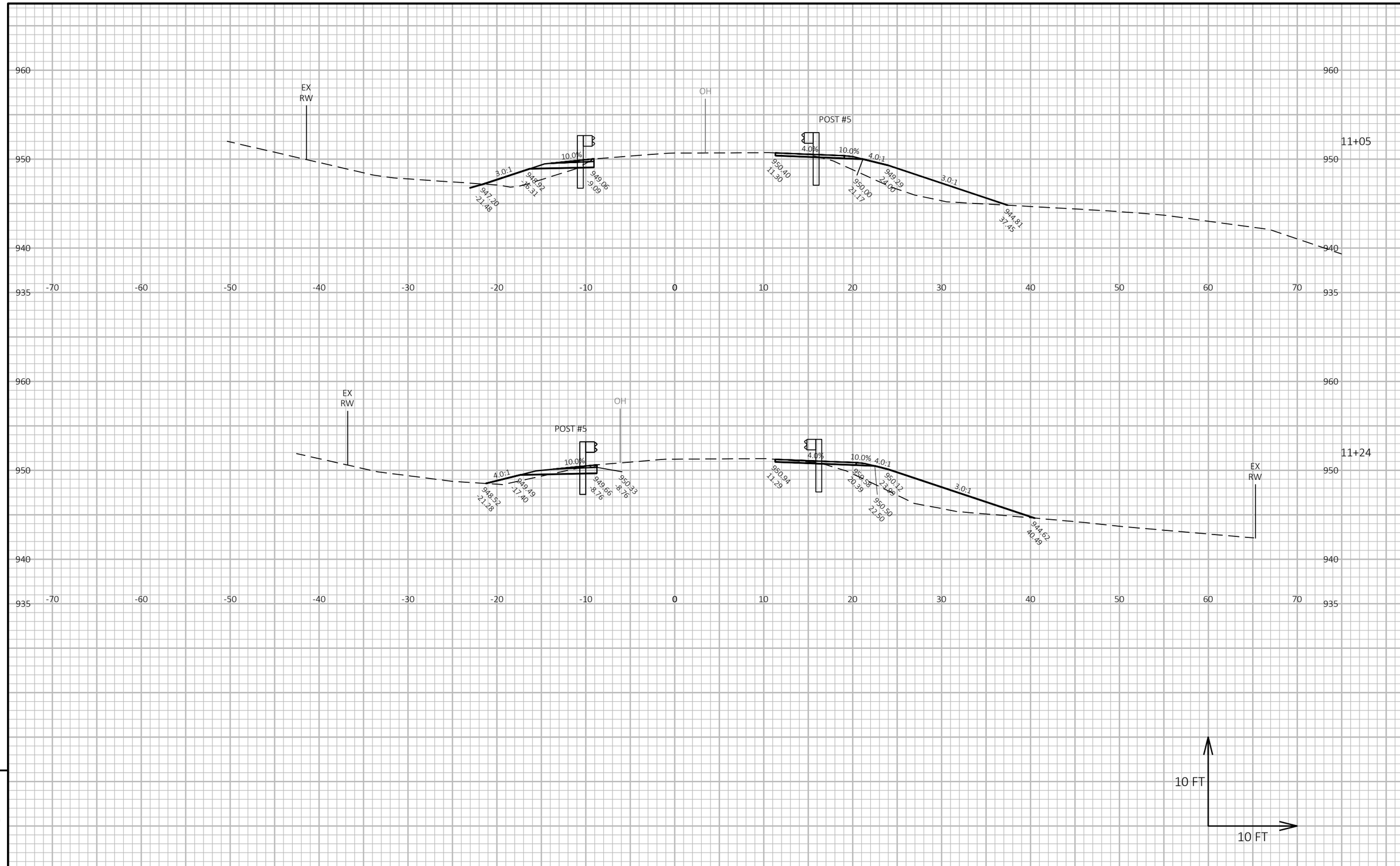

9

9

PROJECT NO: 5235-03-70	HWY: STH 80	COUNTY: GRANT	CROSS SECTIONS: N BLOCKHOUSE RD GUARDRAIL	SHEET 379	E

FILE NAME : X:\PROJECTS\GRANT\200050MW - 5235-03-00 STH 80\DESIGN\C3D\SHEETSPLAN\090202-XS.DWG
LAYOUT NAME - 090202 44

PLOT DATE : 7/15/2022 2:46 PM PLOT BY : BRAD GROH PLOT NAME : PLOT SCALE : 1 IN:10 FT HORZ. / 1 IN:10 FT VERT.

WISDOT/CADDS SHEET 49

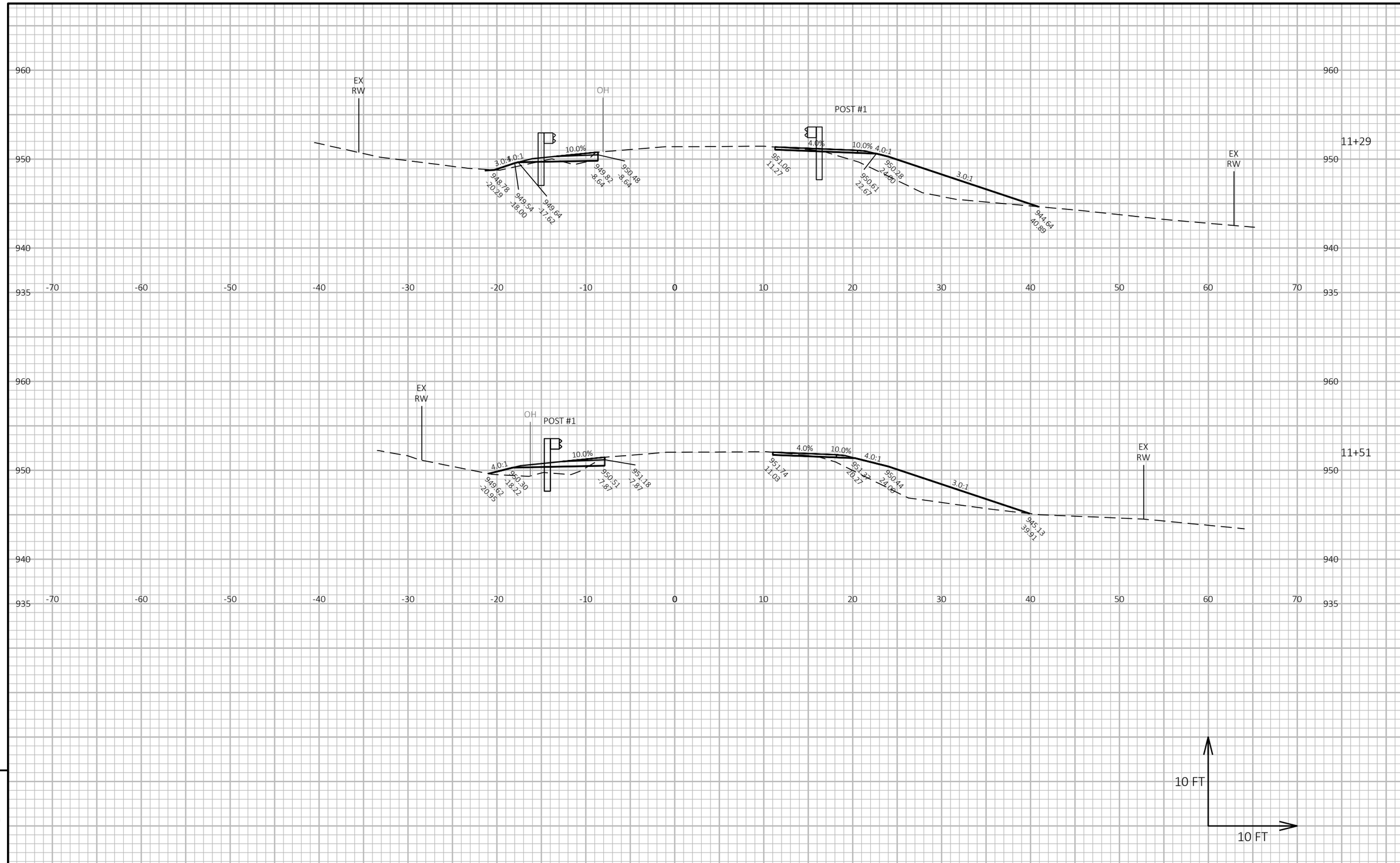

9

9

PROJECT NO: 5235-03-70	HWY: STH 80	COUNTY: GRANT	CROSS SECTIONS: N BLOCKHOUSE RD GUARDRAIL	SHEET 380	E

FILE NAME : X:\PROJECTS\GRANT\200050MW - 5235-03-00 STH 80\DESIGN\C3D\SHEETSPLAN\090202-XS.DWG
LAYOUT NAME - 090202 45

PLOT DATE : 7/15/2022 2:46 PM PLOT BY : BRAD GROH PLOT NAME : PLOT SCALE : 1 IN:10 FT HORZ. / 1 IN:10 FT VERT.

WISDOT/CADDS SHEET 49

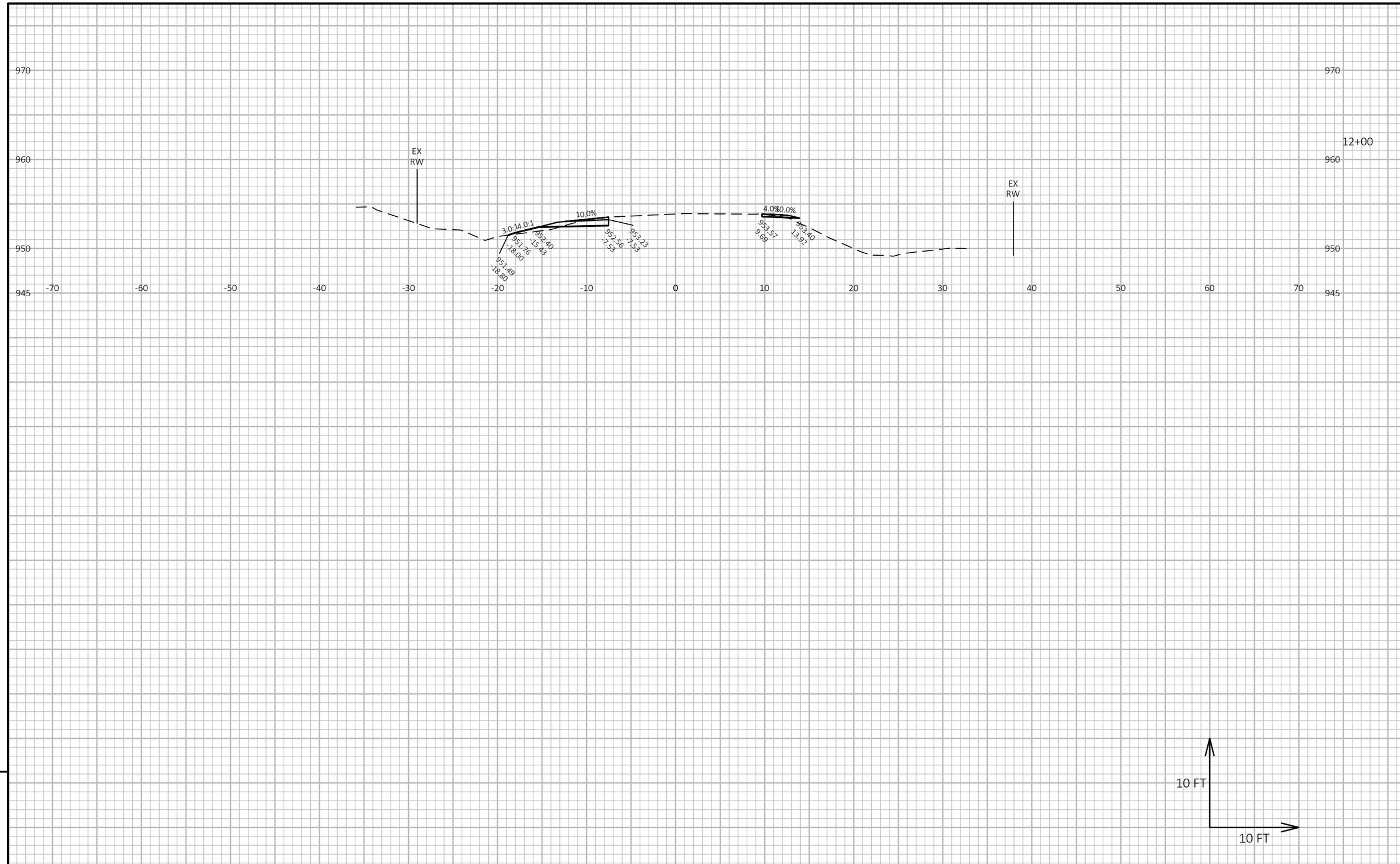

9

9

PROJECT NO: 5235-03-70	HWY: STH 80	COUNTY: GRANT	CROSS SECTIONS: N BLOCKHOUSE RD GUARDRAIL	SHEET 381	E

FILE NAME : X:\PROJECTS\GRANT\200050MW - 5235-03-00 STH 80\DESIGN\C3D\SHEETSPLAN\090202-XS.DWG
LAYOUT NAME - 090202 46
PLOT DATE : 7/15/2022 2:46 PM
PLOT BY : BRAD GROH
PLOT NAME :
PLOT SCALE : 1 IN:10 FT HORZ. / 1 IN:10 FT VERT.
WISDOT/CADDS SHEET 49

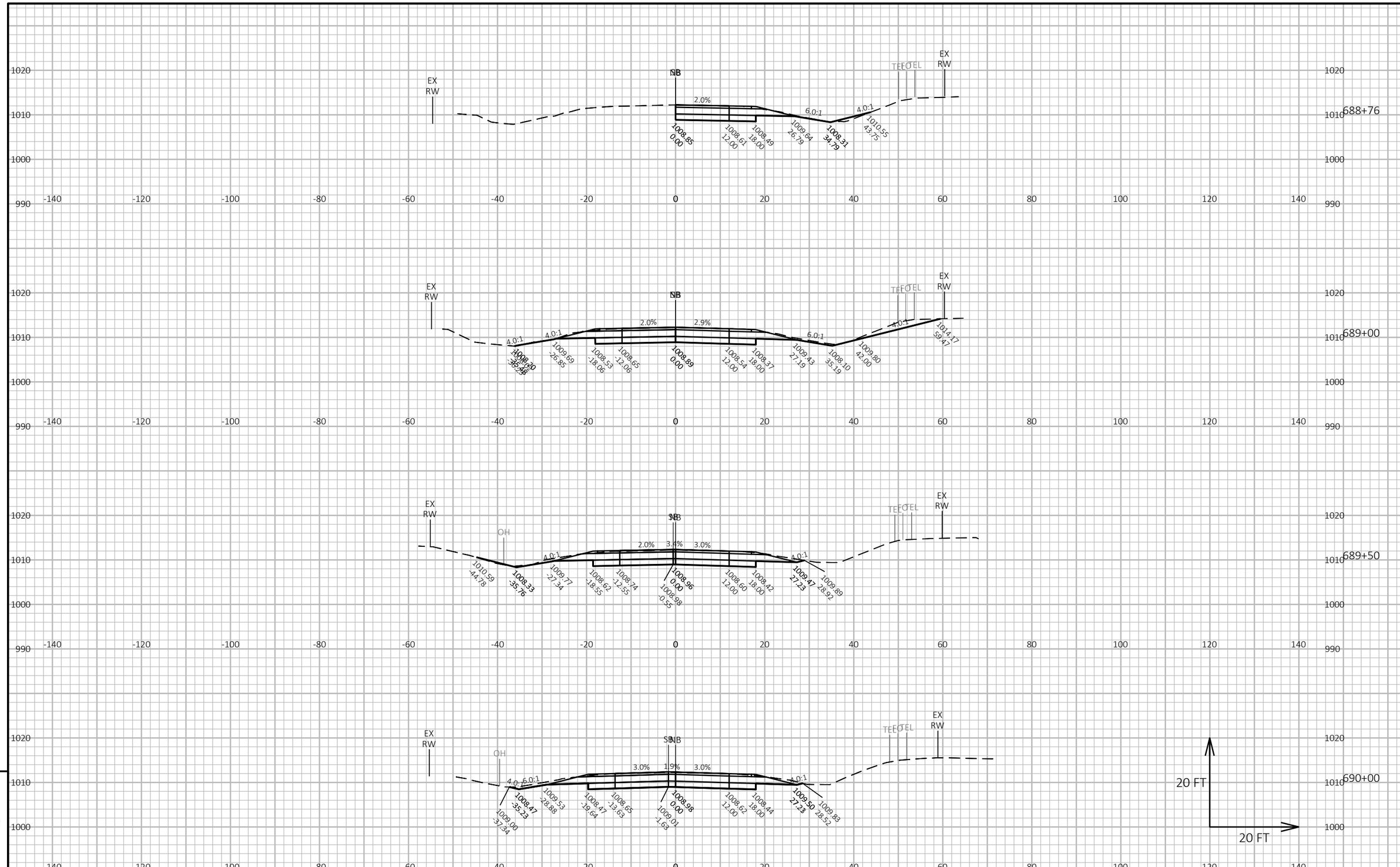

PROJECT NO: 5235-03-70	HWY: STH 80	COUNTY: GRANT	CROSS SECTIONS: NB STH 80 AT ROUNDABOUT	SHEET 382	E

FILE NAME : X:\PROJECTS\GRANT\200050MW - 5235-03-00 STH 80\DESIGN\C3D\SHEETSPLAN\090203-XS.DWG
LAYOUT NAME - NB-1
PLOT DATE : 6/30/2022 6:08 AM
PLOT BY : MICHAEL LISKA
PLOT NAME :
PLOT SCALE : 1 IN:20 FT HORZ. / 1 IN:20 FT VERT.

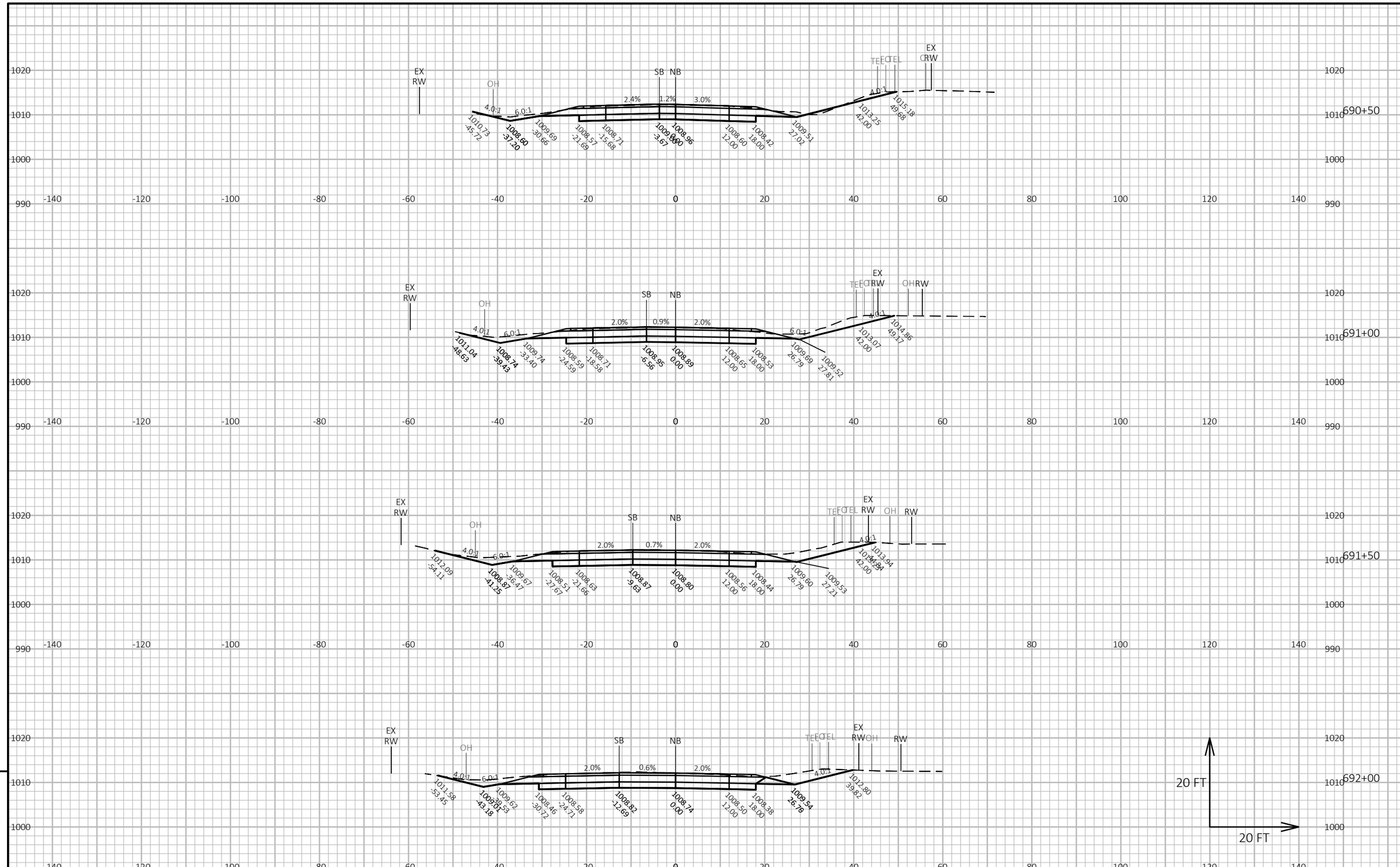

PROJECT NO: 5235-03-70	HWY: STH 80	COUNTY: GRANT	CROSS SECTIONS: NB STH 80 AT ROUNDABOUT	SHEET 383	E

FILE NAME : X:\PROJECTS\GRANT\200050MW - 5235-03-00 STH 80\DESIGN\C3D\SHEETSPLAN\090203-XS.DWG
LAYOUT NAME - NB-2
PLOT DATE : 6/30/2022 6:08 AM
PLOT BY : MICHAEL LISKA
PLOT NAME :
PLOT SCALE : 1 IN:20 FT HORZ. / 1 IN:20 FT VERT.
WISDOT/CADDS SHEET 49

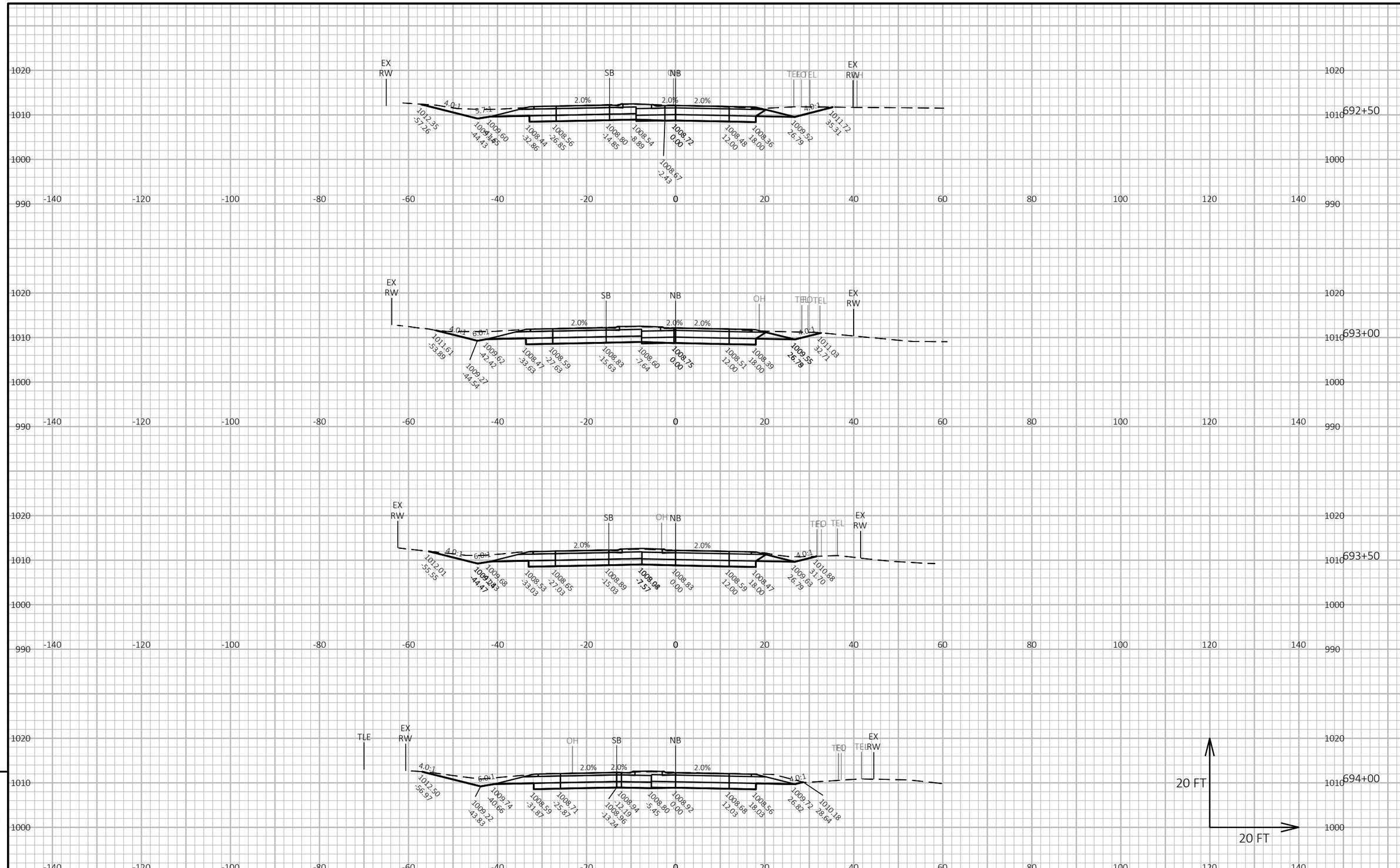

9

9

PROJECT NO: 5235-03-70	HWY: STH 80	COUNTY: GRANT	CROSS SECTIONS: NB STH 80 AT ROUNDABOUT	SHEET 384	E

FILE NAME : X:\PROJECTS\GRANT\200050MW - 5235-03-00 STH 80\DESIGN\C3D\SHEETSPLAN\090203-XS.DWG
LAYOUT NAME - NB-3
PLOT DATE : 6/30/2022 6:08 AM
PLOT BY : MICHAEL LISKA
PLOT NAME :
PLOT SCALE : 1 IN:20 FT HORZ. / 1 IN:20 FT VERT.

WISDOT/CADDS SHEET 49

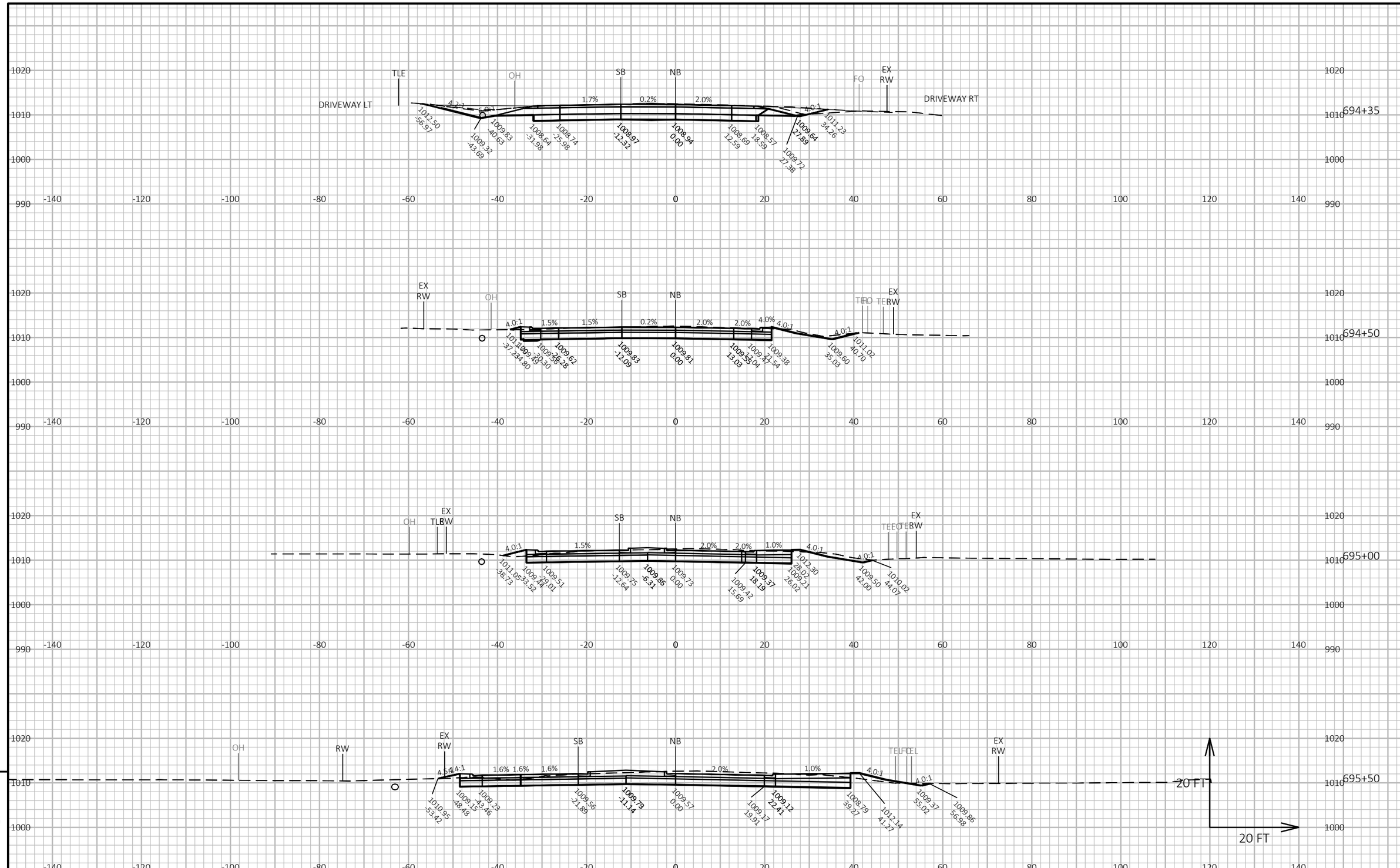

9

9

PROJECT NO: 5235-03-70	HWY: STH 80	COUNTY: GRANT	CROSS SECTIONS: NB STH 80 AT ROUNDABOUT	SHEET 385	E

FILE NAME : X:\PROJECTS\GRANT\200050MW - 5235-03-00 STH 80\DESIGN\C3D\SHEETSPLAN\090203-XS.DWG
LAYOUT NAME - NB-4
PLOT DATE : 6/30/2022 6:08 AM
PLOT BY : MICHAEL LISKA
PLOT NAME :
PLOT SCALE : 1 IN:20 FT HORZ. / 1 IN:20 FT VERT.
WISDOT/CADDS SHEET 49

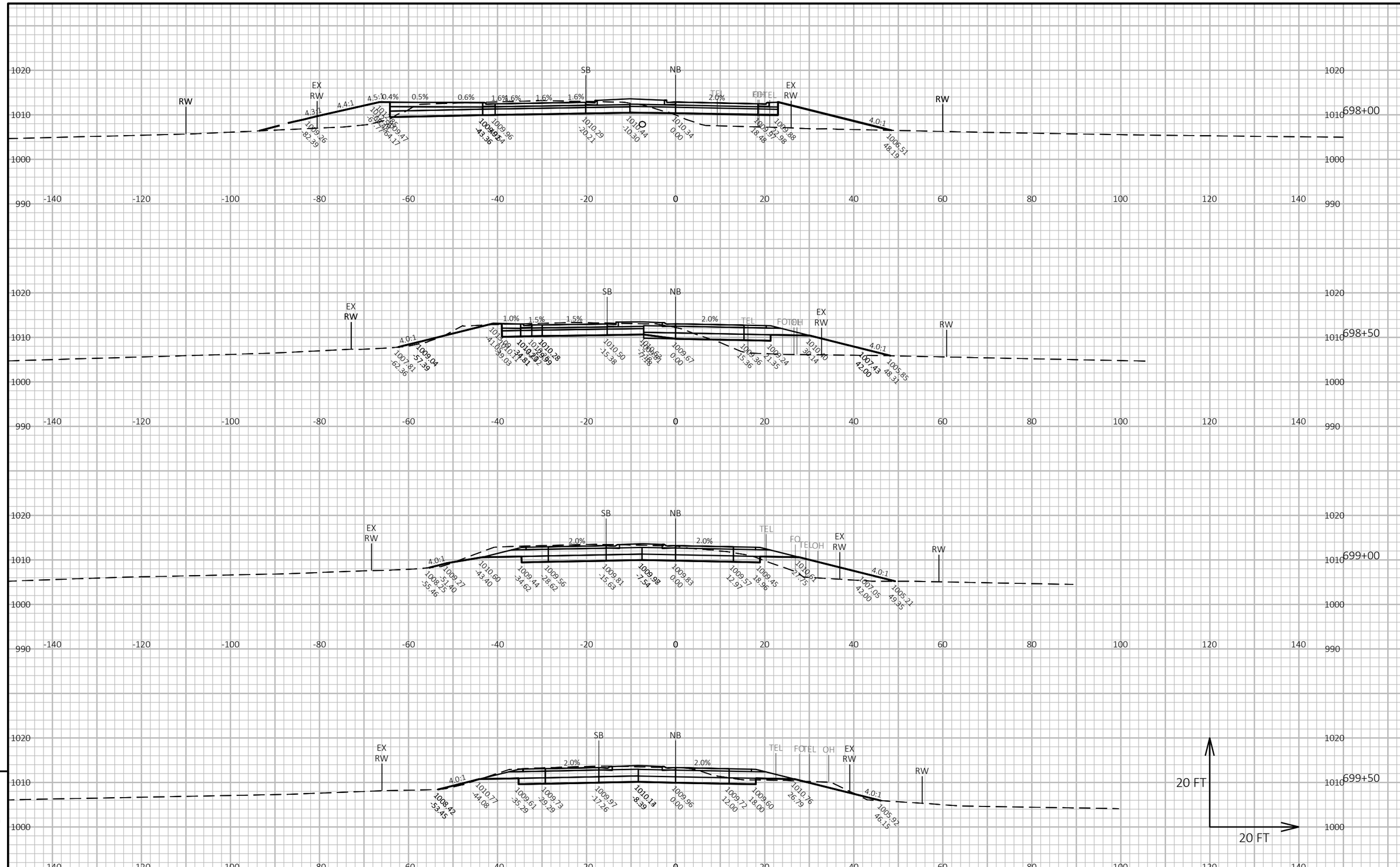

PROJECT NO: 5235-03-70	HWY: STH 80	COUNTY: GRANT	CROSS SECTIONS: NB STH 80 AT ROUNDABOUT	SHEET 386	E

FILE NAME : X:\PROJECTS\GRANT\200050MW - 5235-03-00 STH 80\DESIGN\C3D\SHEETSPLAN\090203-XS.DWG
LAYOUT NAME - NB-5
PLOT DATE : 6/30/2022 6:08 AM
PLOT BY : MICHAEL LISKA
PLOT NAME :
PLOT SCALE : 1 IN:20 FT HORZ. / 1 IN:20 FT VERT.

WISDOT/CADDS SHEET 49

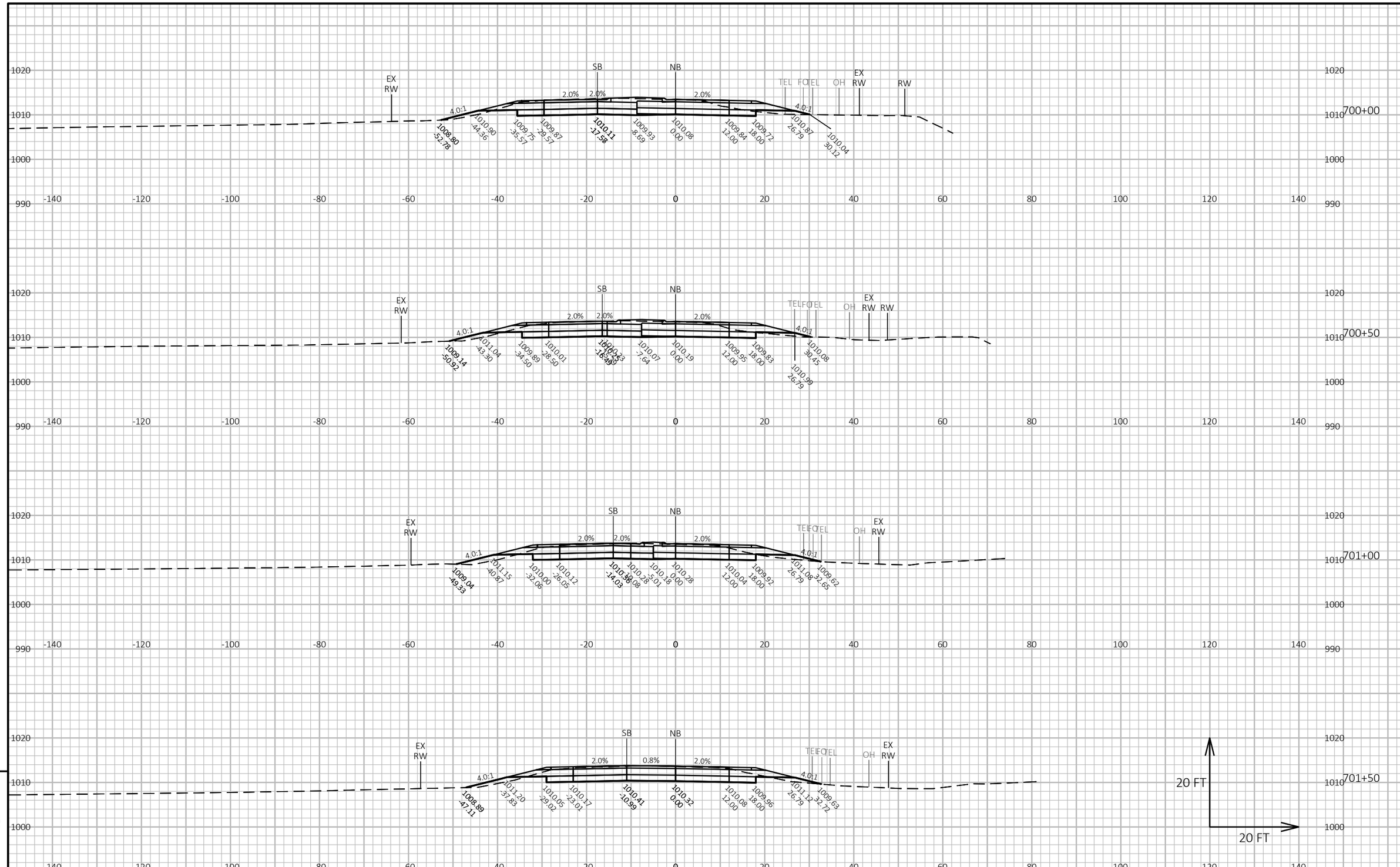

9

9

PROJECT NO: 5235-03-70	HWY: STH 80	COUNTY: GRANT	CROSS SECTIONS: NB STH 80 AT ROUNDABOUT	SHEET 387	E

FILE NAME : X:\PROJECTS\GRANT\200050MW - 5235-03-00 STH 80\DESIGN\C3D\SHEETSPLAN\090203-XS.DWG
LAYOUT NAME - NB-6
PLOT DATE : 6/30/2022 6:08 AM
PLOT BY : MICHAEL LISKA
PLOT NAME :
PLOT SCALE : 1 IN:20 FT HORZ. / 1 IN:20 FT VERT.
WISDOT/CADDS SHEET 49

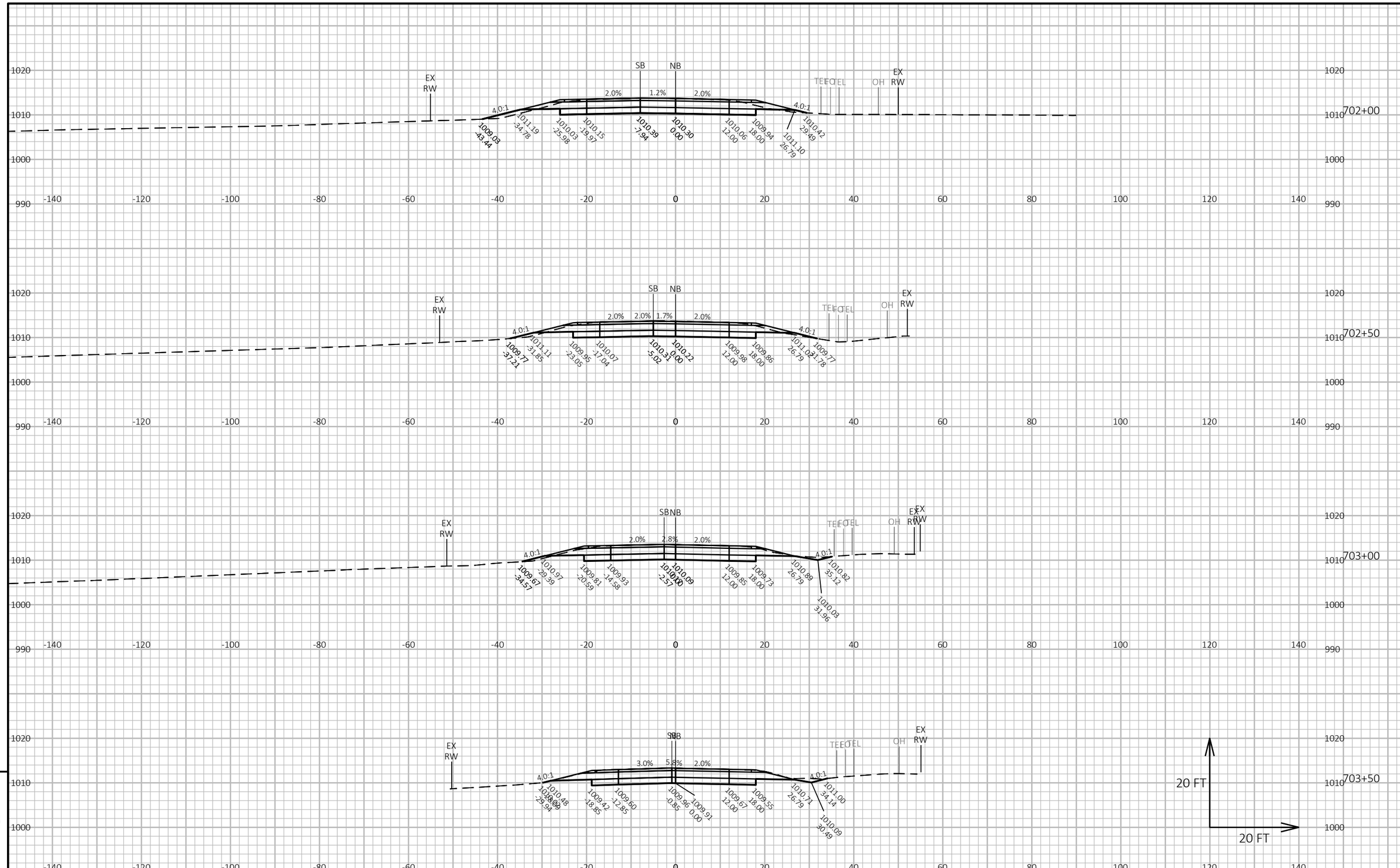

PROJECT NO: 5235-03-70	HWY: STH 80	COUNTY: GRANT	CROSS SECTIONS: NB STH 80 AT ROUNDABOUT	SHEET 388	E

FILE NAME : X:\PROJECTS\GRANT\200050MW - 5235-03-00 STH 80\DESIGN\C3D\SHEETSPLAN\090203-XS.DWG
LAYOUT NAME - NB-7
PLOT DATE : 6/30/2022 6:08 AM
PLOT BY : MICHAEL LISKA
PLOT NAME :
PLOT SCALE : 1 IN:20 FT HORZ. / 1 IN:20 FT VERT.
WISDOT/CADDS SHEET 49

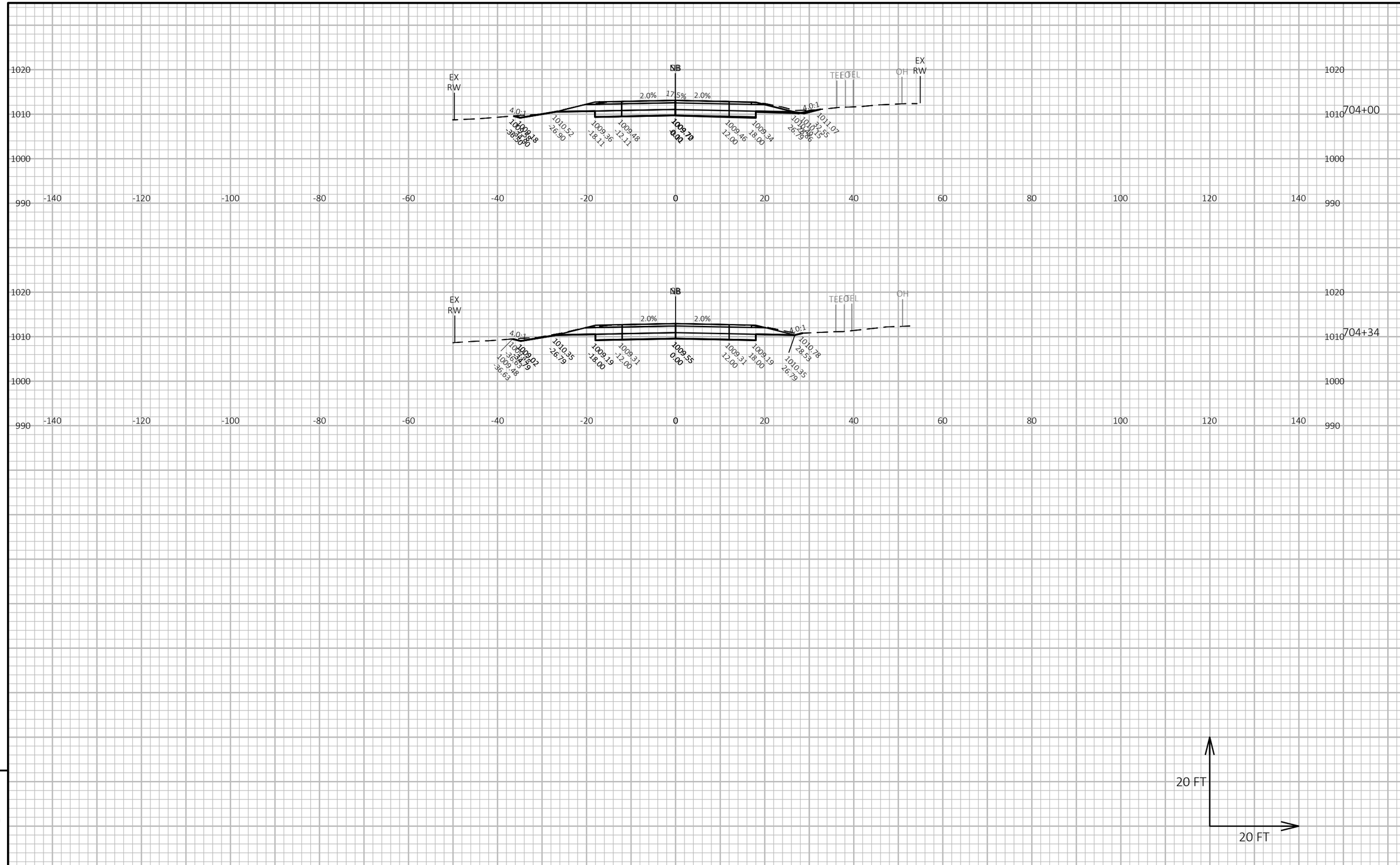

9

9

PROJECT NO: 5235-03-70	HWY: STH 80	COUNTY: GRANT	CROSS SECTIONS: NB STH 80 AT ROUNDABOUT	SHEET 389	E

FILE NAME : X:\PROJECTS\GRANT\200050MW - 5235-03-00 STH 80\DESIGN\C3D\SHEETSPLAN\090203-XS.DWG
LAYOUT NAME - NB-8
PLOT DATE : 6/30/2022 6:08 AM
PLOT BY : MICHAEL LISKA
PLOT NAME :
PLOT SCALE : 1 IN:20 FT HORZ. / 1 IN:20 FT VERT.
WISDOT/CADDS SHEET 49

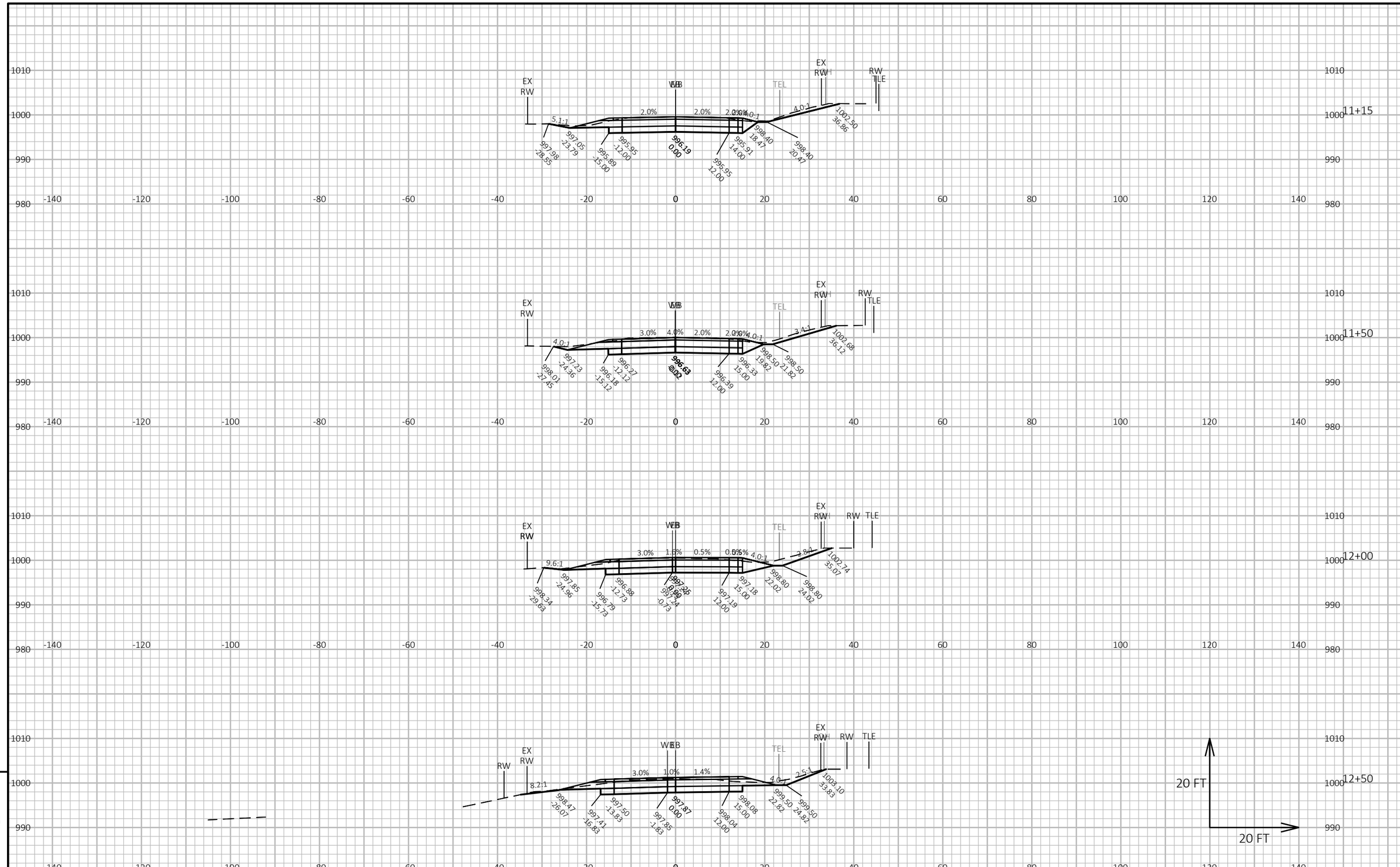

PROJECT NO: 5235-03-70	HWY: STH 80	COUNTY: GRANT	CROSS SECTIONS: EB PATCH RD AND STH 81 AT ROUNDABOUT	SHEET 390	E

FILE NAME : X:\PROJECTS\GRANT\200050MW - 5235-03-00 STH 80\DESIGN\C3D\SHEETSPLAN\090203-XS.DWG
LAYOUT NAME - EB-01
PLOT DATE : 6/30/2022 6:09 AM
PLOT BY : MICHAEL LISKA
PLOT NAME :
PLOT SCALE : 1 IN:20 FT HORZ. / 1 IN:20 FT VERT.
WISDOT/CADDS SHEET 49

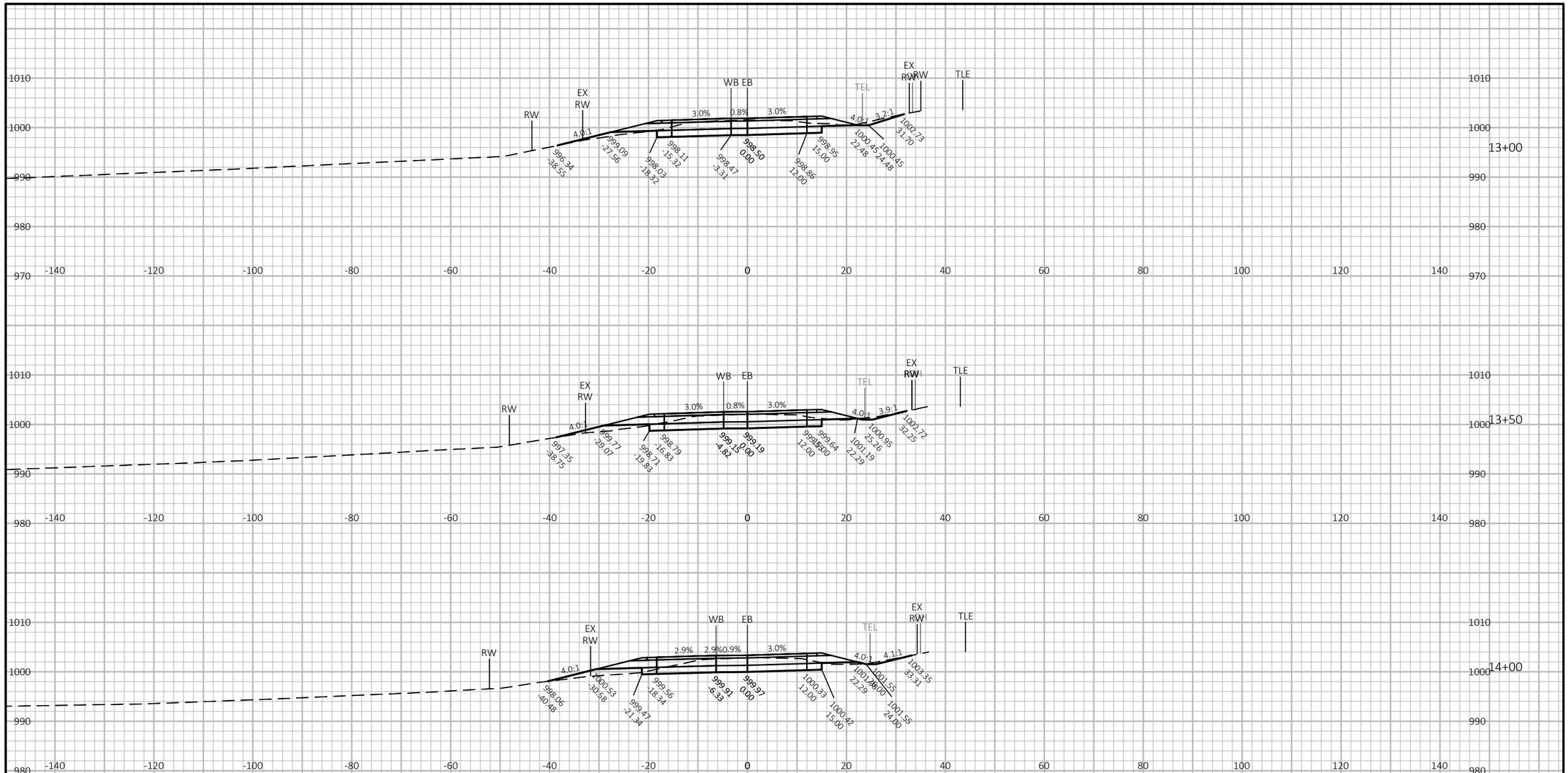

PROJECT NO: 5235-03-70	HWY: STH 80	COUNTY: GRANT	CROSS SECTIONS: EB PATCH RD AND STH 81 AT ROUNDABOUT	SHEET 391	E

FILE NAME : X:\PROJECTS\GRANT\200050MW - 5235-03-00 STH 80\DESIGN\C3D\SHEETSPLAN\090203-XS.DWG
LAYOUT NAME - EB-02
PLOT DATE : 6/30/2022 6:09 AM
PLOT BY : MICHAEL LISKA
PLOT NAME :
PLOT SCALE : 1 IN:20 FT HORZ. / 1 IN:20 FT VERT.
WISDOT/CADDS SHEET 49

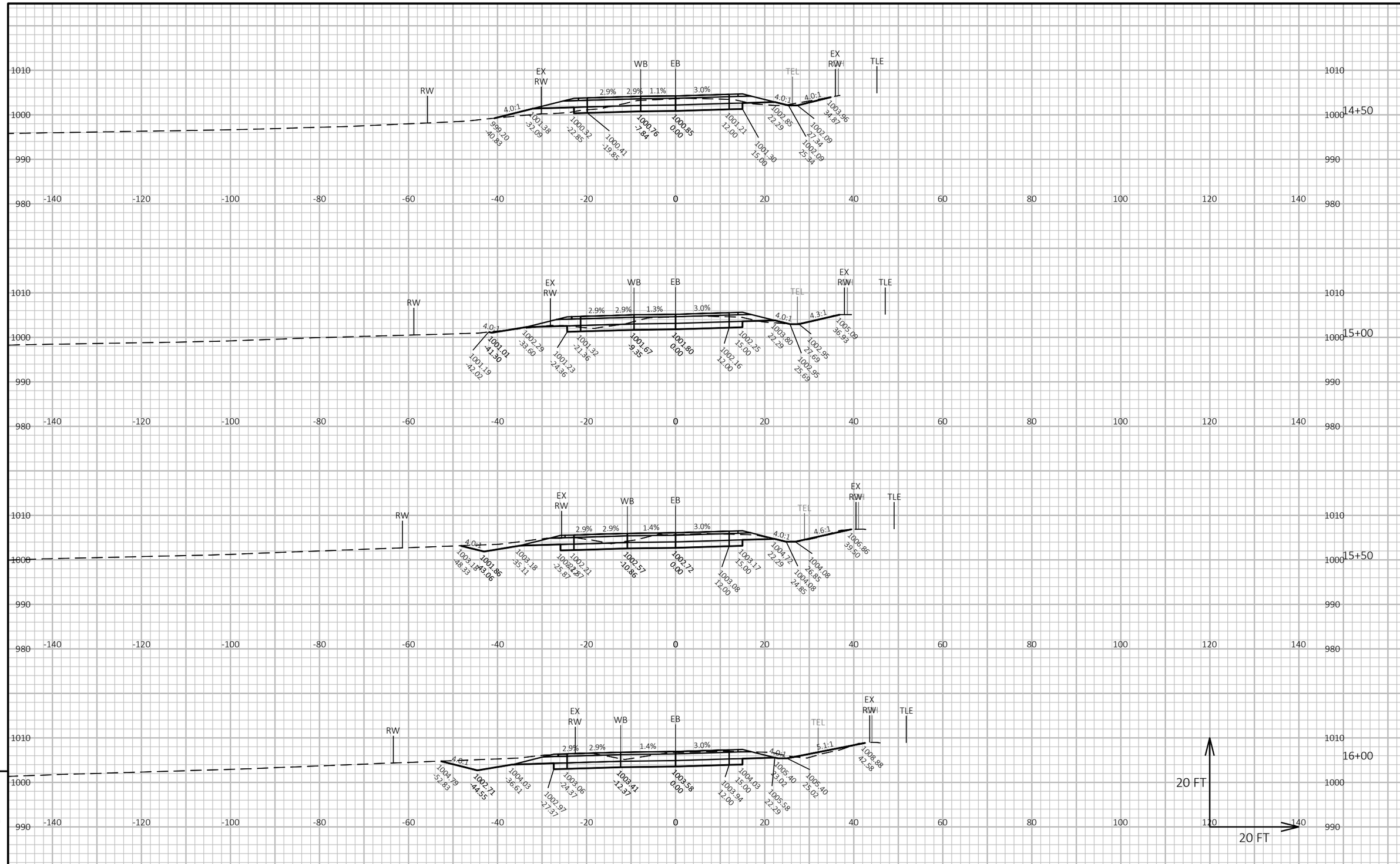

PROJECT NO: 5235-03-70	HWY: STH 80	COUNTY: GRANT	CROSS SECTIONS: EB PATCH RD AND STH 81 AT ROUNDABOUT	SHEET 392	E

FILE NAME : X:\PROJECTS\GRANT\200050MW - 5235-03-00 STH 80\DESIGN\C3D\SHEETSPLAN\090203-XS.DWG
LAYOUT NAME - EB-03
PLOT DATE : 6/30/2022 6:09 AM
PLOT BY : MICHAEL LISKA
PLOT NAME :
PLOT SCALE : 1 IN:20 FT HORZ. / 1 IN:20 FT VERT.
WISDOT/CADDS SHEET 49

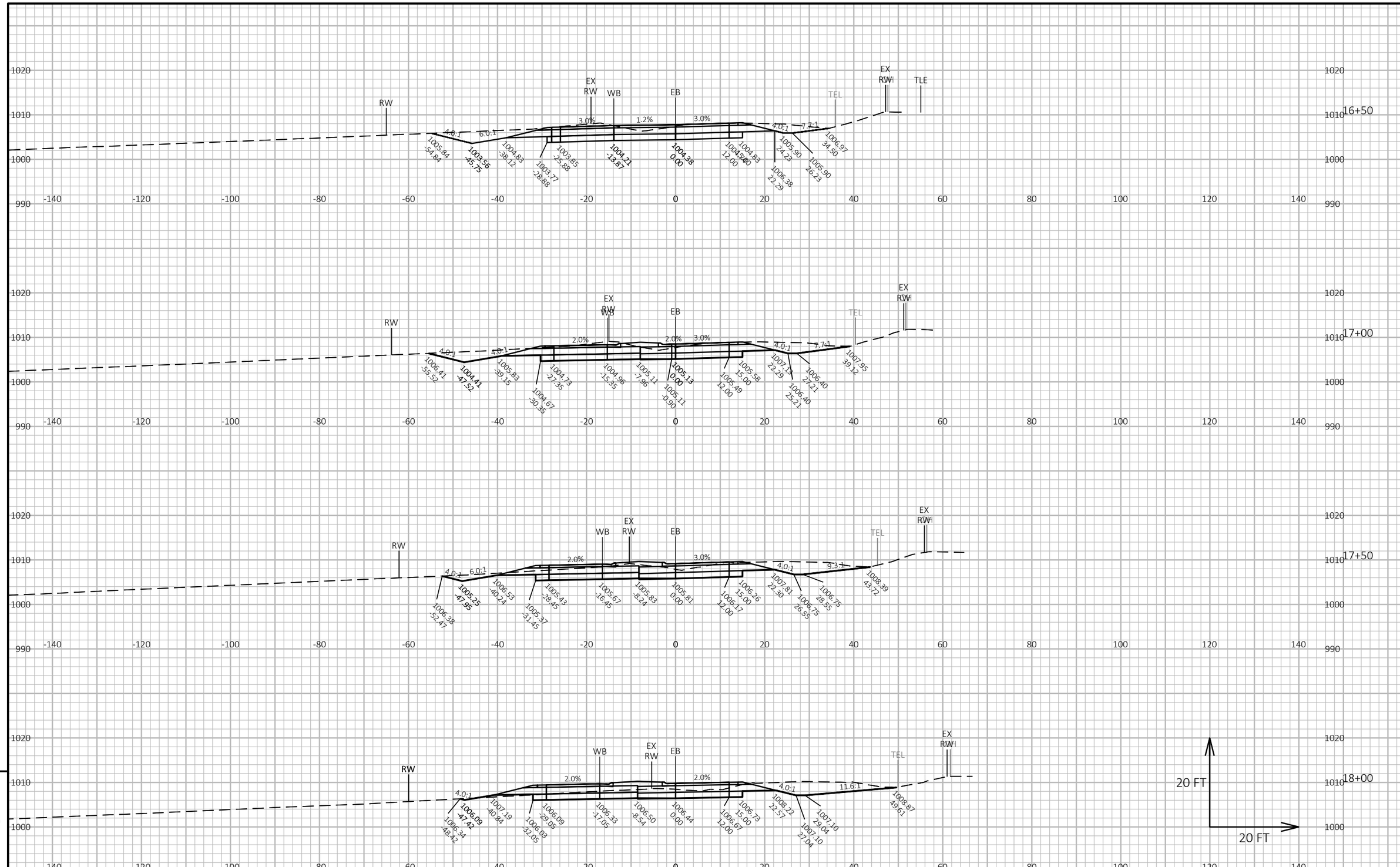

9

9

PROJECT NO: 5235-03-70	HWY: STH 80	COUNTY: GRANT	CROSS SECTIONS: EB PATCH RD AND STH 81 AT ROUNDABOUT	SHEET 393	E

FILE NAME : X:\PROJECTS\GRANT\200050MW - 5235-03-00 STH 80\DESIGN\C3D\SHEETSPLAN\090203-XS.DWG
LAYOUT NAME - EB-04

PLOT DATE : 6/30/2022 6:09 AM PLOT BY : MICHAEL LISKA PLOT NAME : PLOT SCALE : 1 IN:20 FT HORZ. / 1 IN:20 FT VERT.

WISDOT/CADDS SHEET 49

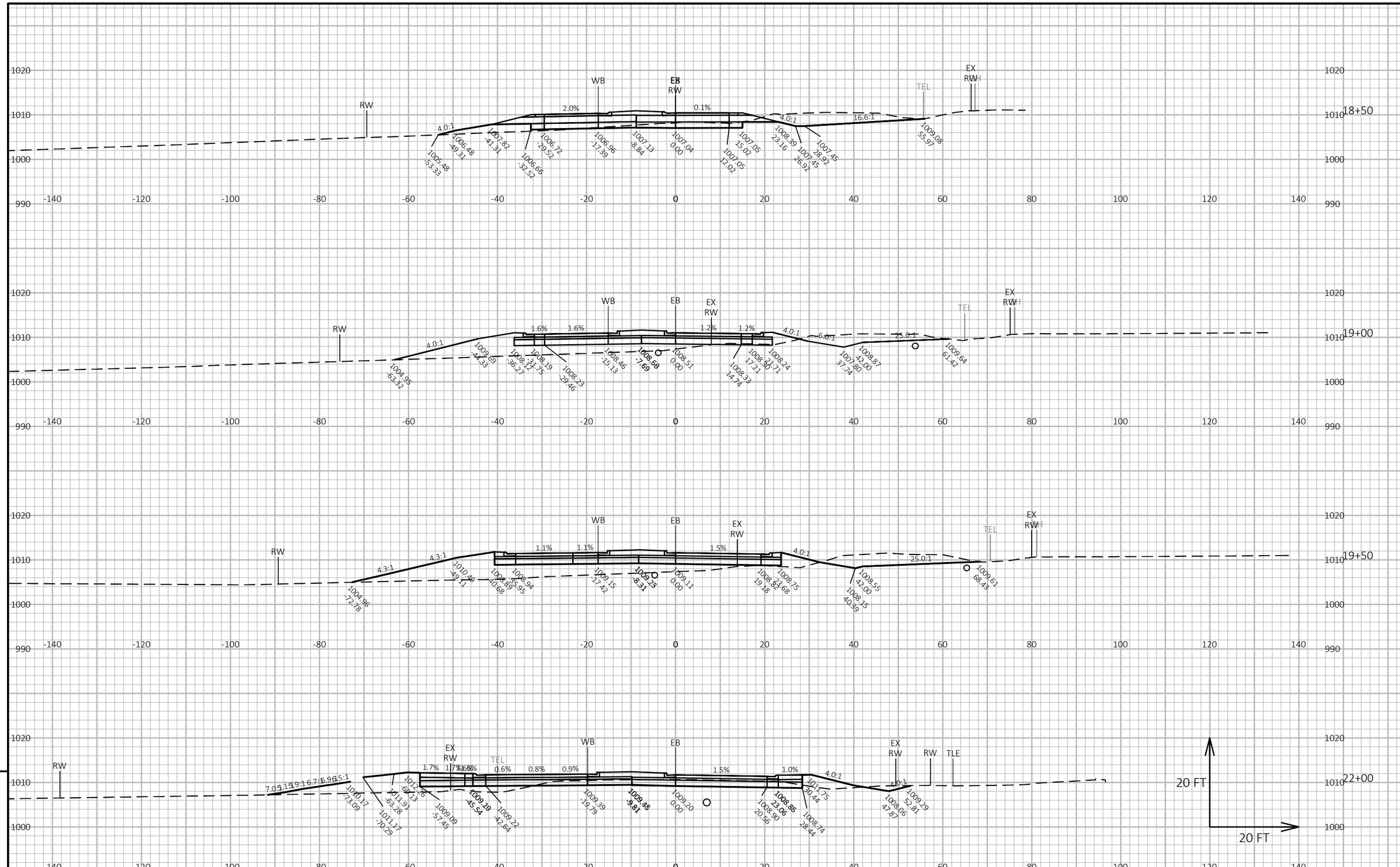

PROJECT NO: 5235-03-70	HWY: STH 80	COUNTY: GRANT	CROSS SECTIONS: EB PATCH RD AND STH 81 AT ROUNDABOUT	SHEET 394	E

FILE NAME : X:\PROJECTS\GRANT\200050MW - 5235-03-00 STH 80\DESIGN\C3D\SHEETSPLAN\090203-XS.DWG
LAYOUT NAME - EB-05
PLOT DATE : 6/30/2022 6:09 AM
PLOT BY : MICHAEL LISKA
PLOT NAME :
PLOT SCALE : 1 IN:20 FT HORZ. / 1 IN:20 FT VERT.
WISDOT/CADDS SHEET 49

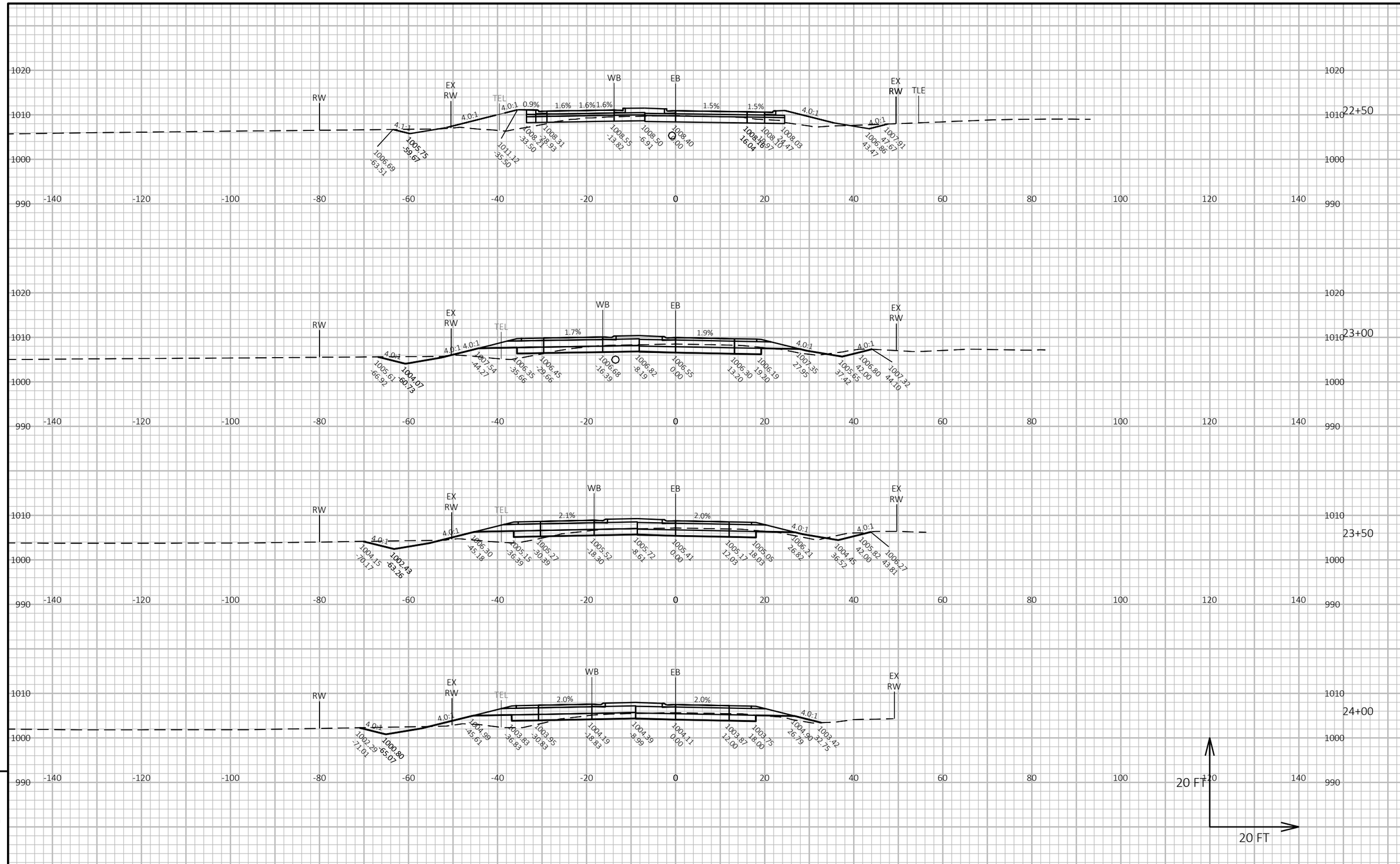

9

9

PROJECT NO: 5235-03-70	HWY: STH 80	COUNTY: GRANT	CROSS SECTIONS: EB PATCH RD AND STH 81 AT ROUNDABOUT	SHEET 395	E

FILE NAME : X:\PROJECTS\GRANT\200050MW - 5235-03-00 STH 80\DESIGN\C3D\SHEETSPLAN\090203-XS.DWG
LAYOUT NAME - EB-06
PLOT DATE : 6/30/2022 6:09 AM
PLOT BY : MICHAEL LISKA
PLOT NAME :
PLOT SCALE : 1 IN:20 FT HORZ. / 1 IN:20 FT VERT.
WISDOT/CADDS SHEET 49

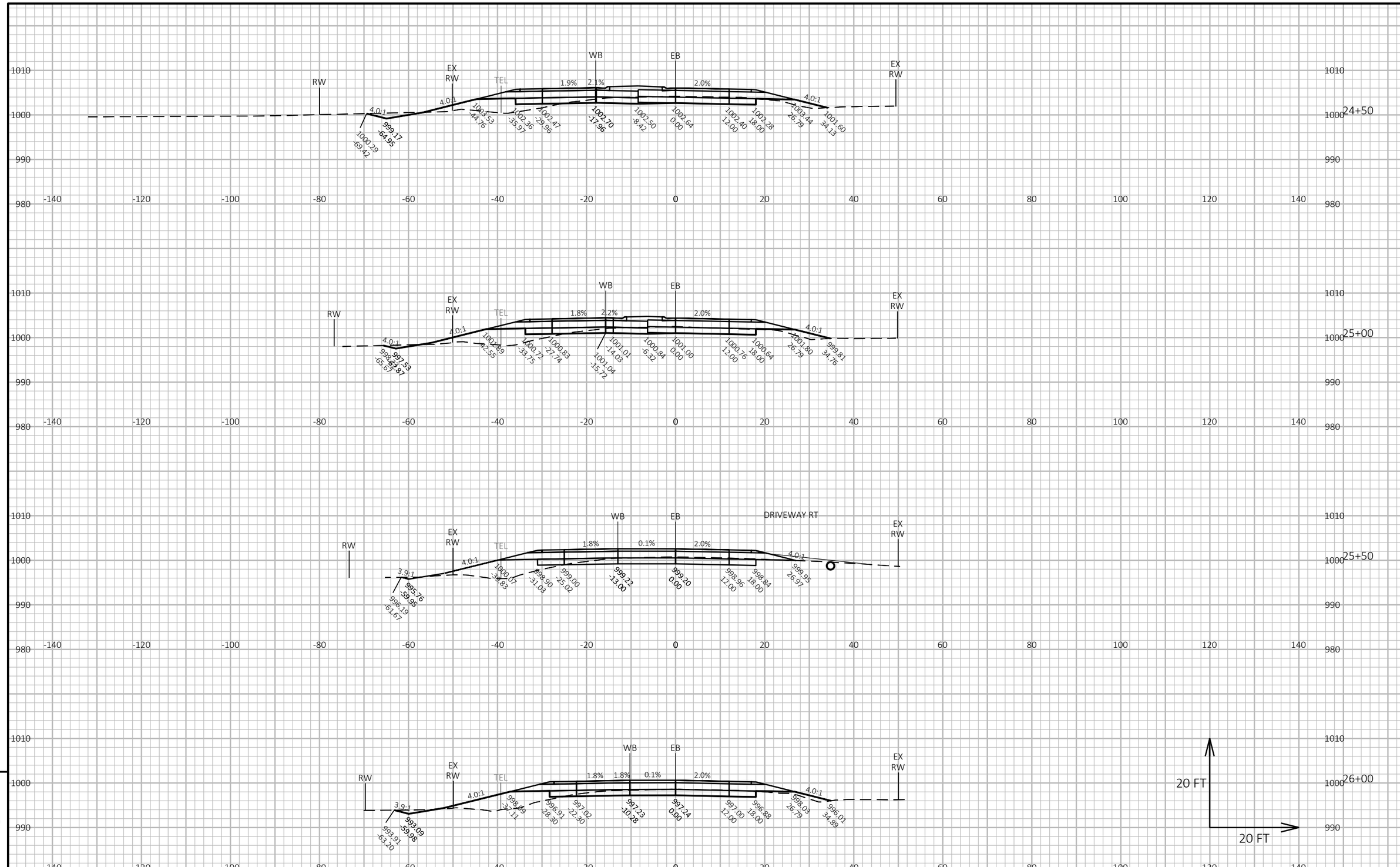

PROJECT NO: 5235-03-70	HWY: STH 80	COUNTY: GRANT	CROSS SECTIONS: EB PATCH RD AND STH 81 AT ROUNDABOUT	SHEET 396	E

FILE NAME : X:\PROJECTS\GRANT\200050MW - 5235-03-00 STH 80\DESIGN\C3D\SHEETSPLAN\090203-XS.DWG
LAYOUT NAME - EB-07
PLOT DATE : 6/30/2022 6:09 AM
PLOT BY : MICHAEL LISKA
PLOT NAME :
PLOT SCALE : 1 IN:20 FT HORZ. / 1 IN:20 FT VERT.
WISDOT/CADDS SHEET 49

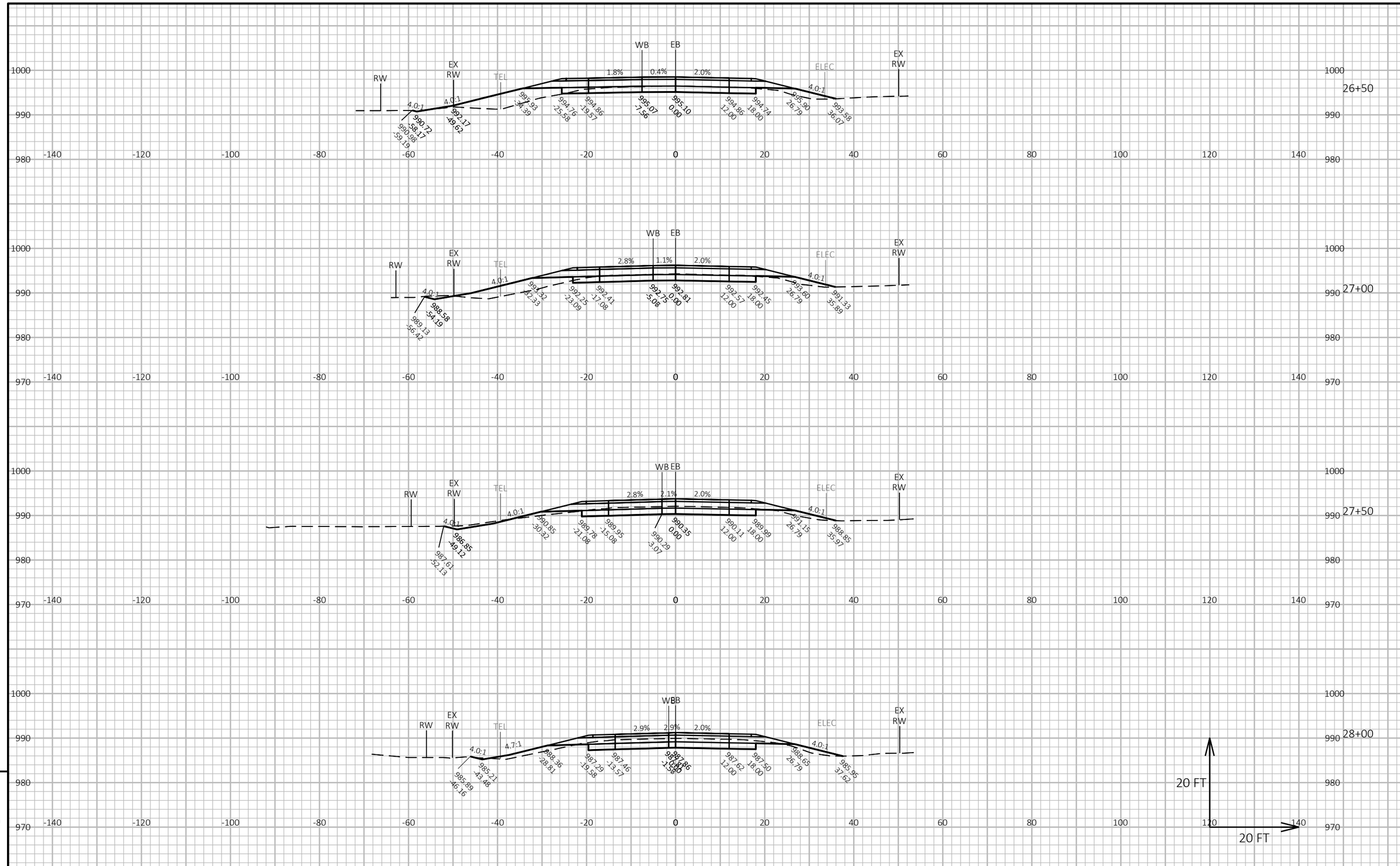

PROJECT NO: 5235-03-70	HWY: STH 80	COUNTY: GRANT	CROSS SECTIONS: EB PATCH RD AND STH 81 AT ROUNDABOUT	SHEET 397	E

FILE NAME : X:\PROJECTS\GRANT\200050MW - 5235-03-00 STH 80\DESIGN\C3D\SHEETSPLAN\090203-XS.DWG
LAYOUT NAME - EB-08
PLOT DATE : 6/30/2022 6:09 AM
PLOT BY : MICHAEL LISKA
PLOT NAME :
PLOT SCALE : 1 IN:20 FT HORZ. / 1 IN:20 FT VERT.
WISDOT/CADDS SHEET 49

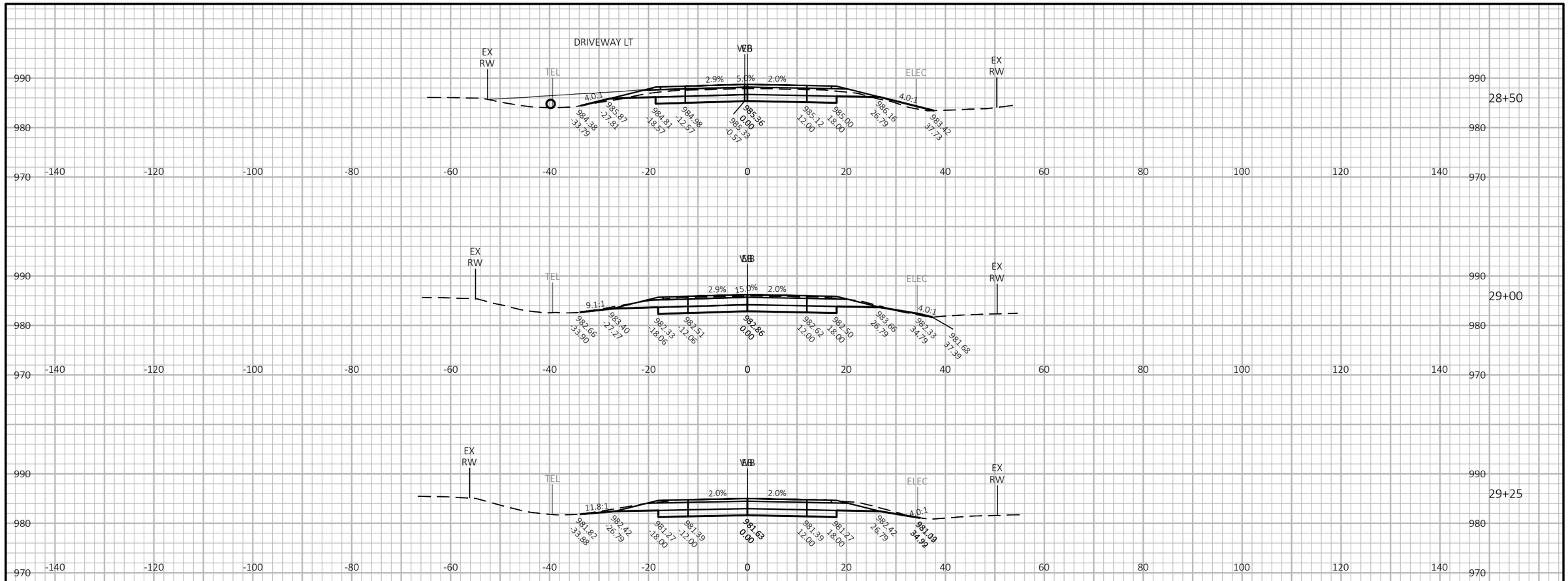

9

9

PROJECT NO: 5235-03-70	HWY: STH 80	COUNTY: GRANT	CROSS SECTIONS: EB PATCH RD AND STH 81 AT ROUNDABOUT	SHEET 398	E

FILE NAME : X:\PROJECTS\GRANT\200050MW - 5235-03-00 STH 80\DESIGN\C3D\SHEETSPLAN\090203-XS.DWG
LAYOUT NAME - EB-09
PLOT DATE : 6/30/2022 6:09 AM
PLOT BY : MICHAEL LISKA
PLOT NAME :
PLOT SCALE : 1 IN:20 FT HORZ. / 1 IN:20 FT VERT.
WISDOT/CADDS SHEET 49

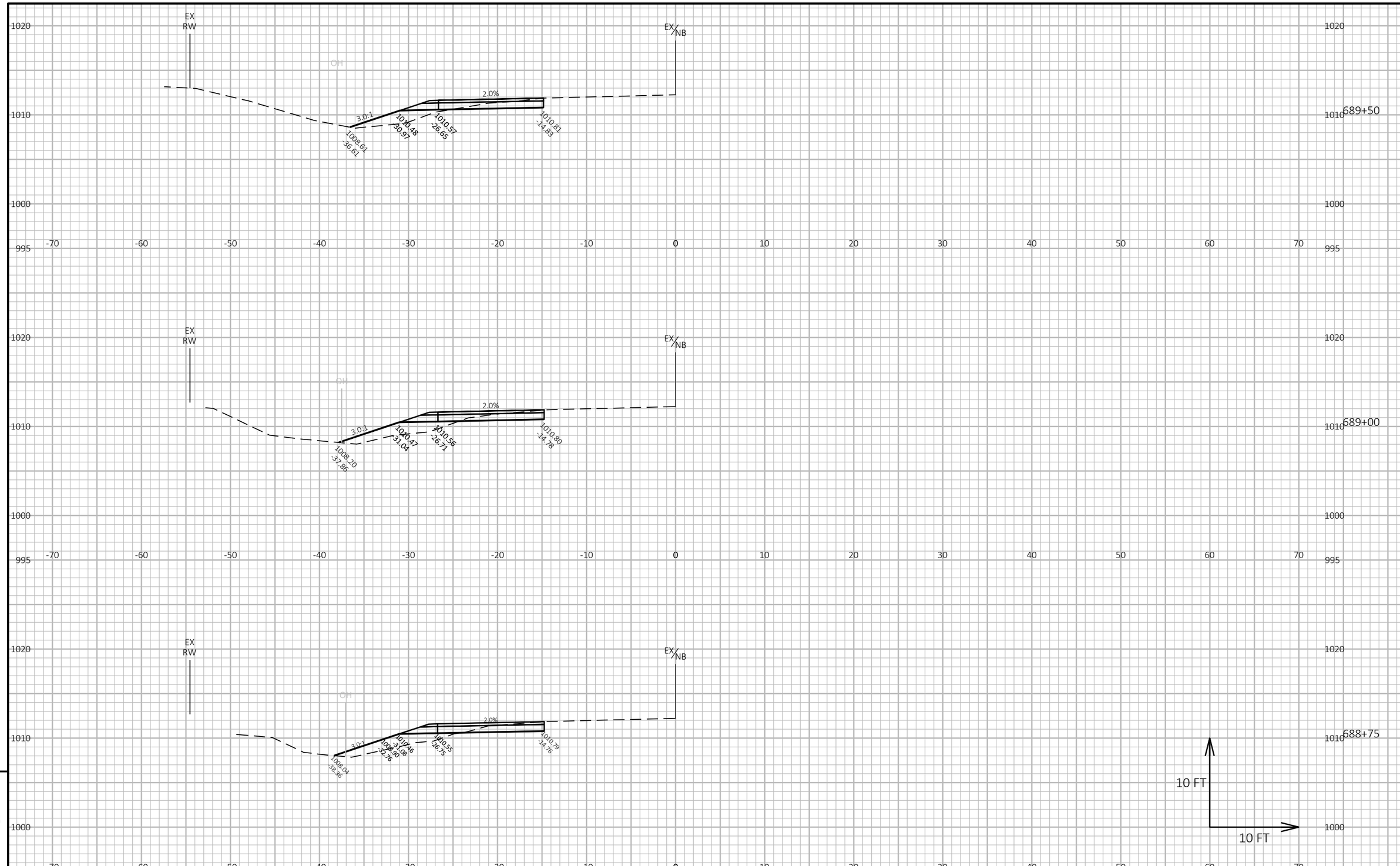

PROJECT NO: 5235-03-70	HWY: STH 80	COUNTY: GRANT	CROSS SECTIONS: TEMP STAGING PS1	SHEET 399	E

FILE NAME : \\JT-FILE\DESIGNS\PROJECTS\GRANT\200050MW - 5235-03-00 STH 80\DESIGN\C3D\SHEETSPLAN\090204-XS-TEMP.DWG
LAYOUT NAME - 090204-XS-PS1-1
PLOT DATE : 7/15/2022 7:32 AM PLOT BY : MIKE LISKA PLOT NAME : PLOT SCALE : 1 IN:10 FT HORZ. / 1 IN:10 FT VERT.
WISDOT/CADDS SHEET 49

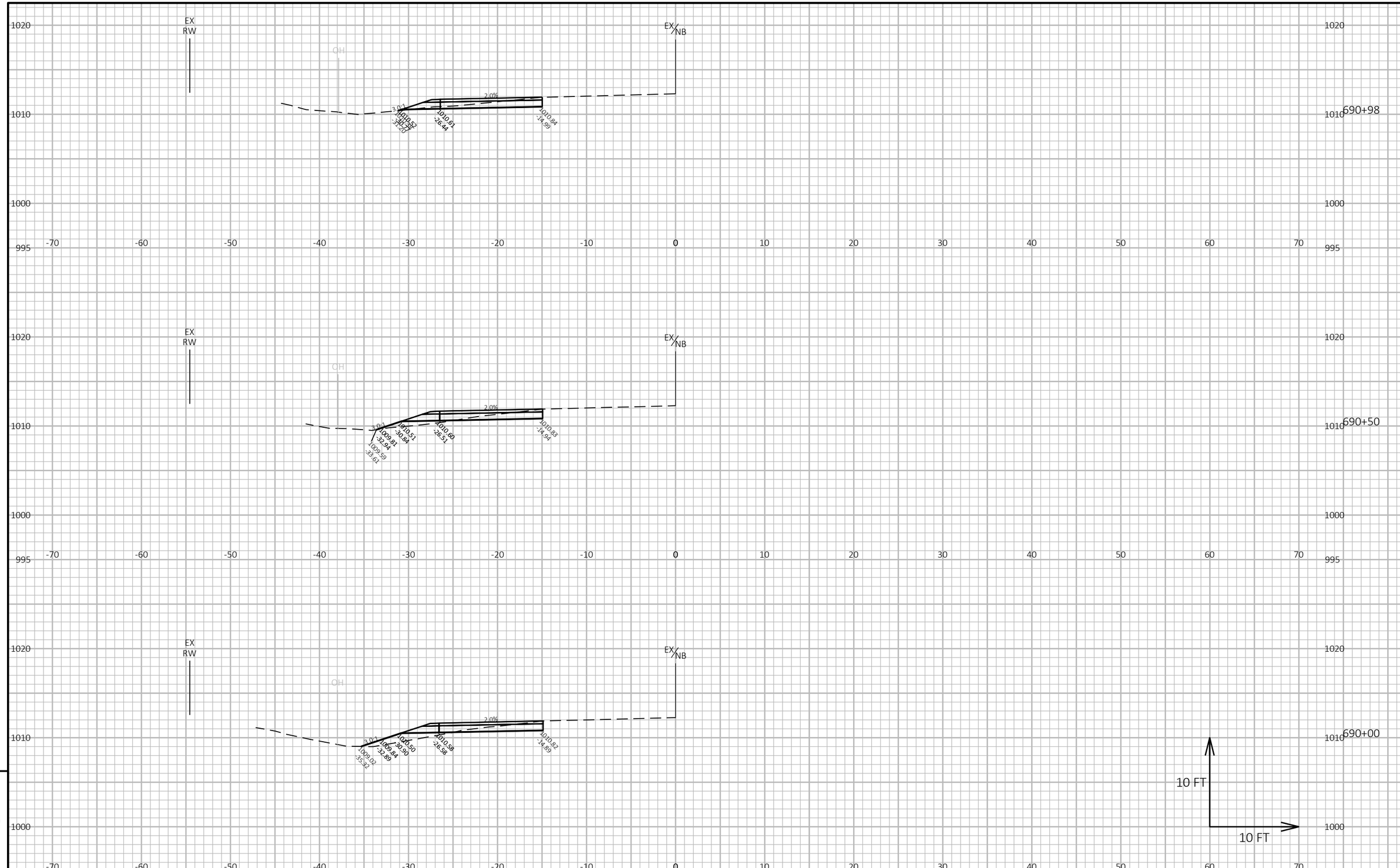

PROJECT NO: 5235-03-70	HWY: STH 80	COUNTY: GRANT	CROSS SECTIONS: TEMP STAGING PS1	SHEET 400	E

FILE NAME : \\JT-FILE\DESIGNS\PROJECTS\GRANT\200050MW - 5235-03-00 STH 80\DESIGN\C3D\SHEETSPLAN\090204-XS-TEMP.DWG
LAYOUT NAME - 090204-XS-PS1-2
PLOT DATE : 7/15/2022 7:32 AM
PLOT BY : MIKE LISKA
PLOT NAME :
PLOT SCALE : 1 IN:10 FT HORZ. / 1 IN:10 FT VERT.
WISDOT/CADDS SHEET 49

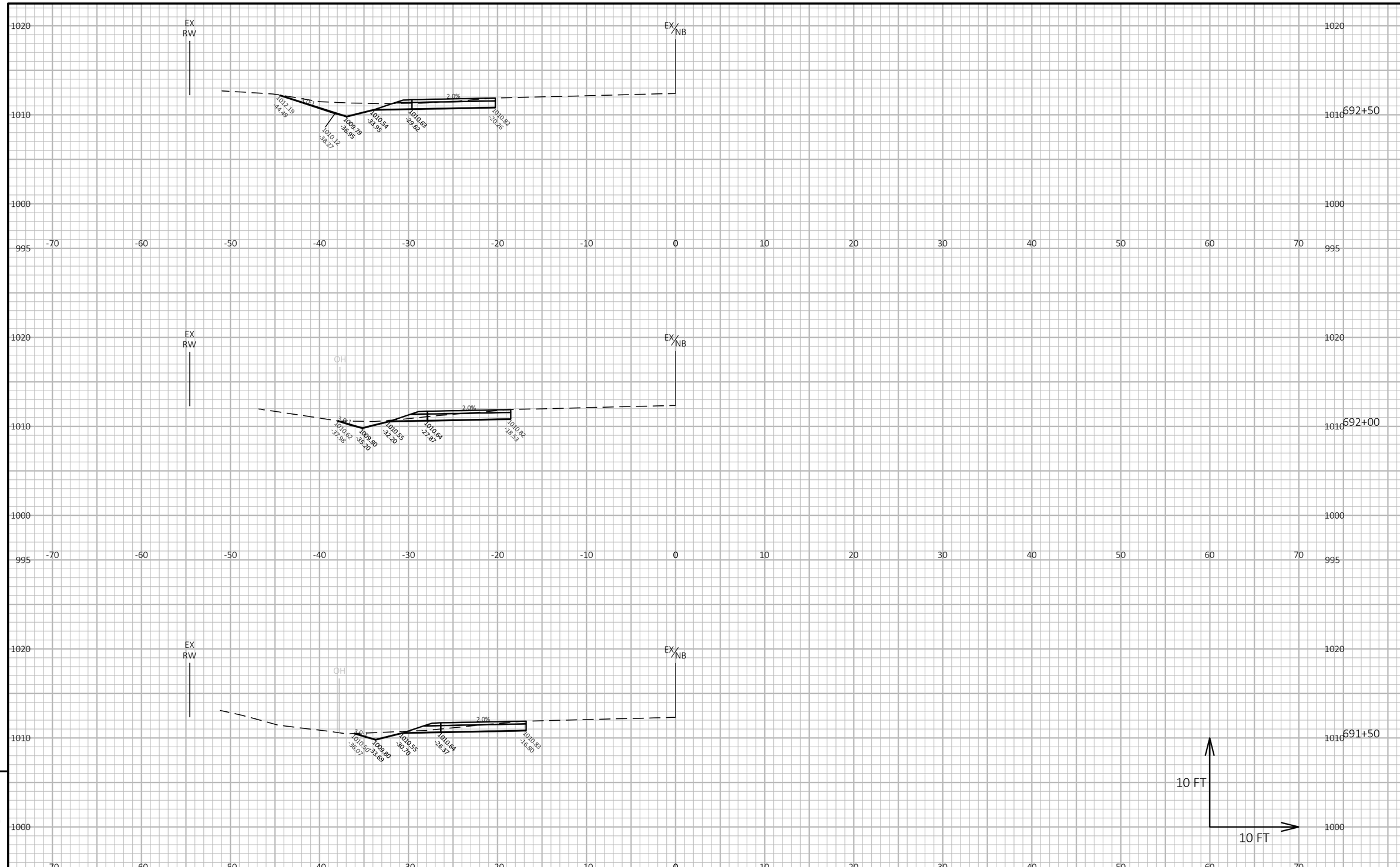

PROJECT NO: 5235-03-70	HWY: STH 80	COUNTY: GRANT	CROSS SECTIONS: TEMP STAGING PS1	SHEET 401	E

FILE NAME : \\JT-FILE\DESIGNS\PROJECTS\GRANT\200050MW - 5235-03-00 STH 80\DESIGN\C3D\SHEETSPLAN\090204-XS-TEMP.DWG
LAYOUT NAME - 090204-XS-PS1-3
PLOT DATE : 7/15/2022 7:32 AM PLOT BY : MIKE LISKA PLOT NAME : PLOT SCALE : 1 IN:10 FT HORZ. / 1 IN:10 FT VERT.

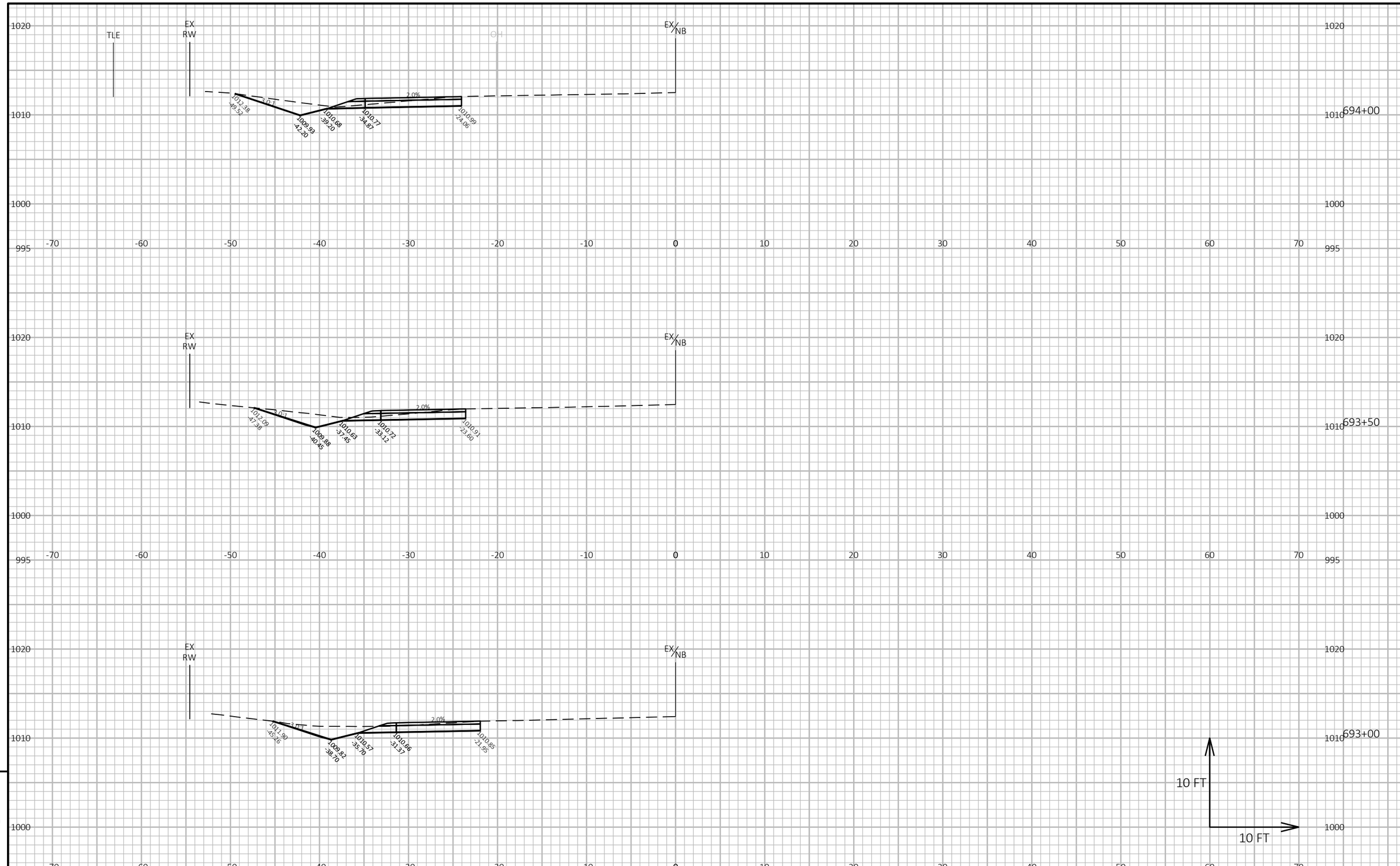

PROJECT NO: 5235-03-70	HWY: STH 80	COUNTY: GRANT	CROSS SECTIONS: TEMP STAGING PS1	SHEET 402	E

FILE NAME : \\JT-FILE\DESIGNS\PROJECTS\GRANT\200050MW - 5235-03-00 STH 80\DESIGN\C3D\SHEETSPLAN\090204-XS-TEMP.DWG
LAYOUT NAME - 090204-XS-PS1-4
PLOT DATE : 7/15/2022 7:32 AM PLOT BY : MIKE LISKA PLOT NAME : **PLOT SCALE :** 1 IN:10 FT HORZ. / 1 IN:10 FT VERT.
WISDOT/CADDS SHEET 49

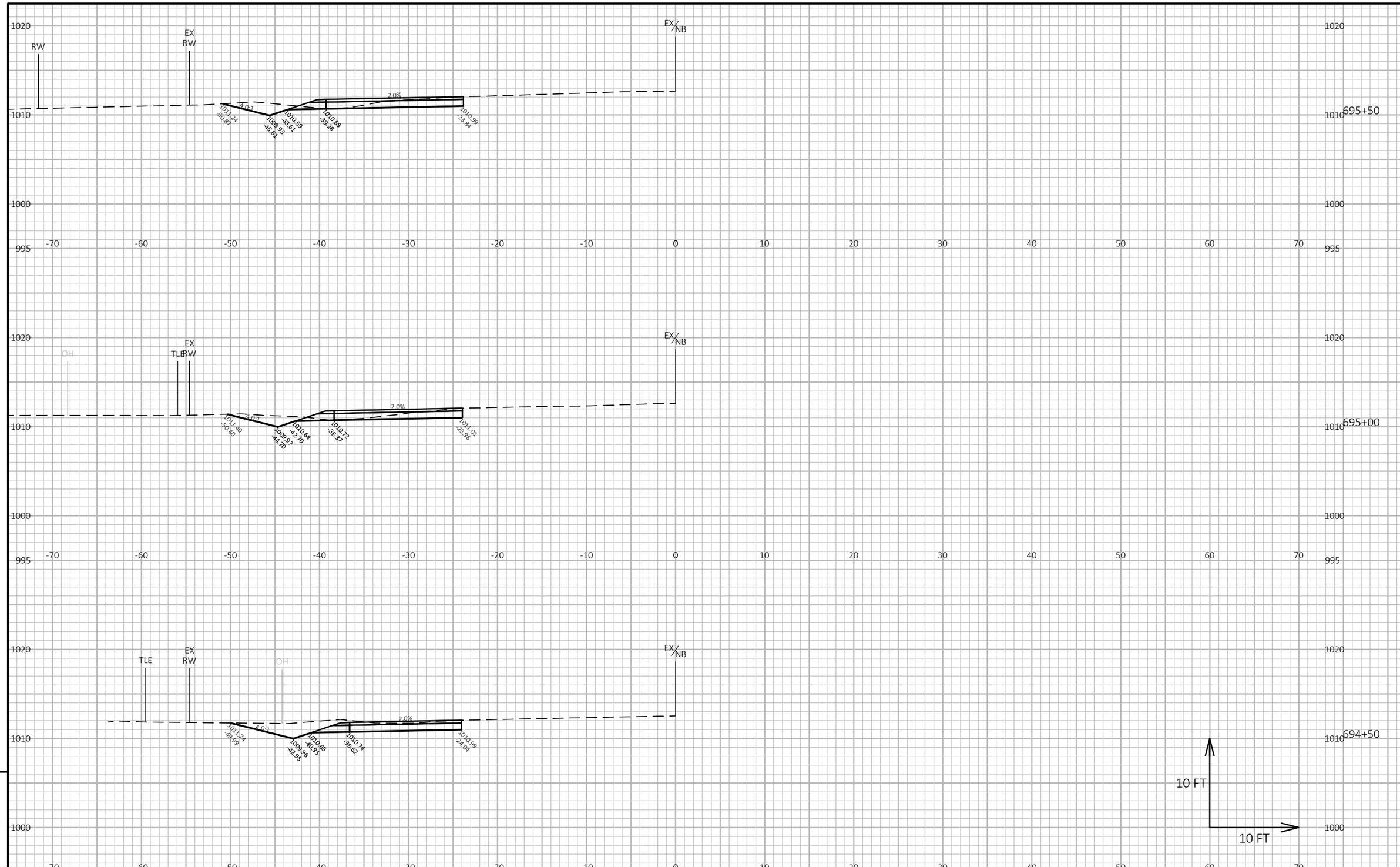

9

9

PROJECT NO: 5235-03-70	HWY: STH 80	COUNTY: GRANT	CROSS SECTIONS: TEMP STAGING PS1	SHEET 403	E

FILE NAME : \\JT-FILE\DESIGNS\PROJECTS\GRANT\200050MW - 5235-03-00 STH 80\DESIGN\C3D\SHEETSPLAN\090204-XS-TEMP.DWG
LAYOUT NAME - 090204-XS-PS1-5

PLOT DATE : 7/15/2022 7:32 AM PLOT BY : MIKE LISKA PLOT NAME : **PLOT SCALE :** 1 IN:10 FT HORZ. / 1 IN:10 FT VERT.

WISDOT/CADDS SHEET 49

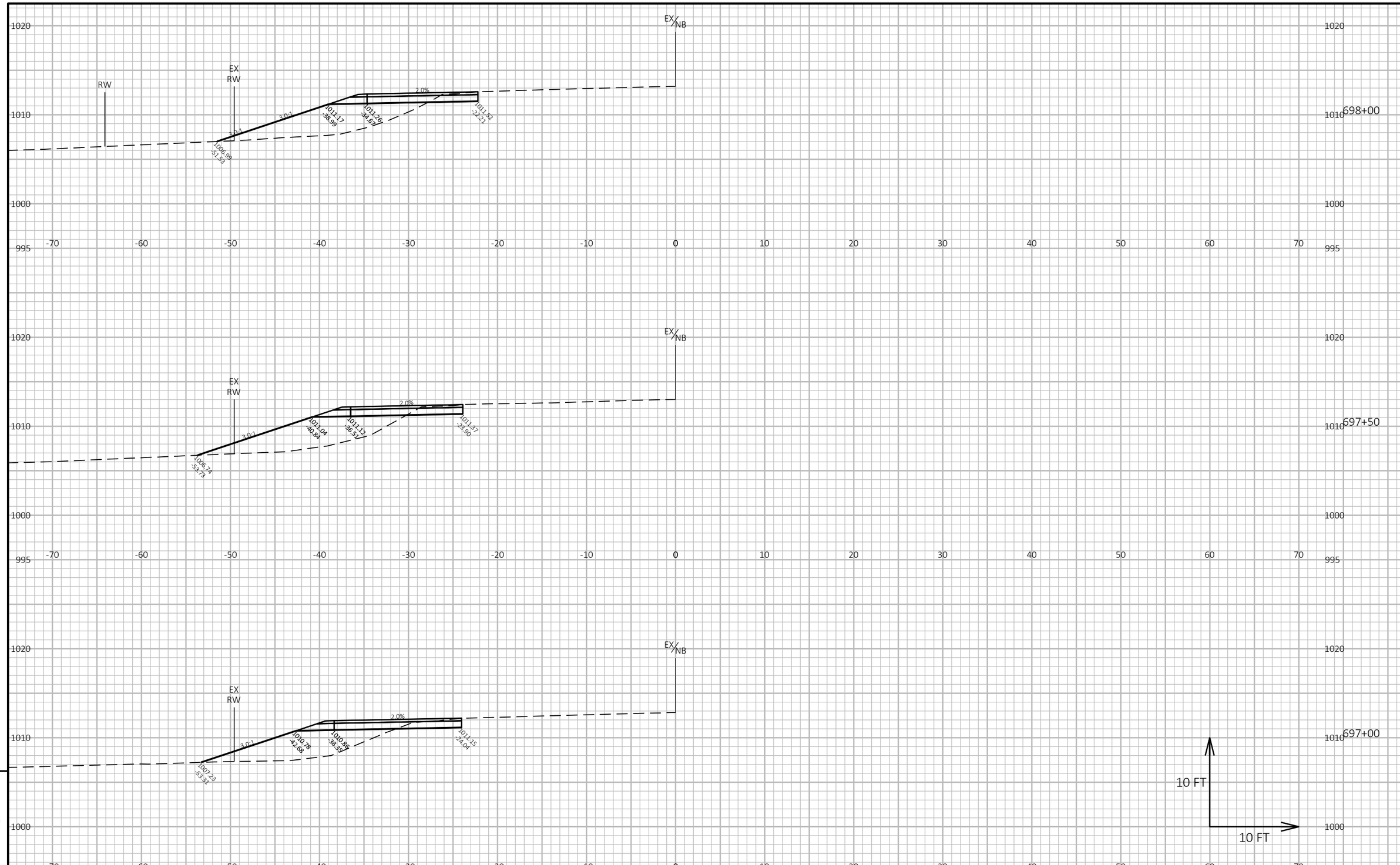

9

9

PROJECT NO: 5235-03-70	HWY: STH 80	COUNTY: GRANT	CROSS SECTIONS: TEMP STAGING PS1	SHEET 404	E

FILE NAME : \\JT-FILE\DESIGNS\PROJECTS\GRANT\200050MW - 5235-03-00 STH 80\DESIGN\C3D\SHEETSPLAN\090204-XS-TEMP.DWG
LAYOUT NAME - 090204-XS-PS1-6

PLOT DATE : 7/15/2022 7:32 AM PLOT BY : MIKE LISKA PLOT NAME : PLOT SCALE : 1 IN:10 FT HORZ. / 1 IN:10 FT VERT.

WISDOT/CADDS SHEET 49

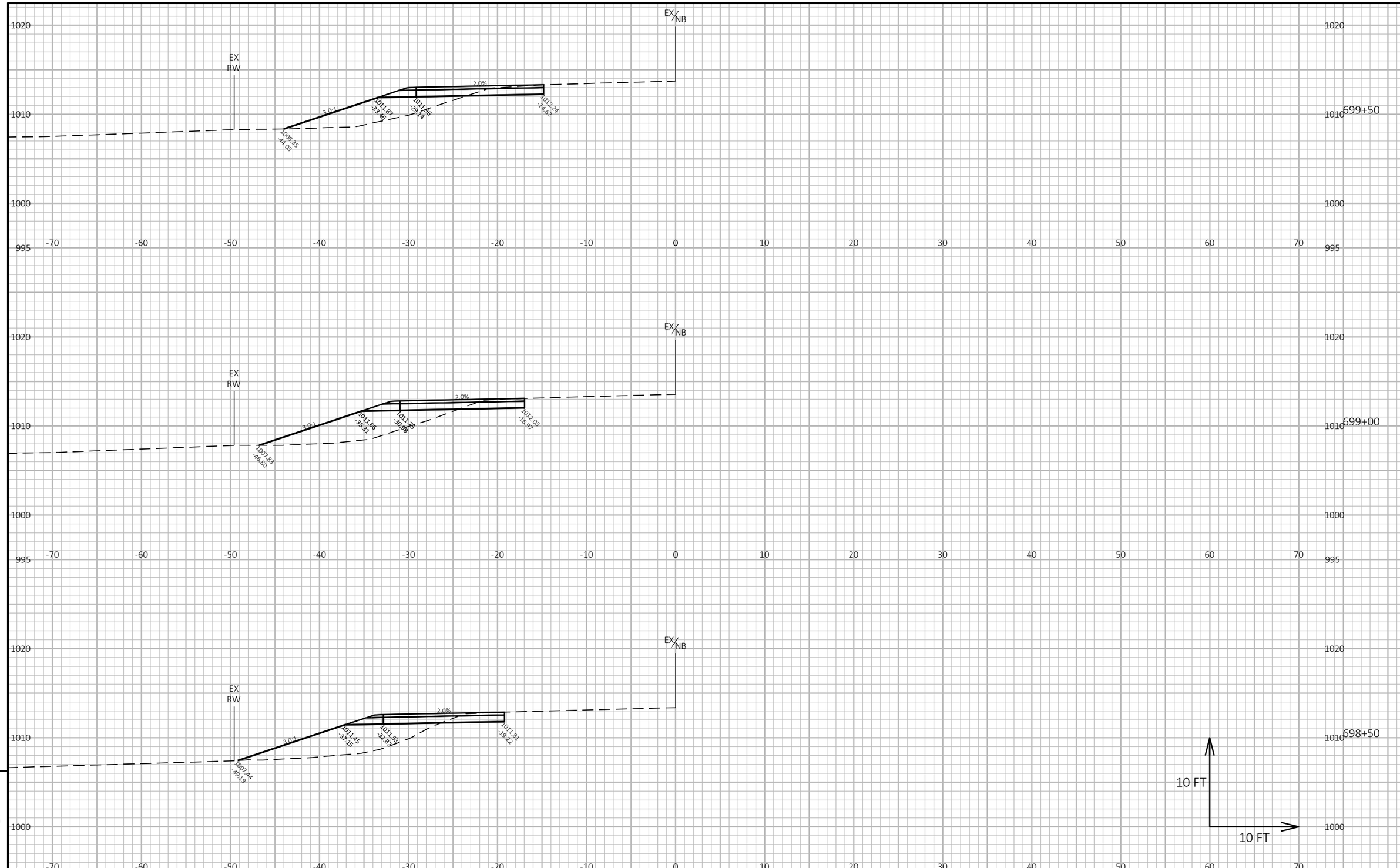

9

9

PROJECT NO: 5235-03-70	HWY: STH 80	COUNTY: GRANT	CROSS SECTIONS: TEMP STAGING PS1	SHEET 405	E

FILE NAME : \\JT-FILE\DESIGNS\PROJECTS\GRANT\200050MW - 5235-03-00 STH 80\DESIGN\C3D\SHEETSPLAN\090204-XS-TEMP.DWG
LAYOUT NAME - 090204-XS-PS1-7
PLOT DATE : 7/15/2022 7:32 AM
PLOT BY : MIKE LISKA
PLOT NAME :
PLOT SCALE : 1 IN:10 FT HORZ. / 1 IN:10 FT VERT.
WISDOT/CADDS SHEET 49

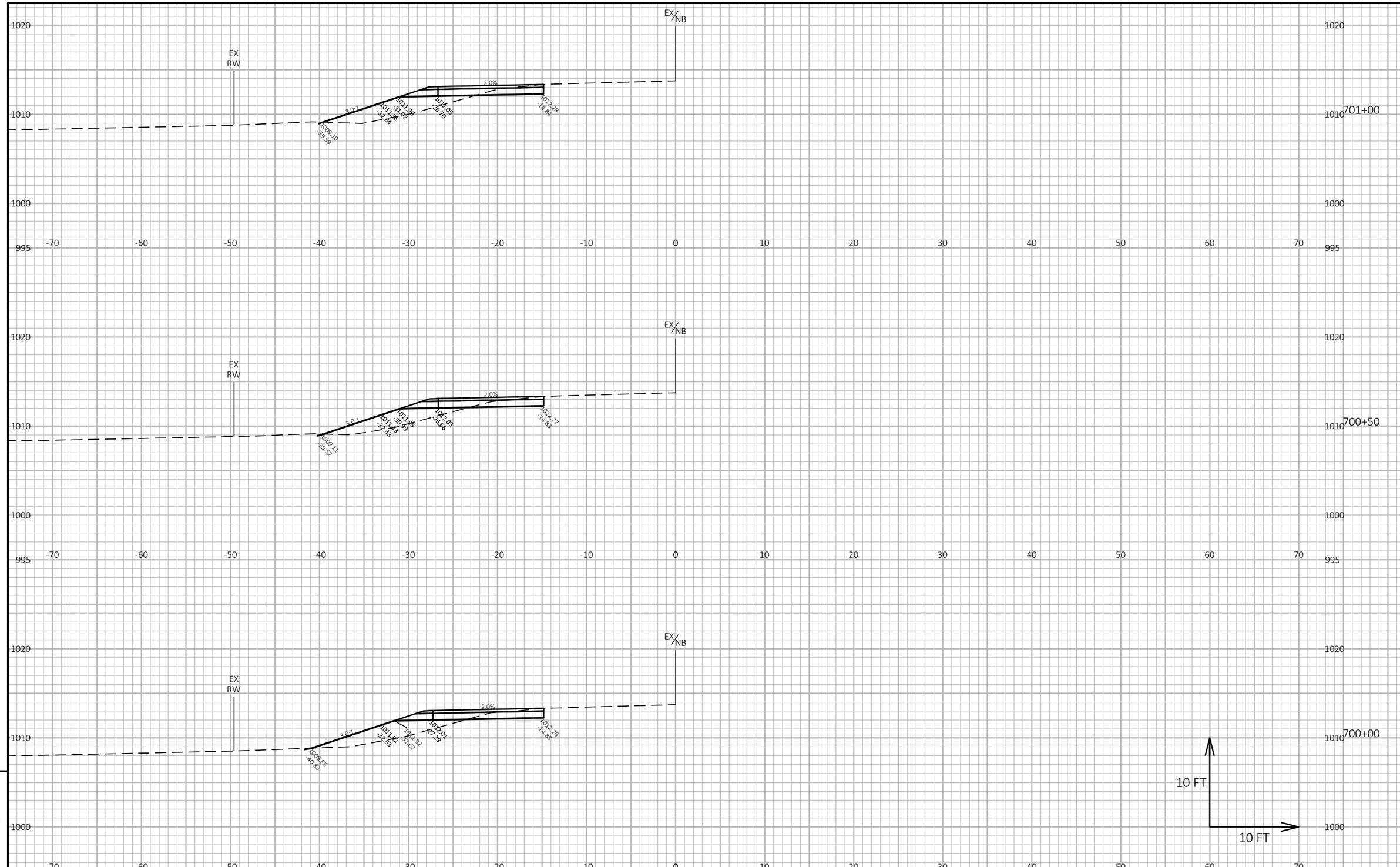

PROJECT NO: 5235-03-70	HWY: STH 80	COUNTY: GRANT	CROSS SECTIONS: TEMP STAGING PS1	SHEET 406	E

FILE NAME : \\JT-FILE\DESIGNS\PROJECTS\GRANT\200050MW - 5235-03-00 STH 80\DESIGN\C3D\SHEETSPLAN\090204-XS-TEMP.DWG
LAYOUT NAME - 090204-XS-PS1-8
PLOT DATE : 7/15/2022 7:32 AM PLOT BY : MIKE LISKA PLOT NAME : PLOT SCALE : 1 IN:10 FT HORZ. / 1 IN:10 FT VERT.

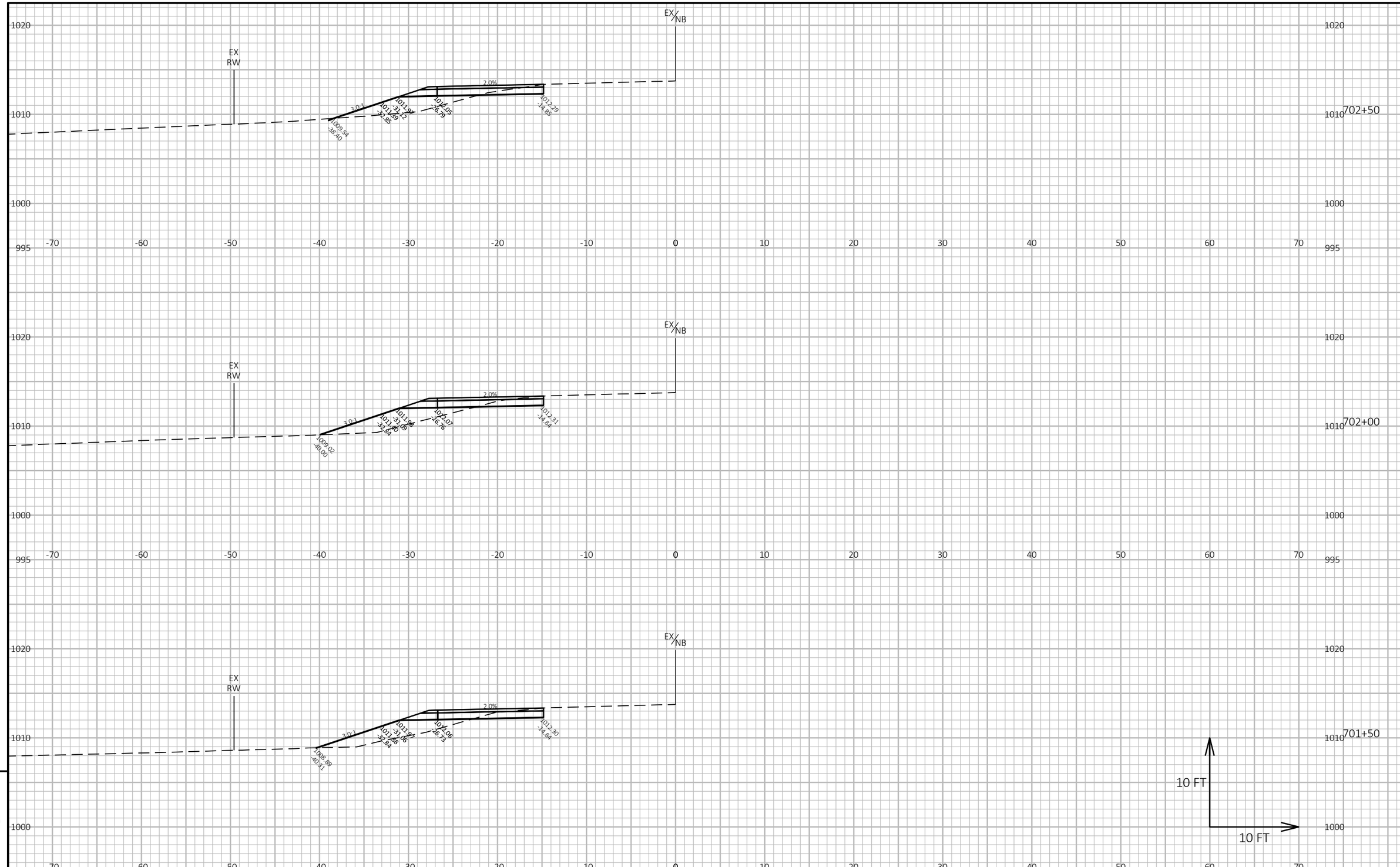

PROJECT NO: 5235-03-70	HWY: STH 80	COUNTY: GRANT	CROSS SECTIONS: TEMP STAGING PS1	SHEET 407	E

FILE NAME : \\JT-FILE\DESIGNS\PROJECTS\GRANT\200050MW - 5235-03-00 STH 80\DESIGN\C3D\SHEETSPLAN\090204-XS-TEMP.DWG
LAYOUT NAME - 090204-XS-PS1-9

PLOT DATE : 7/15/2022 7:32 AM PLOT BY : MIKE LISKA PLOT NAME : PLOT SCALE : 1 IN:10 FT HORZ. / 1 IN:10 FT VERT.

WISDOT/CADDS SHEET 49

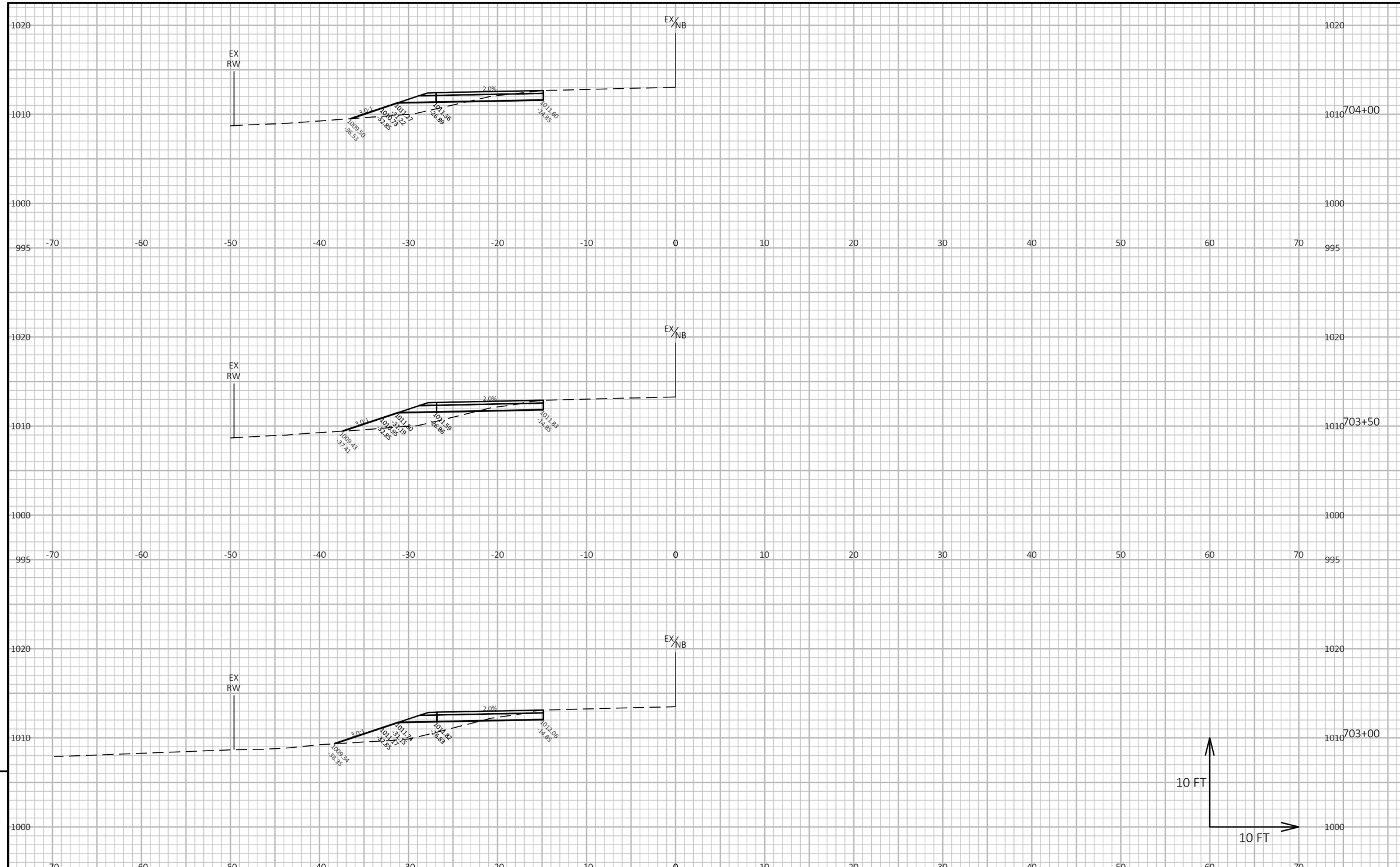

PROJECT NO: 5235-03-70	HWY: STH 80	COUNTY: GRANT	CROSS SECTIONS: TEMP STAGING PS1	SHEET 408	E

FILE NAME : \\JT-FILE\DESIGNS\PROJECTS\GRANT\200050MW - 5235-03-00 STH 80\DESIGN\C3D\SHEETSPLAN\090204-XS-TEMP.DWG
LAYOUT NAME - 090204-XS-PS1-10
PLOT DATE : 7/15/2022 7:32 AM PLOT BY : MIKE LISKA PLOT NAME : PLOT SCALE : 1 IN:10 FT HORZ. / 1 IN:10 FT VERT.

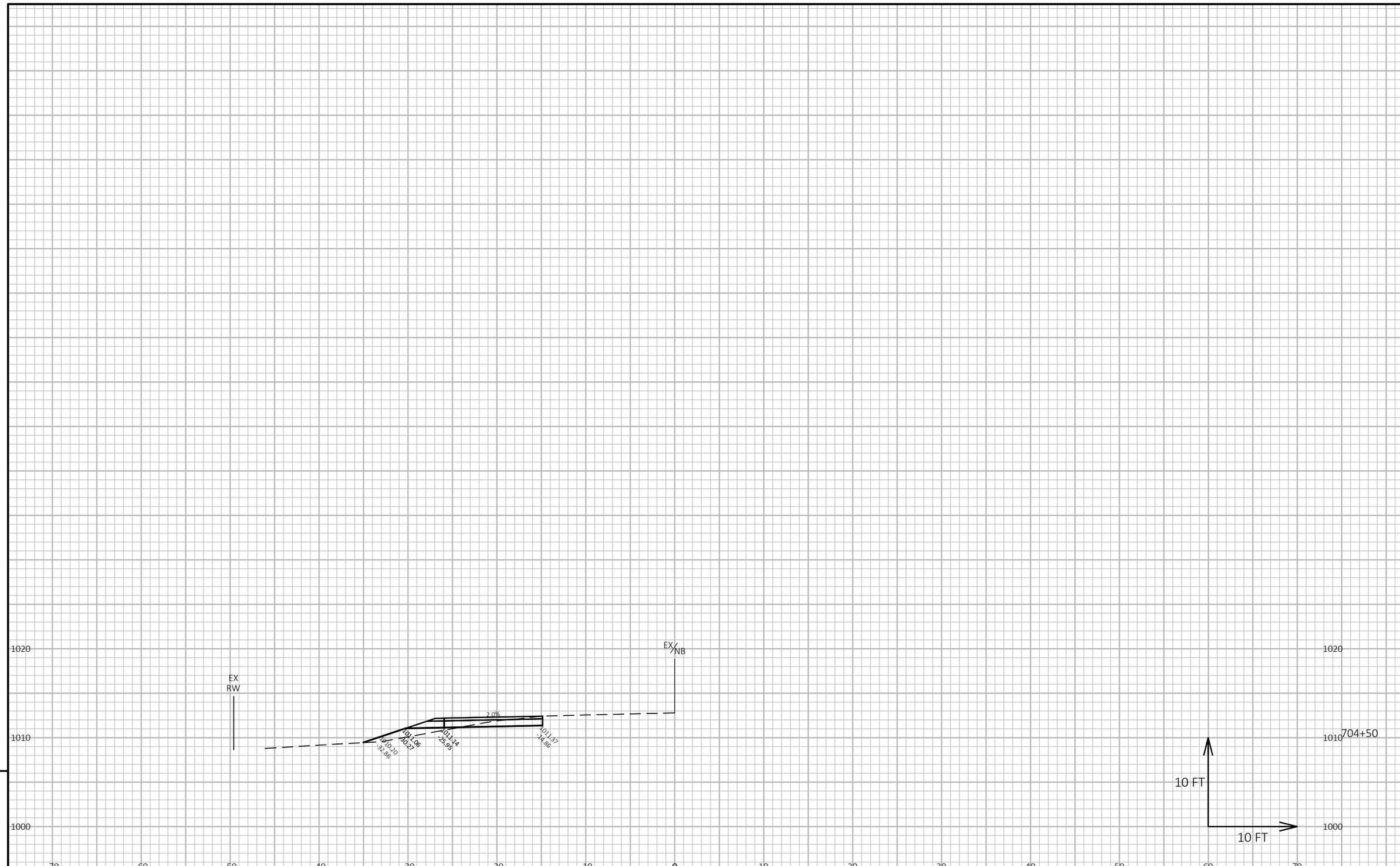

9

9

PROJECT NO: 5235-03-70	HWY: STH 80	COUNTY: GRANT	CROSS SECTIONS: TEMP STAGING PS1	SHEET 409	E

FILE NAME : \\JT-FILE\DESIGNS\PROJECTS\GRANT\200050MW - 5235-03-00 STH 80\DESIGN\C3D\SHEETSPLAN\090204-XS-TEMP.DWG
LAYOUT NAME - 090204-XS-PS1-11

PLOT DATE : 7/15/2022 7:32 AM PLOT BY : MIKE LISKA PLOT NAME : **PLOT SCALE :** 1 IN:10 FT HORZ. / 1 IN:10 FT VERT.

WISDOT/CADDS SHEET 49

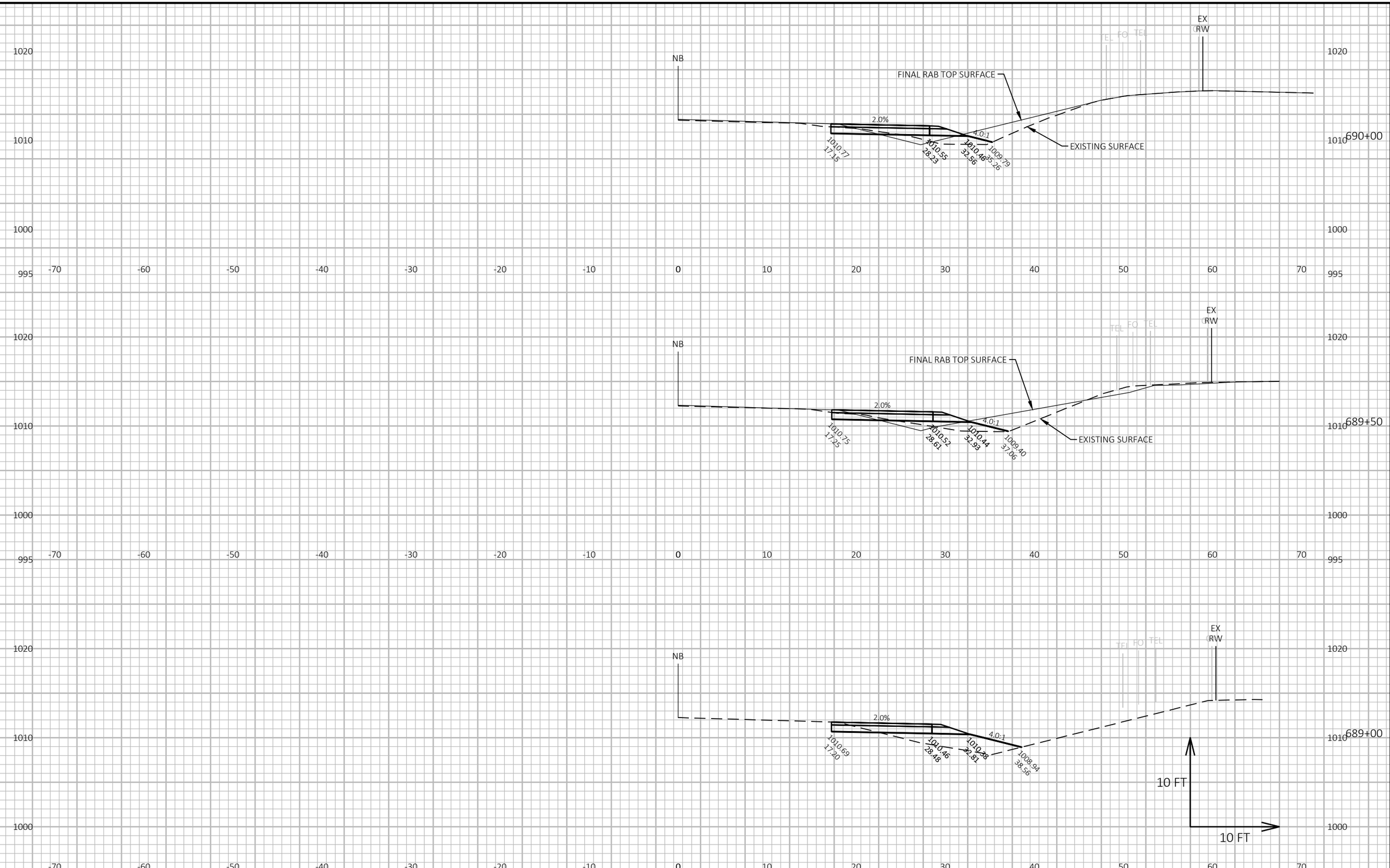

9

9

PROJECT NO: 5235-03-70	HWY: STH 80	COUNTY: GRANT	CROSS SECTIONS: TEMP STAGING - S1	SHEET 410	E

FILE NAME : \\JT-FILE\DESIGNS\PROJECTS\GRANT\200050MW - 5235-03-00 STH 80\DESIGN\C3D\SHEETSPLAN\090204-XS-TEMP.DWG
LAYOUT NAME - 090204-XS-S1 - 01

PLOT DATE : 7/15/2022 7:32 AM PLOT BY : MIKE LISKA PLOT NAME : **PLOT SCALE :** 1 IN:10 FT HORZ. / 1 IN:10 FT VERT.

WISDOT/CADDS SHEET 49

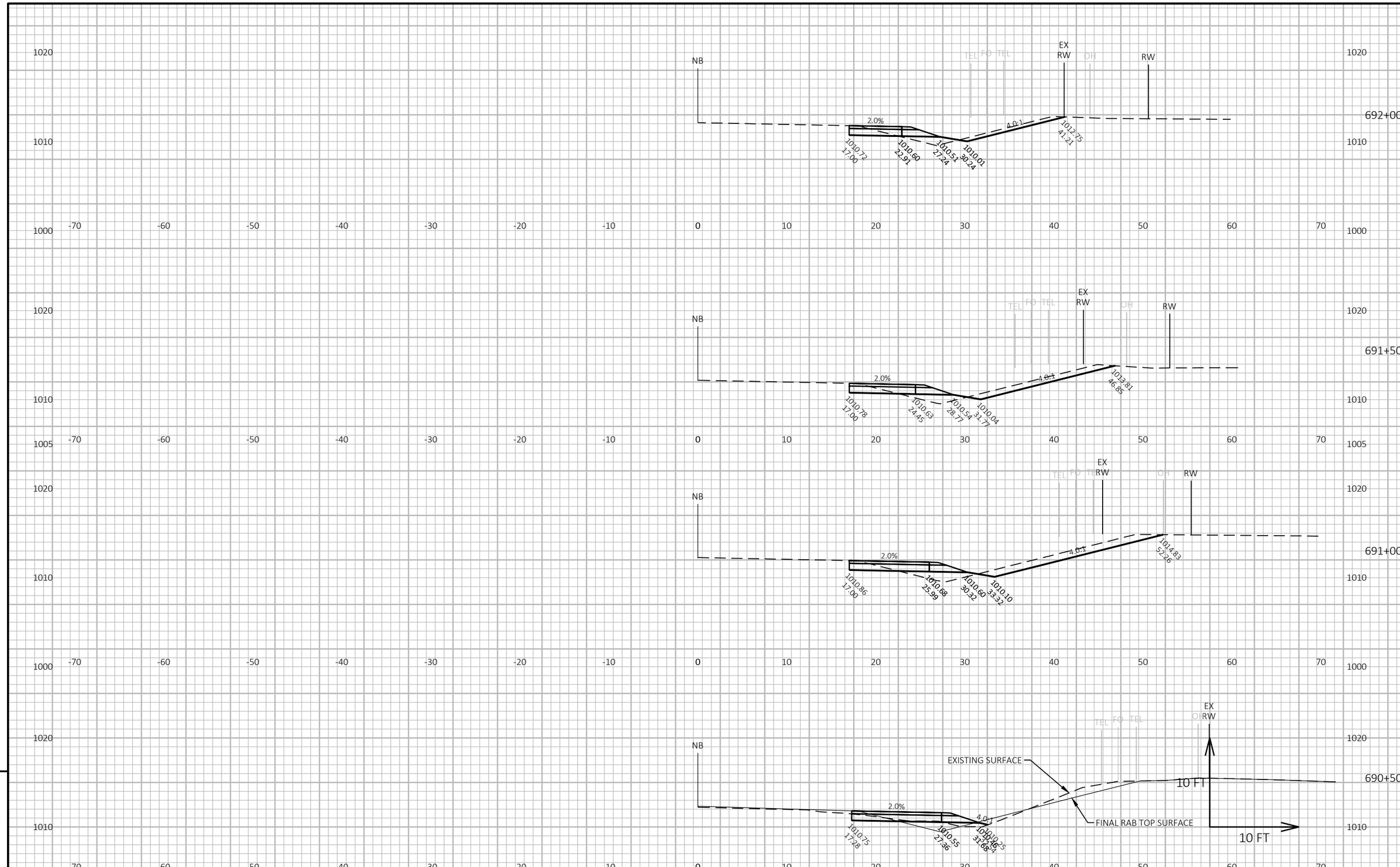

9

9

PROJECT NO: 5235-03-70	HWY: STH 80	COUNTY: GRANT	CROSS SECTIONS: TEMP STAGING - S1	SHEET 411	E

FILE NAME : \\JT-FILE\DESIGNS\PROJECTS\GRANT\200050MW - 5235-03-00 STH 80\DESIGN\C3D\SHEETSPLAN\090204-XS-TEMP.DWG
LAYOUT NAME - 090204-XS-S1 - 02
PLOT DATE : 7/15/2022 7:32 AM
PLOT BY : MIKE LISKA
PLOT NAME :
PLOT SCALE : 1 IN:10 FT HORZ. / 1 IN:10 FT VERT.
WISDOT/CADDS SHEET 49

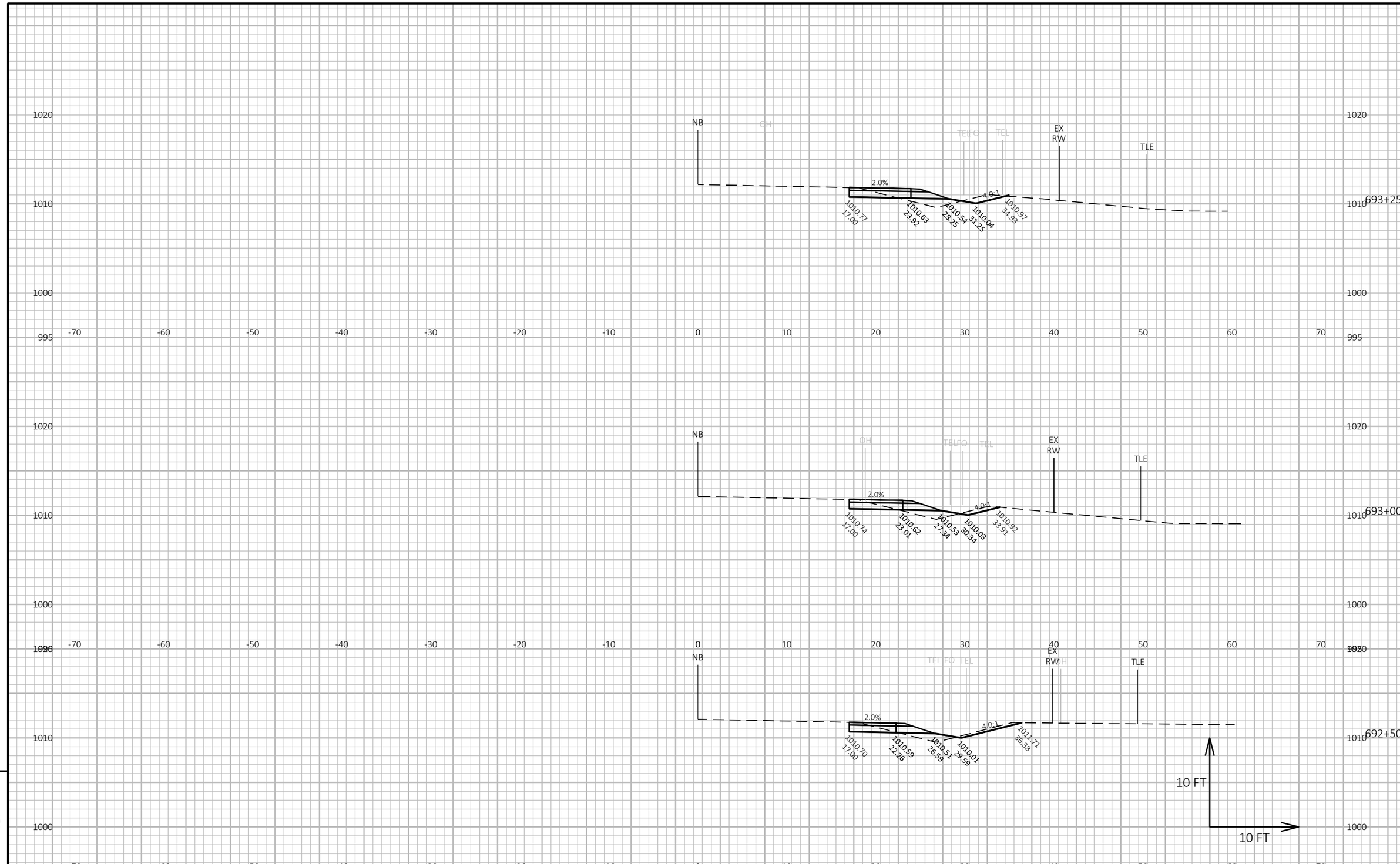

9

9

PROJECT NO: 5235-03-70	HWY: STH 80	COUNTY: GRANT	CROSS SECTIONS: TEMP STAGING - S1	SHEET 412	E

FILE NAME : \\JT-FILE\DESIGNS\PROJECTS\GRANT\200050MW - 5235-03-00 STH 80\DESIGN\C3D\SHEETSPLAN\090204-XS-TEMP.DWG
LAYOUT NAME - 090204-XS-S1 - 03

PLOT DATE : 7/15/2022 7:32 AM PLOT BY : MIKE LISKA PLOT NAME : **PLOT SCALE :** 1 IN:10 FT HORZ. / 1 IN:10 FT VERT.

WISDOT/CADDS SHEET 49

9

9

PROJECT NO: 5235-03-70	HWY: STH 80	COUNTY: GRANT	CROSS SECTIONS: TEMP STAGING - S1	SHEET 413	E

FILE NAME : \\JT-FILE\DESIGNS\PROJECTS\GRANT\200050MW - 5235-03-00 STH 80\DESIGN\C3D\SHEETSPLAN\090204-XS-TEMP.DWG
LAYOUT NAME - 090204-XS-S1 - 04

PLOT DATE : 7/15/2022 7:32 AM PLOT BY : MIKE LISKA PLOT NAME : **PLOT SCALE :** 1 IN:10 FT HORZ. / 1 IN:10 FT VERT.

WISDOT/CADDS SHEET 49

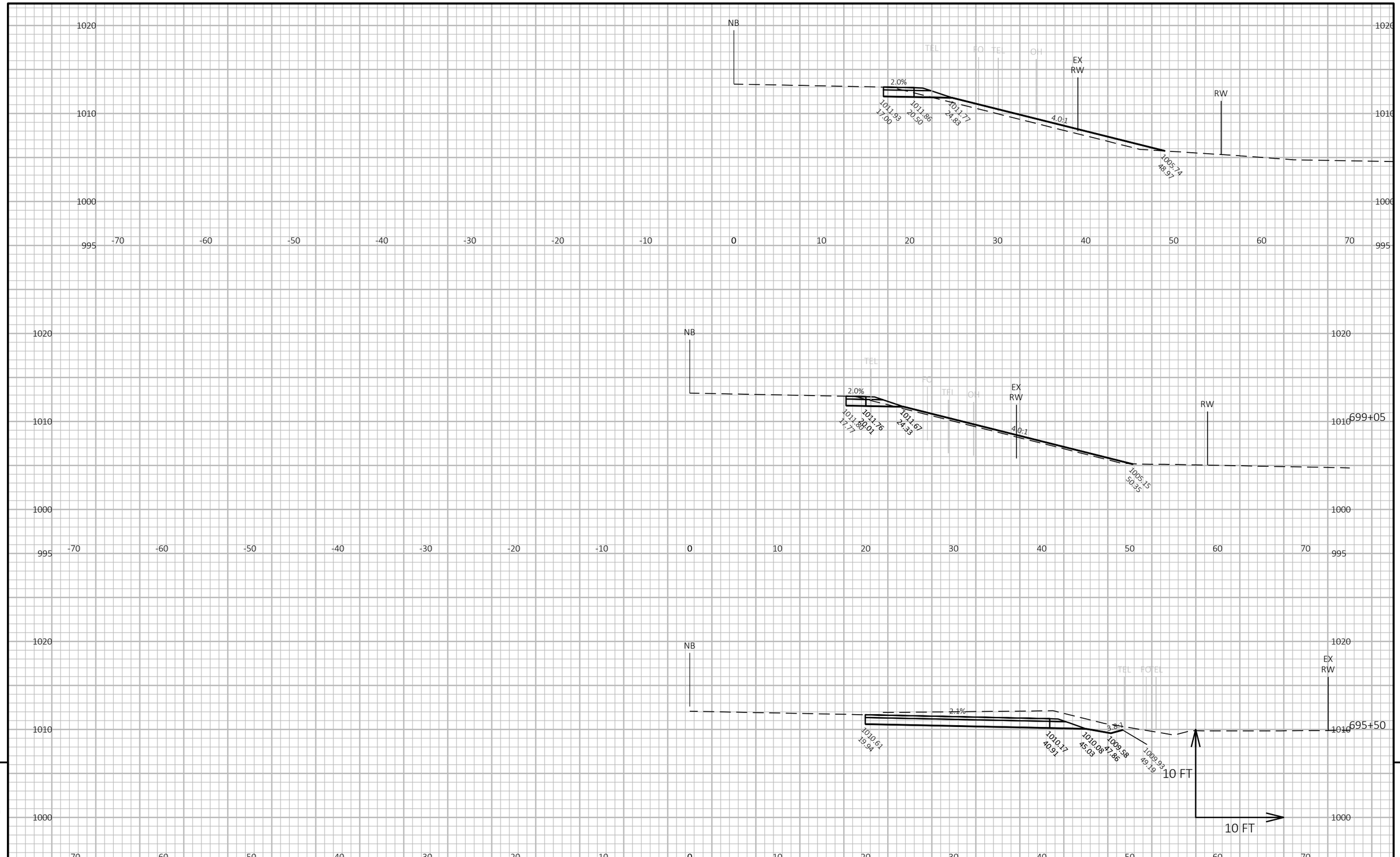

PROJECT NO: 5235-03-70	HWY: STH 80	COUNTY: GRANT	CROSS SECTIONS: TEMP STAGING - S1	SHEET 414	E

FILE NAME : \\JT-FILE\DESIGNS\PROJECTS\GRANT\200050MW - 5235-03-00 STH 80\DESIGN\C3D\SHEETSPLAN\090204-XS-TEMP.DWG
LAYOUT NAME - 090204-XS-S1 - 05
PLOT DATE : 7/15/2022 7:32 AM PLOT BY : MIKE LISKA PLOT NAME : **PLOT SCALE :** 1 IN:10 FT HORZ. / 1 IN:10 FT VERT.
WISDOT/CADDS SHEET 49

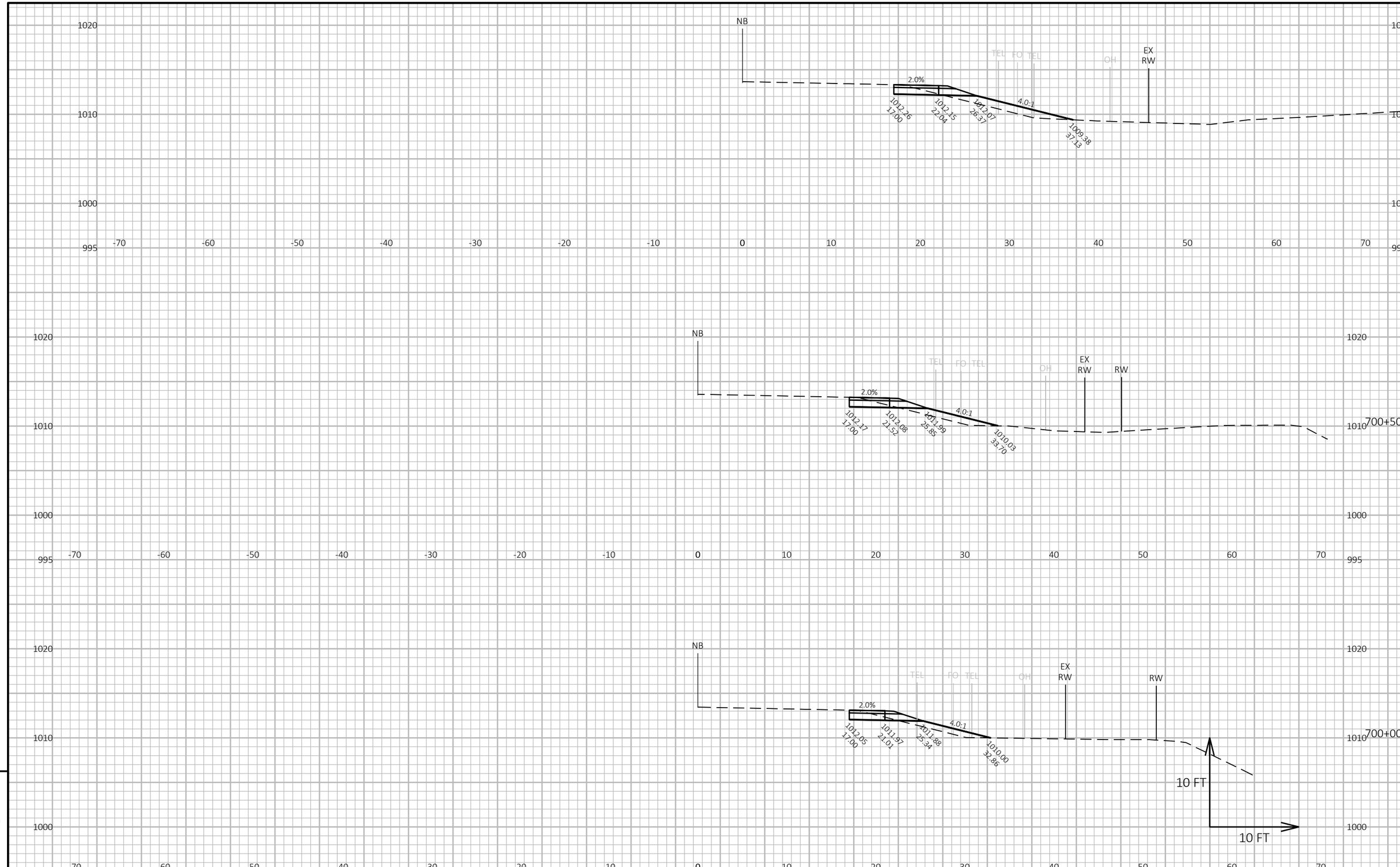

PROJECT NO: 5235-03-70	HWY: STH 80	COUNTY: GRANT	CROSS SECTIONS: TEMP STAGING - S1	SHEET 415	E

FILE NAME : \\JT-FILE\DESIGNS\PROJECTS\GRANT\200050MW - 5235-03-00 STH 80\DESIGN\C3D\SHEETSPLAN\090204-XS-TEMP.DWG
LAYOUT NAME - 090204-XS-S1 - 06
PLOT DATE : 7/15/2022 7:32 AM PLOT BY : MIKE LISKA PLOT NAME : **PLOT SCALE :** 1 IN:10 FT HORZ. / 1 IN:10 FT VERT.

WISDOT/CADDS SHEET 49

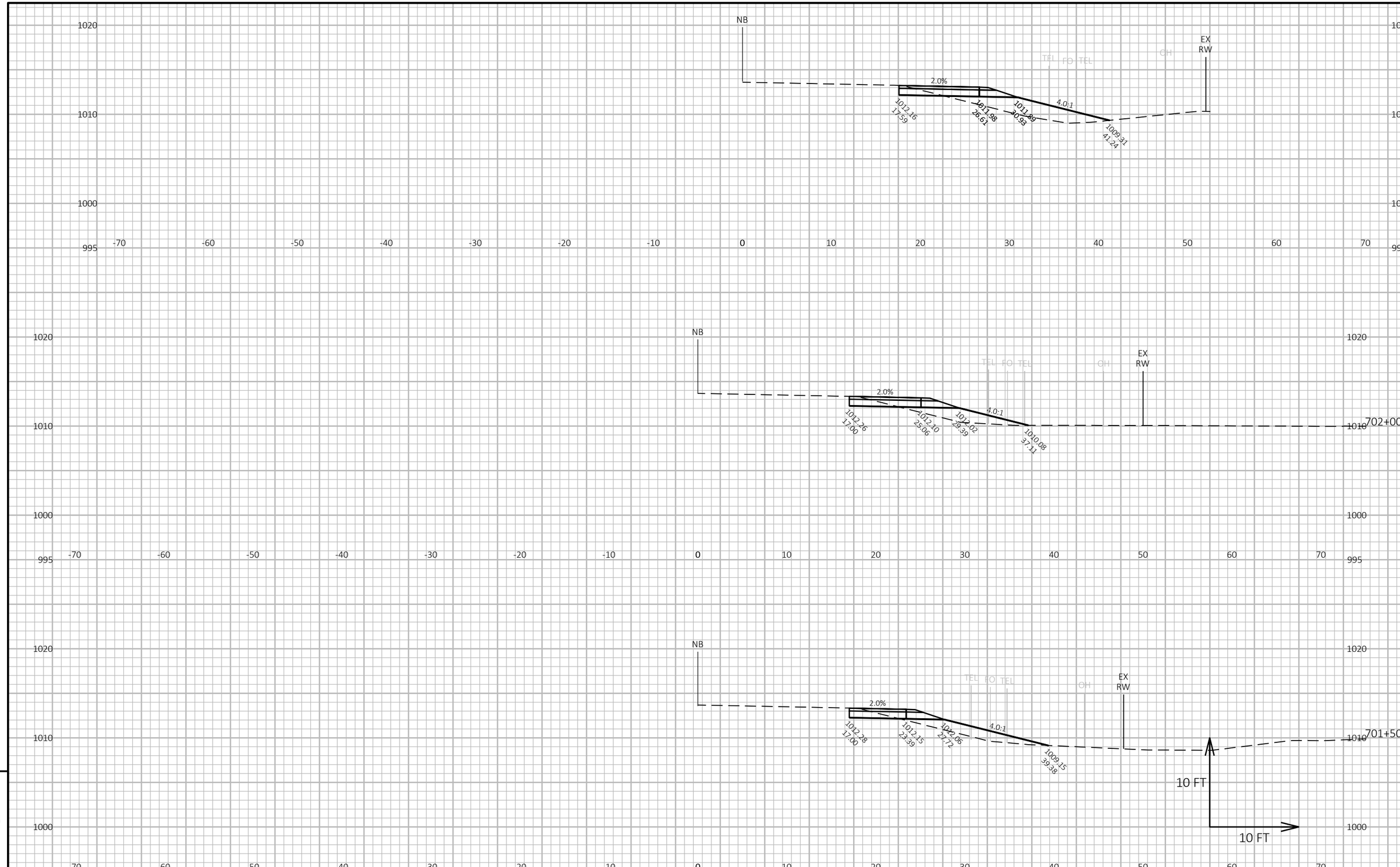

PROJECT NO: 5235-03-70	HWY: STH 80	COUNTY: GRANT	CROSS SECTIONS: TEMP STAGING - S1	SHEET 416	E

FILE NAME : \\JT-FILE\DESIGNS\PROJECTS\GRANT\200050MW - 5235-03-00 STH 80\DESIGN\C3D\SHEETSPLAN\090204-XS-TEMP.DWG
LAYOUT NAME - 090204-XS-S1 - 07
PLOT DATE : 7/15/2022 7:32 AM PLOT BY : MIKE LISKA PLOT NAME : **PLOT SCALE :** 1 IN:10 FT HORZ. / 1 IN:10 FT VERT.

WISDOT/CADDS SHEET 49

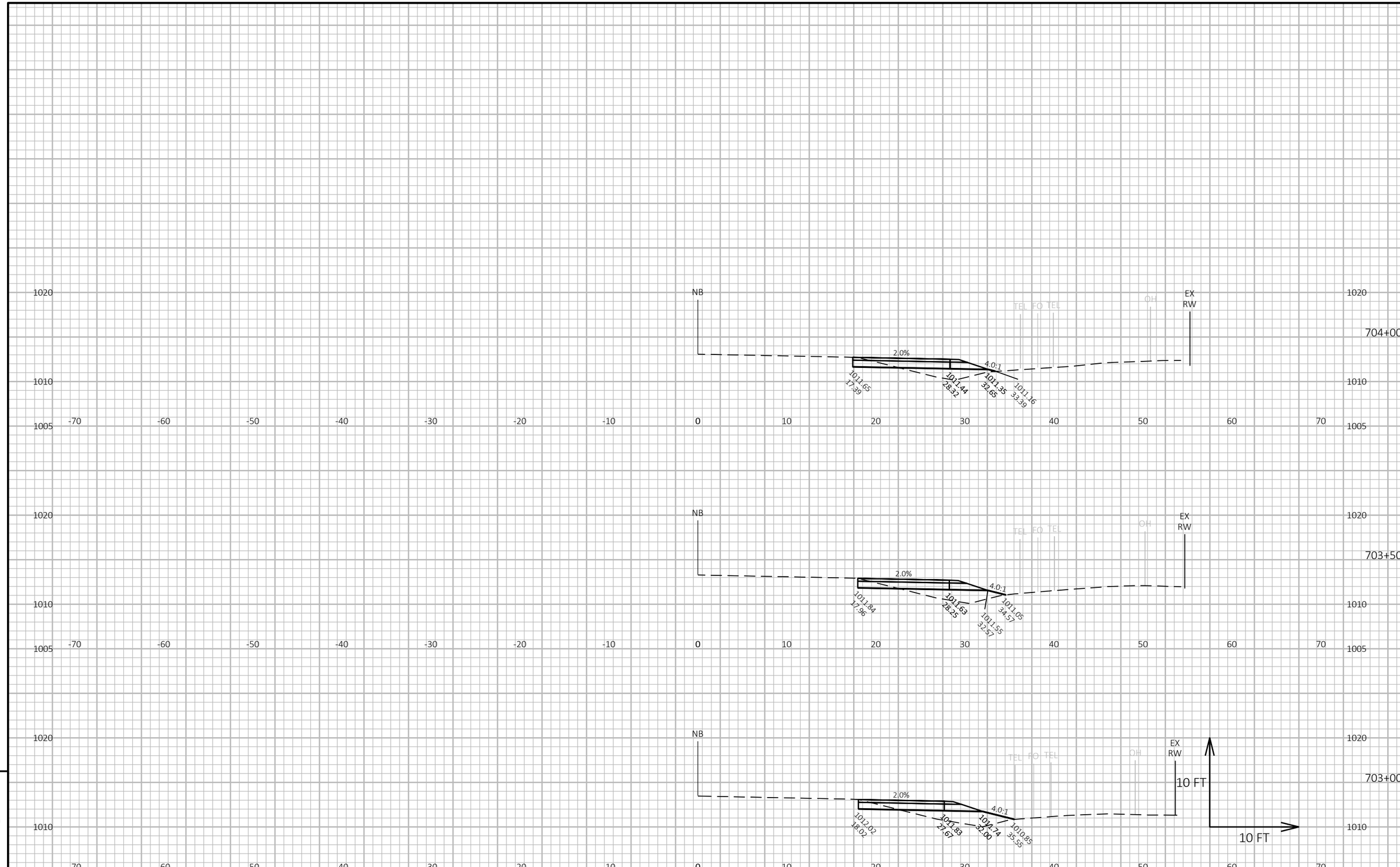

9

9

PROJECT NO: 5235-03-70	HWY: STH 80	COUNTY: GRANT	CROSS SECTIONS: TEMP STAGING - S1	SHEET 417	E

FILE NAME : \\JT-FILE\DESIGNS\PROJECTS\GRANT\200050MW - 5235-03-00 STH 80\DESIGN\C3D\SHEETSPLAN\090204-XS-TEMP.DWG
LAYOUT NAME - 090204-XS-S1 - 08

PLOT DATE : 7/15/2022 7:32 AM PLOT BY : MIKE LISKA PLOT NAME : **PLOT SCALE :** 1 IN:10 FT HORZ. / 1 IN:10 FT VERT.

WISDOT/CADDS SHEET 49

Wisconsin Department of Transportation

Dedicated people creating transportation solutions through innovation and exceptional service.

http://www.dot.wisconsin.gov