GRE

NOVEMBER 2022

PROJECT ID: 9269-10-70

WITH:

COUNTY: BROWN

ORDER OF SHEETS

Section No.	1	Title
Section No.	2	Typical Sections and Details
Section No.	3	Estimate of Quantities
Section No.	3	Miscellaneous Quantities
~~Section No.~~	~~4~~	~~Right of Way Plat~~
Section No.	5	Plan and Profile
Section No.	6	Standard Detail Drawings
Section No.	7	Sign Plates
~~Section No.~~	~~8~~	~~Structure Plans~~
~~Section No.~~	~~9~~	~~Computer Earthwork Data~~
~~Section No.~~	~~9~~	~~Cross Sections~~

TOTAL SHEETS = 92

STATE OF WISCONSIN
DEPARTMENT OF TRANSPORTATION

PLAN OF PROPOSED IMPROVEMENT

V HOWARD, CARDINAL LN

STONE MEADOWS TRAIL TO LINEVILLE ROAD

LOC STR

BROWN COUNTY

STATE PROJECT	FEDERAL PROJECT	
	PROJECT	CONTRACT
9269-10-70	WISC 2023046	1

STATE PROJECT NUMBER
9269-10-70

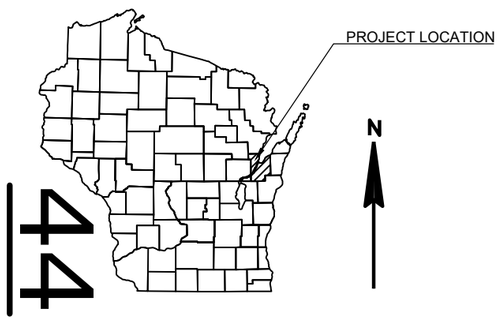

DESIGN DESIGNATION

A.A.D.T.	2023	=	8400
A.A.D.T.	2043	=	9300
D.H.V.		=	-
D.D.		=	50/50
T.		=	3.7%
DESIGN SPEED		=	30 MPH
ESALS		=	1,200,000

CONVENTIONAL SYMBOLS

PLAN

CORPORATE LIMITS
PROPERTY LINE
LOT LINE
LIMITED HIGHWAY EASEMENT
EXISTING RIGHT OF WAY
PROPOSED OR NEW R/W LINE
SLOPE INTERCEPT
REFERENCE LINE (300'EB')
EXISTING CULVERT
PROPOSED CULVERT (Box or Pipe)
COMBUSTIBLE FLUIDS (CAUTION)
MARSH AREA
WOODED OR SHRUB AREA

PROFILE

GRADE LINE
ORIGINAL GROUND
MARSH OR ROCK PROFILE (To be noted as such) (ROCK)
SPECIAL DITCH (LABEL)
GRADE ELEVATION (95.36)
CULVERT (Profile View)

UTILITIES

ELECTRIC — E —
FIBER OPTIC — FO —
GAS — G —
SANITARY SEWER — SAN —
STORM SEWER — SS —
TELEPHONE — T —
WATER — W —
UTILITY PEDESTAL
POWER POLE
TELEPHONE POLE

R-20-E

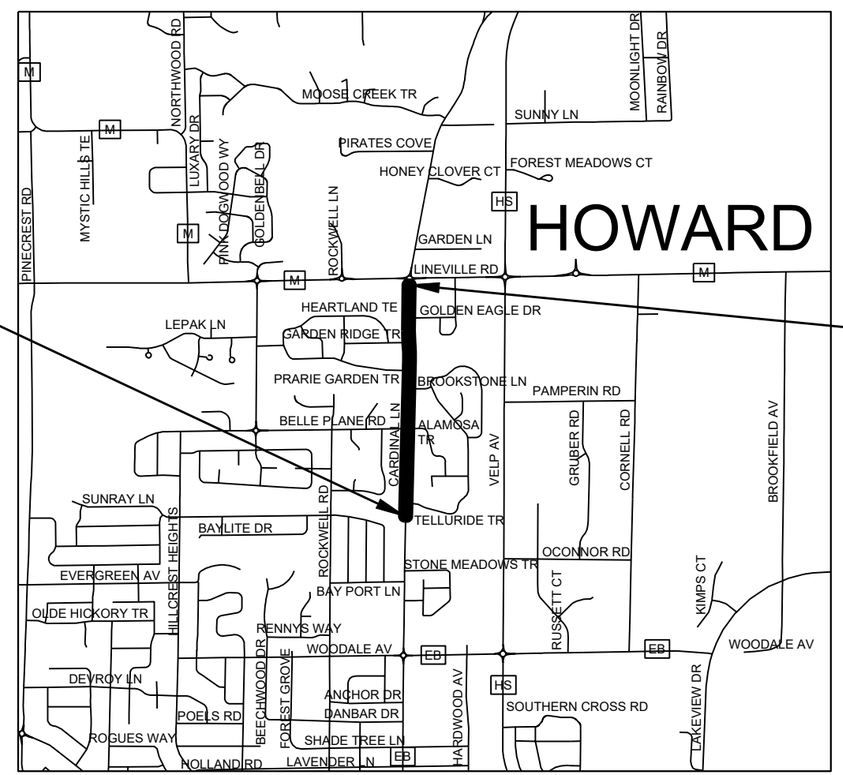

LAYOUT

SCALE 0 0.5 MI

TOTAL NET LENGTH OF CENTERLINE = 0.726 MI

HORIZONTAL POSITIONS SHOWN ON THIS PLAN ARE WISCONSIN COORDINATE REFERENCE SYSTEM (WISCRS), BROWN NAD83 (2011), IN U.S. SURVEY FEET. POSITIONS SHOWN ARE GRID COORDINATES, GRID BEARINGS, AND GRID DISTANCES. GRID DISTANCES ARE THE SAME AS GROUND DISTANCES.

ELEVATIONS ARE REFERENCED TO NAVD 88 (2012). GPS DERIVED ELEVATIONS ARE BASED ON GEOID 18

ACCEPTED FOR
VILLAGE OF HOWARD

7/27/22
DATE / PUBLIC WORKS DIRECTOR

ORIGINAL PLANS PREPARED BY

AYRES

WISCONSIN PHILLIP J. VERVILLE III E36336 GREEN BAY, WI PROFESSIONAL ENGINEER

DATE: 7/27/22

STATE OF WISCONSIN
DEPARTMENT OF TRANSPORTATION

PREPARED BY

Surveyor	AYRES
Designer	AYRES
Project Manager	DOUG KIRST, PE
Regional Supervisor	BRIAN EDWARDS, PE

APPROVED FOR THE DEPARTMENT

DATE: 7/29/22 (Signature)

E

2

GENERAL NOTES

THE LOCATION OF EXISTING UTILITIES AS SHOWN ON THE PLANS ARE APPROXIMATE THERE MAY BE UTILITY INSTALLATIONS WITH THE PROJECT AREA THAT ARE NOT SHOWN.

REFERENCE LINE REFERS TO ALIGNMENT AND STATIONING. CENTERLINE REFERS TO EXISTING ROADWAY CENTERLINE. REFERENCE LINE AND CENTERLINE ARE NOT COINCIDENTAL.

SAW CUT LOCATIONS SHOWN ON THE PLAN ARE SUBJECTED TO ADJUSTMENT BY THE ENGINEER IN FIELD. THE LINE OF SUCH SAWCUTS WILL BE NEATLY DELINEATED THRU THE ASPHALT OR CONCRETE WITHOUT ANY DAMAGE TO THE REMAINING PORTION OF THE EXISTING PAVEMENT.

ALL TIES ON THIS PLAN ARE HORIZONTAL UNLESS DESCRIBED OTHERWISE.

RADIUS POINTS, UNLESS OTHERWISE NOTED, ARE TO FACE OF CURB.

CURVE DATA IS BASED ON ARC DEFINITION.

BEARINGS SHOWN ON THE PLAN ARE TRUE BEARINGS.

PROPERTY LINES SHOWN ARE APPROXIMATE.

PLACE EROSION CONTROL DEVICES IN SEQUENCE WITH CONSTRUCTION OPERATIONS OR AS DETERMINED BY THE ENGINEER. EROSION CONTROL FEATURES ARE SHOWN AT APPROXIMATE LOCATIONS, WITH EXACT LOCATIONS TO BE DETERMINED BY THE ENGINEER.

PRIOR TO ORDERING DRAINAGE PIPES AND STRUCTURES, THE CONTRACTOR SHALL VERIFY RELATED DRAINAGE INFORMATION IN THE PLAN WITH THE ENGINEER IN THE FIELD.

INLET AND DISCHARGE ELEVATIONS FOR DRAINAGE STRUCTURES SHOWN ON THE PLAN MAY BE ADJUSTED BY THE ENGINEER TO FIT FIELD CONDITIONS.

NO TREES OR SHRUBS SHALL BE REMOVED WITHOUT APPROVAL BY THE ENGINEER.

STATIONING, DISTANCES, AND OFFSETS FOR SIGNS AND TRAFFIC CONTROL DEVICES SHOWN IN THE PLANS ARE APPROXIMATE. EXACT LOCATIONS ARE DETERMINED BY THE ENGINEER.

RESHAPE AND SEEDING OF ANY PREVIOUSLY GRASSED AREAS WHICH ARE DISTURBED BY OPERATIONS OUTSIDE OF THE ENGINEER DETERMINED CONSTRUCTION LIMITS ARE INCIDENTAL TO THE CONTRACT.

ORDER OF SECTION 2 SHEETS

GENERAL NOTES
TYPICAL SECTIONS
CONSTRUCTION DETAILS
INTERSECTION DETAILS
PLAN DETAILS
CURB RAMP DETAILS
PAVEMENT MARKING
CURB RAMP STAGING
PEDESTRIAN DETOUR

STANDARD ABBREVIATIONS

ABUT	ABUTMENT
AC	ACRE
AGG	AGGREGATE
AH	AHEAD
ET AL	AND OTHERS
BK	BACK
BLDG	BUILDING
BLK	BLOCK
BR	BRIDGE
CB	CATCH BASIN
C/L	CENTERLINE
Δ	CENTRAL ANGLE OR DELTA
CE	COMMERCIAL ENTRANCE
CONC	CONCRETE
CPCA	CULVERT PIPE CORRUGATED ALUMINUM
CPCS	CULVERT PIPE CORRUGATED STEEL
CTH	COUNTY TRUNK HIGHWAY
CR	CREEK
CP	CULVERT PIPE
C & G	CURB AND GUTTER
D	DEGREE OF CURVE
DNV	DESIGN HOURLY VOLUME
DIA	DIAMETER
DWY	DRIVEWAY
E	EAST
X	EAST COORDINATE
EB	EASTBOUND
EL OR ELEV	ELEVATION
ENT	ENTRANCE
ESALS	EQUIVALENT SINGLE AXLE LOAD
EXIST	EXISTING
F-F	FACE TO FACE
FE	FIELD ENTRANCE
FG	FINISHED GRADE
FT	FOOT
INL	INLET
INV	INVERT
IP	IRON PIPE OR PIN
LT	LEFT
L	LENGTH OF CURVE
LIN. FT OR FT.	LINEAL FOOT
MH	MANHOLE
N/C	NORMAL CROWN
NW OR N/W	NORMAL WATER
N	NORTH
Y	NORTH COORDINATE
NB	NORTHBOUND
PT	POINT
PCC	POINT OF COMPOUND CURVE
PC	POINT OF CURVATURE
PI	POINT OF INTERSECTION
PRC	POINT OF REVERSE CURVATURE
POC	POINT ON CURVE
POT	POINT OF TANGENT
R/L	REFERENCE LINE
REBAR	REINFORCED BAR
REQ'D.	REQUIRED
R/W	RIGHT OF WAY
R	RADIUS
S	SOUTH
SB	SOUTHBOUND
STH	STATE TRUNK HIGHWAY
STA	STATION
SS	STORM SEWER
SE	SUPERELEVATION
SURF	SURFACE
T	TANGENT
TYP	TYPICAL
WB	WESTBOUND

UTILITY CONTACTS

COMMUNICATION LINE

AT&T
ATTN: VICTORIA KASSAB, PE
205 S. JEFFERSON STREET
GREEN BAY, WI 54301
PHONE: 920-401-7512
EMAIL: vk352k@att.com

SPECTRUM
ATTN: VINCE ALBIN
3520 DESTINATION DRIVE
APPLETON, WI 54915
PHONE: 920-831-9249
EMAIL: vince.albin@charter.com

ELECTRIC

WISCONSIN PUBLIC SERVICE CORPORATION
ATTN: SCOTT ZELLNER
2580 S. ASHLAND AVENUE
GREEN BAY, WI 54304
PHONE: 920-617-5068
CELL: 920-680-2188
EMAIL: scott.zellner@wisconsinpublicservice.com

GAS

WISCONSIN PUBLIC SERVICE CORPORATION
ATTN: CHRISTINE BLAZEI
2850 S. ASHLAND AVENUE
GREEN BAY, WI 54304
PHONE: 920-617-5132
CELL: 920-246-7603
EMAIL: christine.blazei@wisconsinpublicservice.com

SANITARY SEWER & WATER

VILLAGE OF HOWARD
ATTN: GEOFF FARR
1336 CORNELL ROAD
GREEN BAY, WI 54313
PHONE: 920-434-4060
EMAIL: gfarr@villageofhoward.com

NEW WATER
ATTN: ROB REINHART
2231 N. QUINCY STREET
GREEN BAY, WI 54302-1248
PHONE: 920-438-1035
EMAIL: rreinhart@newwater.us

DIGGERS HOTLINE
Dial 811 or (800)242-8511
www.DiggersHotline.com

PROJECT CONTACTS

WISCONSIN DEPARTMENT OF NATURAL RESOURCES
NORTHEAST REGION HEADQUARTERS
ATTN: JIM DOPERALSKI JR.
2984 SHAWANO AVENUE
PO BOX 10488
GREEN BAY, WI 54307-0448
PHONE: 920-412-0165
EMAIL: james.doperalski@wisconsin.gov

WIS. DEPT OF TRANSPORTATION
NORTHEAST REGION - PRIMARY CONTACT
ATTN: DOUG KIRST
944 VANDERPERREN WAY
PO BOX 28080
GREEN BAY, WI 54324-0080
PHONE:920-362-0389
EMAIL: DOUGLAS.KIRST@DOT.WI.GOV

AYRES ASSOCIATES
ATTN: PHIL VERVILLE III, PE RSP1
3376 PACKERLAND DRIVE
ASHWAUBENON, WI 54115
PHONE: 920-327-7822
EMAIL: Vervillep@ayresassociates.com

2

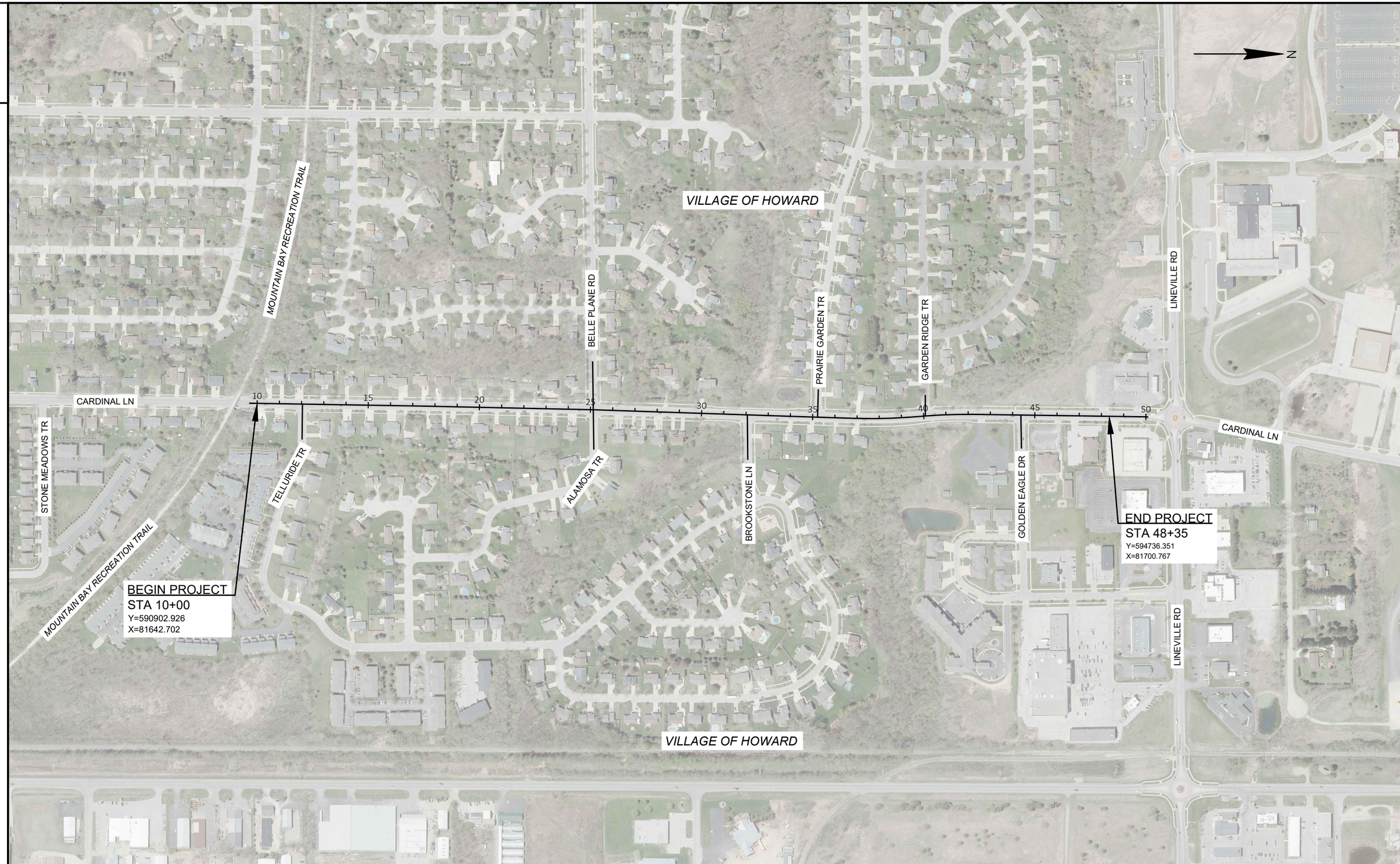

PROJECT NO: 9269-10-70	HWY: CARDINAL LANE	COUNTY: BROWN	PROJECT OVERVIEW	SHEET 3	E

FILE NAME : I:\45\450572 VILLAGE OF HOWARD CARDINAL LANE\C3D\SHEETS\020201-PO.DWG
LAYOUT NAME - 020201-po
PLOT DATE : 8/30/2022 8:43 AM
PLOT BY : VERVILLE, PHILLIP
PLOT NAME :
PLOT SCALE : 1 IN:400 FT
WISDOT/CADDS SHEET 42

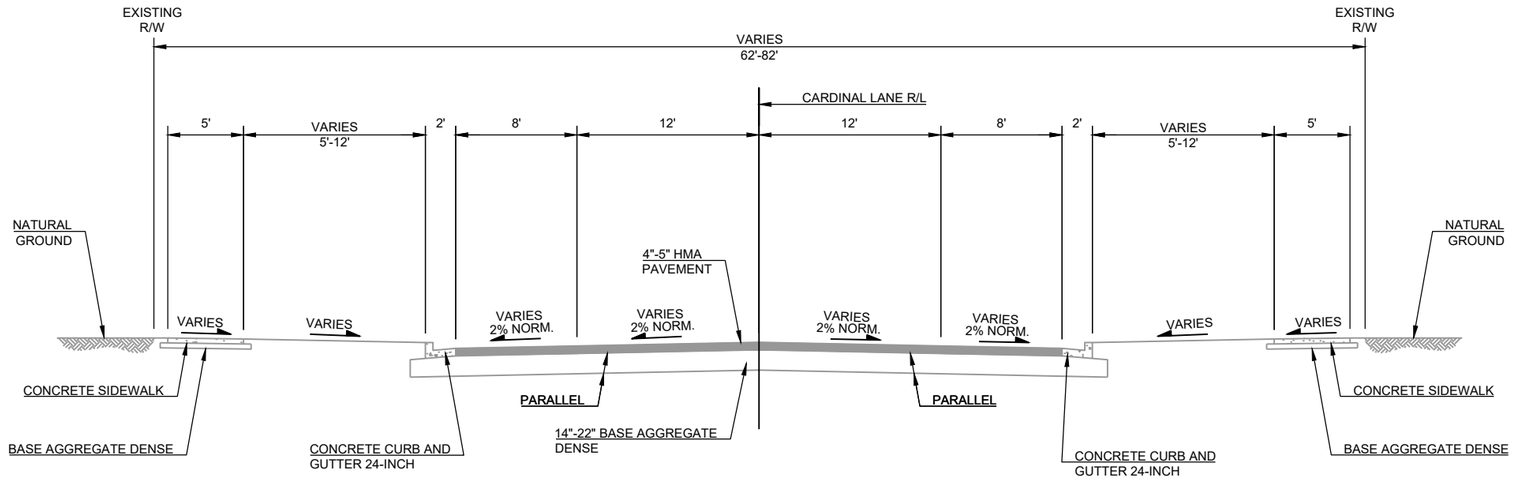

EXISTING TYPICAL SECTION FOR CARDINAL LANE

STA. 10+00 - STA. 48+35

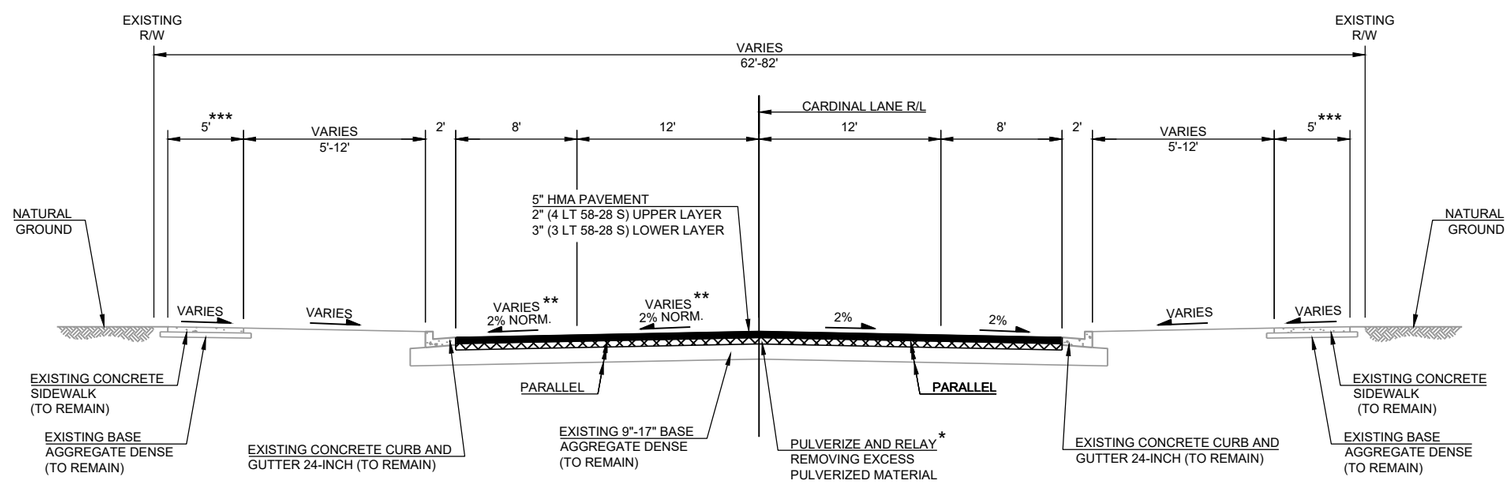

*** SIDEWALK REPLACEMENT AS SHOWN IN CURB RAMP DETAILS.

** SEE INTERSECTION DETAILS SHEET FOR LOCATION OF WHERE SLOPES ARE DIFFERENT THAN 2%.

* -PULVERIZE & RELAY 10" DEEP FROM EXISTING PAVEMENT SURFACE.
-REMOVE EXCESS PULVERIZED MATERIAL BEFORE PLACING 5" HMA PAVEMENT.

FINISHED TYPICAL SECTION FOR CARDINAL LANE

STA. 10+00 - STA. 48+35

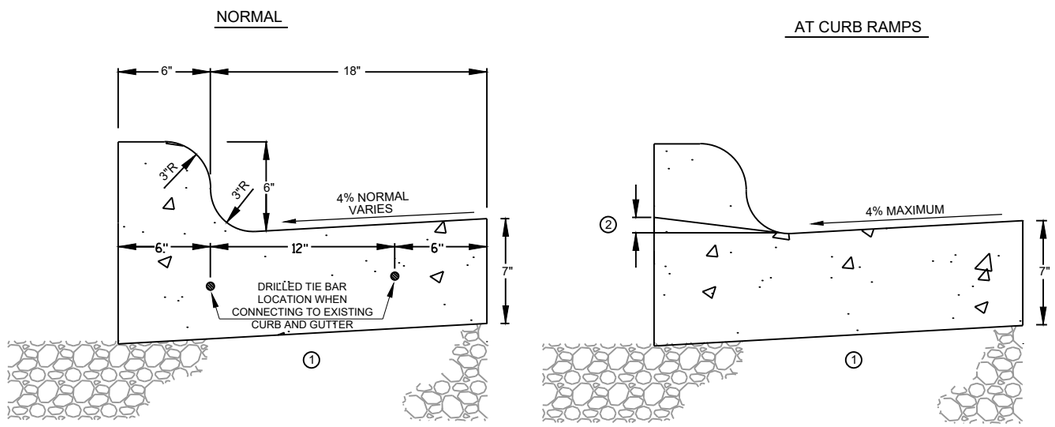

NOTES:

1. THE BOTTOM OF THE CURB AND GUTTER MAY BE CONSTRUCTED EITHER PARALLEL TO THE SUBGRADE OR LEVEL PROVIDED THE GUTTER FLANGE THICKNESS OF 7" AND BASE COURSE THICKNESS OF 4" UNDER THE CURB IS MAINTAINED.
2. VARIES BASED ON SLOPE OF CURB RAMPS AT CURB RAMPS.

CONCRETE CURB AND GUTTER 24-INCH TYPE D

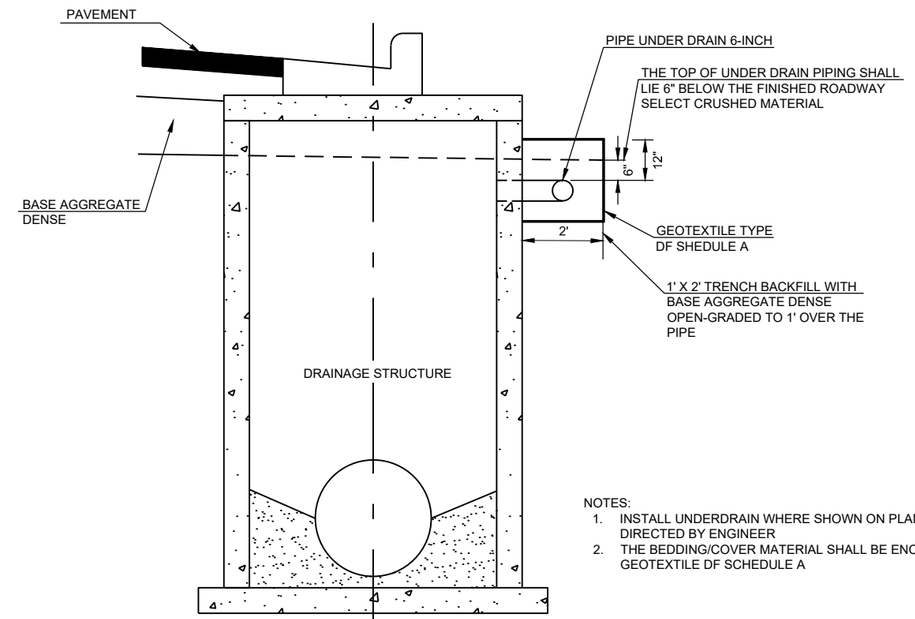

NOTES:

1. INSTALL UNDERDRAIN WHERE SHOWN ON PLANS AND/OR AS DIRECTED BY ENGINEER
2. THE BEDDING/COVER MATERIAL SHALL BE ENCASED WITH GEOTEXTILE DF SCHEDULE A

SECTION A-A

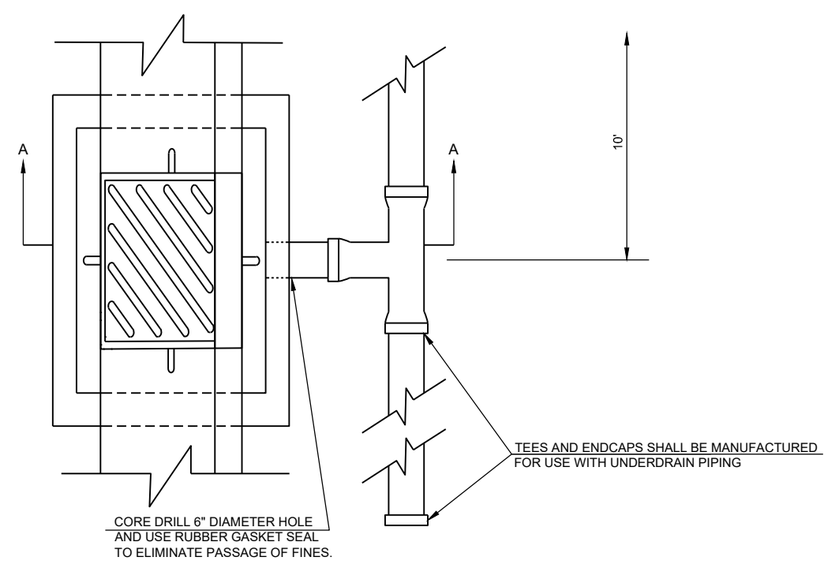

UNDERDRAIN DETAIL

(SEE MISCELLANEOUS QUANTITIES FOR LOCATIONS)

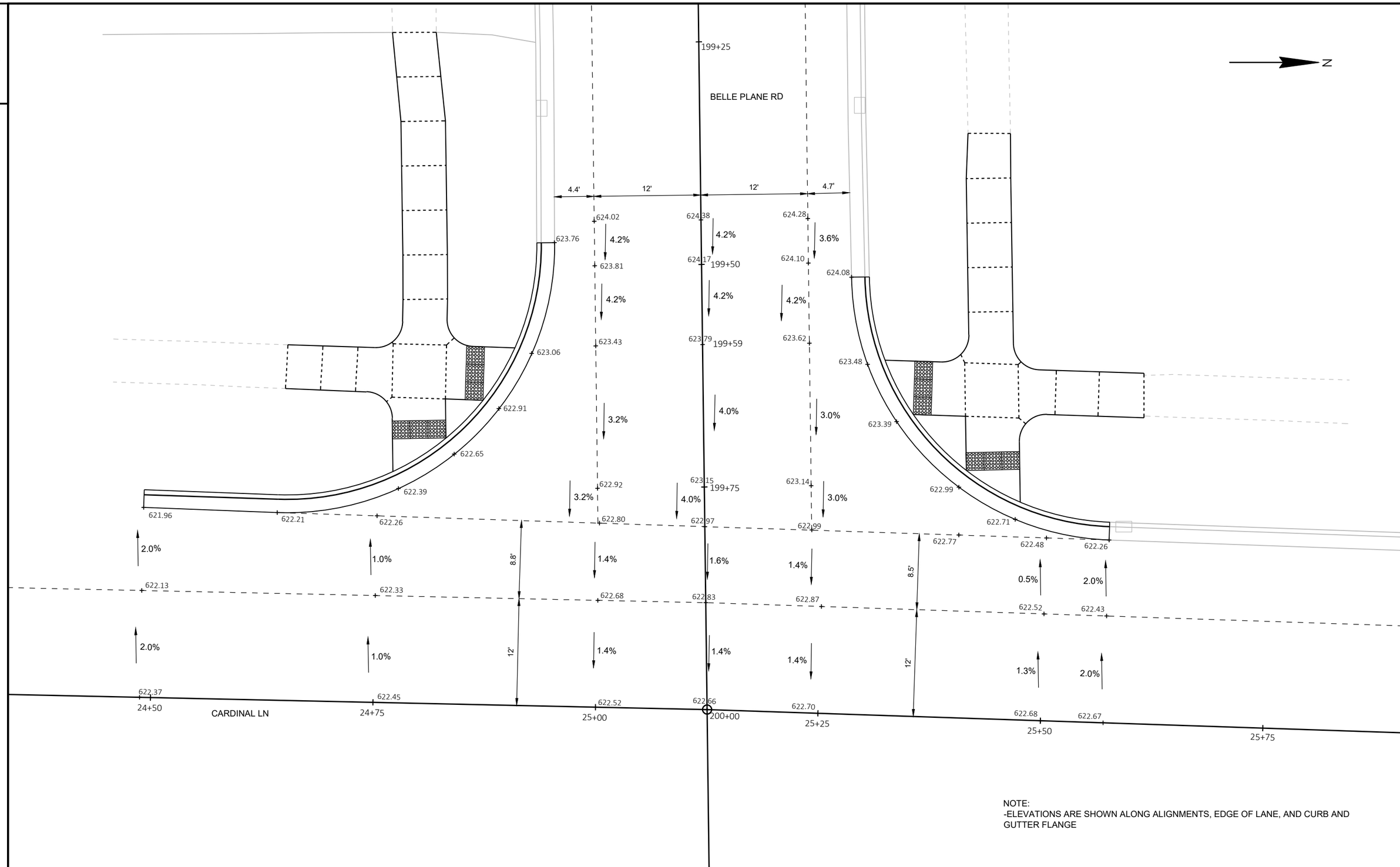

NOTE:
-ELEVATIONS ARE SHOWN ALONG ALIGNMENTS, EDGE OF LANE, AND CURB AND GUTTER FLANGE

PROJECT NO: 9269-10-70	HWY: CARDINAL LANE	COUNTY: BROWN	INTERSECTION DETAILS - BELLE PLANE ROAD	SHEET 6	E

FILE NAME : I:\45\450572 VILLAGE OF HOWARD CARDINAL LANE\C3D\SHEETS\021101-ID.DWG
LAYOUT NAME - 021101-id
PLOT DATE : 8/30/2022 8:44 AM
PLOT BY : VERVILLE, PHILLIP
PLOT NAME :
PLOT SCALE : 1 IN:10 FT
WISDOT/CADDS SHEET 42

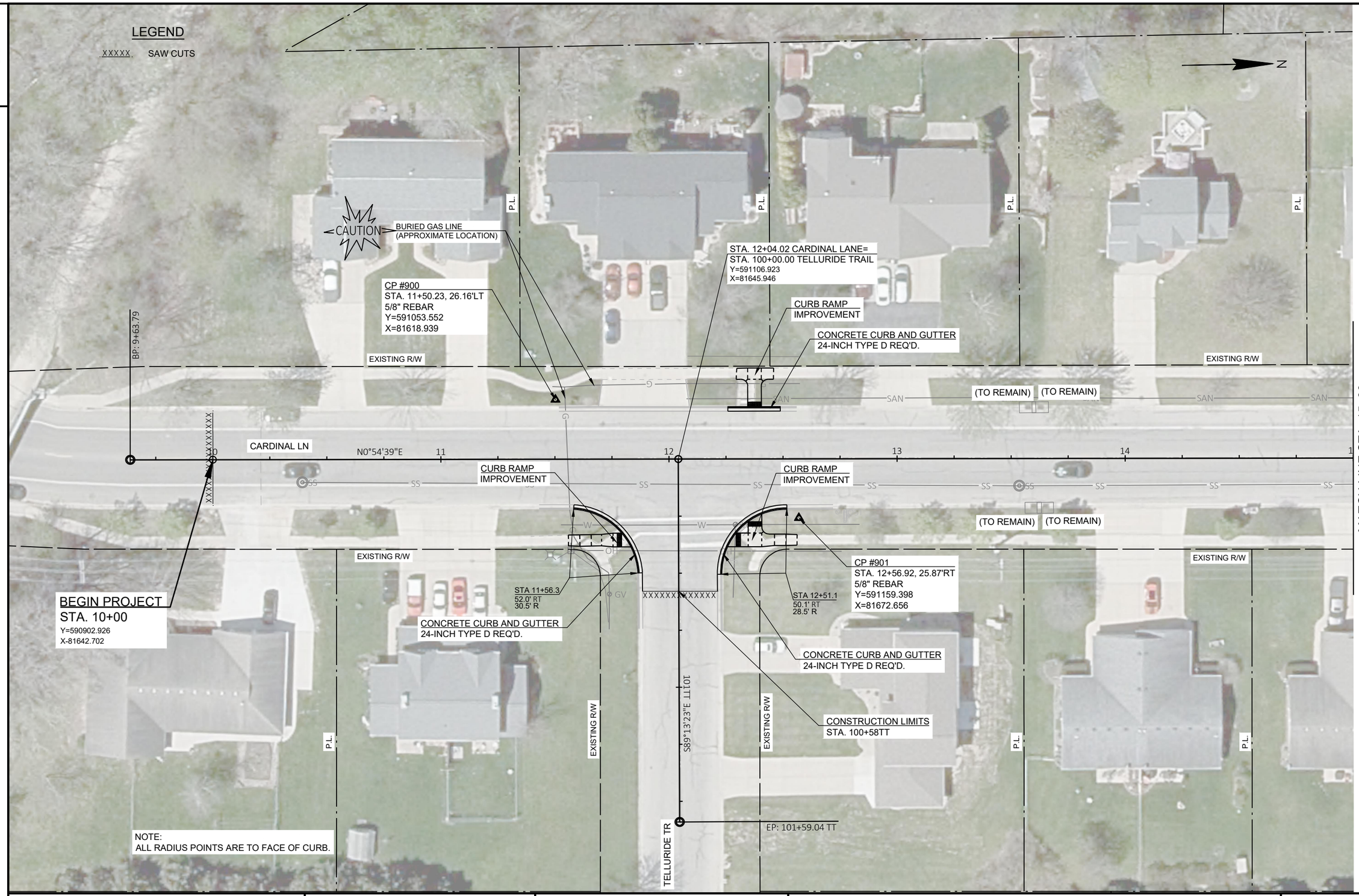

PROJECT NO: 9269-10-70	HWY: CARDINAL LANE	COUNTY: BROWN	PLAN DETAILS	SHEET 7	E

FILE NAME : I:\45\450572 VILLAGE OF HOWARD CARDINAL LANE\C3D\SHEETS\021201-PD.DWG
LAYOUT NAME - 021201-pd
PLOT DATE : 8/30/2022 8:44 AM PLOT BY : VERVILLE, PHILLIP PLOT NAME : PLOT SCALE : 1 IN:40 FT

2

PROJECT NO: 9269-10-70	HWY: CARDINAL LANE	COUNTY: BROWN	PLAN DETAILS	SHEET 8	E

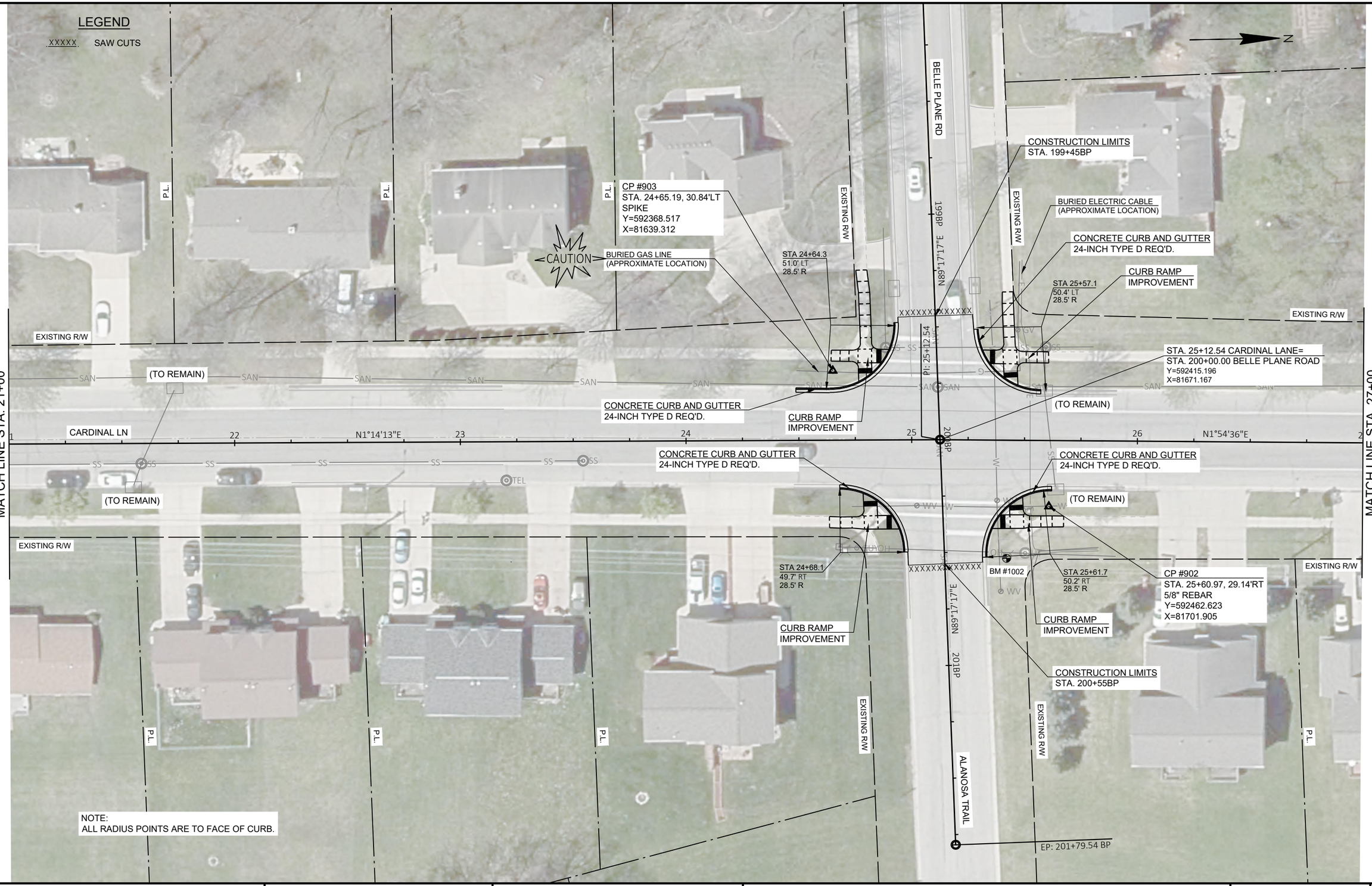

PROJECT NO: 9269-10-70	HWY: CARDINAL LANE	COUNTY: BROWN	PLAN DETAILS	SHEET 9	E

FILE NAME : I:\45\450572 VILLAGE OF HOWARD CARDINAL LANE\C3D\SHEETS\021201-PD.DWG
LAYOUT NAME - 021203-pd
PLOT DATE : 8/30/2022 8:44 AM
PLOT BY : VERVILLE, PHILLIP
PLOT NAME :
PLOT SCALE : 1 IN:40 FT
WISDOT/CADDS SHEET 42

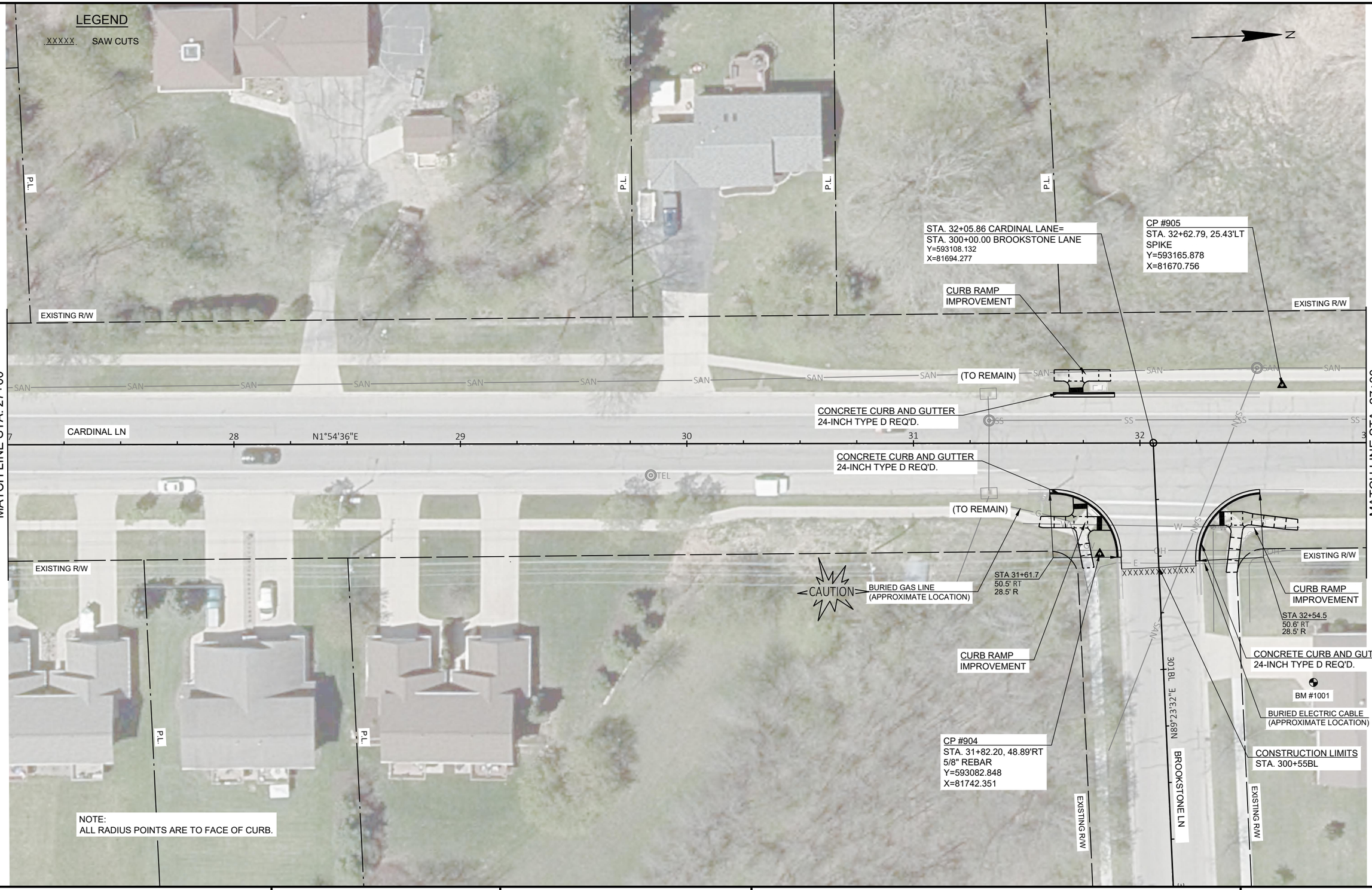

PROJECT NO: 9269-10-70	HWY: CARDINAL LANE	COUNTY: BROWN	PLAN DETAILS	SHEET 10	E

FILE NAME : I:\45\450572 VILLAGE OF HOWARD CARDINAL LANE\C3D\SHEETS\021201-PD.DWG
LAYOUT NAME - 021204-pd
PLOT DATE : 8/30/2022 8:44 AM
PLOT BY : VERVILLE, PHILLIP
PLOT NAME :
PLOT SCALE : 1 IN:40 FT

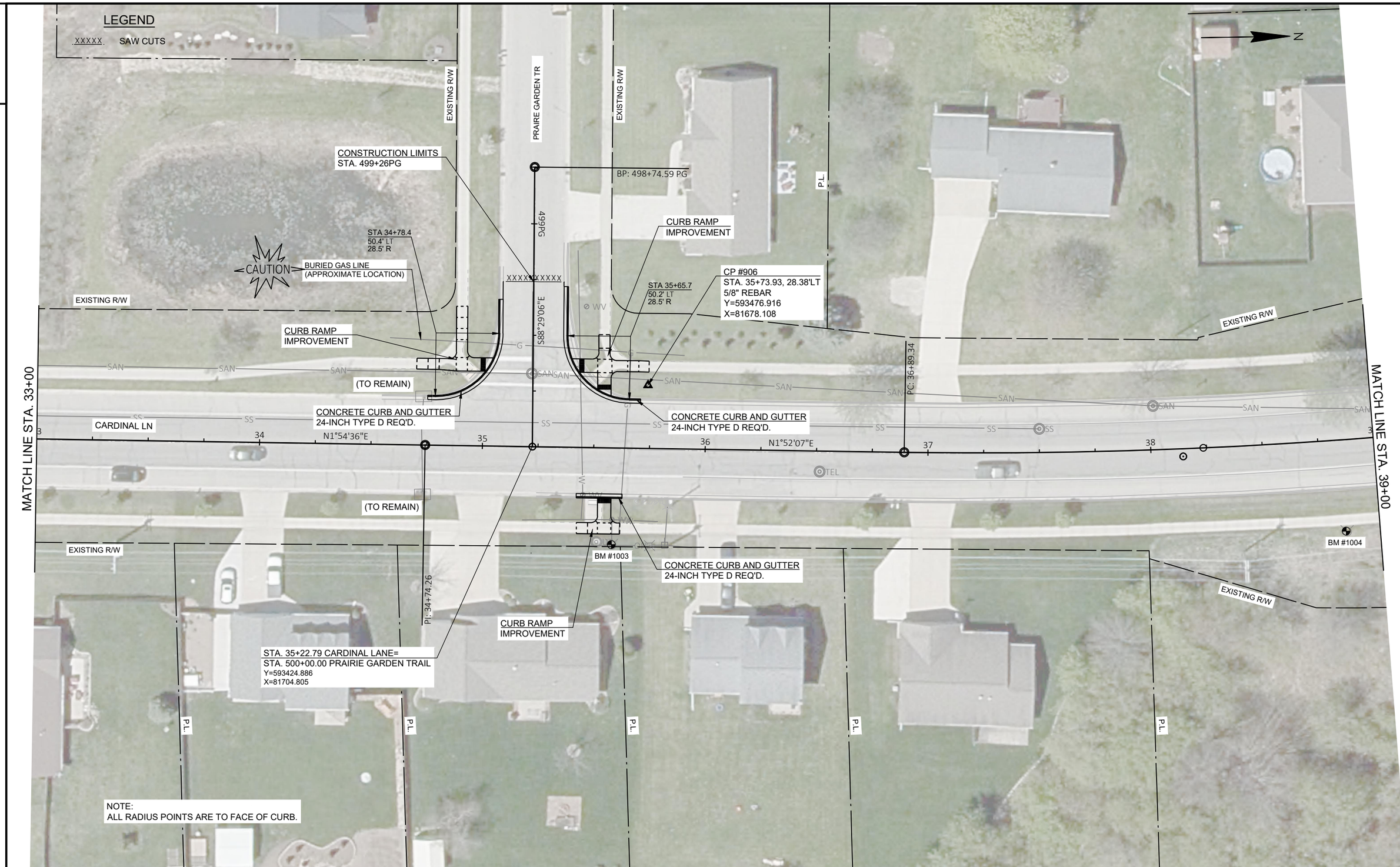

PROJECT NO: 9269-10-70	HWY: CARDINAL LANE	COUNTY: BROWN	PLAN DETAILS	SHEET 11	E

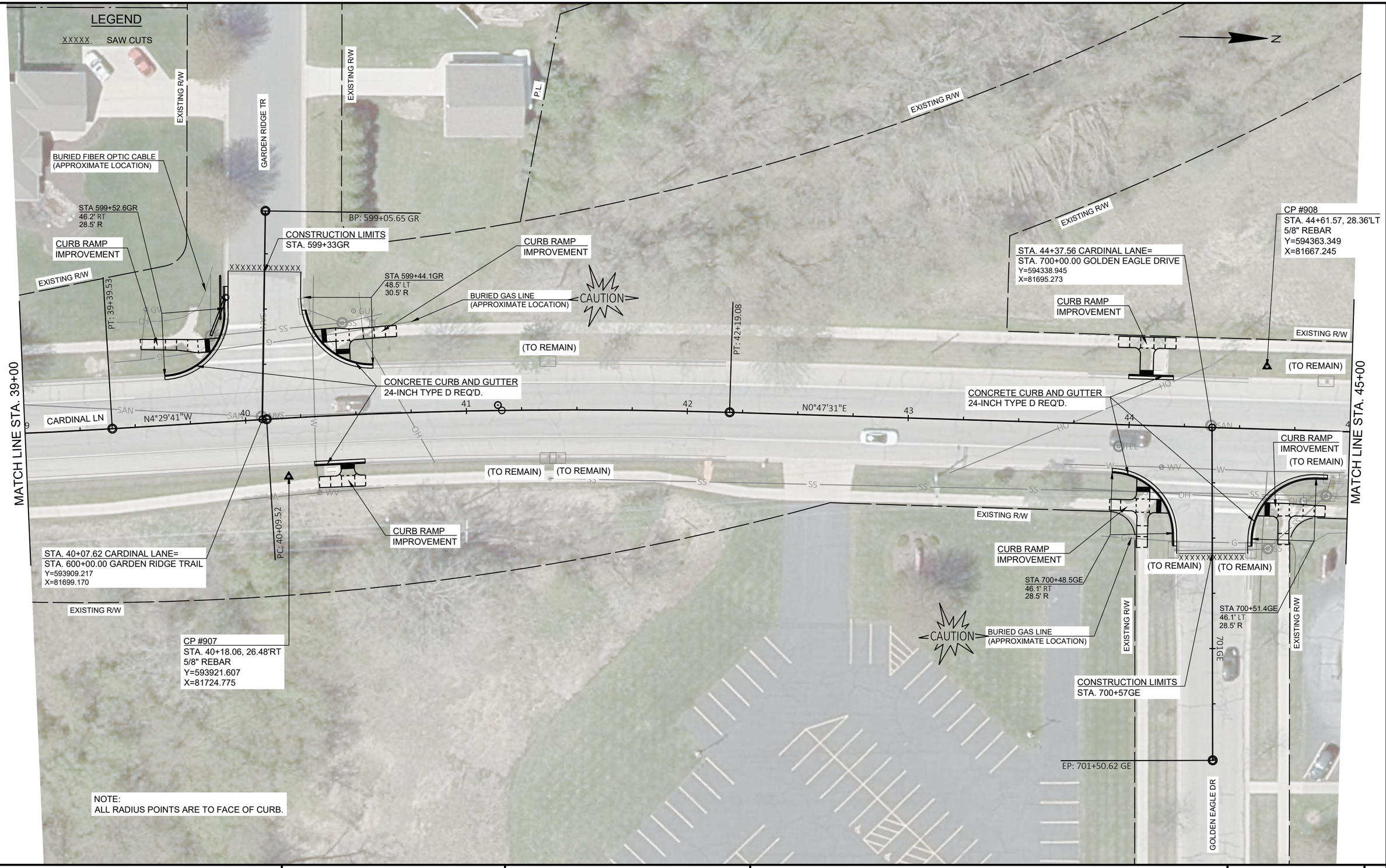

PROJECT NO: 9269-10-70	HWY: CARDINAL LANE	COUNTY: BROWN	PLAN DETAILS	SHEET 12	E

FILE NAME : I:\45\450572 VILLAGE OF HOWARD CARDINAL LANE\C3D\SHEETS\021201-PD.DWG
LAYOUT NAME - 021206-pd
PLOT DATE : 8/30/2022 8:44 AM
PLOT BY : VERVILLE, PHILLIP
PLOT NAME :
PLOT SCALE : 1 IN:40 FT
WISDOT/CADDS SHEET 42

2

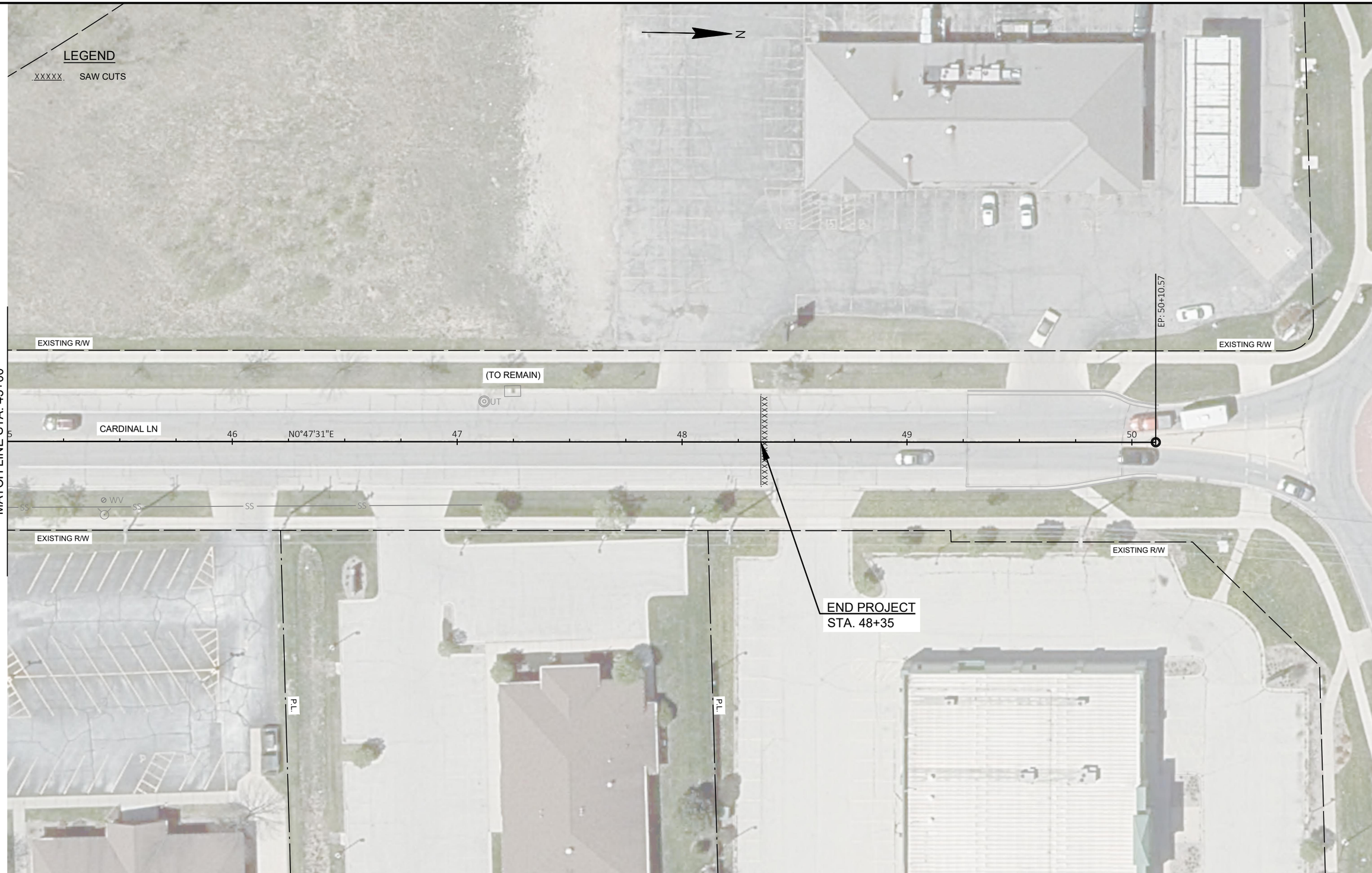

2

PROJECT NO: 9269-10-70	HWY: CARDINAL LANE	COUNTY: BROWN	PLAN DETAILS	SHEET 13	E

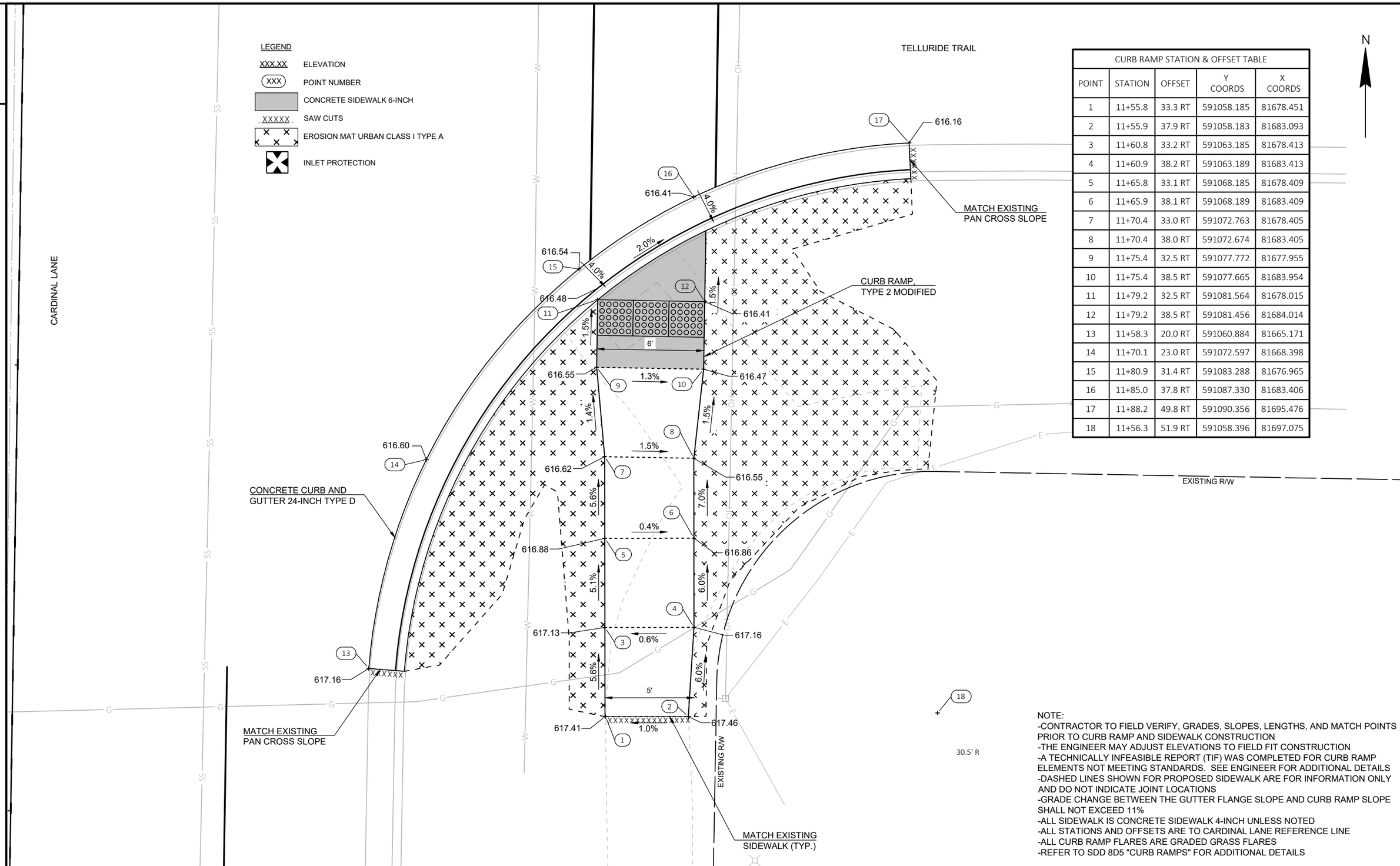

CURB RAMP STATION & OFFSET TABLE				
POINT	STATION	OFFSET	Y COORDS	X COORDS
1	11+55.8	33.3 RT	591058.185	81678.451
2	11+55.9	37.9 RT	591058.183	81683.093
3	11+60.8	33.2 RT	591063.185	81678.413
4	11+60.9	38.2 RT	591063.189	81683.413
5	11+65.8	33.1 RT	591068.185	81678.409
6	11+65.9	38.1 RT	591068.189	81683.409
7	11+70.4	33.0 RT	591072.763	81678.405
8	11+70.4	38.0 RT	591072.674	81683.405
9	11+75.4	32.5 RT	591077.772	81677.955
10	11+75.4	38.5 RT	591077.665	81683.954
11	11+79.2	32.5 RT	591081.564	81678.015
12	11+79.2	38.5 RT	591081.456	81684.014
13	11+58.3	20.0 RT	591060.884	81665.171
14	11+70.1	23.0 RT	591072.597	81668.398
15	11+80.9	31.4 RT	591083.288	81676.965
16	11+85.0	37.8 RT	591087.330	81683.406
17	11+88.2	49.8 RT	591090.356	81695.476
18	11+56.3	51.9 RT	591058.396	81697.075

NOTE:
-CONTRACTOR TO FIELD VERIFY, GRADES, SLOPES, LENGTHS, AND MATCH POINTS PRIOR TO CURB RAMP AND SIDEWALK CONSTRUCTION
-THE ENGINEER MAY ADJUST ELEVATIONS TO FIELD FIT CONSTRUCTION
-A TECHNICALLY INFEASIBLE REPORT (TIF) WAS COMPLETED FOR CURB RAMP ELEMENTS NOT MEETING STANDARDS. SEE ENGINEER FOR ADDITIONAL DETAILS
-DASHED LINES SHOWN FOR PROPOSED SIDEWALK ARE FOR INFORMATION ONLY AND DO NOT INDICATE JOINT LOCATIONS
-GRADE CHANGE BETWEEN THE GUTTER FLANGE SLOPE AND CURB RAMP SLOPE SHALL NOT EXCEED 11%
-ALL SIDEWALK IS CONCRETE SIDEWALK 4-INCH UNLESS NOTED
-ALL STATIONS AND OFFSETS ARE TO CARDINAL LANE REFERENCE LINE
-ALL CURB RAMP FLARES ARE GRADED GRASS FLARES
-REFER TO SDD 8D5 "CURB RAMPS" FOR ADDITIONAL DETAILS

PROJECT NO: 9269-10-70	HWY: CARDINAL LANE	COUNTY: BROWN	CURB RAMP DETAILS - TELLURIDE TRAIL SE QUADRANT	SHEET 14	E

2

LEGEND

XXX.XX ELEVATION

(XXX) POINT NUMBER

CONCRETE SIDEWALK 6-INCH

XXXXX SAW CUTS

EROSION MAT URBAN CLASS I TYPE A

INLET PROTECTION

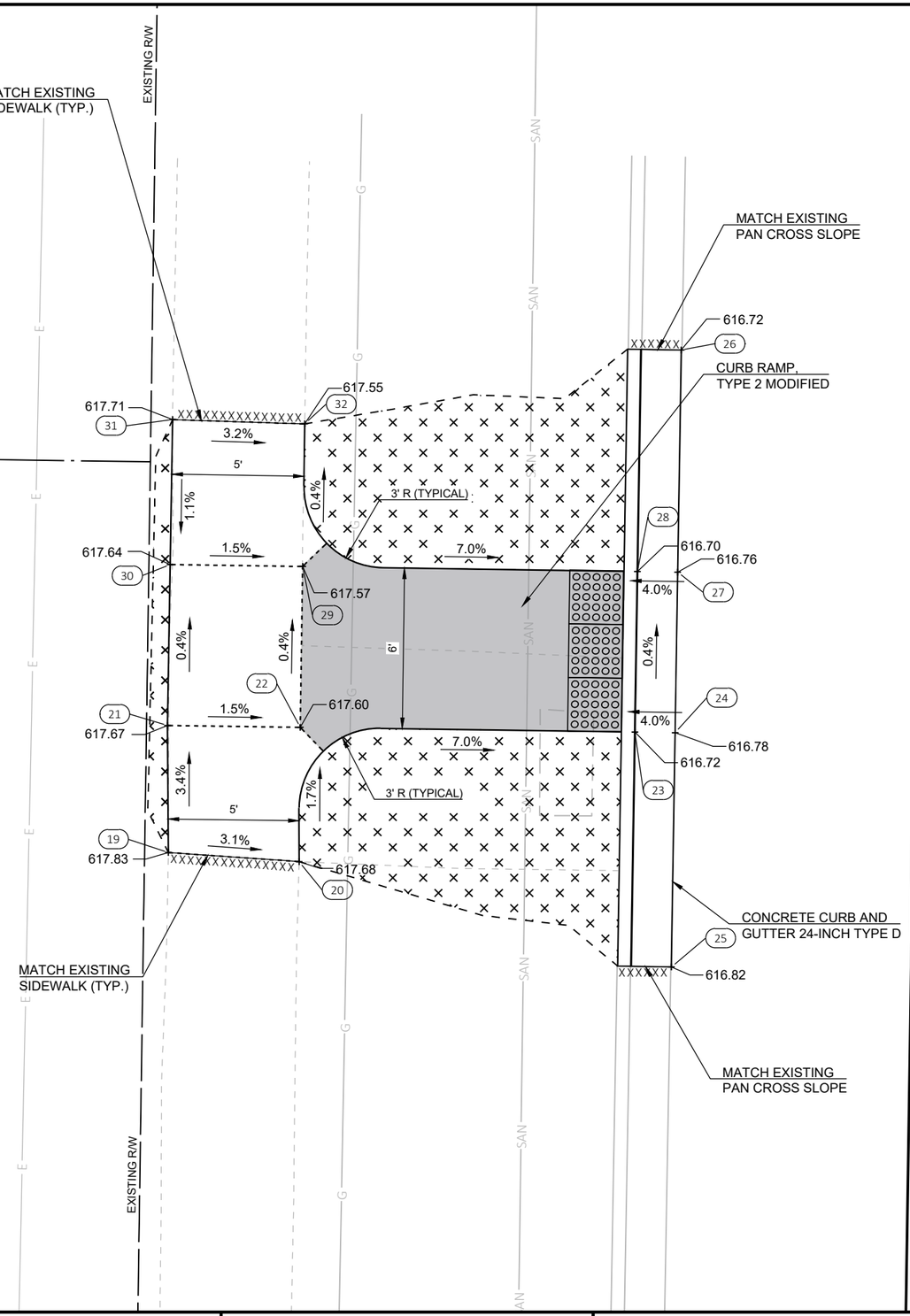

CURB RAMP STATION & OFFSET TABLE				
POINT	STATION	OFFSET	Y COORDS	X COORDS
19	12+29.8	39.8 LT	591133.299	81606.604
20	12+29.5	34.9 LT	591132.962	81611.479
21	12+34.5	39.9 LT	591138.036	81606.570
22	12+34.5	34.9 LT	591137.968	81611.518
23	12+34.5	22.4 LT	591137.795	81623.994
24	12+34.5	20.9 LT	591137.771	81625.493
25	12+25.8	20.9 LT	591129.034	81625.355
26	12+48.8	20.9 LT	591152.031	81625.719
27	12+40.5	20.9 LT	591143.754	81625.588
28	12+40.5	22.4 LT	591143.778	81624.088
29	12+40.5	34.9 LT	591143.963	81611.607
30	12+40.5	39.9 LT	591144.036	81606.671
31	12+45.9	39.9 LT	591149.438	81606.763
32	12+45.8	34.9 LT	591149.280	81611.686

NOTE:
-CONTRACTOR TO FIELD VERIFY, GRADES, SLOPES, LENGTHS, AND MATCH POINTS PRIOR TO CURB RAMP AND SIDEWALK CONSTRUCTION
-THE ENGINEER MAY ADJUST ELEVATIONS TO FIELD FIT CONSTRUCTION
-A TECHNICALLY INFEASIBLE REPORT (TIF) WAS COMPLETED FOR CURB RAMP ELEMENTS NOT MEETING STANDARDS. SEE ENGINEER FOR ADDITIONAL DETAILS
-DASHED LINES SHOWN FOR PROPOSED SIDEWALK ARE FOR INFORMATION ONLY AND DO NOT INDICATE JOINT LOCATIONS
-GRADE CHANGE BETWEEN THE GUTTER FLANGE SLOPE AND CURB RAMP SLOPE SHALL NOT EXCEED 11%
-ALL SIDEWALK IS CONCRETE SIDEWALK 4-INCH UNLESS NOTED
-ALL STATIONS AND OFFSETS ARE TO CARDINAL LANE REFERENCE LINE
-ALL CURB RAMP FLARES ARE GRADED GRASS FLARES
-REFER TO SDD 8D5 "CURB RAMPS" FOR ADDITIONAL DETAILS

2

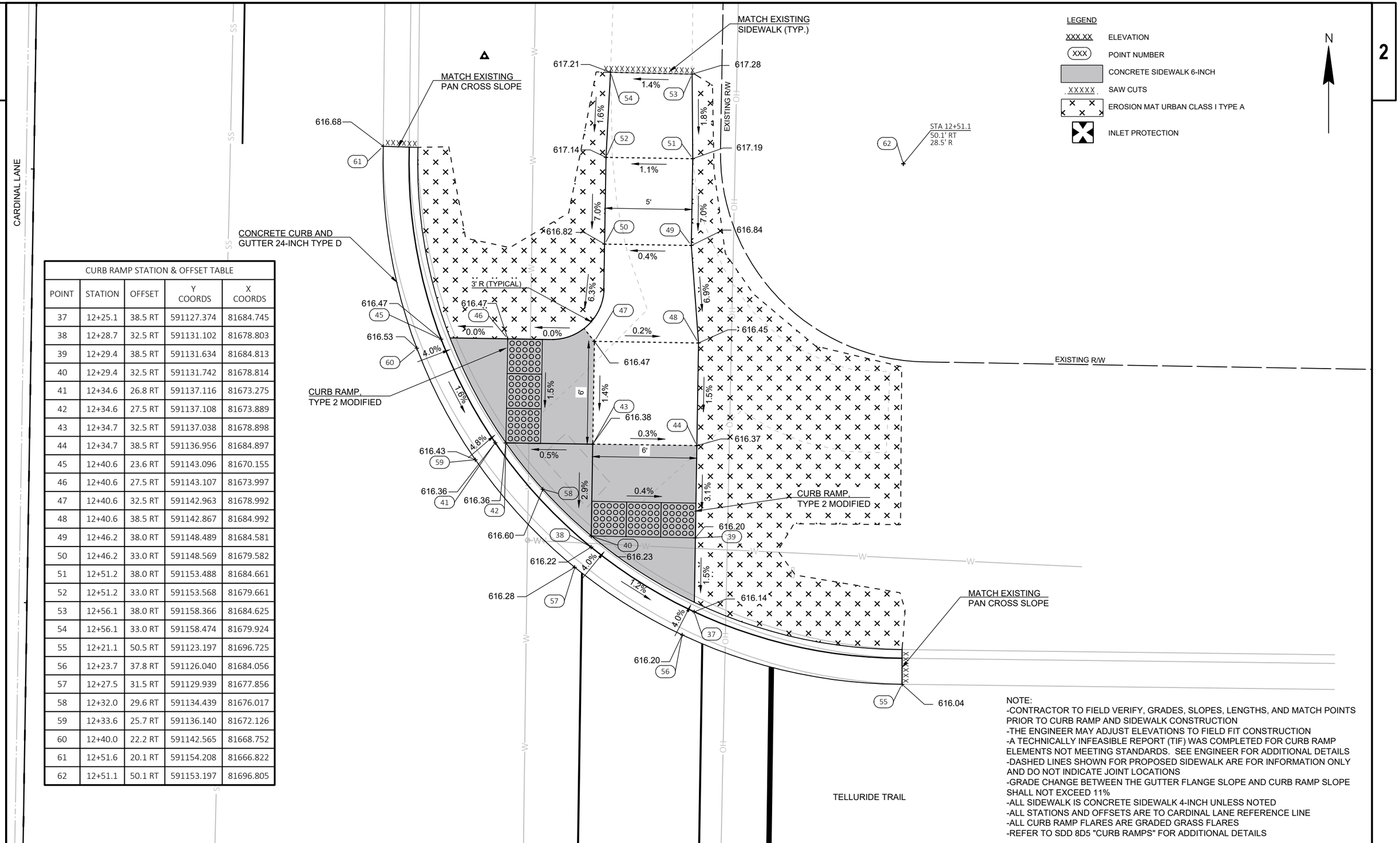

CURB RAMP STATION & OFFSET TABLE				
POINT	STATION	OFFSET	Y COORDS	X COORDS
37	12+25.1	38.5 RT	591127.374	81684.745
38	12+28.7	32.5 RT	591131.102	81678.803
39	12+29.4	38.5 RT	591131.634	81684.813
40	12+29.4	32.5 RT	591131.742	81678.814
41	12+34.6	26.8 RT	591137.116	81673.275
42	12+34.6	27.5 RT	591137.108	81673.889
43	12+34.7	32.5 RT	591137.038	81678.898
44	12+34.7	38.5 RT	591136.956	81684.897
45	12+40.6	23.6 RT	591143.096	81670.155
46	12+40.6	27.5 RT	591143.107	81673.997
47	12+40.6	32.5 RT	591142.963	81678.992
48	12+40.6	38.5 RT	591142.867	81684.992
49	12+46.2	38.0 RT	591148.489	81684.581
50	12+46.2	33.0 RT	591148.569	81679.582
51	12+51.2	38.0 RT	591153.488	81684.661
52	12+51.2	33.0 RT	591153.568	81679.661
53	12+56.1	38.0 RT	591158.366	81684.625
54	12+56.1	33.0 RT	591158.474	81679.924
55	12+21.1	50.5 RT	591123.197	81696.725
56	12+23.7	37.8 RT	591126.040	81684.056
57	12+27.5	31.5 RT	591129.939	81677.856
58	12+32.0	29.6 RT	591134.439	81676.017
59	12+33.6	25.7 RT	591136.140	81672.126
60	12+40.0	22.2 RT	591142.565	81668.752
61	12+51.6	20.1 RT	591154.208	81666.822
62	12+51.1	50.1 RT	591153.197	81696.805

NOTE:
-CONTRACTOR TO FIELD VERIFY, GRADES, SLOPES, LENGTHS, AND MATCH POINTS PRIOR TO CURB RAMP AND SIDEWALK CONSTRUCTION
-THE ENGINEER MAY ADJUST ELEVATIONS TO FIELD FIT CONSTRUCTION
-A TECHNICALLY INFEASIBLE REPORT (TIF) WAS COMPLETED FOR CURB RAMP ELEMENTS NOT MEETING STANDARDS. SEE ENGINEER FOR ADDITIONAL DETAILS
-DASHED LINES SHOWN FOR PROPOSED SIDEWALK ARE FOR INFORMATION ONLY AND DO NOT INDICATE JOINT LOCATIONS
-GRADE CHANGE BETWEEN THE GUTTER FLANGE SLOPE AND CURB RAMP SLOPE SHALL NOT EXCEED 11%
-ALL SIDEWALK IS CONCRETE SIDEWALK 4-INCH UNLESS NOTED
-ALL STATIONS AND OFFSETS ARE TO CARDINAL LANE REFERENCE LINE
-ALL CURB RAMP FLARES ARE GRADED GRASS FLARES
-REFER TO SDD 8D5 "CURB RAMPS" FOR ADDITIONAL DETAILS

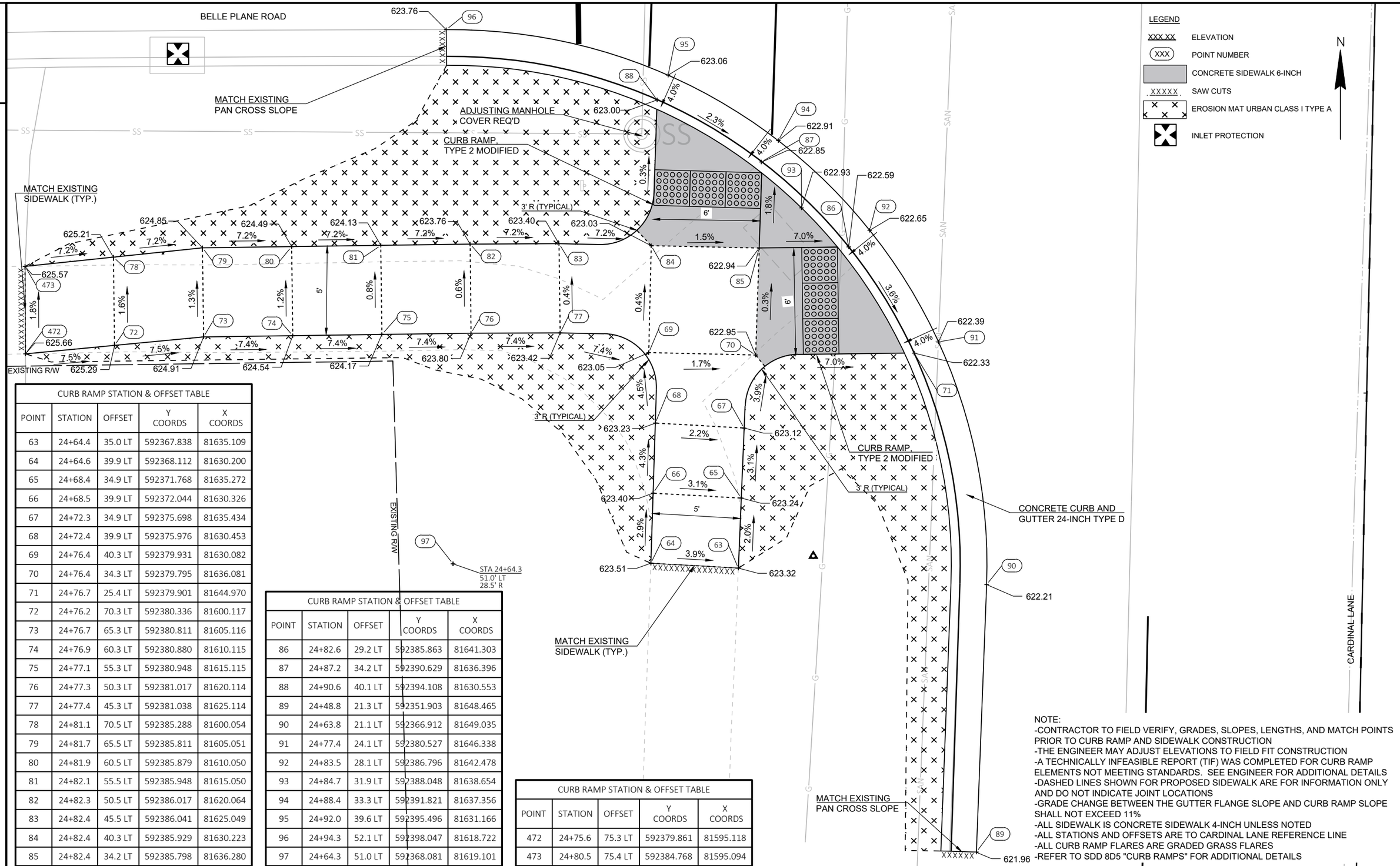

CURB RAMP STATION & OFFSET TABLE				
POINT	STATION	OFFSET	Y COORDS	X COORDS
63	24+64.4	35.0 LT	592367.838	81635.109
64	24+64.6	39.9 LT	592368.112	81630.200
65	24+68.4	34.9 LT	592371.768	81635.272
66	24+68.5	39.9 LT	592372.044	81630.326
67	24+72.3	34.9 LT	592375.698	81635.434
68	24+72.4	39.9 LT	592375.976	81630.453
69	24+76.4	40.3 LT	592379.931	81630.082
70	24+76.4	34.3 LT	592379.795	81636.081
71	24+76.7	25.4 LT	592379.901	81644.970
72	24+76.2	70.3 LT	592380.336	81600.117
73	24+76.7	65.3 LT	592380.811	81605.116
74	24+76.9	60.3 LT	592380.880	81610.115
75	24+77.1	55.3 LT	592380.948	81615.115
76	24+77.3	50.3 LT	592381.017	81620.114
77	24+77.4	45.3 LT	592381.038	81625.114
78	24+81.1	70.5 LT	592385.288	81600.054
79	24+81.7	65.5 LT	592385.811	81605.051
80	24+81.9	60.5 LT	592385.879	81610.050
81	24+82.1	55.5 LT	592385.948	81615.050
82	24+82.3	50.5 LT	592386.017	81620.064
83	24+82.4	45.5 LT	592386.041	81625.049
84	24+82.4	40.3 LT	592385.929	81630.223
85	24+82.4	34.2 LT	592385.798	81636.280

CURB RAMP STATION & OFFSET TABLE				
POINT	STATION	OFFSET	Y COORDS	X COORDS
86	24+82.6	29.2 LT	592385.863	81641.303
87	24+87.2	34.2 LT	592390.629	81636.396
88	24+90.6	40.1 LT	592394.108	81630.553
89	24+48.8	21.3 LT	592351.903	81648.465
90	24+63.8	21.1 LT	592366.912	81649.035
91	24+77.4	24.1 LT	592380.527	81646.338
92	24+83.5	28.1 LT	592386.796	81642.478
93	24+84.7	31.9 LT	592388.048	81638.654
94	24+88.4	33.3 LT	592391.821	81637.356
95	24+92.0	39.6 LT	592395.496	81631.166
96	24+94.3	52.1 LT	592398.047	81618.722
97	24+64.3	51.0 LT	592368.081	81619.101

CURB RAMP STATION & OFFSET TABLE				
POINT	STATION	OFFSET	Y COORDS	X COORDS
472	24+75.6	75.3 LT	592379.861	81595.118
473	24+80.5	75.4 LT	592384.768	81595.094

NOTE:
-CONTRACTOR TO FIELD VERIFY, GRADES, SLOPES, LENGTHS, AND MATCH POINTS PRIOR TO CURB RAMP AND SIDEWALK CONSTRUCTION
-THE ENGINEER MAY ADJUST ELEVATIONS TO FIELD FIT CONSTRUCTION
-A TECHNICALLY INFEASIBLE REPORT (TIF) WAS COMPLETED FOR CURB RAMP ELEMENTS NOT MEETING STANDARDS. SEE ENGINEER FOR ADDITIONAL DETAILS
-DASHED LINES SHOWN FOR PROPOSED SIDEWALK ARE FOR INFORMATION ONLY AND DO NOT INDICATE JOINT LOCATIONS
-GRADE CHANGE BETWEEN THE GUTTER FLANGE SLOPE AND CURB RAMP SLOPE SHALL NOT EXCEED 11%
-ALL SIDEWALK IS CONCRETE SIDEWALK 4-INCH UNLESS NOTED
-ALL STATIONS AND OFFSETS ARE TO CARDINAL LANE REFERENCE LINE
-ALL CURB RAMP FLARES ARE GRADED GRASS FLARES
-REFER TO SDD 8D5 "CURB RAMPS" FOR ADDITIONAL DETAILS

2

CURB RAMP STATION & OFFSET TABLE				
POINT	STATION	OFFSET	Y COORDS	X COORDS
98	25+30.7	39.9 LT	592434.642	81631.901
99	25+34.0	33.9 LT	592437.736	81637.985
100	25+39.7	65.7 LT	592444.508	81606.443
101	25+39.6	60.6 LT	592444.309	81611.536
102	25+39.9	55.6 LT	592444.386	81616.535
103	25+40.1	50.6 LT	592444.464	81621.535
104	25+40.4	45.6 LT	592444.541	81626.534
105	25+40.2	39.9 LT	592444.130	81632.216
106	25+40.5	33.9 LT	592444.223	81638.222
107	25+40.8	27.2 LT	592444.327	81644.947
108	25+44.4	65.8 LT	592449.266	81606.459
109	25+44.6	60.8 LT	592449.308	81611.458
110	25+44.9	55.8 LT	592449.386	81616.458
111	25+45.1	50.8 LT	592449.463	81621.457
112	25+45.4	45.8 LT	592449.541	81626.456
113	25+46.2	39.9 LT	592450.133	81632.416

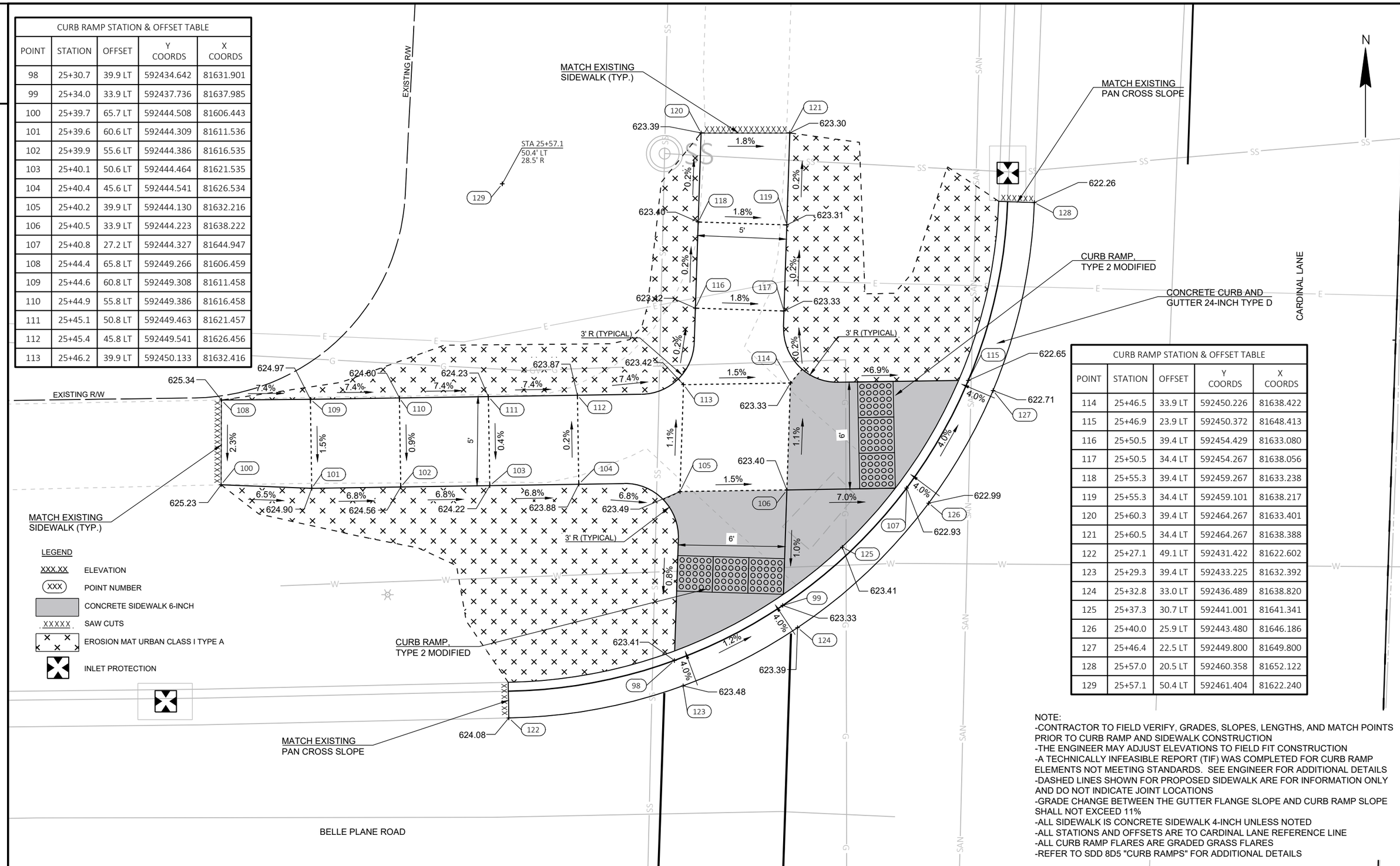

CURB RAMP STATION & OFFSET TABLE				
POINT	STATION	OFFSET	Y COORDS	X COORDS
114	25+46.5	33.9 LT	592450.226	81638.422
115	25+46.9	23.9 LT	592450.372	81648.413
116	25+50.5	39.4 LT	592454.429	81633.080
117	25+50.5	34.4 LT	592454.267	81638.056
118	25+55.3	39.4 LT	592459.267	81633.238
119	25+55.3	34.4 LT	592459.101	81638.217
120	25+60.3	39.4 LT	592464.267	81633.401
121	25+60.5	34.4 LT	592464.267	81638.388
122	25+27.1	49.1 LT	592431.422	81622.602
123	25+29.3	39.4 LT	592433.225	81632.392
124	25+32.8	33.0 LT	592436.489	81638.820
125	25+37.3	30.7 LT	592441.001	81641.341
126	25+40.0	25.9 LT	592443.480	81646.186
127	25+46.4	22.5 LT	592449.800	81649.800
128	25+57.0	20.5 LT	592460.358	81652.122
129	25+57.1	50.4 LT	592461.404	81622.240

NOTE:
-CONTRACTOR TO FIELD VERIFY, GRADES, SLOPES, LENGTHS, AND MATCH POINTS PRIOR TO CURB RAMP AND SIDEWALK CONSTRUCTION
-THE ENGINEER MAY ADJUST ELEVATIONS TO FIELD FIT CONSTRUCTION
-A TECHNICALLY INFEASIBLE REPORT (TIF) WAS COMPLETED FOR CURB RAMP ELEMENTS NOT MEETING STANDARDS. SEE ENGINEER FOR ADDITIONAL DETAILS
-DASHED LINES SHOWN FOR PROPOSED SIDEWALK ARE FOR INFORMATION ONLY AND DO NOT INDICATE JOINT LOCATIONS
-GRADE CHANGE BETWEEN THE GUTTER FLANGE SLOPE AND CURB RAMP SLOPE SHALL NOT EXCEED 11%
-ALL SIDEWALK IS CONCRETE SIDEWALK 4-INCH UNLESS NOTED
-ALL STATIONS AND OFFSETS ARE TO CARDINAL LANE REFERENCE LINE
-ALL CURB RAMP FLARES ARE GRADED GRASS FLARES
-REFER TO SDD 8D5 "CURB RAMPS" FOR ADDITIONAL DETAILS

2

LEGEND

XXX.XX	ELEVATION
XXX	POINT NUMBER
	CONCRETE SIDEWALK 6-INCH
XXXXX	SAW CUTS
	EROSION MAT URBAN CLASS I TYPE A
	INLET PROTECTION

ALAMOSA TRAIL

N

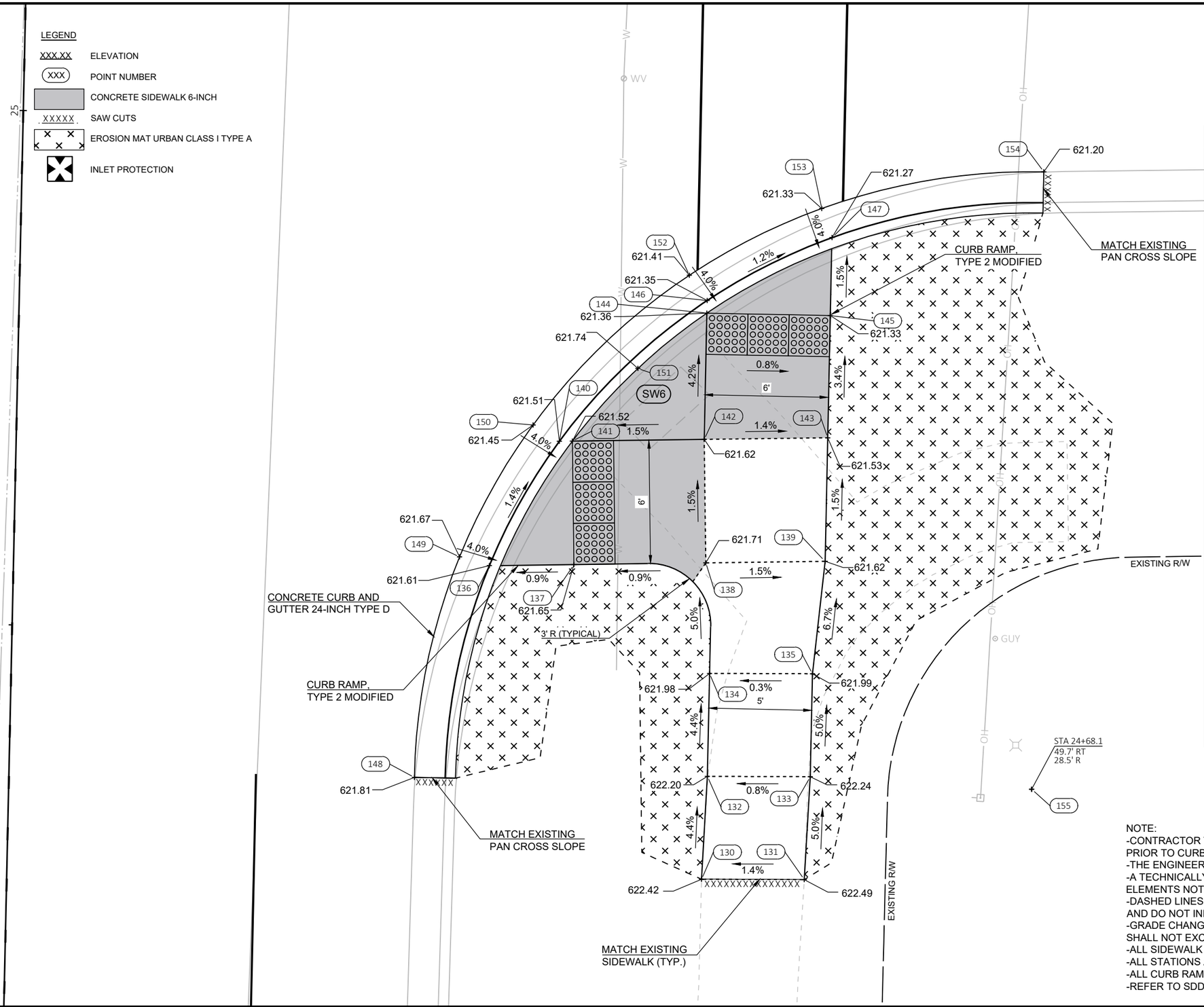

CURB RAMP STATION & OFFSET TABLE				
POINT	STATION	OFFSET	Y COORDS	X COORDS
130	24+63.4	33.8 RT	592365.305	81703.854
131	24+63.5	38.7 RT	592365.290	81708.846
132	24+68.4	33.9 RT	592370.304	81704.136
133	24+68.5	38.9 RT	592370.289	81709.137
134	24+73.4	33.9 RT	592375.304	81704.242
135	24+73.5	38.9 RT	592375.289	81709.243
136	24+78.4	23.1 RT	592380.539	81693.542
137	24+78.6	29.2 RT	592380.592	81697.654
138	24+78.7	33.6 RT	592380.675	81704.060
139	24+78.9	39.4 RT	592380.751	81709.859
140	24+84.5	26.4 RT	592386.584	81696.947
141	24+84.6	29.0 RT	592386.592	81697.577
142	24+84.7	33.4 RT	592386.675	81703.983
143	24+85.0	39.4 RT	592386.753	81709.986
144	24+88.9	33.4 RT	592392.810	81704.112
145	24+88.9	39.4 RT	592392.688	81710.111
146	24+91.5	33.4 RT	592393.421	81704.125
147	24+94.7	39.4 RT	592396.478	81710.191
148	24+68.0	19.7 RT	592370.256	81689.898
149	24+78.8	21.7 RT	592380.967	81692.097
150	24+85.3	25.1 RT	592387.376	81695.668
151	24+88.1	30.1 RT	592390.121	81700.757
152	24+92.7	32.5 RT	592394.649	81703.263
153	24+96.1	38.9 RT	592397.893	81709.695
154	24+98.1	49.6 RT	592399.674	81720.482
155	24+68.1	49.7 RT	592369.680	81719.892

NOTE:
-CONTRACTOR TO FIELD VERIFY, GRADES, SLOPES, LENGTHS, AND MATCH POINTS PRIOR TO CURB RAMP AND SIDEWALK CONSTRUCTION
-THE ENGINEER MAY ADJUST ELEVATIONS TO FIELD FIT CONSTRUCTION
-A TECHNICALLY INFEASIBLE REPORT (TIF) WAS COMPLETED FOR CURB RAMP ELEMENTS NOT MEETING STANDARDS. SEE ENGINEER FOR ADDITIONAL DETAILS
-DASHED LINES SHOWN FOR PROPOSED SIDEWALK ARE FOR INFORMATION ONLY AND DO NOT INDICATE JOINT LOCATIONS
-GRADE CHANGE BETWEEN THE GUTTER FLANGE SLOPE AND CURB RAMP SLOPE SHALL NOT EXCEED 11%
-ALL SIDEWALK IS CONCRETE SIDEWALK 4-INCH UNLESS NOTED
-ALL STATIONS AND OFFSETS ARE TO CARDINAL LANE REFERENCE LINE
-ALL CURB RAMP FLARES ARE GRADED GRASS FLARES
-REFER TO SDD 8D5 "CURB RAMPS" FOR ADDITIONAL DETAILS

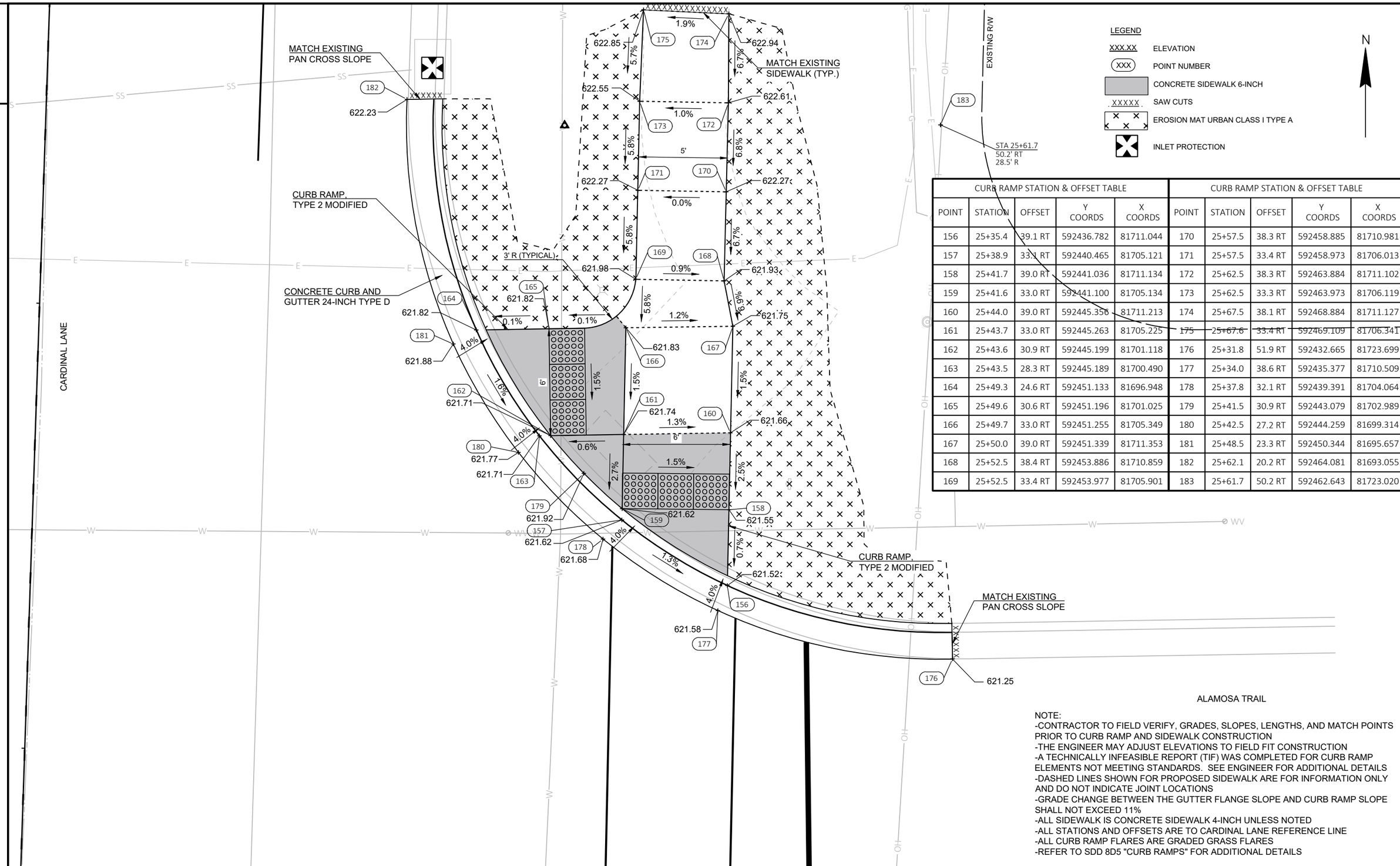

CURB RAMP STATION & OFFSET TABLE					CURB RAMP STATION & OFFSET TABLE				
POINT	STATION	OFFSET	Y COORDS	X COORDS	POINT	STATION	OFFSET	Y COORDS	X COORDS
156	25+35.4	39.1 RT	592436.782	81711.044	170	25+57.5	38.3 RT	592458.885	81710.981
157	25+38.9	33.1 RT	592440.465	81705.121	171	25+57.5	33.4 RT	592458.973	81706.013
158	25+41.7	39.0 RT	592441.036	81711.134	172	25+62.5	38.3 RT	592463.884	81711.102
159	25+41.6	33.0 RT	592441.100	81705.134	173	25+62.5	33.3 RT	592463.973	81706.119
160	25+44.0	39.0 RT	592445.356	81711.213	174	25+67.5	38.1 RT	592468.884	81711.127
161	25+43.7	33.0 RT	592445.263	81705.225	175	25+67.6	33.4 RT	592469.109	81706.341
162	25+43.6	30.9 RT	592445.199	81701.118	176	25+31.8	51.9 RT	592432.665	81723.699
163	25+43.5	28.3 RT	592445.189	81700.490	177	25+34.0	38.6 RT	592435.377	81710.509
164	25+49.3	24.6 RT	592451.133	81696.948	178	25+37.8	32.1 RT	592439.391	81704.064
165	25+49.6	30.6 RT	592451.196	81701.025	179	25+41.5	30.9 RT	592443.079	81702.989
166	25+49.7	33.0 RT	592451.255	81705.349	180	25+42.5	27.2 RT	592444.259	81699.314
167	25+50.0	39.0 RT	592451.339	81711.353	181	25+48.5	23.3 RT	592450.344	81695.657
168	25+52.5	38.4 RT	592453.886	81710.859	182	25+62.1	20.2 RT	592464.081	81693.055
169	25+52.5	33.4 RT	592453.977	81705.901	183	25+61.7	50.2 RT	592462.643	81723.020

NOTE:
-CONTRACTOR TO FIELD VERIFY, GRADES, SLOPES, LENGTHS, AND MATCH POINTS PRIOR TO CURB RAMP AND SIDEWALK CONSTRUCTION
-THE ENGINEER MAY ADJUST ELEVATIONS TO FIELD FIT CONSTRUCTION
-A TECHNICALLY INFEASIBLE REPORT (TIF) WAS COMPLETED FOR CURB RAMP ELEMENTS NOT MEETING STANDARDS. SEE ENGINEER FOR ADDITIONAL DETAILS
-DASHED LINES SHOWN FOR PROPOSED SIDEWALK ARE FOR INFORMATION ONLY AND DO NOT INDICATE JOINT LOCATIONS
-GRADE CHANGE BETWEEN THE GUTTER FLANGE SLOPE AND CURB RAMP SLOPE SHALL NOT EXCEED 11%
-ALL SIDEWALK IS CONCRETE SIDEWALK 4-INCH UNLESS NOTED
-ALL STATIONS AND OFFSETS ARE TO CARDINAL LANE REFERENCE LINE
-ALL CURB RAMP FLARES ARE GRADED GRASS FLARES
-REFER TO SDD 8D5 "CURB RAMPS" FOR ADDITIONAL DETAILS

2

CURB RAMP STATION & OFFSET TABLE				
POINT	STATION	OFFSET	Y COORDS	X COORDS
184	31+56.2	32.3 RT	593057.431	81724.897
185	31+55.4	36.9 RT	593056.444	81729.466
186	31+62.1	37.3 RT	593063.110	81730.133
187	31+62.1	32.3 RT	593063.315	81725.138
188	31+67.1	37.4 RT	593068.106	81730.338
189	31+67.1	32.4 RT	593068.310	81725.342
190	31+70.4	23.4 RT	593071.952	81716.477
191	31+70.6	29.0 RT	593071.952	81720.088
192	31+70.8	32.4 RT	593071.952	81725.491
193	31+70.9	37.4 RT	593071.952	81730.495
194	31+72.9	45.0 RT	593073.646	81738.171
195	31+73.8	49.9 RT	593074.369	81743.125
196	31+74.7	55.2 RT	593075.143	81748.428
197	31+76.5	26.2 RT	593077.952	81719.487
198	31+76.6	28.8 RT	593077.952	81720.088
199	31+76.8	32.4 RT	593077.952	81725.736
200	31+76.9	37.4 RT	593077.952	81730.740
201	31+77.6	44.2 RT	593078.382	81737.480
202	31+78.6	49.1 RT	593079.193	81742.421
203	31+79.7	54.8 RT	593080.143	81748.207
204	31+81.0	38.5 RT	593084.052	81731.991
205	31+81.1	32.5 RT	593084.298	81725.996
206	31+83.8	32.5 RT	593084.945	81726.022
207	31+87.5	38.5 RT	593088.511	81732.173
208	31+60.1	20.5 RT	593061.720	81713.285
209	31+70.9	22.0 RT	593072.462	81715.067
210	31+77.3	24.9 RT	593078.778	81718.234
211	31+79.9	29.3 RT	593081.208	81722.654
212	31+84.9	31.5 RT	593086.142	81725.104
213	31+88.9	37.9 RT	593089.889	81731.587
214	31+91.7	50.4 RT	593092.250	81744.204
215	31+61.7	50.5 RT	593062.264	81743.280

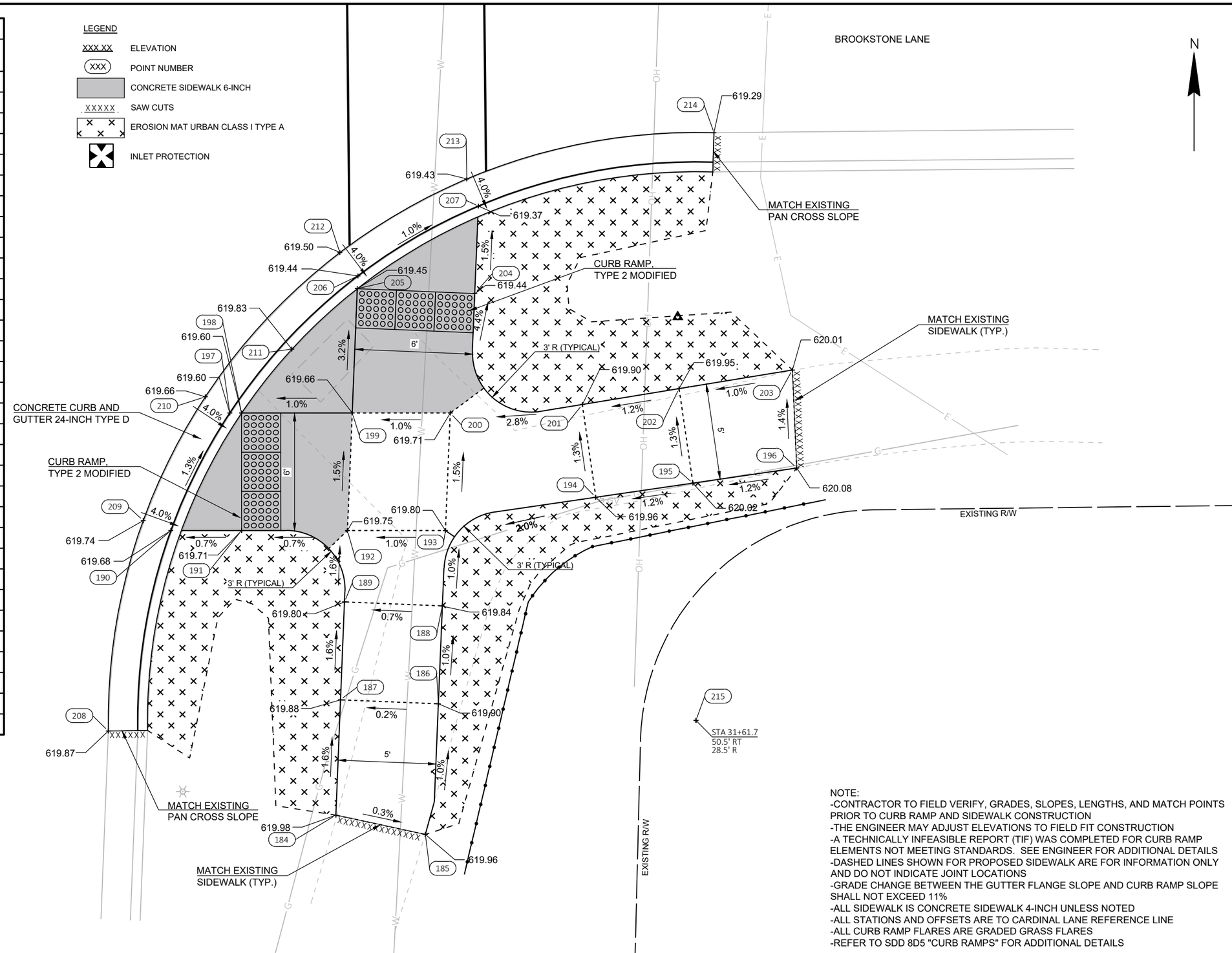

NOTE:
-CONTRACTOR TO FIELD VERIFY, GRADES, SLOPES, LENGTHS, AND MATCH POINTS PRIOR TO CURB RAMP AND SIDEWALK CONSTRUCTION
-THE ENGINEER MAY ADJUST ELEVATIONS TO FIELD FIT CONSTRUCTION
-A TECHNICALLY INFEASIBLE REPORT (TIF) WAS COMPLETED FOR CURB RAMP ELEMENTS NOT MEETING STANDARDS. SEE ENGINEER FOR ADDITIONAL DETAILS
-DASHED LINES SHOWN FOR PROPOSED SIDEWALK ARE FOR INFORMATION ONLY AND DO NOT INDICATE JOINT LOCATIONS
-GRADE CHANGE BETWEEN THE GUTTER FLANGE SLOPE AND CURB RAMP SLOPE SHALL NOT EXCEED 11%
-ALL SIDEWALK IS CONCRETE SIDEWALK 4-INCH UNLESS NOTED
-ALL STATIONS AND OFFSETS ARE TO CARDINAL LANE REFERENCE LINE
-ALL CURB RAMP FLARES ARE GRADED GRASS FLARES
-REFER TO SDD 8D5 "CURB RAMPS" FOR ADDITIONAL DETAILS

2

PROJECT NO: 9269-10-70	HWY: CARDINAL LANE	COUNTY: BROWN	CURB RAMP DETAILS - BROOKSTONE LANE SE QUADRANT	SHEET 21	E

2

LEGEND

XXX.XX	ELEVATION
(XXX)	POINT NUMBER
	CONCRETE SIDEWALK 6-INCH
XXXXX	SAW CUTS
	EROSION MAT URBAN CLASS I TYPE A
	INLET PROTECTION

CURB RAMP STATION & OFFSET TABLE				
POINT	STATION	OFFSET	Y COORDS	X COORDS
216	31+62.2	32.3 LT	593065.570	81660.506
217	31+62.2	27.4 LT	593065.422	81665.460
218	31+68.6	32.3 LT	593071.952	81660.731
219	31+68.8	27.4 LT	593071.952	81665.703
220	31+68.9	21.8 LT	593071.953	81671.272
221	31+74.6	32.3 LT	593077.952	81660.942
222	31+74.8	27.3 LT	593077.952	81665.926
223	31+74.9	21.7 LT	593077.952	81671.509
224	31+81.9	32.3 LT	593085.263	81661.200
225	31+81.9	27.3 LT	593085.078	81666.190
226	31+86.9	32.3 LT	593090.260	81661.376
227	31+87.2	27.3 LT	593090.350	81666.386
228	31+61.8	20.3 LT	593064.760	81672.490
229	31+69.0	20.3 LT	593071.953	81672.732
230	31+75.0	20.3 LT	593077.953	81672.934
231	31+88.9	20.3 LT	593091.838	81673.394

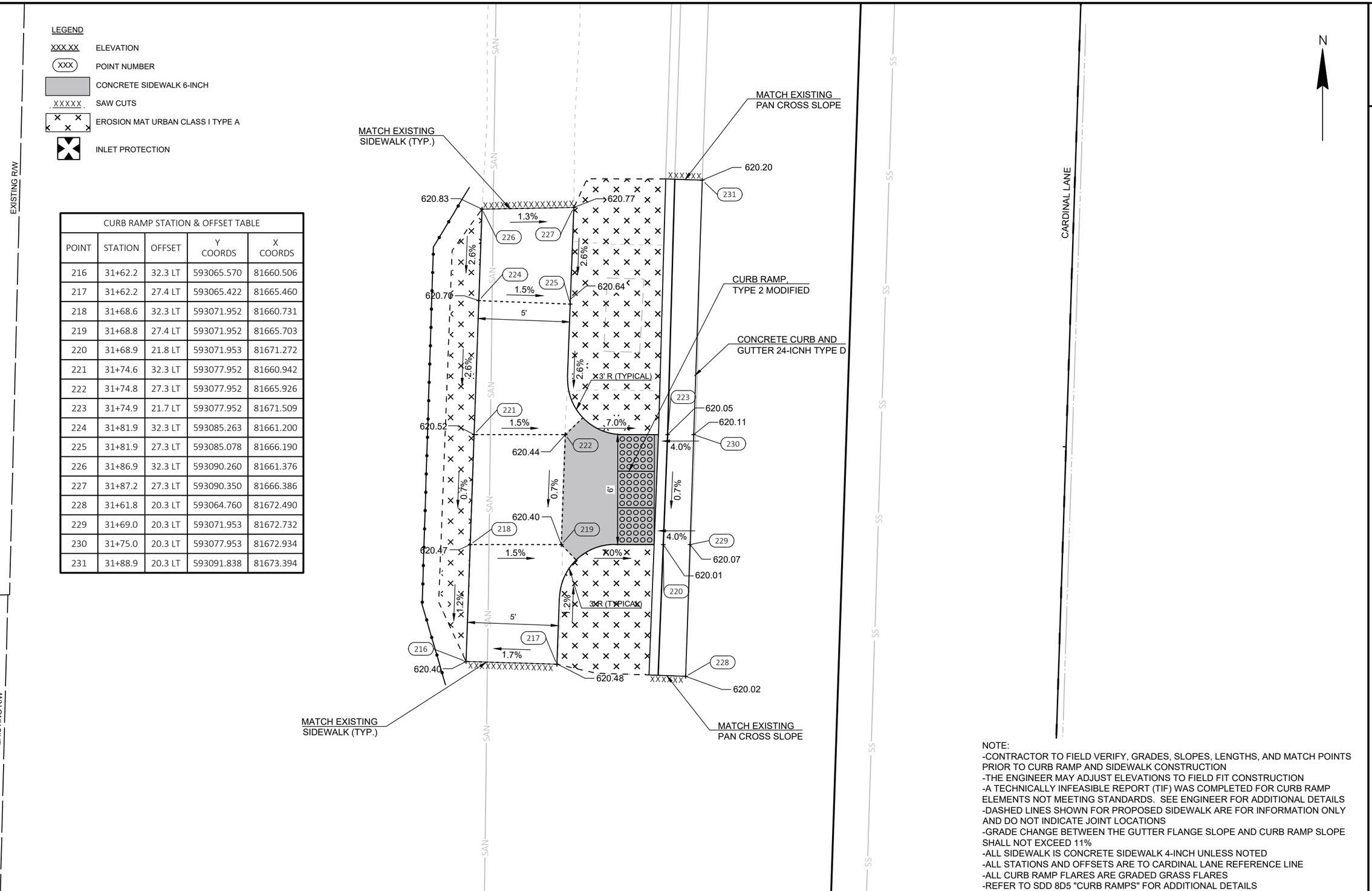

NOTE:
-CONTRACTOR TO FIELD VERIFY, GRADES, SLOPES, LENGTHS, AND MATCH POINTS PRIOR TO CURB RAMP AND SIDEWALK CONSTRUCTION
-THE ENGINEER MAY ADJUST ELEVATIONS TO FIELD FIT CONSTRUCTION
-A TECHNICALLY INFEASIBLE REPORT (TIF) WAS COMPLETED FOR CURB RAMP ELEMENTS NOT MEETING STANDARDS. SEE ENGINEER FOR ADDITIONAL DETAILS
-DASHED LINES SHOWN FOR PROPOSED SIDEWALK ARE FOR INFORMATION ONLY AND DO NOT INDICATE JOINT LOCATIONS
-GRADE CHANGE BETWEEN THE GUTTER FLANGE SLOPE AND CURB RAMP SLOPE SHALL NOT EXCEED 11%
-ALL SIDEWALK IS CONCRETE SIDEWALK 4-INCH UNLESS NOTED
-ALL STATIONS AND OFFSETS ARE TO CARDINAL LANE REFERENCE LINE
-ALL CURB RAMP FLARES ARE GRADED GRASS FLARES
-REFER TO SDD 8D5 "CURB RAMPS" FOR ADDITIONAL DETAILS

2

LEGEND

XXX.XX	ELEVATION
XXX	POINT NUMBER
	CONCRETE SIDEWALK 6-INCH
XXXXX	SAW CUTS
	EROSION MAT URBAN CLASS I TYPE A
	INLET PROTECTION

CURB RAMP STATION & OFFSET TABLE

POINT	STATION	OFFSET	Y COORDS	X COORDS
232	32+29.8	36.5 RT	593130.808	81731.541
233	32+34.4	30.4 RT	593135.611	81725.648
234	32+37.1	30.4 RT	593138.331	81725.709
235	32+37.2	36.4 RT	593138.197	81731.709
236	32+40.3	30.4 RT	593141.533	81725.782
237	32+40.4	36.4 RT	593141.398	81731.780
238	32+39.3	46.5 RT	593139.962	81741.906
239	32+39.9	41.6 RT	593140.738	81736.967
240	32+44.2	47.1 RT	593144.855	81742.674
241	32+44.8	42.2 RT	593145.630	81737.735
242	32+45.4	36.2 RT	593146.474	81731.772
243	32+45.3	30.3 RT	593146.532	81725.895
244	32+49.1	36.3 RT	593150.176	81731.957
245	32+49.8	31.3 RT	593150.969	81727.020
246	32+54.1	36.9 RT	593155.113	81732.750
247	32+54.7	31.9 RT	593155.906	81727.813
248	32+59.1	37.5 RT	593160.050	81733.542
249	32+59.7	32.6 RT	593160.842	81728.605
250	32+64.0	38.1 RT	593164.987	81734.334
251	32+64.6	33.2 RT	593165.779	81729.398
252	32+69.6	38.6 RT	593170.562	81734.940
253	32+69.6	33.8 RT	593170.716	81730.190
254	32+24.6	52.1 RT	593125.122	81746.953
255	32+28.5	35.7 RT	593129.529	81730.757
256	32+33.3	29.4 RT	593134.585	81724.553
257	32+52.8	20.6 RT	593154.374	81716.448
258	32+54.6	50.6 RT	593155.104	81746.439
474	32+38.7	51.5 RT	593139.187	81746.846
475	32+38.0	57.1 RT	593138.308	81752.446
476	32+42.9	57.1 RT	593143.287	81752.551
477	32+43.6	52.1 RT	593144.079	81747.614

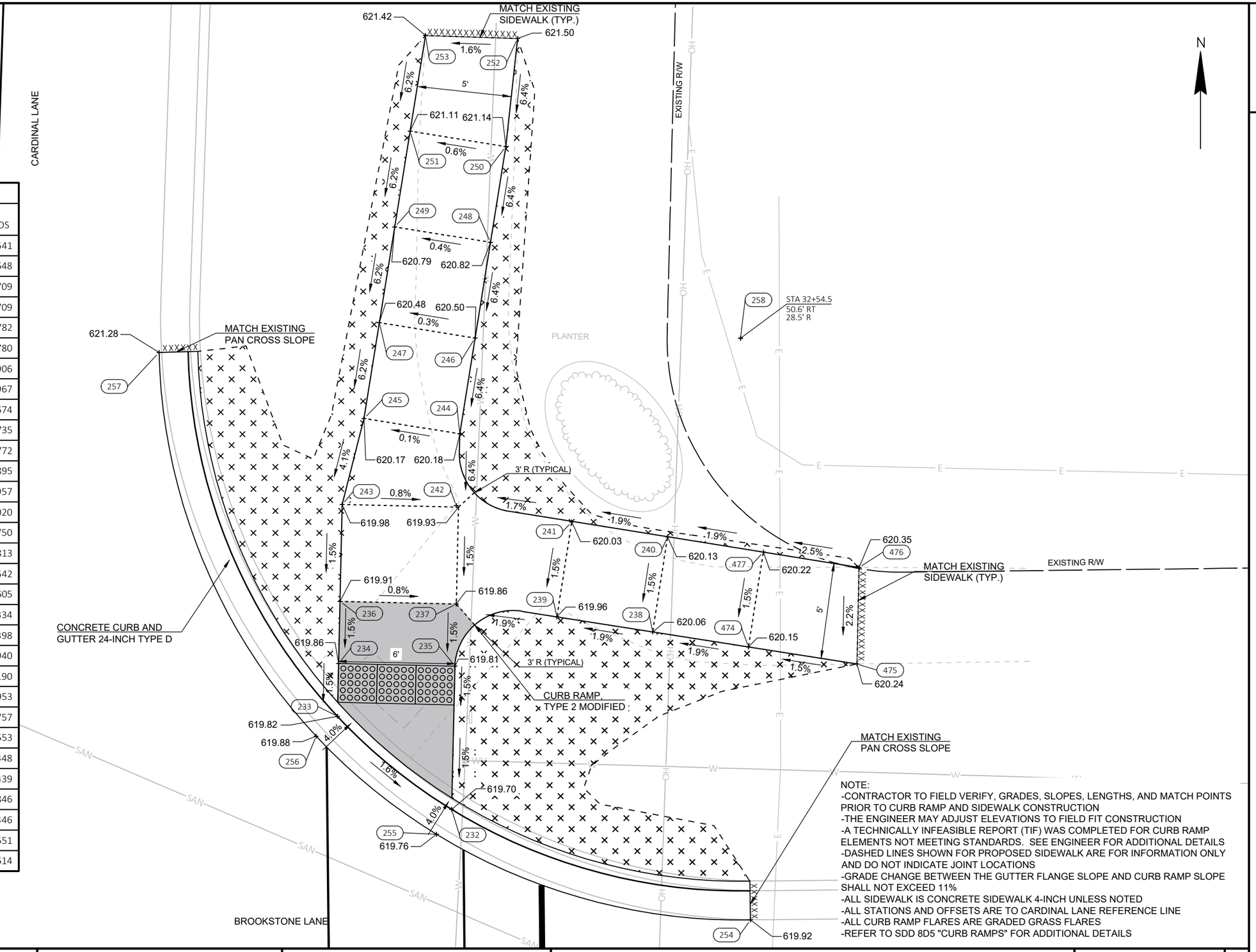

NOTE:
-CONTRACTOR TO FIELD VERIFY, GRADES, SLOPES, LENGTHS, AND MATCH POINTS PRIOR TO CURB RAMP AND SIDEWALK CONSTRUCTION
-THE ENGINEER MAY ADJUST ELEVATIONS TO FIELD FIT CONSTRUCTION
-A TECHNICALLY INFEASIBLE REPORT (TIF) WAS COMPLETED FOR CURB RAMP ELEMENTS NOT MEETING STANDARDS. SEE ENGINEER FOR ADDITIONAL DETAILS
-DASHED LINES SHOWN FOR PROPOSED SIDEWALK ARE FOR INFORMATION ONLY AND DO NOT INDICATE JOINT LOCATIONS
-GRADE CHANGE BETWEEN THE GUTTER FLANGE SLOPE AND CURB RAMP SLOPE SHALL NOT EXCEED 11%
-ALL SIDEWALK IS CONCRETE SIDEWALK 4-INCH UNLESS NOTED
-ALL STATIONS AND OFFSETS ARE TO CARDINAL LANE REFERENCE LINE
-ALL CURB RAMP FLARES ARE GRADED GRASS FLARES
-REFER TO SDD 8D5 "CURB RAMPS" FOR ADDITIONAL DETAILS

PROJECT NO: 9269-10-70	HWY: CARDINAL LANE	COUNTY: BROWN	CURB RAMP DETAILS - BROOKSTONE LANE NE QUADRANT	SHEET 23	E

FILE NAME : I:\45\450572 VILLAGE OF HOWARD CARDINAL LANE\C3D\SHEETS\021301-CR.DWG
LAYOUT NAME - 021310-cr
PLOT DATE : 8/30/2022 8:45 AM PLOT BY : VERVILLE, PHILLIP PLOT NAME : PLOT SCALE : 1 IN:5 FT

WISDOT/CADDS SHEET 42

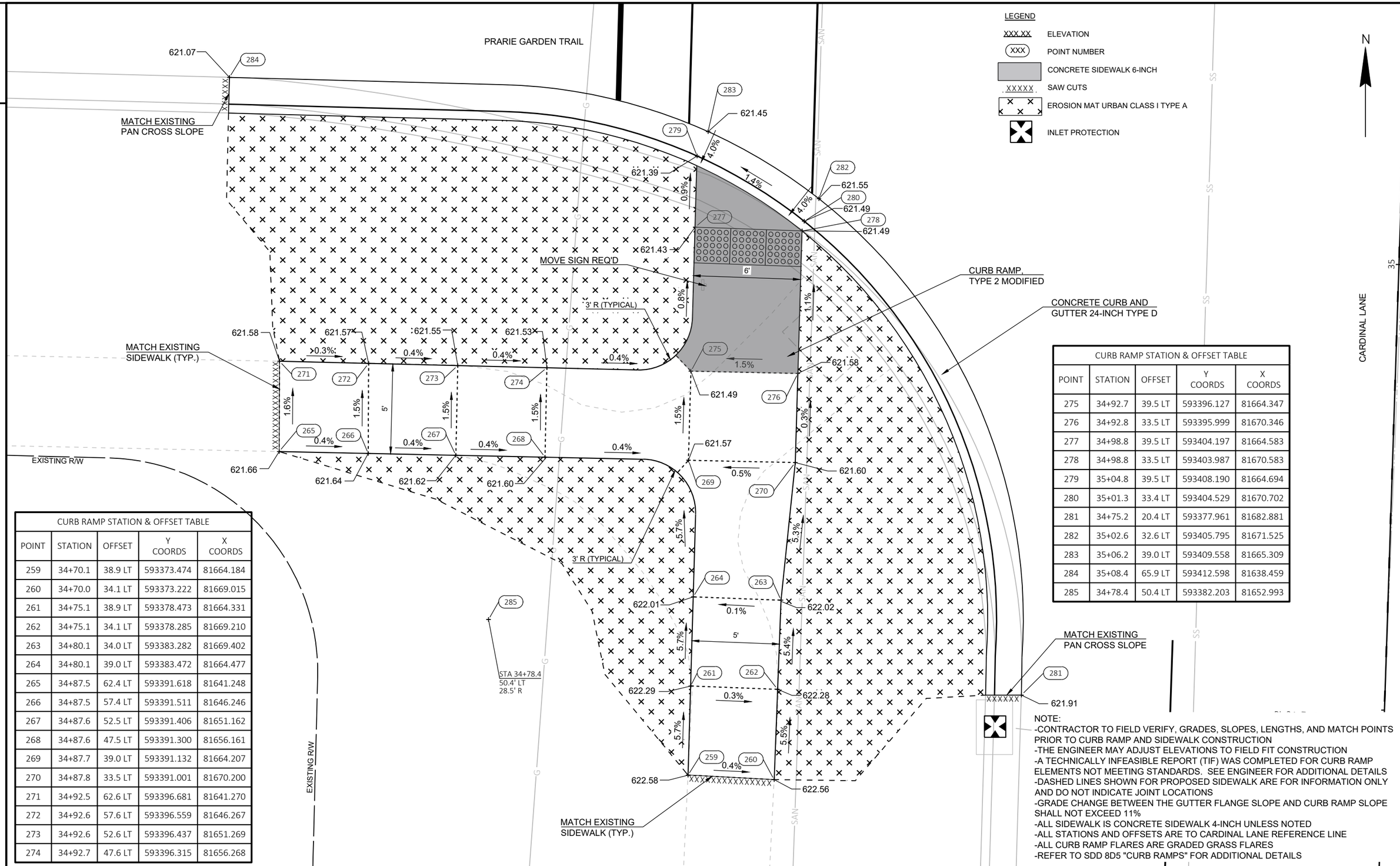

CURB RAMP STATION & OFFSET TABLE				
POINT	STATION	OFFSET	Y COORDS	X COORDS
275	34+92.7	39.5 LT	593396.127	81664.347
276	34+92.8	33.5 LT	593395.999	81670.346
277	34+98.8	39.5 LT	593404.197	81664.583
278	34+98.8	33.5 LT	593403.987	81670.583
279	35+04.8	39.5 LT	593408.190	81664.694
280	35+01.3	33.4 LT	593404.529	81670.702
281	34+75.2	20.4 LT	593377.961	81682.881
282	35+02.6	32.6 LT	593405.795	81671.525
283	35+06.2	39.0 LT	593409.558	81665.309
284	35+08.4	65.9 LT	593412.598	81638.459
285	34+78.4	50.4 LT	593382.203	81652.993

CURB RAMP STATION & OFFSET TABLE				
POINT	STATION	OFFSET	Y COORDS	X COORDS
259	34+70.1	38.9 LT	593373.474	81664.184
260	34+70.0	34.1 LT	593373.222	81669.015
261	34+75.1	38.9 LT	593378.473	81664.331
262	34+75.1	34.1 LT	593378.285	81669.210
263	34+80.1	34.0 LT	593383.282	81669.402
264	34+80.1	39.0 LT	593383.472	81664.477
265	34+87.5	62.4 LT	593391.618	81641.248
266	34+87.5	57.4 LT	593391.511	81646.246
267	34+87.6	52.5 LT	593391.406	81651.162
268	34+87.6	47.5 LT	593391.300	81656.161
269	34+87.7	39.0 LT	593391.132	81664.207
270	34+87.8	33.5 LT	593391.001	81670.200
271	34+92.5	62.6 LT	593396.681	81641.270
272	34+92.6	57.6 LT	593396.559	81646.267
273	34+92.6	52.6 LT	593396.437	81651.269
274	34+92.7	47.6 LT	593396.315	81656.268

NOTE:
-CONTRACTOR TO FIELD VERIFY, GRADES, SLOPES, LENGTHS, AND MATCH POINTS PRIOR TO CURB RAMP AND SIDEWALK CONSTRUCTION
-THE ENGINEER MAY ADJUST ELEVATIONS TO FIELD FIT CONSTRUCTION
-A TECHNICALLY INFEASIBLE REPORT (TIF) WAS COMPLETED FOR CURB RAMP ELEMENTS NOT MEETING STANDARDS. SEE ENGINEER FOR ADDITIONAL DETAILS
-DASHED LINES SHOWN FOR PROPOSED SIDEWALK ARE FOR INFORMATION ONLY AND DO NOT INDICATE JOINT LOCATIONS
-GRADE CHANGE BETWEEN THE GUTTER FLANGE SLOPE AND CURB RAMP SLOPE SHALL NOT EXCEED 11%
-ALL SIDEWALK IS CONCRETE SIDEWALK 4-INCH UNLESS NOTED
-ALL STATIONS AND OFFSETS ARE TO CARDINAL LANE REFERENCE LINE
-ALL CURB RAMP FLARES ARE GRADED GRASS FLARES
-REFER TO SDD 8D5 "CURB RAMPS" FOR ADDITIONAL DETAILS

PROJECT NO: 9269-10-70	HWY: CARDINAL LANE	COUNTY: BROWN	CURB RAMP DETAILS - PRARIE GARDEN TRAIL SW QUADRANT	SHEET 24	E

2

CURB RAMP STATION & OFFSET TABLE				
POINT	STATION	OFFSET	Y COORDS	X COORDS
286	35+39.2	39.7 LT	593442.619	81665.675
287	35+42.5	33.7 LT	593445.685	81671.800
288	35+45.0	39.7 LT	593446.420	81665.819
289	35+45.1	33.7 LT	593446.300	81671.818
290	35+51.5	50.7 LT	593455.246	81655.057
291	35+51.6	44.6 LT	593455.131	81661.123
292	35+51.2	39.7 LT	593454.537	81666.057
293	35+51.2	33.7 LT	593454.423	81672.056
294	35+51.4	25.6 LT	593454.269	81680.190
295	35+51.3	28.1 LT	593454.280	81679.604
296	35+56.5	50.8 LT	593460.245	81655.152
297	35+56.6	44.7 LT	593460.130	81661.218
298	35+57.5	39.7 LT	593460.844	81666.241
299	35+57.8	33.7 LT	593460.921	81672.246
300	35+57.3	28.2 LT	593460.279	81679.716
301	35+57.4	22.9 LT	593460.216	81683.033
302	35+64.6	39.3 LT	593468.004	81666.924
303	35+64.7	34.3 LT	593467.857	81671.929
304	35+69.6	39.3 LT	593473.002	81667.054
305	35+69.7	34.3 LT	593472.856	81672.052
306	35+74.3	39.2 LT	593477.656	81667.352
307	35+74.3	34.2 LT	593477.472	81672.266
308	35+35.6	72.1 LT	593440.047	81633.187
309	35+37.8	39.1 LT	593441.207	81666.181
310	35+41.3	32.8 LT	593444.435	81672.628
311	35+47.2	29.2 LT	593450.230	81676.431
312	35+50.6	24.3 LT	593453.470	81681.460
313	35+57.0	21.5 LT	593459.730	81684.452
314	35+70.7	20.2 LT	593473.420	81686.227
315	35+65.8	50.2 LT	593469.452	81656.071

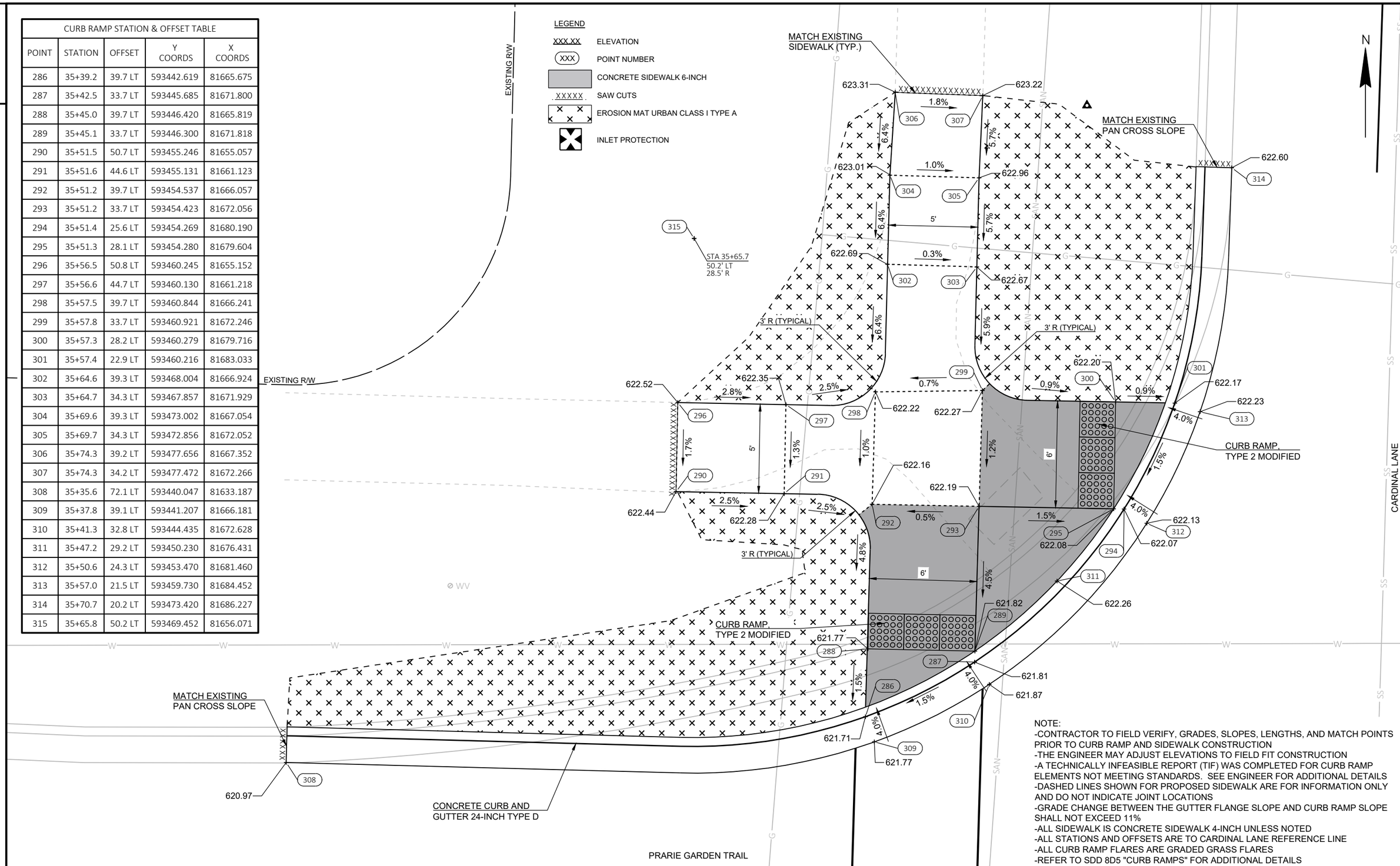

NOTE:
-CONTRACTOR TO FIELD VERIFY, GRADES, SLOPES, LENGTHS, AND MATCH POINTS PRIOR TO CURB RAMP AND SIDEWALK CONSTRUCTION
-THE ENGINEER MAY ADJUST ELEVATIONS TO FIELD FIT CONSTRUCTION
-A TECHNICALLY INFEASIBLE REPORT (TIF) WAS COMPLETED FOR CURB RAMP ELEMENTS NOT MEETING STANDARDS. SEE ENGINEER FOR ADDITIONAL DETAILS
-DASHED LINES SHOWN FOR PROPOSED SIDEWALK ARE FOR INFORMATION ONLY AND DO NOT INDICATE JOINT LOCATIONS
-GRADE CHANGE BETWEEN THE GUTTER FLANGE SLOPE AND CURB RAMP SLOPE SHALL NOT EXCEED 11%
-ALL SIDEWALK IS CONCRETE SIDEWALK 4-INCH UNLESS NOTED
-ALL STATIONS AND OFFSETS ARE TO CARDINAL LANE REFERENCE LINE
-ALL CURB RAMP FLARES ARE GRADED GRASS FLARES
-REFER TO SDD 8D5 "CURB RAMPS" FOR ADDITIONAL DETAILS

2

PROJECT NO: 9269-10-70	HWY: CARDINAL LANE	COUNTY: BROWN	CURB RAMP DETAILS - PRARIE GARDEN TRAIL NW QUADRANT	SHEET 25	E

2

CURB RAMP STATION & OFFSET TABLE				
POINT	STATION	OFFSET	Y COORDS	X COORDS
316	35+42.7	38.7 RT	593443.554	81744.130
317	35+42.7	33.7 RT	593443.649	81739.130
318	35+47.7	38.7 RT	593448.547	81744.293
319	35+47.7	33.7 RT	593448.710	81739.295
320	35+52.2	38.7 RT	593453.050	81744.439
321	35+52.2	33.7 RT	593453.144	81739.440
322	35+52.0	22.2 RT	593453.363	81727.935
323	35+58.2	38.7 RT	593459.047	81744.635
324	35+58.2	33.7 RT	593459.142	81739.636
325	35+58.0	22.2 RT	593459.359	81728.130
326	35+58.0	20.7 RT	593459.386	81726.630
327	35+63.0	20.7 RT	593464.386	81726.792
328	35+62.1	38.6 RT	593462.941	81744.698
329	35+62.2	33.7 RT	593463.203	81739.729
330	35+42.4	20.7 RT	593443.826	81726.124
331	35+52.0	20.7 RT	593453.392	81726.435

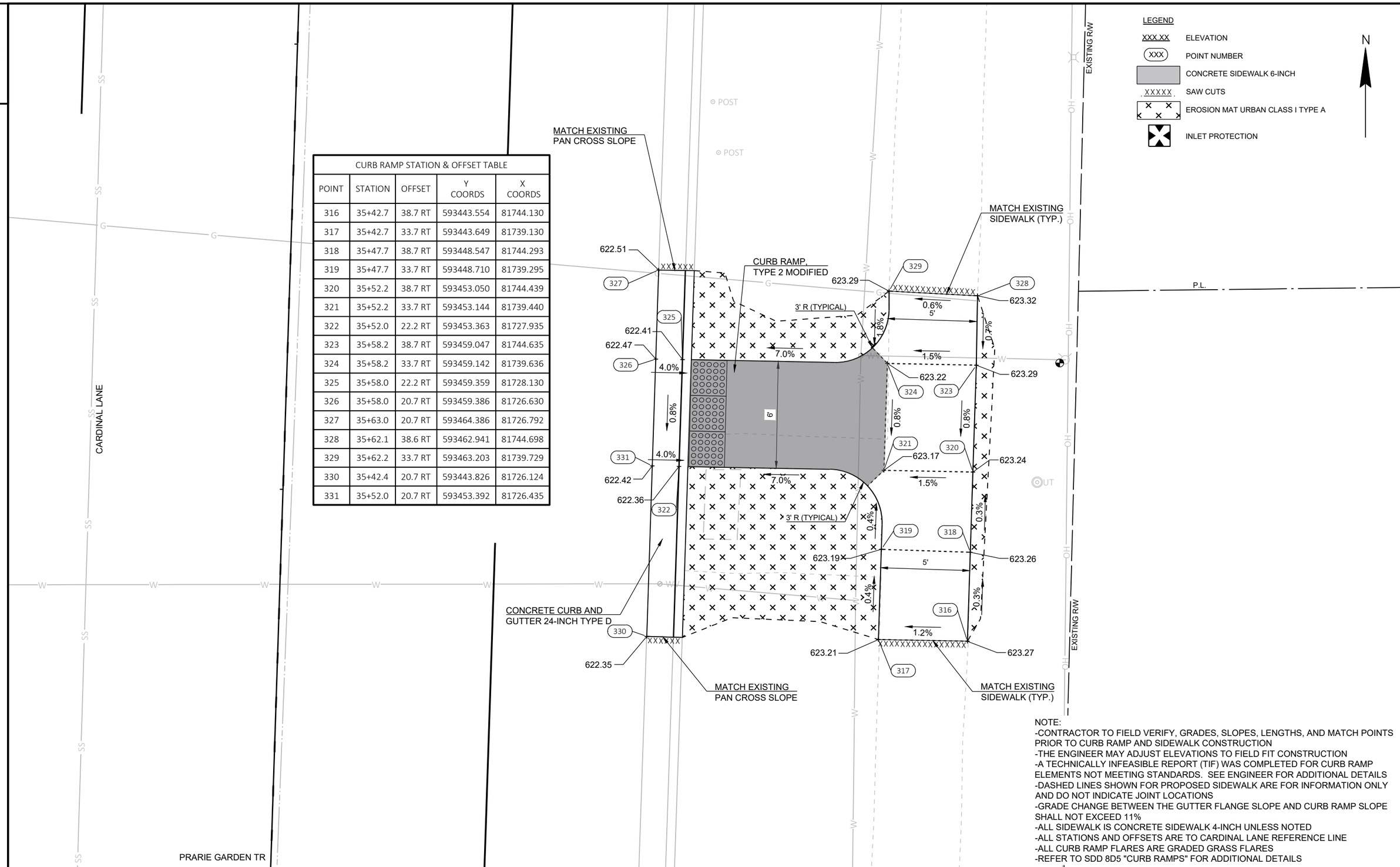

NOTE:
-CONTRACTOR TO FIELD VERIFY, GRADES, SLOPES, LENGTHS, AND MATCH POINTS PRIOR TO CURB RAMP AND SIDEWALK CONSTRUCTION
-THE ENGINEER MAY ADJUST ELEVATIONS TO FIELD FIT CONSTRUCTION
-A TECHNICALLY INFEASIBLE REPORT (TIF) WAS COMPLETED FOR CURB RAMP ELEMENTS NOT MEETING STANDARDS. SEE ENGINEER FOR ADDITIONAL DETAILS
-DASHED LINES SHOWN FOR PROPOSED SIDEWALK ARE FOR INFORMATION ONLY AND DO NOT INDICATE JOINT LOCATIONS
-GRADE CHANGE BETWEEN THE GUTTER FLANGE SLOPE AND CURB RAMP SLOPE SHALL NOT EXCEED 11%
-ALL SIDEWALK IS CONCRETE SIDEWALK 4-INCH UNLESS NOTED
-ALL STATIONS AND OFFSETS ARE TO CARDINAL LANE REFERENCE LINE
-ALL CURB RAMP FLARES ARE GRADED GRASS FLARES
-REFER TO SDD 8D5 "CURB RAMPS" FOR ADDITIONAL DETAILS

PROJECT NO: 9269-10-70	HWY: CARDINAL LANE	COUNTY: BROWN	CURB RAMP DETAILS - PRARIE GARDEN TRAIL NE QUADRANT	SHEET 26	E

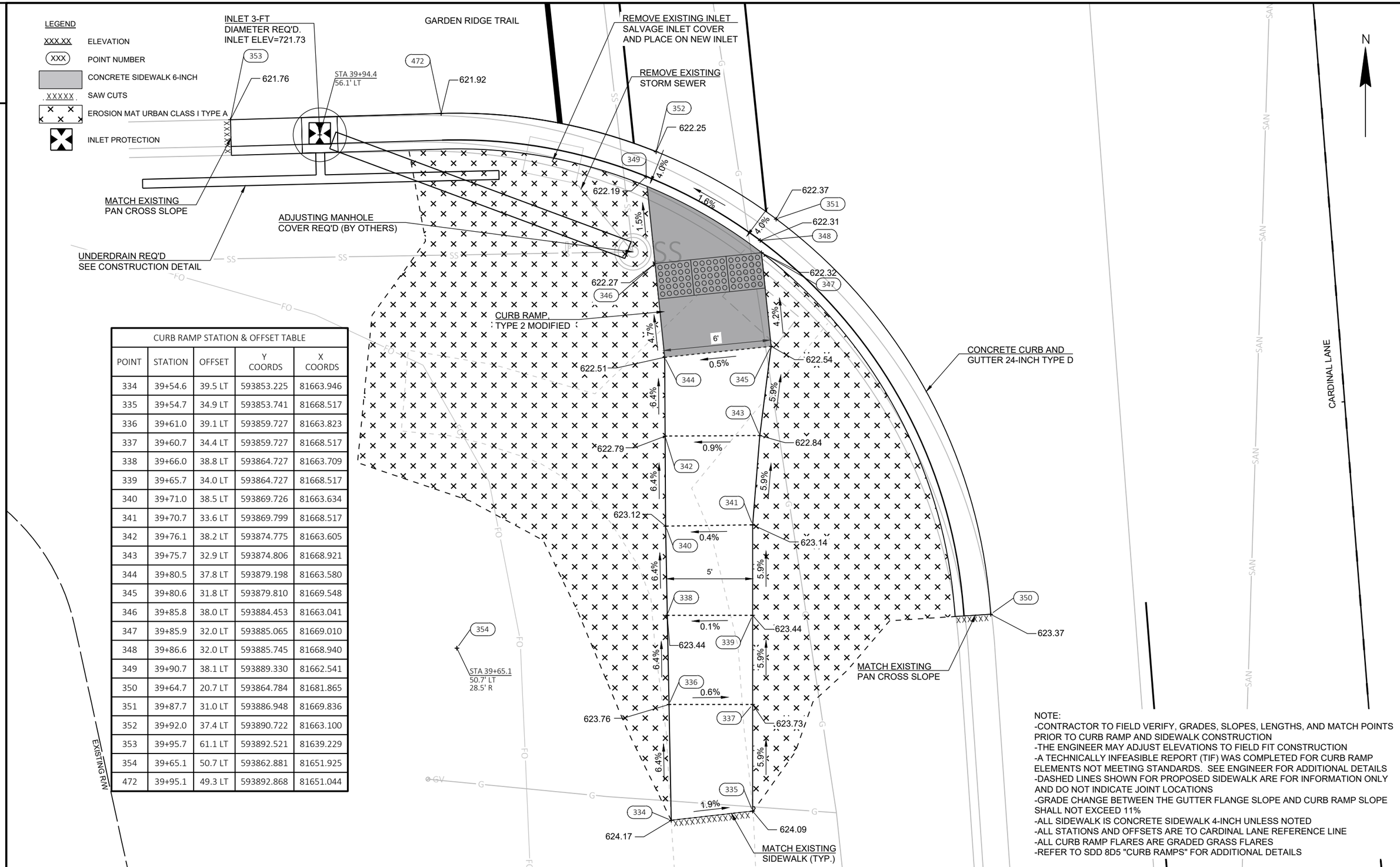

CURB RAMP STATION & OFFSET TABLE				
POINT	STATION	OFFSET	Y COORDS	X COORDS
334	39+54.6	39.5 LT	593853.225	81663.946
335	39+54.7	34.9 LT	593853.741	81668.517
336	39+61.0	39.1 LT	593859.727	81663.823
337	39+60.7	34.4 LT	593859.727	81668.517
338	39+66.0	38.8 LT	593864.727	81663.709
339	39+65.7	34.0 LT	593864.727	81668.517
340	39+71.0	38.5 LT	593869.726	81663.634
341	39+70.7	33.6 LT	593869.799	81668.517
342	39+76.1	38.2 LT	593874.775	81663.605
343	39+75.7	32.9 LT	593874.806	81668.921
344	39+80.5	37.8 LT	593879.198	81663.580
345	39+80.6	31.8 LT	593879.810	81669.548
346	39+85.8	38.0 LT	593884.453	81663.041
347	39+85.9	32.0 LT	593885.065	81669.010
348	39+86.6	32.0 LT	593885.745	81668.940
349	39+90.7	38.1 LT	593889.330	81662.541
350	39+64.7	20.7 LT	593864.784	81681.865
351	39+87.7	31.0 LT	593886.948	81669.836
352	39+92.0	37.4 LT	593890.722	81663.100
353	39+95.7	61.1 LT	593892.521	81639.229
354	39+65.1	50.7 LT	593862.881	81651.925
472	39+95.1	49.3 LT	593892.868	81651.044

NOTE:
-CONTRACTOR TO FIELD VERIFY, GRADES, SLOPES, LENGTHS, AND MATCH POINTS PRIOR TO CURB RAMP AND SIDEWALK CONSTRUCTION
-THE ENGINEER MAY ADJUST ELEVATIONS TO FIELD FIT CONSTRUCTION
-A TECHNICALLY INFEASIBLE REPORT (TIF) WAS COMPLETED FOR CURB RAMP ELEMENTS NOT MEETING STANDARDS. SEE ENGINEER FOR ADDITIONAL DETAILS
-DASHED LINES SHOWN FOR PROPOSED SIDEWALK ARE FOR INFORMATION ONLY AND DO NOT INDICATE JOINT LOCATIONS
-GRADE CHANGE BETWEEN THE GUTTER FLANGE SLOPE AND CURB RAMP SLOPE SHALL NOT EXCEED 11%
-ALL SIDEWALK IS CONCRETE SIDEWALK 4-INCH UNLESS NOTED
-ALL STATIONS AND OFFSETS ARE TO CARDINAL LANE REFERENCE LINE
-ALL CURB RAMP FLARES ARE GRADED GRASS FLARES
-REFER TO SDD 8D5 "CURB RAMPS" FOR ADDITIONAL DETAILS

2

CURB RAMP STATION & OFFSET TABLE				
POINT	STATION	OFFSET	Y COORDS	X COORDS
355	40+32.2	39.2 LT	593931.031	81658.267
356	40+35.9	33.3 LT	593935.169	81663.874
357	40+38.2	39.4 LT	593935.172	81657.843
358	40+38.5	33.4 LT	593935.796	81663.810
359	40+42.6	39.6 LT	593941.575	81657.186
360	40+42.6	33.6 LT	593941.919	81663.183
361	40+42.5	29.8 LT	593942.245	81668.923
362	40+42.5	27.2 LT	593942.283	81669.523
363	40+48.5	38.8 LT	593947.652	81657.569
364	40+48.5	33.8 LT	593947.935	81662.566
365	40+48.5	29.8 LT	593948.236	81668.543
366	40+48.5	24.1 LT	593948.482	81672.222
367	40+54.7	39.1 LT	593953.856	81656.934
368	40+54.9	34.1 LT	593954.366	81661.907
369	40+59.6	39.3 LT	593958.830	81656.425
370	40+59.8	34.3 LT	593959.340	81661.397
371	40+64.6	39.5 LT	593963.974	81655.898
372	40+64.7	34.5 LT	593964.316	81660.886
373	40+69.6	39.6 LT	593968.963	81655.556
374	40+69.6	34.6 LT	593969.305	81660.544
375	40+28.0	48.2 LT	593926.139	81649.534
376	40+30.8	38.5 LT	593929.730	81659.014
377	40+34.7	32.4 LT	593934.071	81664.897
378	40+39.6	30.1 LT	593939.117	81666.802
379	40+41.7	26.0 LT	593941.535	81670.824
380	40+47.9	22.7 LT	593948.039	81673.655
381	40+58.6	20.7 LT	593958.856	81675.051
382	40+59.0	52.7 LT	593957.481	81643.080

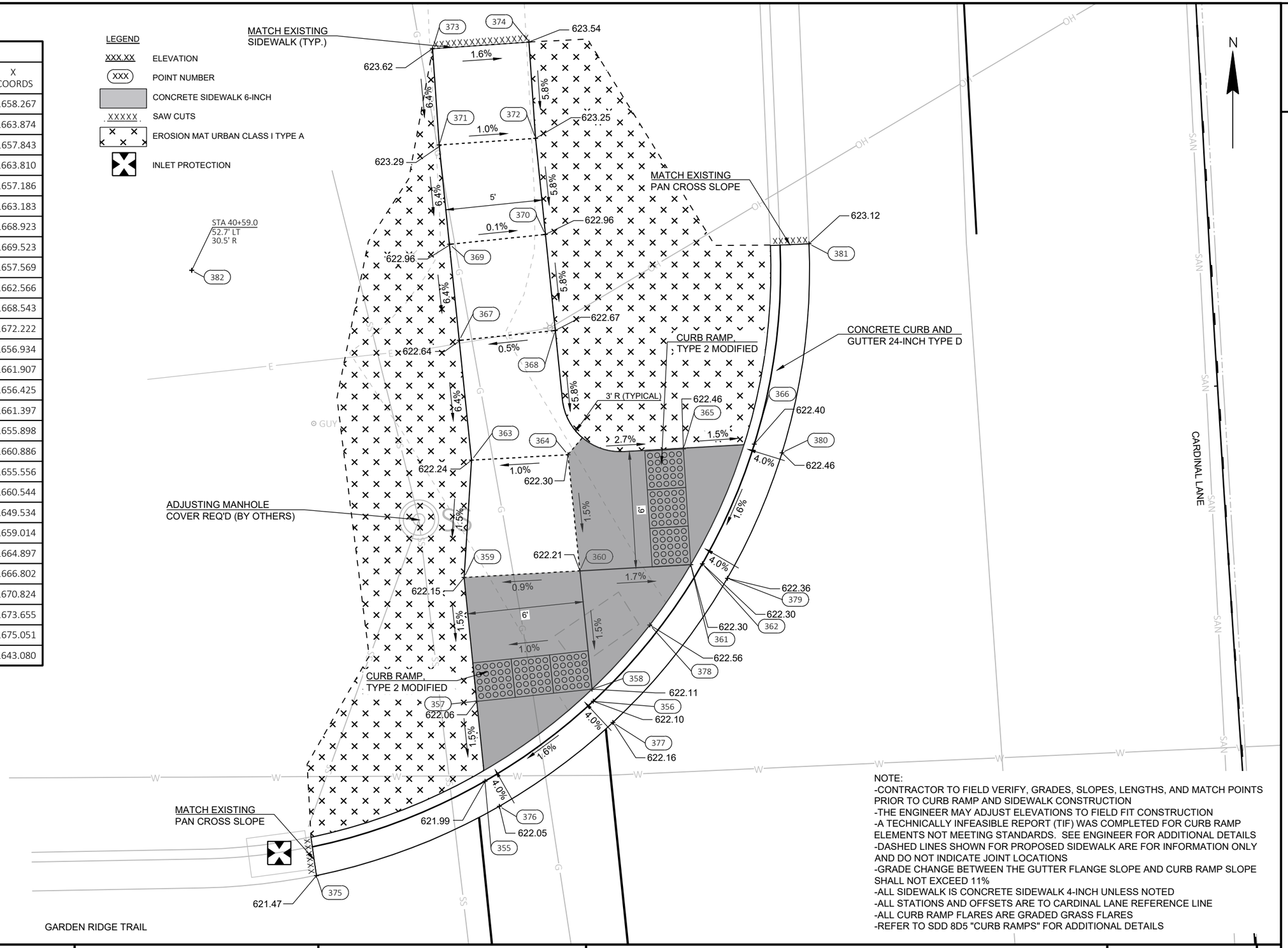

NOTE:
-CONTRACTOR TO FIELD VERIFY, GRADES, SLOPES, LENGTHS, AND MATCH POINTS PRIOR TO CURB RAMP AND SIDEWALK CONSTRUCTION
-THE ENGINEER MAY ADJUST ELEVATIONS TO FIELD FIT CONSTRUCTION
-A TECHNICALLY INFEASIBLE REPORT (TIF) WAS COMPLETED FOR CURB RAMP ELEMENTS NOT MEETING STANDARDS. SEE ENGINEER FOR ADDITIONAL DETAILS
-DASHED LINES SHOWN FOR PROPOSED SIDEWALK ARE FOR INFORMATION ONLY AND DO NOT INDICATE JOINT LOCATIONS
-GRADE CHANGE BETWEEN THE GUTTER FLANGE SLOPE AND CURB RAMP SLOPE SHALL NOT EXCEED 11%
-ALL SIDEWALK IS CONCRETE SIDEWALK 4-INCH UNLESS NOTED
-ALL STATIONS AND OFFSETS ARE TO CARDINAL LANE REFERENCE LINE
-ALL CURB RAMP FLARES ARE GRADED GRASS FLARES
-REFER TO SDD 8D5 "CURB RAMPS" FOR ADDITIONAL DETAILS

2

PROJECT NO: 9269-10-70	HWY: CARDINAL LANE	COUNTY: BROWN	CURB RAMP DETAILS - GARDEN RIDGE TRAIL NW QUADRANT	SHEET 28	E

LEGEND

- XXX.XX — ELEVATION
- XXX — POINT NUMBER
- CONCRETE SIDEWALK 6-INCH
- XXXXX — SAW CUTS
- EROSION MAT URBAN CLASS I TYPE A
- INLET PROTECTION

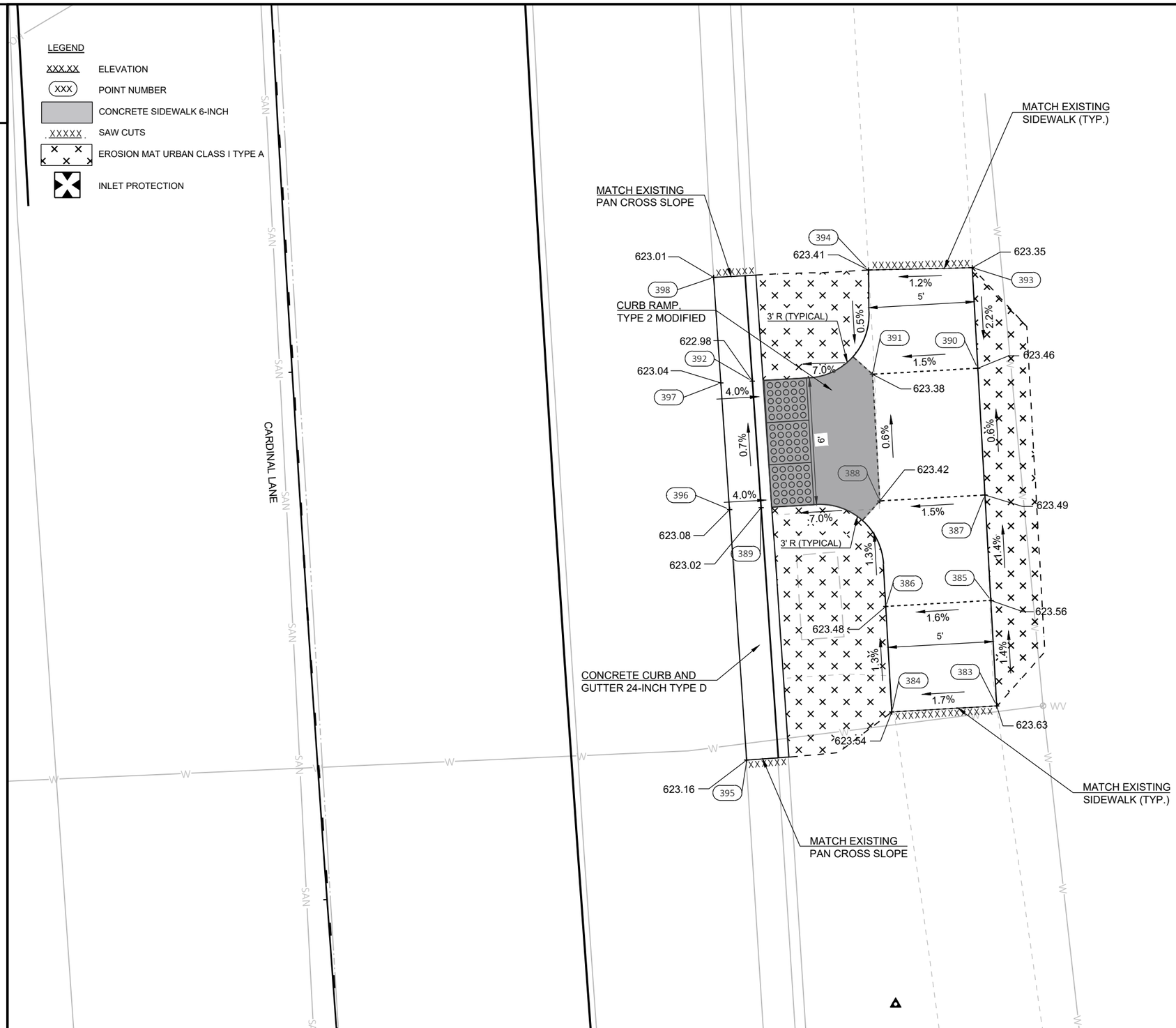

N

CURB RAMP STATION & OFFSET TABLE				
POINT	STATION	OFFSET	Y COORDS	X COORDS
383	40+32.0	32.3 RT	593935.709	81729.563
384	40+32.0	27.3 RT	593935.424	81724.594
385	40+37.0	32.3 RT	593940.702	81729.300
386	40+37.1	27.3 RT	593940.415	81724.308
387	40+42.1	32.4 RT	593945.688	81729.000
388	40+42.1	27.4 RT	593945.407	81724.022
389	40+42.2	21.8 RT	593945.085	81718.406
390	40+48.2	32.4 RT	593951.683	81728.662
391	40+48.2	27.4 RT	593951.397	81723.679
392	40+48.2	21.7 RT	593951.071	81717.992
393	40+53.0	32.4 RT	593956.440	81728.404
394	40+53.2	27.5 RT	593956.332	81723.496
395	40+30.2	20.3 RT	593933.150	81717.727
396	40+42.2	20.3 RT	593945.000	81716.914
397	40+48.2	20.2 RT	593950.986	81716.503
398	40+53.3	20.2 RT	593955.978	81716.161

NOTE:
-CONTRACTOR TO FIELD VERIFY, GRADES, SLOPES, LENGTHS, AND MATCH POINTS PRIOR TO CURB RAMP AND SIDEWALK CONSTRUCTION
-THE ENGINEER MAY ADJUST ELEVATIONS TO FIELD FIT CONSTRUCTION
-A TECHNICALLY INFEASIBLE REPORT (TIF) WAS COMPLETED FOR CURB RAMP ELEMENTS NOT MEETING STANDARDS. SEE ENGINEER FOR ADDITIONAL DETAILS
-DASHED LINES SHOWN FOR PROPOSED SIDEWALK ARE FOR INFORMATION ONLY AND DO NOT INDICATE JOINT LOCATIONS
-GRADE CHANGE BETWEEN THE GUTTER FLANGE SLOPE AND CURB RAMP SLOPE SHALL NOT EXCEED 11%
-ALL SIDEWALK IS CONCRETE SIDEWALK 4-INCH UNLESS NOTED
-ALL STATIONS AND OFFSETS ARE TO CARDINAL LANE REFERENCE LINE
-ALL CURB RAMP FLARES ARE GRADED GRASS FLARES
-REFER TO SDD 8D5 "CURB RAMPS" FOR ADDITIONAL DETAILS

2

LEGEND

XXX.XX	ELEVATION
XXX	POINT NUMBER
	CONCRETE SIDEWALK 6-INCH
XXXXX	SAW CUTS
	EROSION MAT URBAN CLASS I TYPE A
	INLET PROTECTION

CURB RAMP STATION & OFFSET TABLE

POINT	STATION	OFFSET	Y COORDS	X COORDS
401	43+94.1	39.9 LT	594296.030	81654.735
402	43+94.1	34.9 LT	594295.973	81659.735
403	43+99.1	40.0 LT	594301.030	81654.792
404	43+99.1	35.0 LT	594300.977	81659.791
405	44+04.1	40.0 LT	594306.029	81654.848
406	44+04.1	35.0 LT	594305.977	81659.848
407	44+04.1	22.4 LT	594305.844	81672.435
408	44+10.1	40.0 LT	594312.029	81654.916
409	44+10.1	35.0 LT	594311.976	81659.916
410	44+10.1	22.4 LT	594311.843	81672.527
411	44+15.1	40.0 LT	594317.086	81654.973
412	44+15.2	35.0 LT	594317.029	81659.973
413	44+20.1	40.0 LT	594322.028	81655.029
414	44+20.1	35.0 LT	594321.972	81660.029
415	43+99.2	20.9 LT	594300.829	81673.855
416	44+04.2	20.9 LT	594305.898	81673.897
417	44+10.2	21.0 LT	594311.828	81673.946
418	44+19.4	21.0 LT	594321.076	81674.023

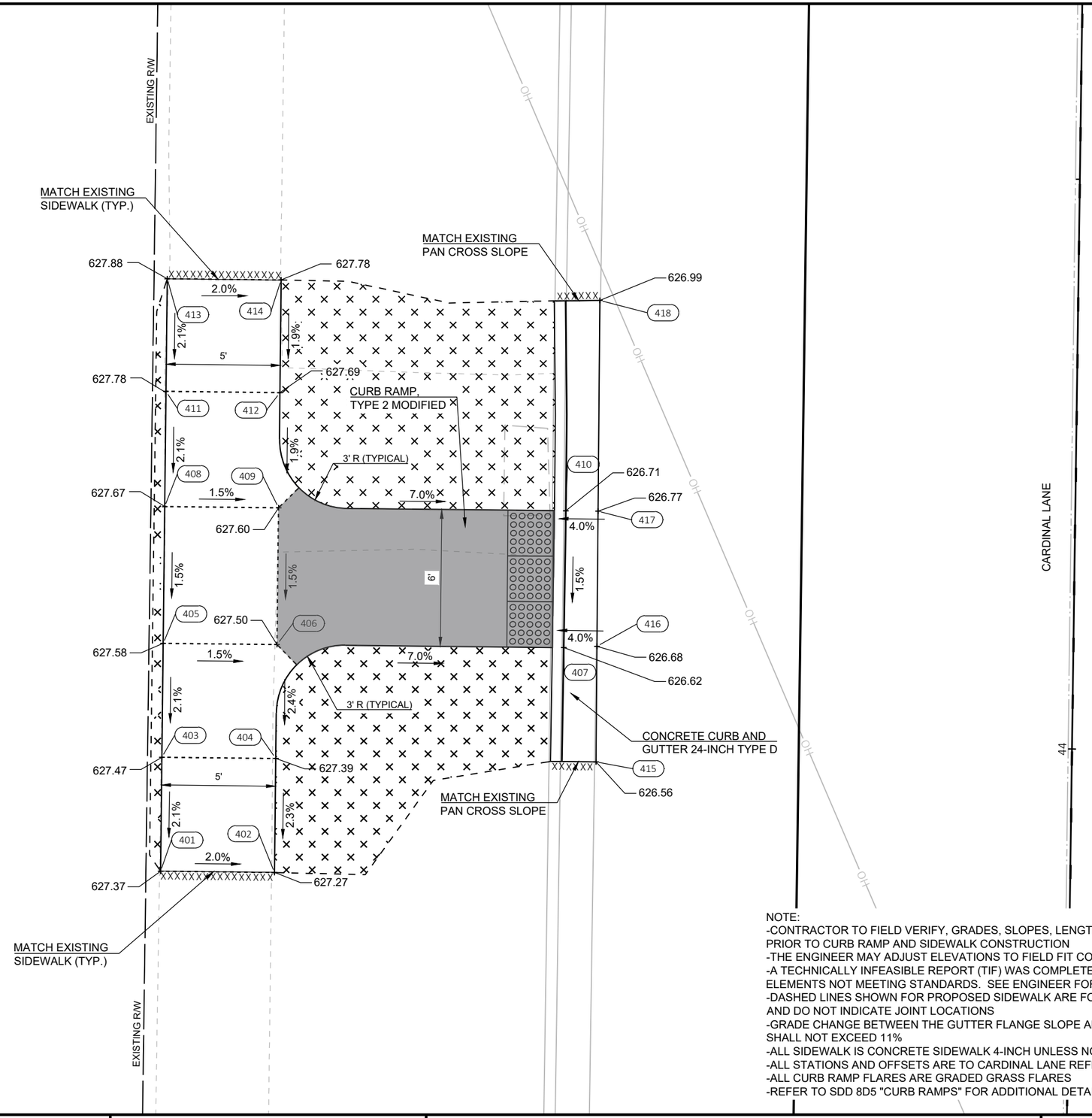

NOTE:
-CONTRACTOR TO FIELD VERIFY, GRADES, SLOPES, LENGTHS, AND MATCH POINTS PRIOR TO CURB RAMP AND SIDEWALK CONSTRUCTION
-THE ENGINEER MAY ADJUST ELEVATIONS TO FIELD FIT CONSTRUCTION
-A TECHNICALLY INFEASIBLE REPORT (TIF) WAS COMPLETED FOR CURB RAMP ELEMENTS NOT MEETING STANDARDS. SEE ENGINEER FOR ADDITIONAL DETAILS
-DASHED LINES SHOWN FOR PROPOSED SIDEWALK ARE FOR INFORMATION ONLY AND DO NOT INDICATE JOINT LOCATIONS
-GRADE CHANGE BETWEEN THE GUTTER FLANGE SLOPE AND CURB RAMP SLOPE SHALL NOT EXCEED 11%
-ALL SIDEWALK IS CONCRETE SIDEWALK 4-INCH UNLESS NOTED
-ALL STATIONS AND OFFSETS ARE TO CARDINAL LANE REFERENCE LINE
-ALL CURB RAMP FLARES ARE GRADED GRASS FLARES
-REFER TO SDD 8D5 "CURB RAMPS" FOR ADDITIONAL DETAILS

2

PROJECT NO: 9269-10-70	HWY: CARDINAL LANE	COUNTY: BROWN	CURB RAMP DETAILS - GOLDEN EAGLE DRIVE SW QUADRANT	SHEET 30	E

LEGEND

XXX.XX ELEVATION

(XXX) POINT NUMBER

CONCRETE SIDEWALK 6-INCH

XXXXX SAW CUTS

EROSION MAT URBAN CLASS I TYPE A

INLET PROTECTION

CARDINAL LANE

GOLDEN EAGLE DRIVE

N

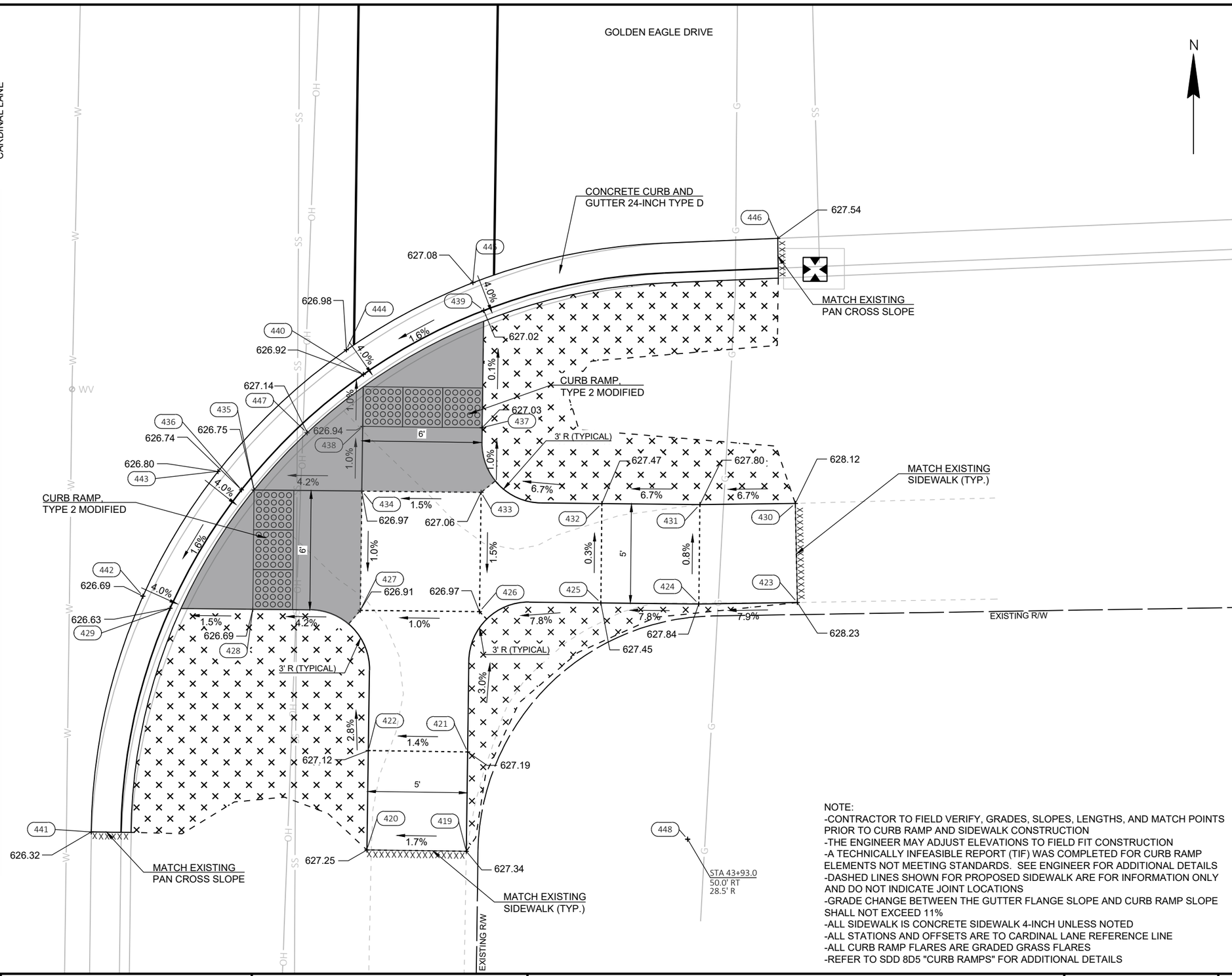

CURB RAMP STATION & OFFSET TABLE				
POINT	STATION	OFFSET	Y COORDS	X COORDS
419	43+92.3	38.8 RT	594293.137	81733.475
420	43+92.3	33.8 RT	594293.206	81728.475
421	43+97.3	38.8 RT	594298.137	81733.544
422	43+97.3	33.8 RT	594298.205	81728.544
423	44+05.0	55.3 RT	594305.650	81750.132
424	44+04.9	50.4 RT	594305.577	81745.173
425	44+04.9	45.4 RT	594305.629	81740.245
426	44+04.3	39.3 RT	594305.193	81734.141
427	44+04.3	33.3 RT	594305.257	81728.142
428	44+04.3	29.9 RT	594305.314	81722.740
429	44+04.3	23.8 RT	594305.357	81718.581
430	44+10.0	55.1 RT	594310.635	81750.026
431	44+09.9	50.3 RT	594310.577	81745.226
432	44+09.9	45.4 RT	594310.629	81740.298
433	44+10.3	39.3 RT	594311.193	81734.224
434	44+10.3	33.3 RT	594311.256	81728.224
435	44+10.3	29.9 RT	594311.313	81722.804
436	44+10.3	27.3 RT	594311.320	81722.171
437	44+13.6	39.3 RT	594314.441	81734.274
438	44+13.6	33.3 RT	594314.506	81728.275
439	44+19.5	39.3 RT	594320.338	81734.350
440	44+16.2	33.3 RT	594317.124	81728.305
441	43+93.0	20.0 RT	594294.114	81714.612
442	44+04.9	22.4 RT	594305.968	81717.211
443	44+11.2	26.1 RT	594312.245	81720.990
444	44+17.4	32.5 RT	594318.355	81727.447
445	44+20.9	38.8 RT	594321.738	81733.810
446	44+23.3	54.1 RT	594323.963	81749.146
447	44+13.2	30.5 RT	594314.184	81725.468
448	43+93.0	50.0 RT	594293.749	81744.610

NOTE:
-CONTRACTOR TO FIELD VERIFY, GRADES, SLOPES, LENGTHS, AND MATCH POINTS PRIOR TO CURB RAMP AND SIDEWALK CONSTRUCTION
-THE ENGINEER MAY ADJUST ELEVATIONS TO FIELD FIT CONSTRUCTION
-A TECHNICALLY INFEASIBLE REPORT (TIF) WAS COMPLETED FOR CURB RAMP ELEMENTS NOT MEETING STANDARDS. SEE ENGINEER FOR ADDITIONAL DETAILS
-DASHED LINES SHOWN FOR PROPOSED SIDEWALK ARE FOR INFORMATION ONLY AND DO NOT INDICATE JOINT LOCATIONS
-GRADE CHANGE BETWEEN THE GUTTER FLANGE SLOPE AND CURB RAMP SLOPE SHALL NOT EXCEED 11%
-ALL SIDEWALK IS CONCRETE SIDEWALK 4-INCH UNLESS NOTED
-ALL STATIONS AND OFFSETS ARE TO CARDINAL LANE REFERENCE LINE
-ALL CURB RAMP FLARES ARE GRADED GRASS FLARES
-REFER TO SDD 8D5 "CURB RAMPS" FOR ADDITIONAL DETAILS

LEGEND

- XXX.XX — ELEVATION
- (XXX) — POINT NUMBER
- CONCRETE SIDEWALK 6-INCH
- XXXXX — SAW CUTS
- EROSION MAT URBAN CLASS I TYPE A
- INLET PROTECTION

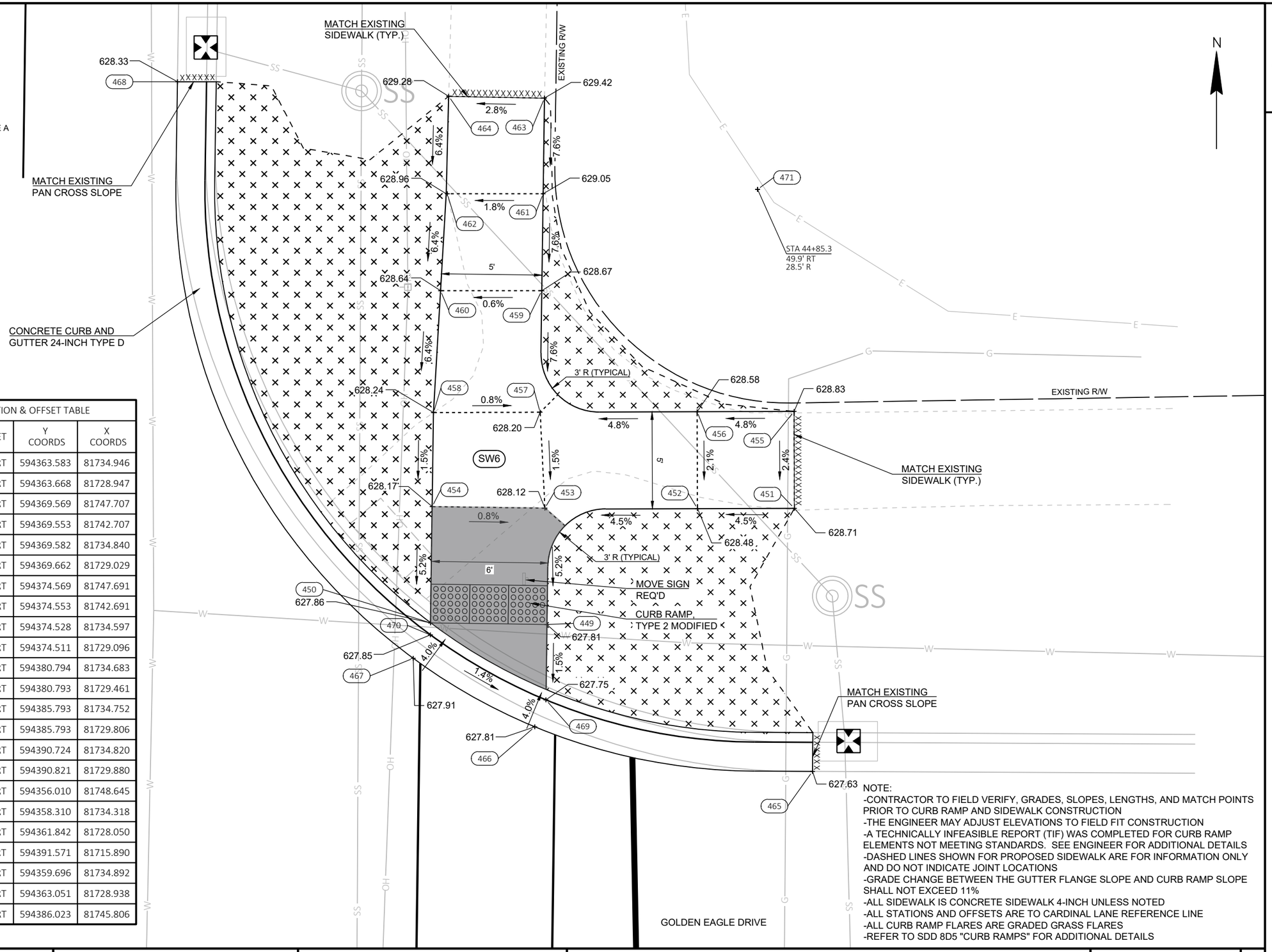

CURB RAMP STATION & OFFSET TABLE				
POINT	STATION	OFFSET	Y COORDS	X COORDS
449	44+64.7	39.3 RT	594363.583	81734.946
450	44+64.7	33.3 RT	594363.668	81728.947
451	44+68.9	52.0 RT	594369.569	81747.707
452	44+68.8	47.0 RT	594369.553	81742.707
453	44+68.7	39.1 RT	594369.582	81734.840
454	44+68.7	33.3 RT	594369.662	81729.029
455	44+73.9	51.9 RT	594374.569	81747.691
456	44+73.8	46.9 RT	594374.553	81742.691
457	44+73.7	38.8 RT	594374.528	81734.597
458	44+73.6	33.3 RT	594374.511	81729.096
459	44+80.0	38.8 RT	594380.794	81734.683
460	44+79.9	33.6 RT	594380.793	81729.461
461	44+84.9	38.8 RT	594385.793	81734.752
462	44+84.9	33.9 RT	594385.793	81729.806
463	44+89.9	38.8 RT	594390.724	81734.820
464	44+89.9	33.9 RT	594390.821	81729.880
465	44+55.4	53.1 RT	594356.010	81748.645
466	44+57.5	38.8 RT	594358.310	81734.318
467	44+60.9	32.5 RT	594361.842	81728.050
468	44+90.5	19.9 RT	594391.571	81715.890
469	44+58.8	39.3 RT	594359.696	81734.892
470	44+62.1	33.3 RT	594363.051	81728.938
471	44+85.3	49.9 RT	594386.023	81745.806

NOTE:
-CONTRACTOR TO FIELD VERIFY, GRADES, SLOPES, LENGTHS, AND MATCH POINTS PRIOR TO CURB RAMP AND SIDEWALK CONSTRUCTION
-THE ENGINEER MAY ADJUST ELEVATIONS TO FIELD FIT CONSTRUCTION
-A TECHNICALLY INFEASIBLE REPORT (TIF) WAS COMPLETED FOR CURB RAMP ELEMENTS NOT MEETING STANDARDS. SEE ENGINEER FOR ADDITIONAL DETAILS
-DASHED LINES SHOWN FOR PROPOSED SIDEWALK ARE FOR INFORMATION ONLY AND DO NOT INDICATE JOINT LOCATIONS
-GRADE CHANGE BETWEEN THE GUTTER FLANGE SLOPE AND CURB RAMP SLOPE SHALL NOT EXCEED 11%
-ALL SIDEWALK IS CONCRETE SIDEWALK 4-INCH UNLESS NOTED
-ALL STATIONS AND OFFSETS ARE TO CARDINAL LANE REFERENCE LINE
-ALL CURB RAMP FLARES ARE GRADED GRASS FLARES
-REFER TO SDD 8D5 "CURB RAMPS" FOR ADDITIONAL DETAILS

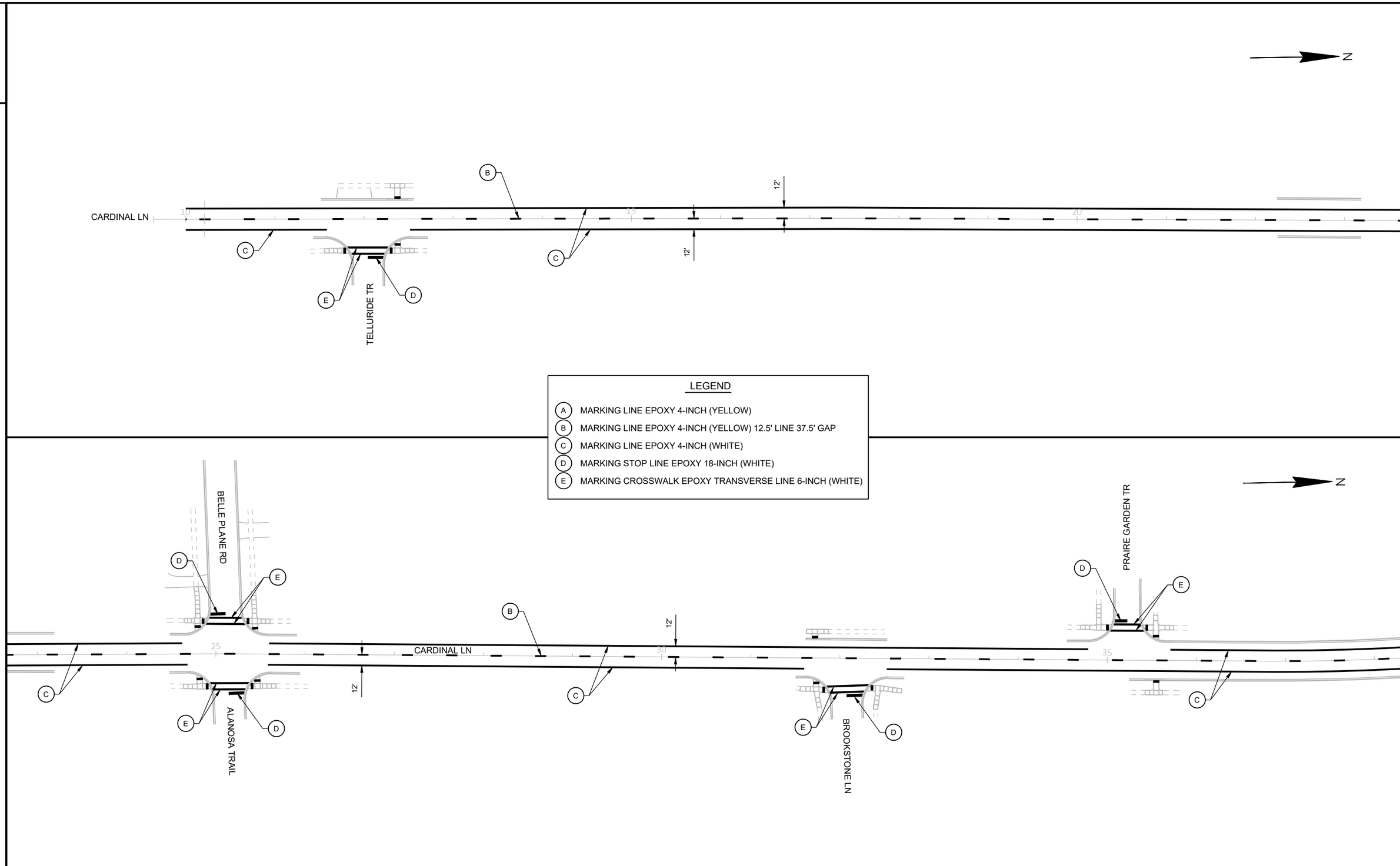

PROJECT NO: 9269-10-70	HWY: CARDINAL LANE	COUNTY: BROWN	PAVEMENT MARKING	SHEET 33	E

FILE NAME : I:\45\450572 VILLAGE OF HOWARD CARDINAL LANE\C3D\SHEETS\024501-PM.DWG
LAYOUT NAME - 024501-pm
PLOT DATE : 8/30/2022 8:47 AM
PLOT BY : VERVILLE, PHILLIP
PLOT NAME :
PLOT SCALE : 1 IN:100 FT
WISDOT/CADDS SHEET 42

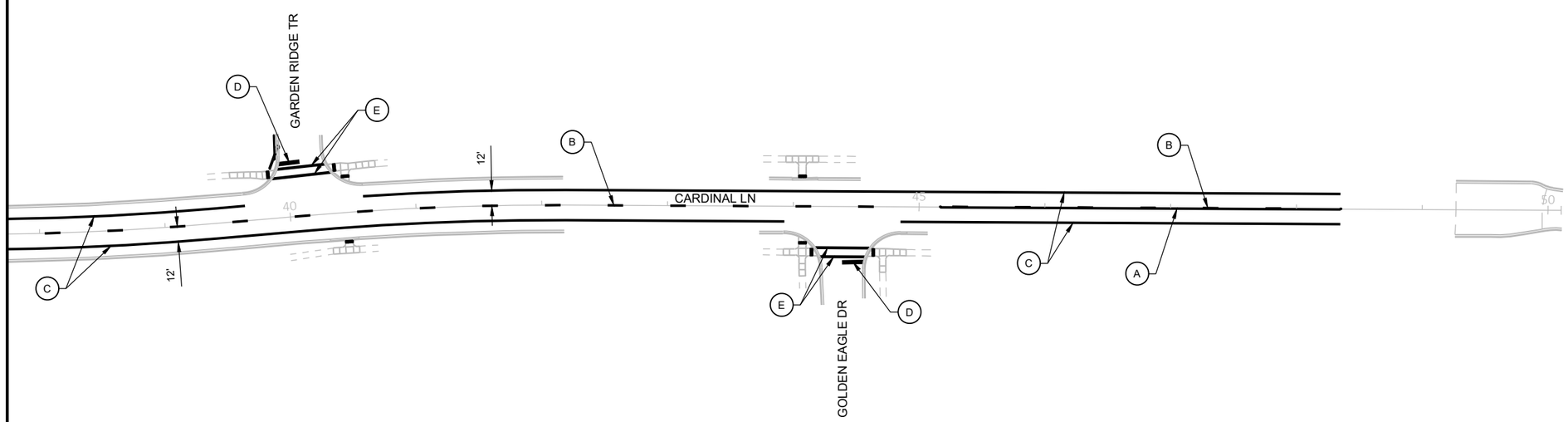

LEGEND

- (A) MARKING LINE EPOXY 4-INCH (YELLOW)
- (B) MARKING LINE EPOXY 4-INCH (YELLOW) 12.5' LINE 37.5' GAP
- (C) MARKING LINE EPOXY 4-INCH (WHITE)
- (D) MARKING STOP LINE EPOXY 18-INCH (WHITE)
- (E) MARKING CROSSWALK EPOXY TRANSVERSE LINE 6-INCH (WHITE)

PROJECT NO: 9269-10-70	HWY: CARDINAL LANE	COUNTY: BROWN	PAVEMENT MARKING	SHEET 34	E

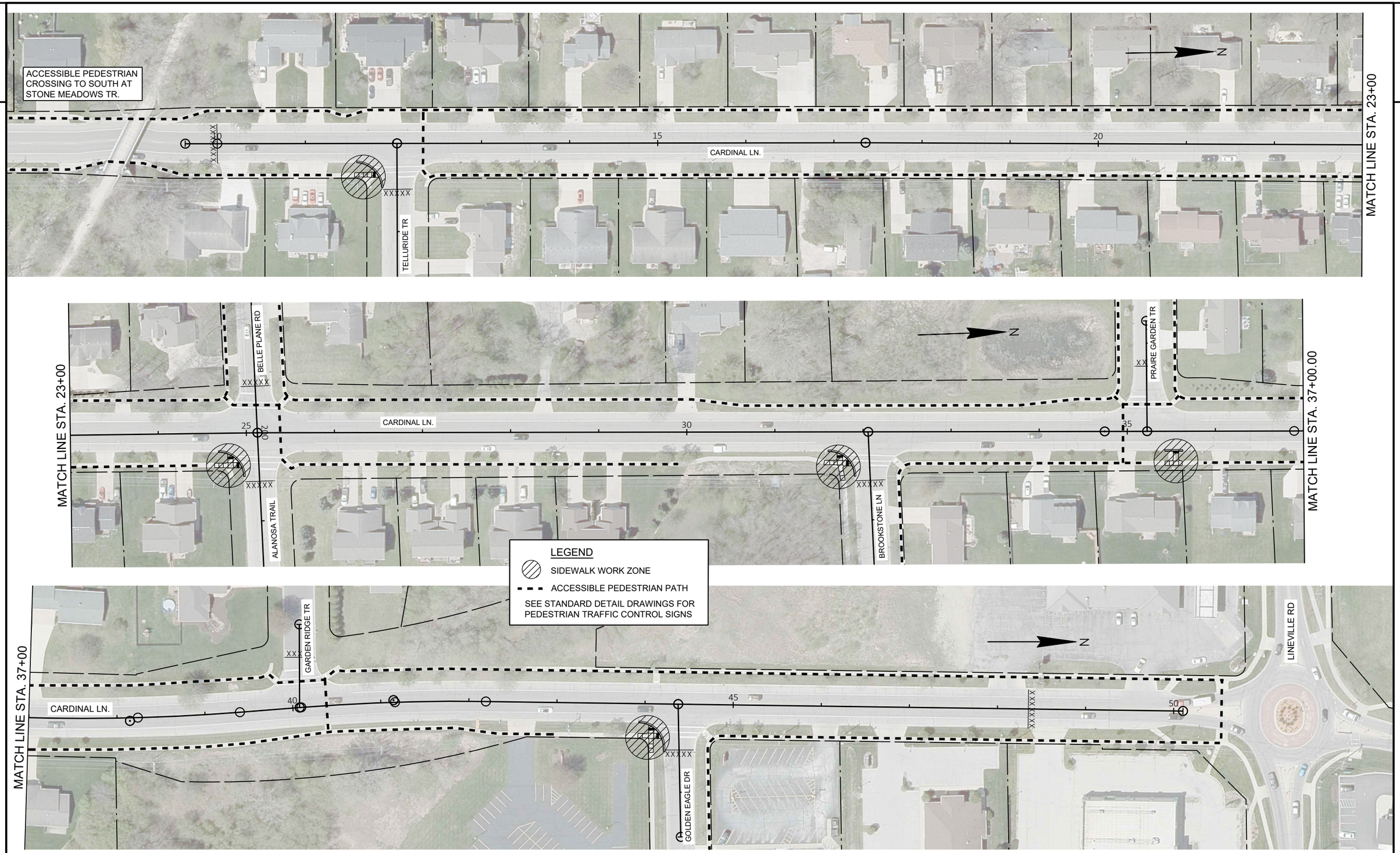

PROJECT NO: 9269-10-70	HWY: CARDINAL LANE	COUNTY: BROWN	CURB RAMP REPLACEMENT - STAGE 1A	SHEET 35	E

FILE NAME : I:\45\450572 VILLAGE OF HOWARD CARDINAL LANE\C3D\SHEETS\027001-DT.DWG
LAYOUT NAME - 027001-dt
PLOT DATE : 8/30/2022 8:47 AM
PLOT BY : VERVILLE, PHILLIP
PLOT NAME :
PLOT SCALE : 1 IN:100 FT
WISDOT/CADDS SHEET 42

2

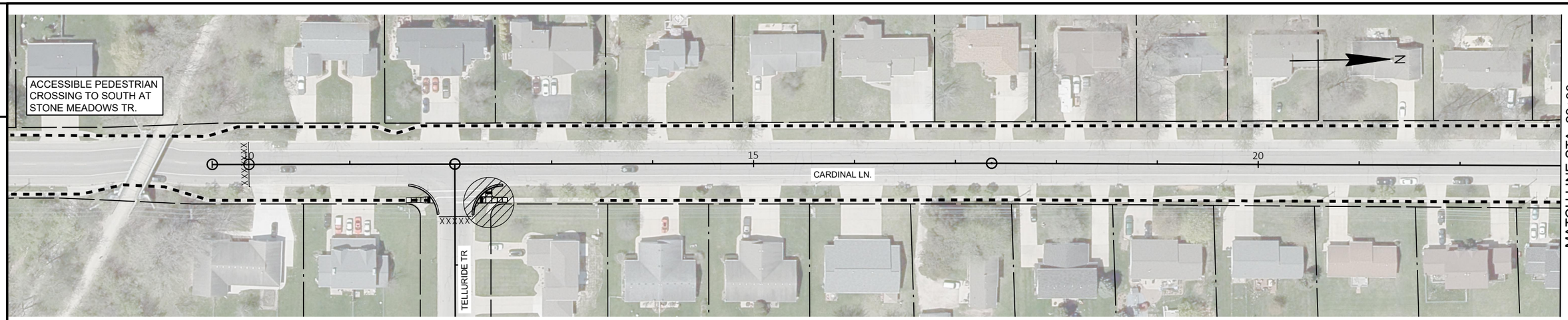

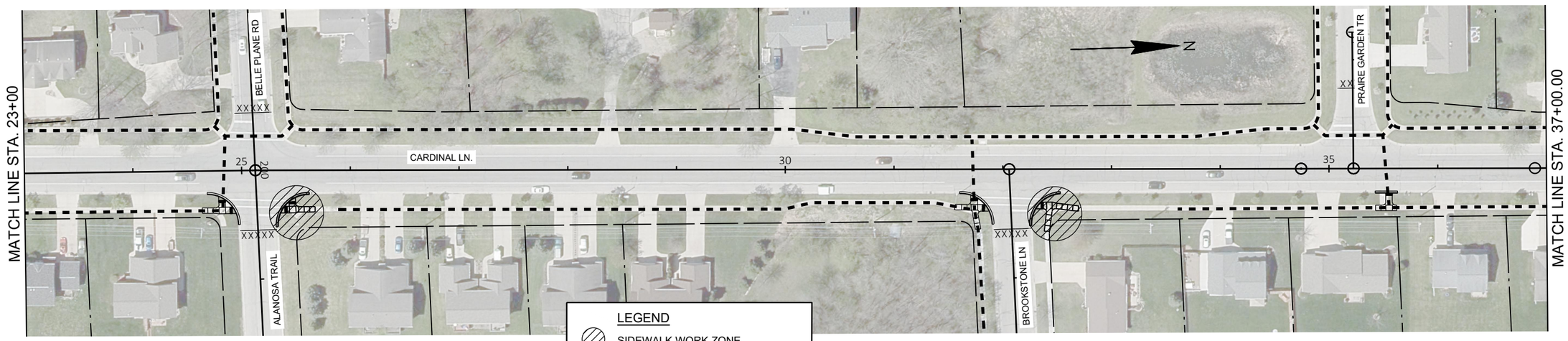

LEGEND

SIDEWALK WORK ZONE

ACCESSIBLE PEDESTRIAN PATH

SEE STANDARD DETAIL DRAWINGS FOR PEDESTRIAN TRAFFIC CONTROL SIGNS

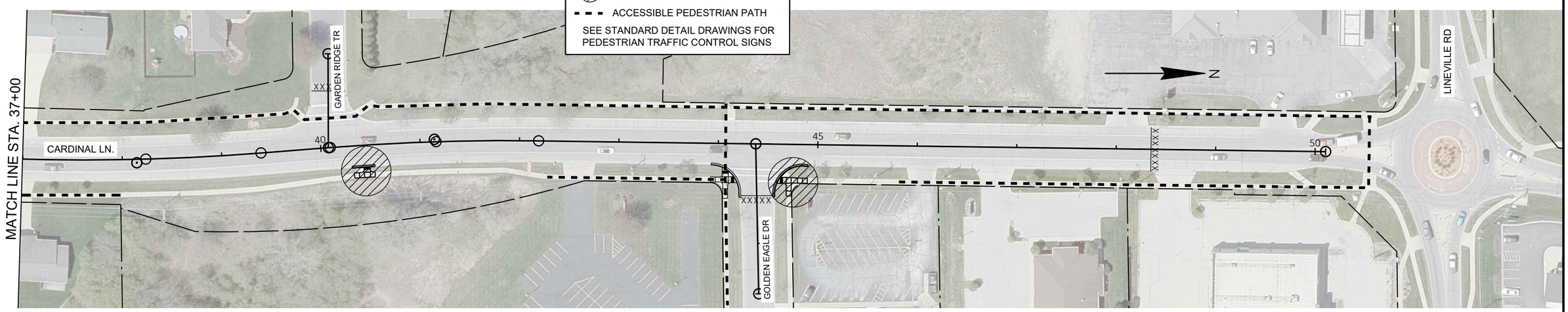

PROJECT NO: 9269-10-70	HWY: CARDINAL LANE	COUNTY: BROWN	CURB RAMP REPLACEMENT - STAGE 1B	SHEET 36	E

FILE NAME : I:\45\450572 VILLAGE OF HOWARD CARDINAL LANE\C3D\SHEETS\027001-DT.DWG
LAYOUT NAME - 027002-dt
PLOT DATE : 8/30/2022 8:47 AM PLOT BY : VERVILLE, PHILLIP PLOT NAME : PLOT SCALE : 1 IN:100 FT

WISDOT/CADDS SHEET 42

2

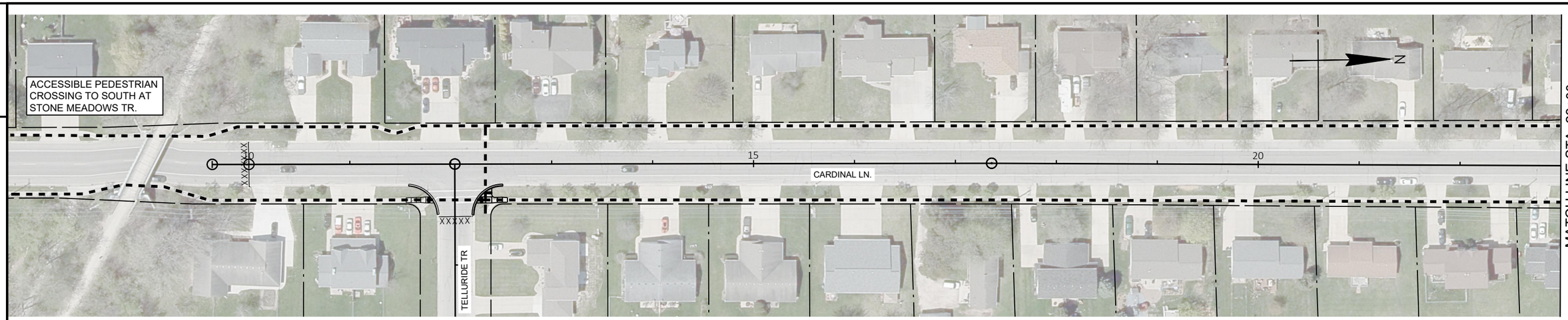

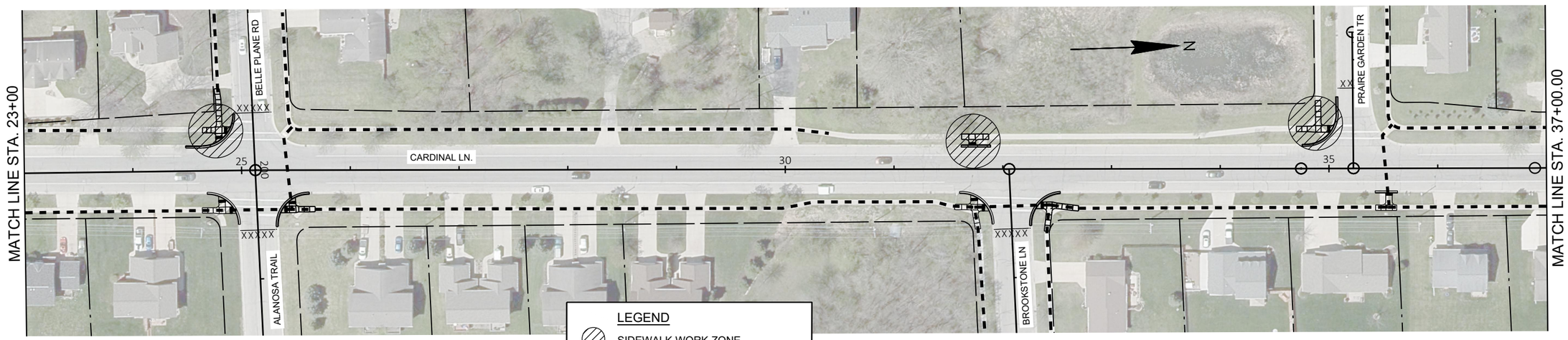

LEGEND

SIDEWALK WORK ZONE

ACCESSIBLE PEDESTRIAN PATH

SEE STANDARD DETAIL DRAWINGS FOR PEDESTRIAN TRAFFIC CONTROL SIGNS

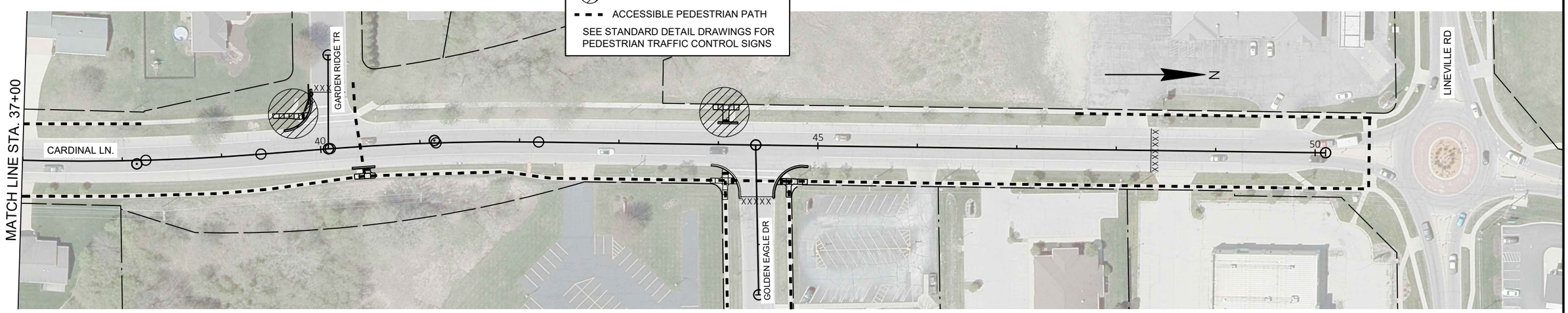

PROJECT NO: 9269-10-70	HWY: CARDINAL LANE	COUNTY: BROWN	CURB RAMP REPLACEMENT - STAGE 1C	SHEET 37	E

FILE NAME : I:\45\450572 VILLAGE OF HOWARD CARDINAL LANE\C3D\SHEETS\027001-DT.DWG
LAYOUT NAME - 027003-dt
PLOT DATE : 8/30/2022 8:47 AM PLOT BY : VERVILLE, PHILLIP PLOT NAME : PLOT SCALE : 1 IN:100 FT

WISDOT/CADDS SHEET 42

2

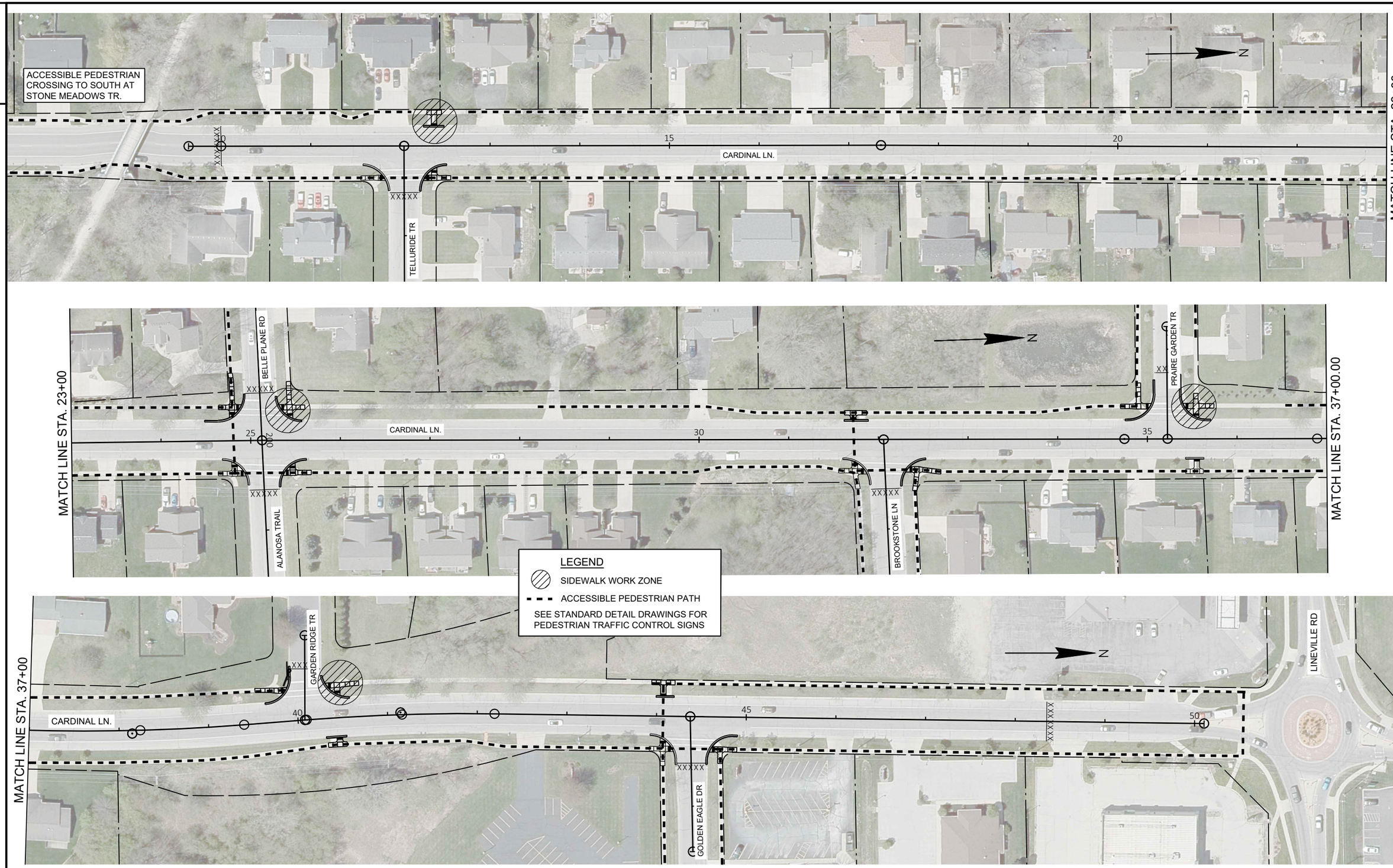

2

PROJECT NO: 9269-10-70	HWY: CARDINAL LANE	COUNTY: BROWN	CURB RAMP REPLACEMENT - STAGE 1D	SHEET 38	E

FILE NAME : I:\45\450572 VILLAGE OF HOWARD CARDINAL LANE\C3D\SHEETS\027001-DT.DWG
LAYOUT NAME - 027004-dt
PLOT DATE : 8/30/2022 8:47 AM PLOT BY : VERVILLE, PHILLIP PLOT NAME : PLOT SCALE : 1 IN:100 FT

WISDOT/CADDS SHEET 42

2

LEGEND

- TEMP. PED. SURFACE MATTING, MIN. WIDTH 4-FT
- TEMP. PED. SURFACE MATTING, LEVEL LANDING AREA
- TEMPORARY DETECTABLE WARNING FIELD
- TEMPORARY PEDESTRIAN BARRICADE
- SIGN ON TEMPORARY SUPPORT
- TRAFFIC CONTROL DRUM

N

EXISTING R/W

CARDINAL LN

SIDEWALK CLOSED
R9-9
24"X12"

12

PAVEMENT CONSTRUCTION LIMITS

M4-60R
30"X24"

M4-60L
30"X24"

EXISTING R/W

TEMPORARY PEDESTRIAN RAMP REQ'D.

TELLURIDE TR

1011T

SEE STANDARD DETAIL DRAWING "TRAFFIC CONTROL, PEDESTRIAN ACCOMMODATION" FOR ADDITIONAL GUIDANCE

BELLE PLANE RD

N89°17'17"E

SEE ADDITIONAL SHEETS FOR PEDESTRIAN DETOUR DETAILS

DETOUR
M4-9BL
30"X24"

PI: 25+12.54

DETOUR
M4-9BR
30"X24"

SIDEWALK CLOSED
R9-9
24"X12"

25

2008P

CARDINAL LN

SIDEWALK CLOSED
R9-9
24"X12"

M4-60R
30"X24"

M4-60L
30"X24"

EXISTING R/W

PAVEMENT CONSTRUCTION LIMITS (TYP)

TEMPORARY PEDESTRIAN RAMP REQ'D.

ALANOSA TR

2018P

SEE STANDARD DETAIL DRAWING "TRAFFIC CONTROL, PEDESTRIAN ACCOMMODATION" FOR ADDITIONAL GUIDANCE

PROJECT NO: 9269-10-70	HWY: CARDINAL LANE	COUNTY: BROWN	PEDESTRIAN DETOUR	SHEET 39	E

FILE NAME : I:\45\450572 VILLAGE OF HOWARD CARDINAL LANE\C3D\SHEETS\027005-DT.DWG
LAYOUT NAME - 027005-dt
PLOT DATE : 8/30/2022 8:48 AM
PLOT BY : VERVILLE, PHILLIP
PLOT NAME :
PLOT SCALE : 1 IN:20 FT

WISDOT/CADDS SHEET 42

2

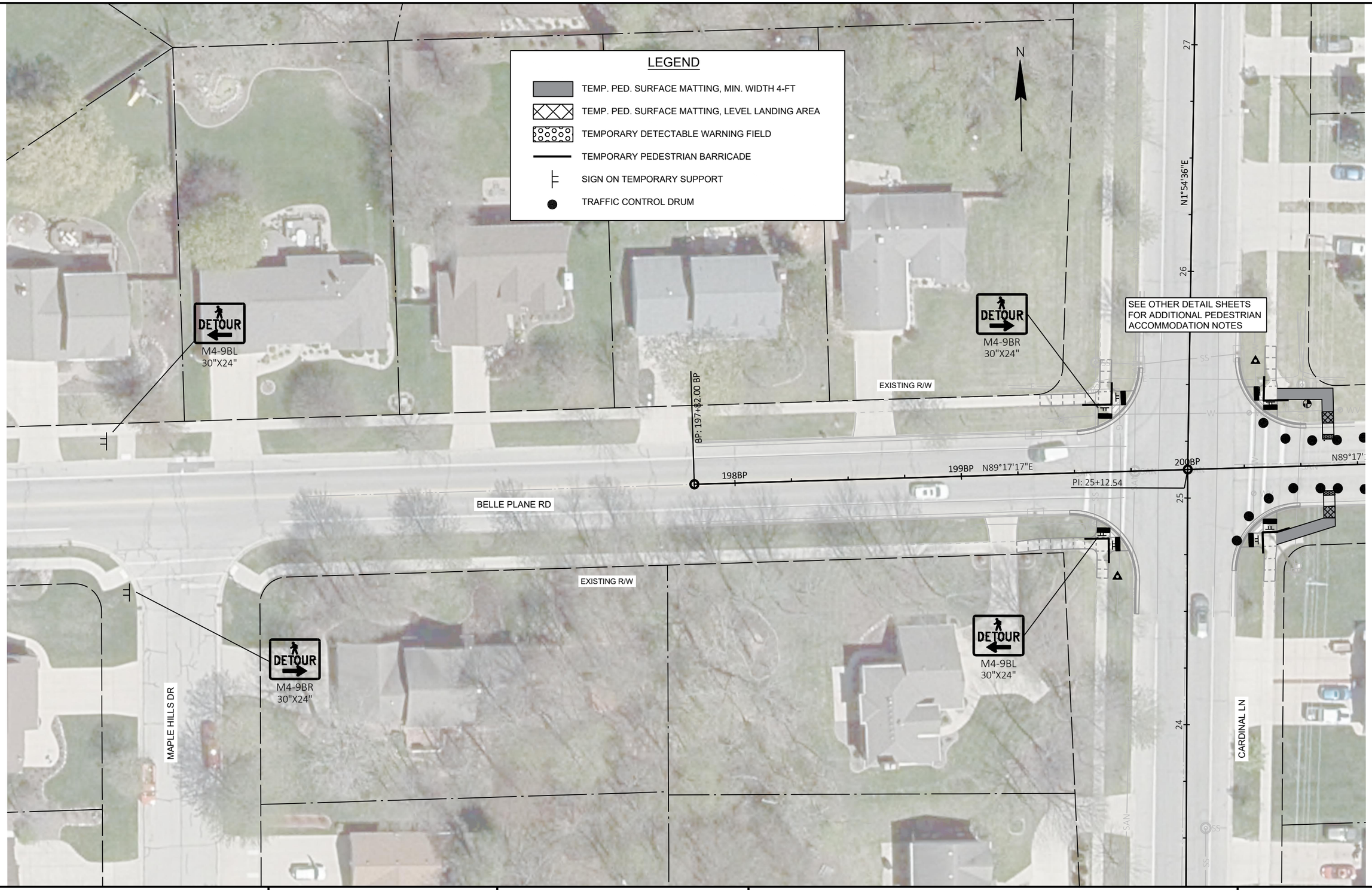

2

PROJECT NO: 9269-10-70	HWY: CARDINAL LANE	COUNTY: BROWN	PEDESTRIAN DETOUR	SHEET 40	E

FILE NAME : I:\45\450572 VILLAGE OF HOWARD CARDINAL LANE\C3D\SHEETS\027005-DT.DWG
LAYOUT NAME - 027006-dt
PLOT DATE : 8/30/2022 8:48 AM
PLOT BY : VERVILLE, PHILLIP
PLOT NAME :
PLOT SCALE : 1 IN:40 FT

WISDOT/CADDS SHEET 42

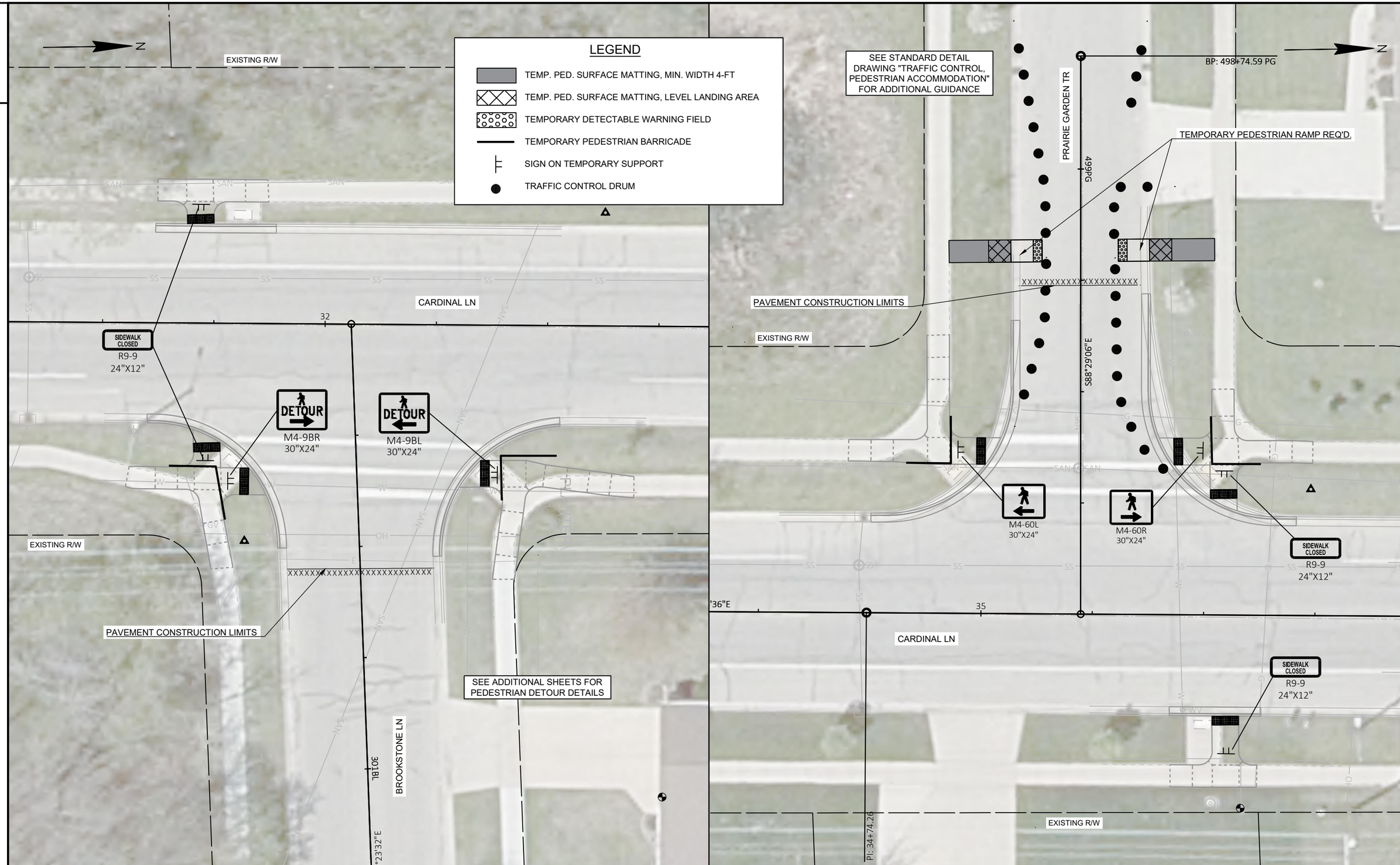

PROJECT NO: 9269-10-70	HWY: CARDINAL LANE	COUNTY: BROWN	PEDESTRIAN DETOUR	SHEET 41	E

FILE NAME : I:\45\450572 VILLAGE OF HOWARD CARDINAL LANE\C3D\SHEETS\027005-DT.DWG
LAYOUT NAME - 027007-dt
PLOT DATE : 8/30/2022 8:48 AM PLOT BY : VERVILLE, PHILLIP PLOT NAME : PLOT SCALE : 1 IN:20 FT
WISDOT/CADDS SHEET 42

2

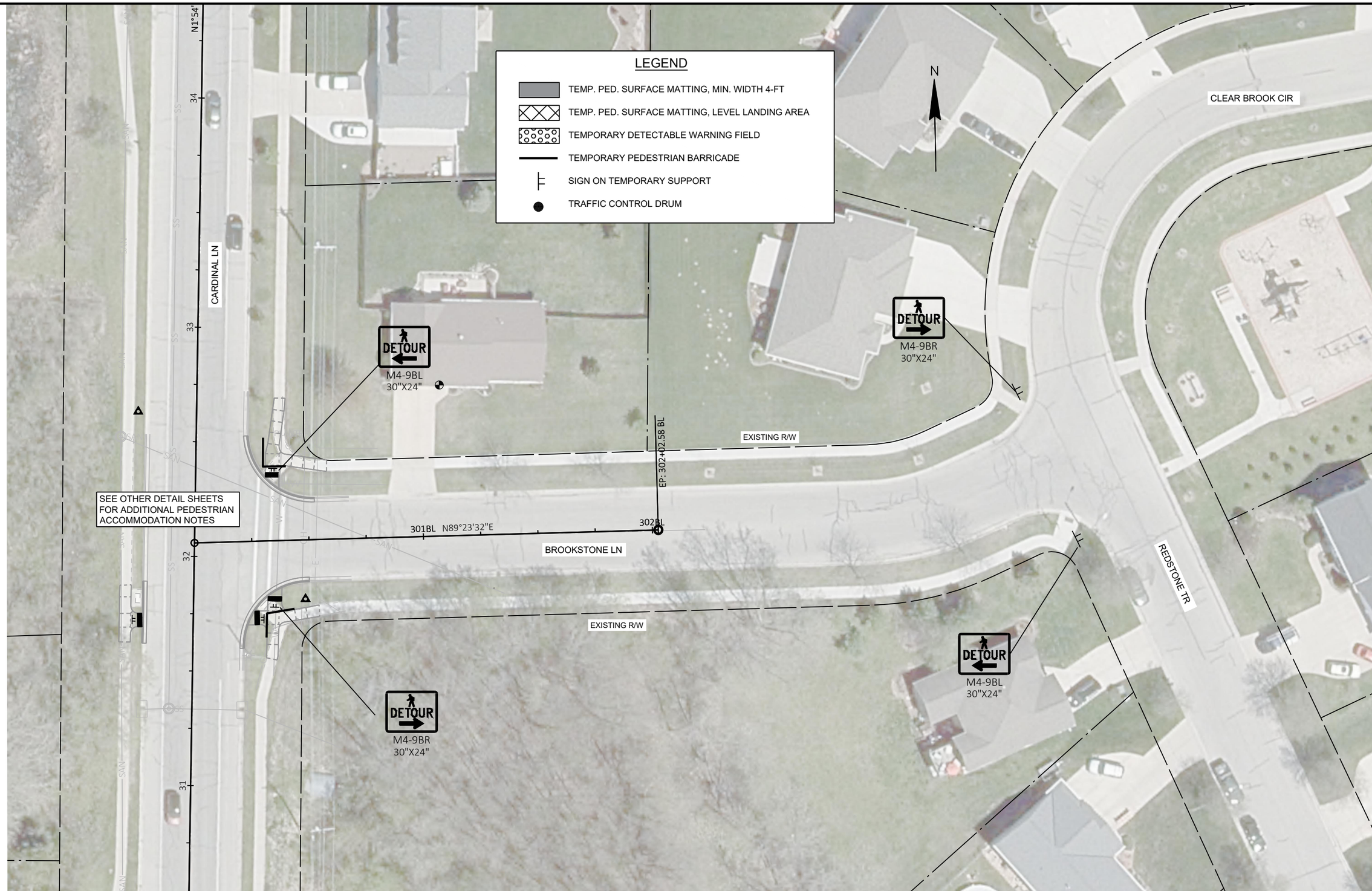

2

PROJECT NO: 9269-10-70	HWY: CARDINAL LANE	COUNTY: BROWN	PEDESTRIAN DETOUR	SHEET 42	E

FILE NAME : I:\45\450572 VILLAGE OF HOWARD CARDINAL LANE\C3D\SHEETS\027005-DT.DWG
LAYOUT NAME - 027008-dt
PLOT DATE : 8/30/2022 8:48 AM PLOT BY : VERVILLE, PHILLIP PLOT NAME : PLOT SCALE : 1 IN:40 FT

WISDOT/CADDS SHEET 42

2

LEGEND

- TEMP. PED. SURFACE MATTING, MIN. WIDTH 4-FT
- TEMP. PED. SURFACE MATTING, LEVEL LANDING AREA
- TEMPORARY DETECTABLE WARNING FIELD
- TEMPORARY PEDESTRIAN BARRICADE
- SIGN ON TEMPORARY SUPPORT
- TRAFFIC CONTROL DRUM

N

GARDEN RIDGE TR

SEE STANDARD DETAIL DRAWING "TRAFFIC CONTROL, PEDESTRIAN ACCOMMODATION" FOR ADDITIONAL GUIDANCE

BP: 599+05.65 GR

TEMPORARY PEDESTRIAN RAMP REQ'D.

EXISTING R/W

PAVEMENT CONSTRUCTION LIMITS

M4-60R
30"X24"

M4-60L
30"X24"

SIDEWALK CLOSED
R9-9
24"X12"

PT: 39+39.53

N4°29'41"W

CARDINAL LN

40

PC: 40+09.52

N

EXISTING R/W

SIDEWALK CLOSED
R9-9
24"X12"

CARDINAL LN

44

45

SIDEWALK CLOSED
R9-9
24"X12"

DETOUR
M4-9BR
30"X24"

DETOUR
M4-9BL
30"X24"

EXISTING R/W

PAVEMENT CONSTRUCTION LIMITS

SEE ADDITIONAL SHEETS FOR PEDESTRIAN DETOUR DETAILS

GOLDEN EAGLE DR

701GE

2

PROJECT NO: 9269-10-70	HWY: CARDINAL LANE	COUNTY: BROWN	PEDESTRIAN DETOUR	SHEET 43	E

FILE NAME : I:\45\450572 VILLAGE OF HOWARD CARDINAL LANE\C3D\SHEETS\027005-DT.DWG
LAYOUT NAME - 027009-dt
PLOT DATE : 8/30/2022 8:48 AM
PLOT BY : VERVILLE, PHILLIP
PLOT NAME :
PLOT SCALE : 1 IN:20 FT
WISDOT/CADDS SHEET 42

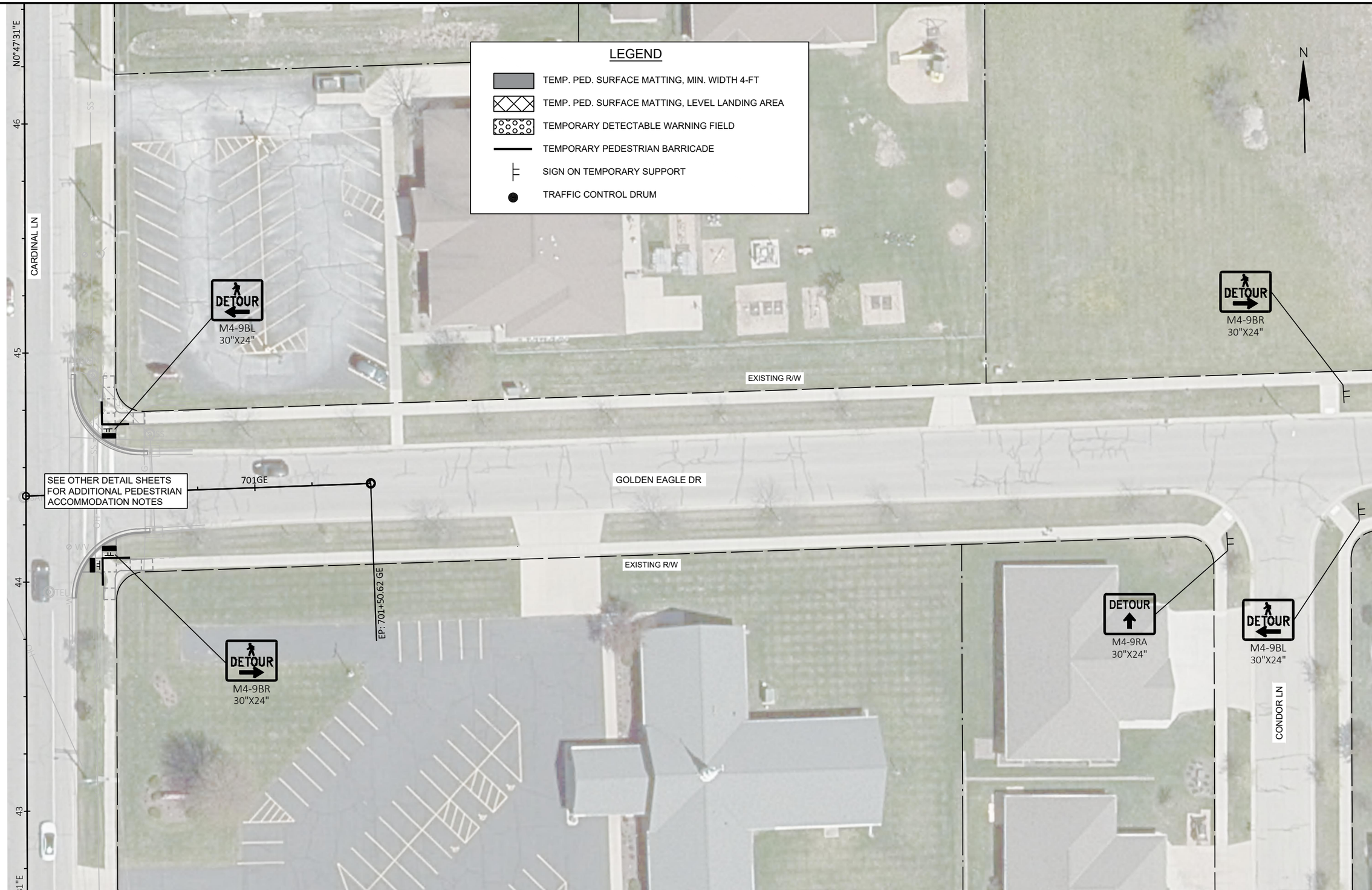

PROJECT NO: 9269-10-70	HWY: CARDINAL LANE	COUNTY: BROWN	PEDESTRIAN DETOUR	SHEET 44	E

FILE NAME : I:\45\450572 VILLAGE OF HOWARD CARDINAL LANE\C3D\SHEETS\027005-DT.DWG
LAYOUT NAME - 027010-dt
PLOT DATE : 8/30/2022 8:48 AM PLOT BY : VERVILLE, PHILLIP PLOT NAME : PLOT SCALE : 1 IN:40 FT

9269-10-70

Line	Item	Item Description	Unit	Total	Qty
0002	204.0110	Removing Asphaltic Surface	SY	210.000	210.000
0004	204.0150	Removing Curb & Gutter	LF	810.000	810.000
0006	204.0155	Removing Concrete Sidewalk	SY	463.000	463.000
0008	204.0220	Removing Inlets	EACH	1.000	1.000
0010	204.0245	Removing Storm Sewer (size) 01. 12-Inch	LF	8.000	8.000
0012	213.0100	Finishing Roadway (project) 01. 9269-10-70	EACH	1.000	1.000
0014	305.0120	Base Aggregate Dense 1 1/4-Inch	TON	170.000	170.000
0016	310.0115	Base Aggregate Open-Graded	CY	3.000	3.000
0018	325.0100	Pulverize and Relay	SY	19,110.000	19,110.000
0020	416.0610	Drilled Tie Bars	EACH	76.000	76.000
0022	455.0605	Tack Coat	GAL	1,340.000	1,340.000
0024	460.2000	Incentive Density HMA Pavement	DOL	3,600.000	3,600.000
0026	460.5223	HMA Pavement 3 LT 58-28 S	TON	3,365.000	3,365.000
0028	460.5224	HMA Pavement 4 LT 58-28 S	TON	2,245.000	2,245.000
0030	465.0125	Asphaltic Surface Temporary	TON	8.000	8.000
0032	602.0405	Concrete Sidewalk 4-Inch	SF	2,980.000	2,980.000
0034	602.0415	Concrete Sidewalk 6-Inch	SF	1,460.000	1,460.000
0036	602.0515	Curb Ramp Detectable Warning Field Natural Patina	SF	336.000	336.000
0038	608.0312	Storm Sewer Pipe Reinforced Concrete Class III 12-Inch	LF	18.000	18.000
0040	611.3003	Inlets 3-FT Diameter	EACH	1.000	1.000
0042	611.9710	Salvaged Inlet Covers	EACH	1.000	1.000
0044	612.0106	Pipe Underdrain 6-Inch	LF	20.000	20.000
0046	618.0100	Maintenance And Repair of Haul Roads (project) 01. 9269-10-70	EACH	1.000	1.000
0048	619.1000	Mobilization	EACH	1.000	1.000
0050	625.0100	Topsoil	SY	870.000	870.000
0052	628.1504	Silt Fence	LF	60.000	60.000
0054	628.1520	Silt Fence Maintenance	LF	60.000	60.000
0056	628.1905	Mobilizations Erosion Control	EACH	4.000	4.000
0058	628.1910	Mobilizations Emergency Erosion Control	EACH	3.000	3.000
0060	628.2006	Erosion Mat Urban Class I Type A	SY	920.000	920.000
0062	628.7015	Inlet Protection Type C	EACH	25.000	25.000
0064	628.7020	Inlet Protection Type D	EACH	20.000	20.000
0066	629.0210	Fertilizer Type B	CWT	1.000	1.000
0068	630.0140	Seeding Mixture No. 40	LB	18.000	18.000
0070	630.0500	Seed Water	MGAL	22.000	22.000
0072	634.0614	Posts Wood 4x6-Inch X 14-FT	EACH	2.000	2.000
0074	638.2102	Moving Signs Type II	EACH	2.000	2.000
0076	638.3000	Removing Small Sign Supports	EACH	2.000	2.000
0078	642.5001	Field Office Type B	EACH	1.000	1.000
0080	643.0300	Traffic Control Drums	DAY	6,270.000	6,270.000
0082	643.0420	Traffic Control Barricades Type III	DAY	480.000	480.000
0084	643.0705	Traffic Control Warning Lights Type A	DAY	960.000	960.000
0086	643.0900	Traffic Control Signs	DAY	2,016.000	2,016.000
0088	643.1050	Traffic Control Signs PCMS	DAY	14.000	14.000
0090	643.5000	Traffic Control	EACH	1.000	1.000
0092	644.1440	Temporary Pedestrian Surface Matting	SF	1,565.000	1,565.000
0094	644.1601	Temporary Pedestrian Curb Ramp	DAY	160.000	160.000
0096	644.1605	Temporary Pedestrian Detectable Warning Field	SF	80.000	80.000
0098	644.1810	Temporary Pedestrian Barricade	LF	300.000	300.000

9269-10-70

Line	Item	Item Description	Unit	Total	Qty
0100	645.0111	Geotextile Type DF Schedule A	SY	20.000	20.000
0102	646.1020	Marking Line Epoxy 4-Inch	LF	8,165.000	8,165.000
0104	646.6120	Marking Stop Line Epoxy 18-Inch	LF	122.000	122.000
0106	646.7420	Marking Crosswalk Epoxy Transverse Line 6-Inch	LF	565.000	565.000
0108	650.4000	Construction Staking Storm Sewer	EACH	1.000	1.000
0110	650.5500	Construction Staking Curb Gutter and Curb & Gutter	LF	830.000	830.000
0112	650.8000	Construction Staking Resurfacing Reference	LF	4,116.000	4,116.000
0114	650.9000	Construction Staking Curb Ramps	EACH	28.000	28.000
0116	650.9500	Construction Staking Sidewalk (project) 01. 9269-10-70	EACH	1.000	1.000
0118	650.9911	Construction Staking Supplemental Control (project) 01. 9269-10-70	EACH	1.000	1.000
0120	690.0150	Sawing Asphalt	LF	1,180.000	1,180.000
0122	690.0250	Sawing Concrete	LF	236.000	236.000
0124	740.0440	Incentive IRI Ride	DOL	2,910.000	2,910.000
0126	ASP.1T0A	On-the-Job Training Apprentice at $5.00/HR	HRS	1,200.000	1,200.000
0128	ASP.1T0G	On-the-Job Training Graduate at $5.00/HR	HRS	600.000	600.000
0130	SPV.0090	Special 01. Concrete Curb and Gutter 24-Inch Type D	LF	830.000	830.000
0132	SPV.0180	Special 01. Removing Excess Pulverized Material	SY	19,110.000	19,110.000

3

REMOVAL ITEMS

STATION	LOCATION	204.0110 REMOVING ASPHALTIC SURFACE SY	204.0150 REMOVING CURB & GUTTER LF	204.0155 REMOVING CONCRETE SIDEWALK SY	REMARKS
100+35	TELLURIDE TRAIL, RT	12	47	25	SE QUADRANT
100+35	TELLURIDE TRAIL, LT	12	46	25	NE QUADRANT
12+35	CARDINAL LANE, LT	6	23	21	
199+65	BELLE PLANE ROAD, RT	15	47	31	SW QUADRANT
199+65	BELLE PLANE ROAD, LT	11	45	23	NW QUADRANT
200+35	ALAMOSA TRAIL, RT	11	44	26	SE QUARDRANT
200+35	ALAMOSA TRAIL, LT	12	47	20	NE QUADRANT
300+35	BROOKSTONE LANE, RT	12	46	28	SE QUADRANT
300+35	BROOKSTONE LANE, LT	11	45	22	NE QUADRANT
31+80	CARDINAL LANE, LT	7	27	22	
499+65	PRAIRE GARDEN TRAIL, RT	16	64	32	SE QUADRANT
499+65	PRAIRE GARDEN TRAIL, LT	17	72	25	NE QUADRANT
35+50	CARDINAL LANE, RT	6	21	24	
599+65	GARDEN RIDGE TRAIL, RT	14	46	26	SW QUADRANT
599+65	GARDEN RIDGE TRAIL, LT	11	43	25	NE QUADRANT
40+40	CARDINAL LANE, RT	6	23	19	
700+35	GOLDEN EAGLE DRIVE, RT	12	49	21	SE QUADRANT
700+35	GOLDEN EAGLE DRIVE, LT	13	54	22	NE QUADRANT
44+15	CARDINAL LANE, LT	6	21	26	
	TOTALS:	210	810	463	

REMOVING INLETS AND STORM SEWER

STATION	TO	STATION	LOCATION	204.0220 REMOVING INLETS EACH	204.0245.01 REMOVING STORM SEWER (12-INCH) LF
599+45	-	599+63	GARDEN RIDGE TRAIL, RT	1	8
			TOTALS:	1	8

BASE AGGREGATE DENSE 1 1/4-INCH

STATION	LOCATION	305.0120 TON	REMARKS
100+35	TELLURIDE TRAIL, RT	7	SE QUADRANT
100+35	TELLURIDE TRAIL, LT	9	NW QUARDRANT
12+35	CARDINAL LANE, LT	6	NE QUADRANT
199+65	BELLE PLANE ROAD, RT	13	SW QUADRANT
199+65	BELLE PLANE ROAD, LT	12	NW QUADRANT
200+35	ALAMOSA TRAIL, RT	9	NW QUARDRANT
200+35	ALAMOSA TRAIL, LT	9	NE QUADRANT
300+35	BROOKSTONE LANE, RT	11	SE QUADRANT
300+35	BROOKSTONE LANE, LT	11	NE QUADRANT
31+80	CARDINAL LANE, LT	6	SW QUADRANT
499+65	PRAIRE GARDEN TRAIL, RT	12	SE QUADRANT
499+65	PRAIRE GARDEN TRAIL, LT	11	NE QUADRANT
35+50	CARDINAL LANE, RT	6	NE QUADRANT
599+65	GARDEN RIDE TRAIL, RT	8	SW QUADRANT
599+65	GARDEN RIDE TRAIL, LT	9	NE QUADRANT
40+40	CARDINAL LANE, RT	5	NW QUARDRANT
700+35	GOLDEN EAGLE DRIVE, RT	10	SE QUADRANT
700+35	GOLDEN EAGLE DRIVE, LT	9	NE QUADRANT
44+15	CARDINAL LANE, LT	7	SW QUADRANT
	TOTALS:	170	

PULVERIZING ITEMS

STATION	TO	STATION	LOCATION	325.0100 PULVERIZE AND RELAY SY	SPV.0180.01 REMOVING EXCESS PULVERIZED MATERIAL SY
10+00	-	48+35	CARDINAL LANE	17,784	17,784
100+20	-	100+58	TELLURIDE TRAIL	184	184
199+45	-	199+80	BELLE PLANE ROAD	173	173
200+20	-	200+55	ALAMOSA TRAIL	173	173
300+20	-	300+55	BROOKSTONE LANE	169	169
499+26	-	499+80	PRARIE GARDEN TRAIL	206	206
599+33	-	599+80	GARDEN RIDE TRAIL	245	245
700+20	-	700+57	GOLDEN EAGLE DRIVE	176	176
			TOTALS:	19,110	19,110

3

3

CURB AND GUTTER

STATION	LOCATION	416.0610 DRILLED TIE BARS EACH	SPV.0090.01 CONCRETE CURB & GUTTER 24-INCH TYPE D LF
100+35	TELLURIDE TRAIL, RT	4	45
100+35	TELLURIDE TRAIL, LT	4	46
12+35	CARDINAL LANE, LT	4	23
199+65	BELLE PLANE ROAD, RT	4	61
199+65	BELLE PLANE ROAD, LT	4	43
200+35	ALAMOSA TRAIL, RT	4	45
200+35	ALAMOSA TRAIL, LT	4	47
300+35	BROOKSTONE LANE, RT	4	46
300+35	BROOKSTONE LANE, LT	4	44
31+80	CARDINAL LANE, LT	4	27
499+65	PRAIRE GARDEN TRAIL, RT	4	64
499+65	PRAIRE GARDEN TRAIL, LT	4	72
35+50	CARDINAL LANE, RT	4	21
599+65	GARDEN RIDE TRAIL, RT	4	56
599+65	GARDEN RIDE TRAIL, LT	4	43
40+40	CARDINAL LANE, RT	4	23
700+35	GOLDEN EAGLE DRIVE, RT	4	49
700+35	GOLDEN EAGLE DRIVE, LT	4	54
44+15	CARDINAL LANE, LT	4	21
	TOTALS:	76	830

STORM SEWER PIPE & STRUCTURES

STATION	TO	STATION	LOCATION	608.0312 STORM SEWER PIPE REINFORCED CONCRETE CLASS III 12-INCH LF	611.3003 INLETS 3-FT DIAMETER EACH	611.9710 SALVAGED INLET COVERS EACH	EXISTING MANHOLE FLOWLINE	PROPOSED INLET FLOWLINE
599+45	-	599+63	GARDEN RIDGE TRAIL, RT	18	1	1	617.00	617.20
			TOTALS:	18	1	1		

PIPE UNDERDRAIN ITEMS

STATION	TO	STATION	LOCATION	310.0115 BASE AGGREGATE OPEN-GRADED CY	612.0106 PIPE UNDERDRAIN 6-INCH LF	645.0111 GEOTEXTILE TYPE DF SCHEDULE A SY
599+43	-	599+63	GARDEN RIDGE TRAIL, RT	3	20	20
			TOTALS:	3	20	20

HMA PAVEMENT

STATION	TO	STATION	LOCATION	455.0605 TACK COAT GAL	460.5223 HMA PAVEMENT 3 LT 58-28 S TON	460.5224 HMA PAVEMENT 4 LT 58-28 S TON
10+00	-	48+35	CARDINAL LANE	1245	3129	2087
100+20	-	100+58	TELLURIDE TRAIL	13	33	22
199+45	-	199+80	BELLE PLANE ROAD	12	31	21
200+20	-	200+55	ALAMOSA TRAIL	12	30	20
300+20	-	300+55	BROOKSTONE LANE	12	30	20
499+26	-	499+80	PRARIE GARDEN TRAIL	15	37	25
599+33	-	599+80	GARDEN RIDE TRAIL	18	44	29
700+20	-	700+57	GOLDEN EAGLE DRIVE	13	31	21
			TOTALS:	1,340	3,365	2,245

SIDEWALK ITEMS

STATION	LOCATION	465.0125 ASPHALTIC SURFACE TEMPORARY TON	602.0405 CONCRETE SIDEWALK 4-INCH SF	602.0415 CONCRETE SIDEWALK 6-INCH SF	602.0515 CURB RAMP DETECTABLE WARNING FIELD NATURAL PATINA SF
100+35	TELLURIDE TRAIL, RT	0.25	101	36	12
100+35	TELLURIDE TRAIL, LT	0.25	116	100	24
12+35	CARDINAL LANE, LT	0.25	82	74	12
199+65	BELLE PLANE ROAD, RT	-	274	88	24
199+65	BELLE PLANE ROAD, LT	-	240	115	24
200+35	ALAMOSA TRAIL, RT	0.75	116	120	24
200+35	ALAMOSA TRAIL, LT	0.75	126	85	24
300+35	BROOKSTONE LANE, RT	0.75	198	115	24
300+35	BROOKSTONE LANE, LT	0.25	259	41	12
31+80	CARDINAL LANE, LT	0.25	126	33	12
499+65	PRAIRE GARDEN TRAIL, RT	0.25	240	61	12
499+65	PRAIRE GARDEN TRAIL, LT	1.50	128	99	24
35+55	CARDINAL LANE, RT	0.25	100	68	12
599+65	GARDEN RIDE TRAIL, RT	0.25	130	46	12
599+65	GARDEN RIDE TRAIL, LT	0.75	142	116	24
40+40	CARDINAL LANE, RT	0.25	106	33	12
700+35	GOLDEN EAGLE DRIVE, RT	0.75	181	104	12
700+35	GOLDEN EAGLE DRIVE, LT	0.25	180	48	24
44+15	CARDINAL LANE, LT	0.25	135	78	12
	TOTALS:	8	2980	1460	336

NOTE:
ASPHALTIC SURFACE TEMPOARY IS FOR PATCHING BETWEEN NEW CURB AND EXISTING ROADWAY ASPHALT TO MAINTAIN PEDESTRIAN ACCESS DURING CURB RAMP CONSTRUCTION. ASPHALTIC SURFACE SHOULD BE 2-INCHES THICK. PLACE BASE AGGREGATE DENSE 1 1/4" AS NECESSARY BELOW TO ASPHALITIC SURFACE TO ACHIEVE THE 2-INCHES. WIDTH OF ASPHALITIC SURFACE SHOULD BE LIMITED TO ONLY 2 FT WIDER THAN THE CURB RAMP BOTTOM OPENING WIDTH.

3

3

MOBILIZATION EROSION CONTROL

STATION	TO	STATION	LOCATION	628.1905 MOBILIZATIONS EROSION CONTROL EACH	628.1910 MOBILIZATIONS EMERGENCY EROSION CONTROL EACH
10+00	-	48+35	CARDINAL LANE	4	3
			TOTALS:	4	3

SIGNS & SUPPORTS

STATION	LOCATION	634.0614 POSTS WOOD 4X6-INCH X 14-FT EACH	638.2102 MOVING SIGNS TYPE II EACH	638.3000 REMOVING SMALL SIGN SUPPORTS EACH
499+60	PRAIRIE GARDEN TRAIL, RT	1	1	1
599+59	GARDEN RIDGE TRAIL, RT	1	1	1
	TOTALS:	2	2	2

3

3

INLET PROTECTION

STATION	LOCATION	628.7015 INLET PROTECTION TYPE C EACH	628.7020 INLET PROTECTION TYPE D EACH	REMARKS
	FIRST INLET SOUTH OF PROJECT LIMITS	2	-	36-INCH WIDE INLETS
13+60	CARDINAL LANE, RT & LT	-	4	36-INCH WIDE INLETS
17+80	CARDINAL LANE, RT & LT	2	-	20-INCH WIDE INLETS
21+55	CARDINAL LANE, RT	1	-	20-INCH WIDE INLET
21+75	CARDINAL LANE, LT	1	-	20-INCH WIDE INLET
25+60	CARDINAL LANE, LT	-	1	20-INCH WIDE INLET
25+65	CARDINAL LANE, RT	1	-	20-INCH WIDE INLET
31+35	CARDINAL LANE, RT & LT	-	2	20-INCH WIDE INLETS
34+73	CARDINAL LANE, RT & LT	2	-	20-INCH WIDE INLETS
41+40	CARDINAL LANE, RT & LT	-	3	20-INCH WIDE INLETS
44+90	CARDINAL LANE, RT & LT	2	-	20-INCH WIDE INLETS
47+25	CARDINAL LANE, LT	1	-	20-INCH WIDE INLET
	TELLURIDE TRAIL - FIRST INLETS EAST OF PROJECT	2	-	20-INCH WIDE INLETS
199+32	BELLE PLANE ROAD, RT & LT	2	-	20-INCH WIDE INLETS
	ALAMOSSA TRAIL - FIRST INLETS EAST OF PROJECT	3	-	20-INCH WIDE INLETS
	BROOKSTONE LANE - FIRST INLETS EAST OF PROJECT	-	2	20-INCH WIDE INLETS
498+77	PRAIRIE GARDEN TRAIL, RT & LT	-	2	20-INCH WIDE INLETS
599+50	GARDEN RIDGE TRAIL, LT	-	1	20-INCH WIDE INLET
599+58	GARDEN RIDGE TRAIL, RT	-	1	20-INCH WIDE INLET
700+55	GOLDEN EAGLE DRIVE, RT & LT	1	1	20-INCH WIDE INLET
	UNDISTRIBUTED	5	3	
	TOTALS:	25	20	

LANDSCAPING

STATION	LOCATION	625.0100 TOPSOIL SY	628.1504 SILT FENCE LF	628.1520 SILT FENCE MAINTENANCE LF	628.2006 EROSION MAT URBAN CLASS I TYPE A SY	629.0210 FERTILIZER TYPE B CWT	630.0140 SEEDING MIXTURE NO. 40 LB	630.0500 SEED WATER MGAL
100+35	TELLURIDE TRAIL, RT	36	-	-	36	0.02	0.7	0.9
100+35	TELLURIDE TRAIL, LT	32	-	-	32	0.02	0.6	0.8
12+35	CARDINAL LANE, LT	18	-	-	18	0.01	0.4	0.5
199+65	BELLE PLANE ROAD, RT	48	-	-	48	0.03	0.9	1.1
199+65	BELLE PLANE ROAD, LT	39	-	-	39	0.03	0.7	0.9
200+35	ALAMOSA TRAIL, RT	38	-	-	38	0.02	0.7	0.9
200+35	ALAMOSA TRAIL, LT	35	-	-	35	0.02	0.7	0.8
300+35	BROOKSTONE LANE, RT	32	30	30	32	0.02	0.6	0.8
300+35	BROOKSTONE LANE, LT	36	-	-	36	0.02	0.7	0.8
31+80	CARDINAL LANE, LT	15	30	30	15	0.01	0.3	0.4
499+65	PRAIRE GARDEN TRAIL, RT	79	-	-	79	0.05	1.5	1.8
499+65	PRAIRE GARDEN TRAIL, LT	54	-	-	54	0.04	1.0	1.3
35+50	CARDINAL LANE, RT	16	-	-	16	0.01	0.3	0.4
599+65	GARDEN RIDE TRAIL, RT	62	-	-	62	0.04	1.2	1.4
599+65	GARDEN RIDE TRAIL, LT	42	-	-	42	0.03	0.8	1.0
40+40	CARDINAL LANE, RT	14	-	-	14	0.01	0.3	0.4
700+35	GOLDEN EAGLE DRIVE, RT	30	-	-	30	0.02	0.6	0.7
700+35	GOLDEN EAGLE DRIVE, LT	43	-	-	43	0.03	0.8	1.0
44+15	CARDINAL LANE, LT	24	-	-	24	0.02	0.5	0.6
	RESTORE TEMPORARY PED ACCOMODATIONS AREA	-	-	-	44	0.03	0.8	1.0
	UNDISTRIBUTED	177	-	-	183	0.53	3.9	4.5
	TOTALS:	870	60	60	920	1	18	22

3

PAVEMENT MARKING

STATION	TO	STATION	LOCATION	646.1020 MARKING LINE EPOXY 4-INCH LF	646.6120 MARKING STOP LINE EPOXY 18-INCH LF	646.7420 MARKING CROSSWALK EPOXY TRANSVERSE LINE 6-INCH LF	REMARKS
10+00	-	48+35	CARDINAL LANE	1,290	-	-	YELLOW DASHED & SOLID LINE
10+00	-	48+35	CARDINAL LANE	6,835	-	-	WHITE SOLID LINE
100+20	-	100+58	TELLURIDE TRAIL	-	18	84	
199+45	-	199+80	BELLE PLANE ROAD	40	18	81	YELLOW AND WHITE SOLID LINE
200+20	-	200+55	ALAMOSA TRAIL	-	18	81	
300+20	-	300+55	BROOKSTONE LANE	-	18	83	
499+26	-	499+80	PRARIE GARDEN TRAIL	-	15	70	
599+33	-	599+80	GARDEN RIDE TRAIL	-	18	85	
700+20	-	700+57	GOLDEN EAGLE DRIVE	-	17	81	
			TOTALS:	8,165	122	565	

3

TRAFFIC CONTROL

LOCATION	APPROXIMATE SERVICE DAYS	NO. IN SERVICE	643.0300 TRAFFIC CONTROL DRUMS DAY	NO. IN SERVICE	643.0420 TRAFFIC CONTROL BARRICADES TYPE III DAY	NO. IN SERVICE	643.0705 TRAFFIC CONTROL WARNING LIGHTS TYPE A DAY	NO. IN SERVICE	643.0900 TRAFFIC CONTROL SIGNS DAY	NO. IN SERVICE	643.1050 TRAFFIC CONTROL SIGNS PCMS DAY	REMARKS
STAGE 1												
ADVANCED WARNING SIGNS CARDINAL LN	40	-	0	2	80	4	160	4	160	-	0	SEE BARRICADES AND SIGNS FOR VARIOUS CLOSURES DETAIL B AND E
ADVANCED WARNING SIGNS SIDEROADS	40	-	0	-	0	-	0	7	280	-	0	SEE BARRICADES AND SIGNS FOR VARIOUS CLOSURES DETAIL E
1A SIDEWALK AND CURB RAMPS WORKING	7	50	350	-	0	-	0	5	35	-	0	
1A SIDEWALK AND CURB RAMPS PROTECTING	39	23	897									
1B SIDEWALK AND CURB RAMPS WORKING	7	50	350	-	0	-	0	5	35	-	0	
1B SIDEWALK AND CURB RAMPS PROTECTING	30	22	660									
1C SIDEWALK AND CURB RAMPS WORKING	8	50	400	-	0	-	0	5	40	-	0	
1C SIDEWALK AND CURB RAMPS PROTECTING	21	21	441									
1D SIDEWALK AND CURB RAMPS WORKING	7	40	280	-	0	-	0	4	28	-	0	
1D SIDEWALK AND CURB RAMPS PROTECTING	10	19	190									
UNDISTRIBUTED	-	-	432	-	0	-	0	-	62	-	0	
STAGE 1 SUBTOTAL			4,000		80		160		640		0	
STAGE 2												
ADVANCED WARNING STAGE 2	7	10	70	-	0	-	0	-	0	2	14	PCMS USED 7 DAYS IN ADVACNE OF STAGE 2 CLOSURE
ADVANCED WARNING SIGNS CARDINAL LN	20	-	0	6	120	12	240	8	160	-	0	SEE BARRICADES AND SIGNS FOR VARIOUS CLOSURES DETAIL C
ADVANCED WARNING SIGNS SIDEROADS	20	-	0	14	280	28	560	14	280	-	0	SEE BARRICADES AND SIGNS FOR SIDEROAD CLOSURES DETAIL 4
TEMPORARY PEDESTRIAN DETOURS	20	100	2000	-	0	-	0	40	800	-	0	SEE TRAFFIC CONTROL, PEDESTRIAN ACCOMODATION
UNDISTRIBUTED	20	10	200	-	0	-	0	-	136	-	0	LOOSE GRAVEL, UNEVEN LANES, ETC
STAGE 2 SUBTOTAL			2,270		400		800		1,376		14	
TOTALS:			6,270		480		960		2,016		14	

3

CONSTRUCTION STAKING

STATION	TO	STATION	LOCATION	650.4000 CONSTRUCTION STAKING STORM SEWER EACH	650.5500 CONSTRUCTION STAKING CURB GUTTER AND CURB & GUTTER LF	650.8000 CONSTRUCTION STAKING RESURFACING REFERENCE LF	650.9000 CONSTRUCTION STAKING CURB RAMPS EACH	650.9500.01 CONSTRUCTION STAKING SIDEWALK (PROJECT) 01. 9269-10-70 EACH	650.9911.01 CONSTRUCTION STAKING SUPPLEMENTAL CONTROL (PROJECT) 01. 9269-10-70 EACH
			ENTIRE PROJECT	-	-			1	1
10+00	-	48+35	CARDINAL LANE	-	-	3835	-	-	-
100+20	-	100+58	TELLURIDE TRAIL	-	-	38	-	-	-
199+45	-	199+80	BELLE PLANE ROAD	-	-	35	-	-	-
200+20	-	200+55	ALAMOSA TRAIL	-	-	35	-	-	-
300+20	-	300+55	BROOKSTONE LANE	-	-	35	-	-	-
499+26	-	499+80	PRAIRE GARDEN TRAIL	-	-	54	-	-	-
599+33	-	599+80	GARDEN RIDGE TRAIL	-	-	47	-	-	-
700+20	-	700+57	GOLDEN EAGLE DRIVE	-	-	37	-	-	-
100+20	-	100+51	TELLURIDE TRAIL, RT	-	45	-	1	-	-
100+20	-	100+51	TELLURIDE TRAIL, LT	-	46	-	2	-	-
12+26	-	12+49	CARDINAL LANE, LT	-	23	-	1	-	-
199+47	-	199+80	BELLE PLANE ROAD, RT	-	61	-	2	-	-
199+47	-	199+80	BELLE PLANE ROAD, LT	-	43	-	2	-	-
200+20	-	200+53	ALAMOSA TRAIL, RT	-	45	-	2	-	-
200+20	-	200+53	ALAMOSA TRAIL, LT	-	47	-	2	-	-
300+20	-	300+53	BROOKSTONE LANE, RT	-	46	-	2	-	-
300+20	-	300+53	BROOKSTONE LANE, LT	-	45	-	1	-	-
31+62	-	31+89	CARDINAL LANE, LT	-	27	-	1	-	-
499+28	-	499+80	PRAIRE GARDEN TRAIL, RT	-	64	-	1	-	-
499+28	-	499+80	PRAIRE GARDEN TRAIL, LT	-	72	-	2	-	-
35+42	-	35+63	CARDINAL LANE, RT	-	21	-	1	-	-
599+40	-	599+80	GARDEN RIDE TRAIL, RT	1	56	-	1	-	-
599+40	-	599+80	GARDEN RIDE TRAIL, LT	-	43	-	2	-	-
40+30	-	40+53	CARDINAL LANE, RT	-	23	-	1	-	-
700+20	-	700+57	GOLDEN EAGLE DRIVE, RT	-	49	-	2	-	-
700+20	-	700+57	GOLDEN EAGLE DRIVE, LT	-	54	-	1	-	-
43+99	-	44+20	CARDINAL LANE, LT	-	21	-	1	-	-
			TOTALS:	1	830	4,116	28	1	1

3

3

TEMPORARY PEDESTRIAN ACCOMODATIONS

STATION	LOCATION	644.1440 TEMPORARY PEDESTRIAN SURFACE MATTING SF	644.1601 TEMPORARY PEDESTRIAN CURB RAMP DAY	644.1605 TEMPORARY PEDESTRIAN DETECTABLE WARNING FIELD SF	644.1810 TEMPORARY PEDESTRIAN BARRICADE LF
100+65	TELLURIDE TRAIL, RT	180	20	10	18
100+65	TELLURIDE TRAIL, LT	175	20	10	22
200+65	ALAMOSA TRAIL, RT	334	20	10	22
200+65	ALAMOSA TRAIL, LT	334	20	10	20
199+65	BELLE PLANE ROAD, RT	-	-	-	24
199+65	BELLE PLANE ROAD, LT	-	-	-	24
300+35	BROOKSTONE LANE, RT	-	-	-	24
300+35	BROOKSTONE LANE, LT	-	-	-	20
499+20	PRAIRIE GARDEN TRAIL, RT	70	20	10	20
499+20	PRAIRIE GARDEN TRAIL, LT	74	20	10	20
599+30	GARDEN RIDGE TRAIL, RT	214	20	10	18
599+30	GARDEN RIDGE TRAIL, LT	184	20	10	24
700+35	GOLDEN EAGLE DRIVE, RT	-	-	-	24
700+35	GOLDEN EAGLE DRIVE, LT	-	-	-	20
	TOTALS:	1,565	160	80	300

SAWING

STATION	LOCATION	690.0150 SAWING ASPHALT LF	690.0250 SAWING CONCRETE LF	REMARKS
10+00	CARDINAL LANE	40	-	BEGIN PROJECT
48+35	CARDINAL LANE	40	-	END PROJECT
100+58	TELLURIDE TRAIL	34	-	SIDE ROAD MATCH
199+45	BELLE PLANE ROAD	33	-	SIDE ROAD MATCH
200+55	ALAMOSA TRAIL	33	-	SIDE ROAD MATCH
300+55	BROOKSTONE LANE	33	-	SIDE ROAD MATCH
499+26	PRAIRIE GARDEN TRAIL	31	-	SIDE ROAD MATCH
599+33	GARDEN RIDGE RAIL	36	-	SIDE ROAD MATCH
700+57	GOLDEN EAGLE DRIVE	32	-	SIDE ROAD MATCH
100+35	TELLURIDE TRAIL, RT	47	9	CURB, CURB RAMP, & SIDEWALK REMOVAL
100+35	TELLURIDE TRAIL, LT	48	14	CURB, CURB RAMP, & SIDEWALK REMOVAL
12+35	CARDINAL LANE, LT	25	9	CURB, CURB RAMP, & SIDEWALK REMOVAL
199+65	BELLE PLANE ROAD, RT	63	14	CURB, CURB RAMP, & SIDEWALK REMOVAL
199+65	BELLE PLANE ROAD, LT	45	14	CURB, CURB RAMP, & SIDEWALK REMOVAL
200+35	ALAMOSA TRAIL, RT	47	9	CURB, CURB RAMP, & SIDEWALK REMOVAL
200+35	ALAMOSA TRAIL, LT	49	9	CURB, CURB RAMP, & SIDEWALK REMOVAL
300+35	BROOKSTONE LANE, RT	48	14	CURB, CURB RAMP, & SIDEWALK REMOVAL
300+35	BROOKSTONE LANE, LT	46	14	CURB, CURB RAMP, & SIDEWALK REMOVAL
31+80	CARDINAL LANE, LT	29	14	CURB, CURB RAMP, & SIDEWALK REMOVAL
499+65	PRAIRE GARDEN TRAIL, RT	66	14	CURB, CURB RAMP, & SIDEWALK REMOVAL
499+65	PRAIRE GARDEN TRAIL, LT	74	14	CURB, CURB RAMP, & SIDEWALK REMOVAL
35+50	CARDINAL LANE, RT	23	14	CURB, CURB RAMP, & SIDEWALK REMOVAL
599+65	GARDEN RIDE TRAIL, RT	58	9	CURB, CURB RAMP, & SIDEWALK REMOVAL
599+65	GARDEN RIDE TRAIL, LT	45	9	CURB, CURB RAMP, & SIDEWALK REMOVAL
40+40	CARDINAL LANE, RT	25	14	CURB, CURB RAMP, & SIDEWALK REMOVAL
700+35	GOLDEN EAGLE DRIVE, RT	51	14	CURB, CURB RAMP, & SIDEWALK REMOVAL
700+35	GOLDEN EAGLE DRIVE, LT	56	14	CURB, CURB RAMP, & SIDEWALK REMOVAL
44+15	CARDINAL LANE, LT	23	14	CURB, CURB RAMP, & SIDEWALK REMOVAL
	TOTALS:	1180	236	

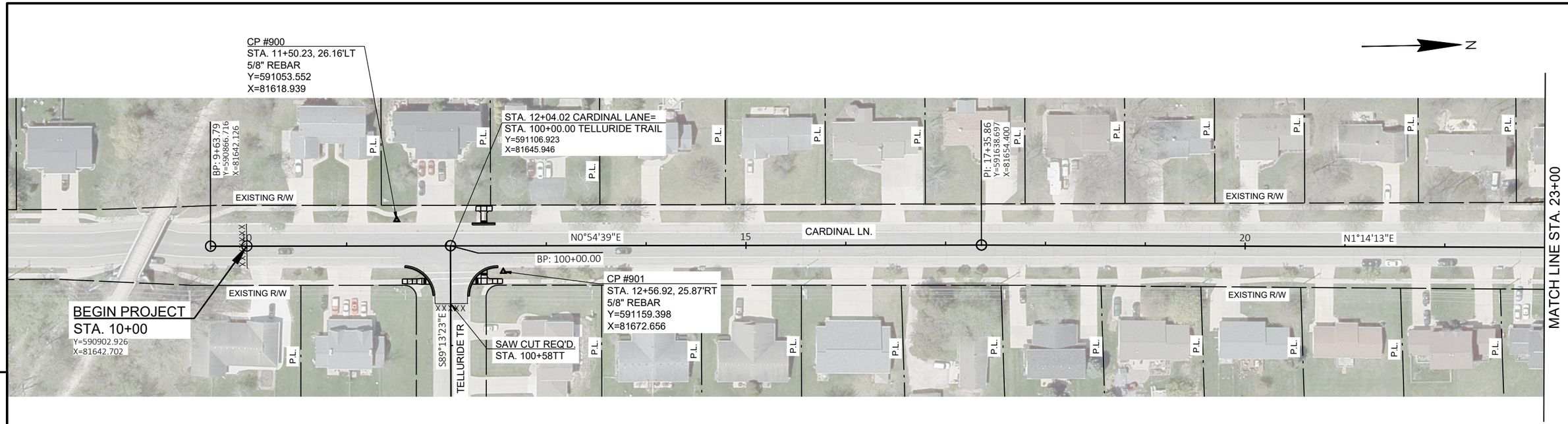

5

5

BENCH MARKS

NO.	STATION	DESCRIPTION	ELEV.
1002	25+42	BURY BOLT ON HYDRANT - 52' RT	623.79
1001	32+76	SW CORNER CONC STEP 2586 - 106' RT	622.45
1003	35+59	BURY BOLT ON HYDRANT - 43' RT	624.81

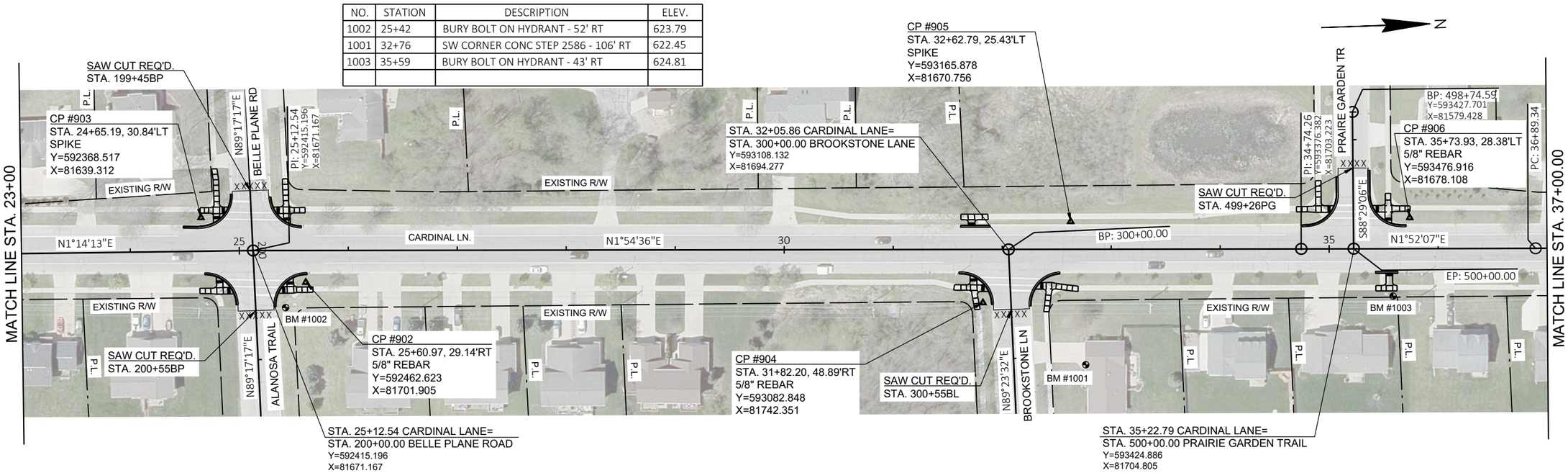

PROJECT NO: 9269-10-70	HWY: CARDINAL LANE	COUNTY: BROWN	PLAN SHEETS	SHEET 54	E

FILE NAME : I:\45\450572 VILLAGE OF HOWARD CARDINAL LANE\C3D\SHEETS\050201-PN.DWG
LAYOUT NAME - 050201-pn
PLOT DATE : 8/30/2022 8:48 AM PLOT BY : VERVILLE, PHILLIP PLOT NAME : PLOT SCALE : 1 IN:100 FT

BENCH MARKS

NO.	STATION	DESCRIPTION	ELEV.
1004	38+85	TOP NUT ON HYDRANT - 41' RT	627.38

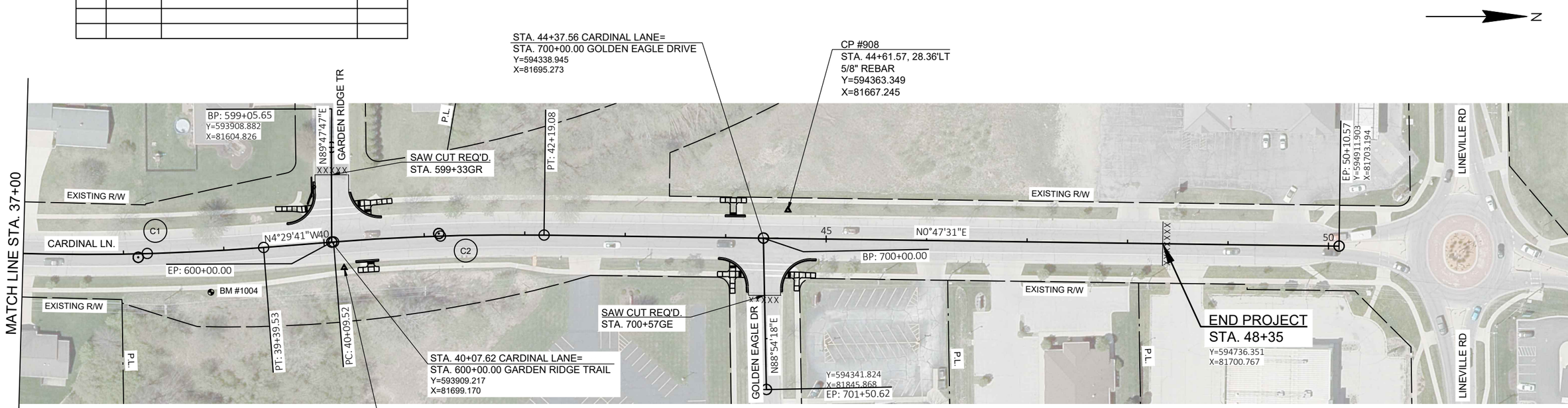

CARDINAL LANE CONSTRUCTION R/L

C1	C2
PI STA = 38+14.6	PI STA = 41+14.4
Y = 593716.499	Y = 594015.645
X = 81714.320	X = 81690.804
DELTA = 6°21'48" LT	DELTA = 5°17'12"
D = 2°32'36"	D = 2°31'22"
T = 125.2'	T = 104.9'
L = 250.2'	L = 209.6'
R = 2252.7'	R = 2271.1'
PC STA = 36+89.3	PC STA = 40+09.5
Y = 593591.342	Y = 593911.115
X = 81710.236	X = 81699.021
PT STA = 39+39.5	PT STA = 42+19.1
Y = 593841.337	Y = 594120.488
X = 81704.506	X = 81692.253
DB = N01°52'07"E	DB = N04°29'41"W
DA = N04°29'41"W	DA = N00°47'31"E

Standard Detail Drawing List

08C06-02	INLETS 3-FT AND 4-FT DIAMETER
08D01-22B	CONCRETE CURB, TIES AND CURB AND GUTTER APPLICATIONS
08D05-20A	CURB RAMPS TYPES 1 AND 1-A
08D05-20B	CURB RAMPS TYPES 2 AND 3
08D05-20C	CURB RAMPS TYPES 4A AND 4A1
08D05-20D	CURB RAMPS TYPE 4B AND 4B1
08D05-20E	CURB RAMPS TYPES 5, 6, 7A, 7B & 8
08D05-20F	CURB RAMPS RADIAL DETECTABLE WARNING FIELD APPLICATIONS
08D05-20G	CURB RAMPS RECTANGULAR AND RADIAL DETECTABLE WARNING PLATES
08E09-06	SILT FENCE
08E10-02	INLET PROTECTION TYPE A, B, C AND D
13C19-03	HMA LONGITUDINAL JOINTS
15C02-08A	BARRICADES AND SIGNS FOR MAINLINE CLOSURES
15C02-08B	BARRICADES AND SIGNS FOR VARIOUS CLOSURES
15C05-05	TRAFFIC CONTROL, ADVANCE WARNING SIGNS 40 M.P.H. OR LESS
15C08-21A	LONGITUDINAL MARKING (MAINLINE)
15C11-09B	CHANNELIZING DEVICES DRUMS, CONES, BARRICADES AND VERTICAL PANELS
15C12-09A	TRAFFIC CONTROL FOR LANE CLOSURE WITH FLAGGING OPERATION
15C12-09B	TRAFFIC CONTROL, LANE CLOSURE WITH AUTOMATED FLAGGER ASSISTANCE DEVICE
15C33-04	STOP LINE AND CROSSWALK PAVEMENT MARKING
15D28-04	TRAFFIC CONTROL, WORK ON SHOULDER OR PARKING LANE, UNDIVIDED ROADWAY
15D30-07A	TRAFFIC CONTROL, PEDESTRIAN ACCOMMODATION
15D30-07B	TRAFFIC CONTROL, TEMPORARY ADA COMPLIANT PEDESTRIAN ACCOMMODATION
15D30-07C	TRAFFIC CONTROL, PEDESTRIAN ACCOMMODATION

6

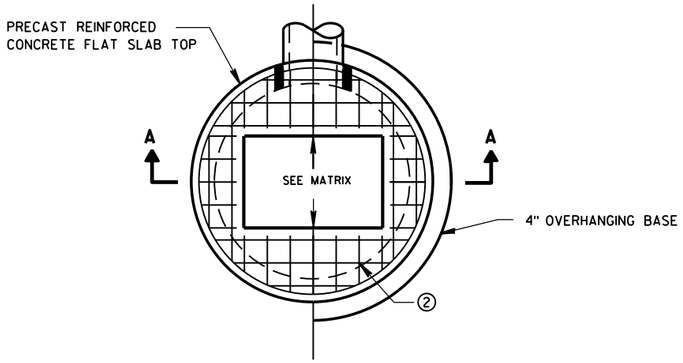

PLAN VIEW RECTANGULAR OPENING

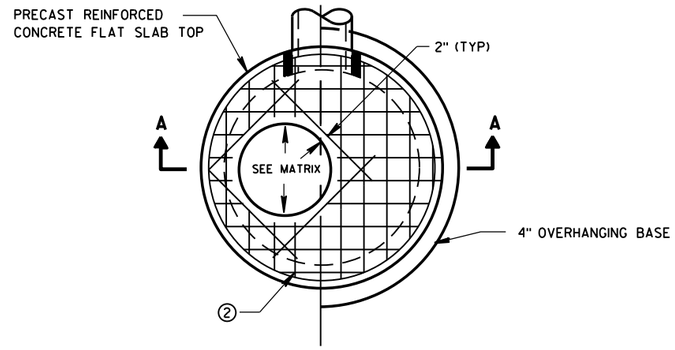

PLAN VIEW CIRCULAR OPENING

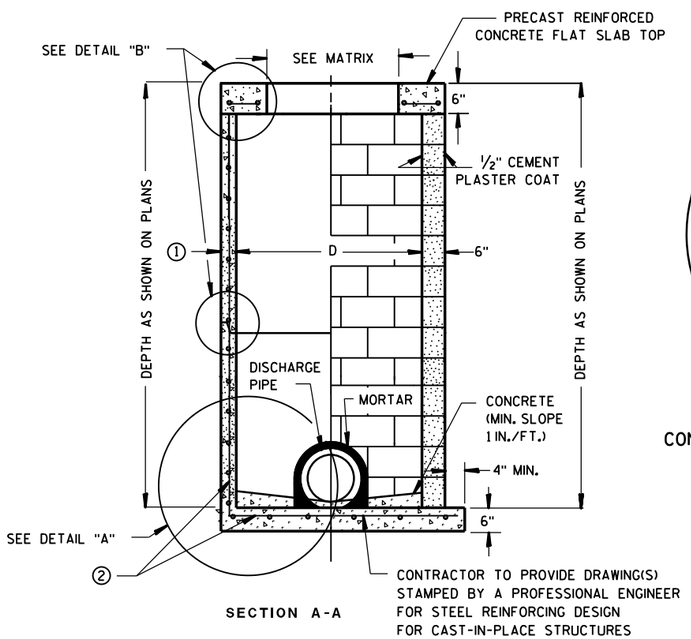

SECTION A-A

PRECAST REINFORCED CONCRETE WITH MONOLITHIC BASE

CONCRETE BLOCK WITH CAST-IN-PLACE OR PRECAST REINFORCED CONCRETE BASE ②

CIRCULAR INLETS W/ FLAT TOP

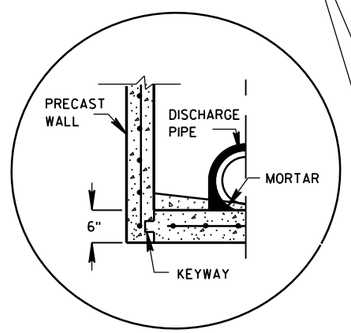

PRECAST REINFORCED CONCRETE WITH INTEGRAL BASE OPTION

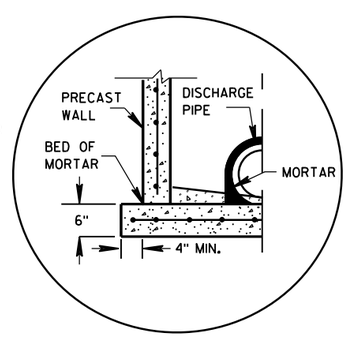

SEPARATE PRECAST REINFORCED CONCRETE BASE OPTION

DETAIL "A"

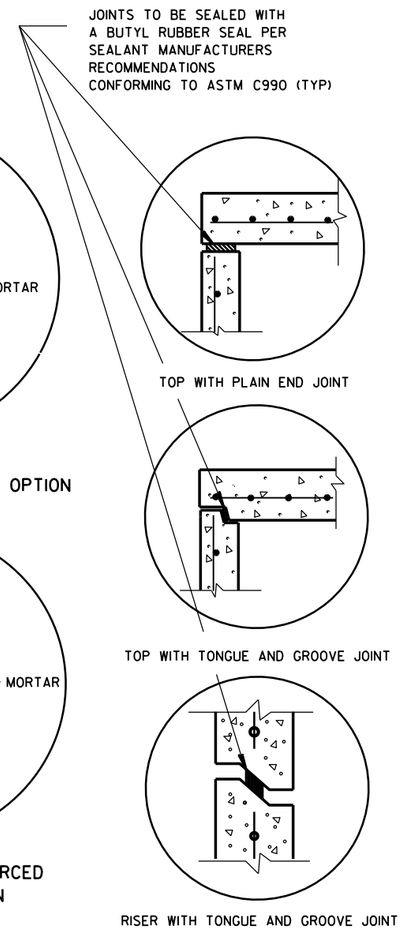

DETAIL "B"

GENERAL NOTES

DETAILS OF CONSTRUCTION, MATERIALS AND WORKMANSHIP NOT SHOWN ON THIS DRAWING SHALL CONFORM TO THE PERTINENT REQUIREMENTS OF THE STANDARD SPECIFICATIONS AND THE APPLICABLE SPECIAL PROVISIONS.

UNLESS OTHERWISE AUTHORIZED IN WRITING BY THE ENGINEER, THE CONTRACTOR SHALL NOT ORDER AND DELIVER PRECAST INLET UNITS REQUIRED FOR THE PROJECT UNTIL A LIST OF SIZES IS FURNISHED BY THE ENGINEER.

DETAILED DRAWINGS FOR PROPOSED ALTERNATE DESIGNS FOR UNDERGROUND DRAINAGE STRUCTURES SHALL BE SUBMITTED TO THE ENGINEER FOR APPROVAL PROVIDING THAT SUCH ALTERNATE DESIGNS MAKE PROVISION FOR EQUIVALENT CAPACITY AND STRENGTH.

ALL DRAINAGE STRUCTURES ARE DESIGNATED ON THE PLANS AS "MANHOLES 3X3-L", "CATCH BASINS 4-B", "INLETS 2X3-H", ETC. THE FIRST NUMBERS DESIGNATE THE SIZE OF THE STRUCTURE, AND THE FOLLOWING LETTER DESIGNATES THE TYPE OF COVER TO BE USED TO COMPRISE THE COMPLETE UNIT.

BASES SHALL BE PLACED ON A BED OF MATERIAL AT LEAST 6 INCHES IN DEPTH, WHICH MEETS THE REQUIREMENTS OF FOUNDATION BACKFILL. THIS BEDDING SHALL BE COMPACTED AND PROVIDE UNIFORM SUPPORT FOR THE ENTIRE AREA OF THE BASE.

ALL BAR STEEL REINFORCEMENT SHALL BE EMBEDDED 2 INCHES CLEAR UNLESS OTHERWISE SHOWN OR NOTED.

ALL PRECAST INLET UNITS SHALL CONFORM TO THE PERTINENT REQUIREMENTS OF AASHTO DESIGNATION M199.

PRECAST REINFORCED RISERS SHALL HAVE A TONGUE AND GROOVE JOINT WITH TONGUE UP OR DOWN.

4" OVERHANGING BASES ARE REQUIRED FOR ALL CONCRETE BLOCK INSTALLATIONS. 4" OVERHANG IS REQUIRED WHEN SEPARATE PRECAST BASE IS PROVIDED. OVERHANG IS NOT REQUIRED ON PRECAST STRUCTURES WITH AN INTEGRAL OR MONOLITHIC BASE.

FOR ADDITIONAL CONFIGURATIONS, MAINTAIN A MINIMUM OF 12 INCHES AS MEASURED FROM THE INSIDE OF THE STRUCTURE WALL BETWEEN THE OUTSIDE PIPE WALLS OF ADJACENT PIPES. SEE DETAIL "C".

① MINIMUM WALL THICKNESS SHALL BE 4-IN FOR 3-FT DIAMETER AND 5-IN FOR 4-FT DIAMETER PRECAST INLETS.

② FOR PRECAST CATCH BASINS PROVIDE REINFORCING STEEL IN ACCORDANCE TO AASHTO M199.

INLET COVER OPENING MATRIX

	INLET COVER TYPE	ALL A'S	ALL B'S	BW	C	F	ALL H'S	S	T	V	WM	Z
INLET SIZE	OPENING SIZE (FT)											
3-FT	2 DIA.				X							X
	2X2	X	X					X		X		
4-FT	2 DIA.				X							X
	2X2	X	X					X		X		
	2X2.5			X				X	X	X	X	
	2X3						X					
	2.5X3					X						

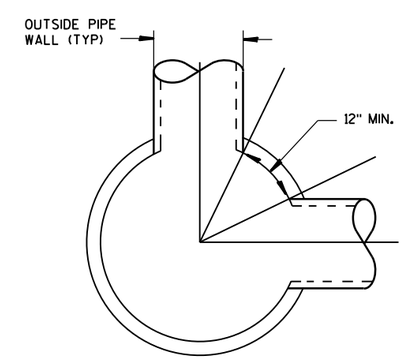

DETAIL "C"

PIPE MATRIX

INLET SIZE	MAXIMUM INSIDE PIPE DIAMETER FOR TWO PIPES	
	180° SEPARATION (IN)	90° SEPARATION (IN)
3-FT	15	12
4-FT	24	18

INLETS 3-FT AND 4-FT DIAMETER

INLETS 3-FT
AND 4-FT DIAMETER

STATE OF WISCONSIN
DEPARTMENT OF TRANSPORTATION

APPROVED
Sept., 2016 /S/ Rodney Taylor
DATE ROADWAY STANDARDS DEVELOPMENT UNIT SUPERVISOR
FHWA

GENERAL NOTES

DETAILS OF CONSTRUCTION AND WORKMANSHIP NOT SHOWN ON THIS DRAWING SHALL CONFORM TO THE PERTINENT REQUIREMENTS OF THE CONTRACT.

PAVEMENT TIES AND TIE BARS SHALL BE EPOXY COATED IN CONFORMANCE WITH SUBSECTION 505.2.6.2 OF THE STANDARD SPECIFICATIONS.

UNLESS OTHERWISE SHOWN ON THE TYPICAL CROSS SECTIONS, THE BASE AGGREGATE AND COMMON EXCAVATION LIMITS ARE 2' - 0" BEHIND THE BACK OF CURBS.

(1) TIE BARS ARE REQUIRED FOR CURB AND GUTTERS TYPES A, G, K, R, AND TBTT.

(2) THE BOTTOM OF CURB AND GUTTER MAY BE CONSTRUCTED EITHER LEVEL OR PARALLEL TO THE SLOPE OF THE SUBGRADE OR BASE AGGREGATE PROVIDED A 6" MINIMUM GUTTER THICKNESS IS MAINTAINED.

(9) REFER TO SDD 08D18 AND 08D19 FOR ADDITIONAL DRIVEWAY ENTRANCE CURB DETAILS.

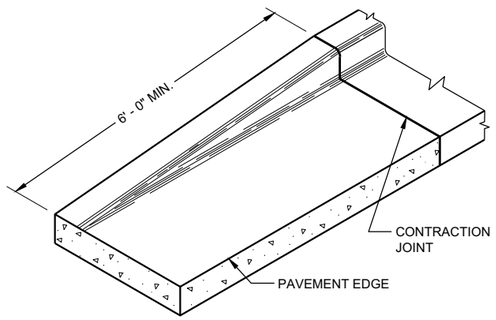

END SECTIONCURB AND GUTTER

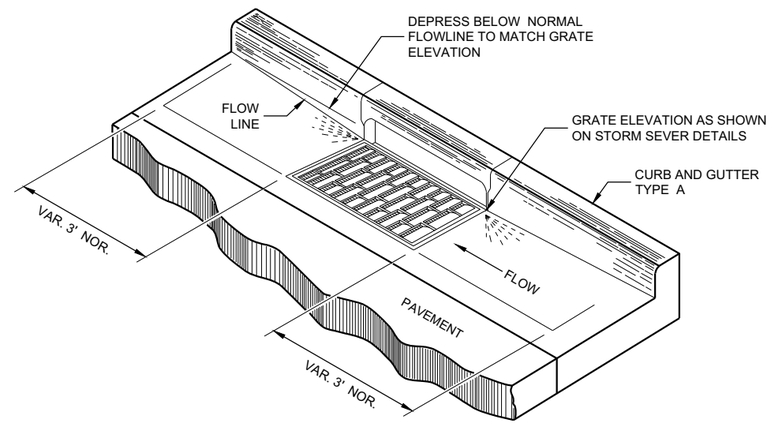

DETAIL OF CURB AND GUTTER AT INLETS
(TYPICAL H INLET COVER SHOWN)

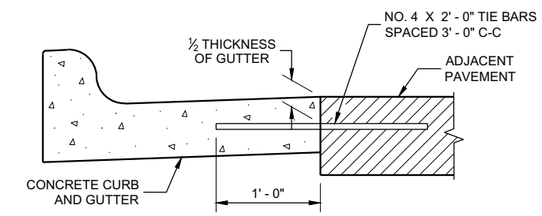

TYPICAL TIE BAR LOCATION (1)

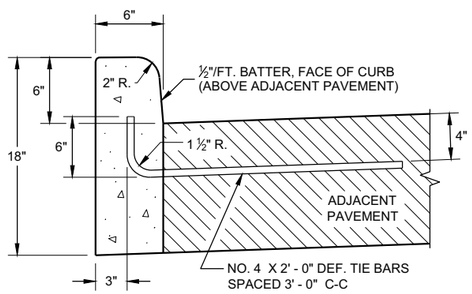

TYPES A (1) & D

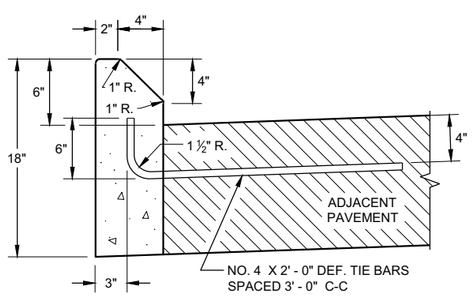

TYPES G (1) & J

CONCRETE CURB

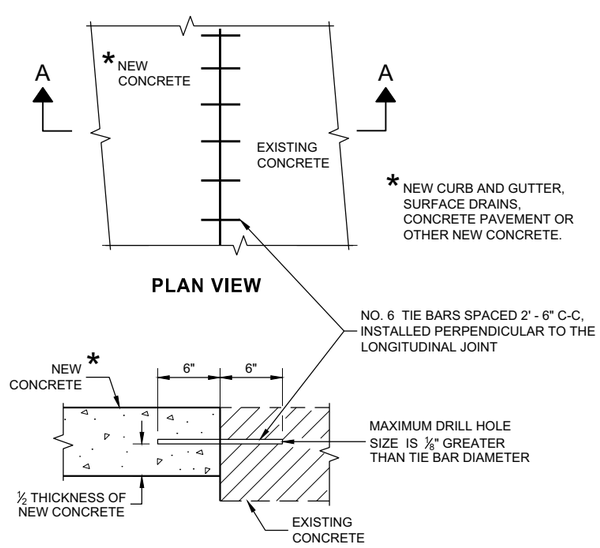

PLAN VIEW

SECTION A - A

TIE BARS DRILLED INTO EXISTING PAVEMENT

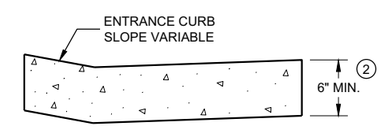

DRIVEWAY ENTRANCE CURB (9)
(WHEN DIRECTED BY THE ENGINEER)

CONCRETE CURB, TIES AND CURB AND GUTTER APPLICATIONS

STATE OF WISCONSIN
DEPARTMENT OF TRANSPORTATION

APPROVED
February 2021 — DATE
/S/ Rodnery Taylor — ROADWAY STANDARDS DEVE ENGINEER
FHWA

6

SDD 08D01 - 22b

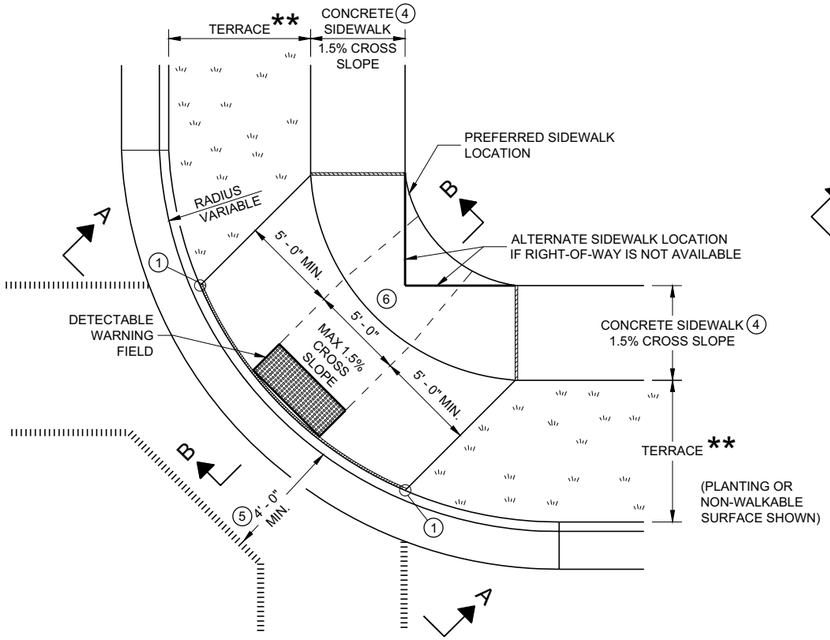

PLAN VIEW

CURB RAMP TYPE 1

(CENTER OF CORNER RADIUS)

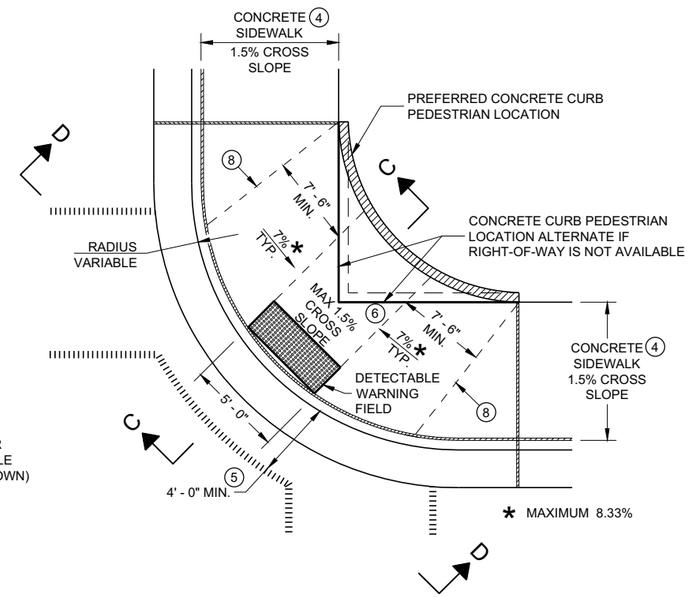

PLAN VIEW

CURB RAMP TYPE 1 - A

(NO TERRACE)

GENERAL NOTES

AVOID PLACING DRAINAGE STRUCTURES, JUNCTION BOXES OR OTHER OBSTRUCTIONS IN FRONT OF RAMP ACCESS AREAS.

DETAILS OF CONSTRUCTION, MATERIALS AND WORKMANSHIP NOT SHOWN ON THIS DRAWING SHALL CONFORM TO THE PERTINENT REQUIREMENTS OF THE STANDARD SPECIFICATIONS AND THE APPLICABLE SPECIAL PROVISIONS.

WHEN NECESSARY, THE SIDEWALK ELEVATION MAY BE LOWERED TO MEET THE HIGH POINT ON THE RAMP.

TYPE 1 CURB RAMPS SHALL HAVE A NORMAL SIDEWALK APRON AND CURB ON BOTH SIDES OF RAMP.

DETECTABLE WARNING FILED SHALL BE MEASURED AND PAID BY THE SQUARE FOOT AS "CURB RAMP DETECTABLE WARNING FIELD". THE CONCRETE PEDESTRIAN CURB, IF NEEDED, SHALL BE MEASURED AND PAID BY THE LINEAR FOOT AS "CONCRETE CURB PEDESTRIAN". CONCRETE SIDEWALK IN THE CURB RAMP AREA SHALL BE MEASURED AND PAID BY THE SQUARE FOOT AS CONCRETE SIDEWALK, INCLUDING THE AREA UNDER THE DETECTABLE WARNING FIELD.

SELECT CURB RAMP DETECTABLE WARNING FIELD MATERIALS AND DEVICES FROM THE DEPARTMENT'S APPROVED MATERIALS LIST. THE COLOR OF THE DETECTABLE WARNING FIELD IS SPECIFIED ELSEWHERE AND IS INCIDENTAL TO THE BID ITEM OF "CURB RAMP DETECTABLE WARNING FIELD"

DETECTABLE WARNING FIELDS THAT ARE INSTALLED AS A GROUP OR SIDE BY SIDE, SHALL BE FROM THE SAME MANUFACTURER.

SURFACE TEXTURE OF THE RAMP SHALL BE OBTAINED BY COARSE BROOMING TRANSVERSE TO THE SLOPE OF THE RAMP.

1. THIS POINT IS AN EXTENSION OF OUTSIDE EDGE OF APPROACHING SIDEWALK WHERE IT MEETS THE BACK OF CONCRETE CURB. POINT LOCATION MAY BE ADJUSTED TO ALIGN WITH BEGINNING OF FULL-HEIGHT CURB IF THIS DISTANCE IS SHORT.
2. GRADE CHANGE BETWEEN GUTTER FLAG SLOPE AND THE CURB RAMP SLOPE SHALL NOT EXCEED 11%. MAXIMUM GUTTER FLAG SLOPE IS 4%. PROVIDE LONGITUDINAL DRAINAGE AROUND CURB AND AWAY FROM CURB RAMP. NO VERTICAL LIPS OR DISCONTINUITIES GREATER THAN ¼ - INCH ARE ALLOWED. SLOPE OF CURB HEAD OPENING SHALL MATCH THE RAMP SLOPE, MINIMALLY 1.5% AND NOT TO EXCEED 7%. WHEN ADJACENT TO 1.5% LANDING, CONSTRUCT CURB HEAD OPENING AT 1.5% IN THE DIRECTION OF PEDESTRIAN TRAVEL.
3. MAXIMUM 8.33% CURB RAMP SLOPE IS ALLOWABLE WITH FLATTENED GUTTER FLAG SLOPE AND NOT TO EXCEED 11% GRADE CHANGE.
4. ±0.5% CONSTRUCTION TOLERANCE IN SIDEWALK CROSS SLOPE. THE SIDEWALK CROSS SLOPE SHALL NOT EXCEED 2% WITHOUT PRIOR APPROVAL FROM THE ENGINEER.
5. PROVIDE A LEVEL LANDING IN THE STREET AND GUTTER AREA (2% MAXIMUM SLOPE IN ANY DIRECTION). WHEN THE GUTTER SLOPE EXCEEDS 2%, CONSTRUCT THE LEVEL LANDING IN THE STREET AREA.
6. PROVIDE A LEVEL LANDING (MAXIMUM 2% SLOPE) IN ANY DIRECTION OF PEDESTRIAN TRAVEL. STANDARD LEVEL LANDING SIZE IS 5 FEET BY 5 FEET.
8. PROVIDE GRADE BREAK PERPENDICULAR TO DIRECTION OF WHEELCHAIR TRAVEL.

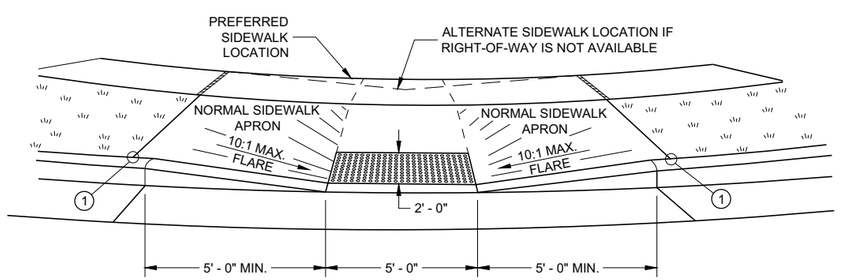

VIEW A - A FOR TYPE 1

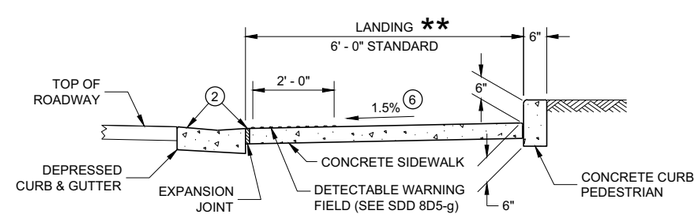

SECTION C - C FOR TYPE 1 - A

LEGEND

- ½" EXPANSION JOINT SIDEWALK
- CONTRACTION JOINT FIELD LOCATED
- PAVEMENT MARKING CROSSWALK (WHITE)

** WIDTH SHOWN ELSEWHERE IN THE PLANS

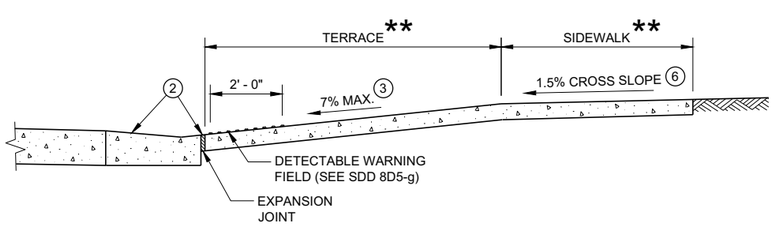

SECTION B - B FOR TYPE 1

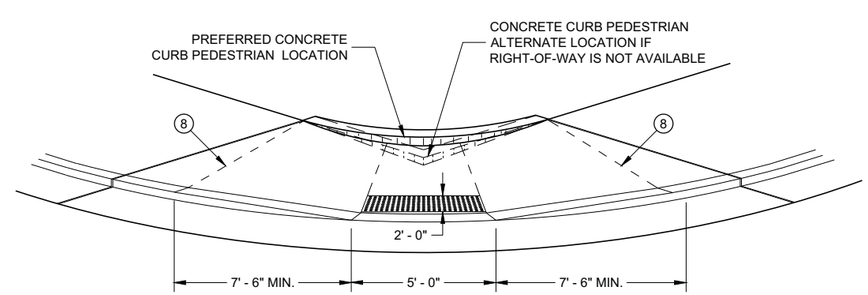

VIEW D - D FOR TYPE 1 - A

CURB RAMPS TYPE 1 AND 1-A

STATE OF WISCONSIN
DEPARTMENT OF TRANSPORTATION

6

SDD 08D05 - 20a

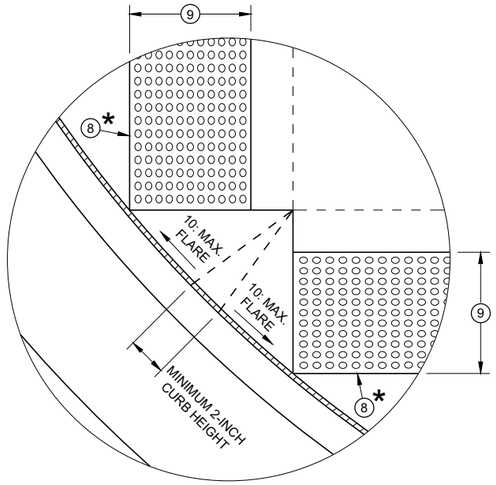

DETAIL A

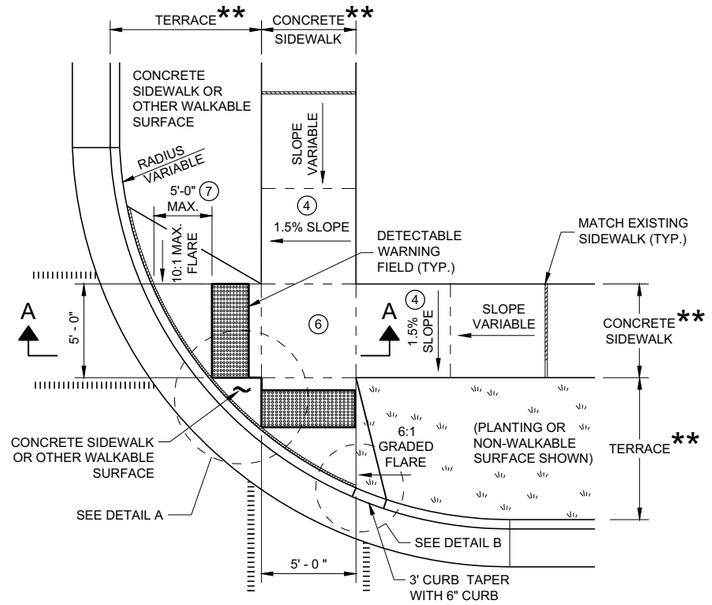

PLAN VIEW
CURB RAMP TYPE 2
(CENTER OF CORNER RADIUS)

GENERAL NOTES

AVOID PLACING DRAINAGE STRUCTURES, JUNCTION BOXES OR OTHER OBSTRUCTIONS IN FRONT OF RAMP ACCESS AREAS.

DETAILS OF CONSTRUCTION, MATERIALS AND WORKMANSHIP NOT SHOWN ON THIS DRAWING SHALL CONFORM TO THE PERTINENT REQUIREMENTS OF THE STANDARD SPECIFICATIONS AND THE APPLICABLE SPECIAL PROVISIONS.

DETECTABLE WARNING FIELDS THAT ARE INSTALLED AS A GROUP OR SIDE BY SIDE SHALL BE FROM THE SAME MANUFACTURER.

2 GRADE CHANGE BETWEEN GUTTER FLAG SLOPE AND THE CURB RAMP SLOPE SHALL NOT EXCEED 11%. MAXIMUM GUTTER FLAG SLOPE IS 4%. PROVIDE LONGITUDINAL DRAINAGE AROUND CURB AND AWAY FROM CURB RAMP. NO VERTICAL LIPS OR DISCONTINUITIES GREATER THAN ¼ - INCH ARE ALLOWED. SLOPE OF CURB HEAD OPENING SHALL MATCH THE RAMP SLOPE, MINIMALLY 1.5% AND NOT TO EXCEED 7%. WHEN ADJACENT TO 1.5% LANDING, CONSTRUCT CURB HEAD OPENING AT 1.5% IN THE DIRECTION OF PEDESTRIAN TRAVEL.

3 AN 8.33% CURB RAMP SLOPE IS ALLOWABLE WITH FLATTENED GUTTER FLAG SLOPE (2.67% OR LESS) AND NOT TO EXCEED 11% GRADE CHANGE.

4 ±0.5% CONSTRUCTION TOLERANCE IN SIDEWALK CROSS SLOPE. THE SIDEWALK CROSS SLOPE SHALL NOT EXCEED 2% WITHOUT PRIOR APPROVAL FROM THE ENGINEER.

6 PROVIDE A LEVEL LANDING (MAXIMUM 2% SLOPE) IN ANY DIRECTION OF PEDESTRIAN TRAVEL. STANDARD LEVEL LANDING SIZE IS 5 FEET X 5 FEET.

7 WHEN GRADE BREAK DISTANCE EXCEEDS 5 FEET, USE RADIAL DETECTABLE WARNING FIELD PER SDD 8D5-f.

8 PROVIDE GRADE BREAK PERPENDICULAR TO DIRECTION OF WHEELCHAIR TRAVEL.

9 WHEN DISTANCE IS LESS THAN 6' - 0", IT MAY BE DIFFICULT TO ACHIEVE A 7% SLOPE OR FLATTER ALONG THE RAMP. REDUCE CURB HEIGHT IN TRIANGLE AREA TO ACHIEVE 7% SLOPE OR FLATTER ON RAMP. CONSTRUCT 2-INCH MINIMUM CURB HEIGHT BETWEEN 10:1 FLARES.

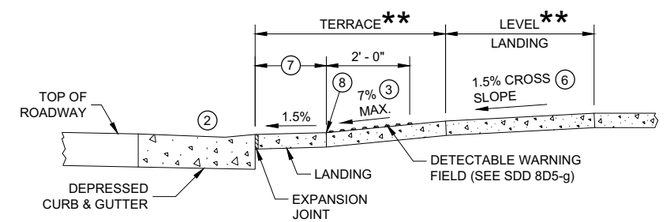

SECTION A - A FOR TYPE 2

* MAXIMUM 2.0% SLOPE IN ALL DIRECTIONS IN FRONT OF GRADE BREAK

** WIDTH SHOWN ELSEWHERE IN THE PLANS

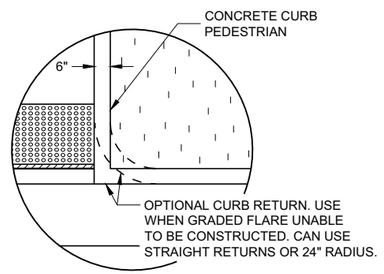

DETAIL B

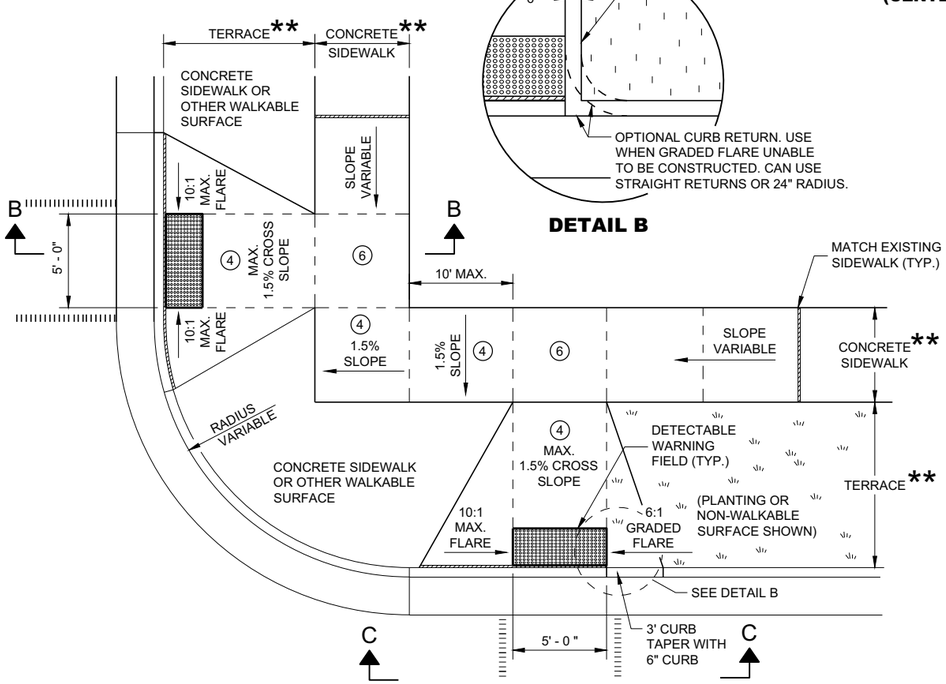

PLAN VIEW
CURB RAMP TYPE 3
(OUTSIDE OF CROSSWALK AREA)

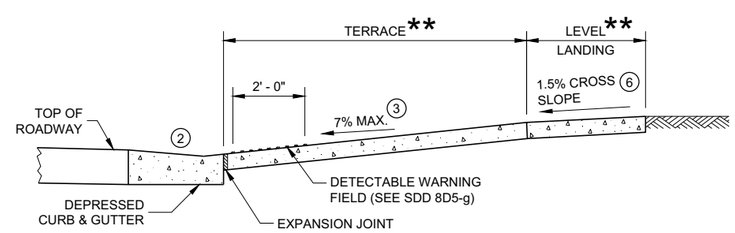

SECTION B - B FOR TYPE 3

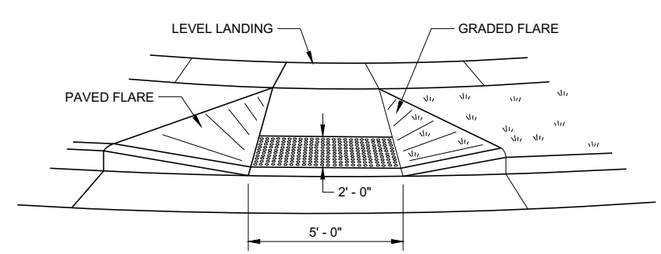

VIEW C - C FOR TYPE 3

LEGEND

- ½" EXPANSION JOINT SIDEWALK
- CONTRACTION JOINT SIDEWALK
- PAVEMENT MARKING CROSSWALK (WHITE)

CURB RAMPS TYPE 2 AND 3

STATE OF WISCONSIN
DEPARTMENT OF TRANSPORTA

6

SDD 08D05 - 20b

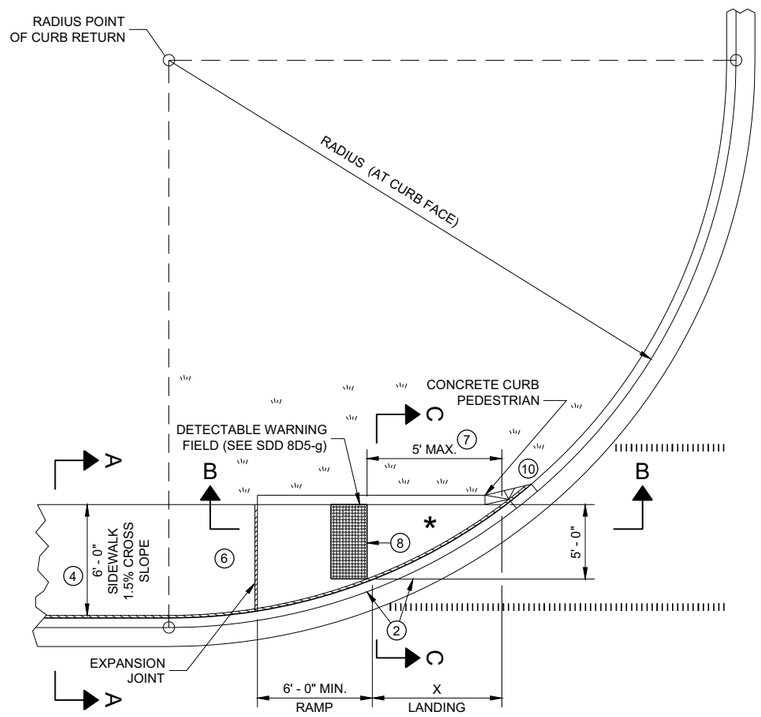

PLAN VIEW
CURB RAMP TYPE 4A

RADIUS (AT CURB FACE)	X
10 FEET	4' - 7"
15 FEET	6' - 5½"

INTERMEDIATE RADII CAN BE INTERPOLATED

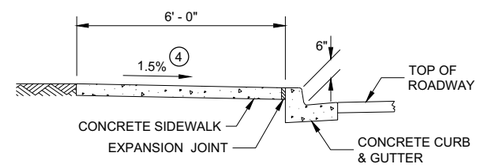

SECTION A - A FOR TYPE 4A

GENERAL NOTES

AVOID PLACING DRAINAGE STRUCTURES, JUNCTION BOXES OR OTHER OBSTRUCTIONS IN FRONT OF RAMP ACCESS AREAS.

DETAILS OF CONSTRUCTION, MATERIALS AND WORKMANSHIP NOT SHOWN ON THIS DRAWING SHALL CONFORM TO THE PERTINENT REQUIREMENTS OF THE STANDARD SPECIFICATIONS AND THE APPLICABLE SPECIAL PROVISIONS.

DETECTABLE WARNING FIELDS THAT ARE INSTALLED AS A GROUP OR SIDE BY SIDE, SHALL BE FROM THE SAME MANUFACTURER.

(2) GRADE CHANGE BETWEEN GUTTER FLAG SLOPE AND THE CURB RAMP SLOPE SHALL NOT EXCEED 11%. MAXIMUM GUTTER FLAG SLOPE IS 4%. PROVIDE LONGITUDINAL DRAINAGE AROUND CURB AND AWAY FROM CURB RAMP. NO VERTICAL LIPS OR DISCONTINUITIES GREATER THAN ¼ - INCH ARE ALLOWED. SLOPE OF CURB HEAD OPENING SHALL MATCH THE RAMP SLOPE, MINIMALLY 1.5% AND NOT TO EXCEED 7%. WHEN ADJACENT TO 1.5% LANDING, CONSTRUCT CURB HEAD OPENING AT 1.5% IN THE DIRECTION OF PEDESTRIAN TRAVEL.

(3) AN 8.33% CURB RAMP SLOPE IS ALLOWABLE WITH FLATTENED GUTTER FLAG SLOPE AND NOT TO EXCEED 11% GRADE CHANGE.

(4) ±0.5% CONSTRUCTION TOLERANCE IN SIDEWALK CROSS SLOPE. THE SIDEWALK CROSS SLOPE SHALL NOT EXCEED 2% WITHOUT PRIOR APPROVAL FROM THE ENGINEER.

(6) PROVIDE A LEVEL LANDING (MAXIMUM 2% SLOPE) IN ANY DIRECTION OF PEDESTRIAN TRAVEL. STANDARD LEVEL LANDING SIZE IS 5 FEET BY 5 FEET.

(7) WHEN THIS GRADE BREAK DISTANCE EXCEEDS 5 FEET, USE RADIAL DETECTABLE WARNING FIELD PER SDD 8D5-f.

(8) PROVIDE GRADE BREAK PERPENDICULAR TO DIRECTION OF WHEELCHAIR TRAVEL.

(10) INSTALL TRANSITION NOSE (INCIDENTAL TO OTHER PAY ITEMS). DO NOT MARK TRANSITION NOSE.

LEGEND

- ½" EXPANSION JOINT SIDEWALK
- CONTRACTION JOINT SIDEWALK
- PAVEMENT MARKING CROSSWALK (WHITE)

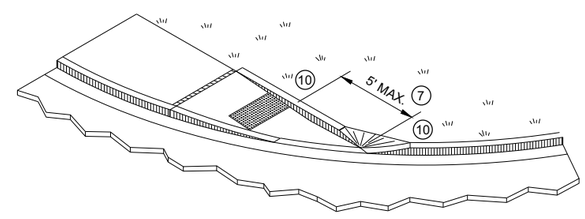

ISOMETRIC VIEW FOR TYPE 4A

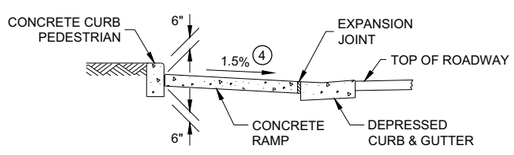

SECTION C - C FOR TYPE 4A

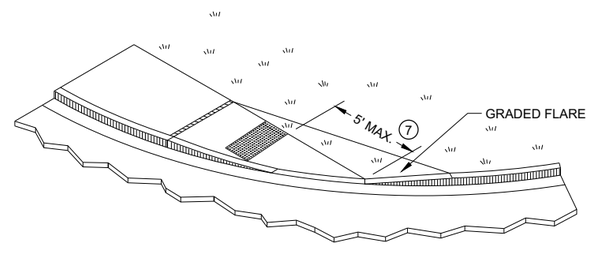

ISOMETRIC VIEW FOR TYPE 4A1

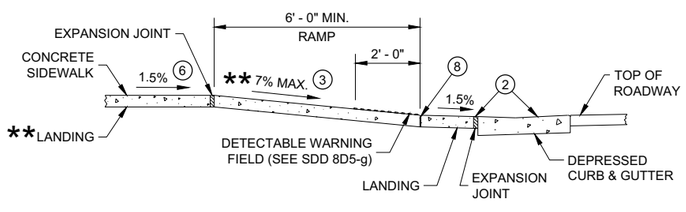

** IF RAMP SLOPE IS LESS THAN 5.0%, THEN NO ADJACENT UPHILL LANDING IS REQUIRED

SECTION B - B FOR TYPE 4A AND TYPE 4A1

* MAXIMUM 2.0% SLOPE IN ALL DIRECTIONS IF FRONT OF GRADE BREAK

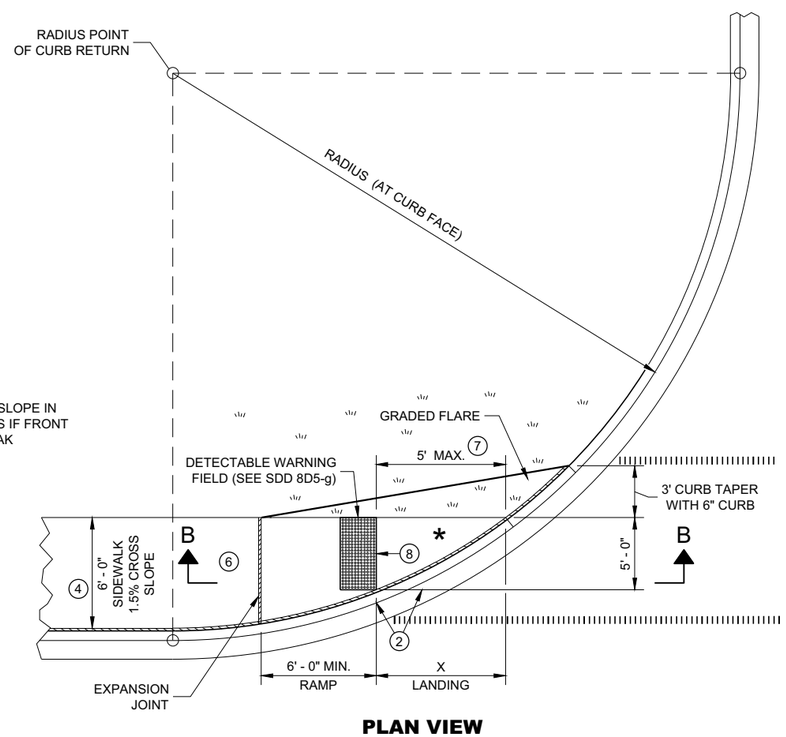

PLAN VIEW
CURB RAMP TYPE 4A1

CURB RAMPS
TYPE 4A AND 4A1

STATE OF WISCONSIN
DEPARTMENT OF TRANSPORTATION

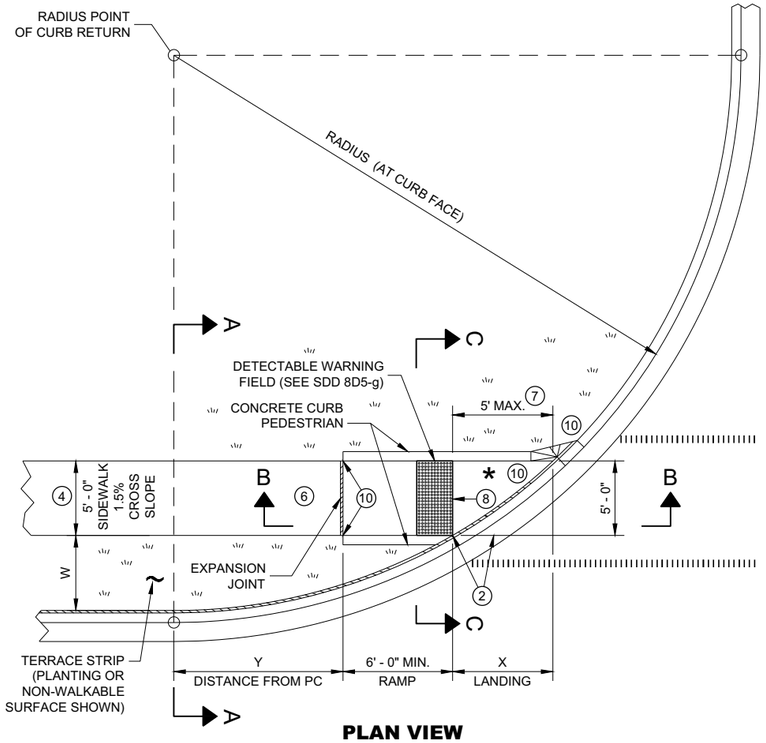

PLAN VIEW

CURB RAMP TYPE 4B

RADIUS (AT CURB FACE)	W = 3' - 0"		W = 4' - 0"		W = 5' - 0"		W = 6' - 0"		W = 7' - 0"		W = 8' - 0"		W = 9' - 0"		W = 10' - 0"	
	X	Y	X	Y	X	Y	X	Y	X	Y	X	Y	X	Y	X	Y
10 FEET	2' - 10 ¼"	0' - 5"	2' - 1"	1' - 4 ½"	1' - 5"	2' - 1"	0' - 10"	2' - 7 ½"	0' - 3 ¼"	3' - 0 ¼"						
15 FEET	4' - 6 ¾"	2' - 1 ¾"	3' - 9"	3' - 5 ¾"	3' - 1 ¼"	4' - 6"	2' - 6 ¾"	5' - 4 ½"	2' - 1"	6' - 1"	1' - 8"	6' - 8 ½"	1' - 3 ¼"	7' - 2 ½"	0' - 10 ¾"	7' - 7 ¼"
20 FEET	5' - 9 ¾"	3' - 6 ½"	4' - 11 ½"	5' - 1 ¾"	4' - 3 ¼"	6' - 5 ½"	3' - 8 ¾"	7' - 7"	3' - 3"	8' - 6 ½"	2' - 10"	9' - 4 ½"	2' - 5 ½"	10' - 1 ¼"	2' - 1 ¼"	10' - 9"
30 FEET			6' - 9 ¼"	7' - 11 ¼"	6' - 0 ¼"	9' - 8"	5' - 5"	11' - 1 ¾"	4' - 10 ¾"	12' - 5 ¾"	4' - 5 ½"	13' - 7 ¾"	4' - 0 ¾"	14' - 8 ½"	3' - 8 ½"	15' - 8 ¼"
40 FEET									6' - 1 ¾"	15' - 8 ½"	5' - 8"	17' - 2"	5' - 3"	18' - 5 ¾"	4' - 10 ¾"	19' - 8 ¼"
50 FEET															5' - 10 ¼"	23' - 2"

INTERMEDIATE RADII CAN BE INTERPOLATED
DIMENSION "Y" IS CALCULATED BASED ON 6'-0" RAMP LENGTH
DIMENSION "X" IS CALCULATED BASED ON 5'-0" SIDEWALK WIDTH

LEGEND

- ½" EXPANSION JOINT SIDEWALK
- CONTRACTION JOINT SIDEWALK
- PAVEMENT MARKING CROSSWALK (WHITE)

GENERAL NOTES

AVOID PLACING DRAINAGE STRUCTURES, JUNCTION BOXES OR OTHER OBSTRUCTIONS IN FRONT OF RAMP ACCESS AREAS.

DETAILS OF CONSTRUCTION, MATERIALS AND WORKMANSHIP NOT SHOWN ON THIS DRAWING SHALL CONFORM TO THE PERTINENT REQUIREMENTS OF THE STANDARD SPECIFICATIONS AND THE APPLICABLE SPECIAL PROVISIONS.

DETECTABLE WARNING FIELDS THAT ARE INSTALLED AS A GROUP OR SIDE BY SIDE, SHALL BE FROM THE SAME MANUFACTURER.

(2) GRADE CHANGE BETWEEN GUTTER FLAG SLOPE AND THE CURB RAMP SLOPE SHALL NOT EXCEED 11%. MAXIMUM GUTTER FLAG SLOPE IS 4%. PROVIDE LONGITUDINAL DRAINAGE AROUND CURB AND AWAY FROM CURB RAMP. NO VERTICAL LIPS OR DISCONTINUITIES GREATER THAN ¼ - INCH ARE ALLOWED. SLOPE OF CURB HEAD OPENING SHALL MATCH THE RAMP SLOPE, MINIMALLY 1.5% AND NOT TO EXCEED 7%. WHEN ADJACENT TO 1.5% LANDING, CONSTRUCT CURB HEAD OPENING AT 1.5% IN THE DIRECTION OF PEDESTRIAN TRAVEL.

(3) AN 8.33% CURB RAMP SLOPE IS ALLOWABLE WITH FLATTENED GUTTER FLAG SLOPE AND NOT TO EXCEED 11% GRADE CHANGE.

(4) ±0.5% CONSTRUCTION TOLERANCE IN SIDEWALK CROSS SLOPE. THE SIDEWALK CROSS SLOPE SHALL NOT EXCEED 2% WITHOUT PRIOR APPROVAL FROM THE ENGINEER.

(6) PROVIDE A LEVEL LANDING (MAXIMUM 2% SLOPE) IN ANY DIRECTION OF PEDESTRIAN TRAVEL. STANDARD LEVEL LANDING SIZE IS 5 FEET BY 5 FEET.

(7) WHEN THIS GRADE BREAK DISTANCE EXCEEDS 5 FEET, USE RADIAL DETECTABLE WARNING FIELD PER SDD 8D5-f.

(8) PROVIDE GRADE BREAK PERPENDICULAR TO DIRECTION OF WHEELCHAIR TRAVEL.

(10) INSTALL TRANSITION NOSE (INCIDENTAL TO OTHER PAY ITEMS). DO NOT MARK TRANSITION NOSE.

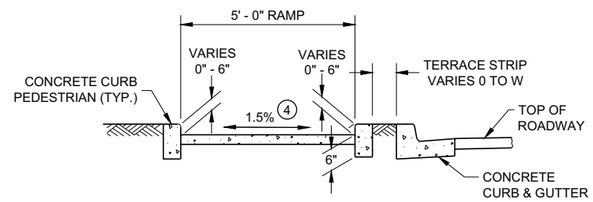

SECTION C - C FOR TYPE 4B

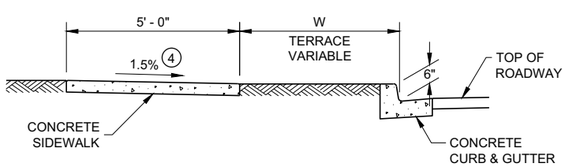

SECTION A - A FOR TYPE 4B

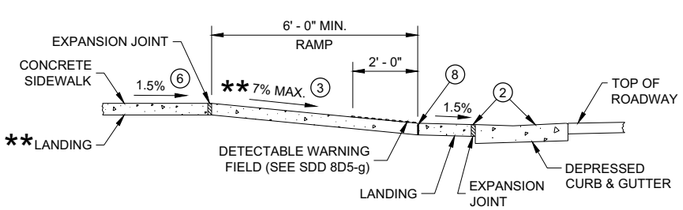

** IF RAMP SLOPE IS LESS THAN 5.0%, THEN NO ADJACENT UPHILL LANDING IS REQUIRED

SECTION B - B FOR TYPE 4B AND TYPE 4B1

* MAXIMUM 2.0% SLOPE IN ALL DIRECTIONS IF FRONT OF GRADE BREAK

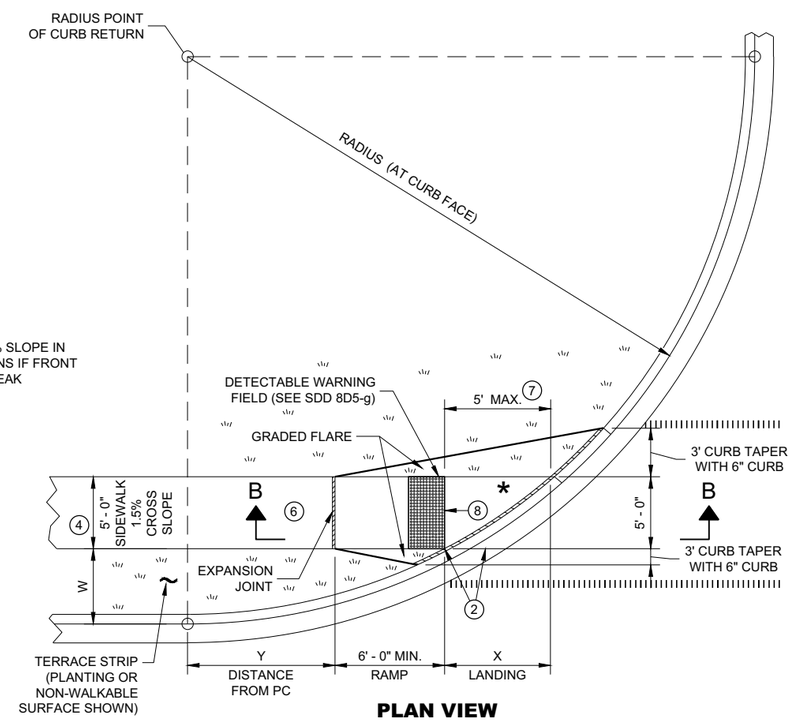

PLAN VIEW

CURB RAMP TYPE 4B1

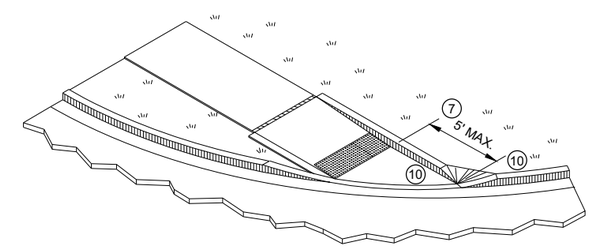

ISOMETRIC VIEW FOR TYPE 4B

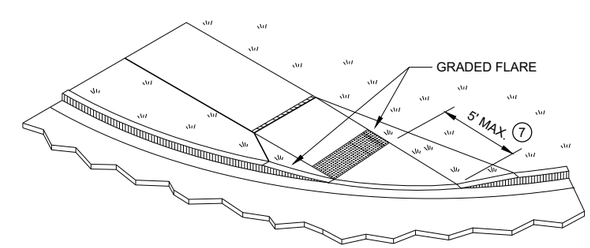

ISOMETRIC VIEW FOR TYPE 4B1

CURB RAMPS TYPE 4B AND 4B1

STATE OF WISCONSIN
DEPARTMENT OF TRANSPORTATION

6

SDD 08D05 - 20d

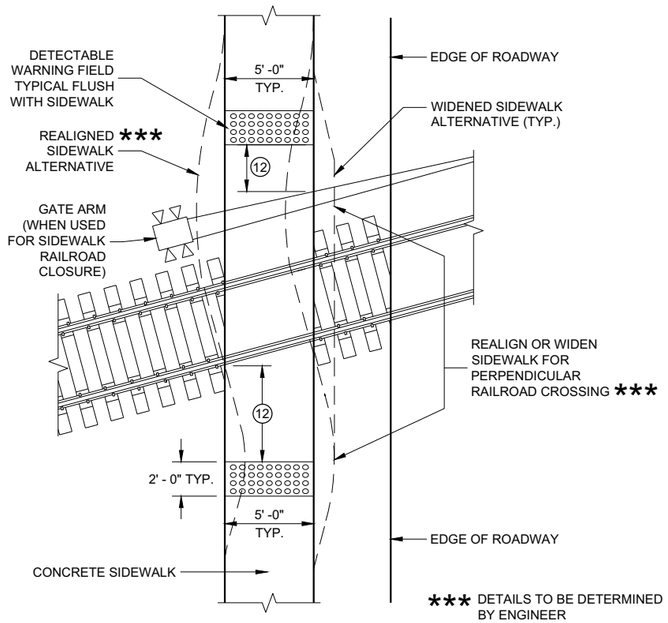

CURB RAMP TYPE 8

DETECTABLE WARNINGS AT RAILROAD CROSSING

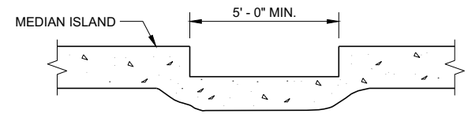

SECTION A - A FOR TYPE 5

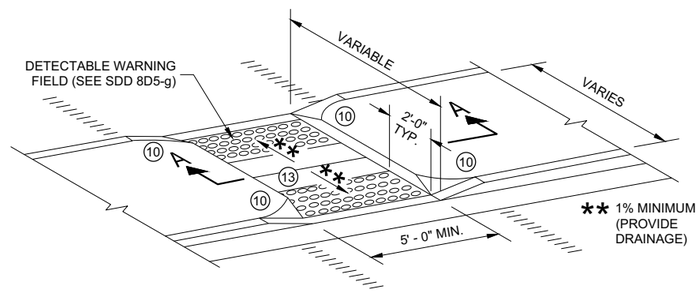

CURB RAMP TYPE 5

MEDIAN ISLAND NON-ELEVATED PEDESTRIAN CROSSING

GENERAL NOTES

AVOID PLACING DRAINAGE STRUCTURES, JUNCTION BOXES OR OTHER OBSTRUCTIONS IN FRONT OF RAMP ACCESS AREAS.

DETAILS OF CONSTRUCTION, MATERIALS AND WORKMANSHIP NOT SHOWN ON THIS DRAWING SHALL CONFORM TO THE PERTINENT REQUIREMENTS OF THE STANDARD SPECIFICATIONS AND THE APPLICABLE SPECIAL PROVISIONS.

SIDEWALK CROSS SLOPE SHALL NOT EXCEED 2%.

DETECTABLE WARNING FIELDS THAT ARE INSTALLED AS A GROUP OR SIDE BY SIDE, SHALL BE FROM THE SAME MANUFACTURER.

(2) GRADE CHANGE BETWEEN GUTTER FLAG SLOPE AND THE CURB RAMP SLOPE SHALL NOT EXCEED 11%. MAXIMUM GUTTER FLAG SLOPE IS 4%. PROVIDE LONGITUDINAL DRAINAGE AROUND CURB AND AWAY FROM CURB RAMP. NO VERTICAL LIPS OR DISCONTINUITIES GREATER THAN ¼ - INCH ARE ALLOWED. SLOPE OF CURB HEAD OPENING SHALL MATCH THE RAMP SLOPE, MINIMALLY 1.5% AND NOT TO EXCEED 7%. WHEN ADJACENT TO 1.5% LANDING, CONSTRUCT CURB HEAD OPENING AT 1.5% IN THE DIRECTION OF PEDESTRIAN TRAVEL.

(3) AN 8.33% CURB RAMP SLOPE IS ALLOWABLE WITH FLATTENED GUTTER FLAG SLOPE AND NOT TO EXCEED 11% GRADE CHANGE.

(4) ±0.5% CONSTRUCTION TOLERANCE IN SIDEWALK CROSS SLOPE. THE SIDEWALK CROSS SLOPE SHALL NOT EXCEED 2% WITHOUT PRIOR APPROVAL FROM THE ENGINEER.

(6) PROVIDE A LEVEL LANDING (MAXIMUM 2% SLOPE) IN ANY DIRECTION OF PEDESTRIAN TRAVEL. STANDARD LEVEL LANDING SIZE IS 5 FEET BY 5 FEET.

(10) INSTALL TRANSITION NOSE (INCIDENTAL TO OTHER PAY ITEMS). DO NOT MARK TRANSITION NOSE.

(11) SLOPE SIDEWALK TOWARD LANDING AS SHOWN WHERE THERE IS NO TERRACE OR WHERE THE TERRACE WIDTH IS LESS THAN 6 FEET WIDE.

(12) THE EDGE OF THE DETECTABLE WARNING FIELD NEAREST TO A RAILROAD CROSSING SHALL BE 1.5 FEET ±0.1' FROM THE FACE OF THE GATE ARM IF THE GATE ARM EXTENDS ACROSS THE SIDEWALK. WHERE THERE IS NO PEDESTRIAN GATE, THE EDGE OF THE DETECTABLE WARNING FIELD NEAREST TO THE RAILROAD CROSSING SHALL BE 15 FEET FROM THE NEAREST RAIL.

(13) DO NOT INSTALL DETECTABLE WARNING FIELDS AT THE EDGES OF STEET-LEVEL PEDESTRIAN REFUGE ISLANDS IF A MINIMUM 2 FOOT CONCRETE SURFACE WITHOUT DETECTABLE WARNINGS (MEASURED IN THE DIRECTION OF PEDESTRIAN TRAVEL) CANNOT BE ACHIEVED.

LEGEND

- ½" EXPANSION JOINT SIDEWALK
- CONTRACTION JOINT FIELD LOCATED
- PAVEMENT MARKING CROSSWALK (WHITE)

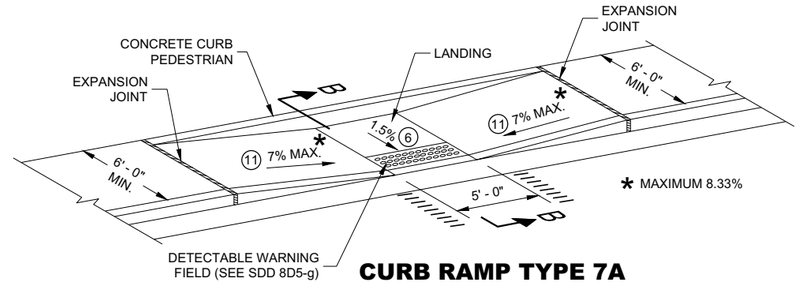

CURB RAMP TYPE 7A

MID BLOCK CROSSING

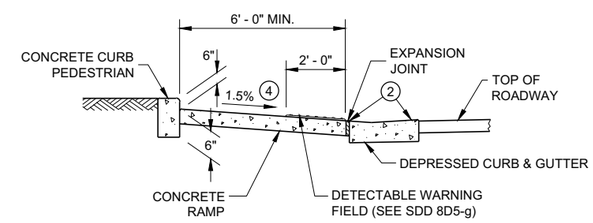

SECTION B - B FOR TYPE 7A

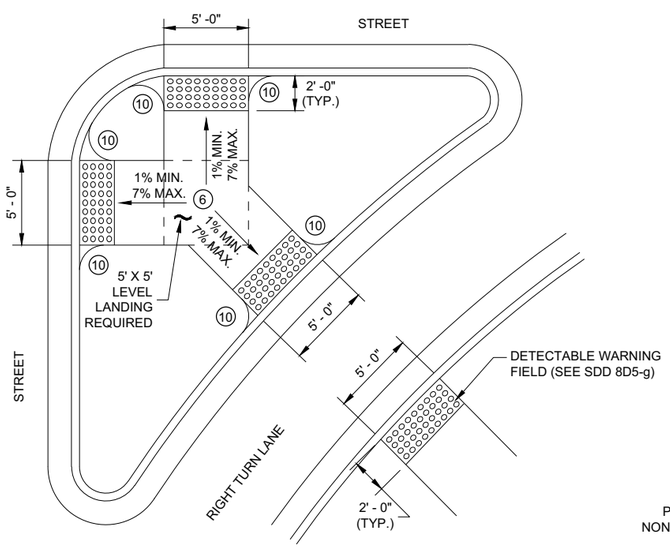

CURB RAMP TYPE 6

DETECTABLE WARNING AT ISLANDS

REFER TO GENERAL NOTES (2) AND (3) FOR ALL ISLAND CURB RAMPS

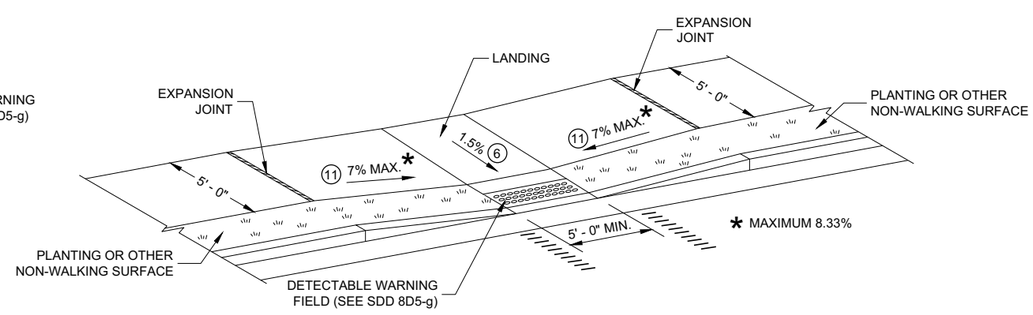

CURB RAMP TYPE 7B

MID BLOCK CROSSING

NOTE: THESE PARALLEL AND PARALLEL/PERPENDICULAR CURB RAMPS MAY BE USED AT INTERSECTIONS AND MID BLOCK LOCATIONS.

CURB RAMPS TYPE 5, 6, 7A, 7B & 8

STATE OF WISCONSIN
DEPARTMENT OF TRANSPORTATION

RADIAL DETECTABLE WARNING FIELD PLACEMENT WHEN 5 FOOT GRADE BREAK DISTANCE PER SDD 8D5-c IS EXCEEDED

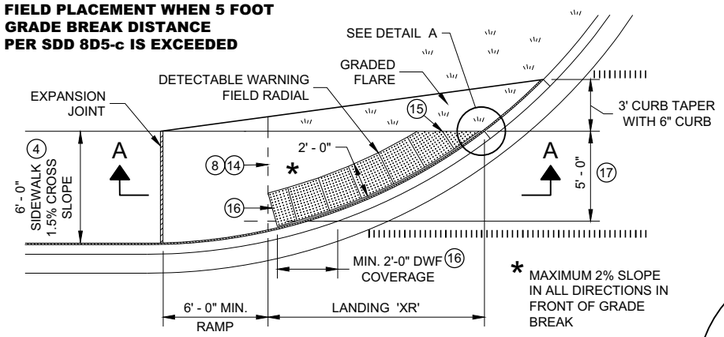

PLAN VIEW

CURB RAMP TYPE 4A1

(GRADE BREAK DISTANCE GREATER THAN 5 FEET)

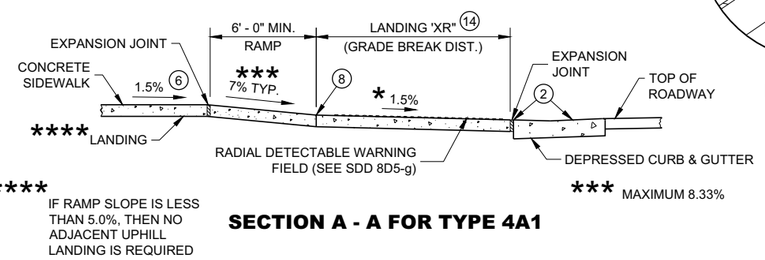

SECTION A - A FOR TYPE 4A1

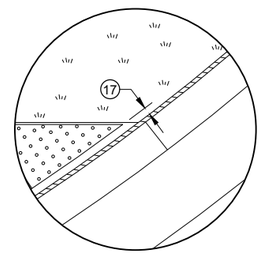

DETAIL A

LEGEND

- ½" EXPANSION JOINT SIDEWALK
- CONTRACTION JOINT SIDEWALK
- PAVEMENT MARKING CROSSWALK (WHITE)

GENERAL NOTES

AVOID PLACING DRAINAGE STRUCTURES, JUNCTION BOXES OR OTHER OBSTRUCTIONS IN FRONT OF RAMP ACCESS AREAS.

DETAILS OF CONSTRUCTION, MATERIALS AND WORKMANSHIP NOT SHOWN ON THIS DRAWING SHALL CONFORM TO THE PERTINENT REQUIREMENTS OF THE STANDARD SPECIFICATIONS AND THE APPLICABLE SPECIAL PROVISIONS.

DETECTABLE WARNING FIELDS THAT ARE INSTALLED AS A GROUP OR SIDE BY SIDE, SHALL BE FROM THE SAME MANUFACTURER.

APPLY RADIAL DETECTABLE WARNING PLACEMENT SIMILARLY FOR TYPE 4A AND 4A1 CURB RAMPS AND SIMILARLY FOR TYPE 4B AND 4B1 CURB RAMPS. TYPE 4A AND 4B CURB RAMPS ARE NOT SHOWN.

REFER TO SDD 8D5-g FOR ADDITIONAL RADIAL PLATE REQUIREMENTS.

FIELD CUTS AT INTERMEDIATE JOINTS WITHIN THE RADIAL DETECTABLE WARNING FILED ARE PROHIBITED.

DETERMINE FINAL RADIAL WARNING FIELD CONFIGURATION AD ITS INDIVIDUAL PLATE LOCATIONS. PERFORM PRE-LAYOUT PRIOR TO PLACEMENT IN PLASTIC CONCRETE. FOLLOW MANUFACTURER'S PRODUCT LIST AND INSTALLATION RECOMMENDATIONS.

(2) GRADE CHANGE BETWEEN GUTTER FLAG SLOPE AND THE CURB RAMP SLOPE SHALL NOT EXCEED 11%. MAXIMUM GUTTER FLAG SLOPE IS 4%. PROVIDE LONGITUDINAL DRAINAGE AROUND CURB AND AWAY FROM CURB RAMP. NO VERTICAL LIPS OR DISCONTINUITIES GREATER THAN ¼ - INCH ARE ALLOWED. SLOPE OF CURB HEAD OPENING SHALL MATCH THE RAMP SLOPE, MINIMALLY 1.5% AND NOT TO EXCEED 7%. WHEN ADJACENT TO 1.5% LANDING, CONSTRUCT CURB HEAD OPENING AT 1.5% IN THE DIRECTION OF PEDESTRIAN TRAVEL.

(3) AN 8.33% CURB RAMP SLOPE IS ALLOWABLE WITH FLATTENED GUTTER FLAG SLOPE AND NOT TO EXCEED 11% GRADE CHANGE.

(4) ±0.5% CONSTRUCTION TOLERANCE IN SIDEWALK CROSS SLOPE. THE SIDEWALK CROSS SLOPE SHALL NOT EXCEED 2% WITHOUT PRIOR APPROVAL FROM THE ENGINEER.

(6) PROVIDE A LEVEL LANDING (MAXIMUM 2% SLOPE) IN ANY DIRECTION OF PEDESTRIAN TRAVEL. STANDARD LANDING SIZE IS 5 FEET BY 5 FEET.

(8) PROVIDE GRADE BREAK PERPENDICULAR TO DIRECTION OF WHEELCHAIR TRAVEL.

(14) CONSULT ENGINEER IF GRADE BREAK LOCATION (END OF LANDING DIMENSION "XR") REQUIRES FIELD ADJUSTMENT WHEN ESTABLISHING FINAL RADIAL DETECTABLE WARNING FIELD LOCATION.

(15) FIELD SAW CUTS ALONG RADIAL DETECTABLE WARNING PLATES WILL BE NECESSARY TO MATCH EACH CURB RAMP EDGE. AVOID CUTTING THROUGH DOMES WHENEVER POSSIBLE. MAKE FIELD CUTS TRUE TO LINE AND WITHIN ⅛" DEVIATION. SMOOTH EDGES OF FIELD CUT PLATES.

(16) USE 1' X 2" RECTANGULAR END PLATE AT END OF TYPE 4A1 RAMP AND PROVIDE MINIMUM 2' - 0" DETECTABLE WARNING FIELD COVERAGE (IN DIRECTION OF PEDESTRIAN TRAVEL) ALONG THE ENTIRE CURB RAMP WIDTH.

(17) A MAXIMUM 3 INCH CONCRETE BORDER WITH IS ALLOWABLE IN FROM OF RADIAL DETECTABLE WARNING FIELD FOR CONSTRUCTABILITY PURPOSES. CONCRETE BORDER WIDTH MAY VARY UP TO 1 INCH.

RADIAL DETECTABLE WARNING FIELD PLACEMENT WHEN 5 FOOT GRADE BREAK DISTANCE PER SDD 8D5-d IS EXCEEDED

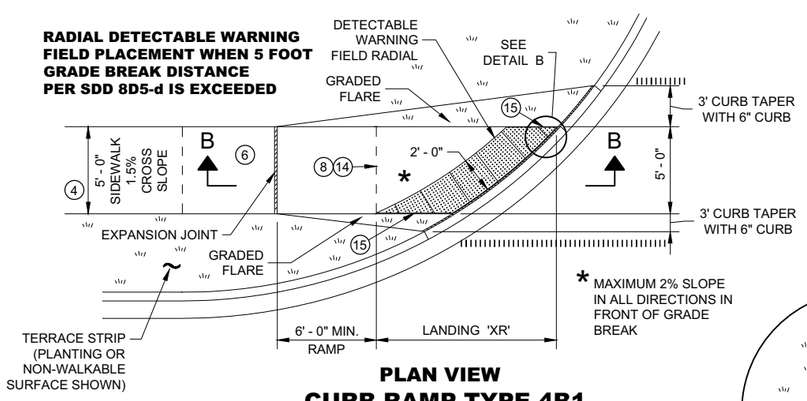

PLAN VIEW

CURB RAMP TYPE 4B1

(GRADE BREAK DISTANCE GREATER THAN 5 FEET)

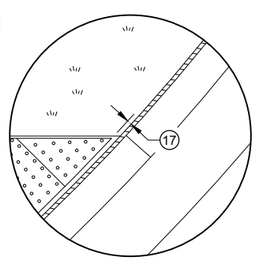

DETAIL B

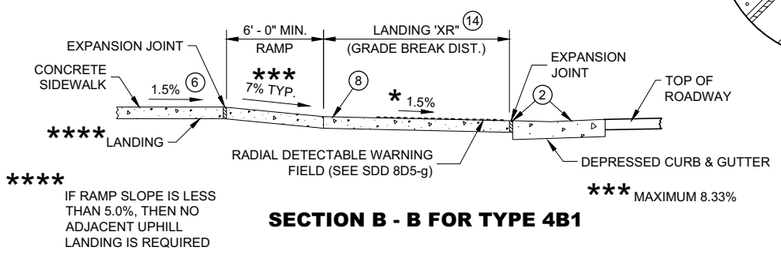

SECTION B - B FOR TYPE 4B1

RADIAL DETECTABLE WARNING FIELD PLACEMENT WHEN 5 FOOT GRADE BREAK DISTANCE PER SDD 8D5-b IS EXCEEDED

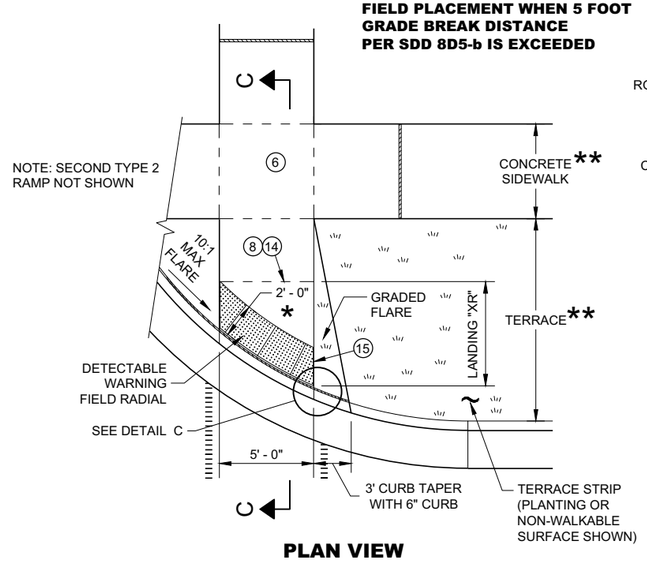

PLAN VIEW

CURB RAMP TYPE 2

(GRADE BREAK DISTANCE GREATER THAN 5 FEET)

(ON LINE WITH SIDEWALK)

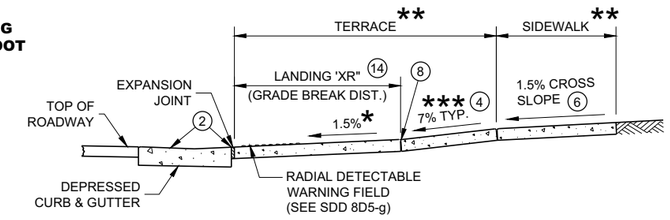

SECTION C - C FOR TYPE 2

* MAXIMUM 2% SLOPE IN ALL DIRECTIONS IN FRONT OF GRADE BREAK

** WIDTH SHOWN ELSEWHERE IN THE PLANS

*** MAXIMUM 8.33%

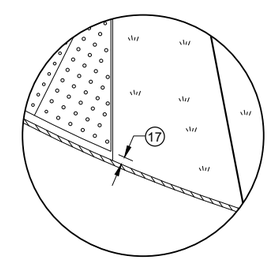

DETAIL C

CURB RAMPS
RADIAL DETECTABLE WARNING FIELD APPLICATIONS

STATE OF WISCONSIN
DEPARTMENT OF TRANSPORTATION

6

6

SDD 08D05 - 20f

SDD 08D05 - 20f

	MIN.	MAX.
A	1.6"	2.4"
B	0.65"	1.5"
C	*	*
D	0.9"	1.4"

* THE C DIMENSION IS 50% TO 65% OF THE D DIMENSION.

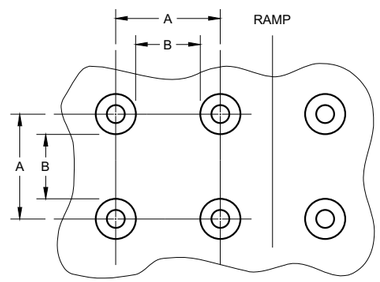

PLAN VIEW

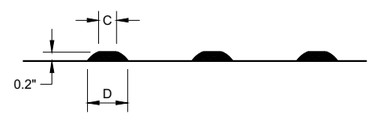

ELEVATION VIEW

TRUNCATED DOMES
DETECTABLE WARNING PATTERN DETAIL

GENERAL NOTES

DETECTABLE WARNING FIELDS THAT ARE INSTALLED AT A CURB RAMP SHALL BE FROM THE SAME MANUFACTURER.

PLACE ALL DETECTABLE WARNING FIELD SYSTEMS IN ACCORDANCE TO THE MANUFACTURER'S RECOMMENDATION.

FIELD CUTS AT INTERMEDIATE JOINTS WITHIN THE RADIAL DETECTABLE WARNING FILED ARE PROHIBITED.

DETERMINE FINAL RADIAL WARNING FIELD CONFIGURATION AND ITS INDIVIDUAL PLATE LOCATIONS. PERFORM PRE-LAYOUT PRIOR TO PLACEMENT IN PLASTIC CONCRETE. FOLLOW MANUFACTURER'S PRODUCT LIST AND INSTALLATION RECOMMENDATIONS.

FOR RADIAL DETECTABLE WARNING FIELD APPLICATIONS WHERE STANDARD RADIAL PLATES ARE NOT AVAILABLE AT AN INTERSECTION CURB RADIUS, A COMBINATION OF SQUARE OR RECTANGULAR PLATES AND RADIAL PLATES MAY BE USED TO FORM RADIAL CONFIGURATION. RADIAL WEDGE PLATES IN COMBINATION WITH SQUARE PLATES ARE ALSO ACCEPTABLE. FOLLOW MANUFACTURER'S RECOMMENDATIONS.

REFER TO CONTRACT AND STANDARD SPECIFICATIONS FOR FIELD CUTTING REQUIREMENTS.

DO NOT EMBED IN CONCRETE ANY FIELD-CUT PLATES WITH CUT EDGES SHORTER THAN 6 INCHES. CONSULT WITH MANUFACTURER FOR RE-DRILLING AND ANCHORING REQUIREMENTS OF FIELD-CUT PLATES.

(15) FIELD SAW CUTS ALONG RADIAL DETECTABLE WARNING PLATES WILL BE NECESSARY TO MATCH EACH CURB RAMP EDGE. AVOID CUTTING THROUGH DOMES WHENEVER POSSIBLE. MAKE FIELD CUTS TRUE TO LINE AND WITHIN ⅛" DEVIATION. SMOOTH EDGES OF FIELD CUT PLATES.

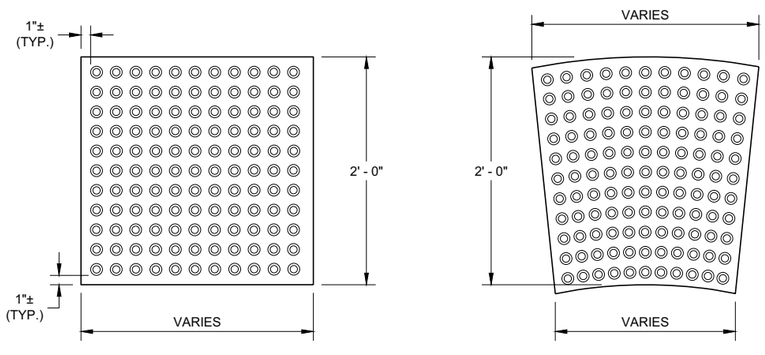

RECTANGULAR PLATES **RADIAL PLATES**

PLAN VIEW
DETECTABLE WARNING FIELDS (TYPICAL)

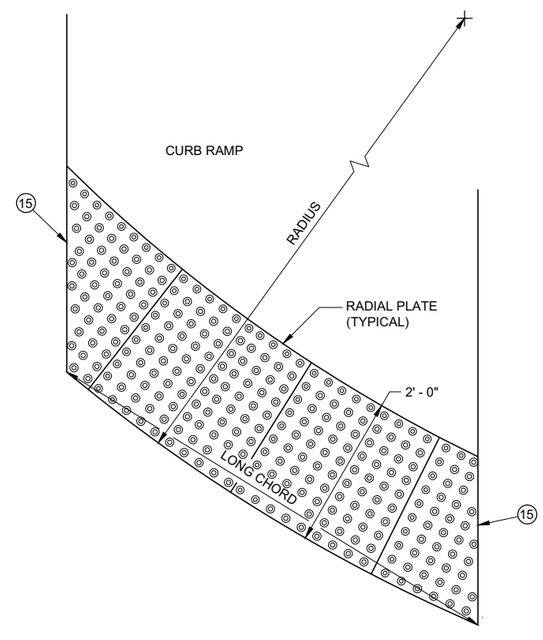

PLAN VIEW
RADIAL DETECTABLE WARNING FIELD ATTRIBUTES

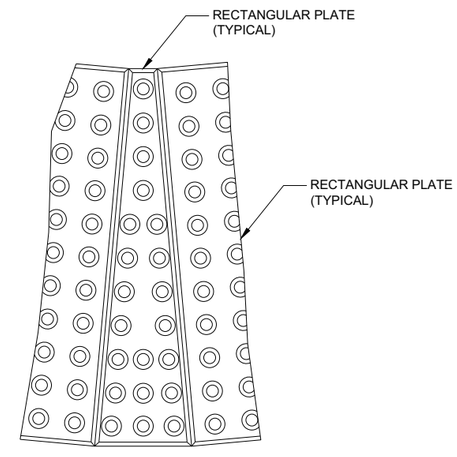

PLAN VIEW
RADIAL WEDGE PLATE CONNECTION DETAIL

6

6

SDD 08D05 - 20g

SDD 08D05 - 20g

CURB RAMPS
RECTANGULAR AND RADIAL
DETECTABLE WARNING PLATES

STATE OF WISCONSIN
DEPARTMENT OF TRANSPORTATION

APPROVED
May 2019 — DATE
/S/ Rodney Taylor — ROADWAY STANDARDS DEVE UNIT SUPERVISOR

FHWA

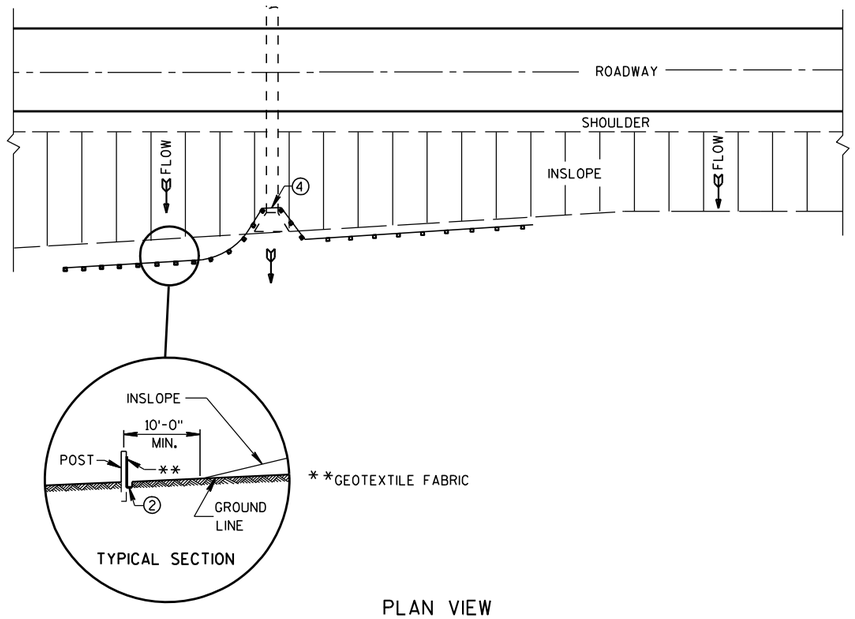

PLAN VIEW

TYPICAL APPLICATION OF SILT FENCE

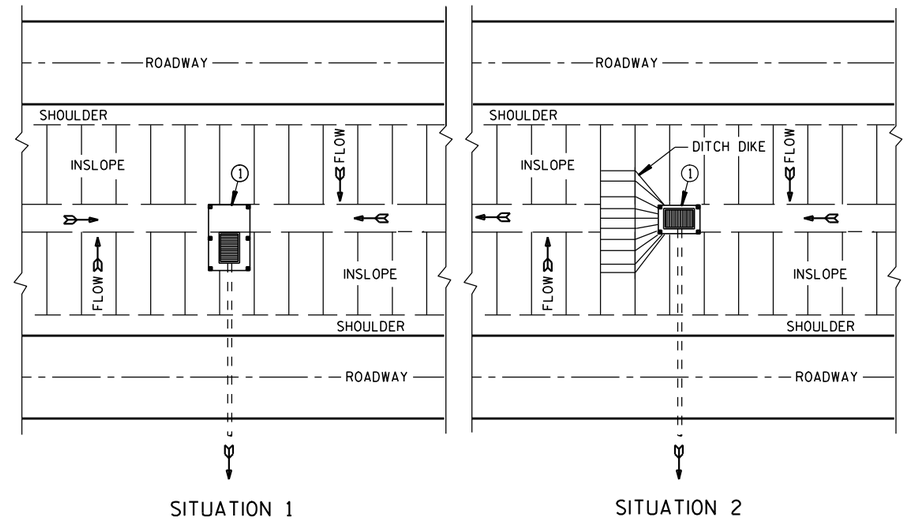

PLAN VIEW

SILT FENCE AT MEDIAN SURFACE DRAINS

GENERAL NOTES

DETAILS OF CONSTRUCTION NOT SHOWN ON THIS DRAWING SHALL CONFORM TO THE PERTINENT REQUIREMENTS OF THE STANDARD SPECIFICATIONS AND APPLICABLE SPECIAL PROVISIONS.

① HORIZONTAL BRACE REQUIRED WITH 2" X 4" WOODEN FRAME OR EQUIVALENT AT TOP OF POSTS.

② FOR MANUAL INSTALLATIONS THE TRENCH SHALL BE A MINIMUM OF 4" WIDE & 6" DEEP TO BURY AND ANCHOR THE GEOTEXTILE FABRIC. FOLD MATERIAL TO FIT TRENCH AND BACKFILL & COMPACT TRENCH WITH EXCAVATED SOIL.

③ WOOD POSTS SHALL BE A MINIMUM SIZE OF 1⅛" X 1⅛" OF OAK OR HICKORY.

④ SILT FENCE TO EXTEND ACROSS THE TOP OF THE PIPE.

⑤ CONSTRUCT SILT FENCE FROM A CONTINUOUS ROLL IF POSSIBLE BY CUTTING LENGTHS TO AVOID JOINTS. IF A JOINT IS NECESSARY USE ONE OF THE FOLLOWING TWO METHODS; A) OVERLAP THE END POSTS AND TWIST, OR ROTATE, AT LEAST 180 DEGREES, B) HOOK THE END OF EACH SILT FENCE LENGTH.

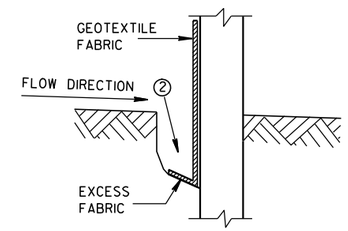

TRENCH DETAIL

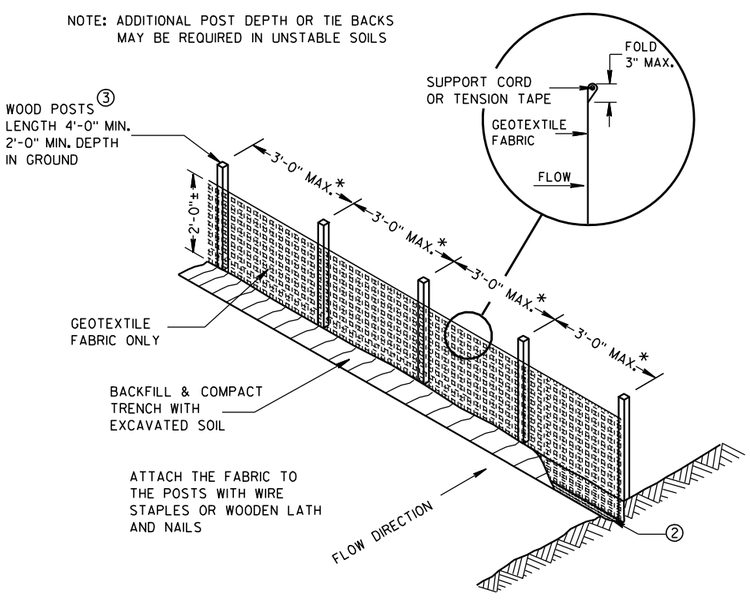

*NOTE: 8'-0" POST SPACING ALLOWED IF A WOVEN GEOTEXTILE FABRIC IS USED.

SILT FENCE

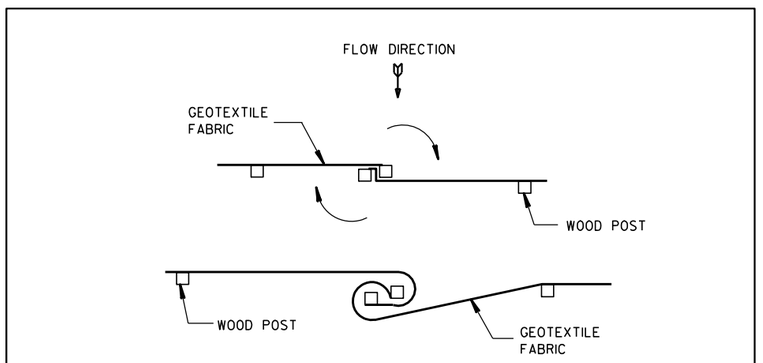

TWIST METHOD

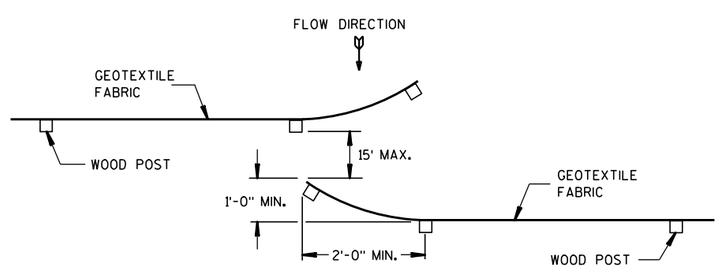

HOOK METHOD

JOINING TWO LENGTHS OF SILT FENCE ⑤

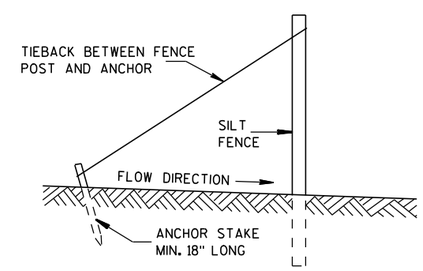

SILT FENCE TIE BACK

(WHEN REQUIRED BY THE ENGINEER)

SILT FENCE
STATE OF WISCONSIN DEPARTMENT OF TRANSPORTATION
APPROVED 4-29-05 DATE — /S/ Beth Cann-- CHIEF ROADWAY DEVELOP ENGINEER FHWA

6

6

S.D.D. 8 E 9-6

S.D.D. 8 E 9-6

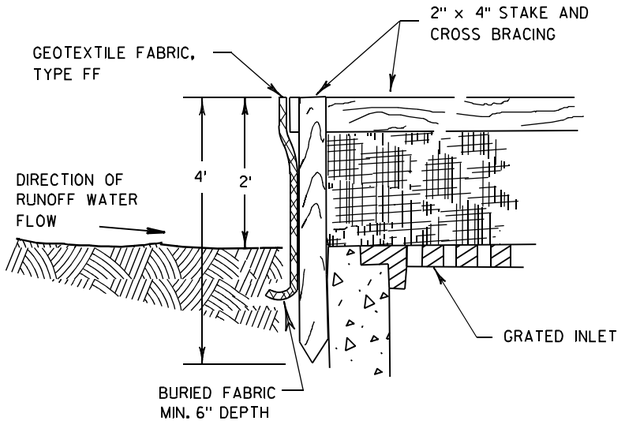

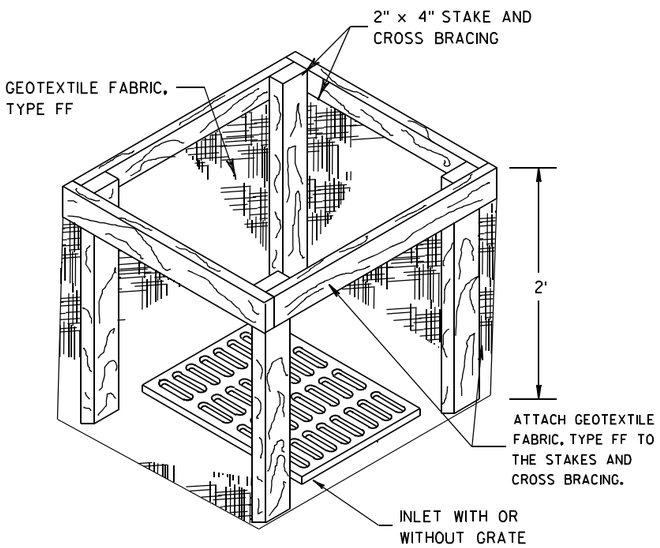

INLET PROTECTION, TYPE A

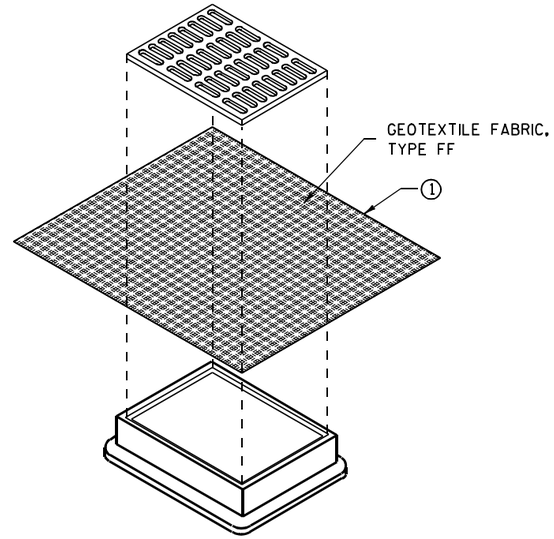

INLET PROTECTION, TYPE B
(WITHOUT CURB BOX)

(CAN BE INSTALLED IN ANY INLET WITHOUT A CURB BOX)

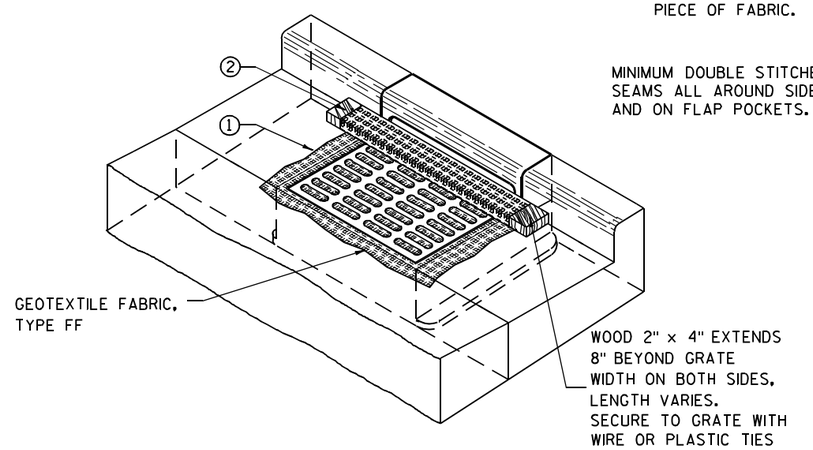

INLET PROTECTION, TYPE C (WITH CURB BOX)

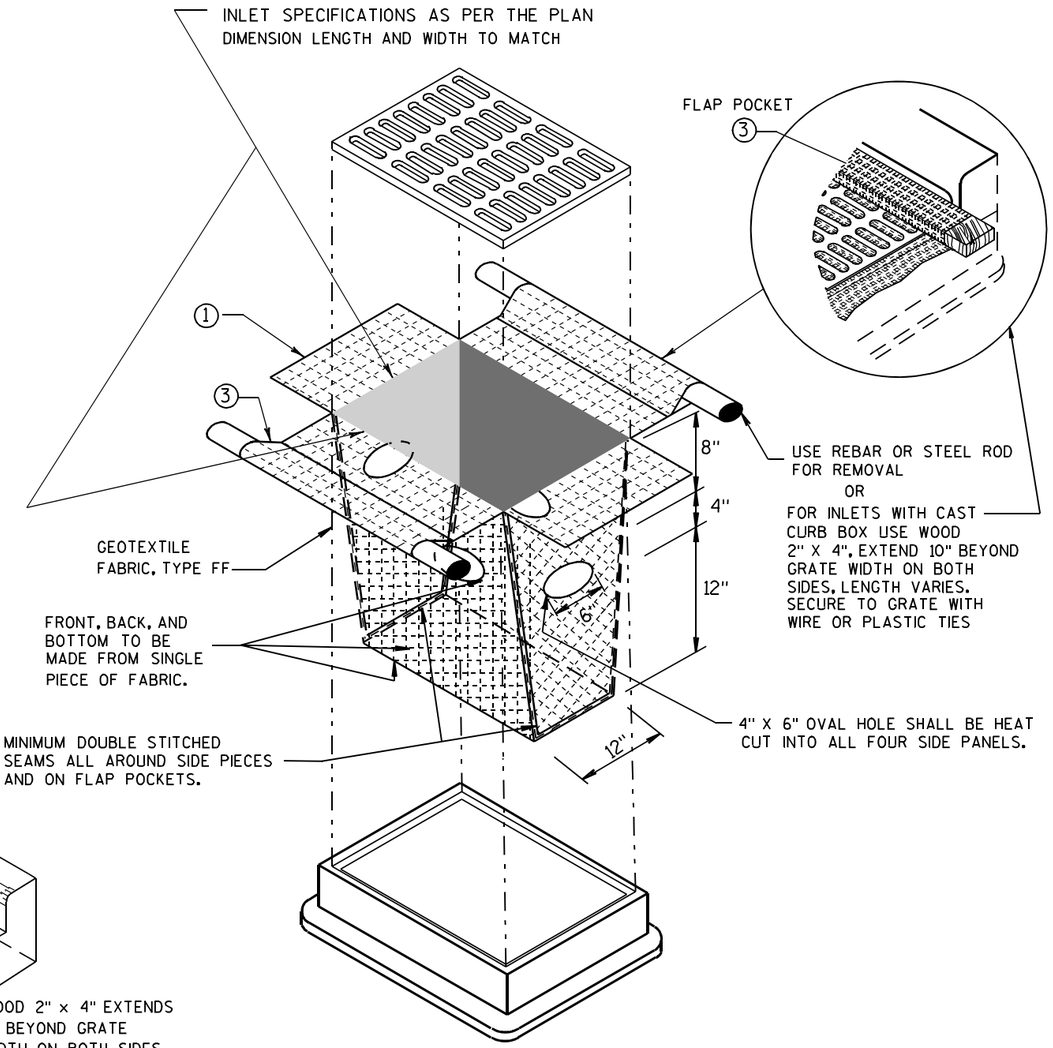

INLET PROTECTION, TYPE D

(CAN BE INSTALLED IN ANY INLET TYPE WITH
OR WITHOUT A CURB BOX AS PER NOTE ②)

GENERAL NOTES

INLET PROTECTION DEVICES SHALL BE MAINTAINED OR REPLACED AT THE DIRECTION OF THE ENGINEER.

MANUFACTURED ALTERNATIVES APPROVED AND LISTED ON THE DEPARTMENT'S EROSION CONTROL PRODUCT ACCEPTABILITY LIST MAY BE SUBSTITUTED.

WHEN REMOVING OR MAINTAINING INLET PROTECTION, CARE SHALL BE TAKEN SO THAT THE SEDIMENT TRAPPED ON THE GEOTEXTILE FABRIC DOES NOT FALL INTO THE INLET. ANY MATERIAL FALLING INTO THE INLET SHALL BE REMOVED IMMEDIATELY.

① FINISHED SIZE, INCLUDING FLAP POCKETS WHERE REQUIRED, SHALL EXTEND A MINIMUM OF 10" AROUND THE PERIMETER TO FACILITATE MAINTENANCE OR REMOVAL.

② FOR INLET PROTECTION, TYPE C (WITH CURB BOX), AN ADDITIONAL 18" OF FABRIC IS WRAPPED AROUND THE WOOD AND SECURED WITH STAPLES. THE WOOD SHALL NOT BLOCK THE ENTIRE HEIGHT OF THE CURB BOX OPENING.

③ FLAP POCKETS SHALL BE LARGE ENOUGH TO ACCEPT WOOD 2X4.

INSTALLATION NOTES

TYPE B & C

TRIM EXCESS FABRIC IN THE FLOW LINE TO WITHIN 3" OF THE GRATE.

THE CONTRACTOR SHALL DEMONSTRATE A METHOD OF MAINTENANCE, USING A SEWN FLAP, HAND HOLDS OR OTHER METHOD TO PREVENT ACCUMULATED SEDIMENT FROM ENTERING THE INLET.

TYPE D

DO NOT INSTALL INLET PROTECTION TYPE D IN INLETS SHALLOWER THAN 30", MEASURED FROM THE BOTTOM OF THE INLET TO THE TOP OF THE GRATE.

TRIM EXCESS FABRIC IN THE FLOW LINE TO WITHIN 3" OF THE GRATE.

THE INSTALLED BAG SHALL HAVE A MINIMUM SIDE CLEARANCE, BETWEEN THE INLET WALLS AND THE BAG, MEASURED AT THE BOTTOM OF THE OVERFLOW HOLES, OF 3". WHERE NECESSARY THE CONTRACTOR SHALL CINCH THE BAG, USING PLASTIC ZIP TIES, TO ACHIEVE THE 3" CLEARANCE. THE TIES SHALL BE PLACED AT A MAXIMUM OF 4" FROM THE BOTTOM OF THE BAG.

INLET PROTECTION
TYPE A, B, C, AND D

STATE OF WISCONSIN
DEPARTMENT OF TRANSPORTATION

APPROVED
10/16/02 — DATE
/S/ Beth Cannon — CHIEF ROADWAY DEVELOPMENT ENGINEER
FHWA

6

S.D.D. 8 E 10-2

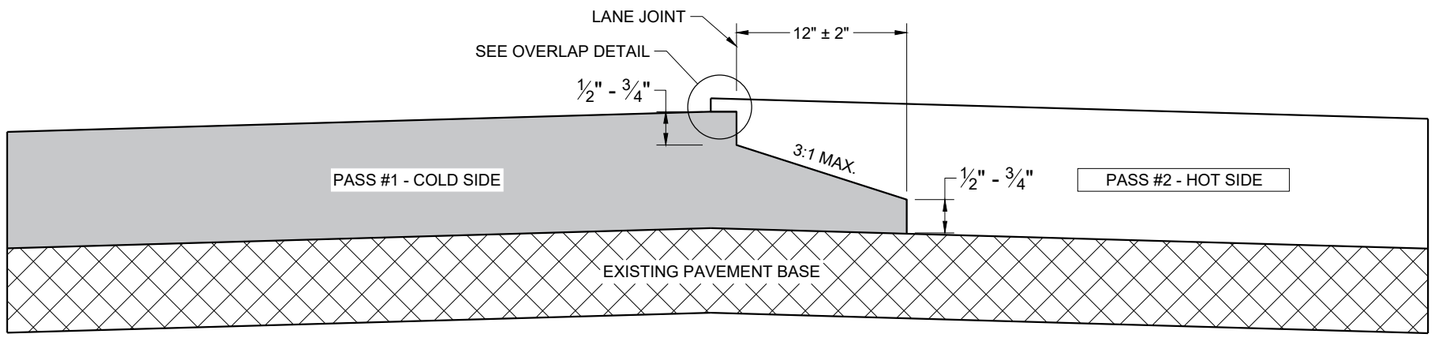

TYPICAL PAVEMENT CROSS SECTION
NOTCHED WEDGE JOINT

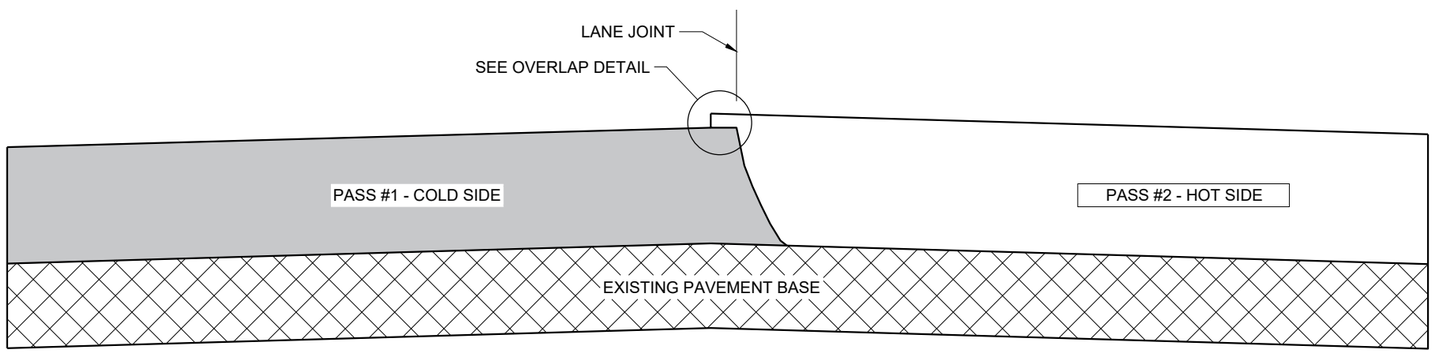

TYPICAL PAVEMENT CROSS SECTION
VERTICAL JOINT

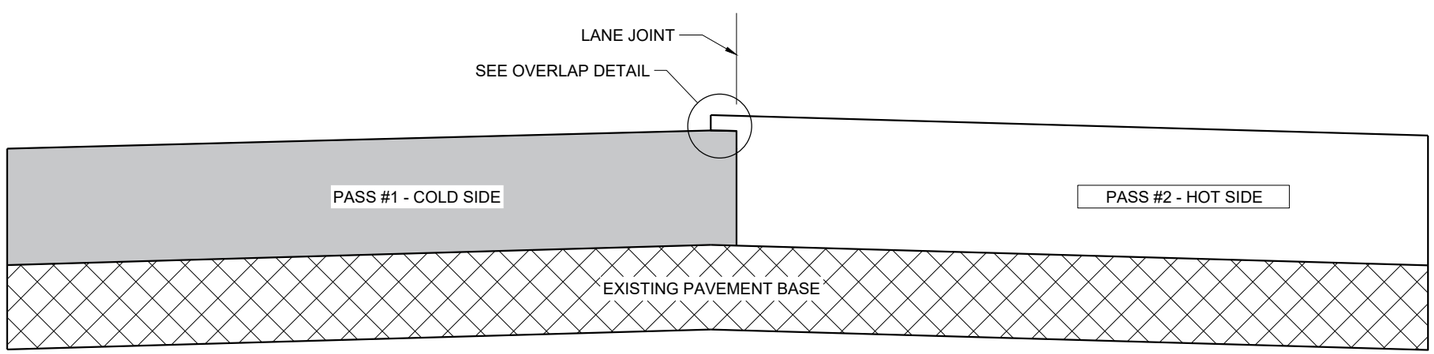

TYPICAL PAVEMENT CROSS SECTION
VERTICAL JOINT (MILLED)

GENERAL NOTES

IN ADDITION TO THE DETAILS PROVIDED IN THIS DRAWING, CONFORM TO STANDARD SPECIFICATION 450.3.2.8 FOR WHEN A NOTCHED WEDGE JOINT IS REQUIRED AND FOR GENERAL JOINT CONSTRUCTION REQUIREMENTS.

FOR ALL LONGITUDINAL JOINTS, ENSURE THE PAVER SCREED OVERLAPS THE PREVIOUSLY PLACED PAVEMENT BY 1" ± 0.5" AND THE HOT SIDE OF THE JOINT REMAINS HIGHER THAN THE COLD SIDE BY APPROXIMATELY 0.1" AFTER FINAL COMPACTION. (IT WILL BE FLUSH WHEN PAVING IN ECHELON.)

ONLY REMOVE THE LONGITUDINAL NOTCHED WEDGE JOINT FOR SMA PAVEMENT OR AS DIRECTED BY THE ENGINEER TO ADDRESS SPECIFIC LENGTHS OF JOINT DAMAGED BY TRAFFIC.

WHEN MILLING BACK OR REMOVING ANY LONGITUDINAL JOINT, LIMIT THE MATERIAL REMOVED TO 2" FROM THE TOP NOTCH OR FROM THE VERTICAL JOINT EDGE ON THE COLD SIDE OF THE JOINT.

USE LONGITUDINAL MILLED JOINT AS PLANS SHOW OR THE AS THE ENGINEER DIRECTS.

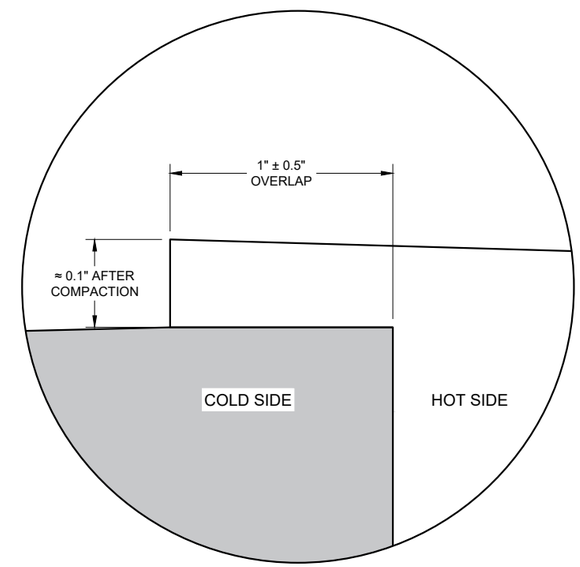

OVERLAP DETAIL (TYPICAL)

6

6

SDD 13C19 - 03

SDD 13C19 - 03

HMA LONGITUDINAL JOINTS

STATE OF WISCONSIN
DEPARTMENT OF TRANSPORTATION

APPROVED
November 2020 /S/ Steven Hefel
DATE HMA PAVEMENT ENGIN

FHWA

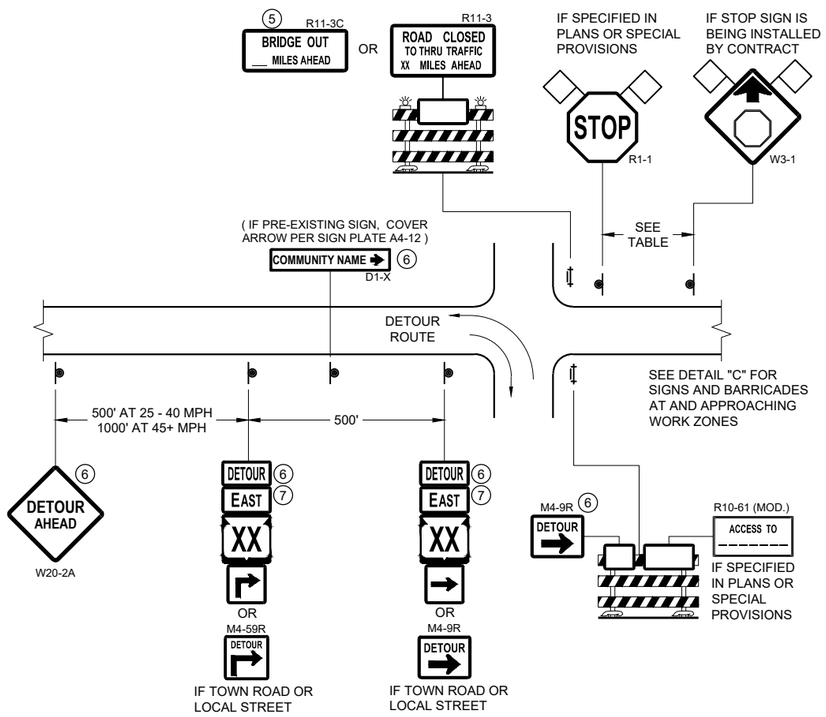

DETAIL A
MAINLINE CLOSURE WITH POSTED DETOUR

WORK ZONE GREATER THAN OR EQUAL TO ½ MILE FROM DETOUR ROUTE (1000 FEET IF URBAN)

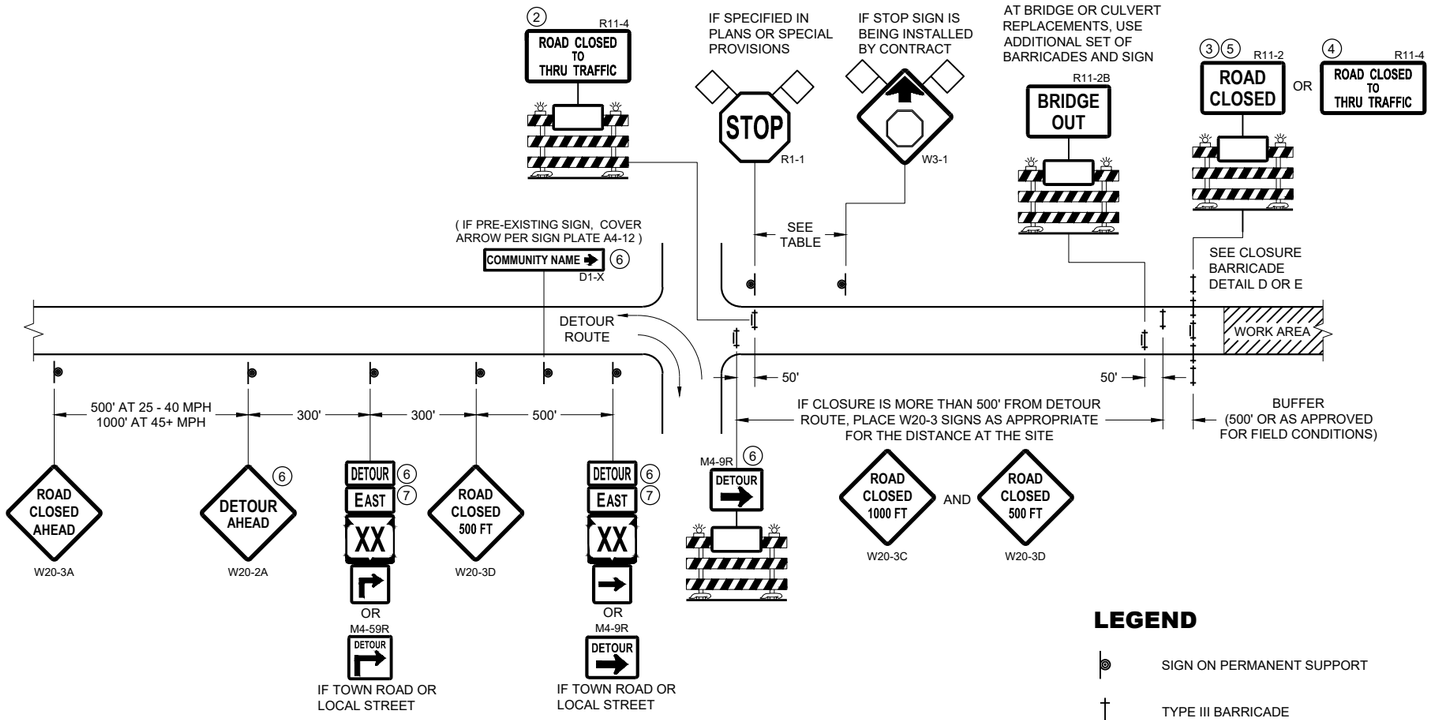

DETAIL B
MAINLINE CLOSURE WITH POSTED DETOUR

WORK ZONE LESS THAN ½ MILE FROM DETOUR ROUTE (1000 FEET IF URBAN)

LEGEND

- SIGN ON PERMANENT SUPPORT
- TYPE III BARRICADE
- TYPE III BARRICADE WITH ATTACHED SIGN
- TYPE "A" WARNING LIGHT (FLASHING)
- WORK AREA
- FLAGS, 16" X 16" MIN. (ORANGE)
- DETOUR — M4 - 8
- EAST — M3 - X
- XX (M1 - 4) OR XX (M1 - 6) OR COUNTY X (M1 - 5A)
- M05 - 1 OR M06 - 1

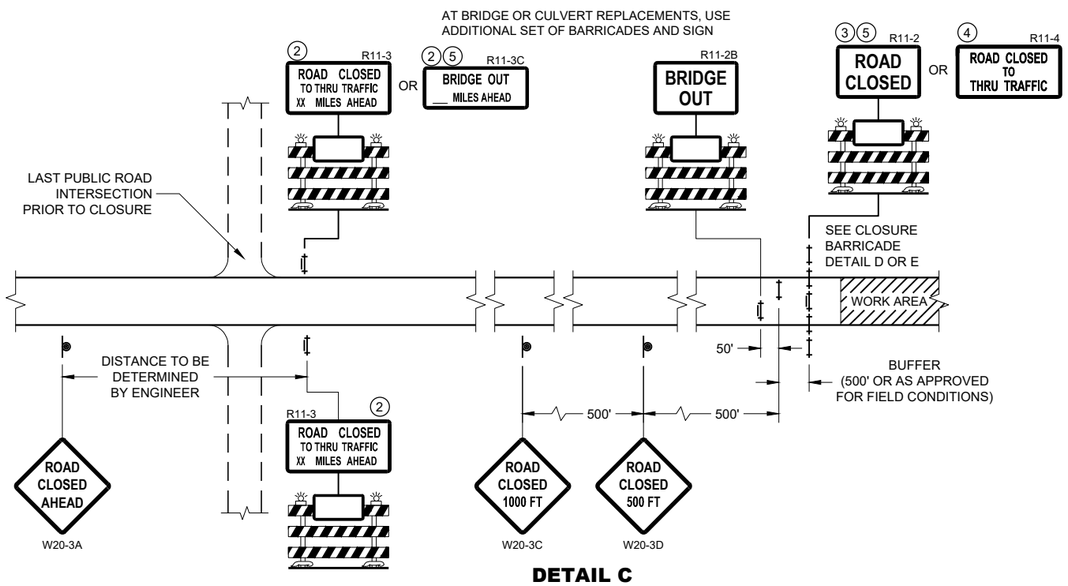

DETAIL C
MAINLINE CLOSURE, NO POSTED DETOUR

SPEED LIMIT (MPH)	"STOP AHEAD" ADVANCE WARNING DISTANCE (FT)
25	200
30	200
35	350
40	350
45	500
50	550
55	750

SEE SDD 15C2-SHEET "b" FOR GENERAL NOTES AND FOOTNOTES ① THROUGH ⑦

BARRICADES AND SIGNS FOR MAINLINE CLOSURES

STATE OF WISCONSIN
DEPARTMENT OF TRANSPORTATION

APPROVED
February 2020 — DATE
/S/ Andrew Heidtke — WORK ZONE ENGINEER
FHWA

6

SDD 15C02 - 08a

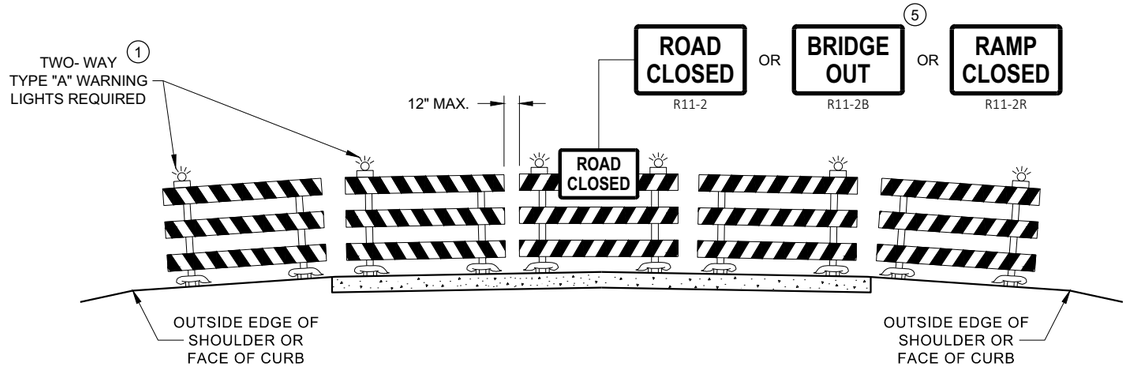

DETAIL D
ROAD CLOSURE BARRICADE DETAIL
APPROACH VIEW

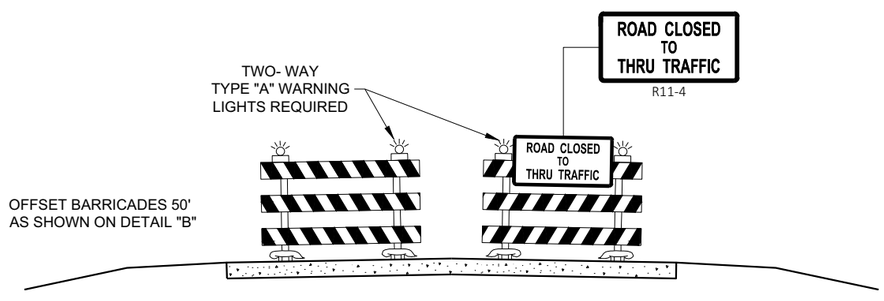

DETAIL E
LANE CLOSURE BARRICADE DETAIL
APPROACH VIEW

SEE SDD 15C2 - SHEET "a" FOR LEGEND

GENERAL NOTES

THE EXACT NUMBER, LOCATION, AND SPACING OF ALL SIGNS AND BARRICADES SHALL BE ADJUSTED TO FIT FIELD CONDITIONS AS APPROVED BY THE ENGINEER.

ANY SIGNS TEMPORARY OR EXISTING, WHICH CONFLICT WITH TRAFFIC CONTROL "IN USE", SHALL BE REMOVED OR COVERED AS NEEDED AND AS APPROVED BY THE ENGINEER.

THE SPACING BETWEEN TRAFFIC CONTROL SIGNS SHOULD BE ADJUSTED TO NOT CONFLICT WITH AND SHOULD PROVIDE A DESIRABLE MINIMUM OF 200 FEET CLEARANCE TO EXISTING SIGNS THAT WILL REMAIN IN PLACE.

BARRICADES THAT MUST BE MOVED FOR A WORK OPERATION SHALL BE IMMEDIATELY RE-ESTABLISHED UPON COMPLETION OF THE OPERATION, OR FOR CONTINUING OPERATIONS, AT THE END OF EACH WORKING DAY.

SIGNS THAT WILL BE IN PLACE LESS THAN 7 CONTINUOUS DAYS AND NIGHTS MAY BE MOUNTED ON PORTABLE SUPPORTS.

ALL TYPE III BARRICADES SHALL HAVE RAILS REFLECTORIZED ON BOTH FACES. STRIPES SHALL BE PROPERLY SLOPED DOWN TOWARD THE TRAFFIC SIDE OR AS SHOWN IN THE ROAD CLOSURE BARRICADE DETAIL "D" FOR FULL ROAD CLOSURES.

TYPE "A" LOW - INTENSITY FLASHING WARNING LIGHTS SHALL BE VISIBLE ON BOTH SIDES OF THE BARRICADE.

THE R11 - 2, R11 - 3, M4 - 9, R11 - 4, AND R10 - 61 SIGNS PLACED ON THE BARRICADES SHALL COVER NO MORE THAN THE TOP RAIL. THE SIGNS SHALL NOT COVER ANY PORTION OF THE MIDDLE RAIL OR BOTTOM RAILS.

"WO" AND "MO" SIGNS ARE THE SAME AS "W" AND "M" SIGNS EXCEPT THE BACKGROUND IS ORANGE.

ALL SIGNS SHALL BE 48" X 48" UNLESS OTHERWISE NOTED BELOW:
- R11 - 2 SHALL BE 48" X 30"
- R11 - 3 SHALL, R11 - 4 AND R10 - 61 SHALL BE 60 " X 30"
- M4 - 9 SHALL BE 30" X 24"
- M3 - X SHALL BE 24" X 12" (36" X 18" IF NEEDED TO MATCH EXISTING SIGNS)
- M4 - 8 SHALL BE 24" X 12" (36" X 18" IF NEEDED TO MATCH EXISTING SIGNS)
- M1 - 4, M1 - 5A AND M1 - 6 SHALL BE 24" X 24" (36" X 36" IF NEEDED TO MATCH EXISTING SIGNS)
- MO5 - 1 AND MO6 - 1 SHALL BE 21" X 21" (30" X 30" IF NEEDED TO MATCH EXISTING SIGNS)
- D1 - X SHALL BE AS SHOWN ON SPECIFIC PROJECT SIGNING DETAIL SHEETS.
- R1 - 1 SHALL BE 36" X 36"

1. TWO WARNING LIGHTS SHALL BE PROVIDED ON THE CENTER BARRICADE AND A MINIMUM OF ONE WARNING LIGHT SHALL BE PROVIDED ON EACH OF THE OTHER BARRICADES WITHIN THE ROADWAY LIMITS. SPACING OF THE WARNING LIGHTS SHALL BE UNIFORM TO THE EDGE OF ROADWAY AS SHOWN (APPROX. 8 FOOT LIGHT SPACING.
2. THESE SIGNS AND BARRICADES ARE NOT REQUIRED IF ROAD CLOSURE BEGINS AT AN INTERSECTION.
3. FOR ROAD CLOSURE WITHOUT LOCAL ACCESS TO PROJECT, SEE ROAD CLOSURE BARRICADE DETAIL "D".
4. FOR ROAD CLOSURE WITH LOCAL ACCESS TO PROJECT, SEE ROAD CLOSURE BARRICADE DETAIL "E".
5. FOR BRIDGE OR CULVERT REPLACEMENTS, SUBSTITUTE "BRIDGE OUT" INSTEAD OF "ROAD CLOSED" ON R11 - 2 AND R11 - 3 SIGNS.
6. INSTALL DETOUR AND COMMUNITY GUIDE SIGNS AND ARROWS ONLY IF SPECIFIED IN THE CONTRACT. IF THERE ARE EXISTING ROUTE MARKER ASSEMBLIES THAT WILL REMAIN IN PLACE, ADJUST THE LOCATION OF THE DETOUR ROUTE SIGNS TO CORRESPOND WITH THE EXISTING ASSEMBLIES. MODIFY EXISTING SIGNS WHERE POSSIBLE. SEE SPECIFIC PROJECT DETOUR SIGNING DETAIL SHEETS. IF DETOUR SIGNS ARE BEING INSTALLED BY OTHERS, PLACE THE CONTRACTED TRAFFIC CONTROL SIGNS TO ALLOW FOR PLACEMENT OF ALL WARNING, DETOUR AND GUIDE SIGNS AS SHOWN.
7. "EAST" CARDINAL DIRECTION MARKERS AND RIGHT TURN ARROWS ARE SHOWN. USE OTHER CARDINAL DIRECTIONS AND ARROWS AS APPROPRIATE.

BARRICADES AND SIGNS FOR VARIOUS CLOSURES

STATE OF WISCONSIN
DEPARTMENT OF TRANSPORTATION

APPROVED
February 2020 — DATE
/S/ Andrew Heidtke — WORK ZONE ENGINEE
FHWA

6
SDD 15C02 - 08b

GENERAL NOTES

THE EXACT NUMBER, LOCATION, AND SPACING OF ALL SIGNS AND DEVICES SHALL BE ADJUSTED TO FIT FIELD CONDITIONS.

THE SPACING BETWEEN TRAFFIC CONTROL SIGNS SHOULD BE ADJUSTED TO NOT CONFLICT WITH AND SHOULD PROVIDE A MINIMUM OF 200 FEET (500 FEET DESIRABLE) CLEARANCE TO EXISTING SIGNS THAT WILL REMAIN IN PLACE.

ALL SIGNS ARE 48" X 48" UNLESS OTHERWISE NOTED. IF NECESSARY DUE TO SPACE CONSTRAINTS, 36"X36" SIGNS MAY BE USED INSTEAD OF 48" X 48" SIGNS.

SIGNS THAT WILL BE IN PLACE LESS THAN SEVEN CONTINUOUS DAYS AND NIGHTS MAY BE MOUNTED ON PORTABLE SUPPORTS.

IF A "STOP" SIGN MUST BE REMOVED FOR A WORK OPERATION, A TEMPORARY "STOP" SIGN SHALL BE PLACED PRIOR TO THE SIGN REMOVAL, OR A FLAGGER SHALL BE PROVIDED UNTIL THE SIGN IS REESTABLISHED.

* THE THIRD W20-1 SIGN IS REQUIRED ONLY IF THERE IS AN INTERSECTION BETWEEN THE "ROAD WORK 500 FEET" SIGN AND THE WORK ZONE. ADJUST THE PLACEMENT OF THIS SIGN BASED ON INTERSECTION LOCATION AND OTHER FIELD CONDITIONS.

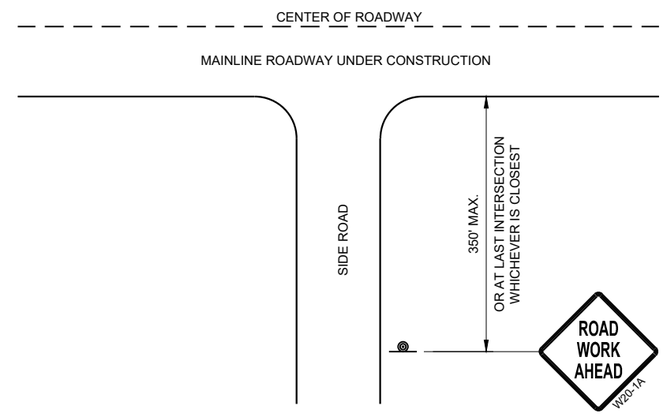

TYPICAL SIDE ROAD APPROACH WARNING SIGN DETAIL

LEGEND

- SIGN ON PERMANENT SUPPORT
- DIRECTION OF TRAFFIC
- WORK AREA

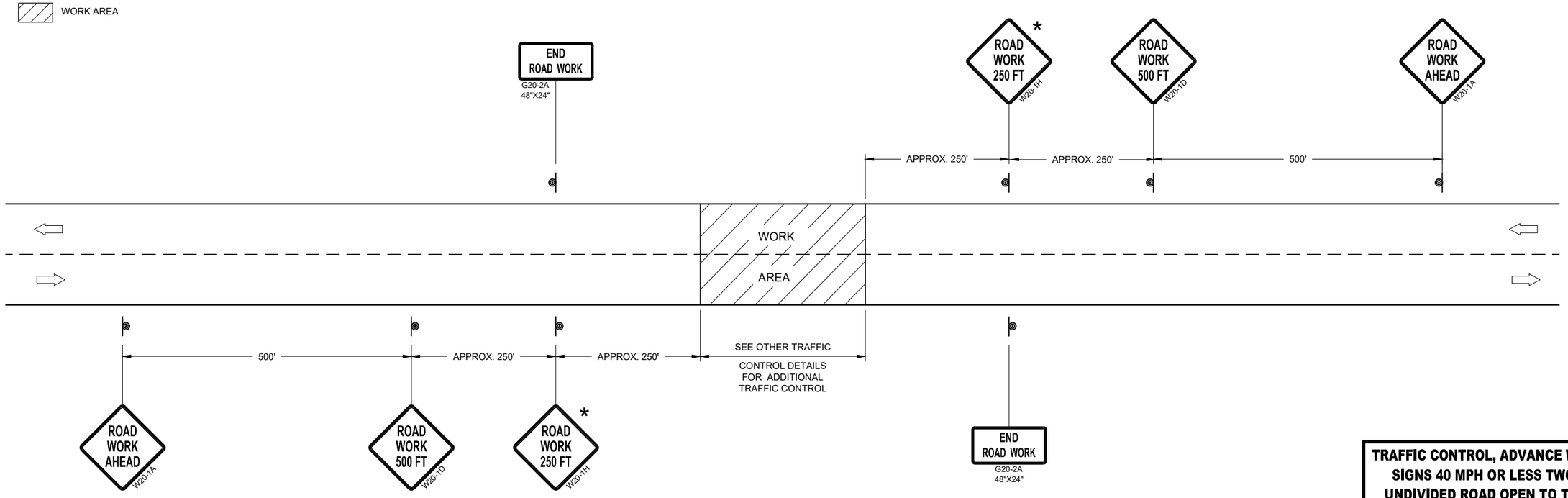

TRAFFIC CONTROL, ADVANCE WARNING SIGNS 40MPH OR LESS

TRAFFIC CONTROL, ADVANCE WARNING SIGNS 40 MPH OR LESS TWO-WAY UNDIVIDED ROAD OPEN TO TRAFFIC

STATE OF WISCONSIN
DEPARTMENT OF TRANSPORTATION

APPROVED
July 2018 — DATE
/S/ Andrew Heidtke — WORK ZONE ENGINEE
FHWA

6
SDD 15C05 - 05

GENERAL NOTES

DETAILS OF CONSTRUCTION NOT SHOWN ON THIS DRAWING SHALL CONFORM TO STANDARD SPECIFICATIONS AND SPECIAL PROVISIONS.

(1) LOCATE THE NO PASSING ZONE W14-3 SIGN WITHIN 50 FEET OF THE "T" MARKING

(2) MEASURE FROM EDGE OF MARKING TO JOINT LINE. THIS DOES NOT INCLUDE SPACE NEEDED FOR GROOVING OPERATIONS.

LEGEND

"T" MARKING

SIGN ON PERMANENT SUPPORT

DIRECTION OF TRAFFIC

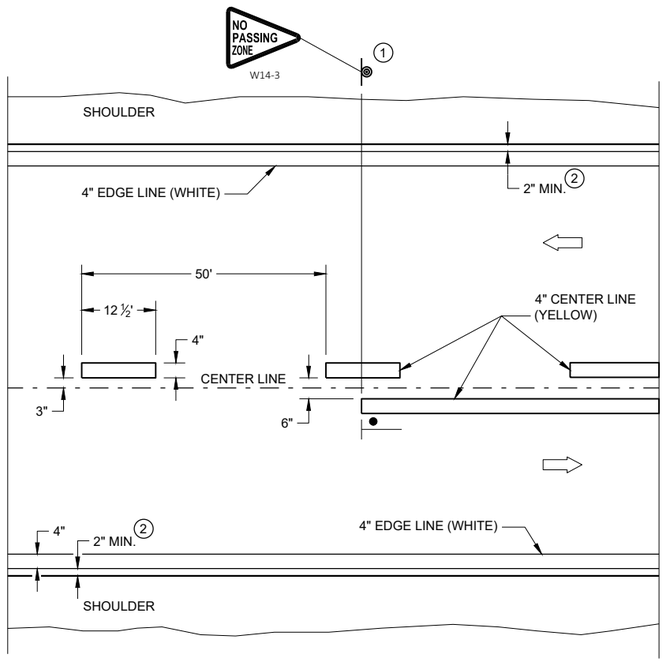

TWO WAY TRAFFIC

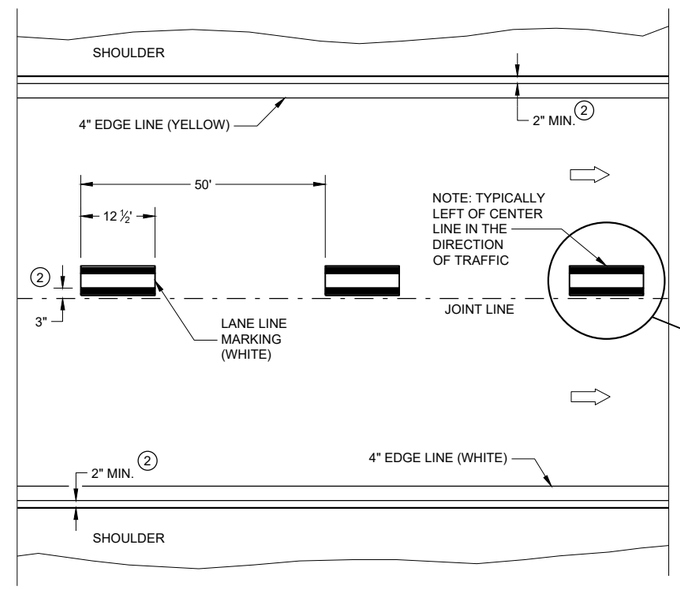

ONE WAY TRAFFIC

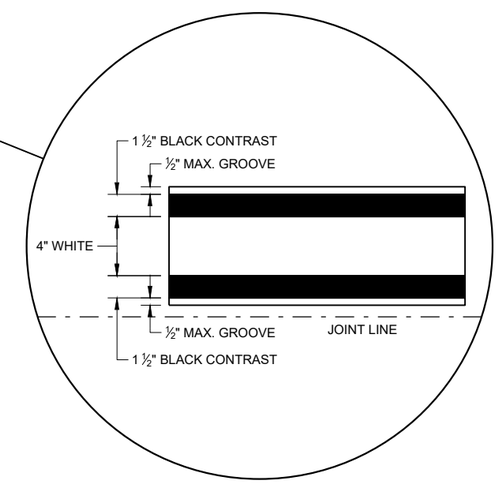

PERMANENT PAVEMENT MARKING

6

6

SDD 15C08 - 21a

SDD 15C08 - 21a

PERMANENT LONGITUDINAL PAVEMENT MARKINGS

STATE OF WISCONSIN
DEPARTMENT OF TRANSPORTATION

APPROVED

May 2022 — DATE

/S/ Jeannie Silver — STATEWIDE SIGNING AND M ENGINEER

FHWA

GENERAL NOTES

1. REFLECTIVE SHEETING SHALL FOLLOW THE REQUIREMENTS IN THE APPROVED PRODUCTS LISTING FOR SIGN SHEETING.
2. LOCATION OF WARNING LIGHTS WHEN SHOWN ON THE PLAN.

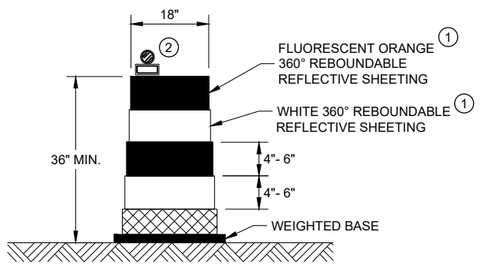

DRUM

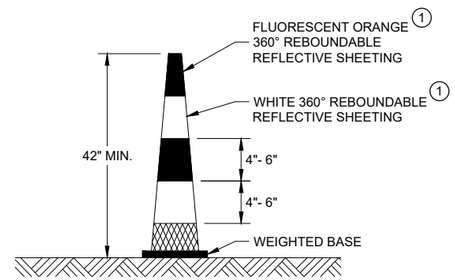

42" CONE

DO NOT USE IN TAPERS
½ SPACING OF DRUMS

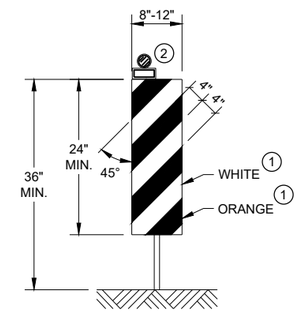

VERTICAL PANEL

THE STRIPES SHALL SLOPE DOWNWARD TO
THE TRAFFIC SIDE FOR CHANNELIZATION.

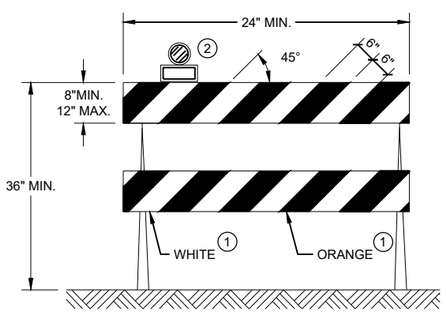

TYPE II BARRICADE

FOR RAILS LESS THAN 36" LONG, 4" WIDE STRIPES
MAY BE USED. ALL STRIPES SHALL SLOPE DOWNWARD
TO THE TRAFFIC SIDE FOR CHANNELIZATION.

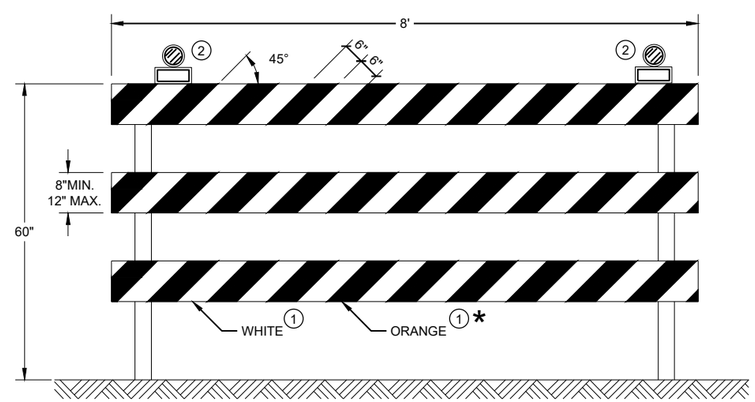

TYPE III BARRICADE

IF SIGN MOUNTED, DO NOT COVER MORE THAN 50% OF THE TOP
TWO RAILS OR 33% OF THE TOTAL AREA OF THE THREE RAILS.

* IF USED FOR A PERMANENT APPLICATION USE RED SHEETING.

CHANNELIZING DEVICES DRUMS, CONES, BARRICADES AND VERTICAL PANELS

STATE OF WISCONSIN
DEPARTMENT OF TRANSPORTATION

APPROVED
May 2021 — DATE
/S/ Andrew Heidtke — WORK ZONE ENGINEE
FHWA

6
SDD 15C11 - 09b

LEGEND

SIGN ON PORTABLE OR PERMANENT SUPPORT

TEMPORARY PORTABLE RUMBLE STRIP ARRAY

DIRECTION OF TRAFFIC

WORK AREA

FLAGGER, EQUIPPED WITH STOP/SLOW PADDLE FASTENED ON SUPPORT STAFF

GENERAL NOTES

DETAILS OF TRAFFIC CONTROL DEVICES AND INSTALLATION NOT SHOWN ON THIS DRAWING SHALL CONFORM TO THE PERTINENT REQUIREMENTS OF THE STANDARD SPECIFICATIONS, THE SPECIAL PROVISIONS, AND THE MANUAL ON UNIFORM TRAFFIC CONTROL DEVICES.

ALL SIGNS ARE 48" X 48" UNLESS OTHERWISE NOTED.

"WO" SIGNS ARE THE SAME AS "W" SIGNS EXCEPT THE BACKGROUND IS ORANGE.

THE EXACT NUMBER, LOCATION AND SPACING OF ALL SIGNS, DEVICES, AND LOCATION OF ALL FLAGGERS SHALL BE ADJUSTED TO FIT FIELD CONDITIONS AS APPROVED BY THE ENGINEER.

THE FIRST ADVANCE WARNING SIGN SHOULD TYPICALLY BE LOCATED IN ADVANCE OF THE ANTICIPATED TRAFFIC BACKUP OR QUEUE.

WHEN A SIDE ROAD OR RAMP INTERSECTS THE FACILITY ON WHICH THE WORK IS BEING PERFORMED, ADDITIONAL TRAFFIC CONTROLS SHALL BE PROVIDED AS SPECIFIED IN THE PLANS AND/OR THE SPECIAL PROVISIONS OR AS APPROVED BY THE ENGINEER.

FLAGGING

FLAGGERS SHALL BE IN SIGHT OF EACH OTHER OR IN DIRECT COMMUNICATION AT ALL TIMES. THEY SHALL BE EQUIPPED WITH STOP/SLOW PADDLES FASTENED ON SUPPORT STAFFS. WHEN THE FLAGGING OPERATION IS NOT IN EFFECT REMOVE TEMPORARY PORTABLE RUMBLE STRIPS PRIOR TO COVERING OR REMOVING ALL ADVANCE SIGNING.

(1) FOR MOVING WORK OPERATIONS, POST ADDITIONAL W20-7A FLAGGER SIGNS AT APPROXIMATELY 3,500' INTERVALS IN THE MOVING WORK OPERATION OR AS APPROVED BY THE ENGINEER.

(2) SIGN NOT REQUIRED IF FLAGGING OPERATION OCCURS WITHIN A SIGNED ROAD WORK ZONE AREA.

WHEN THE DISTANCE BETWEEN FLAGGERS EXCEEDS 2 MILES, A PILOT CAR IS REQUIRED. WHEN CURVES REDUCE SIGHT DISTANCE BELOW 400', A PILOT CAR IS REQUIRED.

TEMPORARY PORTABLE RUMBLE STRIPS

UTILIZE TEMPORARY PORTABLE RUMBLE STRIPS ON ALL FLAGGING OPERATIONS.

(3) EACH TEMPORARY PORTABLE RUMBLE STRIP ARRAY CONSISTS OF THREE RUMBLE STRIPS PLACED TRANSVERSE ACROSS THE LANE AT THE LOCATIONS SHOWN. WITHIN EACH ARRAY, SPACING BETWEEN RUMBLE STRIPS SHALL BE 15 FEET ON CENTER

ONLY USE TEMPORARY PORTABLE RUMBLE STRIPS FROM THE APPROVED PRODUCTS LIST.

INSTALL TEMPORARY RUMBLE STRIPS PER MANUFACTURER'S RECOMMENDATIONS.

PLACE ADVANCE SIGNING PRIOR TO INSTALLING TEMPORARY RUMBLE STRIPS.

DO NOT INSTALL TEMPORARY PORTABLE RUMBLE STRIPS ON GRAVEL, MILLED SURFACES, OR ASPHALT THAT HAS BEEN PAVED LESS THAN 12 HOURS.

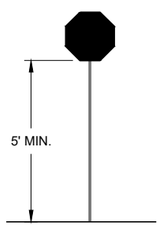

STOP/SLOW PADDLE ON SUPPORT STAFF

SIGN AND TEMPORARY RUMBLE STRIP ARRAY SPACING TABLE

SPEED LIMIT	SPACING "A"
25-30 MPH	200'
35-40 MPH	350'
45-55 MPH	500'

USE OF WO3-4 SIGN IS OPTIONAL. WHEN USED, THIS SIGN SHALL BE LOCATED BETWEEN THE W20-7A AND W20-4A SIGNS, USING SPACING "A".

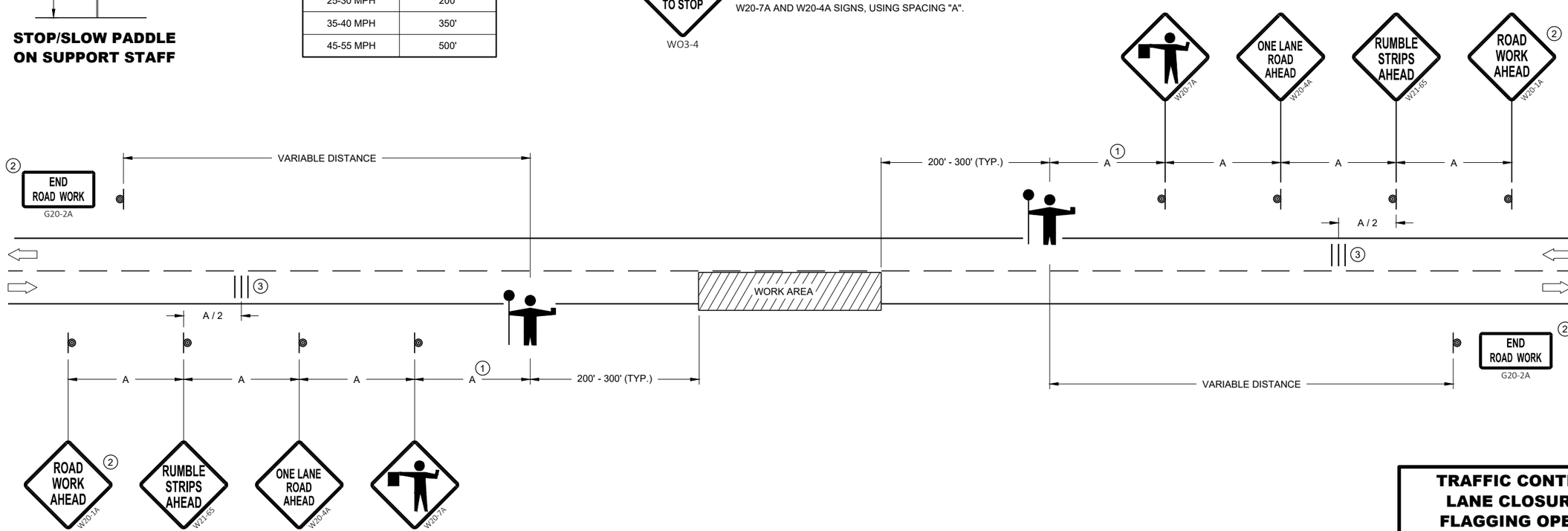

TRAFFIC CONTROL FOR LANE CLOSURE WITH FLAGGING OPERATION

STATE OF WISCONSIN
DEPARTMENT OF TRANSPORTATION

APPROVED
May 2022 — DATE
/S/ Andrew Heidtke — WORK ZONE ENGINEE
FHWA

6

SDD 15C12 - 09a

GENERAL NOTES

- SIGN ON PERMANENT SUPPORT
- TRAFFIC CONTROL CONE 42-INCH
- TRAFFIC CONTROL DRUM
- TEMPORARY PORTABLE RUMBLE STRIP ARRAY
- DIRECTION OF TRAFFIC
- WORK AREA
- AFAD — AUTOMATED FLAGGER ASSISTANCE DEVICE (AFAD)

GENERAL NOTES

DETAILS OF TRAFFIC CONTROL DEVICES AND INSTALLATION NOT SHOWN ON THIS DRAWING SHALL CONFORM TO THE PERTINENT REQUIREMENTS OF THE STANDARD SPECIFICATIONS, THE SPECIAL PROVISIONS, AND THE MANUAL ON UNIFORM TRAFFIC CONTROL DEVICES.

ALL SIGNS ARE 48" X 48" UNLESS OTHERWISE NOTED.

"WO" SIGNS ARE THE SAME AS "W" SIGNS EXCEPT THE BACKGROUND IS ORANGE.

THE EXACT NUMBER, LOCATION AND SPACING OF ALL SIGNS, DEVICES, AND LOCATION OF ALL FLAGGERS SHALL BE ADJUSTED TO FIT FIELD CONDITIONS AS APPROVED BY THE ENGINEER.

THE FIRST ADVANCE WARNING SIGN SHOULD TYPICALLY BE LOCATED IN ADVANCE OF THE ANTICIPATED TRAFFIC BACKUP OR QUEUE.

WHEN A SIDE ROAD OR RAMP INTERSECTS THE FACILITY ON WHICH THE WORK IS BEING PERFORMED, ADDITIONAL TRAFFIC CONTROLS SHALL BE PROVIDED AS SPECIFIED IN THE PLANS AND/OR THE SPECIAL PROVISIONS OR AS APPROVED BY THE ENGINEER.

FLAGGING

IF THE AUTOMATED FLAGGER ASSISTANCE DEVICE (AFAD) STOPS WORKING, FLAGGERS SHALL BE IN SIGHT OF EACH OTHER OR IN DIRECT COMMUNICATION AT ALL TIMES. THEY SHALL BE EQUIPPED WITH STOP/SLOW PADDLES FASTENED ON SUPPORT STAFFS. WHEN THE FLAGGING OPERATION IS NOT IN EFFECT REMOVE TEMPORARY PORTABLE RUMBLE STRIPS PRIOR TO COVERING OR REMOVING ALL ADVANCE SIGNING.

WHEN THE DISTANCE BETWEEN FLAGGERS EXCEEDS 2 MILES, A PILOT CAR IS REQUIRED. WHEN CURVES REDUCE SIGHT DISTANCE BELOW 400', A PILOT CAR IS REQUIRED.

(1) SIGN NOT REQUIRED IF FLAGGING OPERATION OCCURS WITHIN A SIGNED ROAD WORK ZONE AREA.

(2) IF FLAGGERS ARE PHYSICALLY NEEDED TO FLAG, REPLACE WO3-4 SIGNS WITH W20-7A SIGNS.

TEMPORARY PORTABLE RUMBLE STRIPS

UTILIZE TEMPORARY PORTABLE RUMBLE STRIPS ON ALL FLAGGING OPERATIONS.

ONLY USE TEMPORARY PORTABLE RUMBLE STRIPS FROM THE APPROVED PRODUCTS LIST.

PLACE ADVANCE SIGNING PRIOR TO INSTALLING TEMPORARY RUMBLE STRIPS.

DO NOT INSTALL TEMPORARY PORTABLE RUMBLE STRIPS ON GRAVEL, MILLED SURFACES, OR ASPHALT THAT HAS BEEN PAVED LESS THAN 12 HOURS.

(3) EACH TEMPORARY PORTABLE RUMBLE STRIP ARRAY CONSISTS OF THREE RUMBLE STRIPS PLACED TRANSVERSELY AT THE LOCATIONS SHOWN. WITHIN EACH ARRAY, SPACING BETWEEN RUMBLE STRIPS SHALL BE 15 FEET ON CENTER.

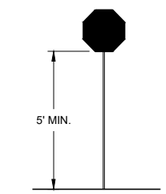

STOP/SLOW PADDLE ON SUPPORT STAFF

SIGN AND TEMPORARY RUMBLE STRIP ARRAY SPACING TABLE

SPEED LIMIT	SPACING "A"
25-30 MPH	200'
35-40 MPH	350'
45-55 MPH	500'

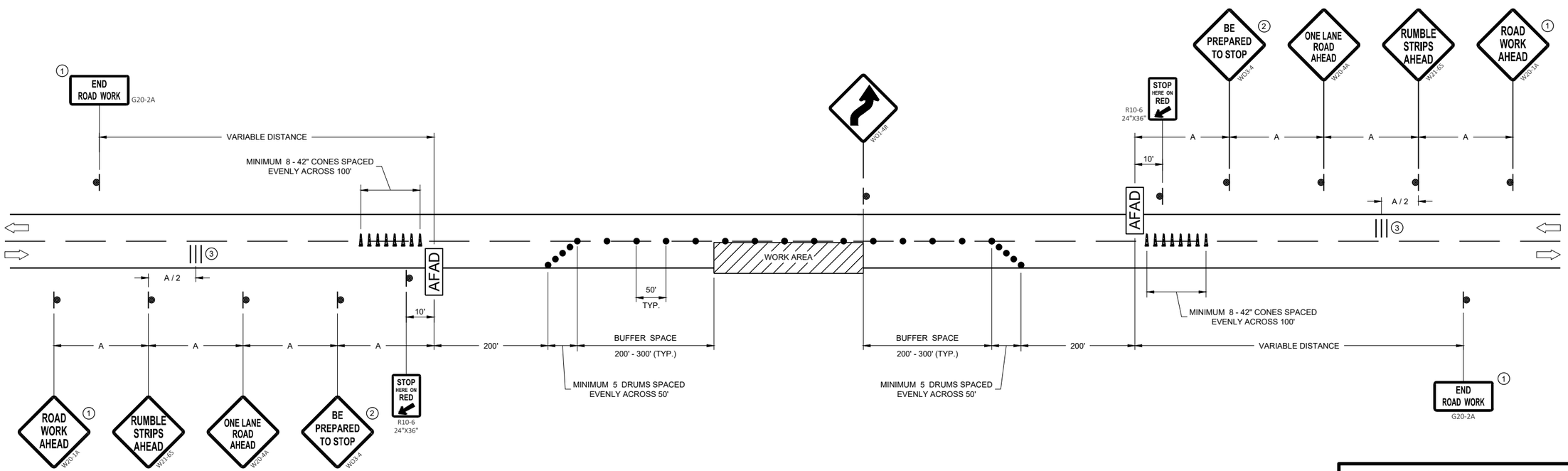

TRAFFIC CONTROL, LANE CLOSURE WITH AUTOMATED FLAGGER ASSISTANCE DEVICE

STATE OF WISCONSIN
DEPARTMENT OF TRANSPORTATION

APPROVED
May 2022 — DATE
/S/ Andrew Heidtke — WORK ZONE ENGINEER
FHWA

6
SDD 15D12 - 09b

GENERAL NOTES

STOP SIGN SHALL BE PLACED A MINIMUM OF 6 FEET TO A MAXIMUM OF 50 FEET FROM THE EDGELINE LOCATION.

1. 18-INCH STOP LINES MAY BE DELETED OR ADDED BY THE REGION MARKING ENGINEER BASED ON VISIBILITY AND SIGHT LINES.
2. NO STOP LINE IS REQUIRED IF STOP SIGN IS LESS THAN OR EQUAL TO 40 FEET FROM THE EDGELINE.
3. NO STOP LINE IS REQUIRED IF STOP SIGN IS LESS THAN OR EQUAL TO 30 FEET FROM THE FLANGELINE EXTENSION.
4. MOVE CLOSER TO THE EDGE OF TRAVEL LINE AS NEEDED FOR VISIBILITY AND SIGHT LINES (NO CLOSER THAN 4 FEET).
5. LADDER BAR CROSSWALKS SHOULD ONLY BE USED FOR MID BLOCK CROSSINGS. USE 2 - 6" TRANSVERSE LINES INSTEAD.

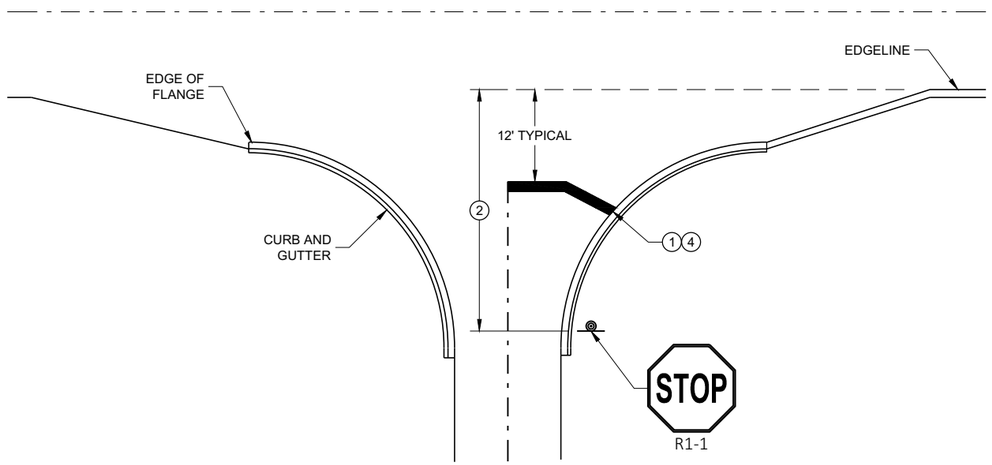

TYPICAL STOP LINE PAVEMENT MARKING WITH CURB AND GUTTER

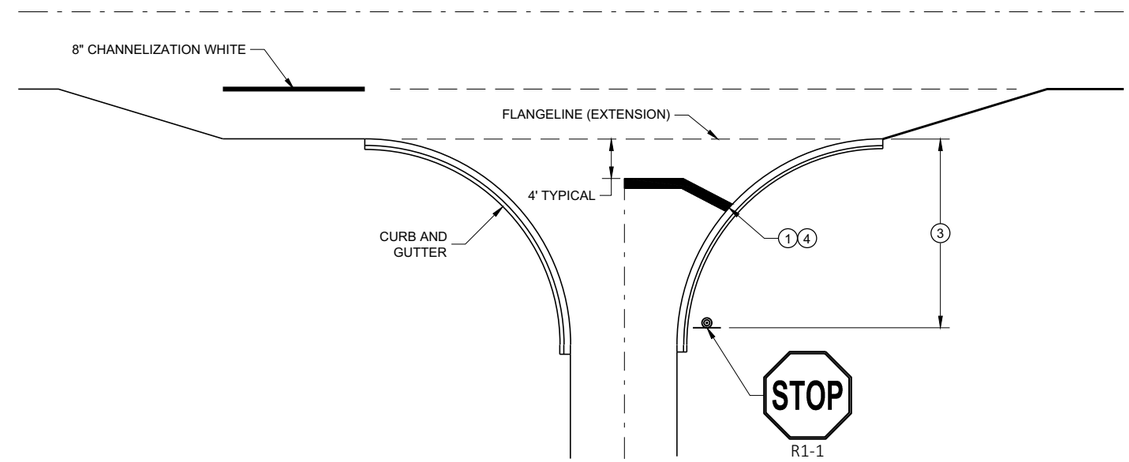

TYPICAL STOP LINE PAVEMENT MARKING FOR SIDEROADS WITH RIGHT TURN LANE

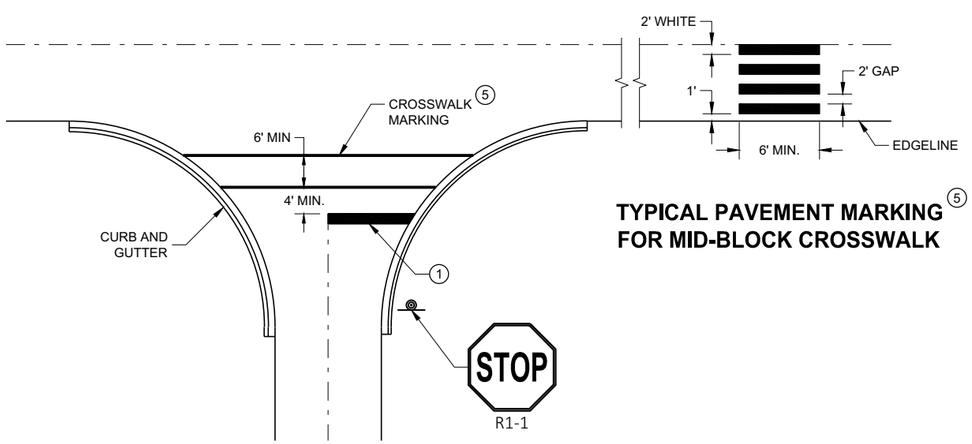

TYPICAL STOP LINE PAVEMENT MARKING FOR SIDEROADS WITH CROSSWALK MARKING

TYPICAL PAVEMENT MARKING 5 FOR MID-BLOCK CROSSWALK

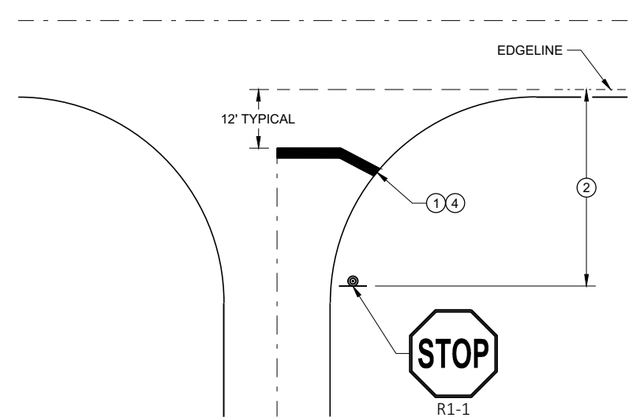

TYPICAL STOP LINE PAVEMENT MARKING WITHOUT CURB AND GUTTER

STOP LINE AND CROSSWALK PAVEMENT MARKING

STATE OF WISCONSIN
DEPARTMENT OF TRANSPORTATION

APPROVED
November 2019 — DATE
/S/ Matthew Rauch — STATE SIGNING AND MAR ENGINEER
FHWA

6

SDD 15C33 - 04

LEGEND

- SIGN ON PERMANENT SUPPORT
- TRAFFIC CONTROL DRUM
- DIRECTION OF TRAFFIC
- WORK ZONE

GENERAL NOTES

ALL SIGNS ARE 48"X48" UNLESS OTHERWISE NOTED. IF NECESSARY DUE TO SPACE CONSTRAINTS IN URBAN AREAS, 36" X 36" SIGNS MAY BE USED IF APPROVED BY THE REGIONAL TRAFFIC UNIT.

"WO" SIGN IS THE SAME AS "W" SIGN EXCEPT THE BACKGROUND IS ORANGE.

ANY SIGNS TEMPORARY OR EXISTING, WHICH CONFLICT WITH THE TRAFFIC CONTROL "IN USE" SHALL BE REMOVED OR COVERED AS NEEDED AND AS APPROVED BY THE ENGINEER.

THE EXACT NUMBER, LOCATION, AND SPACING OF ALL SIGNS AND DEVICES SHALL BE ADJUSTED TO FIT FIELD CONDITIONS AS APPROVED BY THE ENGINEER.

CHANNELIZING DEVICES PLACED ADJACENT TO WORK AREA SHALL BE PULLED BACK FROM THE TRAVEL LANE WHEN WORK IS NOT IN PROGRESS.

SIGNS THAT WILL BE IN PLACE LESS THAN 7 CONTINUOUS DAYS AND NIGHTS MAY BE MOUNTED ON PORTABLE SUPPORTS.

W20-1A AND G20-2A SIGNS ARE NOT REQUIRED IF THE WORK AREA IS WITHIN A LARGER WORK ZONE WHERE THESE SIGNS ARE ALREADY PRESENT. G20-2A SIGNS MAY ALSO BE OMITTED IF DURATION OF WORK IS LESS THAN 7 CONTINUOUS DAYS AND NIGHTS.

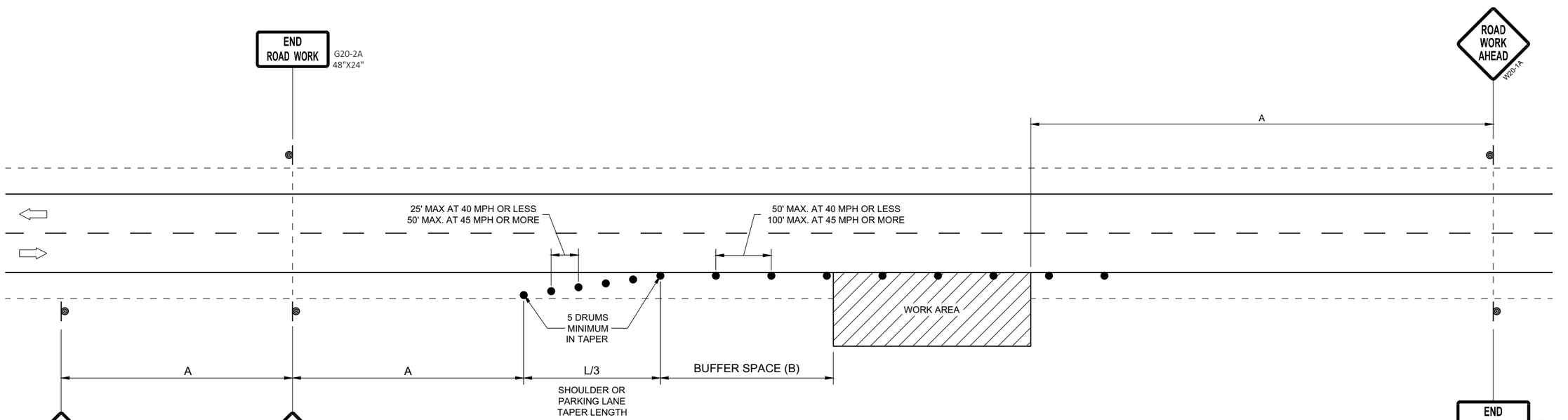

OR
IF TRAFFIC CONTROL DEVICES
ENCROACH ONTO TRAVELED WAY, USE

POSTED SPEED LIMIT PRIOR TO WORK STARTING (MPH)	ADVANCE WARNING SIGN SPACING (A) FEET	SHOULDER TAPER L / 3 W, LATERAL OFFSET (FT)						BUFFER SPACE (B) FEET
		3	4	5	6	7	8	
25	200'	10	14	17	21	24	28	55
30	200'	15	20	25	30	35	40	85
35	350'	20	27	34	40	47	54	120
40	350'	26	35	44	53	62	70	170
45	500'	45	59	74	89	104	119	220
50	500'	50	66	83	99	116	132	280
55	500'	54	73	91	109	127	145	335'

TRAFFIC CONTROL, WORK ON SHOULDER OR PARKING LANE, UNDIVIDED ROADWAY

STATE OF WISCONSIN
DEPARTMENT OF TRANSPORTATION

APPROVED
May 2020 — DATE
/S/ Andrew Heidtke — STATEWIDE WORK ZONE T SAFETY ENGINEER
FHWA

6

SDD 15D28 - 04

GENERAL NOTES

BARRICADE DEVICE SELECTED FROM APPROVED PRODUCT LIST

1. REFLECTIVE SHEETING SHALL FOLLOW THE REQUIREMENTS IN THE APPROVED PRODUCTS LISTING FOR SIGN SHEETING.
2. SHEETING REQUIRED ON MORE THAN 50% OF BARRICADE WIDTH.
3. PLACE SHEETING ON BOTH SIDES OF THE BARRICADE.

* USE THIS DETAIL FOR SHEETING PLACEMENT REFERENCE.

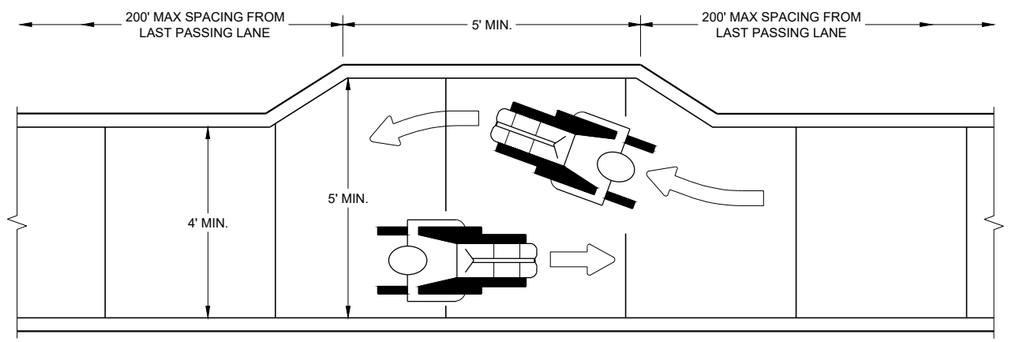

NARROW SIDEWALK PASSING DETAIL

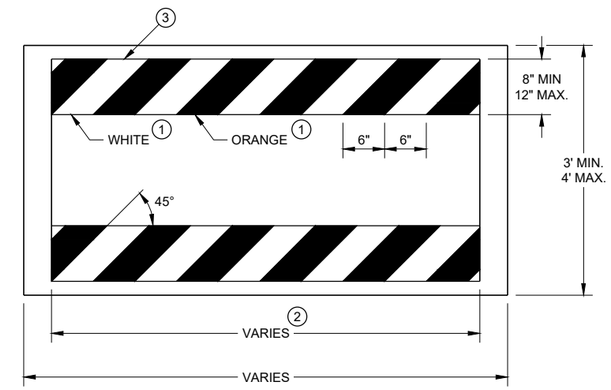

TEMPORARY PEDESTRIAN BARRICADE*

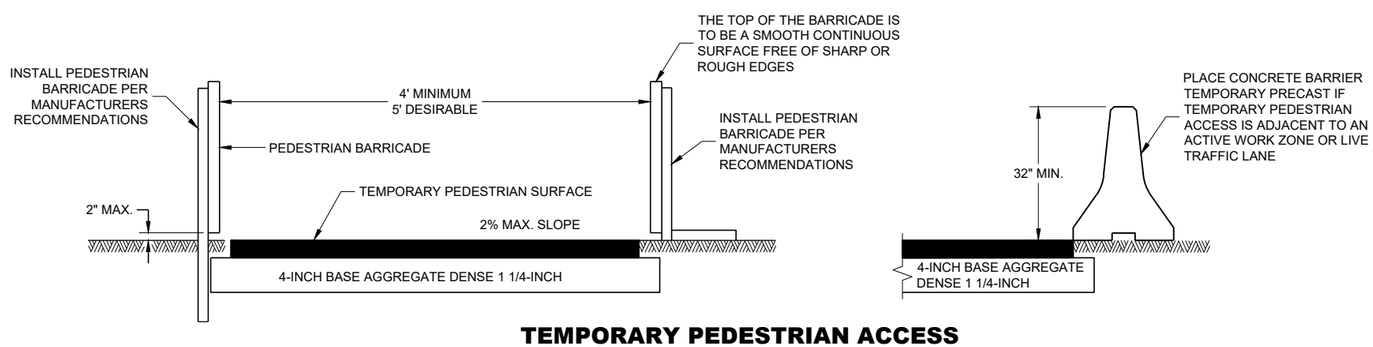

TEMPORARY PEDESTRIAN ACCESS

6

6

SDD 15D30 - 07a

SDD 15D30 - 07a

TRAFFIC CONTROL, PEDESTRIAN ACCOMMODATION

STATE OF WISCONSIN
DEPARTMENT OF TRANSPORTAT

GENERAL NOTES

CURB RAMPS SHALL BE 48" MIN. WIDTH WITH A FIRM, STABLE AND SLIP RESISTANT SURFACE.

CURB RAMPS AND LANDINGS SHALL HAVE A 1:50 (2%) MAX. CROSS-SLOPE.

CLEAR SPACE OF 48" X 48" SHALL BE PROVIDED ABOVE AND BELOW THE CURB RAMP.
LATERAL JOINTS OR GAPS BETWEEN SURFACES SHALL BE LESS THAN ½" WIDTH.

CHANGES BETWEEN SURFACE HEIGHTS SHALL NOT EXCEED ½". LATERAL EDGES MAY BE VERTICAL UP TO ¼" HIGH AND SHALL BE BEVELED AT 1:2 BETWEEN ¼" AND ½".

1. INSTALL CONTRASTING TEMPORARY DETECTABLE WARNING FIELD AT PEDESTRIAN STREET CROSSINGS, AS SHOWN IN THE PLANS.
2. PROTECTIVE EDGING WITH A 2" MIN. HEIGHT SHALL BE INSTALLED WHEN A CURB RAMP OR LANDING PLATFORM HAS A VERTICAL DROP OF 6" OR GREATER OR HAS A SIDE APRON SLOPE STEEPER THAN 1:3 (33%). PROTECTIVE EDGING SHOULD BE CONSIDERED WHEN CURB RAMPS OR LANDING PLATFORMS HAVE A VERTICAL DROP OF 3" OR MORE.
3. DETECTABLE EDGING WITH 6" MIN. HEIGHT AND CONTRASTING COLOR SHALL BE INSTALLED ON ALL CURB RAMP LANDINGS WHERE THE WALKWAY CHANGES DIRECTION (TURNS).
4. DO NOT RESTRICT WATER FLOW IN THE GUTTER SYSTEM.
5. 6" MINIMUM BETWEEN CURB FACE AND EDGE OF RAMP
6. IF ONLY PART OF THE END PANEL OF TEMPORARY PEDESTRIAN BARRICADE PANEL IS NEEDED, EXTEND EXCESS PORTION OF TEMPORARY PEDESTRIAN BARRICADE PANEL HERE.

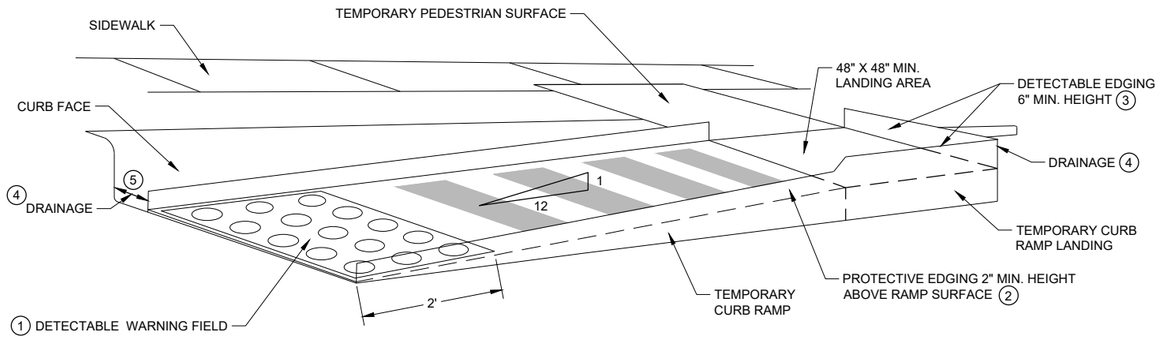

PERSPECTIVE VIEW

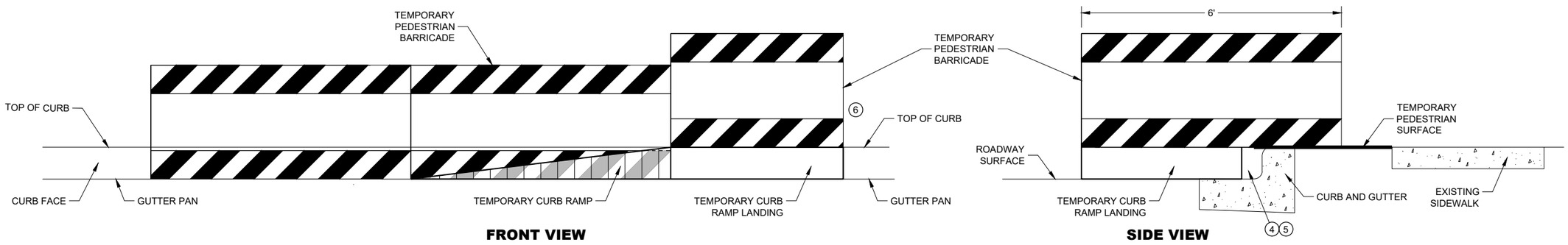

FRONT VIEW **SIDE VIEW**

TEMPORARY CURB RAMP PARALLEL TO CURB

6

6

SDD 15D30 - 07b

SDD 15D30 - 07b

TRAFFIC CONTROL, PEDESTRIAN ACCOMMODATION

STATE OF WISCONSIN
DEPARTMENT OF TRANSPORTAT

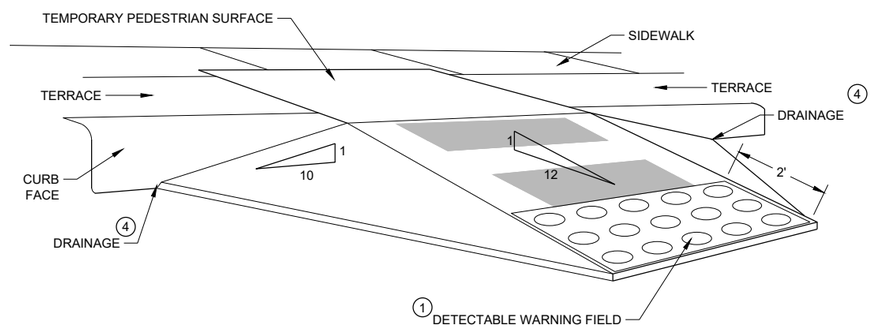

WITH SIDE APRON 5

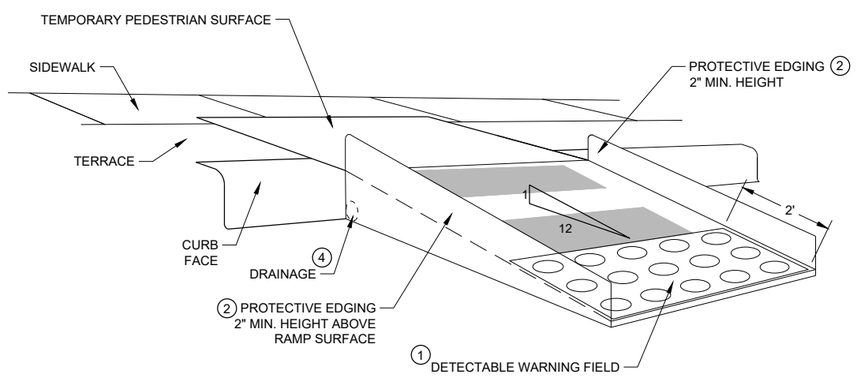

WITH PROTECTIVE EDGE

TEMPORARY CURB RAMP PERPENDICULAR TO CURB

GENERAL NOTES

CURB RAMPS SHALL BE 48" MINIMUM WIDTH WITH A FIRM, STABLE AND SLIP RESISTANT SURFACE.

ALTERNATE SIDEWALK WORK BETWEEN LEFT AND RIGHT SIDE OF ROADWAY TO MAINTAIN PEDESTRIAN ACCESS.

CURB RAMPS AND LANDINGS SHALL HAVE A 1:50 (2%) MAX. CROSS-SLOPE.

CLEAR SPACE OF 48" X 48" SHALL BE PROVIDED ABOVE AND BELOW THE CURB RAMP.

LATERAL JOINTS OR GAPS BETWEEN SURFACES SHALL BE LESS THAN ½" WIDTH.

CHANGES BETWEEN SURFACE HEIGHTS SHALL NOT EXCEED ½". LATERAL EDGES MAY BE VERTICAL UP TO ¼" HIGH AND SHALL BE BEVELED AT 1:2 BETWEEN ¼" AND ½".

1. INSTALL CONTRASTING TEMPORARY DETECTABLE WARNING FIELD AT PEDESTRIAN STREET CROSSINGS, AS SHOWN IN THE PLANS
2. PROTECTIVE EDGING WITH A 2" MIN. HEIGHT SHALL BE INSTALLED WHEN A CURB RAMP OR LANDING PLATFORM HAS A VERTICAL DROP OF 6" OR GREATER OR HAS A SIDE APRON SLOPE STEEPER THAN 1:3 (33%). PROTECTIVE EDGING SHOULD BE CONSIDERED WHEN CURB RAMPS OR LANDING PLATFORMS HAVE A VERTICAL DROP OF 3" OR MORE.
3. DETECTABLE EDGING WITH 6" MIN. HEIGHT AND CONTRASTING COLOR SHALL BE INSTALLED ON ALL CURB RAMP LANDINGS WHERE THE WALKWAY CHANGES DIRECTION (TURNS).
4. DO NOT RESTRICT WATER FLOW IN THE GUTTER SYSTEM.
5. CAN ONLY BE USED FOR RAMPS WITH 6" OR LESS OF VERTICAL CHANGE.

6

SDD 15D30 - 07c

TRAFFIC CONTROL, PEDESTRIAN ACCOMMODATION

STATE OF WISCONSIN
DEPARTMENT OF TRANSPORTAT

URBAN AREA

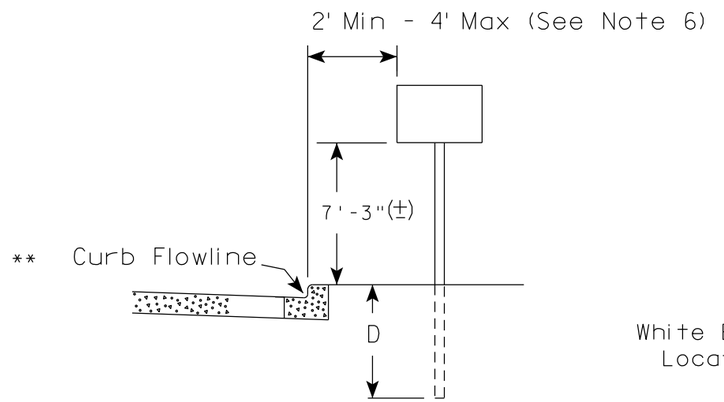

RURAL AREA (See Note 2)

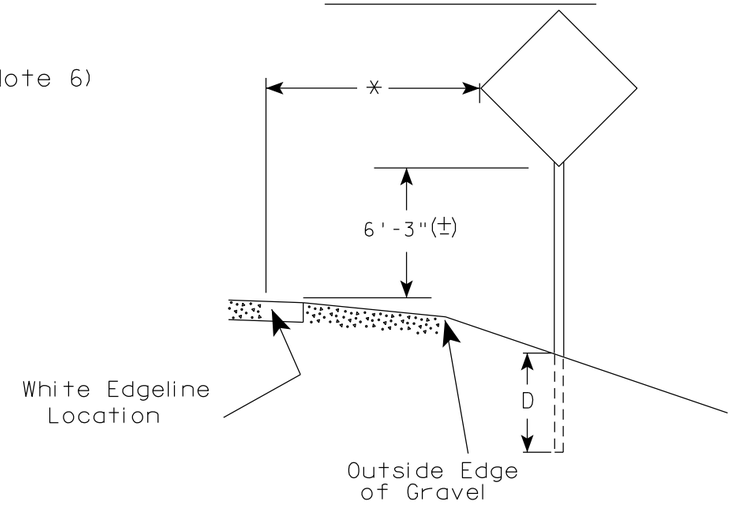

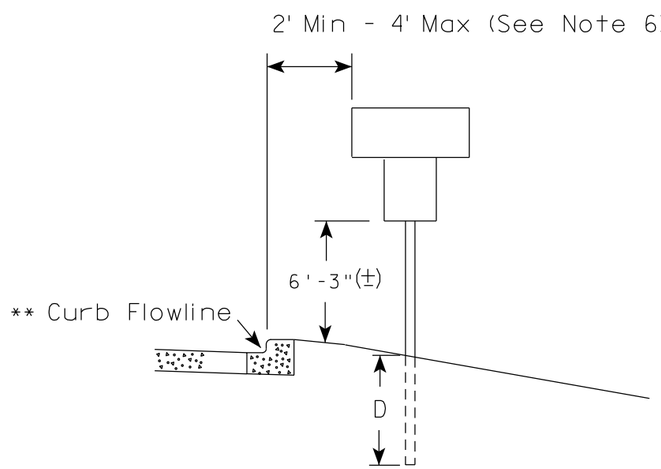

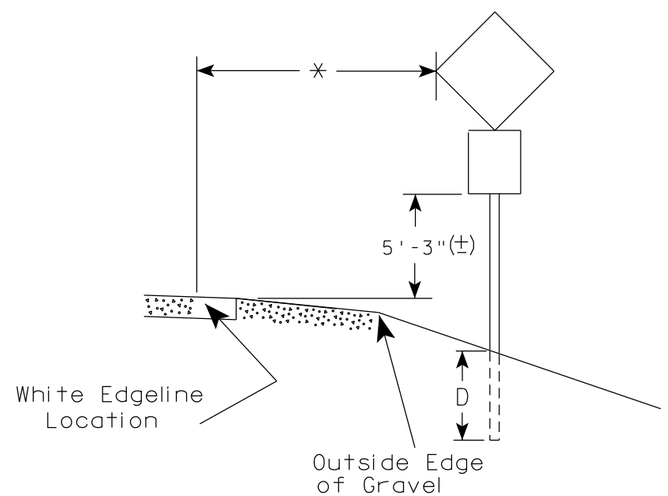

** The existence of curb and gutter does not in itself mandate the vertical clearance illustrated. That height is typically measured where there is sidewalk adjacent to the roadway or parking is permitted. In the absence of sidewalk vertical clearance is measured from the top of the curb. Offset of signs is measured from the flow line.

* 6 feet from edge of a paved shoulder or 12 feet from the edge of pavement (edge line location) or 2 feet from outside edge of gravel, whichever is greater unless directed by project engineer.

GENERAL NOTES

1. Signs wider than 4 feet or 20 sq.ft or larger, shall be mounted on multiple posts. Refer to plate A4-4.
2. If signs are mounted on or behind barrier wall, see A4-10 sign plate.
   The Double Arrow sign (W12-1D) shall be mounted at a height of 2'-3" (±). The Chevron sign (W1-8), Roundabout Chevron panel (R6-4B), Enhanced Reference Markers, Clearance Markers (W5-52), Mile Markers (D10 series), In Road Object Markers (W5-54) & End of Road Markers (W5-56) shall be mounted at a height of 4'-3" (±).
3. For expressways and freeways, mounting height is 7'- 3" (±) or 6'-3" (±) depending upon existence of a sub-sign.
4. Minimum mounting height for signs mounted on traffic signal poles is 5'- 3" (±).
5. Offset distance shall be consistent with existing signs or consistent throughout length of project.
6. The (±) tolerance for mounting height is 3 inches.
7. Folding signs shall be mounted at a height of 5'-3" (±) or as directd by the Engineer.

POST EMBEDMENT DEPTH

Area of Sign Installation (Sq.Ft.)	D (Min)
20 or Less	4'
Greater than 20	5'

TYPICAL INSTALLATION OF PERMANENT TYPE II SIGNS ON SINGLE POSTS

WISCONSIN DEPT OF TRANSPORTATION

APPROVED Matthew R Rauch for State Traffic Engineer

DATE 5/13/2020 PLATE NO. A4-3.22

7 7

PROJECT NO:	HWY:	COUNTY:		SHEET NO: 81	E

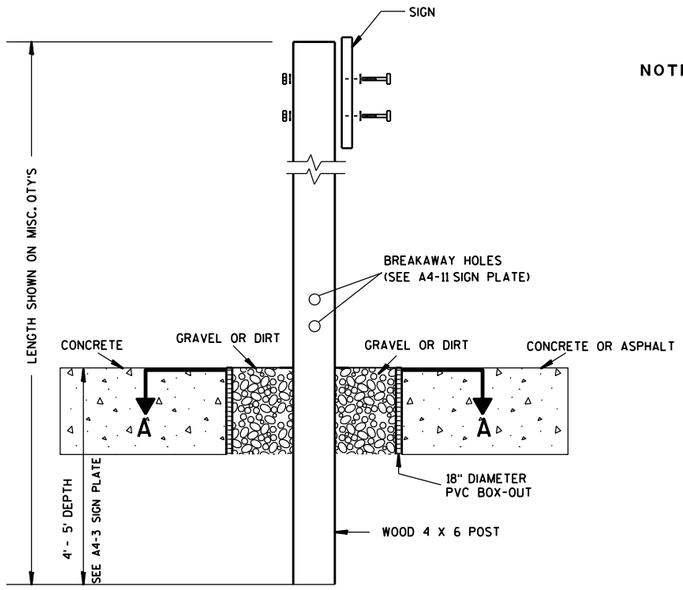

ELEVATION VIEW

DETAIL OF WOOD 4 X 6 SIGN POST IN BOX-OUT

NOTES:
1. ALL MATERIAL TO BE APPROVED BY ENGINEER PRIOR TO INSTALLATION
2. SEE SIGN PLATE A4-8 FOR SIGN HARDWARE REQUIREMENTS
3. 18 INCH X 18 INCH SQUARE BOX-OUTS MAY BE USED FOR INSTALLATIONS IN EXISTING CONCRETE OR ASPHALT LOCATIONS.

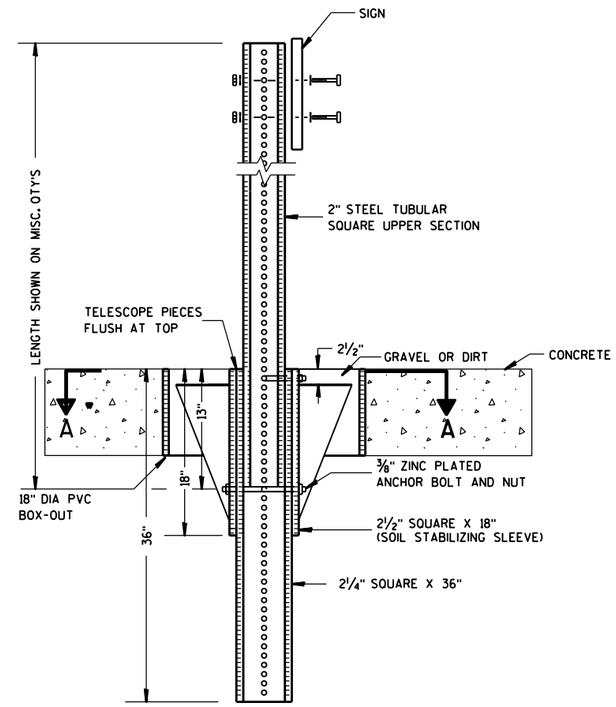

ELEVATION VIEW

DETAIL OF STEEL 2 X 2 SIGN POST IN BOX-OUT

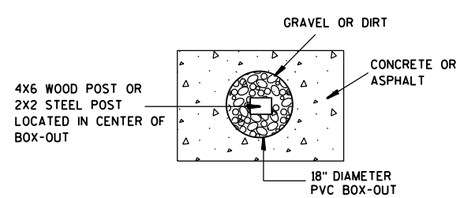

PLAN VIEW

FOR NEW CONCRETE/ASPHALT INSTALLATIONS

SIGN POST
BOX-OUTS
A4-3B

WISCONSIN DEPT OF TRANSPORTATION

APPROVED Matthew R Rauch
for State Traffic Engineer

DATE 1/27/14 PLATE NO. A4-3B.1

PROJECT NO:	HWY:	COUNTY:		SHEET NO:	E

URBAN AREA

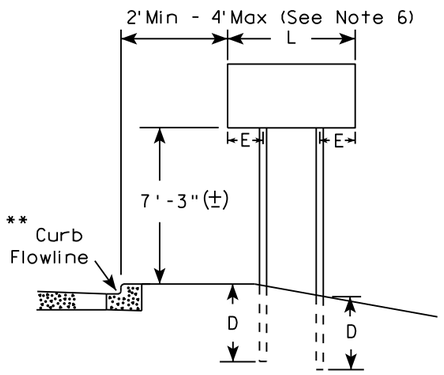

RURAL AREA (See Note 3)

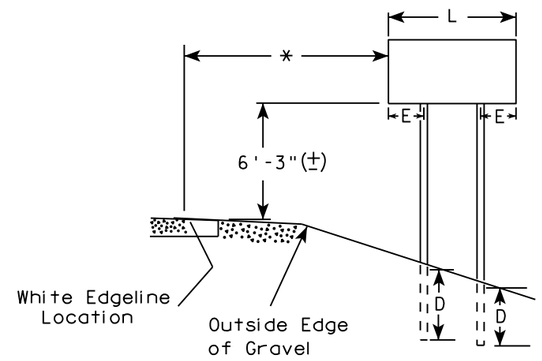

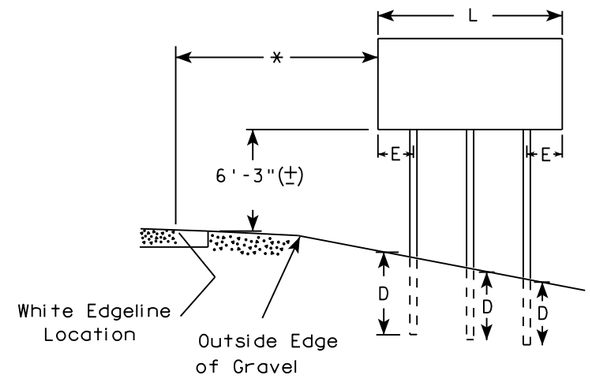

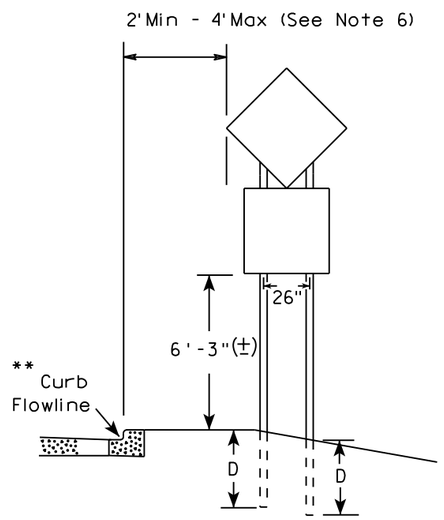

48" DIAMOND WARNING SIGN

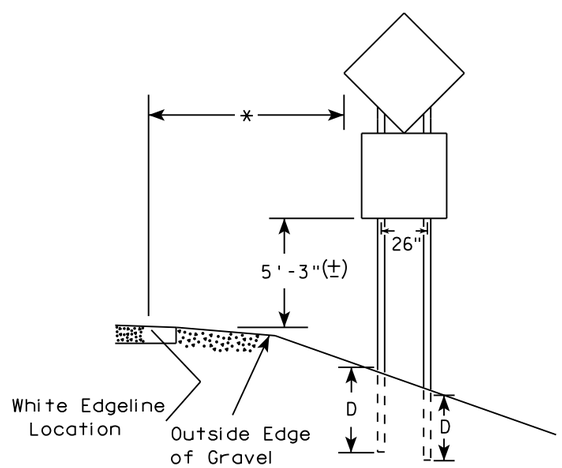

48" DIAMOND WARNING SIGN

SIGN SHAPE OTHER THAN DIAMOND (TWO POSTS REQUIRED)	
L	E
*** Greater than 48" Less than 60"	12"
60" to 108"	L/5

SIGN SHAPE OTHER THAN DIAMOND (THREE POSTS REQUIRED)	
L	E
Greater than 108" to 144"	12"

GENERAL NOTES

1. For 3 or 4 post installations, individual post spacing shall be greater than 3'-6".
2. See tables below for required number of posts.
3. For expressways and freeways, mounting height is 7'-3" (±) or 6'-3" (±) depending upon existence of sub-sign.
4. The (±) tolerance for mounting height is 3 inches.
5. J-Assemblies are considered to be one sign for mounting height.
6. Offset distance shall be consistent with existing signs or consistent throughout length of project.
7. Folding signs shall be mounted at a height of 5'-3" (±) or as directed by the engineer.
8. The Double Arrow sign (W12-1) shall be mounted at a height of 2'-3" (±). The Chevron sign (W1-8), Roundabout Chevron panel (R6-4B), Clearance Markers (W5-52), Mile Markers (D10 series), In Road Object Markers (W5-54) & End of Road Markers (W5-56) shall be mounted at a height of 4"-3" (±).

* 6 feet from edge of a paved shoulder or 12 feet from the edge of pavement (edge line location) or 2 feet from outside edge of gravel, whichever is greater unless directed by project engineer.

** The existence of curb and gutter does not in itself mandate the vertical clearance illustrated. That height is typically measured where there is sidewalk adjacent to the roadway or parking is permitted. In the absence of sidewalk vertical clearance is measured from the top of the curb. Offset of signs is measured from the flow line.

*** See A4-3 sign plate for signs 4' or less in width and less than 20 S.F. in area.

POST EMBEDMENT DEPTH

Area of Sign Installation (Sq. Ft.)	D (Min)
20 or Less	4'
Greater than 20	5'

TYPICAL INSTALLATION OF TYPE II SIGNS ON MULTIPLE POSTS

WISCONSIN DEPT OF TRANSPORTATION

APPROVED Matthew R Rauch
For State Traffic Engineer

DATE 8/21/17 PLATE NO. A4-4.15

7

7

PROJECT NO:	HWY:	COUNTY:		SHEET NO: 83	E

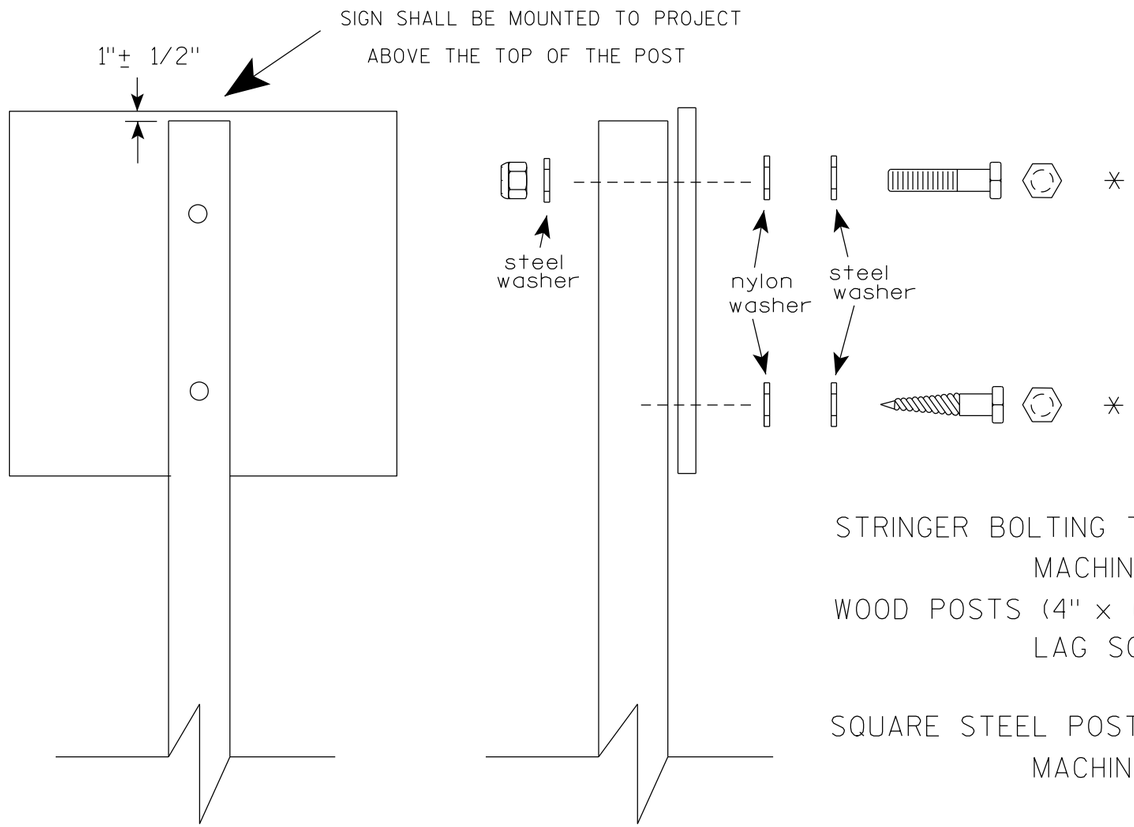

Nuts, bolts and lags used for mounting signs shall have hexagonal heads and shall be either :

a. Hot dip galvanized in accordance with ASTM Designation: A 153, Class D, or SC 3

b. Electro-galvanized in accordance with ASTM Designation : B 633, TYPE III, SC 3.

Threads on bolts and nuts shall be manufactured with sufficient allowance for the cadmium plate or galvanized coating to permit the nuts to run freely on the bolts.

STRINGER BOLTING TO ALUMINUM SIGNS (SEE SIGN PLATE A4-18)

MACHINE BOLTS - 5/16" X 1-3/4" Length w/ lock nuts

WOOD POSTS (4" x 6")

LAG SCREWS - 3/8" X 3" (NO STRINGERS ON BACK OF SIGN)
3/8" X 4" (STRINGERS ON BACK OF SIGN)

SQUARE STEEL POSTS (2" x 2")

MACHINE BOLTS - 3/8" X 3-1/4" Length w/ nuts (NO STRINGER ON BACK OF SIGN)
3/8" X 5" Length w/ nuts (STRINGERS ON BACK OF SIGN)

RIVETS - 9/32 " (6605-9-6) BULB-TITE, TRI-FOLD, ALUMINUM BODY/MANDREL
O.D. FLANGE .720-.765 INCH, GRIP RANGE .042-.375 INCH

WASHERS (ALL POSTS) -

1-1/4" O.D. X 3/8" I.D. X 1/16" STEEL
1-1/4" O.D. X 3/8" I.D. X .080 NYLON

* Two different fastening systems are shown for illustration purposes. On any individual sign, either one or the other system shall be used. Actual number of fasteners per sign varies with the sign area, but normally there are two. For a single post installation, all signs greater than 9 sq. ft. require the use of 3 fasteners.

ATTACHMENT OF SIGNS TO POSTS

WISCONSIN DEPT OF TRANSPORTATION

APPROVED Matthew R Rauch
for State Traffic Engineer

DATE 4/1/2020 PLATE NO. A4-8.9

TELESCOPIC TUBING ANCHORS
TWO PIECE SYSTEM

2 1/4" SQUARE
12 GAUGE
PERFORATED
GALVANIZED FINISH

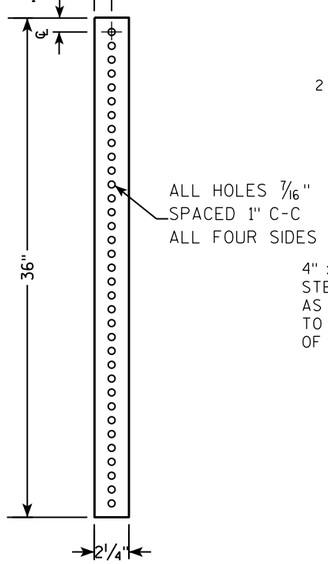

2 1/2" SQUARE
12 GAUGE
OMNI-DIRECTIONAL
PERFORATED
SOIL STABILIZING SLEEVE
GALVANIZED FINISH

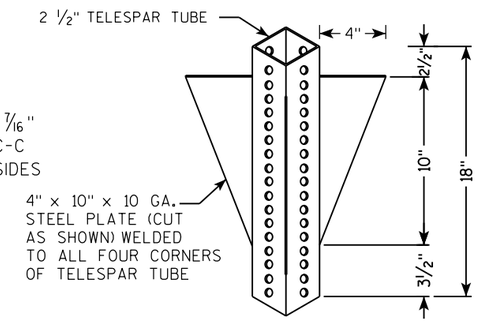

DETAIL OF TUBULAR STEEL SIGN POST
(IN POURED CONCRETE OR ASPHALT)

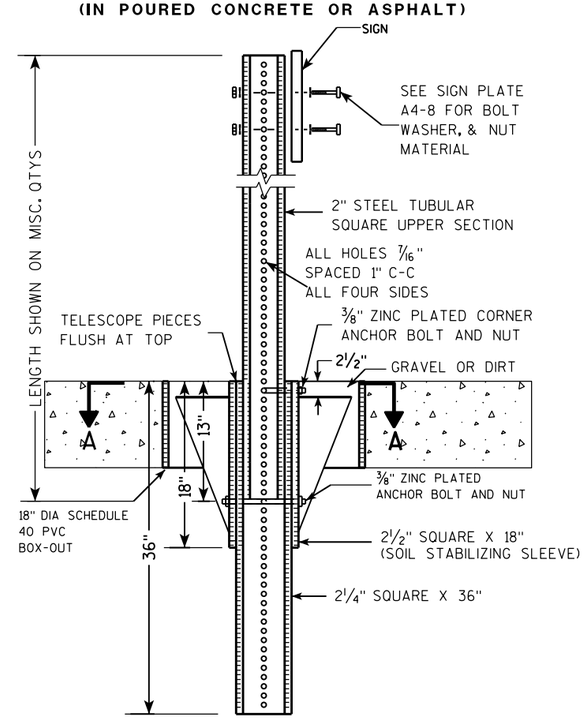

DETAIL OF TUBULAR STEEL SIGN POST
(IN LOCATIONS OTHER THAN POURED CONCRETE OR ASPHALT)

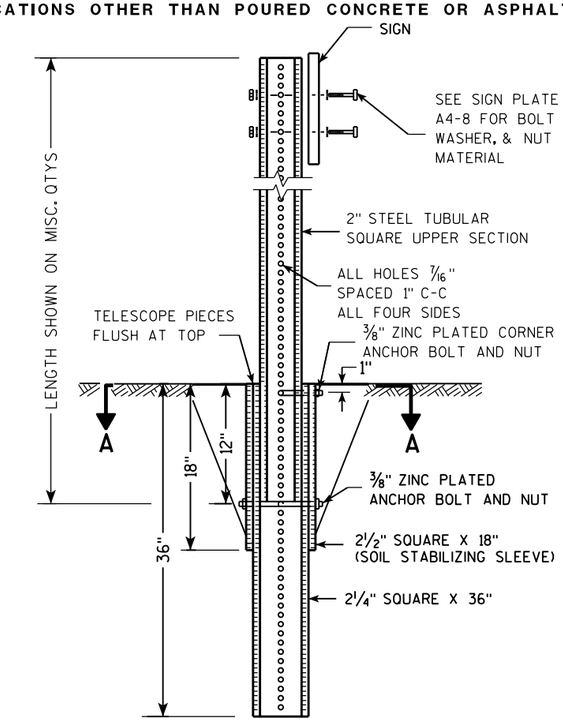

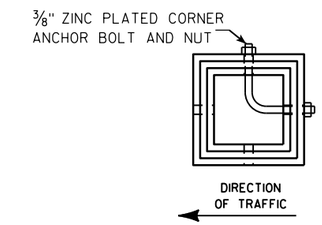

SECTION A-A

Area of Sign Installation (Sq. Ft.)	Number of Required Posts
9 or less	1
Greater than 9 less than or equal to 18	2
Greater than 18 less than or equal to 27	3

Signs wider than 3 feet or larger than 9 sq. ft shall be mounted on multiple posts (see above table).

TUBULAR STEEL
SIGN POST
A4-9

WISCONSIN DEPT OF TRANSPORTATION

APPROVED Matthew R Rauch
for State Traffic Engineer

DATE 2/05/15 PLATE A4-9.9

7

7

PROJECT NO:	HWY:	COUNTY:		SHEET NO:	E

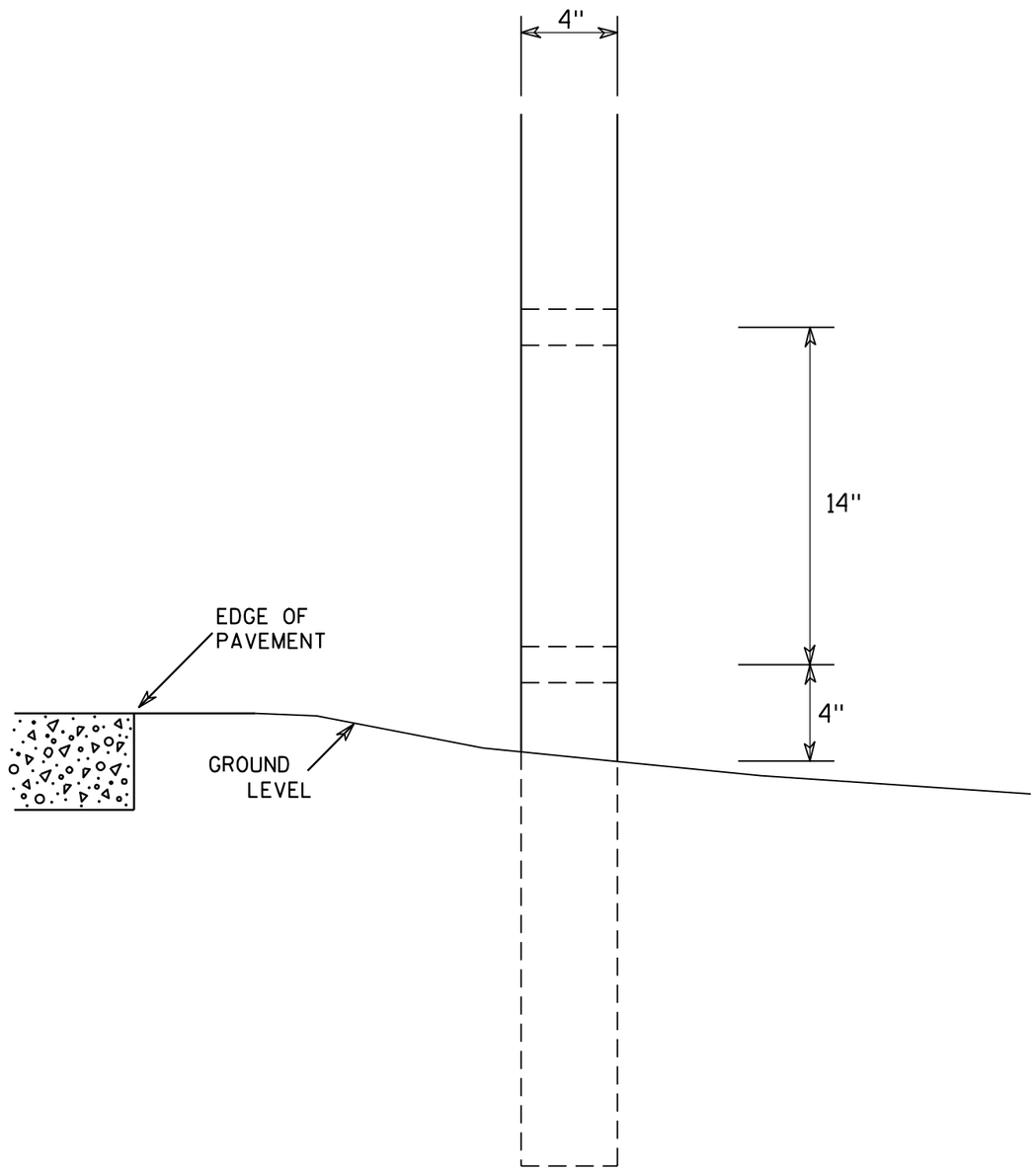

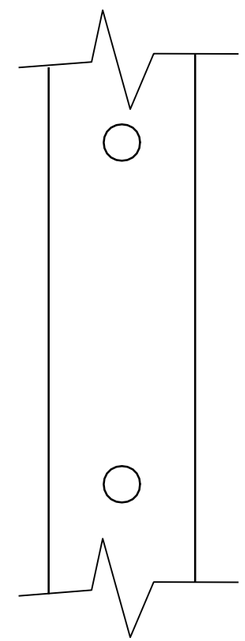

SIDE VIEW

GENERAL NOTES

1. All 4 x 6 Wood Posts shall be modified by having two 1½" diameter holes drilled perpendicular to the roadway centerline.

7

7

4 X 6 WOOD POST MODIFICATIONS

WISCONSIN DEPT OF TRANSPORTATION

APPROVED Chester J Spang for State Traffic Engineer

DATE 3/27/97 PLATE NO. A4-11.2

PROJECT NO:	HWY:	COUNTY:		SHEET NO: 86	E

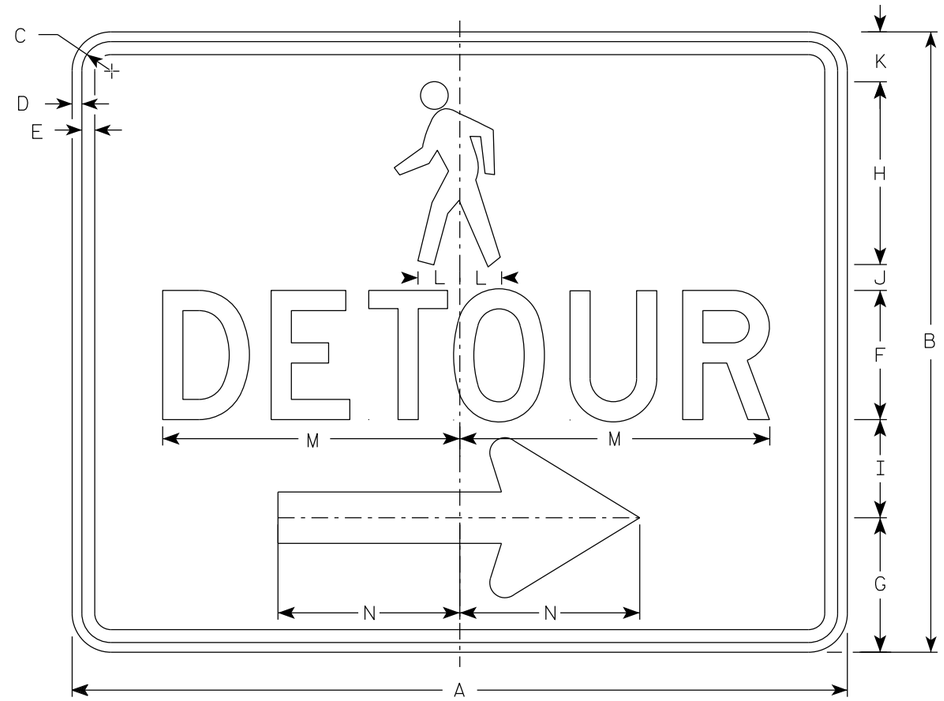

M4-9BR

NOTES

1. Sign is Type II-Type F Reflective
2. Color:
   Background - Orange
   Message - Black
3. Message Series - D
4. Corners may be square or rounded when base material is plywood but borders shall be rounded as shown. When base material is metal, the corners and borders shall be rounded.
5. M4-9BL is the same as M4-9BR except the arrow is reversed.

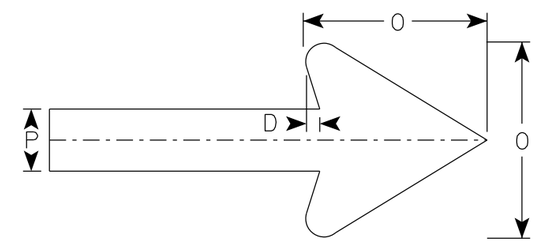

Arrow Detail

SIZE	A	B	C	D	E	F	G	H	I	J	K	L	M	N	O	P	Q	R	S	T	U	V	W	X	Y	Z	Area sq. ft.
1																											
2	30	24	1 1/8	3/8	1/2	5	5 1/4	7 1/8	3 3/4	1	1 1/8	1 5/8	11 3/4	7	6	2											5.00
3																											
4																											
5																											

STANDARD SIGN
M4-9B L&R

WISCONSIN DEPT OF TRANSPORTATION

APPROVED Matthew R Rauch
For State Traffic Engineer

DATE 7/1/19 PLATE NO. M4-9B.2

PROJECT NO: | HWY: | COUNTY: | SHEET NO: 87 | E

NOTES

1. Sign is Type II-Type F Reflective
2. Color:
   Background - Orange
   Message - Black
3. Message Series - D

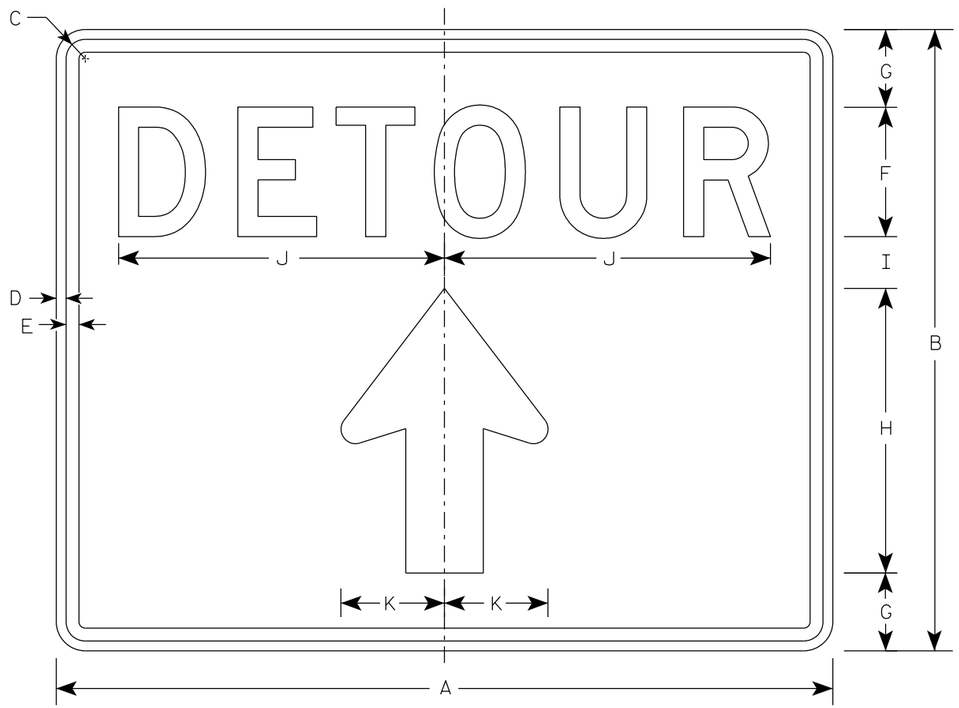

M4-9RA

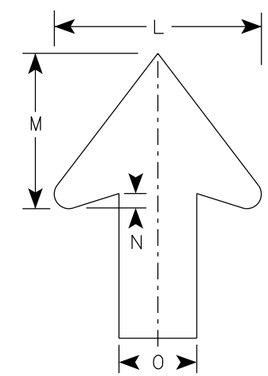

Arrow Detail

SIZE	A	B	C	D	E	F	G	H	I	J	K	L	M	N	O	P	Q	R	S	T	U	V	W	X	Y	Z	Area sq. ft.
1																											
2	30	24	1 1/8	3/8	1/2	5	3	11	2	12 5/8	4	8	6	1/2	3												5.00
3																											
4																											
5																											

STANDARD SIGN
M4-9RA

WISCONSIN DEPT OF TRANSPORTATION

APPROVED Matthew R Rauch
for State Traffic Engineer

DATE 12/10/2020 PLATE NO. M4-9RA.1

PROJECT NO: | HWY: | COUNTY: | SHEET NO: 88 | E

NOTES

1. Sign is Type II- Type F Reflective
2. Color:
   Background - Orange
   Message - Black
3. Corners may be square or rounded when base material is plywood but borders shall be rounded as shown. When base material is metal, the corners and borders shall be rounded.
4. M4-60L is the same as M4-60R except the arrow is reversed.

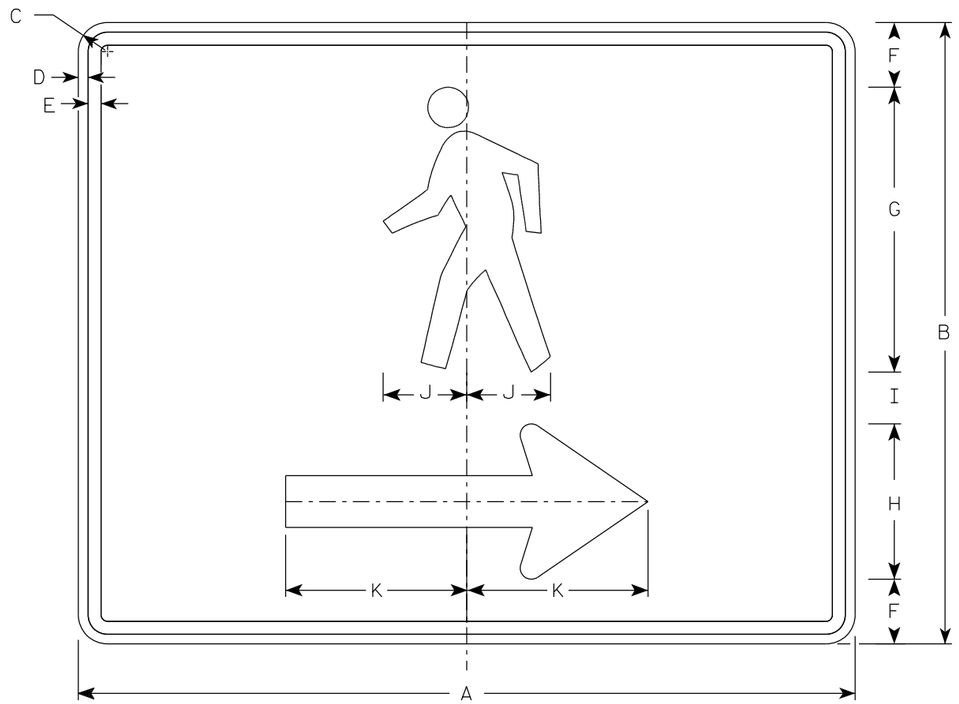

M4-60R

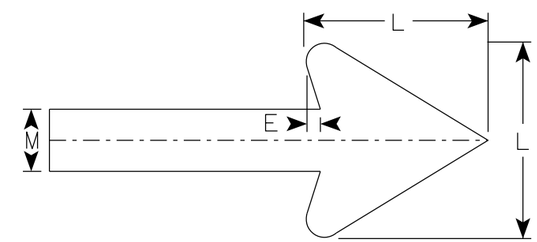

Arrow Detail

SIZE	A	B	C	D	E	F	G	H	I	J	K	L	M	N	O	P	Q	R	S	T	U	V	W	X	Y	Z	Area sq. ft.
1																											
2	30	24	1 1/8	3/8	1/2	2 1/2	11	6	2	3 1/4	7	6	2														5.00
3																											
4																											
5																											

STANDARD SIGN
M4-60 L&R

WISCONSIN DEPT OF TRANSPORTATION

APPROVED Matthew R Rauch
for State Traffic Engineer

DATE 9/16/2021 PLATE NO. M4-60.1

PROJECT NO: | HWY: | COUNTY: | SHEET NO: 89 | E

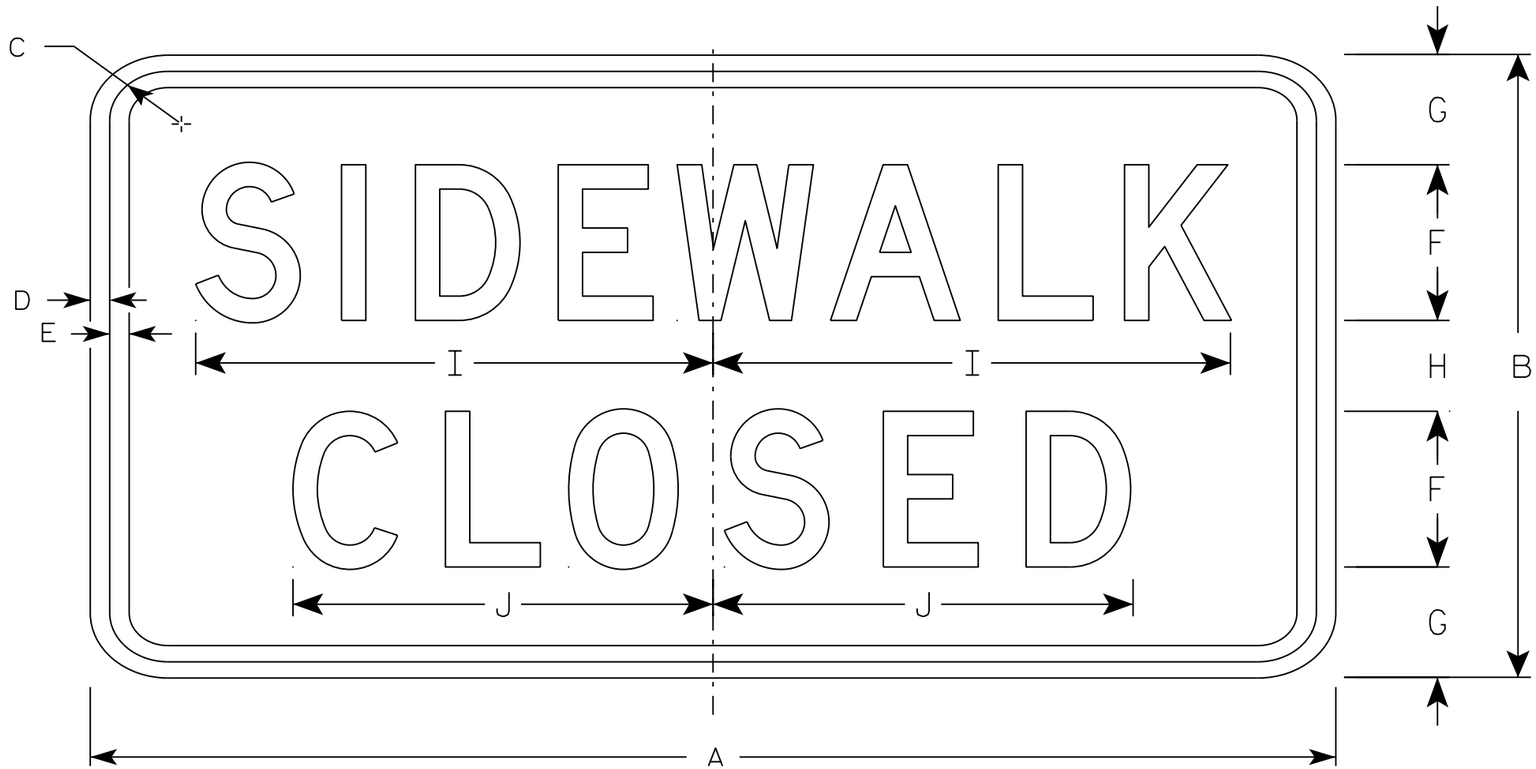

R9-9

NOTES

1. Sign is Type II - Type H Reflective - reference WIS DOT Standard Specification for HIGHWAY and STRUCTURE CONSTRUCTION latest edition.
2. Color:
   Background - White
   Message - Black
3. Message Series - C
4. Corners may be square or rounded when base material is plywood but borders shall be rounded as shown. When base material is metal, the corners and borders shall be rounded.
5. Use Size 2 for Sidewalks. Use Size 3 for Paths and Trails.

SIZE	A	B	C	D	E	F	G	H	I	J	K	L	M	N	O	P	Q	R	S	T	U	V	W	X	Y	Z	Area sq. ft.
1																											
2S	24	12	1 3/4	1/2	1/2	3	2 1/8	1 3/4	10	8 1/8																	2.0
2M	24	12	1 3/4	1/2	1/2	3	2 1/8	1 3/4	10	8 1/8																	2.0
3	30	18	1 3/4	1/2	1/2	4	3 1/2	3	12 1/2	10 1/4																	3.75
4																											
5																											

STANDARD SIGN
R9-9

WISCONSIN DEPT OF TRANSPORTATION

APPROVED Matthew R Rauch
for State Traffic Engineer

DATE 8/11/16 PLATE 90 R9-9.6

PROJECT NO: | HWY: | COUNTY: | SHEET NO: | E

Notes

Wisconsin Department of Transportation

Dedicated people creating transportation solutions through innovation and exceptional service.

http://www.dot.wisconsin.gov