MAD

PROJECT ID: 3993-01-81

WITH: NONE

COUNTY: JEFFERSON

MAY 2022

ORDER OF SHEETS

Section No.	1	Title
Section No.	2	Typical Sections and Details
Section No.	3	Estimate of Quantities
Section No.	3	Miscellaneous Quantities
Section No.	4	Right of Way Plat
Section No.	5	Plan and Profile
Section No.	6	Standard Detail Drawings
Section No.	7	Sign Plates
Section No.	8	Structure Plans
Section No.	9	Computer Earthwork Data
Section No.	9	Cross Sections

TOTAL SHEETS = 174

STATE OF WISCONSIN
DEPARTMENT OF TRANSPORTATION

PLAN OF PROPOSED IMPROVEMENT

S MAIN STREET, C JEFFERSON

ROCK RIVER STRUCTURE B-28-0192

LOC STR
JEFFERSON COUNTY

STATE PROJECT	FEDERAL PROJECT	
	PROJECT	CONTRACT
3993-01-81	WISC 2022378	1

STATE PROJECT NUMBER

3993-01-81

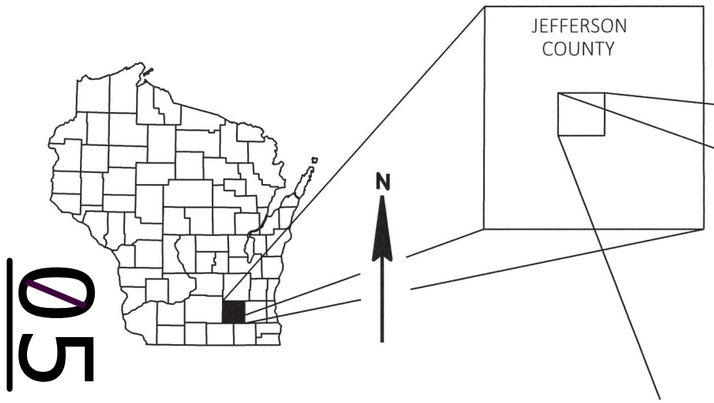

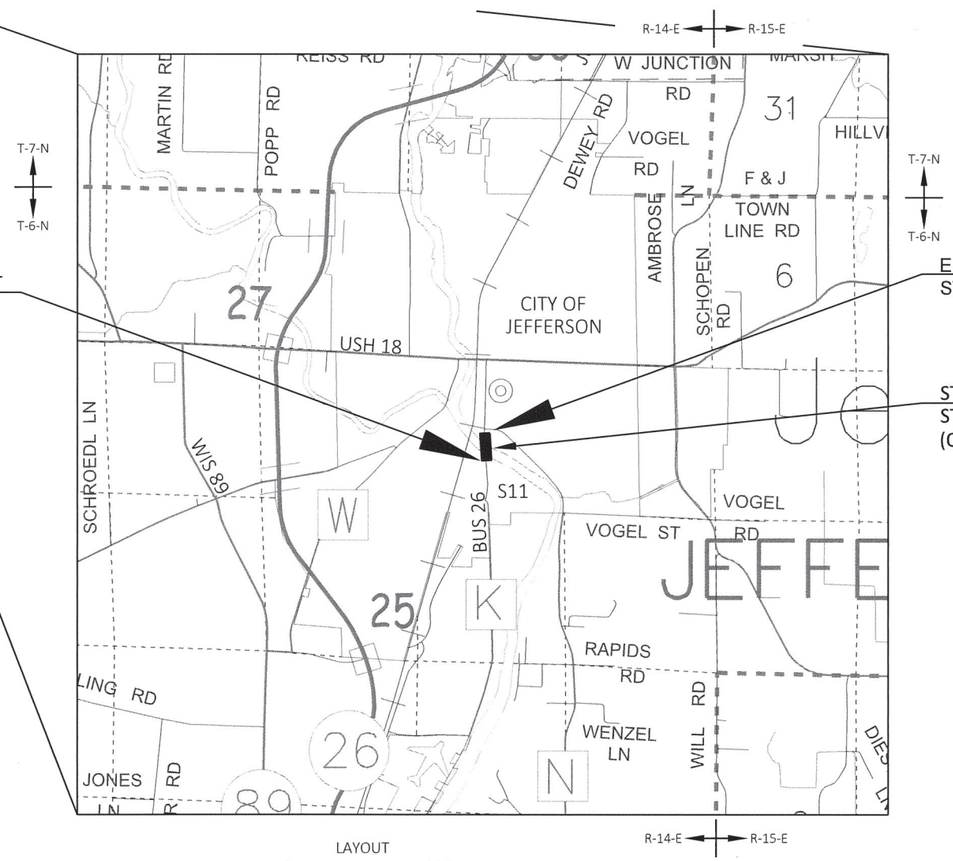

BEGIN PROJECT
STA 15+64.00
Y: 555300.794
X: 855342.136

END PROJECT
STA 22+20

STRUCTURE B-28-0192 REQ'D
STA 17+06 - STA 21+43
(OVER THE ROCK RIVER)

LAYOUT

SCALE 0 1 MI

TOTAL NET LENGTH OF CENTERLINE = 0.124 MILES

HORIZONTAL POSITIONS SHOWN ON THIS PLAN ARE WISCONSIN COORDINATE REFERENCE SYSTEM (WISCRS), JEFFERSON COUNTY, NAD83 (2011), IN U.S. SURVEY FEET. POSITIONS SHOWN ARE GRID COORDINATES, GRID BEARINGS, AND GRID DISTANCES. GRID DISTANCES ARE THE SAME AS GROUND DISTANCES. ELEVATIONS ARE REFERENCED TO NAVD 88 (2012). GPS DERIVED ELEVATIONS ARE BASED ON GEOID 12A.

DESIGN DESIGNATION 3993-01-01

A.A.D.T.	2022	=	10,600
A.A.D.T.	2042	=	11,600
D.H.V.	2042	=	1,288
D.D.		=	59/41
T.		=	5.6%
DESIGN SPEED		=	30 MPH
ESALS		=	2,300,000 (CONCRETE)

CONVENTIONAL SYMBOLS

PLAN
- CORPORATE LIMITS
- PROPERTY LINE
- LOT LINE
- LIMITED HIGHWAY EASEMENT
- EXISTING RIGHT OF WAY
- PROPOSED OR NEW R/W LINE
- SLOPE INTERCEPT
- REFERENCE LINE (300'EB')
- EXISTING CULVERT
- PROPOSED CULVERT (Box or Pipe)
- COMBUSTIBLE FLUIDS (CAUTION)
- MARSH AREA
- WOODED OR SHRUB AREA

PROFILE
- GRADE LINE
- ORIGINAL GROUND
- MARSH OR ROCK PROFILE (To be noted as such) (ROCK)
- SPECIAL DITCH (LABEL)
- GRADE ELEVATION (95.36)
- CULVERT (Profile View)

UTILITIES
- ELECTRIC (E)
- FIBER OPTIC (FO)
- GAS (G)
- SANITARY SEWER (SAN)
- STORM SEWER (SS)
- TELEPHONE (T)
- WATER (W)
- UTILITY PEDESTAL
- POWER POLE
- TELEPHONE POLE

ORIGINAL PLANS PREPARED BY

GREMMER & ASSOCIATES, INC.
CONSULTING ENGINEERS
Stevens Point • Fond du Lac
93 South Pioneer Road, Suite 300
Fond du Lac, WI 54935
(920) 924-5720

WISCONSIN BENJAMIN L. OITZINGER E-36149 NEENAH, WI PROFESSIONAL ENGINEER

DATE: 1-24-2022

BENJAMIN L. OITZINGER, PE

STATE OF WISCONSIN
DEPARTMENT OF TRANSPORTATION

PREPARED BY

Surveyor	MSA PROFESSIONALS SERVICES
Designer	GREMMER & ASSOCIATES, INC.
Project Manager	JEREMY HALL, P.E.
Regional Examiner	SOUTHWEST REGION
Regional Supervisor	JAMES OETTINGER, P.E.

APPROVED FOR THE DEPARTMENT

DATE: (Signature)

Digitally signed by Jeremy M. Hall
DN: C=US, E=jeremy.hall@dot.wi.gov, O=WisDOT, OU=PDS East Unit, CN=Jeremy M. Hall
Date: 2022.01.24 14:58:38-06'00'

E

FILE NAME : S:\CURRPROJ\JEFFERSON\MAIN STREET BRIDGE\CIVIL3D\39930101\SHEETSPLAN\39930181-010101-TI.DWG PLOT DATE : 1/18/2022 10:38 AM PLOT BY : AARON SARAUER PLOT NAME :

GENERAL NOTES

- SAWCUTS , AS SHOWN ON PLANS, ARE APPROXIMATE LOCATIONS AND MAY BE ADJUSTED BY THE FIELD ENGINEER BASED ON FIELD CONDITIONS.
- SIGN LOCATIONS ON THE PLAN ARE APPOXIMATE, AND SHALL BE ADJUSTED BY THE FIELD ENGINEER AS NEEDED TO FIT CONDITIONS.
- EROSION CONTROL ITEMS ON THE PLAN ARE APPROXIMATE AND SHALL BE ADJUSTED BY THE FIELD ENGINEER TO FIT FIELD CONDITIONS.
- THE LOCATIONS OF EXISTING AND PROPOSED UTILITY INSTALLATIONS AS SHOWN ON THE PLAN ARE APPROXIMATE. THERE MAY BE OTHER UTILITY INSTALLATIONS WITHIN THE PROJECT AREA THAT ARE NOT SHOWN.
- THE CONTRACTOR SHALL COORDINATE THEIR CONSTRUCTION ACTIVITIES WITH A CALL TO DIGGERS HOTLINE AND/OR A DIRECT CALL TO THE UTILITIES THAT HAVE FACILITIES IN THE AREA. NOT ALL UTILITIES ARE MEMBERS OF DIGGERS HOTLINE.

ORDER OF SECTION 2 SHEETS

GENERAL NOTES
PROJECT OVERVIEW / HORIZONTAL & VERTICAL CONTROL
TYPICAL SECTIONS
CONSTRUCTION DETAILS
PLAN DETAILS
CURB RAMP DETAILS
EROSION CONTROL PLAN
STORM SEWER
SIGNING & MARKING PLAN
LIGHTING PLAN
TRAFFIC CONTROL
DETOUR
ALIGNMENT DIAGRAM

DESIGN CONTACT

GREMMER & ASSOCIATES, INC.
93 S. PIONEER ROAD, SUITE 300
FOND DU LAC, WI 54935
ATTN: BENJAMIN OITZINGER
PHONE: (920) 924-5720
EMAIL: b.oitzinger@gremmerassociates.com

DNR AREA LIAISON

WISCONSIN DEPT. OF NATURAL RESOURCES
SOUTH CENTRAL REGION HQ
3911 FISH HATCHERY ROAD
FITCHBURG, WI 53711
ATTN: SHELLEY NELSON
PHONE: (608) 444-2835
EMAIL: Shelley.Nelson@wisconsin.gov

CITY OF JEFFERSON CONTACT

CITY OF JEFFERSON
317 SOUTH MAIN STREET
P.O. BOX 119
JEFFERSON, WI 53549
ATTN: BILL PINNOW
PHONE: (920) 674-7727
EMAIL: bpinnow@jeffersonwis.com

WISDOT CONTACT

WISCONSIN DEPARTMENT OF TRANSPORTATION
SOUTHWEST REGION - MADISON OFFICE
2101 WRIGHT STREET
MADISON, WI 53704
ATTN: JEREMY HALL
PHONE: (608) 245-2655
EMAIL: jeremy.hall@dot.wi.gov

BRIDGE CONTACT

WISCONSIN DEPARTMENT OF TRANSPORTATION
BUREAU OF STRUCTURES
ATTN: STACIE WEIS
PHONE: (608) 261-6109
EMAIL: Stacie.Weis@dot.wi.gov

JEFFERSON COUNTY CONTACT

JEFFERSON COUNTY HIGHWAY DEPARTMENT
1425 SOUTH WISCONSIN DRIVE
JEFFERSON, WI 53549
ATTN: BRIAN UDOVICH
PHONE: (920) 674-7273
EMAIL: BrianU@jeffersoncountywi.gov

JEFFERSON COUNTY COMMUNICATIONS

JEFFERSON COUNTY
402 SOUTH CENTER AVENUE
JEFFERSON, WI 53549
ATTN: JOHN RAGETH
PHONE: (920) 674-5954
EMAIL: johnr@jeffersoncountywi.gov

UTILITIES

COMMUNICATIONS

AT&T WISCONSIN
152 DIXON STREET
MADISON, WI 53704
ATTN: RYAN DENEWELLIS
PHONE: (608) 252-2879
MOBILE: (608) 358-6285
EMAIL: rd1238@att.com

COMMUNICATIONS

CHARTER COMMUNICATIONS
N3670 COUNTY ROAD DJ
JUNEAU, WI 53039
ATTN: RON FRASE
PHONE: (920) 349-5056
MOBILE: (608) 438-9648
EMAIL: ronald.frase@charter.com

ELECTRIC

JEFFERSON UTILITIES
425 COLLINS ROAD
JEFFERSON, WI 53549
ATTN: SCOTT ADLER
PHONE: (920) 674-7711
MOBILE: (920) 728-0790
EMAIL: sadler@jeffersonutilities.com

GAS

WE ENERGIES
700 SOUTH KANE STREET
BURLINGTON, WI 53105
ATTN: SCOTT HOLSTEIN
PHONE: (262) 763-1084
MOBILE: (262) 949-0490
EMAIL: scott.holstein@we-energies.com

SEWER & WATER

JEFFERSON WASTEWATER TREATMENT FACILITY
221 EAST HENRY STREET
JEFFERSON, WI 53549
ATTN: TODD CLARK
PHONE: (920) 674-7705
MOBILE: (920) 650-9513
EMAIL: toddclark@jeffersonwis.com

DIGGERS HOTLINE
Dial 811 or (800)242-8511
www.DiggersHotline.com

RUNOFF COEFFICIENT TABLE

	HYDROLOGIC SOIL GROUP											
	A			B			C			D		
	SLOPE RANGE (PERCENT)			SLOPE RANGE (PERCENT)			SLOPE RANGE (PERCENT)			SLOPE RANGE (PERCENT)		
LAND USE:	0-2	2-6	6 & OVER	0-2	2-6	6 & OVER	0-2	2-6	6 & OVER	0-2	2-6	6 & OVER
ROW CROPS	.08 .22	.16 .30	.22 .38	.12 .26	.20 .34	.27 .44	.15 .30	.24 .37	.33 .50	.19 .34	.28 .41	.38 .56
MEDIAN STRIP-TURF	.19 .24	.20 .26	.24 .30	.19 .25	.22 .28	.26 .33	.20 .26	.23 .30	.30 .37	.20 .27	.25 .32	.30 .40
SIDE SLOPE-TURF			.25 .32			.27 .34			.28 .36			.25 .38
PAVEMENT:												
ASPHALT	.70 - .95											
CONCRETE	.80 - .95											
BRICK	.70 - .80											
DRIVES, WALKS	.75 - .85											
ROOFS	.75 - .95											
GRAVEL ROADS, SHOULDERS	.40 - .60											

TOTAL PROJECT AREA = 1.384 ACRES
TOTAL AREA EXPECTED TO BE DISTURBED BY CONSTRUCTION ACTIVITIES = 0.718 ACRES

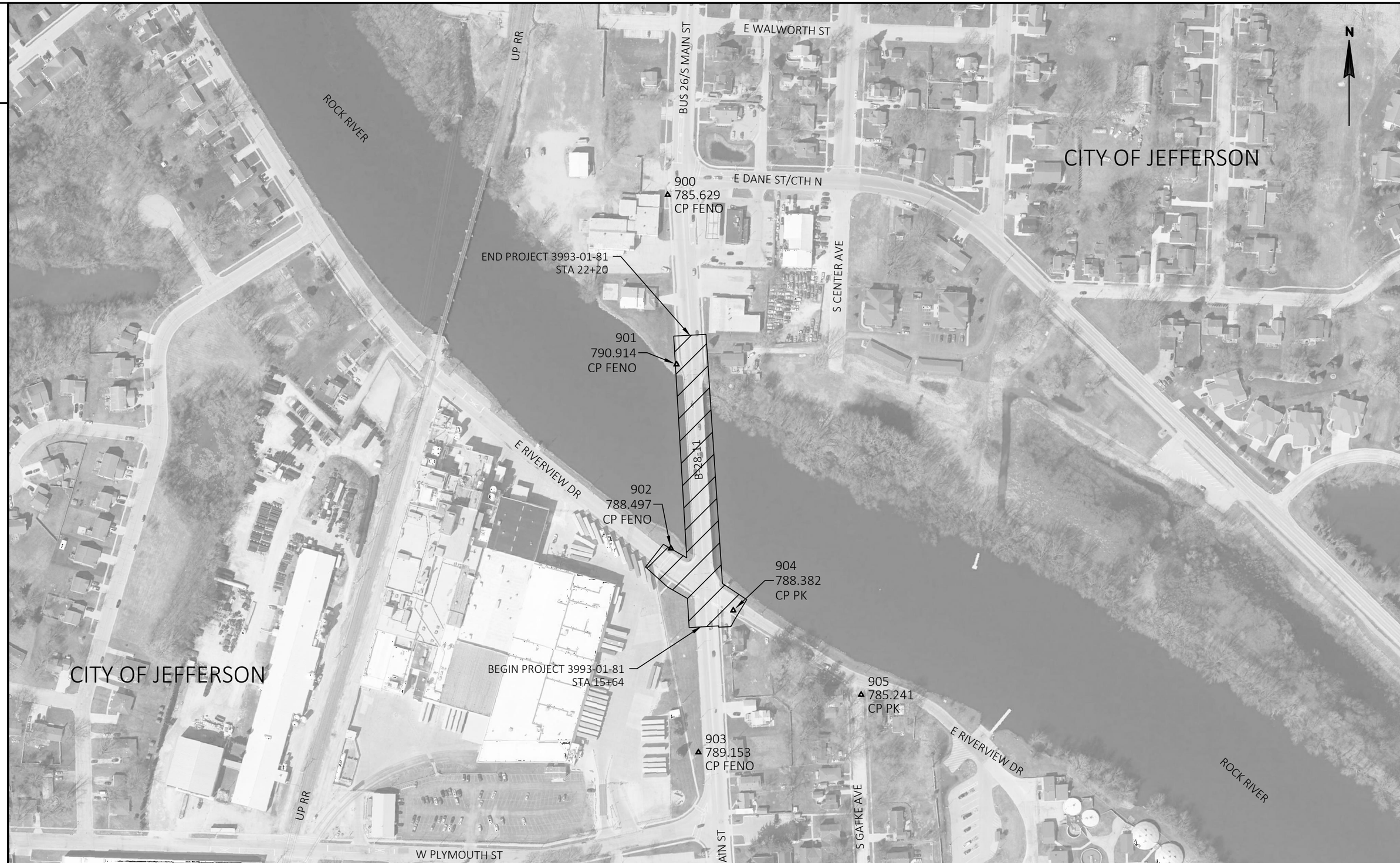

PROJECT NO: 3993-01-81	HWY: BUS 26	COUNTY: JEFFERSON	PROJECT OVERVIEW / HORIZONTAL & VERTICAL CONTROLS	SHEET 3	E

FILE NAME : S:\CURRPROJ\JEFFERSON\MAIN STREET BRIDGE\CIVIL3D\39930101\SHEETSPLAN\39930181-020201-PO.DWG
LAYOUT NAME - Sheet-01
PLOT DATE : 1/18/2022 10:38 AM PLOT BY : AARON SARAUER PLOT NAME : PLOT SCALE : 1 IN:200 FT

WISDOT/CADDS SHEET 42

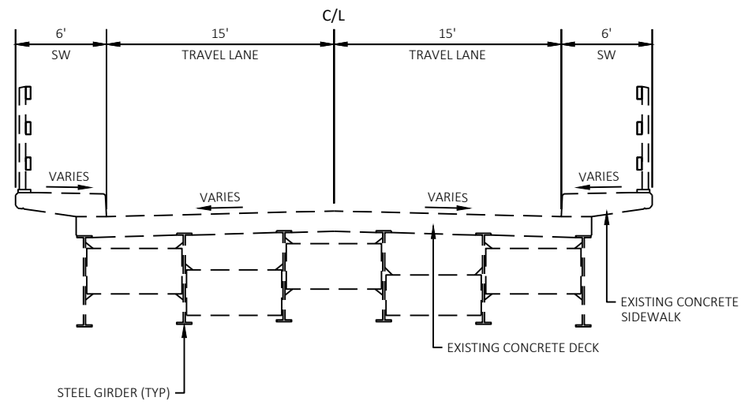

TYPICAL EXISTING SECTION

STRUCTURE B-28-011

STA 17+17 - STA 21+09

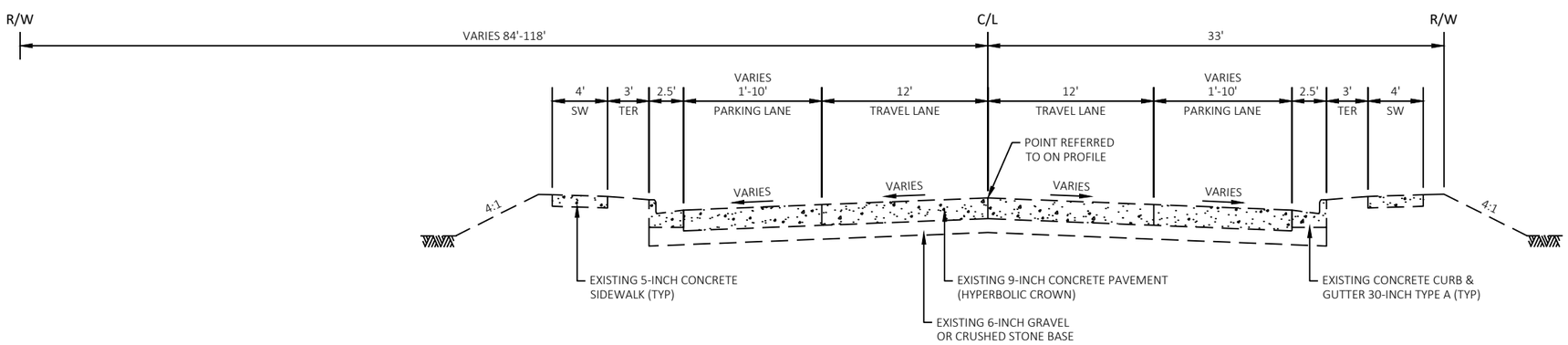

TYPICAL EXISTING SECTION

MAIN STREET

STA 15+64 - STA 17+17

STA 21+09 - STA 22+20

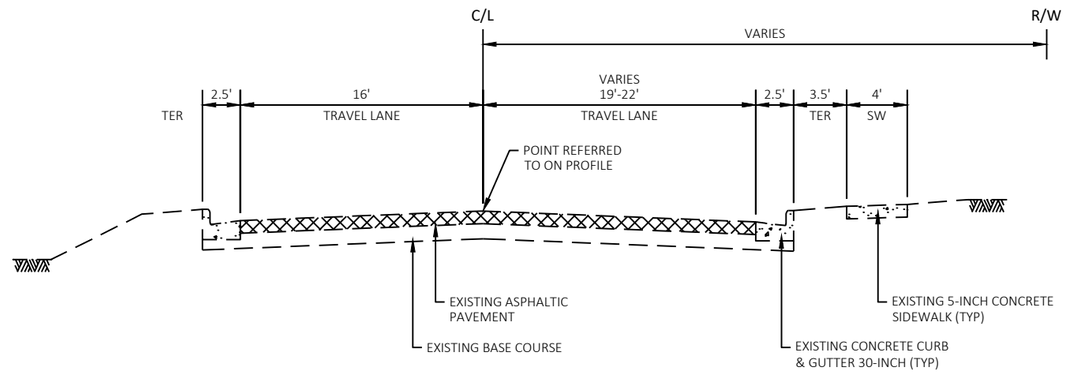

TYPICAL EXISTING SECTION

WEST RIVERVIEW DRIVE

STA 48+69 - STA 50+00

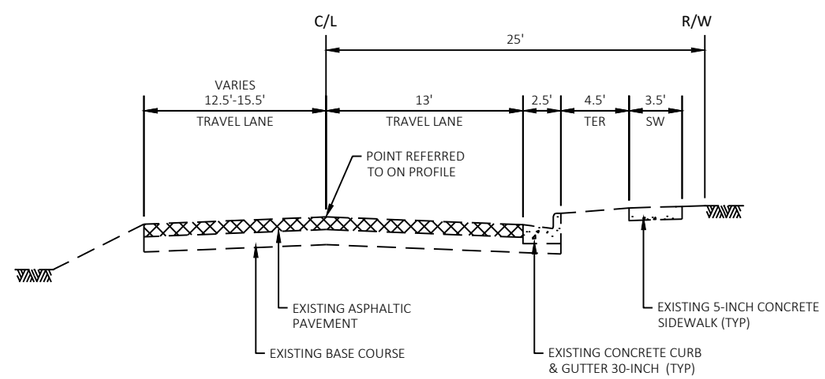

TYPICAL EXISTING SECTION

EAST RIVERVIEW DRIVE

STA 50+50 - STA 50+97

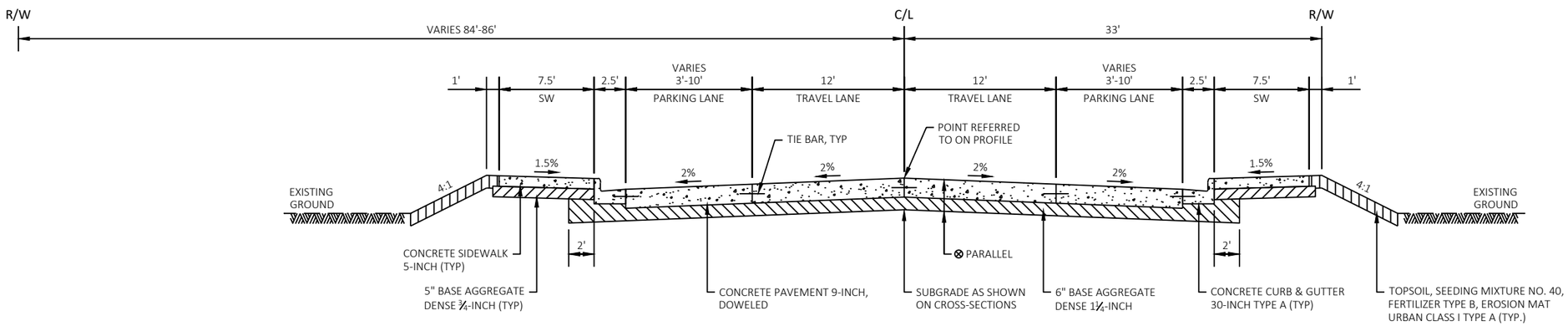

TYPICAL FINISHED SECTION

MAIN STREET

STA 21+26 - STA 22+20*

NOTES:

⊗ SUBGRADE SLOPES ARE PARALLEL TO PAVEMENT WITHIN TRAVEL LANE.

* SEE STRUCTURE PLANS FOR STRUCTURE APPROACH PAVEMENT SECTION.

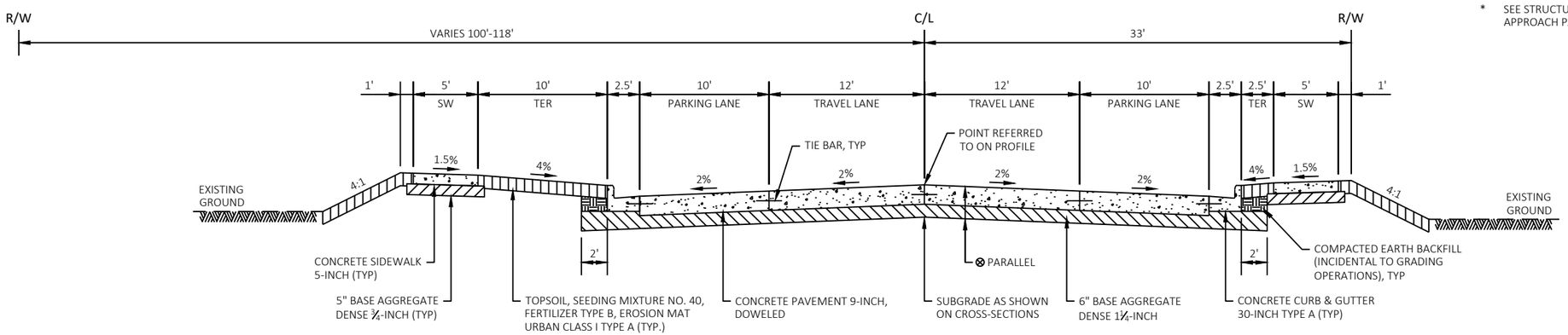

TYPICAL FINISHED SECTION

MAIN STREET

STA 15+64 - STA 17+03*

PROJECT NO: 3993-01-81	HWY: BUS 26	COUNTY: JEFFERSON	TYPICAL SECTIONS	SHEET 6	E

FILE NAME : S:\CURRPROJ\JEFFERSON\MAIN STREET BRIDGE\CIVIL3D\39930101\SHEETSPLAN\39930181-020301-TS.DWG
LAYOUT NAME - Sheet - (03)
PLOT DATE : 1/24/2022 12:36 PM PLOT BY : AARON SARAUER PLOT NAME : PLOT SCALE : 1 IN:10 FT

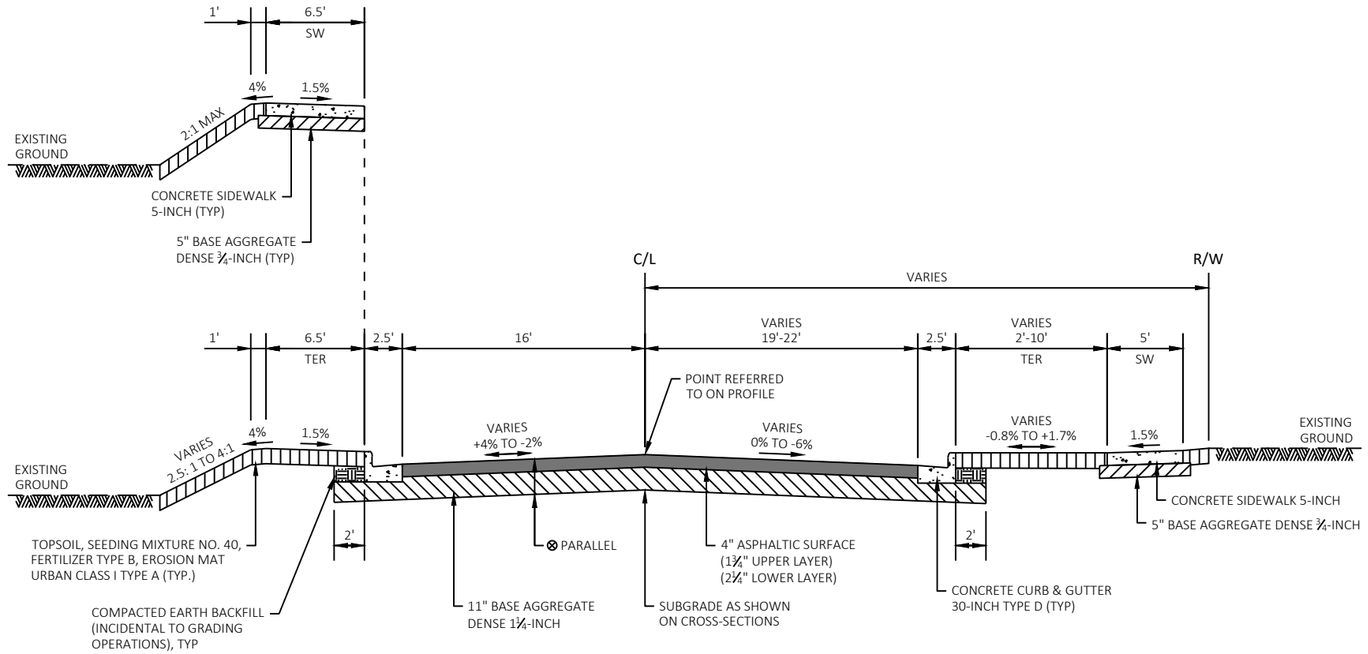

TYPICAL FINISHED SECTION

WEST RIVERVIEW DRIVE
STA 48+69 - STA 49+27

NOTES:

⊗ SUBGRADE SLOPES ARE PARALLEL TO PAVEMENT WITHIN TRAVEL LANE.

• STA 49+27 - STA 50+63 IS WITHIN THE INTERSECTION OF MAIN STREET

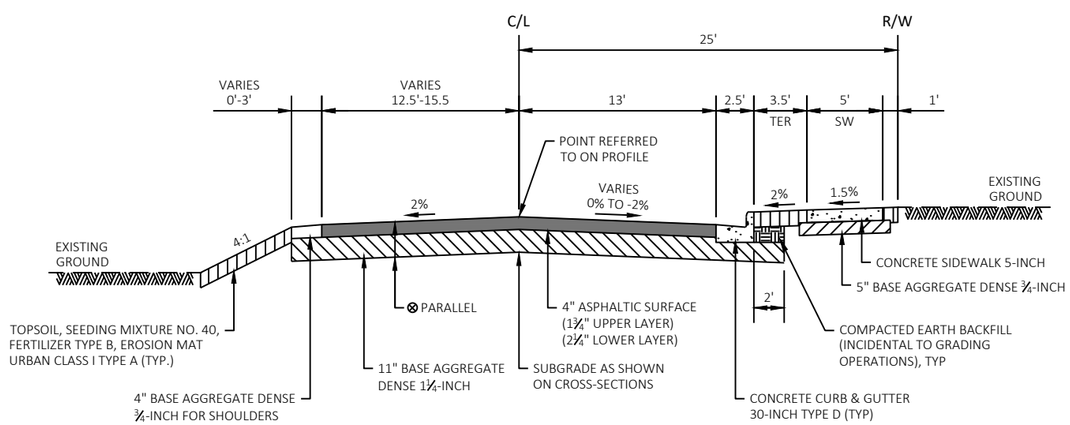

TYPICAL FINISHED SECTION

EAST RIVERVIEW DRIVE
STA 50+63 - STA 50+98

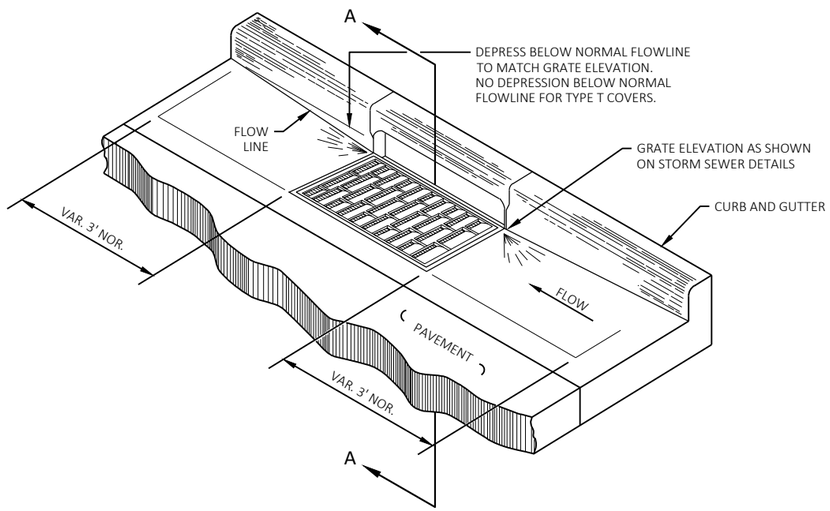

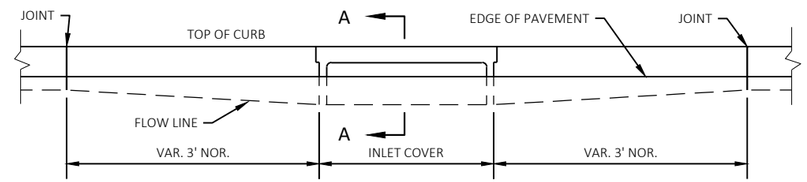

ELEVATION

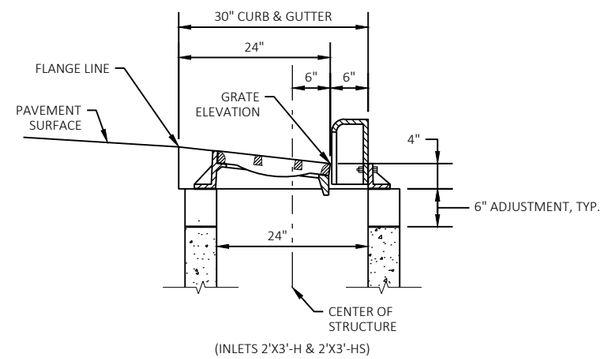

(INLETS 2'X3'-H & 2'X3'-HS)

SECTION A-A

CURB AND GUTTER DETAIL AT INLETS

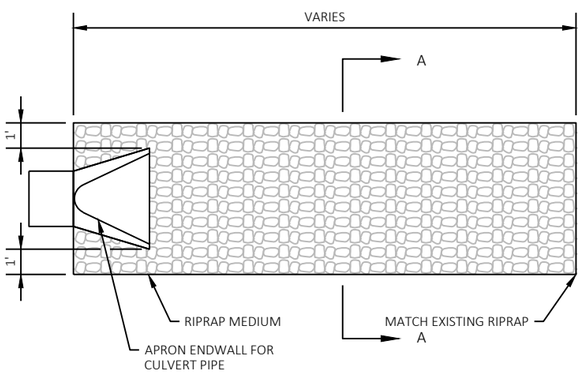

PLAN VIEW

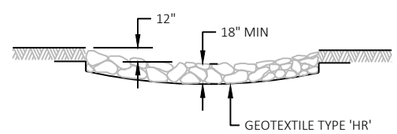

SECTION A-A

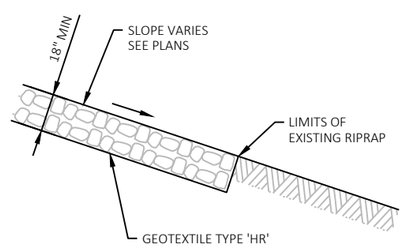

SIDE VIEW

MEDIUM RIPRAP AND GEOTEXTILE DETAIL AT APRON ENDWALL

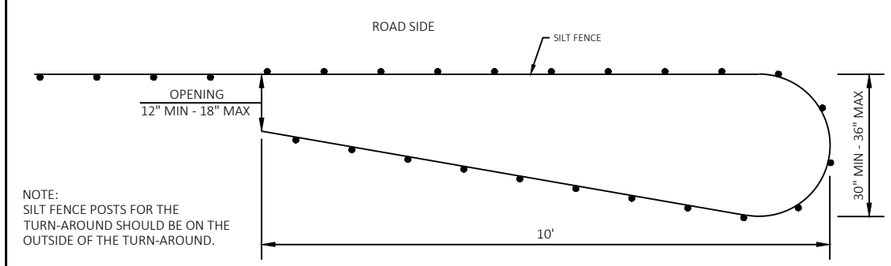

NOTE:
SILT FENCE POSTS FOR THE
TURN-AROUND SHOULD BE ON THE
OUTSIDE OF THE TURN-AROUND.

PLAN VIEW

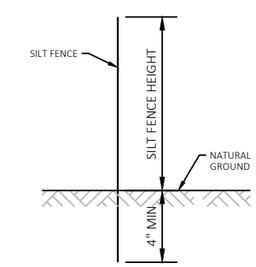

SIDE VIEW

SILT FENCE TURN-AROUND DETAIL

PROJECT NO: 3993-01-81	HWY: BUS 26	COUNTY: JEFFERSON	CONSTRUCTION DETAILS	SHEET 8	E

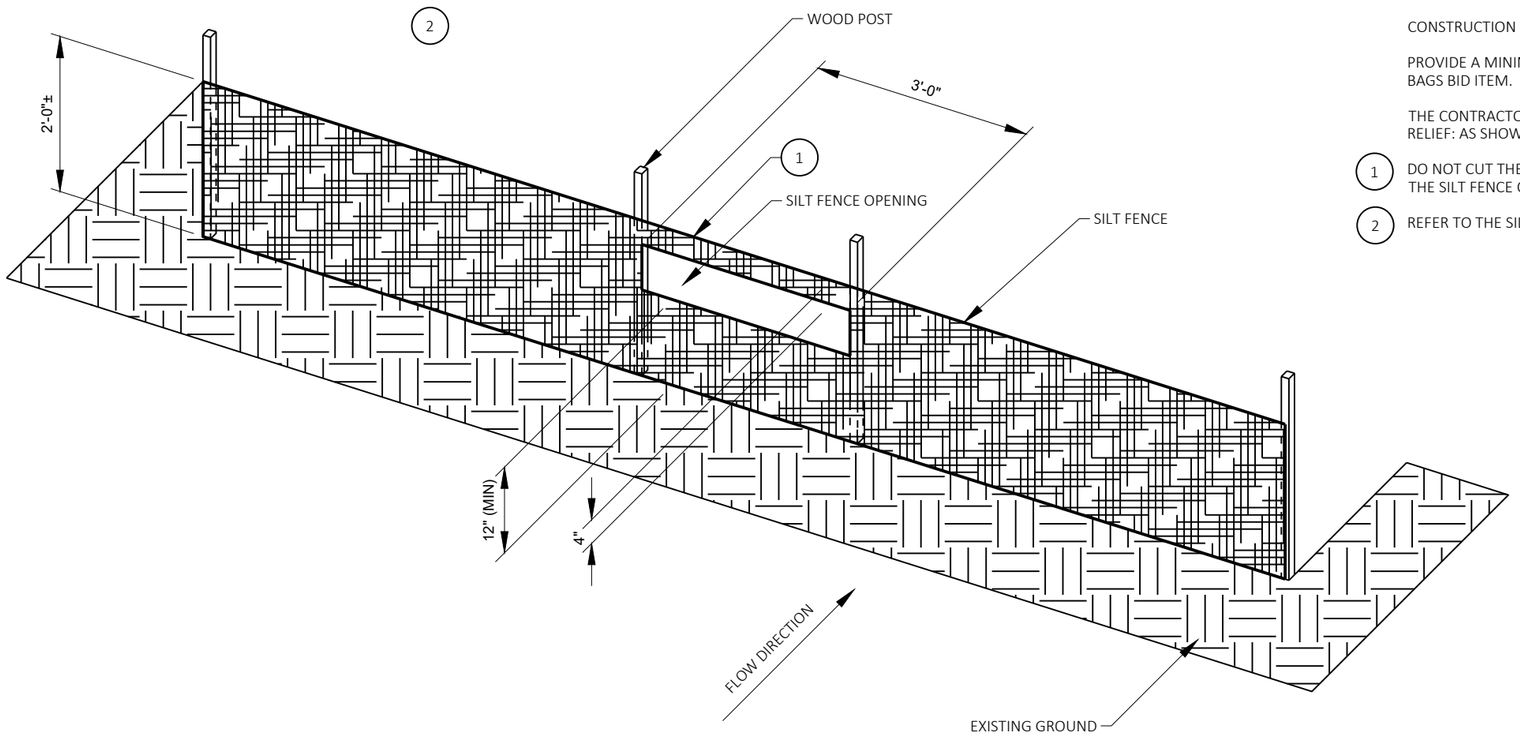

GENERAL NOTES

THE SILT FENCE RELIEF DETAIL IS A SUPPLEMENTAL DETAIL TO THE SILT FENCE STANDARD DETAILS AND SHALL CONFORM TO THE PERTINENT REQUIREMENTS OF THE STANDARD SPECIFICATIONS AND APPLICABLE SPECIAL PROVISIONS.

INSTALL SILT FENCE PRIOR TO CONSTRUCTING THE SILT FENCE OPENING. PRIOR TO CONSTRUCTING THE SILT FENCE OPENING, PLACE ROCK BAGS AT THE SILT FENCE OPENING AS SHOWN IN THIS DETAIL.

CONSTRUCTION OF THE SILT FENCE OPENING SHALL BE INCIDENTAL TO THE COST OF THE SILT FENCE BID ITEM.

PROVIDE A MINIMUM OF 22 ROCK BAGS MINIMUM PER 3 FOOT OPENING. ROCK BAGS SHALL BE PAID UNDER THE ROCK BAGS BID ITEM.

THE CONTRACTOR SHALL ADJUST THE SILT FENCE RELIEF OPENINGS WITHIN THE SILT FENCE AS NECESSARY TO PROVIDE RELIEF: AS SHOWN ON THE PLANS, TO FIT FIELD CONDITIONS AND AS DIRECTED BY THE FIELD ENGINEER.

1. DO NOT CUT THE SUPPORT CORD OR TENSION TAPE WHEN CONSTRUCTING THE SILT FENCE OPENING. KEEP THE TOP OF THE SILT FENCE OPENING 1"± BELOW THE 3" FOLD AT THE SUPPORT CORD OR TENSION TAPE.
2. REFER TO THE SILT FENCE STANDARD DETAILS FOR ALLOWABLE ADJUSTMENTS TO POST SPACING.

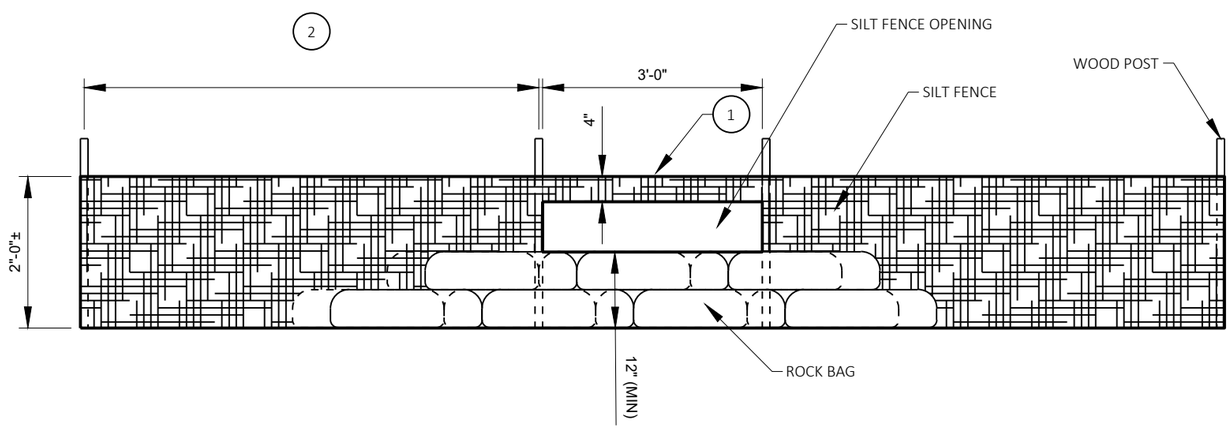

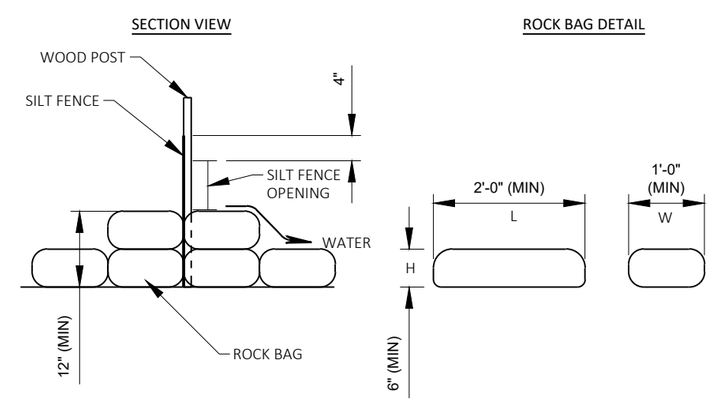

SILT FENCE RELIEF DETAIL

PROJECT NO: 3993-01-81	HWY: BUS 26	COUNTY: JEFFERSON	CONSTRUCTION DETAILS	SHEET 9	E

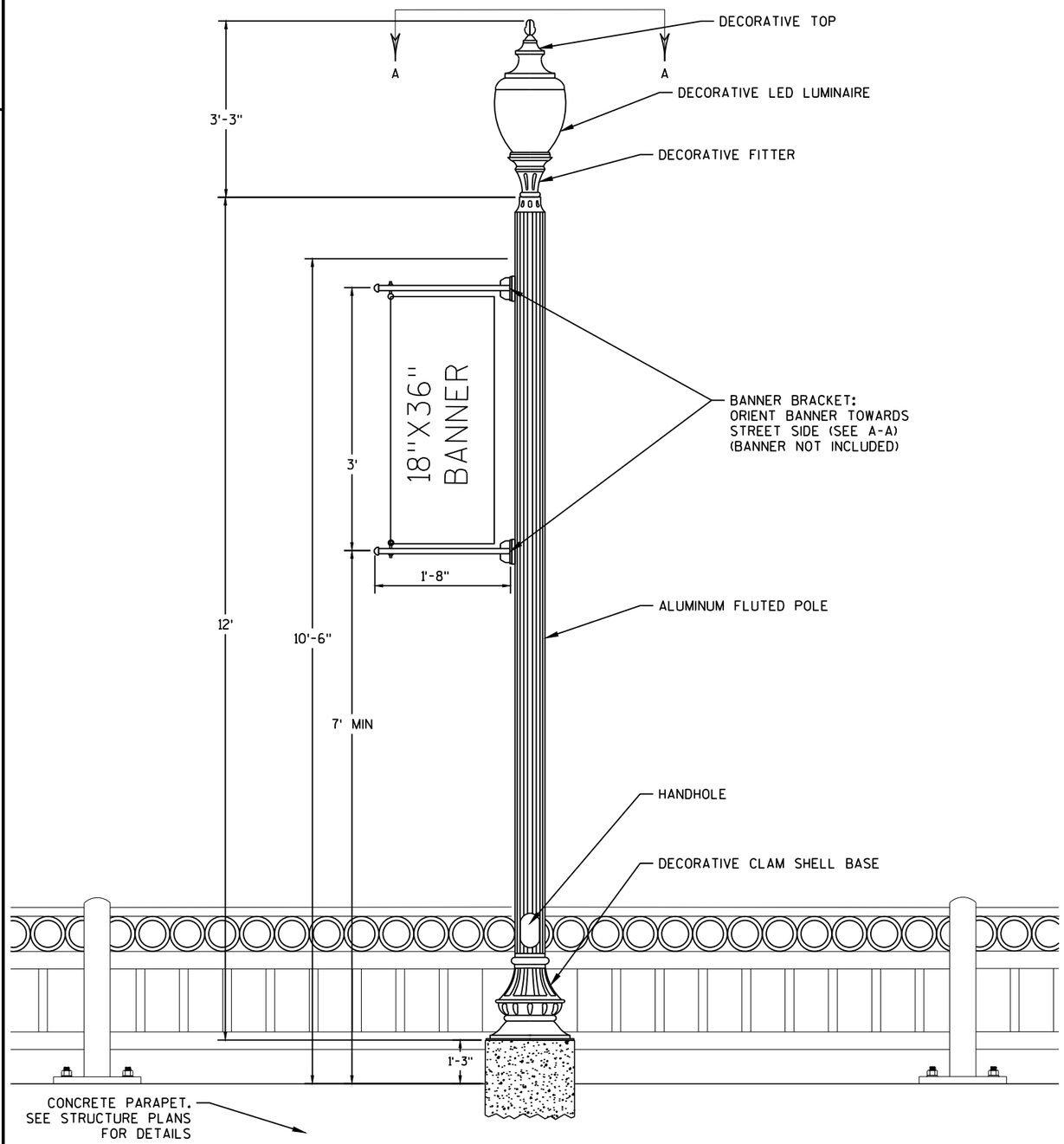

DECORATIVE UNIT DETAIL

NOTE:
EXACT LOCATION AND DIMENSIONS OF RECEPTACLE, FLAG POLE BRACKET AND BANNER BRACKETS TO BE VERIFIED BY THE ENGINEER

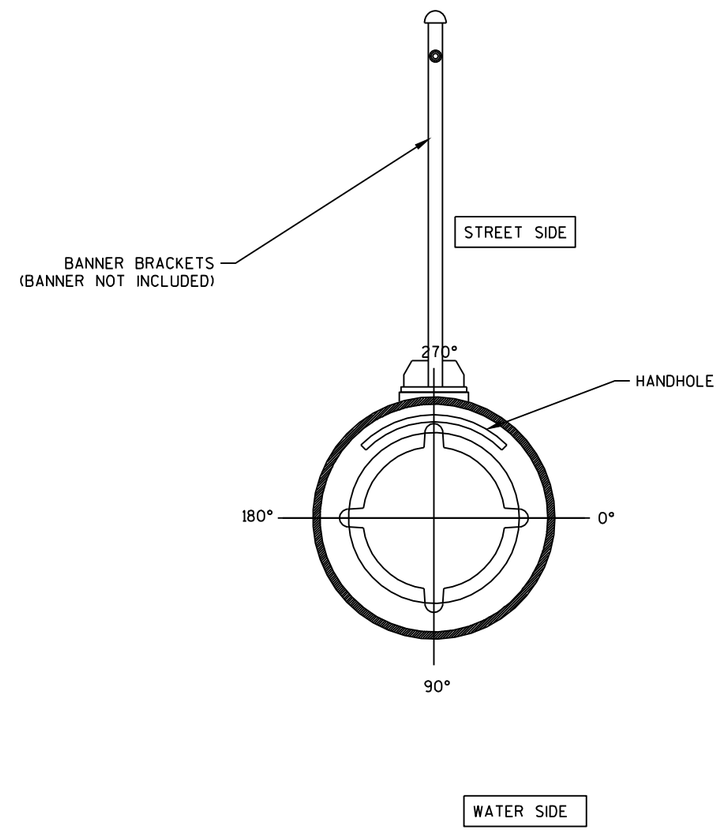

SECTION A-A
OVERHEAD VIEW

NOTES

ALL CURB RADII ARE TO FLANGE OF CURB.

ALL ROADWAY DIMENSIONS ARE TO FLANGE OF CURB OR JOINT LINE.

PAVEMENT GRADES ARE SHOWN AT FLANGE OF CURB FOR CURB & GUTTER SECTIONS.

PAVEMENT GRADES ARE GENERALLY SHOWN AT 25' INTERVALS.

ALL DATA POINT STATION AND OFFSETS ARE TO THE FLANGE OF CURB OR FRONT OF WALK.

ALL CURB RAMPS ARE CONCRETE SIDEWALK 6-INCH UNLESS OTHERWISE NOTED.

* SEE CURB RAMP DETAIL SHEETS FOR ADDITIONAL CURB RAMP INFORMATION.

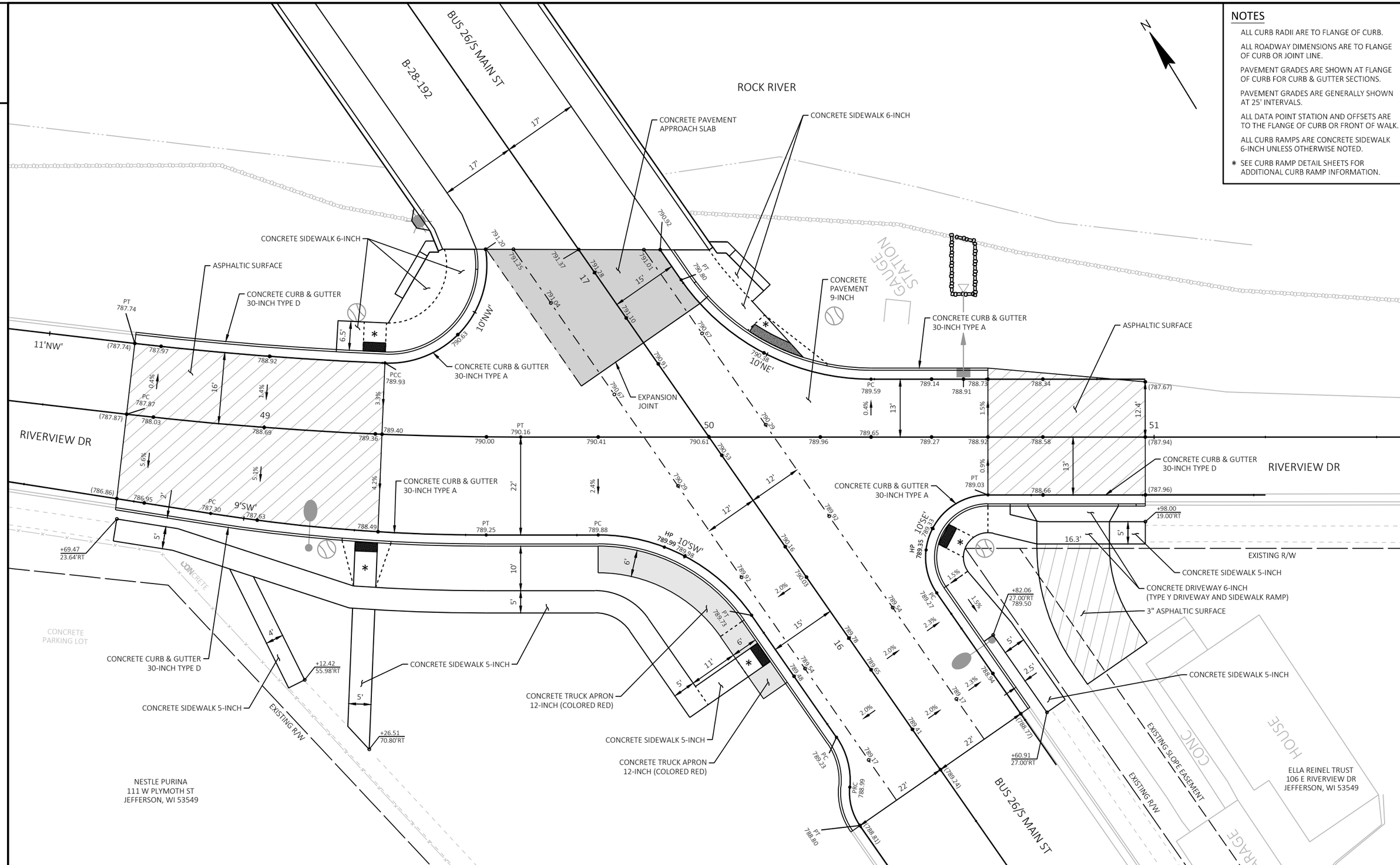

PROJECT NO: 3993-01-81	HWY: BUS 26	COUNTY: JEFFERSON	PLAN DETAILS	SHEET 11	E

FILE NAME : S:\CURRPROJ\JEFFERSON\MAIN STREET BRIDGE\CIVIL3D\39930101\SHEETSPLAN\39930181-021201-PD.DWG
LAYOUT NAME - Sheet - (01)
PLOT DATE : 1/18/2022 2:22 PM PLOT BY : AARON SARAUER PLOT NAME : PLOT SCALE : 1 IN:20 FT

2

NOTES

ALL CURB RADII ARE TO FLANGE OF CURB.

ALL ROADWAY DIMENSIONS ARE TO FLANGE OF CURB OR JOINT LINE.

PAVEMENT GRADES ARE SHOWN AT FLANGE OF CURB FOR CURB & GUTTER SECTIONS.

PAVEMENT GRADES ARE GENERALLY SHOWN AT 25' INTERVALS.

ALL DATA POINT STATION AND OFFSETS ARE TO THE FLANGE OF CURB OR FRONT OF WALK.

ALL CURB RAMPS ARE CONCRETE SIDEWALK 6-INCH UNLESS OTHERWISE NOTED.

∗ SEE CURB RAMP DETAIL SHEETS FOR ADDITIONAL CURB RAMP INFORMATION.

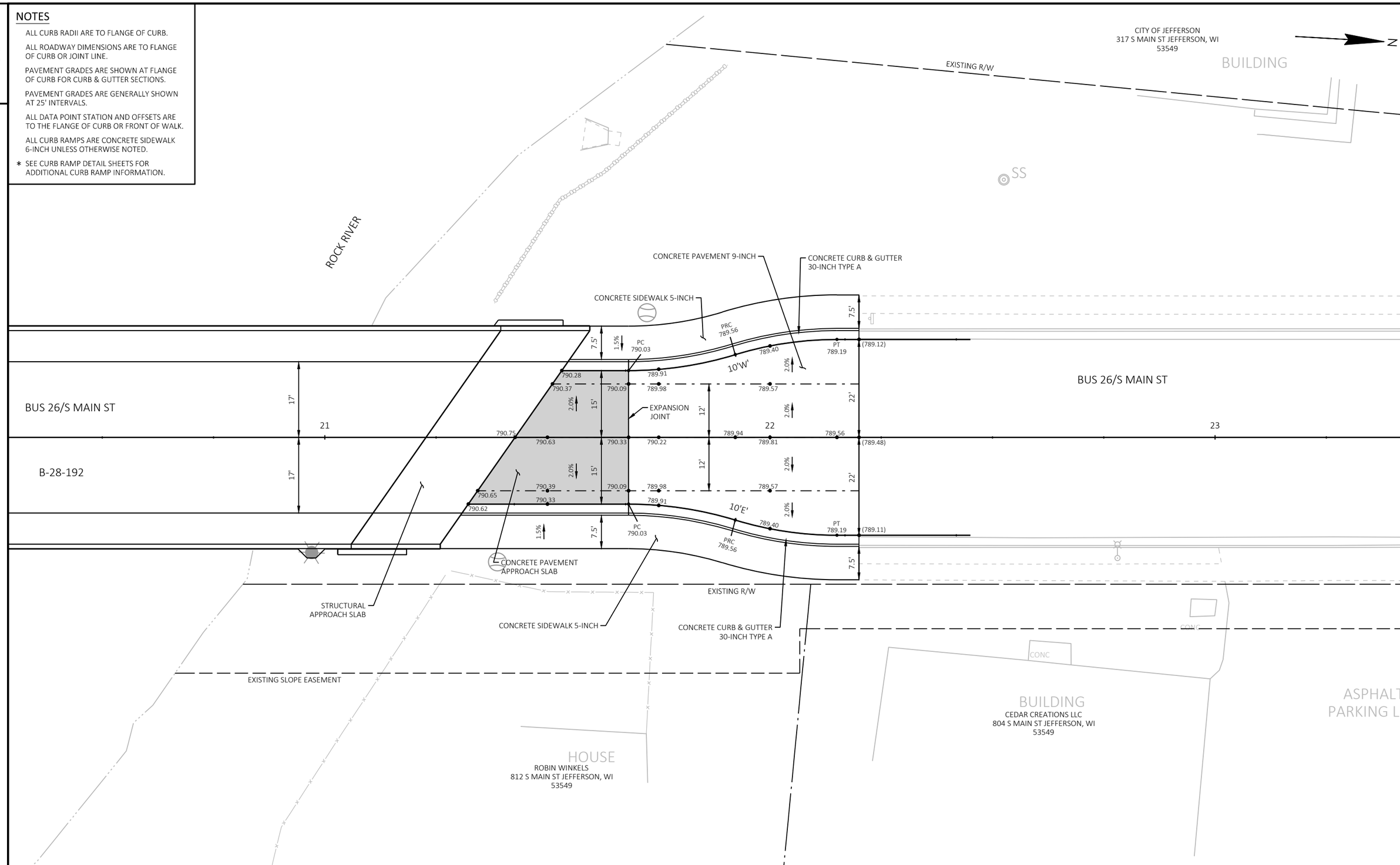

2

PROJECT NO: 3993-01-81	HWY: BUS 26	COUNTY: JEFFERSON	PLAN DETAILS	SHEET 12	E

FILE NAME : S:\CURRPROJ\JEFFERSON\MAIN STREET BRIDGE\CIVIL3D\39930101\SHEETSPLAN\39930181-021201-PD.DWG
LAYOUT NAME - Sheet - (02)
PLOT DATE : 1/18/2022 2:22 PM PLOT BY : AARON SARAUER PLOT NAME : PLOT SCALE : 1 IN:20 FT

WISDOT/CADDS SHEET 42

2

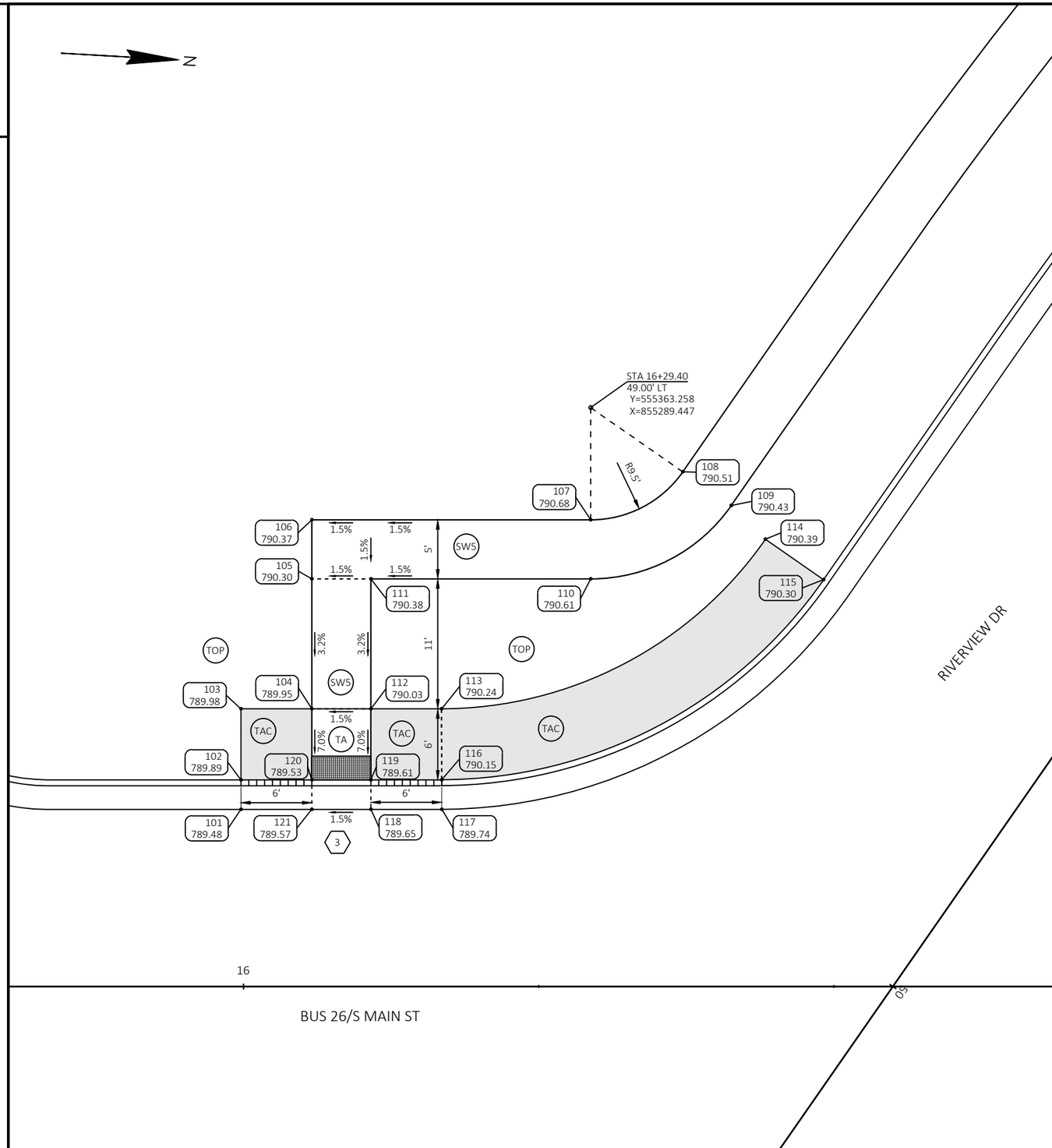

CURB RAMP - 1						
POINT NUMBER	ALIGNMENT	STATION	OFFSET	ELEVATION	NORTHING	EASTING
101	Bus26	15+99.78	15.00' LT	789.48	555335.65	855325.10
102	Bus26	15+99.78	17.50' LT	789.89	555335.51	855322.60
103	Bus26	15+99.78	23.50' LT	789.98	555335.16	855316.61
104	Bus26	16+05.78	23.50' LT	789.95	555341.15	855316.27
105	Bus26	16+05.78	34.50' LT	790.30	555340.52	855305.28
106	Bus26	16+05.78	39.50' LT	790.37	555340.23	855300.29
107	Bus26	16+29.40	39.50' LT	790.68	555363.81	855298.93
108	RiverviewDr	49+74.40	39.50' RT	790.51	555371.36	855294.41
109	RiverviewDr	49+74.40	34.50' RT	790.43	555375.62	855297.03
110	Bus26	16+29.40	34.50' LT	790.61	555364.09	855303.92
111	Bus26	16+10.78	34.50' LT	790.38	555345.51	855305.00
112	Bus26	16+10.78	23.50' LT	790.03	555346.14	855315.98
113	Bus26	16+16.77	23.50' LT	790.24	555352.12	855315.63
114	RiverviewDr	49+75.09	30.50' RT	790.39	555378.67	855299.71
115	RiverviewDr	49+75.09	24.50' RT	790.30	555383.78	855302.85
116	Bus26	16+16.78	17.50' LT	790.15	555352.48	855321.62
117	Bus26	16+16.79	15.00' LT	789.74	555352.63	855324.12
118	Bus26	16+10.78	15.00' LT	789.65	555346.63	855324.46
119	Bus26	16+10.78	17.50' LT	789.61	555346.49	855321.97
120	Bus26	16+05.78	17.50' LT	789.53	555341.50	855322.26
121	Bus26	16+05.78	15.00' LT	789.57	555341.64	855324.75

LEGEND

- X — CURB RAMP TYPE
- ASP — 3" ASPHALTIC SURFACE
- CD6 — CONCRETE DRIVEWAY 6-INCH
- SW5 — CONCRETE SIDEWALK 5-INCH
- SW6 — CONCRETE SIDEWALK 6-INCH
- TA — CONCRETE TRUCK APRON 12-INCH
- TAC — CONCRETE TRUCK APRON 12-INCH (COLORED RED)
- TOP — TOPSOIL, SEED, FERTILIZER, AND EMAT
- CURB HEAD HEIGHT TRANSITION
- CURB RAMP DETECTABLE WARNING FIELD

NOTES:

REFER TO SDD 8D5 "CURB RAMPS" FOR JOINT LOCATIONS AND ADDITIONAL DETAILS.

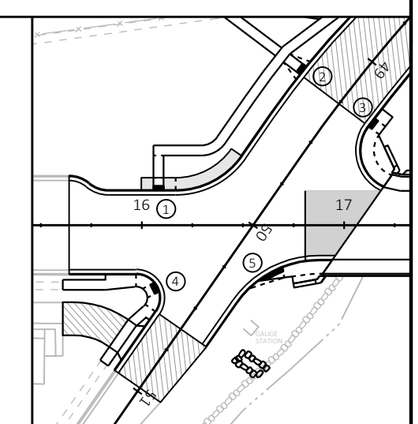

PROJECT NO: 3993-01-81	HWY: BUS 26	COUNTY: JEFFERSON	CURB RAMP DETAILS	SHEET 13	E

2

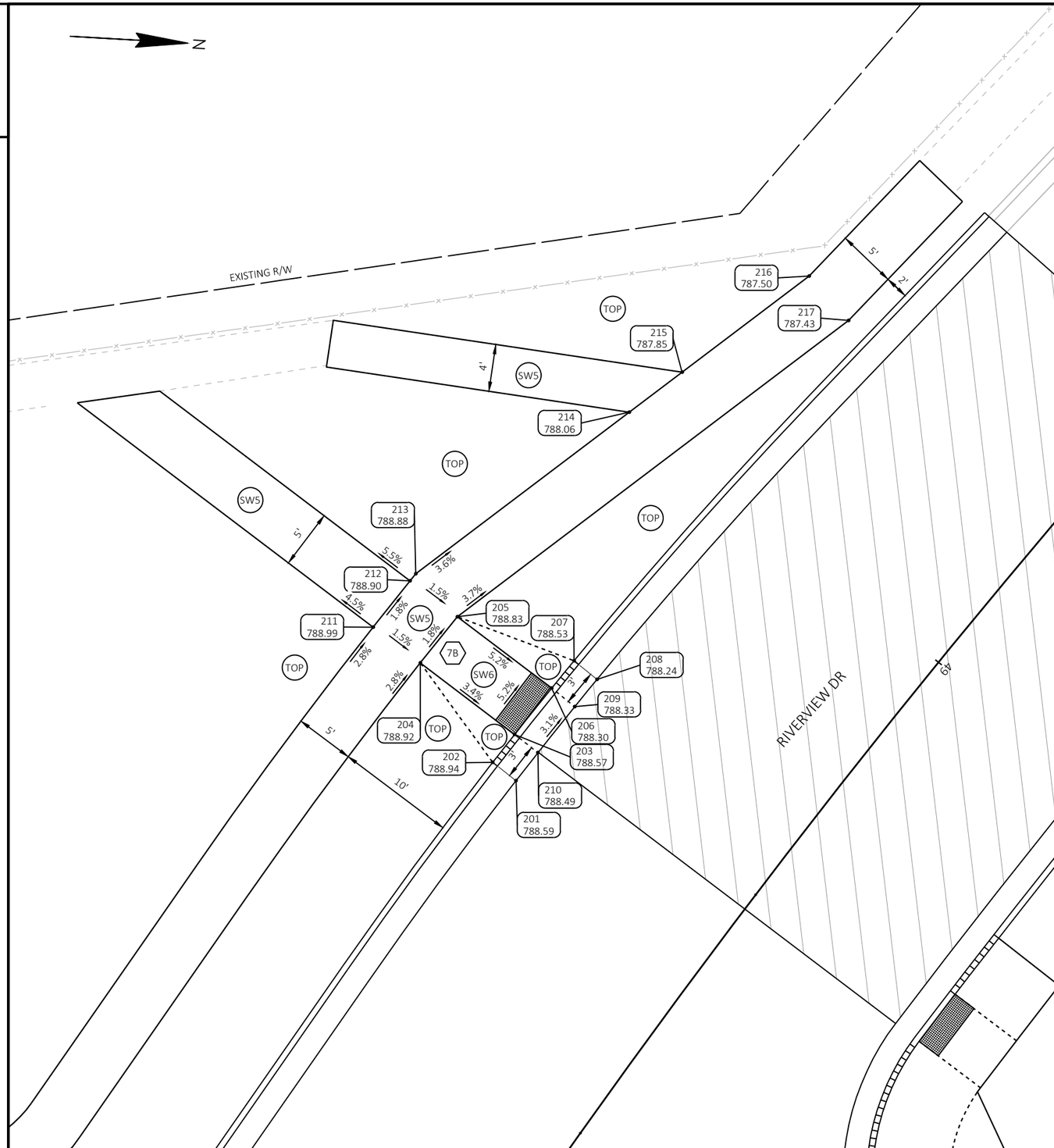

CURB RAMP - 2						
POINT NUMBER	ALIGNMENT	STATION	OFFSET	ELEVATION	NORTHING	EASTING
201	RiverviewDr	49+29.46	21.97' RT	788.59	555410.67	855264.87
202	RiverviewDr	49+29.41	24.47' RT	788.94	555408.62	855263.44
203	RiverviewDr	49+26.51	24.41' RT	788.57	555410.33	855260.98
204	RiverviewDr	49+26.51	34.42' RT	788.92	555402.02	855255.41
205	RiverviewDr	49+21.72	34.30' RT	788.83	555404.92	855251.33
206	RiverviewDr	49+21.66	24.30' RT	788.30	555413.22	855256.90
207	RiverviewDr	49+18.76	24.21' RT	788.53	555414.99	855254.47
208	RiverviewDr	49+18.82	21.71' RT	788.24	555417.01	855255.94
209	RiverviewDr	49+21.71	21.80' RT	788.33	555415.26	855258.35
210	RiverviewDr	49+26.55	21.91' RT	788.49	555412.38	855262.41
211	RiverviewDr	49+26.51	39.42' RT	788.99	555397.87	855252.62
212	RiverviewDr	49+21.75	39.30' RT	788.90	555400.76	855248.54
213	RiverviewDr	49+21.02	39.28' RT	788.88	555401.21	855247.92
214	RiverviewDr	49+00.12	33.61' RT	788.06	555418.44	855233.25
215	RiverviewDr	48+94.90	32.30' RT	787.85	555422.70	855229.62
216	RiverviewDr	48+82.28	29.30' RT	787.50	555432.95	855220.89
217	RiverviewDr	48+82.95	24.33' RT	787.43	555436.49	855224.44

LEGEND

- X — CURB RAMP TYPE
- ASP — 3" ASPHALTIC SURFACE
- CD6 — CONCRETE DRIVEWAY 6-INCH
- SW5 — CONCRETE SIDEWALK 5-INCH
- SW6 — CONCRETE SIDEWALK 6-INCH
- TA — CONCRETE TRUCK APRON 12-INCH
- TAC — CONCRETE TRUCK APRON 12-INCH (COLORED RED)
- TOP — TOPSOIL, SEED, FERTILIZER, AND EMAT
- CURB HEAD HEIGHT TRANSITION
- CURB RAMP DETECTABLE WARNING FIELD

NOTES:

REFER TO SDD 8D5 "CURB RAMPS" FOR JOINT LOCATIONS AND ADDITIONAL DETAILS.

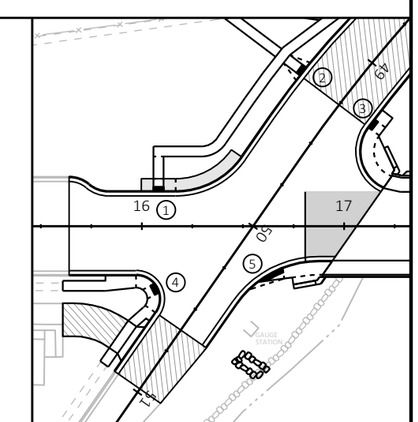

2

PROJECT NO: 3993-01-81	HWY: BUS 26	COUNTY: JEFFERSON	CURB RAMP DETAILS	SHEET 14	E

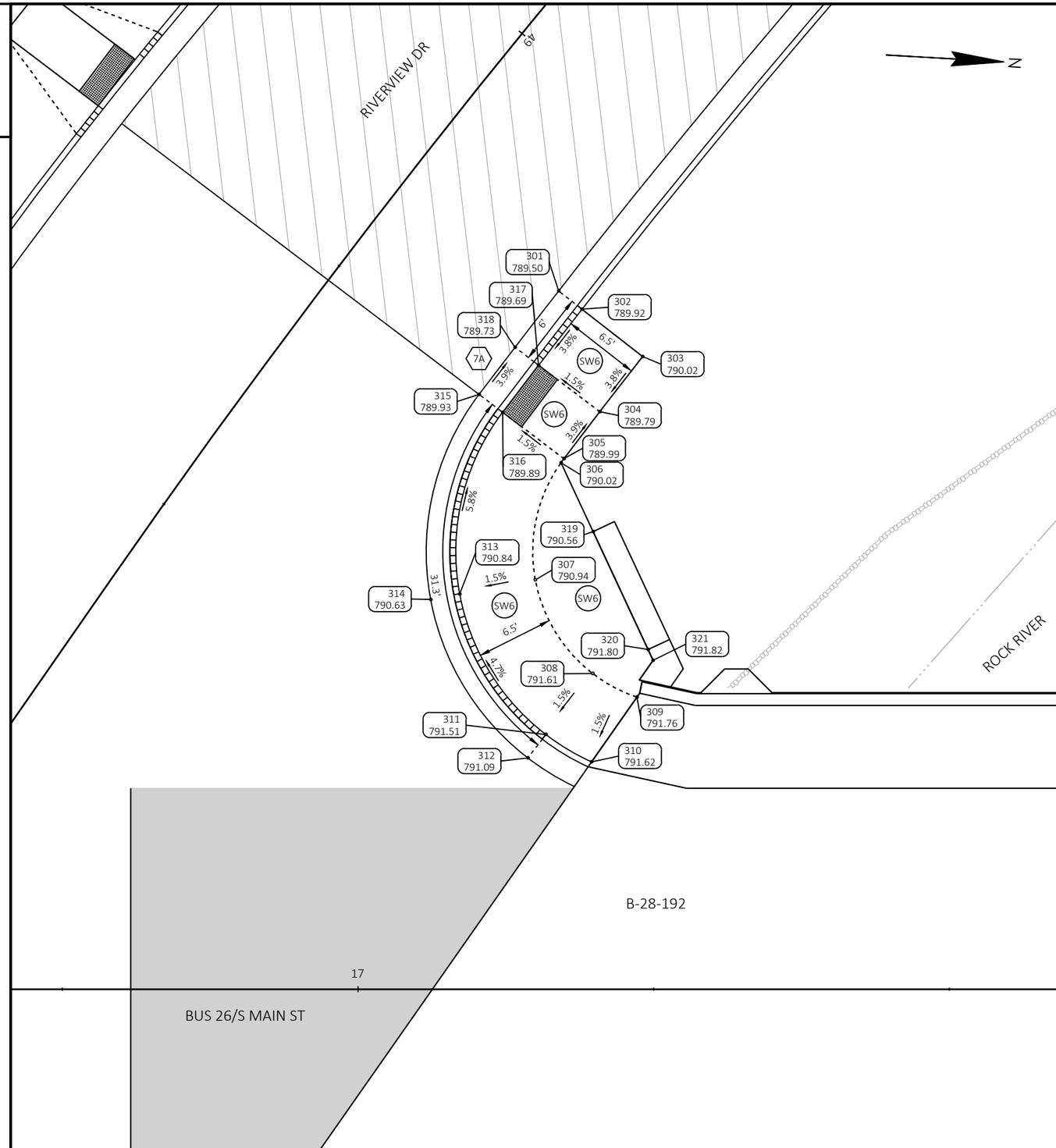

CURB RAMP - 3						
POINT NUMBER	ALIGNMENT	STATION	OFFSET	ELEVATION	NORTHING	EASTING
301	RiverviewDr	49+15.24	16.00' LT	789.50	555450.11	855274.38
302	RiverviewDr	49+15.24	18.50' LT	789.92	555452.16	855275.80
303	RiverviewDr	49+15.24	25.00' LT	790.02	555457.50	855279.50
304	RiverviewDr	49+21.34	25.00' LT	789.79	555454.16	855284.37
305	RiverviewDr	49+26.51	25.00' LT	789.99	555451.36	855288.51
306	RiverviewDr	49+26.94	25.01' LT	790.02	555451.13	855288.87
307	RiverviewDr	49+36.52	29.20' LT	790.94	555449.54	855298.88
308	Bus26	17+19.85	26.69' LT	791.61	555454.84	855306.50
309	Bus26	17+23.58	24.69' LT	791.76	555458.68	855308.28
310	Bus26	17+19.75	19.23' LT	791.62	555455.18	855313.96
311	Bus26	17+15.89	21.54' LT	791.51	555451.19	855311.88
312	Bus26	17+14.37	19.56' LT	791.09	555449.78	855313.94
313	Bus26	17+08.60	33.41' LT	790.84	555443.23	855300.44
314	Bus26	17+06.15	32.95' LT	790.63	555440.80	855301.04
315	RiverviewDr	49+26.51	16.00' LT	789.93	555443.89	855283.50
316	RiverviewDr	49+26.51	18.50' LT	789.89	555445.97	855284.89
317	RiverviewDr	49+21.39	18.50' LT	789.69	555448.76	855280.75
318	RiverviewDr	49+21.39	16.00' LT	789.73	555446.70	855279.34
319	RiverviewDr	49+30.07	30.68' LT	790.56	555454.18	855294.52
320	RiverviewDr	49+35.54	40.37' LT	791.80	555459.40	855304.21
321	RiverviewDr	49+36.05	41.25' LT	791.82	555459.87	855305.09

LEGEND

- X — CURB RAMP TYPE
- ASP — 3" ASPHALTIC SURFACE
- CD6 — CONCRETE DRIVEWAY 6-INCH
- SW5 — CONCRETE SIDEWALK 5-INCH
- SW6 — CONCRETE SIDEWALK 6-INCH
- TA — CONCRETE TRUCK APRON 12-INCH
- TAC — CONCRETE TRUCK APRON 12-INCH (COLORED RED)
- TOP — TOPSOIL, SEED, FERTILIZER, AND EMAT
- CURB HEAD HEIGHT TRANSITION
- CURB RAMP DETECTABLE WARNING FIELD

NOTES:

REFER TO SDD 8D5 "CURB RAMPS" FOR JOINT LOCATIONS AND ADDITIONAL DETAILS.

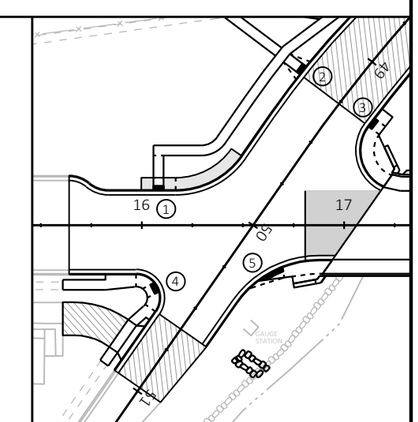

PROJECT NO: 3993-01-81	HWY: BUS 26	COUNTY: JEFFERSON	CURB RAMP DETAILS	SHEET 15	E

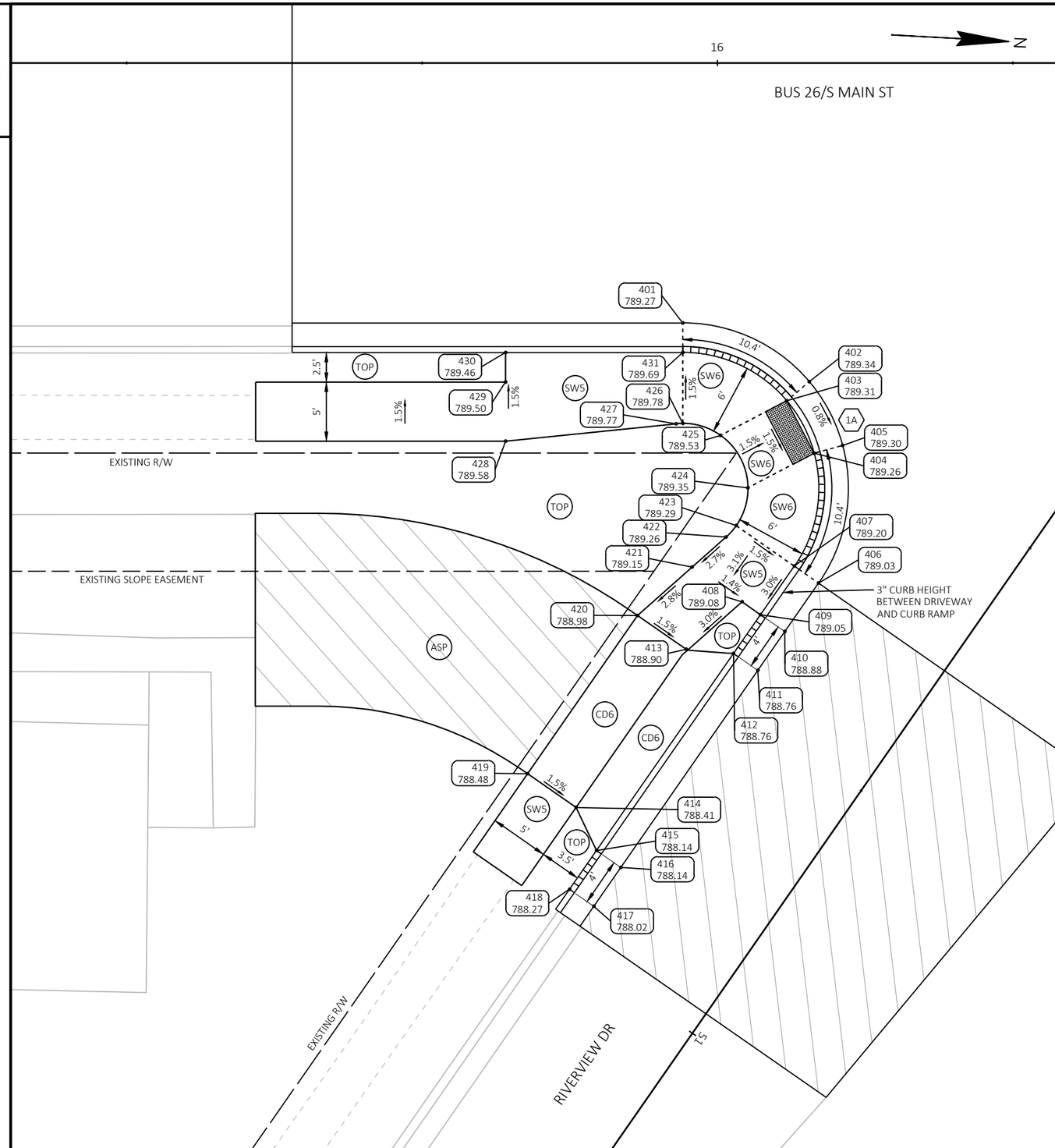

CURB RAMP - 4

POINT NUMBER	ALIGNMENT	STATION	OFFSET	ELEVATION	NORTHING	EASTING
401	Bus26	15+97.06	22.00' RT	789.27	555335.07	855362.19
402	Bus26	16+07.76	26.97' RT	789.34	555346.04	855366.54
403	Bus26	16+05.85	28.59' RT	789.31	555344.22	855368.26
404	Bus26	16+08.17	33.02' RT	789.26	555346.79	855372.55
405	Bus26	16+10.58	32.37' RT	789.30	555349.16	855371.77
406	RiverviewDr	50+62.64	13.00' RT	789.03	555347.81	855383.49
407	RiverviewDr	50+62.64	15.50' RT	789.20	555345.68	855382.18
408	RiverviewDr	50+67.65	17.41' RT	789.08	555341.43	855385.45
409	RiverviewDr	50+67.65	15.50' RT	789.05	555343.06	855386.45
410	RiverviewDr	50+67.65	13.00' RT	788.88	555345.19	855387.76
411	RiverviewDr	50+71.65	13.00' RT	788.76	555343.10	855391.17
412	RiverviewDr	50+71.65	15.50' RT	788.76	555340.97	855389.86
413	RiverviewDr	50+73.65	19.00' RT	788.90	555336.94	855389.74
414	RiverviewDr	50+89.95	19.00' RT	788.41	555328.41	855403.63
415	RiverviewDr	50+91.95	15.50' RT	788.14	555330.35	855407.17
416	RiverviewDr	50+91.95	13.00' RT	788.14	555332.48	855408.48
417	RiverviewDr	50+95.95	13.00' RT	788.02	555330.39	855411.88
418	RiverviewDr	50+95.95	15.50' RT	788.27	555328.26	855410.58
419	RiverviewDr	50+89.95	24.00' RT	788.48	555324.15	855401.02
420	RiverviewDr	50+73.65	24.00' RT	788.98	555332.68	855387.12
421	RiverviewDr	50+67.65	22.55' RT	789.15	555337.05	855382.76
422	RiverviewDr	50+63.93	21.65' RT	789.26	555339.76	855380.07
423	RiverviewDr	50+62.64	21.50' RT	789.29	555340.56	855379.05
424	Bus26	16+02.56	35.95' RT	789.35	555341.36	855375.80
425	Bus26	16+00.24	31.52' RT	789.53	555338.79	855371.51
426	Bus26	15+97.06	30.50' RT	789.78	555335.56	855370.68
427	Bus26	15+96.50	30.53' RT	789.77	555335.00	855370.74
428	Bus26	15+82.06	32.00' RT	789.58	555320.67	855373.04
429	Bus26	15+82.06	27.00' RT	789.50	555320.38	855368.05
430	Bus26	15+82.06	24.50' RT	789.46	555320.24	855365.55
431	Bus26	15+97.06	24.50' RT	789.69	555335.21	855364.69

LEGEND

- X — CURB RAMP TYPE
- ASP — 3" ASPHALTIC SURFACE
- CD6 — CONCRETE DRIVEWAY 6-INCH
- SW5 — CONCRETE SIDEWALK 5-INCH
- SW6 — CONCRETE SIDEWALK 6-INCH
- TA — CONCRETE TRUCK APRON 12-INCH
- TAC — CONCRETE TRUCK APRON 12-INCH (COLORED RED)
- TOP — TOPSOIL, SEED, FERTILIZER, AND EMAT
- CURB HEAD HEIGHT TRANSITION
- CURB RAMP DETECTABLE WARNING FIELD

NOTES:

REFER TO SDD 8D5 "CURB RAMPS" FOR JOINT LOCATIONS AND ADDITIONAL DETAILS.

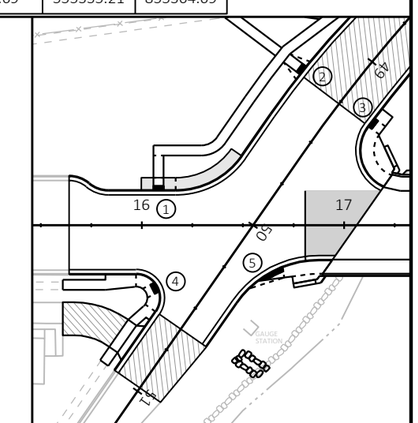

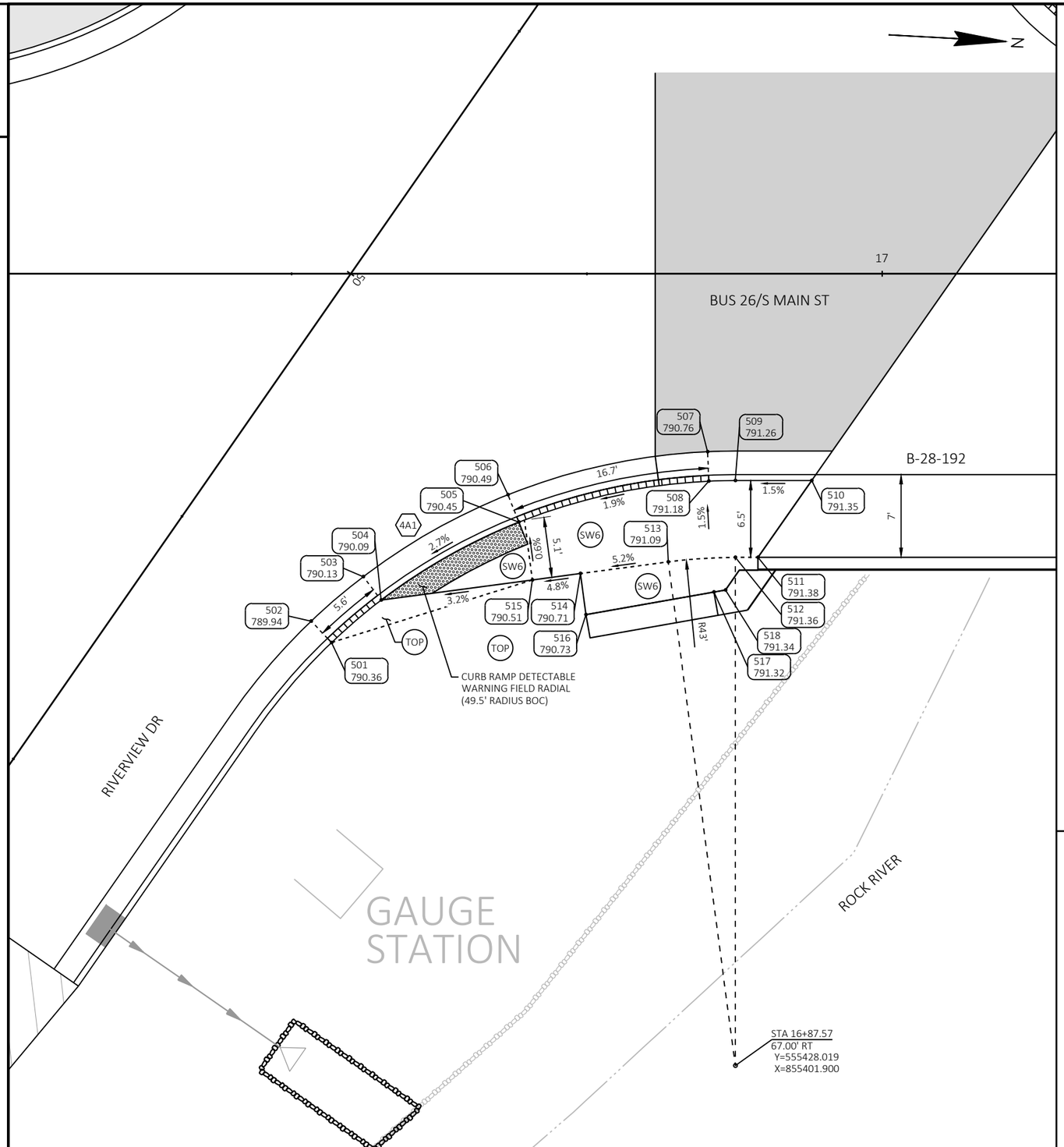

CURB RAMP - 5						
POINT NUMBER	ALIGNMENT	STATION	OFFSET	ELEVATION	NORTHING	EASTING
501	Bus26	16+53.38	31.20' RT	790.36	555391.83	855368.13
502	Bus26	16+51.66	29.39' RT	789.94	555390.00	855366.43
503	Bus26	16+56.07	25.63' RT	790.13	555394.19	855362.41
504	Bus26	16+57.58	27.61' RT	790.09	555395.81	855364.31
505	Bus26	16+69.24	21.02' RT	790.45	555407.07	855357.05
506	Bus26	16+68.32	18.69' RT	790.49	555406.01	855354.79
507	Bus26	16+85.21	15.05' RT	790.76	555422.67	855350.18
508	Bus26	16+85.33	17.55' RT	791.18	555422.93	855352.66
509	Bus26	16+87.57	17.50' RT	791.26	555425.17	855352.48
510	Bus26	16+94.03	17.50' RT	791.35	555431.62	855352.11
511	Bus26	16+89.48	24.00' RT	791.38	555427.45	855358.86
512	Bus26	16+87.57	24.00' RT	791.36	555425.54	855358.97
513	Bus26	16+81.89	24.38' RT	791.09	555419.89	855359.68
514	Bus26	16+74.46	25.37' RT	790.71	555412.53	855361.09
515	Bus26	16+70.39	25.91' RT	790.51	555408.50	855361.87
516	Bus26	16+74.92	28.84' RT	790.73	555413.19	855364.53
517	Bus26	16+85.75	26.93' RT	791.32	555423.90	855362.00
518	Bus26	16+86.74	26.76' RT	791.34	555424.87	855361.77

LEGEND

- X — CURB RAMP TYPE
- ASP — 3" ASPHALTIC SURFACE
- CD6 — CONCRETE DRIVEWAY 6-INCH
- SW5 — CONCRETE SIDEWALK 5-INCH
- SW6 — CONCRETE SIDEWALK 6-INCH
- TA — CONCRETE TRUCK APRON 12-INCH
- TAC — CONCRETE TRUCK APRON 12-INCH (COLORED RED)
- TOP — TOPSOIL, SEED, FERTILIZER, AND EMAT
- CURB HEAD HEIGHT TRANSITION
- CURB RAMP DETECTABLE WARNING FIELD

NOTES:

REFER TO SDD 8D5 "CURB RAMPS" FOR JOINT LOCATIONS AND ADDITIONAL DETAILS.

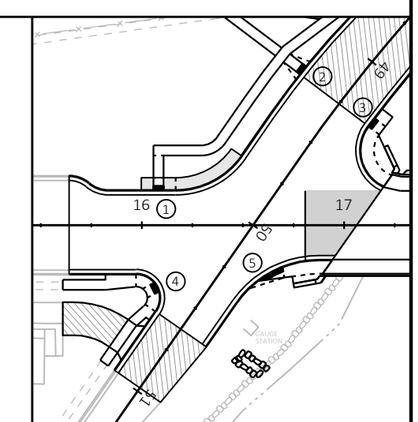

2

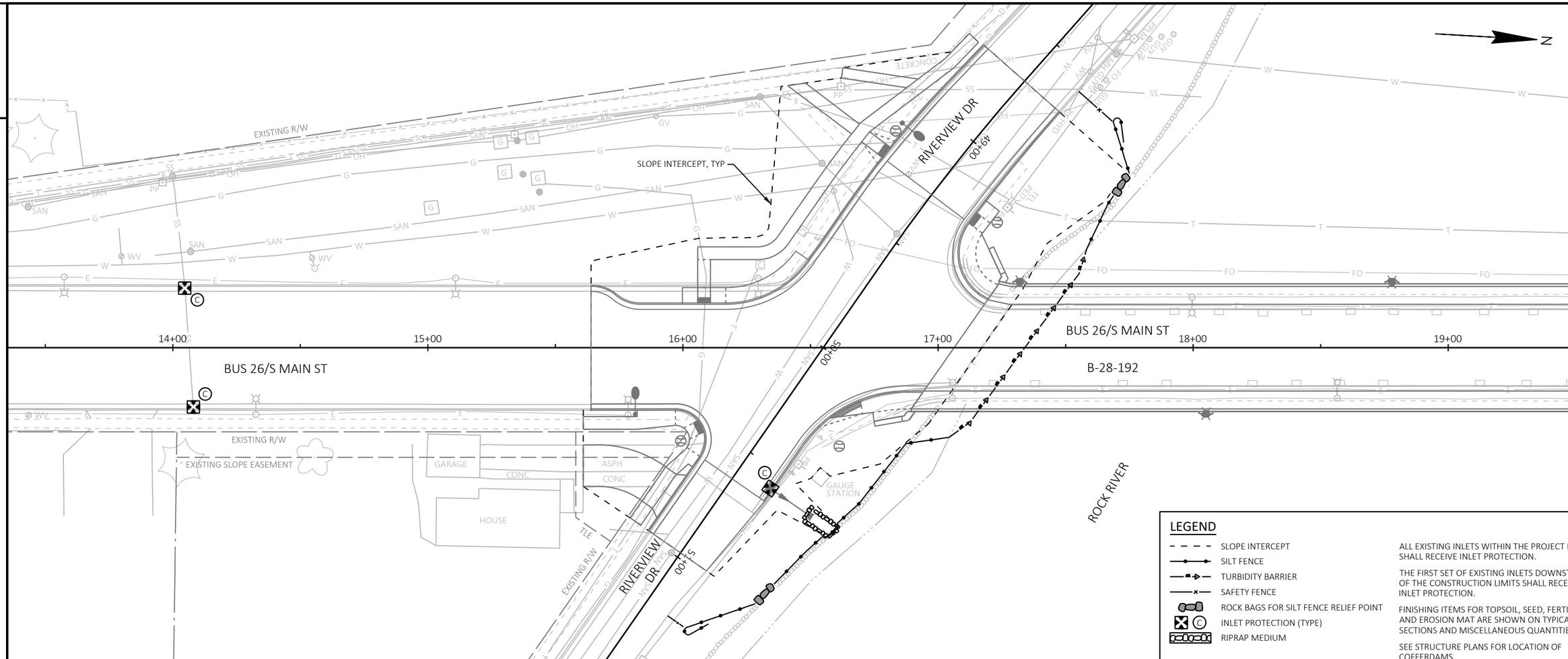

LEGEND

- SLOPE INTERCEPT
- SILT FENCE
- TURBIDITY BARRIER
- SAFETY FENCE
- ROCK BAGS FOR SILT FENCE RELIEF POINT
- INLET PROTECTION (TYPE)
- RIPRAP MEDIUM

ALL EXISTING INLETS WITHIN THE PROJECT LIMITS SHALL RECEIVE INLET PROTECTION.

THE FIRST SET OF EXISTING INLETS DOWNSTREAM OF THE CONSTRUCTION LIMITS SHALL RECEIVE INLET PROTECTION.

FINISHING ITEMS FOR TOPSOIL, SEED, FERTILIZER AND EROSION MAT ARE SHOWN ON TYPICAL SECTIONS AND MISCELLANEOUS QUANTITIES.

SEE STRUCTURE PLANS FOR LOCATION OF COFFERDAMS.

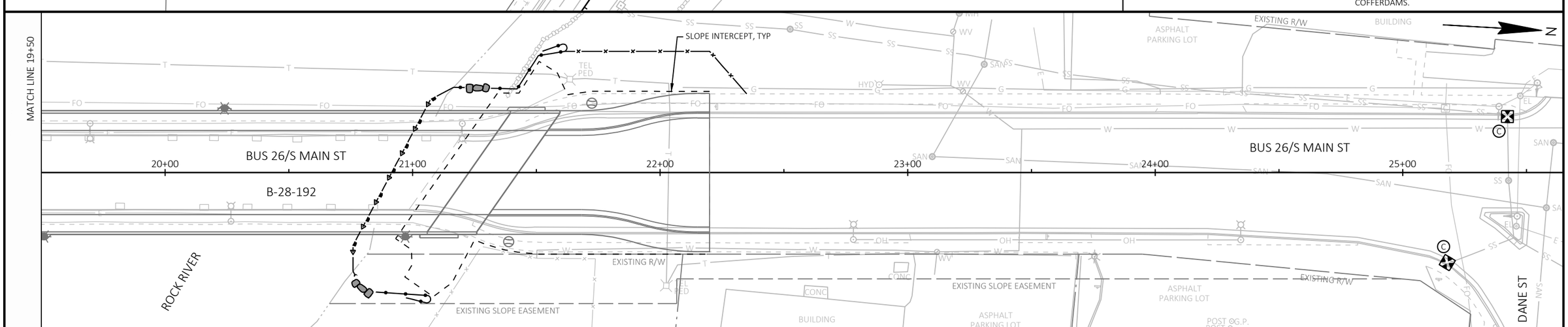

PROJECT NO: 3993-01-81	HWY: BUS 26	COUNTY: JEFFERSON	EROSION CONTROL PLAN	SHEET 18	E

FILE NAME : S:\CURRPROJ\JEFFERSON\MAIN STREET BRIDGE\CIVIL3D\39930101\SHEETSPLAN\39930181-022001-EC.DWG
LAYOUT NAME - Sheet - 01
PLOT DATE : 1/24/2022 2:59 PM
PLOT BY : AARON SARAUER
PLOT NAME :
PLOT SCALE : 1 IN:40 FT
WISDOT/CADDS SHEET 42

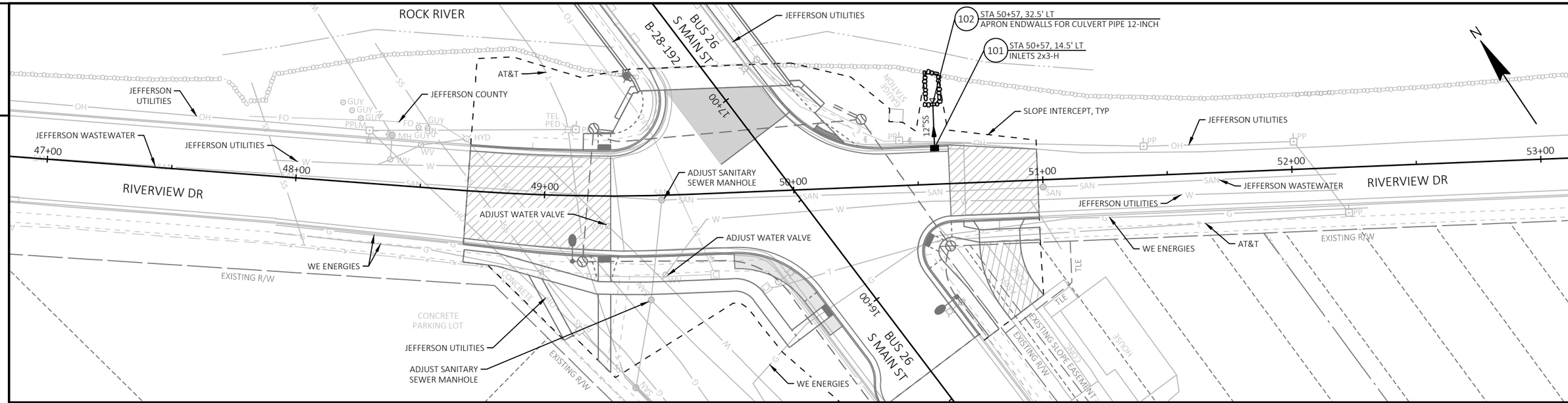

STORM SEWER STRUCTURE DATA

STRUCTURE NUMBER	ALIGNMENT	STATION	OFFSET	LOCATION	TYPE	RIM/GRATE ELEVATION	STRUCTURE INV ELEV	TOTAL DEPTH	SUMP DEPTH	CONNECTING PIPES	PIPE DIRECTION	PIPE SIZE & TYPE	PIPE INVERT	PIPE ROUTE	PIPE LENGTH	PIPE SLOPE	REMARKS
101	RIVERVIEWDR	50+57.15	-14.50	LT	INLETS 2X3-H	788.72	785.72	3.00	0.00	101-102 OUT	NE	SSP CLASS III-A 12-INCH	785.72	TO STR: 102	18.00'	2.00%	
102	RIVERVIEWDR	50+57.15	-32.50	LT	APRON ENDWALLS FOR CULVERT PIPE 12-INCH					101-102 IN	SW	SSP CLASS III-A 12-INCH	785.36	FROM STR: 101	--	--	

NOTES:
1. GRATE ELEVATIONS SHOWN FOR TYPE H & H-S COVERS ARE DEPRESSED 0.08' FROM NORMAL GUTTER FLOW LINE ELEVATION.
2. TOTAL DEPTH = RIM/GRATE ELEVATION - STRUCTURE INVERT ELEVATION.
3. STATION/ OFFSET OF STORM SEWER STRUCTURES ARE TO THE CENTER OF STRUCTURE EXCEPT FOR APRON ENDWALLS WHICH ARE TO PIPE END.

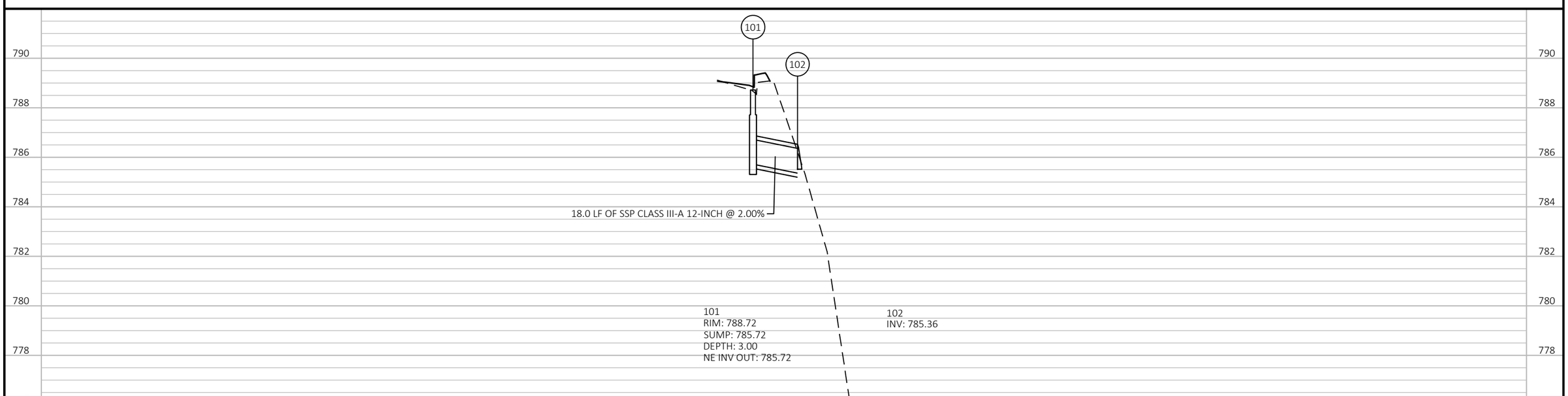

PROJECT NO: 3993-01-81	HWY: BUS 26	COUNTY: JEFFERSON	STORM SEWER: RIVERVIEW DRIVE	SHEET 19	E

2

SIGNING LEGEND

XXX	SIGN - REMOVE AND REPLACE
XXX	SIGN - REMOVE EXISTING
XXX	SIGN - PLACE NEW
XXX	SIGN - MOVE EXISTING
	EXISTING SIGN
	PROPOSED SIGN MOUNTED ON POST(S)

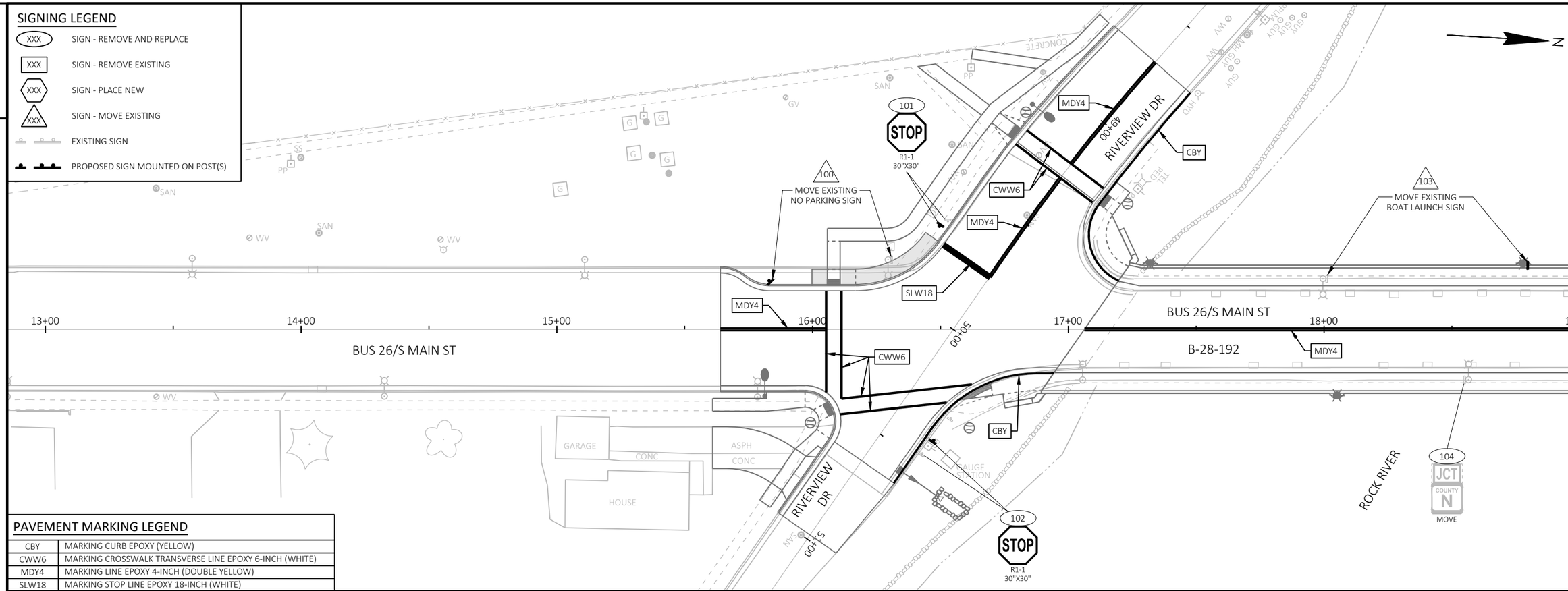

PAVEMENT MARKING LEGEND

CBY	MARKING CURB EPOXY (YELLOW)
CWW6	MARKING CROSSWALK TRANSVERSE LINE EPOXY 6-INCH (WHITE)
MDY4	MARKING LINE EPOXY 4-INCH (DOUBLE YELLOW)
SLW18	MARKING STOP LINE EPOXY 18-INCH (WHITE)

2

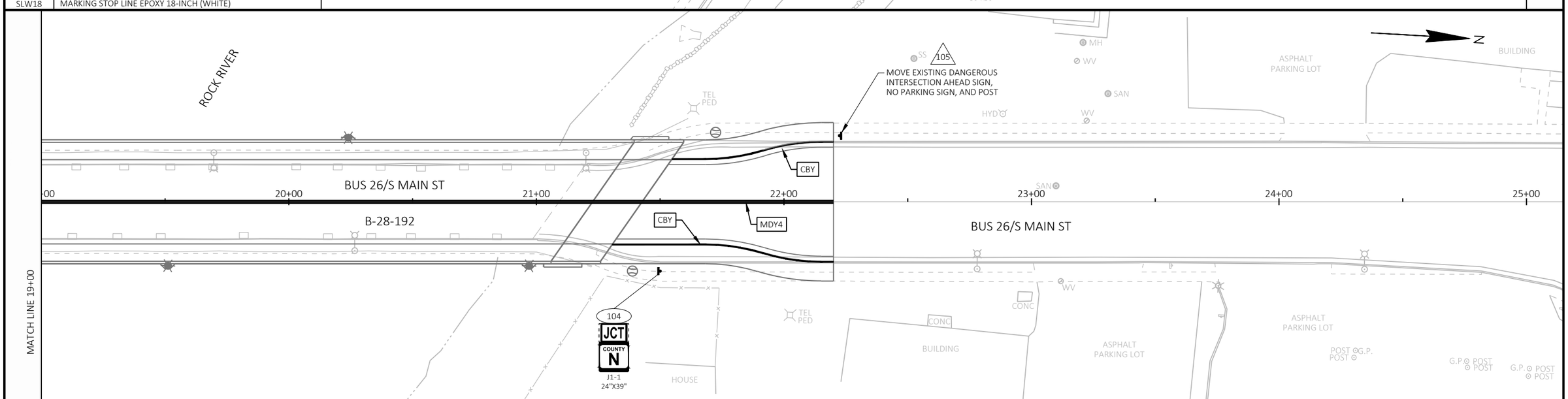

PROJECT NO: 3993-01-81	HWY: BUS 26	COUNTY: JEFFERSON	SIGNING & MARKING PLAN	SHEET 20	E

FILE NAME : S:\CURRPROJ\JEFFERSON\MAIN STREET BRIDGE\CIVIL3D\39930101\SHEETSPLAN\39930181-023201-PS.DWG
LAYOUT NAME - Sheet-01
PLOT DATE : 1/18/2022 2:23 PM PLOT BY : AARON SARAUER PLOT NAME : PLOT SCALE : 1 IN:40 FT

WISDOT/CADDS SHEET 42

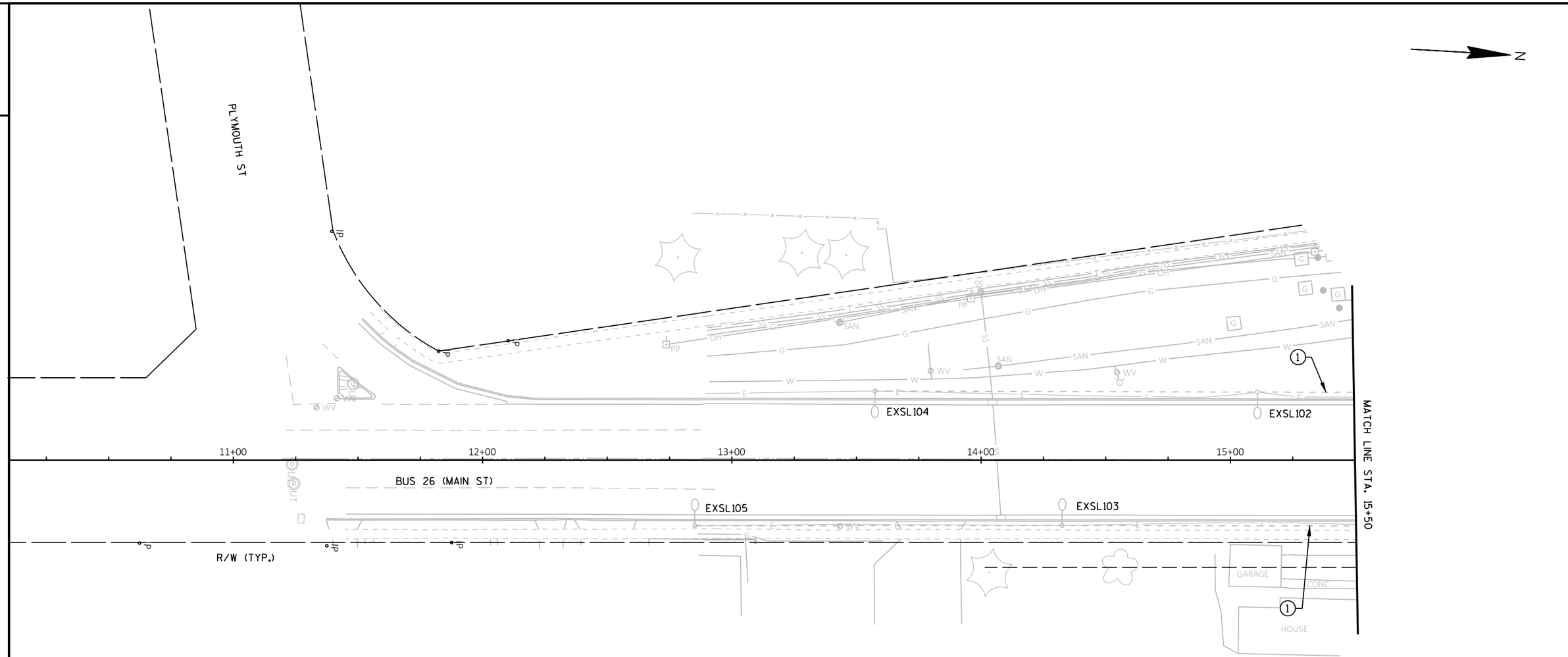

LEGEND

- REMOVE EXISTING LIGHTING CONDUCTORS AND REMOVE OR ABANDON CONDUIT
- EXISTING CONDUIT TO REMAIN
- EXISTING LIGHTING UNIT TO BE REMOVED AND SALVAGED
- EXISTING LIGHTING UNIT TO REMAIN
- EXISTING LIGHTING PULLBOX TO REMAIN
- EXISTING LIGHTING PULLBOX REMOVAL
- EXISTING ELECTRICAL SERVICE/METER PEDESTAL (REMOVE BY OTHERS)

NOTES:

1) FIELD VERIFY ALL ELECTRICAL INFRASTRUCTURE PRIOR TO REMOVAL TO ENSURE ALL REMOVALS ARE NECESSARY.

KEYED NOTES:

1. REMOVE CONDUCTORS BACK TO NEAREST STREET LIGHT AND RE-SPLICE IN HANDHOLE.

ORIGINAL PLANS PREPARED BY

KL Engineering

WISCONSIN
JACOB A. JOYAL
46965-6
OREGON, WI
PROFESSIONAL ENGINEER

01/24/2022
(Date)
(Signature)

SHEET 1 OF 3

PROJECT NO: 3993-01-81	HWY: BUS 26	COUNTY: JEFFERSON	LIGHTING REMOVAL PLAN	SHEET 21	E

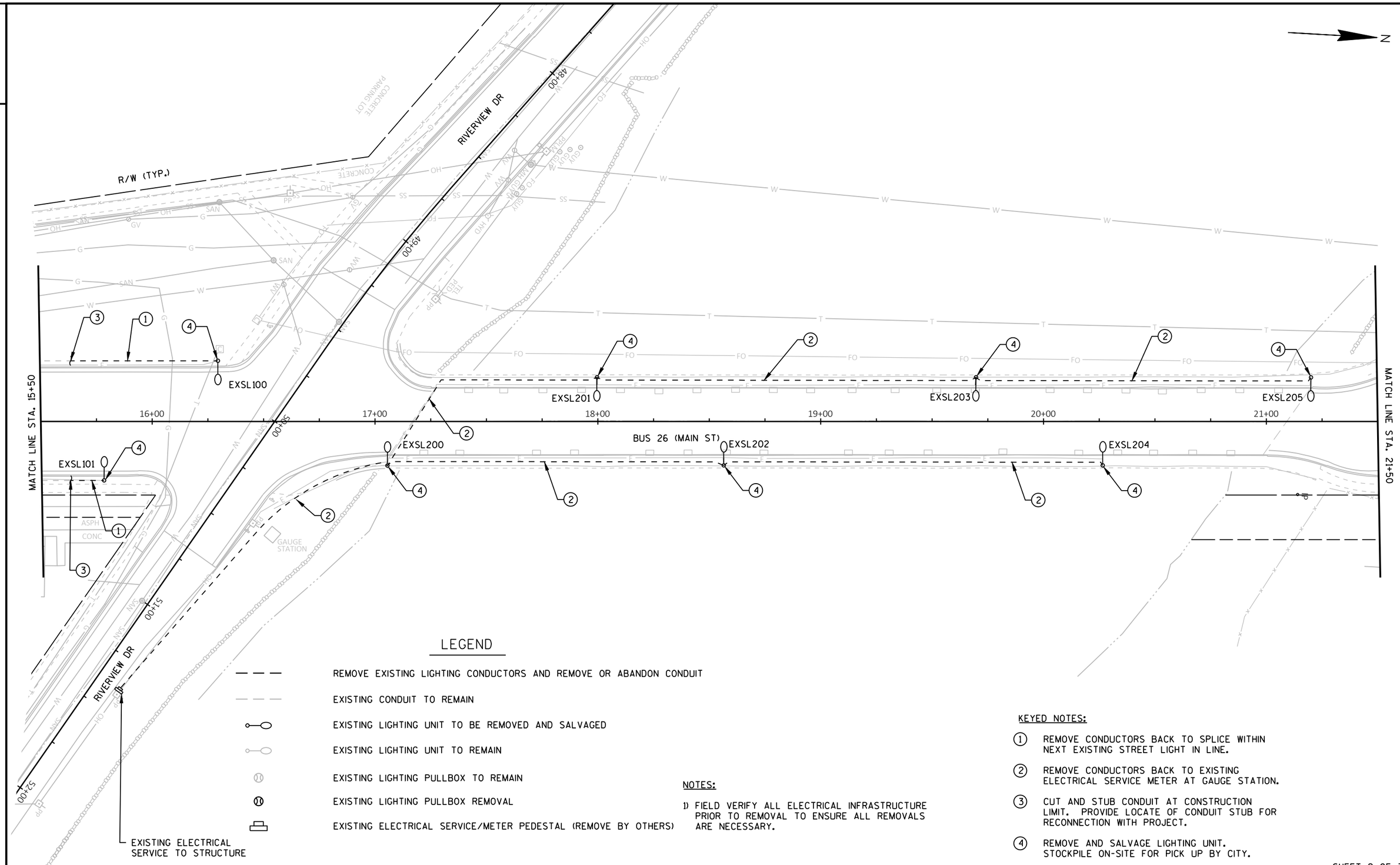

LEGEND

- REMOVE EXISTING LIGHTING CONDUCTORS AND REMOVE OR ABANDON CONDUIT
- EXISTING CONDUIT TO REMAIN
- EXISTING LIGHTING UNIT TO BE REMOVED AND SALVAGED
- EXISTING LIGHTING UNIT TO REMAIN
- EXISTING LIGHTING PULLBOX TO REMAIN
- EXISTING LIGHTING PULLBOX REMOVAL
- EXISTING ELECTRICAL SERVICE/METER PEDESTAL (REMOVE BY OTHERS)

NOTES:

1) FIELD VERIFY ALL ELECTRICAL INFRASTRUCTURE PRIOR TO REMOVAL TO ENSURE ALL REMOVALS ARE NECESSARY.

KEYED NOTES:

1. REMOVE CONDUCTORS BACK TO SPLICE WITHIN NEXT EXISTING STREET LIGHT IN LINE.
2. REMOVE CONDUCTORS BACK TO EXISTING ELECTRICAL SERVICE METER AT GAUGE STATION.
3. CUT AND STUB CONDUIT AT CONSTRUCTION LIMIT. PROVIDE LOCATE OF CONDUIT STUB FOR RECONNECTION WITH PROJECT.
4. REMOVE AND SALVAGE LIGHTING UNIT. STOCKPILE ON-SITE FOR PICK UP BY CITY.

SHEET 2 OF 3

PROJECT NO: 3993-01-81	HWY: BUS 26	COUNTY: JEFFERSON	LIGHTING REMOVAL PLAN	SHEET 22	E

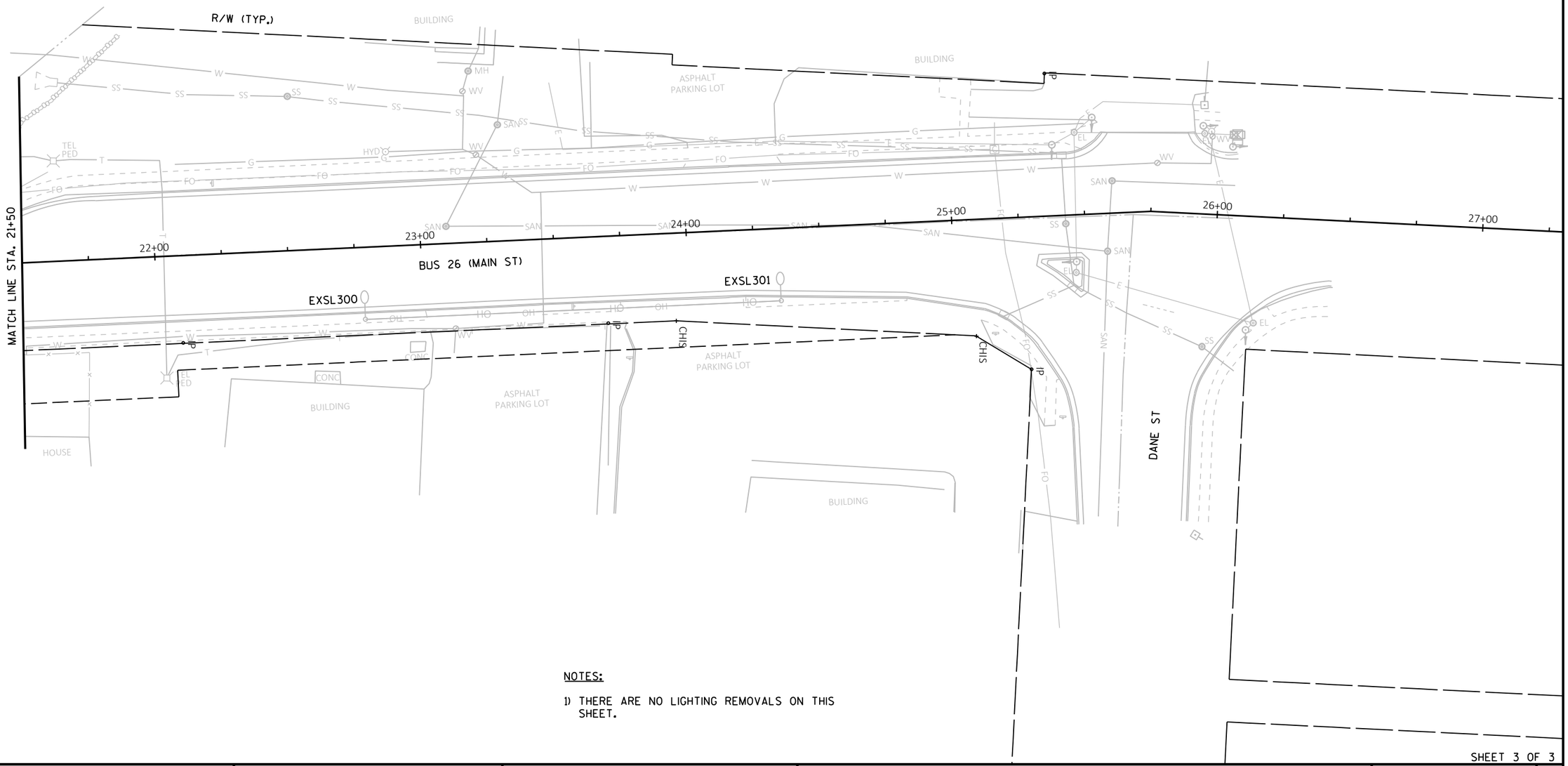

NOTES:

1) THERE ARE NO LIGHTING REMOVALS ON THIS SHEET.

SHEET 3 OF 3

PROJECT NO: 3993-01-81	HWY: BUS 26	COUNTY: JEFFERSON	LIGHTING REMOVAL PLAN	SHEET 23	E

LIGHTING PLAN LEGEND:

- PROPOSED OVERHEAD LIGHTING UNIT
- EXISTING LIGHTING UNIT
- DECORATIVE ACORN LIGHTING UNIT
- PULL BOX NON-CONDUCTIVE (24"X42")
- LIGHTING CONDUIT NON METALLIC SCHEDULE 40 PVC UNLESS OTHERWISE NOTED
- EXISTING CONDUIT

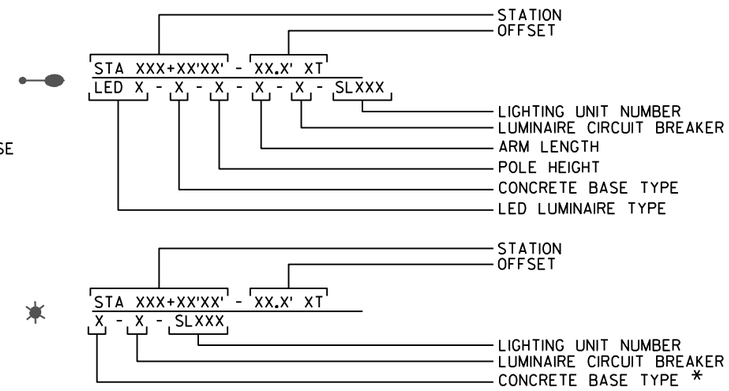

* STR = STRUCTURE MOUNTED LIGHTING UNIT

CONDUIT/CONDUCTOR LEGEND

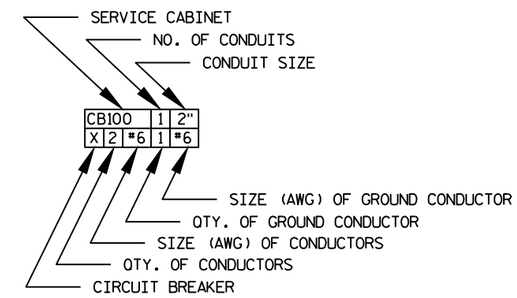

PWO = PULL WIRE ONLY

NEU = NEUTRAL

CONDUCTOR COLOR LEGEND

EXISTING CB100

LIGHTING CONDUCTORS
CKT 3 - BLACK CKT 4 - BLACK
240V PHASE TO PHASE

CABINET LOCATED SOUTH OF THE PROJECT AREA AT THE INTERSECTION OF S. MAIN ST AND COLLINS RD.

GENERAL STREET LIGHTING NOTES:

1) THE ENGINEER SHALL APPROVE THE FINAL LOCATION FOR ALL CONCRETE BASES IN THE FIELD PRIOR TO CONSTRUCTION.

2) PITCH ALL CONDUITS TOWARD PULLBOXES. INSTALL A 2" DRAIN DUCT TO DITCH OR STORM SEWER AS REQUIRED FOR DRAINAGE. THIS 2" DRAIN DUCT IS INCIDENTAL TO THE PULL BOX BID ITEM. DRAIN DUCT IS NOT SHOWN. DO NOT SPLICE IN PULLBOXES.

3) THE LOCATION OF EXISTING AND PROPOSED UTILITIES AS SHOWN ON THE PLANS ARE APPROXIMATE. IN ADDITION, THERE MAY BE OTHER UTILITIES WITHIN THE PROJECT AREA WHICH ARE NOT SHOWN. THE CONTRACTOR SHALL VERIFY THE LOCATIONS OF ALL UTILITIES PRIOR TO CONSTRUCTION.

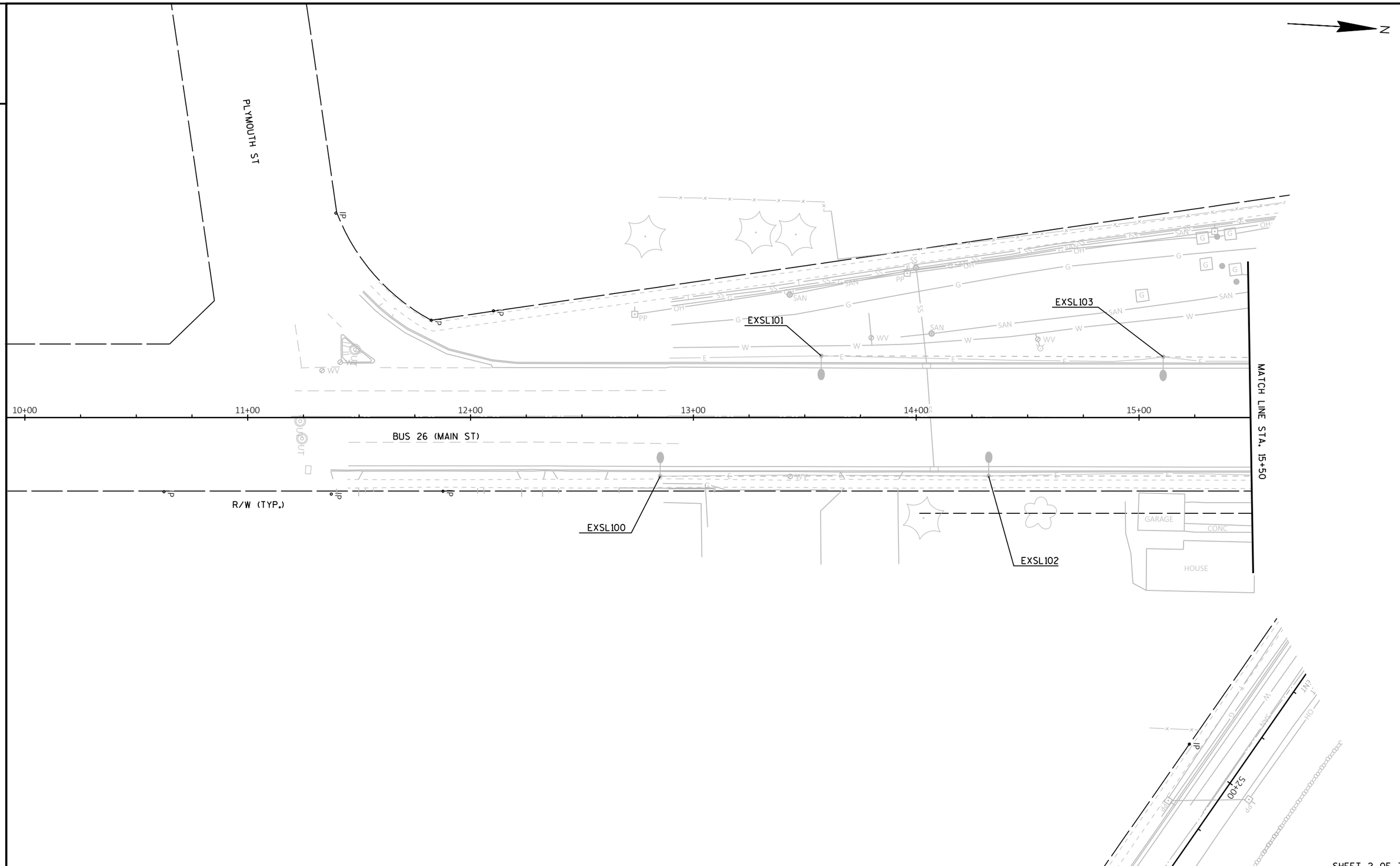

SHEET 2 OF 7

PROJECT NO: 3993-01-81	HWY: BUS 26	COUNTY: JEFFERSON	LIGHTING PLAN	SHEET 25	E

FILE NAME : G:\GREMMER\20049-000 - MAIN STREET BRIDGE LIGHTING - JEFFERSON\CIVIL 3D\SHEETSPLAN\023601_LP.DWG PLOT DATE : 2/24/2022 2:12 PM PLOT BY : KL ENGINEERING PLOT NAME : PLOT SCALE : 1 IN:40 FT

WISDOT/CADDS SHEET 42

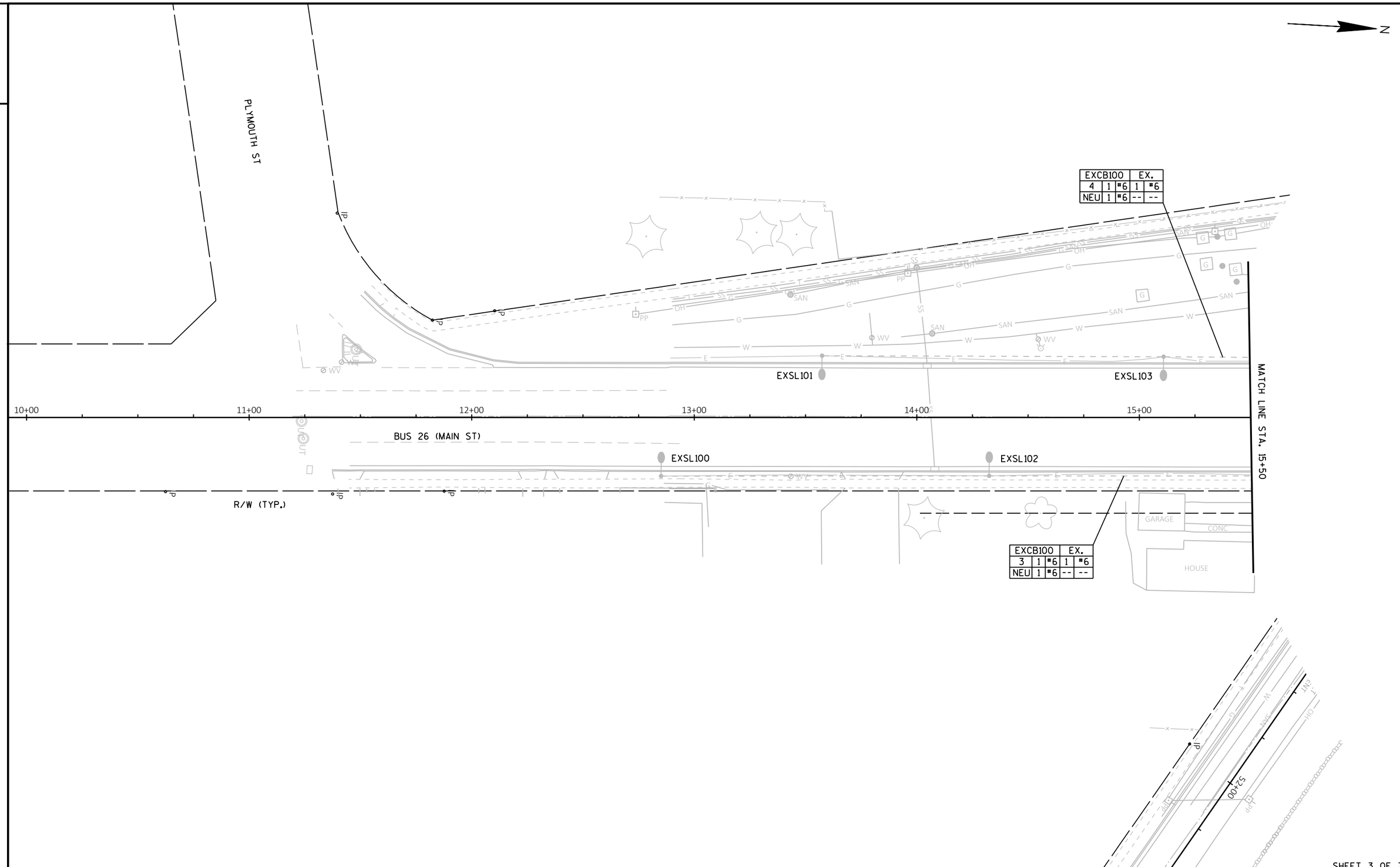

SHEET 3 OF 7

PROJECT NO: 3993-01-81	HWY: BUS 26	COUNTY: JEFFERSON	LIGHTING PLAN - WIRING SHEETS	SHEET 26	E

FILE NAME : G:\GREMMER\20049-000 - MAIN STREET BRIDGE LIGHTING - JEFFERSON\CIVIL 3D\SHEETSPLAN\023601_LP-A.DWG PLOT DATE : 2/24/2022 2:05 PM PLOT BY : KL ENGINEERING PLOT NAME : PLOT SCALE : 1 IN:40 FT

WISDOT/CADDS SHEET 42

2

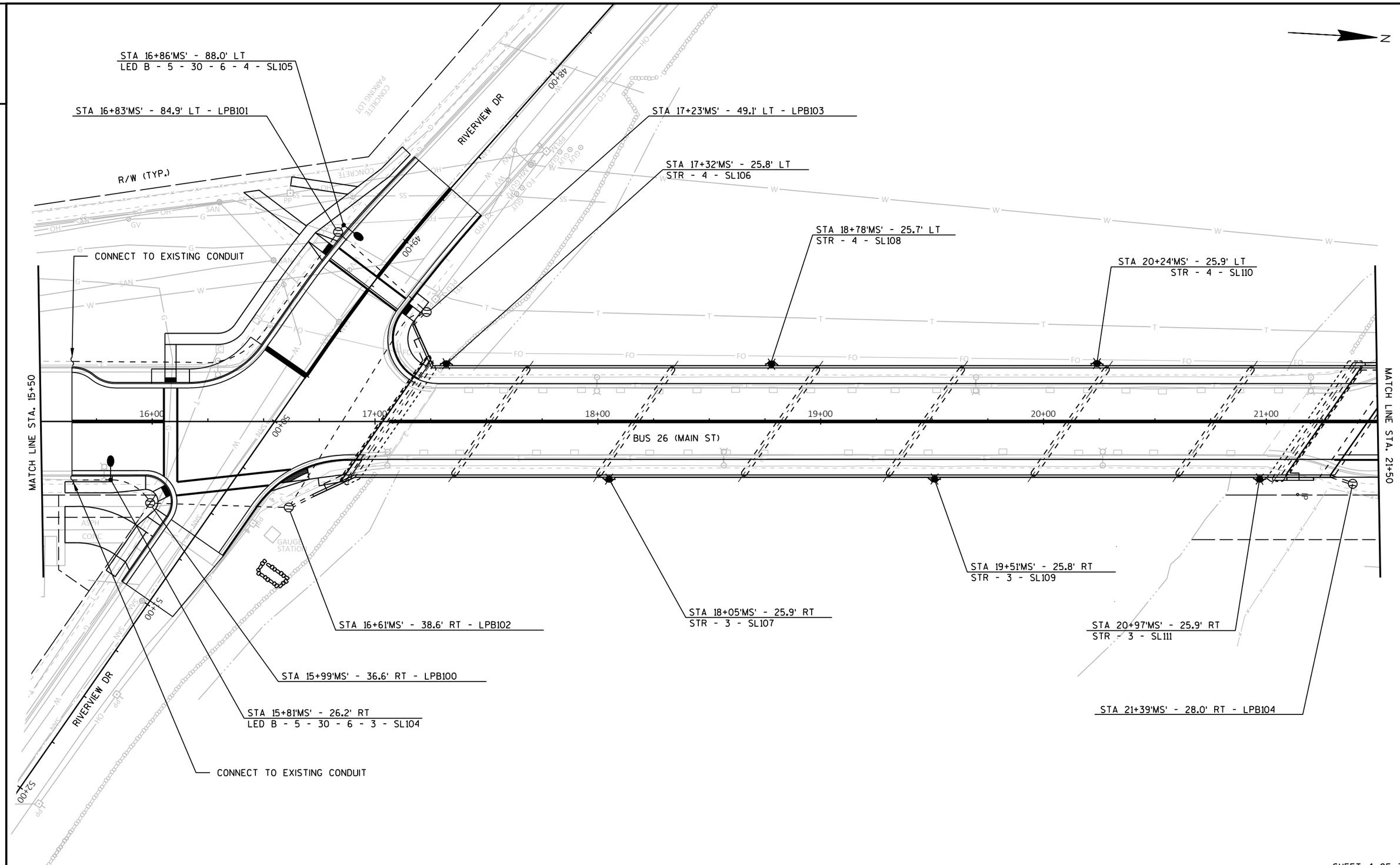

2

SHEET 4 OF 7

PROJECT NO: 3993-01-81	HWY: BUS 26	COUNTY: JEFFERSON	LIGHTING PLAN	SHEET 27	E

FILE NAME : G:\GREMMER\20049-000 - MAIN STREET BRIDGE LIGHTING - JEFFERSON\CIVIL 3D\SHEETSPLAN\023601_LP.DWG PLOT DATE : 2/24/2022 2:12 PM PLOT BY : KL ENGINEERING PLOT NAME : PLOT SCALE : 1 IN:40 FT

WISDOT/CADDS SHEET 42

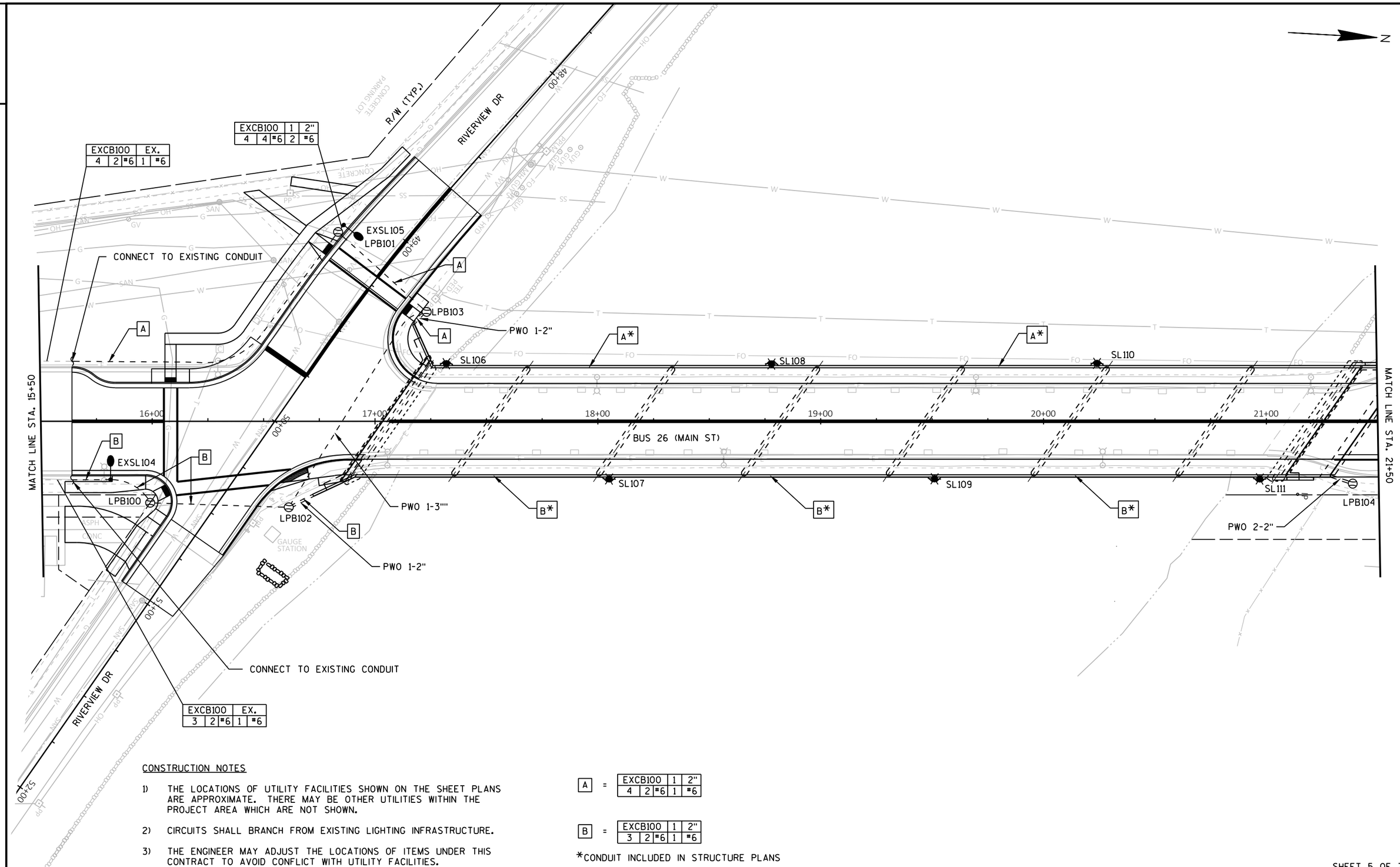

CONSTRUCTION NOTES

1) THE LOCATIONS OF UTILITY FACILITIES SHOWN ON THE SHEET PLANS ARE APPROXIMATE. THERE MAY BE OTHER UTILITIES WITHIN THE PROJECT AREA WHICH ARE NOT SHOWN.

2) CIRCUITS SHALL BRANCH FROM EXISTING LIGHTING INFRASTRUCTURE.

3) THE ENGINEER MAY ADJUST THE LOCATIONS OF ITEMS UNDER THIS CONTRACT TO AVOID CONFLICT WITH UTILITY FACILITIES.

A = EXCB100 | 1 | 2"
4 | 2 | #6 | 1 | #6

B = EXCB100 | 1 | 2"
3 | 2 | #6 | 1 | #6

*CONDUIT INCLUDED IN STRUCTURE PLANS

SHEET 5 OF 7

PROJECT NO: 3993-01-81	HWY: BUS 26	COUNTY: JEFFERSON	LIGHTING PLAN - WIRING SHEETS	SHEET 28	E

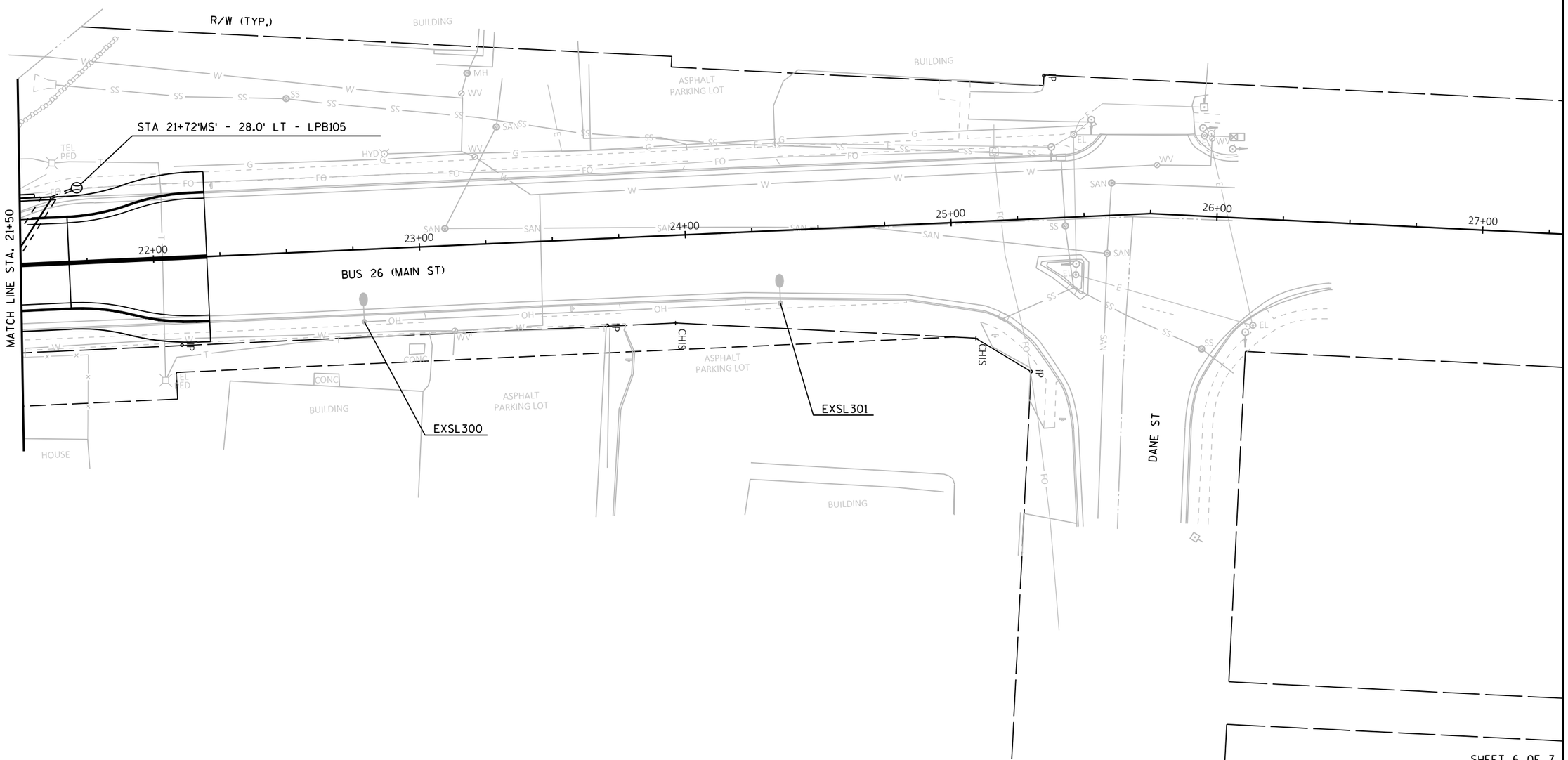

SHEET 6 OF 7

PROJECT NO: 3993-01-81	HWY: BUS 26	COUNTY: JEFFERSON	LIGHTING PLAN	SHEET 29	E

FILE NAME : G:\GREMMER\20049-000 - MAIN STREET BRIDGE LIGHTING - JEFFERSON\CIVIL 3D\SHEETSPLAN\023601_LP.DWG PLOT DATE : 2/24/2022 2:12 PM PLOT BY : KL ENGINEERING PLOT NAME : PLOT SCALE : 1 IN:40 FT

WISDOT/CADDS SHEET 42

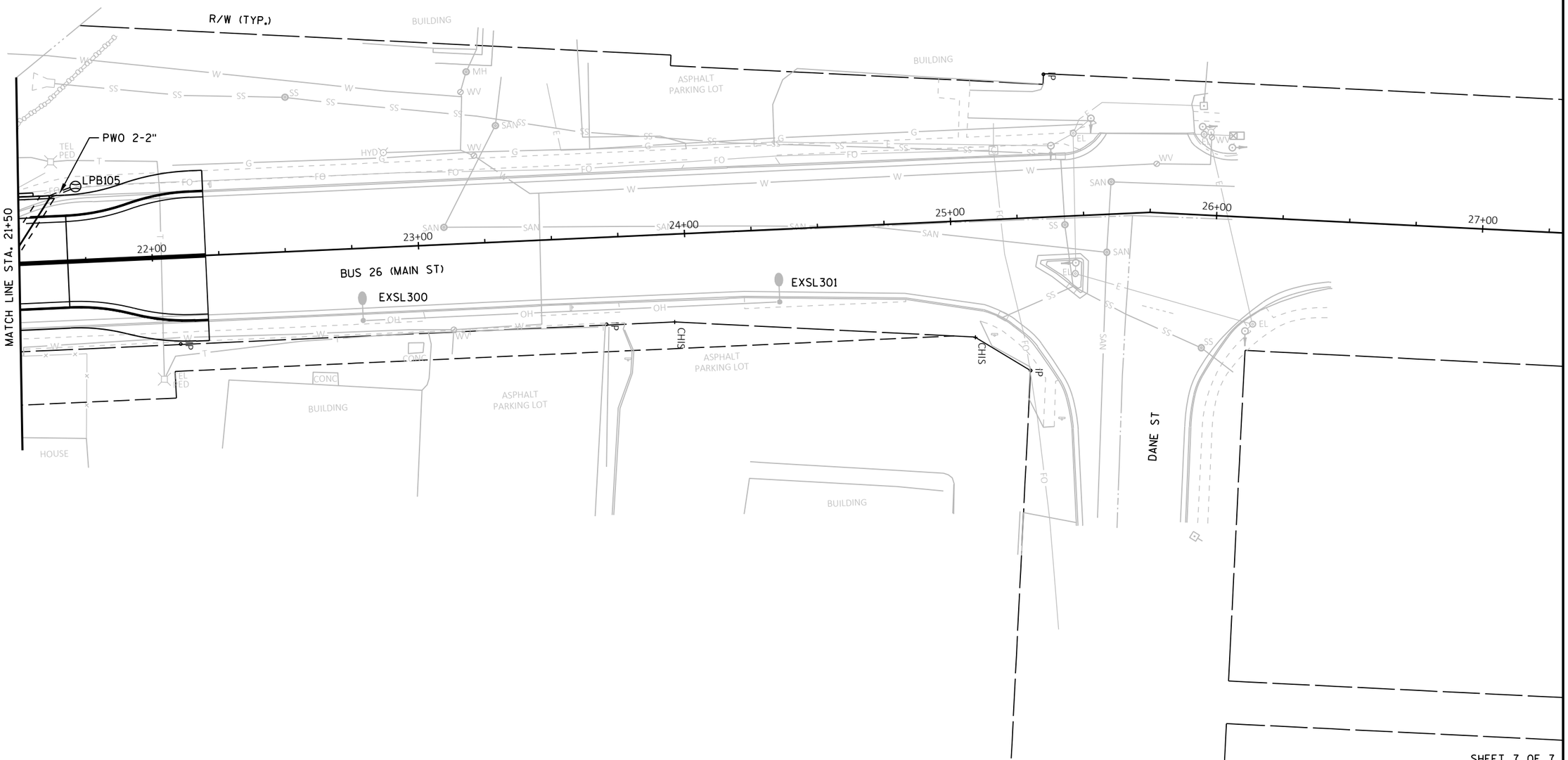

SHEET 7 OF 7

PROJECT NO: 3993-01-81	HWY: BUS 26	COUNTY: JEFFERSON	LIGHTING PLAN - WIRING SHEETS	SHEET 30	E

FILE NAME : G:\GREMMER\20049-000 - MAIN STREET BRIDGE LIGHTING - JEFFERSON\CIVIL 3D\SHEETSPLAN\023601_LP-A.DWG PLOT DATE : 2/24/2022 2:05 PM PLOT BY : KL ENGINEERING PLOT NAME : PLOT SCALE : 1 IN:40 FT

WISDOT/CADDS SHEET 42

2

LEGEND

- SIGN LOCATION
- TYPE II BARRICADE WITH SIGN
- TYPE III BARRICADE
- TYPE III BARRICADE WITH SIGN
- WORK AREA

GENERAL NOTES - DETOUR

SEE S.D.D. "BARRICADES AND SIGNS FOR MAINLINE CLOSURES", "BARRICADES AND SIGNS FOR VARIOUS CLOSURES", "BARRICADES AND SIGNS FOR SIDEROAD CLOSURES", AND "TRAFFIC CONTROL PEDESTRIAN ACCOMMODATION" FOR GENERAL NOTES AND SIGN SPACING REQUIREMENTS.

DRAWINGS SHOW TRAFFIC CONTROL FOR A TYPICAL SITUATION. ADDITIONAL TRAFFIC CONTROL DEVICES MAY BE REQUIRED AND/OR LAYOUT DETAILS MODIFIED DEPENDING ON FIELD CONDITIONS AND THE CONTRACTOR'S METHODS OR SEQUENCE OF OPERATION.

MAP SHOWN IS NOT TO SCALE.

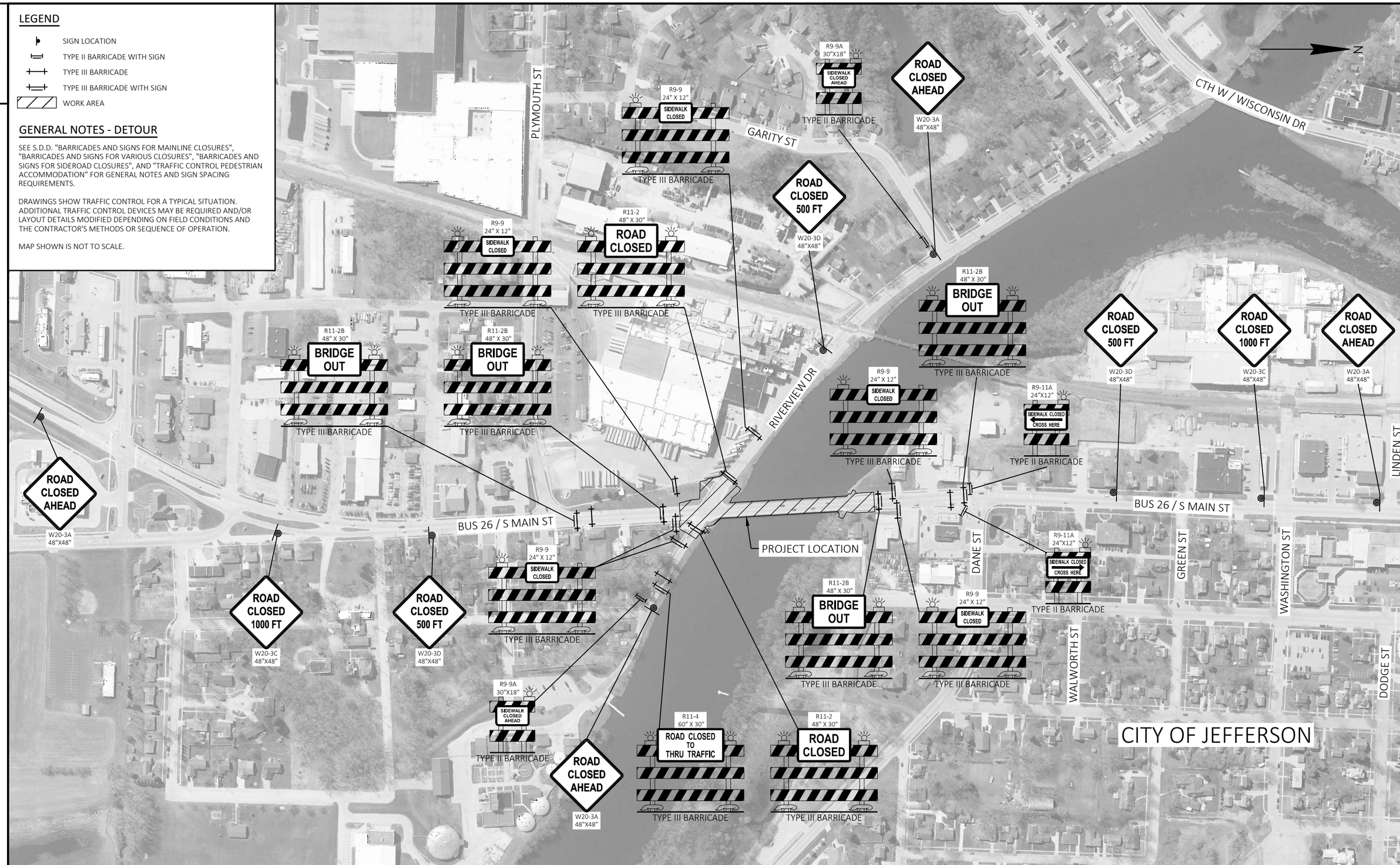

PROJECT NO: 3993-01-81	HWY: BUS 26	COUNTY: JEFFERSON	TRAFFIC CONTROL	SHEET 31	E

FILE NAME : S:\CURRPROJ\JEFFERSON\MAIN STREET BRIDGE\CIVIL3D\39930101\SHEETSPLAN\39930181-025100-TC.DWG
LAYOUT NAME - Sheet-01
PLOT DATE : 1/24/2022 1:04 PM PLOT BY : AARON SARAUER PLOT NAME : PLOT SCALE : 1 IN:300 FT
WISDOT/CADDS SHEET 42

2

LEGEND

- SIGN LOCATION
- TYPE III BARRICADE WITH SIGN
- MB PORTABLE CHANGEABLE MESSAGE BOARD
- PROPOSED DETOUR ROUTE
- WORK AREA

GENERAL NOTES - DETOUR

SEE S.D.D. "BARRICADES AND SIGNS FOR MAINLINE CLOSURES", "BARRICADES AND SIGNS FOR VARIOUS CLOSURES", "DETOUR SIGNING FOR MAINLINE CLOSURES", AND "BARRICADES AND SIGNS FOR SIDEROAD CLOSURES" FOR GENERAL NOTES AND SIGN SPACING REQUIREMENTS.

DRAWINGS SHOW TRAFFIC CONTROL FOR A TYPICAL SITUATION. ADDITIONAL TRAFFIC CONTROL DEVICES MAY BE REQUIRED AND/OR LAYOUT DETAILS MODIFIED DEPENDING ON FIELD CONDITIONS AND THE CONTRACTOR'S METHODS OR SEQUENCE OF OPERATION.

ALL EXISTING OR TEMPORARY SIGN MESSAGES THAT CONFLICT WITH THE DETOUR SHALL BE COVERED OR REMOVED.

MAP SHOWN IS NOT TO SCALE.

PCMS MESSAGES

	7 DAYS PRIOR TO CONSTRUCTION START	
LOCATION	PHASE 1 (2 SEC.)	PHASE 2 (2 SEC.)
MAIN ST / BUS 26 NB	BRIDGE CLOSED BEGINS	DATE XX
MAIN ST / BUS 26 SB	BRIDGE CLOSED BEGINS	DATE XX

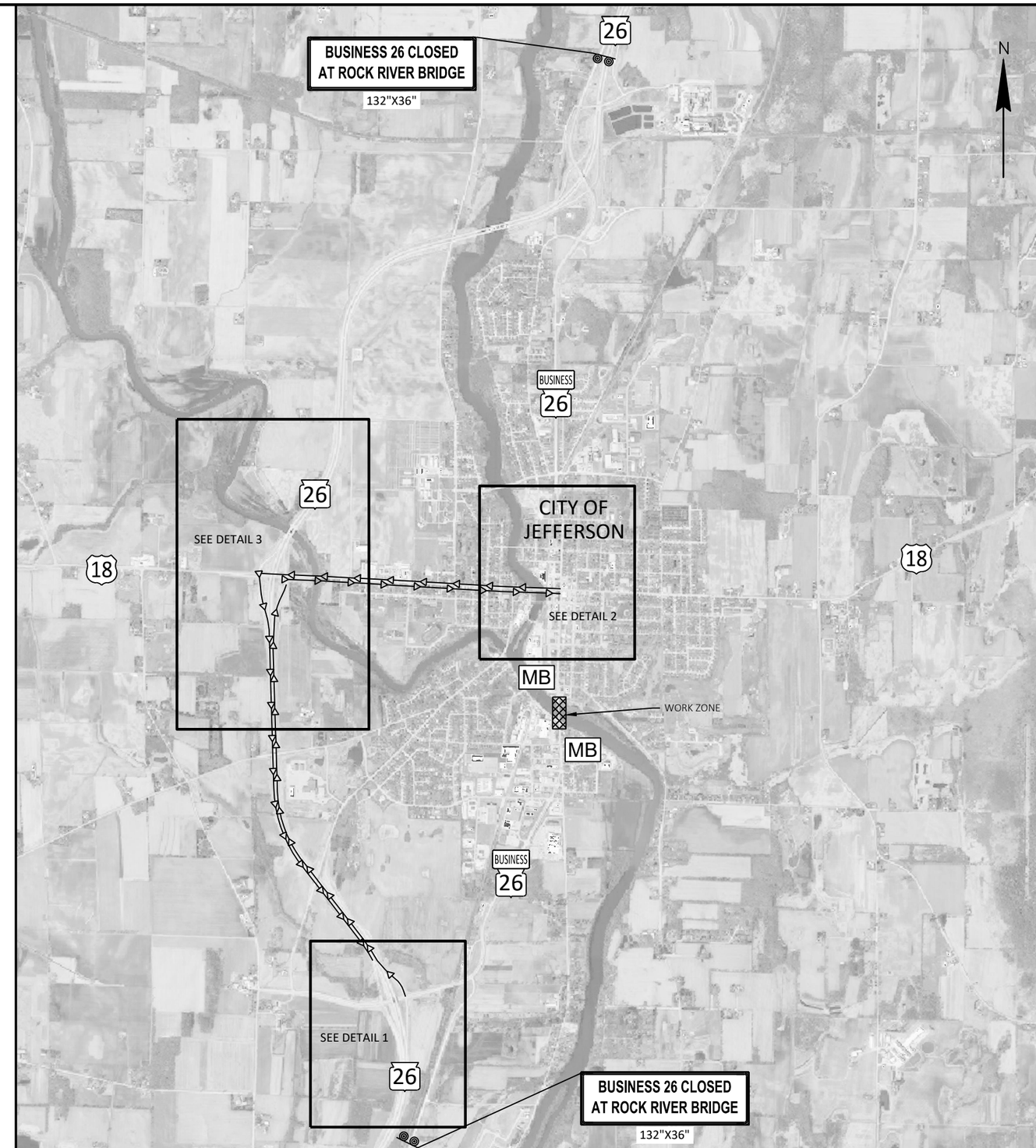

2

PROJECT NO: 3993-01-81	HWY: BUS 26	COUNTY: JEFFERSON	DETOUR - OVERVIEW	SHEET 32	E

FILE NAME : S:\CURRPROJ\JEFFERSON\MAIN STREET BRIDGE\CIVIL3D\39930101\SHEETSPLAN\39930181-027000-DT.DWG
LAYOUT NAME - Sheet-01
PLOT DATE : 1/18/2022 10:40 AM PLOT BY : AARON SARAUER PLOT NAME : PLOT SCALE : 1 IN:3000 FT
WISDOT/CADDS SHEET 42

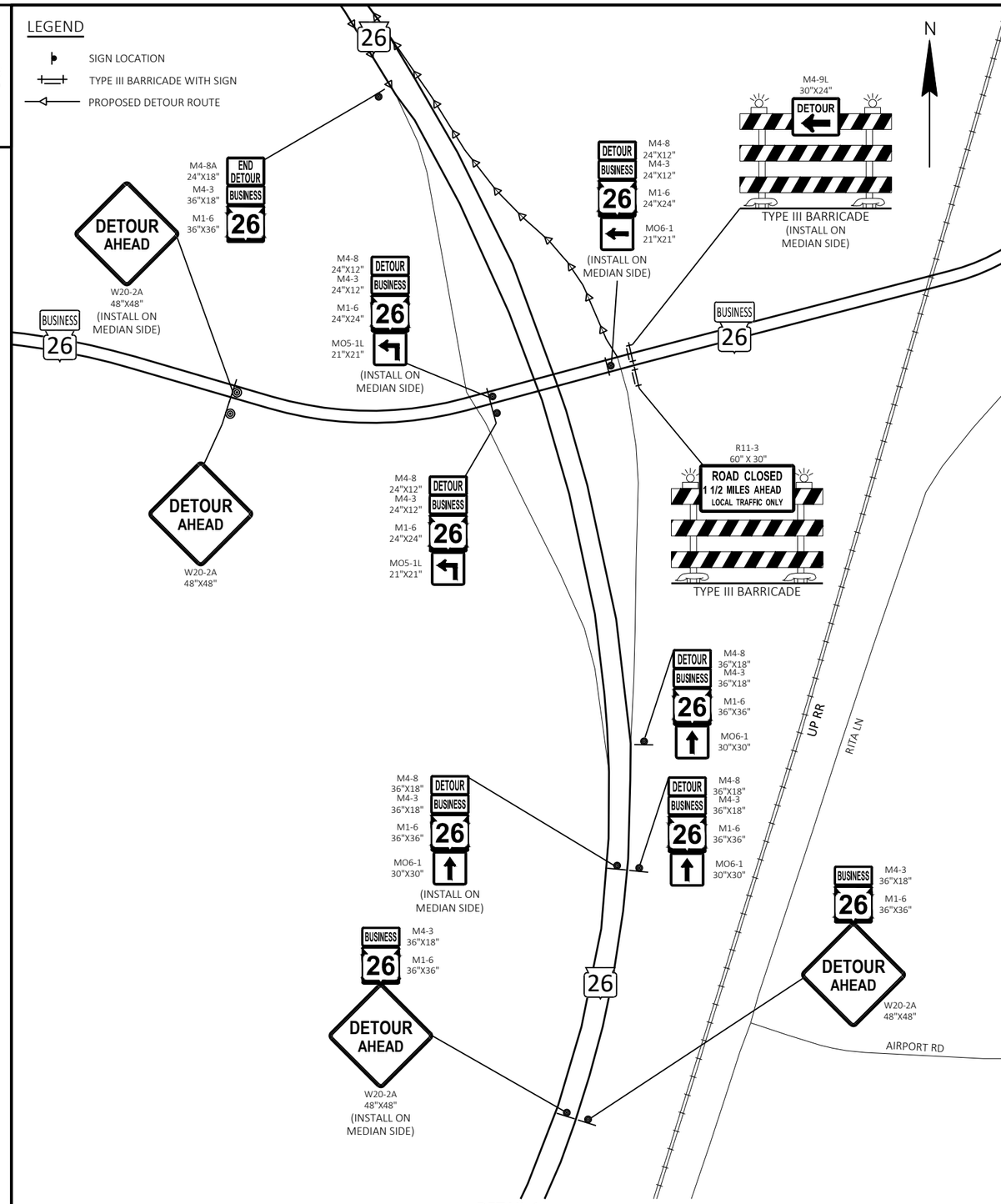

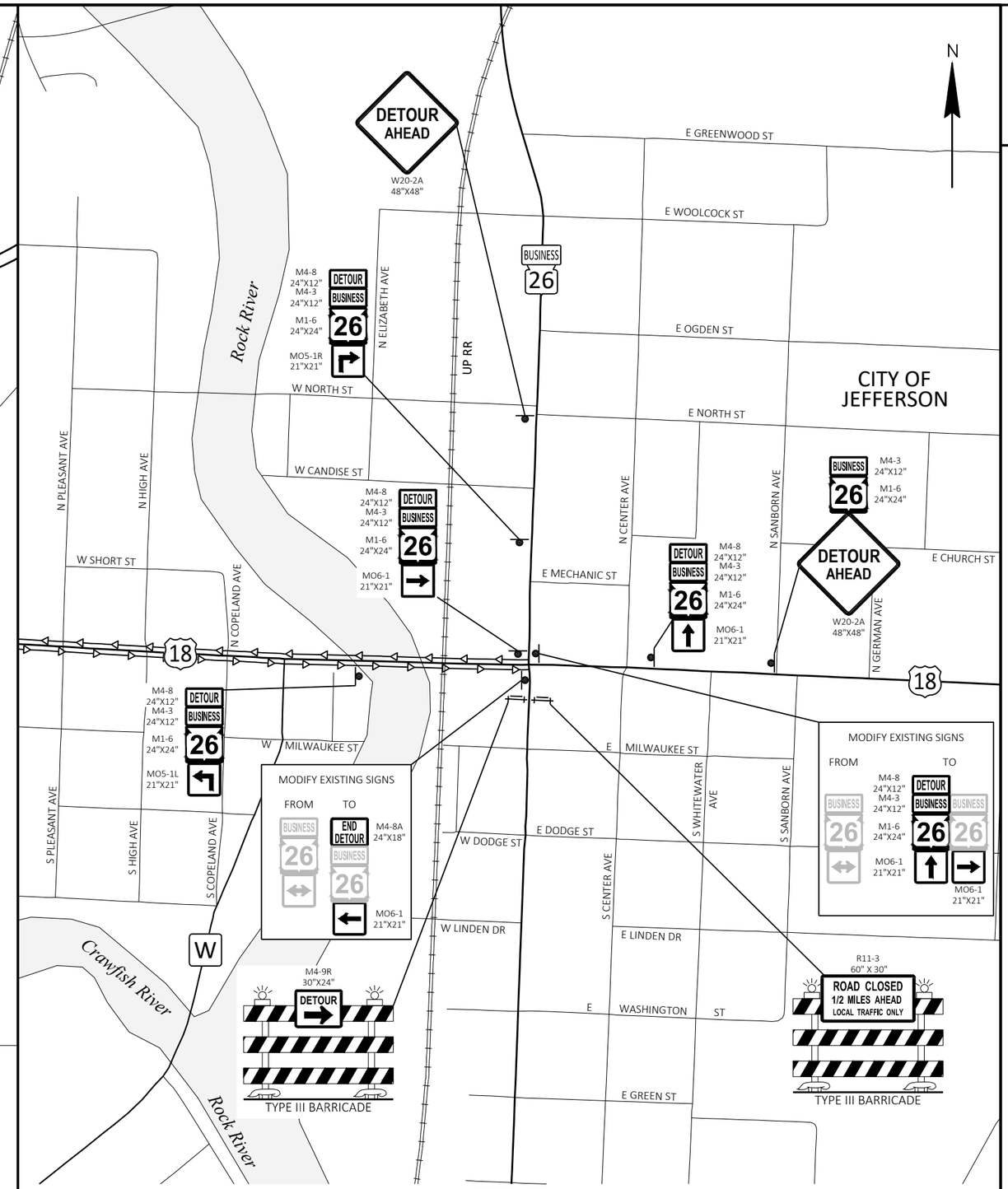

PROJECT NO: 3993-01-81	HWY: BUS 26	COUNTY: JEFFERSON	DETOUR ROUTE - DETAILS 1 & 2	SHEET 33	E

FILE NAME : S:\CURRPROJ\JEFFERSON\MAIN STREET BRIDGE\CIVIL3D\39930101\SHEETSPLAN\39930181-027001-DT.DWG
LAYOUT NAME - Sheet-01
PLOT DATE : 1/18/2022 10:40 AM PLOT BY : AARON SARAUER PLOT NAME : PLOT SCALE : 1 IN:500 FT

LEGEND

SIGN LOCATION

TYPE III BARRICADE WITH SIGN

PROPOSED DETOUR ROUTE

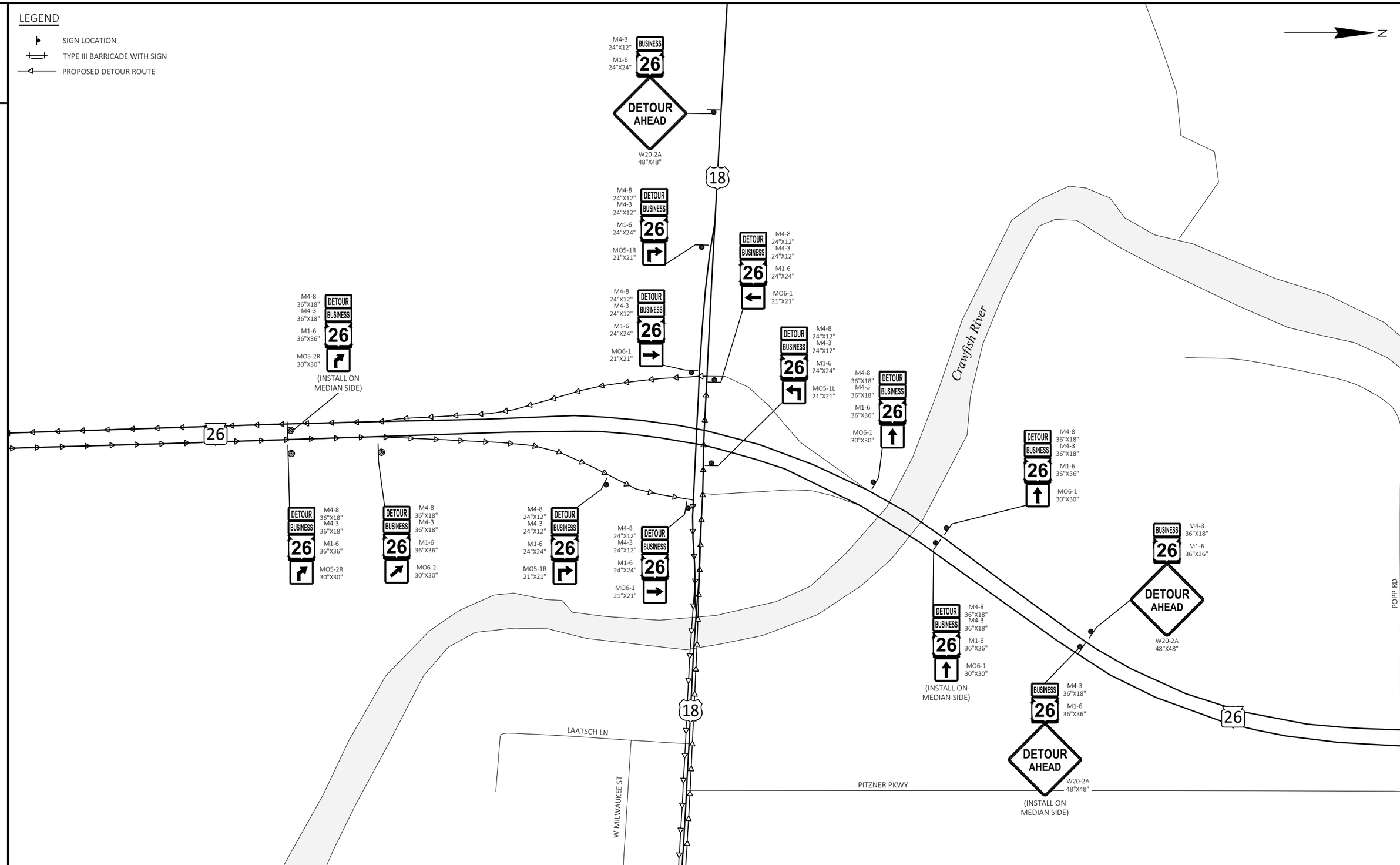

2

LEGEND

- SIGN LOCATION
- TYPE II BARRICADE WITH SIGN AND ONE WARNING LIGHT TYPE A
- MB — PORTABLE CHANGEABLE MESSAGE BOARD
- PROPOSED DETOUR ROUTE
- WORK AREA
- (A) — TEMPORARY CROSSWAK ACROSS MAIN STREET OUTSIDE CONSTRUCTION LIMITS.

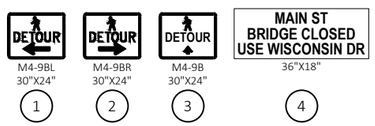

GENERAL NOTES - PEDESTRIAN DETOUR

REFER TO SDD "TRAFFIC CONTROL, PEDESTRIAN ACCOMMODATION" FOR DETAILS.

TEMPORARY CROSSWALKS SHALL BE MOVED AS NEEDED TO PROVIDE CONTINUOUS PEDESTRIAN ACCESS THROUGHOUT THE PROJECT.

MAINTAIN EXISTING SIDEWALK ALONG RIVERVIEW DRIVE AS LONG AS POSSIBLE.

POST MOUNTED SIGNS LOCATED NEAR OR ADJACENT TO THE SIDEWALK SHALL HAVE A 7-FT MINIMUM CLEARANCE FROM THE BOTTOM OF THE SIGN TO THE EXISTING OR NEW SIDEWALK.

FURNISH AND INSTALL TEMPORARY CURB RAMPS WHEN EXISTING OR FINISHED CURB RAMPS ARE NOT IN PLACE.

DRAWINGS SHOW TRAFFIC CONTROL FOR A TYPICAL SITUATION. ADDITIONAL TRAFFIC CONTROL DEVICES MAY BE REQUIRED AND/OR LAYOUT DETAILS MODIFIED DEPENDING ON FIELD CONDITIONS AND THE CONTRACTOR'S METHODS OR SEQUENCE OF OPERATION.

MAP SHOWN IS NOT TO SCALE.

2

PROJECT NO: 3993-01-81	HWY: BUS 26	COUNTY: JEFFERSON	PEDESTRIAN DETOUR	SHEET 35	E

FILE NAME : S:\CURRPROJ\JEFFERSON\MAIN STREET BRIDGE\CIVIL3D\39930101\SHEETSPLAN\39930181-027011-DT.DWG
LAYOUT NAME - Sheet-01
PLOT DATE : 1/18/2022 10:41 AM PLOT BY : AARON SARAUER PLOT NAME : PLOT SCALE : NTS

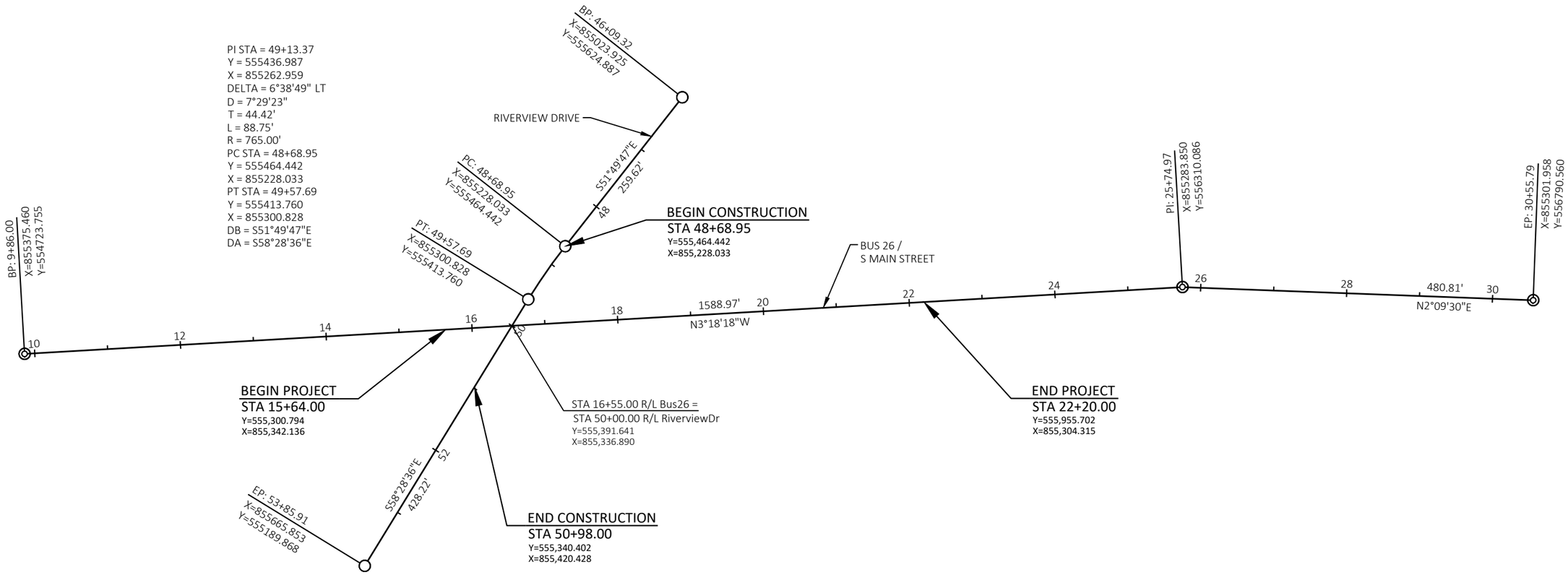

PROJECT NO: 3993-01-81	HWY: BUS 26	COUNTY: JEFFERSON	ALIGNMENT DIAGRAM	SHEET 36	E

FILE NAME : S:\CURRPROJ\JEFFERSON\MAIN STREET BRIDGE\CIVIL3D\39930101\SHEETSPLAN\39930181-027201-AD.DWG
LAYOUT NAME - Sheet-01
PLOT DATE : 1/18/2022 10:41 AM PLOT BY : AARON SARAUER PLOT NAME : PLOT SCALE : 1 IN:150 FT

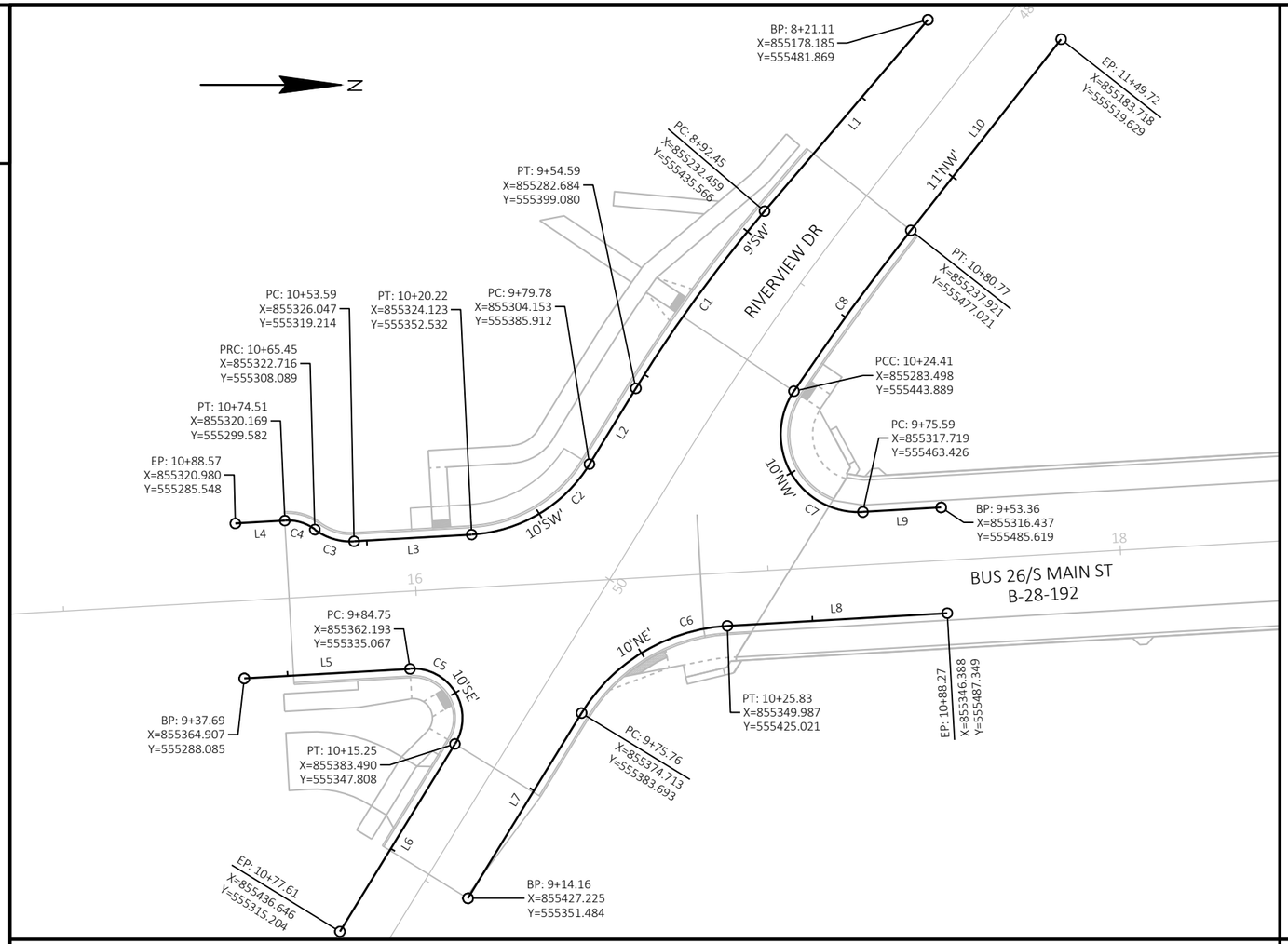

CR-RIVERVIEW-SW										
SEGMENT NUMBER	START STATION	START NORTHING	START EASTING	END STATION	END NORTHING	END EASTING	LENGTH	RADIUS	LINE/CHORD BEARING	DELTA ANGLE
L1	8+21.11	555481.869	855178.185	8+92.45	555435.566	855232.459	71.34		S49° 31' 51"E	
C1	PI 9+23.59	PI 555415.358	PI 855256.144				62.14	398.00	S54° 00' 14"E	8° 56' 45"
L2	9+54.59	555399.080	855282.684	9+79.78	555385.912	855304.153	25.19		S58° 28' 36"E	
C2	PI 10+01.72	PI 555374.439	PI 855322.858				40.44	42.00	S30° 53' 27"E	55° 10' 18"
L3	10+20.22	555352.532	855324.123	10+53.59	555319.214	855326.047	33.37		S3° 18' 18"E	
C3	PI 10+59.77	PI 555313.047	PI 855326.403				11.85	17.00	S16° 40' 02"W	39° 56' 40"
C4	PI 10+70.17	PI 555304.298	PI 855319.897				9.06	13.00	S16° 40' 02"W	39° 56' 40"
L4	10+74.51	555299.582	855320.169	10+88.57	555285.548	855320.980	14.06		S3° 18' 18"E	

CR-RIVERVIEW-SE										
SEGMENT NUMBER	START STATION	START NORTHING	START EASTING	END STATION	END NORTHING	END EASTING	LENGTH	RADIUS	LINE/CHORD BEARING	DELTA ANGLE
L5	9+37.69	555288.085	855364.907	9+84.75	555335.067	855362.193	47.06		N3° 18' 18"W	
C5	PI 10+11.55	PI 555361.818	PI 855360.649				30.50	14.00	N59° 06' 33"E	124° 49' 42"
L6	10+15.25	555347.808	855383.490	10+77.61	555315.204	855436.646	62.36		S58° 28' 36"E	

CR-RIVERVIEW-NW										
SEGMENT NUMBER	START STATION	START NORTHING	START EASTING	END STATION	END NORTHING	END EASTING	LENGTH	RADIUS	LINE/CHORD BEARING	DELTA ANGLE
L9	9+53.36	555485.619	855316.437	9+75.59	555463.426	855317.719	22.23		S3° 18' 18"E	
C7	PI 10+19.87	PI 555419.216	PI 855320.272				48.83	22.00	S60° 16' 37"W	127° 09' 51"
C8	PI 10+52.61	PI 555459.597	PI 855260.086				56.36	749.00	N53° 59' 07"W	4° 18' 41"
L10	10+80.77	555477.021	855237.921	11+49.72	555519.629	855183.718	68.95		N51° 49' 47"W	

CR-RIVERVIEW-NE										
SEGMENT NUMBER	START STATION	START NORTHING	START EASTING	END STATION	END NORTHING	END EASTING	LENGTH	RADIUS	LINE/CHORD BEARING	DELTA ANGLE
L7	9+14.16	555351.484	855427.225	9+75.76	555383.693	855374.713	61.60		N58° 28' 36"W	
C6	PI 10+02.93	PI 555397.898	PI 855351.553				50.07	52.00	N30° 53' 27"W	55° 10' 18"
L8	10+25.83	555425.021	855349.987	10+88.27	555487.349	855346.388	62.43		N3° 18' 18"W	

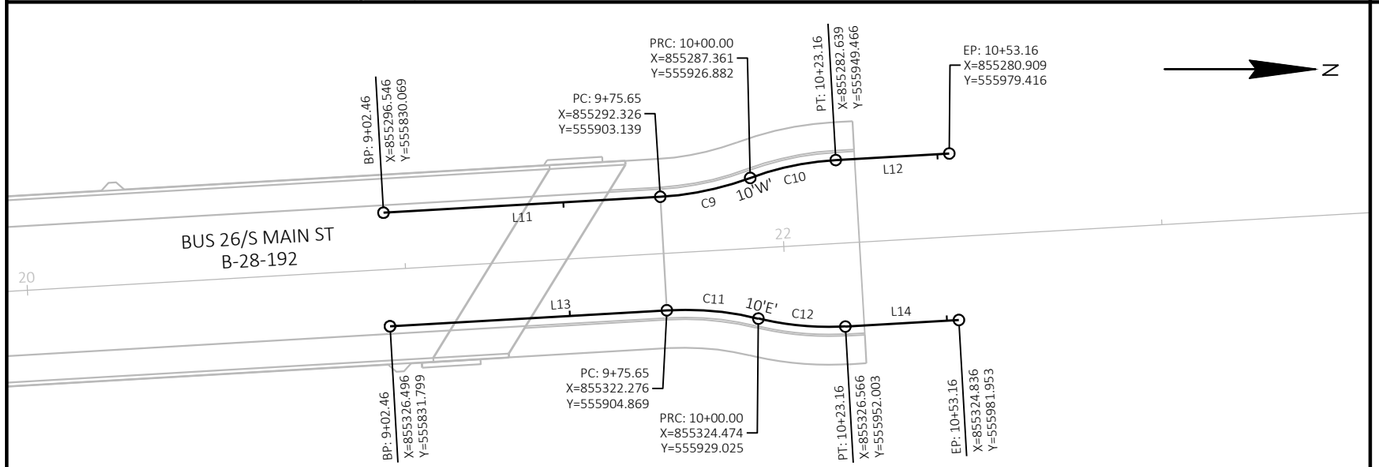

CR_BUS26-WEST										
SEGMENT NUMBER	START STATION	START NORTHING	START EASTING	END STATION	END NORTHING	END EASTING	LENGTH	RADIUS	LINE/CHORD BEARING	DELTA ANGLE
L11	9+02.46	555830.069	855296.546	9+75.65	555903.139	855292.326	73.19		N3° 18' 18"W	
C9	PI 9+87.92	PI 555915.382	PI 855291.619				24.35	82.00	N11° 48' 37"W	17° 00' 39"
C10	PI 10+11.66	PI 555937.821	PI 855283.311				23.16	78.00	N11° 48' 38"W	17° 00' 39"
L12	10+23.16	555949.466	855282.639	10+53.16	555979.416	855280.909	30.00		N3° 18' 18"W	

CR_BUS26-EAST										
SEGMENT NUMBER	START STATION	START NORTHING	START EASTING	END STATION	END NORTHING	END EASTING	LENGTH	RADIUS	LINE/CHORD BEARING	DELTA ANGLE
L13	9+02.46	555831.799	855326.496	9+75.65	555904.869	855322.276	73.19		N3° 18' 18"W	
C11	PI 9+87.92	PI 555917.111	PI 855321.569				24.35	82.00	N5° 12' 01"E	17° 00' 39"
C12	PI 10+11.66	PI 555940.358	PI 855327.238				23.16	78.00	N5° 12' 01"E	17° 00' 39"
L14	10+23.16	555952.003	855326.566	10+53.16	555981.953	855324.836	30.00		N3° 18' 18"W	

3993-01-81

Line	Item	Item Description	Unit	Total	Qty
0002	203.0211.S	Abatement of Asbestos Containing Material (structure) 01. B-28-11	EACH	1.000	1.000
0004	203.0260	Removing Structure Over Waterway Minimal Debris (structure) 01. B-28-11	EACH	1.000	1.000
0006	204.0100	Removing Concrete Pavement	SY	1,750.000	1,750.000
0008	204.0150	Removing Curb & Gutter	LF	155.000	155.000
0010	204.0155	Removing Concrete Sidewalk	SY	325.000	325.000
0012	204.0195	Removing Concrete Bases	EACH	2.000	2.000
0014	204.9090.S	Removing (item description) 01. Removing Electrical Conductors From Existing Conduit	LF	1,000.000	1,000.000
0016	205.0100	Excavation Common	CY	853.000	853.000
0018	206.1000	Excavation for Structures Bridges (structure) 01. B-28-192	LS	1.000	1.000
0020	206.5000	Cofferdams (structure) 01. B-28-192	LS	1.000	1.000
0022	210.1500	Backfill Structure Type A	TON	535.000	535.000
0024	213.0100	Finishing Roadway (project) 01. 3993-01-81	EACH	1.000	1.000
0026	305.0110	Base Aggregate Dense 3/4-Inch	TON	125.000	125.000
0028	305.0120	Base Aggregate Dense 1 1/4-Inch	TON	1,055.000	1,055.000
0030	405.0100	Coloring Concrete WisDOT Red	CY	11.000	11.000
0032	415.0090	Concrete Pavement 9-Inch	SY	1,110.000	1,110.000
0034	415.0410	Concrete Pavement Approach Slab	SY	180.000	180.000
0036	416.0160	Concrete Driveway 6-Inch	SY	17.000	17.000
0038	416.0512	Concrete Truck Apron 12-Inch	SY	35.000	35.000
0040	416.0610	Drilled Tie Bars	EACH	21.000	21.000
0042	416.0620	Drilled Dowel Bars	EACH	60.000	60.000
0044	455.0605	Tack Coat	GAL	18.000	18.000
0046	465.0105	Asphaltic Surface	TON	80.000	80.000
0048	465.0120	Asphaltic Surface Driveways and Field Entrances	TON	9.000	9.000
0050	501.1000.S	Ice Hot Weather Concreting	LB	19,785.000	19,785.000
0052	502.0100	Concrete Masonry Bridges	CY	2,638.000	2,638.000
0054	502.2000	Compression Joint Sealer Preformed Elastomeric (width) 01. 3 1/2-Inch	LF	119.000	119.000
0056	502.3200	Protective Surface Treatment	SY	2,405.000	2,405.000
0058	502.3210	Pigmented Surface Sealer	SY	362.000	362.000
0060	502.9000.S	Underwater Substructure Inspection (Structure) 01. B-28-192	EACH	6.000	6.000
0062	505.0400	Bar Steel Reinforcement HS Structures	LB	36,480.000	36,480.000
0064	505.0600	Bar Steel Reinforcement HS Coated Structures	LB	436,020.000	436,020.000
0066	505.0800.S	Bar Steel Reinforcement HS Stainless Structures	LB	230.000	230.000
0068	513.7006	Railing Steel Type C1	LF	873.000	873.000
0070	513.8006	Railing Steel Pedestrian Type C1	LF	31.000	31.000
0072	516.0500	Rubberized Membrane Waterproofing	SY	30.000	30.000
0074	520.1012	Apron Endwalls for Culvert Pipe 12-Inch	EACH	1.000	1.000
0076	531.8990	Anchor Assemblies Poles on Structures	EACH	6.000	6.000
0078	550.2126	Piling CIP Concrete 12 3/4 X 0.375-Inch	LF	7,170.000	7,170.000
0080	601.0409	Concrete Curb & Gutter 30-Inch Type A	LF	475.000	475.000
0082	601.0411	Concrete Curb & Gutter 30-Inch Type D	LF	151.000	151.000
0084	602.0410	Concrete Sidewalk 5-Inch	SF	2,520.000	2,520.000
0086	602.0415	Concrete Sidewalk 6-Inch	SF	745.000	745.000
0088	602.0515	Curb Ramp Detectable Warning Field Natural Patina	SF	40.000	40.000
0090	602.0615	Curb Ramp Detectable Warning Field Radial Natural Patina	SF	23.000	23.000
0092	606.0200	Riprap Medium	CY	4.000	4.000
0094	606.0300	Riprap Heavy	CY	380.000	380.000
0096	608.3012	Storm Sewer Pipe Class III-A 12-Inch	LF	18.000	18.000
0098	611.0624	Inlet Covers Type H	EACH	1.000	1.000

3993-01-81

Line	Item	Item Description	Unit	Total	Qty
0100	611.3230	Inlets 2x3-FT	EACH	1.000	1.000
0102	612.0406	Pipe Underdrain Wrapped 6-Inch	LF	240.000	240.000
0104	614.0150	Anchor Assemblies for Steel Plate Beam Guard	EACH	2.000	2.000
0106	616.0700.S	Fence Safety	LF	110.000	110.000
0108	619.1000	Mobilization	EACH	1.000	1.000
0110	624.0100	Water	MGAL	14.000	14.000
0112	625.0100	Topsoil	SY	1,260.000	1,260.000
0114	628.1504	Silt Fence	LF	415.000	415.000
0116	628.1520	Silt Fence Maintenance	LF	415.000	415.000
0118	628.1905	Mobilizations Erosion Control	EACH	15.000	15.000
0120	628.1910	Mobilizations Emergency Erosion Control	EACH	10.000	10.000
0122	628.2006	Erosion Mat Urban Class I Type A	SY	1,260.000	1,260.000
0124	628.6005	Turbidity Barriers	SY	340.000	340.000
0126	628.7015	Inlet Protection Type C	EACH	10.000	10.000
0128	628.7570	Rock Bags	EACH	110.000	110.000
0130	629.0210	Fertilizer Type B	CWT	0.500	0.500
0132	630.0140	Seeding Mixture No. 40	LB	23.000	23.000
0134	630.0500	Seed Water	MGAL	29.000	29.000
0136	634.0814	Posts Tubular Steel 2x2-Inch X 14-FT	EACH	3.000	3.000
0138	634.0816	Posts Tubular Steel 2x2-Inch X 16-FT	EACH	1.000	1.000
0140	637.2210	Signs Type II Reflective H	SF	16.860	16.860
0142	638.2102	Moving Signs Type II	EACH	3.000	3.000
0144	638.2602	Removing Signs Type II	EACH	3.000	3.000
0146	638.3000	Removing Small Sign Supports	EACH	2.000	2.000
0148	638.4000	Moving Small Sign Supports	EACH	1.000	1.000
0150	642.5001	Field Office Type B	EACH	1.000	1.000
0152	643.0410	Traffic Control Barricades Type II	DAY	6,716.000	6,716.000
0154	643.0420	Traffic Control Barricades Type III	DAY	12,848.000	12,848.000
0156	643.0705	Traffic Control Warning Lights Type A	DAY	24,820.000	24,820.000
0158	643.0900	Traffic Control Signs	DAY	47,596.000	47,596.000
0160	643.1000	Traffic Control Signs Fixed Message	SF	88.500	88.500
0162	643.1050	Traffic Control Signs PCMS	DAY	14.000	14.000
0164	643.5000	Traffic Control	EACH	1.000	1.000
0166	644.1410	Temporary Pedestrian Surface Asphalt	SF	325.000	325.000
0168	644.1601	Temporary Pedestrian Curb Ramp	DAY	584.000	584.000
0170	645.0111	Geotextile Type DF Schedule A	SY	130.000	130.000
0172	645.0120	Geotextile Type HR	SY	696.000	696.000
0174	646.1020	Marking Line Epoxy 4-Inch	LF	1,310.000	1,310.000
0176	646.6120	Marking Stop Line Epoxy 18-Inch	LF	22.000	22.000
0178	646.7420	Marking Crosswalk Epoxy Transverse Line 6-Inch	LF	251.000	251.000
0180	646.8120	Marking Curb Epoxy	LF	329.000	329.000
0182	649.0150	Temporary Marking Line Removable Tape 4-Inch	LF	88.000	88.000
0184	650.4000	Construction Staking Storm Sewer	EACH	2.000	2.000
0186	650.4500	Construction Staking Subgrade	LF	448.000	448.000
0188	650.5000	Construction Staking Base	LF	93.000	93.000
0190	650.5500	Construction Staking Curb Gutter and Curb & Gutter	LF	151.000	151.000
0192	650.6500	Construction Staking Structure Layout (structure) 01. B-28-192	LS	1.000	1.000
0194	650.7000	Construction Staking Concrete Pavement	LF	355.000	355.000
0196	650.9000	Construction Staking Curb Ramps	EACH	5.000	5.000

3993-01-81

Line	Item	Item Description	Unit	Total	Qty
0198	650.9910	Construction Staking Supplemental Control (project) 01. 3993-01-81	LS	1.000	1.000
0200	650.9920	Construction Staking Slope Stakes	LF	448.000	448.000
0202	652.0125	Conduit Rigid Metallic 2-Inch	LF	55.000	55.000
0204	652.0225	Conduit Rigid Nonmetallic Schedule 40 2-Inch	LF	2,140.000	2,140.000
0206	652.0235	Conduit Rigid Nonmetallic Schedule 40 3-Inch	LF	110.000	110.000
0208	653.0164	Pull Boxes Non-Conductive 24x42-Inch	EACH	6.000	6.000
0210	653.0222	Junction Boxes 18x12x6-Inch	EACH	6.000	6.000
0212	654.0105	Concrete Bases Type 5	EACH	2.000	2.000
0214	655.0610	Electrical Wire Lighting 12 AWG	LF	1,547.000	1,547.000
0216	655.0625	Electrical Wire Lighting 6 AWG	LF	4,410.000	4,410.000
0218	657.0322	Poles Type 5-Aluminum	EACH	2.000	2.000
0220	657.0610	Luminaire Arms Single Member 4 1/2-Inch Clamp 6-FT	EACH	2.000	2.000
0222	659.1120	Luminaires Utility LED B	EACH	2.000	2.000
0224	690.0150	Sawing Asphalt	LF	71.000	71.000
0226	690.0250	Sawing Concrete	LF	193.000	193.000
0228	715.0502	Incentive Strength Concrete Structures	DOL	15,828.000	15,828.000
0230	715.0720	Incentive Compressive Strength Concrete Pavement	DOL	500.000	500.000
0232	ASP.1T0A	On-the-Job Training Apprentice at $5.00/HR	HRS	3,200.000	3,200.000
0234	ASP.1T0G	On-the-Job Training Graduate at $5.00/HR	HRS	2,880.000	2,880.000
0236	SPV.0060	Special 01. Remove and Salvage Lighting Unit	EACH	8.000	8.000
0238	SPV.0060	Special 02. Furnish and Install Decorative Lighting Unit	EACH	6.000	6.000
0240	SPV.0060	Special 03. Adjusting Sanitary Sewer Manhole	EACH	2.000	2.000
0242	SPV.0060	Special 04. Adjusting Water Valve Box	EACH	2.000	2.000
0244	SPV.0090	Special 01. Removing Existing Timber Piling	LF	360.000	360.000
0246	SPV.0180	Special 01. Preparing Topsoil for Lawn Type Turf	SY	1,260.000	1,260.000

3

REMOVING ITEMS

STATION - STATION	LOCATION	204.0100 REMOVING CONCRETE PAVEMENT SY	204.0150 REMOVING CURB & GUTTER LF	204.0155 REMOVING CONCRETE SIDEWALK SY
CATEGORY CODE 0010				
15+64 - 17+17	LT & RT	1,201	155	217
21+09 - 22+20	LT & RT	549	--	108
	TOTALS	**1,750**	**155**	**325**

BASE AGGREGATE DENSE AND WATER ITEMS

STATION - STATION	LOCATION	305.0110 BASE AGGREGATE DENSE 3/4-INCH TON	305.0120* BASE AGGREGATE DENSE 1 1/4-INCH TON	624.0100 WATER MGAL
CATEGORY CODE 0010				
15+64 - 17+06	LT & RT	83	739	11
21+43 - 22+20	LT & RT	42	146	3
PEDESTRIAN ACCOMMODATIONS		--	10	--
	TOTALS	**125**	**895**	**14**

* ADDITIONAL QUANTITIES LISTED ELSEWHERE
BASE AGGREGATE DENSE 3/4-INCH WEIGHT CALCULATIONS BASED ON 2.1 TONS/CY.
BASE AGGREGATE DENSE 1 1/4-INCH WEIGHT CALCULATIONS BASED ON 2.0 TONS/CY.

CONCRETE PAVEMENT ITEMS

STATION - STATION	LOCATION	405.0100 COLORING CONCRETE WISDOT RED CY	415.0090 CONCRETE PAVEMENT 9-INCH SY	415.0410 CONCRETE PAVEMENT APPROACH SLAB SY	416.0512 CONCRETE TRUCK APRON 12-INCH SY
CATEGORY CODE 0010					
15+64 - 17+06	LT & RT	11	895	94	35
21+43 - 22+20	LT & RT	--	215	86	--
	TOTALS	**11**	**1,110**	**180**	**35**

3

DIVISION	FROM/TO STATION	LOCATION	205.0100 COMMON EXCAVATION (1) CUT (2)	205.0100 COMMON EXCAVATION (1) EBS EXCAVATION (3)	SALVAGED/ UNUSABLE PAVEMENT MATERIAL (4)	AVAILABLE MATERIAL (5)	UNEXPANDED FILL	EXPANDED FILL FACTOR 1.30	MASS ORDINATE +/- (14)	WASTE	COMMENT
DIVISION 1											
BUS26-SOUTH	15+64/17+23.811		263	0	294	-31	8	10	-42		
RIVERVIEWDR	48+68.95/50+98		405	0	37	368	22	29	340		
DIVISION 1 SUBTOTAL			668	0	331	337	30	39	298	298	
DIVISION 2											
BUS26-NORTH	21+25.932/22+20		185	0	137	48	0	0	48	48	
DIVISION 2 SUBTOTAL			185	0	137	48	0	0	48	48	
GRAND TOTAL			853	0	468	385	30	39	346	346	
TOTAL COMMON EXC			853								

NOTES:
(1) COMMON EXCAVATION IS THE SUM OF THE CUT AND EBS EXCAVATION COLUMNS. ITEM NUMBER 205.0100
(2) SALVAGED/UNSUABLE PAVEMENT MATERIAL IS INCLUDED IN CUT.
(3) EBS EXCAVATION
(4) SALVAGED/UNUSABLE PAVEMENT MATERIAL
(5) AVAILABLE MATERIAL = CUT - SALVAGED/UNUSUABLE PAVEMENT MATERIAL
(14) THE MASS ORDINATE + OR - QTY CALCULATED FOR THE DIVISION. PLUS QUANTITY INDICATES AN EXCESS OF MATERIAL WITHIN THE DIVISION. MINUS INDICATES A SHORTAGE OF MATERIAL WITHIN THE DIVISION.
(15) FACTORS USED TO COMPUTE ANTICIPATED WASTE AND THE COMPUTED WASTE VOLUME IDENTIFIED ARE FOR GENERAL INFORMATION ONLY.

DRIVEWAY ITEMS

STATION	LOCATION	416.0160 CONCRETE DRIVEWAY 6-INCH SY	465.0120 ASPHALTIC SURFACE DRIVEWAYS AND FIELD ENTRANCES TON
CATEGORY CODE 0010			
50+82	RT	17	9
	TOTALS	**17**	**9**

DRILLED TIE BARS AND DRILLED DOWEL BARS

STATION - STATION	LOCATION	416.0610 DRILLED TIE BARS EACH	416.0620 DRILLED DOWEL BARS EACH
CATEGORY CODE 0010			
15+64	LT & RT	6	30
22+20	LT & RT	6	30
48+69	LT & RT	6	--
50+98	RT	3	--
	TOTALS	**21**	**60**

3

ASPHALTIC ITEMS

STATION - STATION	LOCATION	455.0605 TACK COAT GAL	465.0105 ASPHALTIC SURFACE TON
CATEGORY CODE 0010			
48+69 - 49+27	LT & RT	12	55
50+63 - 50+98	LT & RT	6	25
	TOTALS	**18**	**80**

TACK COAT CALCULATIONS BASED ON 0.050 GAL/SY ON PREVIOUSLY PLACED LOWER LAYERS
ASPHALTIC SURFACE WEIGHT CALCULATIONS BASED ON 112 LB/SY/IN.

CONCRETE CURB AND GUTTER ITEMS

STATION - STATION	LOCATION	601.0409 CONCRETE CURB & GUTTER 30-INCH TYPE A LF	601.0411 CONCRETE CURB & GUTTER 30-INCH TYPE D LF	650.5500 CONSTRUCTION STAKING CURB GUTTER AND CURB & GUTTER LF
CATEGORY CODE 0010				
15+64 - 17+06	LT & RT	319	151	151
21+43 - 22+20	LT & RT	156	--	--
	TOTALS	**475**	**151**	**151**

CONCRETE SIDEWALK ITEMS

STATION - STATION	LOCATION	602.0410 CONCRETE SIDEWALK 5-INCH SF	602.0415 CONCRETE SIDEWALK 6-INCH SF	602.0515 CURB RAMP DETECTABLE WARNING FIELD NATURAL PATINA SF	602.0615 CURB RAMP DETECTABLE WARNING FIELD RADIAL NATURAL PATINA SF
CATEGORY CODE 0010					
15+64 - 17+06	LT & RT	1,349	745	40	23
21+43 - 22+20	LT & RT	1,171	--	--	--
	TOTALS	**2,520**	**745**	**40**	**23**

*CURB RAMPS TO BE PAID FOR AS CONCRETE SIDEWALK 6-INCH

3

RIPRAP AND GEOTEXTILE FABRIC ITEMS

STATION	LOCATION	606.0200 RIPRAP MEDIUM CY	645.0120* GEOTEXTILE TYPE HR SY
CATEGORY CODE 0010			
50+57	LT	3	13
UNDISTRIBUTED		1	3
	TOTALS	**4**	**16**

*ADDITIONAL QUANTITIES LISTED ELSEWHERE

STORM SEWER PIPES

FROM - TO	LOCATION	608.3012 STORM SEWER PIPE CLASS III-A 12-INCH LF
CATEGORY CODE 0010		
101 - 102	RIVERVIEW DRIVE	18
	TOTALS	**18**

STORM SEWER STRUCTURES

STRUCTURE	STATION	OFFSET*	LOCATION	520.1012 APRON ENDWALLS FOR CULVERT PIPE 12-INCH EACH	611.0624 INLET COVERS TYPE H EACH	611.3230 INLETS 2X3-FT EACH	650.4000 CONSTRUCTION STAKING STORM SEWER EACH
CATEGORY CODE 0010							
101	50+57.15	14.50' LT	RIVERVIEWDR	--	1	1	1
102	50+57.15	32.50' LT	RIVERVIEWDR	1	--	--	1
			TOTALS	**1**	**1**	**1**	**2**

*STATIONS AND OFFSETS ARE TO CENTER OF STRUCTURE

FENCE SAFETY

STATION	LOCATION	616.0700.S LF
CATEGORY CODE 0010		
21+61 - 22+35	LT	84
48+59	LT	18
51+21	LT	8
	TOTAL	**110**

RESTORATION ITEMS

STATION - STATION	LOCATION	625.0100 TOPSOIL SY	628.2006 EROSION MAT URBAN CLASS I TYPE A SY	629.0210 FERTILIZER TYPE B CWT	630.0140 SEED MIX NO. 40 LB	630.0500 SEED WATER MGAL	SPV.0180.01 PREPARING TOPSOIL FOR LAWN TYPE TURF SY
CATEGORY CODE 0010							
15+67 - 17+03	LT & RT	780	780	0.27	14	18	780
21+56 - 22+20	LT & RT	178	178	0.06	3	4	178
PEDESTRIAN ACCOMMODATIONS		50	50	0.03	1	1	50
UNDISTRIBUTED		252	252	0.14	5	6	252
	TOTALS	**1,260**	**1,260**	**0.50**	**23**	**29**	**1,260**

NOTES: NO FERTILIZER SHALL BE PLACED WITHIN 20 FEET OF A BODY OF WATER OR WETLAND.

EROSION CONTROL ITEMS

STATION	LOCATION	628.1504 SILT FENCE LF	628.1520 SILT FENCE MAINTENANCE LF	628.1905 MOBILIZATIONS EROSION CONTROL EACH	628.1910 MOBILIZATIONS EMERGENCY EROSION CONTROL EACH	628.6005 TURBIDITY BARRIERS SY	628.7015 INLET PROTECTION TYPE C EACH	628.7570 ROCK BAGS EACH	COMMENTS
CATEGORY CODE 0010									
14+05	LT	--	--	--	--	--	1	--	EXISTING INLET
14+08	RT	--	--	--	--	--	1	--	EXISTING INLET
16+00 - 17+45	LT & RT	215	215	--	--	139	--	44	SOUTH EDGE OF ROCK RIVER
20+85 - 21+65	LT & RT	116	116	--	--	132	--	44	NORTH EDGE OF ROCK RIVER
25+18	RT	--	--	--	--	--	1	--	EXISTING INLET
25+42	LT	--	--	--	--	--	1	--	EXISTING INLET
46+75	LT	--	--	--	--	--	1	--	EXISTING INLET
46+88	RT	--	--	--	--	--	1	--	EXISTING INLET
50+57	LT	--	--	--	--	--	1	--	PROPOSED INLET
53+78	RT	--	--	--	--	--	1	--	EXISTING INLET
UNDISTRIBUTED		84	84	15	10	69	2	22	--
	TOTALS	**415**	**415**	**15**	**10**	**340**	**10**	**110**	

3

SIGNING ITEMS

SIGN NUMBER	EXISTING STATION	EXISTING LOCATION	PROPOSED STATION	PROPOSED LOCATION	ROADWAY	SIGN CODE	SIZE	634.0814 POSTS TUBULAR STEEL 2X2-INCH X 14-FT EACH	634.0816 POSTS TUBULAR STEEL 2X2-INCH X 16-FT EACH	637.2210 SIGNS TYPE II REFLECTIVE H SF	638.2102 MOVING SIGNS TYPE II EACH	638.2602 REMOVING SIGNS TYPE II EACH	638.3000 REMOVING SMALL SIGN SUPPORTS EACH	638.4000 MOVING SMALL SIGN SUPPORTS EACH	COMMENTS
CATEGORY CODE 0010															
100	16+30	LT	15+83	LT	MAIN STREET	--	---	1	--	--	1	--	--	--	NO PARKING SIGN
101	49+67	RT	49+70	RT	RIVERVIEW DRIVE	R1-1	30X30	1	--	5.18	--	1	1	--	--
102	50+47	LT	50+40	LT	RIVERVIEW DRIVE	R1-1	30X30	1	--	5.18	--	1	1	--	--
103	18+00	LT	18+78	LT	MAIN STREET	--	---	--	--	--	1	--	--	--	BOAT LAUNCH SIGN / MOUNT TO LIGHT POLE
104	18+56	RT	21+50	RT	MAIN STREET	J1-1	24X39	--	1	6.50	--	1	--	--	M2-1; M1-5A (N)
105	22+22	LT	22+22	LT	MAIN STREET	--	---	--	--	--	1	--	--	1	DANGEROUS INTERSECTION AHEAD & NO PARKING SIGNS
						TOTALS		**3**	**1**	**16.86**	**3**	**3**	**2**	**1**	

3

TRAFFIC CONTROL ITEMS

	NUMBER OF DAYS IN SERVICE	643.0410 TRAFFIC CONTROL BARRICADES TYPE II NO. REQ'D	643.0410 TOTAL DAY	643.0420 TRAFFIC CONTROL BARRICADES TYPE III NO. REQ'D	643.0420 TOTAL DAY	643.0705 TRAFFIC CONTROL WARNING LIGHTS TYPE A NO. REQ'D	643.0705 TOTAL DAY	643.0900 TRAFFIC CONTROL SIGNS NO. REQ'D	643.0900 TOTAL DAY	643.1000 TRAFFIC CONTROL SIGNS FIXED MESSAGE SF	643.1050 TRAFFIC CONTROL SIGNS PCMS NO. REQ'D	643.1050 NO. DAYS	643.1050 TOTAL DAY	643.5000 TRAFFIC CONTROL EACH
CATEGORY CODE 0010														
PROJECT 3993-01-81	292	--	--	--	--	--	--	--	--	--	--	--	--	1
BUSINESS 26 SOUTH OF PROJECT	292	--	--	*13*	3,796	*18*	5,256	*7*	2,044	--	*1*	*7*	7	--
BUSINESS 26 NORTH OF PROJECT	292	*2*	584	*13*	3,796	*20*	5,840	*9*	2,628	--	*1*	*7*	7	--
RIVERVIEW DRIVE WEST OF PROJECT	292	*1*	292	*7*	2,044	*9*	2,628	*5*	1,460	--	--	--	--	--
RIVERVIEW DRIVE EAST OF PROJECT	292	*1*	292	*7*	2,044	*11*	3,212	*5*	1,460	--	--	--	--	--
SOUTHBOUND DETOUR	292	--	--	*2*	584	*4*	1,168	*63*	18,396	33.00	--	--	--	--
NORTHBOUND DETOUR	292	--	--	*2*	584	*4*	1,168	*60*	17,520	33.00	--	--	--	--
PEDESTRIAN DETOUR	292	*17*	4,964	--	--	*17*	4,964	*12*	3,504	22.50	--	--	--	--
PEDESTRIAN ACCOMMODATIONS	292	*2*	584	--	--	*2*	584	*2*	584	--	--	--	--	--
	TOTALS		**6,716**		**12,848**		**24,820**		**47,596**	**88.50**			**14**	**1**

TEMPORARY PEDESTRIAN ACCOMMODATION ITEMS

LOCATION	644.1410 TEMPORARY PEDESTRIAN SURFACE ASPHALT SF	644.1601 TEMPORARY PEDESTRIAN CURB RAMP DAY	649.0150 TEMPORARY MARKING LINE REMOVABLE TAPE 4-INCH LF
CATEGORY CODE 0010			
BUS 26 SOUTH OF PROJECT	325.0	584.0	88.0
TOTALS	**325.0**	**584.0**	**88.0**

3

PAVEMENT MARKING ITEMS

STATION - STATION	LOCATION	646.1020 MARKING LINE EPOXY 4-INCH YELLOW LF	646.6120 MARKING STOP LINE EPOXY 18-INCH WHITE LF	646.7420 MARKING CROSSWALK EPOXY TRANSVERSE LINE 6-INCH WHITE LF	646.8120 MARKING CURB EPOXY YELLOW LF
CATEGORY CODE 0010					
15+64 - 22+20	LT & RT	1,310	22	251	329
	TOTALS	**1,310**	**22**	**251**	**329**

CONSTRUCTION STAKING ITEMS

STATION - STATION	LOCATION	650.4500 SUBGRADE LF	650.5000 BASE LF	650.6500 STRUCTURE LAYOUT LS	650.7000 CONCRETE PAVEMENT LF	650.9000 CURB RAMPS EACH	650.9910 SUPPLEMENTAL CONTROL LS	650.9920 SLOPE STAKES LF
CATEGORY CODE 0010								
01. 3993-01-81		--	--	--	--	5	1	--
15+64 - 17+06	LT & RT	142	--	--	142	--	--	142
48+69 - 50+98	LT & RT	229	93	--	136	--	--	229
21+43 - 22+20	LT & RT	77	--	--	77	--	--	77
CATEGORY CODE 0010 SUBTOTALS		448	93	--	355	5	1	448
CATEGORY CODE 0020								
01. B-28-192		--	--	1	--	--	--	--
CATEGORY CODE 0020 SUBTOTALS		--	--	1	--	--	--	--
	TOTALS	**448**	**93**	**1**	**355**	**5**	**1**	**448**

STAKING ITEMS FOR STORM SEWER AND CURB & GUTTER SHOWN ELSEWHERE

3

SAWING PAVEMENT ITEMS

STATION - STATION	LOCATION	690.0150 ASPHALT LF	690.0250 CONCRETE LF
CATEGORY CODE 0010			
15+64	LT & RT	--	53
22+20	LT & RT	--	57
48+69	LT & RT	35	5
48+69 - 49+12	RT	--	61
49+27	RT	--	5
50+92	RT	11	6
50+98	LT & RT	25	6
	TOTALS	**71**	**193**

ADJUSTING SANITARY SEWER AND WATER MAIN ITEMS

STATION	LOCATION	EXISTING ELEVATION	FINISHED ELEVATION	SPV.0060.03 ADJUSTING SANITARY SEWER MANHOLE EACH	SPV.0060.04 ADJUSTING WATER VALVE BOX EACH	COMMENTS
CATEGORY CODE 0040						
49+26	RT	788.74	788.87	--	1	0.13' ADJUSTMENT UP
49+42	RT	789.12	789.43	1	--	0.31' ADJUSTMENT UP
49+47	RT	789.71	789.86	1	--	0.15' ADJUSTMENT UP
49+48	RT	789.44	789.59	--	1	0.15' ADJUSTMENT UP
			TOTALS	**2**	**2**	

3

LIGHTING PULLBOXES

	STATION	OFFSET	R/L	653.0164 PULL BOX NON-CONDUCTIVE 24X42-INCH EACH
ALL ITEMS ARE CATEGORY 0030				
LPB100	15+99'MS'	36.6'	RT	1
LPB101	16+83'MS'	84.9'	LT	1
LPB102	16+61'MS'	38.6'	RT	1
LPB103	17+23'MS'	49.1'	LT	1
LPB104	21+39'MS'	28.0'	RT	1
LPB105	21+72'MS'	28.0'	LT	1
PROJECT TOTAL				6

LIGHTING CONDUIT AND WIRE

FROM - TO	652.0225 * CONDUIT RIGID NONMETALLIC SCHEDULE 40 2-INCH LF	652.0235 CONDUIT RIGID NONMETALLIC SCHEDULE 40 3-INCH LF	655.0610 * ELECTRICAL WIRE LIGHTING 12 AWG LF	655.0625 ELECTRICAL WIRE LIGHTING 6 AWG LF	REMARKS
ALL ITEMS ARE CATEGORY 0030					
EXSL 103 - LPB 101	150	--	--	654	EXISTING CONDUIT
LPB 101 - EXSL 105	5	--	--	108	--
LPB 101 - LPB 103	55	--	--	213	--
LPB 103 - SL 106	10	--	--	174	CONDUIT INCLUDED IN STRUCTURE PLANS
LPB 103 - SL 106	10	--	58	--	PWO 1-2" & CONDUIT INCLUDED IN STRUCTURE PLANS
SL 106 - SL 108	--	--	--	480	CONDUIT INCLUDED IN STRUCTURE PLANS
SL 108 - SL 110	--	--	--	480	CONDUIT INCLUDED IN STRUCTURE PLANS
SL 110 - LPB 105	15	--	168	--	PWO 1-2" & CONDUIT INCLUDED IN STRUCTURE PLANS
SL 110 - LPB 105	15	--	168	--	PWO 1-2" & CONDUIT INCLUDED IN STRUCTURE PLANS
EXSL 102 - SL 104	20	--	--	495	EXISTING CONDUIT
SL 104 - LPB 100	25	--	--	114	--
LPB 100 - LPB 102	65	--	--	243	--
LPB 102 - SL 107	15	--	--	489	CONDUIT INCLUDED IN STRUCTURE PLANS
LPB 102 - SL 107	15	--	163	--	PWO 1-2" & CONDUIT INCLUDED IN STRUCTURE PLANS
SL 107 - SL 109	--	--	--	480	CONDUIT INCLUDED IN STRUCTURE PLANS
SL 109 - SL 111	--	--	--	480	CONDUIT INCLUDED IN STRUCTURE PLANS
SL 111 - LPB 104	15	--	63	--	PWO 1-2" & CONDUIT INCLUDED IN STRUCTURE PLANS
SL 111 - LPB 104	15	--	63		PWO 1-2" & CONDUIT INCLUDED IN STRUCTURE PLANS
LPB 102 - LPB 103	--	110	126	--	PWO 1-3"
PROJECT TOTAL	430	110	809	4410	

* ADDITIONAL QUANTITIES LISTED ELSEWHERE

3

LIGHTING REMOVALS

PULLBOX NUMBER	204.0195 REMOVING CONCRETE BASES EACH	204.9090.S.01 REMOVING ELECTRICAL CONDUCTORS FROM EXISTING CONDUIT LF	SPV.0060.01 REMOVE AND SALVAGE LIGHTING UNIT EACH
ALL ITEMS ARE CATEGORY 0030			
EXSL 100	1	--	1
EXSL 101	1	--	1
EXSL 200	--	--	1
EXSL 201	--	--	1
EXSL 202	--	--	1
EXSL 203	--	--	1
EXSL 204	--	--	1
EXSL 205	--	--	1
PROJECT 3993-01-01	--	1000	--
PROJECT TOTAL	2	1,000	8

STREET LIGHTING

LIGHT NUMBER	STATION	OFFSET	R/L	654.0105 CONCRETE BASES TYPE 5 EACH	657.0322 POLES TYPE 5 ALUMINUM EACH	657.0610 LUMINAIRE ARMS SINGLE MEMBER 4 1/2-INCH CLAMP 6-FT EACH	659.1120 LUMINAIRES UTILITY LED B EACH	SPV.0060.02 FURNISH AND INSTALL DECORATIVE LIGHTING UNIT EACH	655.0610 * ELECTRICAL WIRE LIGHTING 12 AWG LF
ALL ITEMS ARE CATEGORY 0030									
SL 104	15+81'MS'	26.2'	RT	1	1	1	1	--	117
SL 105	16+86'MS'	88.0'	LT	1	1	1	1	--	117
SL 106	17+32'MS'	25.8'	LT	--	--	--	--	1	84
SL 107	18+05'MS'	25.9'	RT	--	--	--	--	1	84
SL 108	18+78'MS'	25.7'	LT	--	--	--	--	1	84
SL 109	19+51'MS'	25.8'	RT	--	--	--	--	1	84
SL 110	20+24'MS'	25.9'	LT	--	--	--	--	1	84
SL 111	20+97'MS'	25.9'	RT	--	--	--	--	1	84
PROJECT TOTAL				2	2	2	2	6	738

* ADDITIONAL QUANTITIES LISTED ELSEWHERE

TRANSPORTATION PROJECT PLAT NO: 3993-01-21 - 4.01

THAT PART OF LOTS 3, 4, AND 5, BLOCK 1, RIVERSIDE ADDITION, BEING PART OF GOVERNMENT LOT 5 AND PART OF GOVERNMENT LOT 6, ALL IN SECTION 11, T6N, R14E, CITY OF JEFFERSON, JEFFERSON COUNTY, WISCONSIN

RELOCATION ORDER BUS 26 S MAIN STREET, C JEFFERSON (ROCK RIVER STRUCTURE B-28-11) JEFFERSON COUNTY

TO PROPERLY ESTABLISH, LAY OUT, WIDEN, ENLARGE, EXTEND, CONSTRUCT, RECONSTRUCT, IMPROVE, OR MAINTAIN A PORTION OF THE HIGHWAY DESIGNATED ABOVE, THE CITY OF JEFFERSON DEEMS IT NECESSARY TO RELOCATE OR CHANGE SAID HIGHWAY AND ACQUIRE CERTAIN LANDS AND INTERESTS OR RIGHTS IN LANDS FOR THE ABOVE PROJECT.

TO EFFECT THIS CHANGE, PURSUANT TO AUTHORITY GRANTED UNDER SECTION 62.22, WISCONSIN STATUTES, THE CITY OF JEFFERSON HEREBY ORDERS THAT:
1. THAT PORTION OF SAID HIGHWAY AS SHOWN ON THIS PLAT IS LAID OUT AND ESTABLISHED TO THE LINES AND WIDTHS AS SO SHOWN FOR THE ABOVE PROJECT.
2. THE LANDS OR INTERESTS OR RIGHTS IN LANDS AS SHOWN ON THIS PLAT ARE REQUIRED BY THE CITY FOR THE ABOVE PROJECT AND SHALL BE ACQUIRED IN THE NAME OF THE CITY OF JEFFERSON, PURSUANT TO THE PROVISIONS OF SECTION 62.22, WISCONSIN STATUTES.

POSITIONS SHOWN ON THIS PLAT ARE WISCONSIN COORDINATE REFERENCE SYSTEM COORDINATES (WISCRS), JEFFERSON COUNTY, NAD83(2011) IN U.S. SURVEY FEET. VALUES ARE GRID COORDINATES, GRID BEARINGS, AND GRID DISTANCES. GRID DISTANCES MAY BE USED AS GROUND DISTANCES.

ALL NEW RIGHT-OF-WAY MONUMENTS WILL BE TYPE 2 (TYPICALLY 3/4" IRON REBARS), UNLESS OTHERWISE NOTED, AND WILL BE PLACED PRIOR TO THE COMPLETION OF THE PROJECT.

FOR THE LATEST ACCESS/DRIVEWAY INFORMATION, CONTACT THE PLANNING UNIT OF THE WISCONSIN DEPARTMENT OF TRANSPORTATION OFFICE IN MADISON.

EXISTING HIGHWAY RIGHT-OF-WAY SHOWN HEREIN IS BASED ON THE FOLLOWING POINTS OF REFERENCE:
EXISTING HIGHWAY RIGHT-OF-WAY FOR SOUTH MAIN STREET BUS 26 ESTABLISHED FROM PREVIOUS PROJECT T 010-1(12), HENRY'S ADDITION, PLATS OF SURVEY 241M070 AND 241M008.

EXISTING HIGHWAY RIGHT-OF-WAY FOR RIVERVIEW DRIVE ESTABLISHED FROM PREVIOUS PROJECT T 010-1(12), HENRY'S ADDITION, RIVERSIDE ADDITION, PLATS OF SURVEY 241M070, 241M008, AND S01-022.

1448204

Office of Register of Deeds
Jefferson County, WI
RECEIVED FOR RECORD
07/07/2021 11:40:54 AM
Staci M. Hoffman
Total Pages: 2
REC FEE: 25.00
The above recording information verifies that this document has been electronically recorded and returned to the submitter

RESERVED FOR REGISTER OF DEEDS
PROJECT NUMBER 3993-01-21 - 4.01
SHEET 1 OF 2

FOR ADDITIONAL INFORMATION REFER TO THE TITLE SHEET, RECORDED AS SHEET 2 OF 2.

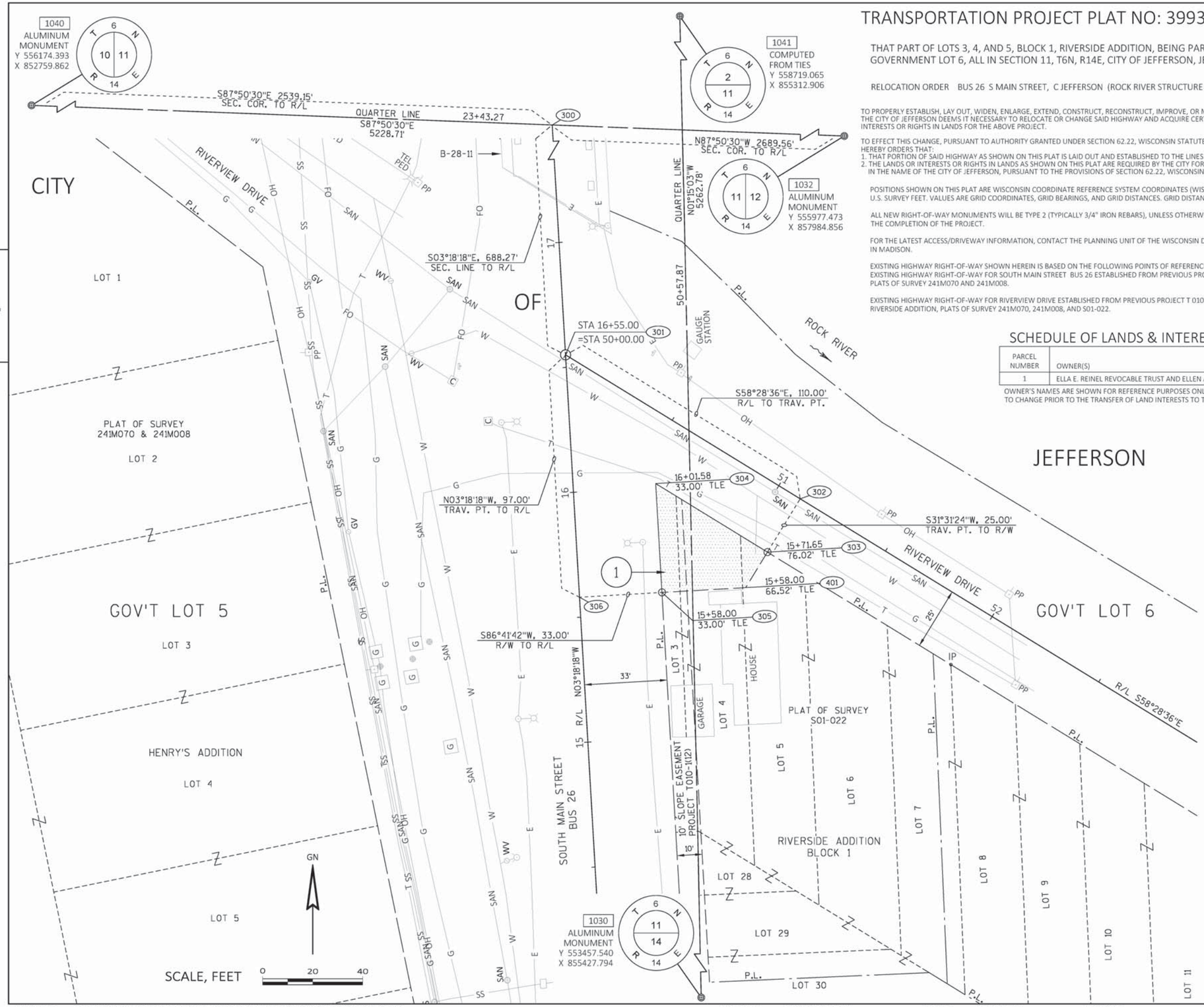

SCHEDULE OF LANDS & INTERESTS REQUIRED

PARCEL NUMBER	OWNER(S)	INTEREST REQUIRED	R/W ACRES OR S.F. REQUIRED NEW	EXISTING	TOTAL	TLE ACRES OR S.F.
1	ELLA E. REINEL REVOCABLE TRUST AND ELLEN A. SAWYERS REVOCABLE TRUST	TLE	0	0	0	1166

OWNER'S NAMES ARE SHOWN FOR REFERENCE PURPOSES ONLY AND ARE SUBJECT TO CHANGE PRIOR TO THE TRANSFER OF LAND INTERESTS TO THE DEPARTMENT.

ALL AREAS SHOWN IN SQUARE FEET UNLESS OTHERWISE NOTED.
*THE PURPOSE FOR TLE'S IS DRIVEWAYS AND SLOPES UNLESS OTHERWISE NOTED.

COURSE TABLE

FROM POINT	TO POINT	BEARING	DISTANCE
1040	300	S87°50'30"E	2539.15'
300	301	S03°18'18"E	688.27'
301	302	S58°28'36"E	110.00'
302	303	S31°31'24"W	25.00'
303	304	N58°28'36"W	52.40'
304	305	S03°18'18"E	43.58'
305	306	S86°41'42"W	33.00'
306	301	N03°18'18"W	97.00'

GREMMER & ASSOCIATES, INC.
CONSULTING ENGINEERS
Stevens Point • Fond du Lac

I, JAY W. PANETTI, PROFESSIONAL LAND SURVEYOR, HEREBY CERTIFY THAT IN FULL COMPLIANCE WITH THE PROVISIONS OF SECTION 84.095 OF THE WISCONSIN STATUTES AND UNDER THE DIRECTION OF THE DEPARTMENT OF TRANSPORTATION, I HAVE SURVEYED AND MAPPED THIS TRANSPORTATION PROJECT PLAT AND SUCH PLAT CORRECTLY REPRESENTS ALL EXTERIOR BOUNDARIES OF THE SURVEYED LAND.

WISCONSIN JAY W. PANETTI S-2747 WAUPUN, WI LAND SURVEYOR

SIGNATURE: _____ DATE: 6/14/21
PRINT NAME: JAY W. PANETTI
REGISTRATION NUMBER: S-2747

THIS PLAT AND RELOCATION ORDER ARE APPROVED FOR THE CITY OF JEFFERSON

SIGNATURE: _____ DATE: 6/28/21
PRINT NAME: WILLIAM PINNOW, PUBLIC DIRECTOR

FILE NAME : S:\CURRPROJ\JEFFERSON\MAIN STREET BRIDGE\CIVIL3D\39930101\RW\DWG\040401-RP.DWG
APPRAISAL PLAT DATE : 6/14/2021
PLOT DATE : 7/7/2021 9:41 AM
PLOT BY : JAY PANETTI
PLOT NAME :
PLOT SCALE : ##########

3993-01-21 - 4.01

STATE OF WISCONSIN
DEPARTMENT OF TRANSPORTATION
TRANSPORTATION PROJECT PLAT TITLE SHEET
3993-01-21
S MAIN STREET, C JEFFERSON
ROCK RIVER STRUCTURE B-28-11
BUS 26
JEFFERSON COUNTY

CONVENTIONAL SYMBOLS

SECTION LINE
QUARTER LINE
SIXTEENTH LINE
NEW REFERENCE LINE
NEW R/W LINE
EXISTING R/W OR HE LINE
PROPERTY LINE
LOT, TIE & OTHER MINOR LINES
SLOPE INTERCEPT
CORPORATE LIMITS
UNDERGROUND FACILITY (COMMUNICATIONS, ELECTRIC, ETC)
NEW R/W (FEE OR HE) (HATCHING VARIES BY OWNER)
TEMPORARY LIMITED EASEMENT AREA
EASEMENT AREA (PERMANENT LIMITED OR RESTRICTED DEVELOPMENT)
TRANSMISSION STRUCTURES
BUILDING — TO BE REMOVED
BRIDGE

SECTION CORNER SYMBOL
SECTION CORNER MONUMENT
GEODETIC SURVEY MONUMENT
SIXTEENTH CORNER MONUMENT
SIGN
OFF-PREMISE SIGN
R/W MONUMENT (TO BE SET)
NON-MONUMENTED R/W POINT
FOUND IRON PIN (1-INCH UNLESS NOTED)

	COMPENSABLE	NON-COMPENSABLE
ELECTRIC POLE		
TELEPHONE POLE		
PEDESTAL (LABEL TYPE) (TV, TEL, ELEC, ETC.)		

ACCESS RESTRICTED BY ACQUISITION
NO ACCESS (BY STATUTORY AUTHORITY)
ACCESS RESTRICTED (BY PREVIOUS PROJECT OR CONTROL)
NO ACCESS (NEW HIGHWAY)
PARCEL NUMBER (25)
UTILITY NUMBER (40)
PARALLEL OFFSETS

CONVENTIONAL ABBREVIATIONS

ACCESS RIGHTS	AR	POINT OF INTERSECTION	PI
ACRES	AC	PROPERTY LINE	PL
AHEAD	AH	RECORDED AS	(100')
ALUMINUM	ALUM	REEL / IMAGE	R/I
AND OTHERS	ET AL	REFERENCE LINE	R/L
BACK	BK	REMAINING	REM
BLOCK	BLK	RESTRICTIVE DEVELOPMENT EASEMENT	RDE
CENTERLINE	C/L	RIGHT	RT
CERTIFIED SURVEY MAP	CSM	RIGHT OF WAY	R/W
CONCRETE	CONC	SECTION	SEC
COUNTY	CO	SEPTIC VENT	SEPV
COUNTY TRUNK HIGHWAY	CTH	SQUARE FEET	SF
DISTANCE	DIST	STATE TRUNK HIGHWAY	STH
CORNER	COR	STATION	STA
DOCUMENT NUMBER	DOC	TELEPHONE PEDESTAL	TP
EASEMENT	EASE	TEMPORARY LIMITED EASEMENT	TLE
EXISTING	EX	TRANSPORTATION PROJECT PLAT	TPP
GAS VALVE	GV	UNITED STATES HIGHWAY	USH
GRID NORTH	GN	VOLUME	V
HIGHWAY EASEMENT	HE		
IDENTIFICATION	ID		
LAND CONTRACT	LC		
LEFT	LT		
MONUMENT	MON		
NATIONAL GEODETIC SURVEY	NGS		
NUMBER	NO		
OUTLOT	OL		
PAGE	P		
POINT OF TANGENCY	PT		
PERMANENT LIMITED EASEMENT	PLE		
POINT OF BEGINNING	POB		
POINT OF CURVATURE	PC		
POINT OF COMPOUND CURVE	PCC		

CURVE DATA

LONG CHORD	LCH
LONG CHORD BEARING	LCB
RADIUS	R
DEGREE OF CURVE	D
CENTRAL ANGLE	Δ/DELTA
LENGTH OF CURVE	L
TANGENT	T
DIRECTION AHEAD	DA
DIRECTION BACK	DB

CONVENTIONAL UTILITY SYMBOLS

W	WATER
G	GAS
T	TELEPHONE
OH	OVERHEAD TRANSMISSION LINES
E	ELECTRIC
TV	CABLE TELEVISION
FO	FIBER OPTIC
SAN	SANITARY SEWER
SS	STORM SEWER

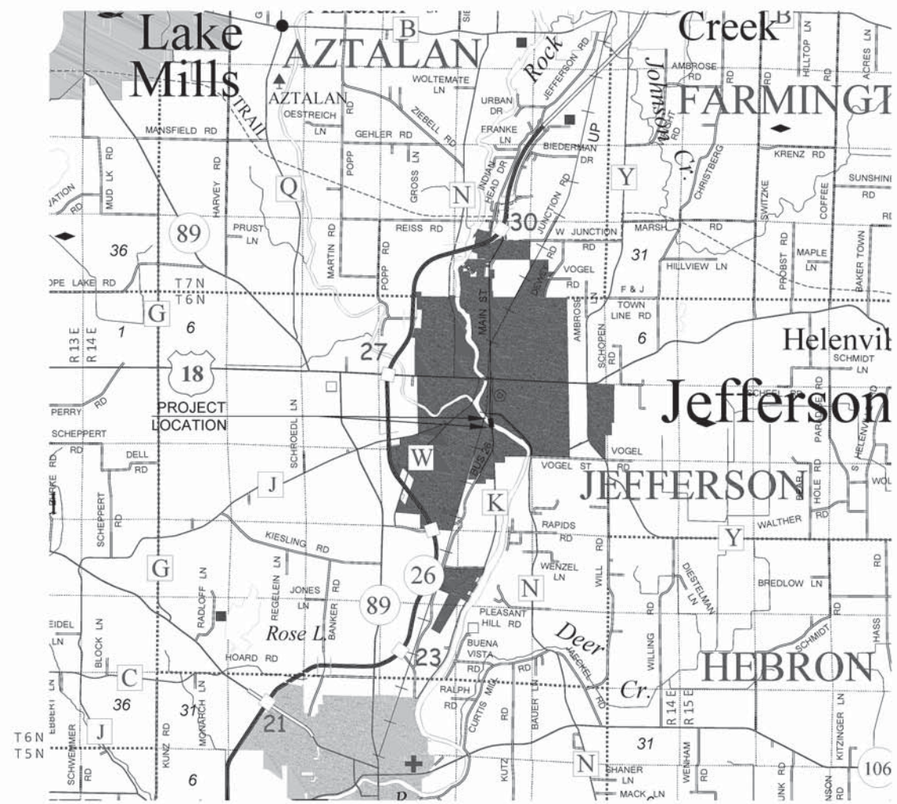

LAYOUT
SCALE 0 1 MI.

THE NOTES,CONVENTIONAL SIGNS, AND ABBREVIATIONS ARE ASSOCIATED WITH EACH TRANSPORTATION PROJECT PLAT FOR PROJECT 3993-01-21

NOTES:

POSITIONS SHOWN ON THIS PLAT ARE WISCONSIN COUNTY COORDINATES, JEFFERSON COUNTY, NAD83(2011), IN U.S. SURVEY FEET. VALUES ARE GRID COORDINATES, GRID BEARINGS, AND GRID DISTANCES. GRID DISTANCES MAY BE USED AS GROUND DISTANCES.

ALL NEW RIGHT-OF-WAY MONUMENTS WILL BE TYPE 2 (TYPICALLY ¾" X 24" IRON REBARS), UNLESS OTHERWISE NOTED, AND WILL BE PLACED PRIOR TO THE COMPLETION OF THE PROJECT.

ALL RIGHT-OF-WAY LINES DEPICTED IN THE NON-ACQUISITION AREAS ARE INTENDED TO RE-ESTABLISH EXISTING RIGHT-OF-WAY LINES AS DETERMINED FROM PREVIOUS PROJECTS, OTHER RECORDED DOCUMENTS, OR FROM CENTERLINE OF EXISTING PAVEMENTS.

RIGHT-OF-WAY BOUNDARIES ARE DEFINED WITH COURSES OF THE PERIMETER OF THE HIGHWAY LANDS REFERENCED TO THE U.S. PUBLIC LAND SURVEY SYSTEM OR OTHER "SURVEYS" OF PUBLIC RECORD.

DIMENSIONING FOR THE NEW RIGHT-OF-WAY IS MEASURED ALONG AND PERPENDICULAR TO THE NEW REFERENCE LINES.

A TEMPORARY LIMITED EASEMENT (TLE) IS A RIGHT FOR CONSTRUCTION PURPOSES, AS DEFINED HEREIN, INCLUDING THE RIGHT TO OPERATE NECESSARY EQUIPMENT THEREON, THE RIGHT OF INGRESS AND EGRESS, AS LONG AS REQUIRED FOR SUCH PUBLIC PURPOSE, INCLUDING THE RIGHT TO PRESERVE, PROTECT, REMOVE, OR PLANT THEREON ANY VEGETATION THAT THE HIGHWAY AUTHORITIES MAY DEEM DESIRABLE. ALL (TLEs) ON THIS PLAT EXPIRE AT THE COMPLETION OF THE CONSTRUCTION PROJECT FOR WHICH THIS INSTRUMENT IS GIVEN.

PROPERTY LINES SHOWN ON THIS PLAT ARE DRAWN FROM DATA DERIVED FROM MAPS AND DOCUMENTS OF PUBLIC RECORD AND/OR EXISTING OCCUPATIONAL LINES. THIS PLAT MAY NOT BE A TRUE REPRESENTATION OF EXISTING PROPERTY LINES, EXCLUDING RIGHT-OF-WAY, AND SHOULD NOT BE USED AS A SUBSTITUTE FOR AN ACCURATE FIELD SURVEY.

FOR THE LATEST ACCESS/DRIVEWAY INFORMATION, CONTACT THE PLANNING UNIT OF THE WISCONSIN DEPARTMENT OF TRANSPORTATION OFFICE IN MADISON.

PARCEL IDENTIFICATION NUMBERS MAY NOT POINT TO ALL AREAS OF ACQUISITION, AS NOTED ON THE SCHEDULE OF LANDS & INTERESTS REQUIRED.

EXISTING HIGHWAY RIGHT-OF-WAY SHOWN HEREIN IS BASED ON THE FOLLOWING POINTS OF REFERENCE:

EXISTING HIGHWAY RIGHT-OF-WAY FOR SOUTH MAIN STREET BUS 26 ESTABLISHED FROM PREVIOUS PROJECT T 010-1(12), HENRY'S ADDITION, PLATS OF SURVEY 241M070 AND 241M008.

EXISTING HIGHWAY RIGHT-OF-WAY FOR RIVERVIEW DRIVE ESTABLISHED FROM PREVIOUS PROJECT T 010-1(12), HENRY'S ADDITION, RIVERSIDE ADDITION, PLATS OF SURVEY 241M070, 241M008, AND S01-022.

PROJECT NUMBER	3993-01-21	-4. 01
SHEET	2 OF 2	
AMENDMENT NO:		

FILE NAME : S:\CURRPROJ\JEFFERSON\MAIN STREET BRIDGE\CIVIL3D\39930101\RW\DWG\040400-RP.DWG
LAYOUT NAME: TPP Title 34x22
PLOT DATE : 6/14/2021 8:45 AM PLOT BY : JAY PANETTI PLOT NAME : _____ APPRAISAL PLAT DATE : 6/14/2021

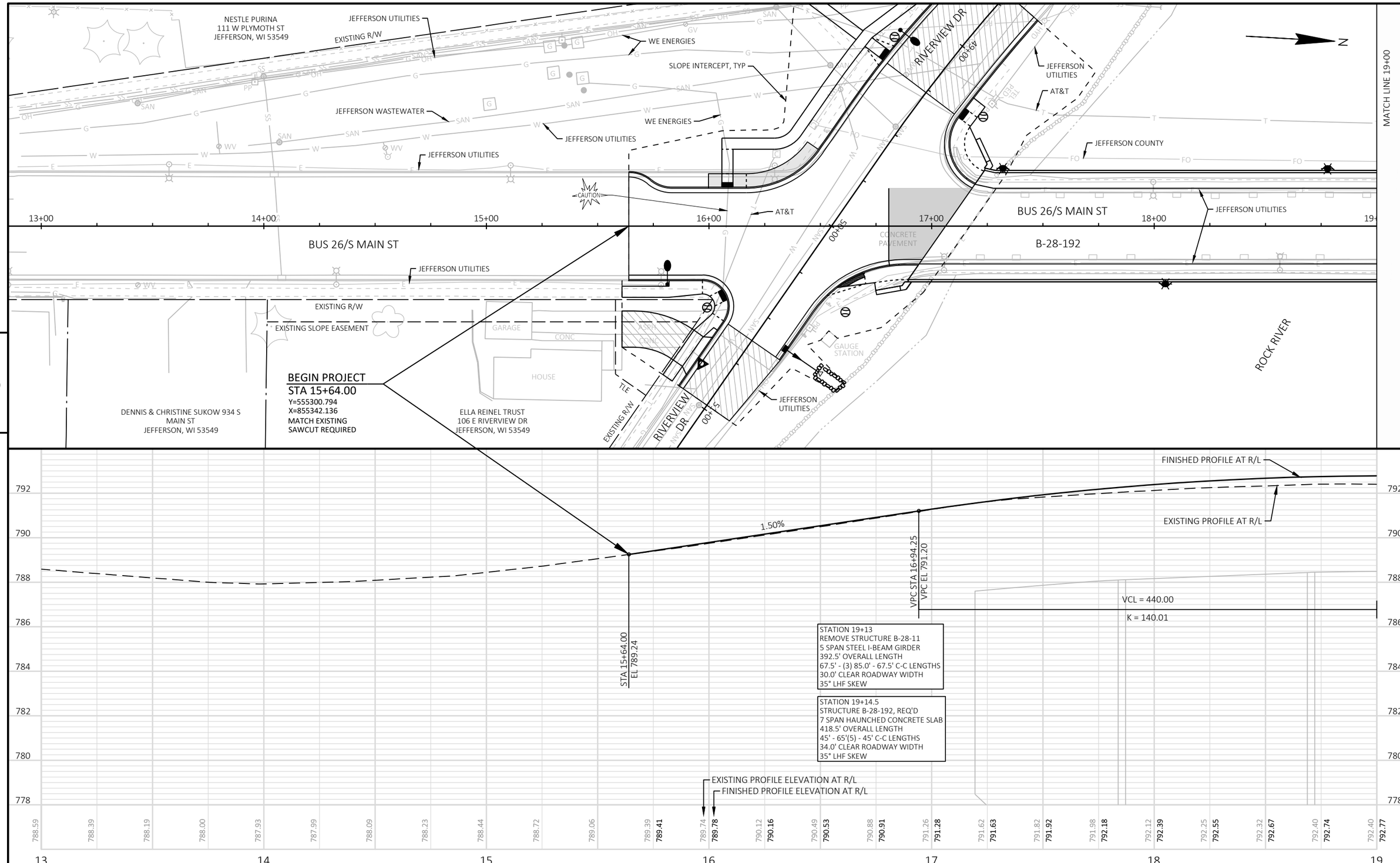

PROJECT NO: 3993-01-81	HWY: BUS 26	COUNTY: JEFFERSON	PLAN AND PROFILE: S MAIN ST	SHEET 48	E

FILE NAME : S:\CURRPROJ\JEFFERSON\MAIN STREET BRIDGE\CIVIL3D\39930101\SHEETSPLAN\39930181-050101-PP.DWG
LAYOUT NAME - Sheet - (01)
PLOT DATE : 1/18/2022 2:23 PM PLOT BY : AARON SARAUER PLOT NAME : PLOT SCALE : 1 IN:40 FT

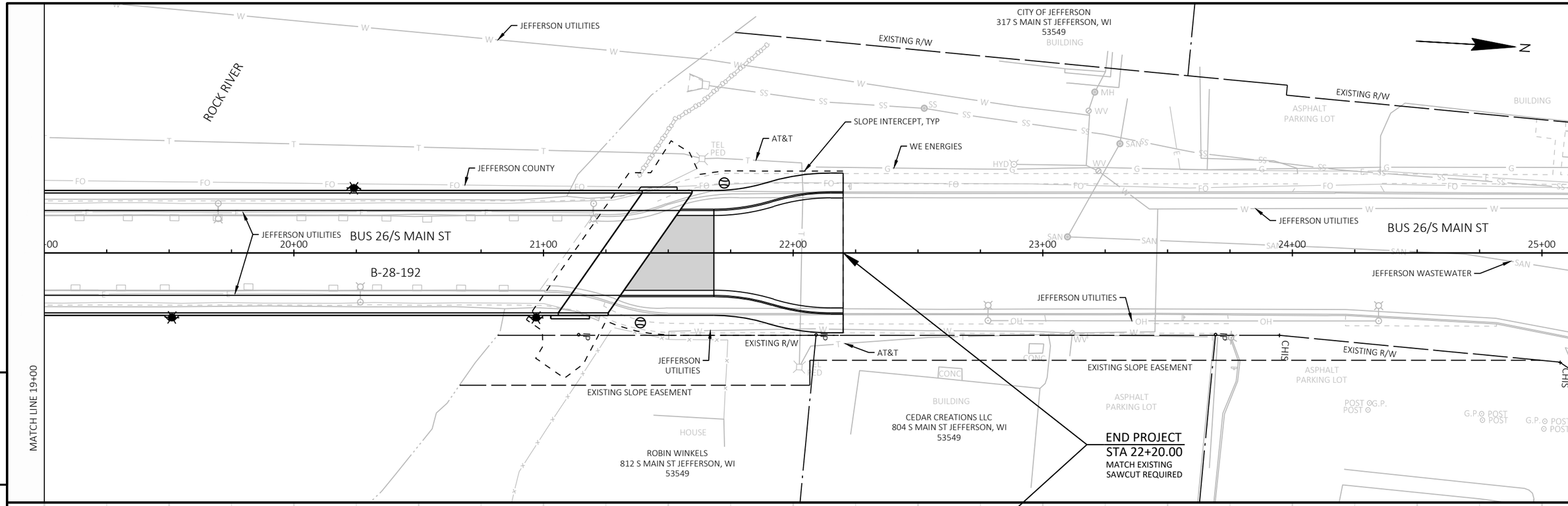

PROJECT NO: 3993-01-81	HWY: BUS 26	COUNTY: JEFFERSON	PLAN AND PROFILE: S MAIN ST	SHEET 49	E

FILE NAME : S:\CURRPROJ\JEFFERSON\MAIN STREET BRIDGE\CIVIL3D\39930101\SHEETSPLAN\39930181-050101-PP.DWG
LAYOUT NAME - Sheet - (02)
PLOT DATE : 1/24/2022 1:02 PM PLOT BY : AARON SARAUER PLOT NAME : PLOT SCALE : 1 IN:40 FT

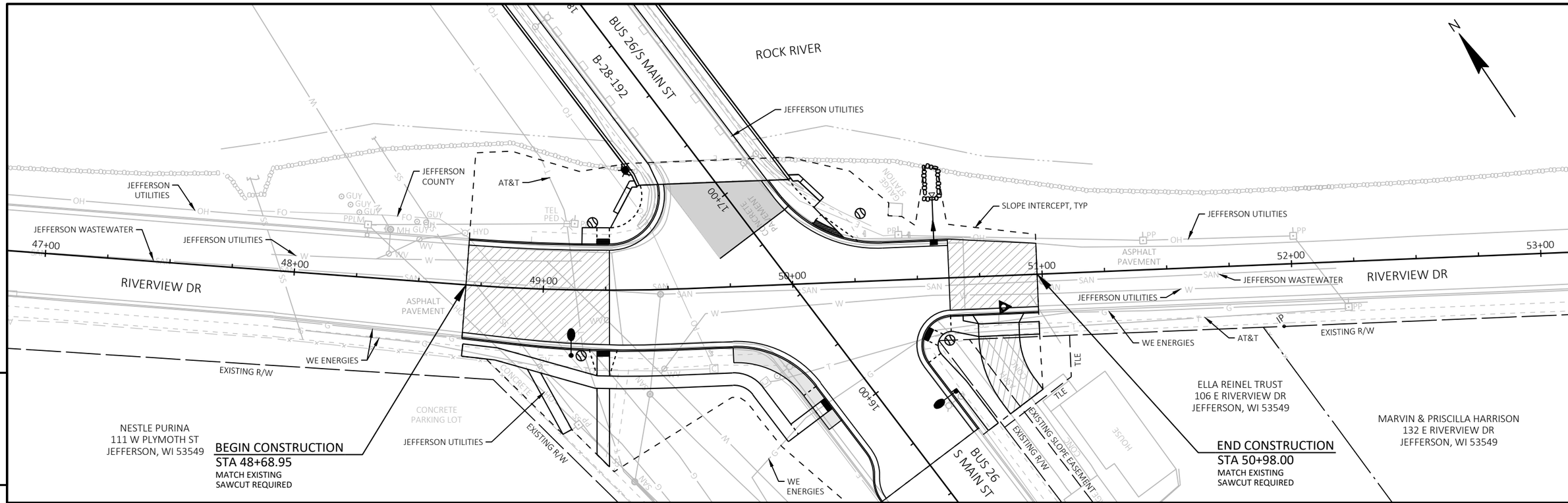

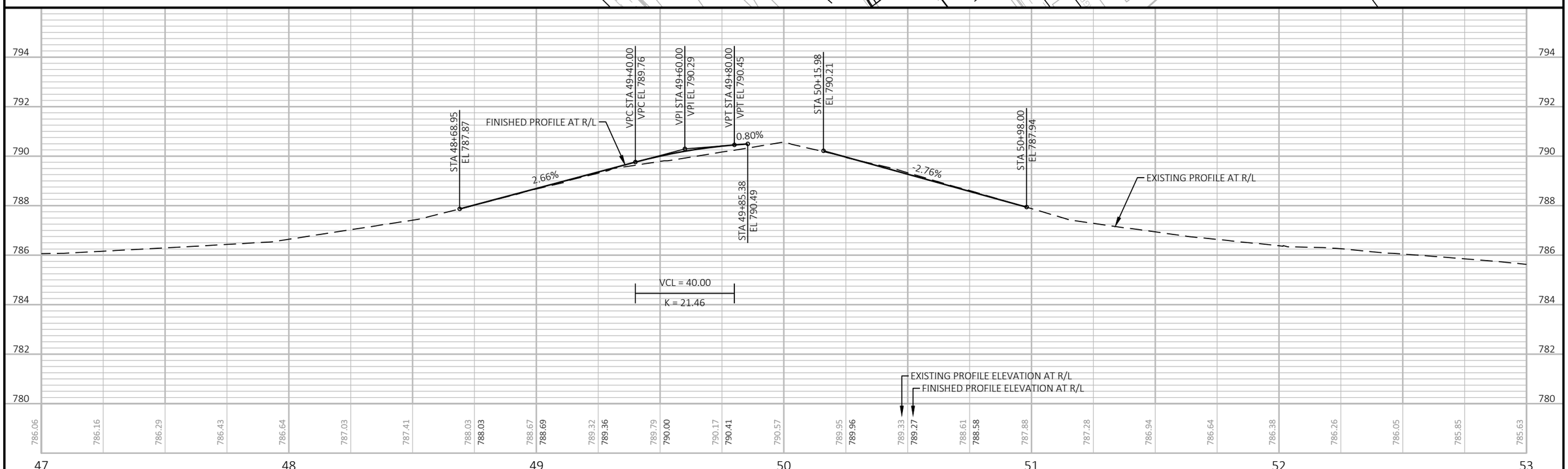

PROJECT NO: 3993-01-81	HWY: BUS 26	COUNTY: JEFFERSON	PLAN AND PROFILE: RIVERVIEW DR	SHEET 50	E

FILE NAME : S:\CURRPROJ\JEFFERSON\MAIN STREET BRIDGE\CIVIL3D\39930101\SHEETSPLAN\39930181-050102-PP.DWG
LAYOUT NAME - Sheet - (03)
PLOT DATE : 1/18/2022 2:23 PM
PLOT BY : AARON SARAUER
PLOT NAME :
PLOT SCALE : 1 IN:40 FT
WISDOT/CADDS SHEET 44

Standard Detail Drawing List

08A05-19A	INLET COVERS TYPE A, H, A-S, H-S & Z
08C07-02	INLETS 2X2-FT, 2X2.5-FT, 2X3-FT AND 2.5X3-FT
08D01-22A	CONCRETE CURB & GUTTER
08D01-22B	CONCRETE CURB, TIES AND CURB AND GUTTER APPLICATIONS
08D05-20A	CURB RAMPS TYPES 1 AND 1-A
08D05-20B	CURB RAMPS TYPES 2 AND 3
08D05-20C	CURB RAMPS TYPES 4A AND 4A1
08D05-20D	CURB RAMPS TYPE 4B AND 4B1
08D05-20E	CURB RAMPS TYPES 5, 6, 7A, 7B & 8
08D05-20F	CURB RAMPS RADIAL DETECTABLE WARNING FIELD APPLICATIONS
08D05-20G	CURB RAMPS RECTANGULAR AND RADIAL DETECTABLE WARNING PLATES
08D18-02	DRIVEWAY AND SIDEWALK RAMPS TYPES X & Y
08E09-06	SILT FENCE
08E10-02	INLET PROTECTION TYPE A, B, C AND D
08E11-02	TURBIDITY BARRIER
08F01-11	APRON ENDWALLS FOR CULVERT PIPE
08F04-08	JOINT TIES FOR CONCRETE PIPE AND CONCRETE COLLAR DETAIL
09B02-10	CONDUIT
09B16-01	PULL BOX NON-CONDUCTIVE
09C02-09	CONCRETE BASES, TYPES 1, 2, 5, & 6
09E01-15D	POLE MOUNTINGS FOR LIGHTING UNITS, TYPE 5 (30 FEET)
09E01-15G	HARDWARE DETAILS FOR POLE MOUNTINGS
09E03-06	NON-FREEWAY LIGHTING UNIT POLE WIRING
12A03-10	NAME PLATE (STRUCTURES)
13B02-09A	CONCRETE PAVEMENT APPROACH SLAB
13B02-09B	STRUCTURAL APPROACH SLAB AND CONCRETE PAVEMENT APPROACH SLAB
13C01-19	CONCRETE PAVEMENT LONGITUDINAL JOINTS AND TIES
13C13-09	URBAN DOWELED CONCRETE PAVEMENT
13C18-07A	CONCRETE PAVEMENT JOINTING
13C18-07B	CONCRETE PAVEMENT STEEL REINFORCEMENT
13C18-07C	CONCRETE PAVEMENT JOINT TYPES
13C18-07D	CONCRETE PAVEMENT JOINT TYPES AT UTILITY FIXTURES
13C18-07F	CONCRETE PAVEMENT INTERSECTION BOXOUT FOR INTEGRAL CURB AND GUTTER
13C19-03	HMA LONGITUDINAL JOINTS
15C02-08A	BARRICADES AND SIGNS FOR MAINLINE CLOSURES
15C02-08B	BARRICADES AND SIGNS FOR VARIOUS CLOSURES
15C02-08C	DETOUR SIGNING FOR MAINLINE CLOSURES
15C03-05	BARRICADES AND SIGNS FOR SIDEROAD CLOSURES
15C08-20A	LONGITUDINAL MARKING (MAINLINE)
15C11-09B	CHANNELIZING DEVICES DRUMS, CONES, BARRICADES AND VERTICAL PANELS
15C33-04	STOP LINE AND CROSSWALK PAVEMENT MARKING
15D30-06A	TRAFFIC CONTROL, PEDESTRIAN ACCOMMODATION
15D30-06B	TRAFFIC CONTROL, TEMPORARY ADA COMPLIANT PEDESTRIAN ACCOMMODATION
15D30-06C	TRAFFIC CONTROL, PEDESTRIAN ACCOMMODATION

6

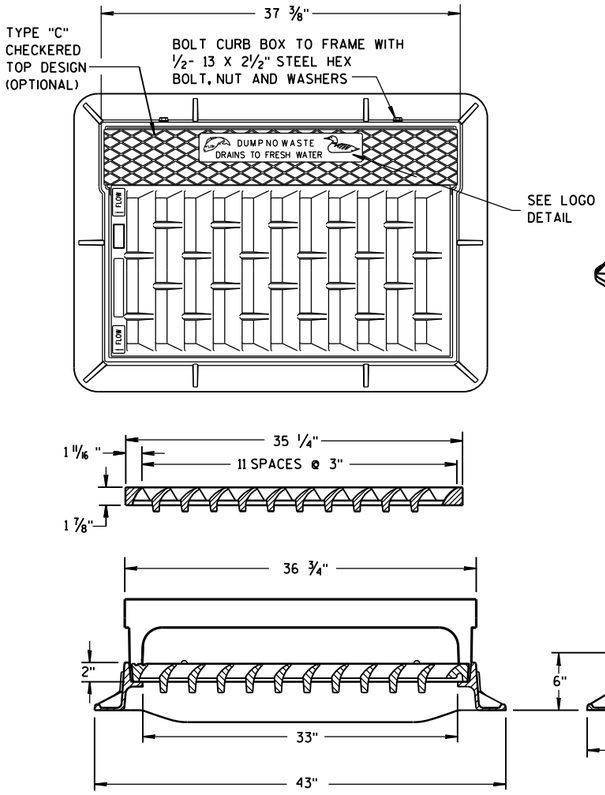

NOTE:
GRATE IS REVERSIBLE.

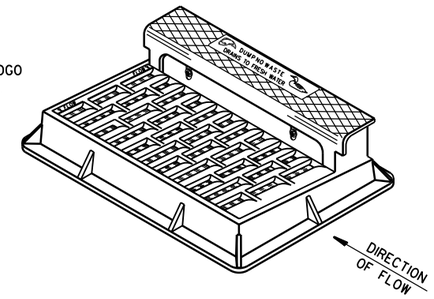

NOTE: CURB BOX HEIGHT ADJUSTABLE 6" TO 9"

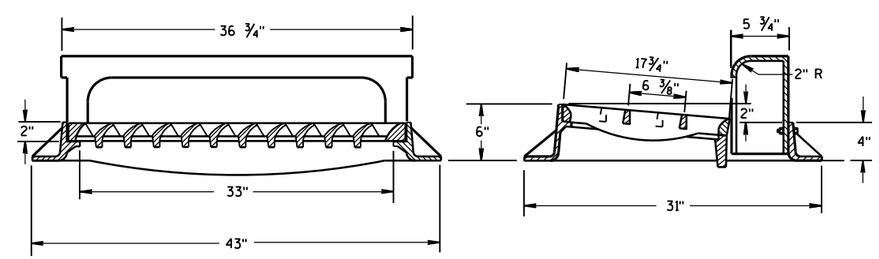

TYPE "H"

NOTE: EITHER CASTING IS ACCEPTABLE

1 1/8" DIAGONAL BARS WITH 1 5/8" OPENINGS

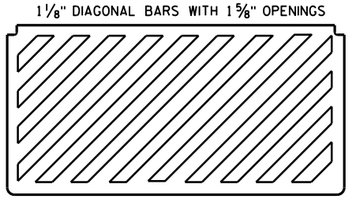

SPECIAL GRATE FOR TYPE "H" COVER

(MEASURES 35 1/4" X 17 3/4" X 2")

(NOTED AS TYPE H-S ON DRAINAGE TABLE)

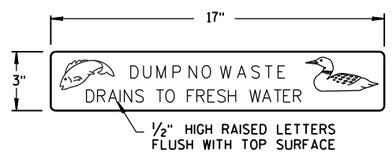

LOGO DETAIL

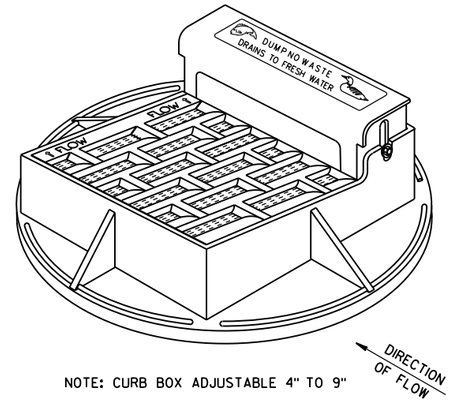

NOTE: CURB BOX ADJUSTABLE 4" TO 9"

NOTE:
GRATE IS REVERSIBLE.

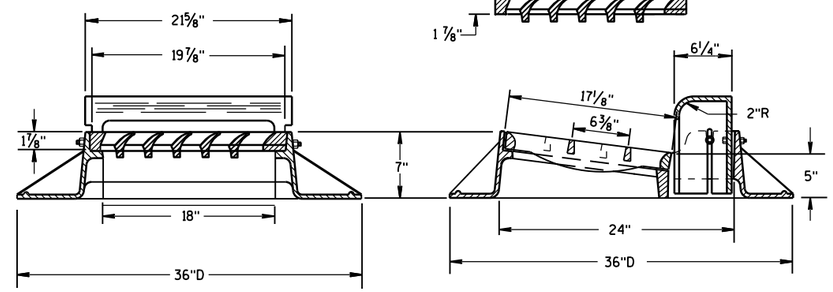

TYPE "A"

GENERAL NOTES

DETAILS OF CONSTRUCTION, MATERIALS AND WORKMANSHIP NOT SHOWN ON THIS DRAWING SHALL CONFORM TO THE PERTINENT REQUIREMENTS OF THE STANDARD SPECIFICATIONS AND THE APPLICABLE SPECIAL PROVISIONS.

DETAIL DRAWINGS FOR PROPOSED ALTERNATE DESIGNS FOR CATCH BASIN, MANHOLE AND INLET COVERS SHALL BE SUBMITTED TO THE ENGINEER FOR APPROVAL PROVIDING THAT SUCH ALTERNATE DESIGNS MAKE PROVISION FOR EQUIVALENT CAPACITY AND STRENGTH.

ROUND FRAMES AND COVERS SHALL HAVE CONTINUOUSLY MACHINED BEARING SURFACES TO PREVENT ROCKING AND RATTLING.

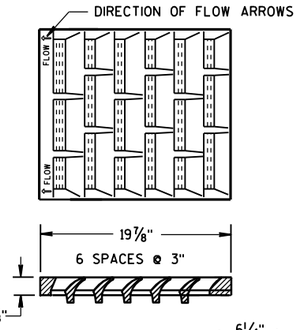

1" DIAGONAL BARS WITH 1 1/2" OPENINGS

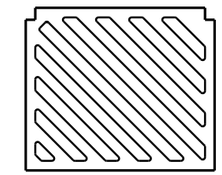

SPECIAL GRATE FOR TYPE "A" COVER

(MEASURES 19 3/4" X 17" X 1 7/8")

(NOTED AS TYPE A-S ON DRAINAGE TABLE)

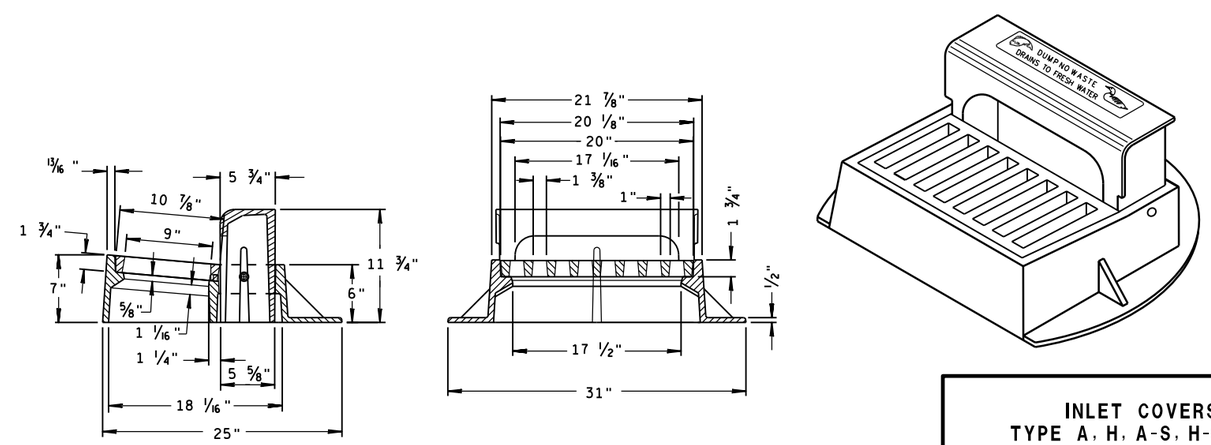

TYPE "Z"

INLET COVERS
TYPE A, H, A-S, H-S & Z

STATE OF WISCONSIN
DEPARTMENT OF TRANSPORTATION

APPROVED
11-27-13 /S/ Jerry H. Zogg
DATE ROADWAY STANDARDS DEVELOPMENT ENGINEER
FHWA

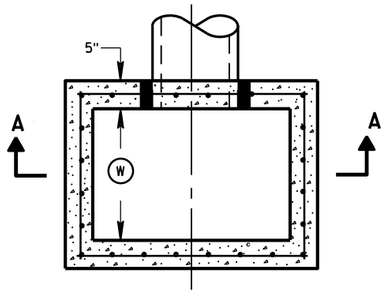

PLAN VIEW

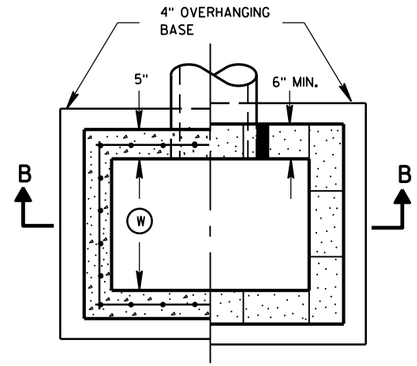

PLAN VIEW

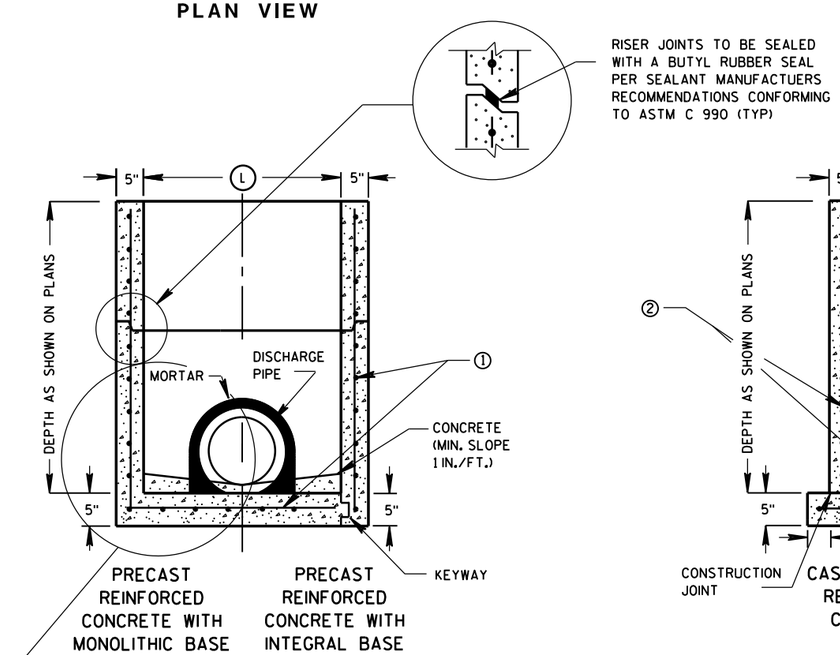

SECTION A-A

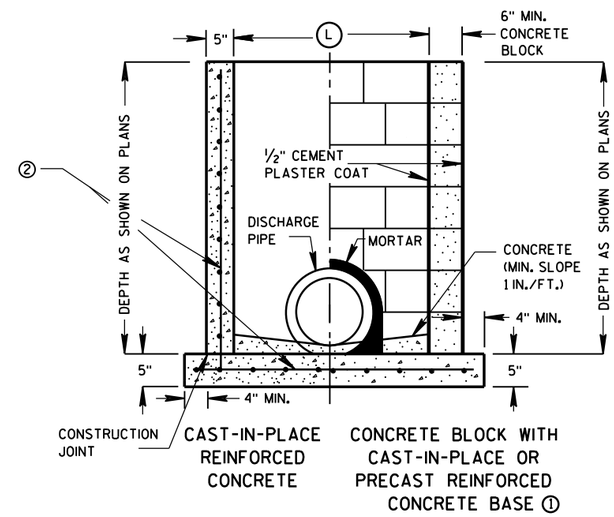

SECTION B-B

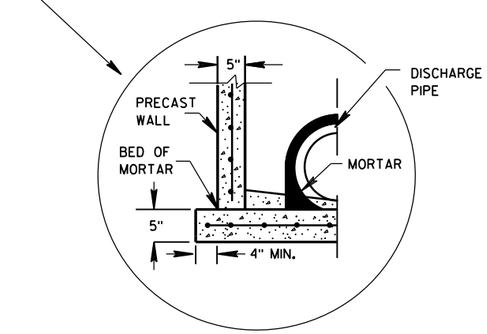

SEPARATE PRECAST REINFORCED CONCRETE BASE OPTION

GENERAL NOTES

DETAILS OF CONSTRUCTION, MATERIALS AND WORKMANSHIP NOT SHOWN ON THIS DRAWING SHALL CONFORM TO THE PERTINENT REQUIREMENTS OF THE STANDARD SPECIFICATIONS AND THE APPLICABLE SPECIAL PROVISIONS.

UNLESS OTHERWISE AUTHORIZED IN WRITING BY THE ENGINEER, THE CONTRACTOR SHALL NOT ORDER AND DELIVER PRECAST INLET UNITS REQUIRED FOR THE PROJECT UNTIL A LIST OF SIZES IS FURNISHED BY THE ENGINEER.

DETAILED DRAWINGS FOR PROPOSED ALTERNATE DESIGNS FOR UNDERGROUND DRAINAGE STRUCTURES SHALL BE SUBMITTED TO THE ENGINEER FOR APPROVAL PROVIDING THAT SUCH ALTERNATE DESIGNS MAKE PROVISION FOR EQUIVALENT CAPACITY AND STRENGTH.

ALL PRECAST INLET UNITS SHALL CONFORM TO THE PERTINENT REQUIREMENTS OF ASTM C 913.

ALL DRAINAGE STRUCTURES ARE DESIGNATED ON THE PLANS AS "MANHOLES 3X3-L", "CATCH BASINS 4-B", "INLETS 2X3-H", ETC. THE FIRST NUMBERS DESIGNATES THE SIZE OF THE STRUCTURE, AND THE FOLLOWING LETTER DESIGNATES THE TYPE OF COVER TO BE USED TO COMPRISE THE COMPLETE UNIT.

BASES SHALL BE PLACED ON A BED OF MATERIAL AT LEAST 6 INCHES IN DEPTH, WHICH MEETS THE REQUIREMENTS OF FOUNDATION BACKFILL. THIS BEDDING SHALL BE COMPACTED AND PROVIDE UNIFORM SUPPORT FOR THE ENTIRE AREA OF THE BASE.

ALL BAR STEEL REINFORCEMENT SHALL BE EMBEDDED 2 INCHES CLEAR UNLESS OTHERWISE SHOWN OR NOTED.

PRECAST REINFORCED RISERS SHALL HAVE A TONGUE AND GROOVE JOINT WITH TONGUE UP OR DOWN.

4" OVERHANGING BASES ARE REQUIRED FOR CAST-IN-PLACE REINFORCED CONCRETE AND CONCRETE BLOCK INSTALLATIONS.
4" OVERHANG IS REQUIRED WHEN SEPARATE PRECAST BASE IS PROVIDED.
OVERHANG IS NOT REQUIRED ON PRECAST STRUCTURES WITH AN INTEGRAL OR MONOLITHIC BASE.

MAXIMUM INSIDE PIPE DIAMETER DETERMINED BY 3 INCH CLEARANCE ON EACH SIDE OF THE OUTSIDE WALL OF THE PIPE. SEE DETAIL "A". ASSUMES PIPE ENTERS PERPENDICULAR TO THE STRUCTURE.

① FOR PRECAST INLETS PROVIDE REINFORCING STEEL IN ACCORDANCE TO ASTM C 913.

② CONTRACTOR TO PROVIDE DRAWING(S) STAMPED BY A PROFESSIONAL ENGINEER FOR STEEL REINFORCING DESIGN FOR CAST-IN-PLACE STRUCTURES.

INLET COVER MATRIX

INLET SIZE		INLET COVER TYPE	ALL A'S	ALL B'S	BW	F	ALL H'S	S	T	V	WM
	WIDTH Ⓦ (FT)	LENGTH Ⓛ (FT)									
2X2-FT	2	2	X	X				X		X	
2X2.5-FT	2	2.5			X			X	X	X	X
2X3-FT	2	3					X				
2.5X3-FT	2.5	3				X					

PIPE MATRIX

INLET SIZE	MAXIMUM INSIDE PIPE DIAMETER	
	WIDTH (IN)	LENGTH (IN)
2X2-FT	12	12
2X2.5-FT	12	18
2X3-FT	12	24
2.5X3-FT	18	24

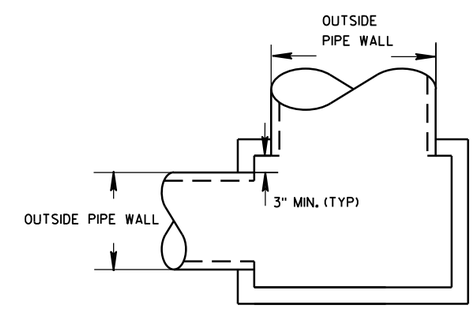

DETAIL "A"

INLETS 2X2-FT, 2X2.5-FT, 2X3-FT AND 2.5X3-FT

INLETS 2X2-FT, 2X2.5-FT, 2X3-FT AND 2.5X3-FT

STATE OF WISCONSIN
DEPARTMENT OF TRANSPORTATION

APPROVED
Sept., 2016 — DATE
/S/ Rodney Taylor
ROADWAY STANDARDS D IT
UNIT SUPERVIS
FHWA

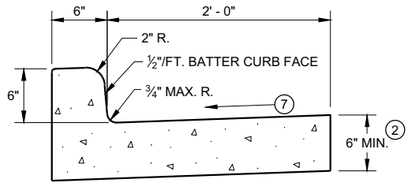

TYPES A[1] & D

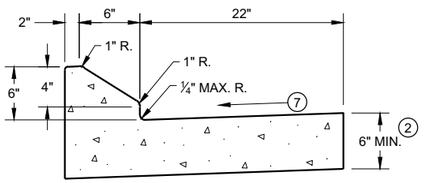

6" SLOPED CURB TYPES G[1] & J

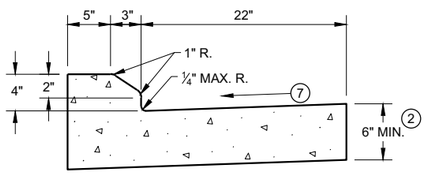

4" SLOPED CURB TYPES G[1] & J

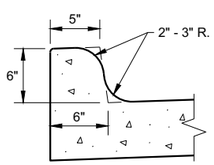

TYPES K[1] & L
(OPTIONAL CURB SHAPE)

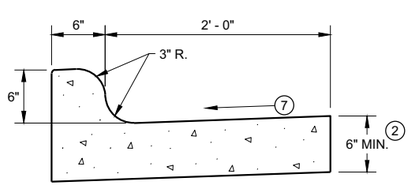

TYPES K[1] & L

CONCRETE CURB AND GUTTER 30"

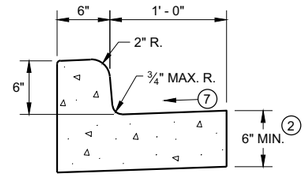

TYPES A[1] & D

CONCRETE CURB AND GUTTER 18"

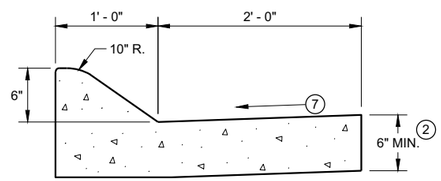

6" SLOPED CURB TYPES A[1] & D

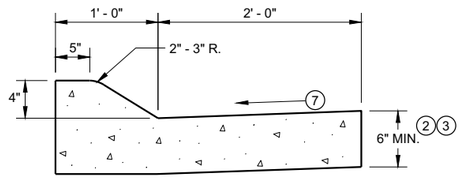

4" SLOPED CURB TYPES A[1] & D

CONCRETE CURB AND GUTTER 36"

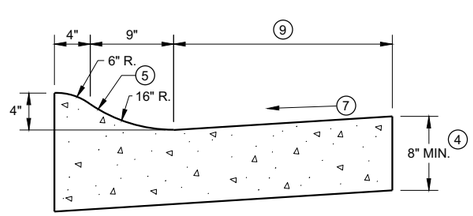

4" SLOPED CURB TYPES R[1] & T

TBT & TBTT	X
30"	22"
36"	28"

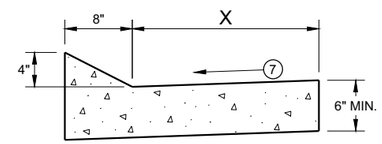

TYPES TBT & TBTT[1]

CONCRETE CURB AND GUTTER

GENERAL NOTES

DETAILS OF CONSTRUCTION AND WORKMANSHIP NOT SHOWN ON THIS DRAWING SHALL CONFORM TO THE PERTINENT REQUIREMENTS OF THE CONTRACT.

PAVEMENT TIES AND TIE BARS SHALL BE EPOXY COATED IN CONFORMANCE WITH SUBSECTION 505.2.6.2 OF THE STANDARD SPECIFICATIONS.

INTEGRAL CURB AND GUTTER SHALL CONFORM TO THE DETAILS SHOWN FOR CONCRETE CURB AND GUTTER INCLUDING THE TRANSVERSE GUTTER SLOPE.

UNLESS OTHERWISE SHOWN ON THE TYPICAL CROSS SECTIONS, THE BASE AGGREGATE AND COMMON EXCAVATION LIMITS ARE 2' - 0" BEHIND THE BACK OF CURBS.

1. TIE BARS ARE REQUIRED FOR CURB AND GUTTERS TYPES A, G, K, R, AND TBTT.
2. THE BOTTOM OF CURB AND GUTTER MAY BE CONSTRUCTED EITHER LEVEL OR PARALLEL TO THE SLOPE OF THE SUBGRADE OR BASE AGGREGATE PROVIDED A 6" MINIMUM GUTTER THICKNESS IS MAINTAINED.
3. USE 8" MINIMUM GUTTER THICKNESS WHEN USED WITH AN ADJACENT CONCRETE TRUCK APRON PLACED BEHIND BACK OF CURB.
4. THE BOTTOM OF CURB AND GUTTER MAY BE CONSTRUCTED EITHER LEVEL OR PARALLEL TO THE SLOPE OF THE SUBGRADE OR BASE AGGREGATE PROVIDED A 8" MINIMUM GUTTER THICKNESS IS MAINTAINED.
5. UNLESS OTHERWISE NOTED, FOR STAKING PURPOSES THE FACE OF CURB IS 6" FROM THE BACK OF CURB.
6. WHEN REVERSE SLOPE GUTTER IS REQUIRED, THE LOCATION(S) WILL BE SHOWN ELSEWHERE IN THE PLAN.
7. USE 4% GUTTER CROSS SLOPE UNLESS OTHERWISE NOTED IN THE PLANS.
8. INCLUDE LONGITUDINAL JOINT AND TIE BARS ALONG LANE EDGE WHEN CONCRETE PANEL WIDTH EXCEEDS THE MAXIMUM WIDTH PER TABLE BELOW. LONGITUDINAL JOINT(S) ARE NOT ALLOWED WITHIN TRAFFIC LANES AND BIKE LANES. LONGITUDINAL JOINT MAY BE SAWED.
9. CONCRETE CURB AND GUTTER 4-INCH SLOPED 30-INCH TYPE "R" AND "T" = 17 INCHES
   CONCRETE CURB AND GUTTER 4-INCH SLOPED 36-INCH TYPE "R" AND "T" = 23 INCHES

PAVEMENT THICKNESS AND MAXIMUM CONCRETE PANEL WIDTH TABLE

PAVEMENT THICKNESS	MAXIMUM PANEL WIDTH
LESS THAN 10"	12'
10" & ABOVE	15'

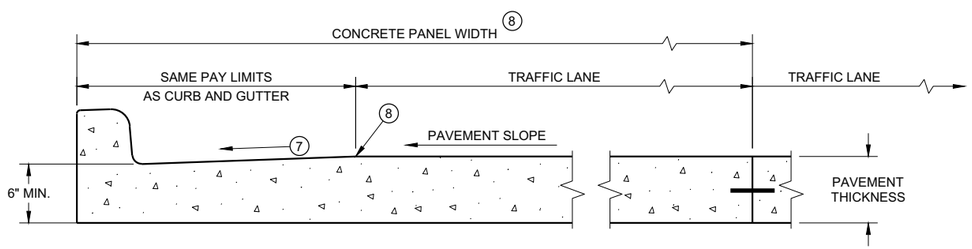

PARTIAL SECTION OF PAVEMENT *
WITH INTEGRAL CURB AND GUTTER

* BIKE LANE IS NOT SHOWN

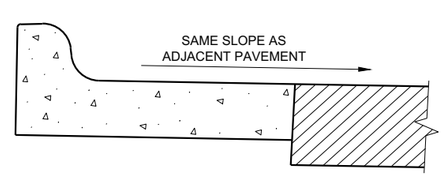

REVERSE SLOPE GUTTER[6]
(TYPICAL FOR ALL CURB & GUTTER TYPES)

CONCRETE CURB AND GUTTER

STATE OF WISCONSIN
DEPARTMENT OF TRANSPORTATION

6

SDD 08D01 - 22a

6

SDD 08D01 - 22a

GENERAL NOTES

DETAILS OF CONSTRUCTION AND WORKMANSHIP NOT SHOWN ON THIS DRAWING SHALL CONFORM TO THE PERTINENT REQUIREMENTS OF THE CONTRACT.

PAVEMENT TIES AND TIE BARS SHALL BE EPOXY COATED IN CONFORMANCE WITH SUBSECTION 505.2.6.2 OF THE STANDARD SPECIFICATIONS.

UNLESS OTHERWISE SHOWN ON THE TYPICAL CROSS SECTIONS, THE BASE AGGREGATE AND COMMON EXCAVATION LIMITS ARE 2' - 0" BEHIND THE BACK OF CURBS.

(1) TIE BARS ARE REQUIRED FOR CURB AND GUTTERS TYPES A, G, K, R, AND TBTT.

(2) THE BOTTOM OF CURB AND GUTTER MAY BE CONSTRUCTED EITHER LEVEL OR PARALLEL TO THE SLOPE OF THE SUBGRADE OR BASE AGGREGATE PROVIDED A 6" MINIMUM GUTTER THICKNESS IS MAINTAINED.

(9) REFER TO SDD 08D18 AND 08D19 FOR ADDITIONAL DRIVEWAY ENTRANCE CURB DETAILS.

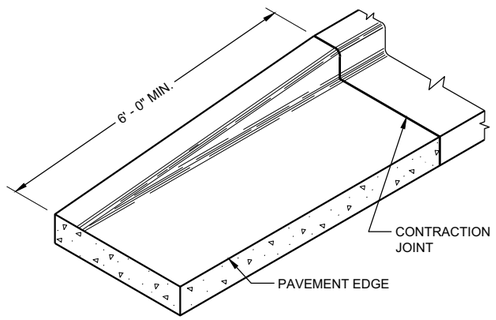

END SECTIONCURB AND GUTTER

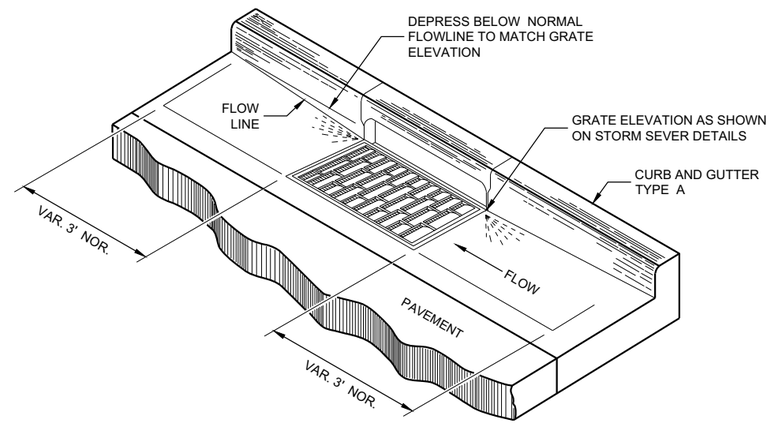

DETAIL OF CURB AND GUTTER AT INLETS
(TYPICAL H INLET COVER SHOWN)

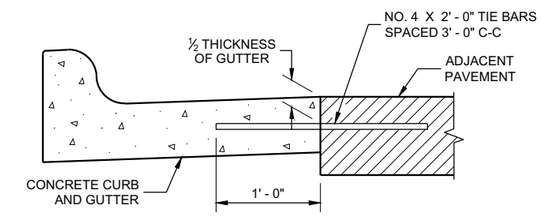

TYPICAL TIE BAR LOCATION (1)

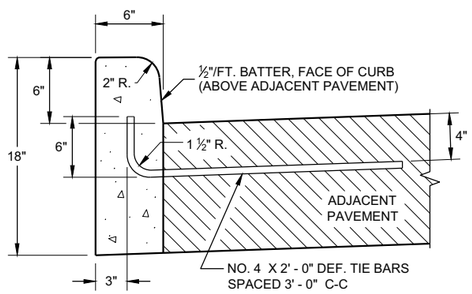

TYPES A (1) & D

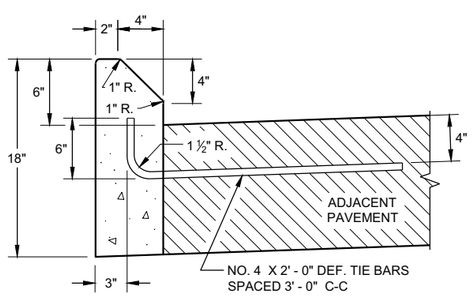

TYPES G (1) & J

CONCRETE CURB

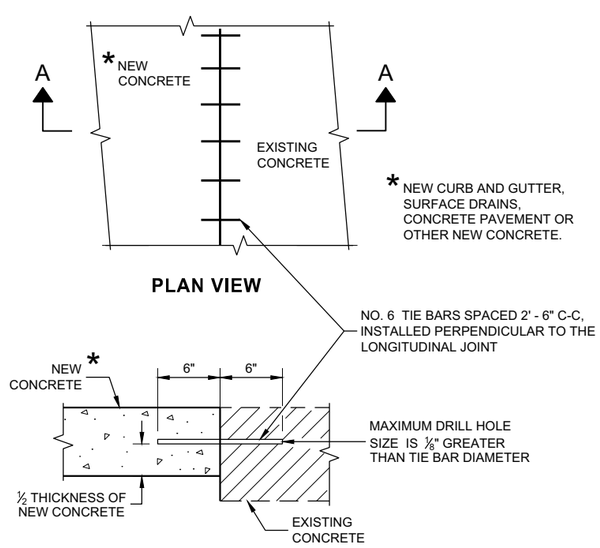

PLAN VIEW

SECTION A - A

TIE BARS DRILLED INTO EXISTING PAVEMENT

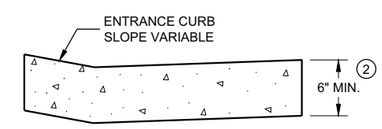

DRIVEWAY ENTRANCE CURB (9)
(WHEN DIRECTED BY THE ENGINEER)

CONCRETE CURB, TIES AND CURB AND GUTTER APPLICATIONS

STATE OF WISCONSIN
DEPARTMENT OF TRANSPORTATION

APPROVED
February 2021 — DATE
/S/ Rodnery Taylor — ROADWAY STANDARDS DEVE ENGINEER
FHWA

6

SDD 08D01 - 22b

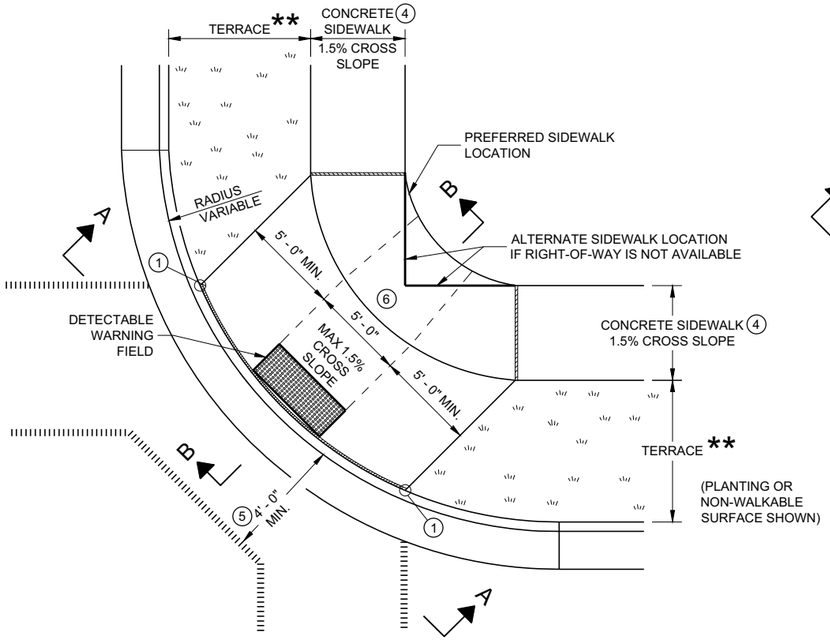

PLAN VIEW

CURB RAMP TYPE 1

(CENTER OF CORNER RADIUS)

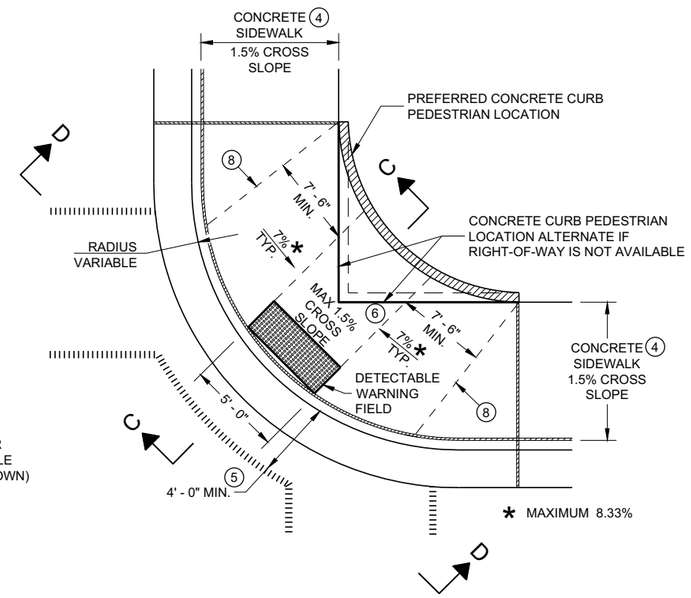

PLAN VIEW

CURB RAMP TYPE 1 - A

(NO TERRACE)

GENERAL NOTES

AVOID PLACING DRAINAGE STRUCTURES, JUNCTION BOXES OR OTHER OBSTRUCTIONS IN FRONT OF RAMP ACCESS AREAS.

DETAILS OF CONSTRUCTION, MATERIALS AND WORKMANSHIP NOT SHOWN ON THIS DRAWING SHALL CONFORM TO THE PERTINENT REQUIREMENTS OF THE STANDARD SPECIFICATIONS AND THE APPLICABLE SPECIAL PROVISIONS.

WHEN NECESSARY, THE SIDEWALK ELEVATION MAY BE LOWERED TO MEET THE HIGH POINT ON THE RAMP.

TYPE 1 CURB RAMPS SHALL HAVE A NORMAL SIDEWALK APRON AND CURB ON BOTH SIDES OF RAMP.

DETECTABLE WARNING FILED SHALL BE MEASURED AND PAID BY THE SQUARE FOOT AS "CURB RAMP DETECTABLE WARNING FIELD". THE CONCRETE PEDESTRIAN CURB, IF NEEDED, SHALL BE MEASURED AND PAID BY THE LINEAR FOOT AS "CONCRETE CURB PEDESTRIAN". CONCRETE SIDEWALK IN THE CURB RAMP AREA SHALL BE MEASURED AND PAID BY THE SQUARE FOOT AS CONCRETE SIDEWALK, INCLUDING THE AREA UNDER THE DETECTABLE WARNING FIELD.

SELECT CURB RAMP DETECTABLE WARNING FIELD MATERIALS AND DEVICES FROM THE DEPARTMENT'S APPROVED MATERIALS LIST. THE COLOR OF THE DETECTABLE WARNING FIELD IS SPECIFIED ELSEWHERE AND IS INCIDENTAL TO THE BID ITEM OF "CURB RAMP DETECTABLE WARNING FIELD"

DETECTABLE WARNING FIELDS THAT ARE INSTALLED AS A GROUP OR SIDE BY SIDE, SHALL BE FROM THE SAME MANUFACTURER.

SURFACE TEXTURE OF THE RAMP SHALL BE OBTAINED BY COARSE BROOMING TRANSVERSE TO THE SLOPE OF THE RAMP.

(1) THIS POINT IS AN EXTENSION OF OUTSIDE EDGE OF APPROACHING SIDEWALK WHERE IT MEETS THE BACK OF CONCRETE CURB. POINT LOCATION MAY BE ADJUSTED TO ALIGN WITH BEGINNING OF FULL-HEIGHT CURB IF THIS DISTANCE IS SHORT.

(2) GRADE CHANGE BETWEEN GUTTER FLAG SLOPE AND THE CURB RAMP SLOPE SHALL NOT EXCEED 11%. MAXIMUM GUTTER FLAG SLOPE IS 4%. PROVIDE LONGITUDINAL DRAINAGE AROUND CURB AND AWAY FROM CURB RAMP. NO VERTICAL LIPS OR DISCONTINUITIES GREATER THAN ¼ - INCH ARE ALLOWED. SLOPE OF CURB HEAD OPENING SHALL MATCH THE RAMP SLOPE, MINIMALLY 1.5% AND NOT TO EXCEED 7%. WHEN ADJACENT TO 1.5% LANDING, CONSTRUCT CURB HEAD OPENING AT 1.5% IN THE DIRECTION OF PEDESTRIAN TRAVEL.

(3) MAXIMUM 8.33% CURB RAMP SLOPE IS ALLOWABLE WITH FLATTENED GUTTER FLAG SLOPE AND NOT TO EXCEED 11% GRADE CHANGE.

(4) ±0.5% CONSTRUCTION TOLERANCE IN SIDEWALK CROSS SLOPE. THE SIDEWALK CROSS SLOPE SHALL NOT EXCEED 2% WITHOUT PRIOR APPROVAL FROM THE ENGINEER.

(5) PROVIDE A LEVEL LANDING IN THE STREET AND GUTTER AREA (2% MAXIMUM SLOPE IN ANY DIRECTION). WHEN THE GUTTER SLOPE EXCEEDS 2%, CONSTRUCT THE LEVEL LANDING IN THE STREET AREA.

(6) PROVIDE A LEVEL LANDING (MAXIMUM 2% SLOPE) IN ANY DIRECTION OF PEDESTRIAN TRAVEL. STANDARD LEVEL LANDING SIZE IS 5 FEET BY 5 FEET.

(8) PROVIDE GRADE BREAK PERPENDICULAR TO DIRECTION OF WHEELCHAIR TRAVEL.

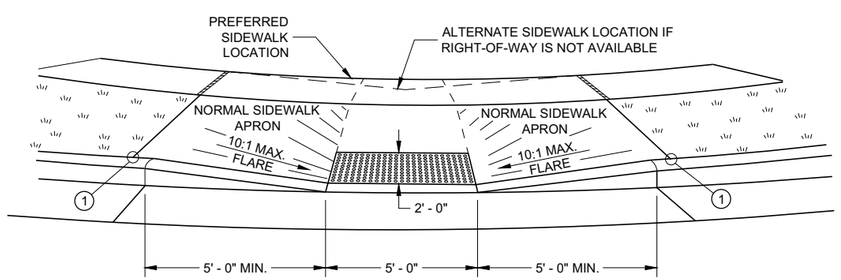

VIEW A - A FOR TYPE 1

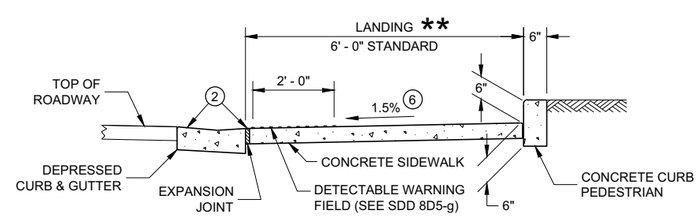

SECTION C - C FOR TYPE 1 - A

LEGEND

- ½" EXPANSION JOINT SIDEWALK
- CONTRACTION JOINT FIELD LOCATED
- PAVEMENT MARKING CROSSWALK (WHITE)

** WIDTH SHOWN ELSEWHERE IN THE PLANS

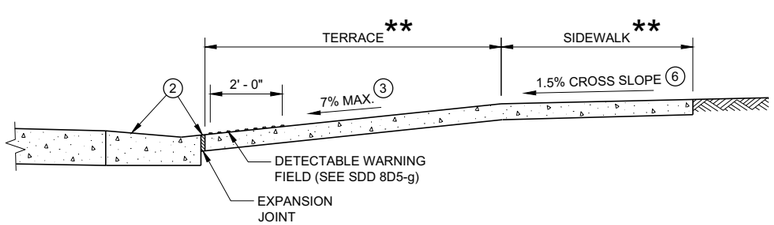

SECTION B - B FOR TYPE 1

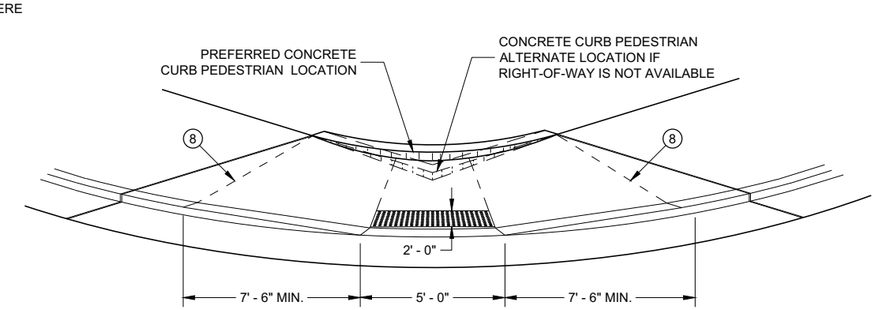

VIEW D - D FOR TYPE 1 - A

CURB RAMPS TYPE 1 AND 1-A

STATE OF WISCONSIN
DEPARTMENT OF TRANSPORTATION

6

6

SDD 08D05 - 20a

SDD 08D05 - 20a

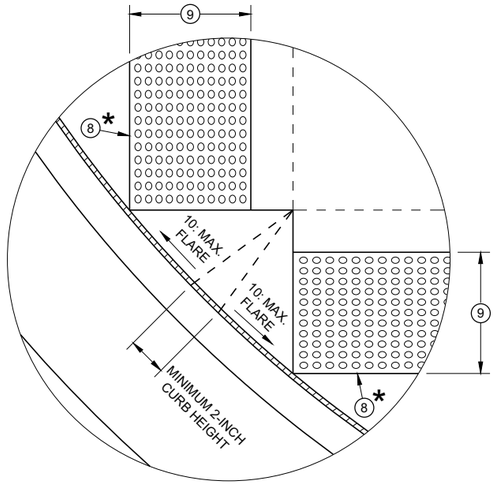

DETAIL A

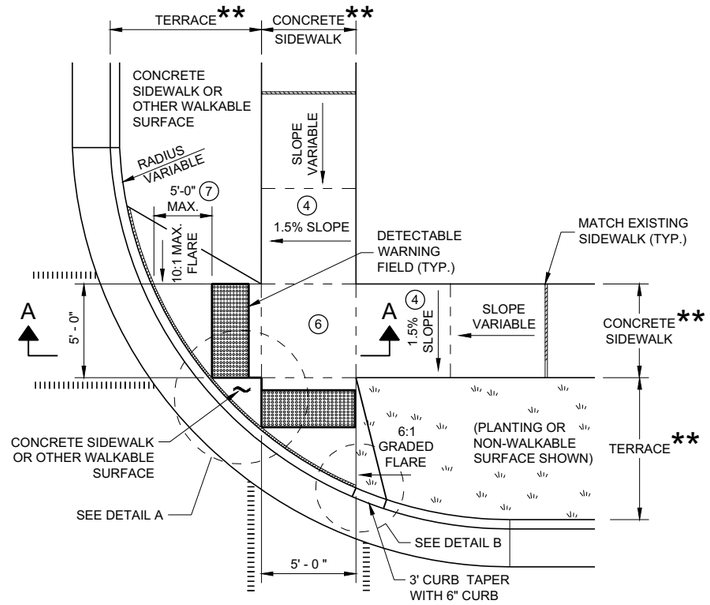

PLAN VIEW
CURB RAMP TYPE 2
(CENTER OF CORNER RADIUS)

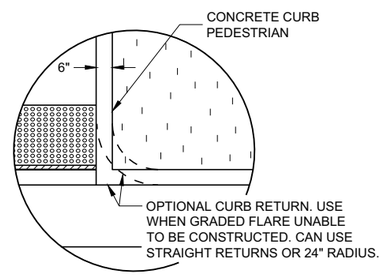

DETAIL B

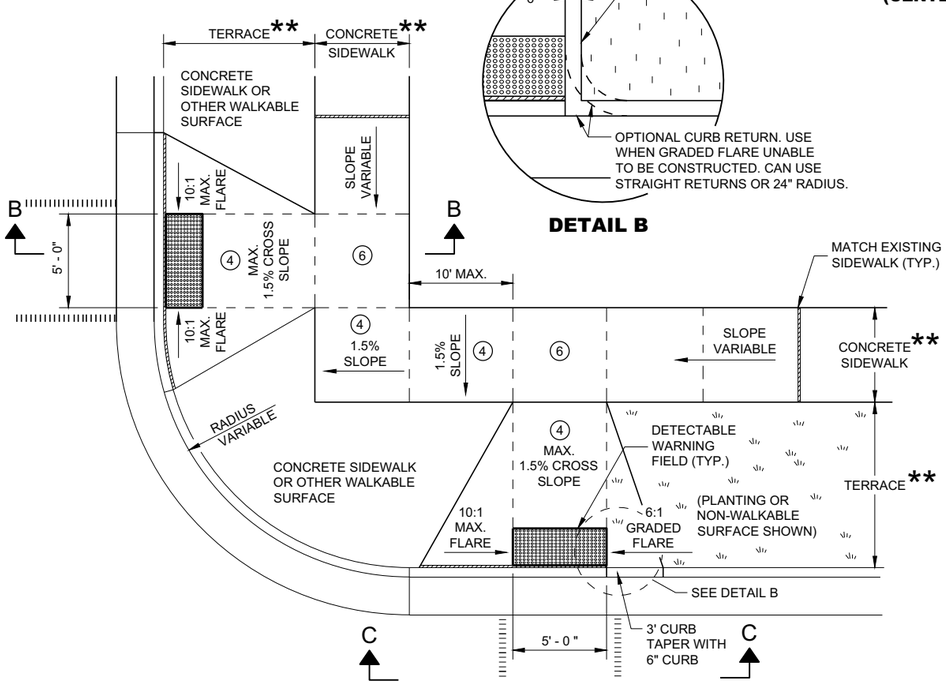

PLAN VIEW
CURB RAMP TYPE 3
(OUTSIDE OF CROSSWALK AREA)

GENERAL NOTES

AVOID PLACING DRAINAGE STRUCTURES, JUNCTION BOXES OR OTHER OBSTRUCTIONS IN FRONT OF RAMP ACCESS AREAS.

DETAILS OF CONSTRUCTION, MATERIALS AND WORKMANSHIP NOT SHOWN ON THIS DRAWING SHALL CONFORM TO THE PERTINENT REQUIREMENTS OF THE STANDARD SPECIFICATIONS AND THE APPLICABLE SPECIAL PROVISIONS.

DETECTABLE WARNING FIELDS THAT ARE INSTALLED AS A GROUP OR SIDE BY SIDE SHALL BE FROM THE SAME MANUFACTURER.

(2) GRADE CHANGE BETWEEN GUTTER FLAG SLOPE AND THE CURB RAMP SLOPE SHALL NOT EXCEED 11%. MAXIMUM GUTTER FLAG SLOPE IS 4%. PROVIDE LONGITUDINAL DRAINAGE AROUND CURB AND AWAY FROM CURB RAMP. NO VERTICAL LIPS OR DISCONTINUITIES GREATER THAN ¼ - INCH ARE ALLOWED. SLOPE OF CURB HEAD OPENING SHALL MATCH THE RAMP SLOPE, MINIMALLY 1.5% AND NOT TO EXCEED 7%. WHEN ADJACENT TO 1.5% LANDING, CONSTRUCT CURB HEAD OPENING AT 1.5% IN THE DIRECTION OF PEDESTRIAN TRAVEL.

(3) AN 8.33% CURB RAMP SLOPE IS ALLOWABLE WITH FLATTENED GUTTER FLAG SLOPE (2.67% OR LESS) AND NOT TO EXCEED 11% GRADE CHANGE.

(4) ±0.5% CONSTRUCTION TOLERANCE IN SIDEWALK CROSS SLOPE. THE SIDEWALK CROSS SLOPE SHALL NOT EXCEED 2% WITHOUT PRIOR APPROVAL FROM THE ENGINEER.

(6) PROVIDE A LEVEL LANDING (MAXIMUM 2% SLOPE) IN ANY DIRECTION OF PEDESTRIAN TRAVEL. STANDARD LEVEL LANDING SIZE IS 5 FEET X 5 FEET.

(7) WHEN GRADE BREAK DISTANCE EXCEEDS 5 FEET, USE RADIAL DETECTABLE WARNING FIELD PER SDD 8D5-f.

(8) PROVIDE GRADE BREAK PERPENDICULAR TO DIRECTION OF WHEELCHAIR TRAVEL.

(9) WHEN DISTANCE IS LESS THAN 6' - 0", IT MAY BE DIFFICULT TO ACHIEVE A 7% SLOPE OR FLATTER ALONG THE RAMP. REDUCE CURB HEIGHT IN TRIANGLE AREA TO ACHIEVE 7% SLOPE OR FLATTER ON RAMP. CONSTRUCT 2-INCH MINIMUM CURB HEIGHT BETWEEN 10:1 FLARES.

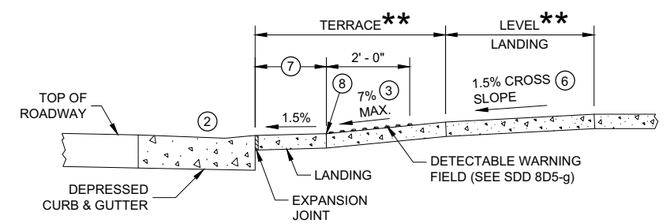

SECTION A - A FOR TYPE 2

* MAXIMUM 2.0% SLOPE IN ALL DIRECTIONS IN FRONT OF GRADE BREAK

** WIDTH SHOWN ELSEWHERE IN THE PLANS

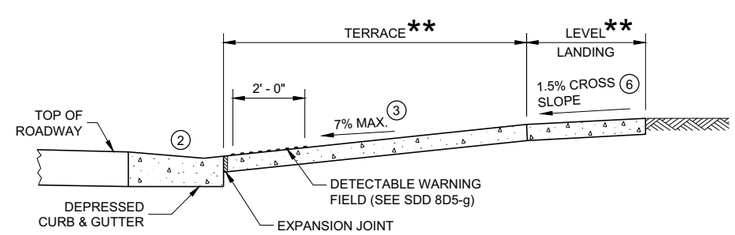

SECTION B - B FOR TYPE 3

LEGEND

- ½" EXPANSION JOINT SIDEWALK
- CONTRACTION JOINT SIDEWALK
- PAVEMENT MARKING CROSSWALK (WHITE)

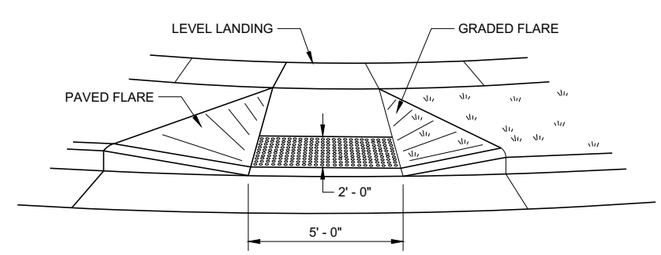

VIEW C - C FOR TYPE 3

CURB RAMPS TYPE 2 AND 3

STATE OF WISCONSIN
DEPARTMENT OF TRANSPORTATION

6

SDD 08D05 - 20b

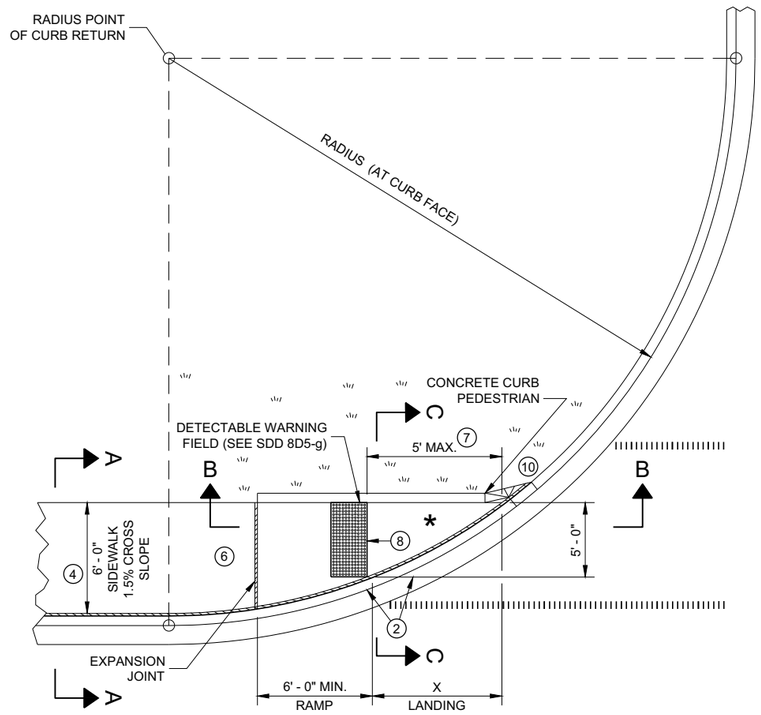

PLAN VIEW
CURB RAMP TYPE 4A

RADIUS (AT CURB FACE)	X
10 FEET	4' - 7"
15 FEET	6' - 5½"

INTERMEDIATE RADII CAN BE INTERPOLATED

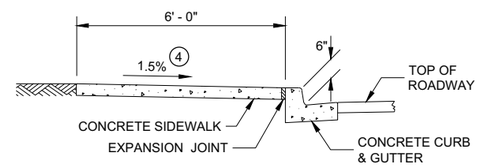

SECTION A - A FOR TYPE 4A

GENERAL NOTES

AVOID PLACING DRAINAGE STRUCTURES, JUNCTION BOXES OR OTHER OBSTRUCTIONS IN FRONT OF RAMP ACCESS AREAS.

DETAILS OF CONSTRUCTION, MATERIALS AND WORKMANSHIP NOT SHOWN ON THIS DRAWING SHALL CONFORM TO THE PERTINENT REQUIREMENTS OF THE STANDARD SPECIFICATIONS AND THE APPLICABLE SPECIAL PROVISIONS.

DETECTABLE WARNING FIELDS THAT ARE INSTALLED AS A GROUP OR SIDE BY SIDE, SHALL BE FROM THE SAME MANUFACTURER.

(2) GRADE CHANGE BETWEEN GUTTER FLAG SLOPE AND THE CURB RAMP SLOPE SHALL NOT EXCEED 11%. MAXIMUM GUTTER FLAG SLOPE IS 4%. PROVIDE LONGITUDINAL DRAINAGE AROUND CURB AND AWAY FROM CURB RAMP. NO VERTICAL LIPS OR DISCONTINUITIES GREATER THAN ¼ - INCH ARE ALLOWED. SLOPE OF CURB HEAD OPENING SHALL MATCH THE RAMP SLOPE, MINIMALLY 1.5% AND NOT TO EXCEED 7%. WHEN ADJACENT TO 1.5% LANDING, CONSTRUCT CURB HEAD OPENING AT 1.5% IN THE DIRECTION OF PEDESTRIAN TRAVEL.

(3) AN 8.33% CURB RAMP SLOPE IS ALLOWABLE WITH FLATTENED GUTTER FLAG SLOPE AND NOT TO EXCEED 11% GRADE CHANGE.

(4) ±0.5% CONSTRUCTION TOLERANCE IN SIDEWALK CROSS SLOPE. THE SIDEWALK CROSS SLOPE SHALL NOT EXCEED 2% WITHOUT PRIOR APPROVAL FROM THE ENGINEER.

(6) PROVIDE A LEVEL LANDING (MAXIMUM 2% SLOPE) IN ANY DIRECTION OF PEDESTRIAN TRAVEL. STANDARD LEVEL LANDING SIZE IS 5 FEET BY 5 FEET.

(7) WHEN THIS GRADE BREAK DISTANCE EXCEEDS 5 FEET, USE RADIAL DETECTABLE WARNING FIELD PER SDD 8D5-f.

(8) PROVIDE GRADE BREAK PERPENDICULAR TO DIRECTION OF WHEELCHAIR TRAVEL.

(10) INSTALL TRANSITION NOSE (INCIDENTAL TO OTHER PAY ITEMS). DO NOT MARK TRANSITION NOSE.

LEGEND

- ½" EXPANSION JOINT SIDEWALK
- CONTRACTION JOINT SIDEWALK
- PAVEMENT MARKING CROSSWALK (WHITE)

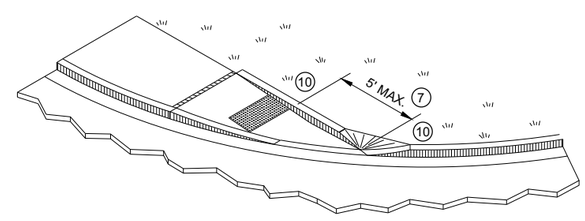

ISOMETRIC VIEW FOR TYPE 4A

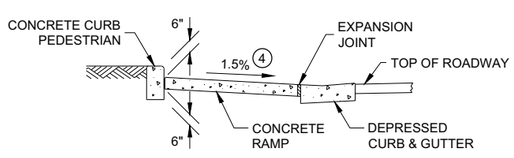

SECTION C - C FOR TYPE 4A

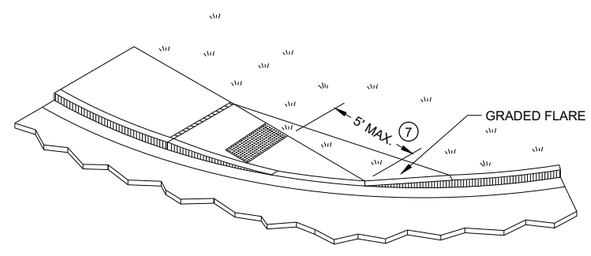

ISOMETRIC VIEW FOR TYPE 4A1

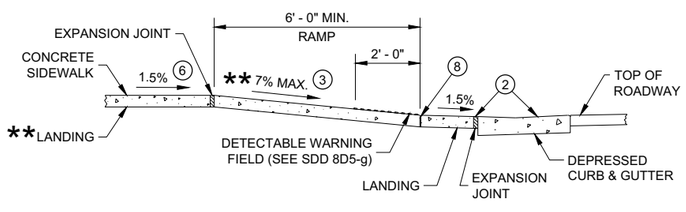

** IF RAMP SLOPE IS LESS THAN 5.0%, THEN NO ADJACENT UPHILL LANDING IS REQUIRED

SECTION B - B FOR TYPE 4A AND TYPE 4A1

* MAXIMUM 2.0% SLOPE IN ALL DIRECTIONS IF FRONT OF GRADE BREAK

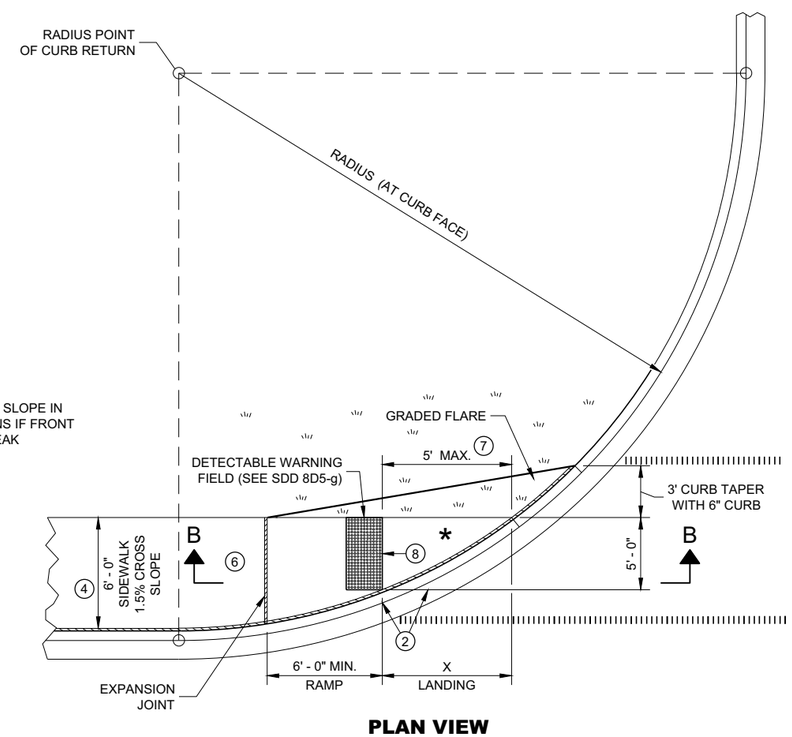

PLAN VIEW
CURB RAMP TYPE 4A1

CURB RAMPS
TYPE 4A AND 4A1

STATE OF WISCONSIN
DEPARTMENT OF TRANSPORTATION

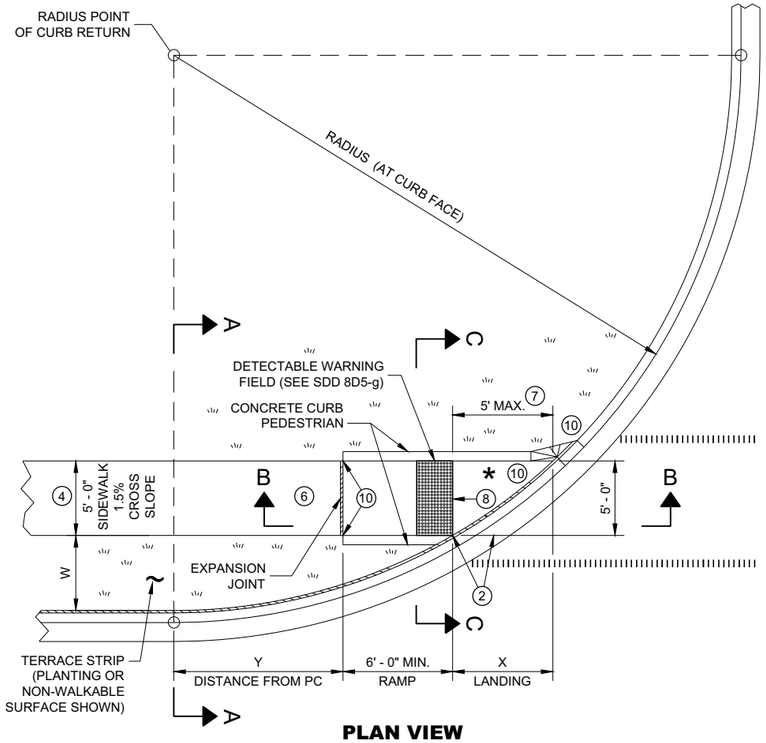

PLAN VIEW

CURB RAMP TYPE 4B

RADIUS (AT CURB FACE)	W = 3' - 0"		W = 4' - 0"		W = 5' - 0"		W = 6' - 0"		W = 7' - 0"		W = 8' - 0"		W = 9' - 0"		W = 10' - 0"	
	X	Y	X	Y	X	Y	X	Y	X	Y	X	Y	X	Y	X	Y
10 FEET	2' - 10 ¼"	0' - 5"	2' - 1"	1' - 4 ½"	1' - 5"	2' - 1"	0' - 10"	2' - 7 ½"	0' - 3 ¼"	3' - 0 ¼"						
15 FEET	4' - 6 ¾"	2' - 1 ¾"	3' - 9"	3' - 5 ¾"	3' - 1 ¼"	4' - 6"	2' - 6 ¾"	5' - 4 ½"	2' - 1"	6' - 1"	1' - 8"	6' - 8 ½"	1' - 3 ¼"	7' - 2 ½"	0' - 10 ¾"	7' - 7 ¼"
20 FEET	5' - 9 ¾"	3' - 6 ½"	4' - 11 ½"	5' - 1 ¾"	4' - 3 ¼"	6' - 5 ½"	3' - 8 ¾"	7' - 7"	3' - 3"	8' - 6 ½"	2' - 10"	9' - 4 ½"	2' - 5 ½"	10' - 1 ¼"	2' - 1 ¼"	10' - 9"
30 FEET			6' - 9 ¼"	7' - 11 ¼"	6' - 0 ¼"	9' - 8"	5' - 5"	11' - 1 ¾"	4' - 10 ¾"	12' - 5 ¾"	4' - 5 ½"	13' - 7 ¾"	4' - 0 ¾"	14' - 8 ½"	3' - 8 ½"	15' - 8 ¼"
40 FEET									6' - 1 ¾"	15' - 8 ½"	5' - 8"	17' - 2"	5' - 3"	18' - 5 ¾"	4' - 10 ¾"	19' - 8 ¼"
50 FEET															5' - 10 ¼"	23' - 2"

INTERMEDIATE RADII CAN BE INTERPOLATED
DIMENSION "Y" IS CALCULATED BASED ON 6'-0" RAMP LENGTH
DIMENSION "X" IS CALCULATED BASED ON 5'-0" SIDEWALK WIDTH

LEGEND

- ½" EXPANSION JOINT SIDEWALK
- CONTRACTION JOINT SIDEWALK
- PAVEMENT MARKING CROSSWALK (WHITE)

GENERAL NOTES

AVOID PLACING DRAINAGE STRUCTURES, JUNCTION BOXES OR OTHER OBSTRUCTIONS IN FRONT OF RAMP ACCESS AREAS.

DETAILS OF CONSTRUCTION, MATERIALS AND WORKMANSHIP NOT SHOWN ON THIS DRAWING SHALL CONFORM TO THE PERTINENT REQUIREMENTS OF THE STANDARD SPECIFICATIONS AND THE APPLICABLE SPECIAL PROVISIONS.

DETECTABLE WARNING FIELDS THAT ARE INSTALLED AS A GROUP OR SIDE BY SIDE, SHALL BE FROM THE SAME MANUFACTURER.

(2) GRADE CHANGE BETWEEN GUTTER FLAG SLOPE AND THE CURB RAMP SLOPE SHALL NOT EXCEED 11%. MAXIMUM GUTTER FLAG SLOPE IS 4%. PROVIDE LONGITUDINAL DRAINAGE AROUND CURB AND AWAY FROM CURB RAMP. NO VERTICAL LIPS OR DISCONTINUITIES GREATER THAN ¼ - INCH ARE ALLOWED. SLOPE OF CURB HEAD OPENING SHALL MATCH THE RAMP SLOPE, MINIMALLY 1.5% AND NOT TO EXCEED 7%. WHEN ADJACENT TO 1.5% LANDING, CONSTRUCT CURB HEAD OPENING AT 1.5% IN THE DIRECTION OF PEDESTRIAN TRAVEL.

(3) AN 8.33% CURB RAMP SLOPE IS ALLOWABLE WITH FLATTENED GUTTER FLAG SLOPE AND NOT TO EXCEED 11% GRADE CHANGE.

(4) ±0.5% CONSTRUCTION TOLERANCE IN SIDEWALK CROSS SLOPE. THE SIDEWALK CROSS SLOPE SHALL NOT EXCEED 2% WITHOUT PRIOR APPROVAL FROM THE ENGINEER.

(6) PROVIDE A LEVEL LANDING (MAXIMUM 2% SLOPE) IN ANY DIRECTION OF PEDESTRIAN TRAVEL. STANDARD LEVEL LANDING SIZE IS 5 FEET BY 5 FEET.

(7) WHEN THIS GRADE BREAK DISTANCE EXCEEDS 5 FEET, USE RADIAL DETECTABLE WARNING FIELD PER SDD 8D5-f.

(8) PROVIDE GRADE BREAK PERPENDICULAR TO DIRECTION OF WHEELCHAIR TRAVEL.

(10) INSTALL TRANSITION NOSE (INCIDENTAL TO OTHER PAY ITEMS). DO NOT MARK TRANSITION NOSE.

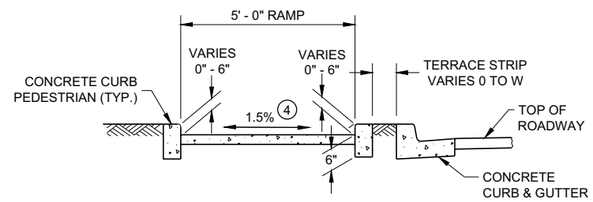

SECTION C - C FOR TYPE 4B

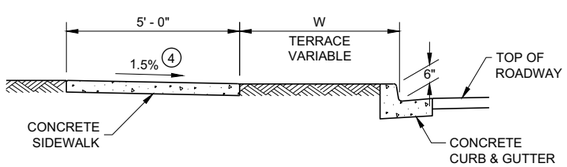

SECTION A - A FOR TYPE 4B

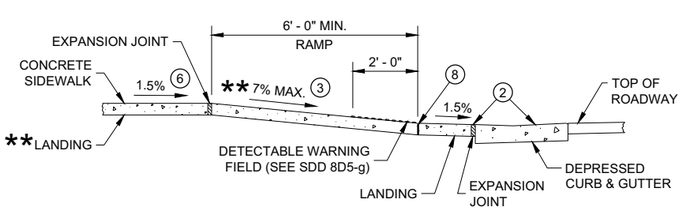

** IF RAMP SLOPE IS LESS THAN 5.0%, THEN NO ADJACENT UPHILL LANDING IS REQUIRED

SECTION B - B FOR TYPE 4B AND TYPE 4B1

* MAXIMUM 2.0% SLOPE IN ALL DIRECTIONS IF FRONT OF GRADE BREAK

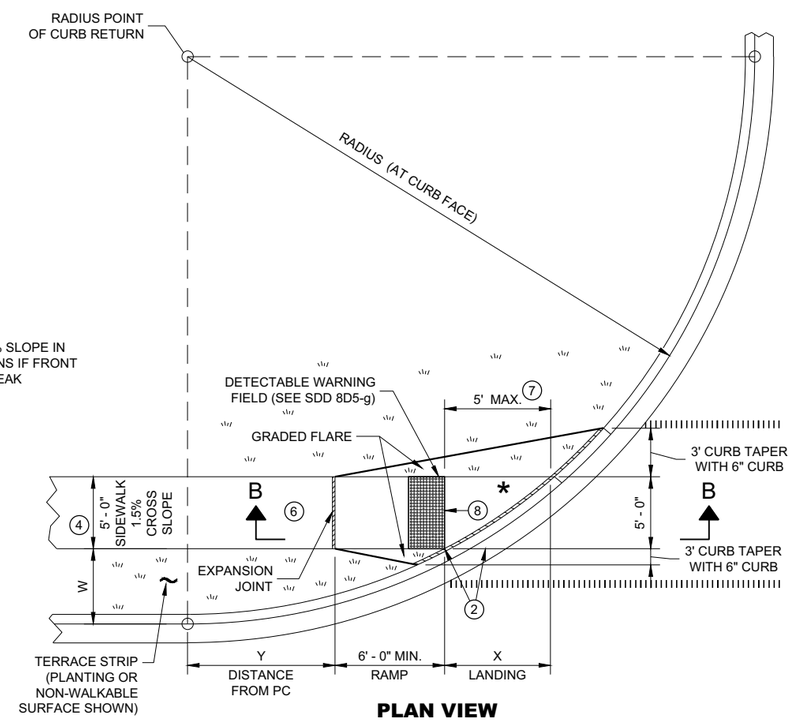

PLAN VIEW

CURB RAMP TYPE 4B1

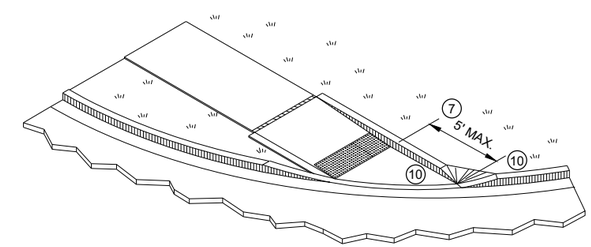

ISOMETRIC VIEW FOR TYPE 4B

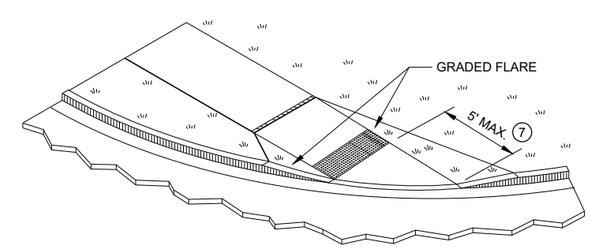

ISOMETRIC VIEW FOR TYPE 4B1

CURB RAMPS TYPE 4B AND 4B1

STATE OF WISCONSIN
DEPARTMENT OF TRANSPORTATION

6

SDD 08D05 - 20d

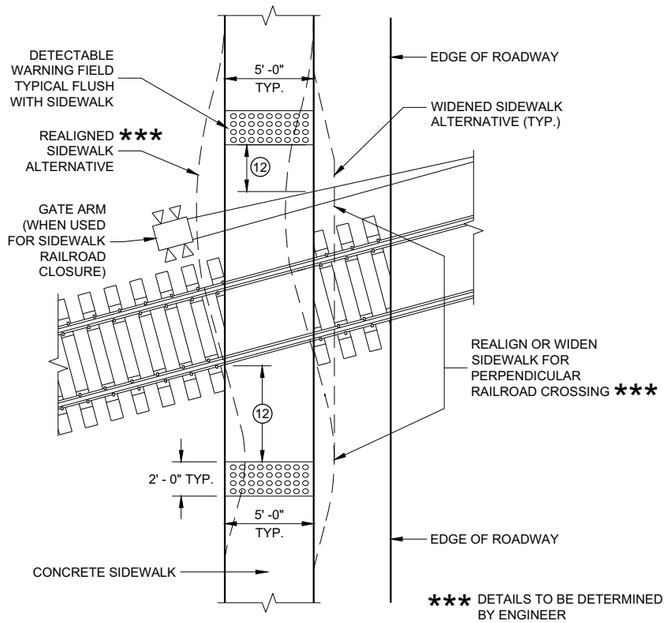

CURB RAMP TYPE 8

DETECTABLE WARNINGS AT RAILROAD CROSSING

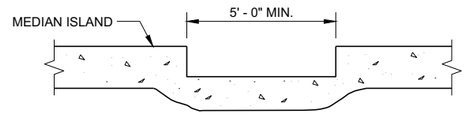

SECTION A - A FOR TYPE 5

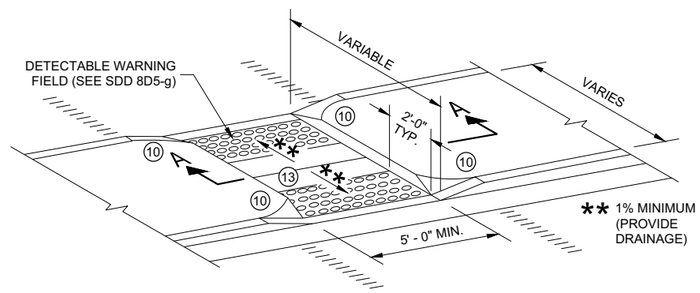

CURB RAMP TYPE 5

MEDIAN ISLAND NON-ELEVATED PEDESTRIAN CROSSING

GENERAL NOTES

AVOID PLACING DRAINAGE STRUCTURES, JUNCTION BOXES OR OTHER OBSTRUCTIONS IN FRONT OF RAMP ACCESS AREAS.

DETAILS OF CONSTRUCTION, MATERIALS AND WORKMANSHIP NOT SHOWN ON THIS DRAWING SHALL CONFORM TO THE PERTINENT REQUIREMENTS OF THE STANDARD SPECIFICATIONS AND THE APPLICABLE SPECIAL PROVISIONS.

SIDEWALK CROSS SLOPE SHALL NOT EXCEED 2%.

DETECTABLE WARNING FIELDS THAT ARE INSTALLED AS A GROUP OR SIDE BY SIDE, SHALL BE FROM THE SAME MANUFACTURER.

(2) GRADE CHANGE BETWEEN GUTTER FLAG SLOPE AND THE CURB RAMP SLOPE SHALL NOT EXCEED 11%. MAXIMUM GUTTER FLAG SLOPE IS 4%. PROVIDE LONGITUDINAL DRAINAGE AROUND CURB AND AWAY FROM CURB RAMP. NO VERTICAL LIPS OR DISCONTINUITIES GREATER THAN ¼ - INCH ARE ALLOWED. SLOPE OF CURB HEAD OPENING SHALL MATCH THE RAMP SLOPE, MINIMALLY 1.5% AND NOT TO EXCEED 7%. WHEN ADJACENT TO 1.5% LANDING, CONSTRUCT CURB HEAD OPENING AT 1.5% IN THE DIRECTION OF PEDESTRIAN TRAVEL.

(3) AN 8.33% CURB RAMP SLOPE IS ALLOWABLE WITH FLATTENED GUTTER FLAG SLOPE AND NOT TO EXCEED 11% GRADE CHANGE.

(4) ±0.5% CONSTRUCTION TOLERANCE IN SIDEWALK CROSS SLOPE. THE SIDEWALK CROSS SLOPE SHALL NOT EXCEED 2% WITHOUT PRIOR APPROVAL FROM THE ENGINEER.

(6) PROVIDE A LEVEL LANDING (MAXIMUM 2% SLOPE) IN ANY DIRECTION OF PEDESTRIAN TRAVEL. STANDARD LEVEL LANDING SIZE IS 5 FEET BY 5 FEET.

(10) INSTALL TRANSITION NOSE (INCIDENTAL TO OTHER PAY ITEMS). DO NOT MARK TRANSITION NOSE.

(11) SLOPE SIDEWALK TOWARD LANDING AS SHOWN WHERE THERE IS NO TERRACE OR WHERE THE TERRACE WIDTH IS LESS THAN 6 FEET WIDE.

(12) THE EDGE OF THE DETECTABLE WARNING FIELD NEAREST TO A RAILROAD CROSSING SHALL BE 1.5 FEET ±0.1' FROM THE FACE OF THE GATE ARM IF THE GATE ARM EXTENDS ACROSS THE SIDEWALK. WHERE THERE IS NO PEDESTRIAN GATE, THE EDGE OF THE DETECTABLE WARNING FIELD NEAREST TO THE RAILROAD CROSSING SHALL BE 15 FEET FROM THE NEAREST RAIL.

(13) DO NOT INSTALL DETECTABLE WARNING FIELDS AT THE EDGES OF STEET-LEVEL PEDESTRIAN REFUGE ISLANDS IF A MINIMUM 2 FOOT CONCRETE SURFACE WITHOUT DETECTABLE WARNINGS (MEASURED IN THE DIRECTION OF PEDESTRIAN TRAVEL) CANNOT BE ACHIEVED.

LEGEND

- ½" EXPANSION JOINT SIDEWALK
- CONTRACTION JOINT FIELD LOCATED
- PAVEMENT MARKING CROSSWALK (WHITE)

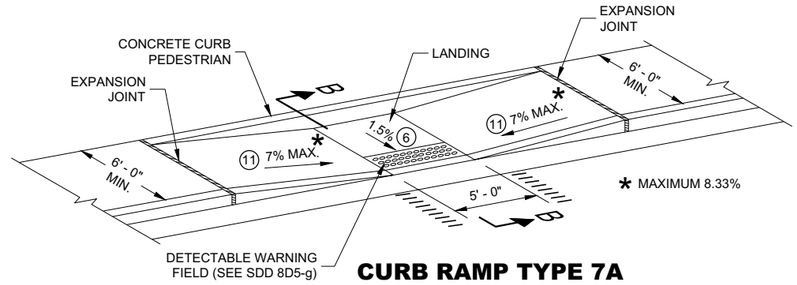

CURB RAMP TYPE 7A

MID BLOCK CROSSING

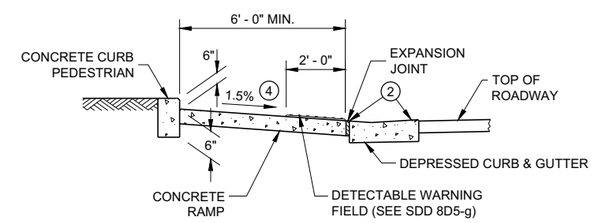

SECTION B - B FOR TYPE 7A

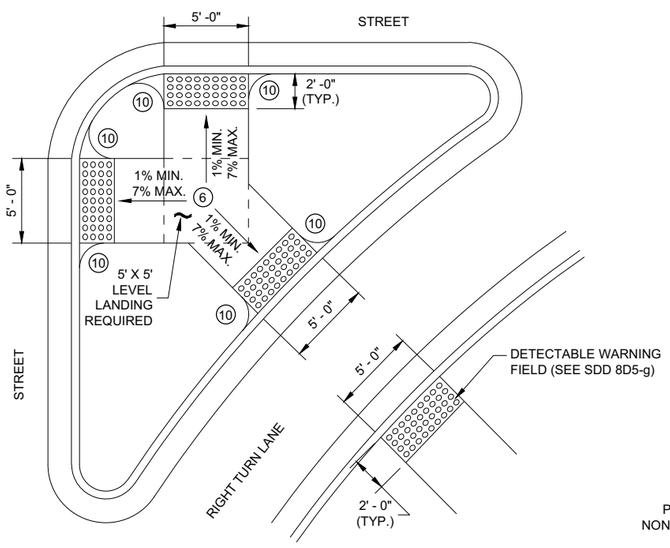

CURB RAMP TYPE 6

DETECTABLE WARNING AT ISLANDS

REFER TO GENERAL NOTES (2) AND (3) FOR ALL ISLAND CURB RAMPS

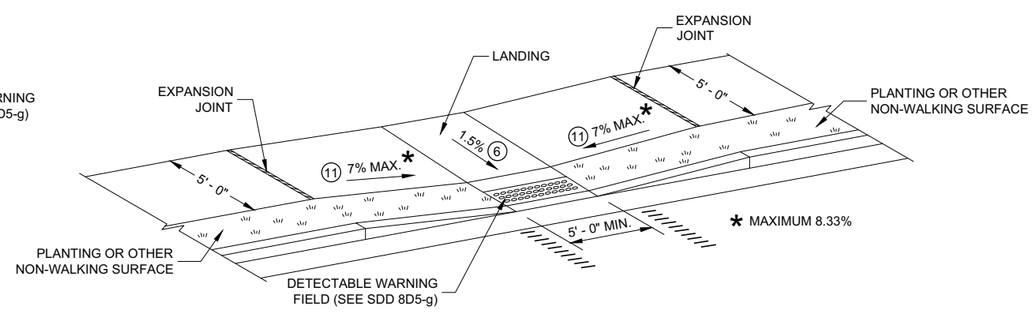

CURB RAMP TYPE 7B

MID BLOCK CROSSING

NOTE: THESE PARALLEL AND PARALLEL/PERPENDICULAR CURB RAMPS MAY BE USED AT INTERSECTIONS AND MID BLOCK LOCATIONS.

CURB RAMPS TYPE 5, 6, 7A, 7B & 8

STATE OF WISCONSIN
DEPARTMENT OF TRANSPORTATION

6

SDD 08D05 - 20e

RADIAL DETECTABLE WARNING FIELD PLACEMENT WHEN 5 FOOT GRADE BREAK DISTANCE PER SDD 8D5-c IS EXCEEDED

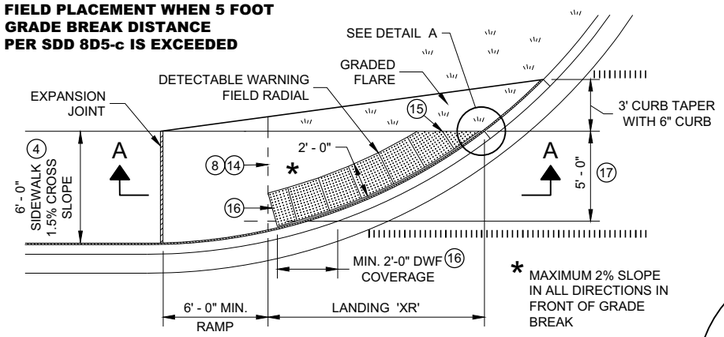

PLAN VIEW

CURB RAMP TYPE 4A1

(GRADE BREAK DISTANCE GREATER THAN 5 FEET)

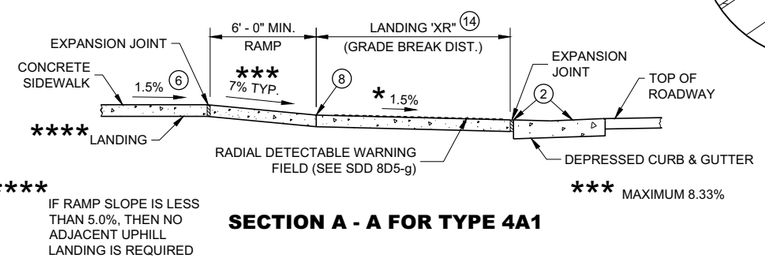

SECTION A - A FOR TYPE 4A1

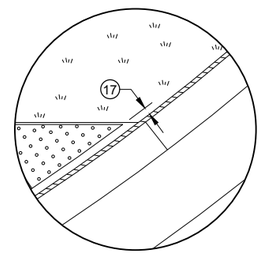

DETAIL A

LEGEND

- ½" EXPANSION JOINT SIDEWALK
- CONTRACTION JOINT SIDEWALK
- PAVEMENT MARKING CROSSWALK (WHITE)

GENERAL NOTES

AVOID PLACING DRAINAGE STRUCTURES, JUNCTION BOXES OR OTHER OBSTRUCTIONS IN FRONT OF RAMP ACCESS AREAS.

DETAILS OF CONSTRUCTION, MATERIALS AND WORKMANSHIP NOT SHOWN ON THIS DRAWING SHALL CONFORM TO THE PERTINENT REQUIREMENTS OF THE STANDARD SPECIFICATIONS AND THE APPLICABLE SPECIAL PROVISIONS.

DETECTABLE WARNING FIELDS THAT ARE INSTALLED AS A GROUP OR SIDE BY SIDE, SHALL BE FROM THE SAME MANUFACTURER.

APPLY RADIAL DETECTABLE WARNING PLACEMENT SIMILARLY FOR TYPE 4A AND 4A1 CURB RAMPS AND SIMILARLY FOR TYPE 4B AND 4B1 CURB RAMPS. TYPE 4A AND 4B CURB RAMPS ARE NOT SHOWN.

REFER TO SDD 8D5-g FOR ADDITIONAL RADIAL PLATE REQUIREMENTS.

FIELD CUTS AT INTERMEDIATE JOINTS WITHIN THE RADIAL DETECTABLE WARNING FILED ARE PROHIBITED.

DETERMINE FINAL RADIAL WARNING FIELD CONFIGURATION AD ITS INDIVIDUAL PLATE LOCATIONS. PERFORM PRE-LAYOUT PRIOR TO PLACEMENT IN PLASTIC CONCRETE. FOLLOW MANUFACTURER'S PRODUCT LIST AND INSTALLATION RECOMMENDATIONS.

(2) GRADE CHANGE BETWEEN GUTTER FLAG SLOPE AND THE CURB RAMP SLOPE SHALL NOT EXCEED 11%. MAXIMUM GUTTER FLAG SLOPE IS 4%. PROVIDE LONGITUDINAL DRAINAGE AROUND CURB AND AWAY FROM CURB RAMP. NO VERTICAL LIPS OR DISCONTINUITIES GREATER THAN ¼ - INCH ARE ALLOWED. SLOPE OF CURB HEAD OPENING SHALL MATCH THE RAMP SLOPE, MINIMALLY 1.5% AND NOT TO EXCEED 7%. WHEN ADJACENT TO 1.5% LANDING, CONSTRUCT CURB HEAD OPENING AT 1.5% IN THE DIRECTION OF PEDESTRIAN TRAVEL.

(3) AN 8.33% CURB RAMP SLOPE IS ALLOWABLE WITH FLATTENED GUTTER FLAG SLOPE AND NOT TO EXCEED 11% GRADE CHANGE.

(4) ±0.5% CONSTRUCTION TOLERANCE IN SIDEWALK CROSS SLOPE. THE SIDEWALK CROSS SLOPE SHALL NOT EXCEED 2% WITHOUT PRIOR APPROVAL FROM THE ENGINEER.

(6) PROVIDE A LEVEL LANDING (MAXIMUM 2% SLOPE) IN ANY DIRECTION OF PEDESTRIAN TRAVEL. STANDARD LANDING SIZE IS 5 FEET BY 5 FEET.

(8) PROVIDE GRADE BREAK PERPENDICULAR TO DIRECTION OF WHEELCHAIR TRAVEL.

(14) CONSULT ENGINEER IF GRADE BREAK LOCATION (END OF LANDING DIMENSION "XR") REQUIRES FIELD ADJUSTMENT WHEN ESTABLISHING FINAL RADIAL DETECTABLE WARNING FIELD LOCATION.

(15) FIELD SAW CUTS ALONG RADIAL DETECTABLE WARNING PLATES WILL BE NECESSARY TO MATCH EACH CURB RAMP EDGE. AVOID CUTTING THROUGH DOMES WHENEVER POSSIBLE. MAKE FIELD CUTS TRUE TO LINE AND WITHIN ⅛" DEVIATION. SMOOTH EDGES OF FIELD CUT PLATES.

(16) USE 1' X 2" RECTANGULAR END PLATE AT END OF TYPE 4A1 RAMP AND PROVIDE MINIMUM 2' - 0" DETECTABLE WARNING FIELD COVERAGE (IN DIRECTION OF PEDESTRIAN TRAVEL) ALONG THE ENTIRE CURB RAMP WIDTH.

(17) A MAXIMUM 3 INCH CONCRETE BORDER WITH IS ALLOWABLE IN FROM OF RADIAL DETECTABLE WARNING FIELD FOR CONSTRUCTABILITY PURPOSES. CONCRETE BORDER WIDTH MAY VARY UP TO 1 INCH.

RADIAL DETECTABLE WARNING FIELD PLACEMENT WHEN 5 FOOT GRADE BREAK DISTANCE PER SDD 8D5-d IS EXCEEDED

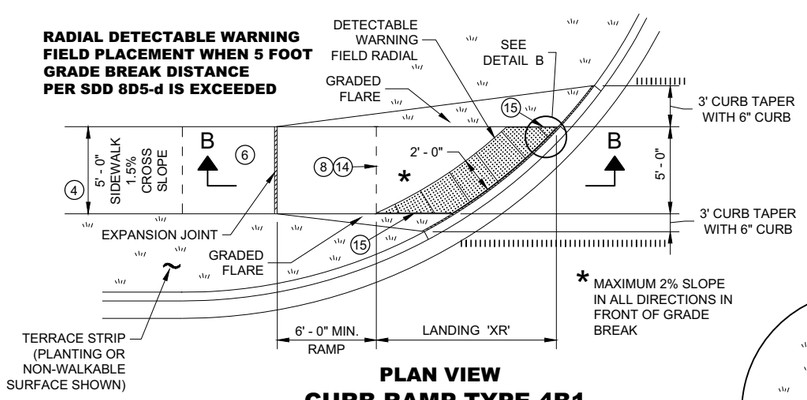

PLAN VIEW

CURB RAMP TYPE 4B1

(GRADE BREAK DISTANCE GREATER THAN 5 FEET)

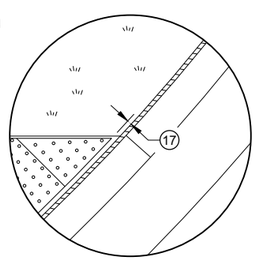

DETAIL B

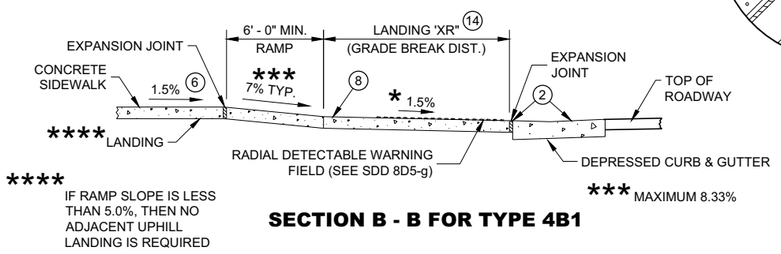

SECTION B - B FOR TYPE 4B1

RADIAL DETECTABLE WARNING FIELD PLACEMENT WHEN 5 FOOT GRADE BREAK DISTANCE PER SDD 8D5-b IS EXCEEDED

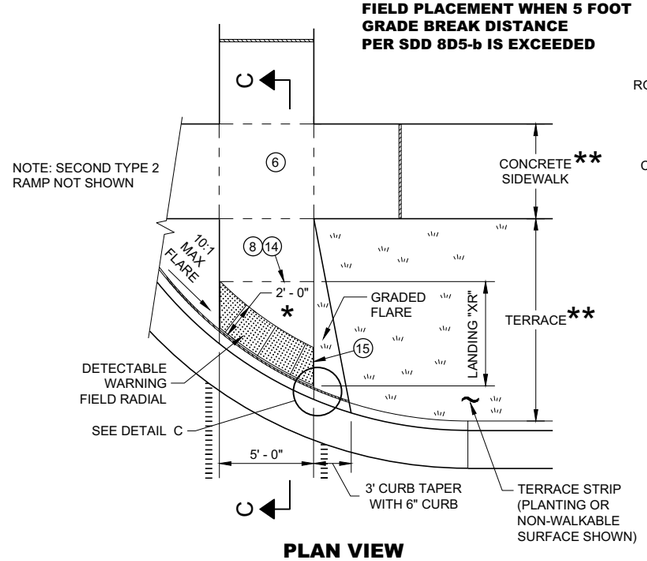

PLAN VIEW

CURB RAMP TYPE 2

(GRADE BREAK DISTANCE GREATER THAN 5 FEET)

(ON LINE WITH SIDEWALK)

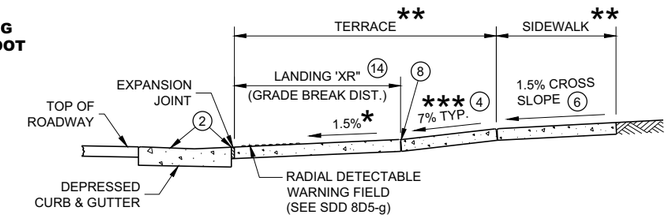

SECTION C - C FOR TYPE 2

* MAXIMUM 2% SLOPE IN ALL DIRECTIONS IN FRONT OF GRADE BREAK

** WIDTH SHOWN ELSEWHERE IN THE PLANS

*** MAXIMUM 8.33%

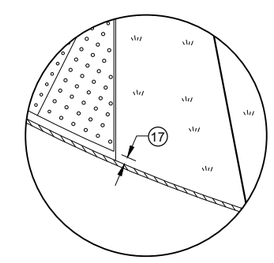

DETAIL C

CURB RAMPS
RADIAL DETECTABLE WARNING FIELD APPLICATIONS

STATE OF WISCONSIN
DEPARTMENT OF TRANSPORTATION

6

SDD 08D05 - 20f

	MIN.	MAX.
A	1.6"	2.4"
B	0.65"	1.5"
C	*	*
D	0.9"	1.4"

* THE C DIMENSION IS 50% TO 65% OF THE D DIMENSION.

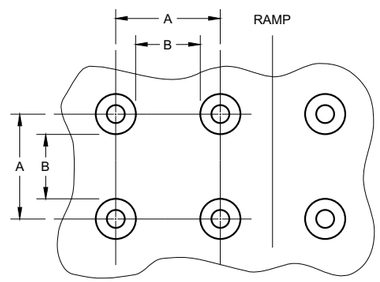

PLAN VIEW

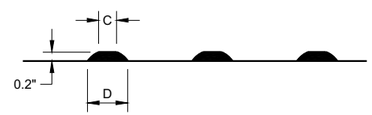

ELEVATION VIEW

TRUNCATED DOMES
DETECTABLE WARNING PATTERN DETAIL

GENERAL NOTES

DETECTABLE WARNING FIELDS THAT ARE INSTALLED AT A CURB RAMP SHALL BE FROM THE SAME MANUFACTURER.

PLACE ALL DETECTABLE WARNING FIELD SYSTEMS IN ACCORDANCE TO THE MANUFACTURER'S RECOMMENDATION.

FIELD CUTS AT INTERMEDIATE JOINTS WITHIN THE RADIAL DETECTABLE WARNING FILED ARE PROHIBITED.

DETERMINE FINAL RADIAL WARNING FIELD CONFIGURATION AND ITS INDIVIDUAL PLATE LOCATIONS. PERFORM PRE-LAYOUT PRIOR TO PLACEMENT IN PLASTIC CONCRETE. FOLLOW MANUFACTURER'S PRODUCT LIST AND INSTALLATION RECOMMENDATIONS.

FOR RADIAL DETECTABLE WARNING FIELD APPLICATIONS WHERE STANDARD RADIAL PLATES ARE NOT AVAILABLE AT AN INTERSECTION CURB RADIUS, A COMBINATION OF SQUARE OR RECTANGULAR PLATES AND RADIAL PLATES MAY BE USED TO FORM RADIAL CONFIGURATION. RADIAL WEDGE PLATES IN COMBINATION WITH SQUARE PLATES ARE ALSO ACCEPTABLE. FOLLOW MANUFACTURER'S RECOMMENDATIONS.

REFER TO CONTRACT AND STANDARD SPECIFICATIONS FOR FIELD CUTTING REQUIREMENTS.

DO NOT EMBED IN CONCRETE ANY FIELD-CUT PLATES WITH CUT EDGES SHORTER THAN 6 INCHES. CONSULT WITH MANUFACTURER FOR RE-DRILLING AND ANCHORING REQUIREMENTS OF FIELD-CUT PLATES.

(15) FIELD SAW CUTS ALONG RADIAL DETECTABLE WARNING PLATES WILL BE NECESSARY TO MATCH EACH CURB RAMP EDGE. AVOID CUTTING THROUGH DOMES WHENEVER POSSIBLE. MAKE FIELD CUTS TRUE TO LINE AND WITHIN ⅛" DEVIATION. SMOOTH EDGES OF FIELD CUT PLATES.

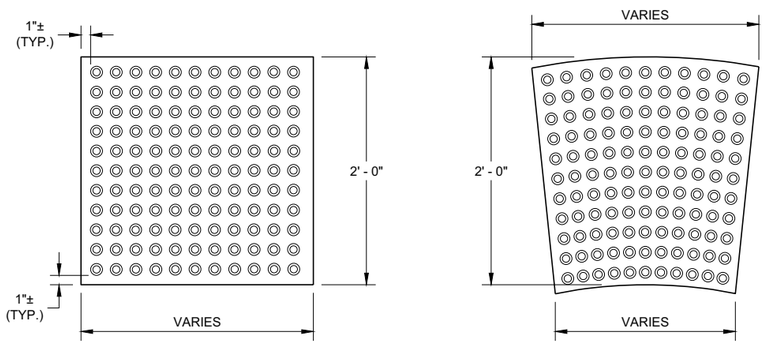

RECTANGULAR PLATES **RADIAL PLATES**

PLAN VIEW
DETECTABLE WARNING FIELDS (TYPICAL)

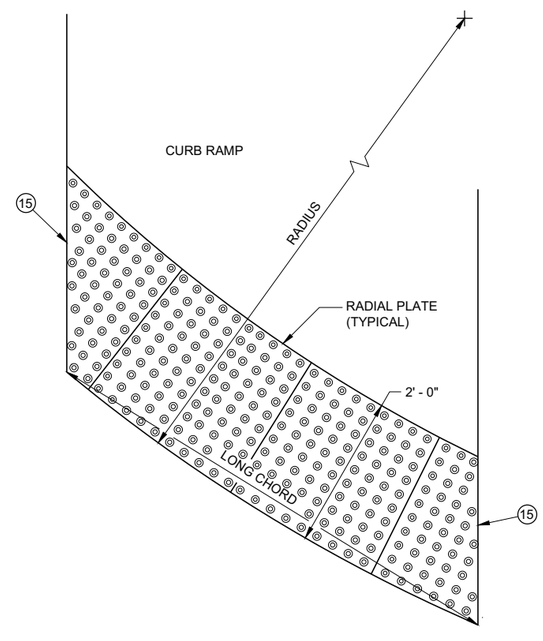

PLAN VIEW
RADIAL DETECTABLE WARNING FIELD ATTRIBUTES

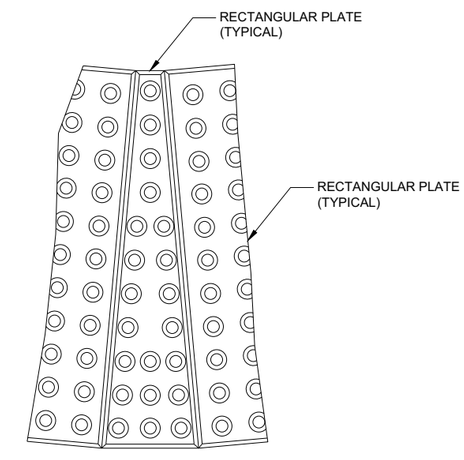

PLAN VIEW
RADIAL WEDGE PLATE CONNECTION DETAIL

6

6

SDD 08D05 - 20g

SDD 08D05 - 20g

CURB RAMPS RECTANGULAR AND RADIAL DETECTABLE WARNING PLATES

STATE OF WISCONSIN
DEPARTMENT OF TRANSPORTATION

APPROVED
May 2019 — DATE
/S/ Rodney Taylor — ROADWAY STANDARDS DEVE UNIT SUPERVISOR

FHWA

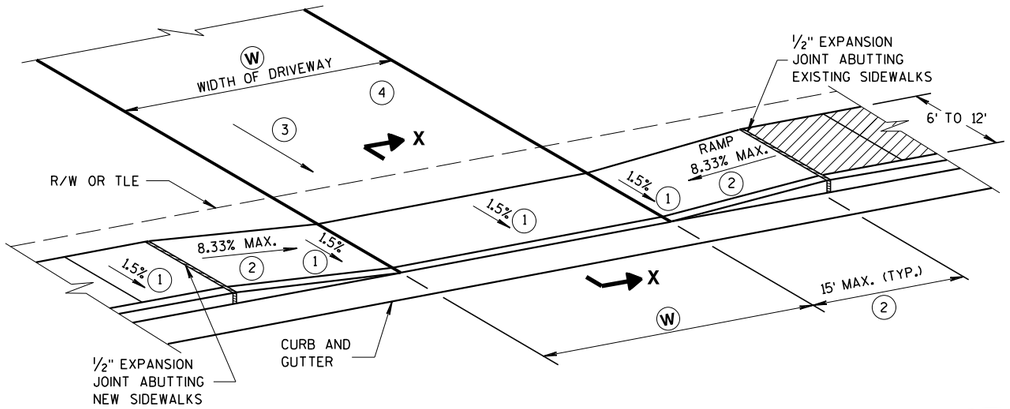

TYPE X

SIDEWALK ABUTS CURB & GUTTER
TERRACE VARIES 0 TO 3 FEET

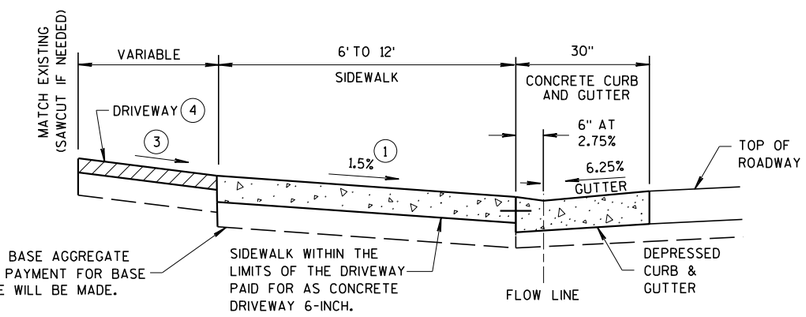

SECTION X-X

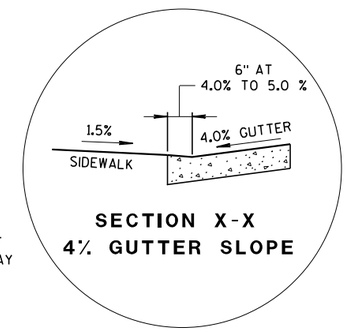

SECTION X-X
4% GUTTER SLOPE

W: 12' MIN. - 24' MAX. RESIDENTIAL AND NON-COMMERCIAL (PE & FE)
16' MIN. - 35' MAX. COMMERCIAL (CE)

GENERAL NOTES

PROVIDE CONSTRUCTION JOINTS ALONG THE CENTER OF THE CONCRETE FOR DRIVEWAYS UNDER 20 FEET IN WIDTH AND AT THE THIRD POINTS OVER 20 FEET IN WIDTH.

(W) IS SHOWN ON PLAN AND PROFILE SHEETS.

OFFSETS, ELEVATIONS, AND PERCENT GRADE ARE SHOWN ON THE CROSS SECTIONS.

(1) CONSTRUCTION TOLERANCE OF 0.5% ± FOR SIDEWALK CROSS SLOPE. THE SIDEWALK CROSS SLOPE SHALL NOT EXCEED 2%.

(2) THE SIDEWALK RAMP MAXIMUM RUNNING SLOPE SHALL NOT REQUIRE THE RAMP LENGTH TO EXCEED 15 FEET TO AVOID CHASING THE SLOPE INDEFINITELY WHEN CONNECTING TO STEEP GRADES. WHEN APPLYING THE 15 FOOT MAXIMUM LENGTH, THE RUNNING SLOPE OF THE SIDEWALK SHALL BE AS FLAT AS FEASIBLE AND NOT EXCEED THE LONGITUDINAL GRADE OF THE ROADWAY. SLOPE SIDEWALK RAMP TOWARD APRON AS SHOWN WHERE THERE IS NO TERRACE OR WHERE THE TERRACE WIDTH IS LESS THAN 6 FEET WIDE.

(3) DRIVEWAY SLOPES: DESIRABLE MAXIMUM
10.5% UP AWAY FROM SIDEWALK (SAG)
8.5% DOWN AWAY FROM SIDEWALK (CREST)
ABSOLUTE MAXIMUM 15% FOR BOTH CREST AND SAG

(4) DRIVEWAY TYPES
- 6-INCH CONCRETE DRIVEWAY PAVEMENT OVER 6-INCH BASE AGGREGATE
- 2-INCH TO 3-INCH ASPHALTIC SURFACE OVER 6-INCH BASE AGGREGATE
- 6-INCH BASE AGGREGATE (MAY BE INCREASED FOR CLAY SUBGRADES)

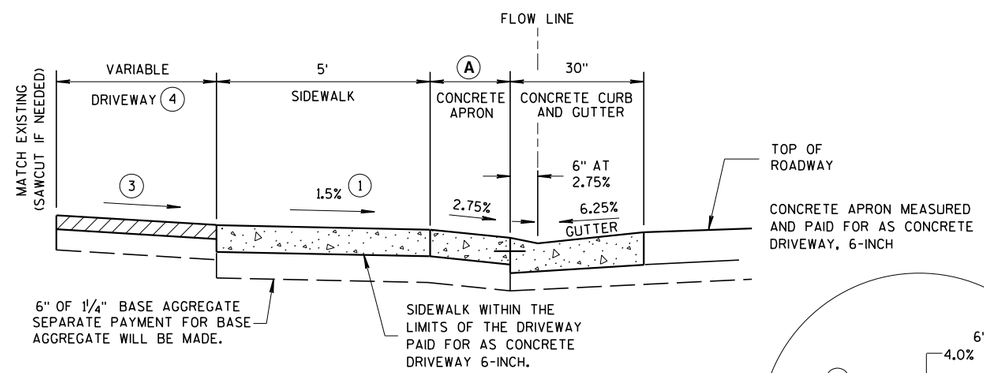

NOTE: SIDEWALK MAY BE DEPRESSED IN DRIVEWAY AREAS

SECTION Y-Y

DRIVEWAY DETAIL
WITH CONCRETE CURB & GUTTER
(URBAN AND SUBURBAN)

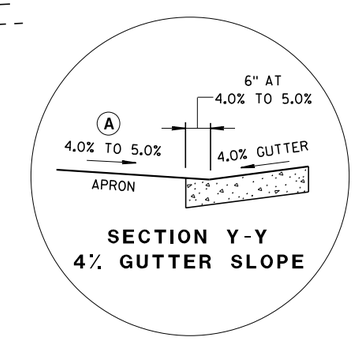

SECTION Y-Y
4% GUTTER SLOPE

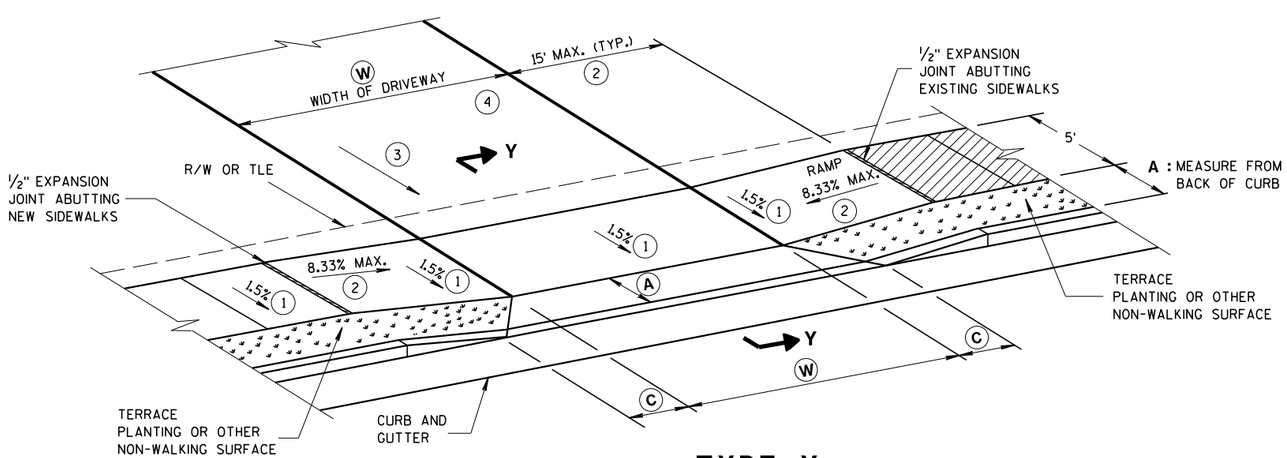

TYPE Y

SIDEWALK WITH NARROWER TERRACE
TERRACE VARIES 4 TO 6 FEET

TABLE Y

(A) FEET	(C) FEET
3.5'	2.0'
4.5'	3.0'
5.5'	3.5'

NOT TO SCALE

DRIVEWAY AND SIDEWALK RAMPS TYPES X & Y

STATE OF WISCONSIN
DEPARTMENT OF TRANSPORTATION

APPROVED
March 2018 — /S/ Rodney Taylor
DATE — ROADWAY STANDARDS DEVELOPMENT UNIT SUPERVISOR
FHWA

6

S.D.D. 8 D 18-2

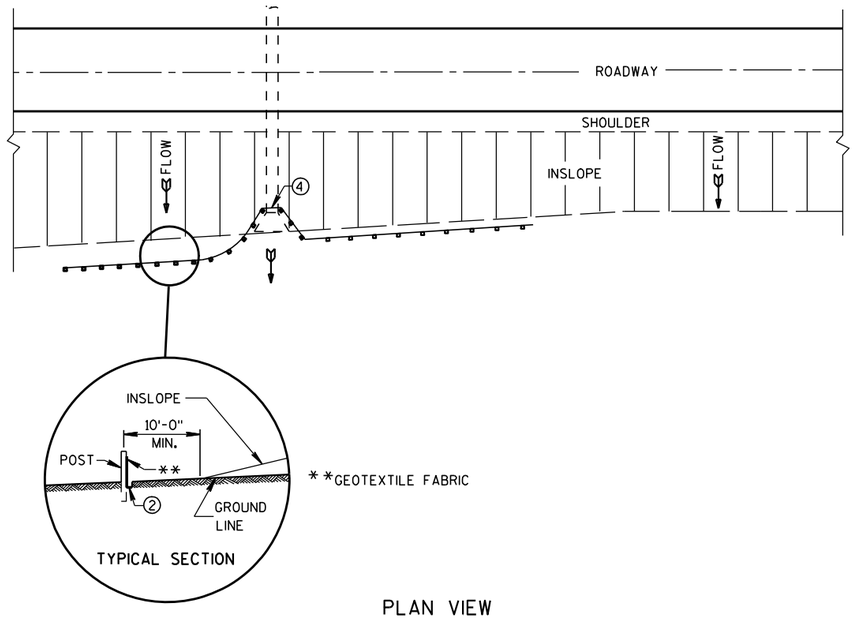

PLAN VIEW

TYPICAL APPLICATION OF SILT FENCE

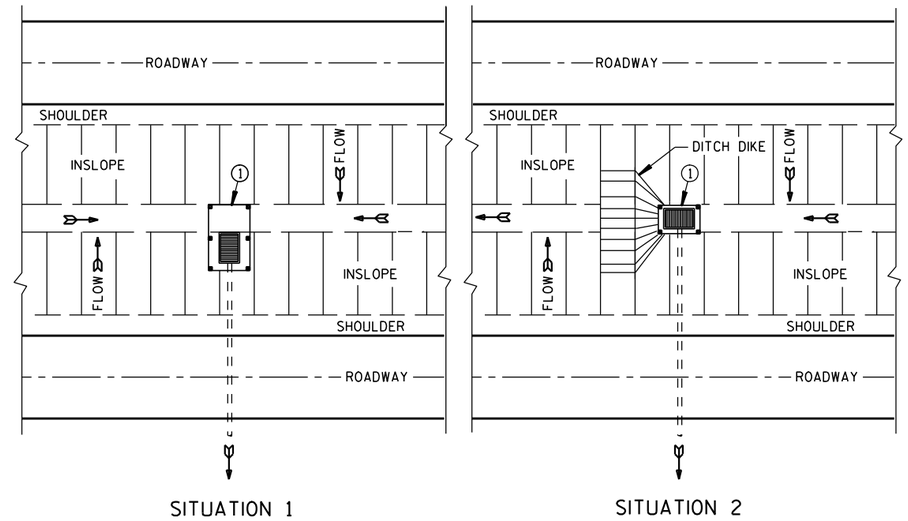

PLAN VIEW

SILT FENCE AT MEDIAN SURFACE DRAINS

GENERAL NOTES

DETAILS OF CONSTRUCTION NOT SHOWN ON THIS DRAWING SHALL CONFORM TO THE PERTINENT REQUIREMENTS OF THE STANDARD SPECIFICATIONS AND APPLICABLE SPECIAL PROVISIONS.

① HORIZONTAL BRACE REQUIRED WITH 2" X 4" WOODEN FRAME OR EQUIVALENT AT TOP OF POSTS.

② FOR MANUAL INSTALLATIONS THE TRENCH SHALL BE A MINIMUM OF 4" WIDE & 6" DEEP TO BURY AND ANCHOR THE GEOTEXTILE FABRIC. FOLD MATERIAL TO FIT TRENCH AND BACKFILL & COMPACT TRENCH WITH EXCAVATED SOIL.

③ WOOD POSTS SHALL BE A MINIMUM SIZE OF 1⅛" X 1⅛" OF OAK OR HICKORY.

④ SILT FENCE TO EXTEND ACROSS THE TOP OF THE PIPE.

⑤ CONSTRUCT SILT FENCE FROM A CONTINUOUS ROLL IF POSSIBLE BY CUTTING LENGTHS TO AVOID JOINTS. IF A JOINT IS NECESSARY USE ONE OF THE FOLLOWING TWO METHODS; A) OVERLAP THE END POSTS AND TWIST, OR ROTATE, AT LEAST 180 DEGREES. B) HOOK THE END OF EACH SILT FENCE LENGTH.

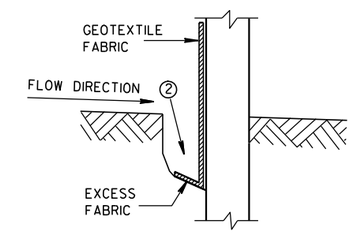

TRENCH DETAIL

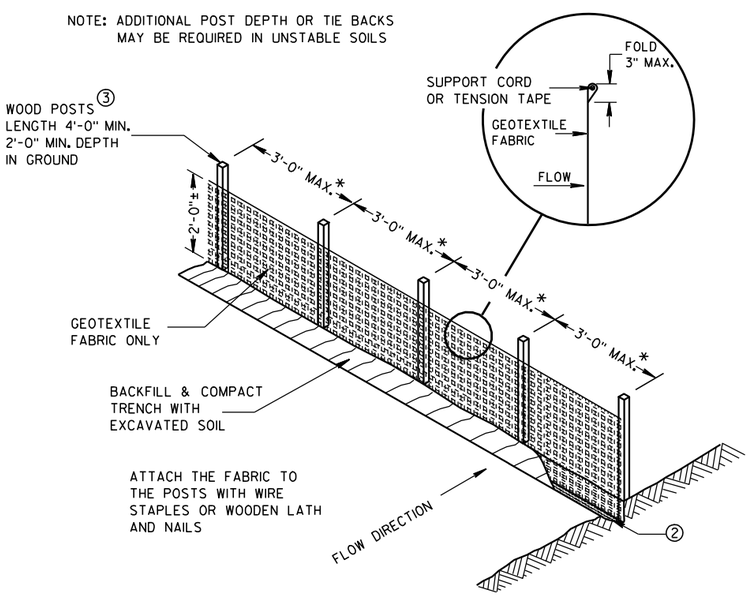

*NOTE: 8'-0" POST SPACING ALLOWED IF A WOVEN GEOTEXTILE FABRIC IS USED.

SILT FENCE

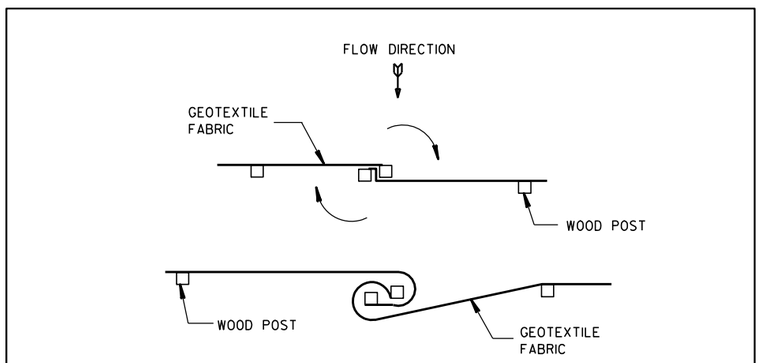

TWIST METHOD

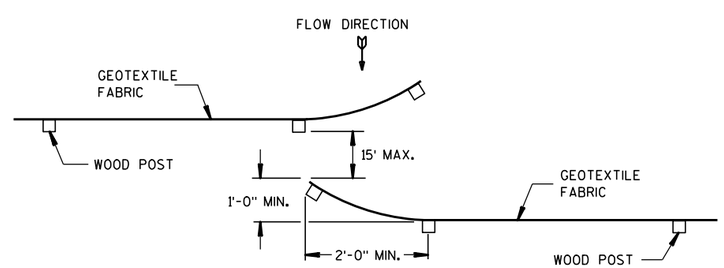

HOOK METHOD

JOINING TWO LENGTHS OF SILT FENCE ⑤

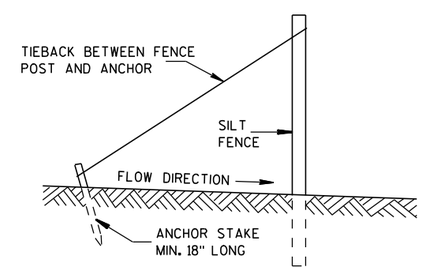

SILT FENCE TIE BACK

(WHEN REQUIRED BY THE ENGINEER)

SILT FENCE

STATE OF WISCONSIN
DEPARTMENT OF TRANSPORTATION

APPROVED
4-29-05 /S/ Beth Cann-----
DATE CHIEF ROADWAY DEVELOP ENGINEER
FHWA

6

6

S.D.D. 8 E 9-6

S.D.D. 8 E 9-6

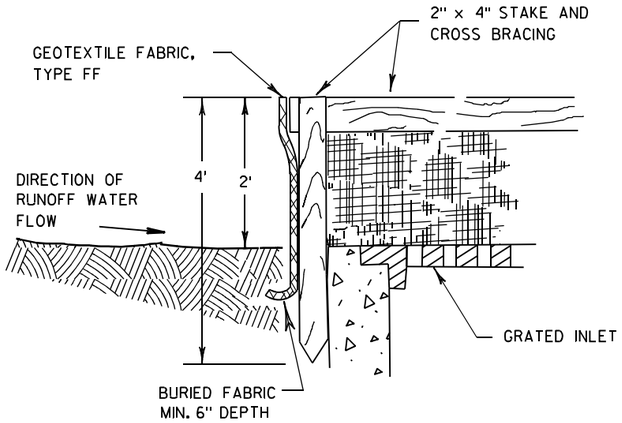

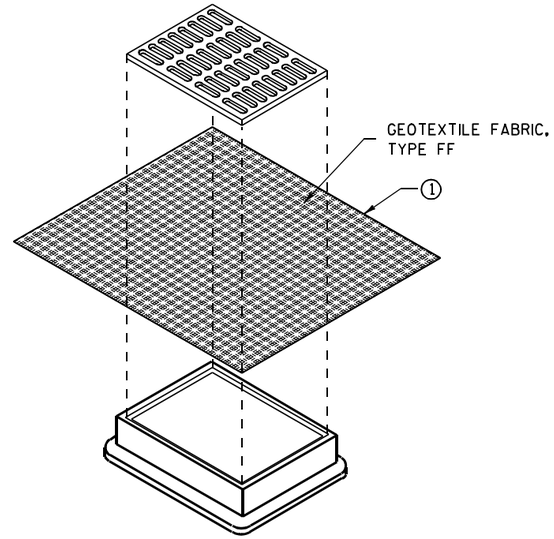

INLET PROTECTION, TYPE B
(WITHOUT CURB BOX)

(CAN BE INSTALLED IN ANY INLET WITHOUT A CURB BOX)

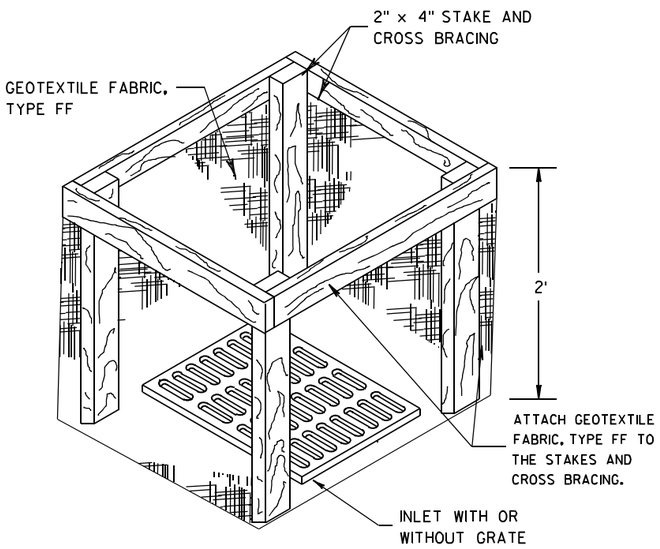

INLET PROTECTION, TYPE A

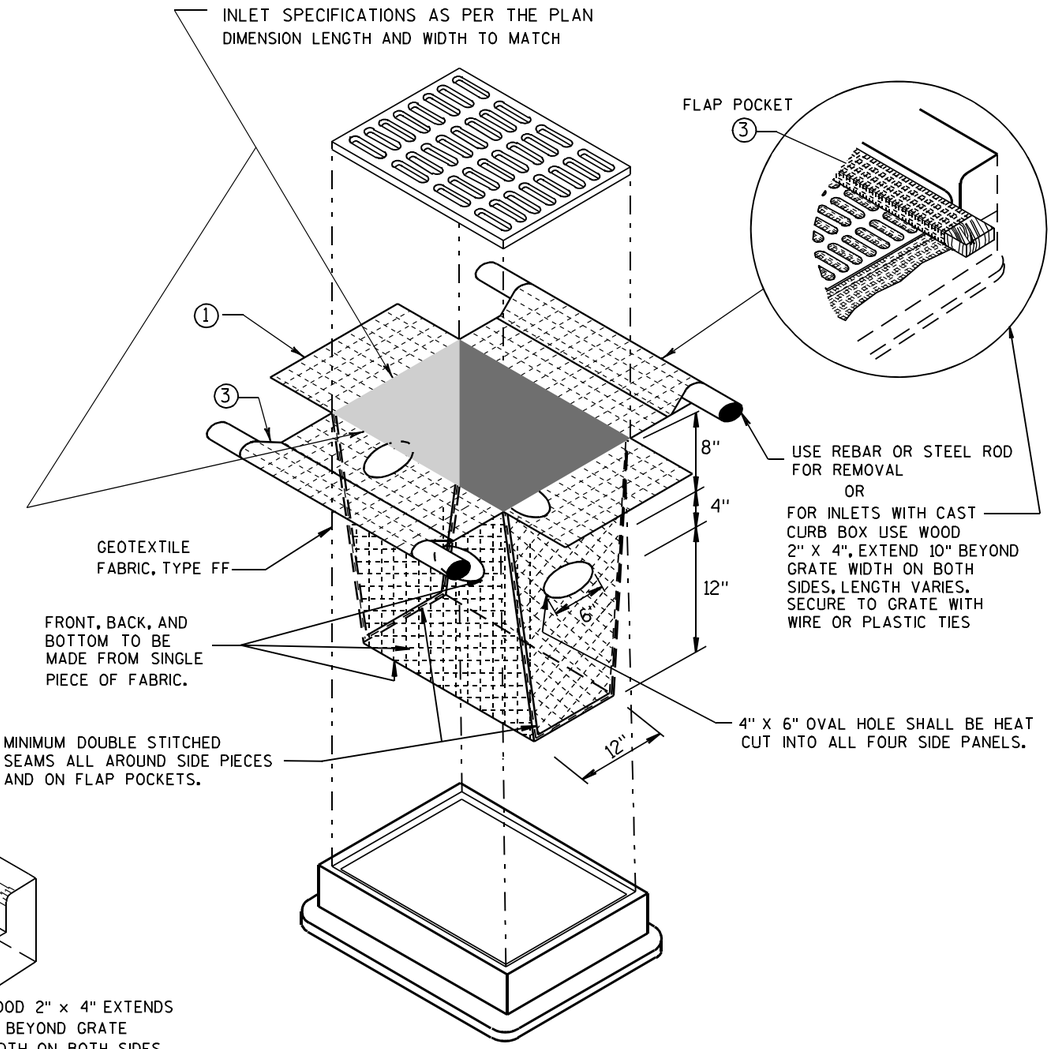

INLET PROTECTION, TYPE D

(CAN BE INSTALLED IN ANY INLET TYPE WITH
OR WITHOUT A CURB BOX AS PER NOTE ②)

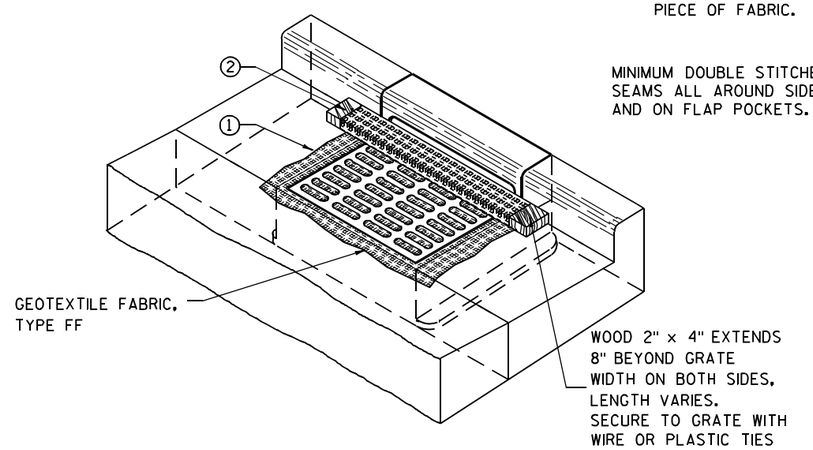

INLET PROTECTION, TYPE C (WITH CURB BOX)

GENERAL NOTES

INLET PROTECTION DEVICES SHALL BE MAINTAINED OR REPLACED AT THE DIRECTION OF THE ENGINEER.

MANUFACTURED ALTERNATIVES APPROVED AND LISTED ON THE DEPARTMENT'S EROSION CONTROL PRODUCT ACCEPTABILITY LIST MAY BE SUBSTITUTED.

WHEN REMOVING OR MAINTAINING INLET PROTECTION, CARE SHALL BE TAKEN SO THAT THE SEDIMENT TRAPPED ON THE GEOTEXTILE FABRIC DOES NOT FALL INTO THE INLET. ANY MATERIAL FALLING INTO THE INLET SHALL BE REMOVED IMMEDIATELY.

① FINISHED SIZE, INCLUDING FLAP POCKETS WHERE REQUIRED, SHALL EXTEND A MINIMUM OF 10" AROUND THE PERIMETER TO FACILITATE MAINTENANCE OR REMOVAL.

② FOR INLET PROTECTION, TYPE C (WITH CURB BOX), AN ADDITIONAL 18" OF FABRIC IS WRAPPED AROUND THE WOOD AND SECURED WITH STAPLES. THE WOOD SHALL NOT BLOCK THE ENTIRE HEIGHT OF THE CURB BOX OPENING.

③ FLAP POCKETS SHALL BE LARGE ENOUGH TO ACCEPT WOOD 2X4.

INSTALLATION NOTES

TYPE B & C

TRIM EXCESS FABRIC IN THE FLOW LINE TO WITHIN 3" OF THE GRATE.

THE CONTRACTOR SHALL DEMONSTRATE A METHOD OF MAINTENANCE, USING A SEWN FLAP, HAND HOLDS OR OTHER METHOD TO PREVENT ACCUMULATED SEDIMENT FROM ENTERING THE INLET.

TYPE D

DO NOT INSTALL INLET PROTECTION TYPE D IN INLETS SHALLOWER THAN 30", MEASURED FROM THE BOTTOM OF THE INLET TO THE TOP OF THE GRATE.

TRIM EXCESS FABRIC IN THE FLOW LINE TO WITHIN 3" OF THE GRATE.

THE INSTALLED BAG SHALL HAVE A MINIMUM SIDE CLEARANCE, BETWEEN THE INLET WALLS AND THE BAG, MEASURED AT THE BOTTOM OF THE OVERFLOW HOLES, OF 3". WHERE NECESSARY THE CONTRACTOR SHALL CINCH THE BAG, USING PLASTIC ZIP TIES, TO ACHIEVE THE 3" CLEARANCE. THE TIES SHALL BE PLACED AT A MAXIMUM OF 4" FROM THE BOTTOM OF THE BAG.

INLET PROTECTION
TYPE A, B, C, AND D

STATE OF WISCONSIN
DEPARTMENT OF TRANSPORTATION

APPROVED
10/16/02 — DATE
/S/ Beth Cannestra
CHIEF ROADWAY DEVELOPMENT ENGINEER
FHWA

6

S.D.D. 8 E 10-2

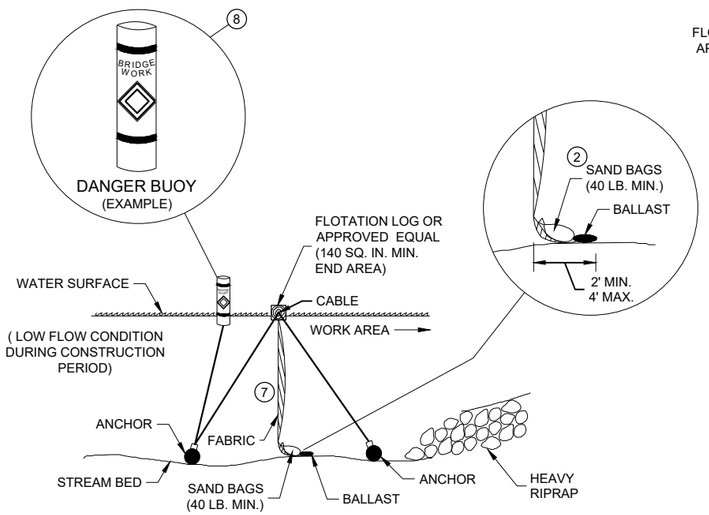

SECTION B - B

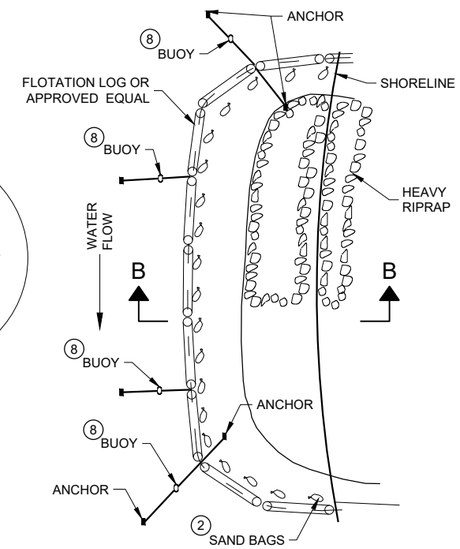

PLAN VIEW

TURBIDITY BARRIER - FLOAT ALTERNATIVE
CAUTION - SEE NOTE 6

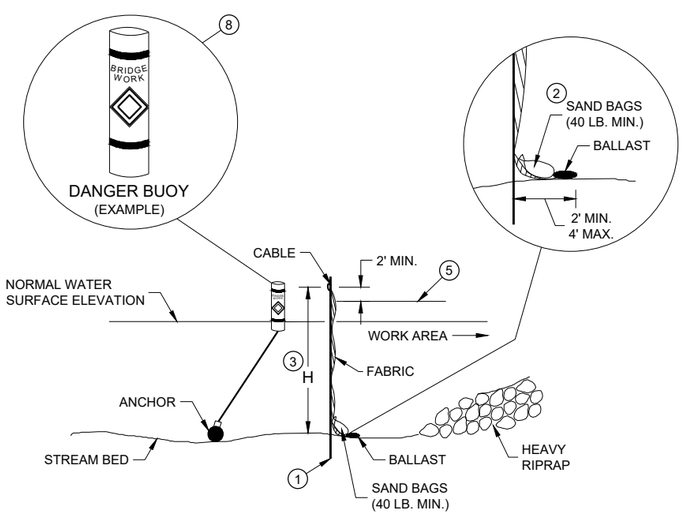

SECTION A - A

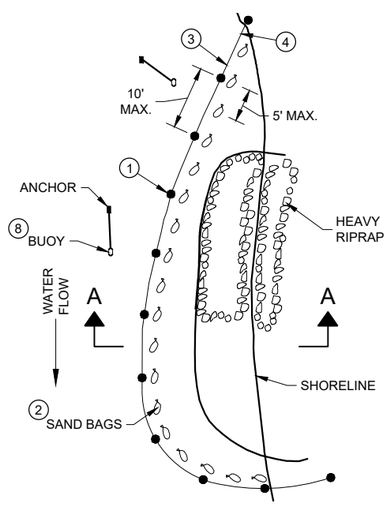

PLAN VIEW

TURBIDITY BARRIER - STANDARD POST INSTALLATION

TURBIDITY BARRIER PLACEMENT DETAILS

GENERAL NOTES

DETAILS OF CONSTRUCTION, MATERIALS AND WORKMANSHIP NOT SHOWN ON THIS DRAWING SHALL CONFORM TO THE PERTINENT REQUIREMENTS OF THE STANDARD SPECIFICATIONS AND THE APPLICABLE SPECIAL PROVISIONS.

TURBIDITY BARRIER MAY BE REMOVED AT THE ENGINEERS DISCRETION, WHEN PERMANENT EROSION CONTROL MEASURES HAVE BEEN ESTABLISHED.

1. DRIVEN STEEL POSTS, PIPES, OR CHANNELS. LENGTH SHALL BE SUFFICIENT TO SECURELY SUPPORT BARRIER AT HIGH WATER ELEVATIONS.
2. SAND BAGS TO BE USED AS ADDITIONAL BALLAST WHEN ORDERED BY THE ENGINEER TO MEET ADVERSE FIELD CONDITIONS. SPACE AS APPROPRIATE FOR SITE CONDITIONS.
3. WHEN BARRIER HEIGHT "H" EXCEEDS 8 FEET, POST SPACING MAY NEED TO BE DECREASED.
4. IN WATERWAYS SUBJECT TO FLUCTUATING WATER ELEVATIONS, PROVISIONS SHOULD BE MADE TO ALLOW THE WATER TO EQUALIZE ON EACH SIDE OF THE BARRIER. THIS MAY BE ACCOMPLISHED BY LEAVING A PORTION OF THE BARRIER OPEN ON THE UPSTREAM END.
5. ESTIMATED HIGH WATER ELEVATION DURING CONSTRUCTION PERIOD. MINIMUM BARRIER HEIGHT SHALL BE 2' GREATER THAN EITHER THE Q2 ELEVATION OR THE ESTIMATED HIGH WATER ELEVATION DURING CONSTRUCTION, WHICHEVER IS GREATER.
6. FLOAT ALTERNATIVE WILL ONLY BE ALLOWED WITH WRITTEN APPROVAL OF THE ENGINEER, AND IS MEANT FOR LOCATIONS WHERE BEDROCK PREVENTS THE INSTALLATION OF POSTS.
7. ALLOW SUFFICIENT SLACK VERTICALLY AND HORIZONTALLY SO THAT SEDIMENT BUILD UP WILL NOT SEPARATE OR LOWER THE TURBIDITY BARRIER.
8. USE AS DIRECTED BY COAST GUARD OR DNR PERMIT WHEN WORKING IN NAVIGABLE WATERWAYS.

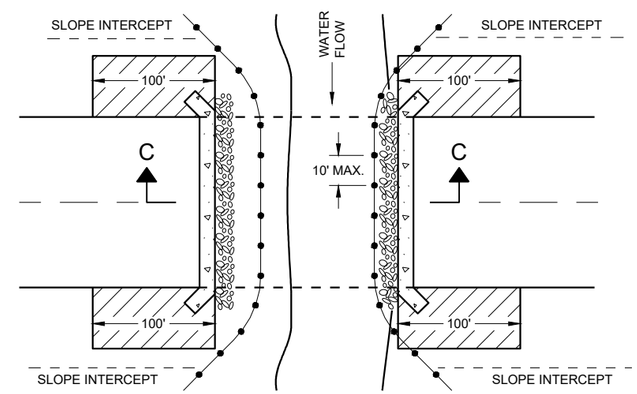

PLAN VIEW

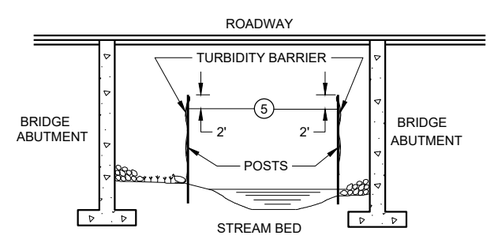

SECTION C - C

TURBIDITY BARRIER DETAIL SHOWING TYPICAL PLACEMENT AT STRUCTURES

TURBIDITY BARRIER

STATE OF WISCONSIN
DEPARTMENT OF TRANSPORTATION

APPROVED
6/4/02 — DATE
/S/ Beth Cannestra — CHIEF ROADWAY DEVELOPMENT ENGINEER
FHWA

6

SDD 08E11 - 02

METAL APRON ENDWALLS

PIPE DIA. (IN.)	MIN. THICK. (Inches) STEEL	MIN. THICK. (Inches) ALUM.	DIMENSIONS (Inches) A (±1")	B (MAX.)	H (±1")	L (±1 1/2")	L1 ①	L2 ①	W (±2")	APPROX. SLOPE	BODY
12	.064	.060	6	6	6	21	12	17 1/2	24	2 1/2 to 1	1 Pc.
15	.064	.060	7	8	6	26	14	21 3/4	30	2 1/2 to 1	1 Pc.
18	.064	.060	8	10	6	31	15	28 1/4	36	2 1/2 to 1	1 Pc.
21	.064	.060	9	12	6	36	18	29 5/8	42	2 1/2 to 1	1 Pc.
24	.064	.075	10	13	6	41	18	37 1/4	48	2 1/2 to 1	1 Pc.
30	.079	.075	12	16	8	51	18	52 1/4	60	2 1/2 to 1	1 Pc.
36	.079	.105	14	19	9	60	24	59 3/4	72	2 1/2 to 1	2 Pc.
42	.109	.105	16	22	11	69	24	75 5/8	84	2 1/2 to 1	2 Pc.
48	.109	.105	18	27	12	78	24	81	90	2 1/4 to 1	3 Pc.
54	.109	.105	18	30	12	84	30	85 1/2	102	2 1/4 to 1	3 Pc.
60	.109×	.105×	18	33	12	87	—	—	114	2 to 1	3 Pc.
66	.109×	.105×	18	36	12	87	—	—	120	2 to 1	3 Pc.
72	.109×	.105×	18	39	12	87	—	—	126	2 to 1	3 Pc.
78	.109×	.105×	18	42	12	87	—	—	132	1 1/2 to 1	3 Pc.
84	.109×	.105×	18	45	12	87	—	—	138	1 1/2 to 1	3 Pc.
90	.109×	.105×	18	37	12	87	—	—	144	1 1/2 to 1	3 Pc.
96	.109×	.105×	18	35	12	87	—	—	150	1 1/2 to 1	3 Pc.

× EXCEPT CENTER PANEL
SEE GENERAL NOTES

REINFORCED CONCRETE APRON ENDWALLS

PIPE DIA. (IN.)	DIMENSIONS (Inches) T	A	B	C	D	E	G	APPROX. SLOPE
12	2	4	24	48 7/8	72 7/8	24	2	3 to 1
15	2 1/4	6	27	46	73	30	2 1/4	3 to 1
18	2 1/2	9	27	46	73	36	2 1/2	3 to 1
21	2 3/4	9	36	37 1/2	73 1/2	42	2 3/4	3 to 1
24	3	9 1/2	43 1/2	30	73 1/2	48	3	3 to 1
27	3 1/4	10 1/2	49 1/2	24	73 1/2	54	3 1/4	3 to 1
30	3 1/2	12	54	19 3/4	73 1/2	60	3 1/2	3 to 1
36	4	15	63	34 3/4	97 3/4	72	4	3 to 1
42	4 1/2	21	63	35	98	78	4 1/2	3 to 1
48	5	24	72	26	98	84	5	3 to 1
54	5 1/2	27	65	*33 1/4-**35	*98 1/4-**100	90	5 1/2	2 2/5 to 1
60	6	*30-**35	60	39	99	96	5	2 to 1
66	6 1/2	*24-**30	*72-**78	*21-**27	99	102	5 1/2	2 to 1
72	7	*24-**36	78	21	99	108	6	2 to 1
78	7 1/2	*24-**36	78	21	99	114	6 1/2	2 to 1
84	8	36	90 1/2	21	111 1/2	120	6 1/2	1 1/2 to 1
90	8 1/2	41	87 1/2	24	111 1/2	132	6 1/2	1 1/2 to 1

*MINIMUM
**MAXIMUM

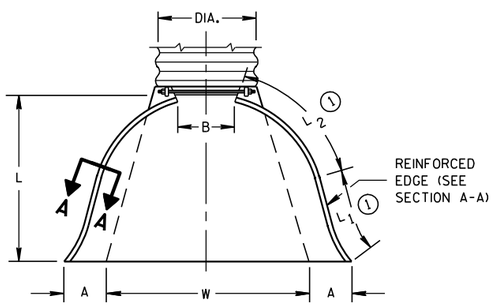

PLAN VIEW

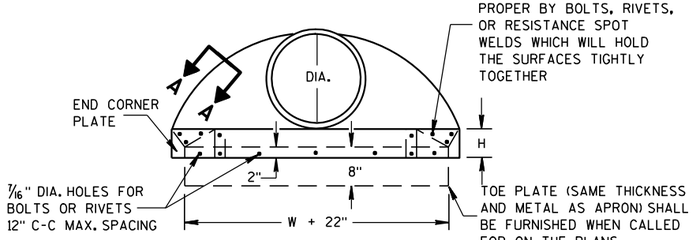

END VIEW

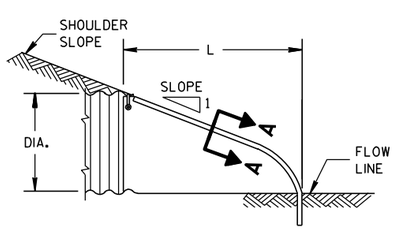

SIDE ELEVATION

METAL ENDWALLS

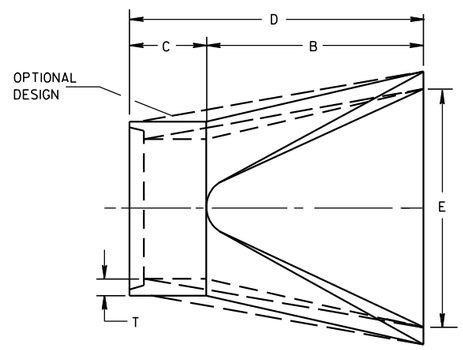

PLAN

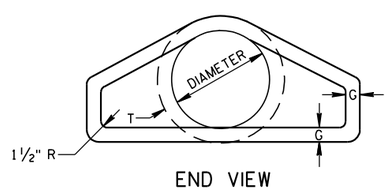

END VIEW

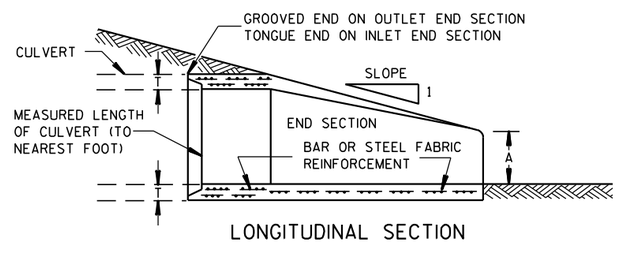

LONGITUDINAL SECTION

CONCRETE ENDWALLS

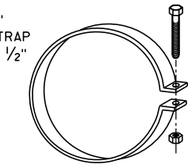

ALTERNATE FOR TYPE 1 CONNECTION

END SECTION CONNECTOR STRAP

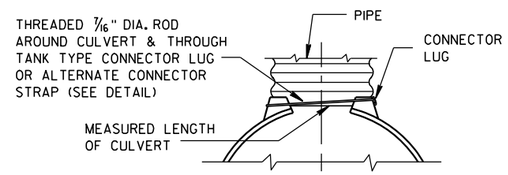

TYPE 1
FOR 12" THRU 24" CORR. PIPE

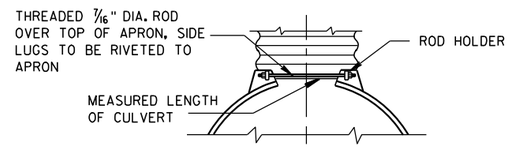

TYPE 2
FOR 30" THRU 96" CORR. PIPE

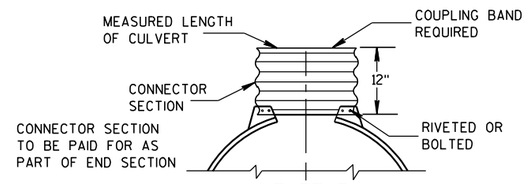

TYPE 3
FOR 42" THRU 96" CORR. PIPE

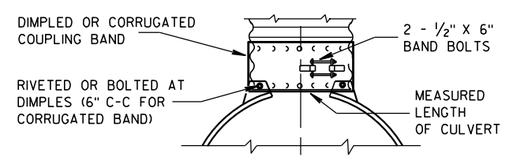

TYPE 5
ALTERNATE FOR:
ALL SIZES CORRUGATED CIRCULAR PIPE

NOTE: DIMPLED BAND FITS OVER OUTSIDE OF ENDWALL, AND CORRUGATED BAND FITS INSIDE ENDWALL. DIMPLED BAND MAY BE USED WITH HELICALLY CORRUGATED PIPE.

FOR CIRCUMFERENTIALLY CORRUGATED PIPE USE ENDWALL CONNECTION DETAILS 1, 2, 3 OR 5 AS APPLICABLE.

FOR HELICALLY CORRUGATED PIPE USE ENDWALL CONNECTION DETAILS 1, 2 OR 5.

FOR HELICALLY CORRUGATED PIPES WITH TWO CIRCUMFERENTIAL CORRUGATIONS AT EACH END USE ENDWALL CONNECTION DETAILS 1, 2 OR 3.

CONNECTION DETAILS

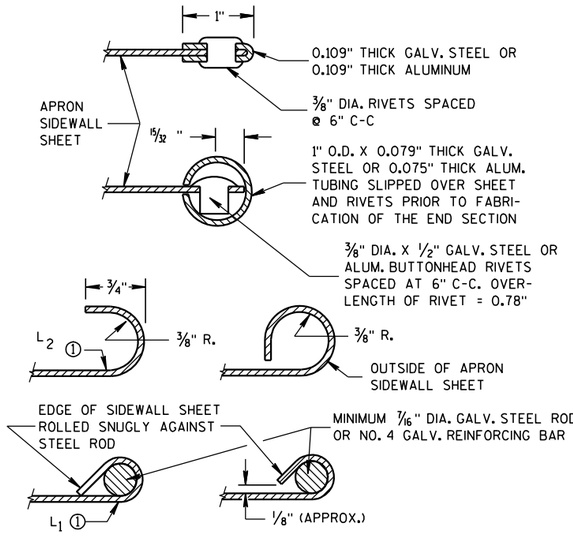

SECTION A-A

GENERAL NOTES

DETAILS OF CONSTRUCTION, MATERIALS AND WORKMANSHIP NOT SHOWN ON THIS DRAWING SHALL CONFORM TO THE PERTINENT REQUIREMENTS OF THE STANDARD SPECIFICATIONS AND THE APPLICABLE SPECIAL PROVISIONS.

CONCRETE CULVERT ENDWALLS MAY NOT BE USED WITH GALVANIZED STEEL OR ALUMINUM CULVERT PIPE OR VISE VERSA. GALVANIZED STEEL OR ALUMINUM ENDWALLS SHALL NORMALLY BE INSTALLED ON CULVERT PIPE OF THE SAME METAL.

ALL THREE PIECE STEEL APRON ENDWALLS FOR 60" DIAMETER PIPE AND LARGER SHALL HAVE 0.109" SIDES AND 0.138" CENTER PANELS. ALL THREE PIECE ALUMINUM APRON ENDWALLS FOR 60" DIAMETER PIPE AND LARGER SHALL HAVE 0.105" SIDES AND 0.134" CENTER PANELS. THE WIDTH OF CENTER PANELS SHALL BE GREATER THAN 20 PERCENT OF THE PIPE PERIMETER.

LAP SEAMS SHALL BE TIGHTLY JOINED BY GALVANIZED RIVETS OR BOLTS FOR STEEL UNITS AND ALUMINUM RIVETS AND BOLTS FOR ALUMINUM UNITS. FOR THE 60" THROUGH 96" DIAMETER APRON ENDWALL SIZES, THE REINFORCED EDGES AND CENTER PANEL SEAMS SHALL BE FURTHER REINFORCED WITH GALVANIZED STEEL OR ALUMINUM STIFFENER ANGLES. THE ANGLES SHALL BE ATTACHED BY GALVANIZED NUTS AND BOLTS FOR STEEL UNITS AND ALUMINUM NUTS AND BOLTS FOR ALUMINUM UNITS.

WHERE TWO OR MORE PIPES WITH APRON ENDWALLS ARE LAID ADJACENT TO EACH OTHER, THEY SHALL BE SEPARATED BY A DISTANCE SUFFICIENT TO PROVIDE A MINIMUM CLEARANCE OF 6 INCHES BETWEEN APRON ENDWALLS.

① FOR PIPE SIZES UP TO 60" DIAMETER, A 180° ROLLED EDGE MAY BE USED INSTEAD OF STEEL ROD REINFORCEMENT. SEE SECTION A-A.

APRON ENDWALLS FOR CULVERT PIPE

STATE OF WISCONSIN
DEPARTMENT OF TRANSPORTATION

APPROVED
11/30/94 — DATE
/S/ Rory L. Rhinesmith — CHIEF ROADWAY DEVELOPMENT ENGINEER
FHWA

6
S.D.D. 8 F 1-11

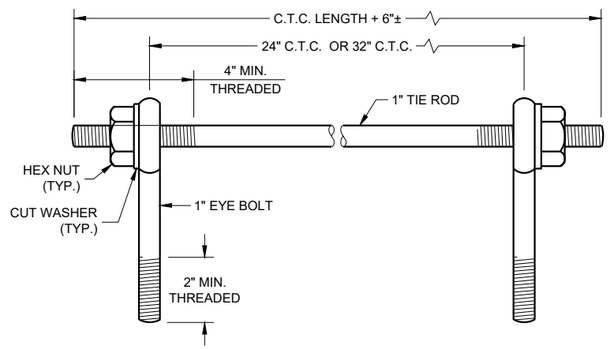

EYE BOLTS AND TIE ROD

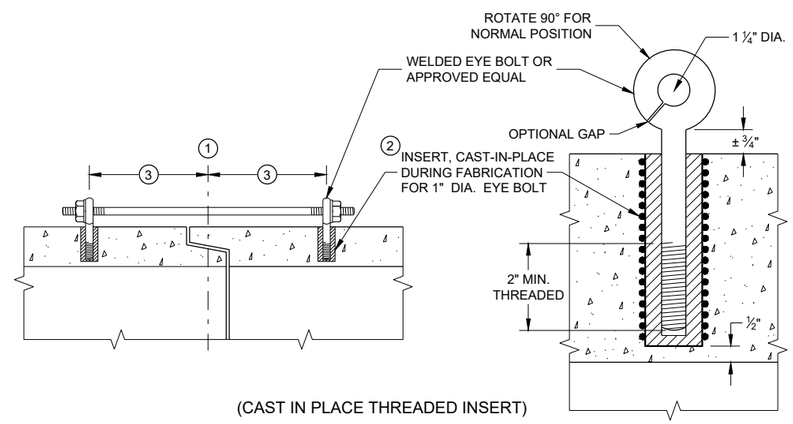

(CAST IN PLACE THREADED INSERT)

LONGITUDINAL SECTIONS

EYE BOLT AND TIE ROD ASSEMBLY (ALTERNATE NO. 1)

GENERAL NOTES

DETAILS OF CONSTRUCTION, MATERIALS, AND WORKMANSHIP NOT SHOWN ON THIS DRAWING SHALL CONFORM TO THE PERTINENT REQUIREMENTS OF THE STANDARD SPECIFICATIONS AND APPLICABLE SPECIAL PROVISIONS.

CONCRETE CULVERT AND STORM SEWER PIPE SHALL BE TIED TOGETHER IN THE MANNER ILLUSTRATED BY THIS DETAIL AT LOCATIONS DESIGNATED IN THE STANDARD SPECIFICATIONS AND THE PLAN. THE CONTRACTOR MAY USE EITHER ALTERNATE 1, 2 OR 3 FOR DRAINAGE STRUCTURES. ONLY ALTERNATE 1 AND 3 MAY BE USED FOR CATTLE PASSES, UNLESS OTHERWISE STATED IN THE CONTRACT. THE MATERIALS, FABRICATION AND WORK NECESSARY TO TIE THE PIPE BY THIS DETAIL WILL BE CONSIDERED INCIDENTAL TO THE PIPE AND APRON ENDWALLS IF REQUIRED.

DETAILED DRAWINGS FOR PROPOSED ALTERNATE DESIGNS FOR JOINT TIES SHALL BE SUBMITTED TO THE ENGINEER FOR APPROVAL.

JOINT TIES TO BE HOT-DIP GALVANIZED PER ASTM A 153.

1. CENTER LINE OF TONGUE AND GROOVE OR BELL AND SPIGOT JOINTS.
2. THE INSIDE OF THE THREADED INSERTS SHALL BE CLEAN TO ALLOW THE INSERTION OF THREADED EYE BOLTS.
3. HOLES SHALL BE CAST-IN-PLACE OR DRILLED PER THE APPLICABLE DETAIL, AND EQUAL DISTANCE FROM THE CENTERLINE OF THE JOINT.
4. BOLT PROJECTION INSIDE OF PIPE SHALL NOT EXCEED 2 INCHES.
5. OPENING TO BE ROD DIAMETER PLUS 1 INCH.
6. LENGTH ADEQUATE TO EXTEND TO WITHIN ½ INCH OF THE INNER SURFACE OF THE PIPE.
7. EYE BOLT LENGTH DETERMINED BY WALL THICKNESS, BELL THICKNESS AND BOLT PROJECTION INSIDE PIPE.

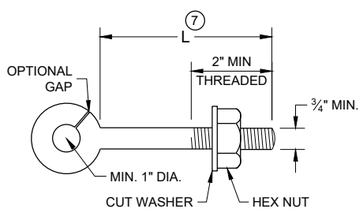

EYE BOLT 7

NOTE: TWO EYE BOLTS MAY BE USED WITH A 30" OR 38" LONG THREADED ROD IN LIEU OF THE 90° BENT TIE ROD.

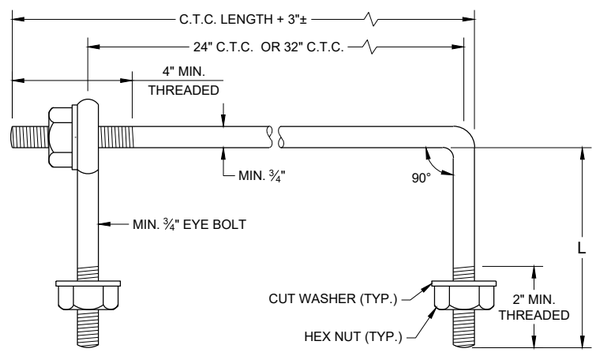

EYE BOLT AND TIE ROD

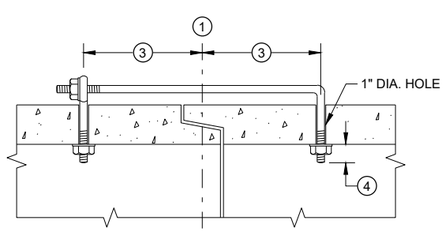

(TONGUE AND GROOVE PIPE)

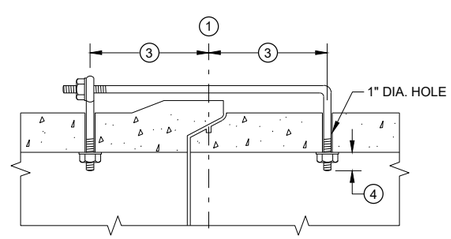

(MODIFIED BELL PIPE)

LONGITUDINAL SECTION

(JOINT TIES FOR 18" TO 66" DIA. CONCRETE PIPE)

EYE BOLT AND TIE ROD ASSEMBLY (ALTERNATE NO. 2)

ADJUSTABLE TIE ROD TABLE

PIPE DIAMETER	TIE ROD DIAMETER	D	L_1	N
12 - 60	⅝	⅝	5	½
66 - 84	¾	¾	5	½
90 - 144	1	1	7	1 7/16

DIMENSIONS SHOWN ARE IN INCHES

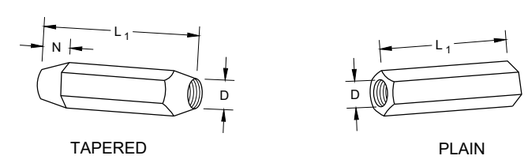

TAPERED PLAIN

RIGHT AND LEFT THREADS

SLEEVE NUTS

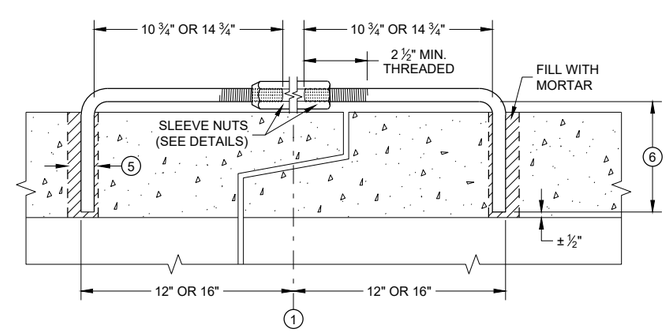

LONGITUDINAL SECTION

ADJUSTABLE TIE ROD (ALTERNATE NO. 3)

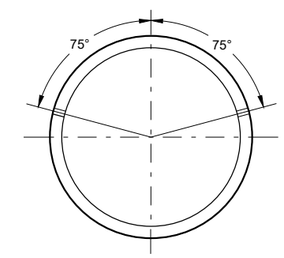

PLACEMENT OF (2) CAST-IN-PLACE INSERTS OR HOLES DURING FABRICATION FOR PIPE SECTIONS REQUIRING TIE RODS

TRANSVERSE SECTION

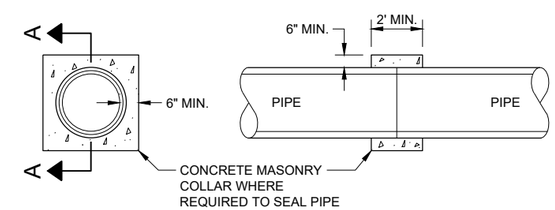

SECTION A - A

CONCRETE COLLAR DETAIL

JOINT TIES FO CONCRETE PIPE AND CONCRETE COLLAR DETAIL

STATE OF WISCONSIN
DEPARTMENT OF TRANSPORTATION

APPROVED
November 2021 — DATE
/S/ Rodney Taylor — ROADWAY STANDARDS DEVE ENGINEER
FHWA

6

SDD 08F04 - 08

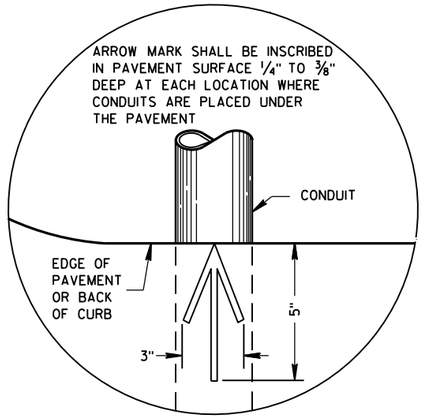

PLAN VIEW

ARROW MARK

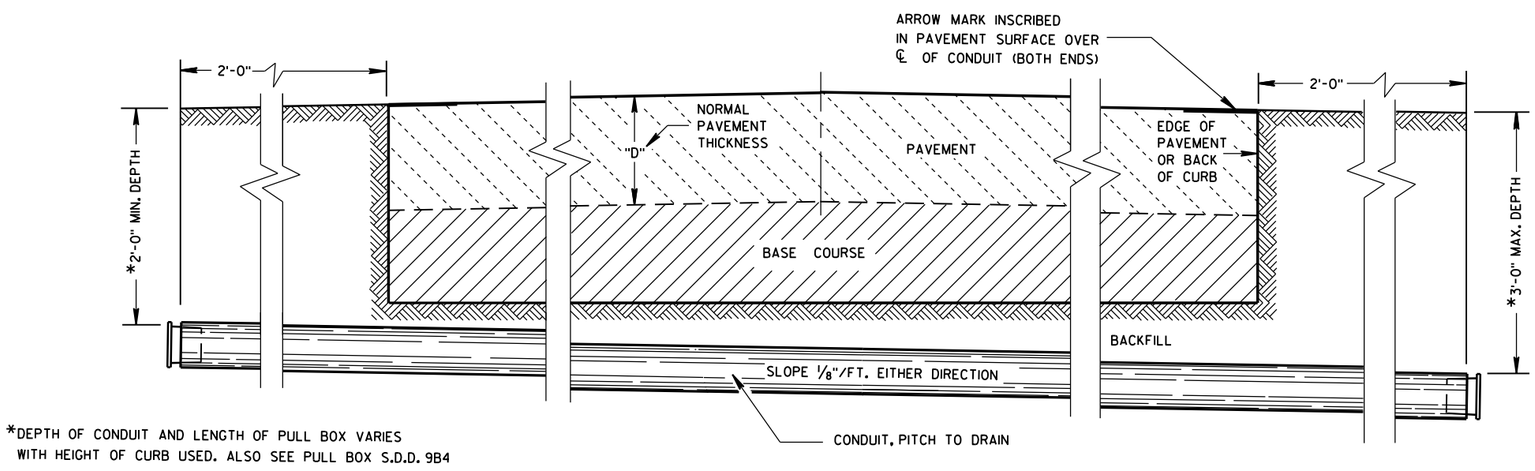

*DEPTH OF CONDUIT AND LENGTH OF PULL BOX VARIES WITH HEIGHT OF CURB USED. ALSO SEE PULL BOX S.D.D. 9B4

SIDE ELEVATION

DETAIL FOR CONDUIT UNDER PAVED HIGHWAYS

GENERAL NOTES

DETAILS OF CONSTRUCTION, MATERIALS AND WORKMANSHIP NOT SHOWN ON THIS DRAWING SHALL CONFORM TO THE PERTINENT REQUIREMENTS OF THE CONTRACT.

METALLIC (STANDARD SPECIFICATION 652.2.2) OR NONMETALLIC (STANDARD SPECIFICATION 652.2.3) CONDUIT SHALL BE FURNISHED AND PLACED AS SHOWN.

DEPTH OF CONDUIT INSTALLED BELOW THE TRAVELED WAY SHALL BE 24 INCHES MINIMUM AND 36 INCHES MAXIMUM.

DEPTH OF CONDUIT INSTALLED THAT IS NOT BELOW THE TRAVELED WAY SHALL BE 18 INCHES MINIMUM AND 36 INCHES MAXIMUM.

ANY EXCEPTION TO THE MAXIMUM DEPTH SHALL BE ONLY WITH THE WRITTEN APPROVAL OF THE ENGINEER.

THE TRENCH SHALL NOT BE BACKFILLED PRIOR TO INSPECTION OF THE CONDUIT.

ALL METALLIC CONDUIT RACEWAY ENDS SHALL BE REAMED AND THREADED.

ALL METALLIC CONDUIT IN WHICH WIRE OR CABLE IS TO BE INSTALLED SHALL BE BUSHED WITH APPROVED THREADED BUSHINGS BEFORE INSTALLATION OF THE WIRE OR CABLE.

ALL METALLIC CONDUITS IN WHICH WIRE OR CABLE IS NOT TO BE INSTALLED SHALL BE CAPPED WITH THREADED PROTECTIVE CAPS, AS APPROVED BY THE ENGINEER.

ALL NONMETALLIC CONDUIT SHALL BE CAPPED OR PLUGGED IMMEDIATELY AFTER INSTALLATION AND SHALL REMAIN CAPPED OR PLUGGED UNTIL WIRE/CABLES ARE INSTALLED.

NONMETALLIC CONDUITS IN WHICH WIRE OR CABLE IS NOT BEING INSTALLED SHALL REMAIN CAPPED OR PLUGGED.

BENDING OF PVC ELECTRICAL CONDUIT SHALL BE ACCOMPLISHED BY USING A BLANKET OR EMERSION TYPE TANK DESIGNED FOR THE PURPOSE OF BENDING PVC ELECTRICAL CONDUIT.

ALL CUT ENDS SHALL BE TRIMMED INSIDE AND OUTSIDE TO REMOVE ALL ROUGH EDGES ON NONMETALLIC CONDUIT. (SEE NEC 347.5)

WHEN REQUIRED TO CONNECT NONMETALLIC CONDUIT TO METALLIC CONDUIT, ONLY U.L. LISTED ADAPTER FITTINGS SHALL BE USED.

PRIOR TO CONDUIT ACCEPTANCE, CONDUIT CAPS OR PLUGS SHALL BE REMOVED, AND THE CAPS, PLUGS AND CONDUIT ENDS SHALL BE THOROUGHLY CLEANED AND THEN THE CAPS OR PLUGS REINSTALLED TO ENSURE THAT THE CAPS OR PLUGS CAN BE EASILY REMOVED IN THE FUTURE.

ALL CONDUIT BEING FURNISHED AND INSTALLED SHALL HAVE THE U.L. LABEL FIRMLY ATTACHED.

CONDUIT RUNS SHALL BE THE SAME SIZE OF CONDUIT FROM ONE END TO THE OTHER (FROM PULL BOX TO PULL BOX-OR-JUNCTION BOX TO JUNCTION BOX-OR-BASE TO BASE, ETC.).

TRACER WIRE SHALL BE INSTALLED AS STATED IN THE STANDARD SPECIFICATION, ITEM 652.3.1.1.

ALL CONDUIT RUNS SHALL BE STRAIGHT (WITHOUT BENDS) FROM PULL BOX TO PULL BOX, PULL BOX TO BASE AND BASE TO BASE AS SHOWN ON THE PLANS.

CONDUIT	
STATE OF WISCONSIN DEPARTMENT OF TRANSPORTATION	
APPROVED March, 2017 DATE	/S/ Ahmet Demirbilek STATE ELECTRICAL
FHWA	

TABLE OF NOMINAL DIMENSIONS AND WEIGHTS

DIMENSION IN INCHES		NON-CONDUCTIVE PULL BOX	
BOX DIAMETER ** (INSIDE)	A	24	24
BOX OVERALL OUTSIDE DIAMETER	B	27	27
BOX LENGTH	C	36	42
FRAME OPENING	D	22 1/2	22 1/2
WEIGHT IN POUNDS *			
COVER		50	50
BOX ONLY		75	85

* THE ACTUAL WEIGHT OF THE COVER OR BOX ONLY MAY VARY NOT TO EXCEED 100 LBS INDIVIDUALLY.

** DIAMETER VARIES FROM TOP TO BOTTOM WITH THE DIAMETER LARGER AT THE BOTTOM TO PREVENT FROST HEAVE

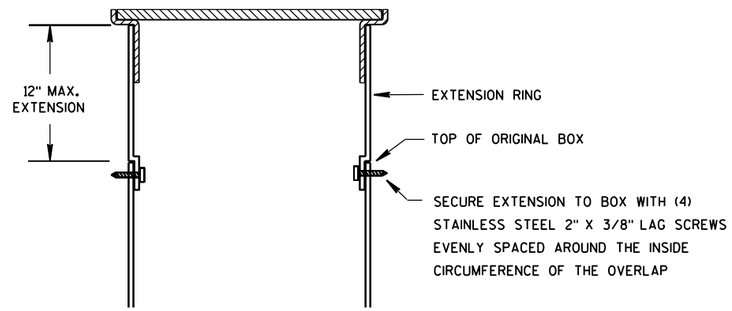

BOX EXTENSION

INSTALLED IN SOD OR CRUSHED AGGREGATE

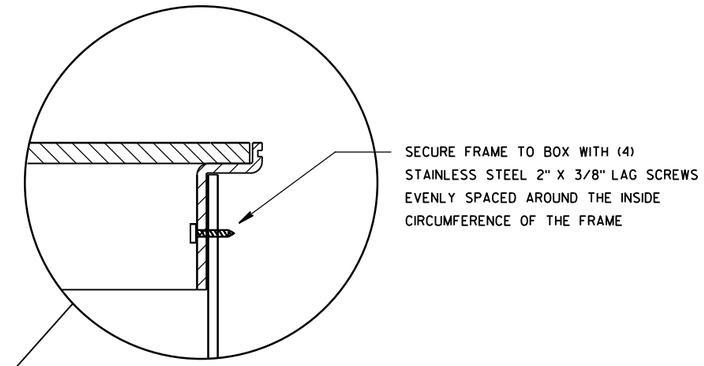

INSTALLED IN SIDEWALK

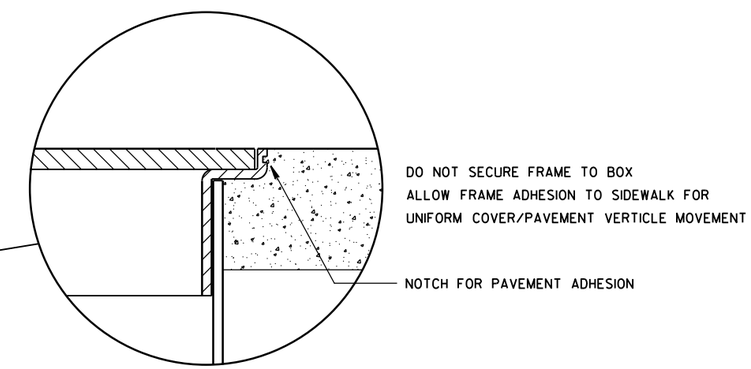

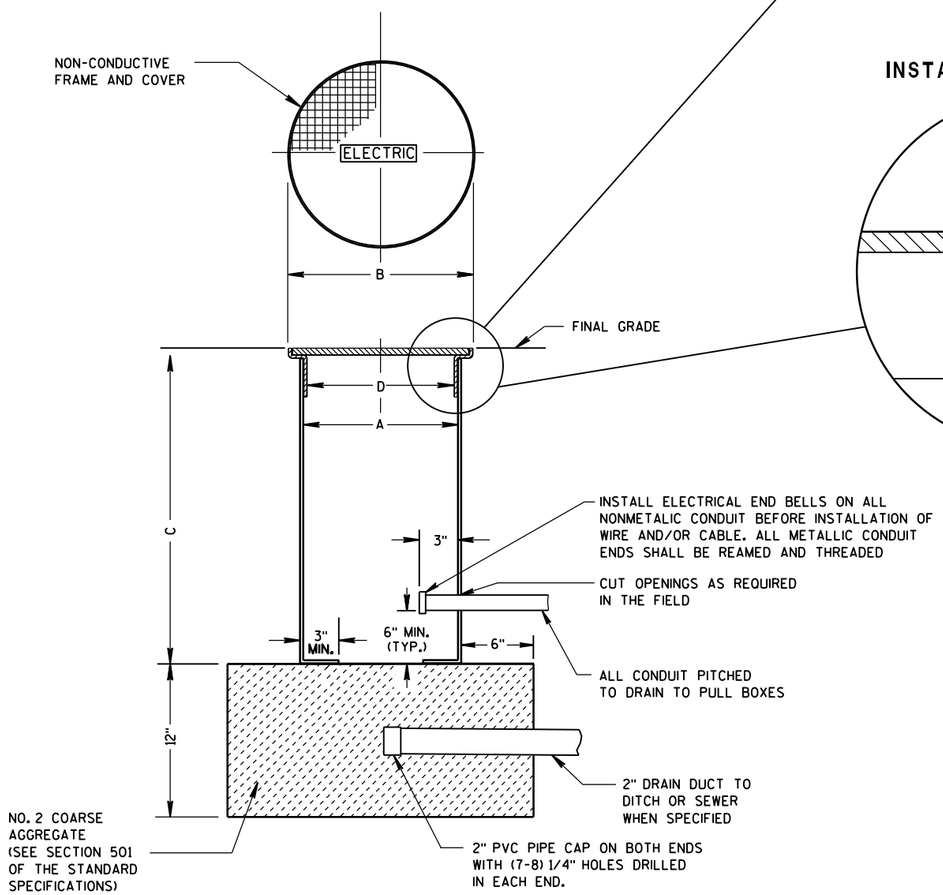

NON-CONDUCTIVE PULL BOX

GENERAL NOTES

DETAILS OF CONSTRUCTION, MATERIALS AND WORKMANSHIP NOT SHOWN ON THIS DRAWING SHALL CONFORM TO THE PERTINENT REQUIREMENTS OF THE CONTRACT.

ALL BOXES, FRAMES AND COVERS SHALL BE SUITABLE FOR TIER 15 LOADING AS SPECIFIED IN ANSI/SCTE 77.

PROVIDE AN OPENING FOR TOOL ASSISTED COVER REMOVAL NOT LARGE ENOUGH TO PERMIT PASSAGE OF A SPHERE MORE THAN 1/2" DIAMETER

ENSURE COVER SURFACE IS SKID RESISTANT WITH A COEFFICIENT OF FRICTION OF AT LEAST 0.5 AND VERTICAL SURFACE DICONTINUITIES LESS THAN 1/4".

COVER SHALL BE MAGNETICALLY LOCATABLE.

BOXES AND EXTENSIONS ARE TRIMMABLE FOR CUSTOM LENGTHS. TRIMMED PIECES SHALL MAINTAIN A UNIFORM LENGTH.

ENTRANCE HOLES INTO PULL BOXES SHALL BE CUT WITH A CIRCULAR HOLE SAW OR HYDRAULIC CONDUIT PUNCH. HOLE SIZE SHALL BE THE OUTSIDE DIAMETER OF THE CONDUIT THAT IS TO FIT IN THE OPENING PLUS NO MORE THAN 1/4".

THE CONTRACTOR SHALL NOT INSTALL WIRE IN ANY PULL BOX UNTIL ITS INSTALLATION HAS BEEN INSPECTED AND ACCEPTED BY THE ENGINEER.

ALL METALLIC CONDUIT IN WHICH WIRE AND/OR CABLE IS TO BE INSTALLED, SHALL BE BUSHED BEFORE INSTALLATION OF THE WIRE AND/OR CABLE.

ENTIRE BOX MUST BE CONSTRUCTED OF NON-CONDUCTIVE MATERIALS WITH THE EXCEPTION OF STAINLESS STEEL FASTENERS AND MAGNETIC LOCATABLE DEVICE.

WHEN A PULL BOX IS INSTALLED IN CRUSHED AGGREGATE SHOULDERS, PLACE IT 2-3 INCHES BELOW GRADE AND COVER IT WITH 2-3 INCHES OF CRUSHED AGGREGATE

LABEL ON COVER SHALL READ "ELECTRIC" FOR SIGNAL AND LIGHTING SYSTEMS, "WISDOT ITS" FOR COMMUNICATIONS AND ITS EQUIPMENT SYSTEMS.

PULL BOX
NON-CONDUCTIVE

STATE OF WISCONSIN
DEPARTMENT OF TRANSPORTATION

APPROVED
May 2017 — DATE
/S/ Ahmet Demirbilek — STATE ELECTRICAL
FHWA

FORM DEPTH SHALL BE NO MORE THAN 6" BELOW GRADE ON THE LOWER SIDE OF BASE

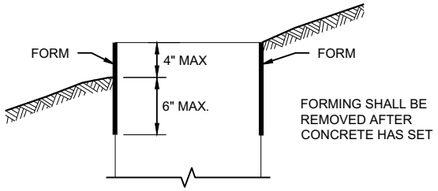

FORMING DETAIL

QUANTITY REQUIREMENTS	CONCRETE BASE TYPE		
	1	2	5 & 6
APPROX. CUBIC YARDS OF CONCRETE	0.40	0.57	0.40
LBS. OF HOOP BAR STEEL	NONE	23	16
LBS. OF VERTICAL BAR STEEL	NONE	60	18

GENERAL NOTES

DETAILS OF CONSTRUCTION, MATERIALS AND WORKMANSHIP NOT SHOWN ON THIS DRAWINGSHALL CONFORM TO THE PERTINENT REQUIREMENTS OF THE CONTRACT.

BASES SHALL BE EXCAVATED BY USE OF A CIRCULAR AUGER.

TOP SURFACES OF CONCRETE BASES SHALL BE TROWEL FINISHED SMOOTH AND LEVEL.

CONDUIT SIZES AND LOCATIONS SHALL BE SHOWN ON THE PLANS

THE FINAL OR TERMINATING CONCRETE BASE IN A CONDUIT RUN SHALL HAVE A 6" EXIT STUB INSTALLED FOR FUTURE CABLING USE. THE EXIT STUB SHALL BE SIZED AS USED THROUGHOUT THE CONDUIT RUN AS SHOWN A THE ENTRANCE OF THE BASE.

ENDS OF CONDUIT INSTALLED BELOW GRADE FRO FUTURE USE SHALL BE CAPPED IF METALLIC OR PLUGGED IF NON-METALLIC.

MINIMUM BENDING RADIUS OF CONDUIT IS EQUAL TO 6X THE DIAMETER.

CONDUIT HEIGHT ABOVE CONCRETE BASES SHALL BE 1 INCH. ALL METALLIC CONDUIT ENDS SHALL BE REAMED AND THREADED.

ALL CONDUIT ENDS AT THE TOP OF CONCRETE BASES SHALL BE CAPPED IF METALLIC OR PLUGGED IF NON-METALLIC IMMEDIATELY AFTER PLACEMENT AND BEFORE CONCRETE IS POURED. CONDUITS IN WHICH WIRE OR CABLE IS NOT INSTALLED SHALL REMAIN CAPPED OR PLUGGED.

BELL ENDS SHALL BE INSTALLED ON ALL PVC CONDUIT EXPOSED AT THE TOP OF CONCRETE BASES BEFORE INSTALLATION.

WHEN REQUIRED TO CONNECT NON-METALLIC CONDUIT TO METALLIC CONDUIT, ONLY ADAPTER FITTINGS, U.L. LISTED FOR ELECTRICAL USE, SHALL BE USED.

IF A BASE REQUIRES A DEEP FORM BECAUSE OF LOOSE DIRT OR FILL, THE FORM SHALL BE REMOVED BEFORE BACKFILLING AROUND THE BASE. BACKFILL SHALL BE TAMPED TIGHT AGAINST THE BARE CONCRETE BASE IN LAYERS OF 1 FOOT OR LESS.

A NO. 4 AWG STRANDED COPPER EQUIPMENT GROUNDING CONDUCTOR SHALL BE EXOTHERMICALLY WELDED TO THE EQUIPMENT GROUNDING ELECTRODE (GROUND ROD) FOR TYPE 2, TYPE 5 AND TYPE 6 BASES.

THE EQUIPMENT GROUNDING CONDUCTOR SHALL BE FURNISHED AND INSTALLED TO ENTER ALL BASE TYPES THROUGH A 1 INCH CONDUIT INSTALLED FOR GROUNDING PURPOSES, LEAVING A 4 FOOT COIL OF WIRE ABOVE THE CONCRETE BASE. THE EQUIPMENT GROUNDING CONDUCTOR SHALL BE NEATLY COILED AND THE COILS TIED TOGETHER.

ANCHOR RODS SHALL BE THREADED 12" IN LENGTH ON EACH END OF THE ROD. ANCHOR RODS SHALL BE MANUFACTURED IN ACCORDANCE WITH SECTION 654.2.1 OF THE STANDARD SPECIFICATIONS.

WASHERS AND LOCK WASHERS ARE REQUIRED ON ALL ANCHOR RODS.

WHEN ANCHOR RODS USING THE ALTERNATE "L" BEND ARE FURNISHED, THE 4 INCH"L" BEND SHALL BE IN ADDITION TO THE SPECIFIED ANCHOR ROD BAR LENGTH. THE "L" BEND SHALL NOT BE THREADED.

ANCHOR RODS SHALL BE INSTALLED WITH MISALIGNMENTS OF LESS THAN 1:40 FROM VERTICAL.

WELDING OF THE ANCHOR RODS TO THE CAGE IS UNACCEPTABLE. TIE WIRES SHALL BE USED.

BAR STEEL REINFORCEMENT SHALL BE COATED WITH POWDERED EPOXY RESIN IN ACCORDANCE WITH SECTION 505 OF THE STANDARD SPECIFICATIONS (LATEST EDITION).

(1) THE MINIMUM DEPTH OF CONDUIT EXITING THE CONCRETE BASE AND INSTALLED BELOW THE TRAVELED WAY SHALL BE 24 INCHES. THE MINIMUM DEPTH OF CONDUIT EXITING THE CONCRETE BASE THAT IS NOT INSTALLED BELOW THE TRAVELED WAY SHALL BE 18 INCHES. THE MAXIMUM DEPTH OF ALL CONDUIT SHALL BE 36 INCHES EXCEPT WITH WRITTEN APPROVAL OF THE ENGINEER.

(2) (4) 1" DIA. X 3' - 6" ANCHOR RODS.

(3) (4) 1" DIA. X 5' - 0" ANCHOR RODS.

(4) (6) NO. 6 X 6' - 8" BAR STEEL REINFORCEMENT.

(5) (7) NO. 4 X 5' - 1" BAR STEEL REINFORCEMENT @ 1' - 0" C - C.

(6) (4) 1" DIA. X 3' - 6" ANCHOR RODS.

(7) (6) NO. 4 X 4' - 8" BAR STEEL REINFORCEMENT.

(8) (5) NO. 4 X 5' - 1" BAR STELL REINFORCEMENT @ 1' - 0" C -C.

(9) EXOTHERMIC CONNECTION TO EUIPMENT GROUNDING CONDUCTOR

(10) ⅝" DIA. X 8' -0" COPPERCLAD EQUIPMENT GROUNDING ELECTRODE REQUIRED

(11) ANY ANCHOR ROD PROJECTION SHORTER THAN 2 ¾" OR LONGER THAN 3 ¼" SHALL REQUIRE THE BASE TO BE REMOVED AND REPLACED AT THE CONTRACTORS EXPENSE.

(12) FOR NON - BREAKAWAY INSTALLATIONS, 4 ½" ± ANCHOR ROD PROJECTION WITH THE USE OF LEVELING NUTS. RODENT SCREEN REQUIRED.

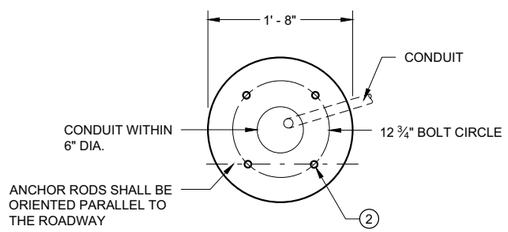

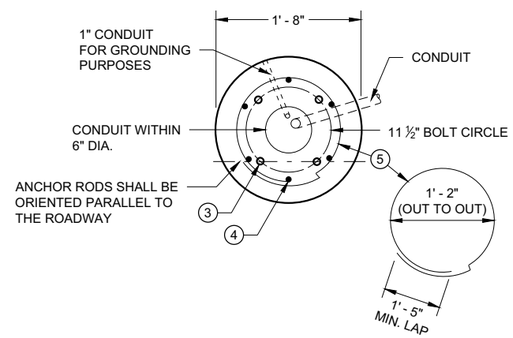

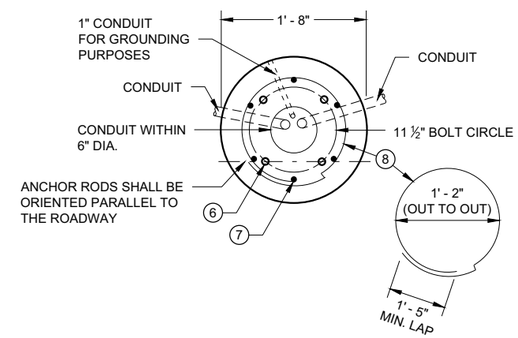

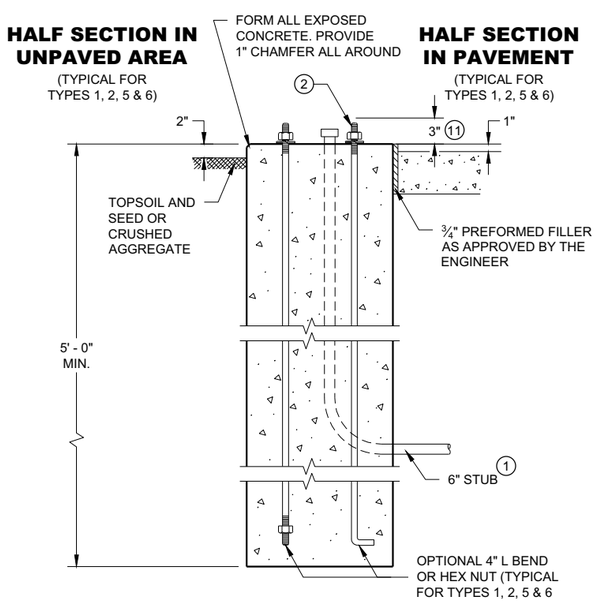

TYPE 1

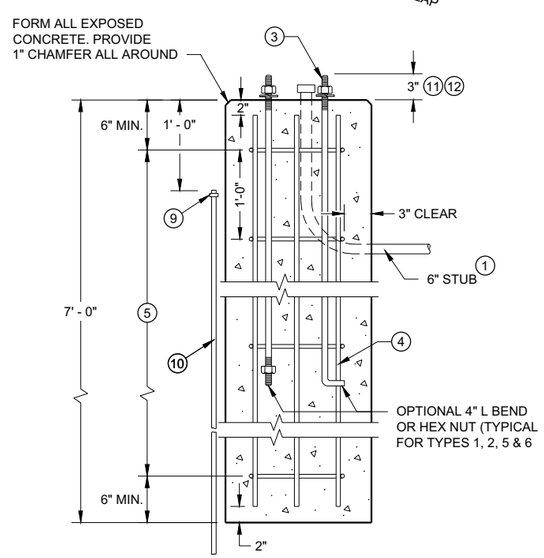

TYPE 2

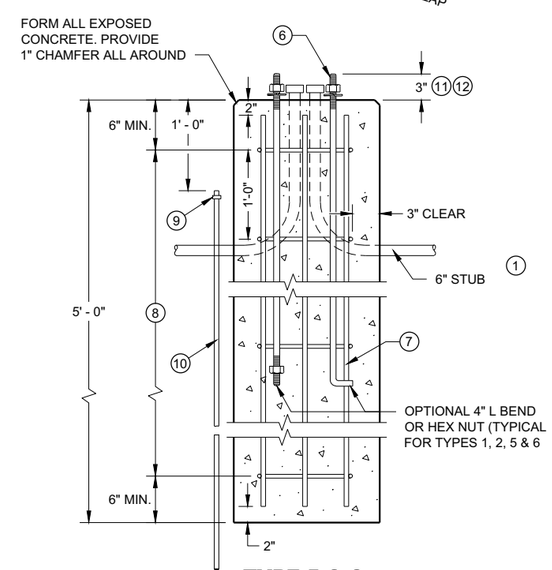

TYPE 5 & 6

CONCRETE BASES

CONCRETE BASES TYPES 1, 2, 5, & 6

STATE OF WISCONSIN
DEPARTMENT OF TRANSPORTATION

APPROVED
May 2019 — DATE
/S/ Ahmet Demirbilek — STATE ELECTRICAL ENGI
FHWA

6

SDD 09C02 - 09

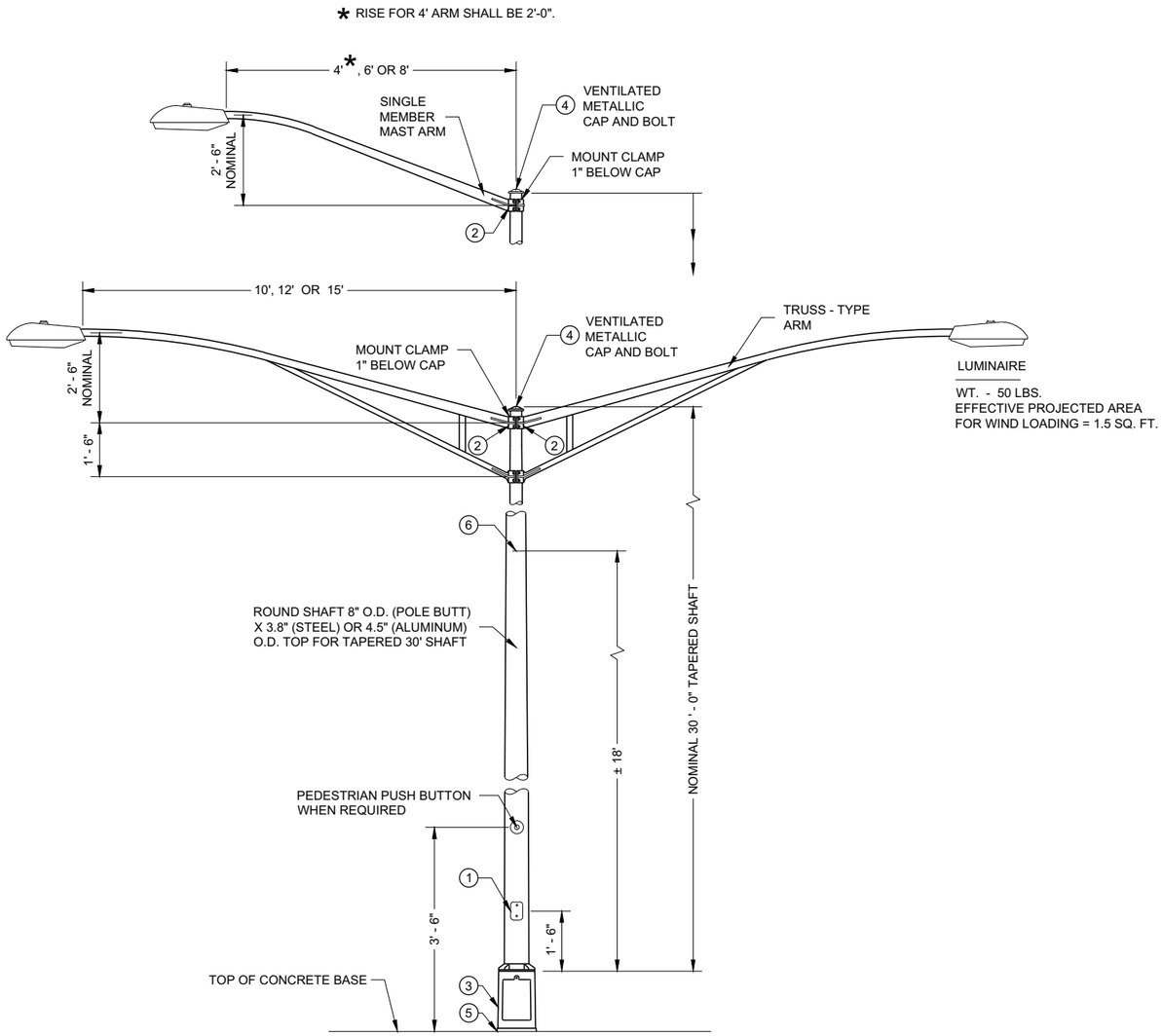

TYPE 5 POLE MOUNTING CONFIGURATION

(MAXIMUM LOAD)

LIGHTING ONLY

GENERAL NOTES

DETAILS OF CONSTRUCTION, MATERIALS AND WORKMANSHIP NOT SHOWN ON THIS DRAWING SHALL CONFORM TO THE PERTINENT REQUIREMENTS OF THE CONTRACT.

SECTION 657, POLES, OF THE STANDARD SPECIFICATIONS SHALL APPLY TO THIS DRAWING.

ALL TYPE 5 POLE MOUNTINGS SHALL BE DESIGNED TO INCLUDE TWIN 15' ARMS WITH LUMINAIRES.

POLES SHALL BE GALVANIZED STEEL OR ALUMINUM, AS CALLED FOR IN THE CONTRACT.

TYPE 5 ALUMINUM POLES SHALL BE CONSTRUCTED OF 6063 - T6 ALUMINUM ALLOY. SLEEVING INSIDE THE POLE IS NOT ACCEPTABLE.

TYPE 5 ALUMINUM POLES SHALL HAVE A MINIMUM WALL THICKNESS OF 0.1888".

TYPE 5 STEEL POLES SHALL HAVE A MINIMUM WALL THICKNESS OF U.S. STANDARD 11 GAGE (0.1196").

THE SLIPFITTER END OF THE LUMINAIRE MAST ARM SHALL BE A NOMINAL 2 ⅜ INCHES IN OUTSIDE DIAMETER. THE STRAIGHT PORTION OF THE SLIPFITTER END OF THE LUMINAIRE MAST ARM SHALL BE A NOMINAL 12 INCHES IN LENGTH.

WHEN TRANSFORMER BASES ARE USED, WIRE CONNECTIONS SHALL BE MADE IN THE TRANSFORMER BASE.

1. 4" X 6" REINFORCED HANDHOLE AND COVER ASSEMBLY WITH TWO (2) ¼" X ¾" - 20 TPI , STAINLESS STEEL, HEX HEAD BOLTS.
2. GROMMETS. 1" CHASE NIPPLES OR 1" CLOSE CONDUIT NIPPLES WITH BUSHINGS SHALL BE PROVIDED FOR 1 ⅜" HOLE IN POLE SHAFT FOR WIRING.
3. CAST ALUMINUM TRANSFORMER BASE, WHEN REQUIRED.
4. FURNISH AND INSTALL VENTILATED, CAST METALLIC (ALUMINUM ALLOY) CAPS. FASTEN CAPS WITH ONE (1) ¼" X ¾" - 20 TPI STAINLESS STEEL, HEX HEAD BOLT.
5. SHIMMING, IF NEEDED, SHALL BE LOCATED BETWEEN THE CONCRETE FOUNDATION AND POLE.
6. INTERNAL DUMBBELL - TYPE VIBRATION DAMPER.

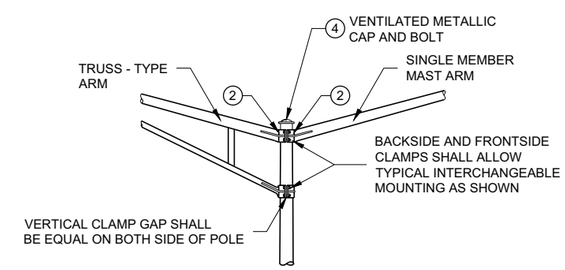

INTERCHANGEABLE MOUNTING DETAIL

6

6

POLE MOUNTINGS FOR LIGHTING UNITS, TYPE 5 (30 FEET)

STATE OF WISCONSIN
DEPARTMENT OF TRANSPORTAT

SDD 09E01 - 15d

SDD 09E01 - 15d

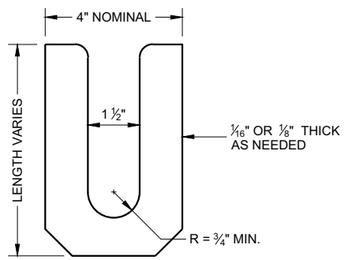

LEVELING SHIM (1)
SHALL BE ALUMINUM

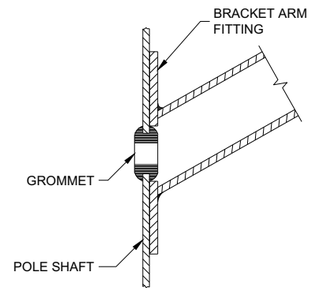

TYPICAL APPLICATION OF GROMMET IN POLE SHAFT

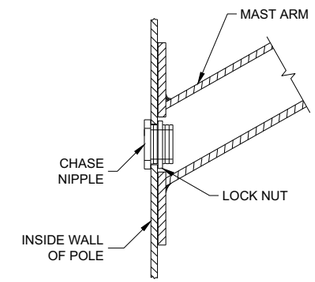

TYPICAL APPLICATION OF CHASE NIPPLE IN POLE SHAFT

GENERAL NOTES

CLAMP BOLT-NUT TIGHTENING TORQUE SHALL BE INDICATED BY INDENT STAMPING (1/2 INCH NUMERALS AND LETTERS) OR WEATHERPROOF PRINTING ON THE INSIDE OF THE CLAMP THAT IS WELDED TO THE ARM MEMBER.

(1) 4.5" I.D. FOR LUMINAIRE MAST ARM CLAMP. 6.625" I.D. FOR TROMBONE MAST ARM CLAMP.

(2) INDIVIDUAL BASE PLATE ANCHOR ROD COVERS. (4 REQUIRED)

(3) BASE PLATE SLOTTED TO ACCEPT 11" THROUGH 12" BOLT CIRCLE USING 1" DIAMETER ANCHOR RODS.

(4) LEVELING SHIMS, DESIGNED FOR THE PURPOSE, SHALL BE USED WHEN PLUMBING POLES. THE USE OF WASHERS IN LIEU OF PROPER LEVELING SHIMS IS NOT ACCEPTABLE. LEVELING SHIMS SHALL BE USED ONLY BETWEEN THE TOP OF THE CONCRETE BASE AND A METALLIC BASE PLATE.

SHIMS SHALL BE LONG ENOUGH AND WIDE ENOUGH TO COMPLETELY COVER THE AREA UNDER THE LENGTH AND WIDTH OF THE BASE MOUNTING FLANGE.

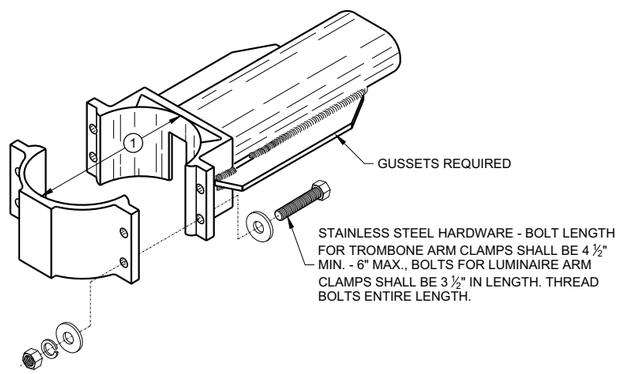

TYPICAL TROMBONE MAST ARM AND SINGLE LUMINAIRE MAST ARM MOUNTING CLAMP

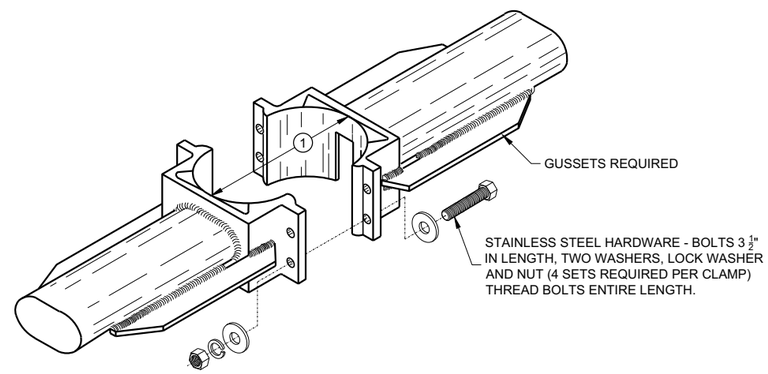

TYPICAL LUMINAIRE MAST ARM (DOUBLE) MOUNTING BRACKETS

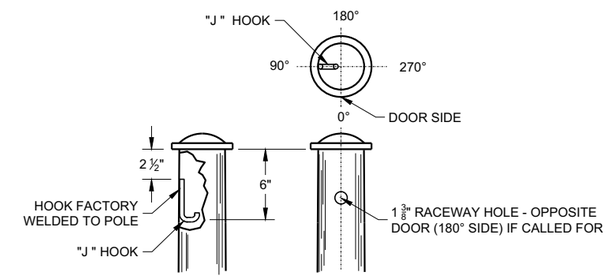

TYPICAL "J" HOOK LOCATION

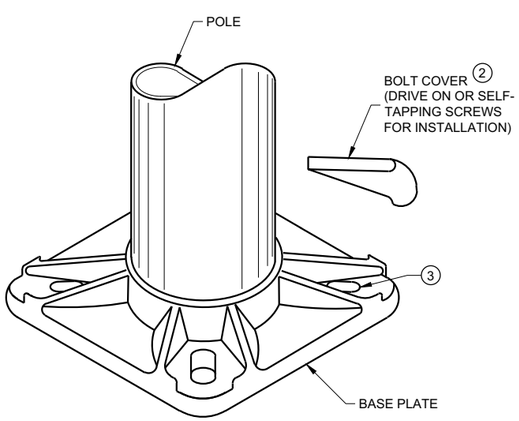

BASE PLATE

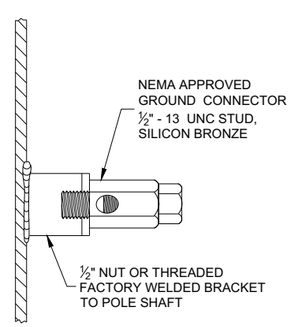

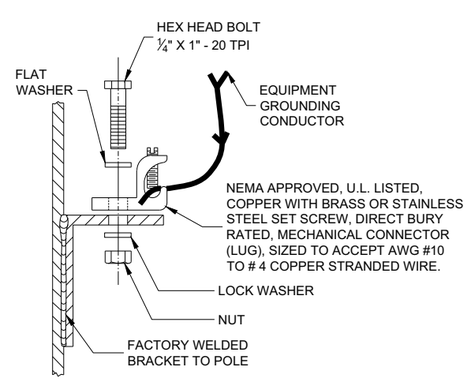

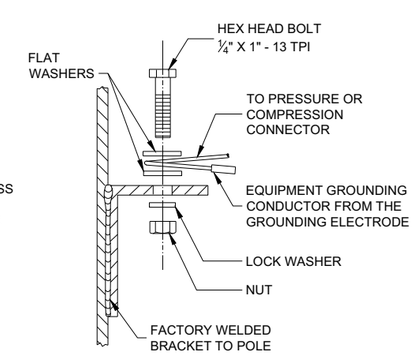

TYPICAL GROUNDING CONNECTIONS
NUT, BOLT AND WASHERS SHALL BE STAINLESS STEEL

HARDWARE DETAILS FOR POLE MOUNTING

STATE OF WISCONSIN
DEPARTMENT OF TRANSPORTATION

APPROVED
November 2018 /S/ Ahmet Demirbilek
DATE STATE ELECTRICAL ENGI 73
FHWA

6
SDD 09A01 - 15g

GENERAL NOTES

DETAILS OF CONSTRUCTION, MATERIALS AND WORKMANSHIP NOT SHOWN ON THIS DRAWING SHALL CONFORM TO THE PERTINENT REQUIREMENTS OF THE CONTRACT.

THE EQUIPMENT GROUND CONNECTOR SHALL BE TAPED WITH 3 WRAPS (MINIMUM) OF APPROVED RUBBER TAPE AND 3 WRAPS (MINIMUM) OF APPROVED VINYL TAPE TO COVER SHARP WIRE ENDS AFTER THE CONNECTION IS COMPLETED.

WHEN TRANSFORMER BASES ARE USED, ALL WIRING CONNECTIONS SHALL OCCUR WITHIN THE TRANSFORMER BASES.

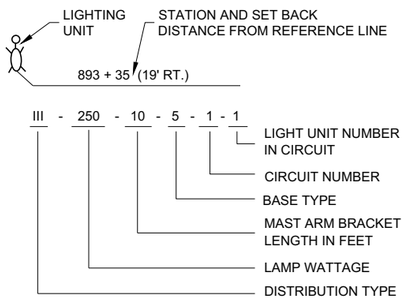

LIGHTING UNIT CODE
(TYPICAL)

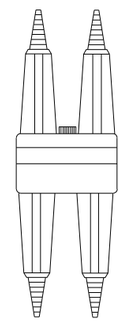

DETAIL "A"
BREAKAWAY DOUBLE POLE WITH WATERPROOF INSULATING BOOT

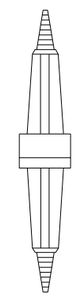

DETAIL "B"
BREAKAWAY SINGLE POLE WITH WATERPROOF INSULATING BOOT

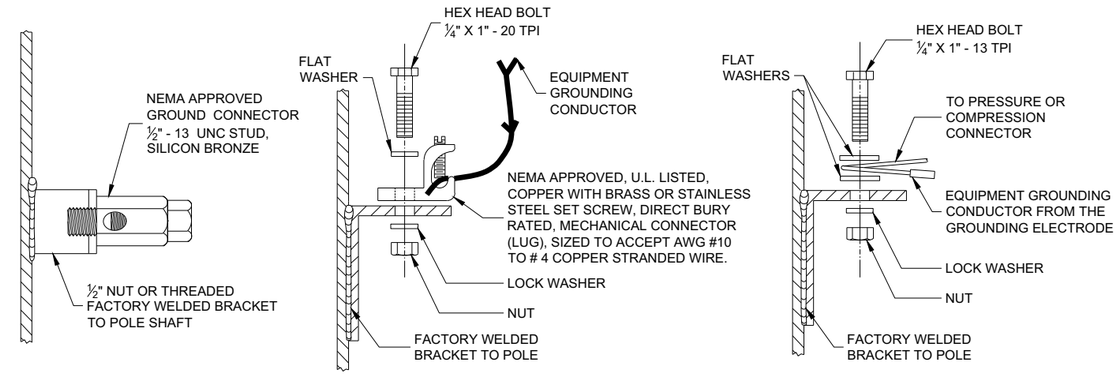

TYPICAL GROUNDING CONNECTIONS
NUT, BOLT AND WASHERS SHALL BE STAINLESS STEEL

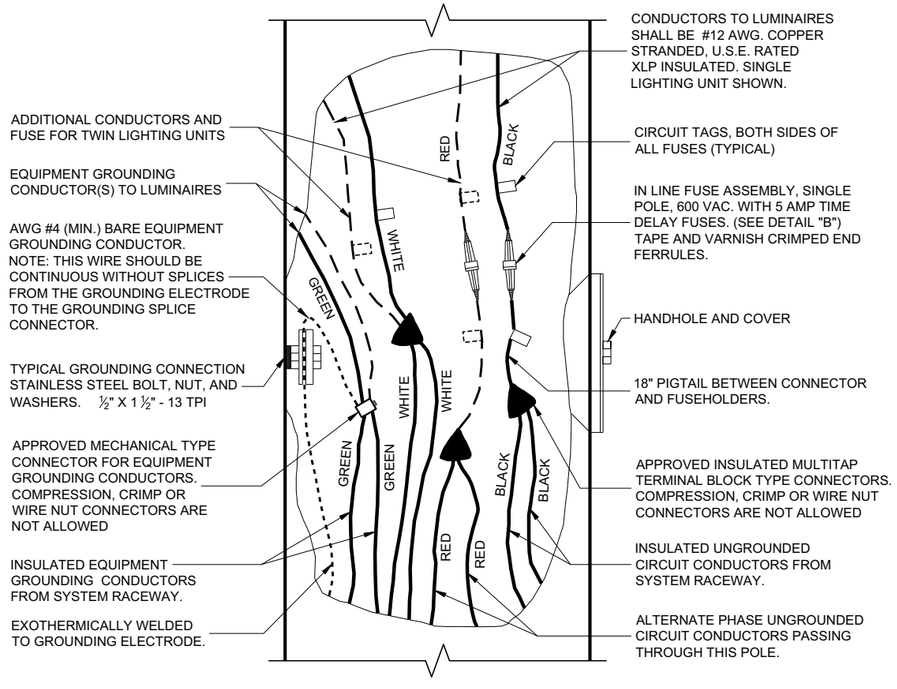

3 WIRE - 120, 240 OR 480 VAC (UNGROUNDED CONDUCTORS) WITH GROUNDING CONDUCTOR AND EQUIPMENT GROUNDING CONDUCTOR

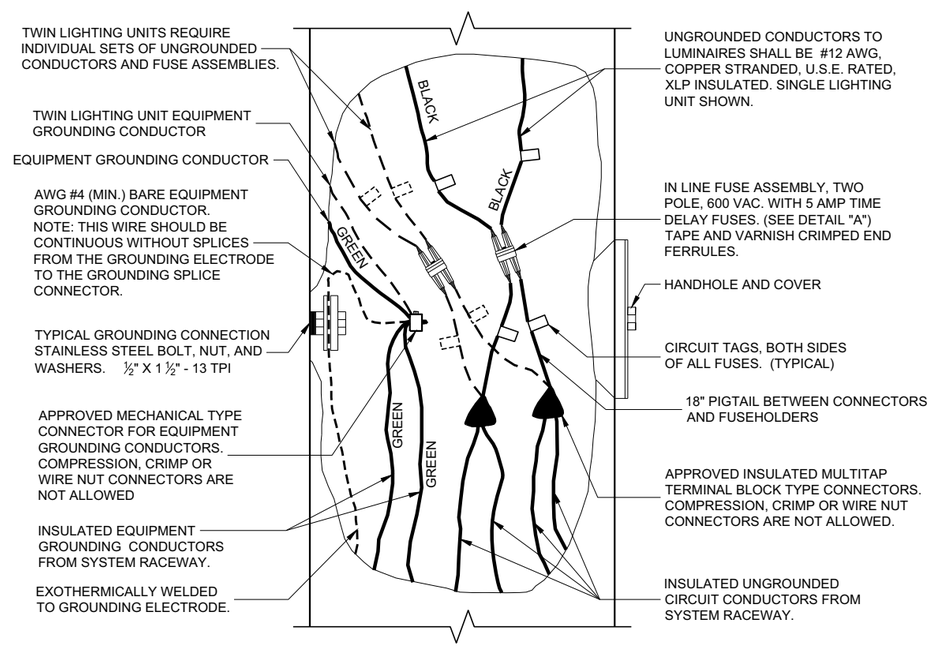

2 WIRE - 240 OR 480 VAC (UNGROUNDED CONDUCTORS) WITH EQUIPMENT GROUNDING CONDUCTOR

NON - FREEWAY LIGHTING UNIT POLE WIRING

STATE OF WISCONSIN
DEPARTMENT OF TRANSPORTATION

APPROVED
November 2018 /S/ Ahmet Demirbilek
DATE STATE ELECTRICAL ENGI
FHWA

6

SDD 09E03 - 06

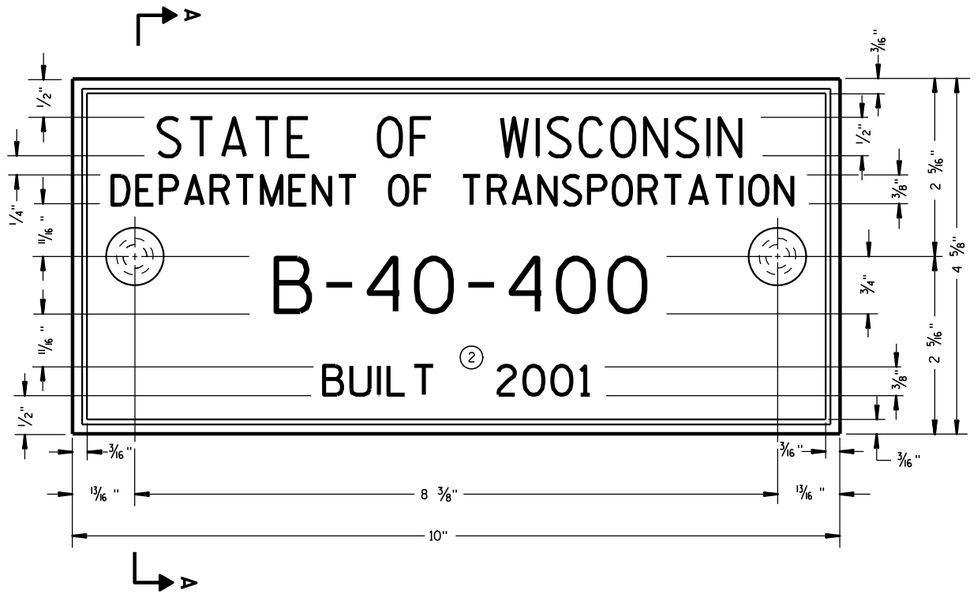

TYPICAL NAME PLATE
(BRIDGES, CULVERTS, AND RETAINING WALLS)

GENERAL NOTES

NAME PLATES TO BE INSTALLED ON BRIDGES, CULVERTS, AND RETAINING WALLS SHALL CONFORM TO THE REQUIREMENTS OF SECTION 502.3.11 OF THE STANDARD SPECIFICATIONS.

THE BRIDGE NUMBER AND YEAR BUILT SHOWN ON THIS DRAWING ARE EXAMPLES ONLY. SEE CONSTRUCTION PLANS FOR INDIVIDUAL NUMBERING AND YEAR BUILT.

① EPOXY RESIN SHALL BE FROM AN APPROVED MANUFACTURER AND USED IN ACCORDANCE WITH MANUFACTURER'S RECOMMENDATIONS.

② REHABILITATION OF AN EXISTING STRUCTURE SHOULD USE THE DATE OF ORIGINAL STRUCTURE CONSTRUCTION.

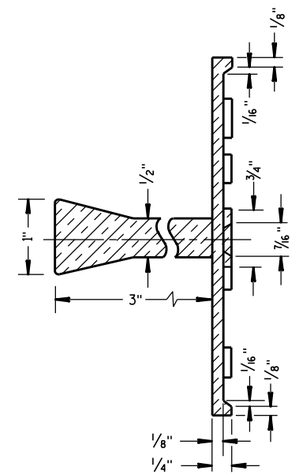

SECTION A-A

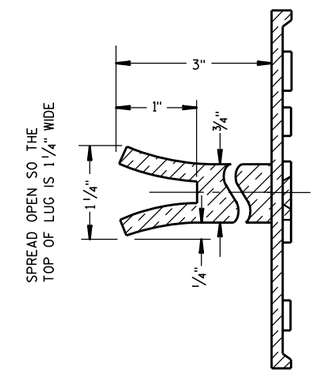

ALTERNATE LUG

6

FOR MULTI-UNIT STRUCTURES
LINE 3 ABOVE SHALL READ

B = BRIDGE
C = CULVERT
R = RETAINING WALL

COUNTY NO.

BRIDGE NO.

UNIT NO. FOR MULTIPLE
UNIT BRIDGE

B-40-400-1A

NUMBERING DESIGNATION
MULTI-UNIT STRUCTURES

① ADHERE ANCHOR LUG TO PRECAST RETAINING WALL WITH EPOXY RESIN.

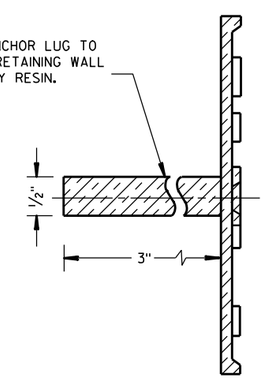

ALTERNATE LUG
(FOR ATTACHMENT TO PRECAST STRUCTURES)

NAME PLATE (STRUCTURES)

STATE OF WISCONSIN
DEPARTMENT OF TRANSPORTATION

APPROVED

3/26/10 — DATE

/S/ Scot Beck — CHIEF STRUCTURAL DEVELOPMENT ENGINEER

FHWA

S.D.D. 12 A 3-10

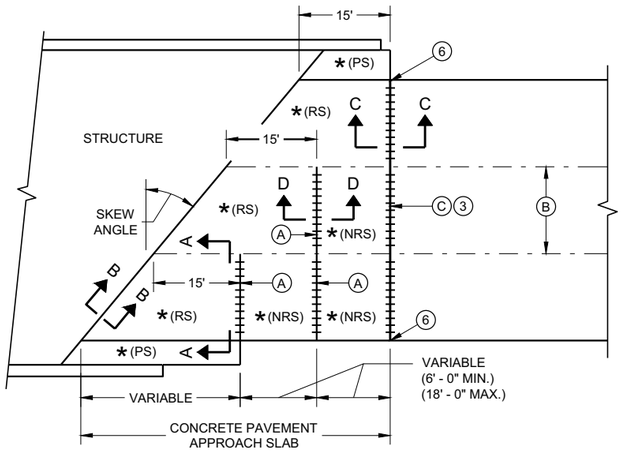

SKEWED APPROACH
(PAVEMENT MORE THAN TWO LANES)

* (RS) = REINFORCED CONCRETE SLAB

* (PS) = PAVED CONCRETE SHOULDER OR CONCRETE DRAINAGE SLAB

* (NRS) - NON - REINFORCED CONCRETE SLAB

*** STANDARD DOWEL BAR DIAMETER (SEE SDD 13C11 AND SDD 13C13)

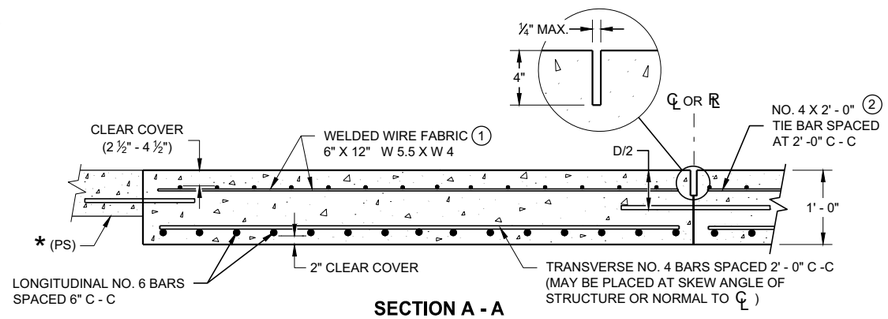

SECTION A - A
REINFORCEMENT POSITIONING DETAIL

GENERAL NOTES

THE CONTRACTOR MAY SPLICE NO. 6 BARS IN THE APPROACH SLAB FOR SKEWED STRUCTURES ONLY. STAGGER SPLICES WITH A MAXIMUM OF ONE SPLICE PER BAR. THE LENGTH OF LAP IS 20 INCHES.

TACK WELD DOWEL BARS TO THE BASKETS ON ALTERNATE ENDS.

1. THE CONTRACTOR MAY USE NO. 4 BARS SPACED AT 2' - 0 " C - C IN BOTH THE LONGITUDINAL AND TRANSVERSE DIRECTIONS FOR TOP REINFORCEMENT AS AN ALTERNATIVE TO THE WELDED WIRE FABRIC.
2. THE CONTRACTOR MAY OMIT THE BARS BETWEEN REINFORCED SLABS WHERE SLAB REINFORCEMENT BARS EXTEND ACROSS THE CENTERLINE OR REFERENCE LINE.
3. DO NOT CONSTRUCT AN EXPANSION JOINT OR INSTALL DOWEL BARS WHEN ABUTTING AN HMA PAVEMENT.
4. USE A JOINT SEALANT CONFORMING TO STANDARD SPECIFICATION 415.2.6.
5. PLACE EXPANSION CAP ON THE END OF THE DOWEL THAT IS NOT TACK WELDED TO THE BASKET. DO NOT FORCE DOWEL BAR PAST THE DOWEL STOP.
6. EXTEND EXPANSION JOINT THROUGH ANY ADJACENT TIED CONCRETE.

A. STANDARD CONTRACTION JOINT NORMAL TO ℄ OR ℞.

B. STANDARD LONGITUDINAL JOINT WITH TIE BARS.

C. 1 ½" EXPANSION JOINT WITH DOWEL BARS NORMAL TO ℄ OR ℞ .

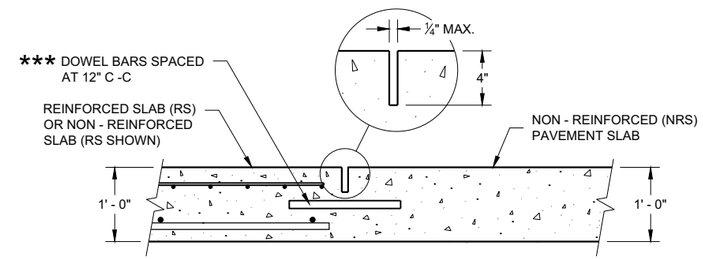

SECTION D - D
CONTRACTION JOINT

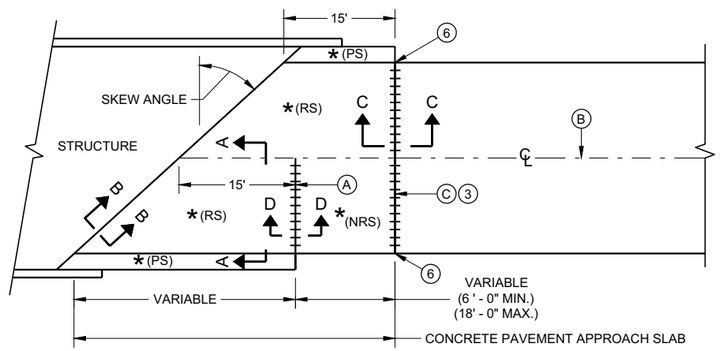

SKEWS > 20°
(PAVEMENT WIDTH ≤ 30')

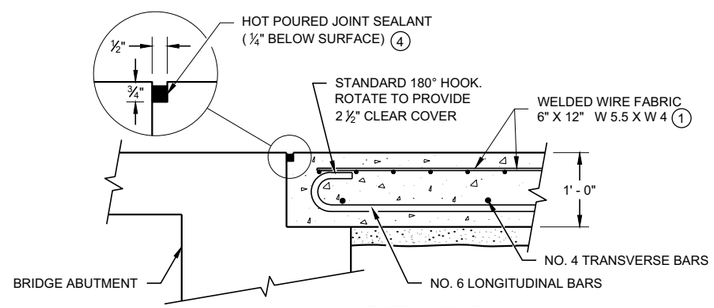

SECTION B - B
BEND DETAIL
BOTTOM REINFORCEMENT

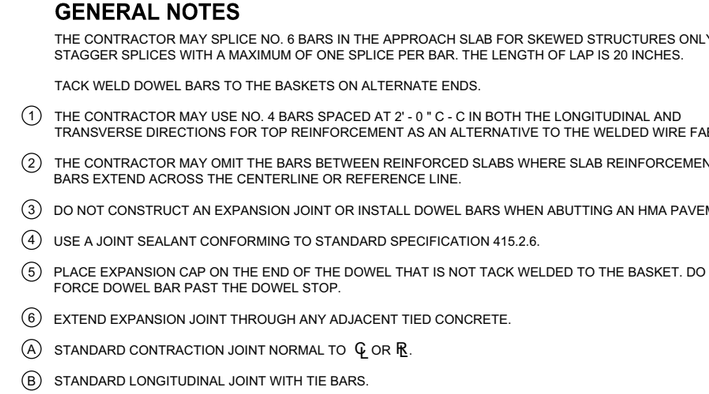

EXPANSION JOINT DETAIL

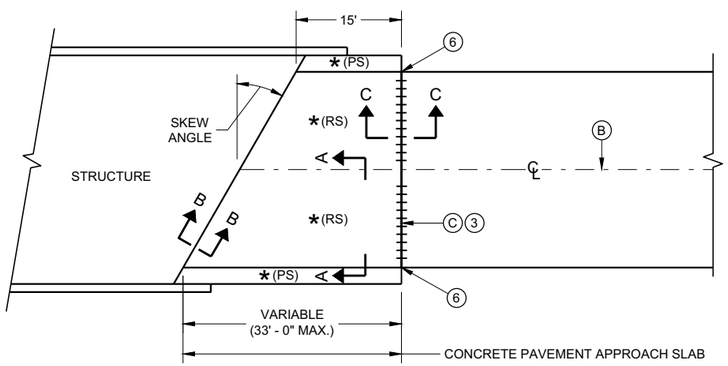

SKEWS ≤ 20°
(PAVEMENT WIDTH ≤ 30')

APPROACH SLAB AND ADJACENT PAVEMENT

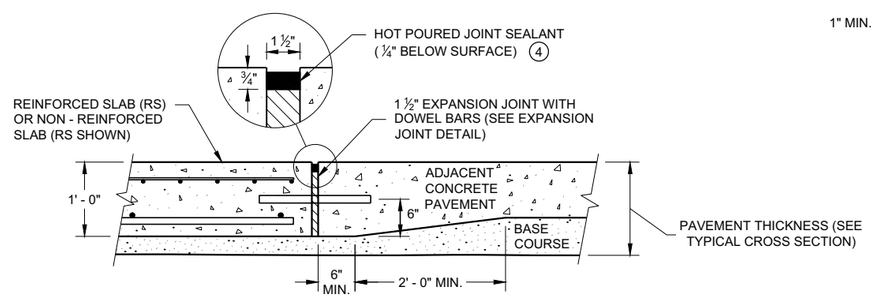

SECTION C - C
TRANSITION DETAIL
APPROACH SLAB TO ADJACENT PAVEMENT

CONCRETE PAVEMENT APPROACH SLAB

STATE OF WISCONSIN
DEPARTMENT OF TRANSPORTATION

APPROVED
November 2018 /S/ Peter Kemp, P.E.
DATE PAVEMENT SUPERVISOR
FHWA

6

6

SDD 13B02 - 09a

SDD 13B02 - 09a

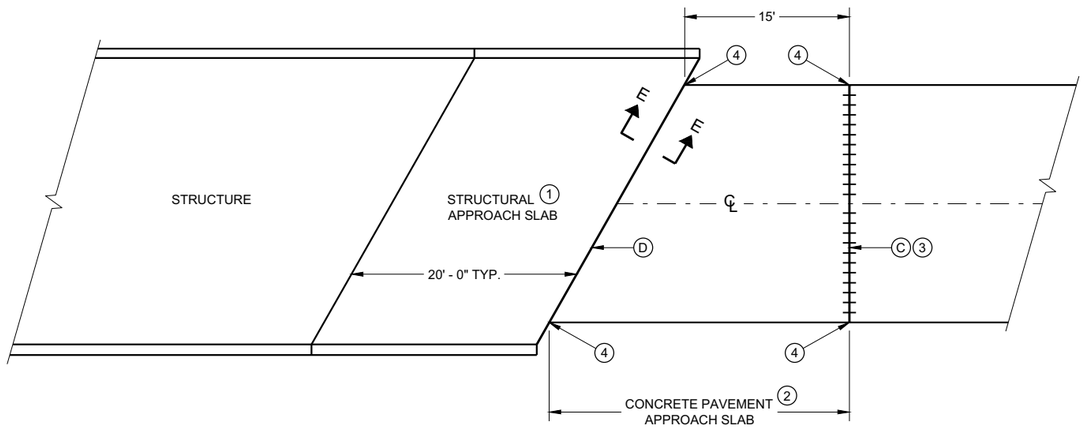

BRIDGE APPROACHES

GENERAL NOTES

ALL PROJECTS THAT INVOLVE A STRUCTURAL APPROACH SLAB WILL ALSO HAVE A CONCRETE PAVEMENT APPROACH SLAB.

1. SEE BRIDGE PLAN.
2. CONFORM TO SDD 13B02 SHEET A FOR CONCRETE PAVEMENT APPROACH SLAB DETAILS
3. DO NOT CONSTRUCT AN EXPANSION JOINT OR INSTALL DOWEL BARS WHEN ABUTTING AN HMA PAVEMENT.
4. EXTEND EXPANSION JOINT THROUGH ANY ADJACENT TIED CONCRETE.

C. 1 ½" EXPANSION JOINT WITH DOWEL BARS NORMAL TO ℄ OR ℞.

D. 1 ½" EXPANSION JOINT (NO DOWELS)

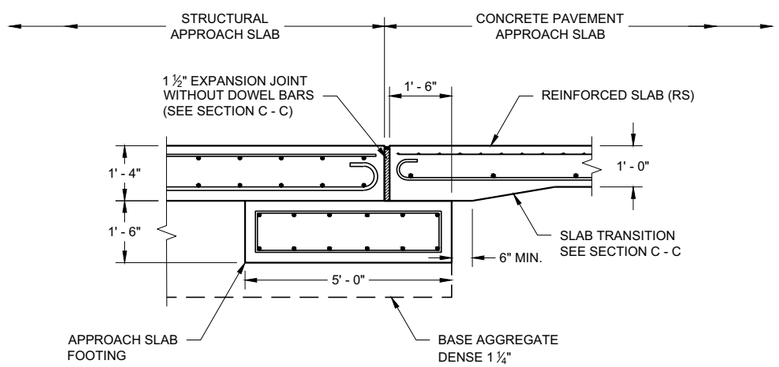

SECTION E - E
FOOTING DETAIL
STRUCTURAL APPROACH SLAB TO CONCRETE BRIDGE APPROACH

6

6

SDD 13B02 - 09b

SDD 13B02 - 09b

STRUCTURAL APPROACH SLAB AND CONCRETE PAVEMENT APPROACH SLAB

STATE OF WISCONSIN
DEPARTMENT OF TRANSPORTATION

APPROVED
November 2018 /S/ Peter Kemp P.E.
DATE PAVEMENT SUPERVISOR
FHWA

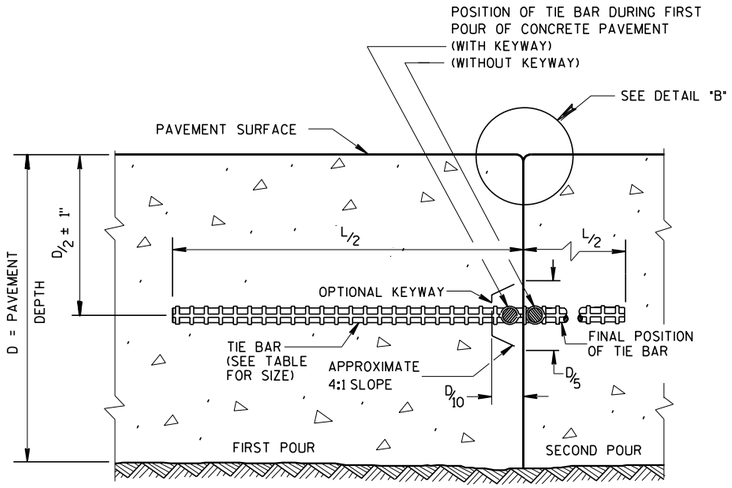

CONSTRUCTION JOINT

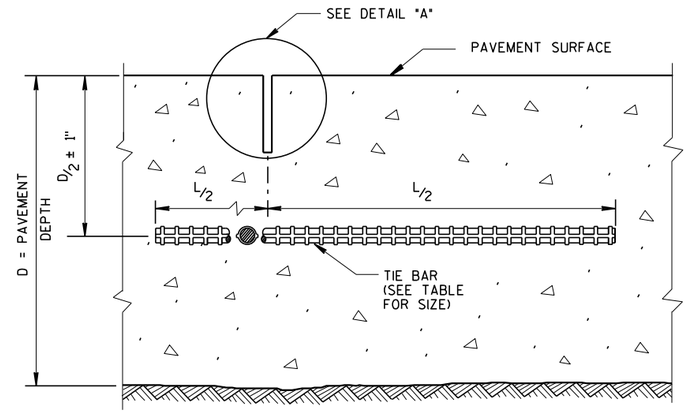

SAWED JOINT

GENERAL NOTES

CREATE A LONGITUDINAL JOINT FOR PAVEMENT WIDTHS GREATER THAN 15 FEET.

CORRELATE LONGITUDINAL JOINTS WITH LANE LINES WHEN POSSIBLE.

1. ANCHOR TIE BARS INTO DRILLED HOLES WITH AN EPOXY.
2. PAVEMENT THAT WAS IN PLACE PRIOR TO THE CONTRACT.

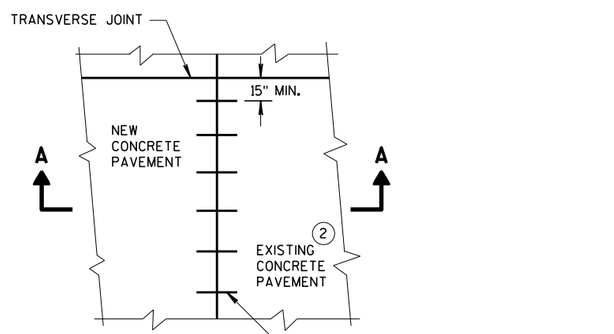

PLAN VIEW

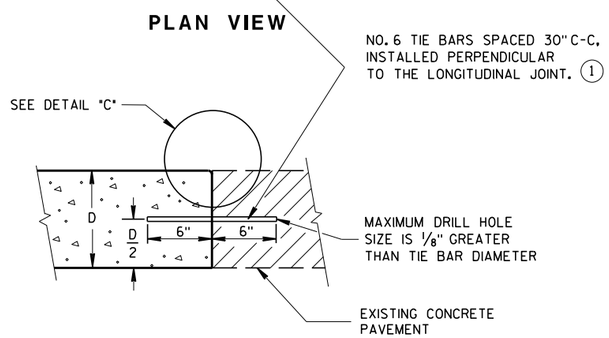

SECTION A-A
LONGITUDINAL CONSTRUCTION JOINT TIE BARS ANCHORED INTO EXISTING PAVEMENT

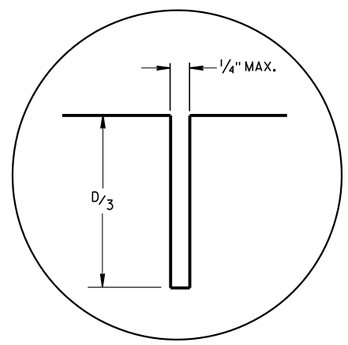

DETAIL "A"

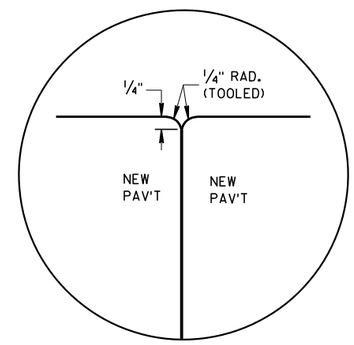

DETAIL "B"

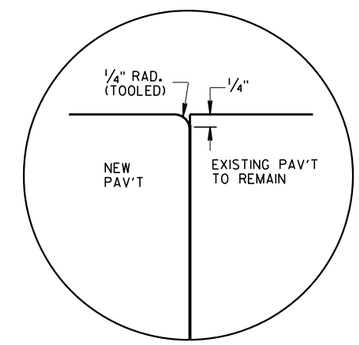

DETAIL "C"

TIE BAR TABLE

PAVEMENT DEPTH (D)	TIE BAR SIZE	TIE BAR LENGTH (L)	MAX. TIE BAR SPACING
< 10 1/2"	NO. 4	30"	36"
≥ 10 1/2"	NO. 5	36"	36"
	NO. 4 *	30"	24" **

* SUBSTITUTE BENT BARS AT LONGITUDINAL JOINTS WHEN EQUIPMENT LIMITATIONS DURING CONSTRUCTION WARRANT (e.g. AUXILIARY LANES OR TURN LANES)

** CONFORM TO 15" MINUMUM SPACING FROM TRANSVERSE JOINTS; SPACING BETWEEN TIE BARS WILL BE 30" AT TRANSVERSE JOINTS.

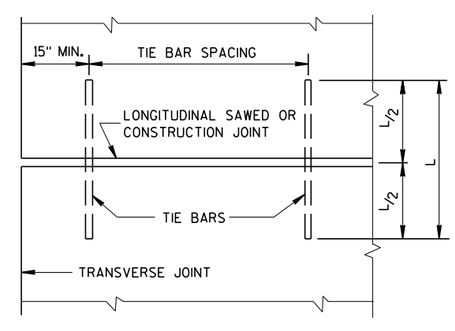

PLAN VIEW
SHOWING LOCATION OF TIE BARS

CONCRETE PAVEMENT
LONGITUDINAL JOINTS AND TIES

STATE OF WISCONSIN
DEPARTMENT OF TRANSPORTATION

APPROVED
March 2018 — DATE
/S/ Peter Kerr — PAVEMENT SUPE
FHWA

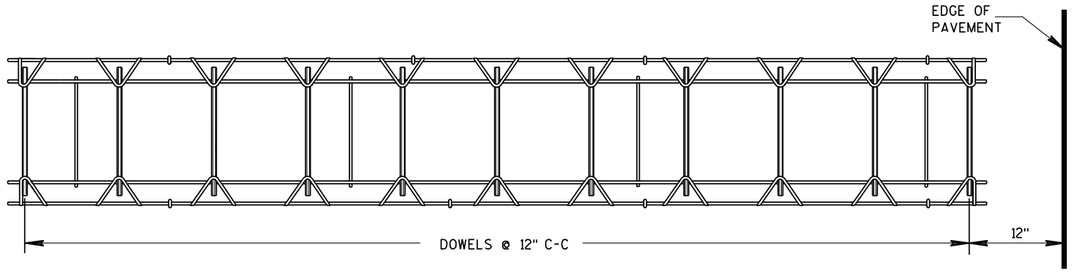

PLAN VIEW

SIDE VIEW

CONTRACTION JOINT DOWEL ASSEMBLY 1

PAVEMENT DEPTH, DOWEL BAR SIZE AND JOINT SPACING TABLE

PAVEMENT DEPTH (D)	DOWEL BAR DIAMETER	CONTRACTION JOINT SPACING
5 1/2", 6", 6 1/2"	NONE	12'
7", 7 1/2"	1"	14'
8", 8 1/2"	1 1/4"	15'
9", 9 1/2"	1 1/4"	15'
10" & ABOVE	1 1/2"	15'

GENERAL NOTES

CONTRACTION JOINTS

CONSTRUCT TRANSVERSE CONTRACTION JOINTS NORMAL TO THE CENTERLINE. SHOW THE LOCATION OF CONTRACTION JOINTS THROUGH INTERSECTIONS ON THE PLANS OR AS DIRECTED BY THE ENGINEER.

INSTALL DOWEL BARS PARALLEL TO THE PAVEMENT CENTERLINE AND PAVEMENT SURFACE.

FOR PAVEMENT SLABS OF VARYING WIDTHS, LOCATE THE OUTER MOST DOWEL BAR SO THAT THE CENTER OF THE BAR IS A MINIMUM OF 6 INCHES AND A MAXIMUM OF 18 INCHES FROM THE LONGITUDINAL JOINT AND THE FREE EDGE OF PAVEMENT.

CONSTRUCTION JOINTS

LOCATE CONSTRUCTION JOINTS A MINIMUM OF 6 FEET FROM THE NEAREST CONTRACTION JOINT AND ALIGN PARALLEL TO CONTRACTION JOINTS.

1. OBTAIN THE ENGINEER'S APPROVAL FOR THE USE OF ALTERNATIVE DESIGNS OF THE DOWEL ASSEMBLY. USE MECHANICAL DOWEL BAR INSERTERS OR DOWEL ASSEMBLIES WHEN CONSTRUCTING CONTRACTION JOINTS.
2. SECURE BASKETS WITH ANCHORS TO HOLD DOWEL BARS IN THE CORRECT POSITION AND ALIGNMENT. TYPE, LOCATION, NUMBER AND LENGTH OF ANCHORS ARE DEPENDENT UPON FIELD CONDITIONS.
3. FORM OR SAW CONSTRUCTION JOINTS. PROVIDE A 1/4-INCH RADIUS AT FORMED JOINTS.
4. PROVIDE A SMOOTH VERTICAL FACE FOR THE ENTIRE DEPTH OF THE PAVEMENT WHEN FORMING CONSTRUCTION JOINTS.
5. INSTALL DOWEL BARS AT CONSTRUCTION JOINTS BY FORMING OR DRILLING. INSTALL FORMED DOWEL BARS 12 INCHES C-C AND 12 INCHES FROM PAVEMENT EDGE. REMOVE EXCESS CONCRETE FROM THE FREE END OF THE DOWEL BAR IF DOWEL BARS ARE FORMED THROUGH A HEADER BOARD. INSTALL DRILLED DOWEL BARS ACCORDING TO *DRILLED DOWEL BAR CONSTRUCTION JOINT* DETAIL.
6. APPLY A THIN UNIFORM COATING OF SURFACE TREATMENT TO THE FREE END OF DOWEL BARS TO PREVENT BONDING.
7. ANCHOR DOWEL BARS INTO DRILLED HOLES WITH AN EPOXY. MAXIMUM DRILLED HOLE SIZE IS 1/8-INCH GREATER THAN DOWEL BAR DIAMETER, 9 INCHES IN LENGTH.

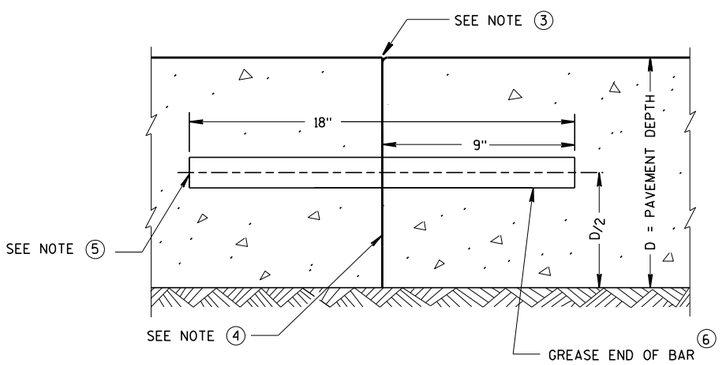

TRANSVERSE CONSTRUCTION JOINT

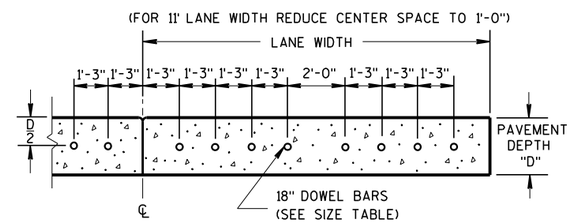

DRILLED DOWEL BAR CONSTRUCTION JOINT 7

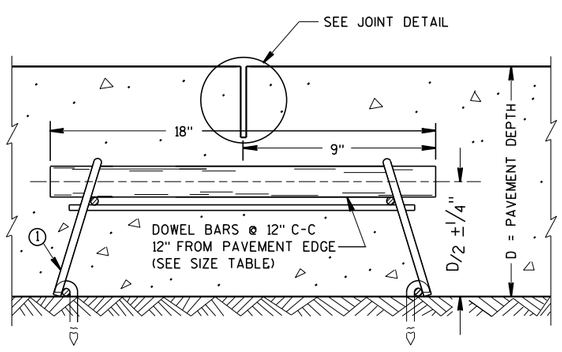

DOWELED CONTRACTION JOINT

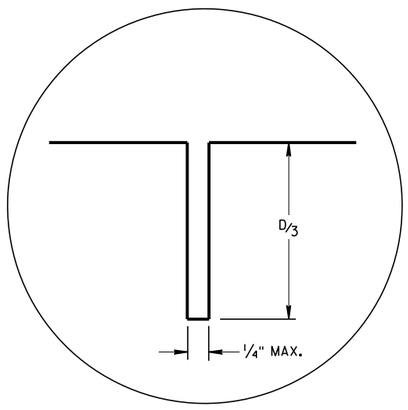

JOINT DETAIL

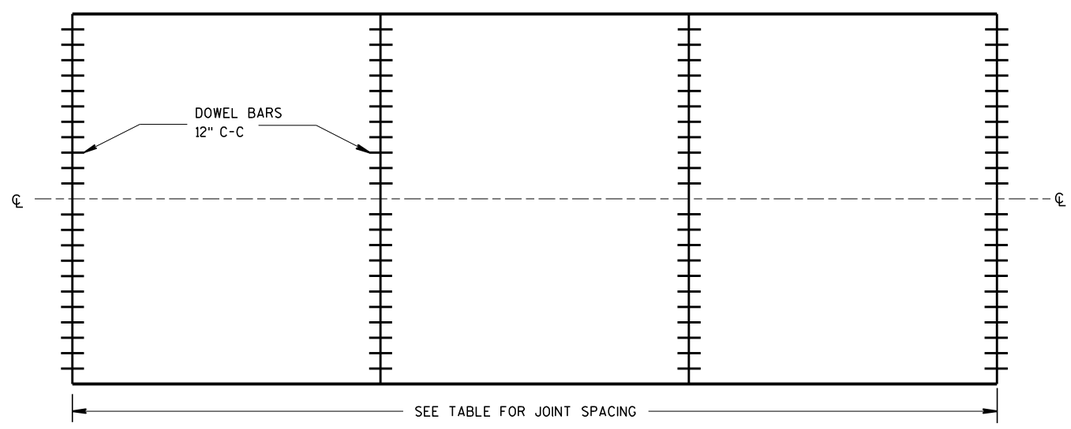

CONTRACTION JOINT LOCATIONS

URBAN DOWELED CONCRETE PAVEMENT

STATE OF WISCONSIN
DEPARTMENT OF TRANSPORTATION

APPROVED
March 2018 — DATE
/S/ Peter Kemp P.E. — PAVEMENT SUP 79
FHWA

6

6

S.D.D. 13 C 13-9

S.D.D. 13 C 13-9

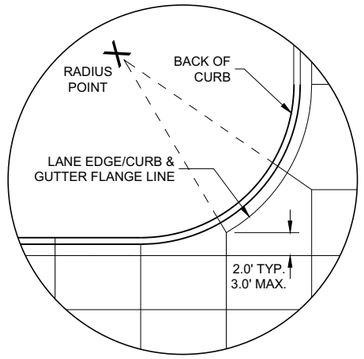

DETAIL "A"

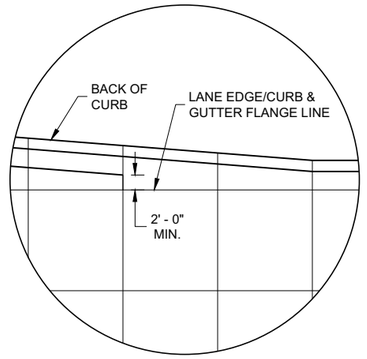

DETAIL "B"

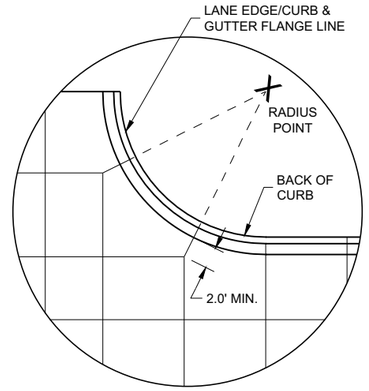

DETAIL "C"

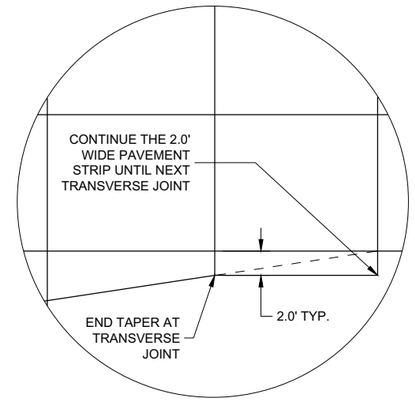

DETAIL "D"

GENERAL NOTES

THE PRIMARY ROADWAY CONTROLS THE TRANSVERSE JOINT PATTERN.

ALIGN NEW JOINTS WITH EXISTING JOINTS OR CRACKS.

CONSTRUCT TRANSVERSE JOINTS PERPENDICULAR TO THE ROADWAY.

ADJUST TRANSVERSE JOINTS TO ALIGN WITH UTILITY FIXTURES (E.G MANHOLES AND INLETS) IN THE PAVEMENT STRUCTURE WHEN POSSIBLE. WATER VALVES DO NOT REQUIRE JOINT ADJUSTMENT.

AVOID SLABS LESS THAN 2 FEET WIDE OR GREATER THAN 15 FEET WIDE.

SEE TABLE FOR TRANSVERSE JOINT SPACING. JOINT SPACING SPECIFIED IS MAXIMUM AND ACTUAL SPACING CAN BE ADJUSTED TO ACCOMMODATE INTERSECTIONS.

AVOID ANGLES LESS THAN 60° BY DOGLEGGING JOINTS THROUGH CURVE RADIUS POINTS. USE 90° ANGLES WHEN POSSIBLE.

CORRELATE LONGITUDINAL JOINTS WITH LANE LINES WHEN POSSIBLE.

1. PROVIDE TRANSVERSE JOINTS AT ALL PAVEMENT WIDTH CHANGES.
2. CONSTRUCT DOWELED EXPANSION JOINT ON THE SIDE ROAD OF AN INTERSECTION IF THE SIDE ROAD IS CONCRETE PAVEMENT AND GREATER THAN 300 FEET IN LENGTH. ALIGN EXPANSION JOINT WITHEDGE OF RADIUS.
3. THE ENGINEER MAY APPROVE SLIGHT VARIATIONS FROM THESE JOINTING DETAILS.

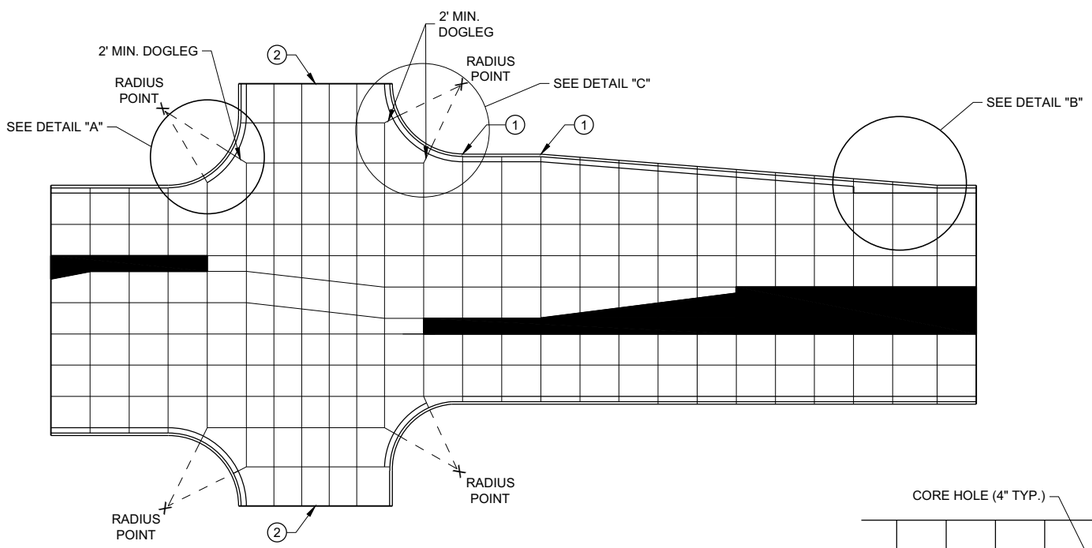

STANDARD INTERSECTION

PAVEMENT DEPTH AND JOINT SPACING TABLE

PAVEMENT DEPTH (D)	CONTRACTION JOINT SPACING
6", 6 ½"	12'
7", 7 ½"	14'
8" & ABOVE	15'

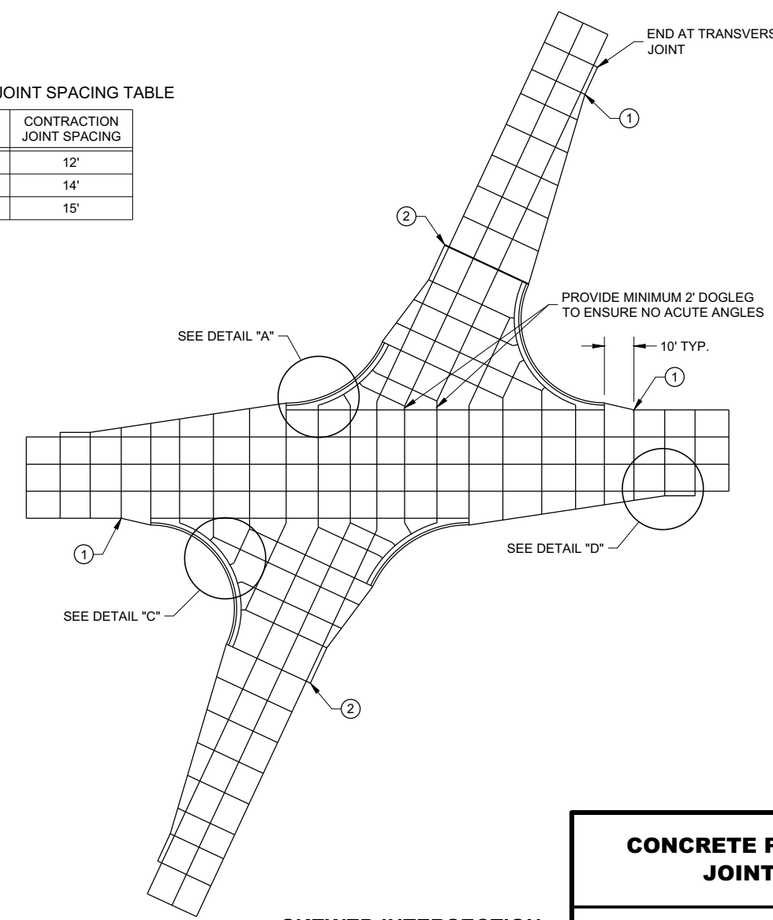

SKEWED INTERSECTION

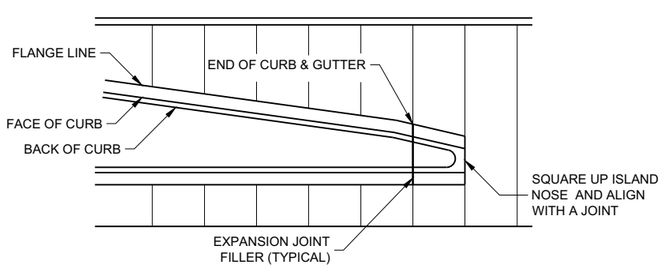

APPROACH TO MEDIAN

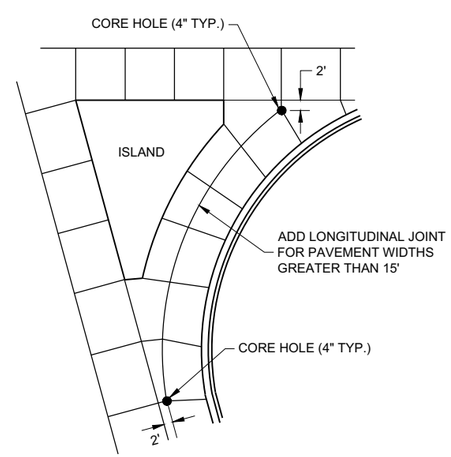

LARGE RIGHT TURN

CONCRETE PAVEMENT JOINTING

STATE OF WISCONSIN
DEPARTMENT OF TRANSPORTATION

6

SDD 13C18 - 07a

LEGEND

POTENTIAL DOWELED EXPANSION JOINT

DOWELED JOINT

TIED JOINT

GENERAL NOTES

USE AN EXPANSION JOINT FILLER MEETING THE REQUIREMENTS OF STANDARD SPECIFICATION 415.

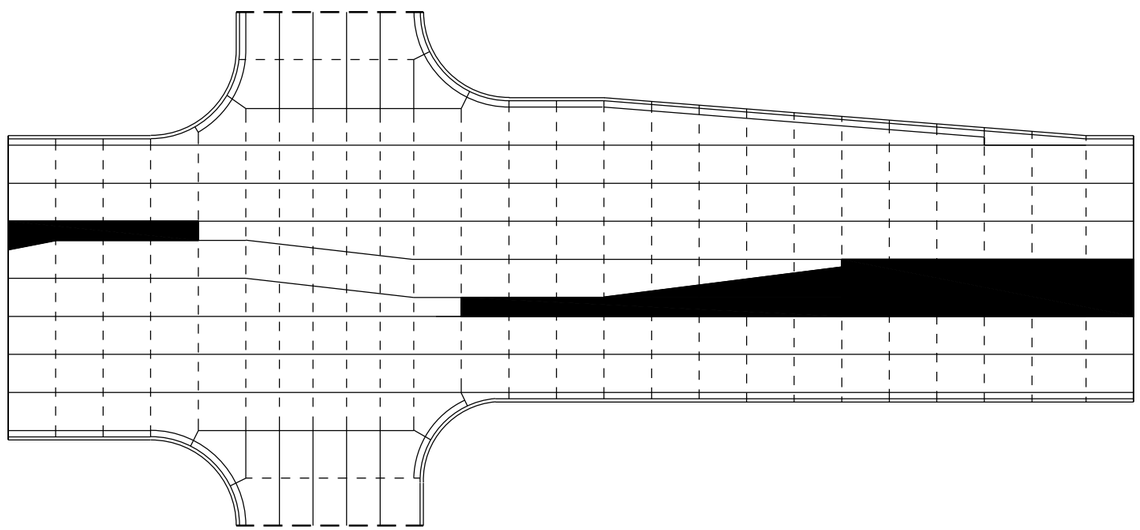

STANDARD INTERSECTION

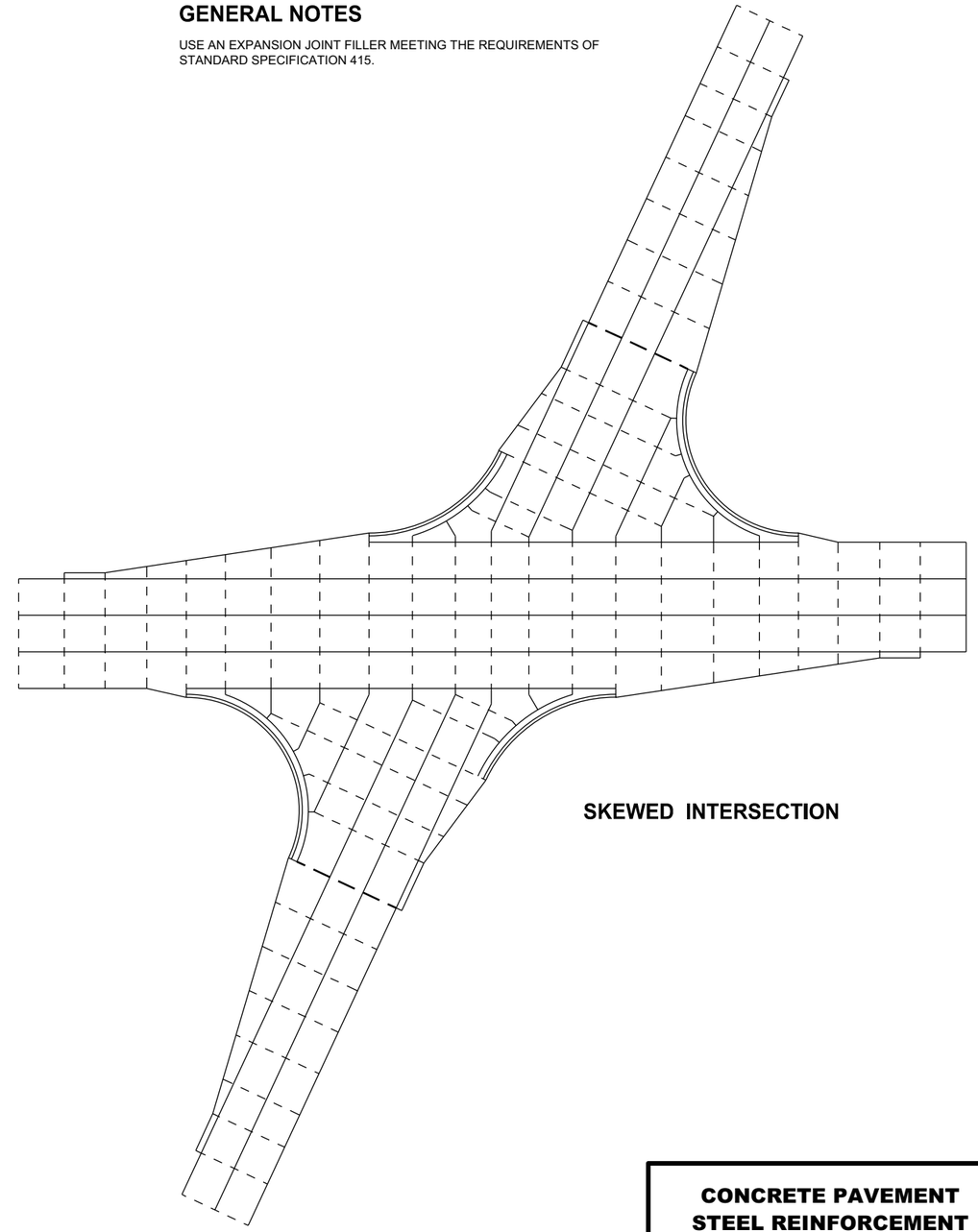

SKEWED INTERSECTION

CONCRETE PAVEMENT STEEL REINFORCEMENT

STATE OF WISCONSIN
DEPARTMENT OF TRANSPORTAT

6

SDD 13C18 - 07b

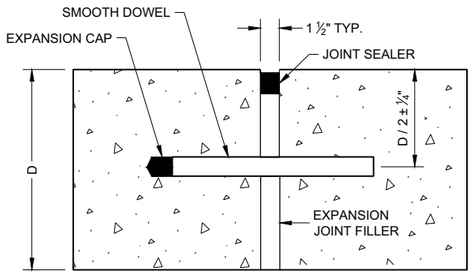

DOWELED TRANSVERSE (1)

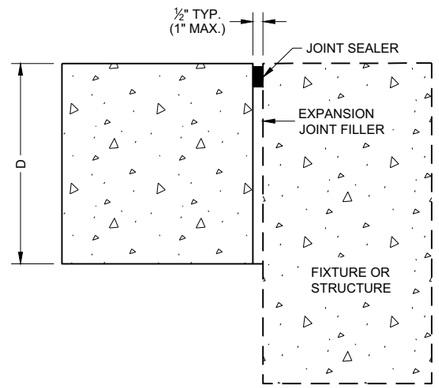

UNTIED - LONGITUDINAL

EXPANSION JOINTS

TIE BAR TABLE

PAVEMENT DEPTH (D)	TIE BAR SIZE	TIE BAR LENGTH (L)	MAX. TIE BAR SPACING
< 10 ½"	NO. 4	30"	36"
≥ 10 ½"	NO. 5	36"	36"
	NO. 4*	30"	24"**

* SUBSTITUTE BENT BARS AT LONGITUDINAL JOINTS WHEN EQUIPMENT LIMITATIONS DURING CONSTRUCTION WARRANT (e.g. AUXILIARY LANES OR TURN LANES)

** CONFORM TO 15" MINIMUM SPACING FROM TRANSVERSE JOINTS; SPACING BETWEEN TIE BARS WILL BE 30" AT TRANSVERSE JOINTS.

GENERAL NOTES

1. USE DOWELED EXPANSION JOINTS ON SIDE ROADS AT INTERSECTIONS (TO ISOLATETHE SIDE ROAD FROM THE THROUGH STREET) IF THE SIDE ROAD IS CONCRETE PAVEMENT AND GREATER THAN 300 FEET IN LENGTH.
2. SPACE CONTRACTION JOINTS IN ACCORDANCE WITH SDD 13C4, 13C11 OR 13C13.
3. LOCATE CONSTRUCTION JOINTS A MINIMUM OF 6 FEET FROM THE NEAREST CONTRACTION JOINT AND ALIGN PARALLEL TO CONTRACTION JOINTS.
4. CONSTRUCTION JOINTS CAN BE FORMED OR SAWED.
5. IF JOINT IS FORMED, PROVIDE A ¼" RADIUS.
6. ANCHOR TIE BARS INTO DRILLED HOLES WITH AN EPOXY.

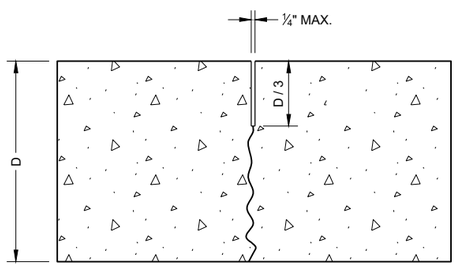

UNDOWELED TRANSVERSE

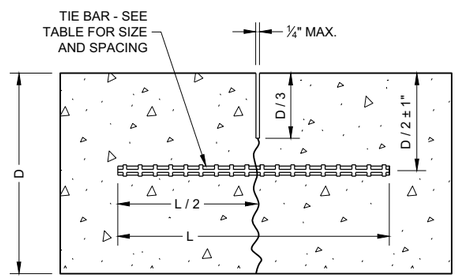

TIED LONGITUDINAL

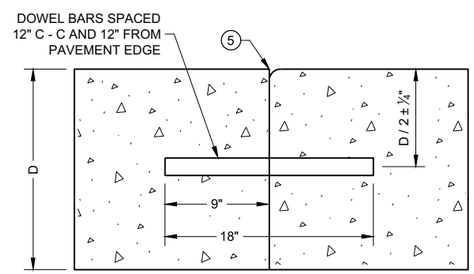

DOWELED TRANSVERSE (3)

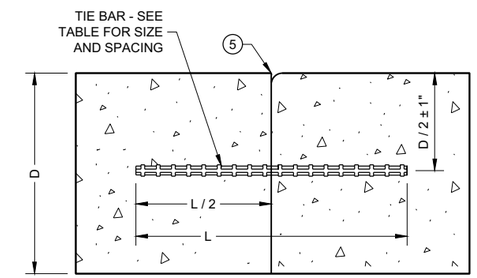

TIED LONGITUDINAL

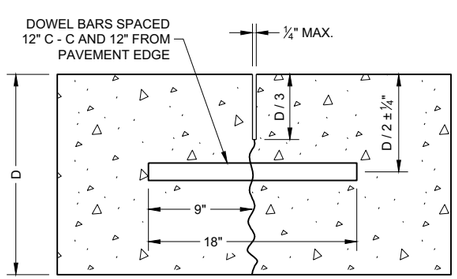

DOWELED TRANSVERSE

CONTRACTION JOINTS (2)

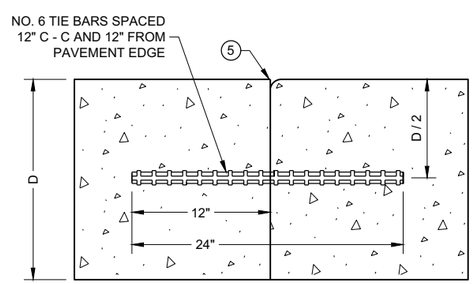

TIED TRANSVERSE (3)
(FOR USE ON NON-DOWELED PAVEMENTS ONLY)

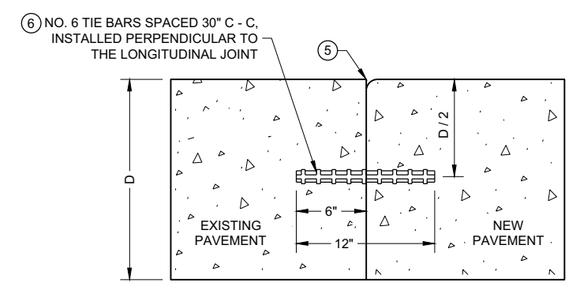

TIED LONGITUDINAL TO EXISTING

CONSTRUCTION JOINTS (4)

CONCRETE PAVEMENT JOINT TYPES

STATE OF WISCONSIN
DEPARTMENT OF TRANSPORTATION

6
SDD 13C18 - 07c

GENERAL NOTES

1. USE BOXOUTS WHEN UTILITY STRUCTURE IS IN THE PATH OF CONSTRUCTION JOINTS. PROVIDE A 1 FOOT MINIMUM CLEARANCE BETWEEN THE EXTERIOR LIMIT OF THE STRUCTURE TO THE DIAMOND BOXOUT.
2. ADJUST TRANSVERSE JOINT TO INTERSECT MANHOLE IF POSSIBLE.
3. IF DISTANCE BETWEEN THE LONGITUDINAL JOINT AND THE EDGE OF MANHOLE IS 2 FEET OR LESS, DIVERT THE LONGITUDINAL JOINT AT A 2:1 TAPER RATE TO THE CENTER OF THE MANHOLE. IF THE DISTANCE IS GREATER THAN 2 FEET, DO NOT DIVERT THE JOINT AND SAW AS NORMAL. PLACE REINFORCEMENT REBAR AROUND THE MANHOLE.
4. IF THE DISTANCE FROM THE EDGE OF THE MANHOLE TO THE NEAREST TRANSVERSE JOINT IS LESS 4 FEET OR LESS, REDIRECT JOINT TO INTERSECT THE CENTER OF THE MANHOLE. IF DISTANCE IS GREATER THAN 4 FEET, DO NOT DIVERT THE JOINT AND SAW AS NORMAL. PLACE REINFORCEMENT REBAR AROUND THE MANHOLE.
5. ALIGN TRANSVERSE JOINT WITH ONE EDGE OF INLET WHEN PRACTICAL.

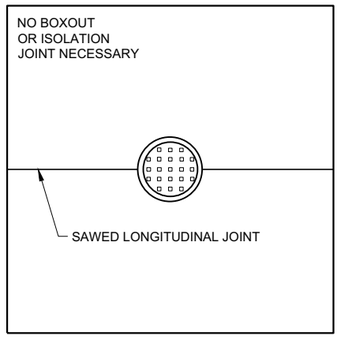

MANHOLE WITH LONGITUDINAL JOINT

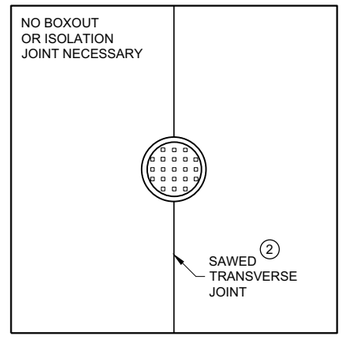

MANHOLE WITH TRANSVERSE JOINT

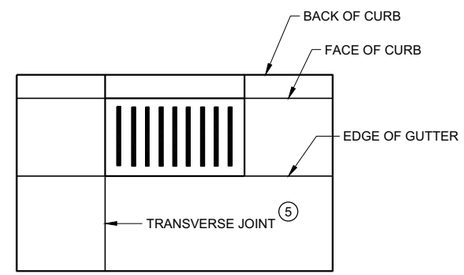

INLET WITH TRANSVERSE JOINT

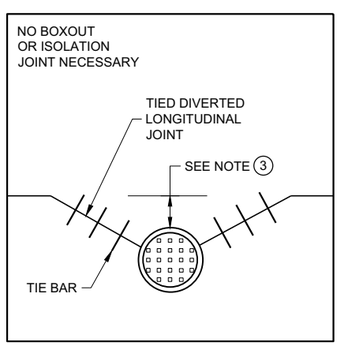

MANHOLE WITH DIVERTED LONGITUDINAL CONTRACTION JOINT

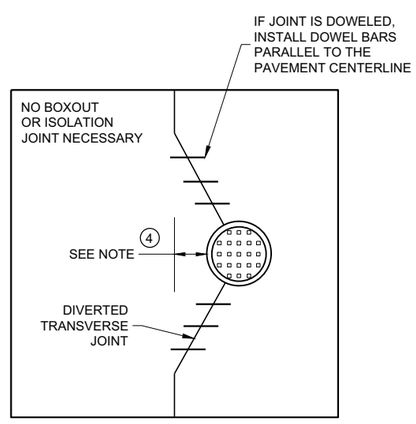

MANHOLE WITH DIVERTED TRANSVERSE CONTRACTION JOINT

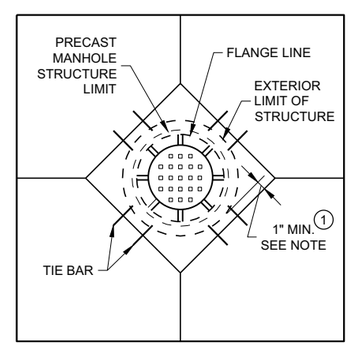

DIAGONAL MANHOLE BOXOUT FOR CONSTRUCTION JOINTS

CONCRETE PAVEMENT JOINTING AT UTILITY FIXTURES

STATE OF WISCONSIN
DEPARTMENT OF TRANSPORTATION

APPROVED
November 2018 /S/ Peter Kemp P.E.
DATE PAVEMENT SUPERVISO
FHWA

6

SDD 13C18 - 07d

LEGEND

- - - - - - DOWELED JOINT
——— TIED JOINT
EXPANSION JOINT
— — POTENTIAL DOWELED EXPANSION JOINT (1)
DIRECTION OF TRAFFIC

GENERAL NOTES

(1) CONSTRUCT DOWELED EXPANSION JOINT ON THE SIDE ROAD OF AN INTERSECTION IF THE SIDE ROAD IS CONCRETE PAVEMENT AND GREATER THAN 300 FEET IN LENGTH. ALIGN EXPANSION JOINT WITH THE EDGE OF RADIUS.

(2) PROVIDE TIED JOINT AT THE FLANGE OF SCAB ON CURB IF SCAB ON CURB AND GUTTER IS USE.

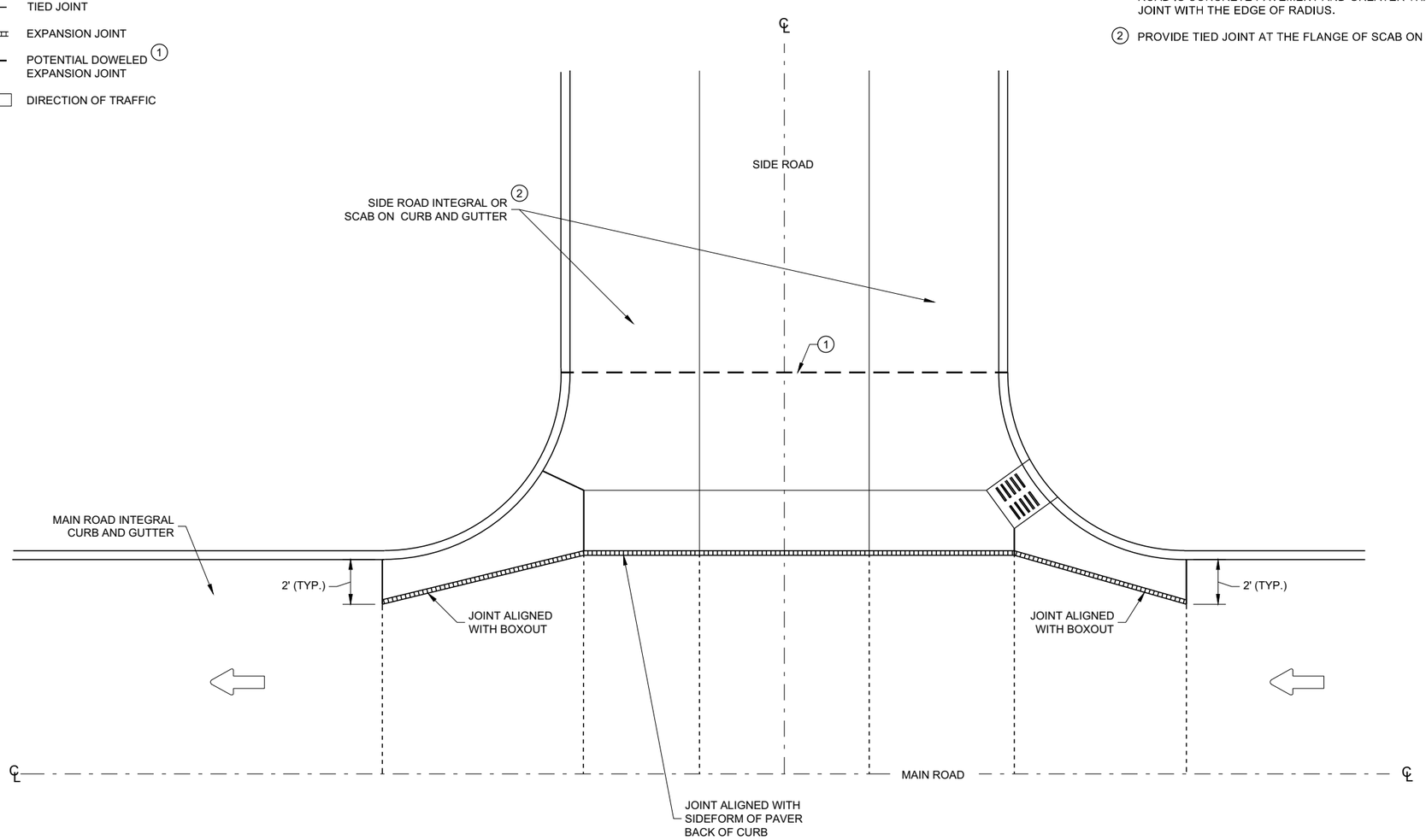

INTERSECTION BOXOUT FOR INTEGRAL CURB AND GUTTER

6

6

SDD 13C18 - 07f

SDD 13C18 - 07f

CONCRETE PAVEMENT INTERSECTION BOXOUT FOR INTEGRAL CURB AND GUTTER

STATE OF WISCONSIN
DEPARTMENT OF TRANSPORTATION

APPROVED
November 2018 — DATE
/S/ Peter Kemp P.E. — ROADWAY STANDARDS DEVE ENGINEER
FHWA

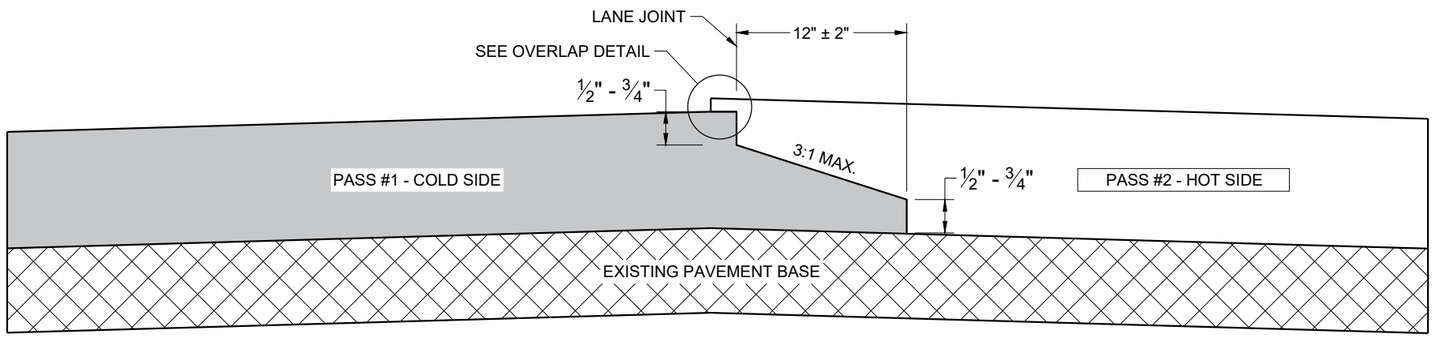

TYPICAL PAVEMENT CROSS SECTION
NOTCHED WEDGE JOINT

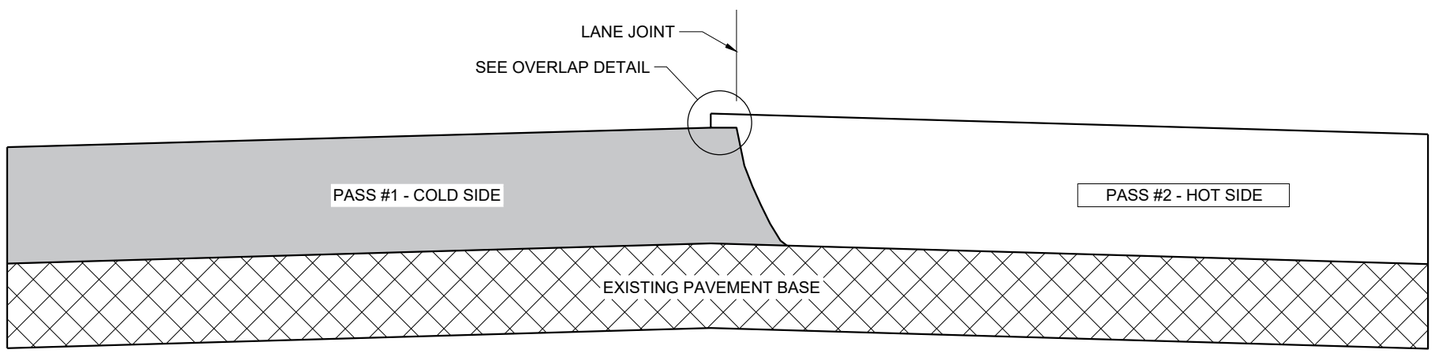

TYPICAL PAVEMENT CROSS SECTION
VERTICAL JOINT

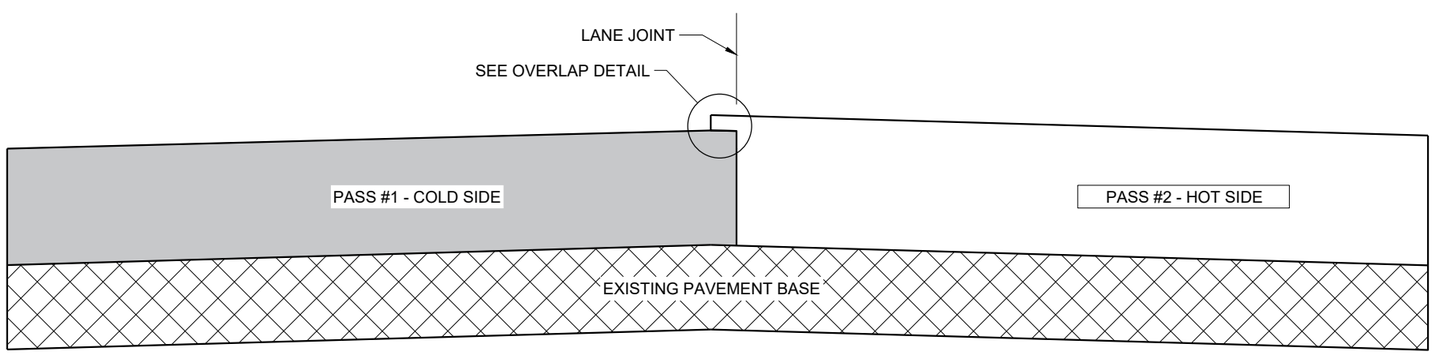

TYPICAL PAVEMENT CROSS SECTION
VERTICAL JOINT (MILLED)

GENERAL NOTES

IN ADDITION TO THE DETAILS PROVIDED IN THIS DRAWING, CONFORM TO STANDARD SPECIFICATION 450.3.2.8 FOR WHEN A NOTCHED WEDGE JOINT IS REQUIRED AND FOR GENERAL JOINT CONSTRUCTION REQUIREMENTS.

FOR ALL LONGITUDINAL JOINTS, ENSURE THE PAVER SCREED OVERLAPS THE PREVIOUSLY PLACED PAVEMENT BY 1" ± 0.5" AND THE HOT SIDE OF THE JOINT REMAINS HIGHER THAN THE COLD SIDE BY APPROXIMATELY 0.1" AFTER FINAL COMPACTION. (IT WILL BE FLUSH WHEN PAVING IN ECHELON.)

ONLY REMOVE THE LONGITUDINAL NOTCHED WEDGE JOINT FOR SMA PAVEMENT OR AS DIRECTED BY THE ENGINEER TO ADDRESS SPECIFIC LENGTHS OF JOINT DAMAGED BY TRAFFIC.

WHEN MILLING BACK OR REMOVING ANY LONGITUDINAL JOINT, LIMIT THE MATERIAL REMOVED TO 2" FROM THE TOP NOTCH OR FROM THE VERTICAL JOINT EDGE ON THE COLD SIDE OF THE JOINT.

USE LONGITUDINAL MILLED JOINT AS PLANS SHOW OR THE AS THE ENGINEER DIRECTS.

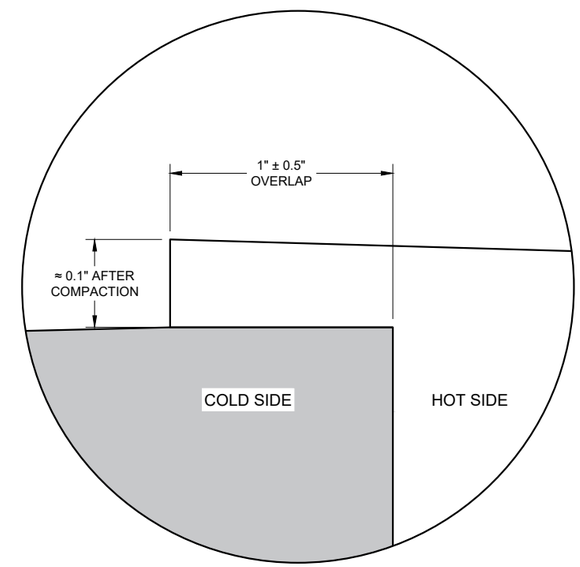

OVERLAP DETAIL (TYPICAL)

6

6

SDD 13C19 - 03

SDD 13C19 - 03

HMA LONGITUDINAL JOINTS

STATE OF WISCONSIN
DEPARTMENT OF TRANSPORTATION

APPROVED
November 2020 /S/ Steven Hefel
DATE HMA PAVEMENT ENGIN

FHWA

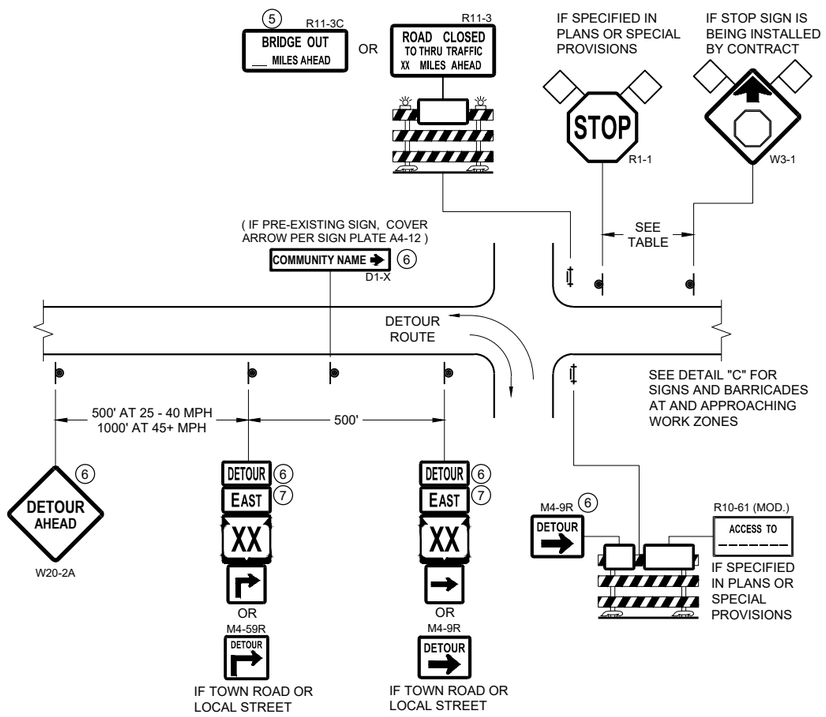

DETAIL A
MAINLINE CLOSURE WITH POSTED DETOUR

WORK ZONE GREATER THAN OR EQUAL TO ½ MILE FROM DETOUR ROUTE (1000 FEET IF URBAN)

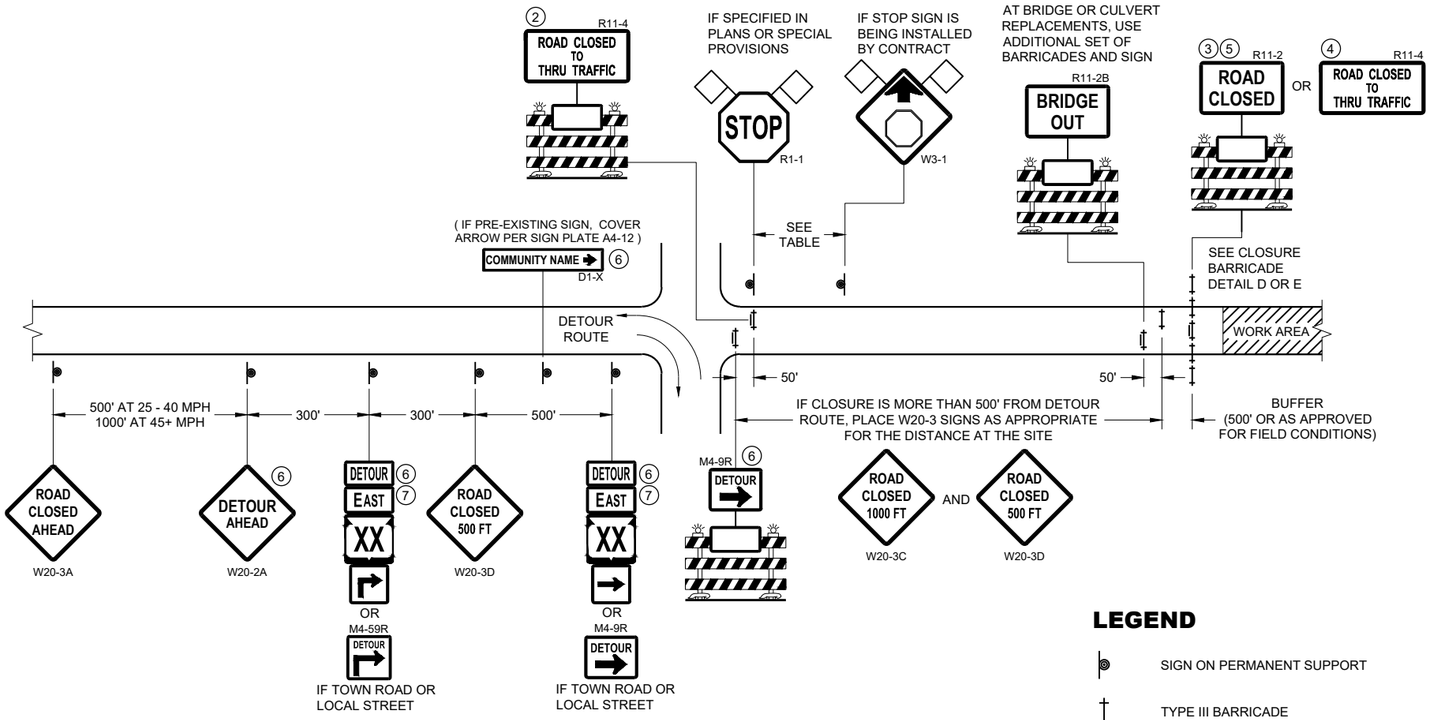

DETAIL B
MAINLINE CLOSURE WITH POSTED DETOUR

WORK ZONE LESS THAN ½ MILE FROM DETOUR ROUTE (1000 FEET IF URBAN)

LEGEND

- SIGN ON PERMANENT SUPPORT
- TYPE III BARRICADE
- TYPE III BARRICADE WITH ATTACHED SIGN
- TYPE "A" WARNING LIGHT (FLASHING)
- WORK AREA
- FLAGS, 16" X 16" MIN. (ORANGE)
- DETOUR — M4 - 8
- EAST — M3 - X
- XX (M1 - 4) OR XX (M1 - 6) OR COUNTY X (M1 - 5A)
- M05 - 1 OR M06 - 1

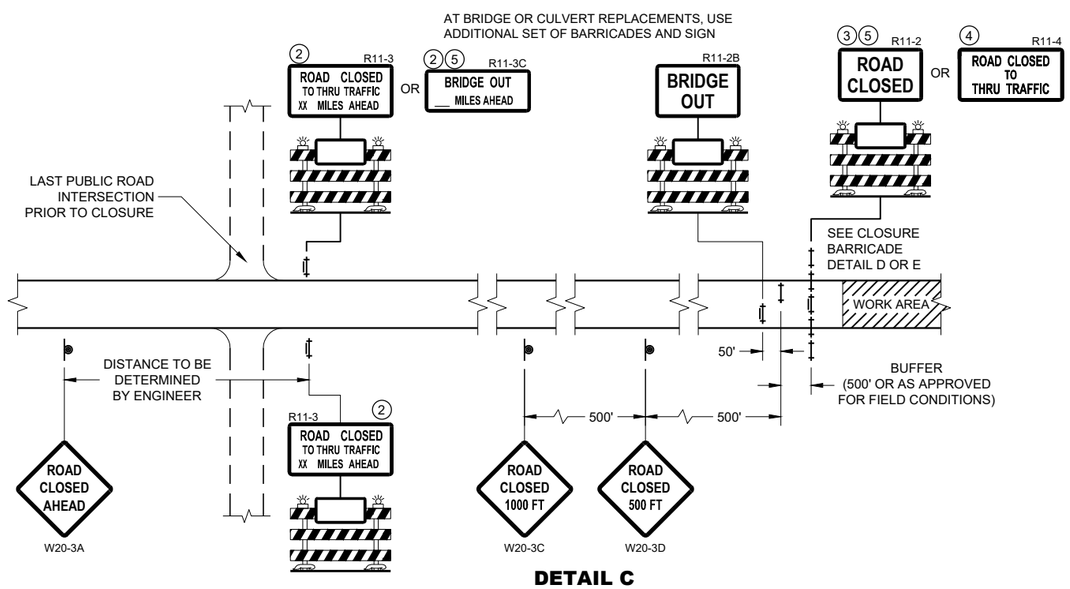

DETAIL C
MAINLINE CLOSURE, NO POSTED DETOUR

SPEED LIMIT (MPH)	"STOP AHEAD" ADVANCE WARNING DISTANCE (FT)
25	200
30	200
35	350
40	350
45	500
50	550
55	750

SEE SDD 15C2-SHEET "b" FOR GENERAL NOTES AND FOOTNOTES ① THROUGH ⑦

BARRICADES AND SIGNS FOR MAINLINE CLOSURES

STATE OF WISCONSIN
DEPARTMENT OF TRANSPORTATION

APPROVED
February 2020 — DATE
/S/ Andrew Heidtke — WORK ZONE ENGINEER
FHWA

6

SDD 15C02 - 08a

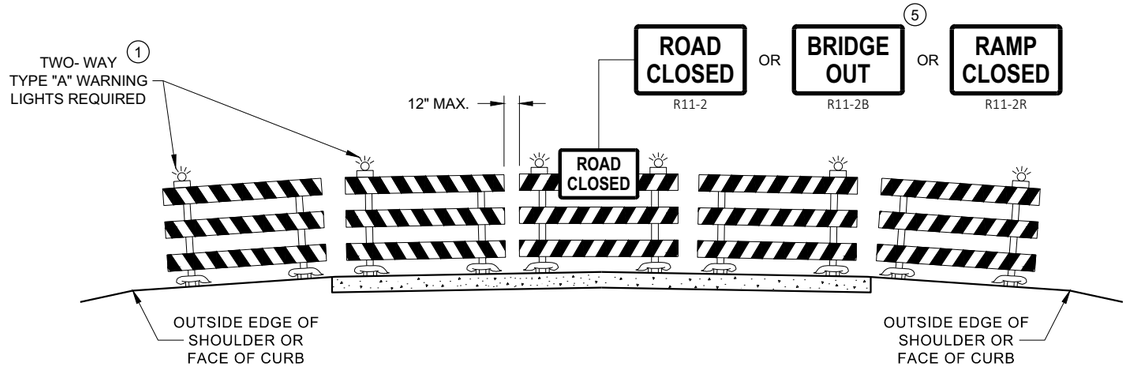

DETAIL D
ROAD CLOSURE BARRICADE DETAIL
APPROACH VIEW

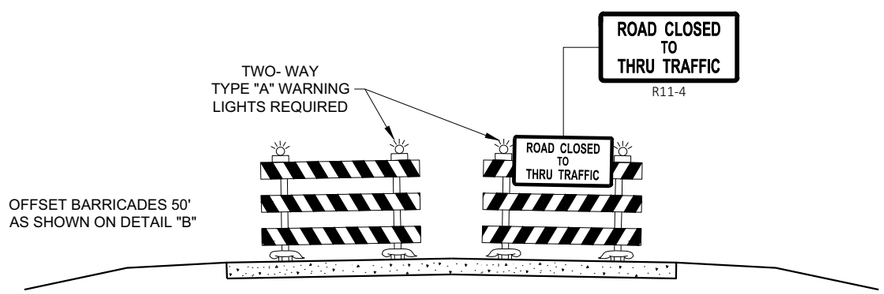

DETAIL E
LANE CLOSURE BARRICADE DETAIL
APPROACH VIEW

SEE SDD 15C2 - SHEET "a" FOR LEGEND

GENERAL NOTES

THE EXACT NUMBER, LOCATION, AND SPACING OF ALL SIGNS AND BARRICADES SHALL BE ADJUSTED TO FIT FIELD CONDITIONS AS APPROVED BY THE ENGINEER.

ANY SIGNS TEMPORARY OR EXISTING, WHICH CONFLICT WITH TRAFFIC CONTROL "IN USE", SHALL BE REMOVED OR COVERED AS NEEDED AND AS APPROVED BY THE ENGINEER.

THE SPACING BETWEEN TRAFFIC CONTROL SIGNS SHOULD BE ADJUSTED TO NOT CONFLICT WITH AND SHOULD PROVIDE A DESIRABLE MINIMUM OF 200 FEET CLEARANCE TO EXISTING SIGNS THAT WILL REMAIN IN PLACE.

BARRICADES THAT MUST BE MOVED FOR A WORK OPERATION SHALL BE IMMEDIATELY RE-ESTABLISHED UPON COMPLETION OF THE OPERATION, OR FOR CONTINUING OPERATIONS, AT THE END OF EACH WORKING DAY.

SIGNS THAT WILL BE IN PLACE LESS THAN 7 CONTINUOUS DAYS AND NIGHTS MAY BE MOUNTED ON PORTABLE SUPPORTS.

ALL TYPE III BARRICADES SHALL HAVE RAILS REFLECTORIZED ON BOTH FACES. STRIPES SHALL BE PROPERLY SLOPED DOWN TOWARD THE TRAFFIC SIDE OR AS SHOWN IN THE ROAD CLOSURE BARRICADE DETAIL "D" FOR FULL ROAD CLOSURES.

TYPE "A" LOW - INTENSITY FLASHING WARNING LIGHTS SHALL BE VISIBLE ON BOTH SIDES OF THE BARRICADE.

THE R11 - 2, R11 - 3, M4 - 9, R11 - 4, AND R10 - 61 SIGNS PLACED ON THE BARRICADES SHALL COVER NO MORE THAN THE TOP RAIL. THE SIGNS SHALL NOT COVER ANY PORTION OF THE MIDDLE RAIL OR BOTTOM RAILS.

"WO" AND "MO" SIGNS ARE THE SAME AS "W" AND "M" SIGNS EXCEPT THE BACKGROUND IS ORANGE.

ALL SIGNS SHALL BE 48" X 48" UNLESS OTHERWISE NOTED BELOW:
- R11 - 2 SHALL BE 48" X 30"
- R11 - 3 SHALL, R11 - 4 AND R10 - 61 SHALL BE 60 " X 30"
- M4 - 9 SHALL BE 30" X 24"
- M3 - X SHALL BE 24" X 12" (36" X 18" IF NEEDED TO MATCH EXISTING SIGNS)
- M4 - 8 SHALL BE 24" X 12" (36" X 18" IF NEEDED TO MATCH EXISTING SIGNS)
- M1 - 4, M1 - 5A AND M1 - 6 SHALL BE 24" X 24" (36" X 36" IF NEEDED TO MATCH EXISTING SIGNS)
- MO5 - 1 AND MO6 - 1 SHALL BE 21" X 21" (30" X 30" IF NEEDED TO MATCH EXISTING SIGNS)
- D1 - X SHALL BE AS SHOWN ON SPECIFIC PROJECT SIGNING DETAIL SHEETS.
- R1 - 1 SHALL BE 36" X 36"

1. TWO WARNING LIGHTS SHALL BE PROVIDED ON THE CENTER BARRICADE AND A MINIMUM OF ONE WARNING LIGHT SHALL BE PROVIDED ON EACH OF THE OTHER BARRICADES WITHIN THE ROADWAY LIMITS. SPACING OF THE WARNING LIGHTS SHALL BE UNIFORM TO THE EDGE OF ROADWAY AS SHOWN (APPROX. 8 FOOT LIGHT SPACING.
2. THESE SIGNS AND BARRICADES ARE NOT REQUIRED IF ROAD CLOSURE BEGINS AT AN INTERSECTION.
3. FOR ROAD CLOSURE WITHOUT LOCAL ACCESS TO PROJECT, SEE ROAD CLOSURE BARRICADE DETAIL "D".
4. FOR ROAD CLOSURE WITH LOCAL ACCESS TO PROJECT, SEE ROAD CLOSURE BARRICADE DETAIL "E".
5. FOR BRIDGE OR CULVERT REPLACEMENTS, SUBSTITUTE "BRIDGE OUT" INSTEAD OF "ROAD CLOSED" ON R11 - 2 AND R11 - 3 SIGNS.
6. INSTALL DETOUR AND COMMUNITY GUIDE SIGNS AND ARROWS ONLY IF SPECIFIED IN THE CONTRACT. IF THERE ARE EXISTING ROUTE MARKER ASSEMBLIES THAT WILL REMAIN IN PLACE, ADJUST THE LOCATION OF THE DETOUR ROUTE SIGNS TO CORRESPOND WITH THE EXISTING ASSEMBLIES. MODIFY EXISTING SIGNS WHERE POSSIBLE. SEE SPECIFIC PROJECT DETOUR SIGNING DETAIL SHEETS. IF DETOUR SIGNS ARE BEING INSTALLED BY OTHERS, PLACE THE CONTRACTED TRAFFIC CONTROL SIGNS TO ALLOW FOR PLACEMENT OF ALL WARNING, DETOUR AND GUIDE SIGNS AS SHOWN.
7. "EAST" CARDINAL DIRECTION MARKERS AND RIGHT TURN ARROWS ARE SHOWN. USE OTHER CARDINAL DIRECTIONS AND ARROWS AS APPROPRIATE.

BARRICADES AND SIGNS FOR VARIOUS CLOSURES

STATE OF WISCONSIN
DEPARTMENT OF TRANSPORTATION

APPROVED
February 2020 — DATE
/S/ Andrew Heidtke — WORK ZONE ENGINEE
FHWA

6

SDD 15C02 - 08b

THIS DRAWING PROVIDES GENERAL GUIDANCE ON TYPICAL DETOUR SIGN LAYOUT AND SPACING. SEE PROJECT DETOUR SIGNING SHEETS FOR SPECIFIC DETAILS FOR EACH PROJECT.

LEGEND

- SIGN ON PERMANENT SUPPORT
- WORK AREA
- DETOUR — M4 - 8
- EAST — M3 - X
- XX — M1 - 4 OR XX — M1 - 6 OR COUNTY X — M1 - 5A
- M05 - 1 OR M06 - 1 OR M06 - 1

GENERAL NOTES

THE EXACT NUMBER, LOCATION AND SPACING OF ALL SIGNS SHALL BE ADJUSTED TO FIT FIELD CONDITIONS AS APPROVED BY THE ENGINEER.

IF THERE ARE EXISTING ROUTE MARKER ASSEMBLIES THAT WILL REMAIN IN PLACE, ADJUST THE LOCATION OF THE DETOUR ROUTE SIGNS TO CORRESPOND WITH THE EXISTING ASSEMBLIES. SEE SPECIFIC PROJECT DETOUR SIGNING DETAIL SHEETS. MODIFY EXISTING SIGNS WHERE POSSIBLE.

THE SPACING BETWEEN TRAFFIC CONTROL AND DETOUR SIGNS SHOULD BE ADJUSTED TO NOT CONFLICT WITH AND TO PROVIDE A DESIRABLE MINIMUM OF 200 FEET CLEARANCE TO EXISTING SIGNS THAT WILL REMAIN IN PLACE.

ANY SIGNS TEMPORARY OR EXISTING, WHICH CONFLICT WITH TRAFFIC CONTROL "IN USE" SHALL BE REMOVED OR COVERED AS NEEDED AND AS APPROVED BY THE ENGINEER.

SIGNS THAT WILL BE IN PLACE LESS THAN 7 CONTINUOUS DAYS AND NIGHTS MAY BE MOUNTED ON PORTABLE SUPPORTS.

"MO" SIGNS ARE THE SAME AS "M" SIGNS EXCEPT THE BACKGROUND IS ORANGE.

SIGN SIZES SHALL BE AS FOLLOWS:

M3-X SHALL BE 24" X 12" (36" X 18" IF NEEDED TO MATCH EXISTING SIGNS)
M4-8 SHALL BE 24" X 12" (36" X 18" IF NEEDED TO MATCH EXISTING SIGNS)
M1-4, M1-5A AND M1-6 SHALL BE 24" X 24" (36" X 36" IF NEEDED TO MATCH EXISTING SIGNS)
M05-1 AND M06-1 SHALL BE 21" X 21" (30" X 30" IF NEEDED TO MATCH EXISTING SIGNS)
M4-9 AND M4-59 SHALL BE 30" X 24"
M4-8a SHALL BE 24" X 18"
G20-51 SHALL BE 60" X 24"
W20-2A SHALL BE 48" X 48"
D1-X SHALL BE AS SHOWN ON SPECIFIC PROJECT SIGNING DETAIL SHEETS.

* OPTIONAL SIGNS. SEE SPECIFIC PROJECT DETOUR SIGNING DETAIL SHEETS.

** FOR A TOWN ROAD OR LOCAL STREET DETOURED ONTO A STATE TRUNK HIGHWAY, PLACE A ROAD NAME PLAQUE ABOVE THE M4-9 SIGN AS SPECIFIED IN THE CONTRACT.

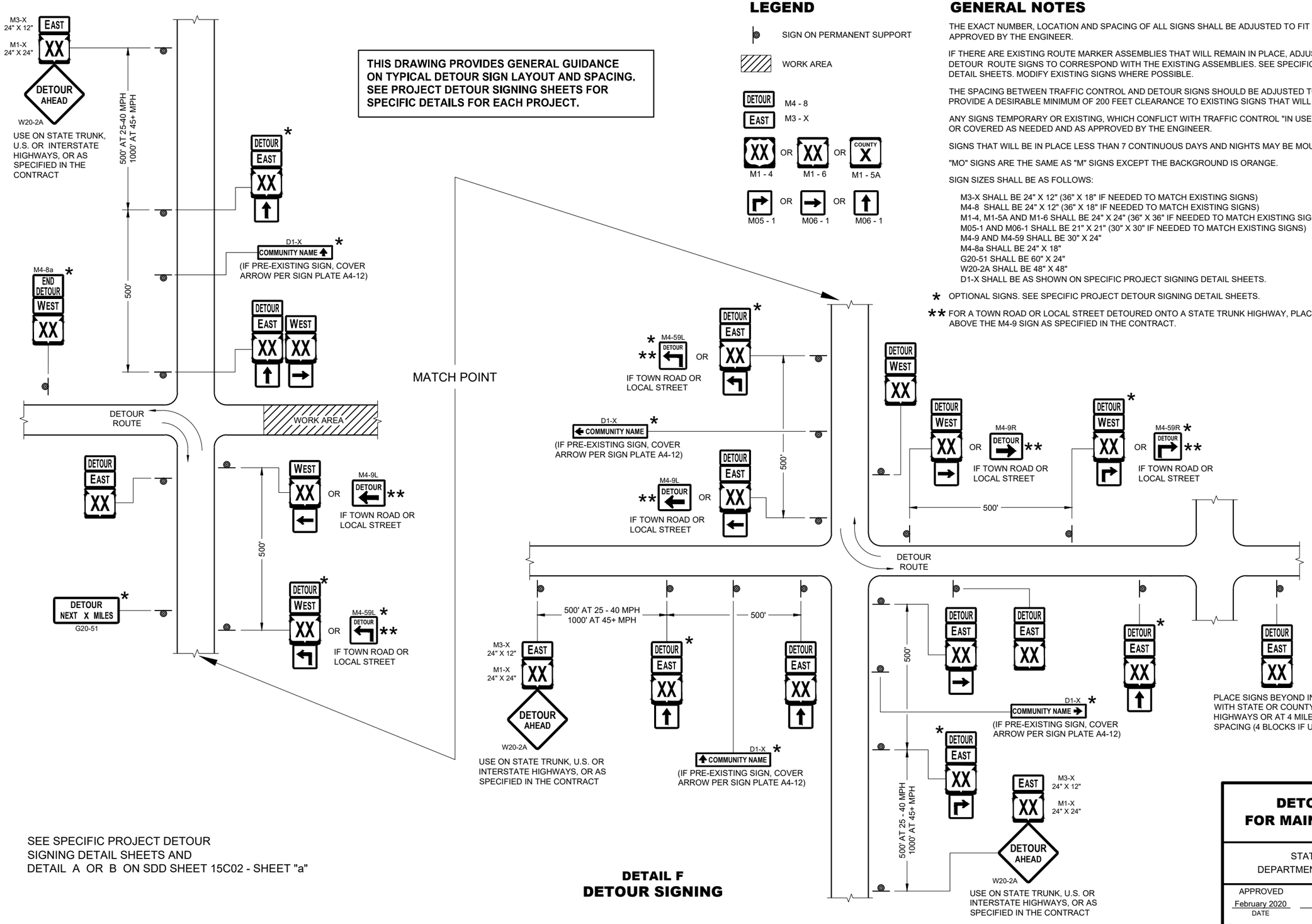

SEE SPECIFIC PROJECT DETOUR SIGNING DETAIL SHEETS AND DETAIL A OR B ON SDD SHEET 15C02 - SHEET "a"

DETAIL F
DETOUR SIGNING

DETOUR SIGNING FOR MAINLINE CLOSURES

STATE OF WISCONSIN
DEPARTMENT OF TRANSPORTATION

APPROVED
February 2020 — DATE
/S/ Andrew Heidtke — WORK ZONE ENGINEER
FHWA

6

SDD 15C02 - 08c

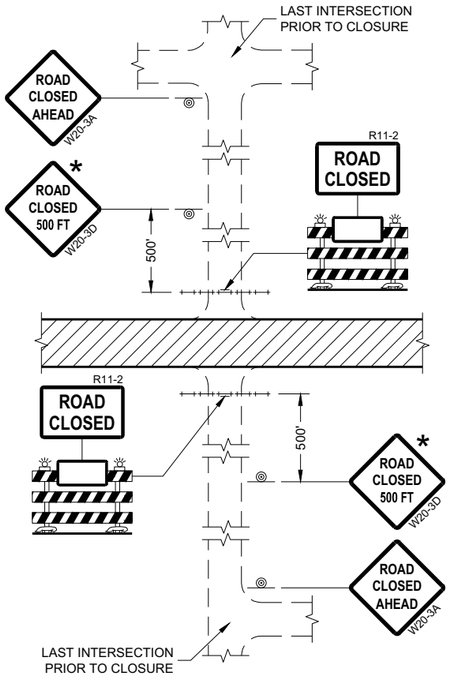

DETAIL 1
(NO ACCESS TO PROJECT)

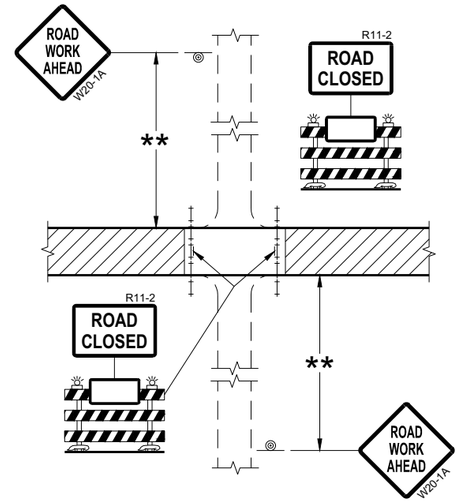

DETAIL 2
(PUBLIC CROSS-TRAFFIC MAINTAINED.
NO ACCESS TO PROJECT)

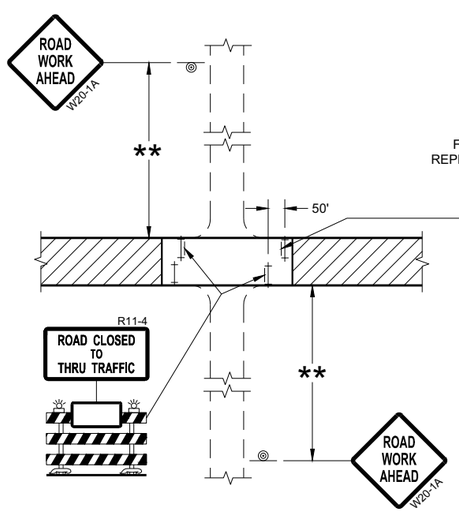

DETAIL 3
(PUBLIC CROSS-TRAFFIC MAINTAINED.
CONTRACTOR, LOCAL BUSINESS AND
RESIDENT ACCESS TO PROJECT)

FOR BRIDGE OR CULVERT
REPLACEMENT, USE ADDITIONAL
SIGN ON BARRICADE

BRIDGE OUT
XX MILES AHEAD
R11-3C

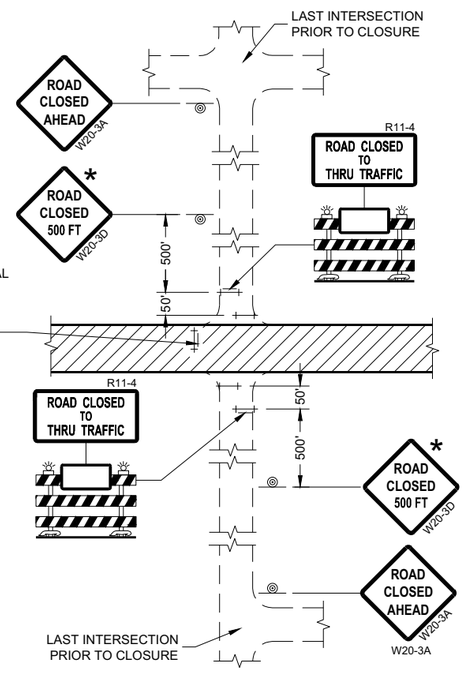

DETAIL 4
(CONTRACTOR, LOCAL BUSINESS AND
RESIDENT ACCESS TO PROJECT)

GENERAL NOTES

THE EXACT NUMBER, LOCATION, AND SPACING OF ALL SIGNS AND BARRICADES SHALL BE ADJUSTED TO FIT FIELD CONDITIONS AS APPROVED BY THE ENGINEER.

ANY SIGNS TEMPORARY OR EXISTING, WHICH CONFLICT WITH TRAFFIC CONTROL "IN USE" SHALL BE REMOVED OR COVERED AS NEEDED AND AS APPROVED BY THE ENGINEER.

THE SPACING BETWEEN TRAFFIC CONTROL SIGNS SHOULD BE ADJUSTED TO NOT CONFLICT WITH AND SHOULD PROVIDE A DESIRABLE MINIMUM OF 200 FEET CLEARANCE (500 FEET DESIRABLE) TO EXISTING SIGNS THAT WILL REMAIN IN PLACE.

IF A "STOP" SIGN MUST BE REMOVED FOR A WORK OPERATION, A TEMPORARY "STOP" SIGN SHALL BE PLACED PRIOR TO THE SIGN REMOVAL, OR A FLAGGER SHALL BE PROVIDED UNTIL THE SIGN IS REESTABLISHED.

BARRICADES THAT MUST BE MOVED FOR A WORK OPERATION SHALL BE IMMEDIATELY REESTABLISHED UPON COMPLETION OF THE OPERATION OR FOR CONTINUING OPERATIONS, AT THE END OF EACH WORKING DAY.

SIGNS THAT WILL BE IN PLACE LESS THAN SEVEN CONTINUOUS DAYS AND NIGHTS MAY BE MOUNTED ON PORTABLE SUPPORTS.

ALL TYPE III BARRICADES SHALL HAVE RAILS REFLECTORIZED ON BOTH FACES. STRIPES SHALL BE PROPERLY SLOPED DOWN TOWARD THE TRAFFIC SIDE OR AS SHOWN IN THE ROAD CLOSURE BARRICADE DETAIL "D" FOR FULL ROAD CLOSURES.

TYPE "A" LOW-INTENSITY FLASHING WARNING LIGHTS SHALL BE VISIBLE ON BOTH SIDES OF THE BARRICADE.

THE R11-2, R11-3, AND R11-4 SIGNS PLACED ON BARRICADES SHALL COVER NO MORE THAN THE TOP RAIL. THE SIGNS SHALL NOT COVER ANY PORTION OF THE MIDDLE OR BOTTOM RAILS.

ALL SIGNS SHALL BE 48" X 48" UNLESS OTHERWISE NOTED BELOW:
R11-2 SHALL BE 48" X 30".
R11-4 AND R11-3 SHALL BE 60" X 30".

* OMIT THE "ROAD CLOSED 500 FT." SIGN IF THE LAST INTERSECTION IS 500 FEET OR LESS FROM THE WORK ZONE.

** 500' MAX. OR AT LAST INTERSECTION, WHICHEVER IS CLOSEST.

LEGEND

- SIGN ON PERMANENT SUPPORT
- TYPE III BARRICADE
- TYPE III BARRICADE WITH ATTACHED SIGN
- TYPE "A" WARNING LIGHT (FLASHING)
- WORK AREA

BARRICADES AND SIGNS FOR SIDEROAD CLOSURES

STATE OF WISCONSIN
DEPARTMENT OF TRANSPORTATION

APPROVED
July 2018 — DATE
/S/ Andrew Heidtke — WORK ZONE ENGINEE
FHWA

6
SDD 15C03 - 05

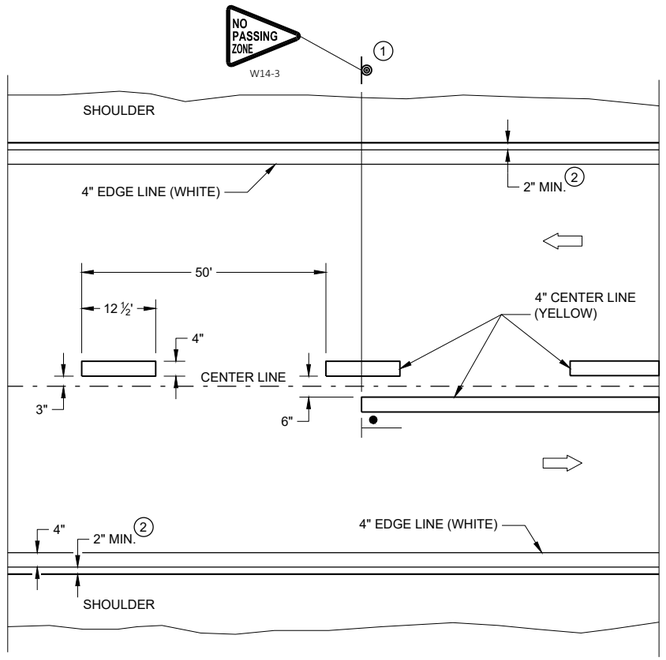

TWO WAY TRAFFIC

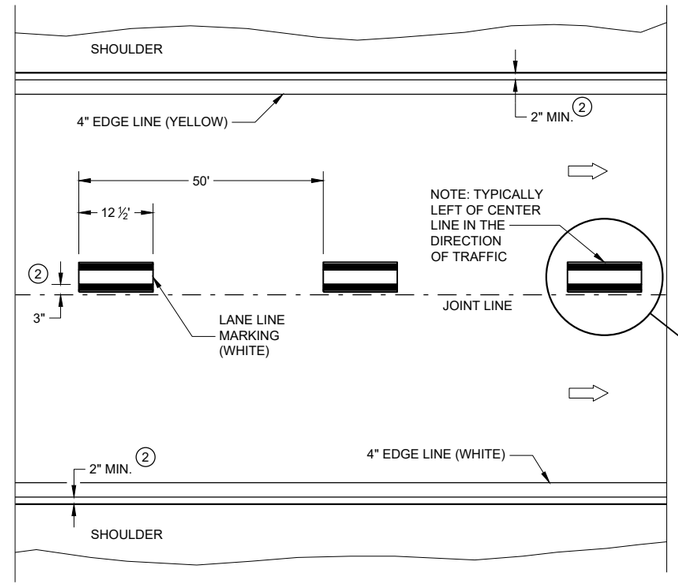

ONE WAY TRAFFIC

PERMANENT PAVEMENT MARKING

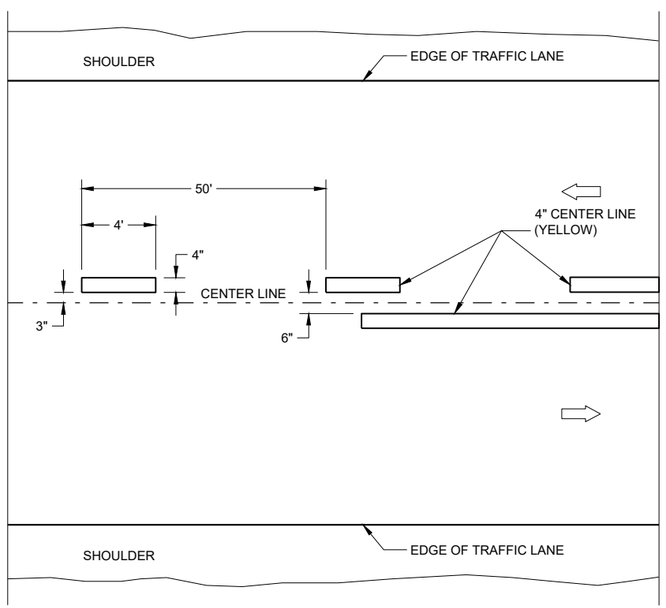

TWO WAY TRAFFIC

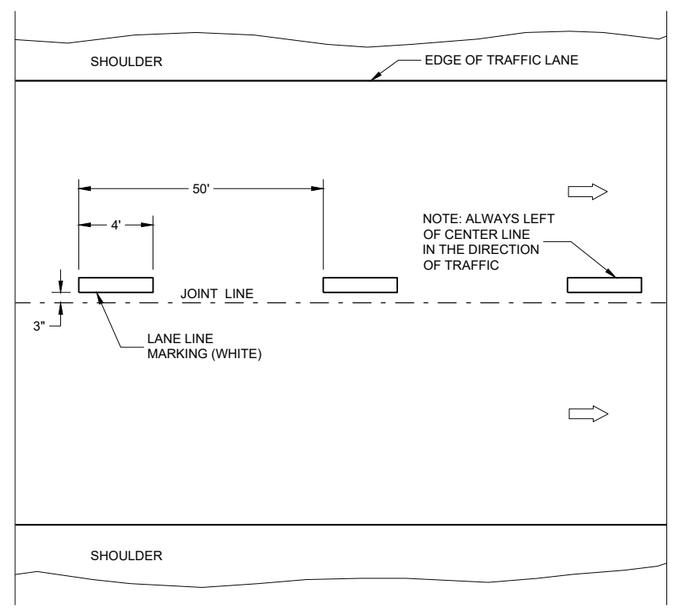

ONE WAY TRAFFIC

TEMPORARY PAVEMENT MARKING

GENERAL NOTES

DETAILS OF CONSTRUCTION NOT SHOWN ON THIS DRAWING SHALL CONFORM TO STANDARD SPECIFICATIONS AND SPECIAL PROVISIONS.

1. LOCATE THE NO PASSING ZONE W14-3 SIGN WITHIN 50 FEET OF THE "T" MARKING
2. MEASURE FROM EDGE OF MARKING TO JOINT LINE. THIS DOES NOT INCLUDE SPACE NEEDED FOR GROOVING OPERATIONS.

LEGEND

"T" MARKING

SIGN ON PERMANENT SUPPORT

DIRECTION OF TRAFFIC

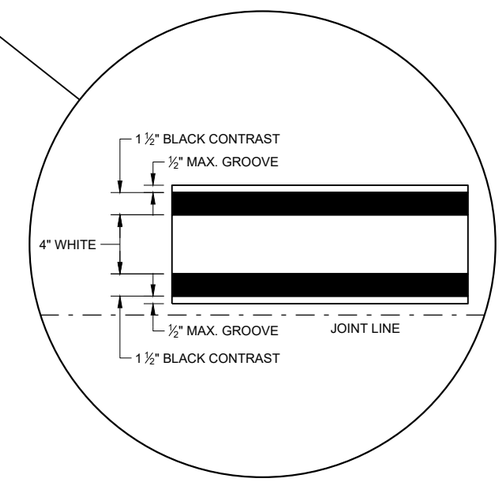

LONGITUDINAL MARKING (MAINLINE)

STATE OF WISCONSIN
DEPARTMENT OF TRANSPORTATION

APPROVED
February 2020 — DATE
/S/ Matthew Rauch — STATEWIDE SIGNING AND M ENGINEER
FHWA

6

SDD 15C08 - 20a

GENERAL NOTES

1. REFLECTIVE SHEETING SHALL FOLLOW THE REQUIREMENTS IN THE APPROVED PRODUCTS LISTING FOR SIGN SHEETING.
2. LOCATION OF WARNING LIGHTS WHEN SHOWN ON THE PLAN.

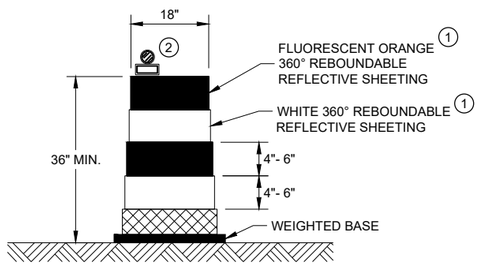

DRUM

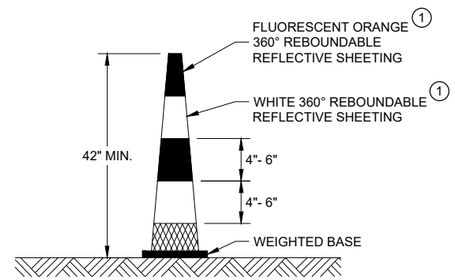

42" CONE

DO NOT USE IN TAPERS
½ SPACING OF DRUMS

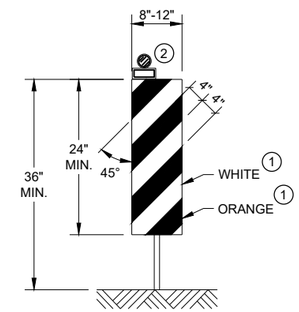

VERTICAL PANEL

THE STRIPES SHALL SLOPE DOWNWARD TO
THE TRAFFIC SIDE FOR CHANNELIZATION.

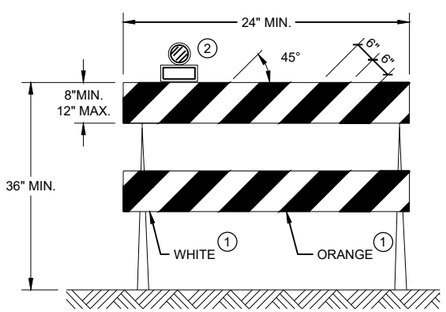

TYPE II BARRICADE

FOR RAILS LESS THAN 36" LONG, 4" WIDE STRIPES
MAY BE USED. ALL STRIPES SHALL SLOPE DOWNWARD
TO THE TRAFFIC SIDE FOR CHANNELIZATION.

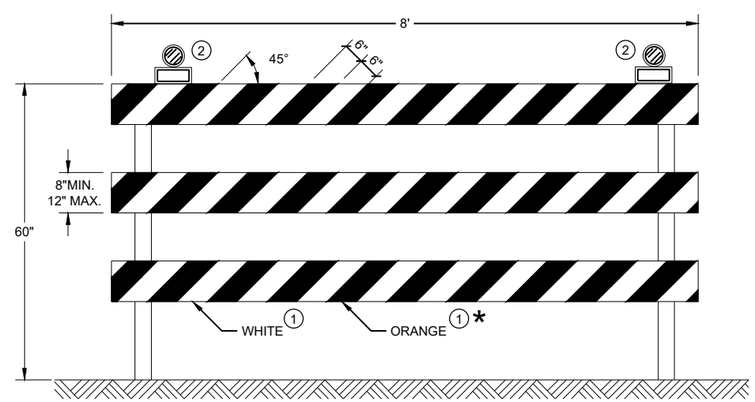

TYPE III BARRICADE

IF SIGN MOUNTED, DO NOT COVER MORE THAN 50% OF THE TOP
TWO RAILS OR 33% OF THE TOTAL AREA OF THE THREE RAILS.

* IF USED FOR A PERMANENT APPLICATION USE RED SHEETING.

CHANNELIZING DEVICES DRUMS, CONES, BARRICADES AND VERTICAL PANELS

STATE OF WISCONSIN
DEPARTMENT OF TRANSPORTATION

APPROVED
May 2021 — DATE
/S/ Andrew Heidtke — WORK ZONE ENGINEE
FHWA

6

SDD 15C11 - 09b

6

SDD 15C11 - 09b

GENERAL NOTES

STOP SIGN SHALL BE PLACED A MINIMUM OF 6 FEET TO A MAXIMUM OF 50 FEET FROM THE EDGELINE LOCATION.

1. 18-INCH STOP LINES MAY BE DELETED OR ADDED BY THE REGION MARKING ENGINEER BASED ON VISIBILITY AND SIGHT LINES.
2. NO STOP LINE IS REQUIRED IF STOP SIGN IS LESS THAN OR EQUAL TO 40 FEET FROM THE EDGELINE.
3. NO STOP LINE IS REQUIRED IF STOP SIGN IS LESS THAN OR EQUAL TO 30 FEET FROM THE FLANGELINE EXTENSION.
4. MOVE CLOSER TO THE EDGE OF TRAVEL LINE AS NEEDED FOR VISIBILITY AND SIGHT LINES (NO CLOSER THAN 4 FEET).
5. LADDER BAR CROSSWALKS SHOULD ONLY BE USED FOR MID BLOCK CROSSINGS. USE 2 - 6" TRANSVERSE LINES INSTEAD.

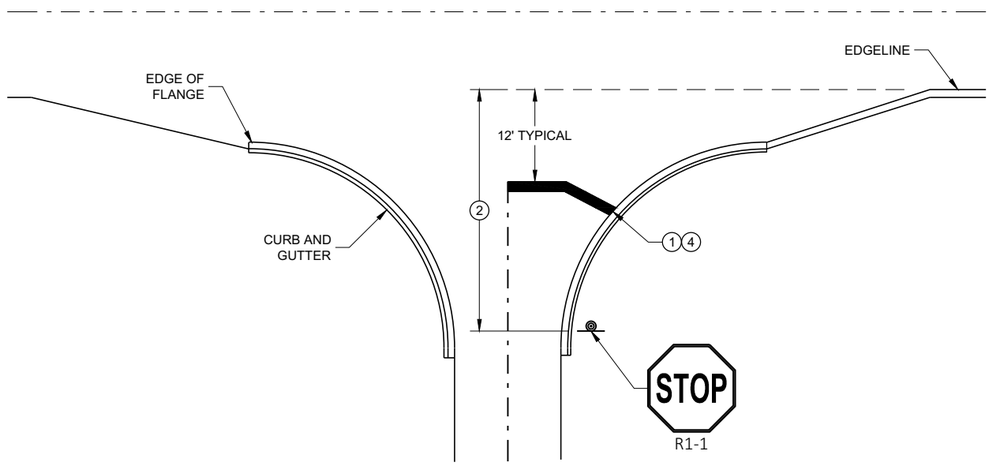

TYPICAL STOP LINE PAVEMENT MARKING WITH CURB AND GUTTER

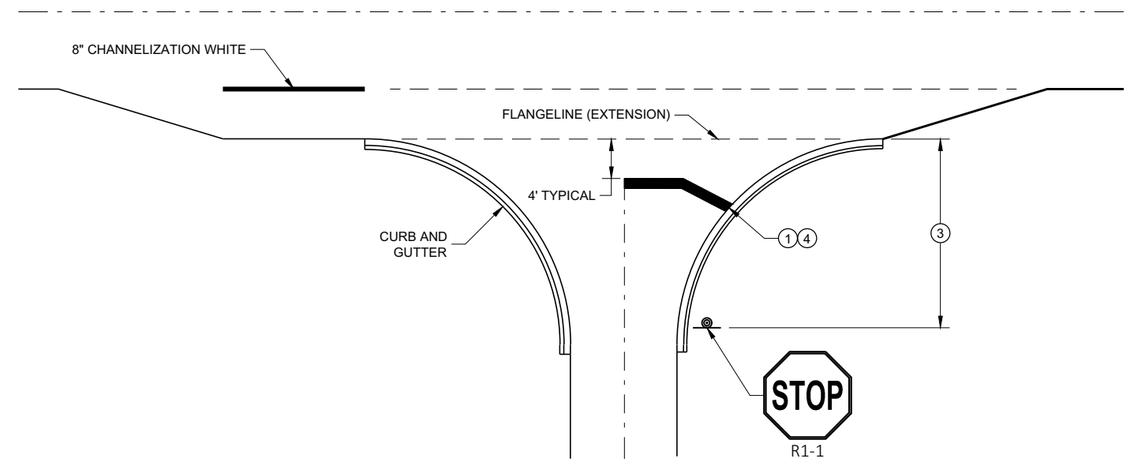

TYPICAL STOP LINE PAVEMENT MARKING FOR SIDEROADS WITH RIGHT TURN LANE

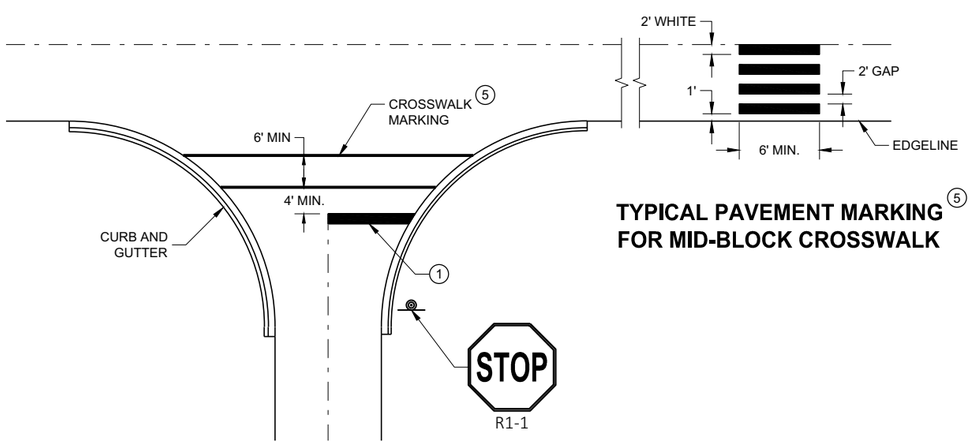

TYPICAL STOP LINE PAVEMENT MARKING FOR SIDEROADS WITH CROSSWALK MARKING

TYPICAL PAVEMENT MARKING 5 FOR MID-BLOCK CROSSWALK

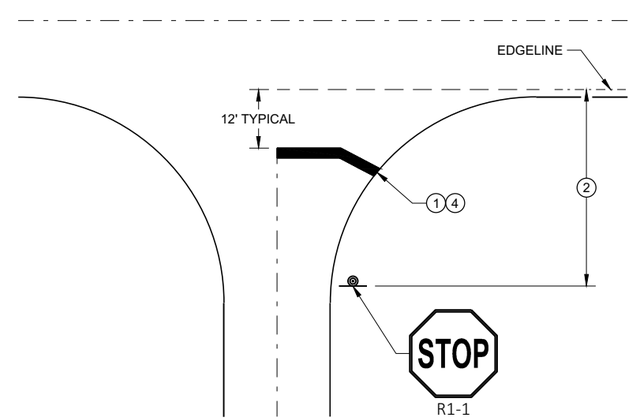

TYPICAL STOP LINE PAVEMENT MARKING WITHOUT CURB AND GUTTER

STOP LINE AND CROSSWALK PAVEMENT MARKING

STATE OF WISCONSIN
DEPARTMENT OF TRANSPORTATION

APPROVED
November 2019 — DATE
/S/ Matthew Rauch — STATE SIGNING AND MAF ENGINEER
FHWA

NOTE: MAY BE USED ON ROADWAY WITH POSTED SPEED OF LESS THAN 40 MPH.

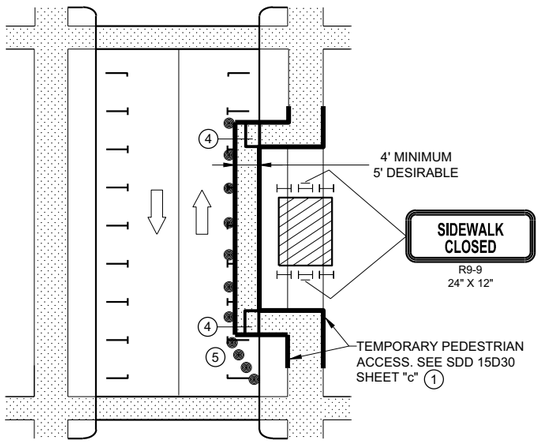

MID-BLOCK SIDEWALK CLOSURE IN PARKING LANE

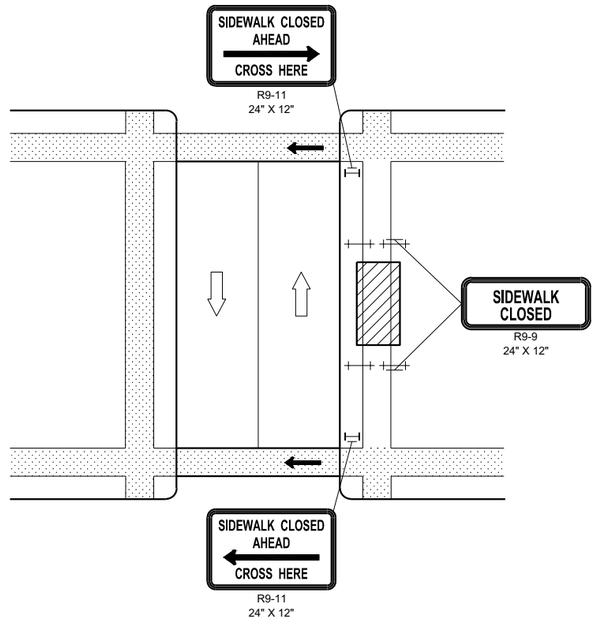

MID-BLOCK SIDEWALK CLOSURE

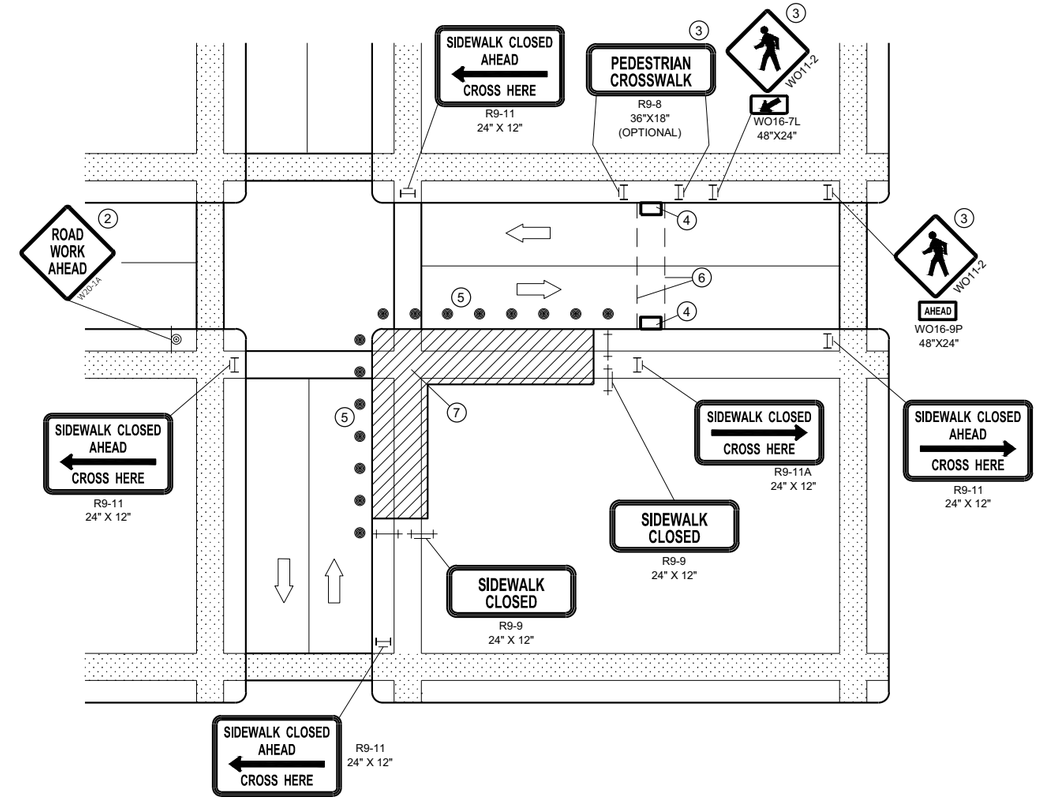

CORNER SIDEWALK CLOSURE WITH TEMPORARY CROSSWALK

6

6

NOTE: LAYOUT SAME AS ABOVE.

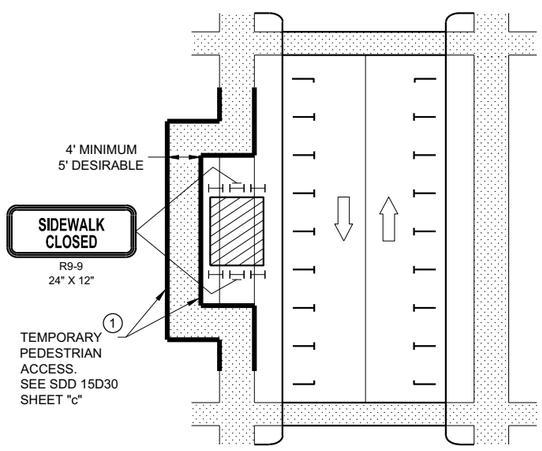

SIDEWALK DIVERSION

GENERAL NOTES

WHEN CLOSING OR RELOCATING CROSSWALKS OR SIDEWALKS, PROVIDE DETECABLE TEMPORARY FACILITIES AND INCLUDE ACCESSIBILITY FEATURES CONSISTENT WITH EXISTING PEDESTRIAN FACILITIES.

TEMPORARY TRAFFIC CONTROL DEVICES FOR PEDESTRIANS ARE SHOWN. OTHER DEVICES MAY BE NECESSARY TO CONTROL VEHICULAR TRAFFIC. STAGE WORK AS NECESSARY, TO PROVIDE A TEMPORARY PEDESTRIAN ACCESS ROUTE AT ALL TIMES. FOR ROADWAYS WITH NO AVAILABLE DETOURS, MAINTAIN ONE OPEN SIDEWALK AT ALL TIMES.

"WO" SIGN IS THE SAME AS "W" SIGN, EXCEPT THE BACKGROUND IS ORANGE.

FOR NIGHTIME CLOSURE, USE TYPE "A" FLASHING WARNING LIGHTS ON BARRICADES, SUPPORTING SIGNS AND CLOSING SIDEWALK. USE TYPE "C" STEADY BURN LIGHTS ON CHANNELIZING DEVICES SEPARATING THE WORK AREA FROM VEHICULAR TRAFFIC.

PEDESTRIAN TRAFFIC SIGNAL DISPLAY CONTROLLING CLOSED CROSSWALK SHALL BE COVERED OR DEACTIVATED.

POST MOUNTED SIGNS LOCATED ADJACENT TO A SIDEWALK SHALL HAVE A 7 FOOT MINIMUM CLEARANCE FROM THE BOTTOM OF THE SIGN TO THE SIDEWALK SURFACE.

ALTERNATE SIDEWALK WORK BETWEEK LEFT AND RIGHT SIDE OF ROADWAY TO MAINTAIN PEDESTRIAN ACCESS.

1. IF SIDEWALK CLOSURE AFFECTS AN ACCESSIBLE AND DETECTABLE FACILITY, MAINTAIN ACCESSIBILITY AND DETECTABILITY ALONG THE ALTERNATE PEDESTRIAN ROUTE
2. "ROAD WORK AHEAD" SIGNS ARE NOT REQUIRED IF THE SIDEWALK CLOSURE OCCURS WITHIN A LARGER WORK ZONE WHERE ADVANCE WARNING SIGNS ARE ALREADY PRESENT, OR IF THE WORK AREA AND EQUIPMENT ARE MORE THAN 2 FEET BEHIND THE CURB.
3. IF TEMPORARY PEDESTRIAN CROSSWALK IS NOT PROVIDED, OMIT R9-8 AND WO11-2 SIGN ASSEMBLIES. IF PROVIDED INCLUDE ON BOTH SIDES OF THE CROSSWALK.
4. TEMPORARY CURB RAMPS. SEE SDD 15D30 SHEET "b'.
5. DRUMS OR BARRICADES AT 25 FOOT SPACING. STREET PARKING SHALL BE PROHIBITED FOR AT LEAST 50 FEET IN ADVANCE OF THE MID-BLOCK CROSSWALK.
6. TEMPORARY PAVEMENT MARKING FOR CROSSWALK LINES.
7. LIMIT WORK TO ONE QUADRANT AT A TIME TO MINIMIZE PEDESTRIAN DISRUPTION.

LEGEND

- SIGN ON PERMANENT SUPPORT
- TRAFFIC CONTROL DRUM
- TYPE II BARRICADE WITH/WITHOUT SIGN (ALL WITH ONE WARNING LIGHT, TYPE A, LOW INTENSITY FLASHING)
- TYPE III BARRICADE WITH/WITHOUT SIGN (ALL WITH ONE WARNING LIGHT, TYPE A, LOW INTENSITY FLASHING)
- UNDER PEDESTRIAN TRAFFIC
- WORK AREA
- PEDESTRIAN CHANNELIZATION DEVICE
- DIRECTION OF TRAFFIC

TRAFFIC CONTROL, PEDESTRIAN ACCOMMODATION

STATE OF WISCONSIN
DEPARTMENT OF TRANSPORTAT

SDD 15D30 - 06a

SDD 15D30 - 06a

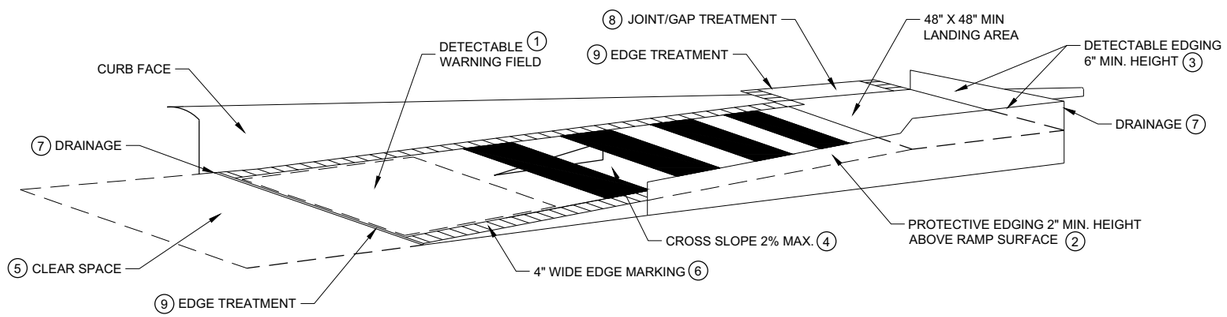

TEMPORARY CURB RAMP PARALLEL TO CURB

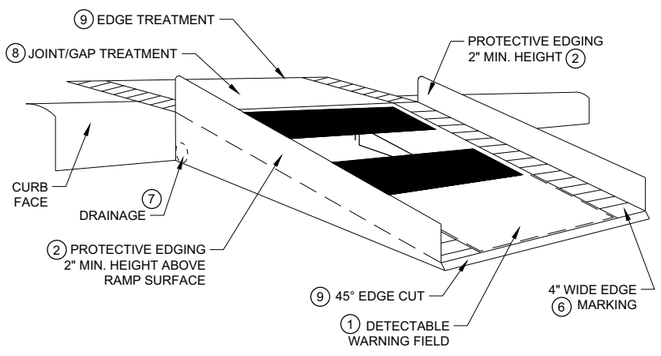

WITH PROTECTIVE EDGE

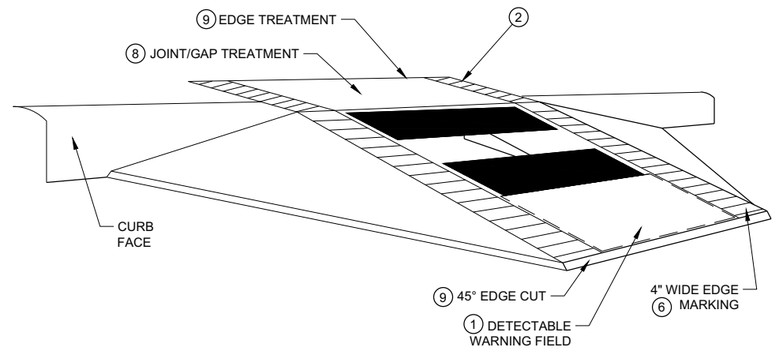

WITH SIDE APRON

TEMPORARY CURB RAMP PERPENDICULAR TO CURB

GENERAL NOTES

NOTIFY THE BUS COMPANY 7 DAYS IN ADVANCE OF THE BUS STOP RELOCATION.

ALTERNATE SIDEWALK WORK BETWEEN LEFT AND RIGHT SIDE OF ROADWAY TO MAINTAIN PEDESTRIAN ACCESS.

1. CURB RAMPS SHALL BE 48" MIN. WIDTH WITH A A FIRM, STABLE AND SLIP RESISTANT SURFACE. INSTALL CONTRASTING DETECTABLE WARNING FIELD AT PEDESTRIAN STREET CROSSINGS. REFER TO SDD 08D05, SHEET "e".
2. PROTECTIVE EDGING WITH A 2" MIN. HEIGHT SHALL BE INSTALLED WHEN A CURB RAMP OR LANDING PLATFORM HAS A VERTICAL DROP OF 6" OR GREATER OR HAS A SIDE APRON SLOPE STEEPER THAN 1:3 (33%). PROTECTIVE EDGING SHOULD BE CONSIDERED WHEN CURB RAMPS OR LANDING PLATFORMS HAVE A VERTICAL DROP OF 3" OR MORE.
3. DETECTABLE EDGING WITH 6" MIN. HEIGHT AND CONTRASTING COLOR SHALL BE INSTALLED ON ALL CURB RAMP LANDINGS WHERE THE WALKWAY CHANGES DIRECTION (TURNS).
4. CURB RAMPS AND LANDINGS SHALL HAVE A 1:50 (2%) MAX. CROSS-SLOPE.
5. CLEAR SPACE OF 48" X 48" SHALL BE PROVIDED ABOVE AND BELOW THE CURB RAMP.
6. THE CURB RAMP WALKWAY EDGE SHALL BE MARKED WITH A YELLOW COLOR, 4" WIDE MARKING, UNLESS A CONTRASTING DETECTABLE WARNING FIELD IS PROVIDED.
7. DO NOT RESTRICT WATER FLOW IN THE GUTTER SYSTEM.
8. LATERAL JOINTS OR GAPS BETWEEN SURFACES SHALL BE LESS THAN ½" WIDTH.
9. CHANGES BETWEEN SURFACE HEIGHTS SHALL NOT EXCEED ½". LATERAL EDGES SHALL BE VERTICAL UP TO ¼" HIGH AND BEVELED AT 1:2 BETWEEN ¼" AND ½".
10. 5" WIDE MIN. WITH PEDESTRIAN SAFETY BARRICADE, 10' WIDE MIN. WITHOUT PEDESTRIAN SAFETY BARRICADE.

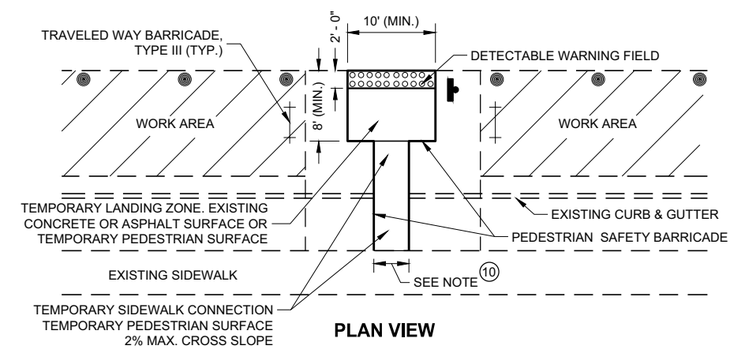

PLAN VIEW

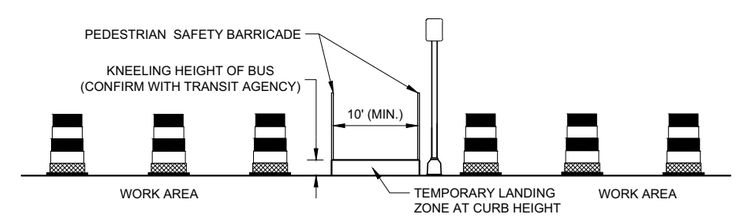

PROFILE VIEW

TEMPORARY BUS STOP PAD

LEGEND

- TRAFFIC CONTROL DRUM
- TYPE III BARRICADE
- WORK AREA

TRAFFIC CONTROL, PEDESTRIAN ACCOMMODATION

STATE OF WISCONSIN
DEPARTMENT OF TRANSPORTATION

6

6

SDD 15D30 - 06b

SDD 15D30 - 06b

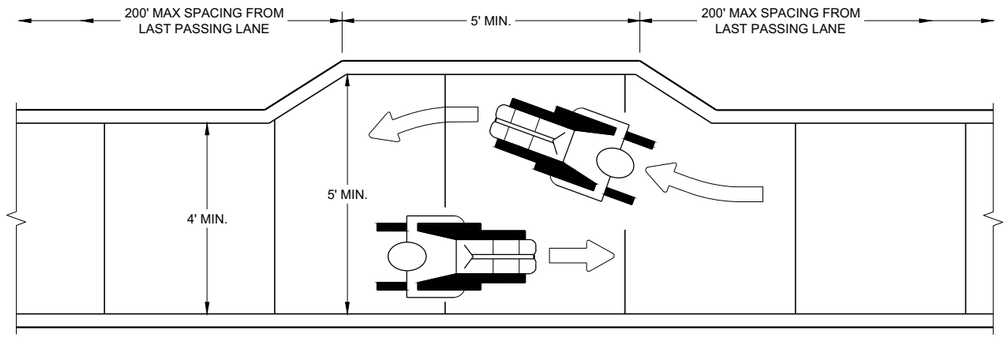

NARROW SIDEWALK PASSING DETAIL

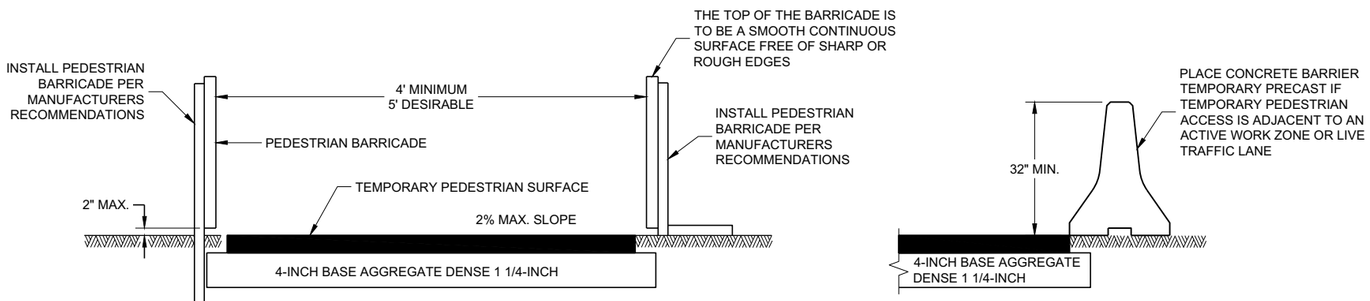

TEMPORARY PEDESTRIAN ACCESS

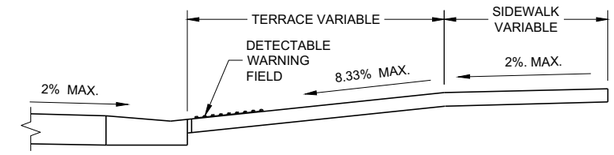

SECTION A - A

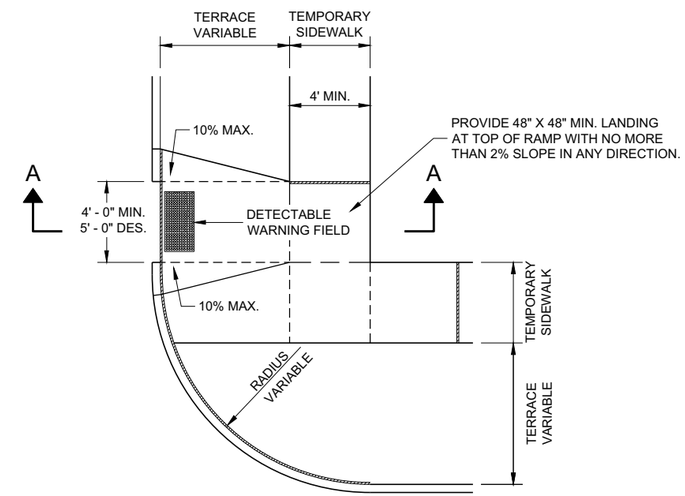

PLAN VIEW
TEMPORARY TYPE 3 RAMP
(OUTSIDE OF CROSSWALK AREA)

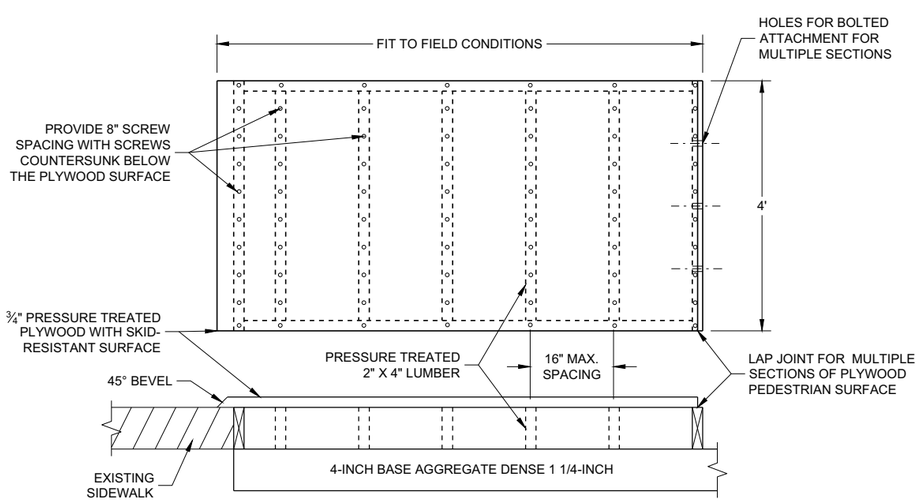

TEMPORARY PEDESTRIAN SURFACE PLYWOOD

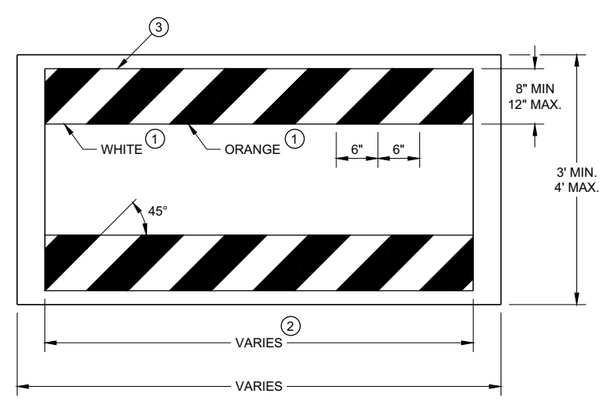

TEMPORARY PEDESTRIAN BARRICADE *

GENERAL NOTES

BARRICADE DEVICE SELECTED FROM APPROVED PRODUCT LIST

1. REFLECTIVE SHEETING SHALL FOLLOW THE REQUIREMENTS IN THE APPROVED PRODUCTS LISTING FOR SIGN SHEETING.
2. SHEETING REQUIRED ON MORE THAN 50% OF BARRICADE WIDTH.
3. PLACE SHEETING ON BOTH SIDES OF THE BARRICADE.

* USE THIS DETAIL FOR SHEETING PLACEMENT REFERENCE.

TRAFFIC CONTROL, PEDESTRIAN ACCOMMODATION

STATE OF WISCONSIN
DEPARTMENT OF TRANSPORTATION

APPROVED
November 2019 /S/ Andrew Heidtke
DATE WORK ZONE ENGINEE
FHWA

6

SDD 15D30 - 06c

6

SDD 15D30 - 06c

TYPICAL ASSEMBLIES

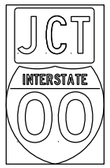

J1-1

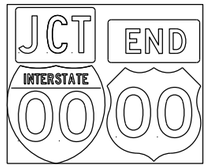

J1-2

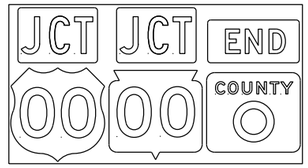

J1-3

JR1-1

J2-1

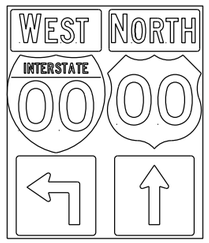

J2-2

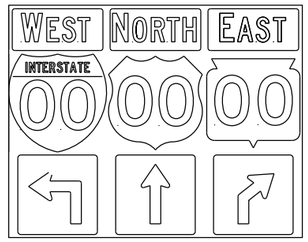

J2-3

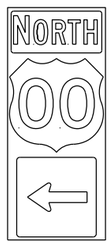

J3-1

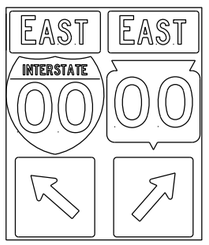

J3-2

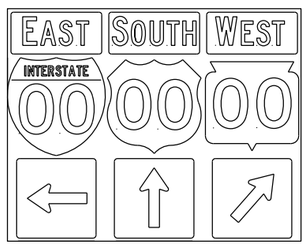

J3-3

J4-1

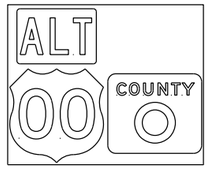

J4-2

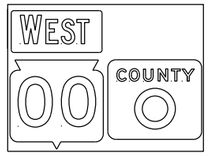

J4-2

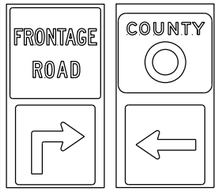

J12-1 J13-1

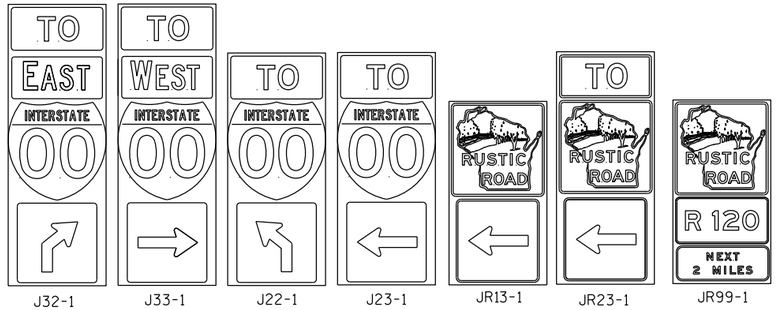

J32-1 J33-1 J22-1 J23-1 JR13-1 JR23-1 JR99-1

JV
(Typical Vertical J-Assembly
See Note 10 and 11)

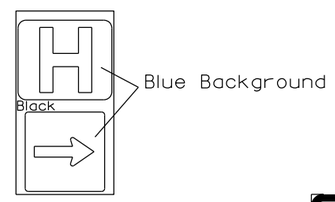

JH-1

NOTES

1. Signs are Type II - Type H Reflective
2. Color:
   Background - Black Non-reflective
   Message - see Note 5
3. Message Series - See Note 5
4. Corners shall be square or rounded if base material is plywood. If base material is metal the corners shall be rounded.
5. The colors and message spacing on each marker shall be according to the applicable route marker panel specifications.
6. Certain marker heads require the component pieces to be the same color. As an example, all the components used with an M1-1 Interstate marker shall be blue.
7. Single panel j-assemblies shall only be used with route marker shields that are same size. If the route marker shields are different size use multiple piece component.
8. Route assemblies that have 24 inch route shields and have dimensions greater than 48 inches (both vertical and horizontal) shall have one horizontal splice between the arrows and route shields. Vertical splices shall not be used on route assemblies with a horizontal dimension of 144 inches or less. The contractor shall not use more than one vertical joint per sign and the joint shall be between route shields.
9. Route assemblies that have 36 inch shields and have dimensions greater than 48 inchs (both vertical and horizontal) shall have two horizontal splices. One horizontal splice shall be between the cardinal direction and route shields and the other horizontal splice shall be between the arrows and route shields. Vertical splices shall not be used on route assemblies with a horizontal dimension of 144 or less. The contractor shall not use more than one vertical joint per sign and the joint shall be between route shields.
10. All Vertical J Assemblies are given a Sign Code of JV
11. For JV Assemblies that have a mixture of Interstate and non Interstate shields, arrows and cardinals shall be white on blue.

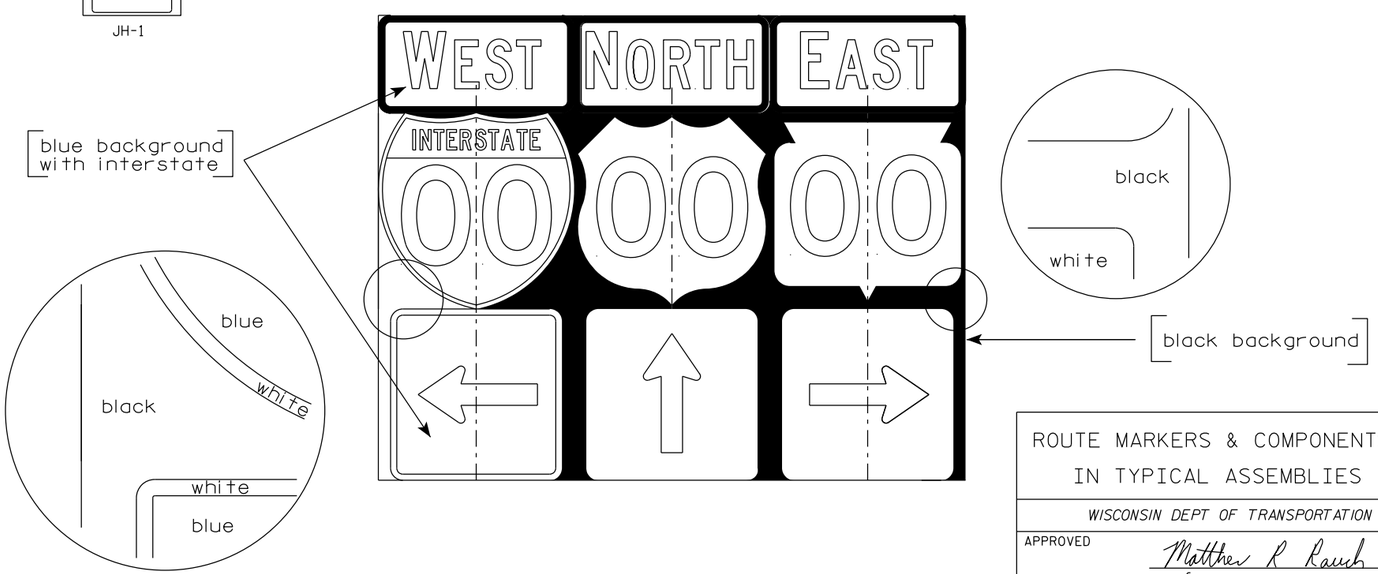

ROUTE MARKERS & COMPONENTS
IN TYPICAL ASSEMBLIES

WISCONSIN DEPT OF TRANSPORTATION

APPROVED Matthew R Rauch
for State Traffic Engineer

DATE 3/18/21 PLATE NO. A2-1S.9

PROJECT NO:

SHEET NO: 96 E

URBAN AREA

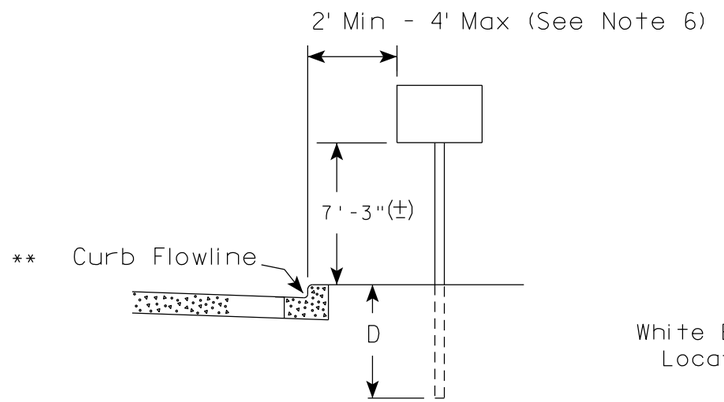

RURAL AREA (See Note 2)

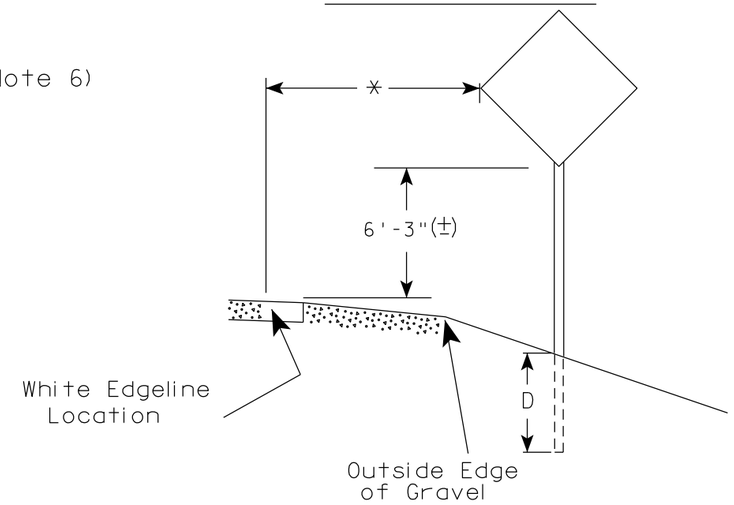

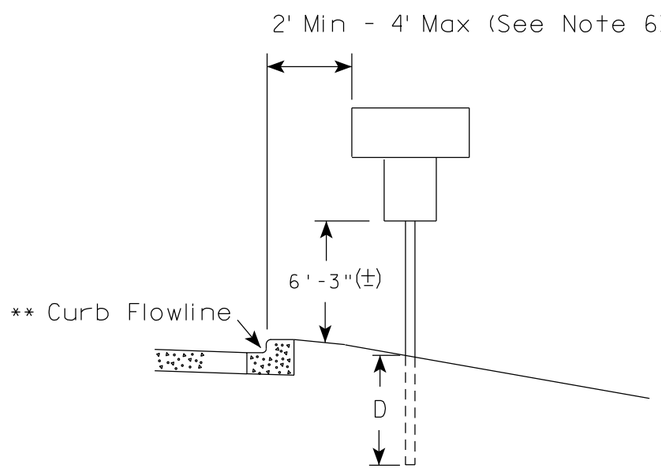

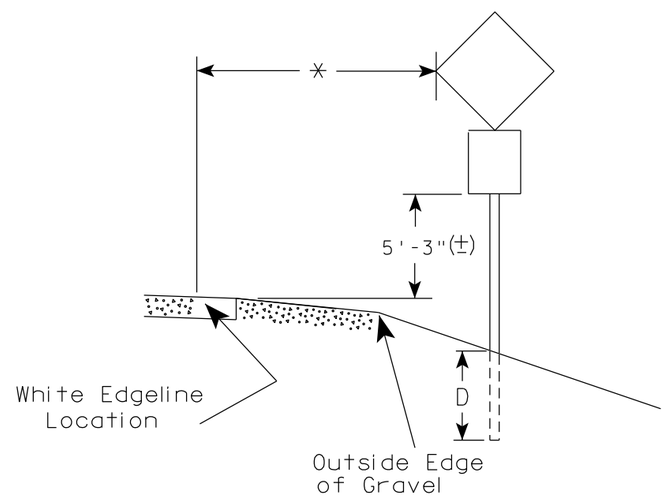

** The existence of curb and gutter does not in itself mandate the vertical clearance illustrated. That height is typically measured where there is sidewalk adjacent to the roadway or parking is permitted. In the absence of sidewalk vertical clearance is measured from the top of the curb. Offset of signs is measured from the flow line.

* 6 feet from edge of a paved shoulder or 12 feet from the edge of pavement (edge line location) or 2 feet from outside edge of gravel, whichever is greater unless directed by project engineer.

GENERAL NOTES

1. Signs wider than 4 feet or 20 sq.ft or larger, shall be mounted on multiple posts. Refer to plate A4-4.
2. If signs are mounted on or behind barrier wall, see A4-10 sign plate.
   The Double Arrow sign (W12-1D) shall be mounted at a height of 2'-3" (±). The Chevron sign (W1-8), Roundabout Chevron panel (R6-4B), Enhanced Reference Markers, Clearance Markers (W5-52), Mile Markers (D10 series), In Road Object Markers (W5-54) & End of Road Markers (W5-56) shall be mounted at a height of 4'-3" (±).
3. For expressways and freeways, mounting height is 7'- 3" (±) or 6'-3" (±) depending upon existence of a sub-sign.
4. Minimum mounting height for signs mounted on traffic signal poles is 5'- 3" (±).
5. Offset distance shall be consistent with existing signs or consistent throughout length of project.
6. The (±) tolerance for mounting height is 3 inches.
7. Folding signs shall be mounted at a height of 5'-3" (±) or as directd by the Engineer.

POST EMBEDMENT DEPTH

Area of Sign Installation (Sq.Ft.)	D (Min)
20 or Less	4'
Greater than 20	5'

TYPICAL INSTALLATION OF PERMANENT TYPE II SIGNS ON SINGLE POSTS

WISCONSIN DEPT OF TRANSPORTATION

APPROVED Matthew R Rauch for State Traffic Engineer

DATE 5/13/2020 PLATE NO. A4-3.22

7 7

PROJECT NO:	HWY:	COUNTY:		SHEET NO: 97	E

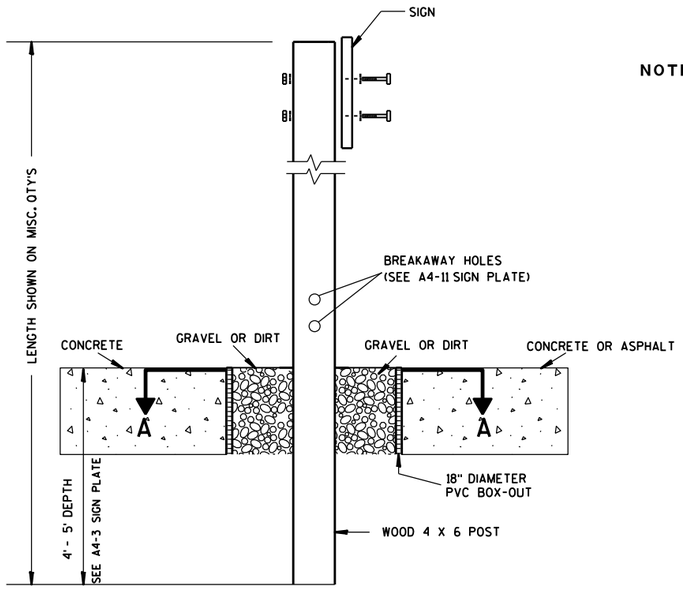

ELEVATION VIEW

DETAIL OF WOOD 4 X 6 SIGN POST IN BOX-OUT

NOTES:
1. ALL MATERIAL TO BE APPROVED BY ENGINEER PRIOR TO INSTALLATION
2. SEE SIGN PLATE A4-8 FOR SIGN HARDWARE REQUIREMENTS
3. 18 INCH X 18 INCH SQUARE BOX-OUTS MAY BE USED FOR INSTALLATIONS IN EXISTING CONCRETE OR ASPHALT LOCATIONS.

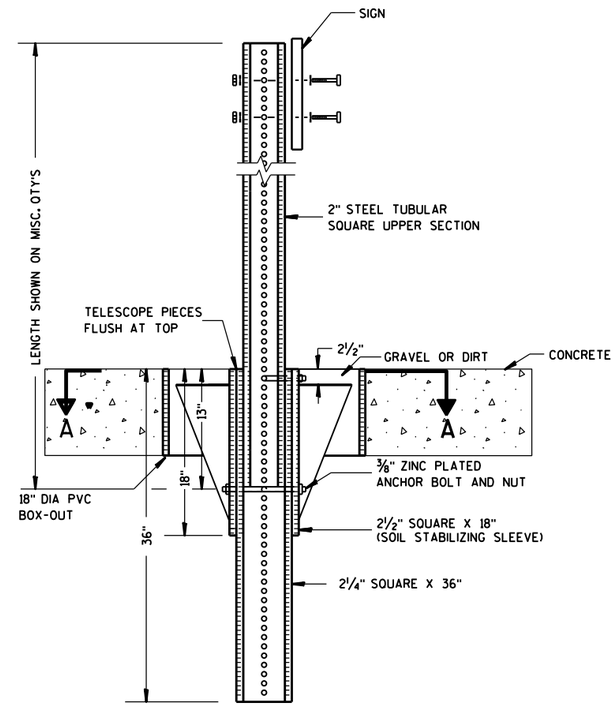

ELEVATION VIEW

DETAIL OF STEEL 2 X 2 SIGN POST IN BOX-OUT

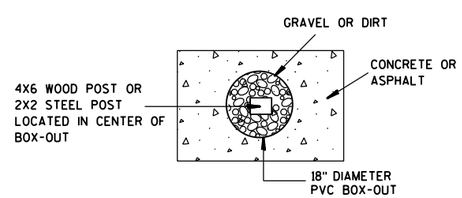

PLAN VIEW

FOR NEW CONCRETE/ASPHALT INSTALLATIONS

SIGN POST
BOX-OUTS
A4-3B

WISCONSIN DEPT OF TRANSPORTATION

APPROVED Matthew R Rauch
for State Traffic Engineer

DATE 1/27/14 PLATE NO. A4-3B.1

98

PROJECT NO:	HWY:	COUNTY:		SHEET NO:	E

FILE NAME : C:\CAEFiles\Projects\tr_stdplate\A43B.DGN PLOT DATE : 27-JAN-2014 09:48 PLOT BY : mscsja PLOT NAME : PLOT SCALE : 13.659812:1.000000 WISDOT/CADDS SHEET 42

URBAN AREA

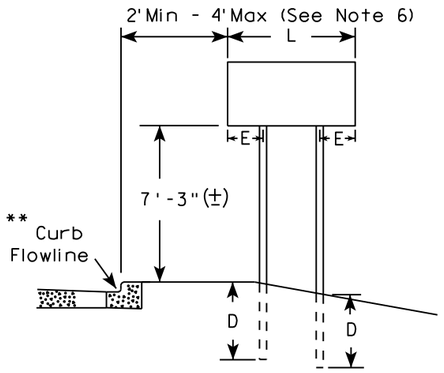

RURAL AREA (See Note 3)

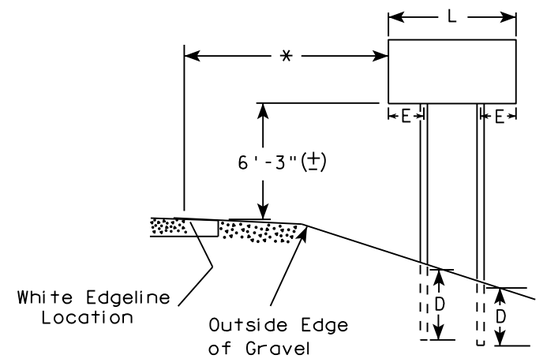

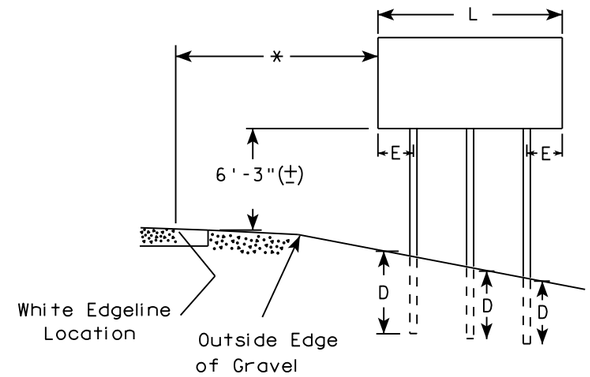

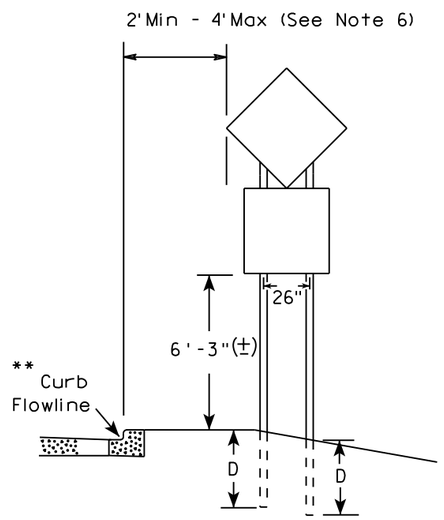

48" DIAMOND WARNING SIGN

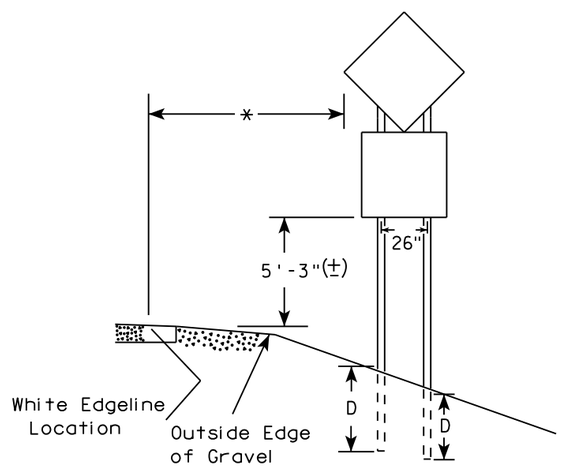

48" DIAMOND WARNING SIGN

GENERAL NOTES

1. For 3 or 4 post installations, individual post spacing shall be greater than 3'-6".
2. See tables below for required number of posts.
3. For expressways and freeways, mounting height is 7'-3" (±) or 6'-3" (±) depending upon existence of sub-sign.
4. The (±) tolerance for mounting height is 3 inches.
5. J-Assemblies are considered to be one sign for mounting height.
6. Offset distance shall be consistent with existing signs or consistent throughout length of project.
7. Folding signs shall be mounted at a height of 5'-3" (±) or as directed by the engineer.
8. The Double Arrow sign (W12-1) shall be mounted at a height of 2'-3" (±). The Chevron sign (W1-8), Roundabout Chevron panel (R6-4B), Clearance Markers (W5-52), Mile Markers (D10 series), In Road Object Markers (W5-54) & End of Road Markers (W5-56) shall be mounted at a height of 4"-3" (±).

* 6 feet from edge of a paved shoulder or 12 feet from the edge of pavement (edge line location) or 2 feet from outside edge of gravel, whichever is greater unless directed by project engineer.

** The existence of curb and gutter does not in itself mandate the vertical clearance illustrated. That height is typically measured where there is sidewalk adjacent to the roadway or parking is permitted. In the absence of sidewalk vertical clearance is measured from the top of the curb. Offset of signs is measured from the flow line.

*** See A4-3 sign plate for signs 4' or less in width and less than 20 S.F. in area.

SIGN SHAPE OTHER THAN DIAMOND (TWO POSTS REQUIRED)	
L	E
*** Greater than 48" Less than 60"	12"
60" to 108"	L/5

SIGN SHAPE OTHER THAN DIAMOND (THREE POSTS REQUIRED)	
L	E
Greater than 108" to 144"	12"

POST EMBEDMENT DEPTH

Area of Sign Installation (Sq. Ft.)	D (Min)
20 or Less	4'
Greater than 20	5'

TYPICAL INSTALLATION OF TYPE II SIGNS ON MULTIPLE POSTS

WISCONSIN DEPT OF TRANSPORTATION

APPROVED Matthew R Rauch
For State Traffic Engineer

DATE 8/21/17 PLATE NO. A4-4.15

7

7

PROJECT NO:	HWY:	COUNTY:		SHEET NO: 99	E

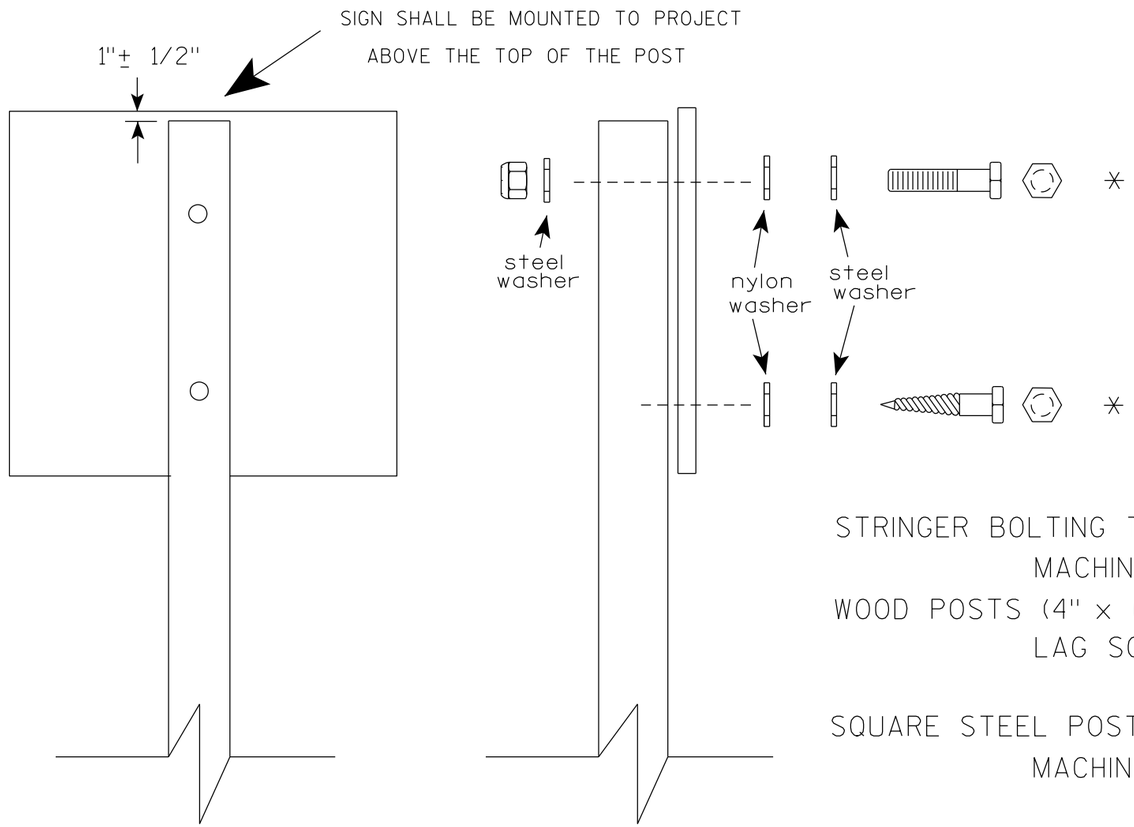

Nuts, bolts and lags used for mounting signs shall have hexagonal heads and shall be either :

a. Hot dip galvanized in accordance with ASTM Designation: A 153, Class D, or SC 3

b. Electro-galvanized in accordance with ASTM Designation : B 633, TYPE III, SC 3.

Threads on bolts and nuts shall be manufactured with sufficient allowance for the cadmium plate or galvanized coating to permit the nuts to run freely on the bolts.

STRINGER BOLTING TO ALUMINUM SIGNS (SEE SIGN PLATE A4-18)

MACHINE BOLTS - 5/16" X 1-3/4" Length w/ lock nuts

WOOD POSTS (4" x 6")

LAG SCREWS - 3/8" X 3" (NO STRINGERS ON BACK OF SIGN)
3/8" X 4" (STRINGERS ON BACK OF SIGN)

SQUARE STEEL POSTS (2" x 2")

MACHINE BOLTS - 3/8" X 3-1/4" Length w/ nuts (NO STRINGER ON BACK OF SIGN)
3/8" X 5" Length w/ nuts (STRINGERS ON BACK OF SIGN)

RIVETS - 9/32 " (6605-9-6) BULB-TITE, TRI-FOLD, ALUMINUM BODY/MANDREL
O.D. FLANGE .720-.765 INCH, GRIP RANGE .042-.375 INCH

WASHERS (ALL POSTS) -

1-1/4" O.D. X 3/8" I.D. X 1/16" STEEL
1-1/4" O.D. X 3/8" I.D. X .080 NYLON

* Two different fastening systems are shown for illustration purposes. On any individual sign, either one or the other system shall be used. Actual number of fasteners per sign varies with the sign area, but normally there are two. For a single post installation, all signs greater than 9 sq. ft. require the use of 3 fasteners.

ATTACHMENT OF SIGNS TO POSTS

WISCONSIN DEPT OF TRANSPORTATION

APPROVED Matthew R Rauch
for State Traffic Engineer

DATE 4/1/2020 PLATE NO. A4-8.9

TELESCOPIC TUBING ANCHORS
TWO PIECE SYSTEM

2 1/4" SQUARE
12 GAUGE
PERFORATED
GALVANIZED FINISH

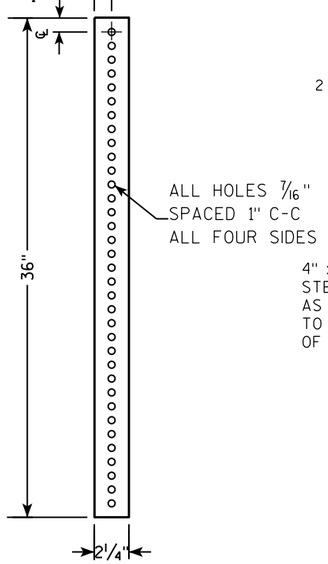

2 1/2" SQUARE
12 GAUGE
OMNI-DIRECTIONAL
PERFORATED
SOIL STABILIZING SLEEVE
GALVANIZED FINISH

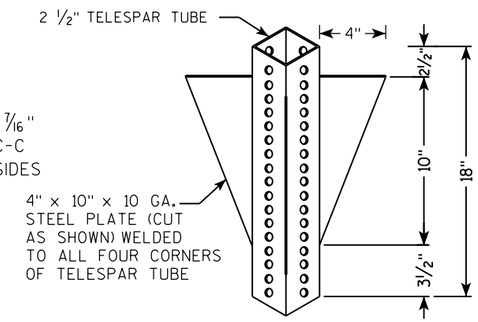

DETAIL OF TUBULAR STEEL SIGN POST
(IN POURED CONCRETE OR ASPHALT)

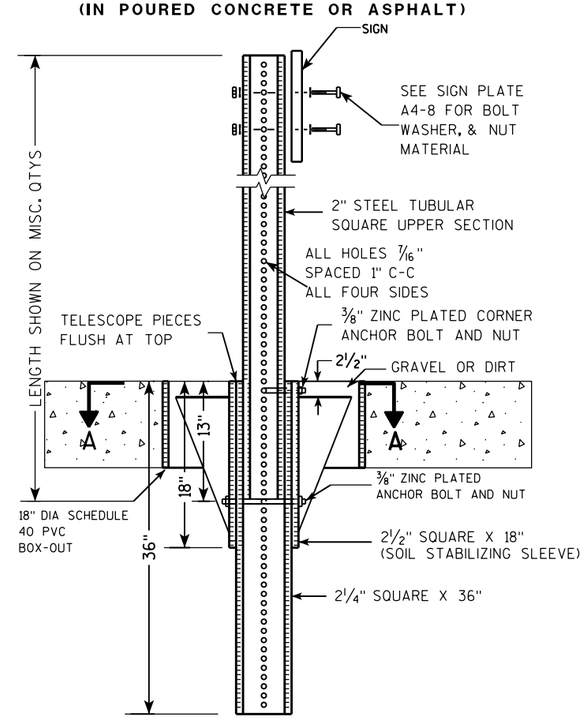

DETAIL OF TUBULAR STEEL SIGN POST
(IN LOCATIONS OTHER THAN POURED CONCRETE OR ASPHALT)

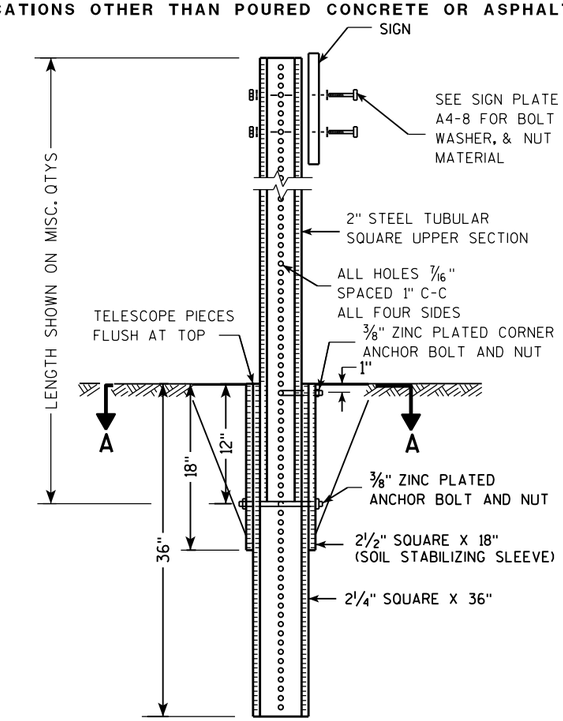

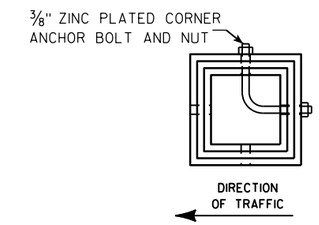

SECTION A-A

Area of Sign Installation (Sq. Ft.)	Number of Required Posts
9 or less	1
Greater than 9 less than or equal to 18	2
Greater than 18 less than or equal to 27	3

Signs wider than 3 feet or larger than 9 sq. ft shall be mounted on multiple posts (see above table).

TUBULAR STEEL
SIGN POST
A4-9

WISCONSIN DEPT OF TRANSPORTATION

APPROVED Matthew R Rauch
for State Traffic Engineer

DATE 2/05/15 PLATE A4-9.9

PROJECT NO:	HWY:	COUNTY:		SHEET NO:	E

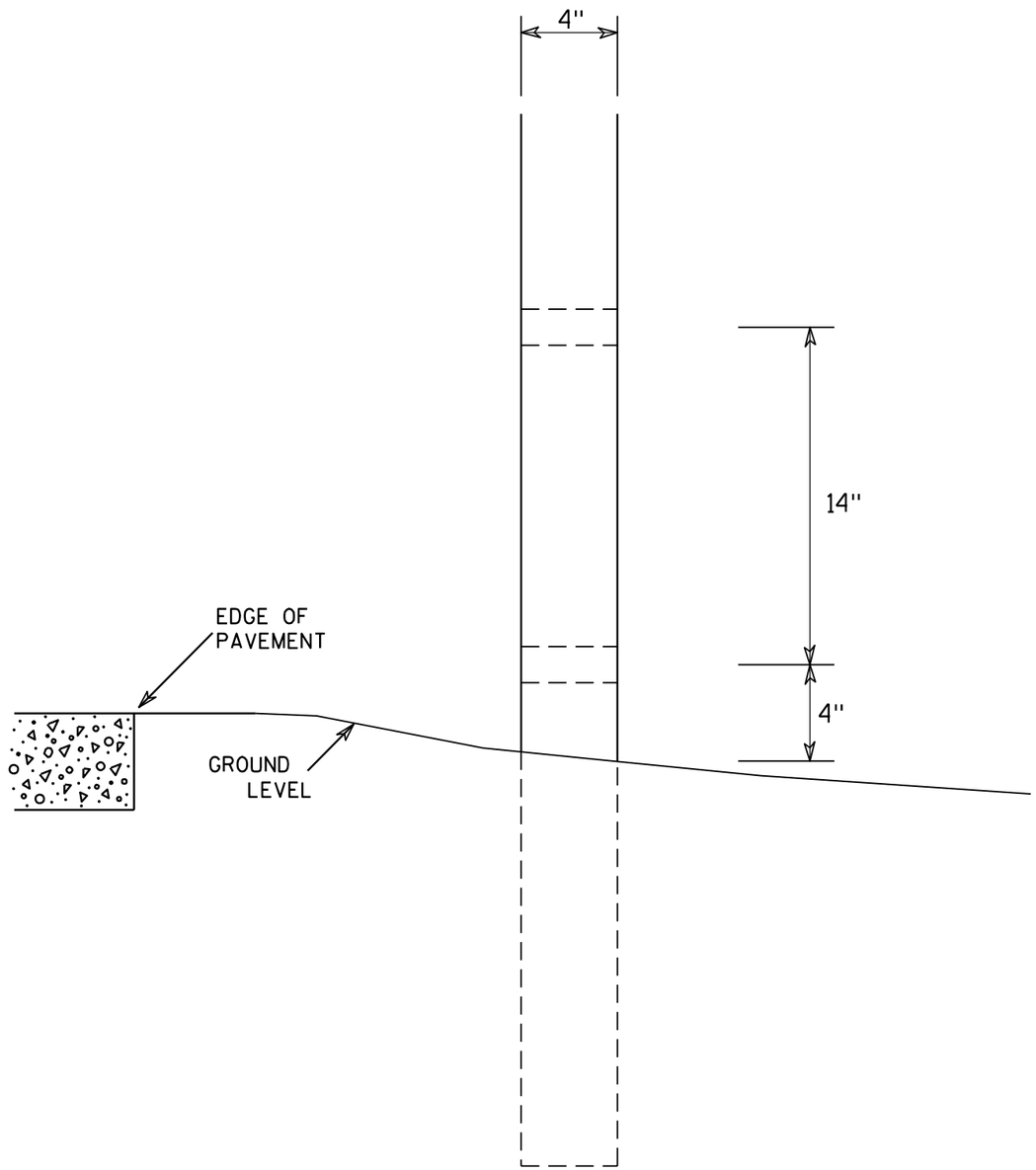

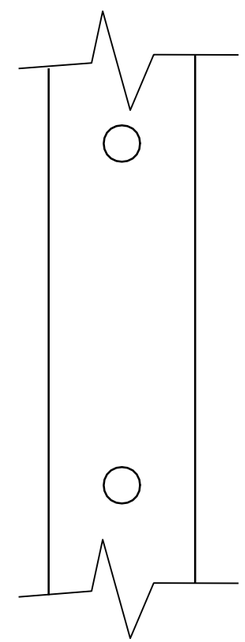

SIDE VIEW

GENERAL NOTES

1. All 4 x 6 Wood Posts shall be modified by having two 1½" diameter holes drilled perpendicular to the roadway centerline.

4 X 6 WOOD POST MODIFICATIONS

WISCONSIN DEPT OF TRANSPORTATION

APPROVED Chester J Spang for State Traffic Engineer

DATE 3/27/97 PLATE NO. A4-11.2

PROJECT NO:	HWY:	COUNTY:		SHEET NO: 102	E

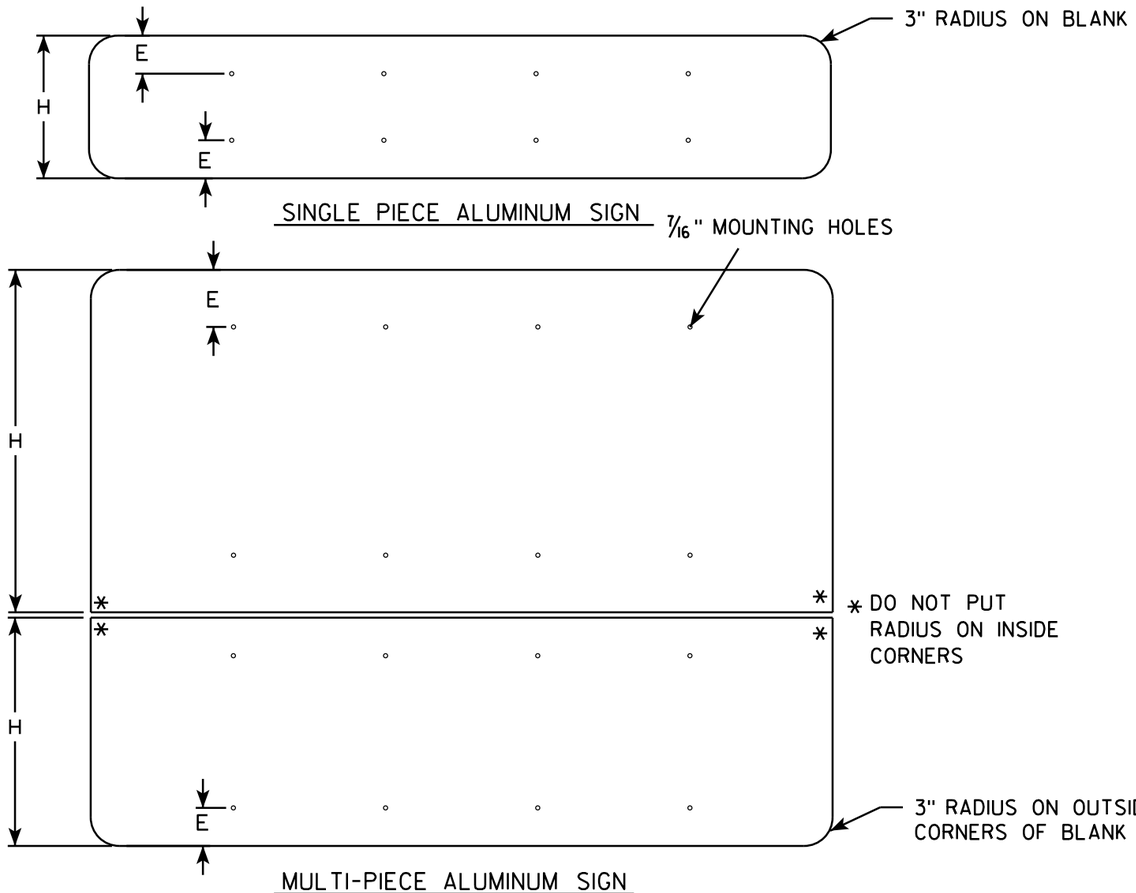

GENERAL NOTES

- ALL SIGNS OVER 60" IN WIDTH SHALL HAVE A 3" RADIUS ON THE OUTSIDE CORNERS OF THE ALUMINUM BLANK.
- MOUNTING HOLES SHALL BE 7/16" DIAMETER.
- SEE CHART FOR HOLE SPACING REQUIREMENTS
- FOR SIGN PANELS WITH DIMENSION (H) 36" AND OVER, DIMENSION E SHALL BE 6"
- FOR SIGN PANELS WITH DIMENSION (H) UNDER 36", DIMENSION E SHALL BE 4"
- SIGN STRINGER MATERIAL SHALL CONSIST OF STEEL CHANNEL POST SECTIONS, WEIGHING 1.12 LBS/FT IN ACCORDANCE WITH SECTION 633.2.1 OF THE STANDARD SPECIFICATIONS FOR HIGHWAY AND STRUCTURE CONSTRUCTION.
- SEE SIGN PLATE A4-8 FOR SIGN STRINGER BOLTING REQUIREMENTS.

SIGN WIDTH	STRINGER WIDTH	POSTS	HOLE SPACING	MOUNTING HOLES						
78"	72"	2	16"	15"	31"	47"	63"			
84"	72"	2	17"	16 1/2"	33 1/2"	50 1/2"	67 1/2"			
90"	72"	2	18"	18"	36"	54"	72"			
96"	90"	2	19"	19 1/2"	38 1/2"	57 1/2"	76 1/2"			
102"	90"	2	20"	21"	41"	61"	81"			
108"	90"	2	21"	22 1/2"	43 1/2"	64 1/2"	85 1/2"			
114"	108"	3	15"	12"	27"	42"	57"	72"	87"	102"
120"	108"	3	16"	12"	28"	44"	60"	76"	92"	108"
126"	108"	3	17"	12"	29"	46"	63"	80"	97"	114"
132"	126"	3	18"	12"	30"	48"	66"	84"	102"	120"
138"	126"	3	19"	12"	31"	50"	69"	88"	107"	126"
144"	126"	3	20"	12"	32"	52"	72"	92"	112"	132"

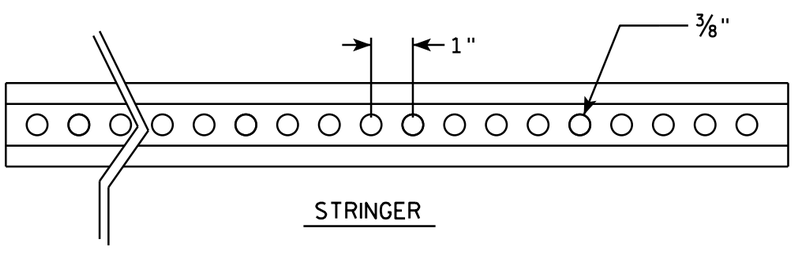

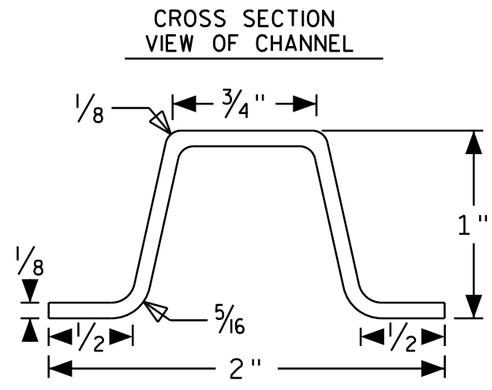

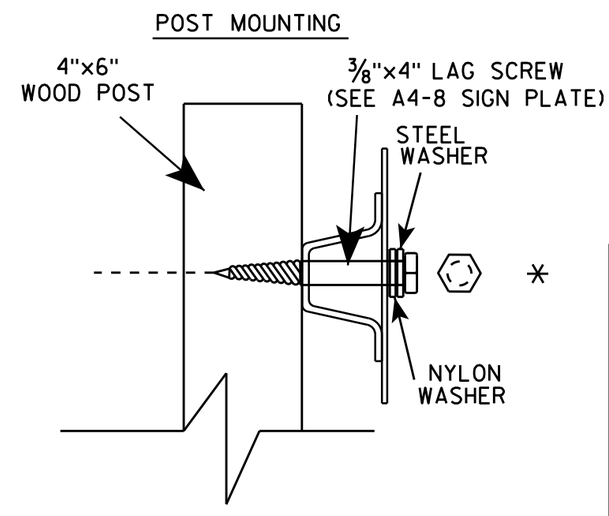

SIGN STRINGER MOUNTING REQUIREMENTS

WISCONSIN DEPT OF TRANSPORTATION

APPROVED Matthew R Rauch
for State Traffic Engineer

DATE 4/26/16 PLATE NO A4-18.1

PROJECT NO:	HWY:	COUNTY:		SHEET NO:	E

BANDING

SINGLE SIGN

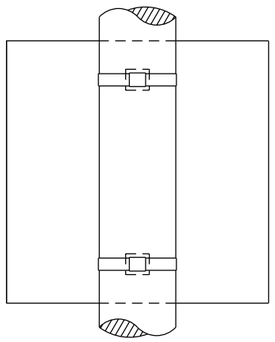

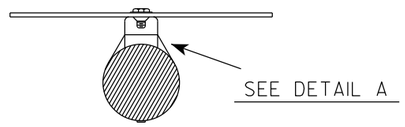

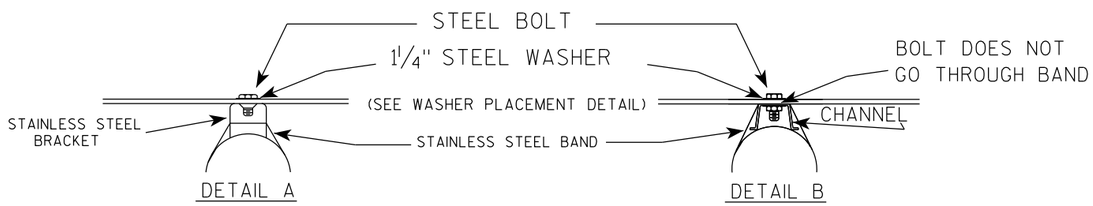

WASHER PLACEMENT

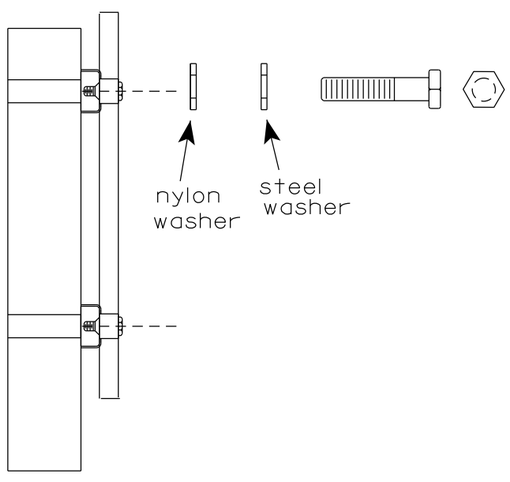

WASHERS (ALL POSTS) -
1-1/4" O.D. X 3/8" I.D. X 1/16" STEEL
1-1/4" O.D. X 3/8" I.D. X .080 NYLON
FOR ALL TYPE H SIGNS

GENERAL NOTES

1. Any sign over 3 feet in width shall use the V-Block banding method. See A5-10 standard plate.
2. Signs 3 feet or greater in height shall have three bracket bands installed. Signs less than 3 feet in height shall have two bracket bands installed.
3. Banding and assembly bracket shall be stainless steel. All bands shall be 3/4" in width and 0.025" thickness.
4. ALL SIGN MOUNTING BOLTS AND WASHERS SHALL BE EITHER:
   a. Hot dip or mechanically galvanized in accordance with ASTM Designation: A 153, Class D
   b. Electro-galvanized in accordance with ASTM designation: B 633, Type III, SC 3

"J" ASSEMBLY

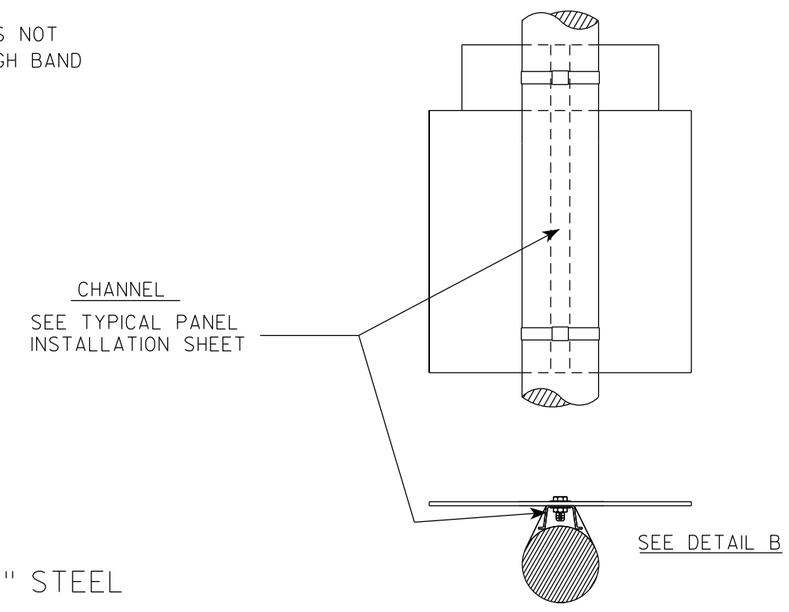

STANDARD SIGN
SIGN BANDING DETAILS

WISCONSIN DEPT OF TRANSPORTATION

APPROVED Matthew R Rauch for State Traffic Engineer

DATE 6/10/19 PLATE NO. A5-9.4

PROJECT NO:	HWY:	COUNTY:		SHEET NO: 104	E

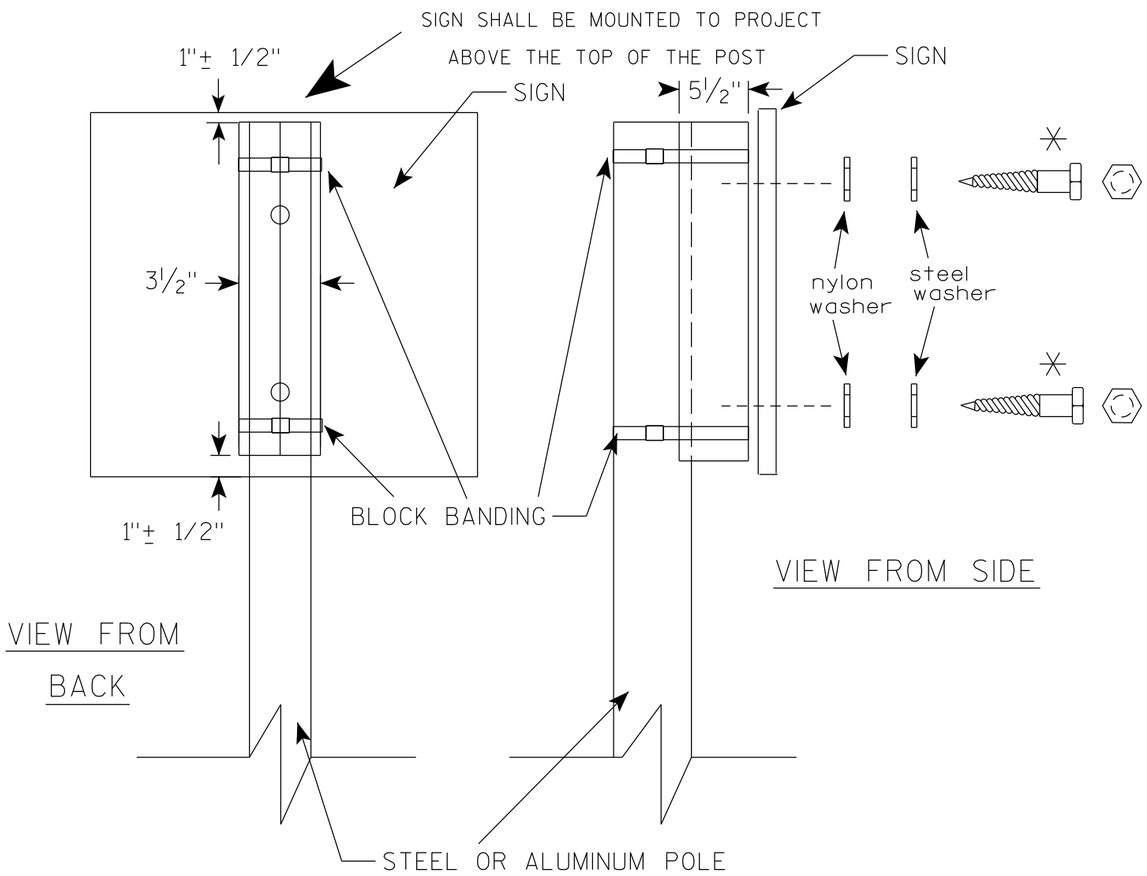

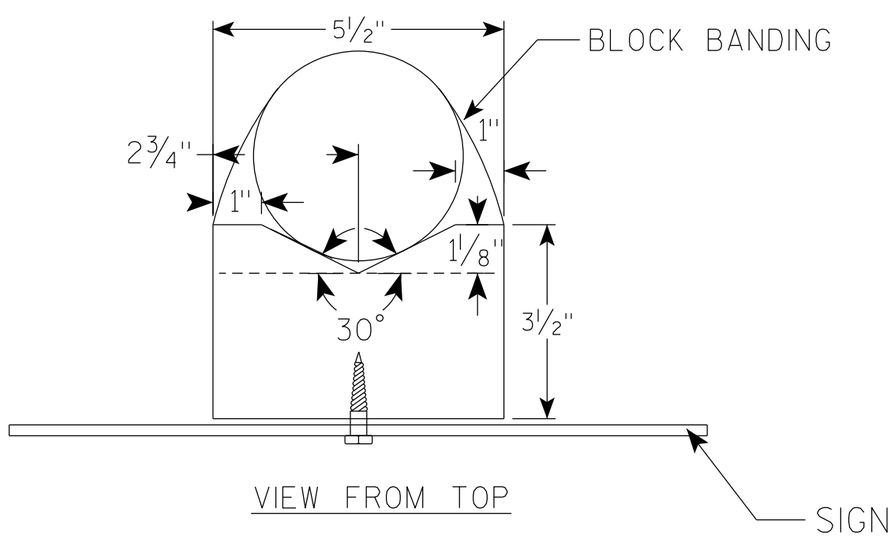

GENERAL NOTES

1. WOOD 4"X6" POST MATERIAL SHALL CONFORM TO 507.2.2 OF THE WisDOT STANDARD SPECIFICATIONS
2. BLOCK BANDING AND CLIPS SHALL BE STAINLESS STEEL, 3/4" WIDTH AND 0.025" THICKNESS
3. SIGNS 3' OR GREATER IN HEIGHT SHALL UTILIZE 3 BLOCK BANDS. SIGNS UNDER 3' IN HEIGHT SHALL UTILIZE 2 BLOCK BANDS
4. ACTUAL NUMBER OF FASTENERS PER SIGN VARIES WITH THE SIGN AREA, BUT NORNALLY THERE ARE TWO. FOR SIGNS GREATER THAN 9 S.F. 3 FASTENERS SHALL BE USED.
5. ALL SIGN MOUNTING BOLTS AND WASHERS SHALL BE EITHER:
   a. Hot dip or mechanically galvanized in accordance with ASTM Designation: A 153, Class D
   b. Electro-galvanized in accordance with ASTM Designation : B 633, TYPE III, SC 3
6. ALL BOLTS SHALL HAVE HEXAGONAL HEADS.
7. STEEL WASHERS SHALL BE 1 1/4" O.D. X 3/8" I.D. X 1/16"
8. NYLON WASHERS SHALL BE 1 1/4" O.D. X 3/8" I.D. X .080 FOR TYPE H OR TYPE F FACE SIGN

✳ LAG BOLTS SHALL BE 3/8" X 2 1/2"

BLOCK BANDING DETAIL
(V-BLOCK OPTION)

WISCONSIN DEPT OF TRANSPORTATION

APPROVED Matthew R Rauch
For State Traffic Engineer

DATE 6/10/19 PLATE NO. A5-10.2

PROJECT NO:				SHEET NO: 105	E

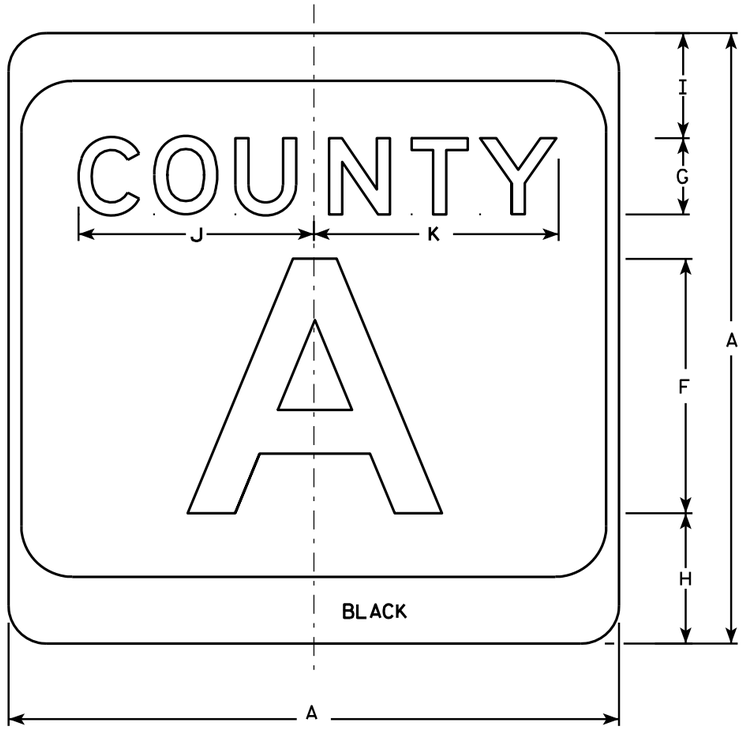

M1-5A

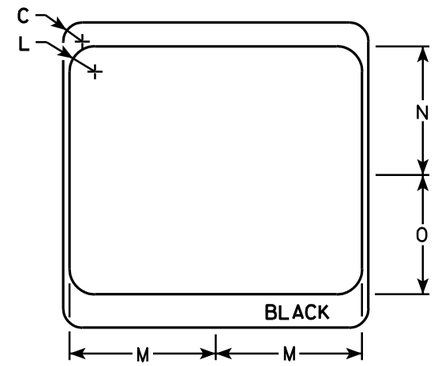

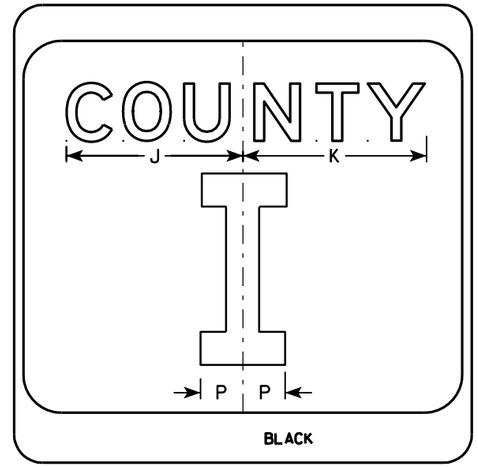

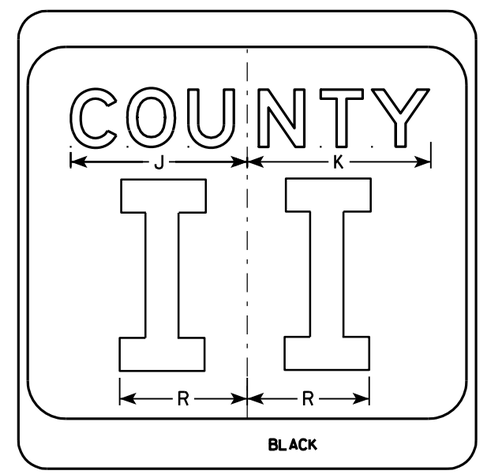

NOTES

1. Sign is Type II - see Note 7 - reference WIS DOT Standard Specification for HIGHWAY and STRUCTURE CONSTRUCTION latest edition.
2. Color:
   Background - White & Black - See Note 7
   Message - Black
3. Message Series - see Note 5
4. Corners may be square or rounded when base material is plywood but borders shall be rounded as shown. When base material is metal, the corners and borders shall be rounded.
5. Message Series E for 1 letter.
   Message Series D for 2 letters unless message is too big then Series C.
   Message Series C for 3 letters unless message is too big then Series B.
6. Substitute appropriate letters & optically center to achieve proper balance.
7. Permanent Signs
   Background - Type H Reflective
   Detour or temporary Signs
   Background - Reflective

SIZE	A	B	C	D	E	F	G	H	I	J	K	L	M	N	O	P	Q	R	S	T	U	V	W	X	Y	Z	Area sq. ft.
1																											
2	24		1 1/2			10	3	5 1/8	4 1/8	9 1/4	9 5/8	2	11 1/2	10 1/8	9 3/8	2 1/4		6 5/8									4.0
3	36		2 1/4			16	4	7 5/8	5 5/8	12 1/4	12 7/8	3	17 1/8	15 1/4	14	3 3/8		10									9.0
4	36		2 1/4			16	4	7 5/8	5 5/8	12 1/4	12 7/8	3	17 1/8	15 1/4	14	3 3/8		10									9.0
5	36		2 1/4			16	4	7 5/8	5 5/8	12 1/4	12 7/8	3	17 1/8	15 1/4	14	3 3/8		10									9.0

CTH MARKER
M1-5A FOR ASSEMBLIES

WISCONSIN DEPT OF TRANSPORTATION

APPROVED Matthew R Rauch
for State Traffic Engineer

DATE 9/27/11 PLATE NO. M1-5A.8

PROJECT NO: | HWY: | COUNTY: | SHEET NO: 106 | E

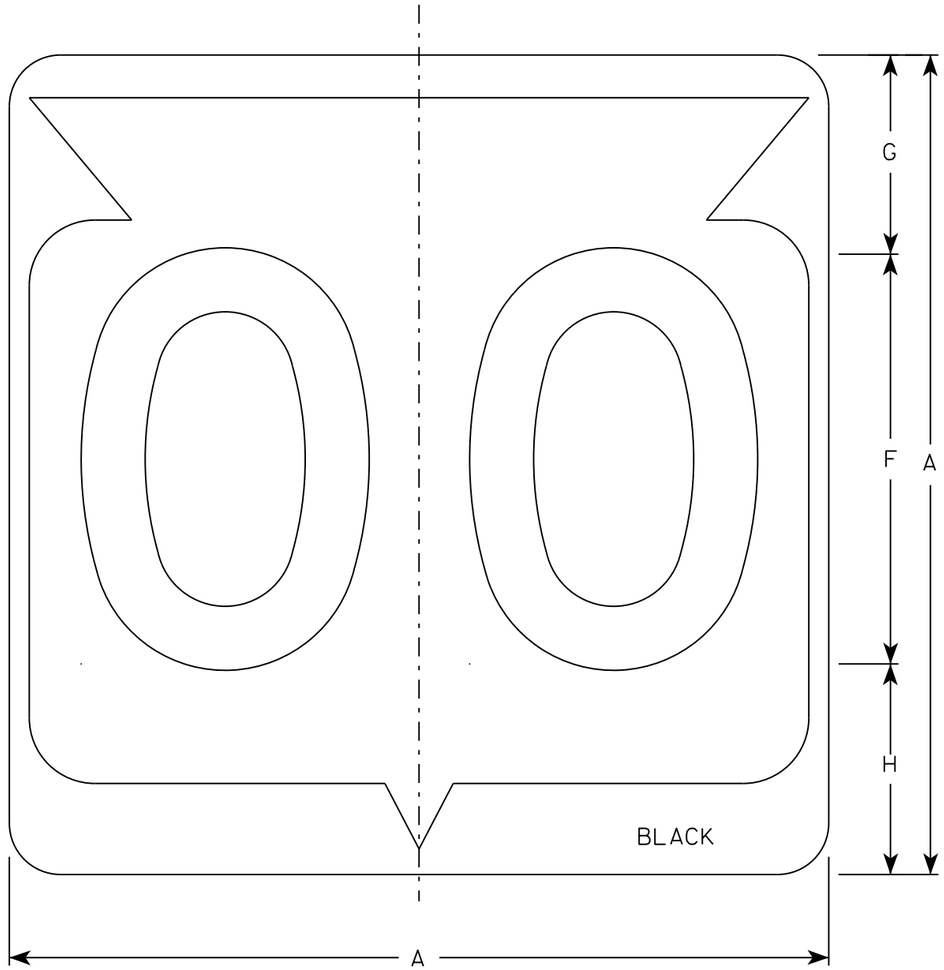

M1-6

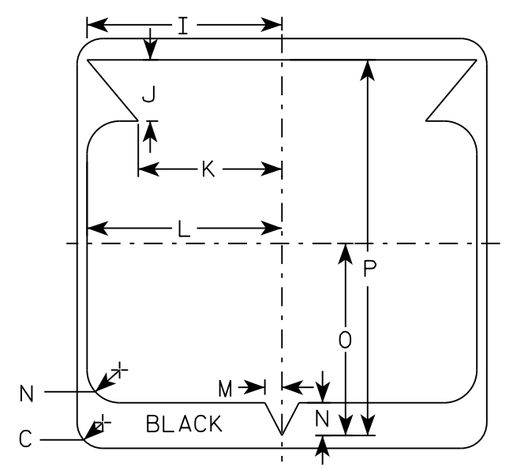

NOTES

1. Sign is Type II - Type H Reflective
2. Color:
   Background - White
   Message - Black
3. Message Series - D except 3 number signs Series C
4. Corners may be square or rounded when base material is plywood but borders shall be rounded as shown. When base material is metal, the corners and borders shall be rounded.

SIZE	A	B	C	D	E	F	G	H	I	J	K	L	M	N	O	P	Q	R	S	T	U	V	W	X	Y	Z	Area sq. ft.
1																											
2	24		1 1/2			12	5 1/2	6 1/2	10 1/4	2 1/2	8 7/8	11 1/2	1	1 7/8	11 1/4	21 7/8											4.0
3	36		2 1/4			18	8 3/4	9 1/4	15 3/8	5 3/8	12 5/8	17 1/8	1 1/2	2 7/8	16 7/8	33											9.0
4	36		2 1/4			18	8 3/4	9 1/4	15 3/8	5 3/8	12 5/8	17 1/8	1 1/2	2 7/8	16 7/8	33											9.0
5	36		2 1/4			18	8 3/4	9 1/4	15 3/8	5 3/8	12 5/8	17 1/8	1 1/2	2 7/8	16 7/8	33											9.0

STATE ROUTE MARKER
M1-6 FOR ASSEMBLIES

WISCONSIN DEPT OF TRANSPORTATION

APPROVED Matthew R Rauch
for State Traffic Engineer

DATE 3/16/18 PLATE NO. M1-6.10

PROJECT NO: | HWY: | COUNTY: | SHEET NO: 107 | E

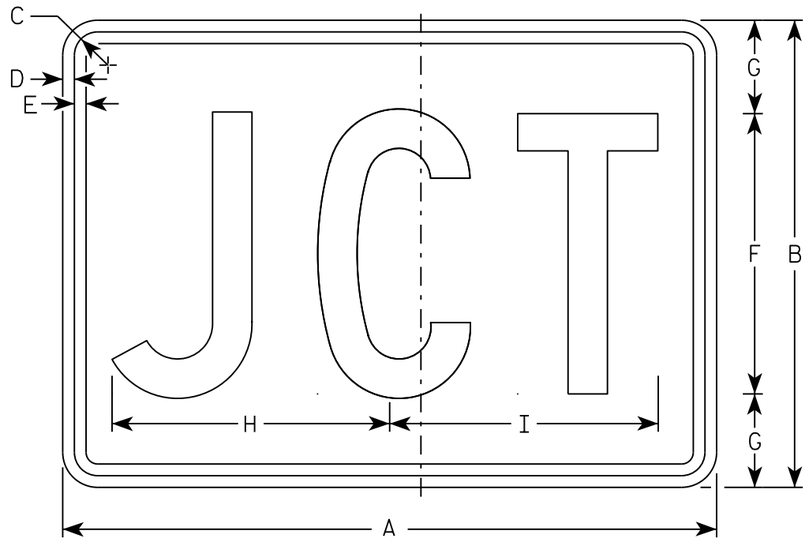

M2-1
MM2-1
MP2-1

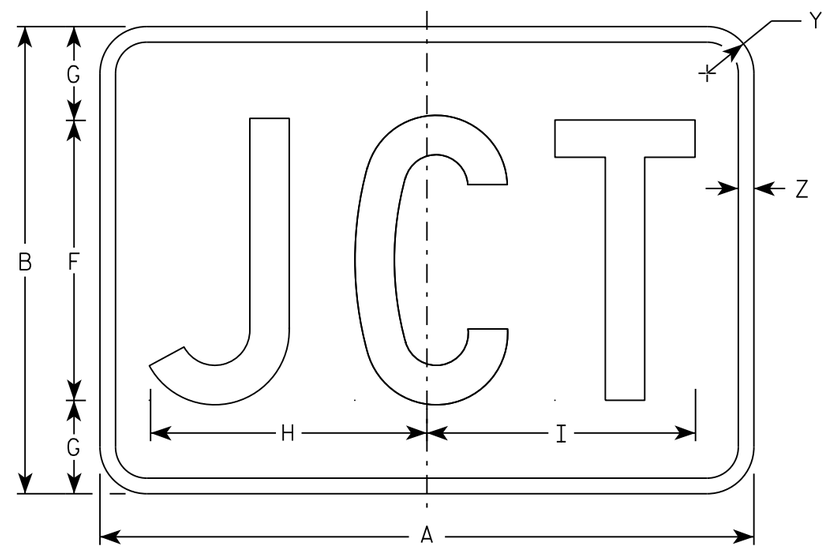

MB2-1
MK2-1
MN2-1
MR2-1

NOTES

1. Sign is Type II - Type H
2. Color:
   Background - See note 5
   Message - See note 5
3. Message Series - C
4. Corners may be square or rounded when base material is plywood but borders shall be rounded as shown. When base material is metal, the corners and borders shall be rounded.
5. M2-1 Background - White
   Message - Black
   MB2-1 Background - Blue
   Message - White
   MK2-1 Background - Green
   Message - White
   MM2-1 Background - White
   Message - Green
   MN2-1 Background - Brown
   Message - White
   MP2-1 Background - White
   Message - Blue
   MR2-1 Background - Brown
   Message - Yellow

SIZE	A	B	C	D	E	F	G	H	I	J	K	L	M	N	O	P	Q	R	S	T	U	V	W	X	Y	Z	Area sq. ft.
1																											
2	21	15	1 1/8	3/8	3/8	9	3	8 7/8	8 5/8																1 1/2	1/2	2.20
3	30	21	1 1/8	3/8	3/8	13	4	12 7/8	12 3/8																1 1/2	1/2	4.40
4	30	21	1 1/8	3/8	3/8	13	4	12 7/8	12 3/8																1 1/2	1/2	4.40
5	30	21	1 1/8	3/8	3/8	13	4	12 7/8	12 3/8																1 1/2	1/2	4.40

STANDARD SIGN
M2-1

WISCONSIN DEPT OF TRANSPORTATION

APPROVED Matthew R Rauch
for State Traffic Engineer

DATE 10/15/15 PLATE 108 M2-1.12

PROJECT NO: | HWY: | COUNTY: | SHEET NO: | E

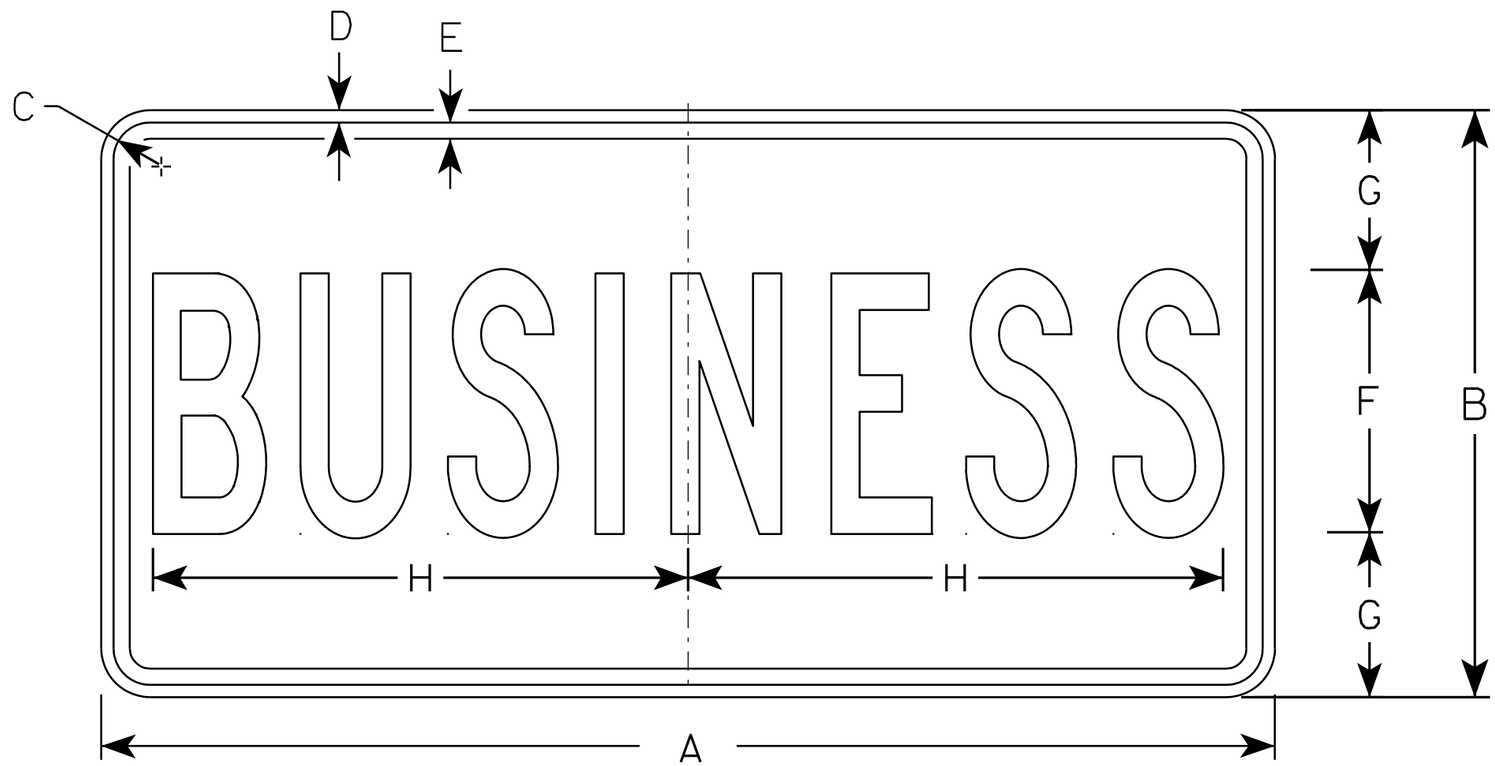

M4 - 3

NOTES

1. Sign is Type II - See Note 5 - reference WIS DOT Standard Specification for HIGHWAY and STRUCTURE CONSTRUCTION latest edition.
2. Color:
   Background - White - See Note 5
   Message - Black
3. Message Series - B
4. Corners may be square or rounded when base material is plywood but borders shall be rounded as shown. When base material is metal, the corners and borders shall be rounded.
5. Permanent Signs
   Background - Type H Reflective
   Detour or other temporary Signs
   Background - Reflective

SIZE	A	B	C	D	E	F	G	H	I	J	K	L	M	N	O	P	Q	R	S	T	U	V	W	X	Y	Z	Area sq. ft.
1																											
2	24	12	1 1/8	3/8	3/8	5	3 1/2	9 5/8																			2.0
3	36	18	1 1/8	3/8	1/2	8	5	16 3/8																			4.5
4																											
5																											

STANDARD SIGN
M4 - 3

WISCONSIN DEPT OF TRANSPORTATION

APPROVED Matthew R Rauch
for State Traffic Engineer

DATE 11/10/10 PLATE NO. M4-3.5

PROJECT NO: | HWY: | COUNTY: | SHEET NO: 109 | E

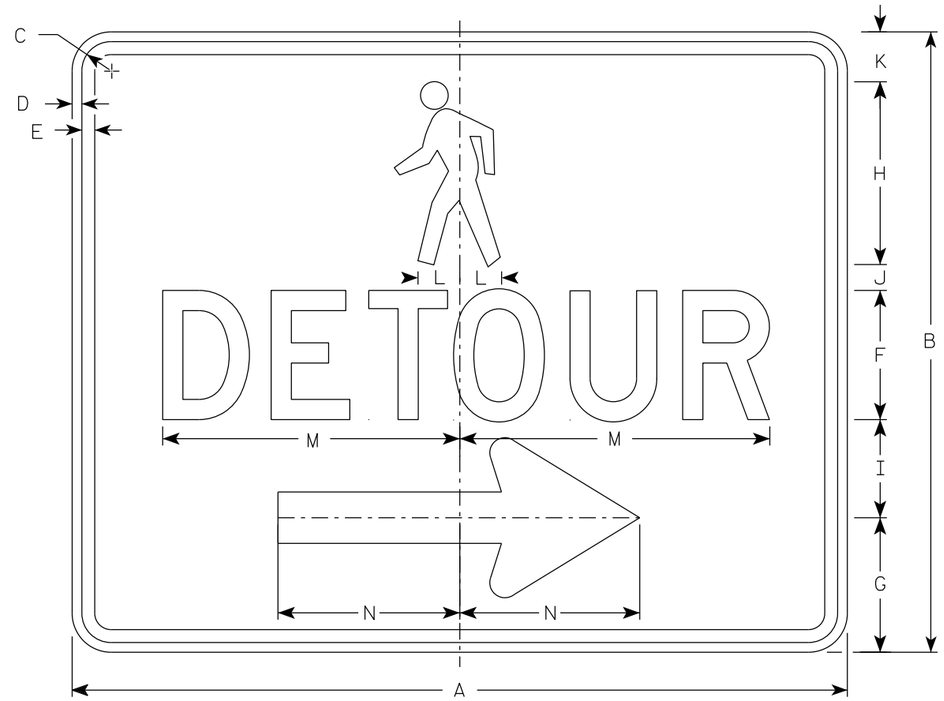

M4-9BR

NOTES

1. Sign is Type II-Type F Reflective
2. Color:
   Background - Orange
   Message - Black
3. Message Series - D
4. Corners may be square or rounded when base material is plywood but borders shall be rounded as shown. When base material is metal, the corners and borders shall be rounded.
5. M4-9BL is the same as M4-9BR except the arrow is reversed.

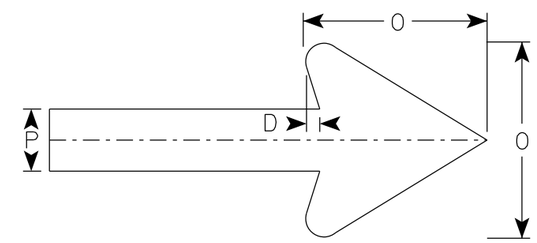

Arrow Detail

SIZE	A	B	C	D	E	F	G	H	I	J	K	L	M	N	O	P	Q	R	S	T	U	V	W	X	Y	Z	Area sq. ft.
1																											
2	30	24	1 1/8	3/8	1/2	5	5 1/4	7 1/8	3 3/4	1	1 1/8	1 5/8	11 3/4	7	6	2											5.00
3																											
4																											
5																											

STANDARD SIGN
M4-9B L&R

WISCONSIN DEPT OF TRANSPORTATION

APPROVED Matthew R Rauch
for State Traffic Engineer

DATE 7/1/19 PLATE NO. M4-9B.2

PROJECT NO: | HWY: | COUNTY: | SHEET NO: 110 | E

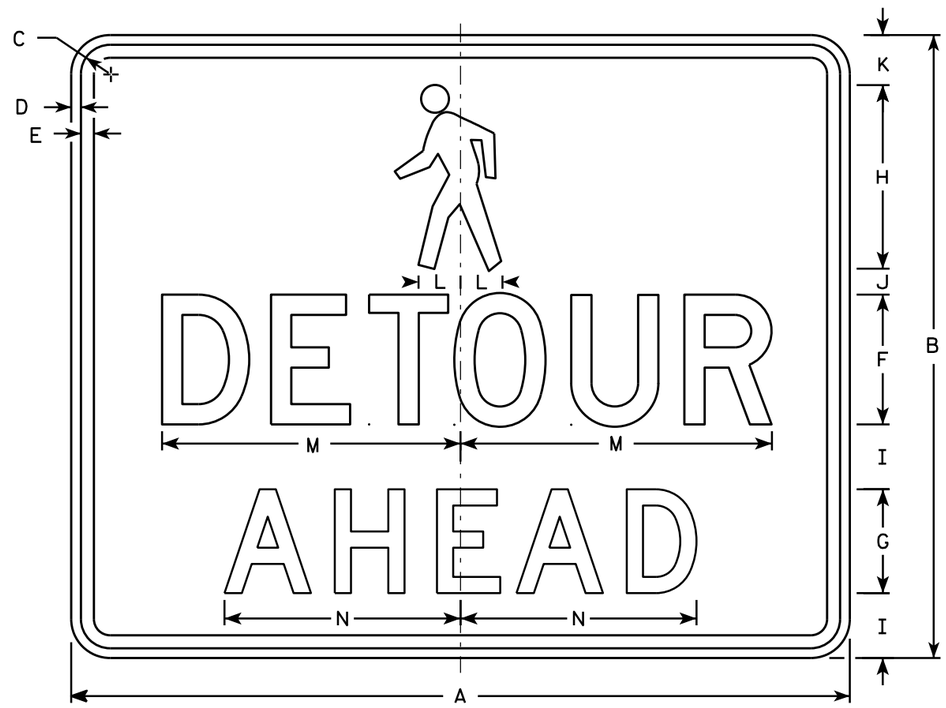

M4-9BA

NOTES

1. Sign is Type II - Type F Reflective
2. Color:
   Background - Orange
   Message - Black
3. Message Series - D
4. Corners may be square or rounded when base material is plywood but borders shall be rounded as shown. When base material is metal, the corners and borders shall be rounded.

SIZE	A	B	C	D	E	F	G	H	I	J	K	L	M	N	O	P	Q	R	S	T	U	V	W	X	Y	Z	Area sq. ft.
1																											
2	30	24	1 1/8	3/8	1/2	5	4	7 1/8	2 1/2	1	1 7/8	1 5/8	11 3/4	9 1/8													5.0
3																											
4																											
5																											

STANDARD SIGN
M4-9BA

WISCONSIN DEPT OF TRANSPORTATION

APPROVED Matthew R Rauch
for State Traffic Engineer

DATE 3/24/16 PLATE NO M4-9BA.1

PROJECT NO: | HWY: | COUNTY: | SHEET NO: | E

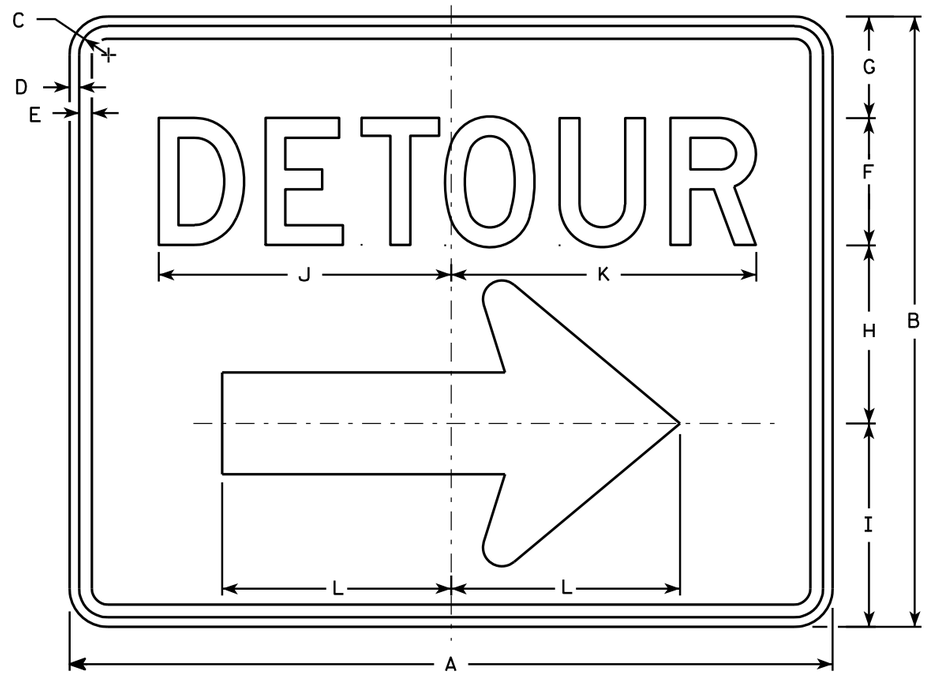

M4-9R

NOTES

1. Sign is Type II - Type F Reflective - reference WIS DOT Standard Specification for HIGHWAY and STRUCTURE CONSTRUCTION latest edition.
2. Color:
   Background - Orange
   Message - Black
3. Message Series - D
4. Corners may be square or rounded when base material is plywood but borders shall be rounded as shown. When base material is metal, the corners and borders shall be rounded.
5. M4-9L is the same as M4-9R except the arrow is reversed.

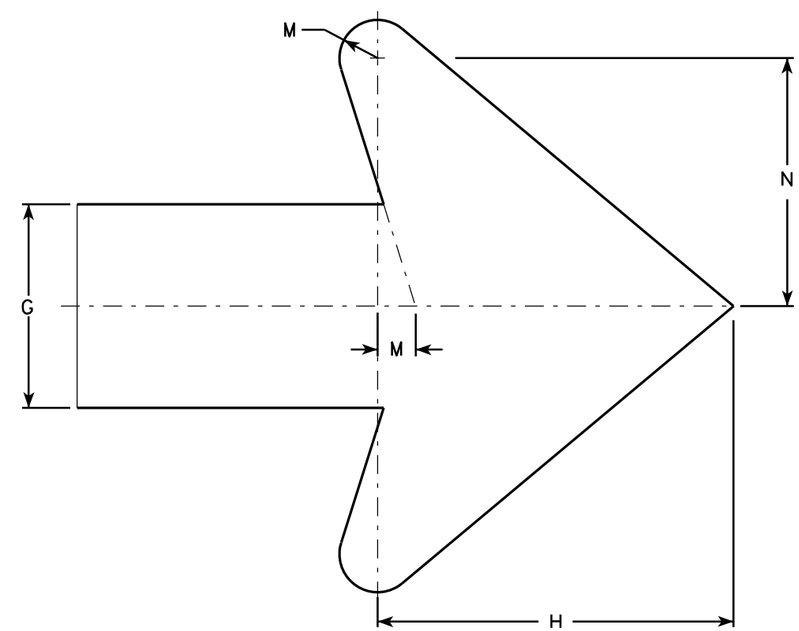

Arrow Detail

SIZE	A	B	C	D	E	F	G	H	I	J	K	L	M	N	O	P	Q	R	S	T	U	V	W	X	Y	Z	Area sq. ft.
1																											
2	30	24	1 1/8	3/8	1/2	5	4	7	8	11 1/2	12	9	3/4	4 7/8													5.00
3	30	24	1 1/8	3/8	1/2	5	4	7	8	11 1/2	12	9	3/4	4 7/8													5.00
4	48	36	1 3/8	1/2	5/8	8	6	10 1/2	11 5/8	20 5/8	20 1/2	13 1/4	1 1/8	6 7/8													12.0
5	48	36	1 3/8	1/2	5/8	8	6	10 1/2	11 5/8	20 5/8	20 1/2	13 1/4	1 1/8	6 7/8													12.0

STANDARD SIGN
M4-9 R & L

WISCONSIN DEPT OF TRANSPORTATION

APPROVED Matthew R Rauch
for State Traffic Engineer

DATE 3/9/11 PLATE NO. M4-9R.4

PROJECT NO: | HWY: | COUNTY: | SHEET NO: 112 | E

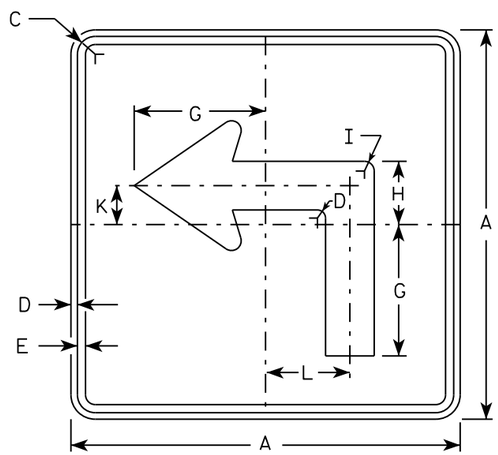

M5-1L
MM5-1L
MO5-1L
MP5-1L

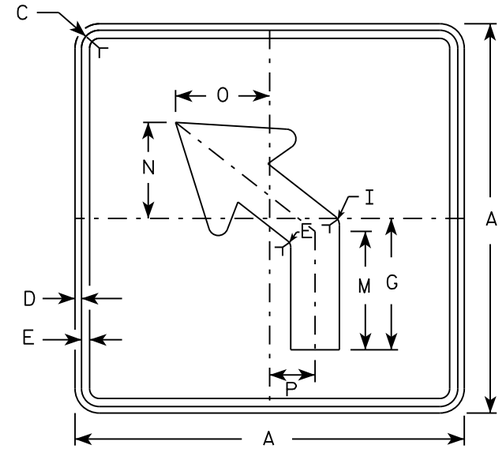

M5-2L
MM5-2L
MO5-2L
MP5-2L

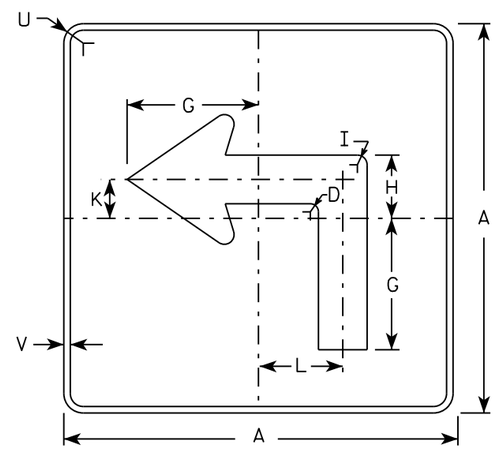

MB5-1L
MK5-1L
MN5-1L
MR5-1L

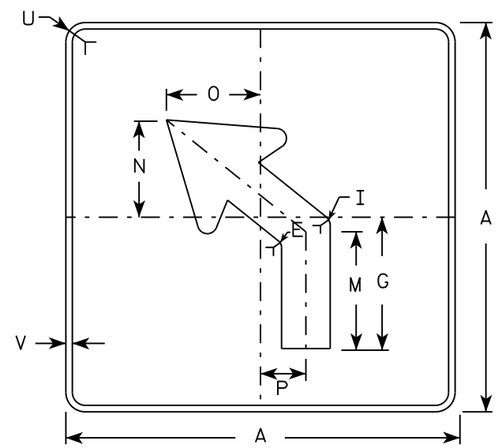

MB5-2L
MK5-2L
MN5-2L
MR5-2L

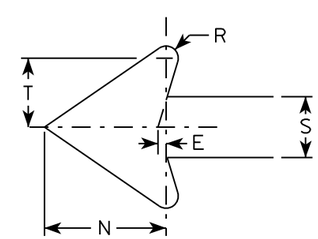

NOTES

1. Signs are Type II - Type H reflective except as shown
2. Color:
   Background - See note 4
   Message - See note 4
3. Corners may be square or rounded when base material is plywood but borders shall be rounded as shown. When base material is metal, the corners and borders shall be rounded.
4. M5-1 and M5-2 Background - White
   Message - Black
   MB5-1 and MB5-2 Background - Blue
   Message - White
   MK5-1 and MK5-2 Background - Green
   Message - White
   MM5-1 and MM5-2 Background - White
   Message - Green
   MN5-1 and MN5-2 Background - Brown
   Message - White
   MO5-1 and MO5-2 Background - Orange - Type F Reflective
   Message - Black
   MP5-1 and MP5-2 Background - White - Type H Reflective
   Message - Blue
   MR5-1 and MR5-2 Background - Brown
   Message - Yellow
5. M5-1R same as M5-1L except arrow points right.
6. M5-2R same as M5-2L except arrow tilts right.

SIZE	A	B	C	D	E	F	G	H	I	J	K	L	M	N	O	P	Q	R	S	T	U	V	W	X	Y	Z	Area sq. ft.
1																											
2	21		1 1/8	3/8	3/8		7	3 3/8	5/8		2 1/8	4 1/2	6 3/8	5 1/4	5	2 1/2		1/2	2 5/8	3	1 1/2	1/2					3.06
3	30		1 3/8	1/2	5/8		10 1/8	4 7/8	7/8		3	6 1/2	9 1/8	7 1/2	7 1/4	3 1/2		3/4	3 3/4	4 1/4	1 7/8	1/2					6.25
4	30		1 3/8	1/2	5/8		10 1/8	4 7/8	7/8		3	6 1/2	9 1/8	7 1/2	7 1/4	3 1/2		3/4	3 3/4	4 1/4	1 7/8	1/2					6.25
5	30		1 3/8	1/2	5/8		10 1/8	4 7/8	7/8		3	6 1/2	9 1/8	7 1/2	7 1/4	3 1/2		3/4	3 3/4	4 1/4	1 7/8	1/2					6.25

STANDARD SIGN
M5-1 & M5-2

WISCONSIN DEPT OF TRANSPORTATION

APPROVED Matthew R Rauch
for State Traffic Engineer

DATE 10/15/15 PLATE NO. M5-1.13

PROJECT NO:	HWY:	COUNTY:		SHEET NO:	E

FILE NAME : C:\CAEfiles\Projects\tr stdplate\M51.DGN PLOT DATE : 01-DEC-2015 18:07 PLOT BY : $$ plotuser $$ PLOT NAME : PLOT SCALE : 11.675051:1.000000

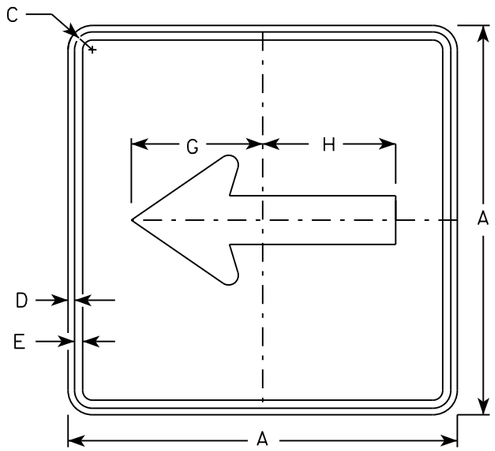

M6-1
MM6-1
MO6-1
MP6-1

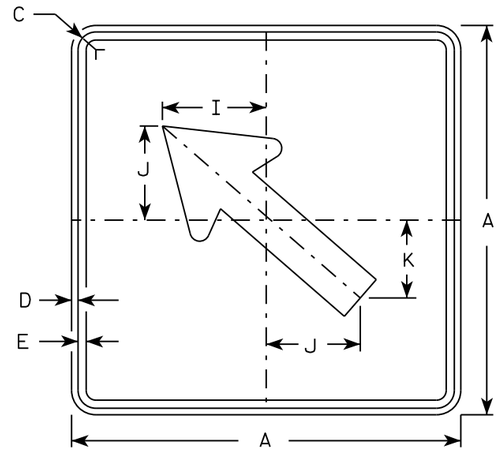

M6-2
MM6-2
MO6-2
MP6-2

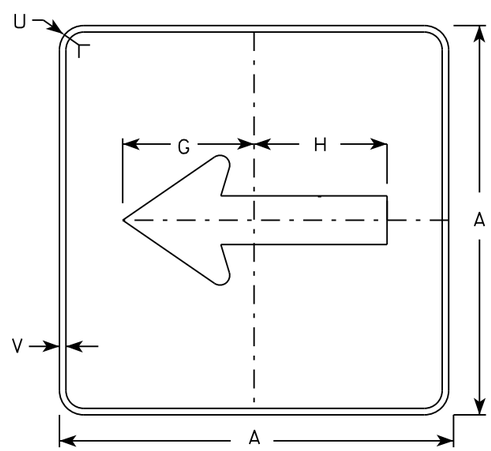

MB6-1
MK6-1
MN6-1
MR6-1

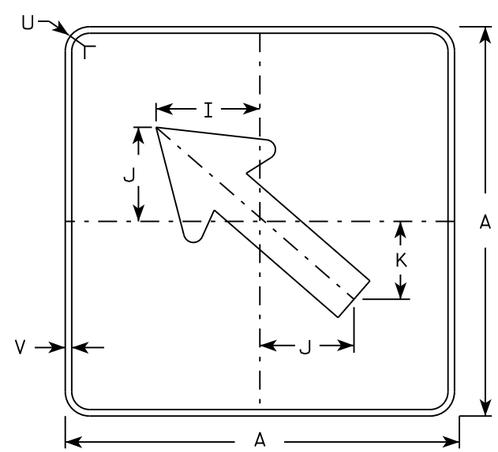

MB6-2
MK6-2
MN6-2
MR6-2

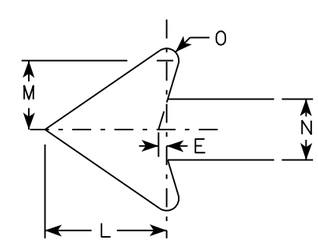

NOTES

1. Signs are Type II - Type H except as Shown
2. Color:
   Background - See note 4
   Message - See note 4
3. Corners may be square or rounded when base material is plywood but borders shall be rounded as shown. When base material is metal, the corners and borders shall be rounded.
4. M6-1 and M6-2 Background - White
   Message - Black
   MB6-1 and MB6-2 Background - Blue
   Message - White
   MK6-1 and MK6-2 Background - Green
   Message - White
   MM6-1 and MM6-2 Background - White
   Message - Green
   MN6-1 and MN6-2 Background - Brown
   Message - White
   MO6-1 and MO6-2 Background - Orange - Type F Reflective
   Message - Black
   MP6-1 and MP6-2 Background - White
   Message - Blue
   MR6-1 and MR6-2 Background - Brown
   Message - Yellow

SIZE	A	B	C	D	E	F	G	H	I	J	K	L	M	N	O	P	Q	R	S	T	U	V	W	X	Y	Z	Area sq. ft.
1																											
2	21		1 1/8	3/8	3/8		7 1/2	7 1/8	5 5/8	5	4 1/4	5 1/4	3	2 5/8	1/2						1 1/2	1/2					3.06
3	30		1 3/8	1/2	5/8		10 3/4	10 1/4	8	7 1/4	6	7 1/2	4 1/4	3 3/4	3/4						1 7/8	1/2					6.25
4	30		1 3/8	1/2	5/8		10 3/4	10 1/4	8	7 1/4	6	7 1/2	4 1/4	3 3/4	3/4						1 7/8	1/2					6.25
5	30		1 3/8	1/2	5/8		10 3/4	10 1/4	8	7 1/4	6	7 1/2	4 1/4	3 3/4	3/4						1 7/8	1/2					6.25

STANDARD SIGN
M6-1 & M6-2
SERIES

WISCONSIN DEPT OF TRANSPORTATION

APPROVED Matthew R Rauch
for State Traffic Engineer

DATE 10/15/15 PLATE 114 M6-1.15

PROJECT NO: | HWY: | COUNTY: | SHEET NO: | E

FILE NAME : C:\CAEfiles\Projects\tr_stdplate\M61.DGN PLOT DATE : 01-DEC-2015 17:57 PLOT BY : $$ plotuser $$ PLOT NAME : PLOT SCALE : 11.675051:1.000000

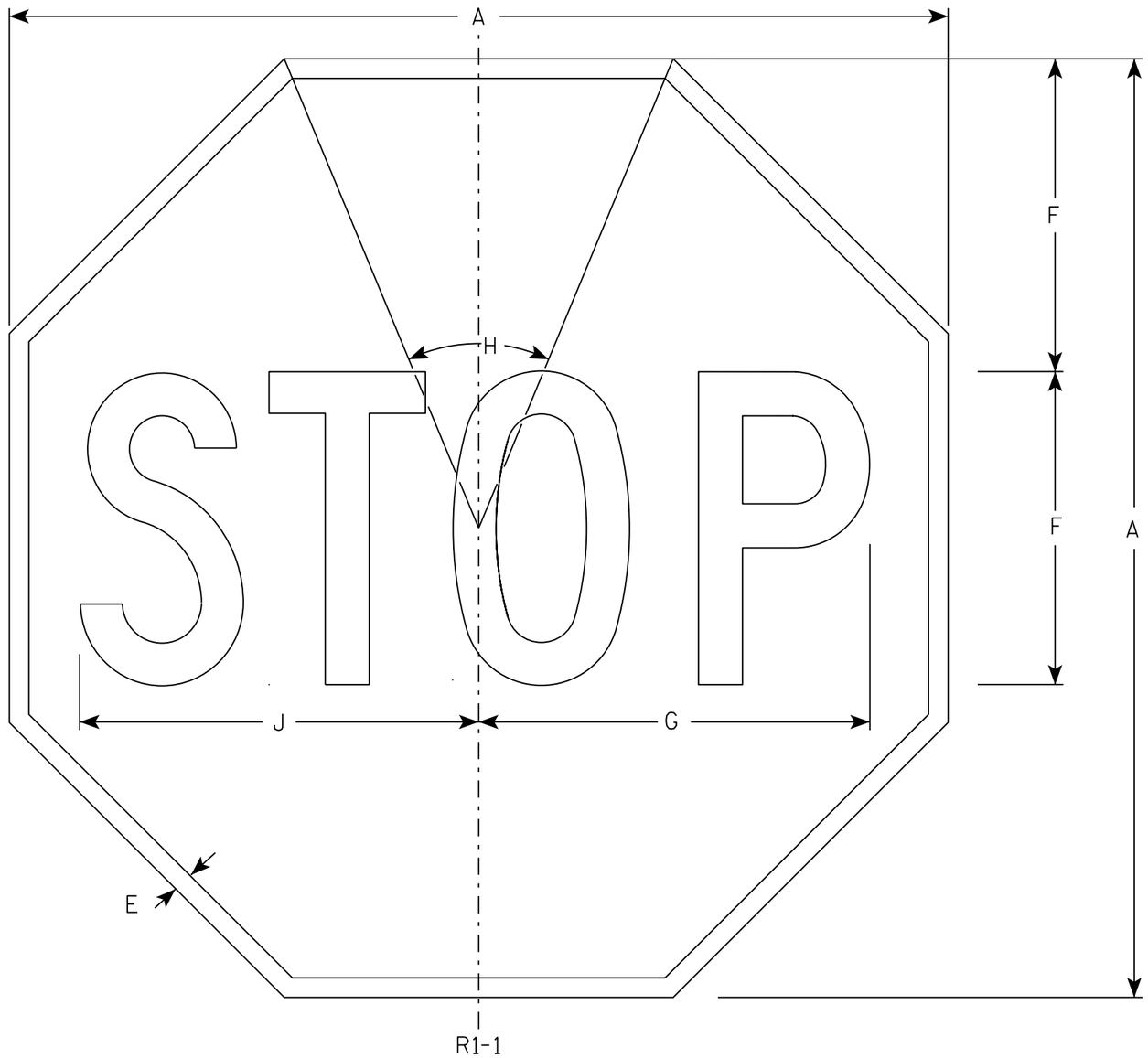

NOTES

1. Sign is Type II - Type H Reflective - reference WIS DOT Standard Specification for HIGHWAY and STRUCTURE CONSTRUCTION latest edition.
2. Color:
   Background - Red
   Message - White
3. Message Series - C

SIZE	A	B	C	D	E	F	G	H	I	J	K	L	M	N	O	P	Q	R	S	T	U	V	W	X	Y	Z	Area sq. ft.
1	30				5/8	10	12 1/2	45°		12 3/4																	5.18
2S	30				5/8	10	12 1/2	45°		12 3/4																	5.18
2M	36				3/4	12	15	45°		15 3/8																	7.46
3	36				3/4	12	15	45°		15 3/8																	7.46
4	48				1	16	20	45°		20 1/2																	13.25
5	48				1	16	20	45°		20 1/2																	13.25
6	18				3/8	6	7 3/4	45°		7 3/4																	1.86
7	12				1/4	4	5	45°		5 1/8																	0.78

STANDARD SIGN
R1-1

WISCONSIN DEPT OF TRANSPORTATION

APPROVED Matthew R Rauch
for State Traffic Engineer

DATE 11/12/15 PLATE NO. R1-1.13

PROJECT NO: | HWY: | COUNTY: | SHEET NO: 115 | E

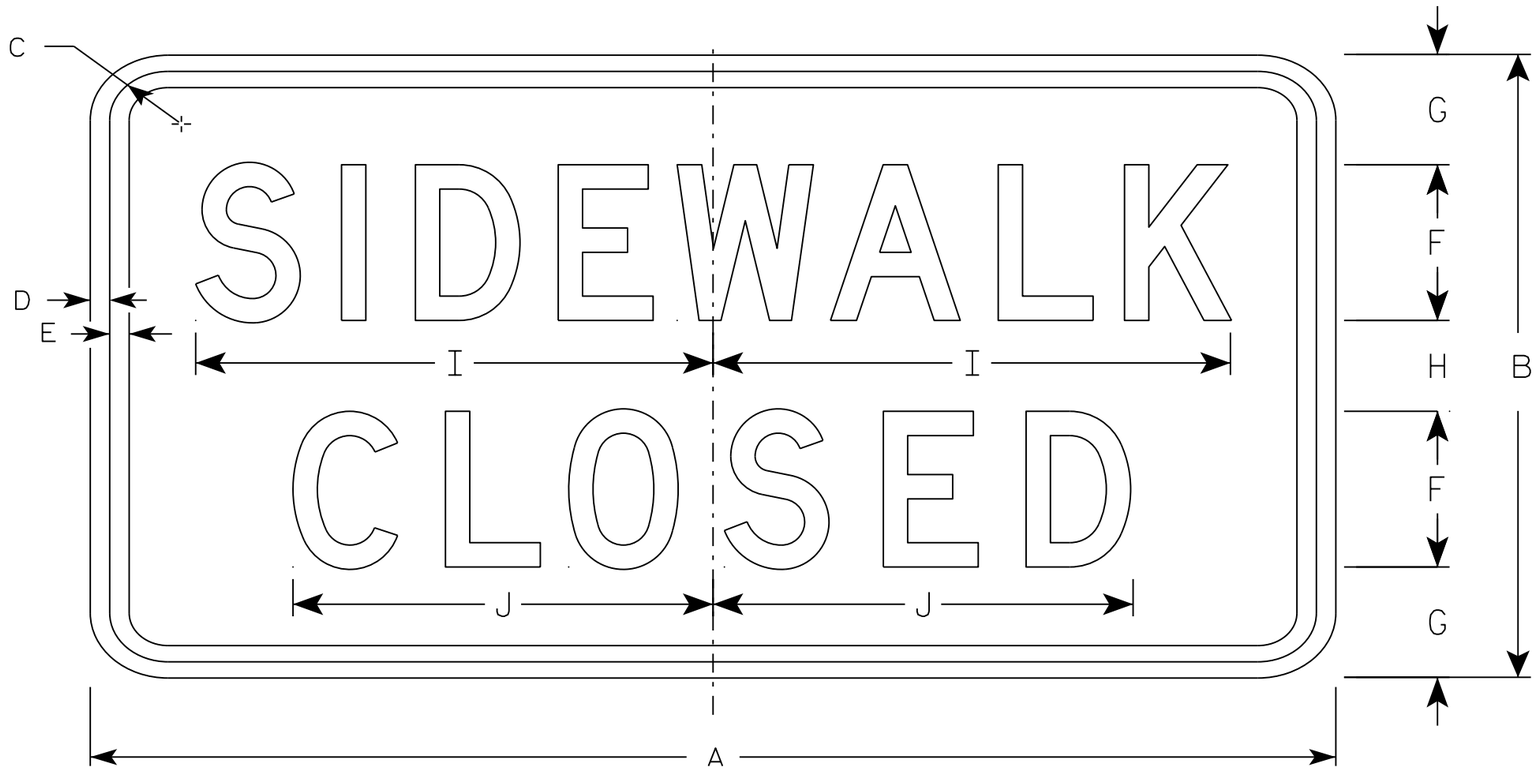

R9-9

NOTES

1. Sign is Type II - Type H Reflective - reference WIS DOT Standard Specification for HIGHWAY and STRUCTURE CONSTRUCTION latest edition.
2. Color:
   Background - White
   Message - Black
3. Message Series - C
4. Corners may be square or rounded when base material is plywood but borders shall be rounded as shown. When base material is metal, the corners and borders shall be rounded.
5. Use Size 2 for Sidewalks. Use Size 3 for Paths and Trails.

SIZE	A	B	C	D	E	F	G	H	I	J	K	L	M	N	O	P	Q	R	S	T	U	V	W	X	Y	Z	Area sq. ft.
1																											
2S	24	12	1 3/4	1/2	1/2	3	2 1/8	1 3/4	10	8 1/8																	2.0
2M	24	12	1 3/4	1/2	1/2	3	2 1/8	1 3/4	10	8 1/8																	2.0
3	30	18	1 3/4	1/2	1/2	4	3 1/2	3	12 1/2	10 1/4																	3.75
4																											
5																											

STANDARD SIGN
R9-9

WISCONSIN DEPT OF TRANSPORTATION

APPROVED Matthew R Rauch
for State Traffic Engineer

DATE 8/11/16 PLATE R9-9.6

PROJECT NO: | HWY: | COUNTY: | SHEET NO: | E

FILE NAME : C:\CAEfiles\Projects\tr stdplate\R99.DGN PLOT DATE : 11-AUG-2016 11:33 PLOT BY : $$ plotuser $$ PLOT NAME : PLOT SCALE : 2.918761:1.000000

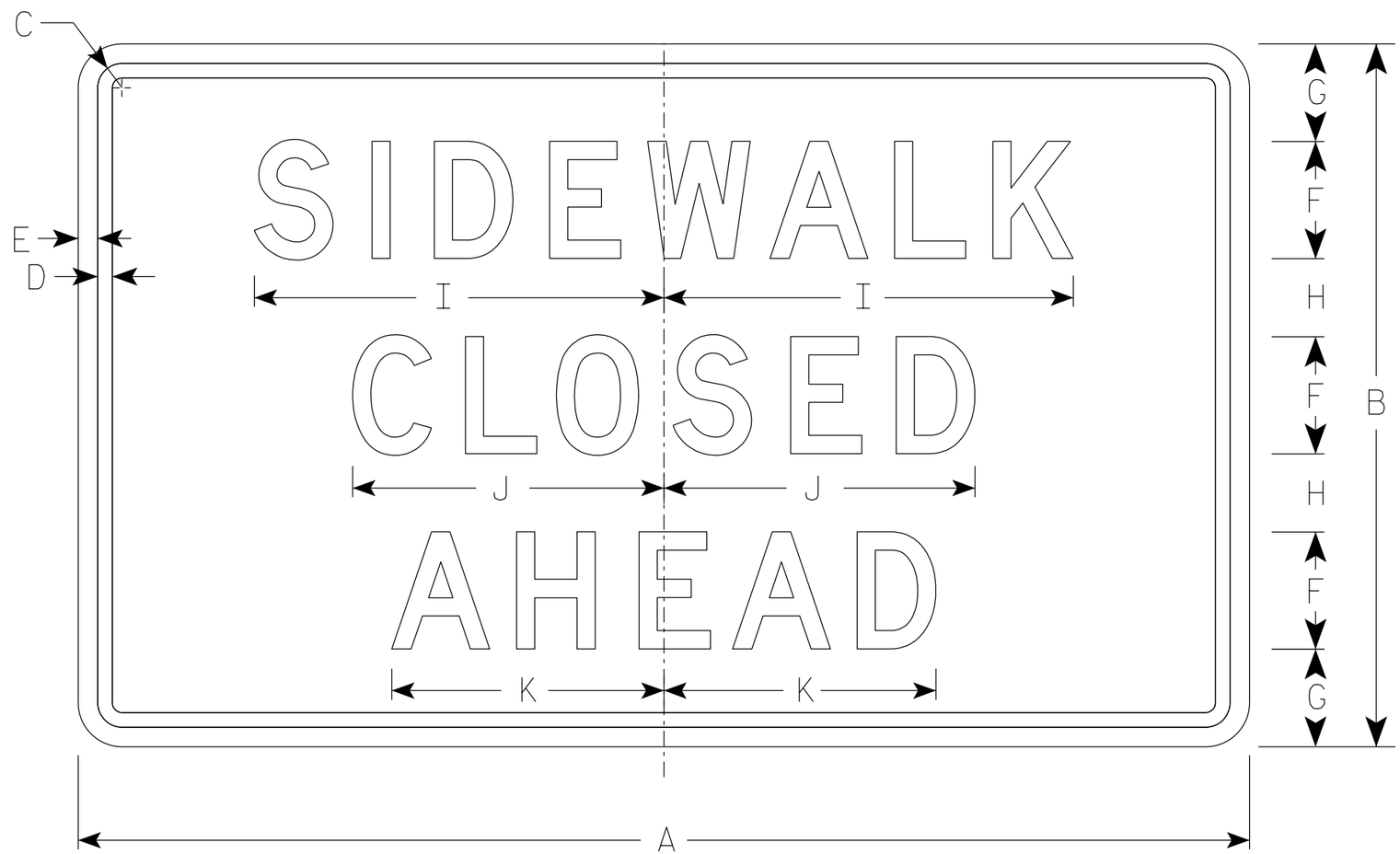

R9-9A

NOTES

1. Sign is Type II - Type H Reflective
2. Color:
   Background - White
   Message - Black
3. Message Series - D
4. Corners may be square or rounded when base material is plywood but borders shall be rounded as shown. When base material is metal, the corners and borders shall be rounded.

SIZE	A	B	C	D	E	F	G	H	I	J	K	L	M	N	O	P	Q	R	S	T	U	V	W	X	Y	Z	Area sq. ft.
1																											
2S	30	18	1 1/8	3/8	1/2	3	2 1/2	2	10 1/2	8	7																3.75
2M	30	18	1 1/8	3/8	1/2	3	2 1/2	2	10 1/2	8	7																3.75
3																											
4																											
5																											

STANDARD SIGN
R9-9A

WISCONSIN DEPT OF TRANSPORTATION

APPROVED Matthew R Rauch
for State Traffic Engineer

DATE 8/31/2020 PLATE NO. R9-9A.1

PROJECT NO: | HWY: | COUNTY: | SHEET NO: 117 | E

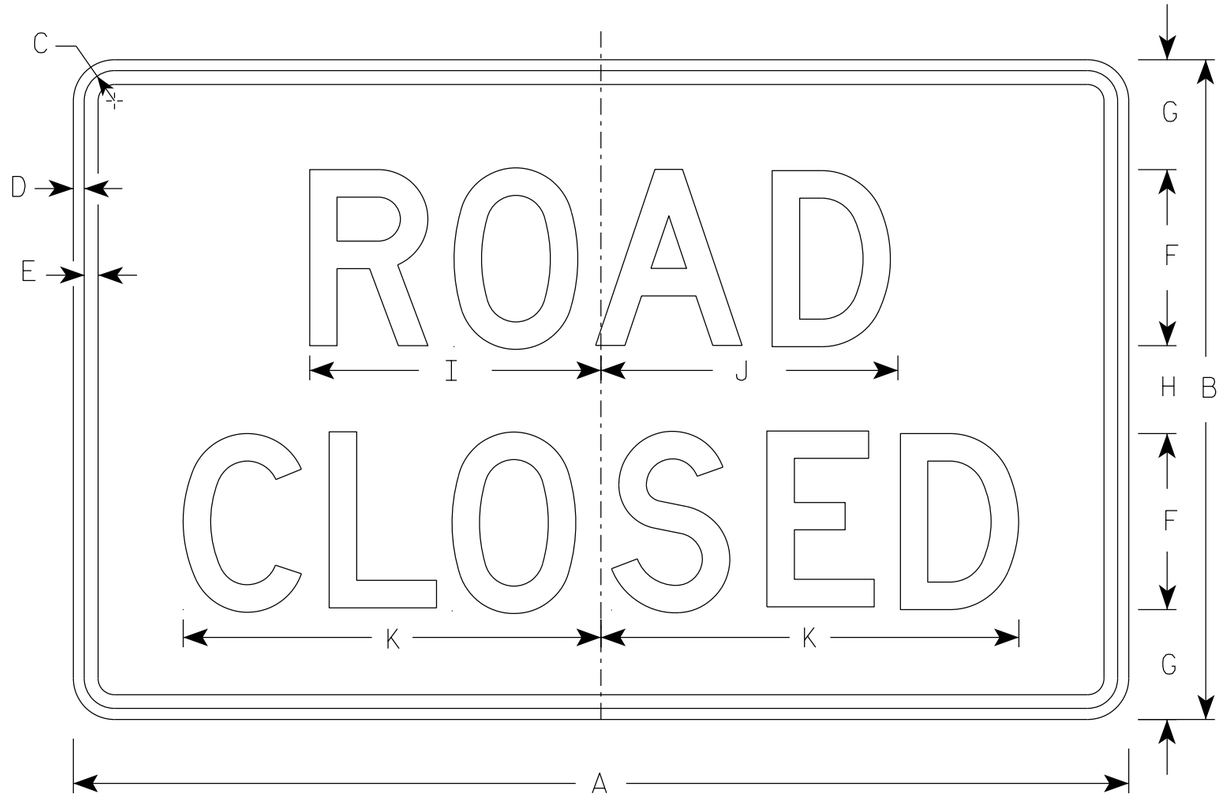

R11-2

NOTES

1. Sign is Type II - Type H Reflective
2. Color:
   Background - White
   Message - Black
3. Message Series - D
4. Corners may be square or rounded when base material is plywood but borders shall be rounded as shown. When base material is metal, the corners and borders shall be rounded.
5. Modify the message as required.

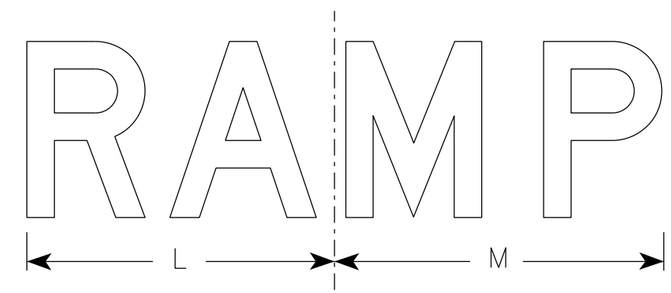

R11-2R

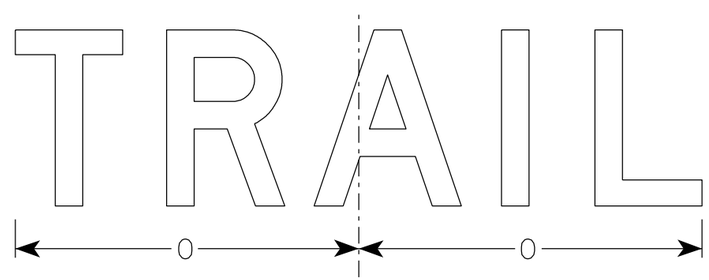

R11-2T

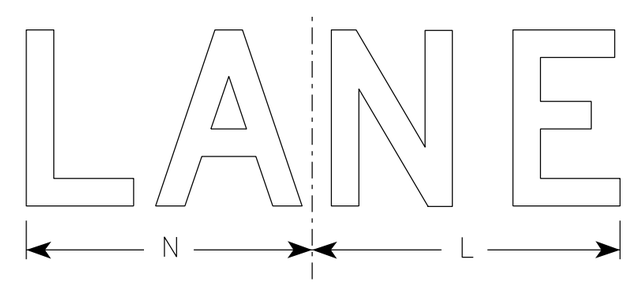

R11-2L

SIZE	A	B	C	D	E	F	G	H	I	J	K	L	M	N	O	P	Q	R	S	T	U	V	W	X	Y	Z	Area sq. ft.
1																											
2S	48	30	1 3/8	1/2	5/8	8	5	4	13 1/4	13 1/2	19	14	15	13	15 5/8												10.0
2M	48	30	1 3/8	1/2	5/8	8	5	4	13 1/4	13 1/2	19	14	15	13	15 5/8												10.0
3	48	30	1 3/8	1/2	5/8	8	5	4	13 1/4	13 1/2	19	14	15	13	15 5/8												10.0
4	48	30	1 3/8	1/2	5/8	8	5	4	13 1/4	13 1/2	19	14	15	13	15 5/8												10.0
5	48	30	1 3/8	1/2	5/8	8	5	4	13 1/4	13 1/2	19	14	15	13	15 5/8												10.0

STANDARD SIGN
R11-2

WISCONSIN DEPT OF TRANSPORTATION

APPROVED Matthew R Rauch
for State Traffic Engineer

DATE 3/29/2021 PLATE NO. R11-2.11

PROJECT NO: | HWY: | COUNTY: | SHEET NO: E

7

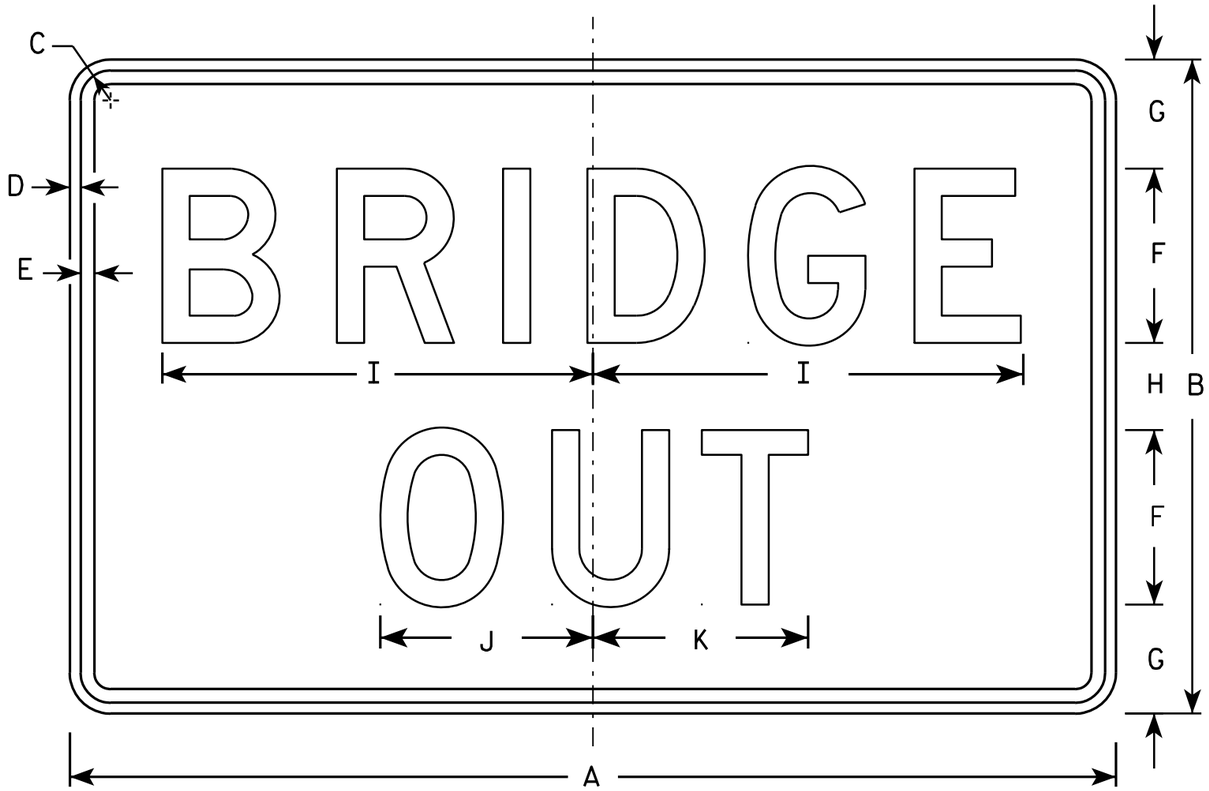

R11-2B

NOTES

1. Sign is Type II - Type H Reflective - reference WIS DOT Standard Specification for HIGHWAY and STRUCTURE CONSTRUCTION latest edition.
2. Color:
   Background - White
   Message - Black
3. Message Series - D
4. Corners may be square or rounded when base material is plywood but borders shall be rounded as shown. When base material is metal, the corners and borders shall be rounded.

SIZE	A	B	C	D	E	F	G	H	I	J	K	L	M	N	O	P	Q	R	S	T	U	V	W	X	Y	Z	Area sq. ft.
1																											
2S	48	30	1 3/8	1/2	5/8	8	5	4	19 3/4	9 3/4	9 7/8																10.0
2M	48	30	1 3/8	1/2	5/8	8	5	4	19 3/4	9 3/4	9 7/8																10.0
3	48	30	1 3/8	1/2	5/8	8	5	4	19 3/4	9 3/4	9 7/8																10.0
4	48	30	1 3/8	1/2	5/8	8	5	4	19 3/4	9 3/4	9 7/8																10.0
5	48	30	1 3/8	1/2	5/8	8	5	4	19 3/4	9 3/4	9 7/8																10.0

STANDARD SIGN
R11-2B

WISCONSIN DEPT OF TRANSPORTATION

APPROVED Matthew R Rauch
For State Traffic Engineer
DATE 4/1/11 PLATE NO. R11-2B.2

PROJECT NO:

SHEET NO: 119 E

NOTES

1. Sign is Type II - Type H Reflective
2. Color:
   Background - White
   Message - Black
3. Message Series - C
4. Corners may be square or rounded when base material is plywood but borders shall be rounded as shown. When base material is metal, the corners and borders shall be rounded.
5. Substitute appropriate numerals to nearest quarter mile and optically adjust spacing to achieve proper balance.

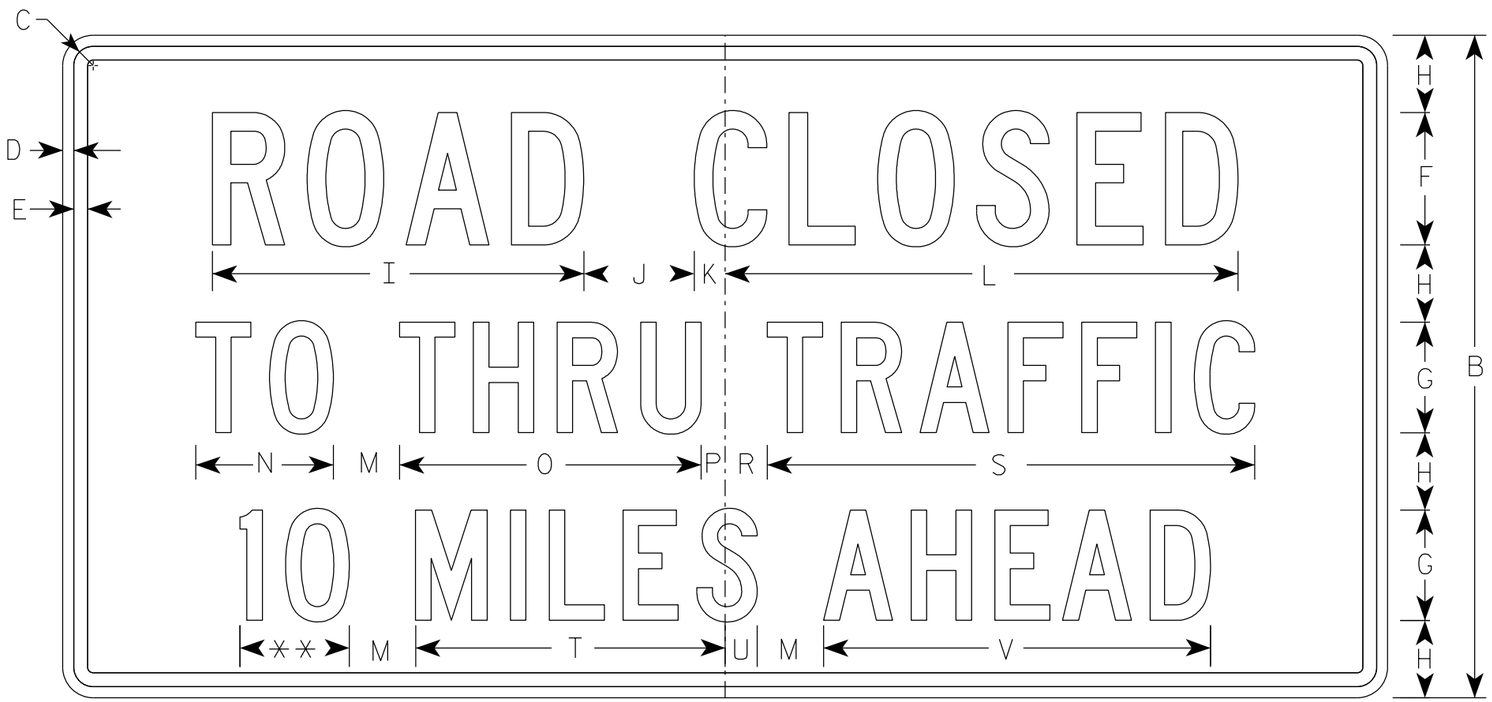

R11-3

** See Note 5

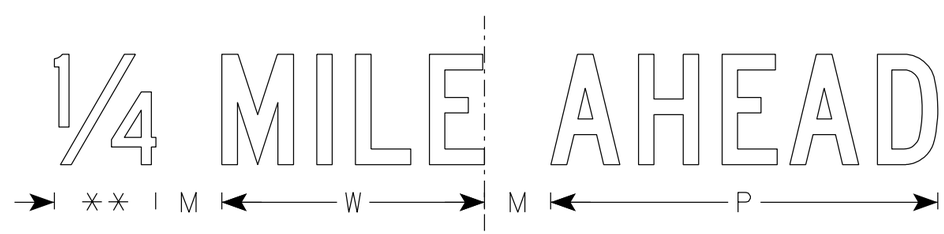

SIZE	A	B	C	D	E	F	G	H	I	J	K	L	M	N	O	P	Q	R	S	T	U	V	W	X	Y	Z	Area sq. ft.
1	36	18	1 1/4	3/8	3/8	4	3	2	11 1/4	3	1 1/8	15 3/8	2	3 3/4	8 1/4	5/8		1 3/8	13 1/4	8 3/8	7/8	10 1/2	7 1/8				4.5
2S	60	30	1 3/8	1/2	5/8	6	5	3 1/2	16 7/8	5	1 3/8	23 1/4	3	6 1/4	13 5/8	1 1/8		1 7/8	22 1/8	14	1 1/2	17 1/2	11 7/8				12.5
2M	60	30	1 3/8	1/2	5/8	6	5	3 1/2	16 7/8	5	1 3/8	23 1/4	3	6 1/4	13 5/8	1 1/8		1 7/8	22 1/8	14	1 1/2	17 1/2	11 7/8				12.5
3																											
4																											
5																											

STANDARD SIGN
R11-3

WISCONSIN DEPT OF TRANSPORTATION

APPROVED Matthew R Rauch
for State Traffic Engineer

DATE 6/14/2021 PLATE NO. R11-3.9

PROJECT NO: | HWY: | COUNTY: | SHEET NO: 120 | E

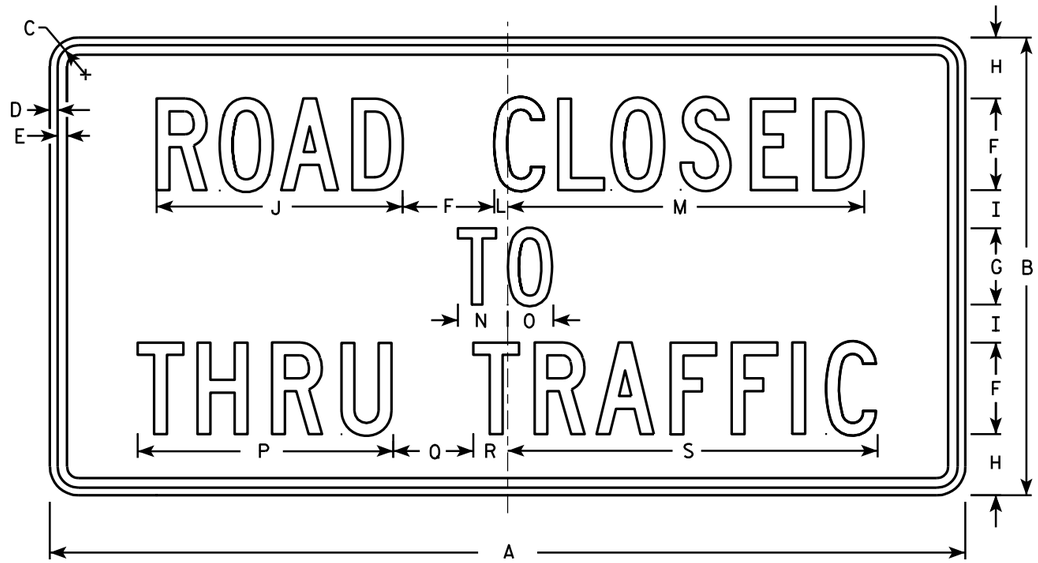

R11-4

NOTES

1. Sign is Type II - Type H Reflective - reference WIS DOT Standard Specification for HIGHWAY and STRUCTURE CONSTRUCTION latest edition.
2. Color:
   Background - White
   Message - Black
3. Message Series - C
4. Corners may be square or rounded when base material is plywood but borders shall be rounded as shown. When base material is metal, the corners and borders shall be rounded.

SIZE	A	B	C	D	E	F	G	H	I	J	K	L	M	N	O	P	Q	R	S	T	U	V	W	X	Y	Z	Area sq. ft.
1																											
2S	60	30	1 3/8	1/2	5/8	6	5	4	2 1/2	16 1/8		7/8	23 3/8	3 1/4	3	16 3/4	5 1/4	2 1/4	24 1/4								12.5
2M	60	30	1 3/8	1/2	5/8	6	5	4	2 1/2	16 1/8		7/8	23 3/8	3 1/4	3	16 3/4	5 1/4	2 1/4	24 1/4								12.5
3																											
4																											
5																											

STANDARD SIGN
R11 - 4

WISCONSIN DEPT OF TRANSPORTATION

APPROVED Matthew R Rauch for State Traffic Engineer

DATE 4/1/11 PLATE NO. R11-4.3

PROJECT NO: | HWY: | COUNTY: | SHEET NO: 121 | E

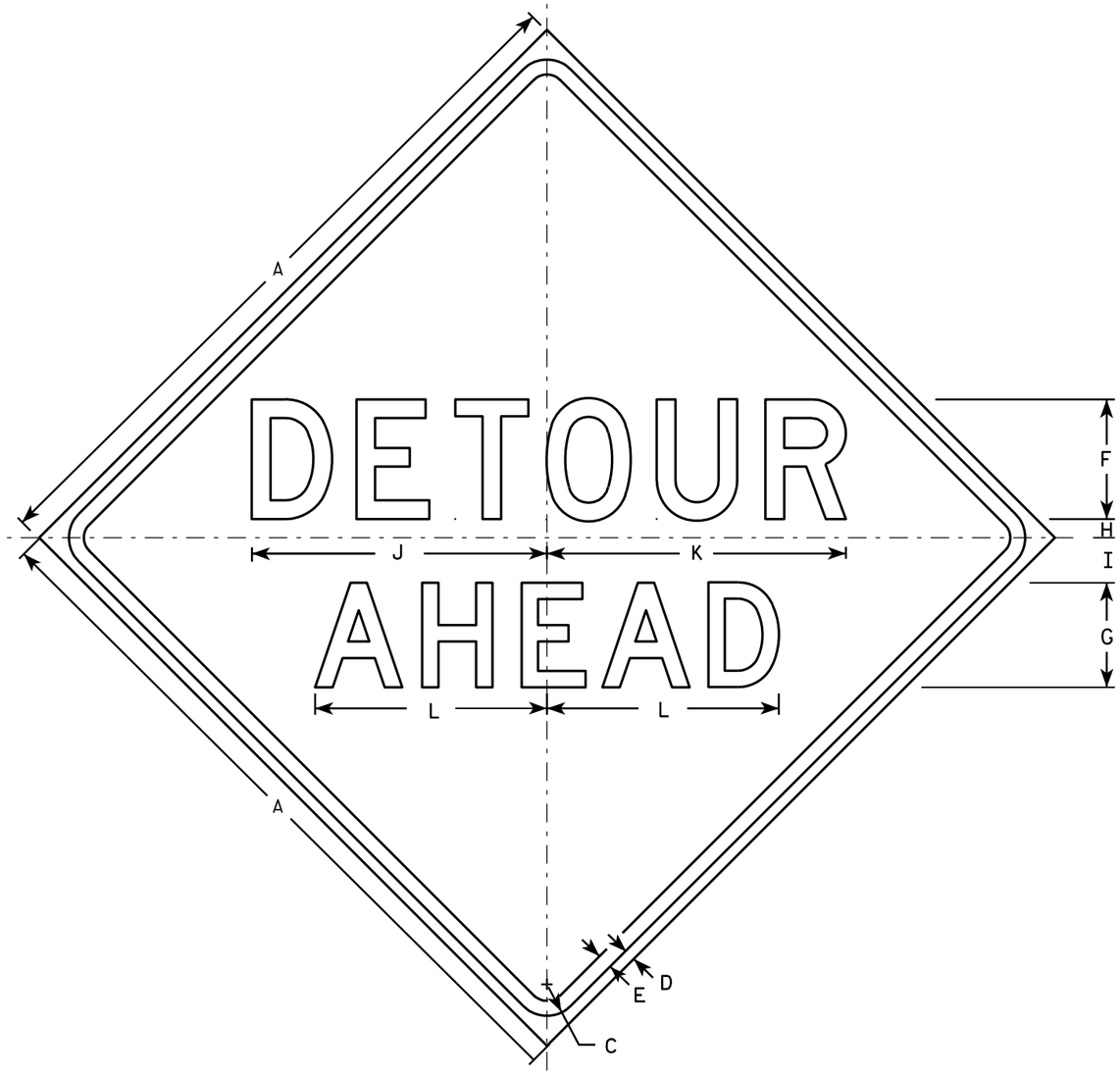

W20-2A

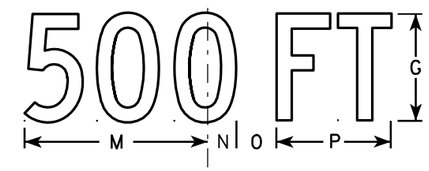

W20-2D

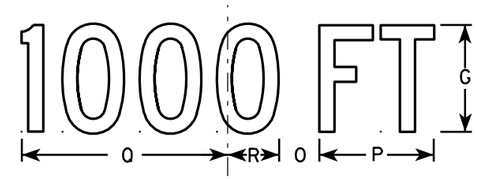

W20-2C

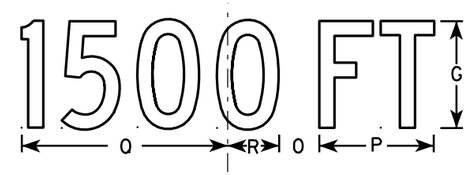

W20-2B

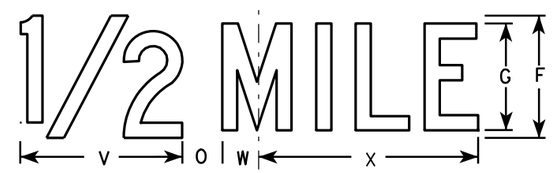

W20-2G

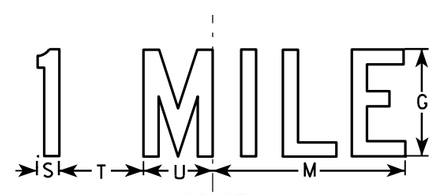

W20-2F

NOTES

1. Sign is Type II - Type F Reflective - reference WIS DOT Standard Specification for HIGHWAY and STRUCTURE CONSTRUCTION latest edition.
2. Color:
   Background - Orange
   Message - Black
3. Message Series - See note 5
4. Corners may be square or rounded when base material is plywood but borders shall be rounded as shown. When base material is metal, the corners and borders shall be rounded.
5. Line 1 is Series D.
   Line 2 is Series D for AHEAD and Series C for all other distances.

SIZE	A	B	C	D	E	F	G	H	I	J	K	L	M	N	O	P	Q	R	S	T	U	V	W	X	Y	Z	Area sq. ft.
1	36		1 5/8	5/8	3/4	6	5	1	2 1/4	14 3/4	15	11 5/8	9	1 3/8	1 7/8	5 5/8	10 1/8	2 1/2	1 1/8	4 1/2	3 1/2	8	1 3/4	10 3/4			9.0
2S	48		2 1/4	3/4	1	8	7	1 1/4	3	19 3/4	20	15 1/2	12	1 7/8	2 5/8	7 1/2	13 1/2	3 3/8	1 1/2	6	4 5/8	10 5/8	2 3/8	14 3/8			16.0
2M	48		2 1/4	3/4	1	8	7	1 1/4	3	19 3/4	20	15 1/2	12	1 7/8	2 5/8	7 1/2	13 1/2	3 3/8	1 1/2	6	4 5/8	10 5/8	2 3/8	14 3/8			16.0
3	48		2 1/4	3/4	1	8	7	1 1/4	3	19 3/4	20	15 1/2	12	1 7/8	2 5/8	7 1/2	13 1/2	3 3/8	1 1/2	6	4 5/8	10 5/8	2 3/8	14 3/8			16.0
4	48		2 1/4	3/4	1	8	7	1 1/4	3	19 3/4	20	15 1/2	12	1 7/8	2 5/8	7 1/2	13 1/2	3 3/8	1 1/2	6	4 5/8	10 5/8	2 3/8	14 3/8			16.0
5	48		2 1/4	3/4	1	8	7	1 1/4	3	19 3/4	20	15 1/2	12	1 7/8	2 5/8	7 1/2	13 1/2	3 3/8	1 1/2	6	4 5/8	10 5/8	2 3/8	14 3/8			16.0

STANDARD SIGN
W20-2A,B,C,D,F & G

WISCONSIN DEPT OF TRANSPORTATION

APPROVED Matthew R Rauch
for State Traffic Engineer
DATE 3/18/11 PLATE NO. W20-2.6

7

7

PROJECT NO: | HWY: | COUNTY: | SHEET NO: 122 | E

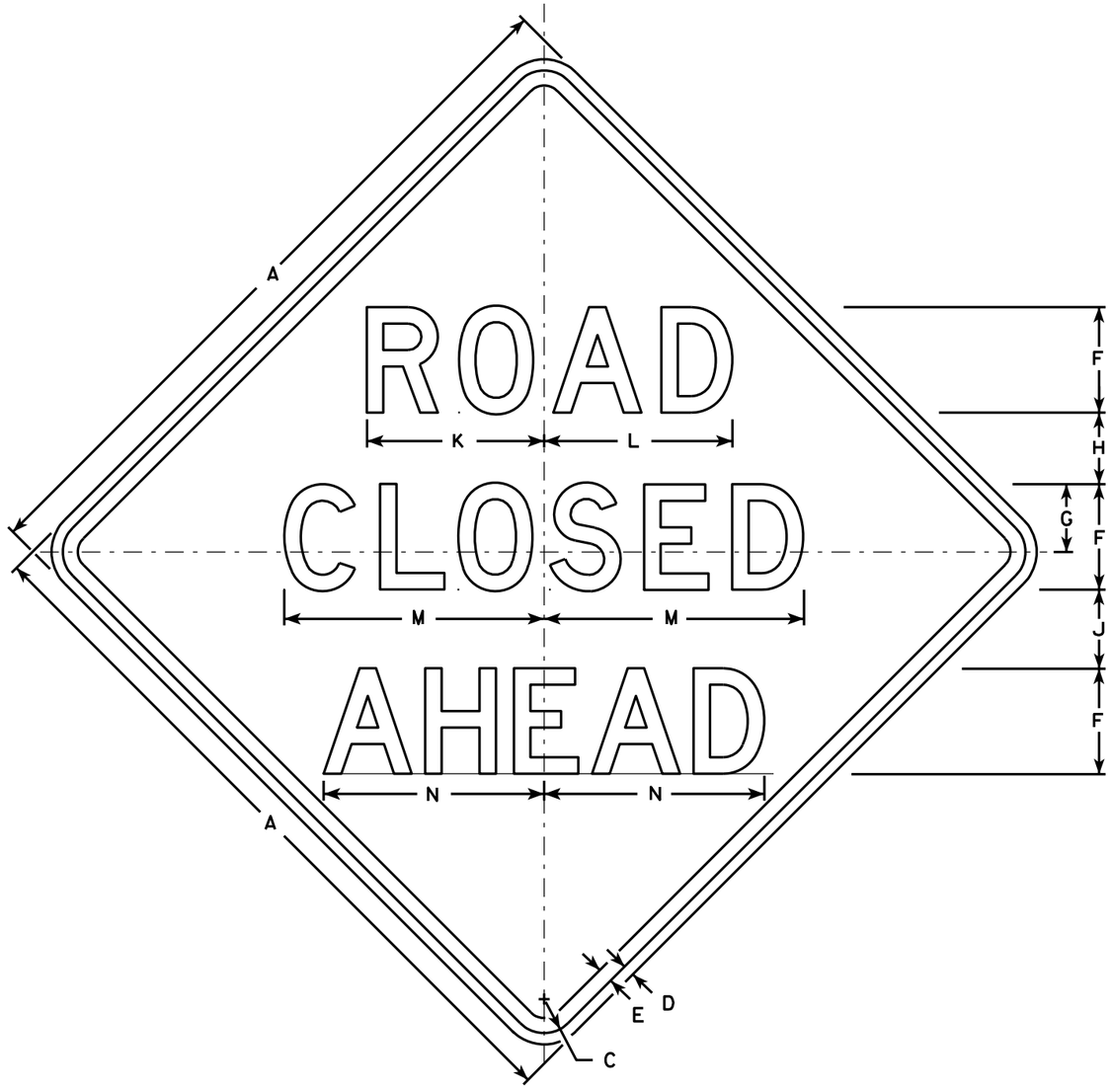

W20-3A

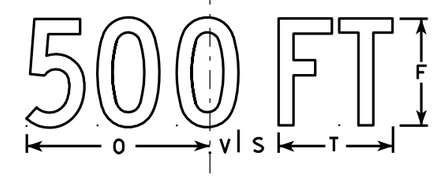

W20-3D

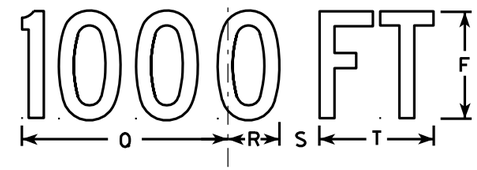

W20-3C

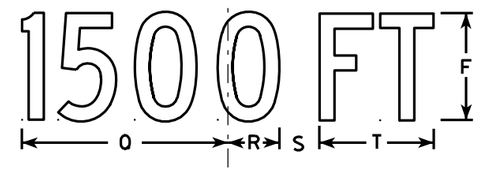

W20-3B

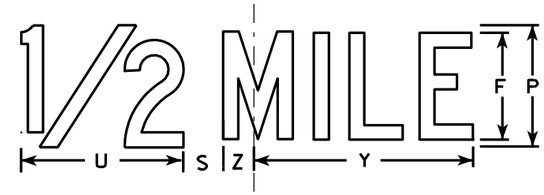

W20-3G

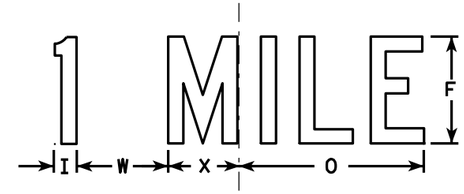

W20-3F

NOTES

1. Sign is Type II - Type F Reflective - reference WIS DOT Standard Specification for HIGHWAY and STRUCTURE CONSTRUCTION latest edition.
2. Color:
   Background - Orange
   Message - Black
3. Message Series - see note 5
4. Corners may be square or rounded when base material is plywood but borders shall be rounded as shown. When base material is metal, the corners and borders shall be rounded.
5. Lines 1 and 2 are Series D.
   Line 3 is Series D for AHEAD and Series C for all other distances.

SIZE	A	B	C	D	E	F	G	H	I	J	K	L	M	N	O	P	Q	R	S	T	U	V	W	X	Y	Z	Area sq. ft.
1	36		1 5/8	5/8	3/4	5	3 3/8	3 1/2	1 1/8	4	8 3/8	8 7/8	12 1/2	11	9	6	10 1/8	2 1/2	1 7/8	5 5/8	8	1 3/8	4 1/2	3 1/2	10 3/4	1 3/4	9.0
2S	48		2 1/4	3/4	1	7	4 1/2	4 3/4	1 1/2	5 1/4	11 3/4	12 1/2	17 1/4	14 5/8	12	8	13 1/2	3 3/8	2 5/8	7 1/2	10 5/8	1 7/8	6	4 5/8	14 3/8	2 3/8	16.0
2M	48		2 1/4	3/4	1	7	4 1/2	4 3/4	1 1/2	5 1/4	11 3/4	12 1/2	17 1/4	14 5/8	12	8	13 1/2	3 3/8	2 5/8	7 1/2	10 5/8	1 7/8	6	4 5/8	14 3/8	2 3/8	16.0
3	48		2 1/4	3/4	1	7	4 1/2	4 3/4	1 1/2	5 1/4	11 3/4	12 1/2	17 1/4	14 5/8	12	8	13 1/2	3 3/8	2 5/8	7 1/2	10 5/8	1 7/8	6	4 5/8	14 3/8	2 3/8	16.0
4	48		2 1/4	3/4	1	7	4 1/2	4 3/4	1 1/2	5 1/4	11 3/4	12 1/2	17 1/4	14 5/8	12	8	13 1/2	3 3/8	2 5/8	7 1/2	10 5/8	1 7/8	6	4 5/8	14 3/8	2 3/8	16.0
5	48		2 1/4	3/4	1	7	4 1/2	4 3/4	1 1/2	5 1/4	11 3/4	12 1/2	17 1/4	14 5/8	12	8	13 1/2	3 3/8	2 5/8	7 1/2	10 5/8	1 7/8	6	4 5/8	14 3/8	2 3/8	16.0

STANDARD SIGN
W20-3A, B, C, D, F & G

WISCONSIN DEPT OF TRANSPORTATION

APPROVED Matthew R Rauch
for State Traffic Engineer
DATE 3/18/11 PLATE NO. W20-3.7

7

7

PROJECT NO: | HWY: | COUNTY: | SHEET NO: 123 | E

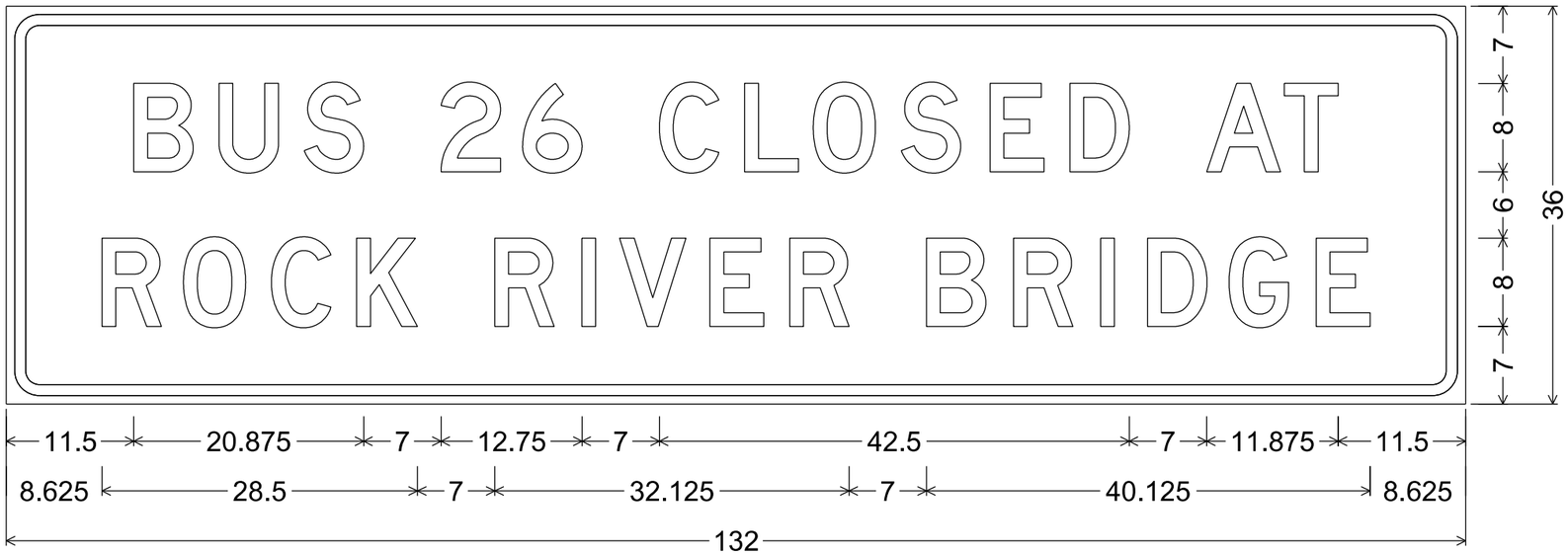

3.000" Radius, 1.000" Border, 0.750" Indent

NOTES

1. Signs are Type II - Type F Reflective
2. Color:
   Background - Orange
   Message - Black
3. Message Series - D except as noted

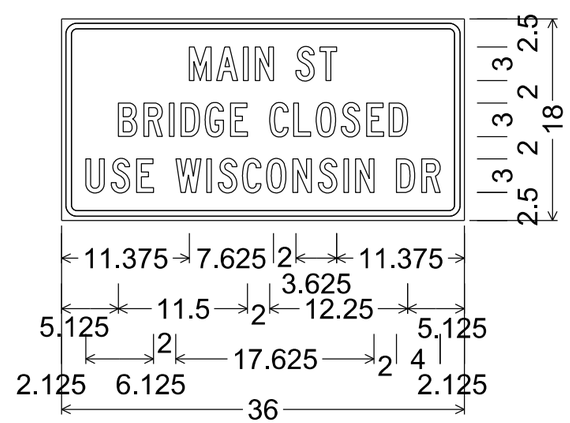

1.375" Radius, 0.500" Border, 0.375" Indent

"MAIN", C; "ST", C; "BRIDGE", C; "CLOSED", C;
"USE", C; "WISCONSIN", C; "DR", C

7

7

STATE PROJECT NUMBER

3993-01-81

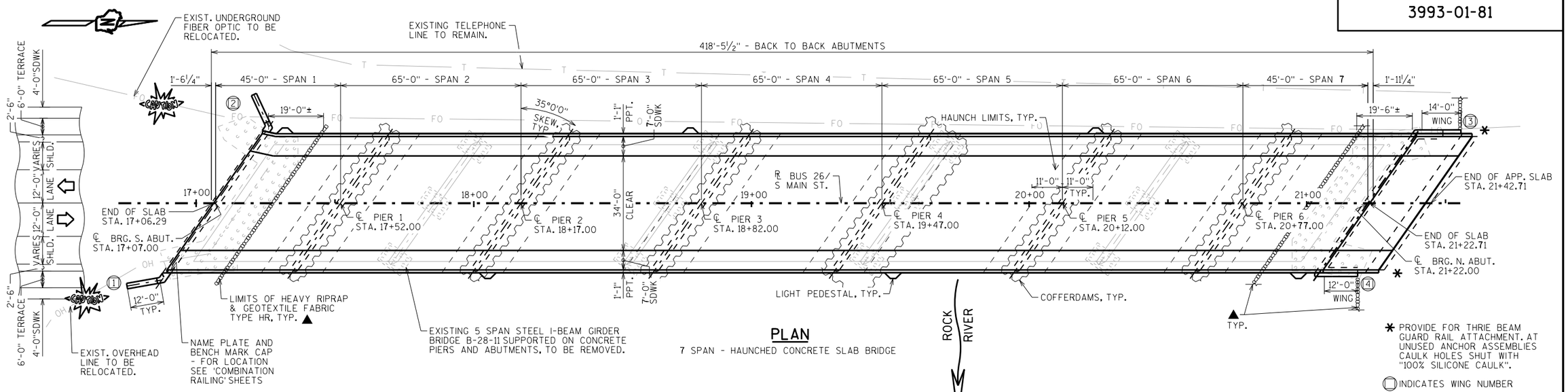

PLAN

7 SPAN - HAUNCHED CONCRETE SLAB BRIDGE

✱ PROVIDE FOR THRIE BEAM GUARD RAIL ATTACHMENT. AT UNUSED ANCHOR ASSEMBLIES CAULK HOLES SHUT WITH "100% SILICONE CAULK".

INDICATES WING NUMBER

▲ BLEND INTO EXISTING STREAM BANK

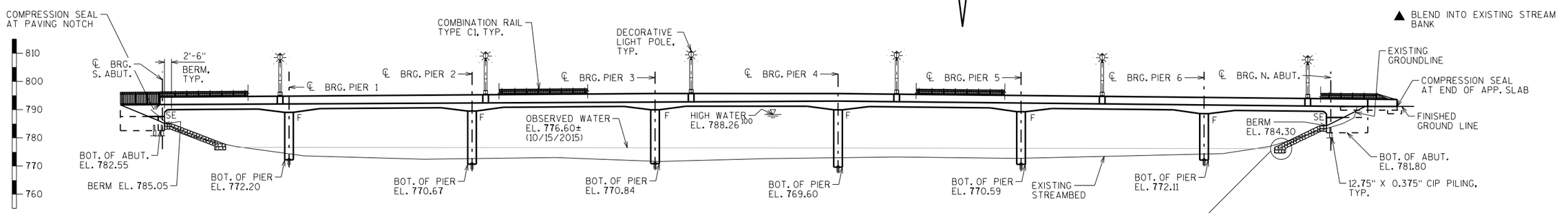

ELEVATION

LOOKING SOUTH
NORMAL TO ROCK RIVER

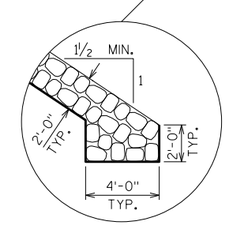

DESIGN DATA

LIVE LOAD:

DESIGN LOADING: HL-93
INVENTORY RATING FACTOR: RF = 1.18
OPERATING RATING FACTOR: RF = 1.53
WISCONSIN STANDARD PERMIT VEHICLE (WIS.-SPV): 250(KIPS)

STRUCTURE IS DESIGNED FOR A FUTURE WEARING SURFACE OF 20 POUNDS PER SQUARE FOOT.

MATERIAL PROPERTIES:

CONCRETE MASONRY:
SUPERSTRUCTURE & STRUCTURAL APPROACH SLAB — f'c = 4,000 P.S.I.
ALL OTHER — f'c = 3,500 P.S.I.

BAR STEEL REINFORCEMENT:
GRADE 60 — fy = 60,000 P.S.I.
STAINLESS, GRADE 60 — fy = 60,000 P.S.I.

STEEL PILE SHELLS — fy = 45,000 P.S.I.

FOUNDATION DATA

ABUTMENTS TO BE SUPPORTED ON 12¾" X 0.375" C.I.P. PILING DRIVEN TO A REQUIRED DRIVING RESISTANCE OF 210 TONS ✱✱PER PILE AS DETERMINED BY THE MODIFIED GATES DYNAMIC FORMULA.
ESTIMATED 60'-0" LONG AT THE SOUTH ABUTMENT.
ESTIMATED 65'-0" LONG AT THE NORTH ABUTMENT.

PIERS TO BE SUPPORTED ON 12¾" X 0.375" C.I.P. PILING DRIVEN TO A REQUIRED DRIVING RESISTANCE OF 210 TONS ✱✱PER PILE AS DETERMINED BY THE MODIFIED GATES DYNAMIC FORMULA.
ESTIMATED 65'-0" LONG AT PIERS 1, 3, & 5.
ESTIMATED 70'-0" LONG AT PIERS 2 & 4.
ESTIMATED 60'-0" LONG AT PIER 6.

✱✱THE FACTORED AXIAL RESISTANCE OF PILES IN COMPRESSION USED FOR DESIGN IS THE REQUIRED DRIVING RESISTANCE MULTIPLIED BY A RESISTANCE FACTOR OF 0.5 USING MODIFIED GATES TO DETERMINE DRIVEN PILE CAPACITY.

HYDRAULIC DATA

100 YEAR FREQUENCY

Q_{100} = 12,820 C.F.S.
$VEL._{100}$ = 2.9 F.P.S.
$HW._{100}$ = EL. 788.26
WATERWAY AREA = 4386 SQ. FT.
DRAINAGE AREA = 1,858 SQ. MI.
ROADWAY OVERTOPPING = N/A
SCOUR CRITICAL CODE = 5

2 YEAR FREQUENCY

Q_2 = 6000 C.F.S.
$VEL._2$ = 1.9 F.P.S.
$HW._2$ = EL. 784.39

TRAFFIC VOLUME

BUS 26 (S. MAIN ST.)

ADT = 10,200 (2032)
R.D.S. = 30 M.P.H.

LIST OF DRAWINGS

1. GENERAL PLAN
2. CROSS SECTION & NOTES
3. QUANTITIES
4. SUBSURFACE EXPLORATION
5. MISCELLANEOUS DETAILS
6. SOUTH ABUTMENT
7. SOUTH ABUTMENT DETAILS - 1
8. SOUTH ABUTMENT DETAILS - 2
9. NORTH ABUTMENT
10. NORTH ABUTMENT DETAILS - 1
11. NORTH ABUTMENT DETAILS - 2
12. PIER 1
13. PIER 2
14. PIER 3
15. PIER 4
16. PIER 5
17. PIER 6
18. SUPERSTRUCTURE CROSS SECTIONS - 1
19. SUPERSTRUCTURE CROSS SECTIONS - 2
20. SUPERSTRUCTURE PLAN SPANS 1 - 3
21. SUPERSTRUCTURE PLAN SPANS 3 - 5
22. SUPERSTRUCTURE PLAN SPANS 5 - 7
23. SUPERSTRUCTURE CORNER DETAILS
24. SUPERSTRUCTURE LONGITUDINAL SECTIONS
25. SUPERSTRUCTURE DATA
26. VERTICAL FACE PARAPET "A" AT S. ABUT.
27. EAST SIDEWALK/PARAPET DETAILS
28. WEST SIDEWALK/PARAPET DETAILS
29. NORTH STRUCT. APPR. SLAB
30. NORTH STRUCT. APPR. SLAB CROSS SECTIONS
31. NORTH STRUCT. APPR. SLAB LONGIT. SECTION
32. VERTICAL FACE PARAPET "A" AT APPR. SLAB
33. LIGHT STANDARD & ELECTRICAL DETAILS
34. CONDUIT DETAILS
35. SUPERSTRUCTURE BAR DETAILS
36. COMBINATION RAILING TYPE 'C1'
37. COMBINATION RAILING TYPE 'C1' AT S. END
38. COMBINATION RAILING TYPE 'C1' DETAILS
39. RAILING STEEL PEDESTRIAN - 1
40. RAILING STEEL PEDESTRIAN - 2

STRUCTURE DESIGN CONTACTS:

STACIE WEIS (608) 261-6109
DOMINIQUE BECHLE (608) 261-8205

NO.	DATE	REVISION	BY

BUREAU OF STRUCTURES

ACCEPTED DMB 02/24/22
CHIEF STRUCTURES DESIGN ENGINEER DATE

STRUCTURE B-28-192

BUS 26 (S. MAIN ST.) OVER ROCK RIVER

COUNTY	CITY
JEFFERSON	JEFFERSON

DESIGN SPEC.
AASHTO LRFD BRIDGE DESIGN SPECIFICATIONS

DESIGNED BY	DESIGNED CK'D.	DRAWN BY	PLANS CK'D.
SEW	WAH	SEW	SEW

GENERAL PLAN

SHEET 1 OF 40

125

8

8

SCALE = 18.00

I.D. 3993-01-01A DATE: JAN. 2022

STATE PROJECT NUMBER
3993-01-81

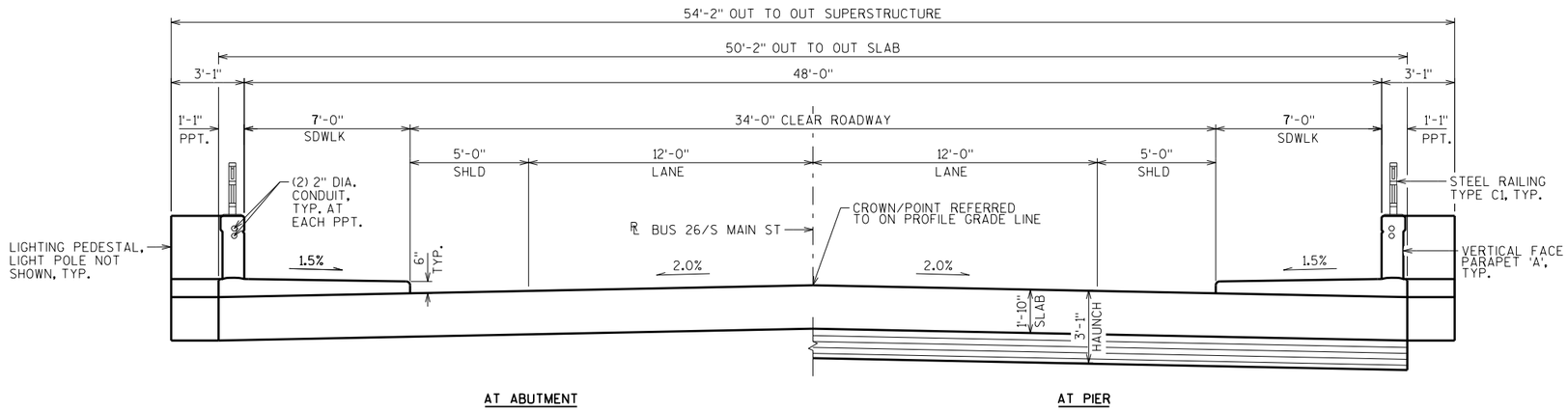

CROSS SECTION THRU BRIDGE

LOOKING NORTH

GENERAL NOTES

DRAWINGS SHALL NOT BE SCALED.

BAR STEEL REINFORCEMENT SHALL BE EMBEDDED 2" CLEAR UNLESS OTHERWISE SHOWN OR NOTED.

THE FIRST OR FIRST TWO DIGITS OF THE BAR MARK SIGNIFIES THE BAR SIZE.

BEVEL EXPOSED EDGES OF CONCRETE ¾" UNLESS OTHERWISE NOTED.

THE UPPER LIMITS OF "EXCAVATION FOR STRUCTURES BRIDGES B-28-192" SHALL BE THE EXISTING GROUNDLINE.

AT THE BACK FACE OF ABUTMENT ALL VOLUME WHICH CANNOT BE PLACED BEFORE ABUTMENT CONSTRUCTION AND IS NOT OCCUPIED BY THE NEW STRUCTURE SHALL BE BACKFILLED WITH STRUCTURE BACKFILL TYPE A. ALSO EXCLUDED IS THE "BASE AGGREGATE DENSE 1 1/4-INCH" AS DETAILED ON THE STRUCTURAL APPROACH SLAB SHEETS.

EXCAVATION BELOW THE ABUTMENT AND ABUTMENT BEDDING MATERIALS REQUIRES ENGINEER APPROVAL. GEOTEXTILE SHALL BE SET AT THE BOTTOM OF EXCAVATION AND EXTEND 2'-0" ABOVE BOTTOM OF ABUTMENT.

THE QUANTITY FOR BACKFILL STRUCTURE IS CALCULATED BASED ON THE DETAIL SHOWN IN THE PLANS.

PROTECTIVE SURFACE TREATMENT TO BE APPLIED TO THE ENTIRE EXPOSED TOP OF DECK AND APPROACH SLAB SURFACES AND TO THE VERTICAL AND HORIZONTAL SURFACES OF THE PAVING NOTCHES AT ABUTMENT DIAPHRAGMS AND TO THE TOP OF THE SIDEWALKS AND CURBS.

PIGMENTED SURFACE SEALER TO BE APPLIED TO THE FRONT FACE AND THE TOP OF THE PARAPETS, INCLUDING PARAPETS ON APPROACH SLABS.

THE SLOPE OF THE FILL IN FRONT OF THE ABUTMENTS SHALL BE COVERED WITH HEAVY RIPRAP AND GEOTEXTILE TYPE "HR" TO THE EXTENT SHOWN ON SHEET 1 AND THE ABUTMENT DETAILS.

SLAB FALSEWORK SHALL BE SUPPORTED ON PILES OR THE SUBSTRUCTURE, UNLESS AN ALTERNATE METHOD IS APPROVED BY THE ENGINEER.

THE EXISTING STREAM BED SHALL BE USED AS THE UPPER LIMITS OF EXCAVATION AT THE PIERS.

AT ABUTMENTS AND PIER(S), CONCRETE POURED UNDER WATER WILL BE ALLOWED AND SHALL BE DONE IN ACCORDANCE WITH SECTION 502.3.5.3 OF THE STANDARD SPECIFICATIONS.

AT PIERS 1-6, COFFERDAMS REQUIRED. CONCRETE POURED UNDERWATER WILL BE ALLOWED AND SHALL BE DONE IN ACCORDANCE WITH STANDARD SPEC 502.3.5.3. CONCRETE POURED UNDERWATER SHALL NOT EXCEED 10.0 FEET IN DEPTH, UNLESS APPROVED OTHERWISE.

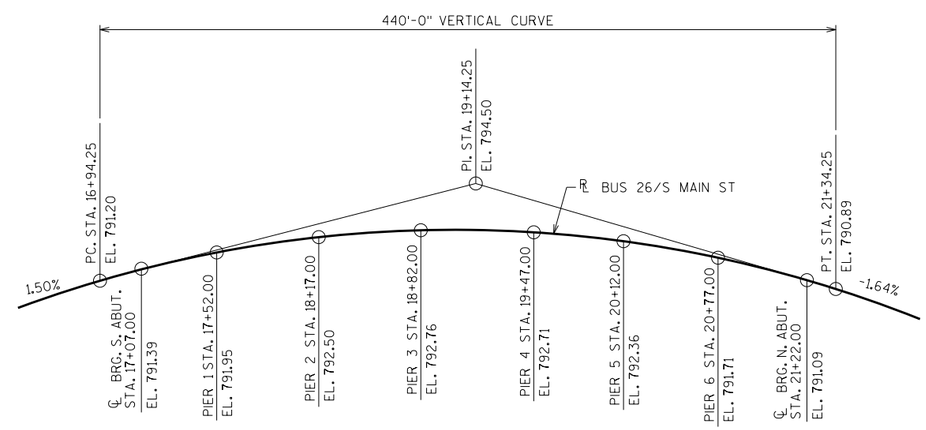

PROFILE GRADE LINE - BUS 26/S. MAIN ST.

8

8

NO.	DATE	REVISION	BY

STATE OF WISCONSIN
DEPARTMENT OF TRANSPORTATION
STRUCTURES DESIGN SECTION

STRUCTURE B-28-192

DRAWN BY SEW | PLANS CK'D. WAH

CROSS SECTION & NOTES

SHEET 2

SCALE = 3.00

STATE PROJECT NUMBER

3993-01-81

TOTAL ESTIMATED QUANTITIES

BID ITEM NUMBER	BID ITEMS	UNIT	SUPER.	SOUTH ABUT.	PIER 1	PIER 2	PIER 3	PIER 4	PIER 5	PIER 6	NORTH ABUT.	NORTH APP. SLAB	TOTALS
203.0260	REMOVING STRUCTURE OVER WATERWAY MINIMAL DEBRIS B-28-11	EACH	—	—	—	—	—	—	—	—	—	—	1
203.0211.S	ABATEMENT OF ASBESTOS CONTAINING MATERIAL B-28-11	EACH	—	—	—	—	—	—	—	—	—	—	1
206.1000	EXCAVATION FOR STRUCTURES BRIDGES B-28-192	LS	—	—	—	—	—	—	—	—	—	—	1
206.5000	COFFERDAMS B-28-192	LS	—	—	—	—	—	—	—	—	—	—	1
210.1500	BACKFILL STRUCTURE TYPE A	TON	—	355	—	—	—	—	—	—	180	—	535
305.0120	BASE AGGREGATE DENSE 1 1/4-INCH	TON	—	—	—	—	—	—	—	—	—	160	160
501.1000.S	ICE HOT WEATHER CONCRETING	LB	13,925	415	665	750	750	800	745	655	495	585	19,785
502.0100	CONCRETE MASONRY BRIDGES	CY	1,856.8	55.1	88.5	99.8	100.2	106.7	99.4	87.6	66.0	77.9	2,638
502.2000	COMPRESSION JOINT SEALER PREFORMED ELASTOMERIC 3 1/2-INCH	LF	60	—	—	—	—	—	—	—	—	59	119
502.3200	PROTECTIVE SURFACE TREATMENT	SY	2,295	—	—	—	—	—	—	—	—	110	2,405
502.3210	PIGMENTED SURFACE SEALER	SY	345	—	—	—	—	—	—	—	—	17	362
502.9000.S	UNDERWATER SUBSTRUCTURE INSPECTION B-28-192	EACH	—	—	1	1	1	1	1	1	—	—	6
505.0400	BAR STEEL REINFORCEMENT HS STRUCTURES	LB	—	4,510	4,240	4,680	4,630	4,930	4,700	4,230	4,560	—	36,480
505.0600	BAR STEEL REINFORCEMENT HS COATED STRUCTURES	LB	418,250	2,100	120	120	120	120	120	120	1,890	13,060	436,020
505.0800.S	BAR STEEL REINFORCEMENT HS STAINLESS STRUCTURES	LB	230	—	—	—	—	—	—	—	—	—	230
513.7006	RAILING STEEL TYPE C1	LF	833	—	—	—	—	—	—	—	—	40	873
513.8006	RAILING STEEL PEDESTRIAN TYPE C1	LF	—	31	—	—	—	—	—	—	—	—	31
516.0500	RUBBERIZED MEMBRANE WATERPROOFING	SY	—	14	—	—	—	—	—	—	16	—	30
531.8990	ANCHOR ASSEMBLIES POLES ON STRUCTURES	EACH	6	—	—	—	—	—	—	—	—	—	6
550.2126	PILING CIP CONCRETE 12¾X 0.375-INCH	LF	—	660	975	1050	975	1050	975	900	585	—	7,170
606.0300	RIPRAP HEAVY	CY	—	210	—	—	—	—	—	—	170	—	380
612.0406	PIPE UNDERDRAIN WRAPPED 6-INCH	LF	—	120	—	—	—	—	—	—	120	—	240
614.0150	ANCHOR ASSEMBLIES FOR STEEL PLATE BEAM GUARD	EACH	2	—	—	—	—	—	—	—	—	—	2
645.0111	GEOTEXTILE TYPE DF SCHEDULE A	SY	—	68	—	—	—	—	—	—	62	—	130
645.0120	GEOTEXTILE TYPE HR	SY	—	380	—	—	—	—	—	—	300	—	680
652.0125	CONDUIT RIGID METALLIC 2-INCH	LF	55	—	—	—	—	—	—	—	—	—	55
652.0225	CONDUIT RIGID NONMETALLIC SCHEDULE 40 2-INCH	LF	1,710	—	—	—	—	—	—	—	—	—	1,710
653.0222	JUNCTION BOXES 18X12X6-INCH	EACH	6	—	—	—	—	—	—	—	—	—	6
SPV.0090	REMOVING EXISTING TIMBER PILING	LF	—	160	—	—	—	—	—	—	200	—	360
	NON-BID ITEMS												
	FILLER	SIZE	—	—	—	—	—	—	—	—	—	—	½", ¾"

8

8

NO.	DATE	REVISION	BY

STATE OF WISCONSIN
DEPARTMENT OF TRANSPORTATION
STRUCTURES DESIGN SECTION

STRUCTURE B-28-192

DRAWN BY SEW PLANS CK'D. WAH

QUANTITIES

SHEET 3

SCALE = 3.00

BORING #	DATE COMPLETED	NORTHING (Y)	EASTING (X)
4	9/29/2020	555480	855255
5	8/26/2020	555472	855362
6	9/01/2020	555564	855282
7	8/19/2020	55503	855354
8	9/02/2020	555700	855276
9	8/18/2020	555725	855345
11	8/06/2020	556007	855253
BORINGS COMPLETED BY: WISDOT			
REPORT COMPLETED BY: WISDOT			
ALL COORDINATES REFERENCED TO WCCS NAD 83(91) JEFFERSON COUNTY			
COORDINATES COLLECTED USING NON-SURVEY GRADE EQUIPMENT			

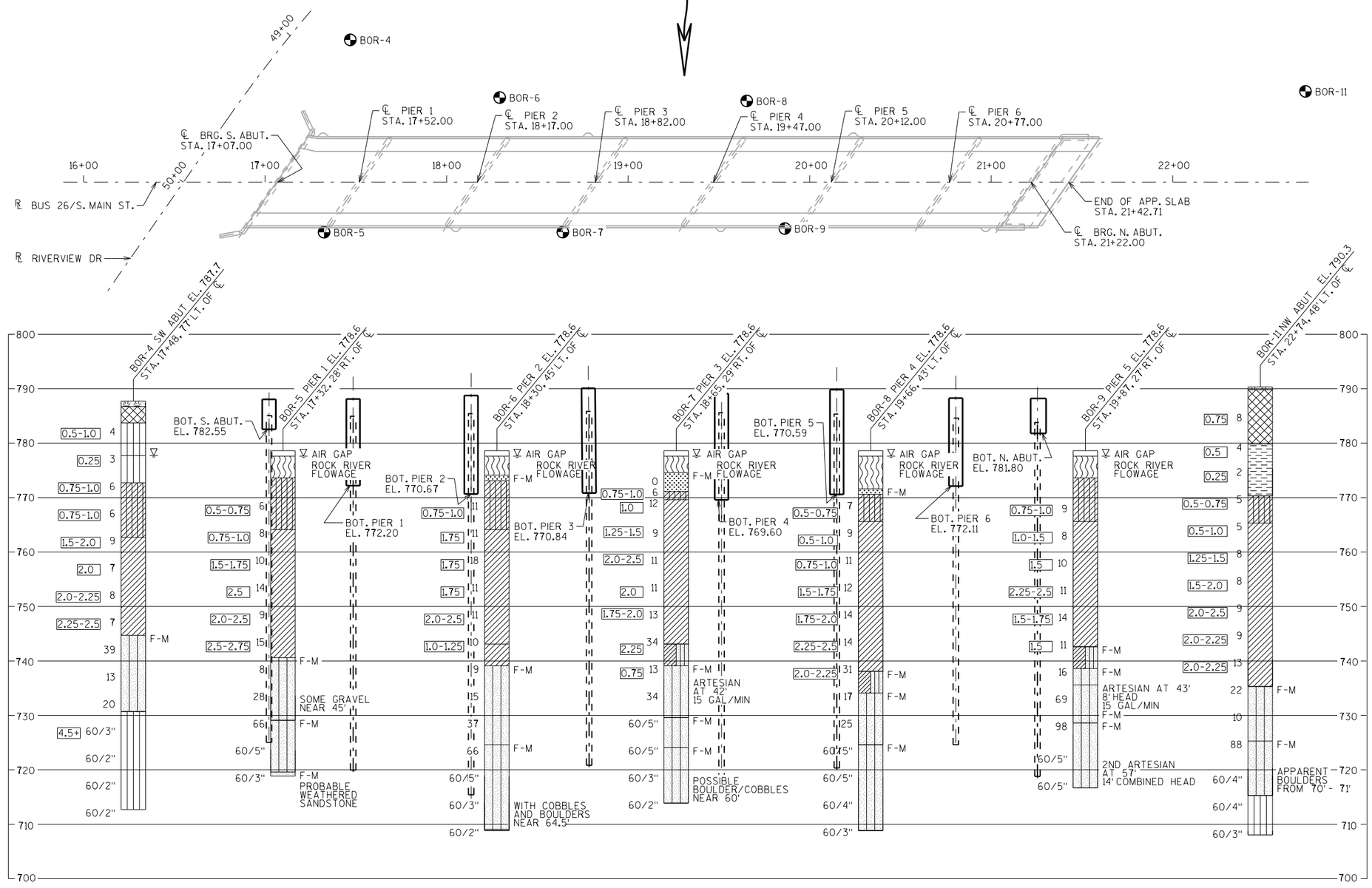

STATE PROJECT NUMBER

3993-01-81

MATERIAL SYMBOLS

ASPHALT, TOPSOIL, PEAT, CONCRETE, FILL, GRAVEL, SAND, CLAY, SILT, BOULDERS OR COBBLES, LIMESTONE, BEDROCK (UNKNOWN), SHALE, SANDSTONE, IGNEOUS/META

LEGEND OF BORING

BORING #/EL. STA./OFFSET

ST

(1) (2)
0.25 17

F-C COBBLE OR BOULDER

WEATHERED LIMESTONE

CORE RUN #1 - 24'-29' REC=80%, RQD=72%

(1) UNCONFINED STRENGTH, AS DETERMINED BY A POCKET PENETROMETER (TSF)

(2) UNLESS OTHERWISE, SPECIFIED THE SPT 'N' VALUE IS BASED ON AASHTO T-206, STANDARD PENETRATION TEST. THE SPT 'N' VALUE PRESENTED HAS NOT BEEN CORRECTED FOR OVERBURDEN PRESSURE OR HAMMER EFFICIENCY.

GROUND WATER ELEVATION

- AT TIME OF DRILLING
- END OF DRILLING
- AFTER DRILLING

ABBREVIATIONS

F-FINE M-MEDIUM C-COARSE ST-SHELBY TUBE

SUBSURFACE EXPLORATION FOR FOUNDATION DESIGN AND BIDDERS INFORMATION

BORINGS WERE COMPLETED AT POINTS APPROXIMATELY AS INDICATED ON THIS DRAWING TO OBTAIN INFORMATION CONCERNING THE CHARACTER OF SUBSURFACE MATERIALS FOUND AT THE SITE. BECAUSE THE INVESTIGATED DEPTHS ARE LIMITED AND THE AREA OF THE BORINGS IS VERY SMALL IN RELATION TO THE ENTIRE SITE, THE WISCONSIN DEPARTMENT OF TRANSPORTATION DOES NOT WARRANT SIMILAR SUBSURFACE CONDITIONS BELOW, BETWEEN, OR BEYOND THESE BORINGS. VARIATIONS IN SOIL CONDITIONS SHOULD BE EXPECTED AND FLUCTUATIONS IN GROUNDWATER LEVELS MAY OCCUR.

NO.	DATE	REVISION	BY

STATE OF WISCONSIN
DEPARTMENT OF TRANSPORTATION
STRUCTURES DESIGN SECTION

STRUCTURE B-28-192

DRAWN BY TLP/SEW | PLANS CK'D. WAH

SUBSURFACE EXPLORATION

SHEET 4

128

SCALE = 30.00

8

8

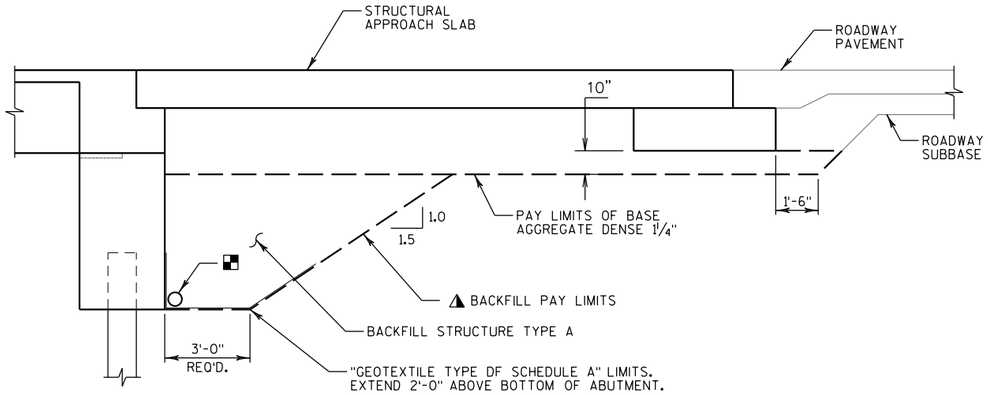

STRUCTURE BACKFILL LIMITS

NORTH ABUTMENT SHOWN, SOUTH ABUTMENT SIMILAR (PAY LIMITS TO BOTTOM OF ROADWAY SUBGRADE).

THE BACKFILL QUANTITIES ARE BASED ON THE PAY LIMITS SHOWN ON THE PLANS AND MAY NOT REFLECT ACTUAL PLACED QUANTITIES. "BACKFILL STRUCTURE TYPE A" REQUIRED DIRECTLY BEHIND ABUTMENTS AND ABUTMENT WINGS FOR 3 FEET. BACKFILL PLACED BEYOND PAY LIMITS OR EXCEEDING PLAN QUANTITIES SHALL BE INCIDENTAL TO EXCAVATION FOR STRUCTURES.

PIPE UNDERDRAIN WRAPPED (6-INCH). SLOPE 0.5% MIN. TO SUITABLE DRAINAGE. ATTACH RODENT SHIELD AT ENDS OF PIPE UNDERDRAIN.

BACKFILL BEYOND PAY LIMITS SHALL BE INCIDENTAL TO EXCAVATION FOR STRUCTURES. LIMITS OF EXCAVATION SHALL BE DETERMINED BY THE CONTRACTOR.

NOTE: EXCAVATION BELOW THE ABUTMENT AND ABUTMENT BEDDING MATERIALS REQUIRES ENGINEER APPROVAL. GEOTEXTILE SHALL BE SET AT THE BOTTOM OF EXCAVATION AND EXTEND 2'-0" ABOVE BOTTOM OF ABUTMENT.

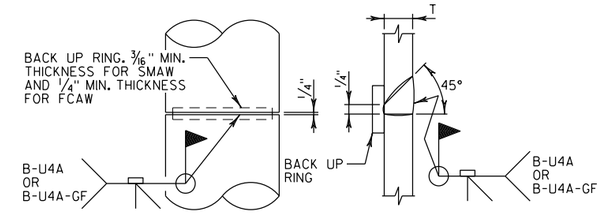

CAST-IN-PLACE 'PIPE PILE'

C.I.P. PILE WELD DETAIL

PILE SPLICE DETAILS

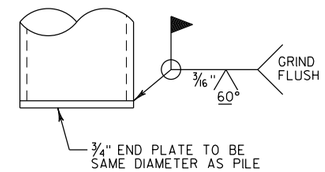

END PLATE DETAIL FOR CIP PILING IN ARTESIAN CONDITIONS

(ONLY USE FOR ARTESIAN CONDITIONS)

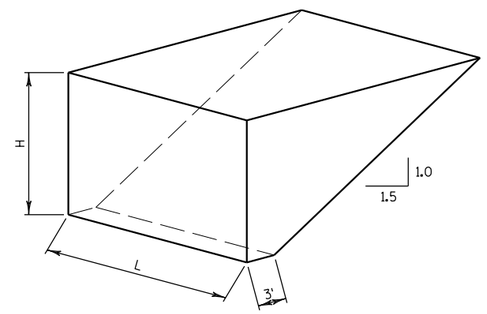

NORTH ABUTMENT BACKFILL DIAGRAM

L = OUT TO OUT OF ABUTMENT, INCLUDING WINGS (FT)
H = AVERAGE ABUTMENT FILL HEIGHT (FT)
EF = EXPANSION FACTOR (1.20 FOR CY BID ITEMS AND 1.00 FOR TON BID ITEMS)
V_{CF} = (L)(3.0')(H) + (L)(0.5)(1.5H)(H)
V_{CY} = V_{CF} (EF)/27
V_{TON} = V_{CY} (2.0)

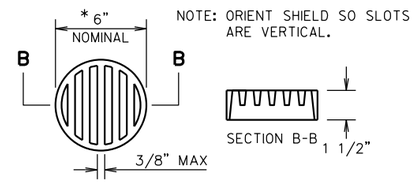

NOTE: ORIENT SHIELD SO SLOTS ARE VERTICAL.

* DIMENSION IS APPROXIMATE. THE GRATE IS SIZED TO FIT INTO A PIPE COUPLING.

RODENT SHIELD DETAIL

THE RODENT SHIELD, PIPE COUPLING AND SCREWS SHALL BE CONSIDERED INCIDENTAL TO THE BID ITEM "PIPE UNDERDRAIN WRAPPED 6-INCH".

THE RODENT SHIELD SHALL BE A PVC GRATE SIMILAR TO THIS DETAIL. THE GRATE IS COMMERCIALLY AVAILABLE AS A FLOOR STRAINER. A PIPE COUPLING IS REQUIRED FOR THE ATTACHMENT OF THIS SHIELD TO THE EXPOSED END OF THE PIPE UNDERDRAIN. THE SHIELD SHALL BE FASTENED TO THE PIPE COUPLING WITH TWO OR MORE NO. 10 X 1-INCH STAINLESS STEEL SHEET METAL SCREWS.

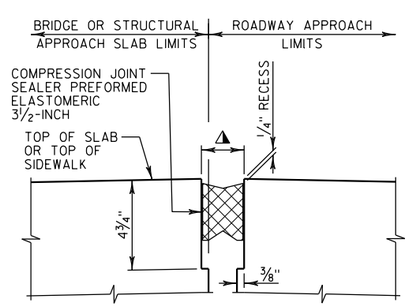

ELASTOMERIC COMPRESSION SEAL DETAIL

SETTING TEMPERATURE	JOINT OPENING
-5	3"
45	2⅛"
85	1½"

EXTEND COMPRESSION SEAL BETWEEN PARAPETS, ALONG TOP OF SLAB, CURB, OR TOP OF SIDEWALK.

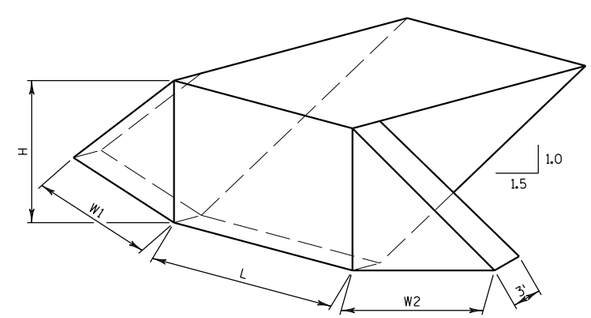

SOUTH ABUTMENT BACKFILL DIAGRAM

L = OUT TO OUT OF ABUTMENT, INCLUDING WINGS (FT)
H = AVERAGE ABUTMENT FILL HEIGHT (FT)
W1 = WING 1 LENGTH (FT)
W2 = WING 2 LENGTH (FT)
EF = EXPANSION FACTOR (1.20 FOR CY BID ITEMS AND 1.00 FOR TON BID ITEMS)
V_{CF} = (L)(3.0')(H) + (L)(0.5)(1.5H)(H)+(3.0')(0.5)(W_1 + W_2)(H)
V_{CY} = V_{CF} (EF)/27
V_{TON} = V_{CY} (2.0)

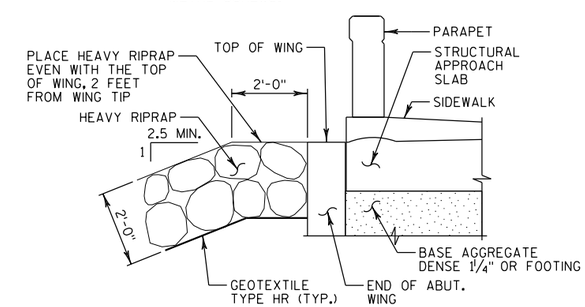

TYPICAL FILL SECTION AT WING TIPS

(NORTH ABUTMENT SHOWN. PLACE HEAVY RIPRAP AS SHOWN IN WING DETAILS AT SOUTH ABUTMENT)

8

8

NO.	DATE	REVISION	BY

STATE OF WISCONSIN
DEPARTMENT OF TRANSPORTATION
STRUCTURES DESIGN SECTION

STRUCTURE B-28-192

DRAWN BY TKB | PLANS CK'D. WAH

MISCELLANEOUS DETAILS

SHEET 5

SCALE = 1:2

STATE PROJECT NUMBER

3993-01-81

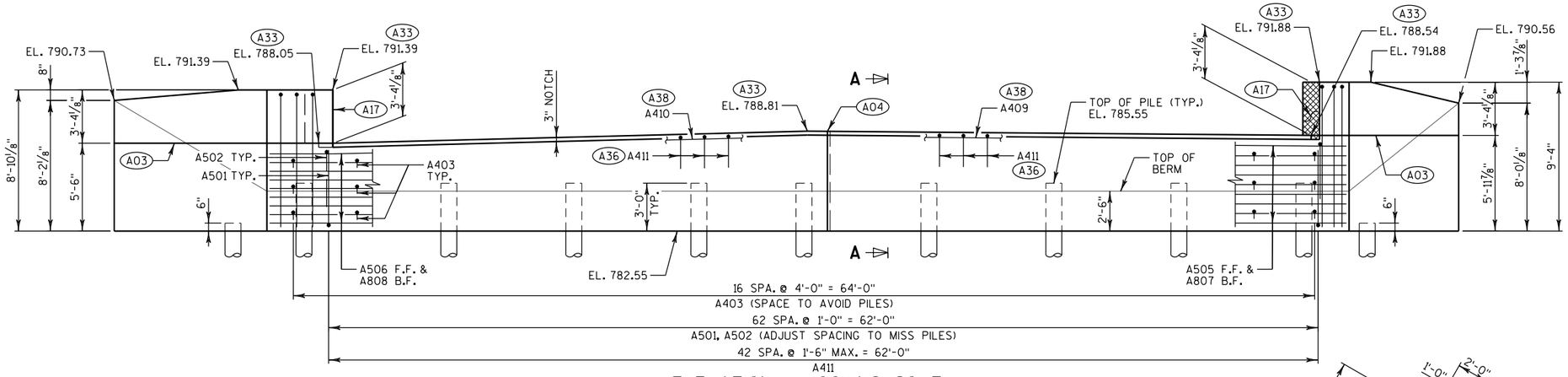

ELEVATION - LOOKING SOUTH

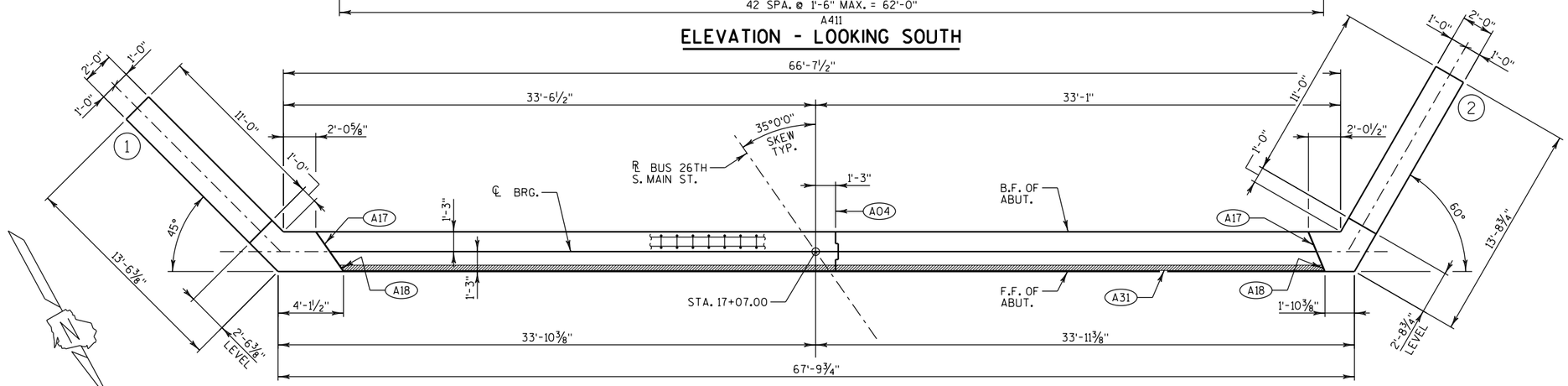

PLAN

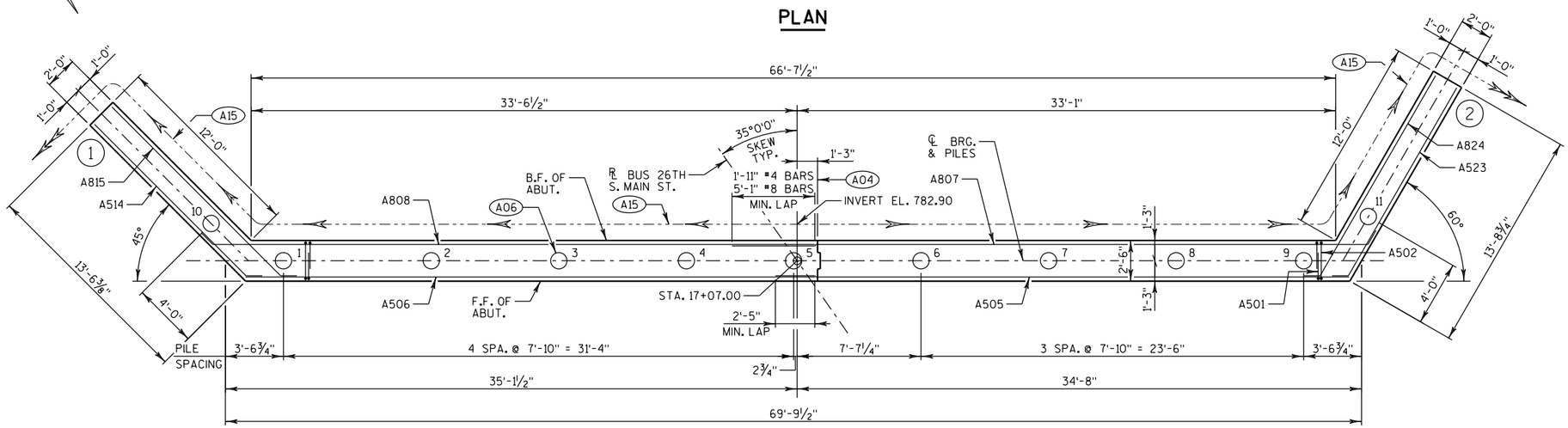

PILE PLAN

NOTES & LEGEND

(A03) OPTIONAL CONST. JOINT: KEYWAY FORMED BY BEVELED 2×6 (18" RMW @ B.F. & ¾" "V" GROOVE @ F.F. IF JOINT IS USED. INCIDENTAL TO "CONCRETE MASONRY").

(A04) VERT. CONST. JOINT: KEYWAY FORMED BY A BEVELED 2×8. ¾" "V" GROOVE @ THE FRONT FACE AND 18" RMW @ BACKFACE. FOR OPTIONAL DETAILS SEE "ALTERNATE CONSTRUCTION JOINT AT ABUTMENT" DETAIL.

(A06) SOUTH ABUTMENT TO BE SUPPORTED ON PILING CIP CONCRETE 12¾×0.375-INCH DRIVEN TO A REQUIRED DRIVING RESISTANCE OF 210 TONS PER PILE AS DETERMINED BY THE MODIFIED GATES DYNAMIC FORMULA. ESTIMATED 60' LONG.

(A15) PIPE UNDERDRAIN WRAPPED 6-INCH. SLOPE 0.5% MIN. TO SUITABLE DRAINAGE. ATTACH RODENT SCREEN AT ENDS OF PIPE UNDERDRAIN. RODENT SHIELD TO BE INCLUDED IN BID PRICE OF "PIPE UNDERDRAIN WRAPPED 6-INCH."

(A17) ½" FILLER (INCLUDED IN WING LENGTH): SEAL ALL EXPOSED HORIZONTAL AND VERTICAL SURFACES OF ½" FILLER WITH NON-STAINING GRAY NON-BITUMINOUS JOINT SEALER. (1" DEEP AND HOLD ⅛" BELOW SURFACE OF CONCRETE.)

(A18) ¾" CORK FILLER UP VERT. BEAM SEAT FACES THAT RUN PARALLEL WITH SLAB.

(A19) 18" RUBBERIZED MEMBRANE WATERPROOFING. SEAL ALL HORIZONTAL AND VERTICAL JOINTS ON BACK FACE.

(A31) ¾"×4" PREFORMED JOINT FILLER TO EXTEND BETWEEN EDGES OF WINGS (TYP.)

(A32) HEAVY RIPRAP. SEE SHEET 1 FOR ADDITIONAL DETAILS.

(A33) ELEVATION SHOWN IS TAKEN AT ℄ BRG. OF ABUTMENT AT TOP OF NOTCH OR AT ℄ OF WING.

(A34) STEEL TROWEL TOP SURFACE OF ABUTMENT. PLACE MULTIPLE LAYERS OF POLYETHYLENE SHEETS OVER ENTIRE ABUTMENT TOP BEFORE PLACING SUPERSTRUCTURE. TOTAL THICKNESS OF SHEETS SHALL BE AT LEAST 0.03"

(A36) PULL UP TO 2" CLEAR.

(A37) SLOPE TOP OF ABUTMENT AS SHOWN.

(A38) FIELD BEND TO FOLLOW SLOPE OF TOP OF ABUTMENT.

(X) INDICATES WING NUMBER.

DO NOT PLACE FILL ABOVE 3'-0" FROM BOTTOM OF ABUTMENT UNTIL SUPERSTRUCTURE IS IN PLACE.

SEE "SOUTH ABUTMENT DETAILS-2" SHEET FOR SECTION A-A.

NO.	DATE	REVISION	BY

STATE OF WISCONSIN
DEPARTMENT OF TRANSPORTATION
STRUCTURES DESIGN SECTION

STRUCTURE B-28-192

DRAWN BY TKB | PLANS CK'D. WAH

SOUTH ABUTMENT

SHEET 6

SCALE = 1:2

8

8

STATE PROJECT NUMBER

3993-01-81

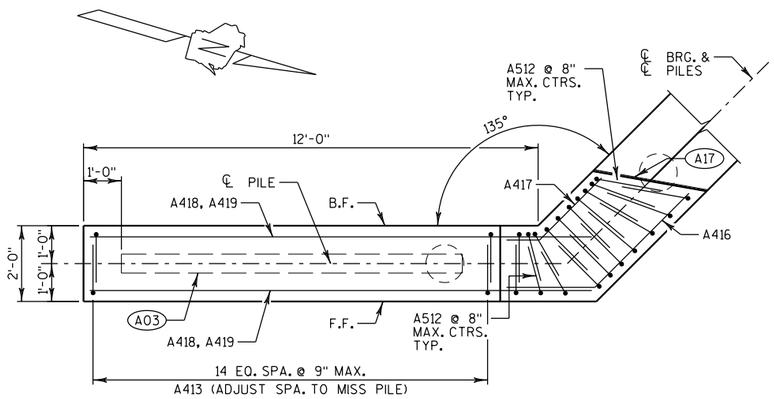

PLAN-WING 1

HORIZONTAL REINF. BELOW SEAT NOT SHOWN FOR CLARITY. SEE PILE PLAN

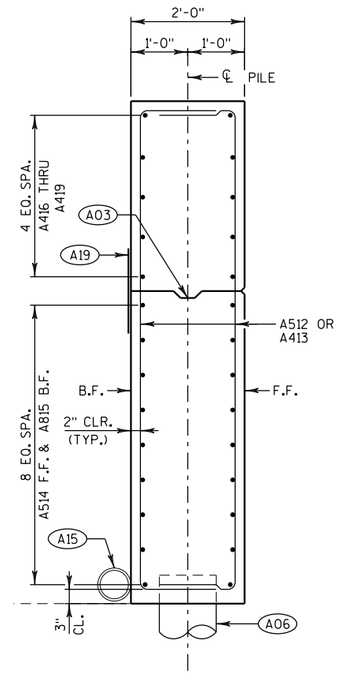

SECTION B-B

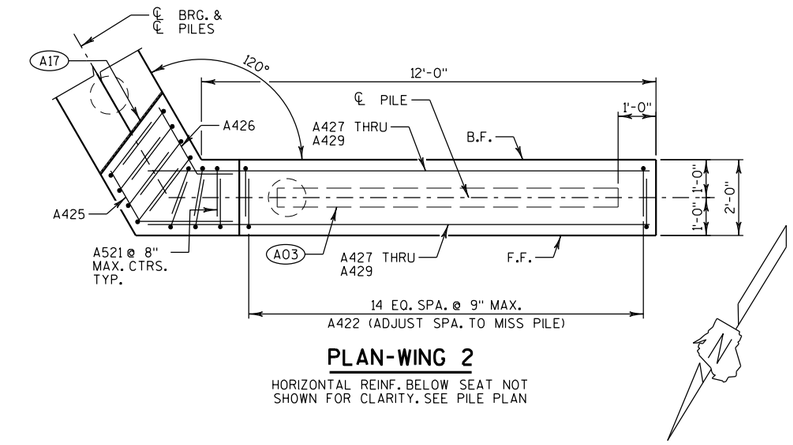

PLAN-WING 2

HORIZONTAL REINF. BELOW SEAT NOT SHOWN FOR CLARITY. SEE PILE PLAN

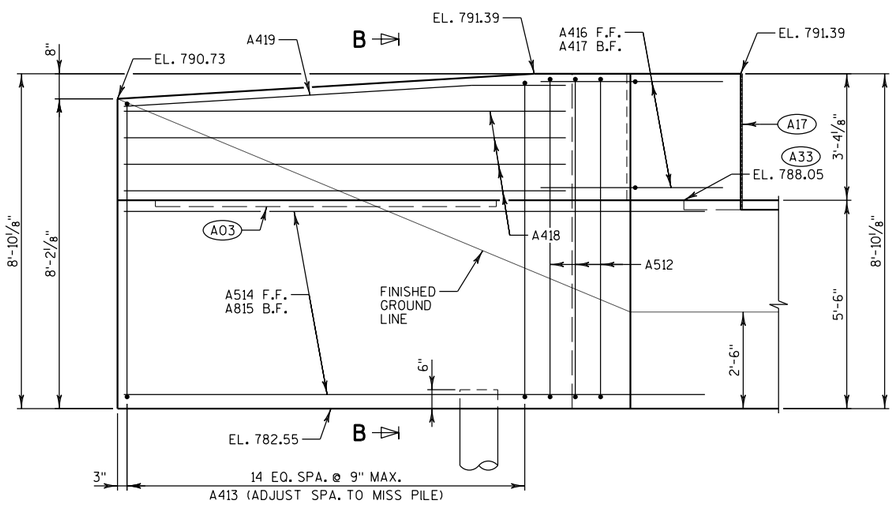

ELEVATION - WING 1

(LOOKING WEST)

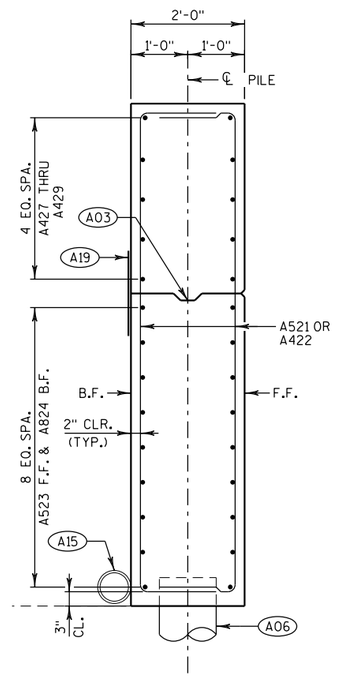

SECTION C-C

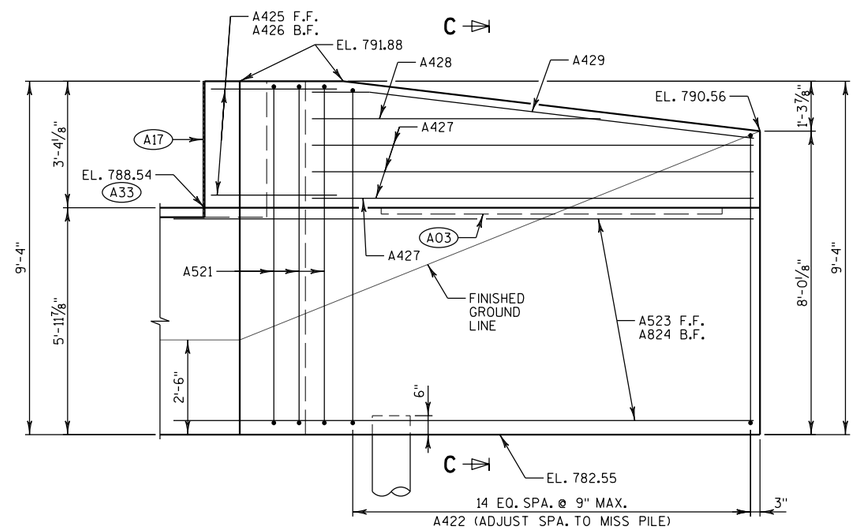

ELEVATION - WING 2

(LOOKING SOUTH)

LEGEND

(AXX) SEE "SOUTH ABUTMENT" SHEET FOR SYMBOL DESCRIPTION.

NO.	DATE	REVISION	BY

STATE OF WISCONSIN
DEPARTMENT OF TRANSPORTATION
STRUCTURES DESIGN SECTION

STRUCTURE B-28-192

DRAWN BY TKB | PLANS CK'D. WAH

SOUTH ABUTMENT DETAILS-1

SHEET 7

SCALE = 1:2

STATE PROJECT NUMBER
3993-01-81

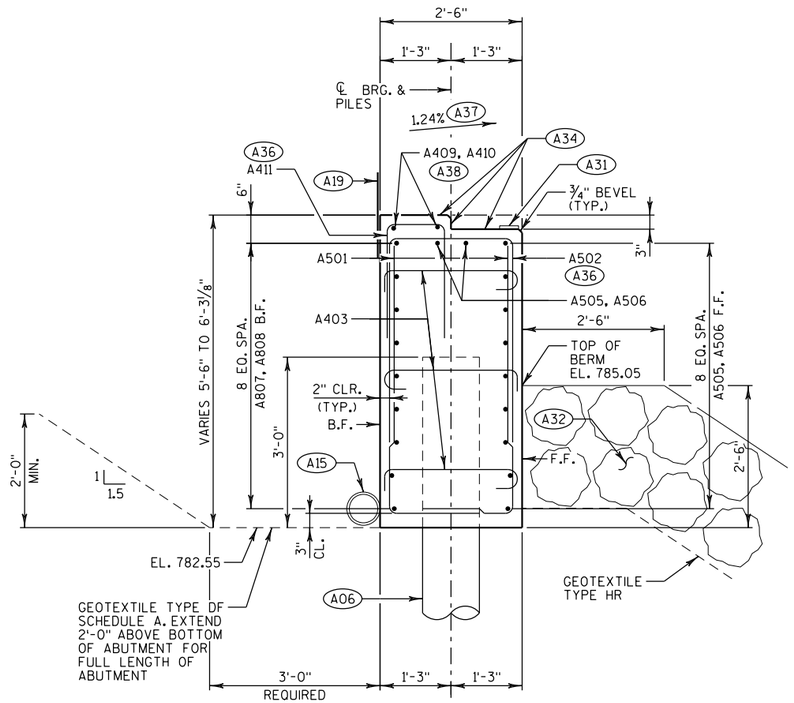

SECTION A-A

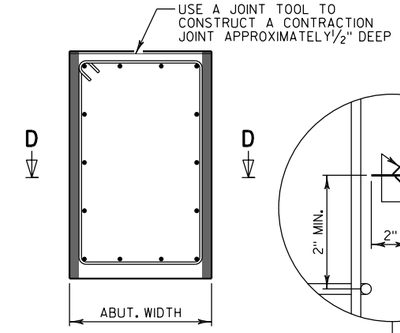

SECTION THRU ABUTMENT BODY

LEGEND

(AXX) SEE "SOUTH ABUTMENT" SHEET FOR SYMBOL DESCRIPTION.

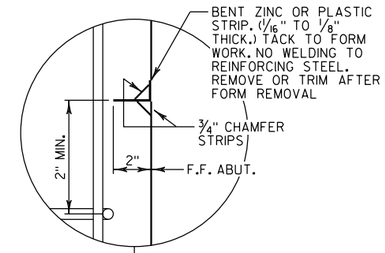

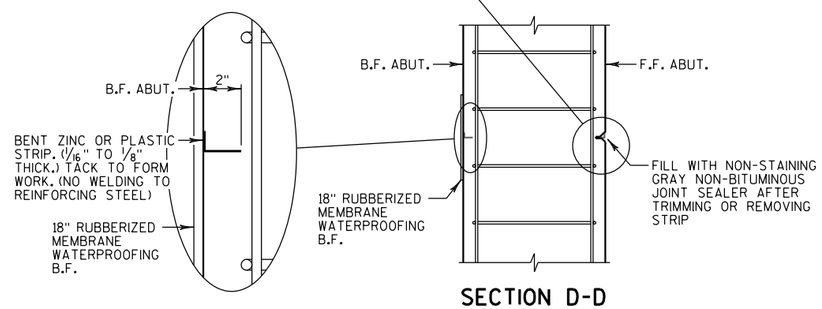

SECTION D-D

ALTERNATE CONSTRUCTION JOINT AT ABUTMENT

PARTIAL ZINC OR PLASTIC BULKHEAD MAY BE USED AS ALTERNATE CONSTRUCTION JOINT, WITH THE PERMISSION OF THE ENGINEER, AT THE CONTRACTOR'S EXPENSE.

VERTICAL CONSTRUCTION JOINT KEYWAY IS NOT REQUIRED WHEN USING ALTERNATE CONSTRUCTION JOINT.

CARE IS TO BE USED IN CASTING CONCRETE AROUND BULKHEAD TO PREVENT DISLOCATION OR MISALIGNMENT OF THE BULKHEAD.

SAW CUTTING JOINT IS NOT ALLOWED.

BILL OF BARS - SOUTH ABUTMENT

BAR MARK	NO. REQ'D	LENGTH	BENT	BAR SERIES	LOCATION	
UNCOATED BARS					TOTAL WEIGHT = 4,510 LBS	
A501	126	6'-5"	X		BODY	VERT.
A502	63	9'-9"	X		BODY, TOP	VERT.
A403	51	3'-0"	X		BODY, TIES	HORIZ.
AX04					VACANT	
A505	11	35'-3"			BODY, F.F.	HORIZ.
A506	11	34'-10"			BODY, F.F.	HORIZ.
A807	9	40'-8"	X		BODY, B.F.	HORIZ.
A808	9	38'-6"	X		BODY, B.F.	HORIZ.
A409	2	33'-5"			BODY, TOP AT NOTCH	HORIZ.
A410	2	33'-6"			BODY, TOP AT NOTCH	HORIZ.
A411	43	4'-5"	X		BODY, TOP AT NOTCH	VERT.
COATED BARS					TOTAL WEIGHT = 2,100 LBS	
A512	20	11'-6"	X		WING 1	VERT.
A413	30	10'-7"	X	X	WING 1	VERT.
A514	9	14'-8"	X		WING 1, F.F.	HORIZ.
A815	9	16'-3"	X		WING 1, B.F.	HORIZ.
A416	5	6'-0"	X		WING 1, TOP AT F.F.	HORIZ.
A417	5	2'-11"	X		WING 1, TOP AT B.F.	HORIZ.
A418	8	11'-10"			WING 1, TOP	HORIZ.
A419	2	11'-10"	X		WING 1, TOP	HORIZ.
AX20					VACANT	
A521	14	12'-0"	X		WING 2	VERT.
A422	30	10'-9"	X	X	WING 2	VERT.
A523	9	14'-10"	X		WING 2, F.F.	HORIZ.
A824	9	15'-10"	X		WING 2, B.F.	HORIZ.
A425	5	4'-1"	X		WING 2, TOP AT F.F.	HORIZ.
A426	5	2'-9"	X		WING 2, TOP AT B.F.	HORIZ.
A427	6	11'-10"			WING 2, TOP	HORIZ.
A428	2	7'-4"			WING 2, TOP	HORIZ.
A429	2	11'-11"	X		WING 2, TOP	HORIZ.

THE FIRST DIGIT OR FIRST TWO DIGITS OF THE BAR MARK SIGNIFIES THE BAR SIZE.
DIMENSIONS IN BENDING DETAILS ARE OUT-TO-OUT OF BAR.
LENGTH SHOWN FOR BARS IN A BAR SERIES IS AN AVERAGE,
SEE BAR SERIES TABLE FOR ACTUAL LENGTHS

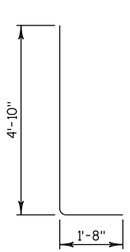

A501

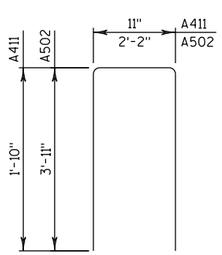

A502, A411

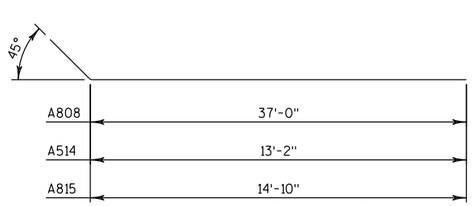

A808, A514, A815

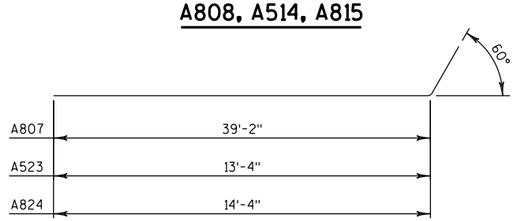

A807, A523, A824

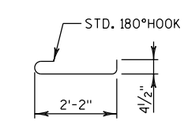

A403

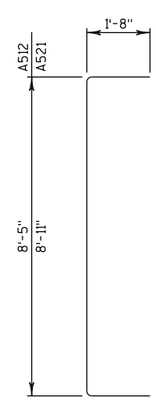

A512, A521

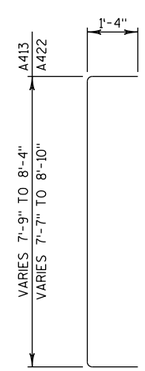

A413, A422

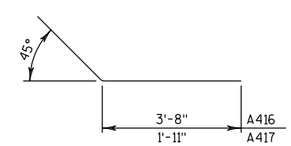

A416, A417

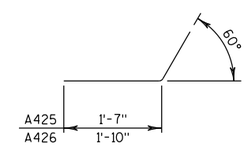

A425, A426

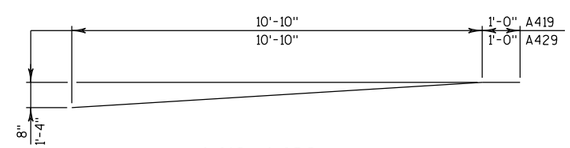

A419, A429

BAR SERIES TABLE

BAR MARK	NO. REQ'D.	LENGTH
A413	2 SERIES OF 15	10'-3" TO 10'-10"
A422	2 SERIES OF 15	10'-1" TO 11'-4"

BUNDLE AND TAG EACH SERIES SEPARATELY.

NO.	DATE	REVISION	BY

STATE OF WISCONSIN
DEPARTMENT OF TRANSPORTATION
STRUCTURES DESIGN SECTION

STRUCTURE B-28-192

DRAWN BY TKB | PLANS CK'D. WAH

SOUTH ABUTMENT DETAILS-2

SHEET 8

SCALE = 1:2

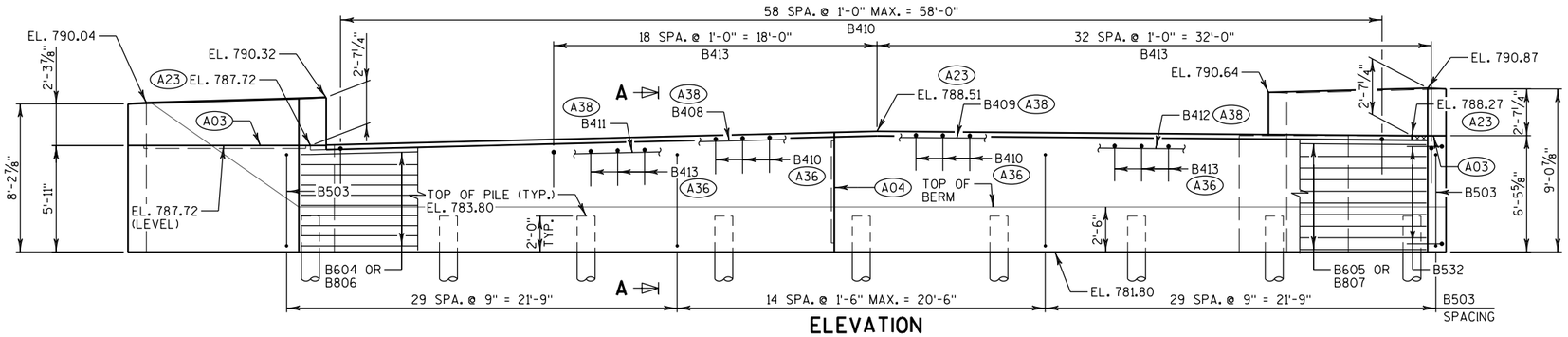

ELEVATION

(LOOKING NORTH)

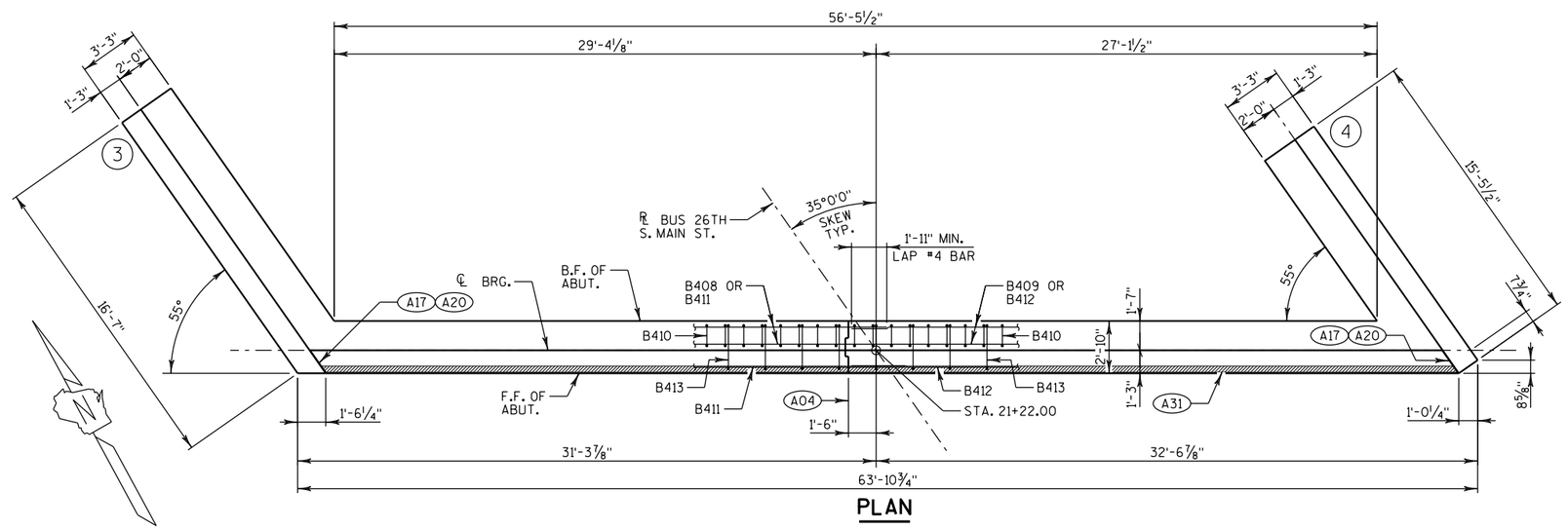

PLAN

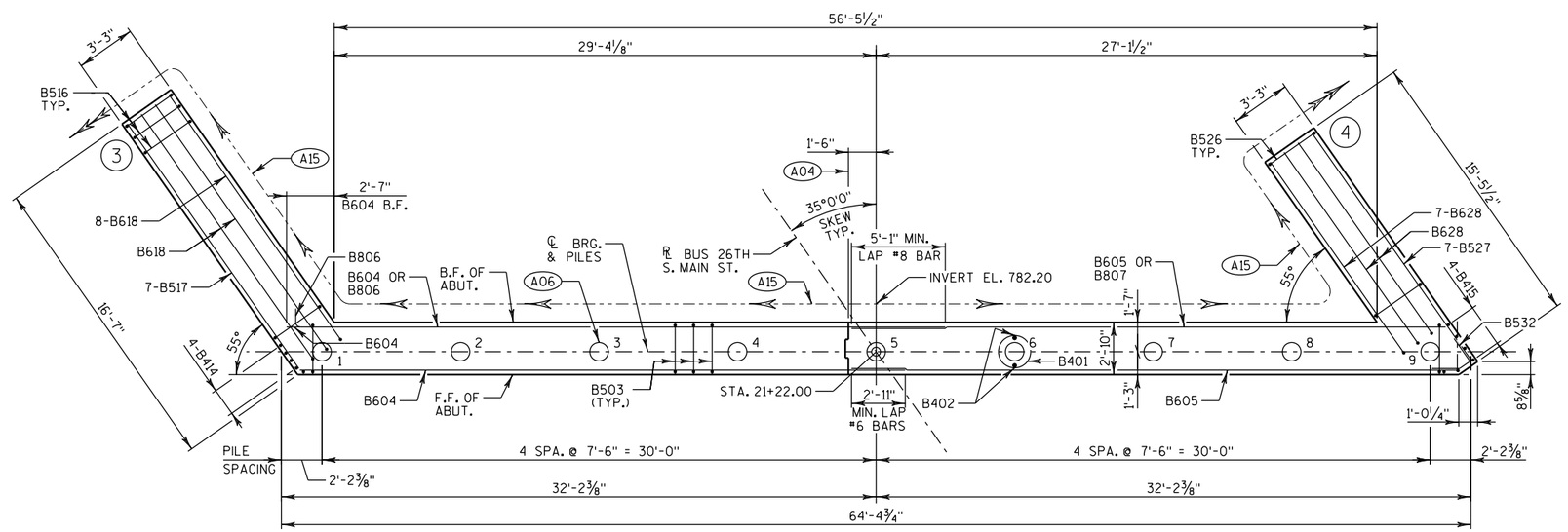

PILE PLAN

STATE PROJECT NUMBER

3993-01-81

NOTES & LEGEND

(A03) OPTIONAL CONST. JOINT: KEYWAY FORMED BY BEVELED 2×6 (18" RMW @ B.F. & ¾" "V" GROOVE @ F.F. IF JOINT IS USED. INCIDENTAL TO "CONCRETE MASONRY").

(A04) VERT. CONST. JOINT: KEYWAY FORMED BY A BEVELED 2×8. ¾" "V" GROOVE @ THE FRONT FACE AND 18" RMW @ BACKFACE. FOR OPTIONAL DETAILS SEE "ALTERNATE CONSTRUCTION JOINT AT ABUTMENT" DETAIL.

(A06) NORTH ABUTMENT TO BE SUPPORTED ON PILING CIP CONCRETE 12¾×0.375-INCH DRIVEN TO A REQUIRED DRIVING RESISTANCE OF 210 TONS PER PILE AS DETERMINED BY THE MODIFIED GATES DYNAMIC FORMULA. ESTIMATED 65' LONG.

(A15) PIPE UNDERDRAIN WRAPPED 6-INCH. SLOPE 0.5% MIN. TO SUITABLE DRAINAGE. ATTACH RODENT SCREEN AT ENDS OF PIPE UNDERDRAIN. RODENT SHIELD TO BE INCLUDED IN BID PRICE OF "PIPE UNDERDRAIN WRAPPED 6-INCH."

(A17) ½" FILLER (INCLUDED IN WING LENGTH): SEAL ALL EXPOSED HORIZONTAL AND VERTICAL SURFACES OF ½" FILLER WITH NON-STAINING GRAY NON-BITUMINOUS JOINT SEALER. (1" DEEP AND HOLD ⅛" BELOW SURFACE OF CONCRETE.)

(A18) ¾" CORK FILLER UP VERT. BEAM SEAT FACES THAT RUN PARALLEL WITH SLAB.

(A19) 18" RUBBERIZED MEMBRANE WATERPROOFING. SEAL ALL HORIZONTAL AND VERTICAL JOINTS ON BACK FACE.

(A31) ¾"×4" PREFORMED JOINT FILLER TO EXTEND BETWEEN EDGES OF WINGS (TYP.)

(A32) HEAVY RIPRAP. SEE SHEET 1 FOR ADDITIONAL DETAILS.

(A33) ELEVATION SHOWN IS TAKEN AT ℄ BRG. OF ABUTMENT AT TOP OF NOTCH OR AT ℄ OF WING.

(A34) STEEL TROWEL TOP SURFACE OF ABUTMENT. PLACE MULTIPLE LAYERS OF POLYETHYLENE SHEETS OVER ENTIRE ABUTMENT TOP BEFORE PLACING SUPERSTRUCTURE. TOTAL THICKNESS OF SHEETS SHALL BE AT LEAST 0.03"

(A36) PULL UP TO 2" CLEAR.

(A37) SLOPE TOP OF ABUTMENT AS SHOWN.

(A38) FIELD BEND TO FOLLOW SLOPE OF TOP OF ABUTMENT.

(X) INDICATES WING NUMBER.

SEE "NORTH ABUTMENT DETAILS-2" SHEET FOR SECTION A-A.

NO.	DATE	REVISION	BY

STATE OF WISCONSIN
DEPARTMENT OF TRANSPORTATION
STRUCTURES DESIGN SECTION

STRUCTURE B-28-192

DRAWN BY TKB | PLANS CK'D. WAH

NORTH ABUTMENT

SHEET 9

SCALE = 1:2

8

8

STATE PROJECT NUMBER

3993-01-81

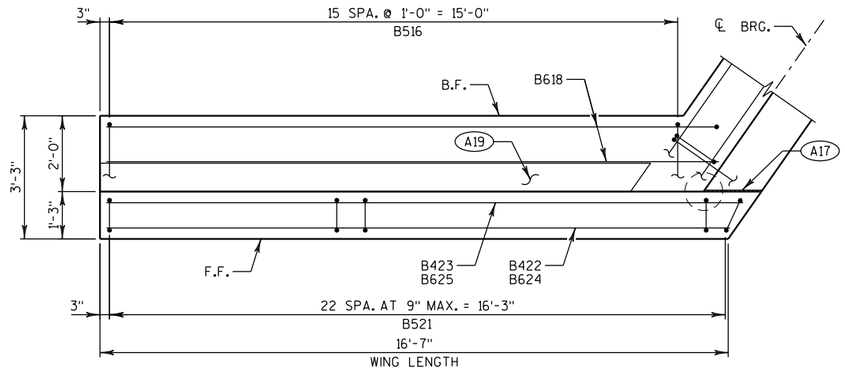

PLAN-WING 3

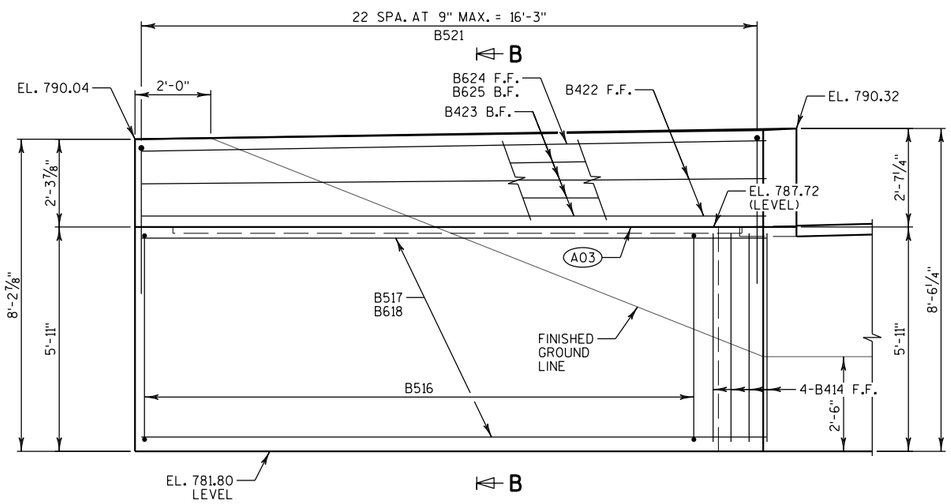

ELEVATION-WING 3

(LOOKING EAST)

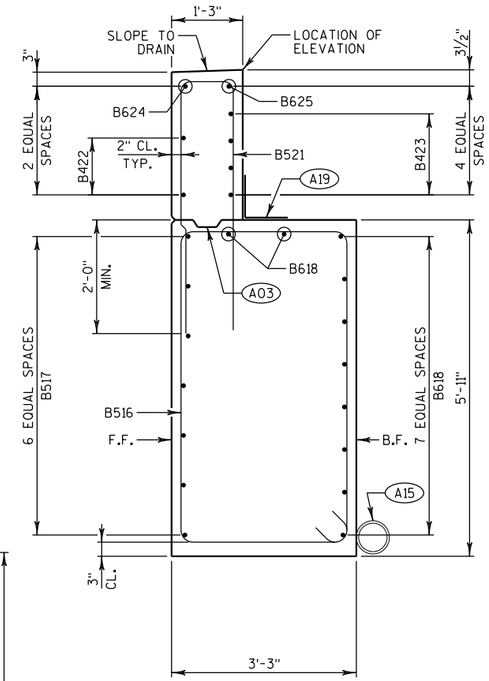

SECTION B-B

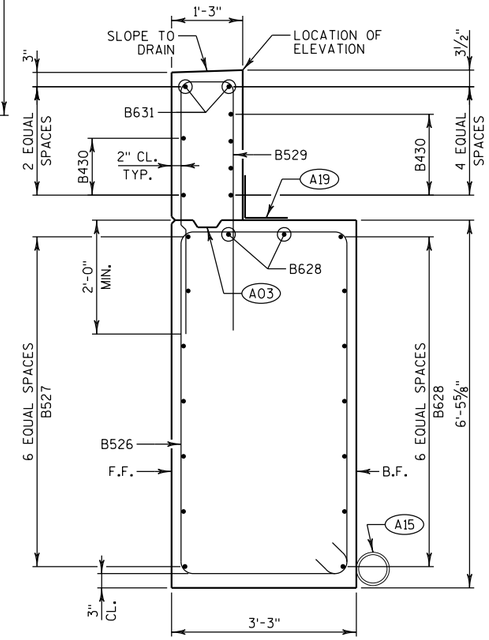

SECTION C-C

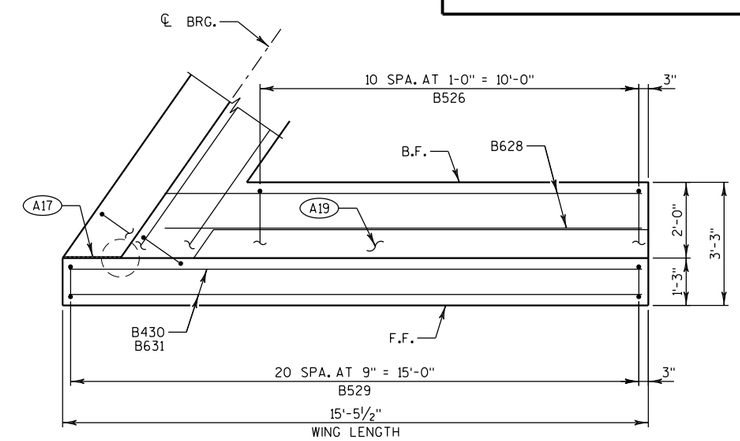

PLAN-WING 4

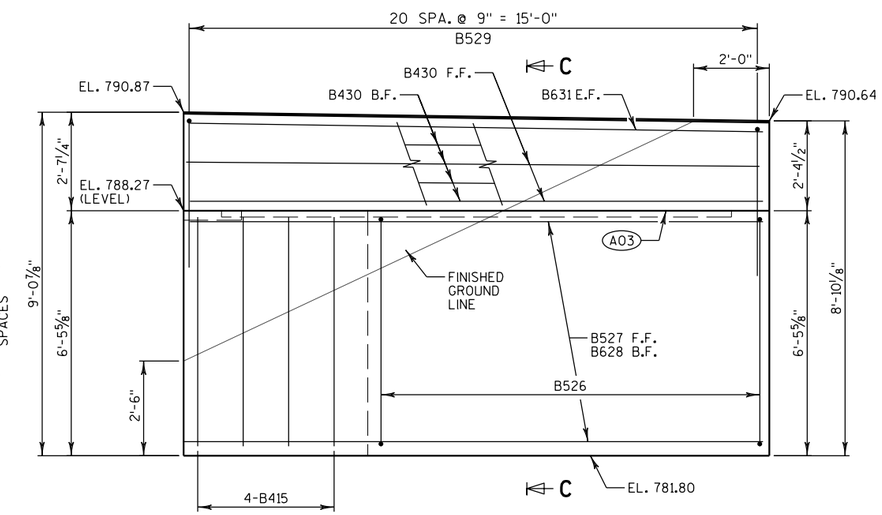

ELEVATION-WING 4

(LOOKING WEST)

NO.	DATE	REVISION	BY

STATE OF WISCONSIN
DEPARTMENT OF TRANSPORTATION
STRUCTURES DESIGN SECTION

STRUCTURE B-28-192

DRAWN BY TKB | PLANS CK'D. WAH

NORTH ABUTMENT DETAILS-1

SHEET 10

SCALE = 1:2

8

8

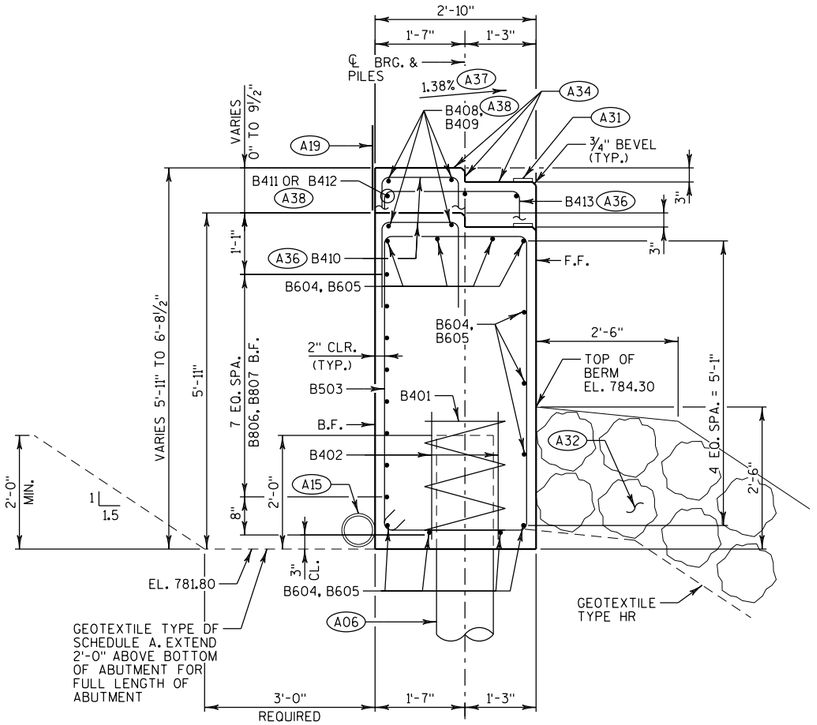

SECTION A-A

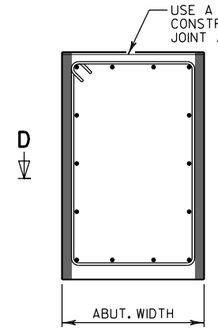

SECTION THRU ABUTMENT BODY

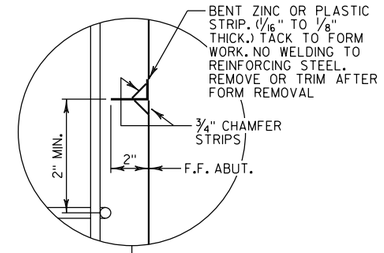

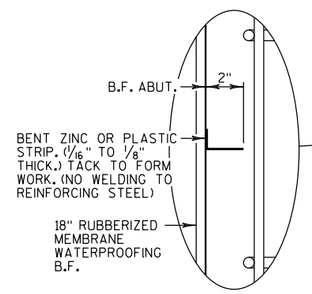

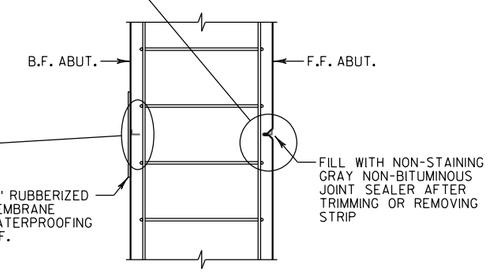

SECTION E-E

ALTERNATE CONSTRUCTION JOINT AT ABUTMENT

PARTIAL ZINC OR PLASTIC BULKHEAD MAY BE USED AS ALTERNATE CONSTRUCTION JOINT, WITH THE PERMISSION OF THE ENGINEER, AT THE CONTRACTOR'S EXPENSE.

VERTICAL CONSTRUCTION JOINT KEYWAY IS NOT REQUIRED WHEN USING ALTERNATE CONSTRUCTION JOINT.

CARE IS TO BE USED IN CASTING CONCRETE AROUND BULKHEAD TO PREVENT DISLOCATION OR MISALIGNMENT OF THE BULKHEAD.

SAW CUTTING JOINT IS NOT ALLOWED.

BILL OF BARS - NORTH ABUTMENT

BAR MARK	NO. REQ'D	LENGTH	BENT	BAR SERIES	LOCATION	
UNCOATED BARS						TOTAL WEIGHT = 4,560 LBS
B401	9	28'-0"	X		BODY AT PILES	VERT.
B402	18	2'-3"			BODY AT PILES	VERT.
B503	73	16'-2"	X		BODY, STIRRUPS	VERT.
B604	11	33'-0"			BODY, F.F., TOP, & BTM.	HORIZ.
B605	11	32'-4"			BODY, F.F., TOP, & BTM.	HORIZ.
B806	8	36'-4"	X		BODY, B.F.	HORIZ.
B807	8	30'-11"	X		BODY, B.F.	HORIZ.
B408	2	33'-1"			BODY, TOP AT NOTCH	HORIZ.
B409	2	32'-4"			BODY, TOP AT NOTCH	HORIZ.
B410	59	4'-9"	X		BODY, TOP AT NOTCH	VERT.
B411	3	20'-6"			BODY, TOP	HORIZ.
B412	3	32'-3"			BODY, TOP	HORIZ.
B413	51	6'-0"	X		BODY, TOP	VERT.
B414	4	5'-6"			BODY, END AT WING 3	VERT.
B415	4	6'-0"			BODY, END AT WING 4	VERT.
COATED BARS						TOTAL WEIGHT = 1,890 LBS
B516	16	17'-6"	X		WING 3, STIRRUPS	VERT.
B517	7	16'-3"			WING 3, F.F.	VERT.
B618	10	17'-4"	X		WING 3, B.F. & TOP LOWER SEGMENT	HORIZ.
BX19					VACANT	
BX20					VACANT	
B521	23	9'-8"	X		WING 3	VERT.
B422	2	16'-3"			WING 3, TOP F.F.	HORIZ.
B423	4	16'-11"			WING 3, TOP B.F.	HORIZ.
B624	1	16'-3"			WING 3, TOP F.F.	HORIZ.
B625	1	16'-11"			WING 3, TOP B.F.	VERT.
B526	11	18'-6"	X		WING 4, STIRRUPS	VERT.
B527	7	15'-1"			WING 4, F.F.	HORIZ.
B628	9	14'-2"	X		WING 4, B.F. & TOP LOWER SEGMENT	HORIZ.
B529	21	9'-6"	X		WING 4, TOP	VERT.
B430	6	15'-1"			WING 4, TOP E.F.	HORIZ.
B631	2	15'-1"			WING 4, TOP E.F.	HORIZ.
B532	9	4'-0"	X		WING 4 AT ABUTMENT	HORIZ.

THE FIRST DIGIT OR FIRST TWO DIGITS OF THE BAR MARK SIGNIFIES THE BAR SIZE.
DIMENSIONS IN BENDING DETAILS ARE OUT-TO-OUT OF BAR.
LENGTH SHOWN FOR BARS IN A BAR SERIES IS AN AVERAGE,
SEE BAR SERIES TABLE FOR ACTUAL LENGTHS.

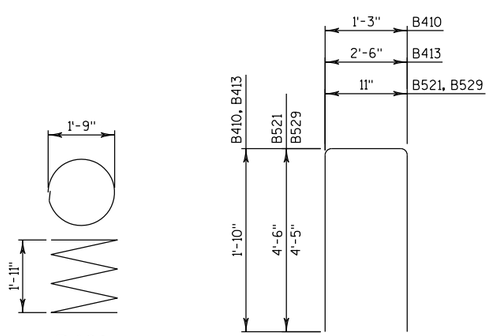

B401

B410, B413, B521, B529

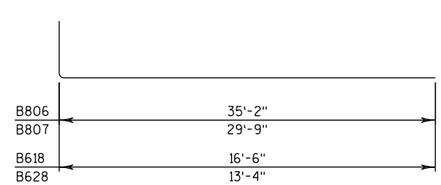

B806, B807, B618, B628

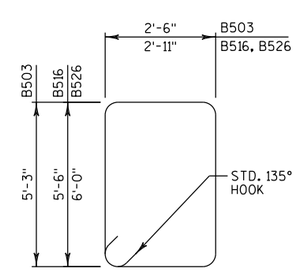

B503, B516, B526

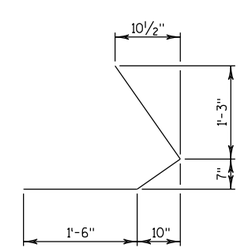

B532

NO.	DATE	REVISION	BY

STATE OF WISCONSIN
DEPARTMENT OF TRANSPORTATION
STRUCTURES DESIGN SECTION

STRUCTURE B-28-192

DRAWN BY TKB | PLANS CK'D. WAH

NORTH ABUTMENT DETAILS-2

SHEET 11

SCALE = 1:2

8

8

STATE PROJECT NUMBER
3993-01-81

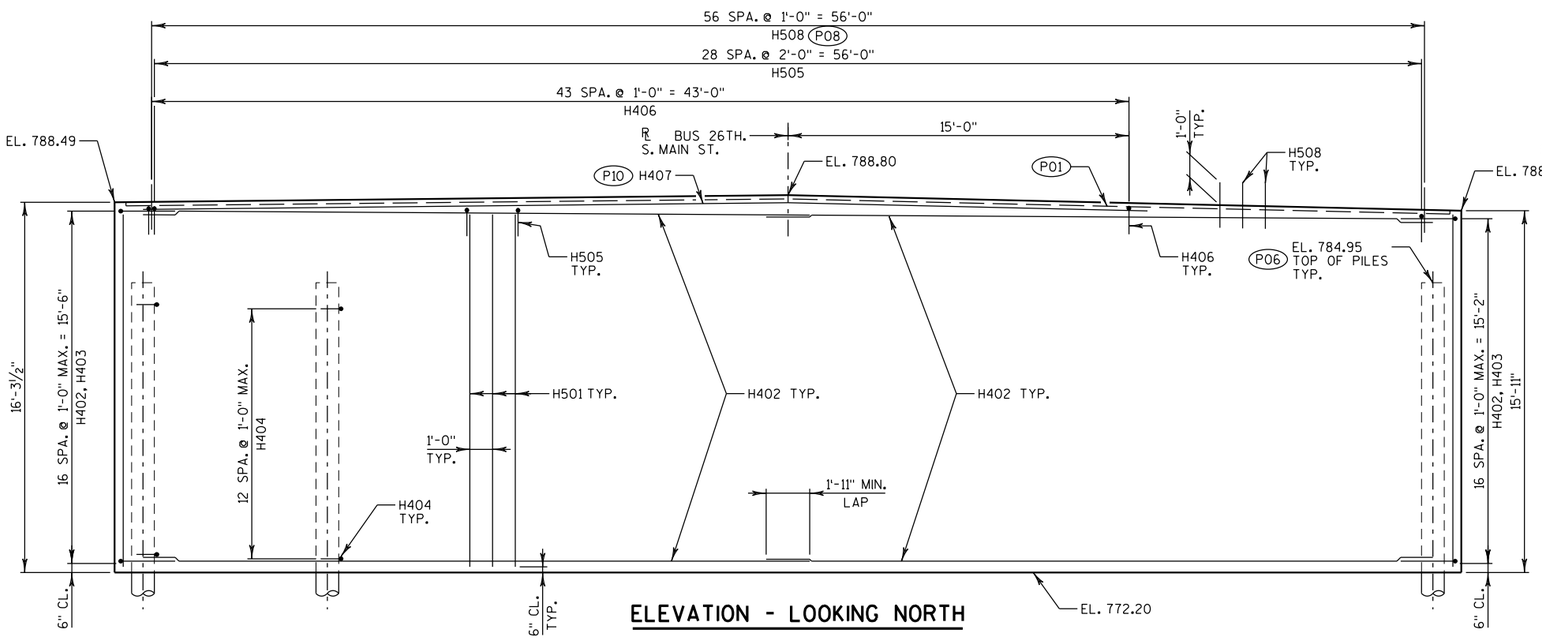

ELEVATION - LOOKING NORTH

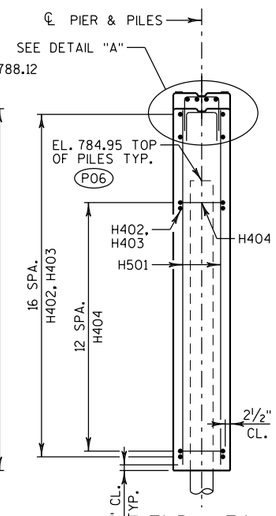

END VIEW

BILL OF BARS - PIER 1

BAR MARK	NO. REQ'D	LENGTH	BENT	BAR SERIES	LOCATION	
UNCOATED BARS						TOTAL WEIGHT = 4,240 LBS
H501	124	15'-2"			BOTH FACES	VERT.
H402	68	29'-4"			BOTH FACES	HORIZ.
H403	34	6'-4"	X		ENDS	HORIZ.
H404	195	2'-11"	X		TIE BARS	HORIZ.
H505	29	4'-8"	X		TOP	VERT.
H406	44	5'-5"	X		TOP	VERT.
H407	4	43'-8"			TOP	HORIZ.
COATED BARS						TOTAL WEIGHT = 120 LBS
H508	57	2'-0"			DOWEL BARS	VERT.

THE FIRST DIGIT OR FIRST TWO DIGITS OF THE BAR MARK SIGNIFIES THE BAR SIZE.

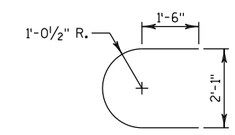

H403

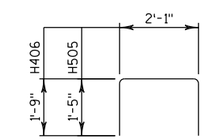

H505, H406

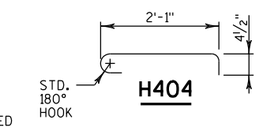

H404

LEGEND

(P01) KEYED CONSTRUCTION JOINT-FORMED BY BEVELED 2 x 6.

(P06) SUPPORT PIER ON 12¾" DIA. x 0.375" CIP CONCRETE PILING, ESTIMATED 65'-0" LONG WITH A REQUIRED DRIVING RESISTANCE OF 210 TONS PER PILE.

(P08) H508 BARS @ 1'-0" CTRS. MAY BE PLACED AFTER CONCRETE IS POURED BUT BEFORE INITIAL SET HAS TAKEN PLACE. (EMBED 1'-0" INTO CONCRETE).

(P10) FIELD BEND TO FOLLOW TOP OF PIER SLOPE.

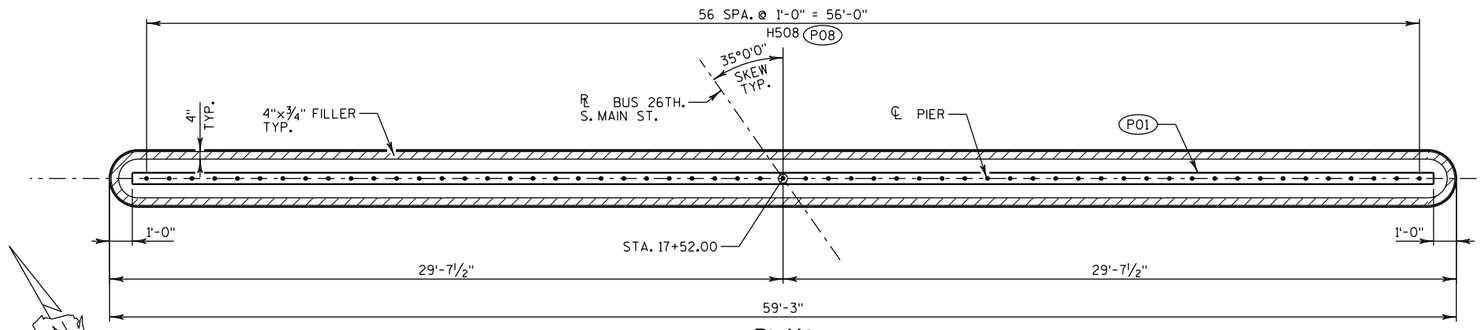

PLAN

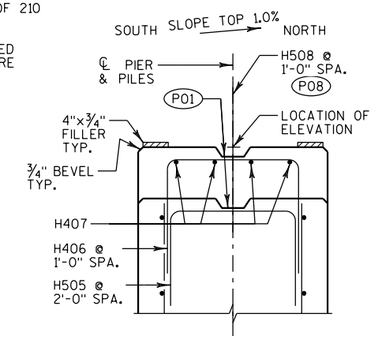

DETAIL "A"

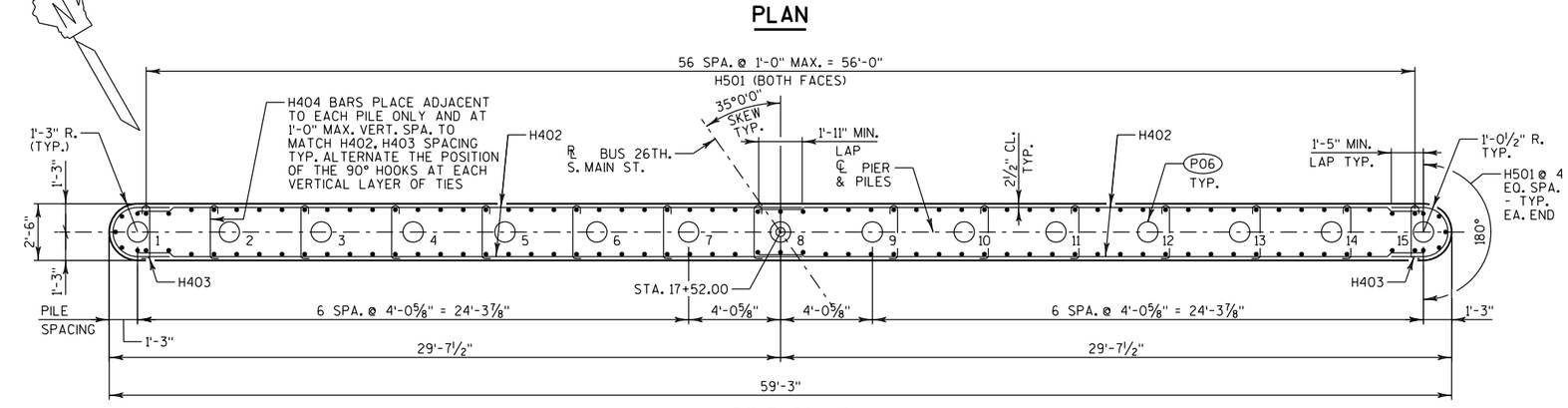

PILE PLAN

NO.	DATE	REVISION	BY

STATE OF WISCONSIN
DEPARTMENT OF TRANSPORTATION
STRUCTURES DESIGN SECTION

STRUCTURE B-28-192

DRAWN BY TKB | PLANS CK'D. WAH

PIER 1

SHEET 12

SCALE = 1:2

STATE PROJECT NUMBER
3993-01-81

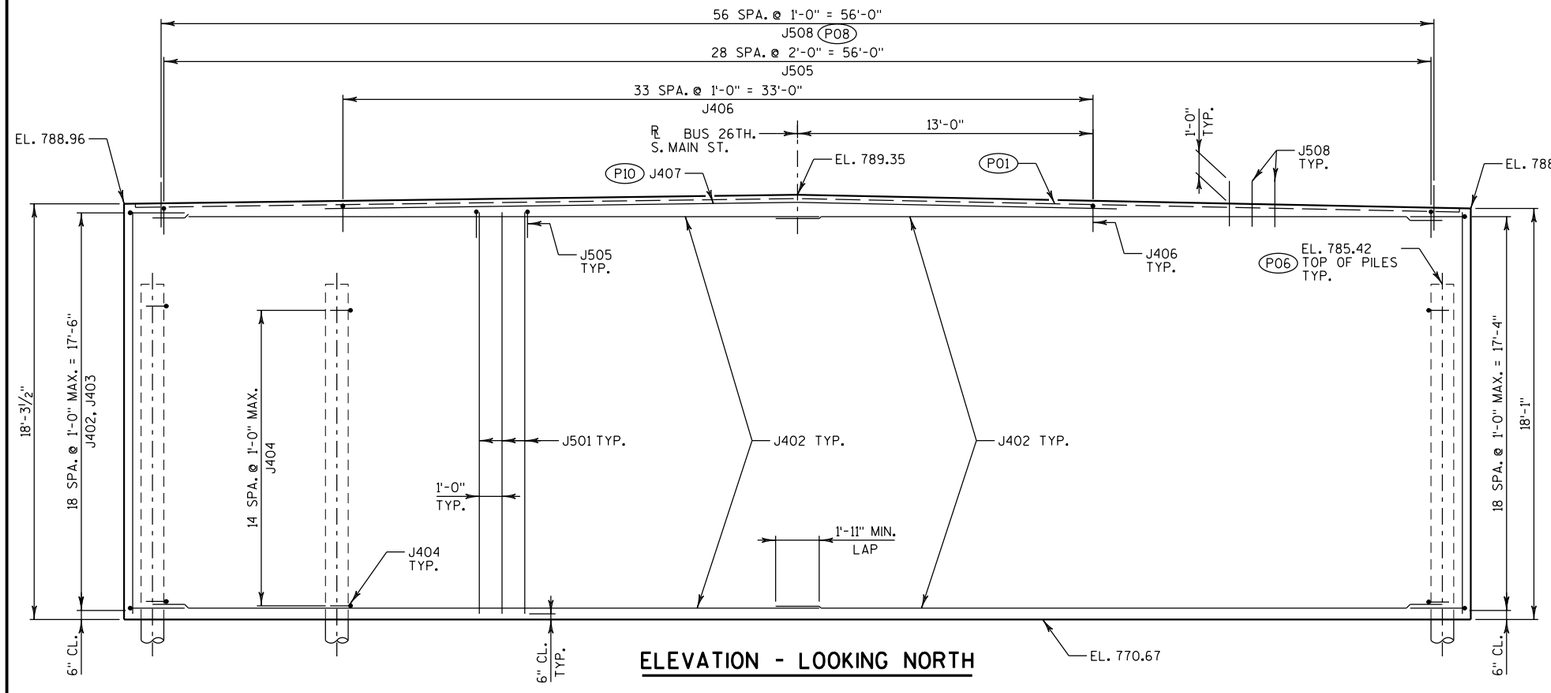

ELEVATION - LOOKING NORTH

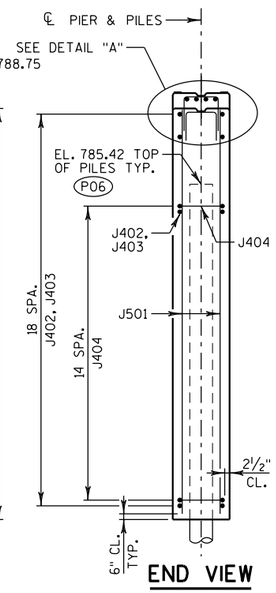

END VIEW

BILL OF BARS - PIER 2

BAR MARK	NO. REQ'D	LENGTH	BENT	BAR SERIES	LOCATION	
UNCOATED BARS						TOTAL WEIGHT = 4,680 LBS
J501	124	17'-4"			BOTH FACES	VERT.
J402	76	29'-4"			BOTH FACES	HORIZ.
J403	38	6'-4"	X		ENDS	HORIZ.
J404	225	2'-11"	X		TIE BARS	HORIZ.
J505	29	4'-6"	X		TOP	VERT.
J406	34	5'-5"	X		TOP	VERT.
J407	4	33'-6"			TOP	HORIZ.
COATED BARS						TOTAL WEIGHT = 120 LBS
J508	57	2'-0"			DOWEL BARS	VERT.

THE FIRST DIGIT OR FIRST TWO DIGITS OF THE BAR MARK SIGNIFIES THE BAR SIZE.

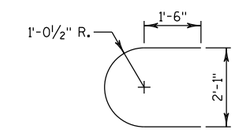

J403

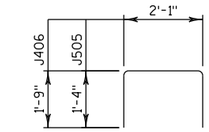

J505, J406

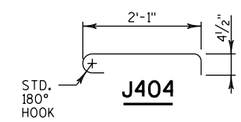

J404

LEGEND

(P01) KEYED CONSTRUCTION JOINT-FORMED BY BEVELED 2 x 6.

(P06) SUPPORT PIER ON 12¾" DIA. x 0.375" CIP CONCRETE PILING. ESTIMATED 70'-0" LONG WITH A REQUIRED DRIVING RESISTANCE OF 210 TONS PER PILE.

(P08) J508 BARS @ 1'-0" CTRS. MAY BE PLACED AFTER CONCRETE IS POURED BUT BEFORE INITIAL SET HAS TAKEN PLACE. (EMBED 1'-0" INTO CONCRETE).

(P10) FIELD BEND TO FOLLOW TOP OF PIER SLOPE.

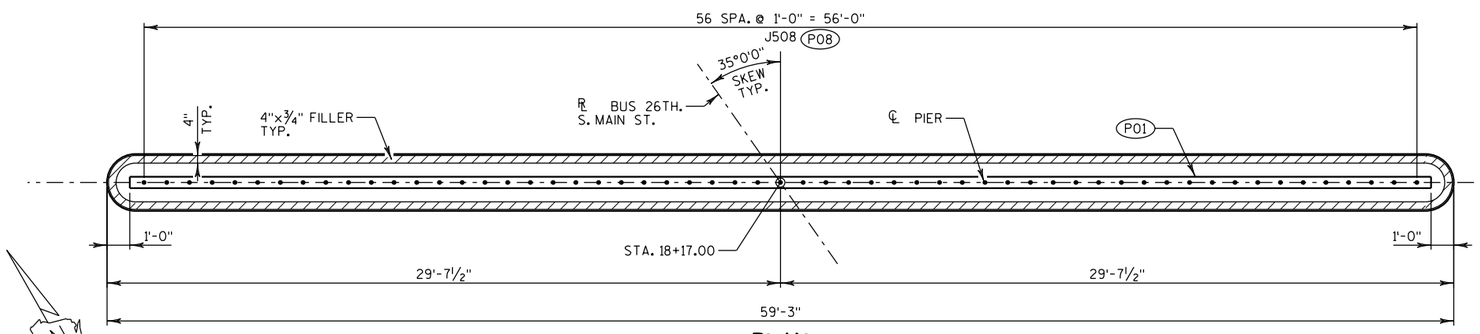

PLAN

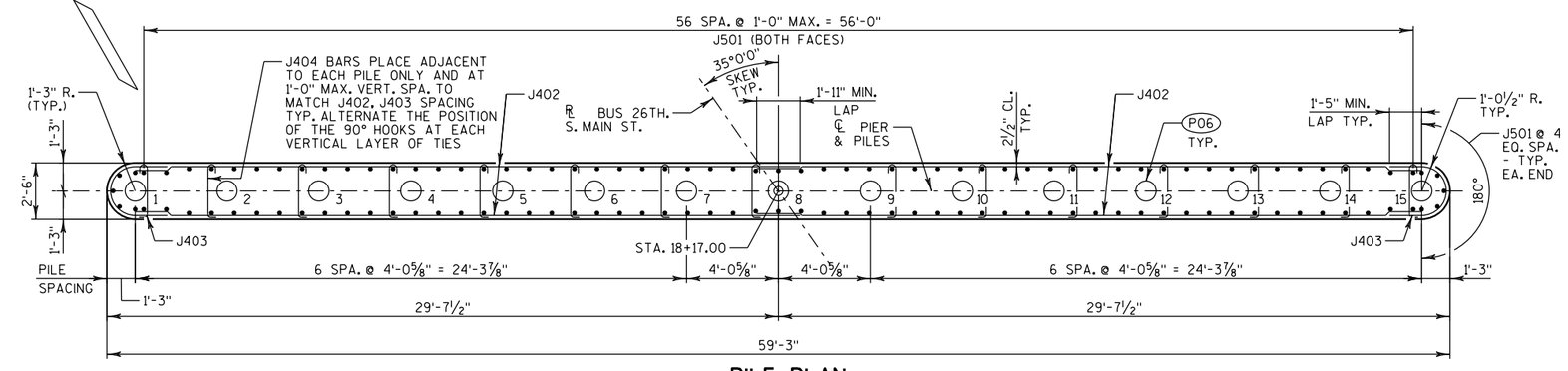

PILE PLAN

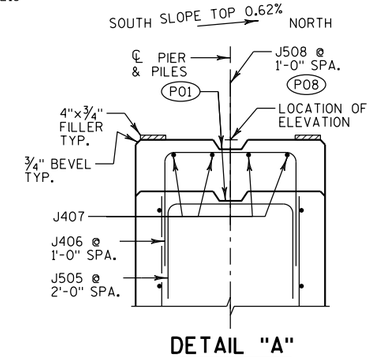

DETAIL "A"

NO.	DATE	REVISION	BY

STATE OF WISCONSIN
DEPARTMENT OF TRANSPORTATION
STRUCTURES DESIGN SECTION

STRUCTURE B-28-192

DRAWN BY	TKB	PLANS CK'D.	WAH

PIER 2

SHEET 13

SCALE = 1:2

8

8

STATE PROJECT NUMBER

3993-01-81

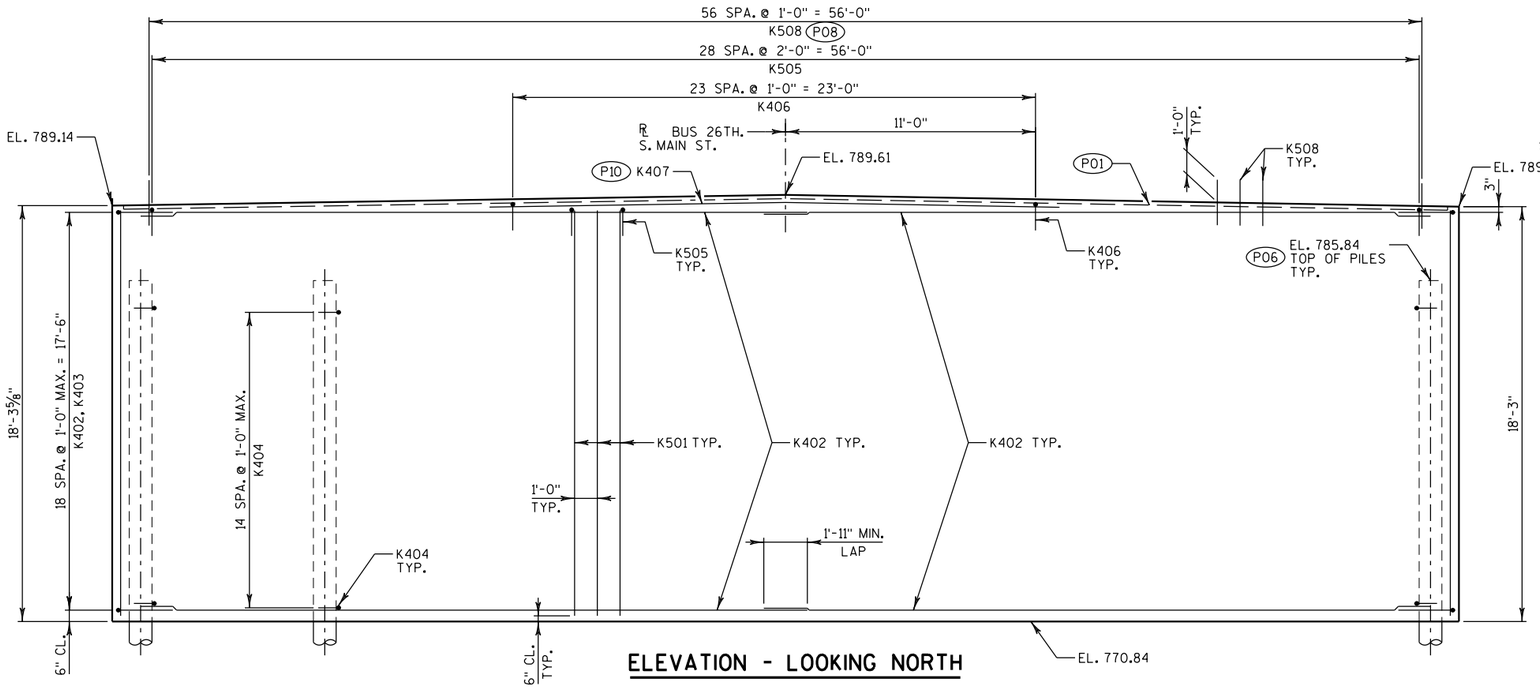

ELEVATION - LOOKING NORTH

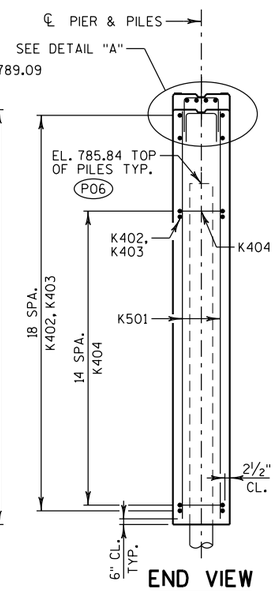

END VIEW

BILL OF BARS - PIER 3

BAR MARK	NO. REQ'D	LENGTH	BENT	BAR SERIES	LOCATION	
UNCOATED BARS						TOTAL WEIGHT = 4,630 LBS
K501	124	17'-6"			BOTH FACES	VERT.
K402	76	29'-4"			BOTH FACES	HORIZ
K403	38	6'-4"	X		ENDS	HORIZ.
K404	225	2'-11"	X		TIE BARS	HORIZ.
K505	29	4'-0"	X		TOP	VERT.
K406	24	5'-5"	X		TOP	VERT.
K407	4	23'-6"			TOP	HORIZ
COATED BARS						TOTAL WEIGHT = 120 LBS
K508	57	2'-0"			DOWEL BARS	VERT.

THE FIRST DIGIT OR FIRST TWO DIGITS OF THE BAR MARK SIGNIFIES THE BAR SIZE.

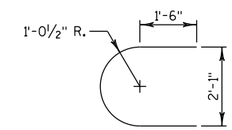

K403

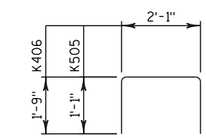

K505, K406

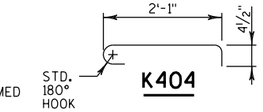

K404

LEGEND

(P01) KEYED CONSTRUCTION JOINT-FORMED BY BEVELED 2 × 6.

(P06) SUPPORT PIER ON 12¾" DIA. × 0.375" CIP CONCRETE PILING. ESTIMATED 65'-0" LONG WITH A REQUIRED DRIVING RESISTANCE OF 210 TONS PER PILE.

(P08) K508 BARS @ 1'-0" CTRS. MAY BE PLACED AFTER CONCRETE IS POURED BUT BEFORE INITIAL SET HAS TAKEN PLACE. (EMBED 1'-0" INTO CONCRETE).

(P10) FIELD BEND TO FOLLOW TOP OF PIER SLOPE.

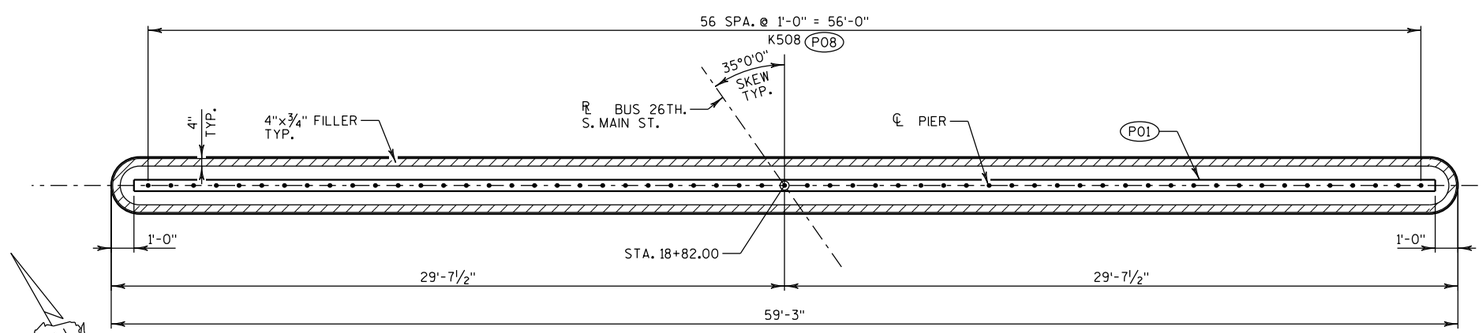

PLAN

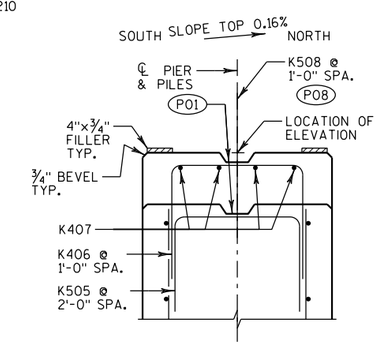

DETAIL "A"

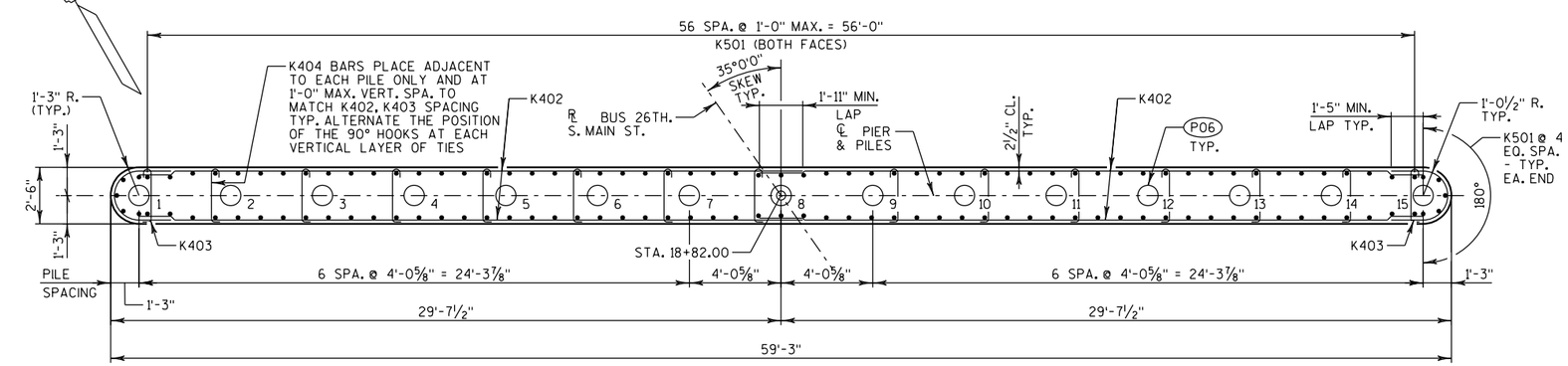

PILE PLAN

NO.	DATE	REVISION	BY

STATE OF WISCONSIN
DEPARTMENT OF TRANSPORTATION
STRUCTURES DESIGN SECTION

STRUCTURE B-28-192

DRAWN BY TKB | PLANS CK'D. WAH

PIER 3

SHEET 14

SCALE = 1:2

8

8

STATE PROJECT NUMBER

3993-01-81

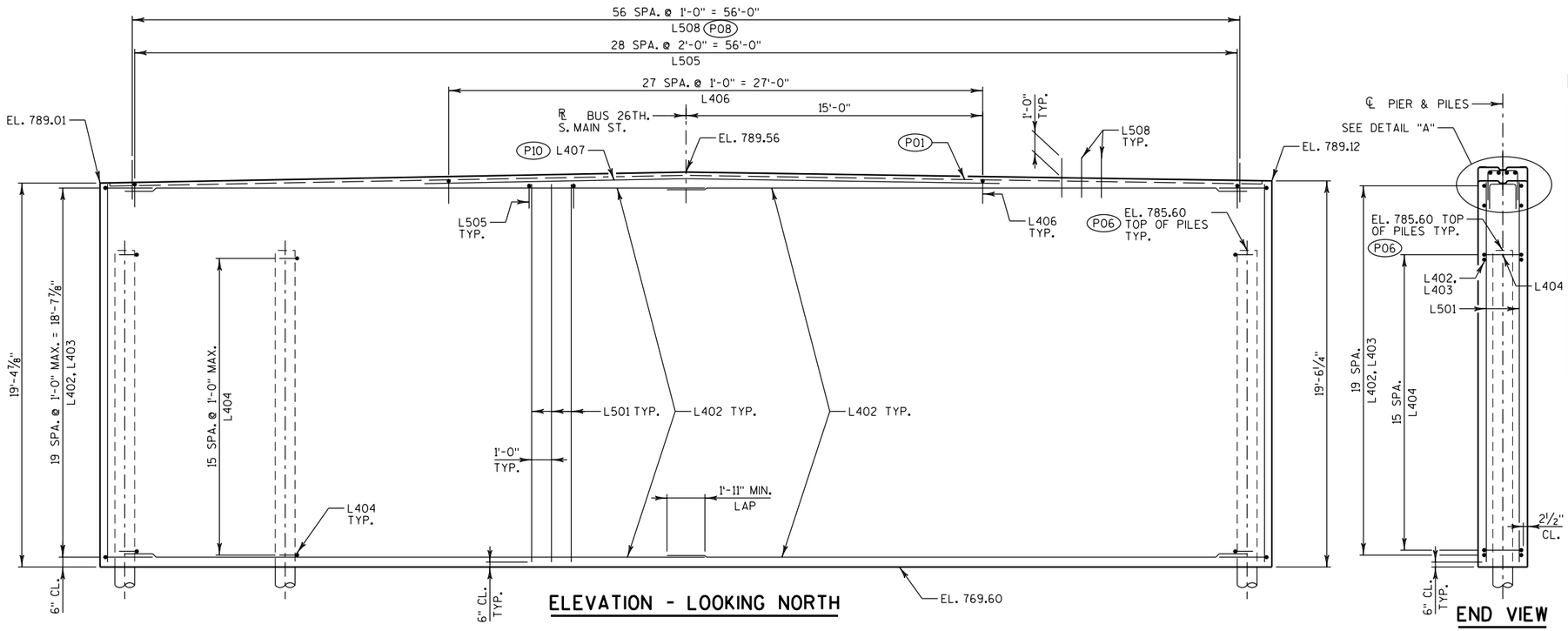

ELEVATION - LOOKING NORTH

END VIEW

BILL OF BARS - PIER 4

BAR MARK	NO. REQ'D	LENGTH	BENT	BAR SERIES	LOCATION	
UNCOATED BARS						TOTAL WEIGHT = 4,930 LBS
L501	124	18'-8"			BOTH FACES	VERT.
L402	80	29'-4"			BOTH FACES	HORIZ.
L403	40	6'-4"	X		ENDS	HORIZ.
L404	240	2'-11"	X		TIE BARS	HORIZ.
L505	29	4'-4"	X		TOP	VERT.
L406	28	5'-5"	X		TOP	VERT.
L407	4	27'-6"			TOP	HORIZ.
COATED BARS						TOTAL WEIGHT = 120 LBS
L508	57	2'-0"			DOWEL BARS	VERT.

THE FIRST DIGIT OR FIRST TWO DIGITS OF THE BAR MARK SIGNIFIES THE BAR SIZE.

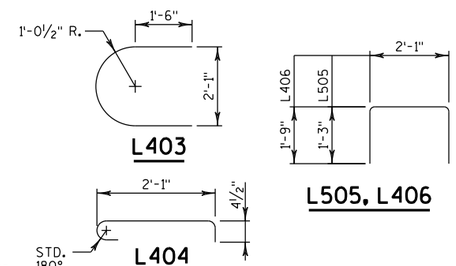

LEGEND

(P01) KEYED CONSTRUCTION JOINT-FORMED BY BEVELED 2 x 6.

(P06) SUPPORT PIER ON 12¾" DIA. x 0.375" CIP CONCRETE PILING, ESTIMATED 70'-0" LONG WITH A REQUIRED DRIVING RESISTANCE OF 210 TONS PER PILE.

(P08) L508 BARS @ 1'-0" CTRS. MAY BE PLACED AFTER CONCRETE IS POURED BUT BEFORE INITIAL SET HAS TAKEN PLACE. (EMBED 1'-0" INTO CONCRETE).

(P10) FIELD BEND TO FOLLOW TOP OF PIER SLOPE.

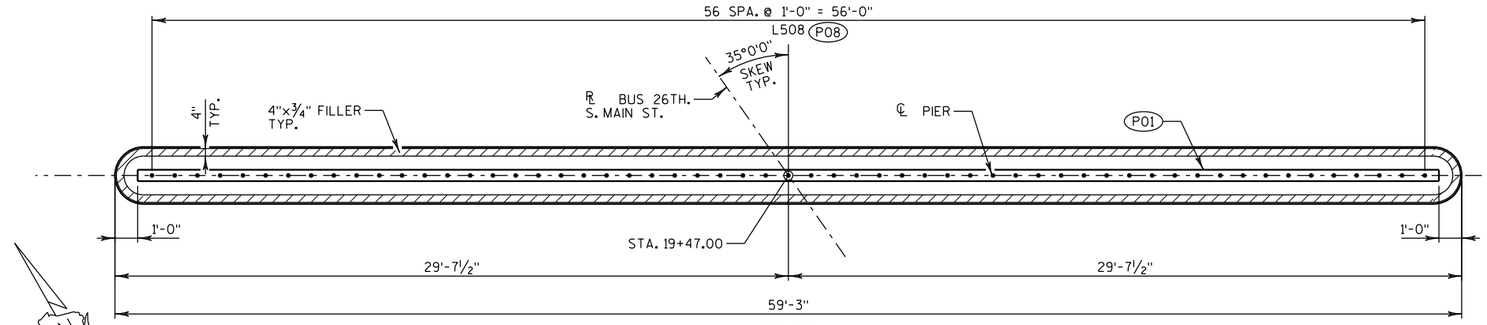

PLAN

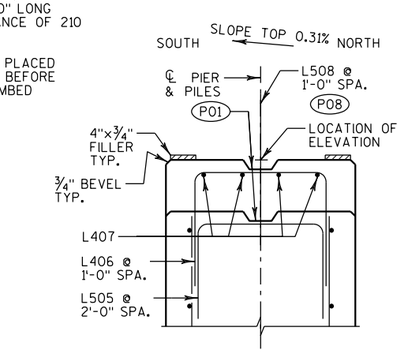

DETAIL "A"

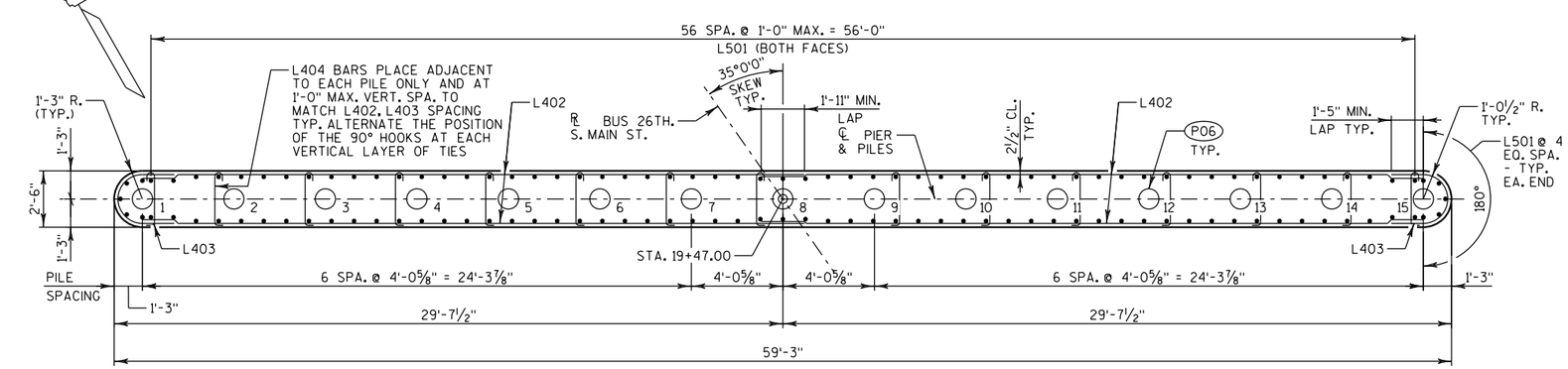

PILE PLAN

NO.	DATE	REVISION	BY

STATE OF WISCONSIN
DEPARTMENT OF TRANSPORTATION
STRUCTURES DESIGN SECTION

STRUCTURE B-28-192

DRAWN BY TKB | PLANS CK'D. WAH

PIER 4

SHEET 15

SCALE = 1:2

STATE PROJECT NUMBER
3993-01-81

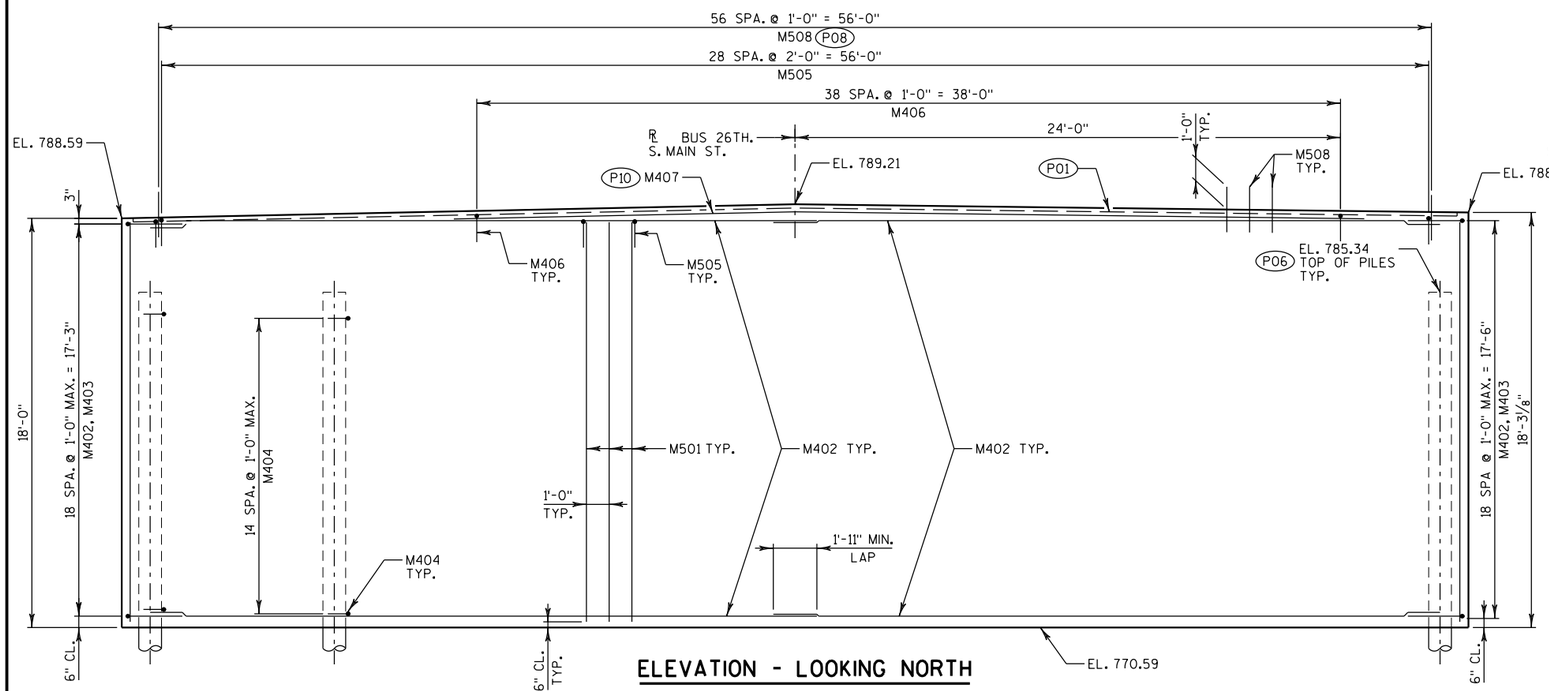

ELEVATION - LOOKING NORTH

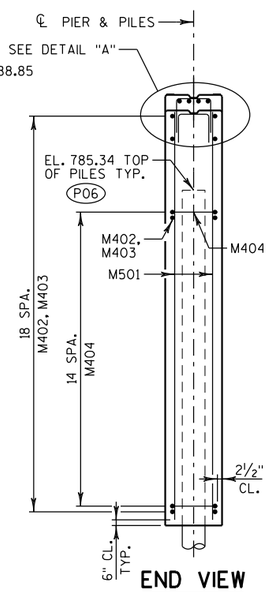

END VIEW

BILL OF BARS - PIER 5

BAR MARK	NO. REQ'D	LENGTH	BENT	BAR SERIES	LOCATION	
UNCOATED BARS						TOTAL WEIGHT = 4,700 LBS
M501	124	17'-3"			BOTH FACES	VERT.
M402	76	29'-4"			BOTH FACES	HORIZ
M403	38	6'-4"	X		ENDS	HORIZ
M404	225	2'-11"	X		TIE BARS	HORIZ
M505	29	4'-6"	X		TOP	VERT.
M406	39	5'-5"	X		TOP	VERT.
M407	4	38'-6"			TOP	HORIZ
COATED BARS						TOTAL WEIGHT = 120 LBS
M508	57	2'-0"			DOWEL BARS	VERT.

THE FIRST DIGIT OR FIRST TWO DIGITS OF THE BAR MARK SIGNIFIES THE BAR SIZE.

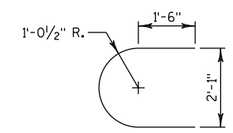

M403

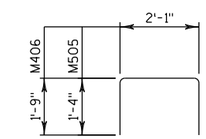

M505, M406

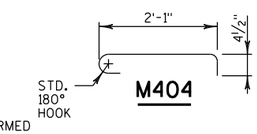

M404

LEGEND

P01 KEYED CONSTRUCTION JOINT-FORMED BY BEVELED 2 x 6.

P06 SUPPORT PIER ON 12¾" DIA. x 0.375" CIP CONCRETE PILING, ESTIMATED 65'-0" LONG WITH A REQUIRED DRIVING RESISTANCE OF 210 TONS PER PILE.

P08 M508 BARS @ 1'-0" CTRS. MAY BE PLACED AFTER CONCRETE IS POURED BUT BEFORE INITIAL SET HAS TAKEN PLACE. (EMBED 1'-0" INTO CONCRETE).

P10 FIELD BEND TO FOLLOW TOP OF PIER SLOPE.

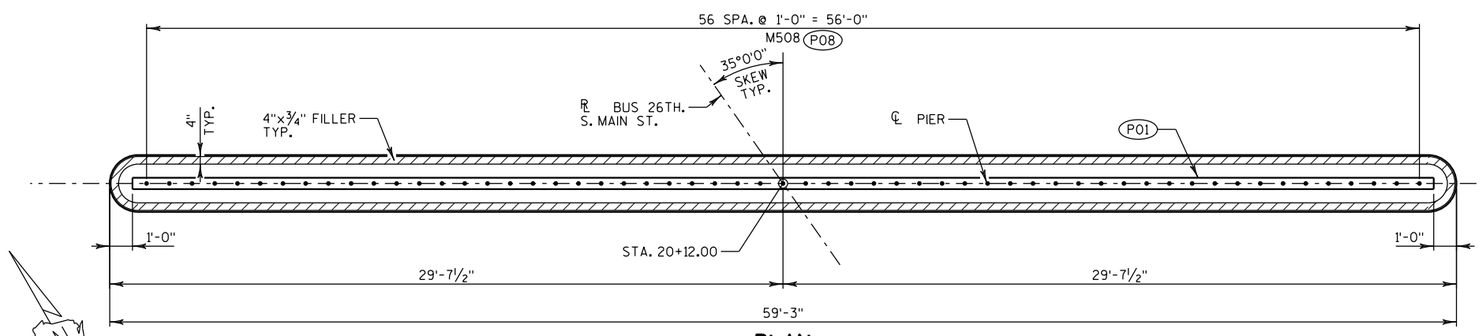

PLAN

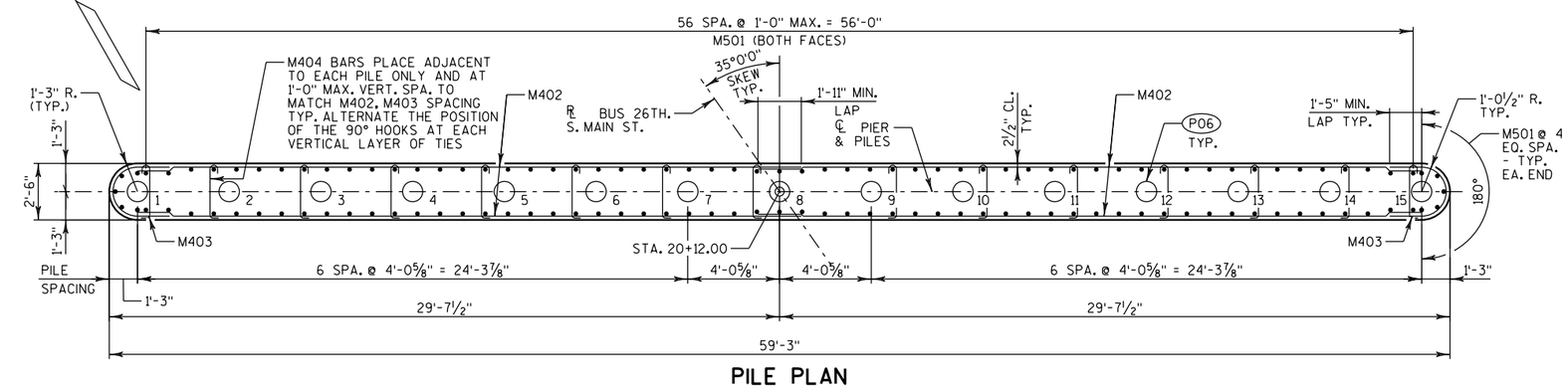

PILE PLAN

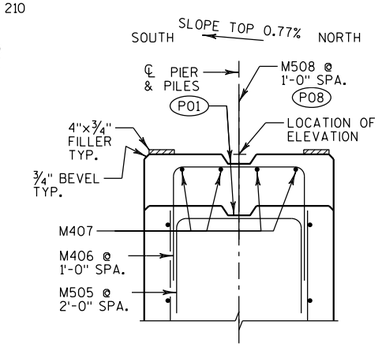

DETAIL "A"

NO.	DATE	REVISION	BY

STATE OF WISCONSIN
DEPARTMENT OF TRANSPORTATION
STRUCTURES DESIGN SECTION

STRUCTURE B-28-192

DRAWN BY TKB | PLANS CK'D. WAH

PIER 5

SHEET 16

SCALE = 1:2

8

8

STATE PROJECT NUMBER
3993-01-81

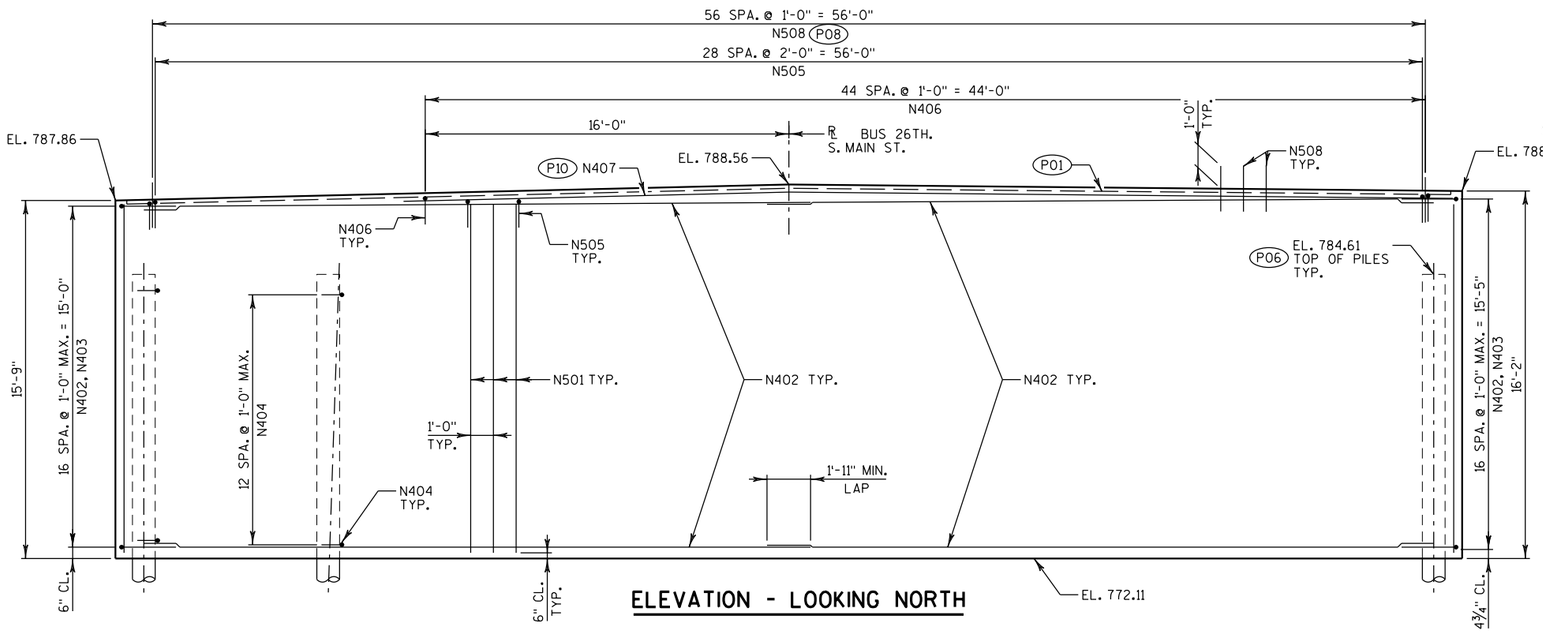

ELEVATION - LOOKING NORTH

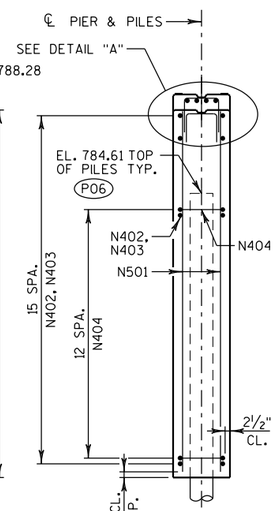

END VIEW

BILL OF BARS - PIER 6

BAR MARK	NO. REQ'D	LENGTH	BENT	BAR SERIES	LOCATION	
UNCOATED BARS						TOTAL WEIGHT = 4,230 LBS
N501	124	15'-0"			BOTH FACES	VERT.
N402	68	29'-4"			BOTH FACES	HORIZ.
N403	34	6'-4"	X		ENDS	HORIZ.
N404	195	2'-11"	X		TIE BARS	HORIZ.
N505	29	4'-10"	X		TOP	VERT.
N406	45	5'-5"	X		TOP	VERT.
N407	4	44'-6"			TOP	HORIZ.
COATED BARS						TOTAL WEIGHT = 120 LBS
N508	57	2'-0"			DOWEL BARS	VERT.

THE FIRST DIGIT OR FIRST TWO DIGITS OF THE BAR MARK SIGNIFIES THE BAR SIZE.

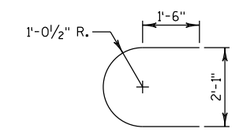

N403

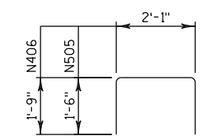

N505, N406

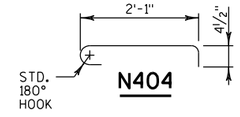

N404

LEGEND

(P01) KEYED CONSTRUCTION JOINT-FORMED BY BEVELED 2 x 6.

(P06) SUPPORT PIER ON 12¾" DIA. x 0.375" CIP CONCRETE PILING, ESTIMATED 60'-0" LONG WITH A REQUIRED DRIVING RESISTANCE OF 210 TONS PER PILE.

(P08) N508 BARS @ 1'-0" CTRS. MAY BE PLACED AFTER CONCRETE IS POURED BUT BEFORE INITIAL SET HAS TAKEN PLACE. (EMBED 1'-0" INTO CONCRETE).

(P10) FIELD BEND TO FOLLOW TOP OF PIER SLOPE.

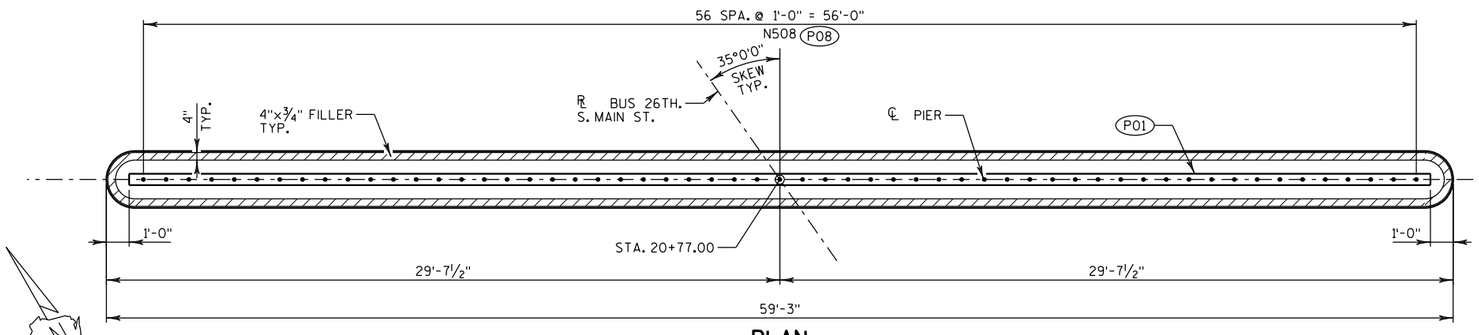

PLAN

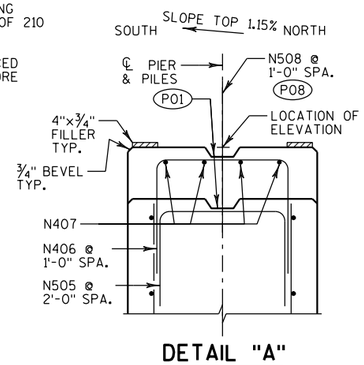

DETAIL "A"

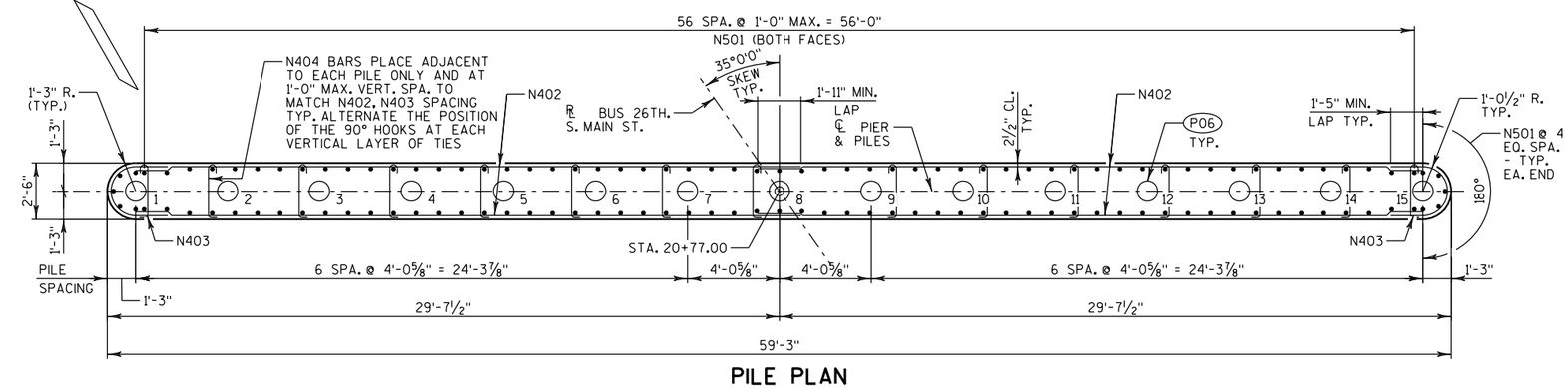

PILE PLAN

NO.	DATE	REVISION	BY

STATE OF WISCONSIN
DEPARTMENT OF TRANSPORTATION
STRUCTURES DESIGN SECTION

STRUCTURE B-28-192

DRAWN BY TKB | PLANS CK'D. WAH

PIER 6

SHEET 17

SCALE = 1:2

STATE PROJECT NUMBER

3993-01-81

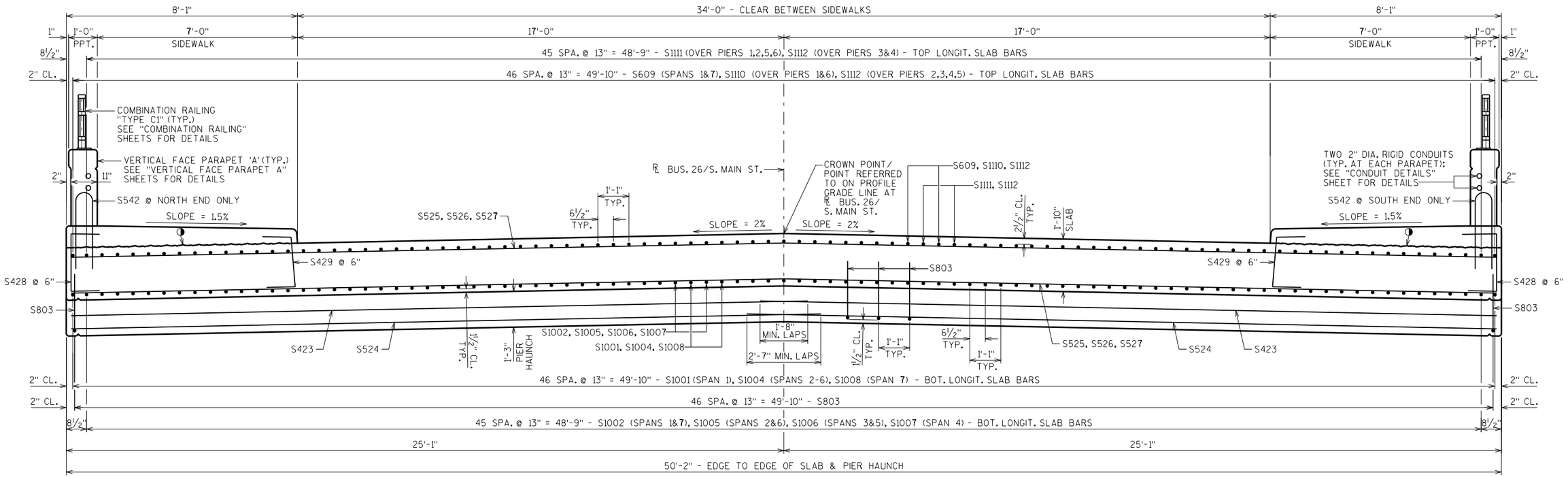

TYPICAL CROSS SECTION THRU BRIDGE LOOKING NORTH

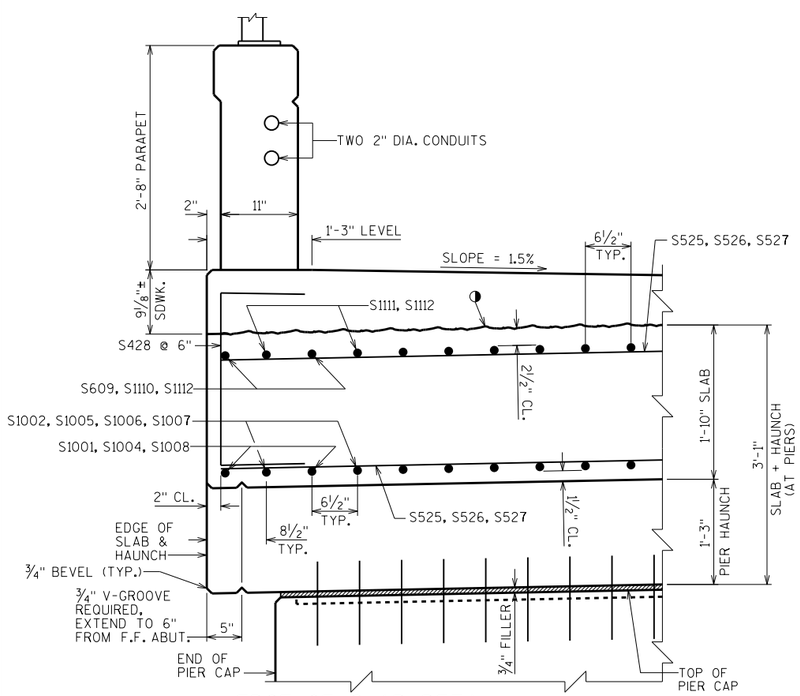

EDGE OF SLAB DETAIL

(TYP. @ BOTH SIDES)

◑HORIZ. CONST. JOINT: STRIKE OFF AND LEAVE ROUGH AS SHOWN

NO.	DATE	REVISION	BY

STATE OF WISCONSIN
DEPARTMENT OF TRANSPORTATION
STRUCTURES DESIGN SECTION

STRUCTURE B-28-192

DRAWN BY JPH | PLANS CK'D. WAH

SUPERSTRUCTURE CROSS SECTIONS - 1

SHEET 18

142

SCALE = 1.75

8

8

STATE PROJECT NUMBER

3993-01-81

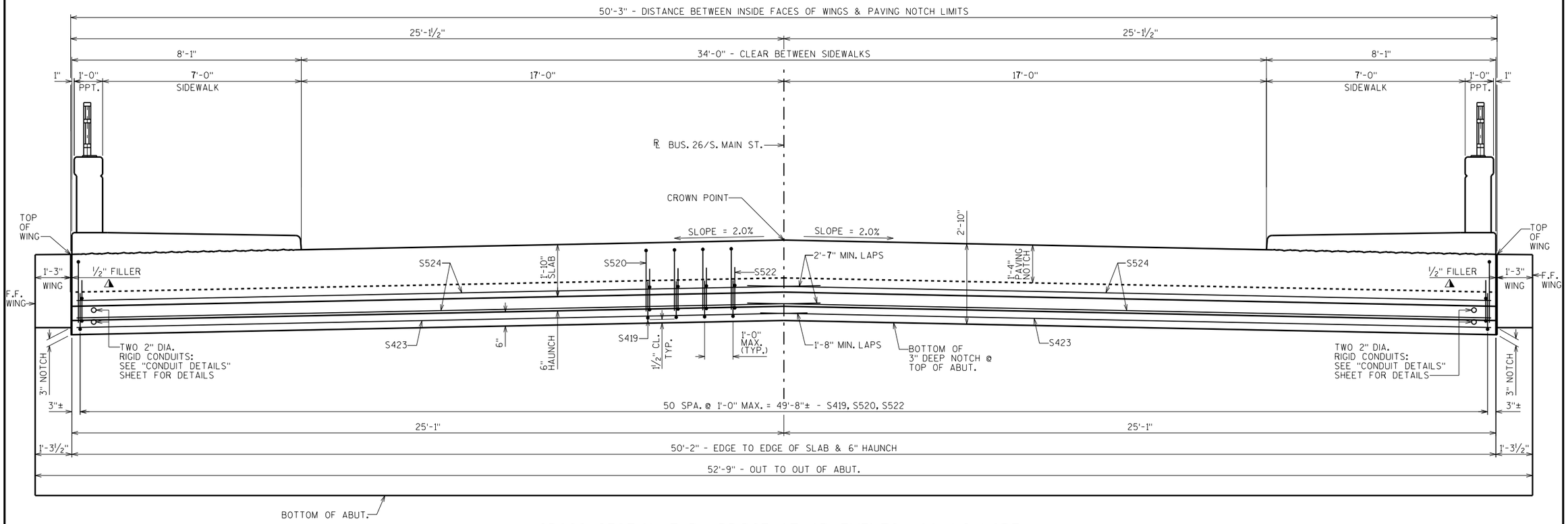

CROSS SECTION THRU BRIDGE AT ABUTMENTS LOOKING NORTH

(NORTH ABUTMENT SHOWN)

8

8

◭ SEAL ALL EXPOSED HORIZONTAL AND VERTICAL SURFACES OF ½" FILLER WITH NON-STAINING, GRAY, NON-BITUMINOUS JOINT SEALER. (1" DEEP AND HOLD ⅛" BELOW SURFACE OF CONCRETE). EXTEND SEALER 3" BELOW GUTTER LINE AT INSIDE FACE.

NO.	DATE	REVISION	BY

STATE OF WISCONSIN
DEPARTMENT OF TRANSPORTATION
STRUCTURES DESIGN SECTION

STRUCTURE B-28-192

DRAWN BY JPH | PLANS CK'D. WAH

SUPERSTRUCTURE CROSS SECTIONS - 2

SHEET 19

143

SCALE = 1.75

STATE PROJECT NUMBER

3993-01-81

INDICATES WING NUMBER

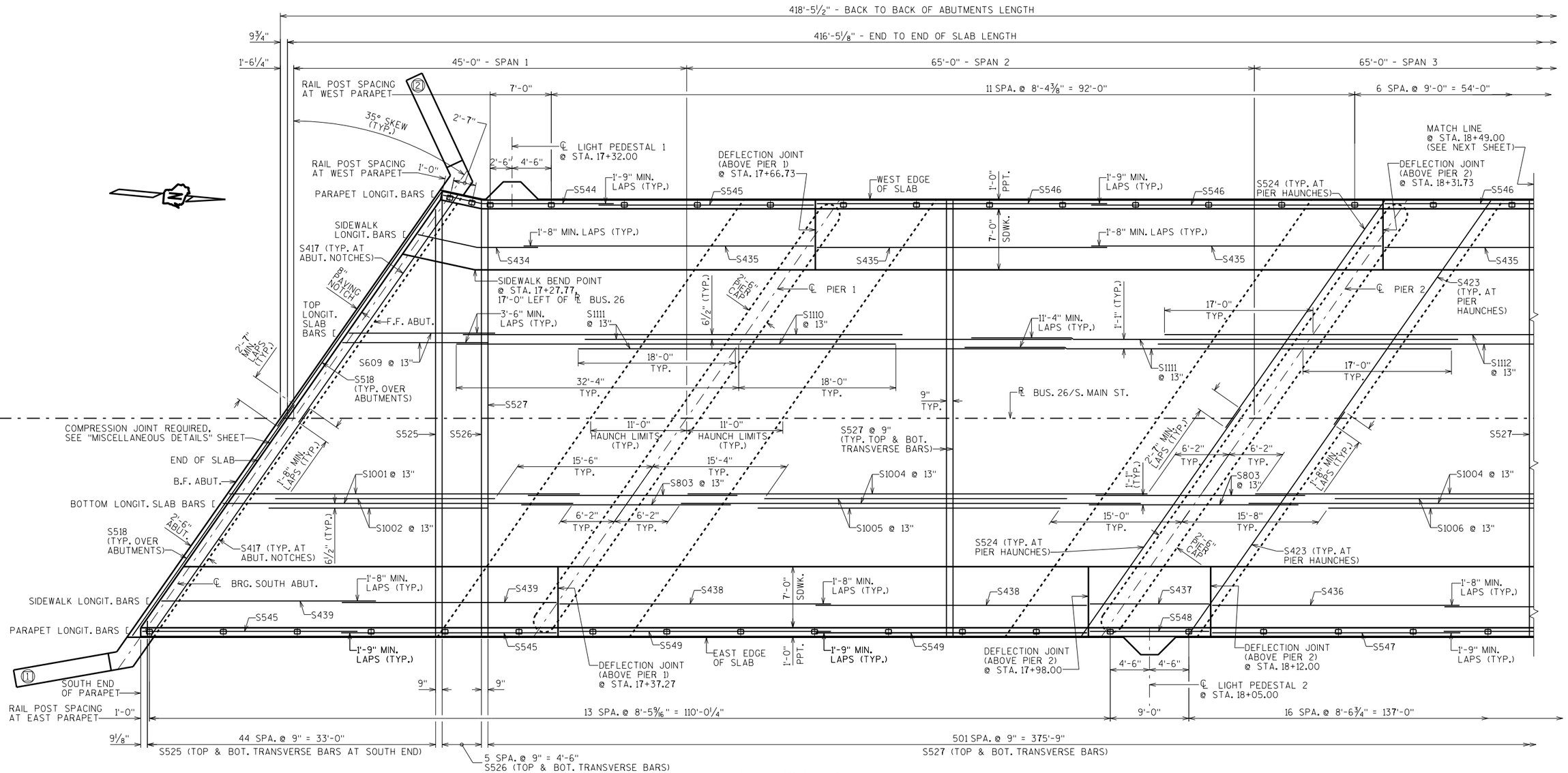

PLAN (SPANS 1-3)

8

8

NO.	DATE	REVISION	BY

STATE OF WISCONSIN
DEPARTMENT OF TRANSPORTATION
STRUCTURES DESIGN SECTION

STRUCTURE B-28-192

DRAWN BY JPH PLANS CK'D. WAH

SUPERSTRUCTURE PLAN SPANS 1 - 3

SHEET 20

144

SCALE = 5.75

STATE PROJECT NUMBER

3993-01-81

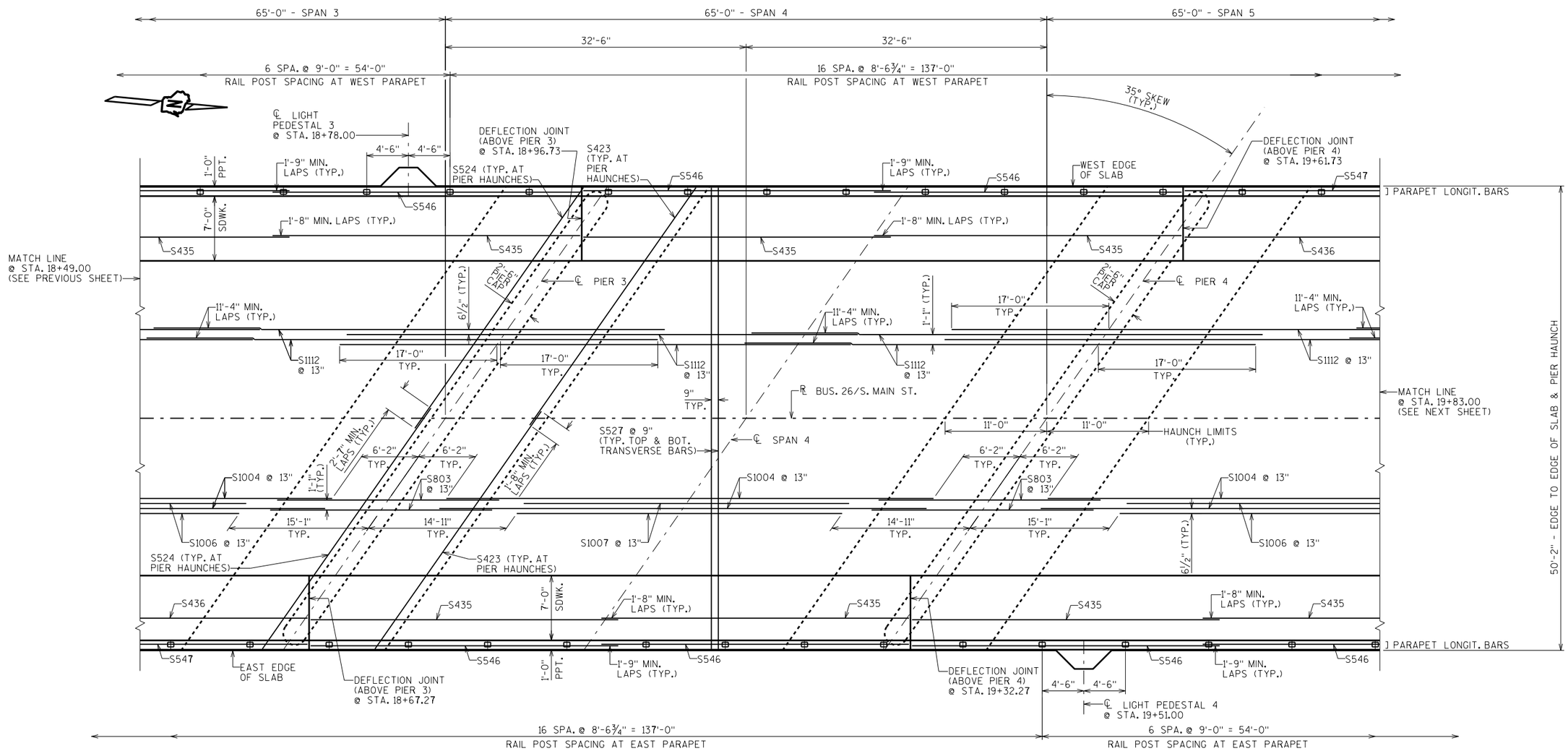

PLAN (SPANS 3-5)

8

8

NO.	DATE	REVISION	BY

STATE OF WISCONSIN
DEPARTMENT OF TRANSPORTATION
STRUCTURES DESIGN SECTION

STRUCTURE B-28-192

DRAWN BY JPH | PLANS CK'D. WAH

SUPERSTRUCTURE PLAN SPANS 3 - 5

SHEET 21

145

SCALE = 5.75

STATE PROJECT NUMBER

3993-01-81

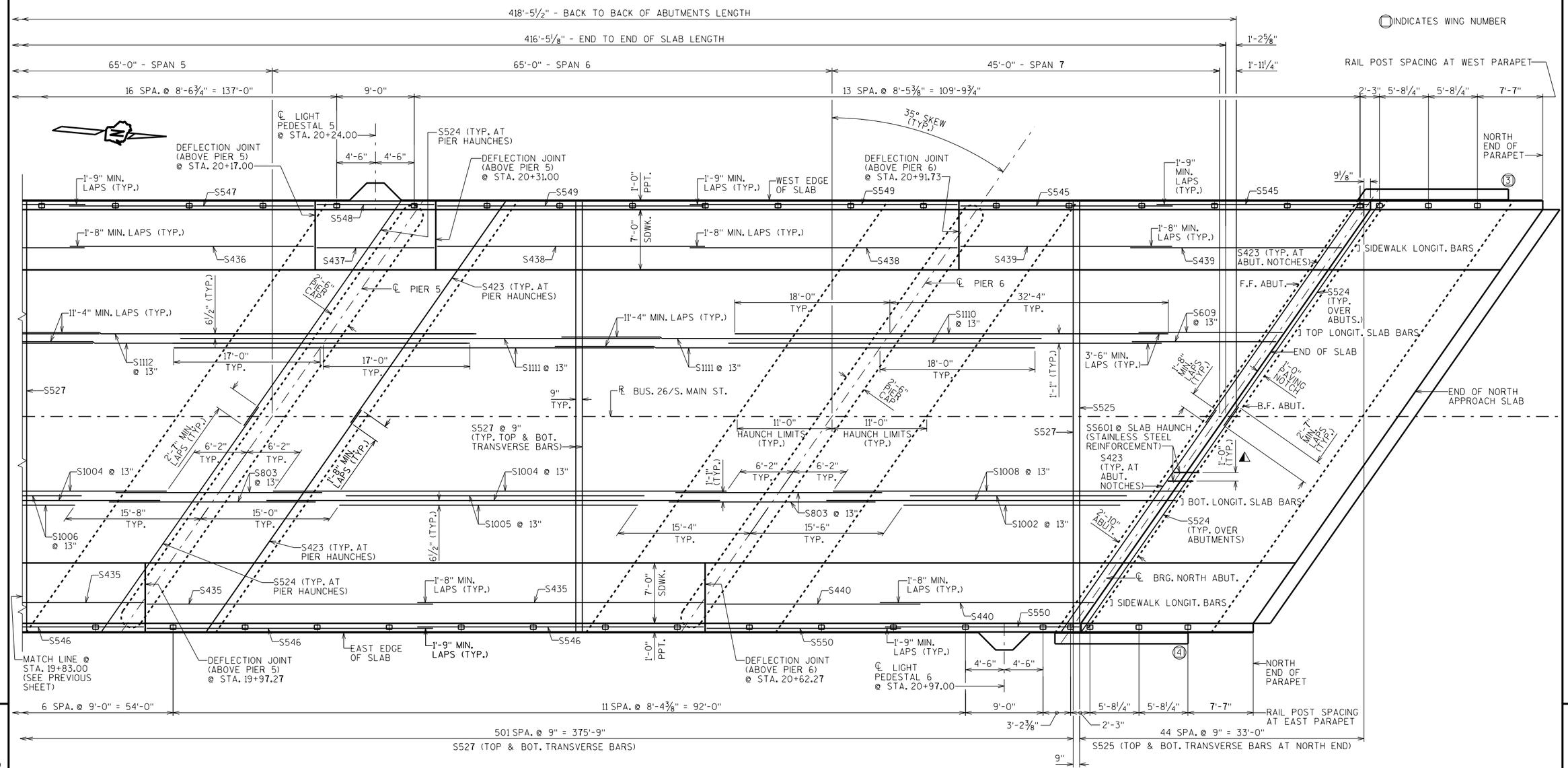

PLAN (SPANS 5-7)

⚠ SEE "NORTH STRUCT. APPR. SLAB" SHEET FOR SS601 BAR SPACING

NO.	DATE	REVISION	BY

STATE OF WISCONSIN
DEPARTMENT OF TRANSPORTATION
STRUCTURES DESIGN SECTION

STRUCTURE B-28-192

DRAWN BY JPH PLANS CK'D. WAH

SUPERSTRUCTURE PLAN SPANS 5 - 7

SHEET 22

146

SCALE = 5.75

8

8

STATE PROJECT NUMBER

3993-01-81

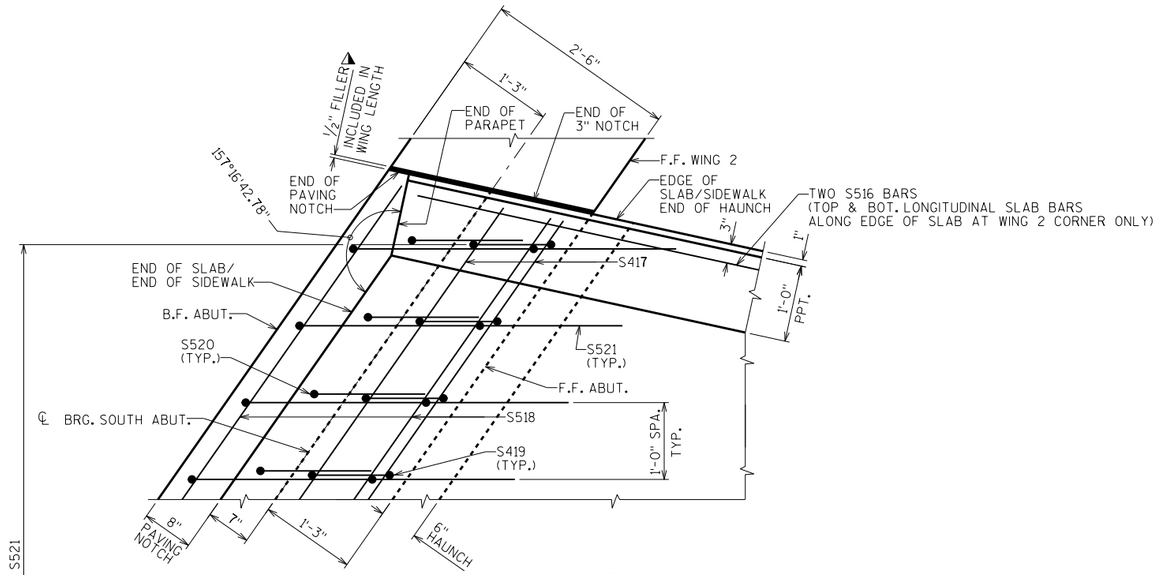

CORNER DETAIL AT WING 2 (PLAN VIEW)

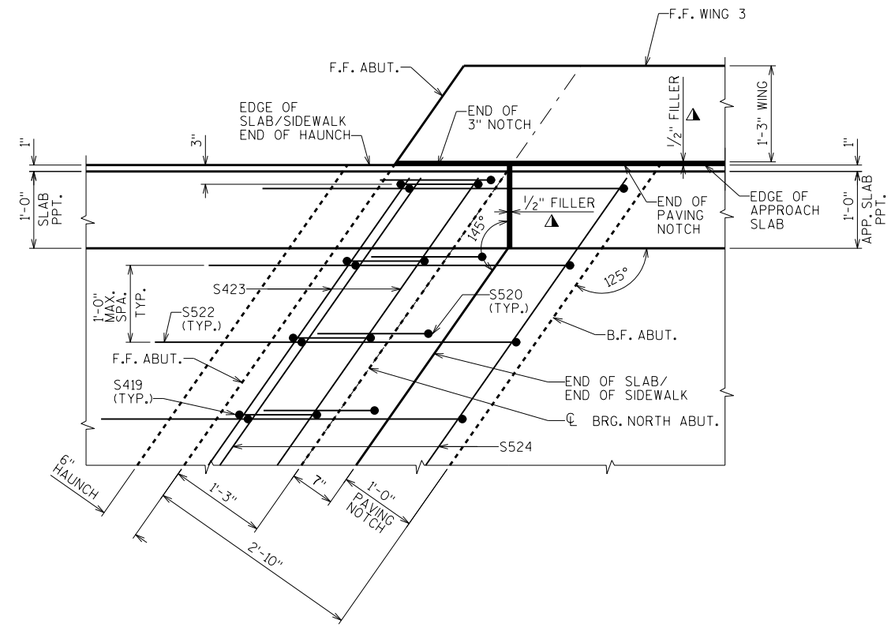

CORNER DETAIL AT WING 3 (PLAN VIEW)

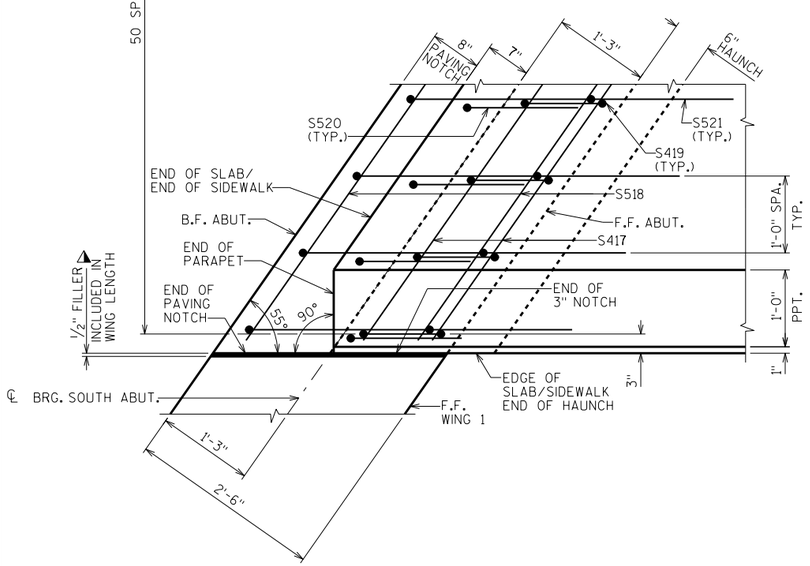

CORNER DETAIL AT WING 1 (PLAN VIEW)

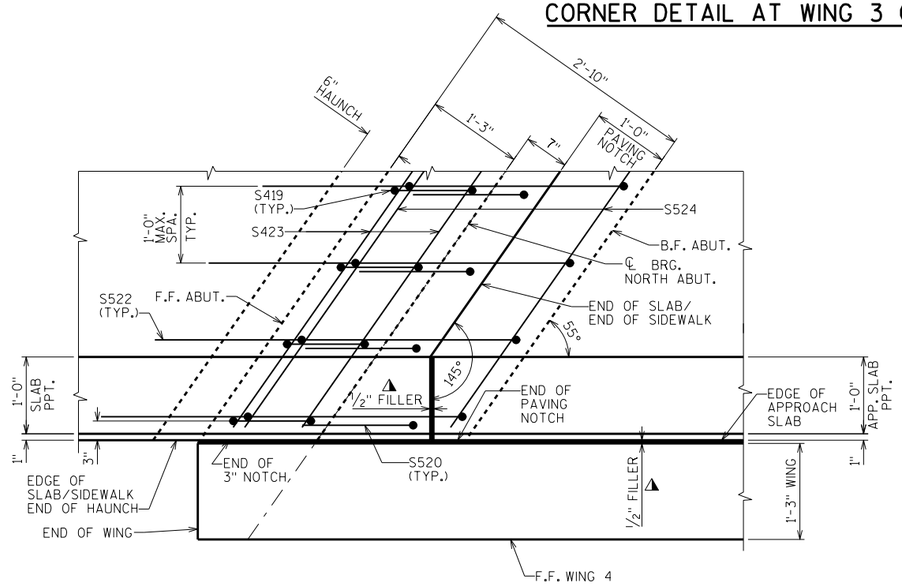

CORNER DETAIL AT WING 4 (PLAN VIEW)

▲ SEAL ALL EXPOSED HORIZONTAL AND VERTICAL SURFACES OF 1/2" FILLER WITH NON-STAINING, GRAY, NON-BITUMINOUS JOINT SEALER. (1" DEEP AND HOLD 1/8" BELOW SURFACE OF CONCRETE). EXTEND SEALER 3" BELOW GUTTER LINE AT INSIDE FACE.

NO.	DATE	REVISION	BY

STATE OF WISCONSIN
DEPARTMENT OF TRANSPORTATION
STRUCTURES DESIGN SECTION

STRUCTURE B-28-192

DRAWN BY JPH PLANS CK'D. WAH

SUPERSTRUCTURE CORNER DETAILS

SHEET 23

SCALE = 5.75

8

8

STATE PROJECT NUMBER

3993-01-81

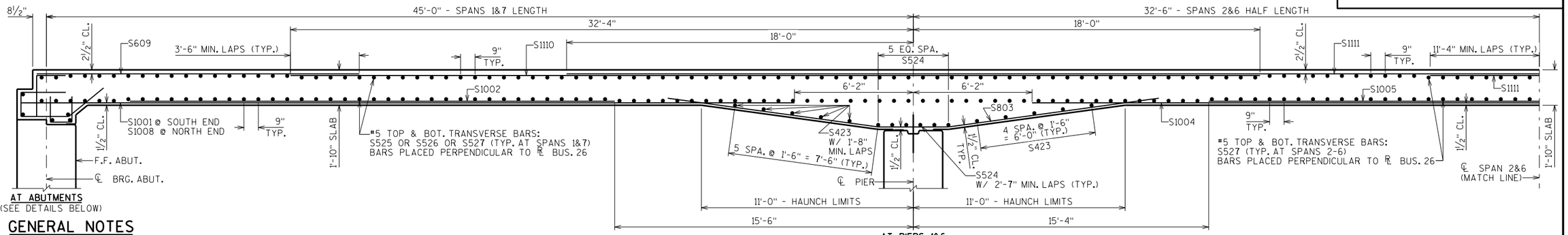

AT ABUTMENTS
(SEE DETAILS BELOW)

AT PIERS 1&6
NOTE: S423 & S524 TRANSVERSE BARS ARE PLACED PARALLEL TO ℄ PIER.

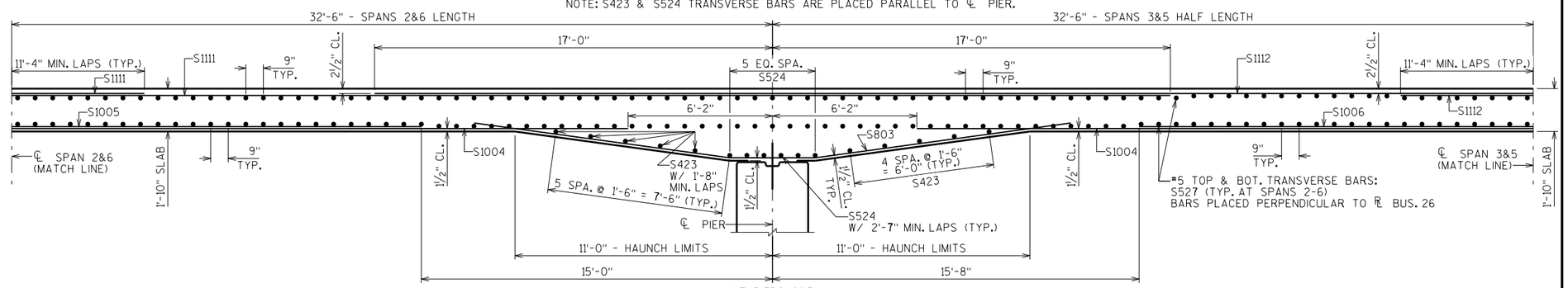

AT PIERS 2&5
NOTE: S423 & S524 TRANSVERSE BARS ARE PLACED PARALLEL TO ℄ PIER.

GENERAL NOTES

SEE "SUPERSTRUCTURE BAR DETAILS" SHEET FOR THE 'BILL OF BARS' AND BAR DETAILS.

TOP TRANSVERSE BARS IN SLAB SHALL BE SUPPORTED BY INDIVIDUAL BAR CHAIRS AT APPROXIMATELY 3'-0" CENTERS EACH WAY. BOTTOM LONGITUDINAL BARS SHALL BE SUPPORTED BY CONTINUOUS BAR CHAIRS AT APPROXIMATELY 4'-0" CENTERS.

ALL SLAB THICKNESS DIMENSIONS ARE MINIMUM. ANY TOLERANCES NECESSARY TO CORRECT CONSTRUCTION DISCREPANCIES ARE TO BE PLUS (+).

PARAPETS & SIDEWALKS PLACED ON TOP OF THE SLAB SHALL BE POURED AFTER FALSEWORK HAS BEEN RELEASED.

PRIOR TO RELEASING SLAB FALSEWORK, TAKE TOP OF SLAB ELEVATIONS AT THE ℄ OF ABUTMENTS, THE ℄ OF PIERS AND AT 5/10 PTS. TO VERIFY CAMBER. TAKE ELEVATIONS ALONG GUTTER LINES AND ℞ BUS. 26/CROWN POINT.

*DIMENSION IS TAKEN PERPENDICULAR TO ℄ SUBSTRUCTURES.

**DIMENSION IS TAKEN PARALLEL TO "℞ BUS. 26". BARS PLACED PARALLEL TO "℞ BUS. 26" AND SPACED PERPENDICULAR TO "℞ BUS. 26".

***BARS PLACED PERPENDICULAR TO "℞ BUS. 26" AND SPACED ALONG "℞ BUS. 26".

◆ ¾" THK. PREFORMED JOINT FILLER ACCORDING TO STANDARD SPEC 502.2.7 (4" WIDE X PAVING NOTCH LENGTH)

★ APPLY 'PROTECTIVE SURFACE TREATMENT' TO VERTICAL AND HORIZONTAL PAVING NOTCH SURFACES.

COMPRESSION JOINT REQUIRED. SEE "MISCELLANEOUS DETAILS" SHEET

(A19) 18" (RMW) RUBBERIZED MEMBRANE WATERPROOFING SEAL ALL HORIZ. & VERT. JOINTS AT BACKFACE.

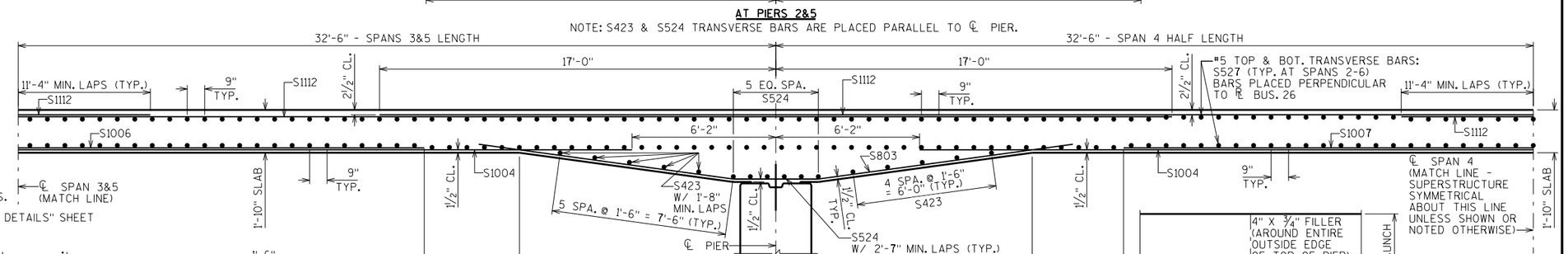

AT PIERS 3&4
NOTE: S423 & S524 TRANSVERSE BARS ARE PLACED PARALLEL TO ℄ PIER.

LONGITUDINAL SECTION THRU BRIDGE LOOKING WEST

ALL HORIZONTAL DIMENSIONS ARE TAKEN PARALLEL TO "℞ BUS. 26".
ALL LONGITUDINAL BARS ARE PLACED PARALLEL TO "℞ BUS. 26"

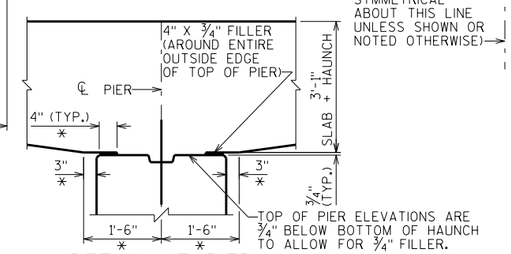

DETAIL AT PIER

TYP. @ ALL PIERS

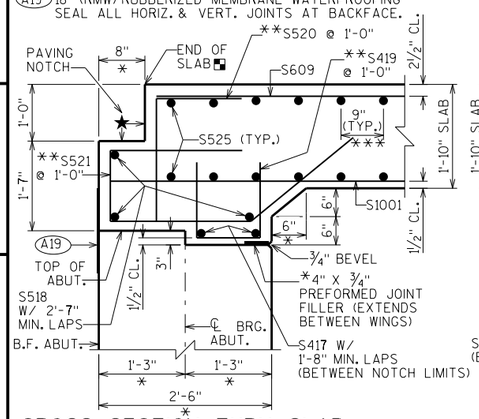

CROSS SECTION THRU SLAB HAUNCH AT SOUTH ABUTMENT

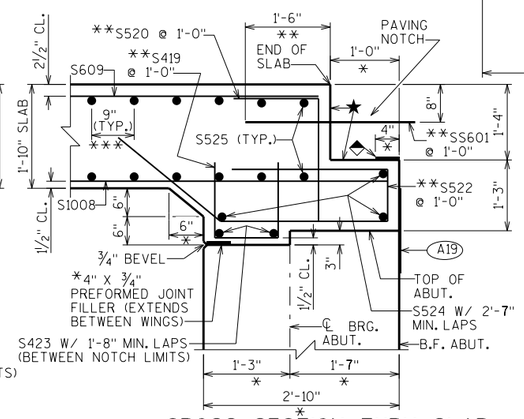

CROSS SECTION THRU SLAB HAUNCH AT NORTH ABUTMENT

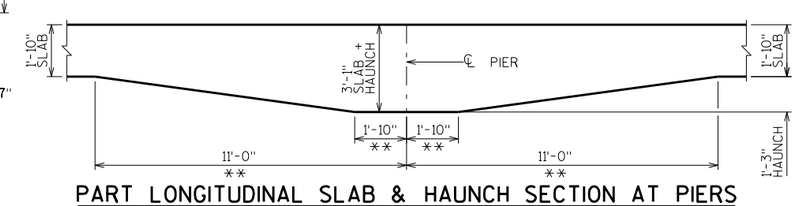

PART LONGITUDINAL SLAB & HAUNCH SECTION AT PIERS LOOKING AT OUTSIDE FACE

(STEEL REINFORCEMENT NOT SHOWN)

NOTE: S417 & S518 TRANSVERSE BARS ARE PLACED PARALLEL TO ℄ BRG. ABUT. NOTE: S423 & S524 TRANSVERSE BARS ARE PLACED PARALLEL TO ℄ BRG. ABUT.

NO.	DATE	REVISION	BY

STATE OF WISCONSIN
DEPARTMENT OF TRANSPORTATION
STRUCTURES DESIGN SECTION

STRUCTURE B-28-192

DRAWN BY JPH | PLANS CK'D. WAH

SUPERSTRUCTURE LONGITUDINAL SECTIONS

SHEET 24

148

SCALE = 2.60

STATE PROJECT NUMBER
3993-01-81

TOP OF SLAB ELEVATIONS

EOS = EDGE OF SLAB

	℄ BRG. S. ABUT.	1/10 PT.	2/10 PT.	3/10 PT.	4/10 PT.	5/10 PT.	6/10 PT.	7/10 PT.	8/10 PT.	9/10 PT.	℄ BRG. PIER 1	1/10 PT.	2/10 PT.	3/10 PT.	4/10 PT.	5/10 PT.	6/10 PT.	7/10 PT.	8/10 PT.	9/10 PT.	℄ BRG. PIER 2	1/10 PT.	2/10 PT.	3/10 PT.	4/10 PT.	5/10 PT.	6/10 PT.	7/10 PT.	8/10 PT.	9/10 PT.	℄ BRG. PIER 3
W. EOS	791.12	791.18	791.23	791.29	791.34	791.39	791.44	791.49	791.54	791.58	791.63	791.69	791.74	791.80	791.85	791.90	791.95	791.99	792.03	792.07	792.10	792.13	792.16	792.18	792.21	792.22	792.24	792.25	792.26	792.27	792.27
℞ BUS 26	791.39	791.45	791.51	791.57	791.63	791.68	791.74	791.79	791.85	791.90	791.95	792.02	792.08	792.15	792.21	792.26	792.32	792.37	792.42	792.46	792.50	792.54	792.58	792.61	792.64	792.67	792.69	792.71	792.73	792.75	792.76
E. EOS	790.63	790.69	790.76	790.83	790.89	790.95	791.01	791.07	791.13	791.19	791.24	791.32	791.40	791.47	791.53	791.60	791.66	791.72	791.78	791.83	791.88	791.93	791.97	792.01	792.05	792.09	792.12	792.15	792.17	792.20	792.22

	℄ BRG. PIER 3	1/10 PT.	2/10 PT.	3/10 PT.	4/10 PT.	5/10 PT.	6/10 PT.	7/10 PT.	8/10 PT.	9/10 PT.	℄ BRG. PIER 4	1/10 PT.	2/10 PT.	3/10 PT.	4/10 PT.	5/10 PT.	6/10 PT.	7/10 PT.	8/10 PT.	9/10 PT.	℄ BRG. PIER 5	1/10 PT.	2/10 PT.	3/10 PT.	4/10 PT.	5/10 PT.	6/10 PT.	7/10 PT.	8/10 PT.	9/10 PT.	℄ BRG. PIER 6
W. EOS	792.27	792.27	792.27	792.27	792.26	792.25	792.23	792.22	792.20	792.17	792.15	792.12	792.08	792.05	792.01	791.97	791.92	791.88	791.83	791.77	791.72	791.66	791.59	791.53	791.46	791.39	791.31	791.24	791.16	791.07	790.98
℞ BUS 26	792.76	792.77	792.77	792.78	792.78	792.77	792.77	792.76	792.75	792.73	792.71	792.69	792.67	792.64	792.61	792.58	792.54	792.50	792.46	792.41	792.36	792.31	792.26	792.20	792.14	792.08	792.01	791.94	791.87	791.79	791.71
E. EOS	792.22	792.23	792.25	792.26	792.27	792.27	792.27	792.27	792.27	792.26	792.25	792.24	792.22	792.20	792.18	792.16	792.13	792.10	792.06	792.03	791.99	791.94	791.90	791.85	791.79	791.74	791.68	791.62	791.56	791.49	791.42

	℄ BRG. PIER 6	1/10 PT.	2/10 PT.	3/10 PT.	4/10 PT.	5/10 PT.	6/10 PT.	7/10 PT.	8/10 PT.	9/10 PT.	℄ BRG. N. ABUT.
W. EOS	790.98	790.92	790.86	790.80	790.73	790.66	790.59	790.52	790.45	790.38	790.30
℞ BUS 26	791.71	791.66	791.60	791.54	791.48	791.42	791.36	791.29	791.22	791.16	791.09
E. EOS	791.42	791.37	791.32	791.26	791.21	791.15	791.09	791.03	790.97	790.91	790.85

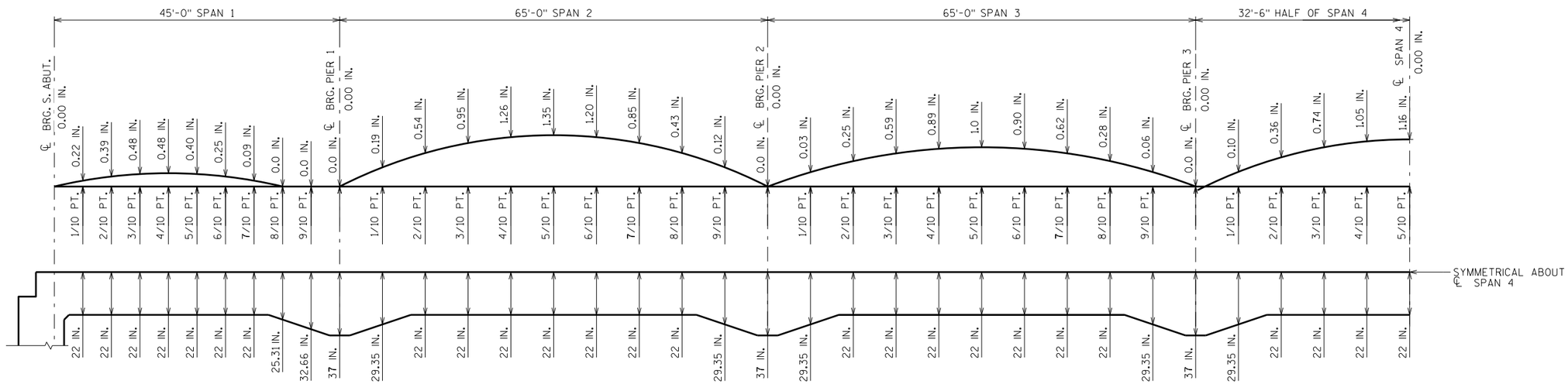

CAMBER AND SLAB THICKNESS DIAGRAM

CAMBER IS BASED ON 3 TIMES DEAD LOAD DEFLECTIONS.
CAMBER SPANS AS SHOWN TO PROVIDE FOR DEADLOAD DEFLECTION & FUTURE CREEP. CAMBER DOES NOT INCLUDE ALLOWANCE FOR FORM SETTLEMENT.
SIDEWALKS AND PARAPETS PLACED ON TOP OF SLAB SHALL BE POURED AFTER FALSEWORK HAS BEEN RELEASED. EXCEPT FOR STAGED CONSTRUCTION.

TO DETERMINE FALSEWORK ELEVATION AT EDGE OF SLAB, CROWN OR CENTERLINE FOLLOW THIS PROCEDURE:

TOP OF SLAB ELEVATION AT FINAL GRADE
MINUS (-) SLAB THICKNESS
PLUS (+) CAMBER
PLUS (+) FORM SETTLEMENT/DEFLECTION DUE TO PLACEMENT OF SLAB CONCRETE (TO BE COMPUTED BY THE CONTRACTOR)
EQUALS = TOP OF SLAB FALSEWORK ELEVATION.

SURVEY TOP OF SLAB ELEVATIONS

EOS = EDGE OF SLAB

	℄ BRG. S. ABUT.	5/10 PT.	℄ PIER 1	5/10 PT.	℄ PIER 2	5/10 PT.	℄ PIER 3	5/10 PT.	℄ PIER 4	5/10 PT.	℄ PIER 5	5/10 PT.	℄ PIER 6	5/10 PT.	℄ BRG. N. ABUT.
WEST EOS															
℞ BUS. 24/ CROWN POINT															
EAST EOS															

PRIOR TO RELEASING SLAB FALSEWORK, TAKE TOP OF SLAB ELEVATIONS AT THE ℄ OF ABUTMENTS, THE ℄ OF PIERS AND AT 5/10 PTS. TO VERIFY CAMBER. TAKE ELEVATIONS ALONG EDGE OF SLAB AND CROWN POINT. RECORD THE ELEVATIONS IN THE ABOVE TABLE FOR THE "AS BUILT" PLANS.

NOTE:
ALL SLAB THICKNESS DIMENSIONS ARE MINIMUM.
ANY TOLERANCES NECESSARY TO CORRECT CONSTRUCTION DISCREPANCIES ARE TO BE PLUS (+).

NO.	DATE	REVISION	BY

STATE OF WISCONSIN
DEPARTMENT OF TRANSPORTATION
STRUCTURES DESIGN SECTION

STRUCTURE B-28-192

DRAWN BY JPH PLANS CK'D. WAH

SUPERSTRUCTURE DATA

SHEET 25

SCALE = 1.00

8

8

STATE PROJECT NUMBER

3993-01-81

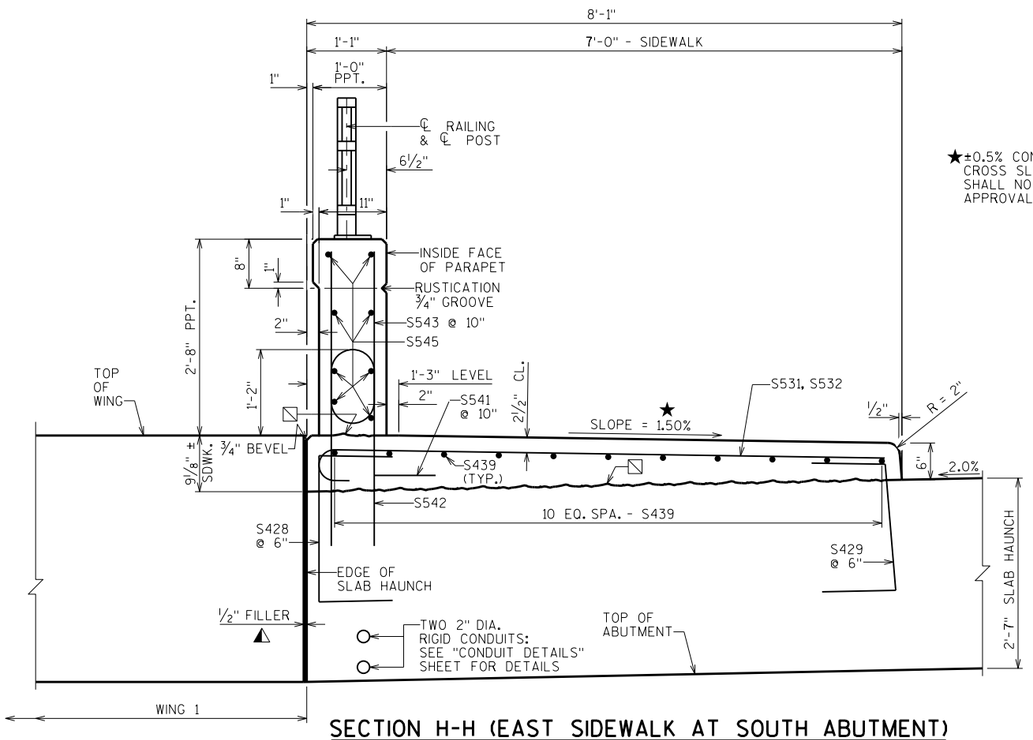

SECTION H-H (EAST SIDEWALK AT SOUTH ABUTMENT)

(LOOKING SOUTH)

★±0.5% CONSTRUCTION TOLERANCE IN SIDEWALK CROSS SLOPE. THE SIDEWALK CROSS SLOPE SHALL NOT EXCEED 2% WITHOUT PRIOR APPROVAL FROM THE ENGINEER.

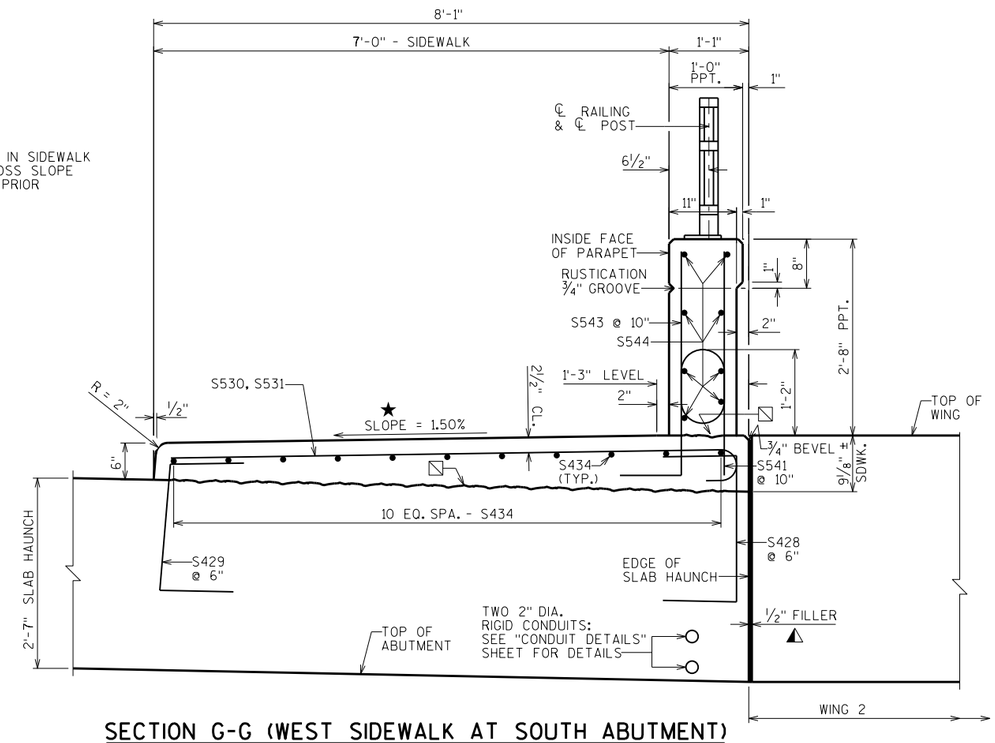

SECTION G-G (WEST SIDEWALK AT SOUTH ABUTMENT)

(LOOKING SOUTH)

NOTE:
SEE "VERTICAL FACE PARAPET "A" AT APPR. SLAB" SHEET FOR DEFLECTION JOINT DETAILS.

8

8

HORIZ. CONST. JOINT - STRIKE OFF AS SHOWN AND LEAVE ROUGH.

SEAL ALL EXPOSED HORIZONTAL AND VERTICAL SURFACES OF ½" FILLER WITH NON-STAINING, GRAY, NON-BITUMINOUS JOINT SEALER. (1" DEEP AND HOLD ⅛" BELOW SURFACE OF CONCRETE). EXTEND SEALER 3" BELOW GUTTER LINE AT INSIDE FACE.

NO.	DATE	REVISION	BY

STATE OF WISCONSIN
DEPARTMENT OF TRANSPORTATION
STRUCTURES DESIGN SECTION

STRUCTURE B-28-192

DRAWN BY JPH | PLANS CK'D. WAH

VERTICAL FACE PARAPET "A" AT S. ABUT.

SHEET 26

150

SCALE = 1.00

STATE PROJECT NUMBER

3993-01-81

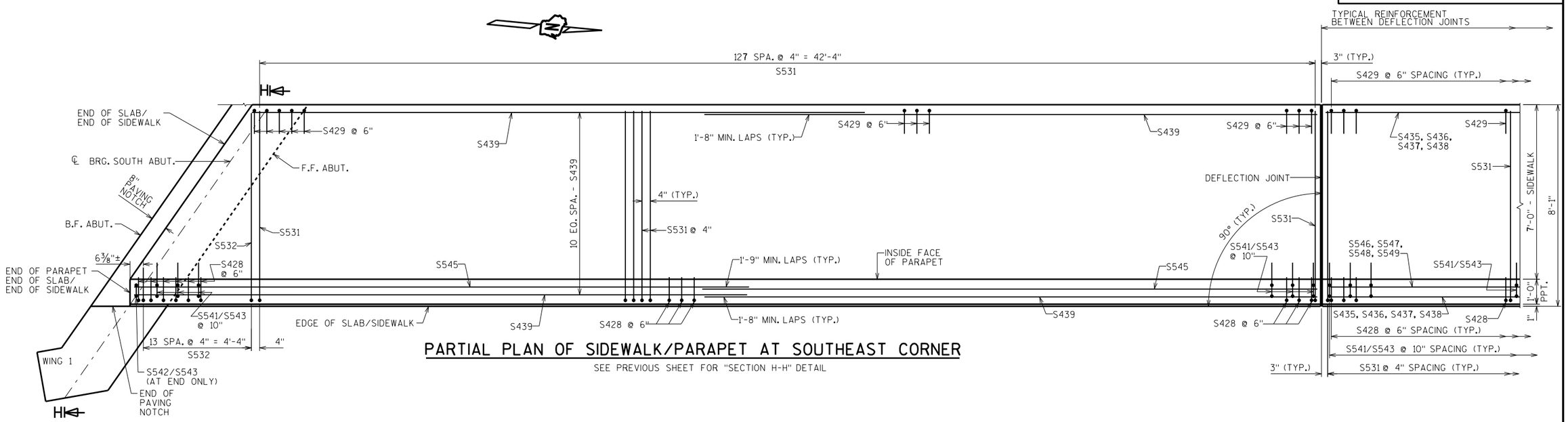

PARTIAL PLAN OF SIDEWALK/PARAPET AT SOUTHEAST CORNER

SEE PREVIOUS SHEET FOR "SECTION H-H" DETAIL

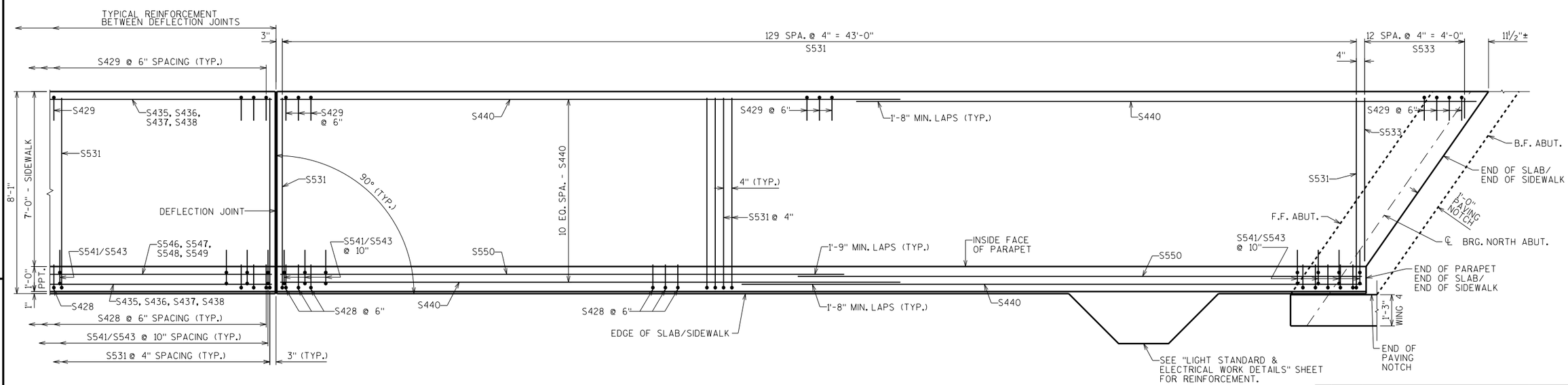

PARTIAL PLAN OF SIDEWALK/PARAPET AT NORTHEAST CORNER

8

8

NO.	DATE	REVISION	BY

STATE OF WISCONSIN
DEPARTMENT OF TRANSPORTATION
STRUCTURES DESIGN SECTION

STRUCTURE B-28-192

DRAWN BY JPH PLANS CK'D. WAH

EAST SIDEWALK/PARAPET DETAILS

SHEET 27

151

SCALE = 2.00

STATE PROJECT NUMBER

3993-01-81

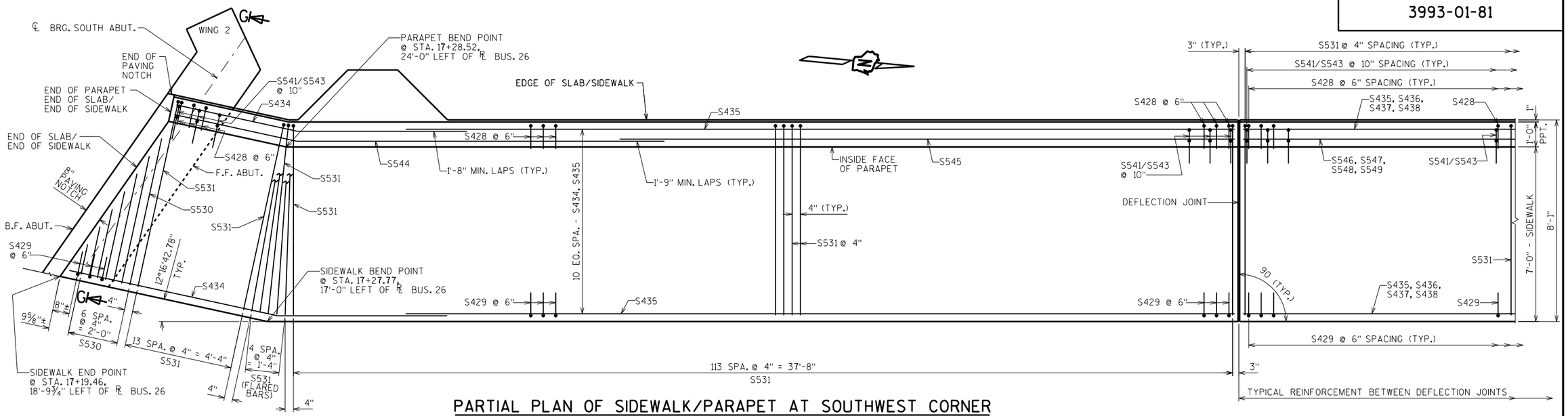

PARTIAL PLAN OF SIDEWALK/PARAPET AT SOUTHWEST CORNER

SEE "VERTICAL FACE PARAPET "A" AT S. ABUT." SHEET FOR "SECTION G-G" DETAIL

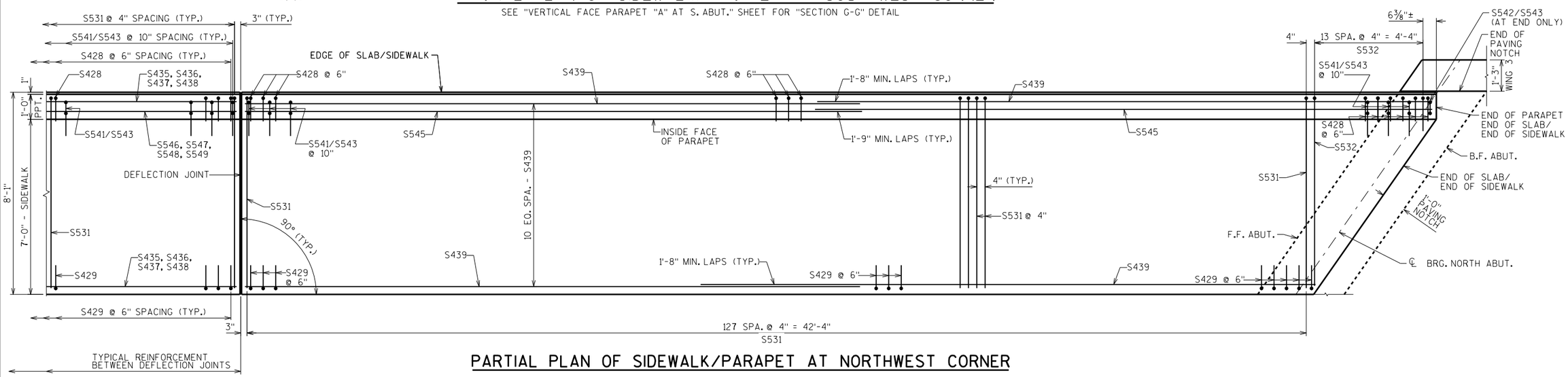

PARTIAL PLAN OF SIDEWALK/PARAPET AT NORTHWEST CORNER

8

8

NO.	DATE	REVISION	BY

STATE OF WISCONSIN
DEPARTMENT OF TRANSPORTATION
STRUCTURES DESIGN SECTION

STRUCTURE B-28-192

DRAWN BY JPH PLANS CK'D. WAH

WEST SIDEWALK/PARAPET DETAILS

SHEET 28

152

SCALE = 2.00

STATE PROJECT NUMBER

3993-01-81

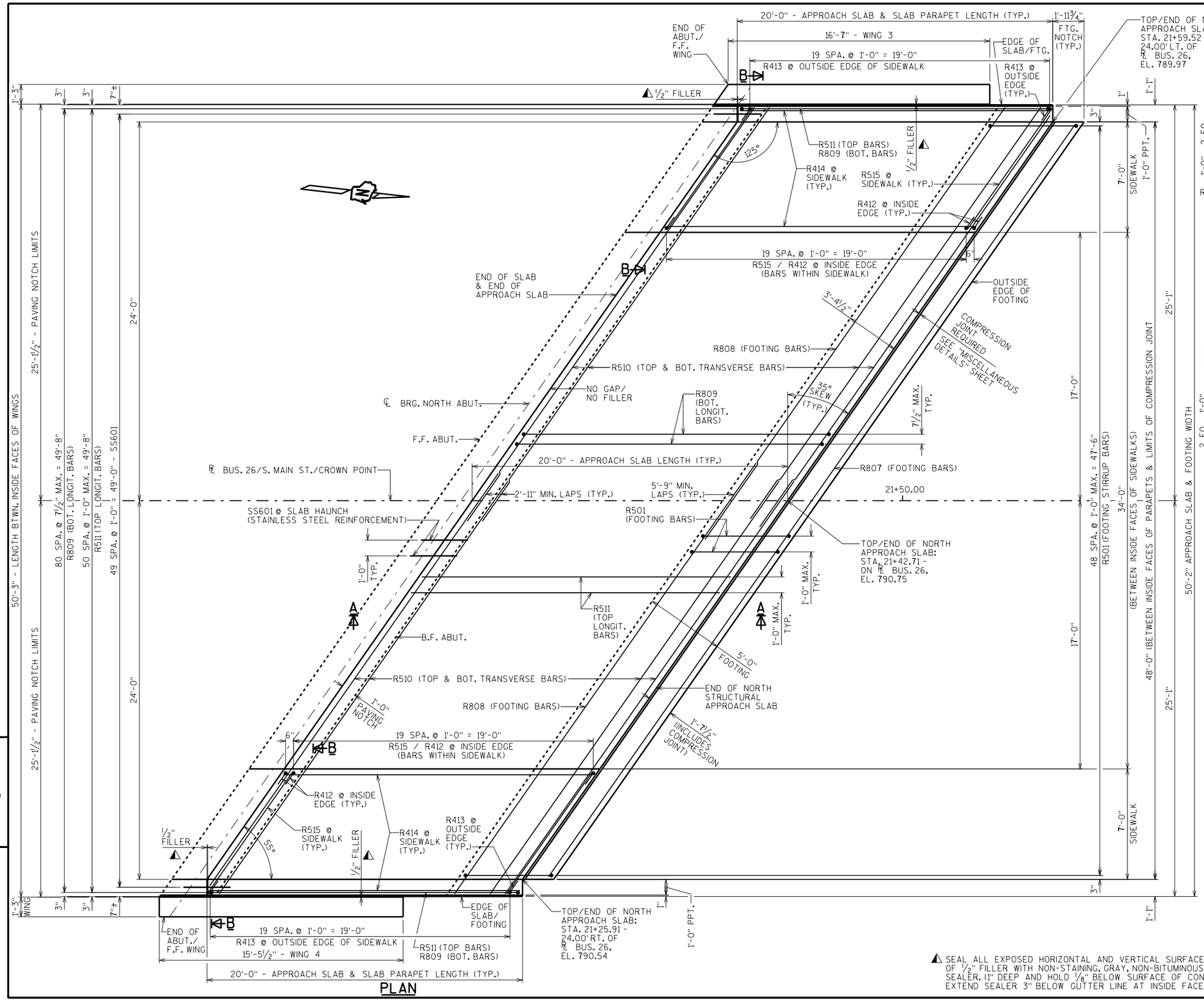

PLAN

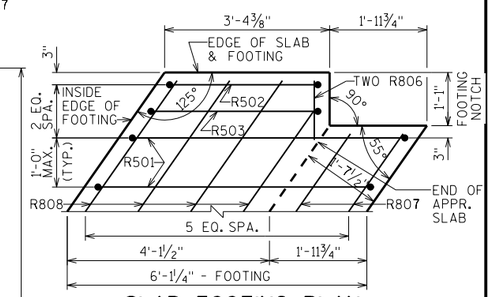

SLAB FOOTING PLAN DETAIL @ NW CORNER

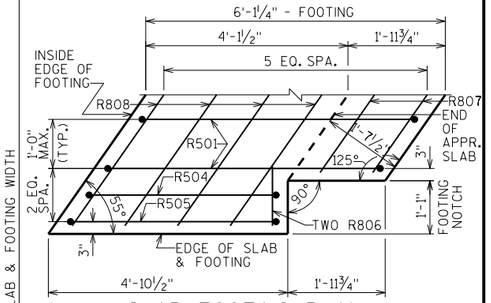

SLAB FOOTING PLAN DETAIL @ NE CORNER

NOTE:
SEE NEXT 2 SHEETS FOR SECTION A-A AND SECTION B-B CROSS SECTION DETAILS AT STRUCTURAL APPROACH SLAB

⚠ SEAL ALL EXPOSED HORIZONTAL AND VERTICAL SURFACES OF ½" FILLER WITH NON-STAINING, GRAY, NON-BITUMINOUS JOINT SEALER. (1" DEEP AND HOLD ⅛" BELOW SURFACE OF CONCRETE). EXTEND SEALER 3" BELOW GUTTER LINE AT INSIDE FACE.

NO.	DATE	REVISION	BY

STATE OF WISCONSIN
DEPARTMENT OF TRANSPORTATION
STRUCTURES DESIGN SECTION

STRUCTURE B-28-192

DRAWN BY JPH | PLANS CK'D. WAH

NORTH STRUCT. APPR. SLAB

SHEET 29

153

8

8

SCALE = 3.00

STATE PROJECT NUMBER

3993-01-81

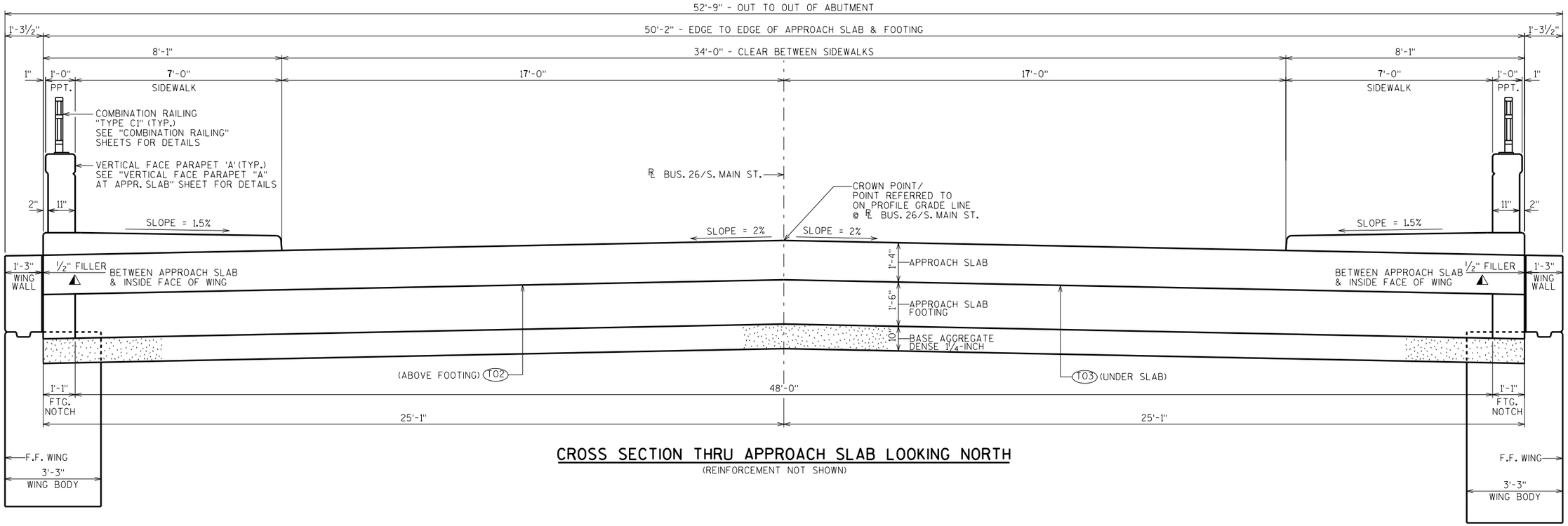

CROSS SECTION THRU APPROACH SLAB LOOKING NORTH

(REINFORCEMENT NOT SHOWN)

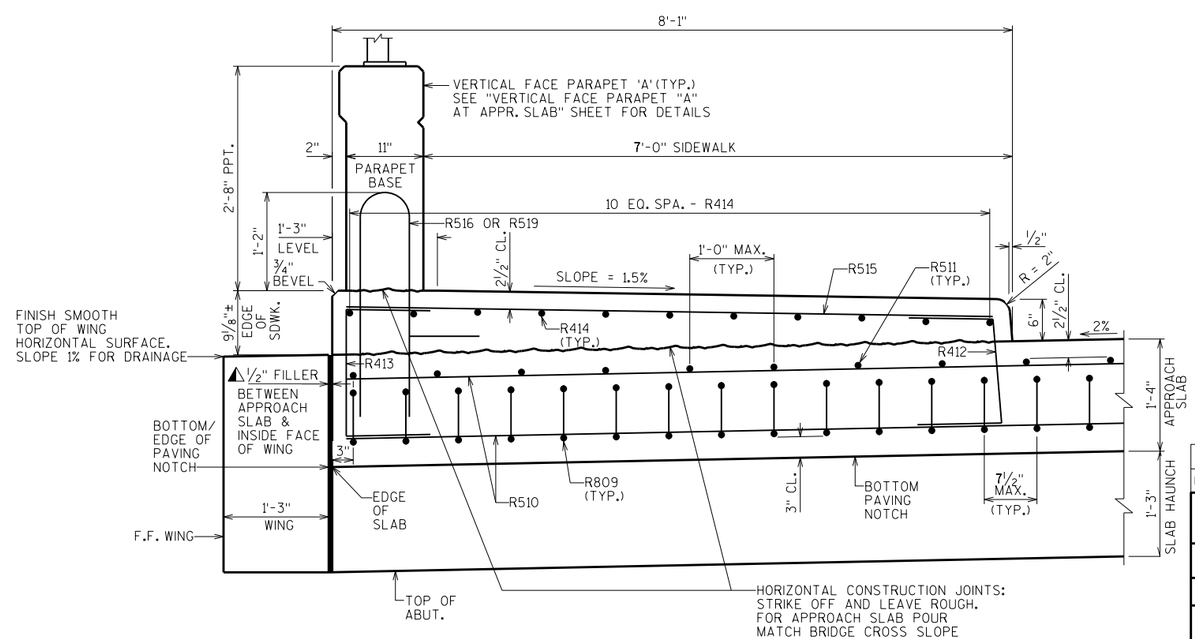

SECTION B-B (EDGE OF SLAB/SIDEWALK DETAIL)

▲ SEAL ALL EXPOSED HORIZONTAL AND VERTICAL SURFACES OF ½" FILLER WITH NON-STAINING, GRAY, NON-BITUMINOUS JOINT SEALER. (1" DEEP AND HOLD ⅛" BELOW SURFACE OF CONCRETE). EXTEND SEALER 3" BELOW GUTTER LINE AT INSIDE FACE.

T02 STEEL TROWEL TOP SURFACE OF FOOTING AND PLACE MULTIPLE LAYERS (0.03" MIN. TOTAL THK.) OF POLYETHYLENE SHEETS OVER THE ENTIRE TOP OF THE FOOTING.

T03 PLACE MULTIPLE LAYERS (0.03" MIN. TOTAL THK.) OF POLYETHYLENE SHEETS OVER THE ENTIRE TOP OF SUBGRADE BENEATH SLAB.

NO.	DATE	REVISION	BY

STATE OF WISCONSIN
DEPARTMENT OF TRANSPORTATION
STRUCTURES DESIGN SECTION

STRUCTURE B-28-192

DRAWN BY JPH PLANS CK'D. WAH

NORTH STRUCT.
APPR. SLAB
CROSS SECTIONS

SHEET 30

154

SCALE = 1.75

8

8

STATE PROJECT NUMBER

3993-01-81

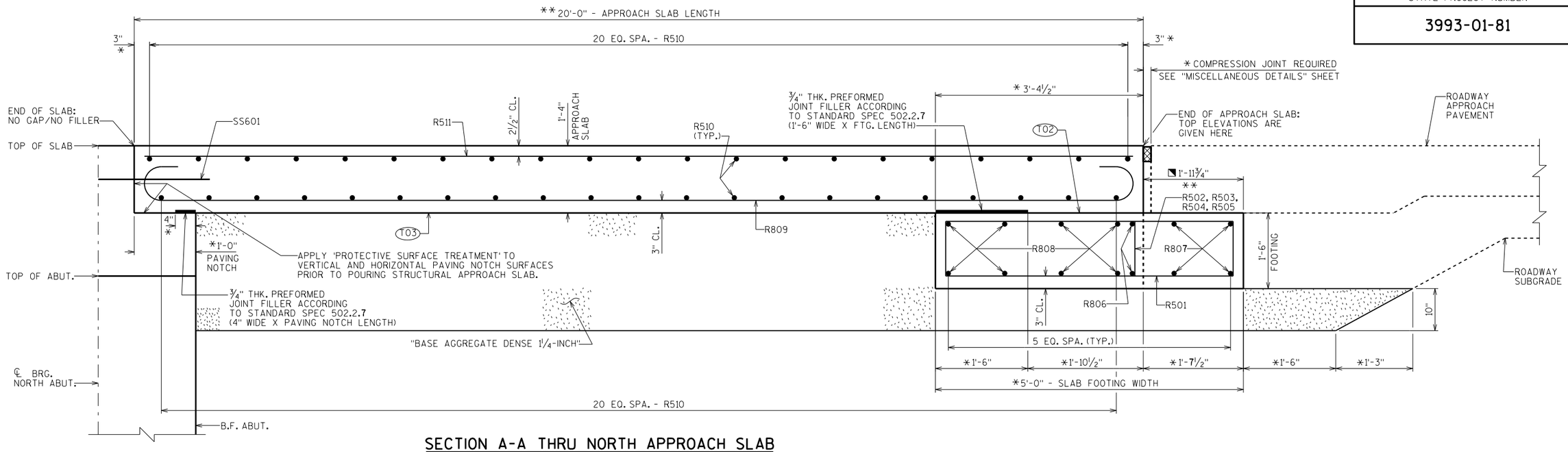

SECTION A-A THRU NORTH APPROACH SLAB

NOTES:

TRANSVERSE BARS SHALL BE PLACED PARALLEL TO ℄ BRG. ABUTMENT.

LONGITUDINAL BARS SHALL BE PLACED PARALLEL TO "℄ BUS. 26".

*DIMENSION IS TAKEN NORMAL TO ℄ BRG. ABUTMENT.

**DIMENSION IS TAKEN PARALLEL TO "℄ BUS. 26".

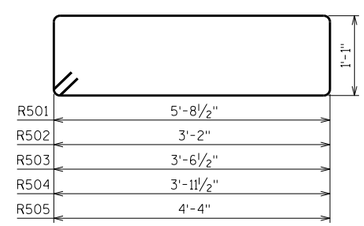

R501 R502 R503 R504 R505
(STIRRUP BARS)

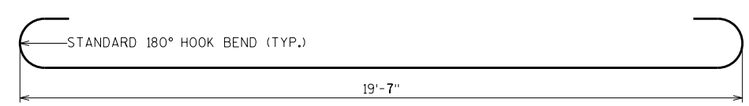

R809

BILL OF BARS

NOTE:
THE FIRST OR FIRST TWO DIGITS OF THE BAR MARK SIGNIFIES THE BAR SIZE

BAR MARK	COAT	NO. REQ'D.	LENGTH	BENT	LOCATION
R501	X	49	14'-3"	X	FOOTING-VERTICAL-LONGITUDNIAL-BETWEEN PARAPETS
R502	X	1	9'-2"	X	FOOTING-VERTICAL-LONGITUDINAL-AT WEST END ONLY
R503	X	1	9'-11"	X	FOOTING-VERTICAL-LONGITUDINAL-AT WEST END ONLY
R504	X	1	10'-9"	X	FOOTING-VERTICAL-LONGITUDINAL-AT EAST END ONLY
R505	X	1	11'-6"	X	FOOTING-VERTICAL-LONGITUDINAL-AT EAST END ONLY
R806	X	4	1'-2"		FOOTING-TOP & BOTTOM-HORIZONTAL-TRANSVERSE-AT BOTH ENDS ONLY
R807	X	4	58'-2"		FOOTING-TOP & BOTTOM-HORIZONTAL-TRANSVERSE-AT OUTSIDE FACE
R808	X	16	33'-4"		FOOTING-TOP & BOTTOM-HORIZONTAL-TRANSVERSE-AT INSIDE FACE
R809	X	81	21'-5"	X	SLAB-BOTTOM-VERTICAL-LONGITUDINAL
R510	X	84	31'-11"		SLAB-TOP & BOTTOM-HORIZONTAL-TRANSVERSE
R511	X	51	19'-7"		SLAB-TOP-HORIZONTAL-LONGITUDINAL
R412	X	42	3'-2"	X	SLAB/SIDEWALKS-VERTICAL-TRANSVERSE-AT INSIDE EDGES
R413	X	40	3'-5"	X	SLAB/SIDEWALKS-VERTICAL-TRANSVERSE-AT OUTSIDE EDGES
R414	X	22	19'-7"		SIDEWALKS-TOP-HORIZONTAL-LONGITUDINAL
R515	X	40	9'-5"		SIDEWALKS-TOP-HORIZONTAL-TRANSVERSE
R516	X	56	4'-5"	X	SIDEWALKS/PARAPETS-VERTICAL-TRANSVERSE
R517	X	58	4'-11"	X	PARAPETS-VERTICAL-TRANSVERSE
R518	X	16	19'-8"		PARAPETS-HORIZONTAL-LONGITUDINAL-AT BOTH FACES
R519	X	2	5'-8"	X	SLAB/SIDEWALKS/PARAPETS-VERTICAL-TRANSVERSE-AT ENDS ONLY

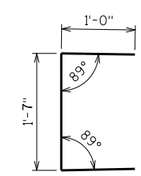

R413

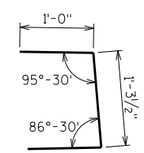

R412

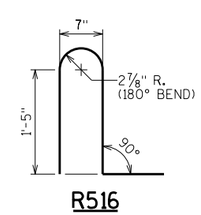

R516

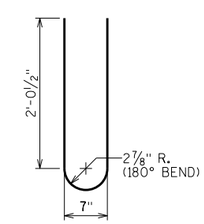

R517

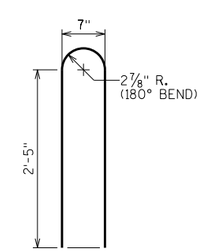

R519

INCLUDES COMPRESSION JOINT

T02 STEEL TROWEL TOP SURFACE OF FOOTING AND PLACE MULTIPLE LAYERS (0.03" MIN. TOTAL THK.) OF POLYETHYLENE SHEETS OVER THE ENTIRE TOP OF THE FOOTING.

T03 PLACE MULTIPLE LAYERS (0.03" MIN. TOTAL THK.) OF POLYETHYLENE SHEETS OVER THE ENTIRE TOP OF SUBGRADE BENEATH SLAB.

NO.	DATE	REVISION	BY

STATE OF WISCONSIN
DEPARTMENT OF TRANSPORTATION
STRUCTURES DESIGN SECTION

STRUCTURE B-28-192

DRAWN BY JPH PLANS CK'D. WAH

NORTH STRUCT. APPR. SLAB LONGIT. SECTION

SHEET 31

155

8

8

SCALE = 1.00

STATE PROJECT NUMBER
3993-01-81

NOTES:

SEE THE "NORTH STRUCT. APPR. SLAB LONGIT. SECTION" SHEET FOR THE BILL OF BARS AND BAR DETAILS FOR THE APPROACH SLAB PARAPET R-BARS.

SEE THE "SUPERSTRUCTURE BAR DETAILS" SHEET FOR THE BILL OF BARS AND BAR DETAILS FOR THE SUPERSTRUCTURE PARAPET S-BARS.

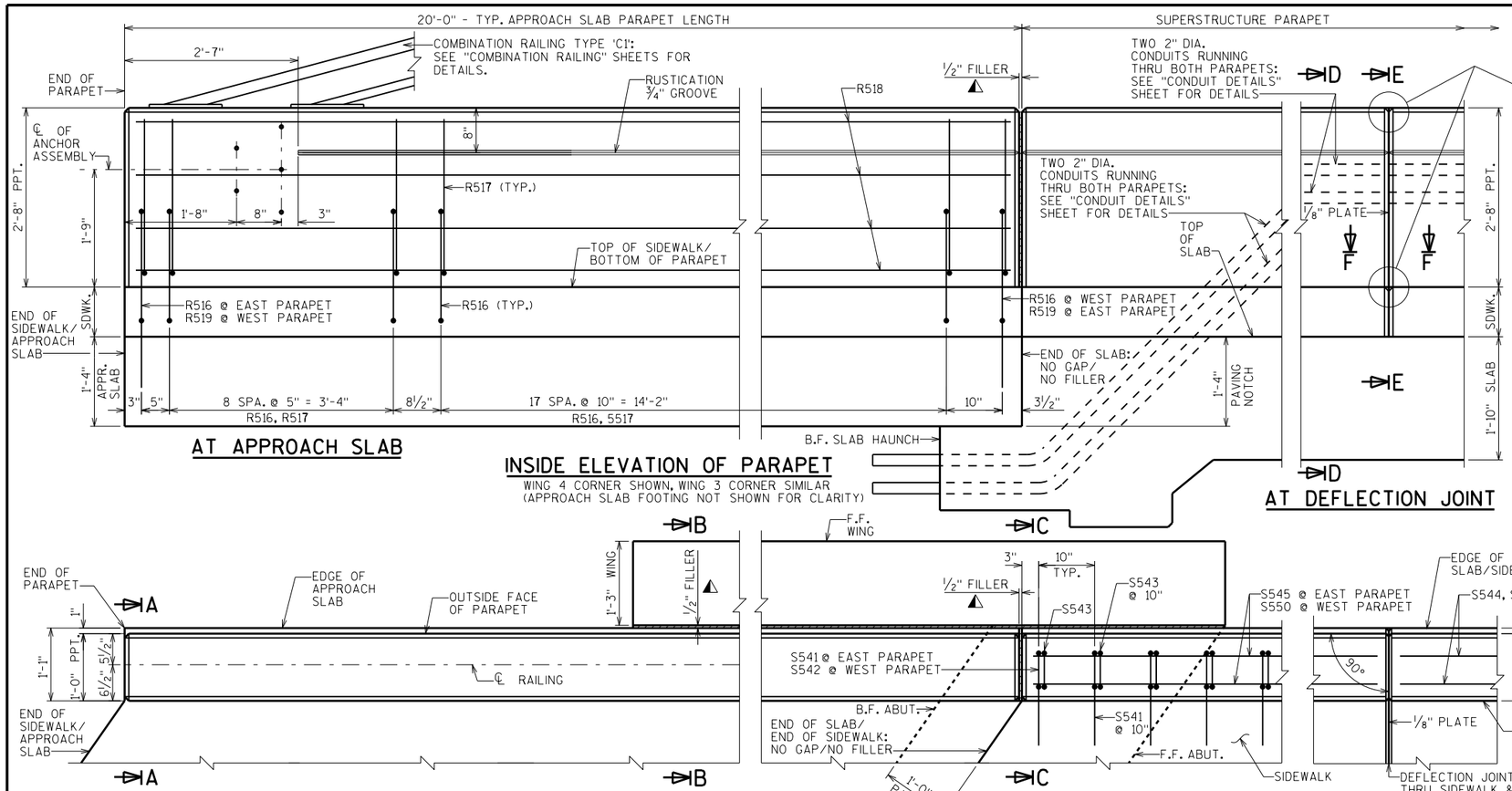

AT APPROACH SLAB

INSIDE ELEVATION OF PARAPET

WING 4 CORNER SHOWN, WING 3 CORNER SIMILAR (APPROACH SLAB FOOTING NOT SHOWN FOR CLARITY)

AT DEFLECTION JOINT

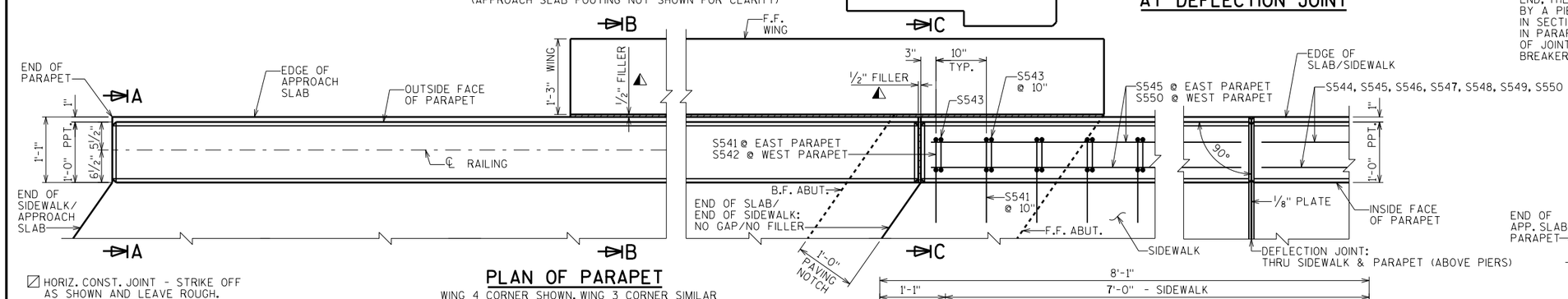

PLAN OF PARAPET

WING 4 CORNER SHOWN, WING 3 CORNER SIMILAR (RAILING NOT SHOWN FOR CLARITY)

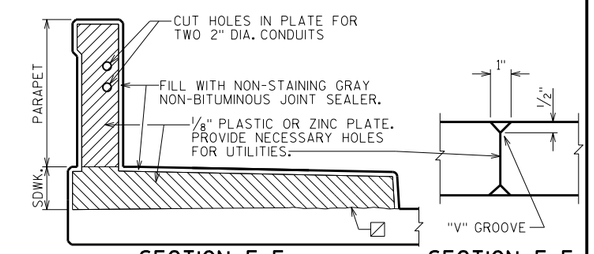

SECTION E-E

SECTION F-F

(SHOWING DEFLECTION JOINT IN PARAPET AND SIDEWALK.)

WHEN PARAPETS ARE POURED CONTINUOUSLY FROM END TO END, THEY SHALL BE SEPARATED AT THE DEFLECTION JOINTS BY A PIECE OF ⅛" ZINC OR PLASTIC PLATE CUT AS SHOWN IN SECTION B-B BY SHADED AREA. IF CONSTRUCTION JOINTS IN PARAPETS ARE USED AT THE DEFLECTION JOINTS, ONE SIDE OF JOINT SHALL BE COATED WITH AN APPROVED LIQUID BOND BREAKER AND PLATE SEPARATORS MAY BE OMITTED.

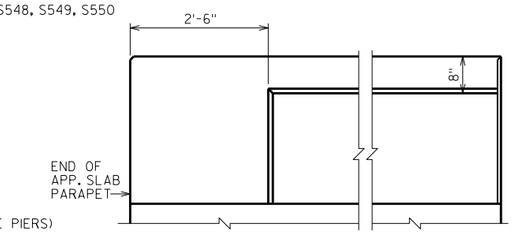

OUTSIDE FACE OF PARAPET

HORIZ. CONST. JOINT - STRIKE OFF AS SHOWN AND LEAVE ROUGH.

SEAL ALL EXPOSED HORIZONTAL AND VERTICAL SURFACES OF ½" FILLER WITH NON-STAINING, GRAY, NON-BITUMINOUS JOINT SEALER. (1" DEEP AND HOLD ⅛" BELOW SURFACE OF CONCRETE). EXTEND SEALER 3" BELOW GUTTER LINE AT INSIDE FACE.

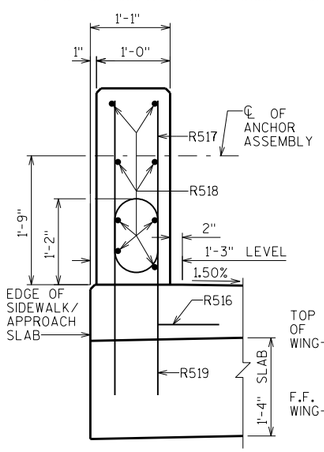

SECTION A-A

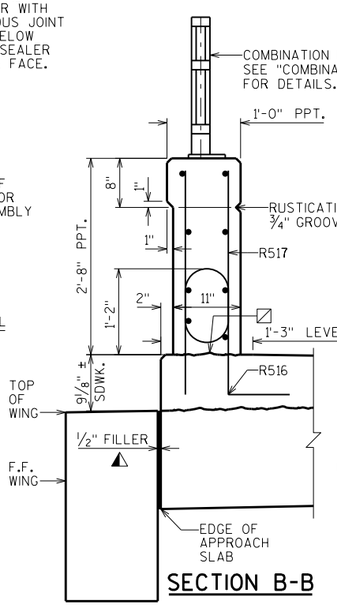

SECTION B-B

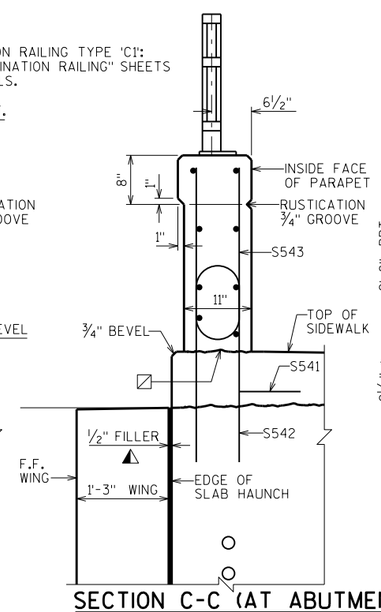

SECTION C-C (AT ABUTMENT)

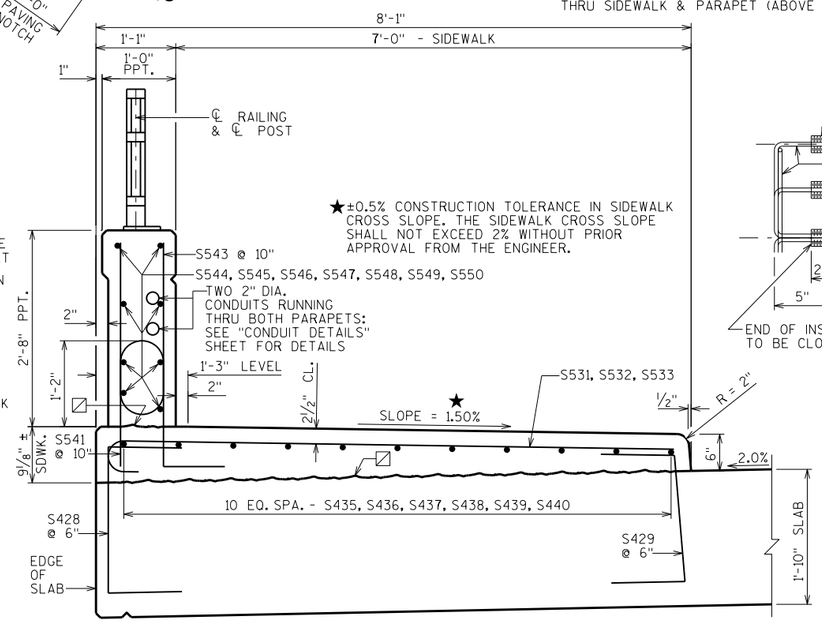

SECTION D-D (AT SUPERSTRUCTURE)

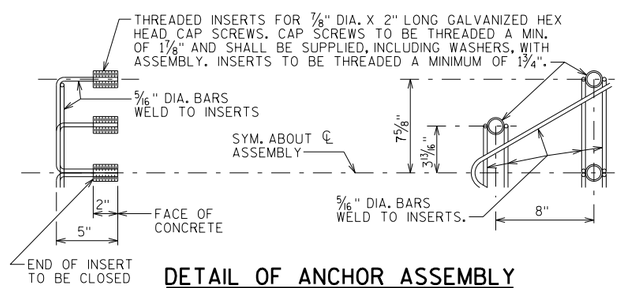

DETAIL OF ANCHOR ASSEMBLY

NOTE: HEX HEAD CAP SCREWS & WASHERS TO BE GALVANIZED IN ACCORDANCE WITH AASHTO M232 CLASS C.

ASSEMBLY SHALL BE BID ITEM "ANCHOR ASSEMBLIES FOR STEEL PLATE BEAM GUARD", EACH.

NO.	DATE	REVISION	BY

STATE OF WISCONSIN
DEPARTMENT OF TRANSPORTATION
STRUCTURES DESIGN SECTION

STRUCTURE B-28-192

DRAWN BY JPH | PLANS CK'D. WAH

VERTICAL FACE PARAPET "A" AT APPR. SLAB

SHEET 32

156

SCALE = 1.00

8

8

STATE PROJECT NUMBER

3993-01-81

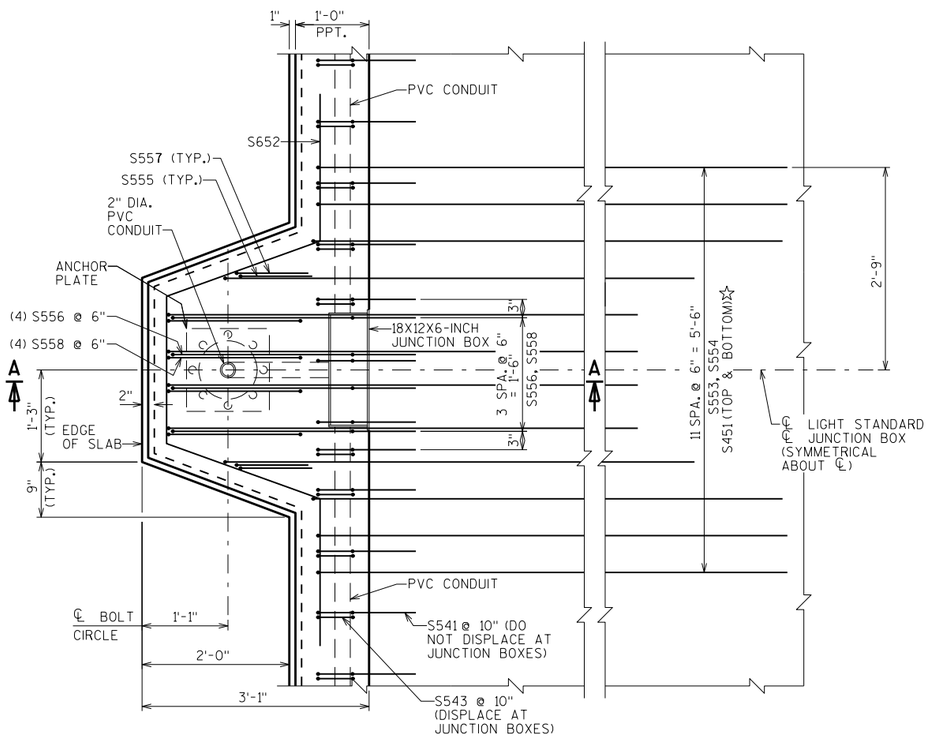

PLAN AT LIGHT STANDARD

(SLAB STEEL NOT SHOWN FOR CLARITY)

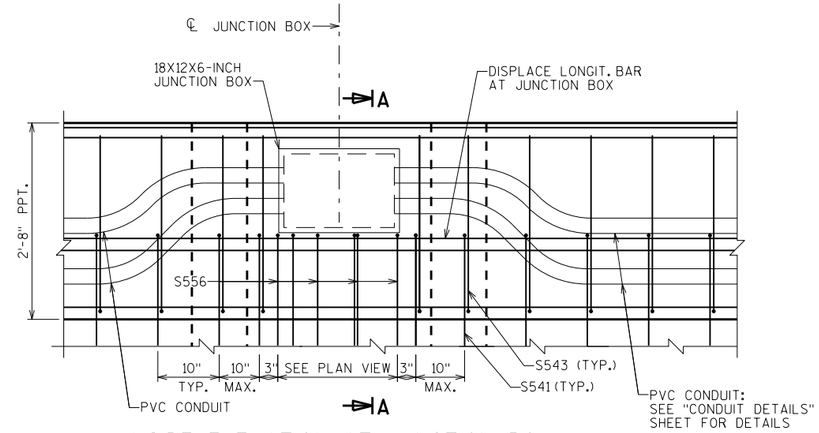

INSIDE ELEVATION AT JUNCTION BOX

(SLAB STEEL NOT SHOWN FOR CLARITY)

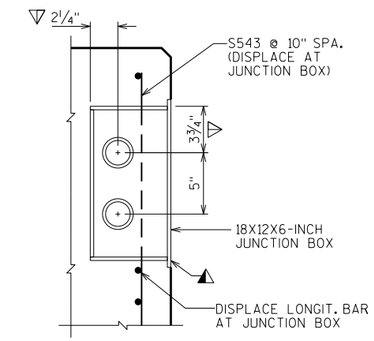

JUNCTION BOX DETAIL

NOTES

BID ITEM FOR ANCHOR ROD ASSEMBLY SHALL BE "ANCHOR ASSEMBLIES POLES ON STRUCTURES", EACH

CONDUIT SHALL BE EMBEDDED 2" CLEAR.

USE 2" DIA. RIGID NONMETALLIC CONDUIT (PVC) UNLESS NOTED OTHERWISE.

CONDUIT FITTINGS, CONDUIT BENDS, AND ADAPTER FITTINGS INCIDENTAL TO CONDUIT WORK.

PROVIDE JUNCTION BOXES FROM THE APPROVED PRODUCTS LIST.

SEE "CONDUIT DETAILS" SHEET FOR ADDITIONAL INFORMATION.

LEGEND

◐ CONSTRUCTION JOINT, STRIKE OFF AS SHOWN.

◭ CUT OUT ± 1" OF GASKET AT BOTTOM OF JUNCTION BOX COVER TO ALLOW FOR DRAINAGE.

▽ LOCATION OF CONDUIT IS MEASURED FROM OUTSIDE EDGE OF JUNCTION BOX.

PVC = POLYVINYL CHLORIDE (RIGID NONMETALLIC) CONDUIT

⬙ ¾" DIA. ANCHOR RODS ASTM F1554 GR 55, HEAVY HEX NUTS ASTM A563, AND WASHERS ASTM F436. ANCHOR ASSEMBLIES SHALL BE GALVANIZED PER SECTION 531 OF THE STANDARD SPECIFICATION. PROVIDE (2) WASHERS AND (4) NUTS PER ANCHOR ROD. CONFIRM ANCHOR ROD ASSEMBLY DETAILS WITH SUPPLIER OF LIGHT POST PRIOR TO INSTALLATION. ALL NUTS, WASHERS, ETC. REQUIRED FOR CONNECTION OF LIGHT POST SHALL BE PROVIDED BY LIGHT POST SUPPLIER.

☆ THESE BARS ARE IN ADDITION TO STANDARD TRANSVERSE BARS IN SIDEWALK OR SLAB.

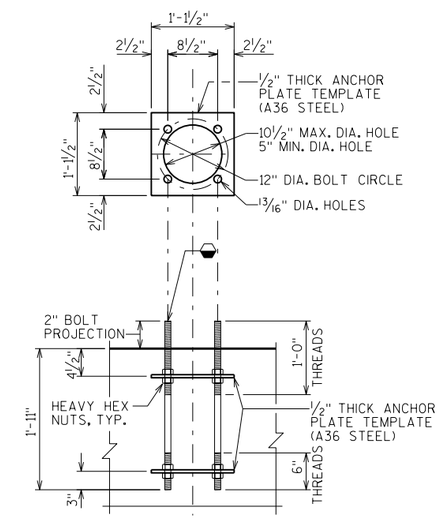

ANCHOR ROD ASSEMBLY DETAIL

(6 REQUIRED)

(4) - ANCHOR RODS REQUIRED PER ASSEMBLY

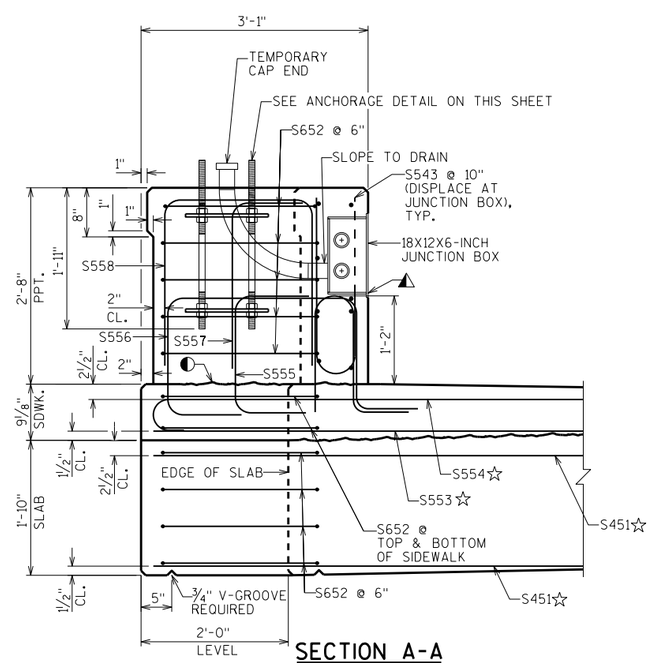

SECTION A-A

NOTE:
SEE "SUPERSTRUCTURE BAR DETAILS" SHEET FOR THE 'BILL OF BARS' AND BAR DETAILS.

NO.	DATE	REVISION	BY

STATE OF WISCONSIN
DEPARTMENT OF TRANSPORTATION
STRUCTURES DESIGN SECTION

STRUCTURE B-28-192

DRAWN BY JPH | PLANS CK'D. WAH

LIGHT STANDARD & ELECTRICAL DETAILS

SHEET 33

157

8

8

SCALE = 1.00

STATE PROJECT NUMBER

3993-01-81

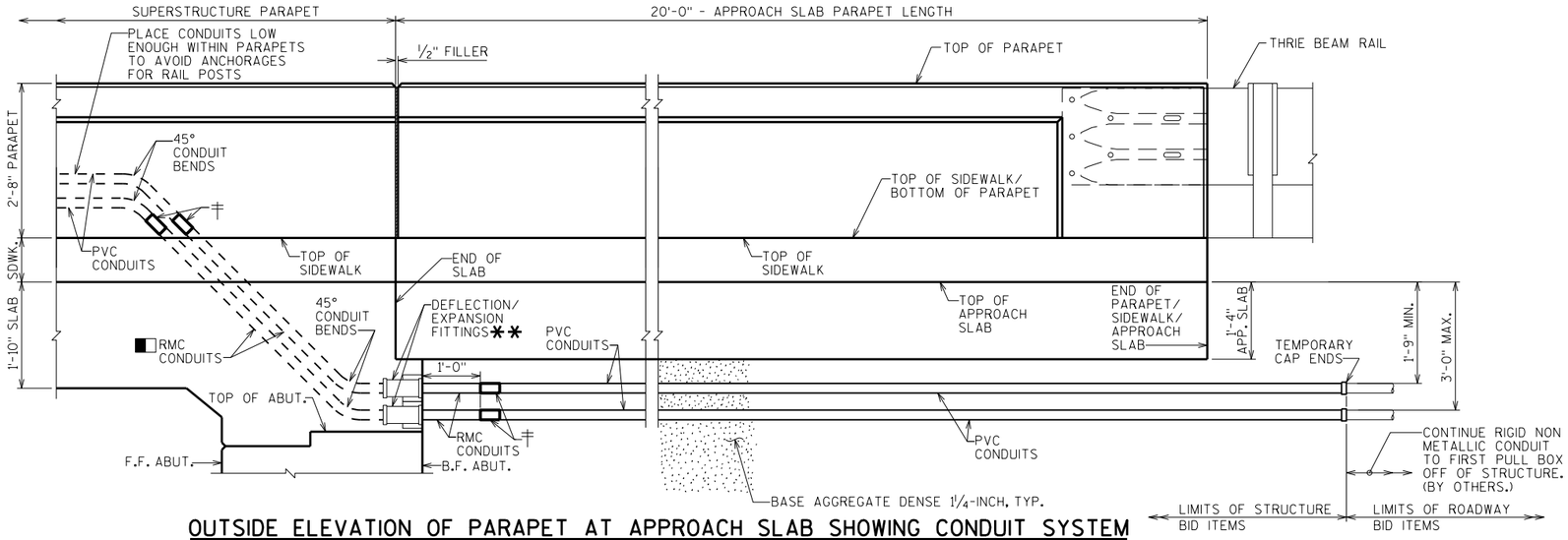

OUTSIDE ELEVATION OF PARAPET AT APPROACH SLAB SHOWING CONDUIT SYSTEM

WING 4 CORNER SHOWN, WING 3 CORNER SIMILAR
(RAILING, WING AND APPROACH SLAB FOOTING NOT SHOWN FOR CLARITY)

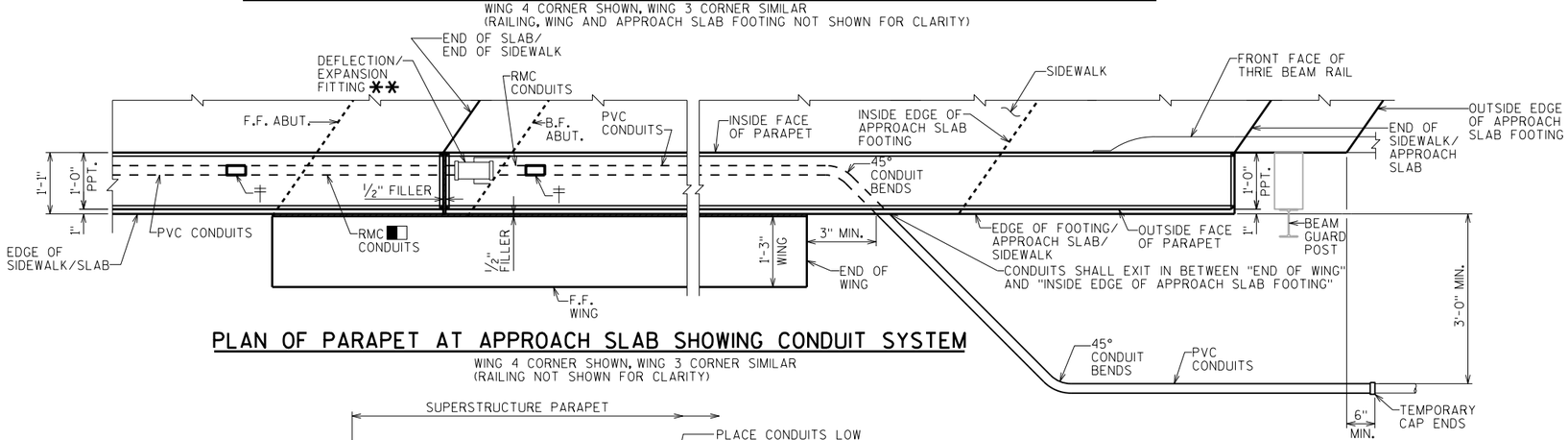

PLAN OF PARAPET AT APPROACH SLAB SHOWING CONDUIT SYSTEM

WING 4 CORNER SHOWN, WING 3 CORNER SIMILAR
(RAILING NOT SHOWN FOR CLARITY)

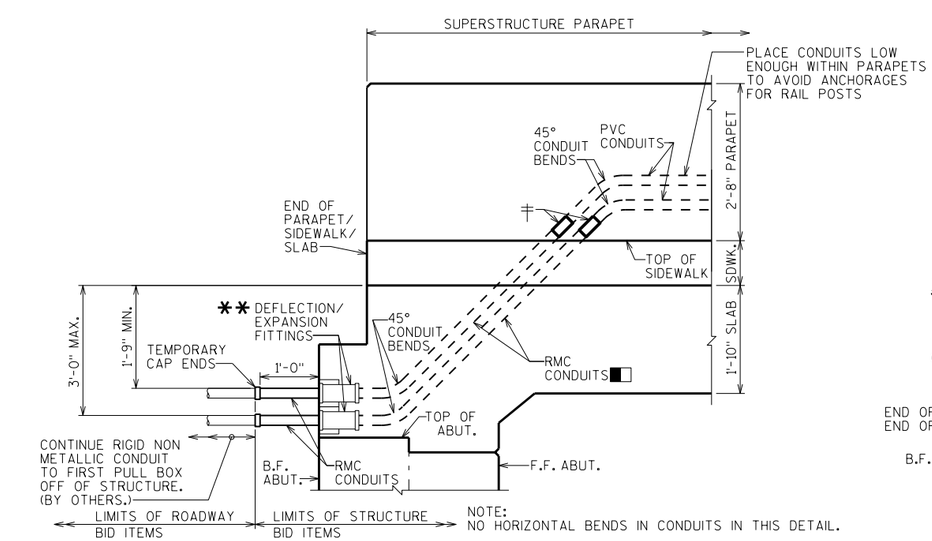

NOTE:
NO HORIZONTAL BENDS IN CONDUITS IN THIS DETAIL.

ELEVATION OF BOTH PARAPETS AT SOUTH ABUTMENT SHOWING CONDUIT SYSTEM

(RAILING AND WING NOT SHOWN FOR CLARITY)

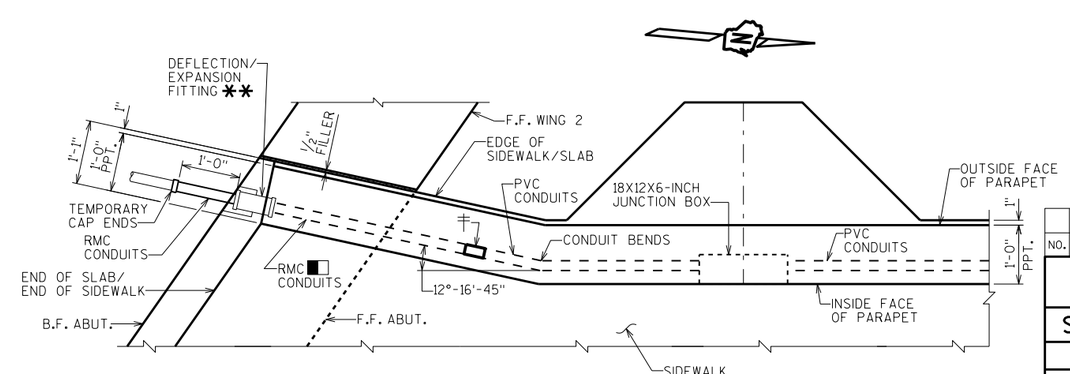

PLAN OF WEST PARAPET AT SOUTH ABUTMENT SHOWING CONDUIT SYSTEM

(RAILING NOT SHOWN FOR CLARITY)

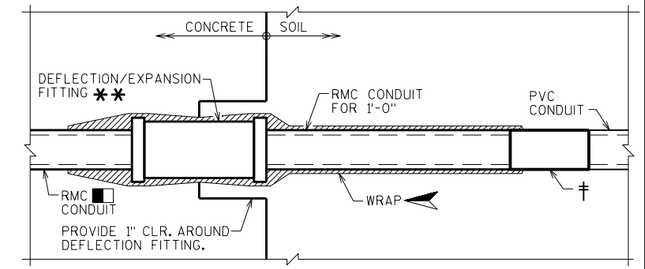

DEFLECTION/EXPANSION FITTING

THIS DETAIL ACCOMMODATES A MAXIMUM OF 3/4" TOTAL MOVEMENT AND UP TO 30 DEGREES OF ANGULAR MISALIGNMENT IN ANY DIRECTION. BOND JUMPER NOT SHOWN FOR CLARITY (CONCRETE TO SOIL FITTING)

LEGEND

- USE 2" DIA. RIGID METALLIC (RMC) CONDUIT AT FITTINGS. PROVIDE RMC FOR 3'-0" MIN. ON ONE SIDE OF JOINT OPENINGS UNLESS NOTED OTHERWISE.
- NONMETALLIC CONDUIT TO METALLIC CONDUIT ADAPTER FITTING (UL OR NRTL LISTED FOR ELECTRICAL USE SHALL BE USED).
- SPONGE RUBBER WRAP TO BE AASHTO M153, TYPE 1 OR EQUIVALENT - 1/4" MINIMUM THICKNESS. PROVIDE WRAP FOR THE ENTIRE LENGTH OF THE FITTING OR AS SHOWN. SPONGE RUBBER WRAP INCIDENTAL TO "CONDUIT RIGID METALLIC 2-INCH".
- ** DEFLECTION/EXPANSION FITTING REQUIREMENTS (IF USED):
  - UP TO 3/4" CONDUIT CONTRACTION OR EXPANSION AND UP TO 30° OF ANGULAR MISALIGNMENT IN ANY DIRECTION WITH BONDING JUMPER

NOTES

CONDUIT SHALL BE EMBEDDED 2" CLEAR.

USE 2" DIA. RIGID NONMETALLIC CONDUIT (PVC) UNLESS NOTED OTHERWISE.

CONDUIT FITTINGS, CONDUIT BENDS, AND ADAPTER FITTINGS INCIDENTAL TO CONDUIT WORK.

CONDUIT BENDS SHALL CONFORM TO THE NATIONAL ELECTRIC CODE.

NO.	DATE	REVISION	BY

STATE OF WISCONSIN
DEPARTMENT OF TRANSPORTATION
STRUCTURES DESIGN SECTION

STRUCTURE B-28-192

DRAWN BY JPH | PLANS CK'D. WAH

CONDUIT DETAILS

SHEET 34

SCALE = 1.25

8

8

STATE PROJECT NUMBER

3993-01-81

BILL OF BARS

NOTE:
THE FIRST OR FIRST TWO DIGITS OF THE BAR MARK SIGNIFIES THE BAR SIZE.

BAR MARK	COAT	NO. REQ'D.	LENGTH	BENT	BAR SERIES	LOCATION
S1001	X	47	40'-2"			SLAB-BOTTOM-HORIZONTAL-LONGITUDINAL-AT SPAN 1
S1002	X	92	25'-2"			SLAB-BOTTOM-HORIZONTAL-LONGITUDINAL-AT SPANS 1&7
S803	X	282	25'-8"	X		SLAB/PIER HAUNCHES-BOT.-VERTICAL-LONGIT.
S1004	X	235	52'-8"			SLAB-BOTTOM-HORIZONTAL-LONGITUDINAL-AT SPANS 2 THRU 6
S1005	X	92	34'-8"			SLAB-BOTTOM-HORIZONTAL-LONGITUDINAL-AT SPANS 2&6
S1006	X	92	34'-3"			SLAB-BOTTOM-HORIZONTAL-LONGITUDINAL-AT SPANS 3&5
S1007	X	46	35'-2"			SLAB-BOTTOM-HORIZONTAL-LONGITUDINAL-AT SPAN 4
S1008	X	47	40-6"			SLAB-BOTTOM-HORIZONTAL-LONGITUDINAL-AT SPAN 7
S609	X	94	16'-9"			SLAB-TOP-HORIZ.-LONGIT.-AT SPANS 1&7
S1110	X	94	50'-4"			SLAB-TOP-HORIZ.-LONGIT.-OVER PIERS 1&6
S1111	X	184	55'-9"			SLAB-TOP-HORIZ.-LONGIT.-OVER PIERS 1,2,5&6
S1112	X	280	55'-3"			SLAB-TOP-HORIZ.-LONGIT.-OVER PIERS 2,3,4&5
						NOT USED
						NOT USED
						NOT USED
S516	X	2	5'-6"			SLAB-TOP & BOTTOM-HORIZ.-LONGIT.-AT WING 2 CORNER ALONG EDGE OF SLAB ONLY
S417	X	4	31'-9"			SOUTH ABUT. HAUNCH-F.F.-BOT.-HORIZ.-TRANS.-AT 3" DEEP NOTCH
S518	X	6	32'-4"			SOUTH ABUT. HAUNCH-BOT.-HORIZ.-TRANSVERSE
S419	X	102	3'-8"	X		ABUT. HAUNCHES-F.F.-BOT.-VERT.-LONGIT.-AT 3" NOTCHES
S520	X	102	3'-7"	X		ABUT. HAUNCHES/SLAB-VERT.-LONGIT.-ALONG PAVING NOTCHES
S521	X	51	8'-1"	X		SOUTH ABUT. HAUNCH/SLAB-BOT.-VERT.-LONGIT.-UNDER PAVING NOTCH
S522	X	51	8'-7"	X		NORTH ABUT. HAUNCH/SLAB-BOT.-VERT.-LONGIT.-UNDER PAVING NOTCH
S423	X	124	31'-4"			NORTH ABUT. HAUNCH/PIER HAUNCHES-BOT.-HORIZ.-TRANSVERSE
S524	X	78	31'-9"			NORTH ABUT. HAUNCH/PIER HAUNCHES-BOT.-HORIZ.-TRANSVERSE
S525	X	180	25'-3"		◭	SLAB-TOP & BOT.-HORIZ.-TRANSVERSE-AT BOTH ENDS ONLY
S526	X	12	50'-4"		◭	SLAB-TOP & BOT.-HORIZ.-TRANSVERSE-AT SOUTH END ONLY
S527	X	1004	49'-10"			SLAB-TOP & BOT.-HORIZ.-TRANSVERSE
S428	X	1670	3'-11"	X		SLAB/SIDEWALKS-VERT.-TRANSVERSE-AT OUTSIDE EDGES
S429	X	1670	3'-8"	X		SLAB/SIDEWALKS-VERT.-TRANSVERSE-AT INSIDE EDGES
S530	X	7	3'-8"		◭	WEST SIDEWALK-TOP-HORIZ.-TRANSVERSE-AT SOUTH END ONLY
S531	X	2470	8'-3"	X		SIDEWALKS-TOP-VERTICAL-TRANSVERSE
S532	X	28	5'-1"	X	◭	WEST SIDEWALK/NORTH END & EAST SIDEWALK/SOUTH END-TOP-VERTICAL-TRANSVERSE
S533	X	13	3'-8"		◭	EAST SIDEWALK-TOP-HORIZ.-TRANSVERSE-AT NORTH END ONLY
S434	X	11	13'-1"	X	◭	WEST SIDEWALK-TOP-HORIZONTAL-LONGITUDINAL-AT SOUTH END ONLY
S435	X	143	33'-3"			WEST SIDEWALK/SPANS 1 THRU 4 & EAST SIDEWALK/SPANS 4 THRU 6-TOP-HORIZONTAL-LONGITUDINAL
S436	X	44	28'-4"			WEST SIDEWALK/SPAN 5 & EAST SIDEWALK/SPAN 3-TOP-HORIZONTAL-LONGITUDINAL
S437	X	22	13'-8"			WEST SIDEWALK/OVER PIER 5 & EAST SIDEWALK/OVER PIER 2-TOP-HORIZONTAL-LONGITUDINAL
S438	X	44	31'-1"			WEST SIDEWALK/SPAN 6 & EAST SIDEWALK/SPAN 2-TOP-HORIZONTAL-LONGITUDINAL
S439	X	44	24'-7"			WEST SIDEWALK/SPAN 7 & EAST SIDEWALK/SPAN 1-TOP-HORIZONTAL-LONGITUDINAL
S440	X	22	24'-10"			EAST SIDEWALK/SPAN 7-TOP-HORIZONTAL-LONGITUDINAL
S541	X	1011	4'-5"	X		SIDEWALKS/PARAPETS-VERTICAL-TRANSVERSE
S542	X	2	5'-7"	X		SLAB/SIDEWALK/PARAPET-VERT.-TRANSVERSE-AT WEST PARAPET/NORTH END & EAST PARAPET/SOUTH END ONLY
S543	X	1013	4'-11"	X		PARAPETS-VERTICAL-TRANSVERSE
S544	X	8	19'-9"	X		WEST PARAPET-HORIZONTAL-LONGITUDINAL-BOTH FACES-AT SOUTH END ONLY
S545	X	40	24'-8"			WEST PARAPET/SPANS 1&7 & EAST PARAPET/SPAN 1-HORIZONTAL-LONGITUDINAL-AT BOTH FACES
S546	X	96	33'-3"			WEST PARAPET/SPANS 2 THRU 4 & EAST PARAPET/SPANS 4 THRU 6-HORIZONTAL-LONGITUDINAL-AT BOTH FACES
S547	X	32	28'-5"			WEST PARAPET/SPAN 5 & EAST PARAPET/SPAN 3-HORIZONTAL-LONGITUDINAL-AT BOTH FACES
S548	X	16	13'-8"			WEST PARAPET/OVER PIER 5 & EAST PARAPET/OVER PIER 2-HORIZONTAL-LONGITUDINAL-AT BOTH FACES
S549	X	32	31'-2"			WEST PARAPET/SPAN 6 & EAST PARAPET/SPAN 2-HORIZONTAL-LONGITUDINAL-AT BOTH FACES
S550	X	16	22'-7"			EAST PARAPET/SPAN 7-HORIZONTAL-LONGITUDINAL-AT BOTH FACES
S451	X	144	7'-0"			LIGHT STANDARD SLAB-TOP & BOTTOM-HORIZ.-TRANSVERSE
S652	X	66	10'-0"	X		LIGHT STANDARD SLAB/SIDEWALK/PARAPET-HORIZ.-LONGITUDINAL
S553	X	72	7'-0"			LIGHT STANDARD SIDEWALK-BOTTOM-HORIZ.-TRANSVERSE
S554	X	72	7'-7"	X		LIGHT STANDARD SIDEWALK-TOP-VERTICAL-TRANSVERSE
S555	X	12	3'-4"	X		LIGHT STANDARD SIDEWALK/PARAPET-VERTICAL-TRANSVERSE
S556	X	24	7'-0"	X		LIGHT STANDARD SIDEWALK/PARAPET-VERTICAL-TRANSVERSE
S557	X	12	3'-2"	X		LIGHT STANDARD PARAPET-VERTICAL-TRANSVERSE
S558	X	24	6'-3"	X		LIGHT STANDARD PARAPET-VERTICAL-TRANSVERSE
SS601		50	3'-0"			SLAB/NORTH APPROACH SLAB-HORIZ.-LONGIT.-AT PAVING NOTCH

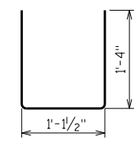

S419

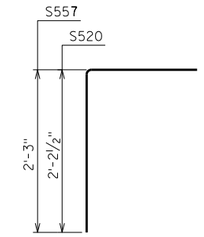

S520 S557

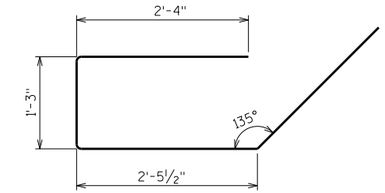

S521

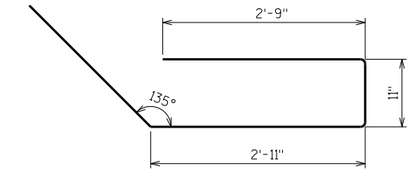

S522

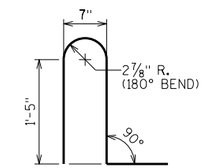

S541

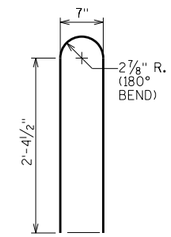

S542

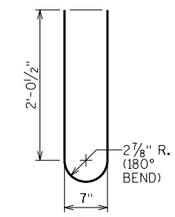

S543

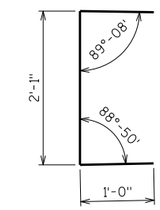

S428

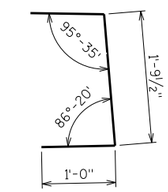

S429

BAR SERIES TABLE

BAR MARK	NUMBER REQUIRED	TOTAL LENGTHS
S525	4 SERIES OF 45 BARS	1'-8" TO 48'-10"
S526	2 SERIES OF 6 BARS	49'-10" TO 50'-10"
S530	1 SERIES OF 7 BARS	1'-3" TO 6'-0"
S532	2 SERIES OF 14 BARS	2'-0" TO 8'-2"
S533	1 SERIES OF 13 BARS	0'-10" TO 6'-6"
S434	1 SERIES OF 11 BARS	10'-9" TO 15'-5"

BUNDLE AND TAG EACH SERIES SEPARATELY.

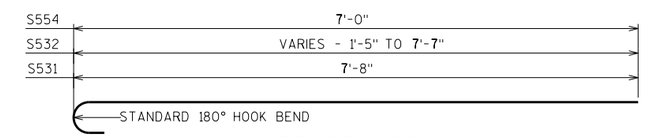

S531 S532 S554

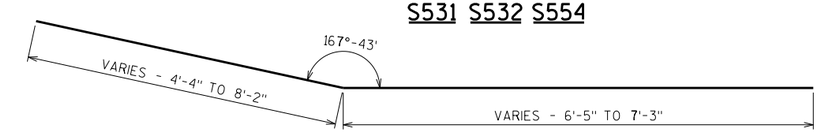

S434

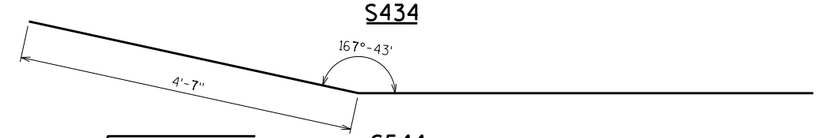

S544

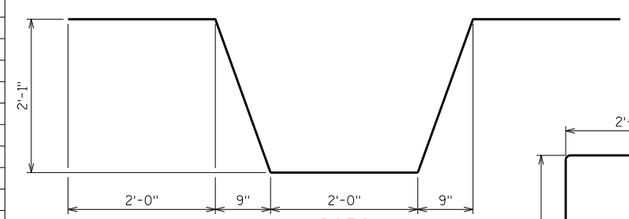

S652

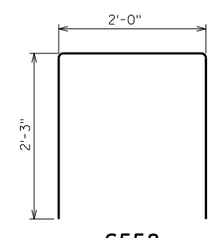

S558

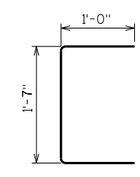

S555

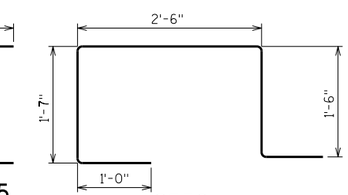

S556

◭ LENGTH SHOWN FOR BAR IS AN AVERAGE LENGTH AND SHOULD ONLY BE USED FOR BAR WEIGHT CALCULATIONS. SEE BAR SERIES TABLE FOR ACTUAL LENGTHS.

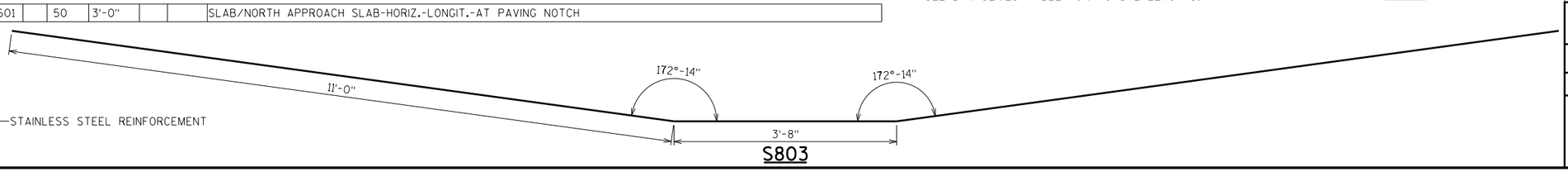

S803

8

8

NO.	DATE	REVISION	BY

STATE OF WISCONSIN
DEPARTMENT OF TRANSPORTATION
STRUCTURES DESIGN SECTION

STRUCTURE B-28-192

DRAWN BY JPH PLANS CK'D. WAH

SUPERSTRUCTURE BAR DETAILS

SHEET 35

SCALE = 1.00

STATE PROJECT NUMBER

3993-01-81

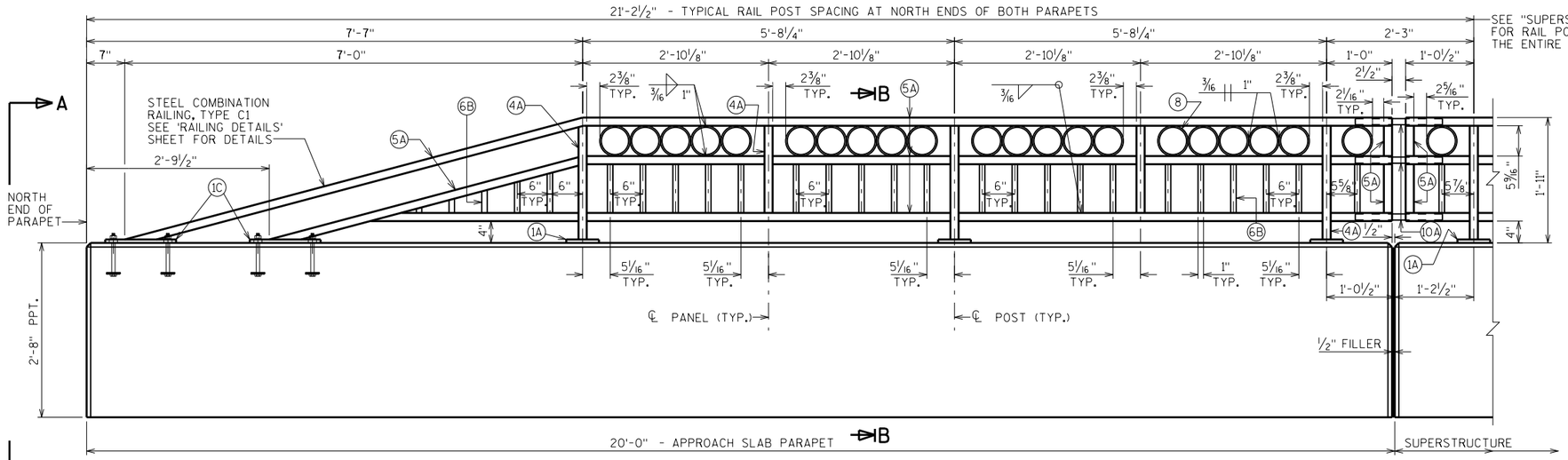

ELEVATION OF PARAPET & RAILING AT NORTH ENDS OF BOTH PARAPETS

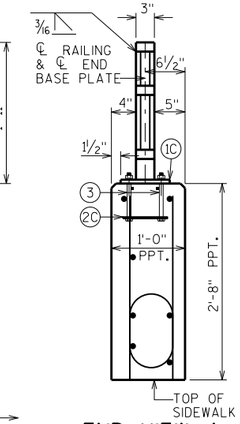

END VIEW A-A

NOTE:
ADJUST LOCATIONS OF REBAR TO ALLOW PLACEMENT OF ANCHOR ASSEMBLY FOR RAILING AND BEAM GUARD.

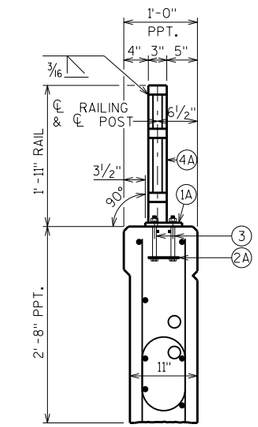

SECTION B-B

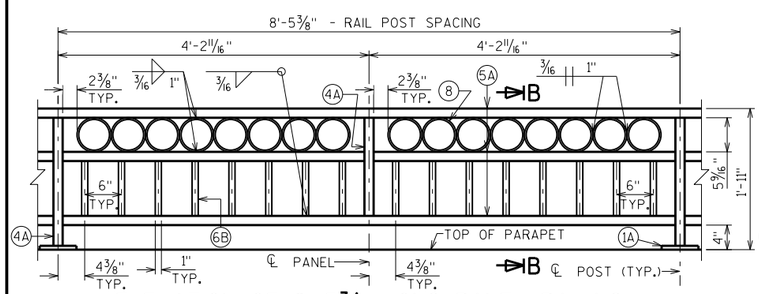

ELEVATION OF 8'-5⅜" LONG PANEL RAILING

TYP. AT WEST PARAPET - SPANS 6&7

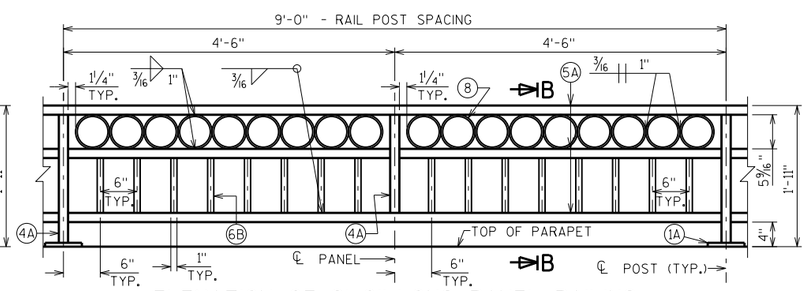

ELEVATION OF 9'-0" LONG PANEL RAILING

TYP. AT LIGHT STANDARDS, WEST PARAPET - SPAN 3 & EAST PARAPET - SPAN 5

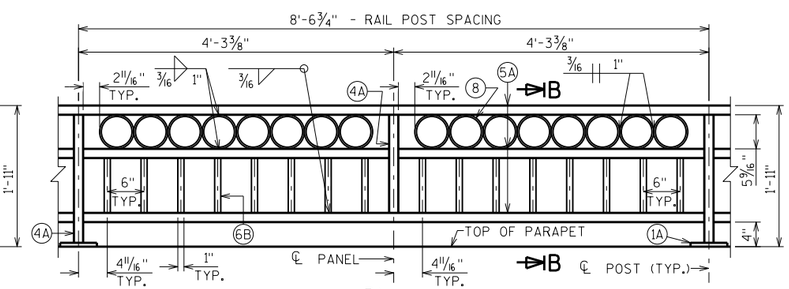

ELEVATION OF 8'-6¾" LONG PANEL RAILING

TYP. AT WEST PARAPET - SPANS 3-5 & EAST PARAPET SPANS 3-5

8

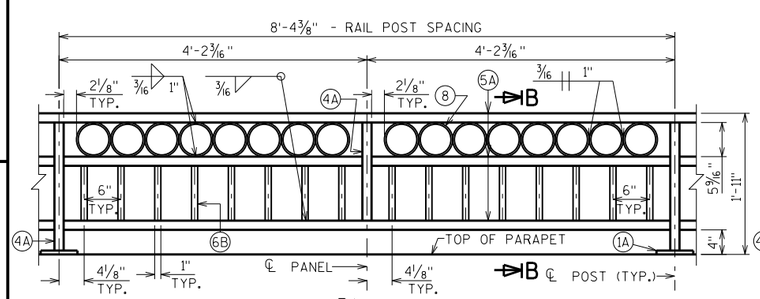

ELEVATION OF 8'-4⅜" LONG PANEL RAILING

TYP. AT WEST PARAPET - SPANS 1&2 AND EAST PARAPET - SPANS 6&7

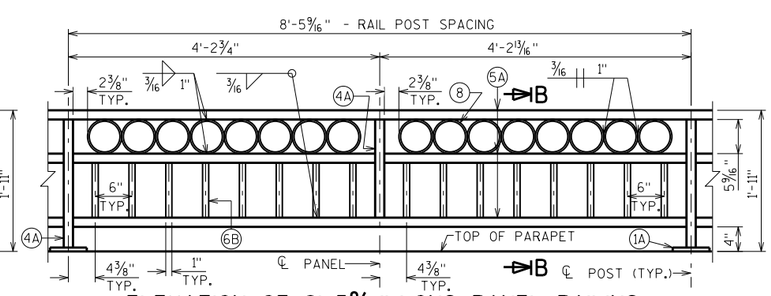

ELEVATION OF 8'-5 9/16" LONG PANEL RAILING

TYP. AT EAST PARAPET - SPANS 1&2

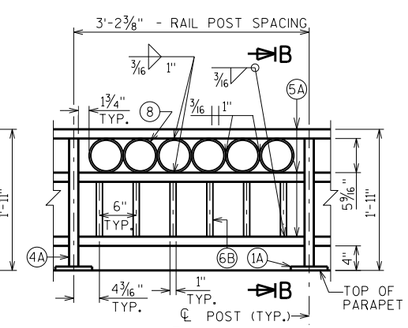

ELEVATION OF 3'-2⅜" LONG PANEL RAILING

AT EAST PARAPET - NORTH END ONLY

8

NO.	DATE	REVISION	BY

STATE OF WISCONSIN
DEPARTMENT OF TRANSPORTATION
STRUCTURES DESIGN SECTION

STRUCTURE B-28-192

DRAWN BY JPH | PLANS CK'D. WAH

COMBINATION RAILING TYPE 'C1'

SHEET 36

160

SCALE = 1.00

STATE PROJECT NUMBER

3993-01-81

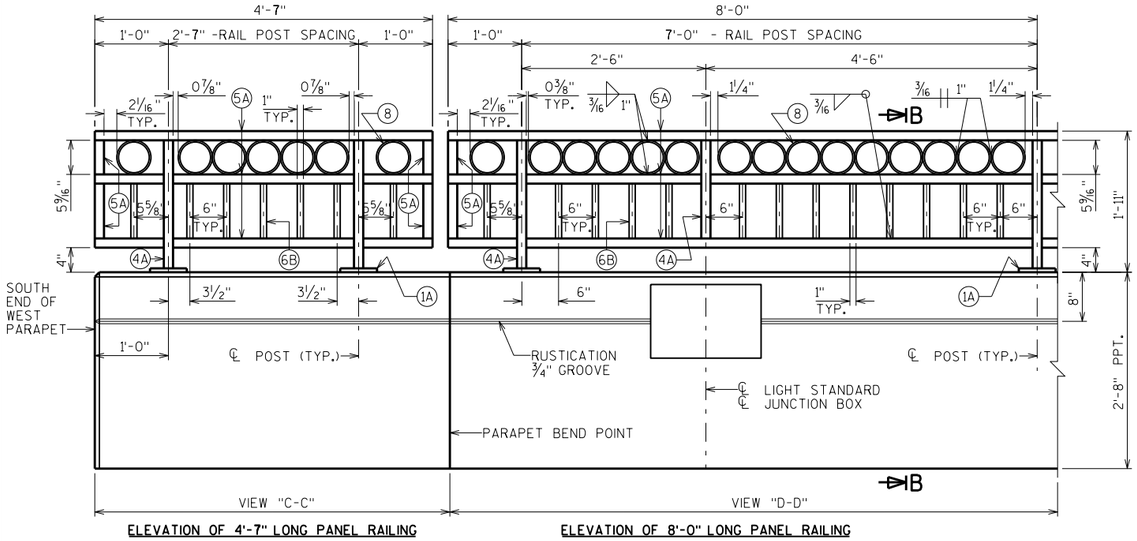

ELEVATION OF 4'-7" LONG PANEL RAILING

ELEVATION OF 8'-0" LONG PANEL RAILING

INSIDE ELEVATION VIEW OF WEST PARAPET & RAILING AT SOUTHWEST CORNER OF BRIDGE

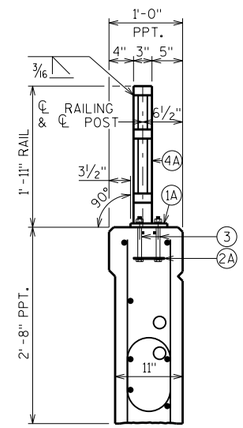

SECTION B-B

NOTE:
ADJUST LOCATIONS OF REBAR TO ALLOW PLACEMENT OF ANCHOR ASSEMBLY FOR RAILING AND BEAM GUARD.

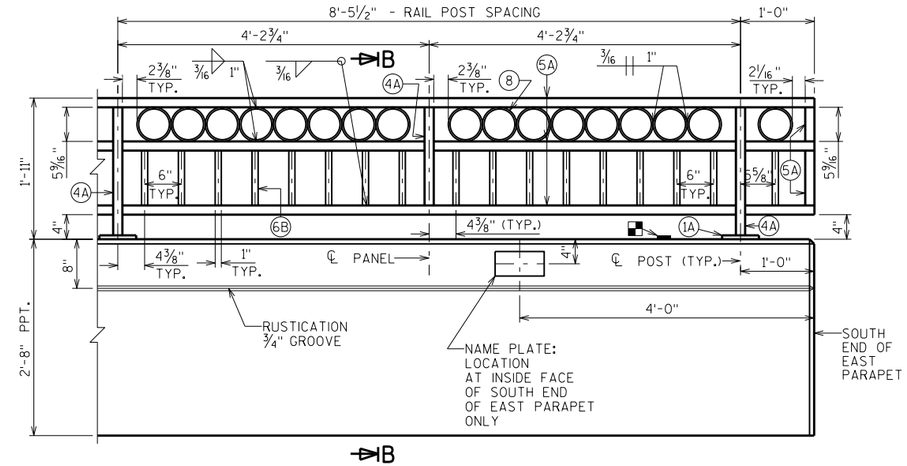

INSIDE ELEVATION VIEW OF EAST PARAPET & RAILING AT SOUTHEAST CORNER OF BRIDGE

BENCHMARK CAP. AVOID PLACING BELOW A RAIL OR FENCE SYSTEM THAT IS ATTACHED TO THE TOP OF THE PARAPET.

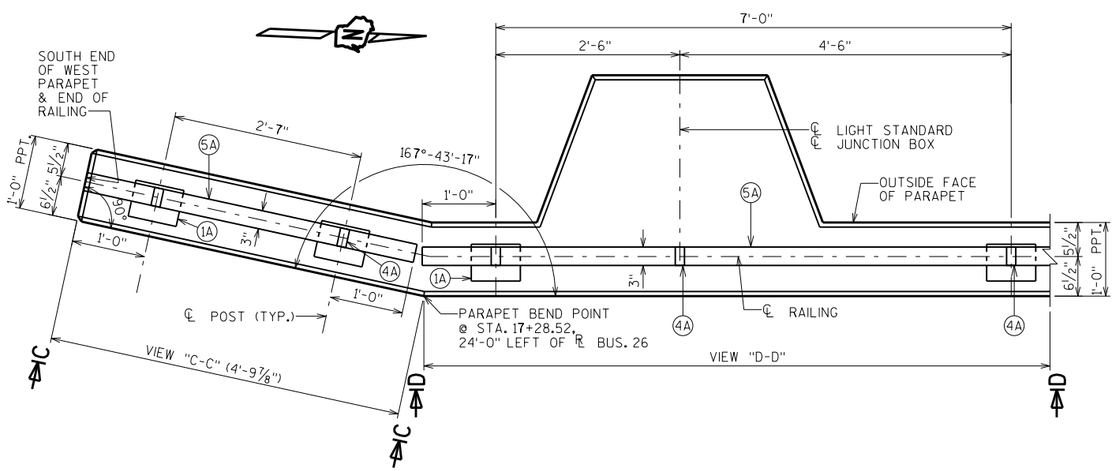

PLAN OF WEST PARAPET & RAILING AT SOUTHWEST CORNER OF BRIDGE

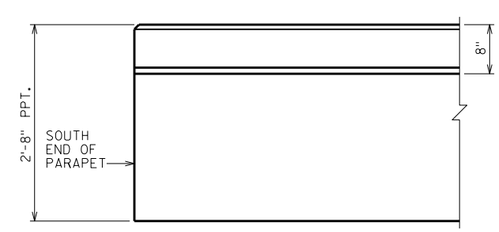

OUTSIDE ELEVATION OF BOTH PARAPETS

NO.	DATE	REVISION	BY

STATE OF WISCONSIN
DEPARTMENT OF TRANSPORTATION
STRUCTURES DESIGN SECTION

STRUCTURE B-28-192

DRAWN BY JPH PLANS CK'D. WAH

COMBINATION RAILING TYPE 'C1' AT S. END

SHEET 37

161

SCALE = 1.00

8

8

STATE PROJECT NUMBER

3993-01-81

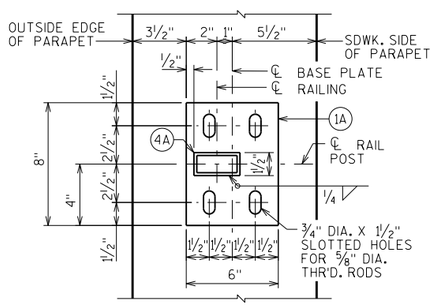

TYPICAL RAIL POST BASE PLATE

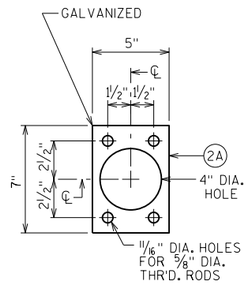

ANCHOR PLATE

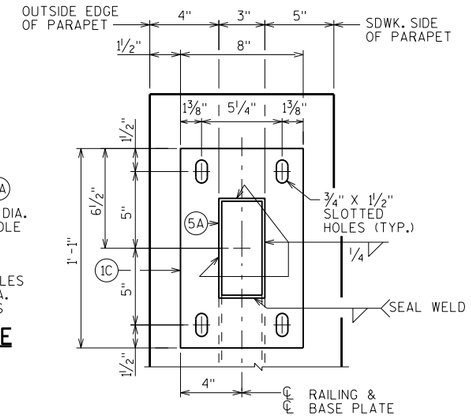

END RAIL BASE PLATE

LEGEND

(1A) PLATE ⅝" X 6" X 8" WITH ¾" X 1½" SLOTTED HOLES.

(1C) PLATE ⅝" X 8" X 1'-1" WITH ¾" X 1½" SLOTTED HOLES.

(2A) ¼" X 5" X 7" ANCHOR PLATE WITH 11/16" DIA. HOLES FOR THR'D. RODS NO. 3.

(2C) ¼" X 2½" X 7¼" ANCHOR PLATE WITH 11/16" DIA. HOLES FOR THR'D. RODS NO. 3.

(3) ⅝" DIA. X 9" LONG, TYPE 316 STAINLESS STEEL THREADED RODS (MIN. TENSILE STRENGTH = 70 KSI) WITH NUT AND WASHERS OF SAME ALLOY GROUP. ALTERNATIVE ANCHORAGE: CONCRETE ADHESIVE ANCHORS ⅝-INCH. EMBED 7" IN CONCRETE FOR RAIL POSTS. EMBED 5" IN CONCRETE FOR END RAILS. ADHESIVE ANCHORS SHALL CONFORM TO SECTIONS 502.2.12 AND 502.3.14 OF THE STANDARD SPECIFICATIONS.

(4A) STRUCTURAL TUBING 3" X 1½" X 3/16". PLACE VERTICAL. WELD TO NO. 1 & 5.

(5A) STRUCTURAL TUBING 3" X 1½" X 3/16" RAILS. WELD TO NO. 1 & NO. 4. INSIDE OF TUBE TO BE PAINTED AT ALL FIELD ERECTION & EXPANSION JOINTS.

(6B) BAR 1" X 1½" PICKETS. WELD TO NO. 5. (SPACE AT 6" MAX. ℄ TO ℄ SPACING) PLACE VERTICAL.

(8) STRUCTURAL TUBING 5" DIA. (STANDARD SIZE) (5.563" O.D.) 1½" LONG SLICES. WELD TO NO. 5A.

(9A) RECTANGULAR SLEEVE FABRICATED FROM 3/16" PLATES. PROVIDE "SLIDING FIT".

(10A) RECTANGULAR SLEEVE FABRICATED FROM 3/16" PLATES. (1'-4" @ FIELD ERECTION JTS.) (1'-4" @ STRIP SEAL EXP. JTS.)

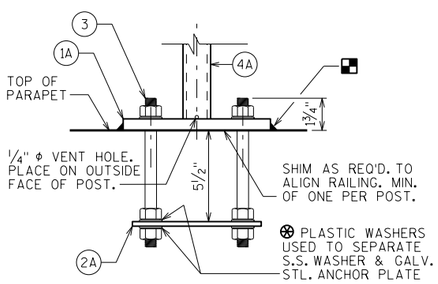

ANCHORAGE FOR RAIL POSTS

NOTE: ANCHOR PLATE NOT REQUIRED WHEN ADHESIVE ANCHORS ARE USED.

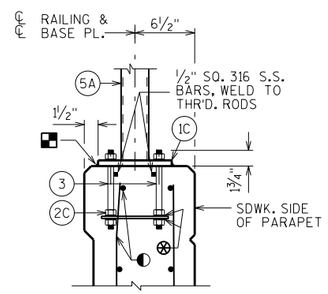

ANCHORAGE FOR END RAIL

NOTE: ANCHOR PLATES NOT REQ'D. WHEN ADHESIVE ANCHORS ARE USED.

◐ WHEN ADHESIVE ANCHORS ARE USED, FIELD BEND AND/OR DISPLACE TO AVOID HITTING LONGITUDINAL BAR WHEN DRILLING FOR ADHESIVE ANCHORS.

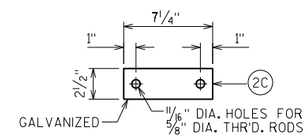

END RAIL ANCHOR PLATE

2 REQ'D. PER END RAIL BASE PLATE

RAILING NOTES

BID ITEM SHALL BE "RAILING STEEL TYPE C1", WHICH SHALL INCLUDE ALL STEEL ITEMS SHOWN.

POST BASE PLATES SHALL BE FLAT WITH ALL SURFACES SMOOTH AND FREE FROM WARP AND ALL EDGES SMOOTH, STRAIGHT AND VERTICAL. ALL PLATE CUTS SHALL BE MACHINE OR MACHINE FLAME CUTS.

ALL PLATES, BARS, AND RECTANGULAR SLEEVES SHALL CONFORM TO ASTM A709 GRADE 36. ALL STRUCTURAL TUBING SHALL CONFORM TO ASTM A500 GRADE B.

ANCHORAGES SHALL BE ACCURATELY PLACED TO PROVIDE CORRECT ALIGNMENT OF RAILING. SET NORMAL TO GRADE.

CUT BOTTOM OF POST TO MAKE POST VERTICAL IN BOTH TRANSVERSE AND LONGITUDINAL DIRECTION.

STEEL SHIMS SHALL BE PROVIDED & USED UNDER BASE PLATES WHERE REQUIRED FOR ALIGNMENT, AND SHALL BE GALVANIZED.

◪ CAULK AROUND PERIMETER OF BASE PLATES, NO. 1, AND FILL BOLT SLOT OPENINGS IN SHIMS AND BASE PLATES WITH NON-STAINING GRAY NON-BITUMINOUS JOINT SEALER.

ALL JOINTS AND RECESSES IN CONCRETE PARAPET ARE TO BE VERTICAL.

ALL MATERIAL (EXCEPT NO. 3) SHALL BE GALVANIZED AFTER FABRICATION. PRIOR TO GALVANIZING, THE STEEL RAILING SHALL BE GIVEN A NO. 6 BLAST CLEANING PER SSPC SPECIFICATIONS. PAINT OVER GALVANIZING WITH AN APPROVED TIE COAT AND TOP COAT AS SPECIFIED IN THE CONTRACT DOCUMENTS. THE RAILING SHALL BE PAINTED AMS STD. COLOR NO. 27038, BLACK.

VENT HOLES SHALL BE DRILLED IN POST AND RAIL MEMBERS AS REQUIRED TO FACILITATE GALVANIZING AND DRAINAGE.

RAILING SHALL BE FABRICATED IN LENGTHS THAT INCLUDE 3 OR 4 POSTS.

TOUCH-UP PAINTING TO BE DONE AT COMPLETION OF STEEL RAILING INSTALLATION TO THE SATISFACTION OF THE ENGINEER AT NO EXTRA COST.

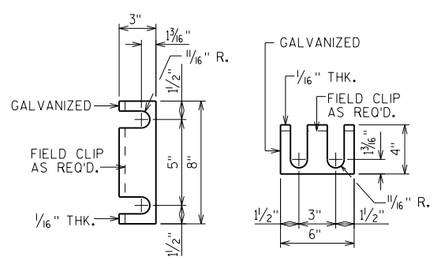

RAIL POST SHIM DETAIL

(2 SETS PER POST)

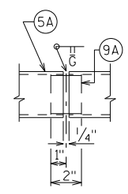

SHOP RAIL SPLICE DETAIL

(LOCATION MUST BE SHOWN ON SHOP DRAWINGS)

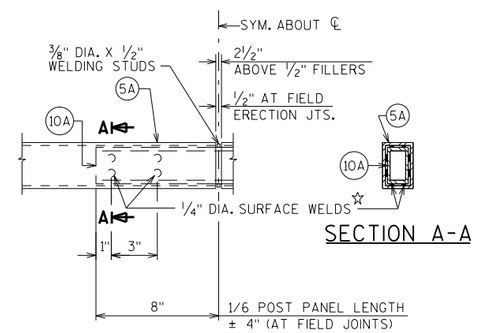

FIELD ERECTION JOINT DETAIL

☆ MIN. ⅝" FLAT SURFACE DIA. PUNCHINGS OR STUDS MAY BE USED AS AN ALTERNATE.

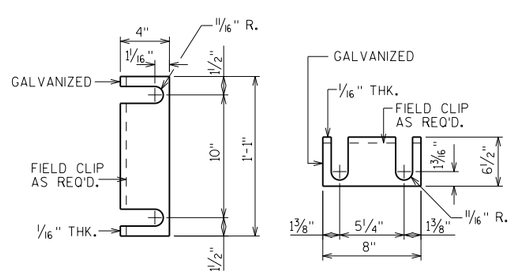

END RAIL SHIM DETAIL

(2 SETS PER POST)

8

8

NO.	DATE	REVISION	BY

STATE OF WISCONSIN
DEPARTMENT OF TRANSPORTATION
STRUCTURES DESIGN SECTION

STRUCTURE B-28-192

DRAWN BY JPH PLANS CK'D. WAH

COMBINATION RAILING TYPE 'C1' DETAILS

SHEET 38

162

SCALE = 1.00

STATE PROJECT NUMBER

3993-01-81

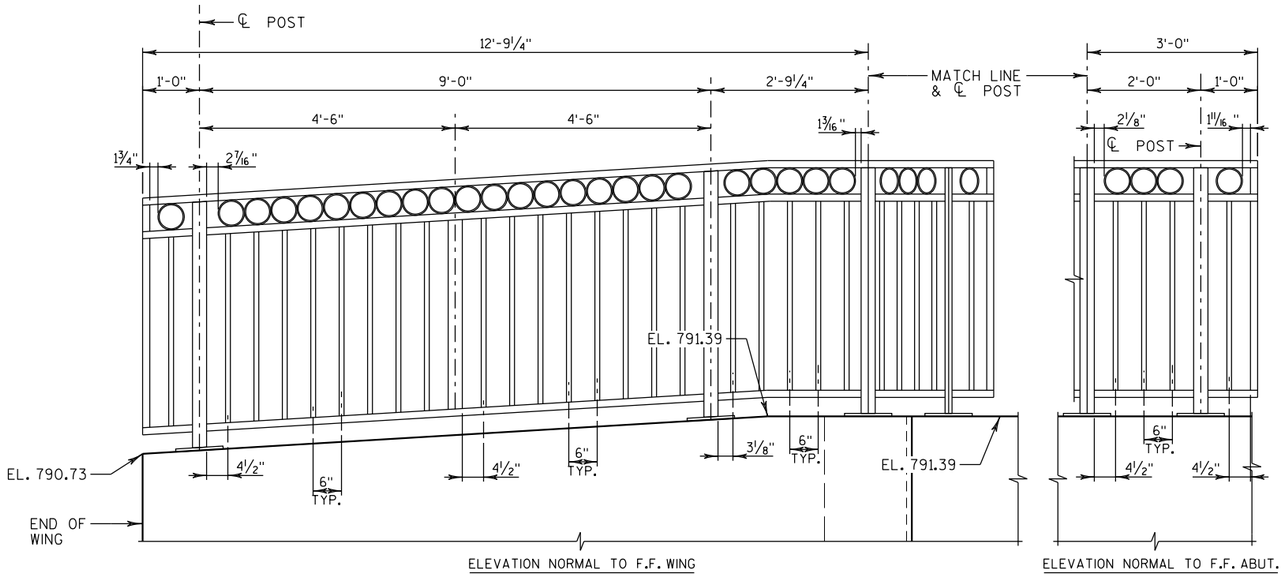

ELEVATION - WING 1

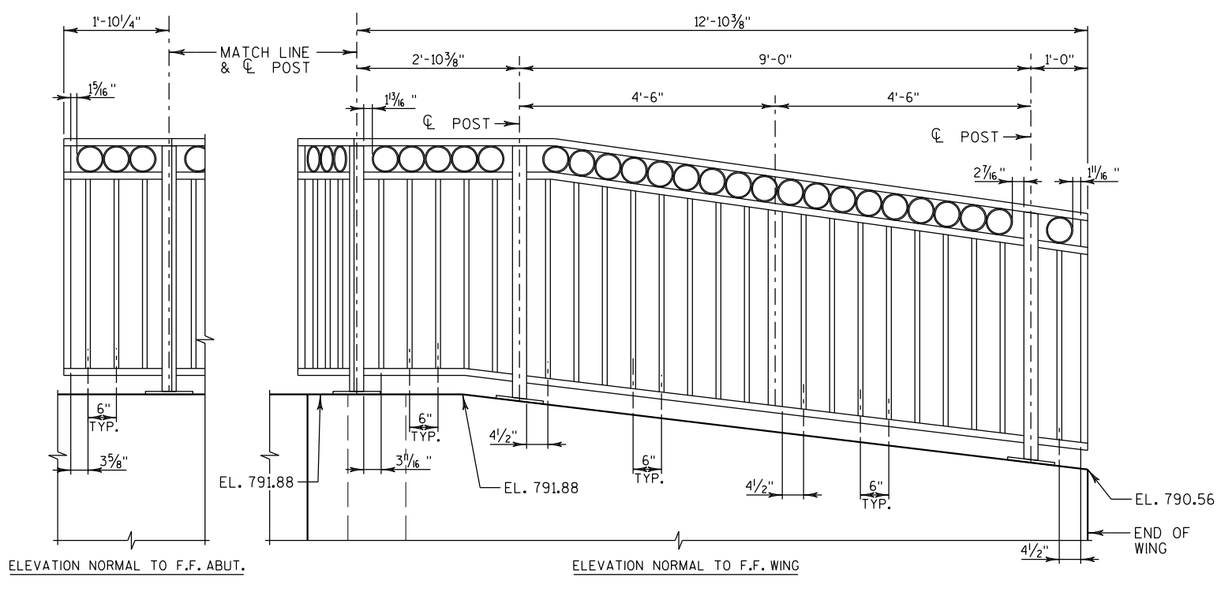

RAIL ELEVATION AT WING 2

NOTE

SEE "RAILING STEEL PEDESTRIAN-2" SHEET FOR LEGEND & NOTES.

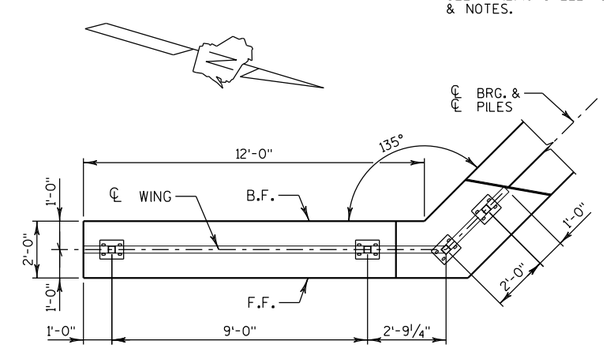

RAIL POST SPACING AT WING 1

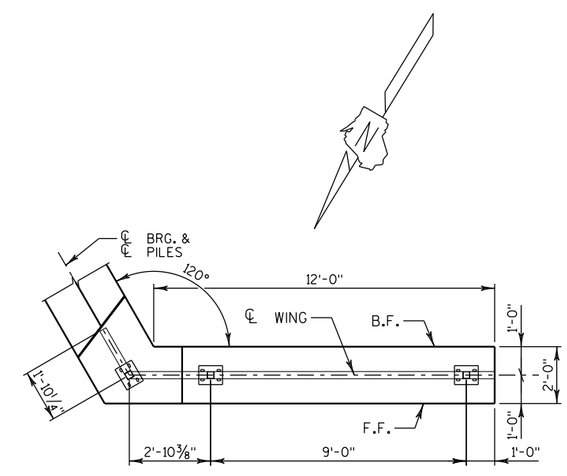

RAIL POST SPACING AT WING 2

8

8

NO.	DATE	REVISION	BY

STATE OF WISCONSIN
DEPARTMENT OF TRANSPORTATION
STRUCTURES DESIGN SECTION

STRUCTURE B-28-192

DRAWN BY TKB | PLANS CK'D. WAH

RAILING STEEL PEDESTRIAN-1

SHEET 39

SCALE = 1:2

STATE PROJECT NUMBER

3993-01-81

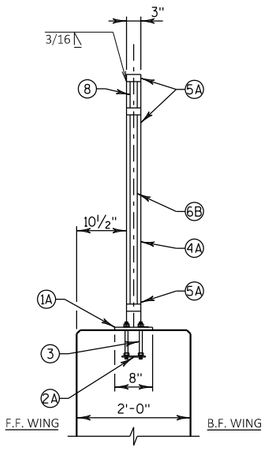

SECTION THRU WING
(ADJUST REINFORCEMENT AT ANCHORAGES)

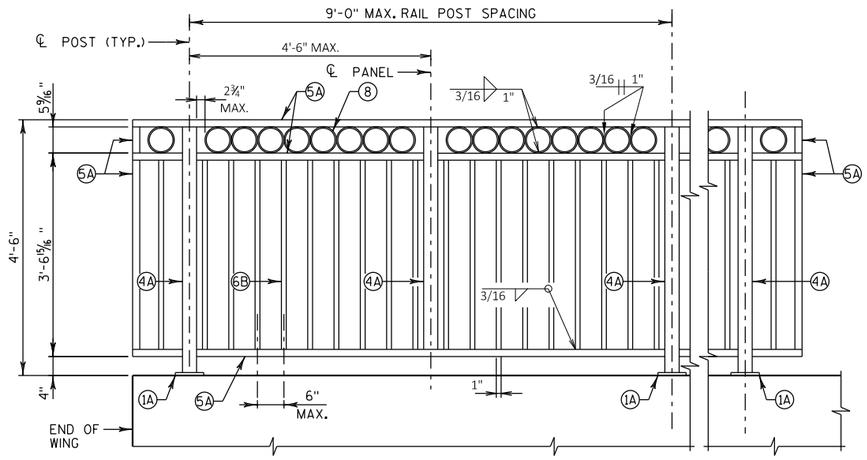

ELEVATION - TYPICAL RAIL DETAILS

LEGEND

(1A) PLATE 1" X 8" X 10" WITH ¾" X 1½" SLOTTED HOLES.

(2A) ¼" X 6" X 9" ANCHOR PLATE WITH 11/16" DIA. HOLES FOR THR'D. RODS NO. 3.

(3) ⅝" DIA. X 9" LONG, TYPE 316 STAINLESS STEEL THREADED RODS (MIN. TENSILE STRENGTH = 70 KSI) WITH NUT AND WASHERS OF SAME ALLOY GROUP. ALTERNATIVE ANCHORAGE: CONCRETE ADHESIVE ANCHORS ⅝-INCH. EMBED 7" IN CONCRETE FOR RAIL POSTS. ADHESIVE ANCHORS SHALL CONFORM TO SECTIONS 502.2.12 AND 502.3.14 OF THE STANDARD SPECIFICATIONS.

(4A) STRUCTURAL TUBING 3" X 3" X 3/16". PLACE VERTICAL. WELD TO NO. 1 & NO. 5.

(5A) STRUCTURAL TUBING 3" X 1½" X 3/16" RAILS. WELD TO NO. 1 & NO. 4. INSIDE OF TUBE TO BE PAINTED AT ALL FIELD ERECTION & EXPANSION JOINTS.

(6B) BAR 1" X 1½" PICKETS. WELD TO NO. 5. (SPACE AT 6" MAX. ℄ TO ℄ SPACING). PLACE VERTICAL.

(8) STRUCTURAL TUBING 5" DIA. (STANDARD SIZE) (5.563" O.D.) 1½" LONG SLICES. WELD TO NO. 5A.

(9A) RECTANGULAR SLEEVE FABRICATED FROM 3/16" PLATES. PROVIDE "SLIDING FIT".

(10A) RECTANGULAR SLEEVE FABRICATED FROM 3/16" PLATES. (1'-4" @ FIELD ERECTION JTS.)

RAILING NOTES

BID ITEM SHALL BE "RAILING STEEL PEDESTRIAN TYPE C1", WHICH SHALL INCLUDE ALL STEEL ITEMS SHOWN.

POST BASE PLATES SHALL BE FLAT WITH ALL SURFACES SMOOTH AND FREE FROM WARP AND ALL EDGES SMOOTH, STRAIGHT AND VERTICAL. ALL PLATE CUTS SHALL BE MACHINE OR MACHINE FLAME CUTS.

ALL PLATES, BARS, AND RECTANGULAR SLEEVES SHALL CONFORM TO ASTM A709 GRADE 36. ALL STRUCTURAL TUBING SHALL CONFORM TO ASTM A500 GRADE B.

ANCHORAGES SHALL BE ACCURATELY PLACED TO PROVIDE CORRECT ALIGNMENT OF RAILING. SET NORMAL TO GRADE.

CUT BOTTOM OF POST TO MAKE POST VERTICAL IN BOTH TRANSVERSE AND LONGITUDINAL DIRECTION.

STEEL SHIMS SHALL BE PROVIDED & USED UNDER BASE PLATES WHERE REQUIRED FOR ALIGNMENT, AND SHALL BE GALVANIZED.

CAULK AROUND PERIMETER OF BASE PLATES, NO. 1, AND FILL BOLT SLOT OPENINGS IN SHIMS AND BASE PLATES WITH NON-STAINING GRAY NON-BITUMINOUS JOINT SEALER.

ALL JOINTS AND RECESSES IN CONCRETE PARAPET ARE TO BE VERTICAL.

ALL MATERIAL (EXCEPT NO. 3) SHALL BE GALVANIZED AFTER FABRICATION. PRIOR TO GALVANIZING, THE STEEL RAILING SHALL BE GIVEN A NO. 6 BLAST CLEANING PER SSPC SPECIFICATIONS. PAINT OVER GALVANIZING WITH AN APPROVED TIE COAT AND TOP COAT AS SPECIFIED IN THE CONTRACT DOCUMENTS. THE RAILING SHALL BE PAINTED AMS STD. COLOR NO. 27038, BLACK.

VENT HOLES SHALL BE DRILLED IN POST AND RAIL MEMBERS AS REQUIRED TO FACILITATE GALVANIZING AND DRAINAGE.

RAILING SHALL BE FABRICATED IN LENGTHS THAT INCLUDE 3 OR 4 POSTS.

TOUCH-UP PAINTING TO BE DONE AT COMPLETION OF STEEL RAILING INSTALLATION TO THE SATISFACTION OF THE ENGINEER AT NO EXTRA COST.

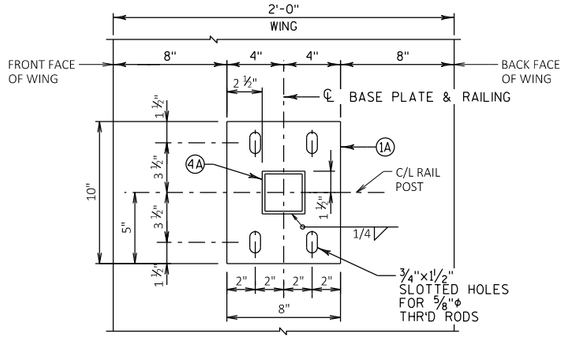

TYPICAL RAIL POST BASE PLATE

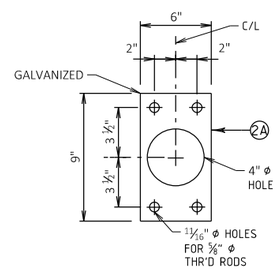

ANCHOR PLATE

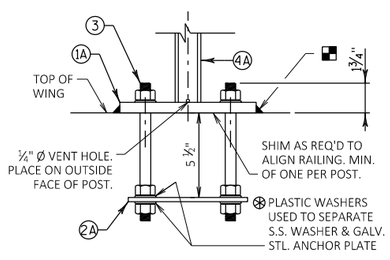

ANCHORAGE FOR RAIL POSTS

NOTE: ANCHOR PLATE NOT REQUIRED WHEN ADHESIVE ANCHORS ARE USED.

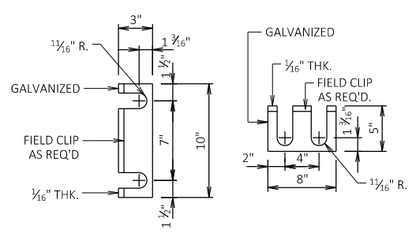

RAIL POST SHIM DETAIL

(2 SETS PER POST)

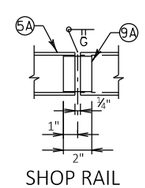

SHOP RAIL SPLICE DETAIL

(LOCATION MUST BE SHOWN ON SHOP DRAWINGS)

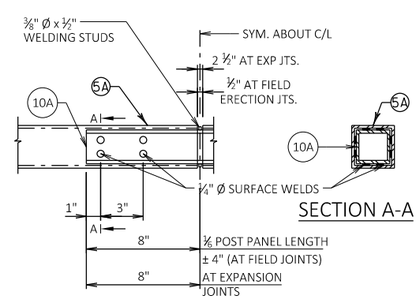

FIELD ERECTION JOINT DETAIL

✱MIN. 5/8" FLAT SURFACE DIA. PUNCHINGS OR STUDS MAY BE USED AS AN ALTERNATE.

8

8

NO.	DATE	REVISION	BY

STATE OF WISCONSIN
DEPARTMENT OF TRANSPORTATION
STRUCTURES DESIGN SECTION

STRUCTURE B-28-192

DRAWN BY TKB | PLANS CK'D. WAH

RAILING STEEL PEDESTRIAN-2

SHEET 40

SCALE = 1:2

DIVISION 1 - BUS26

STATION	REAL STATION	DISTANCE	AREA (SF)		INCREMENTAL VOL (CY) (UNADJUSTED)		CUMULATIVE VOL (CY)		
			CUT	FILL	CUT	FILL	CUT	EXPANDED FILL	MASS ORDINATE
							1.00	1.30	
					NOTE 1	NOTE 3	NOTE 1		NOTE 8
15+64	1564.00	0.00	71.59	1.86	0	0	0	0	0
16+00	1600.00	36.00	60.35	4.47	88	4	88	5	83
16+50	1650.00	50.00	32.05	0.00	86	4	174	10	164
17+00	1700.00	50.00	43.50	0.00	70	0	244	10	234
17+23.811	1723.81	23.81	0.00	0.00	19	0	263	10	253

DIVISION 1 - RIVERVIEWDR

STATION	REAL STATION	DISTANCE	AREA (SF)		INCREMENTAL VOL (CY) (UNADJUSTED)		CUMULATIVE VOL (CY)		
			CUT	FILL	CUT	FILL	CUT	EXPANDED FILL	MASS ORDINATE
							1.00	1.30	
					NOTE 1	NOTE 3	NOTE 1		NOTE 8
48+68.95	4868.95	0.00	64.60	0.34	0	0	0	0	0
49+00	4900.00	31.05	58.54	6.11	71	4	71	5	66
49+26.51	4926.51	26.51	65.33	5.34	61	6	132	13	119
49+50	4950.00	23.49	77.45	3.80	62	4	194	18	176
49+81.727	4981.73	31.73	32.64	4.17	65	5	259	25	234
49+81.827	4981.83	0.10	0.00	0.00	0	0	259	25	234
50+14.519	5014.52	32.69	0.00	0.00	0	0	259	25	234
50+14.619	5014.62	0.10	33.63	0.00	0	0	259	25	234
50+25	5025.00	10.38	42.63	0.00	15	0	274	25	249
50+50	5050.00	25.00	61.24	1.16	48	1	322	26	296
50+62.641	5062.64	12.64	43.92	1.30	25	1	347	27	320
50+98	5098.00	35.36	44.97	0.22	58	1	405	29	376

DIVISION 2 - BUS26

STATION	REAL STATION	DISTANCE	AREA (SF)		INCREMENTAL VOL (CY) (UNADJUSTED)		CUMULATIVE VOL (CY)		
			CUT	FILL	CUT	FILL	CUT	EXPANDED FILL	MASS ORDINATE
							1.00	1.30	
					NOTE 1	NOTE 3	NOTE 1		NOTE 8
21+25.932	2125.93	0.00	0.00	0.00	0	0	0	0	0
21+50	2150.00	24.07	46.00	0.40	21	0	21	0	21
22+00	2200.00	50.00	71.46	0.10	109	0	130	0	130
22+20	2220.00	20.00	78.00	0.21	55	0	185	0	185

Notes:	
1 - CUT	CUT INCLUDES SALVAGED/UNUSABLE PAVEMENT MATERIAL
2 - SALVAGED/UNUSABLE PAVEMENT MATERIAL	THIS DOES NOT SHOW UP IN CROSS SECTIONS
3 - FILL	DOES NOT INCLUDE UNUSABLE PAVEMENT EXC VOLUME
8 - MASS ORDINATE	PLUS QUANTITY INDICATES AN EXCESS OF MATERIAL. MINUS INDICATES A SHORTAGE OF MATERIAL.

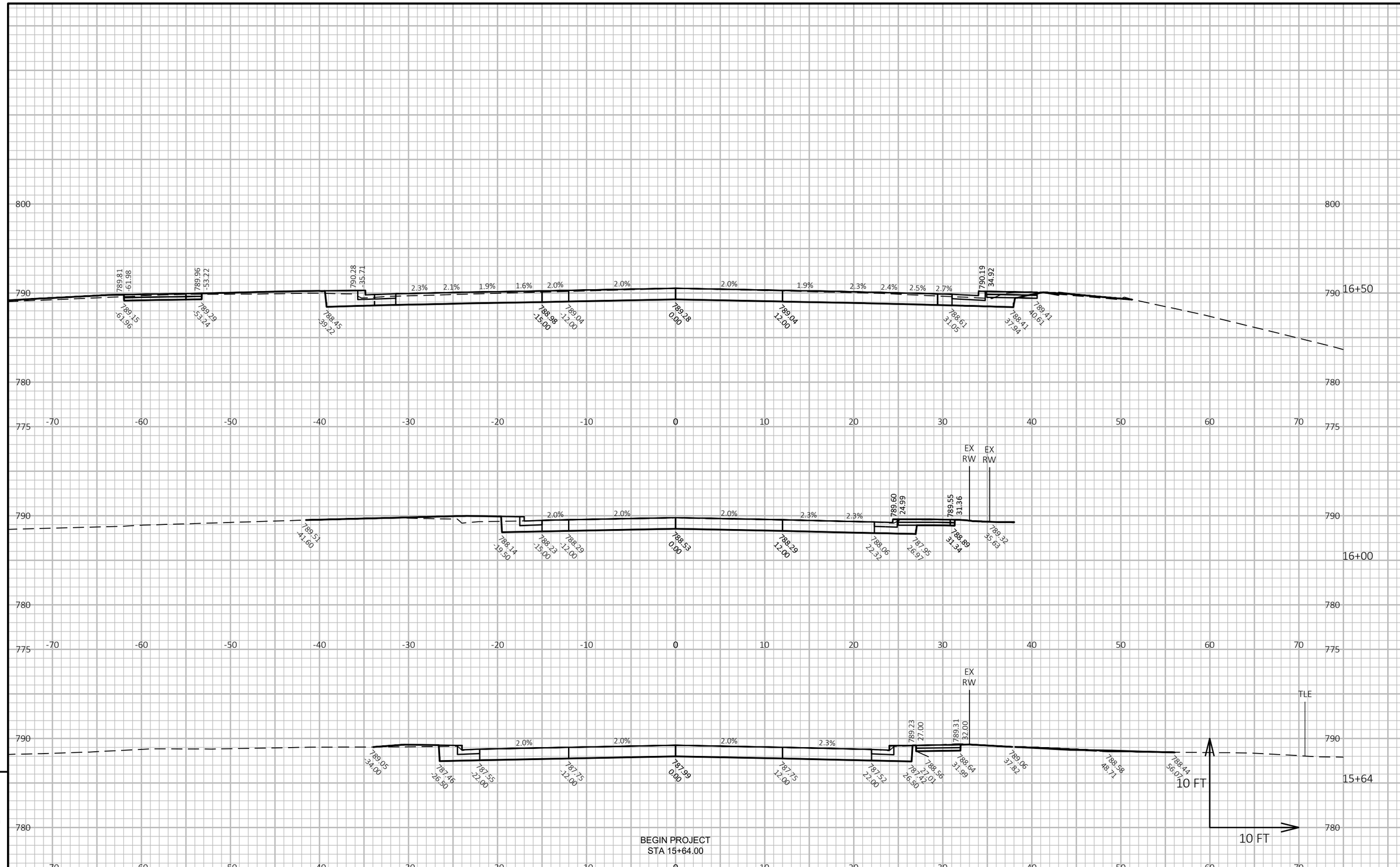

9

9

PROJECT NO: 3993-01-81	HWY: BUS 26	COUNTY: JEFFERSON	CROSS SECTIONS: S MAIN ST	SHEET 166	E

FILE NAME : S:\CURRPROJ\JEFFERSON\MAIN STREET BRIDGE\CIVIL3D\39930101\SHEETSPLAN\39930181-090102-XS.DWG
LAYOUT NAME - 01-Main

PLOT DATE : 1/21/2022 10:29 AM PLOT BY : BENJAMIN OITZINGER PLOT NAME : **PLOT SCALE :** 1 IN:10 FT HORZ. / 1 IN:10 FT VERT.

WISDOT/CADDS SHEET 49

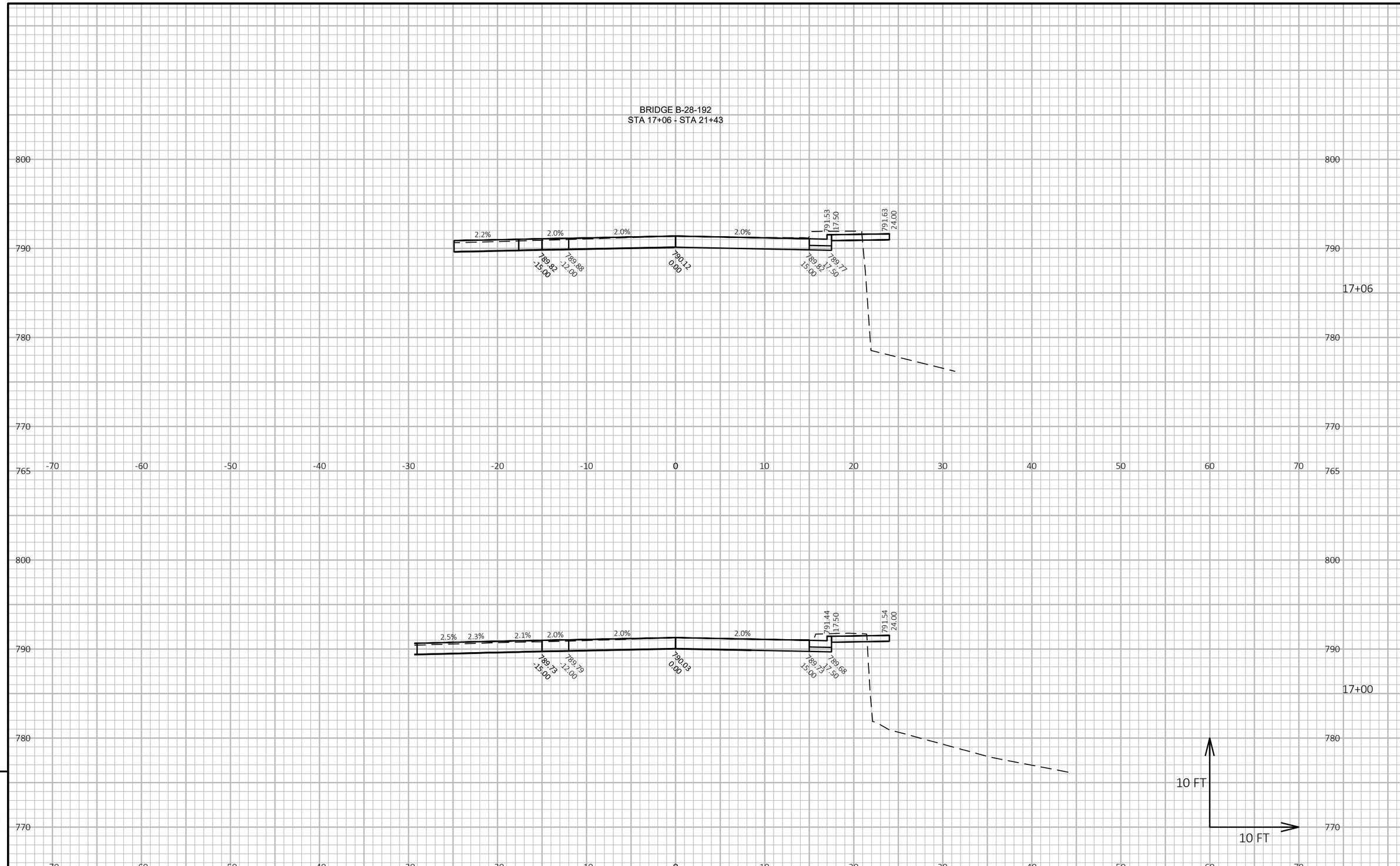

PROJECT NO: 3993-01-81	HWY: BUS 26	COUNTY: JEFFERSON	CROSS SECTIONS: S MAIN ST	SHEET 167	E

FILE NAME : S:\CURRPROJ\JEFFERSON\MAIN STREET BRIDGE\CIVIL3D\39930101\SHEETSPLAN\39930181-090102-XS.DWG
LAYOUT NAME - 02-Main
PLOT DATE : 1/21/2022 10:29 AM
PLOT BY : BENJAMIN OITZINGER
PLOT NAME :
PLOT SCALE : 1 IN:10 FT HORZ. / 1 IN:10 FT VERT.
WISDOT/CADDS SHEET 49

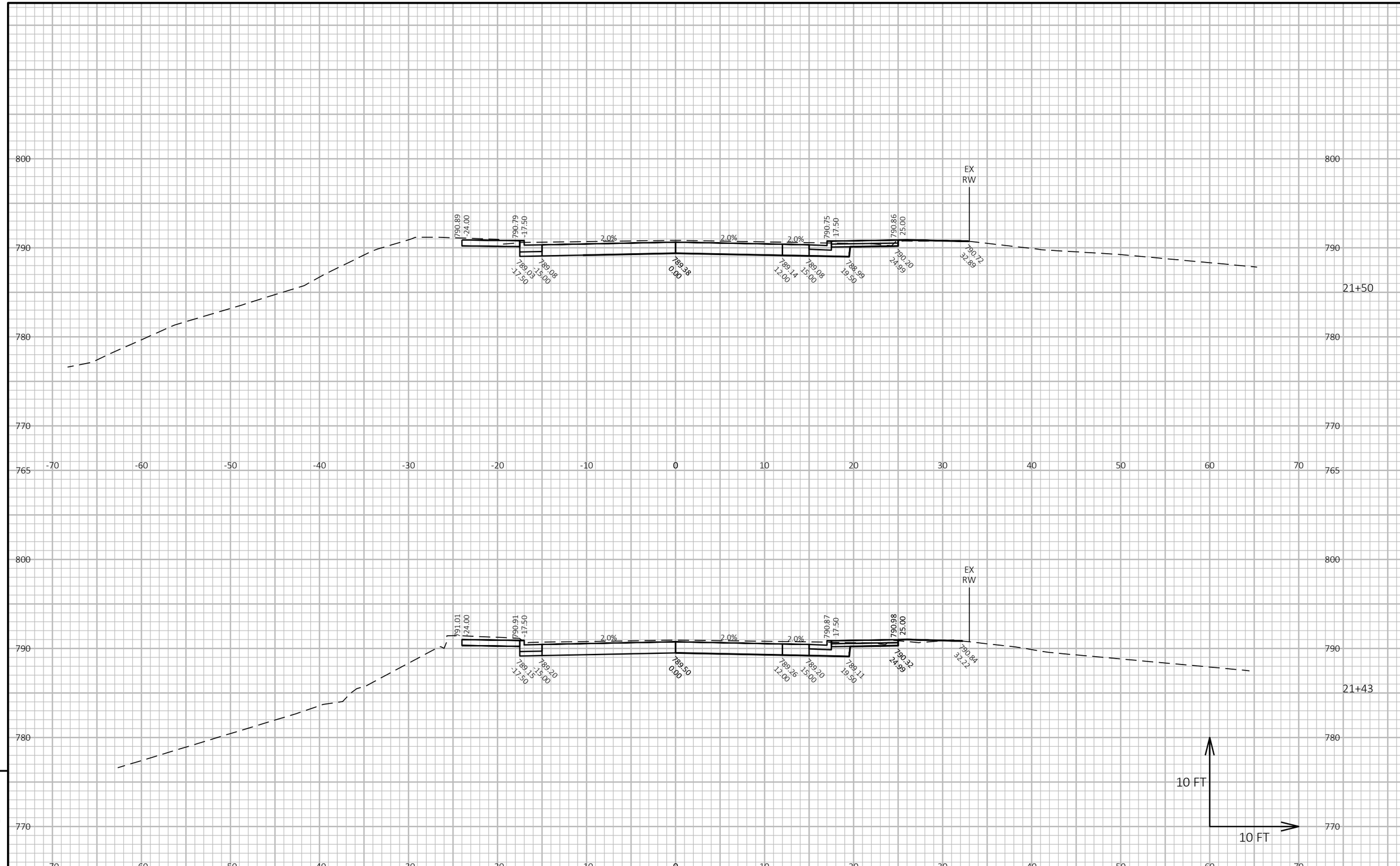

PROJECT NO: 3993-01-81	HWY: BUS 26	COUNTY: JEFFERSON	CROSS SECTIONS: S MAIN ST	SHEET 168	E

FILE NAME : S:\CURRPROJ\JEFFERSON\MAIN STREET BRIDGE\CIVIL3D\39930101\SHEETSPLAN\39930181-090102-XS.DWG
LAYOUT NAME - 03-Main
PLOT DATE : 1/21/2022 10:29 AM PLOT BY : BENJAMIN OITZINGER PLOT NAME : PLOT SCALE : 1 IN:10 FT HORZ. / 1 IN:10 FT VERT.

WISDOT/CADDS SHEET 49

END PROJECT
STA 22+20.00

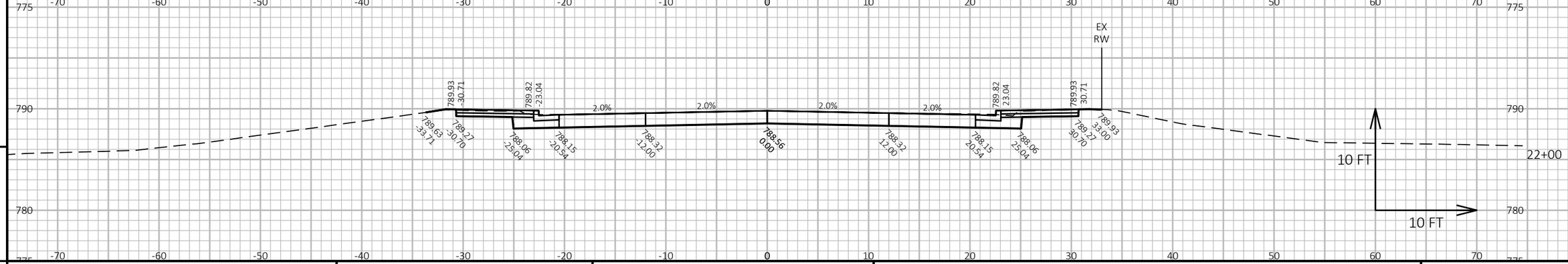

9

9

PROJECT NO: 3993-01-81	HWY: BUS 26	COUNTY: JEFFERSON	CROSS SECTIONS: S MAIN ST	SHEET 169	E

FILE NAME : S:\CURRPROJ\JEFFERSON\MAIN STREET BRIDGE\CIVIL3D\39930101\SHEETSPLAN\39930181-090102-XS.DWG
LAYOUT NAME - 04-Main
PLOT DATE : 1/21/2022 10:29 AM
PLOT BY : BENJAMIN OITZINGER
PLOT NAME :
PLOT SCALE : 1 IN:10 FT HORZ. / 1 IN:10 FT VERT.

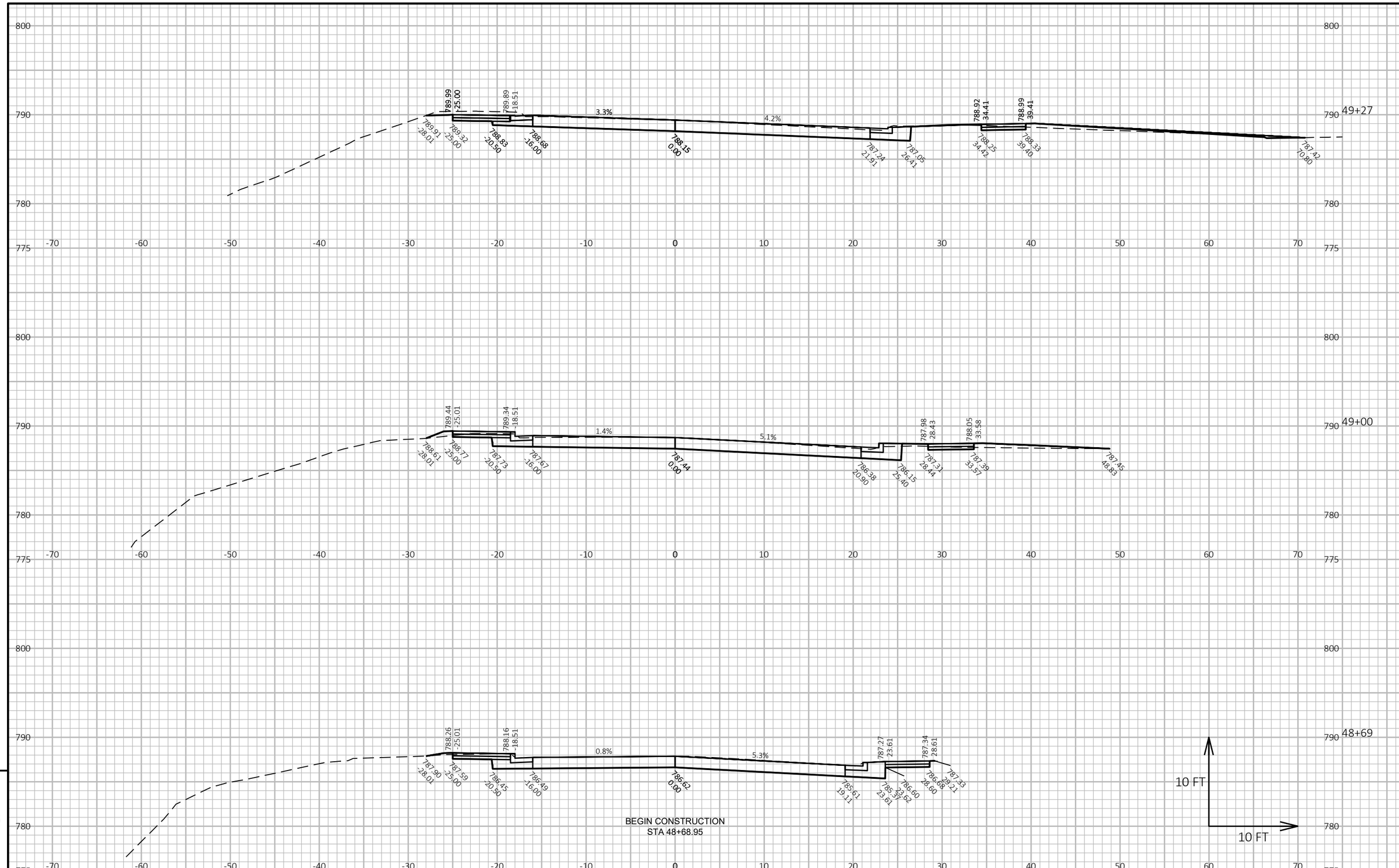

9

9

PROJECT NO: 3993-01-81	HWY: BUS 26	COUNTY: JEFFERSON	CROSS SECTIONS: RIVERVIEW DR	SHEET 170	E

FILE NAME : S:\CURRPROJ\JEFFERSON\MAIN STREET BRIDGE\CIVIL3D\39930101\SHEETSPLAN\39930181-090102-XS.DWG
LAYOUT NAME - 21-Riverview

PLOT DATE : 1/21/2022 10:29 AM PLOT BY : BENJAMIN OITZINGER PLOT NAME : **PLOT SCALE :** 1 IN:10 FT HORZ. / 1 IN:10 FT VERT.

WISDOT/CADDS SHEET 49

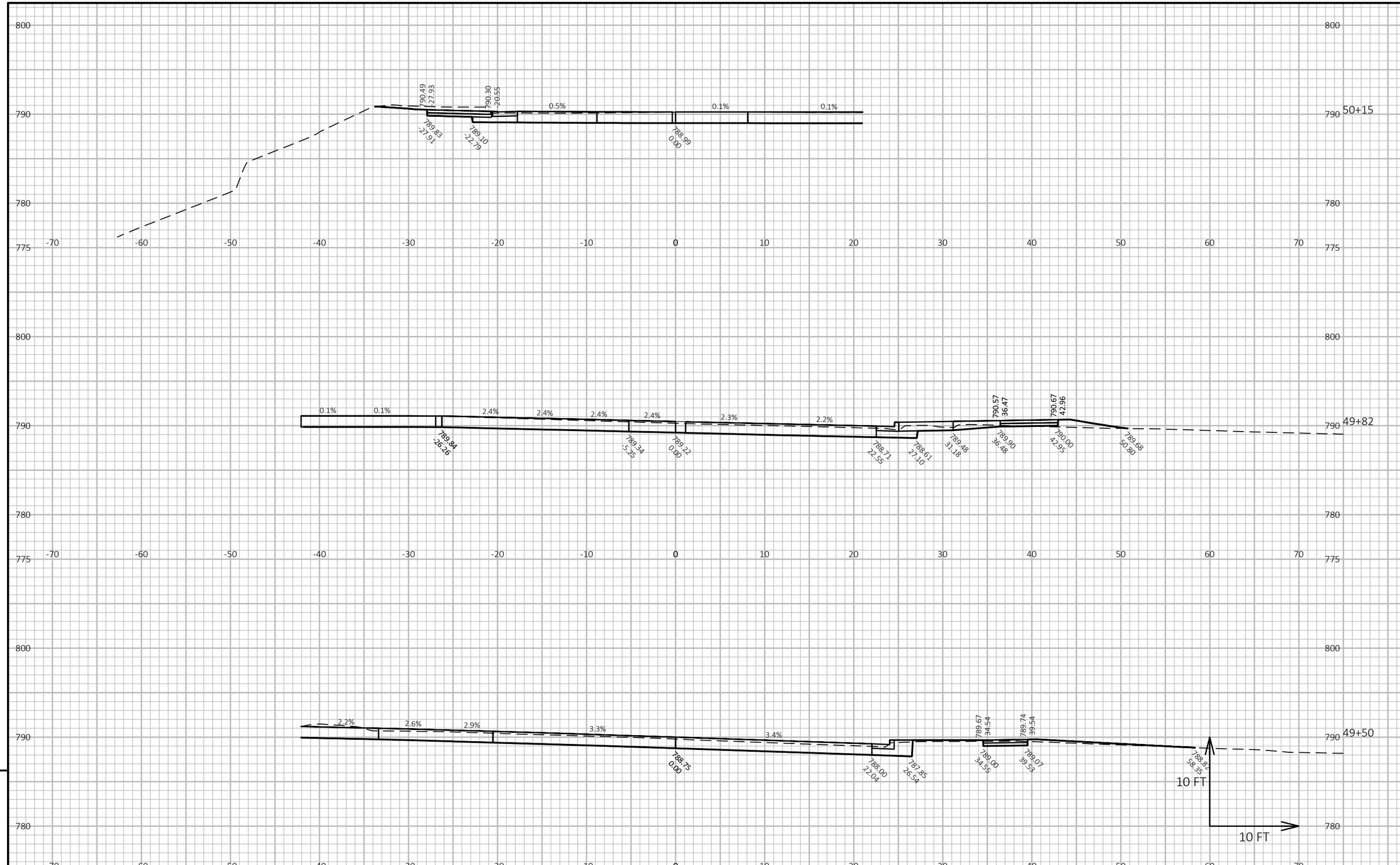

9

9

PROJECT NO: 3993-01-81	HWY: BUS 26	COUNTY: JEFFERSON	CROSS SECTIONS: RIVERVIEW DR	SHEET 171	E

FILE NAME : S:\CURRPROJ\JEFFERSON\MAIN STREET BRIDGE\CIVIL3D\39930101\SHEETSPLAN\39930181-090102-XS.DWG
LAYOUT NAME - 22-Riverview
PLOT DATE : 1/21/2022 10:29 AM PLOT BY : BENJAMIN OITZINGER PLOT NAME : PLOT SCALE : 1 IN:10 FT HORZ. / 1 IN:10 FT VERT.

WISDOT/CADDS SHEET 49

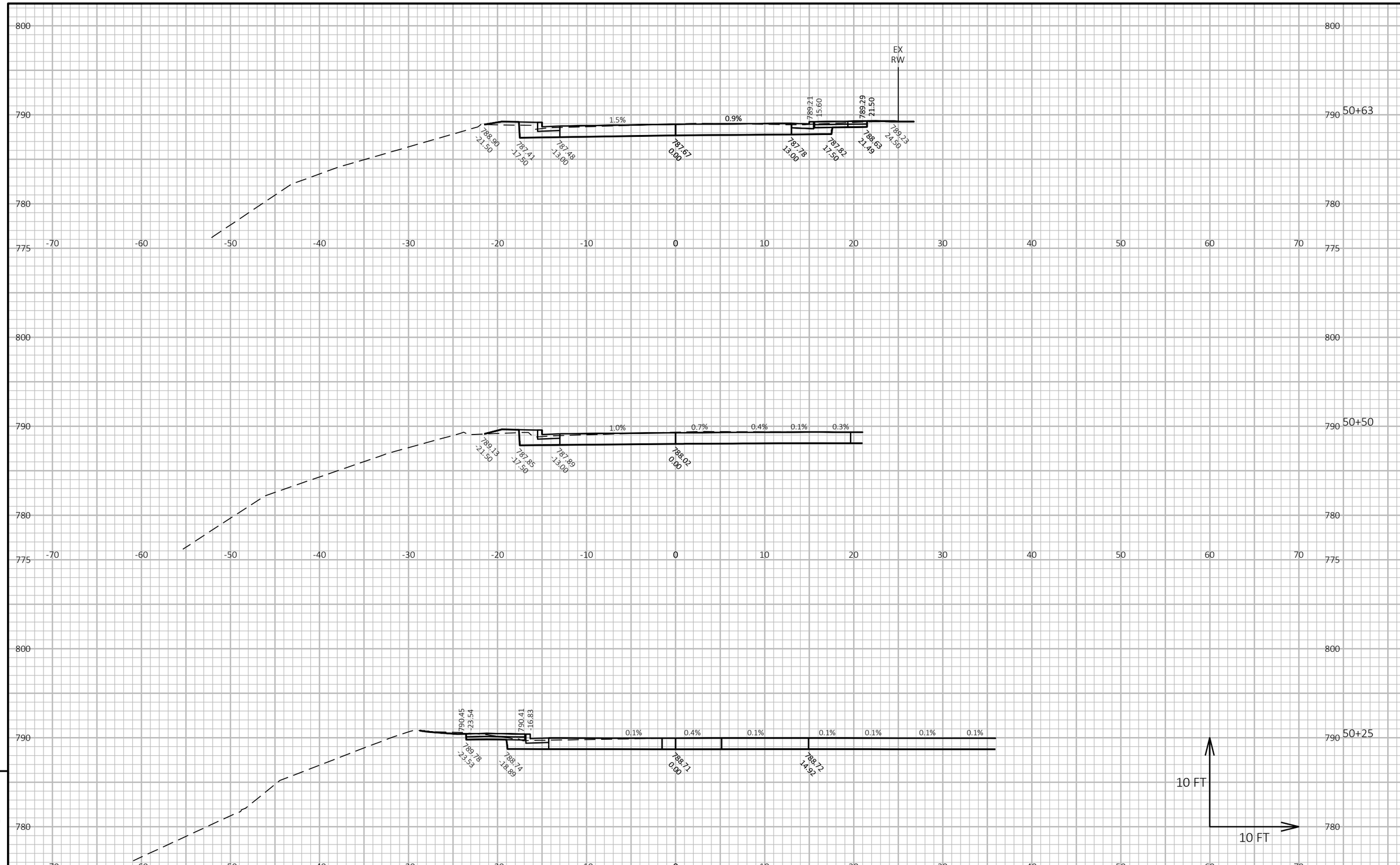

PROJECT NO: 3993-01-81	HWY: BUS 26	COUNTY: JEFFERSON	CROSS SECTIONS: RIVERVIEW DR	SHEET 172	E

FILE NAME : S:\CURRPROJ\JEFFERSON\MAIN STREET BRIDGE\CIVIL3D\39930101\SHEETSPLAN\39930181-090102-XS.DWG
LAYOUT NAME - 23-Riverview
PLOT DATE : 1/21/2022 10:29 AM PLOT BY : BENJAMIN OITZINGER PLOT NAME :
PLOT SCALE : 1 IN:10 FT HORZ. / 1 IN:10 FT VERT.
WISDOT/CADDS SHEET 49

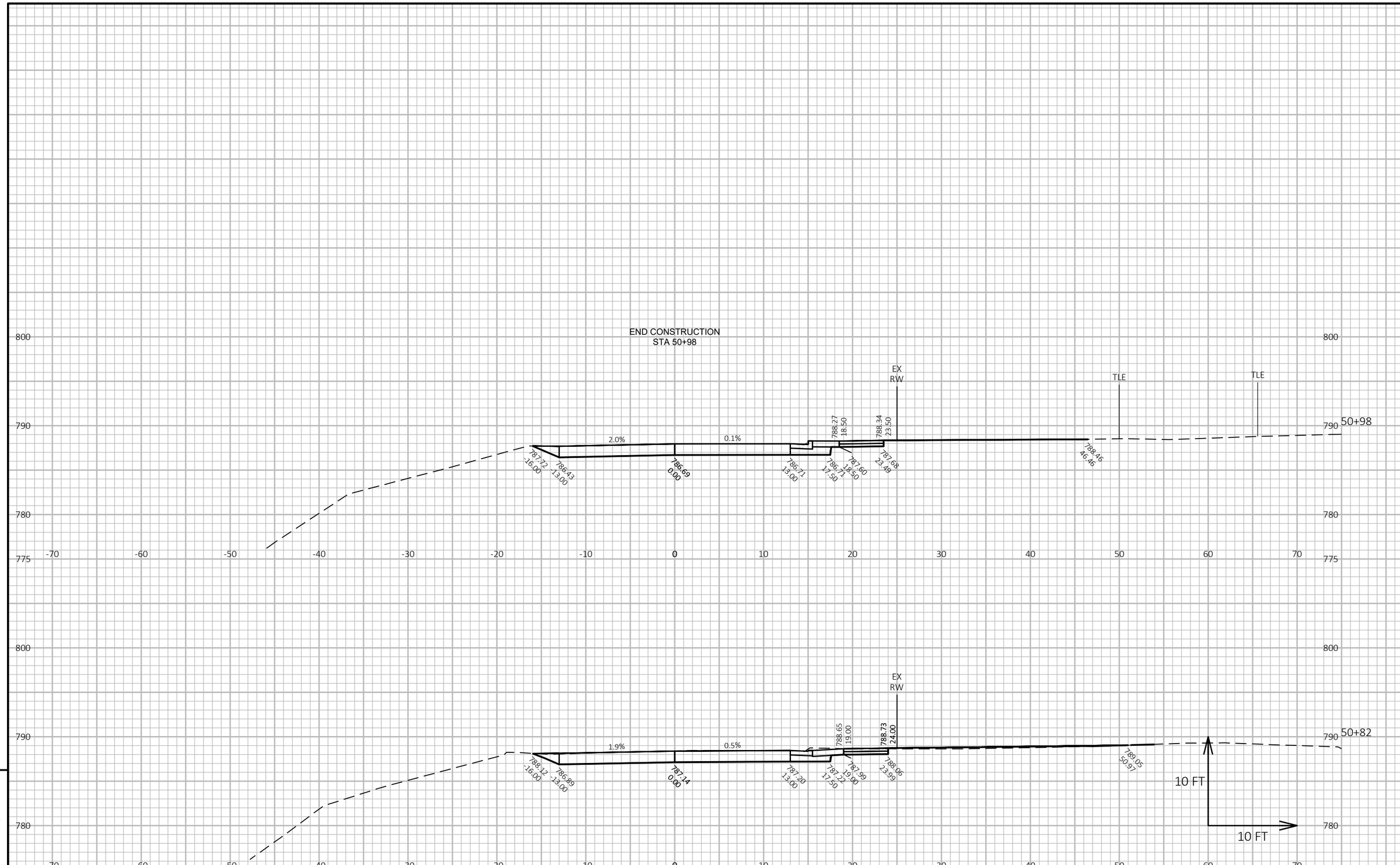

9

9

PROJECT NO: 3993-01-81	HWY: BUS 26	COUNTY: JEFFERSON	CROSS SECTIONS: RIVERVIEW DR	SHEET 173	E

FILE NAME : S:\CURRPROJ\JEFFERSON\MAIN STREET BRIDGE\CIVIL3D\39930101\SHEETSPLAN\39930181-090102-XS.DWG
LAYOUT NAME - 24-Riverview

PLOT DATE : 1/21/2022 10:29 AM PLOT BY : BENJAMIN OITZINGER PLOT NAME : **PLOT SCALE :** 1 IN:10 FT HORZ. / 1 IN:10 FT VERT.

WISDOT/CADDS SHEET 49

Wisconsin Department of Transportation

Dedicated people creating transportation solutions through innovation and exceptional service.

http://www.dot.wisconsin.gov