EAU Apr 12, 2022

PROJECT ID: 8072-00-70
WITH: 8072-00-71

COUNTY: ST. CROIX & POLK

ORDER OF SHEETS

Section No.	1	Title
Section No.	2	Typical Sections and Details
Section No.	2	Erosion Control
Section No.	3	Estimate of Quantities
Section No.	3	Miscellaneous Quantities
Section No.	4	Right of Way Plat
Section No.	5	Plan and Profile
Section No.	6	Standard Detail Drawings
Section No.	7	Sign Plates
Section No.	8	Structure Plans
~~Section No.~~	~~9~~	~~Computer Earthwork Data~~
Section No.	9	Cross Sections

TOTAL SHEETS = 170

STATE PROJECT	FEDERAL PROJECT	
	PROJECT	CONTRACT
8072-00-70	WISC 2022097	1
8072-00-71	WISC 2022098	1

STATE OF WISCONSIN
DEPARTMENT OF TRANSPORTATION

STATE HIGHWAY REHABILITATION-MAINTENANCE PROJECT

CYLON - AMERY

STH 64 TO SNOW STREET

STH 46

ST. CROIX & POLK COUNTY

STATE PROJECT NUMBER
8072-00-70

STATE PROJECT NUMBER
8072-00-71

N

DESIGN DESIGNATION

A.A.D.T.	2022	=	4900
A.A.D.T.	2042	=	6100
D.H.V.		=	800
D.D.		=	60/40
T.		=	14.2
DESIGN SPEED		=	55 MPH
ESALS		=	1,500,000

CONVENTIONAL SYMBOLS

PLAN
- CORPORATE LIMITS
- PROPERTY LINE
- LOT LINE
- LIMITED HIGHWAY EASEMENT
- EXISTING RIGHT OF WAY
- PROPOSED OR NEW R/W LINE
- SLOPE INTERCEPT
- REFERENCE LINE (100FB)
- EXISTING CULVERT
- PROPOSED CULVERT (Box or Pipe)
- COMBUSTIBLE FLUIDS (CAUTION)
- MARSH AREA
- WOODED OR SHRUB AREA

PROFILE
- GRADE LINE
- ORIGINAL GROUND
- MARSH OR ROCK PROFILE (To be noted as such) (ROCK)
- SPECIAL DITCH (LABEL)
- GRADE ELEVATION (95.36)
- CULVERT (Profile View)

UTILITIES
- ELECTRIC (E)
- FIBER OPTIC (FO)
- GAS (G)
- SANITARY SEWER (SAN)
- STORM SEWER (SS)
- TELEPHONE (T)
- WATER (W)
- UTILITY PEDESTAL
- POWER POLE
- TELEPHONE POLE

END PROJECT 8072-00-71
STA 519+69B

END PROJECT 8072-00-70
STA 602+00.00B

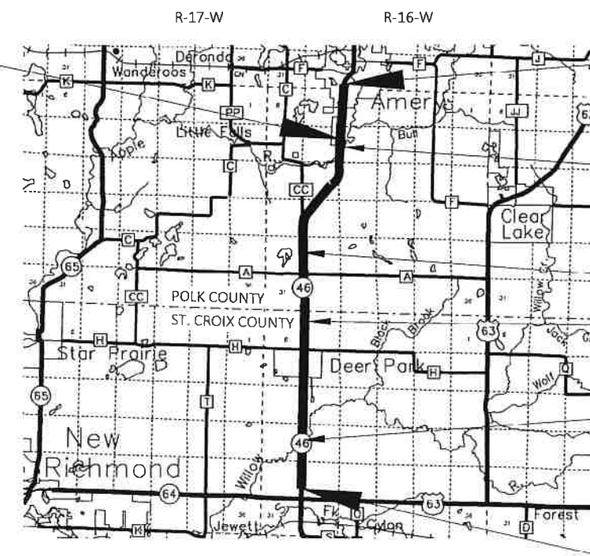

NET EXEPTION TO CL
STRUCTURE B-48-0046
STA 512+94.75B - STA 514+11.05B

STRUCTURE C-48-2333

STATION EQUATION
AHEAD STA 263+21.81A
BACK STA 265+00.00B

NET EXEPTION TO CL
STRUCTURE B-55-204
STA 81+69.75A - STA 82+86.70A

BEGIN PROJECT
8072-00-70 & 71
STA 10+43.43A
X = 607367.7802'
Y = 402355.5739'

LAYOUT
SCALE 0 — 4 MI

TOTAL NET LENGTH OF 8072-00-70 CENTERLINE = 11.521 MI
TOTAL NET LENGTH OF 8072-00-71 CENTERLINE = 9.962 MI

HORIZONTAL POSITIONS SHOWN ON THIS PLAN ARE WISCONSIN COORDINATE REFERENCE SYSTEM (WISCRS), POLK & ST CROIX COUNTY, NAD83 (2011), IN U.S. SURVEY FEET. POSITIONS SHOWN ARE GRID COORDINATES, GRID BEARINGS, AND GRID DISTANCES. GRID DISTANCES ARE THE SAME AS GROUND DISTANCES. ELEVATIONS ARE REFERENCED TO NAVD 88 (2012). GPS DERIVED ELEVATIONS ARE BASED ON GEOID 12A.

ORIGINAL PLANS PREPARED BY

KL Engineering
[A] Better Experience

WISCONSIN
JON P. BLOMQUIST
34305-006
MENOMONIE, WI
PROFESSIONAL ENGINEER

DATE 7-21-21 (Professional Engineer Signature)

STATE OF WISCONSIN
DEPARTMENT OF TRANSPORTATION

PREPARED BY

Surveyor	SEH, INC.
Designer	KL ENGINEERING
Project Manager	JESSICA BOWKER
Regional Examiner	TOU YANG
Regional Supervisor	TYLER RONGSTAD

APPROVED FOR THE DEPARTMENT
DATE 7/20/21 (Signature)

E

FILE NAME : \\KLENGINEERING\DATA1\WDOTNW\19065-000 (STH 46)\CIVIL 3D\SHEETSPLAN\010101-TI.DWG PLOT DATE : 5/27/2021 12:38 PM PLOT BY : JON BLOMQUIST PLOT NAME :

ABBREVIATIONS

ADJ	ADJUST
AEW	APRON ENDWALL
ASPH	ASPHALT
AUX	AUXILLARY
AVG	AVERAGE
BAD	BASE AGGREGATE DENSE
BM	BENCH MARK
C&G	CURB AND GUTTER
CE	COMMERCIAL ENTRANCE
CONC	CONCRETE
CP	CULVERT PIPE
CPRC	CULVERT PIPE REINFORCED CONCRETE
CSCP	CULVERT PIPE CORRUGATED STEEL
D	DEGREE OF CURVE
DWY	DRIVEWAY
EAT	ENERGY ABSORBING TERMINAL
EWAL	ENDWALL
EXIST	EXISTING
FE	FARM ENTRANCE
HMA	HOT MIX ASPHALT
INV	INVERT
L	LENGTH OF CURVE
LHF	LEFT HAND FORWARD
LT	LEFT
M/L	MATCHLINE
MAX	MAXIMUM
MGRS	MIDWEST GUARD RAIL SYSTEM
MIN	MINIMUM
NC	NORMAL CROWN
NOR	NORMAL
PAV	PAVEMENT
PC	POINT OF CURVE
PE	PRIVATE ENTRANCE
PI	POINT OF INTERSECTION
PNT	POINT
PT	POINT OF TANGENT
RAD OR R	RADIUS OF CURVE
R/L OR RL	REFERENCE LINE
R/W	RIGHT OF WAY
RC	REVERSE CROWN
RCAEW	APRON ENDWALL FOR CULVERT PIPE REINFORCED CONCRETE
RCCP	REINFORCED CONCRETE CULVERT PIPE
REQD	REQUIRED
RHF	RIGHT HAND FORWARD
RO	RUN OFF LENGTH
RT	RIGHT
SALV	SALVAGED
SDD	STANDARD DETAIL DRAWINGS
SE	SUPER ELEVATION
SHLD	SHOULDER
T	TANGENT LENGTH
TLE	TEMPORARY LIMITED EASEMENT
TYP	TYPICAL
VCL	VERTICAL CURVE LENGTH
VPC	POINT OF VERTICAL CURVE
VPI	POINT OF VERTICAL INTERSECTION
VPT	POINT OF VERTICAL TANGENT

UTILITY CONTACTS

Amery Mun Joint Wtr & Swr Uty - Water
Allen "Bones" McCarty
118 Center St W
Amery, WI 54001-1024
(715) 268-7427
bones@amerywi.gov

Northwest Comm - Communication Line
Greg Cardinal
Amery Telcom Inc.
116 Harriman Ave N
Amery, WI 54001
(715) 268-4690
info@nwcomm.net

Polk-Burnett Electric Cooperative - Electricity
Ed Johansen
1001 State Road 35
Centuria, WI 54824
(715) 646-3322
ejohansen@polkburnett.com

Viking Gas Transmission Company - Gas/Petroleum
Steve Keilen
2077 70th Ave
Osceola, WI 54020
(715) 294-2155
Steven.Keilen@oneok.com

Frontier Communications St Croix LLC - Communication
Russ Ryan
118 Division St
Plymouth, WI 53073
(920) 583-3275
Russell.w.ryan@ftr.com

Northern Natural Gas Company - Gas/Petroleum
Dave Becker
6579 420th Street
Harris, MN 55032-2116
(763) 312-9058
David.Becker@nngco.com

St Croix Electric Cooperative - Electricity
Rob Dooley
1925 Ridgeway St
P.O. Box 108
Hammond, WI 54015-5039
(715) 796-7000
robd@scecnet.net

We Energies - Gas/Petroleum
Steven Chavers
104 W South Street
Rice Lake, WI 54868
(715) 234-9605
Mobile: (715) 213-4327
Steven.chavers@we-energies.com

Xcel Energy - Electricity-Transmission
Pam Taylor
1414 W Hamilton Avenue
P.O. Box 8
Eau Claire, WI 54702-0008
(715) 737-1306
pamela.l.taylor@xcelenergy.com

DIGGERS HOTLINE
Dial 811 or (800)242-8511
www.DiggersHotline.com

GENERAL NOTES

EXPANSION JOINTS TO BE CONSTRUCTED AT ALL RADII POINTS IN THE CURB AND GUTTER OR AT LOCATIONS SHOWN ON THE PLAN.

THE LOCATION OF EXISTING AND PROPOSED UTILITY INSTALLATIONS AS SHOWN IN THE PLAN, ARE APPROXIMATE. THERE MAY BE OTHER UTILITY INSTALLATIONS WITHIN THE PROJECT AREA THAT ARE NOT SHOWN. CONTACT DIGGERS HOTLINE AND AFFECTED UTILITIES PRIOR TO START OF WORK.

UTILITY REFERENCE LINES ON THE CROSS SECTIONS ARE FOR APPROXIMATE HORIZONTAL REFERENCE ONLY.

REMOVAL ITEMS REQUIRING RESTORATION OF CONCRETE OR ASPHALT SHALL BE REMOVED TO AN EXISTING JOINT OR SAWED AS DETERMINED BY THE ENGINEER.

EROSION CONTROL FEATURES AS SHOWN IN THE PLANS ARE AT SUGGESTED LOCATIONS. THE ENGINEER MAY MODIFY LOCATIONS AS NEEDED. ALL EROSION CONTROL MEASURES SHALL BE MAINTAINED UNTIL SUCH TIME AS THE ENGINEER DETERMINES THE MEASURE IS NO LONGER NECESSARY.

NO TREES AND/OR SHRUBS ARE TO BE REMOVED WITHOUT THE APPROVAL OF THE ENGINEER.

CULVERTS ARE TO BE LAYED AT THE SAME ELEVATION AND SLOPE AS THE EXISTING PIPE, UNLESS OTHERWISE NOTED BUT MAY BE ADJUSTED TO FIT EXISTING FIELD CONDITIONS AS APPROVED BY THE ENGINEER.

CONTRACTOR IS RESPONSIBLE FOR RESHAPING AND FINISHING ANY PREVIOUSLY GRASSED AREAS WHICH ARE DISTURBED BY THEIR OPERATION OUTSIDE THE NORMAL CONSTRUCTION LIMITS.

THE CONTRACTOR'S HMA PAVING OPERATION SHALL BE CONSISTENT WITH THE TYPICAL SECTIONS AND CONSTRUCTED TO PREVENT LONGITUDINAL JOINTS FROM BEING LOCATED WITHIN A DRIVING, TURNING, PASSING OR PARKING LANE.

HMA PAVEMENT, WHEN INDICATED ON THE PLANS, SHALL CONSIST OF COURSE THICKNESSES AS FOLLOWS:

TOTAL DEPTH	LAYERS	HMA MIXTURES	LOCATIONS
3.25"	1.5" UPPER 1.75" LOWER	5 MT 58-34V 4 MT 58-34V	STH 46 & SIDE ROADS

ORDER OF DETAILS

PROJECT OVERVIEW
PAVEMENT CORES
TYPICAL SECTIONS
CONSTRUCTION DETAILS
CONTROL POINTS
MGS LAYOUT DETAILS
EROSION CONTROL PLAN
PAVEMENT MARKING PLAN
SIGNAL PLAN (LIGHTING)
TRAFFIC CONTROL PLAN

RUNOFF COEFFICENT TABLE

	HYDROLOGIC SOIL GROUP											
	A			B			C			D		
	SLOPE RANGE (PERCENT)			SLOPE RANGE (PERCENT)			SLOPE RANGE (PERCENT)			SLOPE RANGE (PERCENT)		
LAND USE:	0-2	2-6	6 & OVER	0-2	2-6	6 & OVER	0-2	2-6	6 & OVER	0-2	2-6	6 & OVER
ROW CROPS	0.08 0.22	0.16 0.30	0.22 0.38	0.12 0.26	0.20 0.34	0.27 0.44	0.15 0.30	0.24 0.37	0.33 0.50	0.19 0.34	0.28 0.41	0.38 0.56
MEDIAN STRIP-TURF	0.19 0.24	0.20 0.26	0.24 0.30	0.19 0.25	0.22 0.28	0.26 0.33	0.20 0.26	0.23 0.30	0.30 0.37	0.20 0.27	0.25 0.32	0.30 0.40
SIDE SLOPE-TURF			0.25 0.32			0.27 0.34			0.28 0.36			0.30 0.38
PAVEMENT:												
ASPHALT	.70 - .95											
CONCRETE	.80 - .95											
BRICK	.70 - .80											
DRIVES, WALKS	.75 - .85											
ROOFS	.75 - .95											
GRAVEL ROADS, SHOULDERS	.40 - .60											

TOTAL PROJECT AREA = 55.2 ACRES
TOTAL AREA EXPECTED TO BE DISTRIBUTED BY CONSTRUCTION ACTIVITIES = 2.8 ACRES

DESIGN CONTACT

KL ENGINEERING
JON BLOMQUIST
393 RED CEDAR STREET, SUITE 2
MENOMONIE, WI 54751
(715) 231-1600
jblomquist@klengineering.com

WISDOT PROJECT MANAGER

NW REGION (EAU CLAIRE OFFICE)
JESSICA BOWKER
718 W. CLAIREMONT AVE
EAU CLAIRE, WI 54751
(715) 577-2963
Jessica.Bowker@dot.wi.gov

DNR LIAISON

DEPARTMENT OF NATURAL RESOURCES
DNR WEST CENTRAL REGION HEADQUARTERS
POLK COUNTY
AMY CRONK
1300 WEST CLAIREMONT AVE
EAU CLAIRE, WI 54701
(715) 520-3976
Amy.Cronk@Wisconsin.gov

ST CROIX COUNTY
AMY LESIK
1300 WEST CLAIREMONT AVE
EAU CLAIRE, WI 54701
(715) 495-1903
AmyL.Lesik@Wisconsin.gov

2

ST CROIX COUNTY

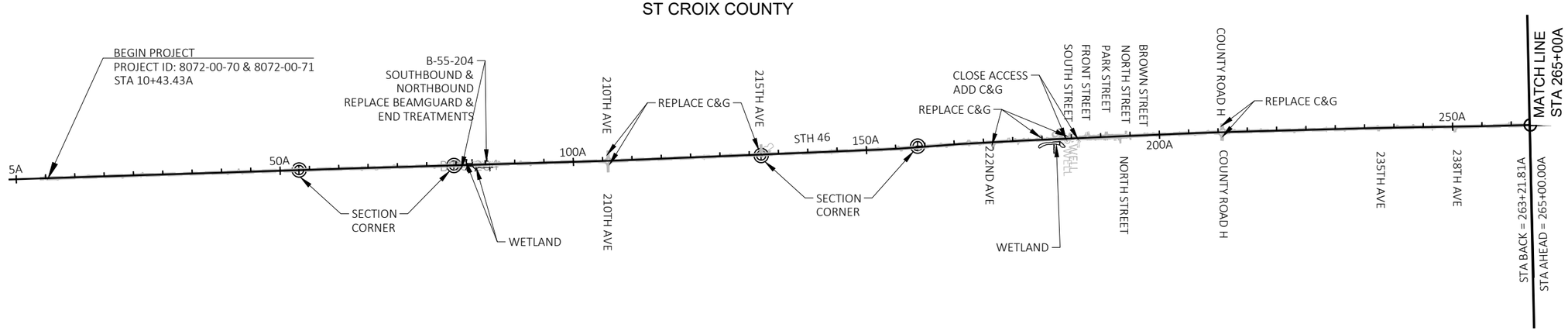

2

PROJECT 8072-00-71 INCLUDES 2' WIDENING OF NORTHBOUND AND SOUTHBOUND PAVED SHOULDER BETWEEN THE BEGINNING OF THE PROJECT AND 45TH AVENUE

POLK COUNTY

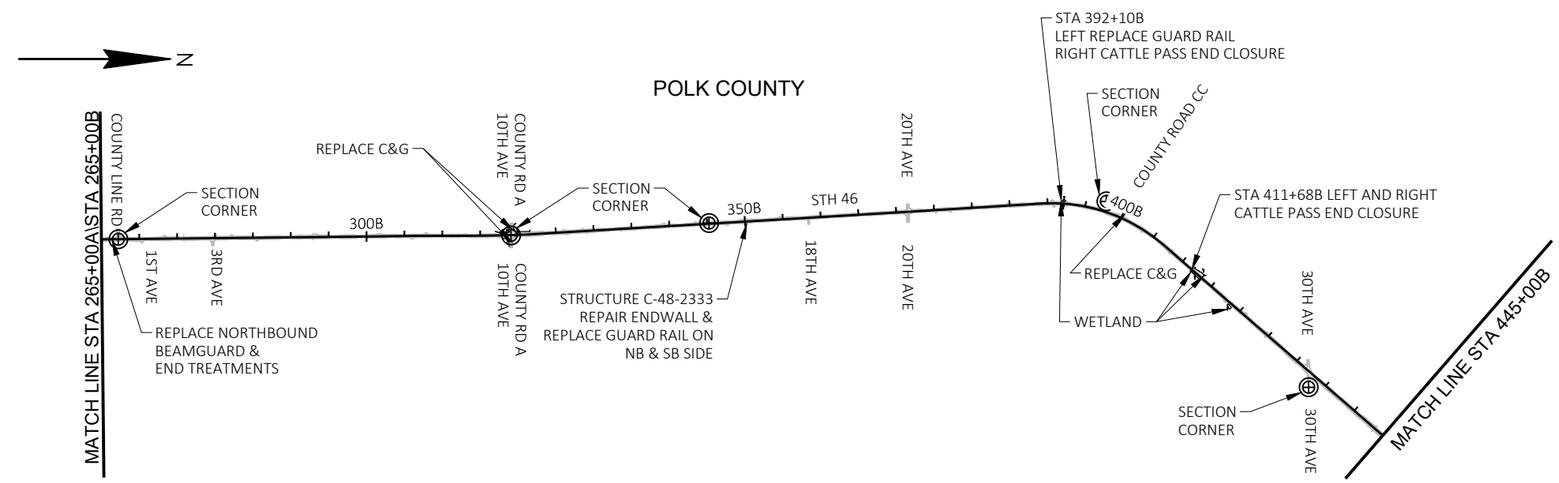

POLK COUNTY

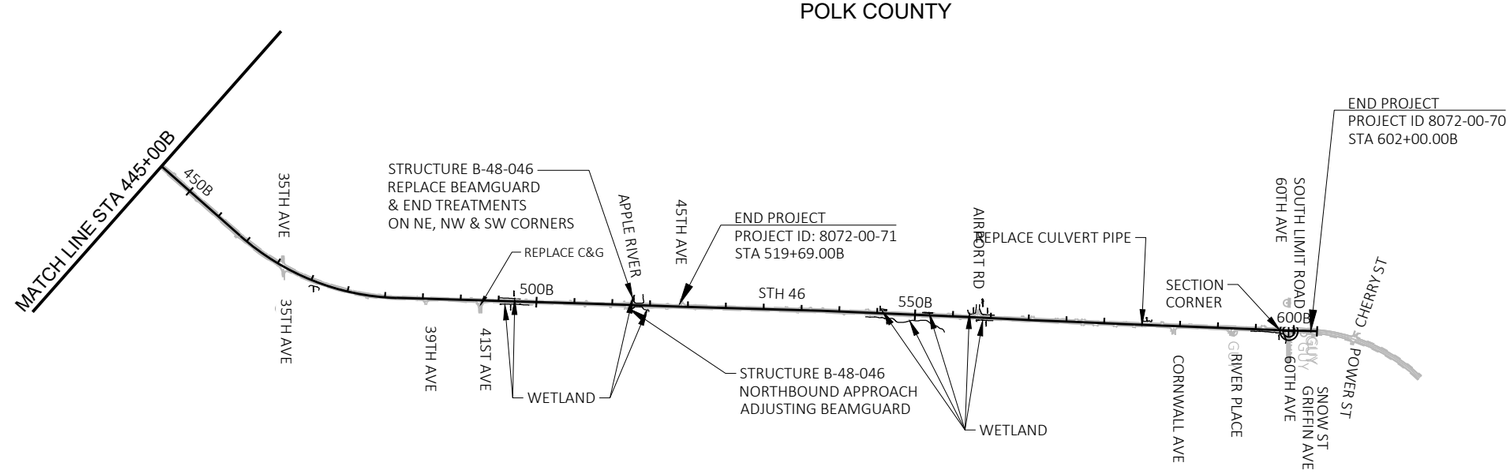

PROJECT NO: 8072-00-70 & 8072-00-71	HWY: STH 46	COUNTY: ST. CROIX/POLK	PROJECT OVERVIEW	SHEET 3	E

ST CROIX COUNTY

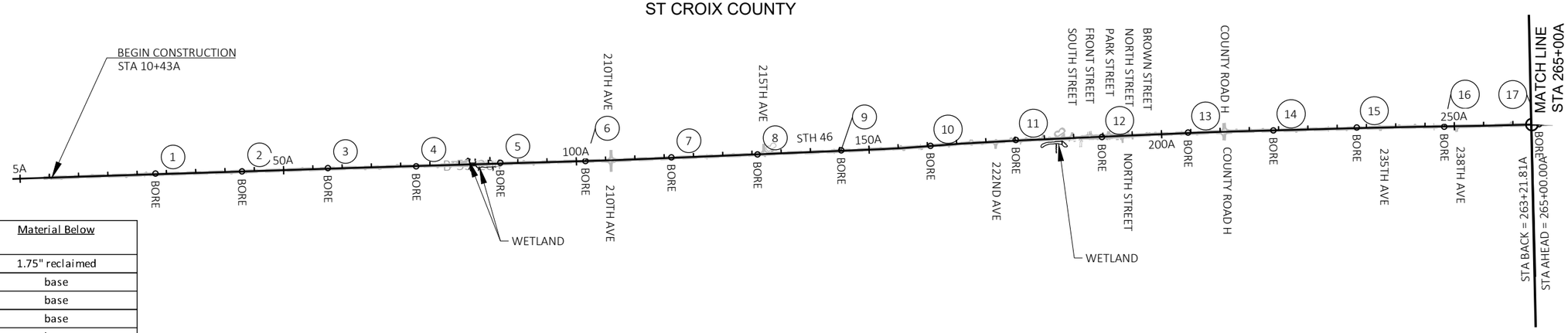

Core	STA	Offset	HMA Thickness (in)	Material Below
C-1	28+10	6.3' LT	6"	1.75" reclaimed
C-2	42+90	3.9' RT	6.75"	base
C-3	57+50	6.2' LT	7.5"	base
C-4	72+60	7.8' RT	7"	base
C-5	87+00	6.8' LT	7.125"	base
C-6	101+50	4.2' RT	5.5"	base
C-7	116+20	3.3' LT	7.25"	reclaimed
C-8	130+90	6.2' RT	6.375"	reclaimed
C-9	145+20	5.2' LT	5.5"	reclaimed
C-10	160+50	4.8' RT	5.75"	reclaimed
C-11	175+00	6.5' LT	5.5"	base
C-12	189+80	9.1' RT	4.625"	base
C-13	204+40	5.4' LT	6.75"	base
C-14	219+00	5' RT	7.5"	base
C-15	233+30	7.4' LT	7.25"	base
C-16	248+20	6' RT	7"	base
C-17	264+40	3.5' LT	6.25"	1.25" recl / 2.25" HMA / base
C-18	281+99	8.7' RT	10.75"	reclaimed
C-19	296+36	11.1' LT	7.5"	0.75" reclaimed
C-20	312+12	7.5' RT	7.25"	2.5" reclaimed
C-21	325+61	5.6' LT	9.75"	reclaimed
C-22	341+98	7.3' RT	10"	1.0" reclaimed / base
C-23	355+71	7.8' LT	6.5"	2.25" recl / 1.5" HMA / base
C-24	371+22	7.9' RT	8.5"	1.75" reclaimed / base
C-25	384+26	8.2' LT	7.5"	2.25" reclaimed / base
C-26	401+16	10.7' RT	6.125"	1.5" recl/1.5" HMA/4.25" recl/base
C-27	414+29	6.9' LT	8.25"	2.0" recl / 1.5" HMA / 2.5" recl
C-28	429+53	6.4' RT	7.5"	base
C-29	444+37	5.4' LT	9.75"	base
C-30	459+39	7.4' RT	11.125"	base
C-31	473+39	7.3' LT	9"	base
C-32	488+73	6.5' RT	8"	reclaimed
C-33	503+31	5.5' LT	7"	1.25" reclaimed
C-34	518+54	10.5' RT	9"	1.25" recl / 3.25" HMA / recl
C-35	532+82	7.2' LT	7.25"	reclaimed
C-36	548+30	3.4' RT	1.25"	2.25" recl / 7.0" HMA / recl
C-37	562+56	11.2' LT	8.875"	reclaimed
C-38	576+71	6.3' RT	12"	reclaimed
C-39	592+05	6.7' LT	7.25"	reclaimed

1 "Material Below" column: All materials recovered in cores are listed here. The entire thickness of thelowest material was likely not recovered in each core. Where no thickness is given for the lowest material, that material type was observed in the bottom of the core hole or at the bottom of the recovered core. that material type was observed in the bottom of the core hole or at the bottom of the recovered core.

2 The pavement cores were obtained on December 5 and 6, 2019

POLK COUNTY

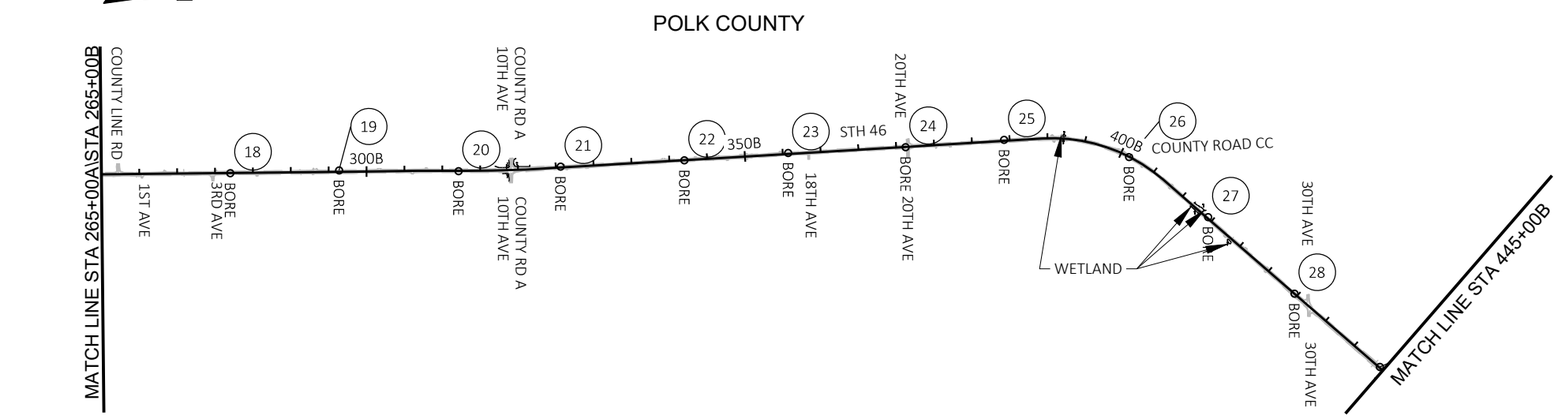

POLK COUNTY

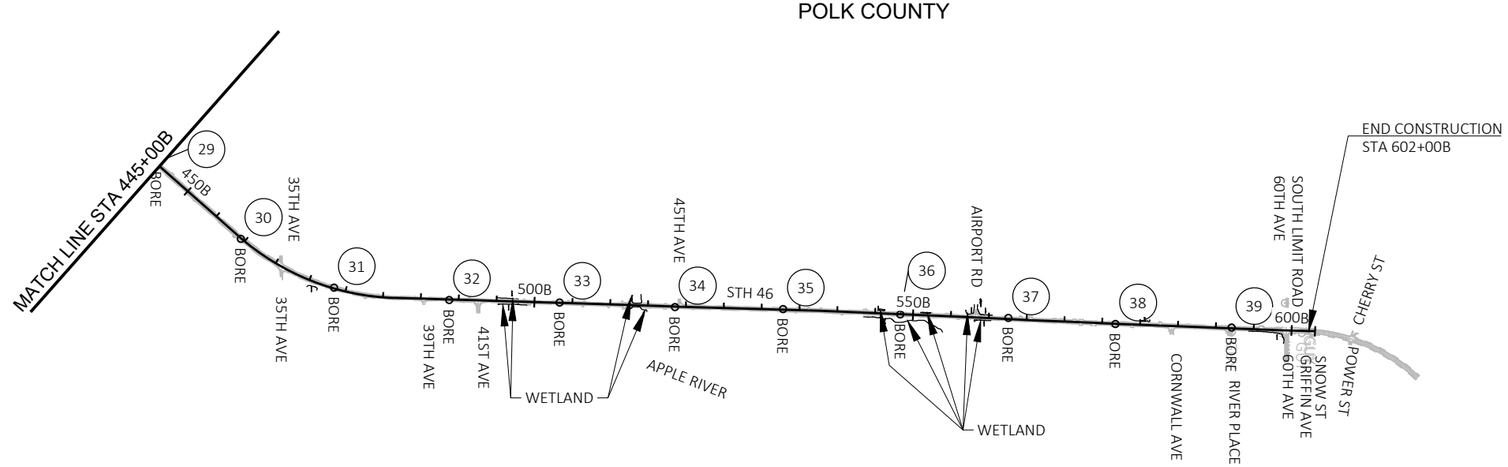

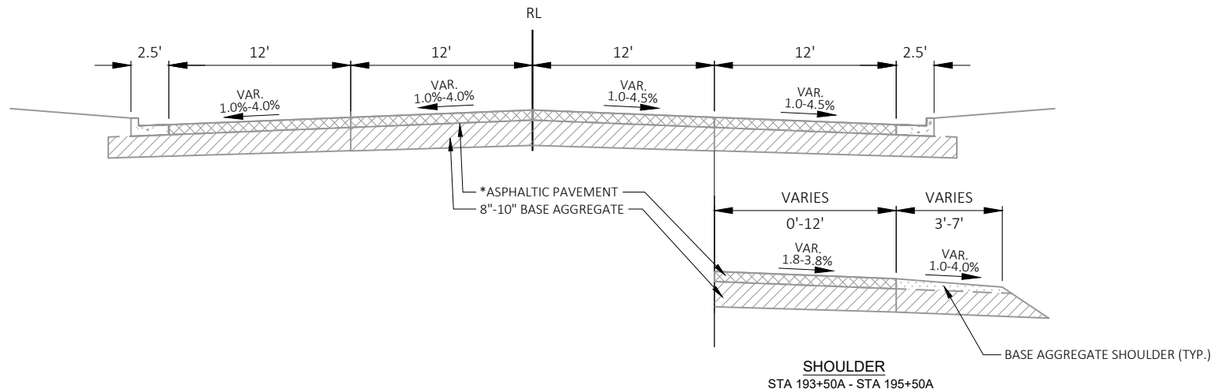

STH 46 EXISTING TYPICAL SECTION
STA 187+75A - STA 195+50A

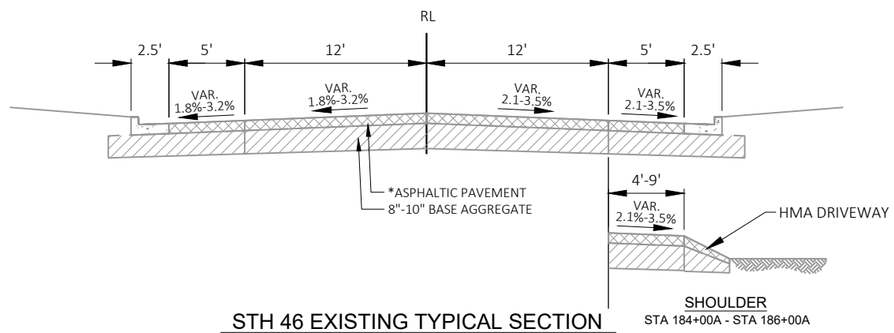

STH 46 EXISTING TYPICAL SECTION
STA 184+00A - STA 187+75A

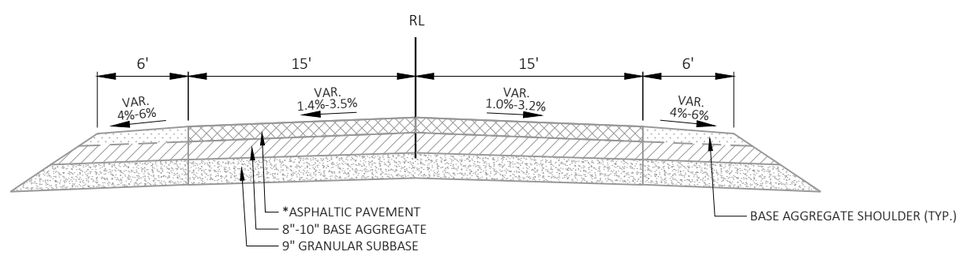

STH 46 EXISTING TYPICAL SECTION
STA 10+43A - STA 184+00A
STA 195+50A - STA 265+00B

*SEE PAVEMENT CORE LOG FOR THICKNESS

PROJECT NO: 8072-00-70	HWY: STH 46	COUNTY: ST CROIX/POLK	TYPICAL SECTIONS	SHEET 5	E

SOUTHBOUND RIGHT TURN LANE
STA 320+00B STA 324+00B

SOUTHBOUND PASSING LANE
STA 444+50B STA 485+00B

NORTHBOUND PASSING LANE
STA 429+50B STA 467+00B

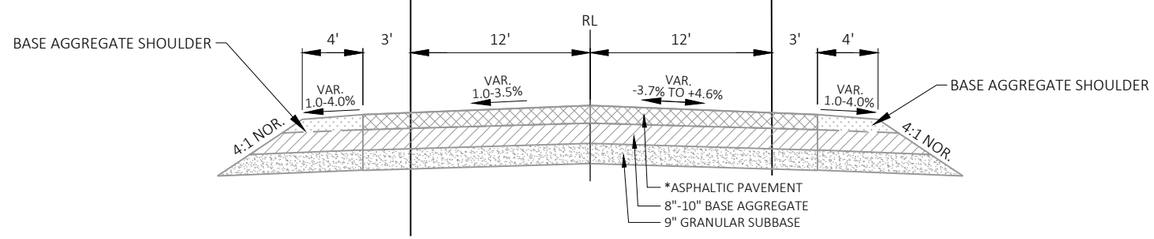

STH 46 EXISTING TYPICAL SECTION
STA 265+00B - STA 519+50B

STATION	- STATION	WIDTH (A/B)
STA 349+49B	- STA 350+93B	(5.6'-9'/8.3'-14')
STA 391+41B	- STA 392+76B	(5.5'-8'/8'-10')
STA 511+86B	- STA 512+82B	(10'-12.5'/14'-16')
STA 514+25B	- STA 515+20B	(9.5'-12.5/14'-19')

STATION	- STATION	WIDTH (A/B)
STA 267+75B	- STA 270+00B	(3'-7'/10'-14')
STA 349+49B	- STA 350+93B	(3'-9'/8'-12')
STA 391+45B	- STA 392+77B	(3'-8'/9'-12')
STA 512+04B	- STA 512+82B	(10.5'-14'/17.5')
STA 514+25B	- STA 515+20B	(10.5'-13'/15'-19')

*SEE PAVEMENT CORE LOG FOR THICKNESS

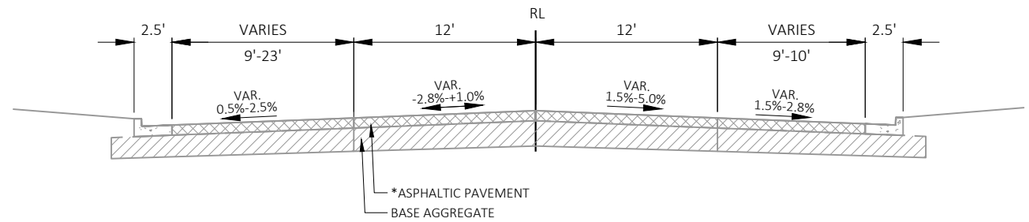

STH 46 EXISTING TYPICAL SECTION
STA 598+50B - STA 602+00B

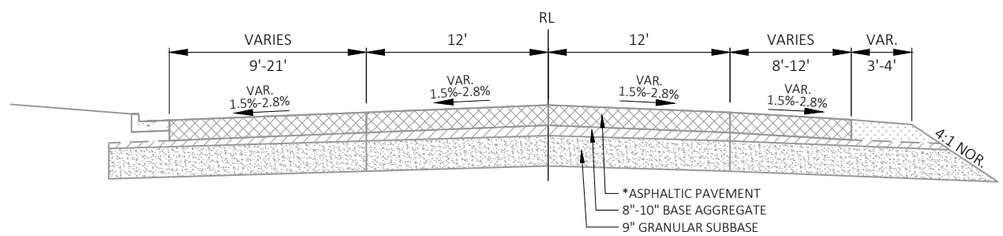

STH 46 EXISTING TYPICAL SECTION
STA 597+50B - STA 598+50B

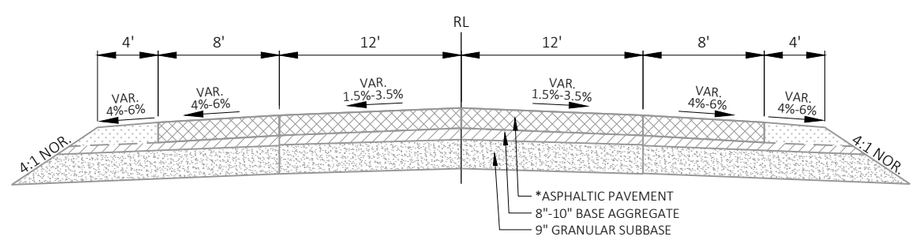

STH 46 EXISTING TYPICAL SECTION
STA 519+50B - STA 597+50B

*SEE PAVEMENT CORE LOG FOR THICKNESS

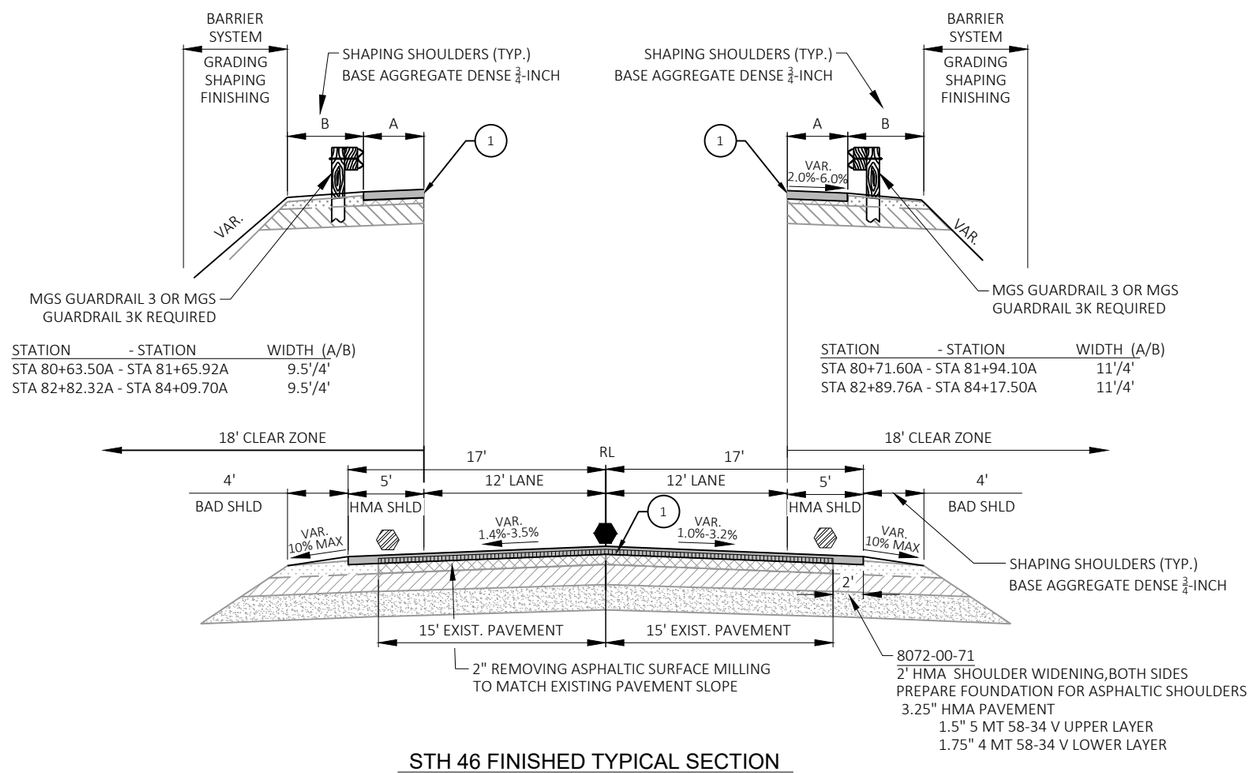

STATION	- STATION	WIDTH (A/B)
STA 80+63.50A	- STA 81+65.92A	9.5'/4'
STA 82+82.32A	- STA 84+09.70A	9.5'/4'

STATION	- STATION	WIDTH (A/B)
STA 80+71.60A	- STA 81+94.10A	11'/4'
STA 82+89.76A	- STA 84+17.50A	11'/4'

STH 46 FINISHED TYPICAL SECTION

STA 10+43A - STA 184+00A
STA 194+50A - STA 263+22A (265+00B)

(1) 3.25" HMA PAVEMENT
1.5" 5 MT 58-34 V UPPER LAYER
1.75" 4 MT 58-34 V LOWER LAYER
"ASPHALTIC SURFACE PATCHING" TO BE USED AS NECESSARY TO "PREPARE FOUNDATION FOR ASPHALTIC PAVING"

ASPHALTIC CENTERLINE RUMBLE STRIPS 2-LANE RURAL
NOTE: SEE PERMANENT PAVEMENT MARKING SHEETS FOR DETAILS.

ASPHALTIC SHOULDER RUMBLE STRIPS 2-LANE RURAL
NOTE: SEE PERMANENT PAVEMENT MARKING SHEETS FOR DETAILS.

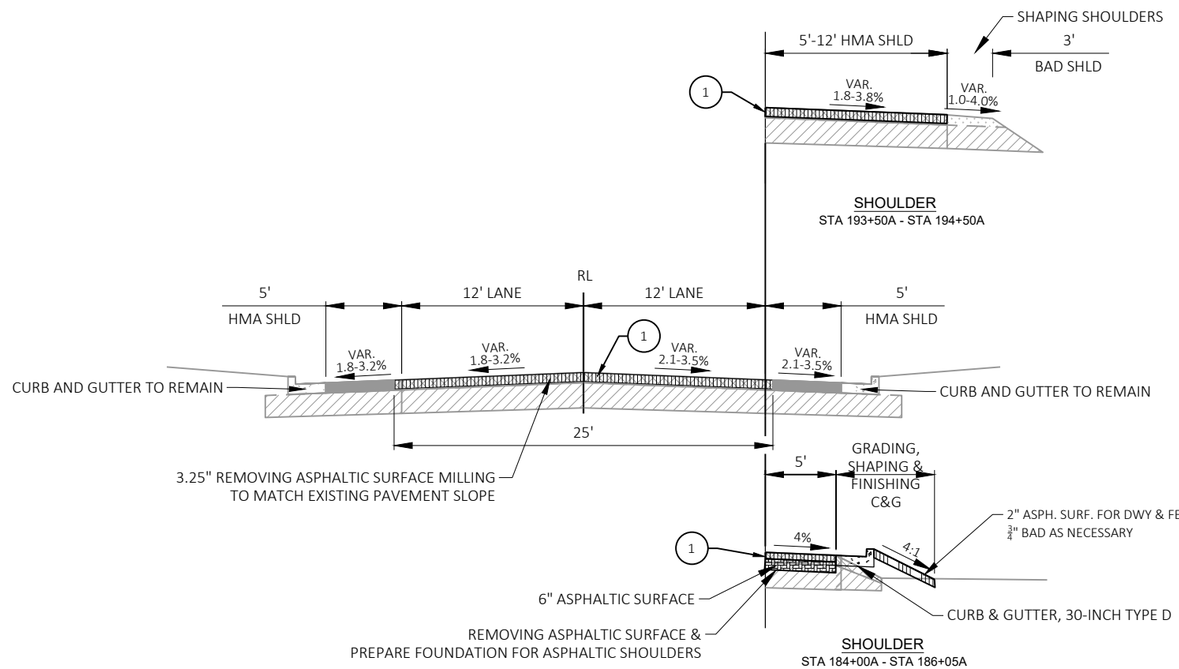

STH 46 FINISHED TYPICAL SECTION
STA 184+00A - STA 194+50A

(1) 3.25" HMA PAVEMENT
1.5" 5 MT 58-34 V UPPER LAYER
1.75" 4 MT 58-34 V LOWER LAYER
"ASPHALTIC SURFACE PATCHING" TO BE USED AS NECESSARY TO "PREPARE FOUNDATION FOR ASPHALTIC PAVING"

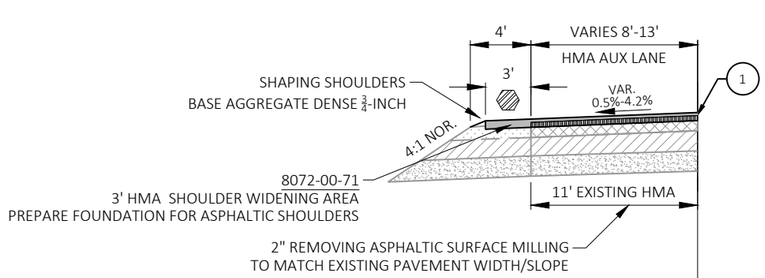

SOUTHBOUND RIGHT TURN LANE
STA 320+00B STA 324+00B

SOUTHBOUND PASSING LANE
STA 444+50B STA 485+00B

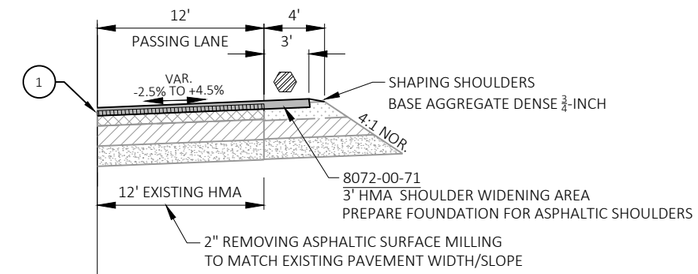

NORTHBOUND PASSING LANE
STA 429+50B STA 467+00B

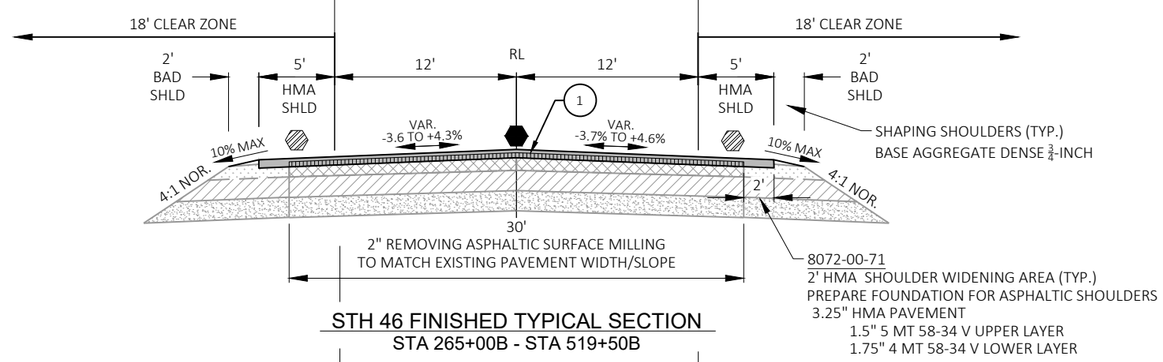

STH 46 FINISHED TYPICAL SECTION
STA 265+00B - STA 519+50B

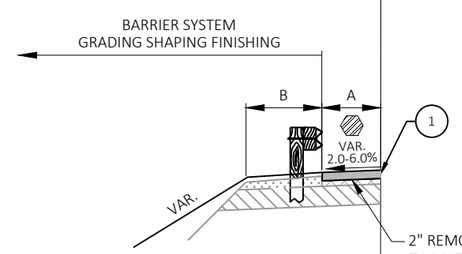

STATION - STATION	WIDTH (A/B)
STA 349+36.90B - STA 351+55.59B	5'/4'
STA 391+27.68B - STA 393+56.84B	5.5-8'/2-4'
STA 511+79.30B - STA 515+27.80B	10.5'/4'

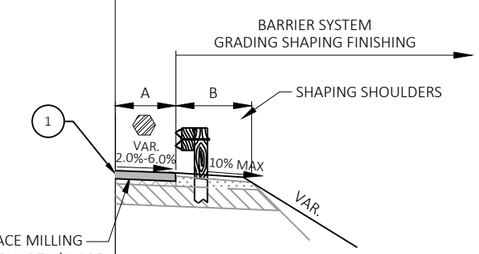

STATION - STATION	WIDTH (A/B)
STA 265+97.50B - STA 270+03.67B	8'/2'
STA 348+84.21B - STA 351+02.88B	5'/4'
STA 512+05B - STA 515+28.03B	9.5'/4'

(1) 3.25" HMA PAVEMENT
1.5" 5 MT 58-34 V UPPER LAYER
1.75" 4 MT 58-34 V LOWER LAYER
"ASPHALTIC SURFACE PATCHING" TO BE USED AS NECESSARY TO COMPLETE "PREPARE FOUNDATION FOR ASPHALTIC PAVING" ITEM

ASPHALTIC CENTERLINE RUMBLE STRIPS 2-LANE RURAL
NOTE: SEE PERMANENT PAVEMENT MARKING SHEETS FOR DETAILS.

ASPHALTIC SHOULDER RUMBLE STRIPS 2-LANE RURAL
NOTE: SEE PERMANENT PAVEMENT MARKING SHEETS FOR DETAILS.

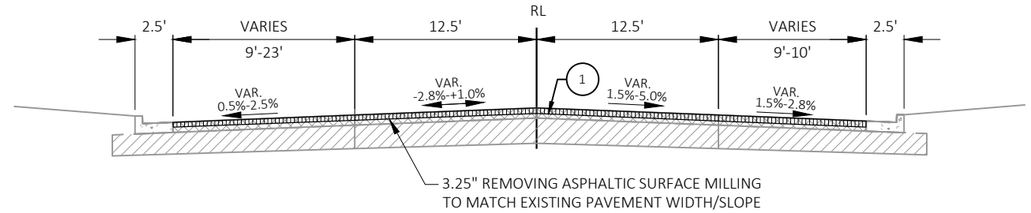

STH 46 FINISHED TYPICAL SECTION
STA 598+50B - STA 602+00B

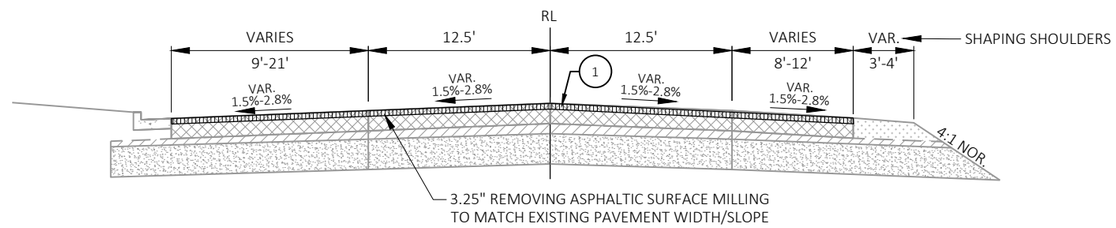

STH 46 FINISHED TYPICAL SECTION
STA 597+50B - STA 598+50B

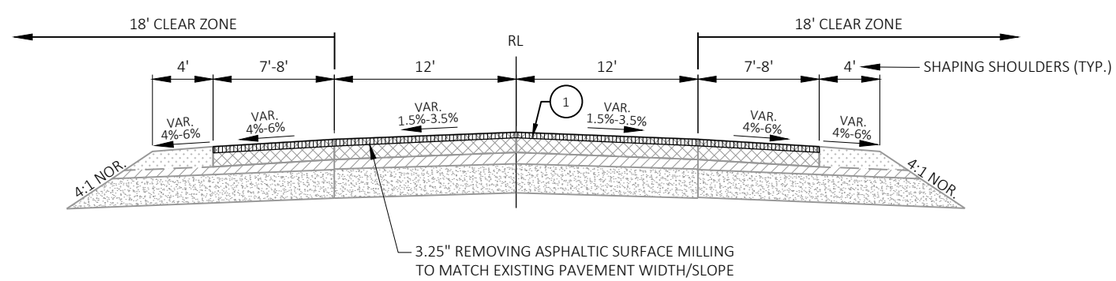

STH 46 FINISHED TYPICAL SECTION
STA 519+50B - STA 597+50B

(1) 3.25" HMA PAVEMENT
1.5" 5 MT 58-34 V UPPER LAYER
1.75" 4 MT 58-34 V LOWER LAYER
"ASPHALTIC SURFACE PATCHING" TO BE USED AS NECESSARY TO COMPLETE "PREPARE FOUNDATION FOR ASPHALTIC PAVING" ITEM

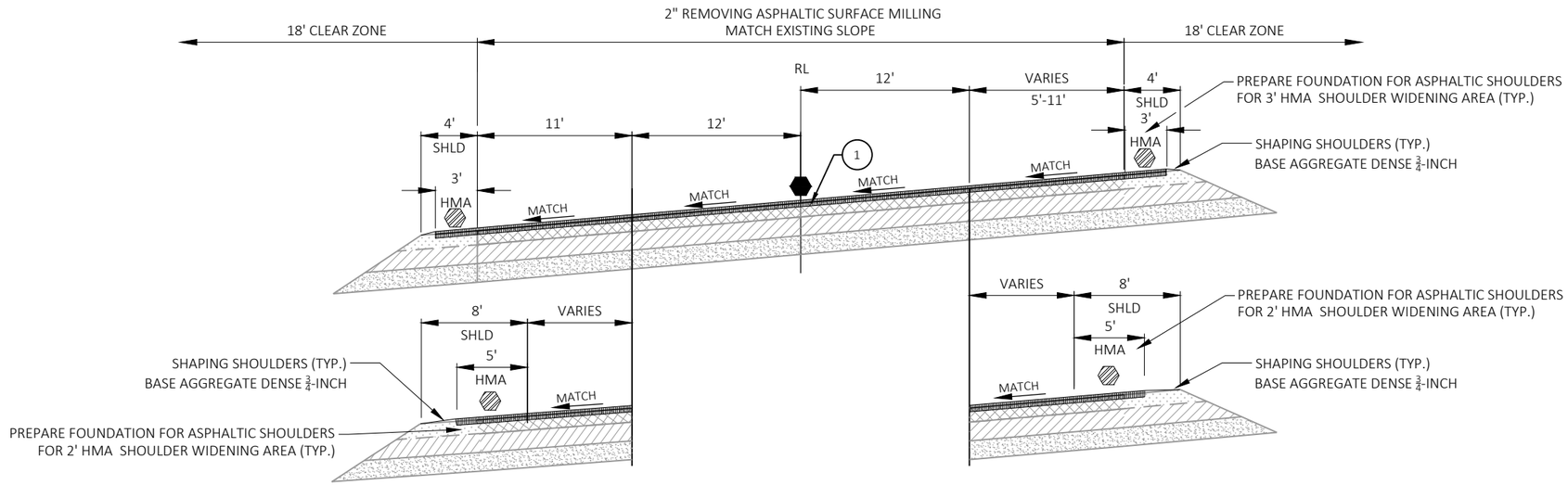

STH 46 FINISHED SUPERELEVATED SECTION
SHOWN FOR CURVE LEFT
STA 460+00B - STA 482+00B

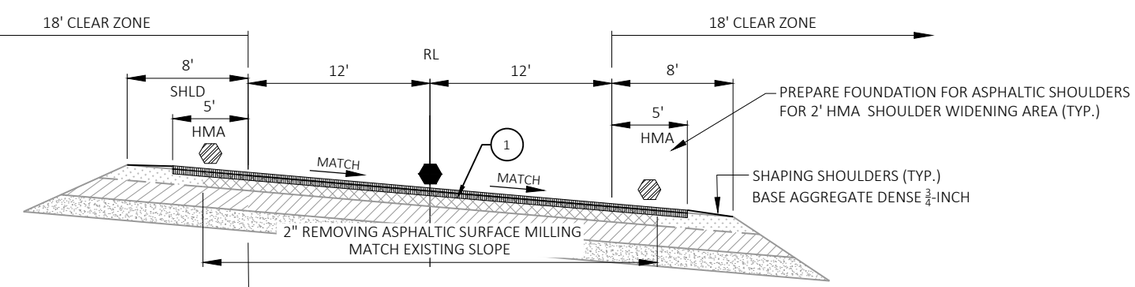

STH 46 FINISHED SUPERELEVATED SECTION
SHOWN FOR CURVE RIGHT
STA 390+00B - STA 406+00B

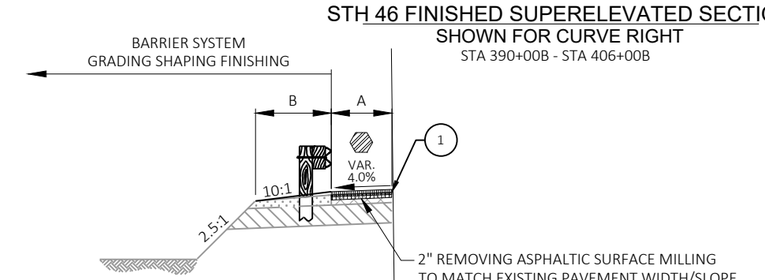

STATION	- STATION	WIDTH (A/B)
STA 391+27.68B	- STA 393+56.84B	5.5-8'/2'-4'

(1) 3.25" HMA PAVEMENT
1.5" 5 MT 58-34 V UPPER LAYER
1.75" 4 MT 58-34 V LOWER LAYER
"ASPHALTIC SURFACE PATCHING" TO BE USED AS NECESSARY TO COMPLETE "PREPARE FOUNDATION FOR ASPHALTIC PAVING" ITEM

ASPHALTIC CENTERLINE RUMBLE STRIPS 2-LANE RURAL
NOTE: SEE PERMANENT PAVEMENT MARKING SHEETS FOR DETAILS.

ASPHALTIC SHOULDER RUMBLE STRIPS 2-LANE RURAL
NOTE: SEE PERMANENT PAVEMENT MARKING SHEETS FOR DETAILS.

2

SIDE ROAD WITH CURB & GUTTER

210TH AVE (EAST)	CTH H (EAST)	41ST AVE
210TH AVE (WEST)	*CTH H (WEST)	
215TH AVE	CTH A/10TH AVE (EAST)	
222ND AVE	CTH A/10TH AVE (WEST)	
VILLAGE PARK	CTH CC	

*CTH H WEST REQUIRES EXTENSION OF SW RADIUS C&G

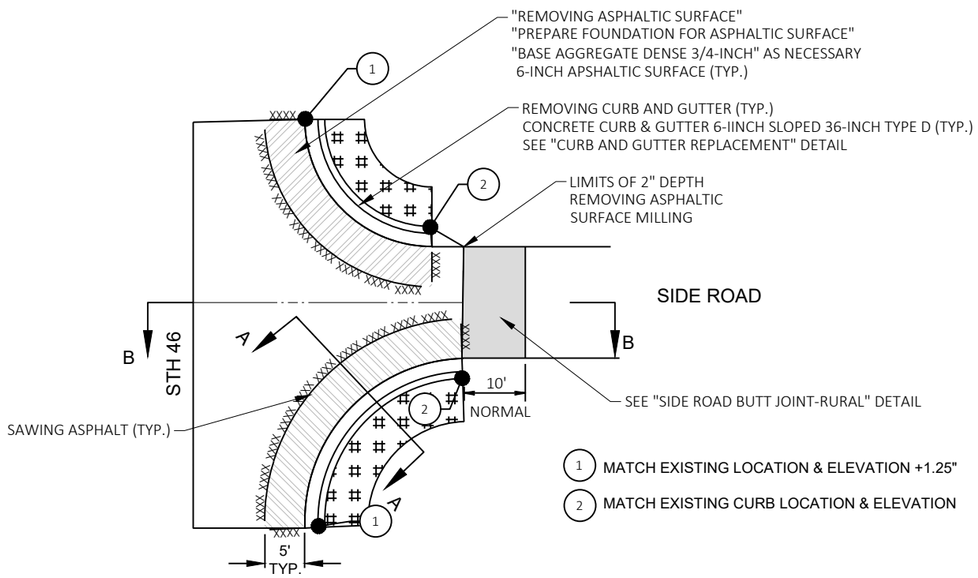

PLAN DETAIL OF SIDE ROAD WITH CURB & GUTTER - RURAL
NOT TO SCALE

SIDE ROAD WITHOUT CURB & GUTTER

SOUTH STREET	30TH AVE WEST
238TH AVE	30TH AVE EAST
COUNTY LINE ROAD	35TH AVE WEST
3RD AVE	35TH AVE EAST
18TH AVE	39TH AVE
20TH AVE (EAST)	45TH AVE
20TH AVE (WEST)	AIRPORT ROAD

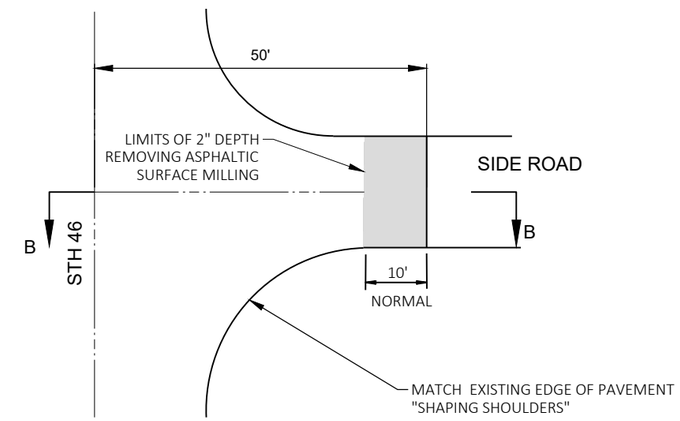

PLAN DETAIL OF SIDE ROAD WITHOUT CURB & GUTTER - RURAL
NOT TO SCALE

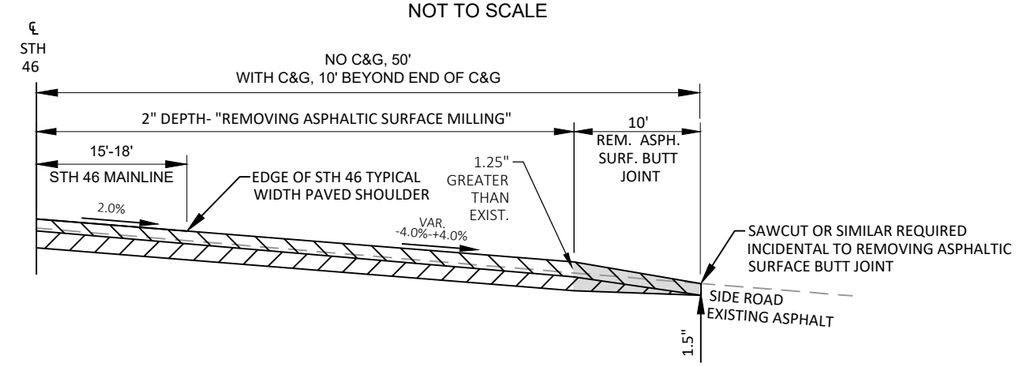

SECTION B-B
NOT TO SCALE

ON FLAT GRADE THERE IS 1.25"
DIFFERENCE OVER 10' FOR DIFFERENTIAL
GRADE CHANGE OF 1.04%
ADJUST BUTT JOINT LIMITS AS NECESSARY
TO MAINTAIN 1.5% OR LESS GRADE CHANGE

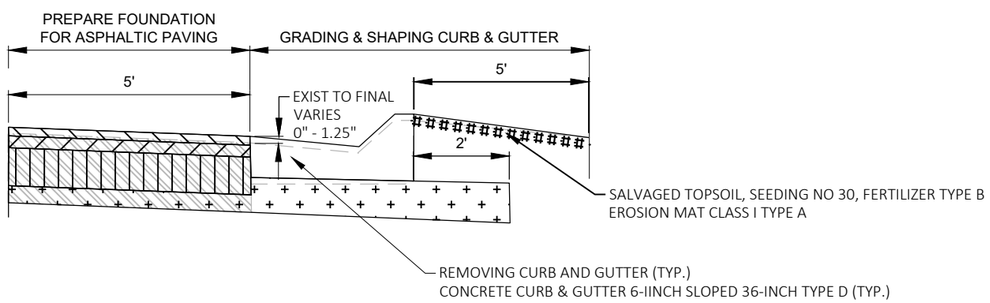

CURB AND GUTTER REPLACEMENT
SECTION A-A

LEGEND

- 6" ASPHALTIC SURFACE
- BASE AGGREGATE DENSE 3/4 -INCH
- REMOVING ASPHALTIC SURFACE
- TOPSOIL, SEEDING MIXTURE NO 30, FERTILIZER TYPE B & EROSION MAT
- SAWING ASPHALT
- 1.5" UPPER LAYER HMA PAVEMENT 5MT58-34V
- 1.75" LOWER LAYER HMA PAVEMENT 4MT58-34V
- REMOVING ASPHALTIC SURFACE BUTT JOINT

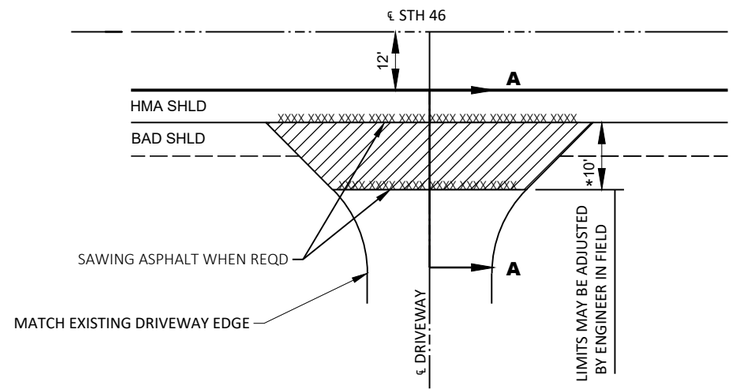

DRIVEWAY PLAN DETAIL - RURAL

* WHEN FINAL PAVED SHOULDER IS WIDER THAN EXISTING SHOULDER, ADD WIDTH OF PAVED SHOULDER WIDENING TO DISTANCE FROM EXISTING SHOULDER WHEN DETERMINING SAWING LOCATION

EXAMPLE
EXISTING PAVED SHOULDER = 3'
NEW PAVED SHOULDER = 5'
WIDENING = 5'-3' = 2'
SAWCUT AT 2'+10' = 12' FROM EDGE OF EXISTING SHOULDER

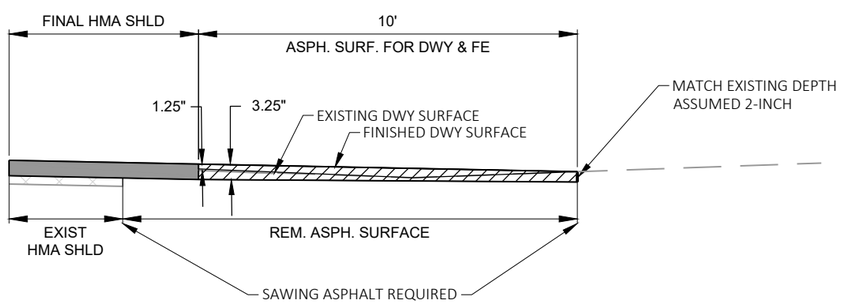

PAVED DRIVEWAY SECTION A-A

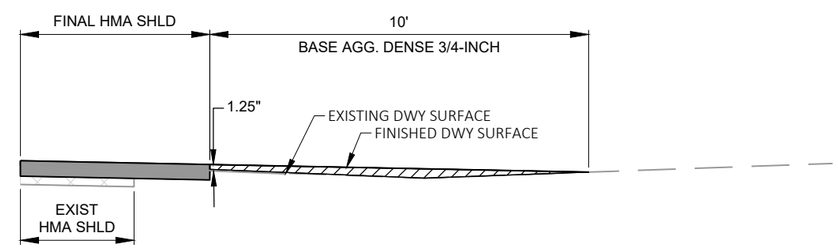

BAD DRIVEWAY SECTION A-A

AREA OF DRIVEWAY SURFACE MATERIAL

NOTES:
- MATCH EXISTING DRIVEWAY SURFACE WIDTH, RADII AND TAPERS

HMA DRIVEWAYS
-"SAWING ASPHALT" AT EXISTING STH 46 SHOULDER AND ON DRIVEWAY
-"REMOVING ASPALTIC SURFACE" BETWEEN SAWCUTS
-SHAPING OF DRIVEWAYS IS INCLUDED WITH "PREPARE FOUNDATION FOR ASPHALTIC PAVING (8072-00-70)" OR WITH "BASE AGGREGATE 3/4-INCH" BID ITEMS
-"ASPHALTIC SURFACE FOR DRIVEWAYS AND FIELD ENTRANCES" FROM EDGE OF NEW PAVED SHOULDER

BAD DRIVEWAYS
-"BASE AGGREGATE DENSE 3/4-INCH"

S.D.D. ON THIS SHEET REFERS TO STANDARD DETAIL DRAWING "MIDWEST GUARDRAIL SYSTEM ENERGY ABSORBING TERMINAL (MGS)"
INFORMATION ON THIS SHEET SUPERCEDES INFORMATION GIVEN ON S.D.D.

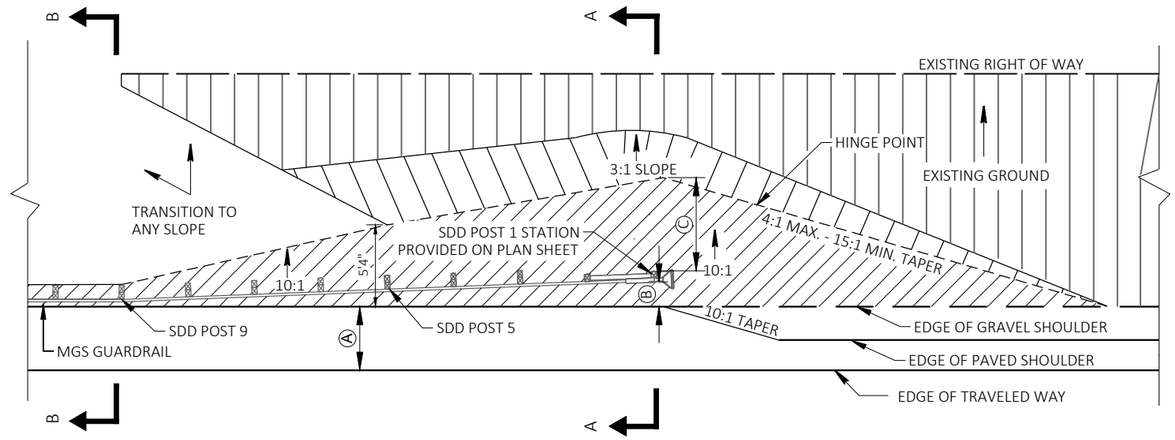

PLAN VIEW

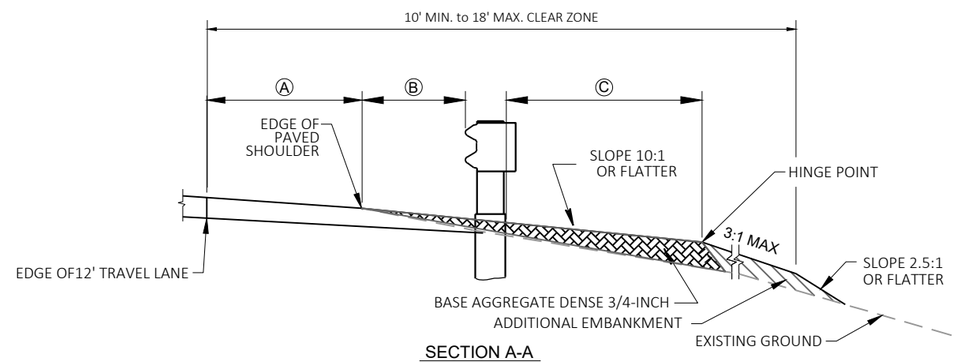

SECTION A-A
POST 1 SECTION

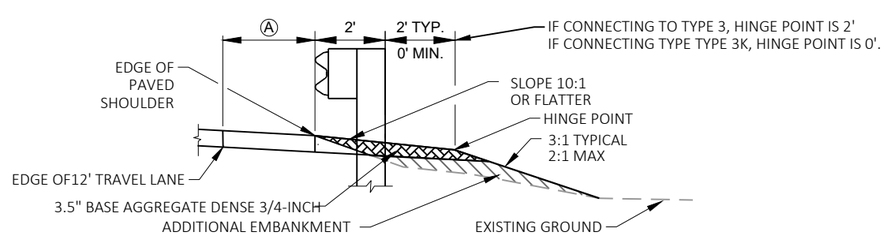

SECTION B-B
POST 9 SECTION

Ⓐ NORMAL DISTANCE TO FACE OF RAIL FROM EDGE OF 12' LANE
Ⓑ DISTANCE TO FACE OF RAIL FROM NORMAL SHOULDER AT POST 1
Ⓒ DISTANCE TO HINGE POINT FROM BACK OF POST 1

HAZARD	SIDE	POST1 STA	Ⓐ	Ⓑ	Ⓒ	MGS TYPE
B-55-204 NB APPROACH	RIGHT	80+71.60A	11'	1'	5'	TYPE 3 + THRIE
B-55-204 NB DEPARTURE	RIGHT	84+17.50A	11'	2'	2'	TYPE 3 + THRIE
B-55-204 SB DEPARTURE	LEFT	80+63.50A	9.5'	2'	3'	TYPE 3 + THRIE
B-55-204 SB APPROACH	LEFT	84+09.70A	9.5'	2'	3'	TYPE 3 + THRIE
SLOPE NB APPROACH	RIGHT	265+97.50B	8'	2'	3'	TYPE 3K
SLOPE NB DEPARTURE	RIGHT	270+03.67B	8'	2'	5'	
C-48-2333 SB DEPARTURE	LEFT	349+36.90B	5'	2'	5'	TYPE 3K
C-48-2333 SB APPROACH	LEFT	351+55.59	5'	2'	5'	TYPE 3
C-48-2333 NB APPROACH	RIGHT	348+84.21B	5'	2'	5'	TYPE 3
C-48-2333 NB DEPARTURE	RIGHT	351+02.88B	5'	2'	5'	TYPE 3K
SB SLOPE	LEFT	391+27.68B	5.5'	2'	4'	TYPE 3K
SB SLOPE	LEFT	393+56.84B	8'	0'	5'	TYPE 3
B-48-046 SB DEPARTURE	LEFT	511+79.30B	12.5'	2'	4.5'	TYPE 3 + THRIE
B-48-046 SB APPROACH	LEFT	515+27.80B	13'	2'	4'	TYPE 3 + THRIE
B-48-046 NB APPROACH	RIGHT	512+05	ADJUST- EXISTING TO REMAIN			TYPE 3 + THRIE
B-48-046 NB DEPARTURE	RIGHT	515+28.03B	9.5'	2'	5'	TYPE 3 + THRIE

MGS TERMINAL GRADING DETAIL

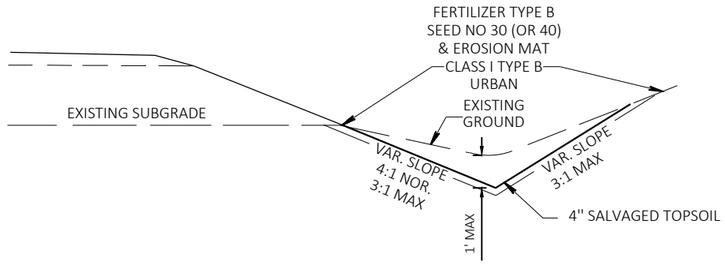

DITCH CLEANING DETAIL

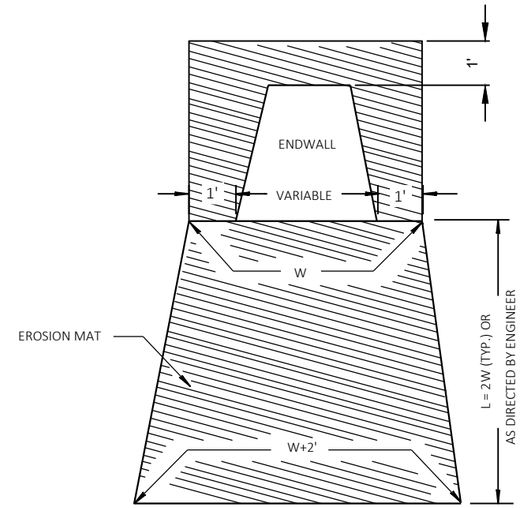

EROSION MAT TREATMENT AT CULVERTS

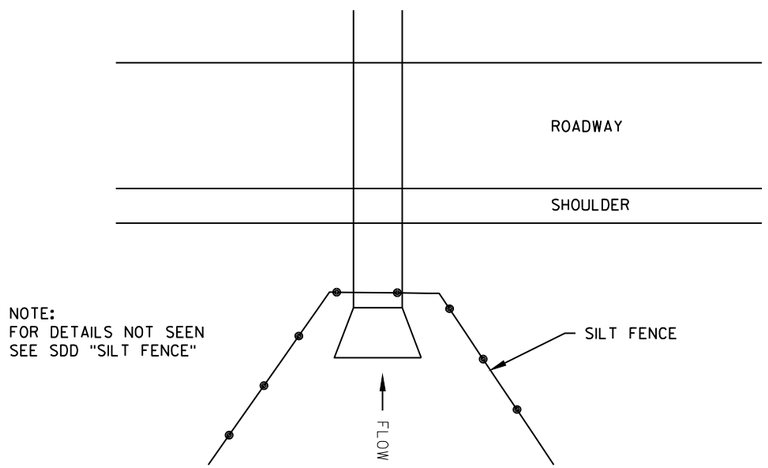

TYPICAL SILT FENCE DETAIL AT PIPE INLET
(SEE EROSION CONTROL PLAN FOR LOCATIONS)

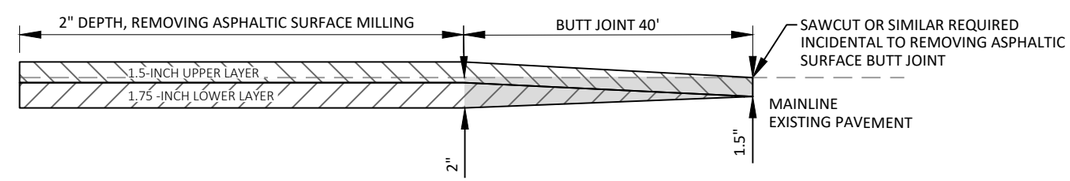

NOT TO SCALE

DETAIL OF MAINLINE BUTT JOINT ALONG PROFILE- RURAL

STA 10+43.4A	BEGIN PROJECT MATCH
STA 81+69.2A	B-25-204 SOUTH APPROACH
STA 82+86.7A	B-25-204 NORTH APPROACH
STA 184+05.0A	DEER PARK
STA 195+73.0A	DEER PARK
STA 512+79.0B	B-48-046 SOUTH APPROACH
STA 519+75.0B	B-48-046 NORTH APPROACH
STA 612+17.5B	END PROJECT MATCH

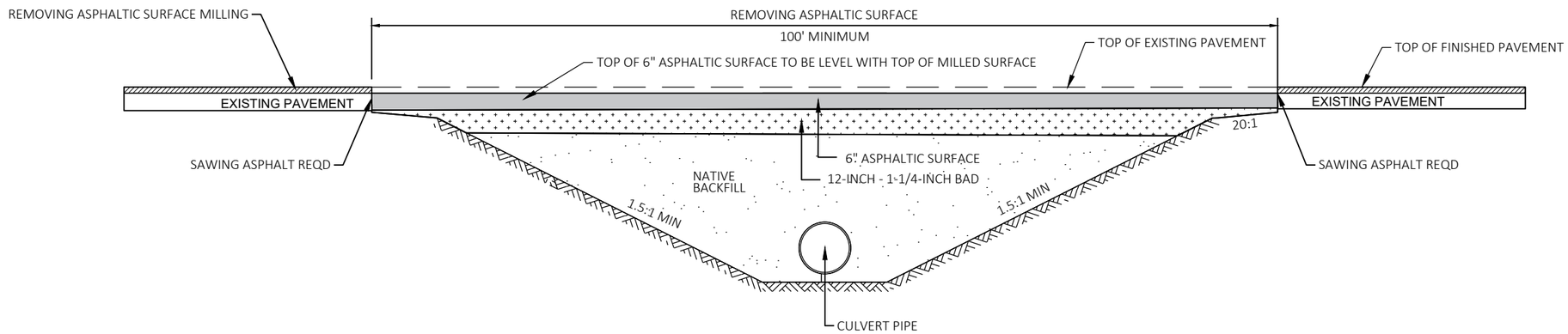

CROSS DRAIN INSTALLATION DETAIL

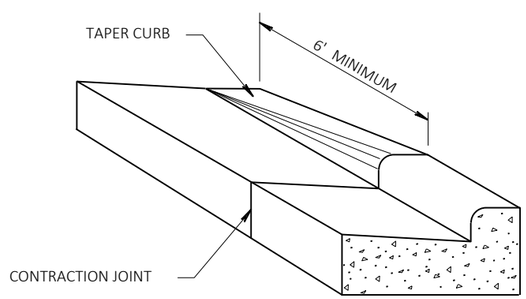

DETAIL OF CURB & GUTTER TERMINI

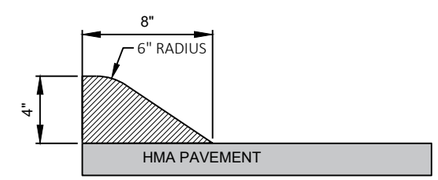

NOTE: WHEN ASPHALTIC CURB LOCATED UNDER MGS, FACE OF RAIL TO BE EVEN WITH FLOWLINE OF CURB

ASPHALTIC CURB

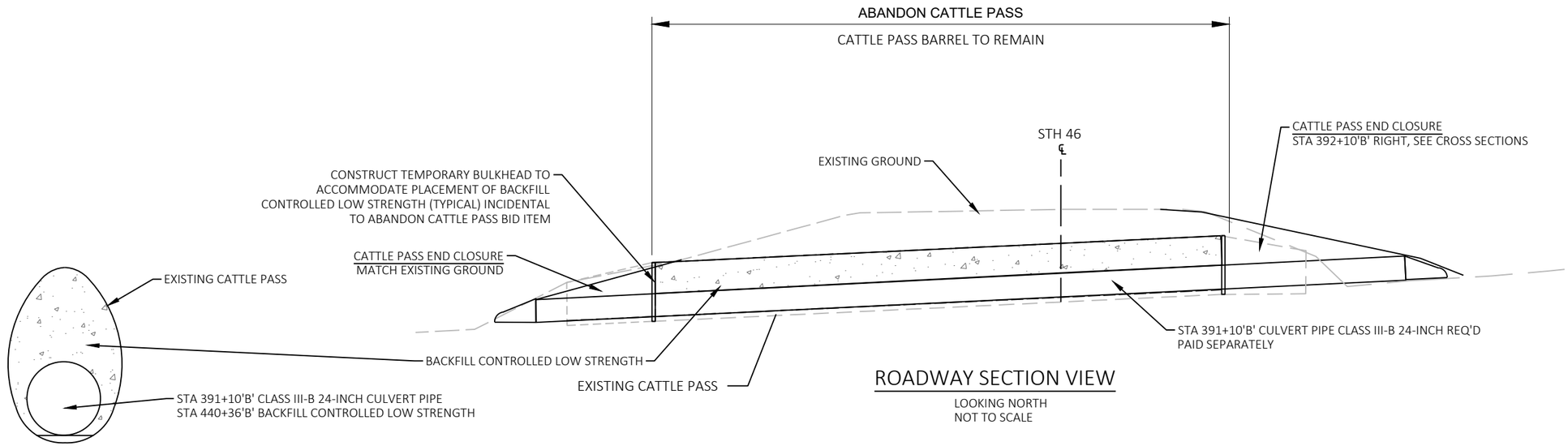

SECTION THRU CATTLE PASS

ABANDON CATTLE PASS (STA 392+10'B')

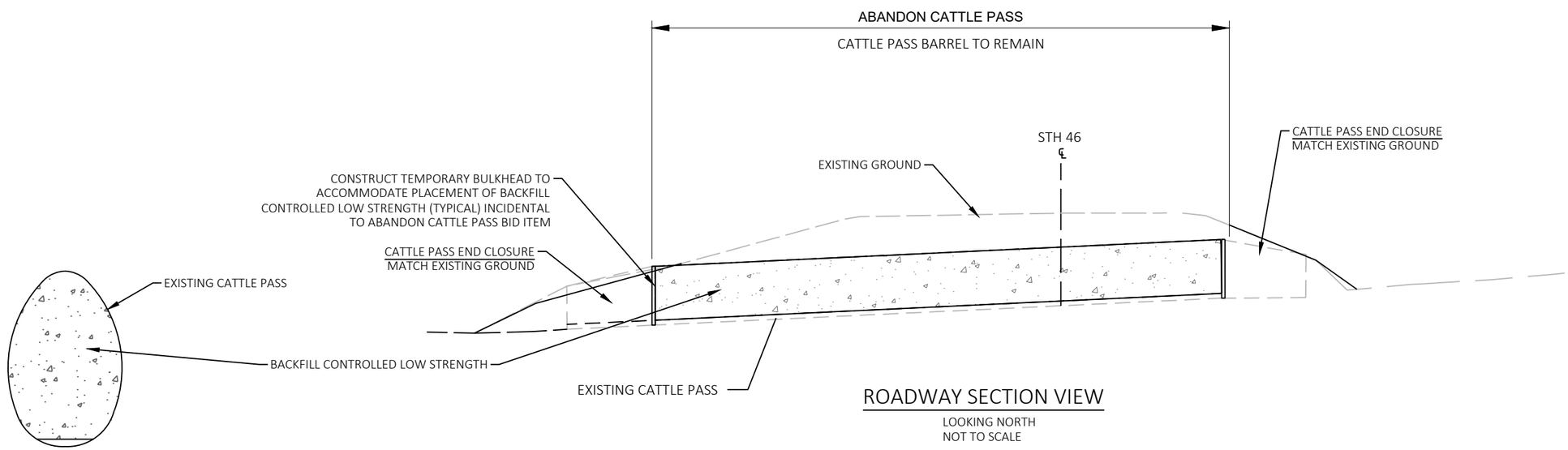

SECTION THRU CATTLE PASS

ABANDON CATTLE PASS (STA 440+36'B')

PROJECT NO: 8072-00-70	HWY: STH 46	COUNTY: ST. CROIX/POLK	CONSTRUCTION DETAILS	SHEET 18	E

2

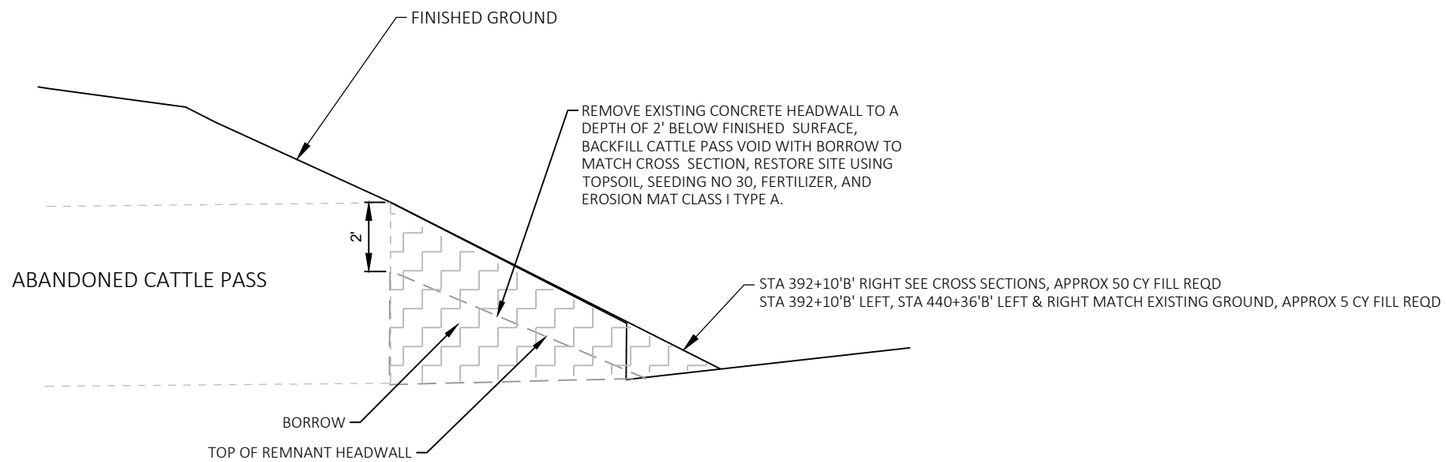

CATTLE PASS END CLOSURE

2

ST CROIX COUNTY

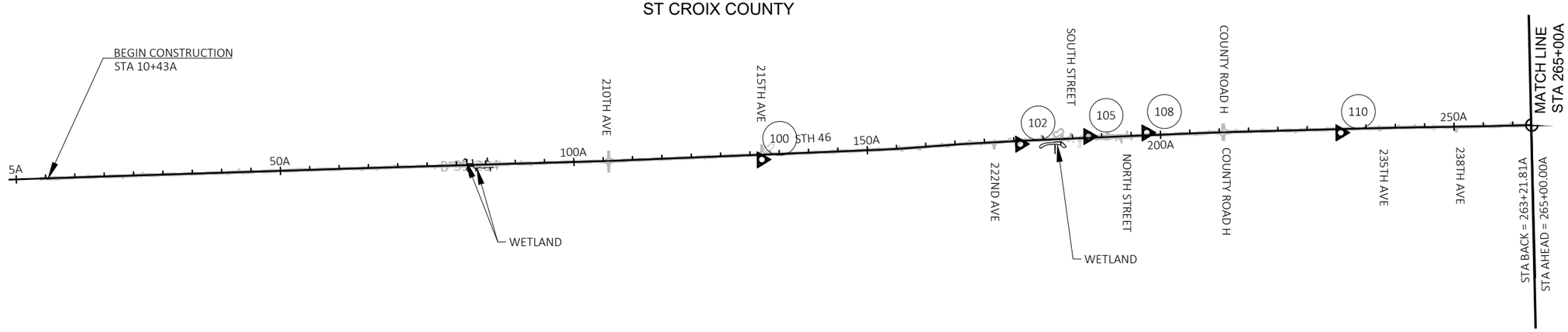

2

N

POLK COUNTY

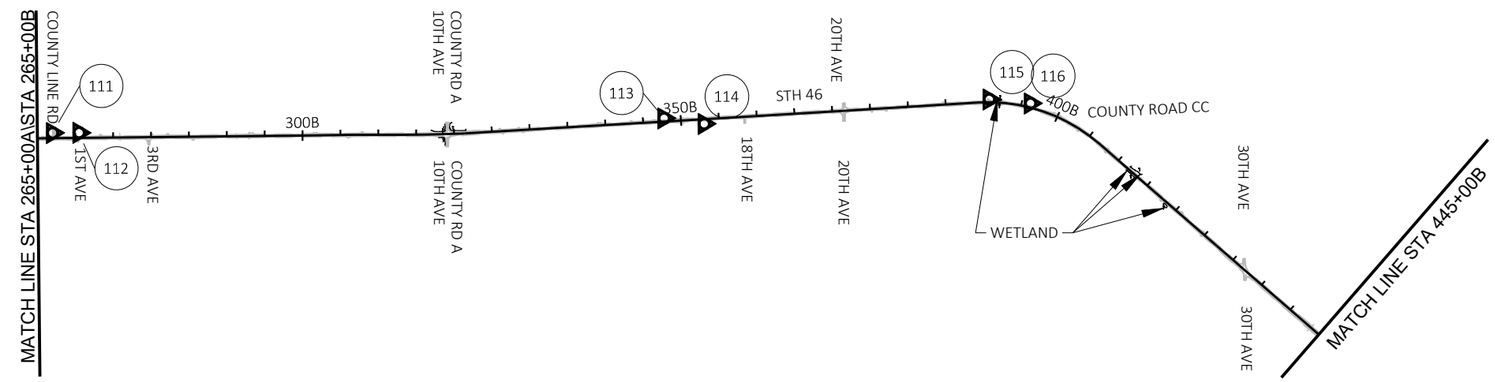

POINT TABLE			
POINT NAME	Y	X	ELEVATION
100	414510.571	607225.829	1060.90
102	418914.305	607024.626	1049.91
105	420077.052	606911.588	1058.51
108	421069.157	606864.415	1099.93
110	424371.832	606911.096	1123.11
111	199968.057	528756.324	1087.03
112	200315.672	528753.593	1099.24
113	208036.587	528562.754	1079.81
114	208568.041	528636.034	1087.40
115	212328.361	528314.960	1164.46
116	212872.496	528365.979	1153.42
117	222606.047	533228.541	1051.65
118	223163.384	533158.853	1061.86
119	231632.557	533513.515	1089.19
120	232405.513	533518.016	1089.24

POLK COUNTY

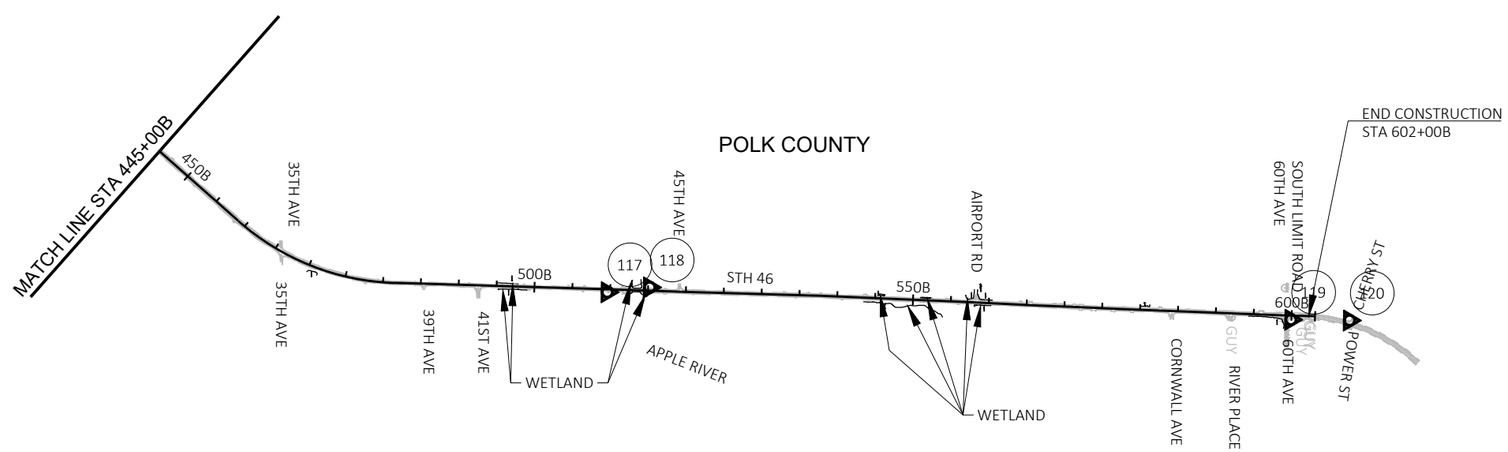

PROJECT NO: 8072-00-70	HWY: STH 46	COUNTY: ST. CROIX/POLK	CONTROL POINTS	SHEET 20	E

B-55-204 MGS LAYOUT DETAIL

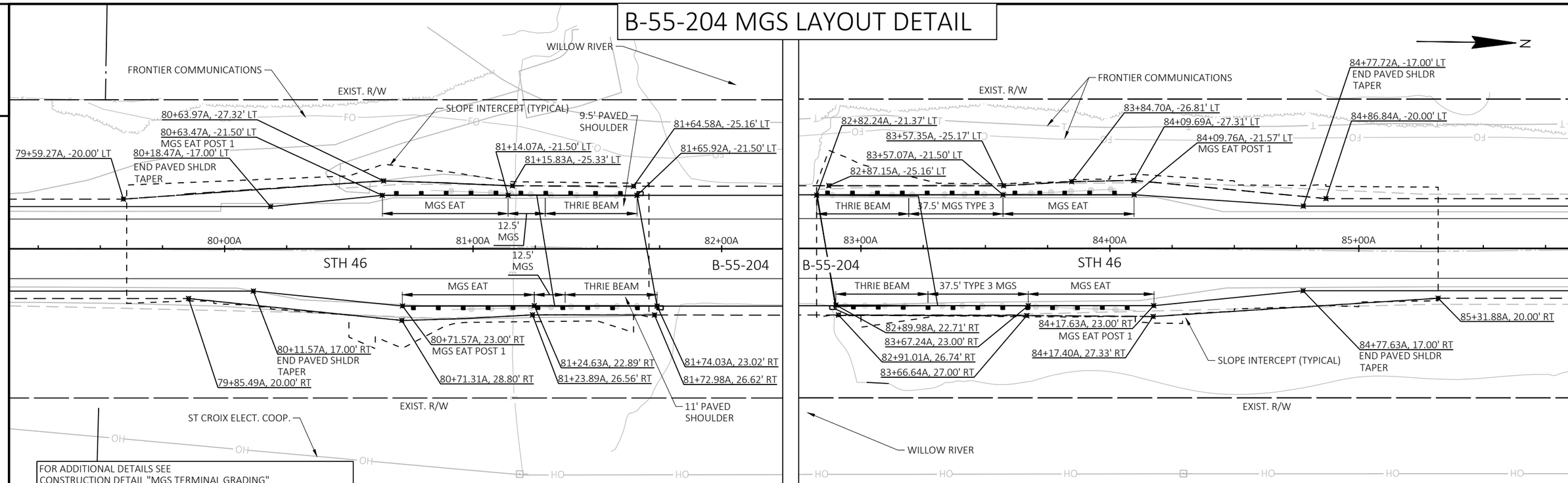

DEER PARK - ACCESS CLOSURE DETAIL

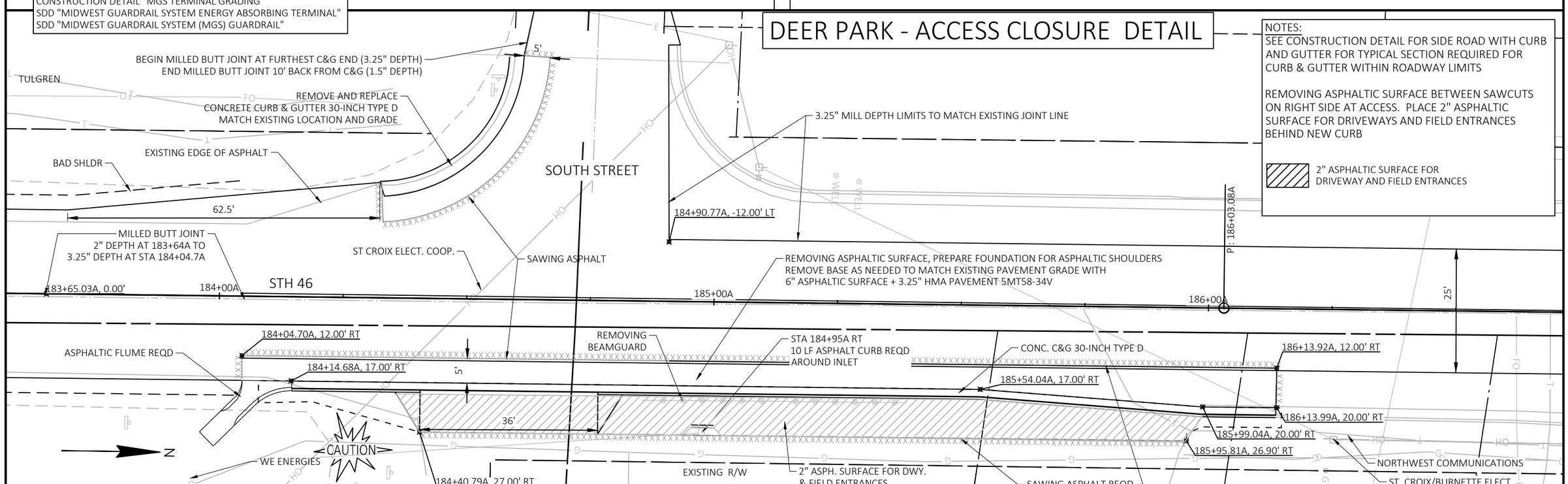

NOTES:
SEE CONSTRUCTION DETAIL FOR SIDE ROAD WITH CURB AND GUTTER FOR TYPICAL SECTION REQUIRED FOR CURB & GUTTER WITHIN ROADWAY LIMITS

REMOVING ASPHALTIC SURFACE BETWEEN SAWCUTS ON RIGHT SIDE AT ACCESS. PLACE 2" ASPHALTIC SURFACE FOR DRIVEWAYS AND FIELD ENTRANCES BEHIND NEW CURB

2" ASPHALTIC SURFACE FOR DRIVEWAY AND FIELD ENTRANCES

PROJECT NO: 8072-00-70	HWY: STH 46	COUNTY: ST CROIX/POLK	MGS GUARDRAIL LAYOUT DETAIL/ACCESS CLOSURE	SHEET 21	E

2

COUNTY LINE RD MGS LAYOUT DETAIL

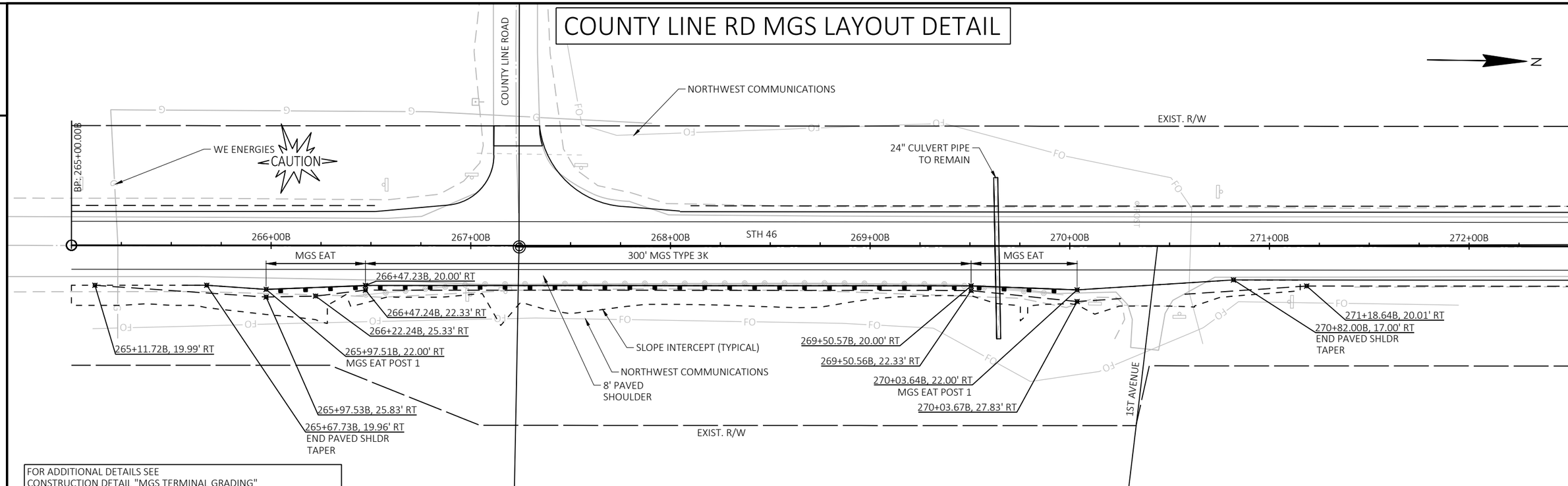

FOR ADDITIONAL DETAILS SEE
CONSTRUCTION DETAIL "MGS TERMINAL GRADING"
SDD "MIDWEST GUARDRAIL SYSTEM ENERGY ABSORBING TERMINAL"
SDD "MIDWEST GUARDRAIL SYSTEM (MGS) GUARDRAIL"

C-48-2333 MGS LAYOUT DETAIL

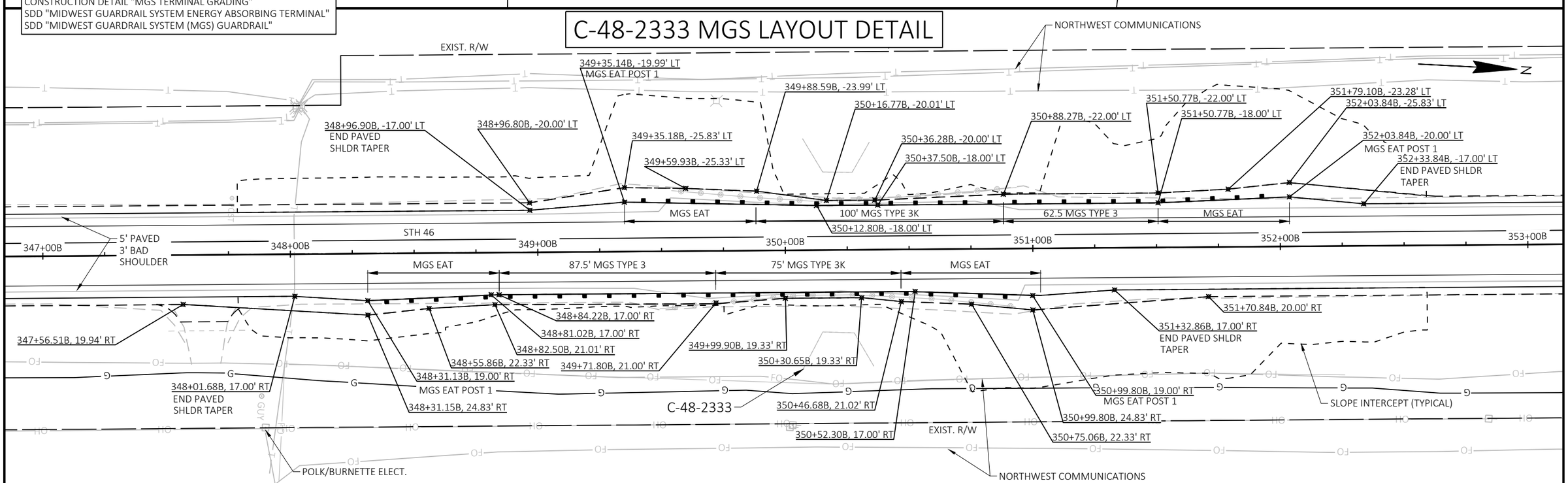

PROJECT NO: 8072-00-70	HWY: STH 46	COUNTY: ST. CROIX\POLK	MGS GUARDRAIL LAYOUT DETAIL	SHEET 22	E

FILE NAME : \\KLENGINEERING\DATA1\WDOTNW\19065-000 (STH 46)\CIVIL 3D\SHEETSPLAN\021101-PD.DWG
LAYOUT NAME - 02
PLOT DATE : 7/15/2021 9:11 AM
PLOT BY : JON BLOMQUIST
PLOT NAME :
PLOT SCALE : ##########
WISDOT/CADDS SHEET 44

CATTLE PASS MGS LAYOUT DETAIL

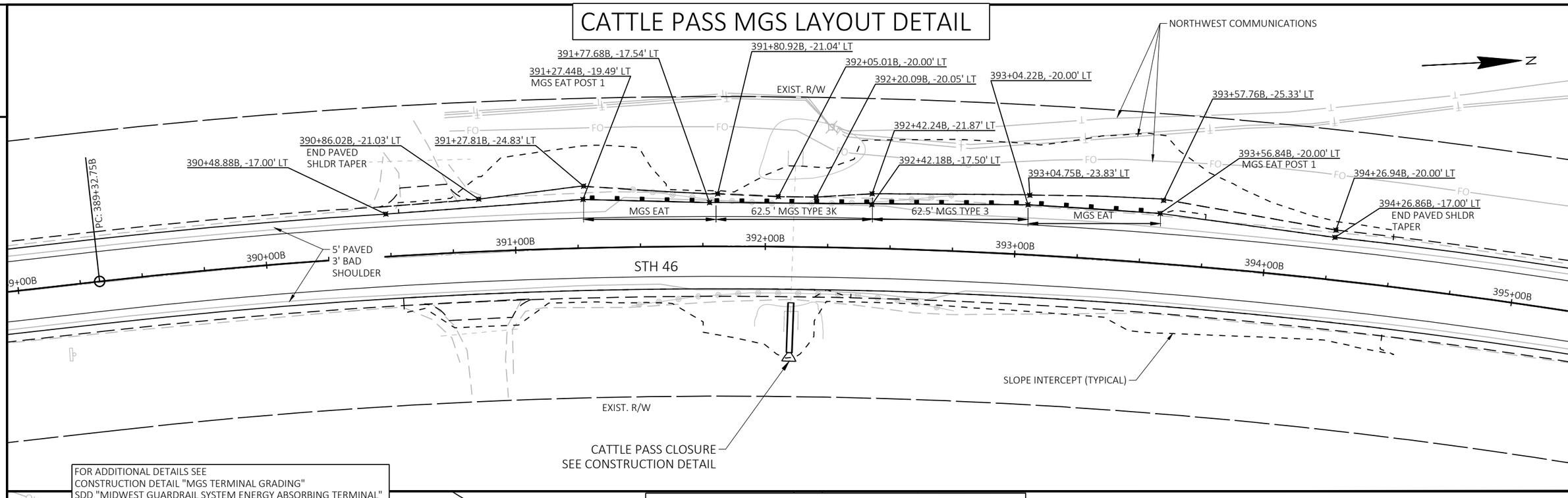

FOR ADDITIONAL DETAILS SEE
CONSTRUCTION DETAIL "MGS TERMINAL GRADING"
SDD "MIDWEST GUARDRAIL SYSTEM ENERGY ABSORBING TERMINAL"
SDD "MIDWEST GUARDRAIL SYSTEM (MGS) GUARDRAIL"

B-48-046 MGS LAYOUT DETAIL

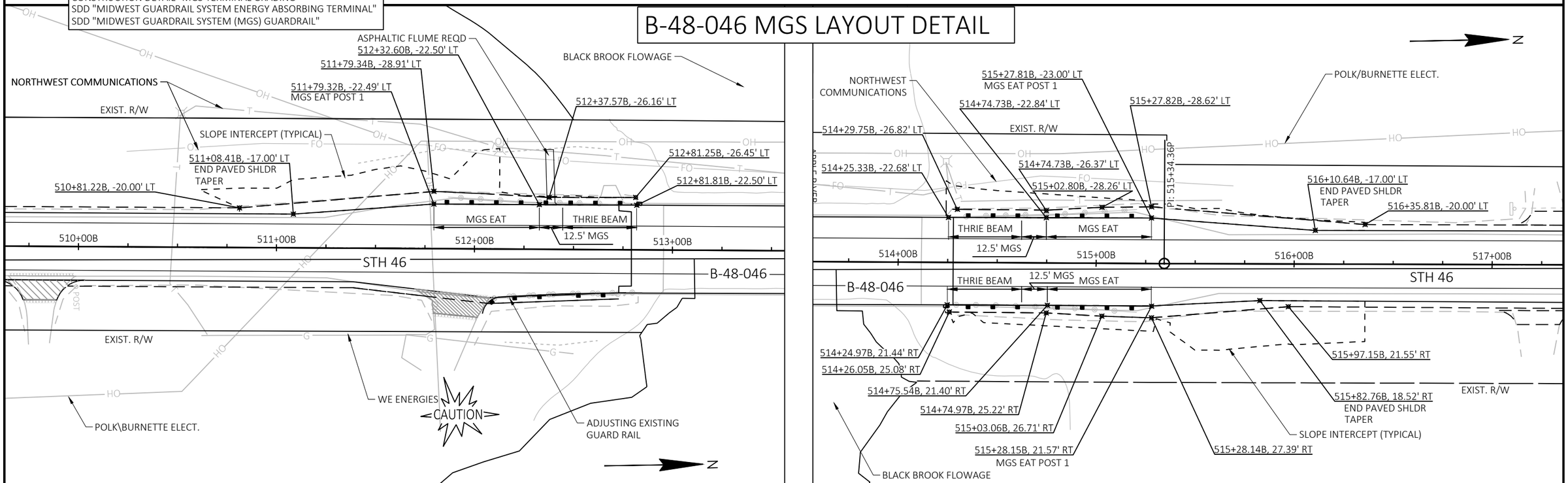

PROJECT NO: 8072-00-70	HWY: STH 46	COUNTY: ST. CROIX\POLK	MGS GUARDRAIL LAYOUT DETAIL	SHEET 23	E

2

B-55-204 EROSION CONTROL DETAIL

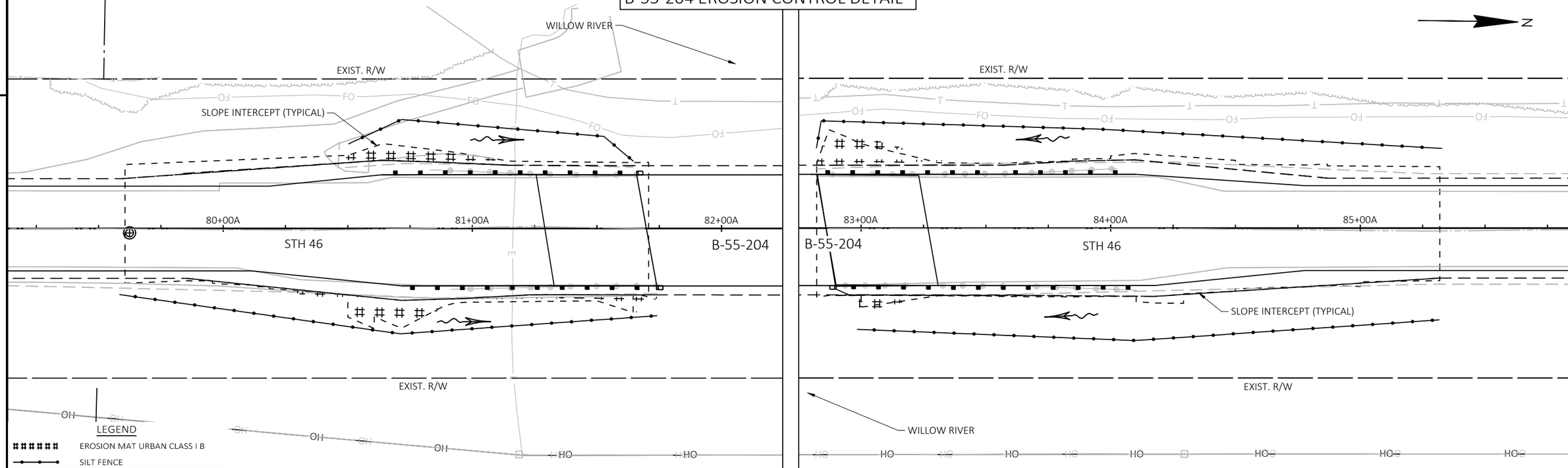

LEGEND

- EROSION MAT URBAN CLASS I B
- SILT FENCE
- SLOPE INTERCEPT
- TEMPORARY DITCH CHECK
- CULVERT PIPE DITCH CHECK
- SURFACE WATER FLOW

COUNTY LINE RD EROSION CONTROL DETAIL

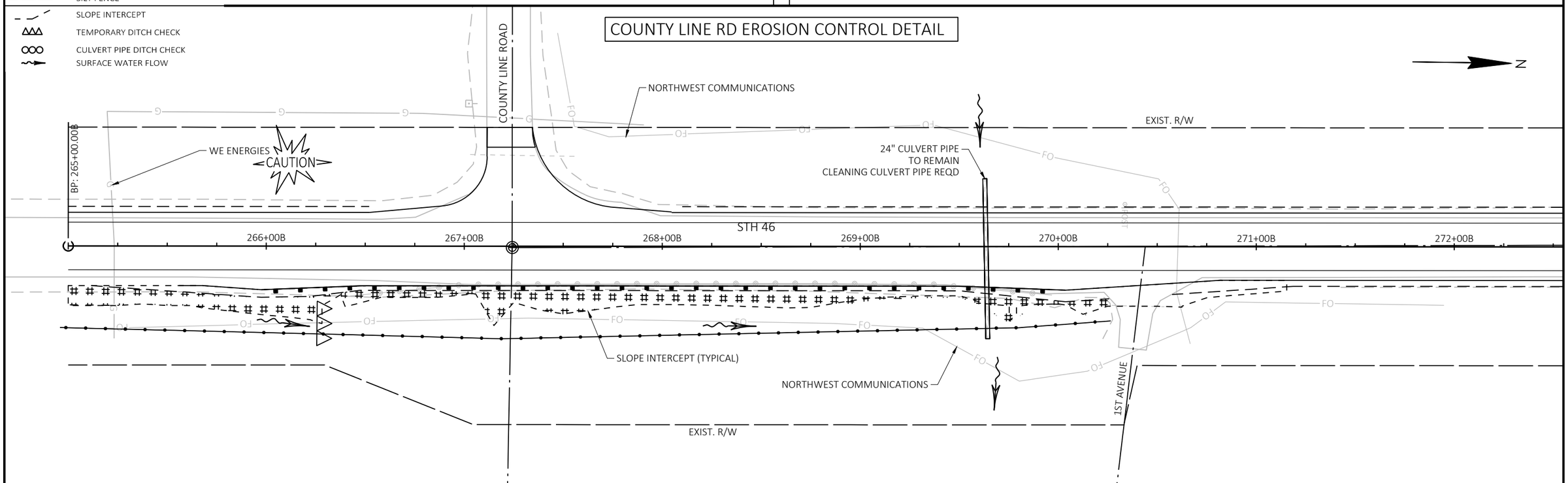

2

PROJECT NO: 8072-00-70	HWY: STH 46	COUNTY: ST. CROIX/POLK	EROSION CONTROL DETAIL	SHEET 24	E

2

C-48-2333 EROSION CONTROL DETAIL

LEGEND

- EROSION MAT URBAN CLASS I B
- SILT FENCE
- SLOPE INTERCEPT
- TEMPORARY DITCH CHECK
- CULVERT PIPE DITCH CHECK
- SURFACE WATER FLOW

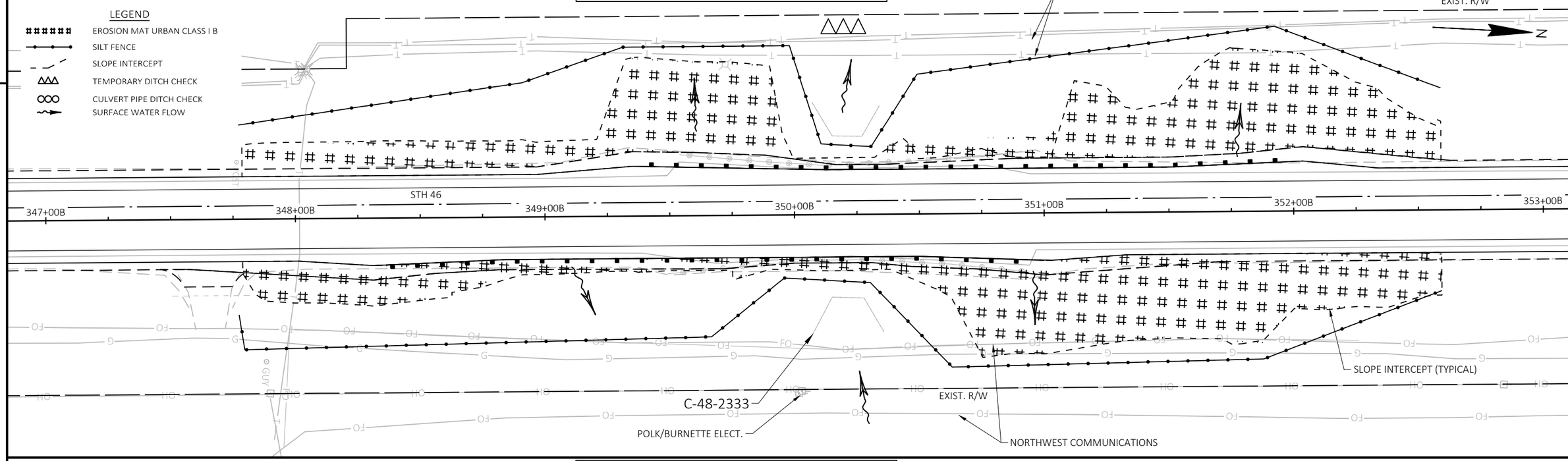

CATTLE PASS EROSION CONTROL DETAIL

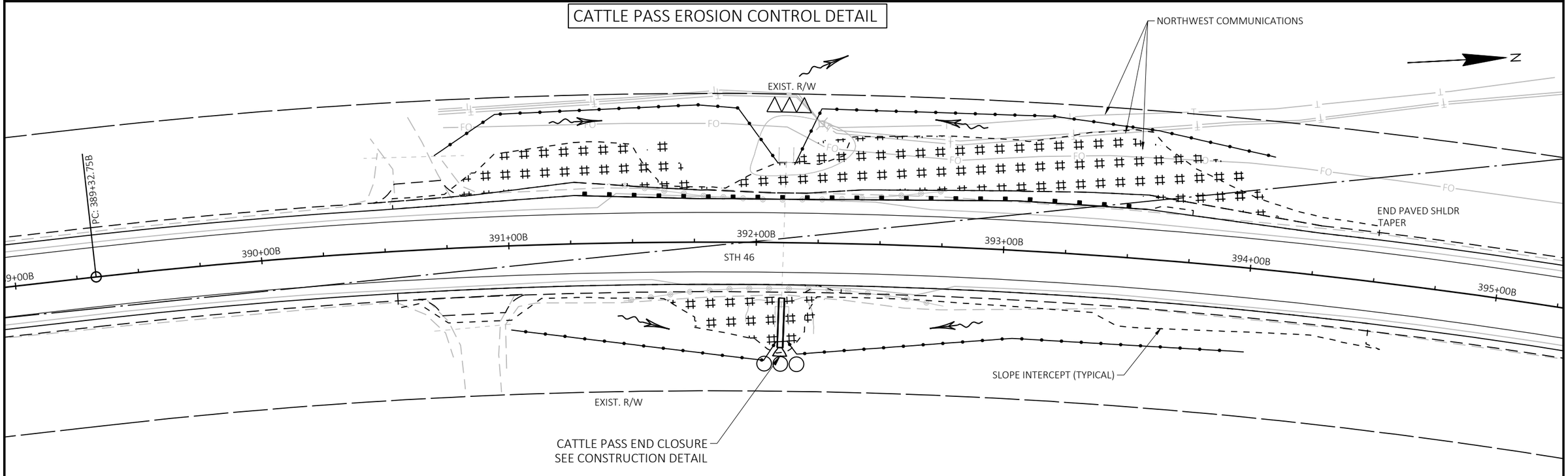

PROJECT NO: 8072-00-70	HWY: STH 46	COUNTY: ST CROIX\POLK	EROSION CONTROL DETAIL	SHEET 25	E

B-48-046 EROSION CONTROL DETAIL

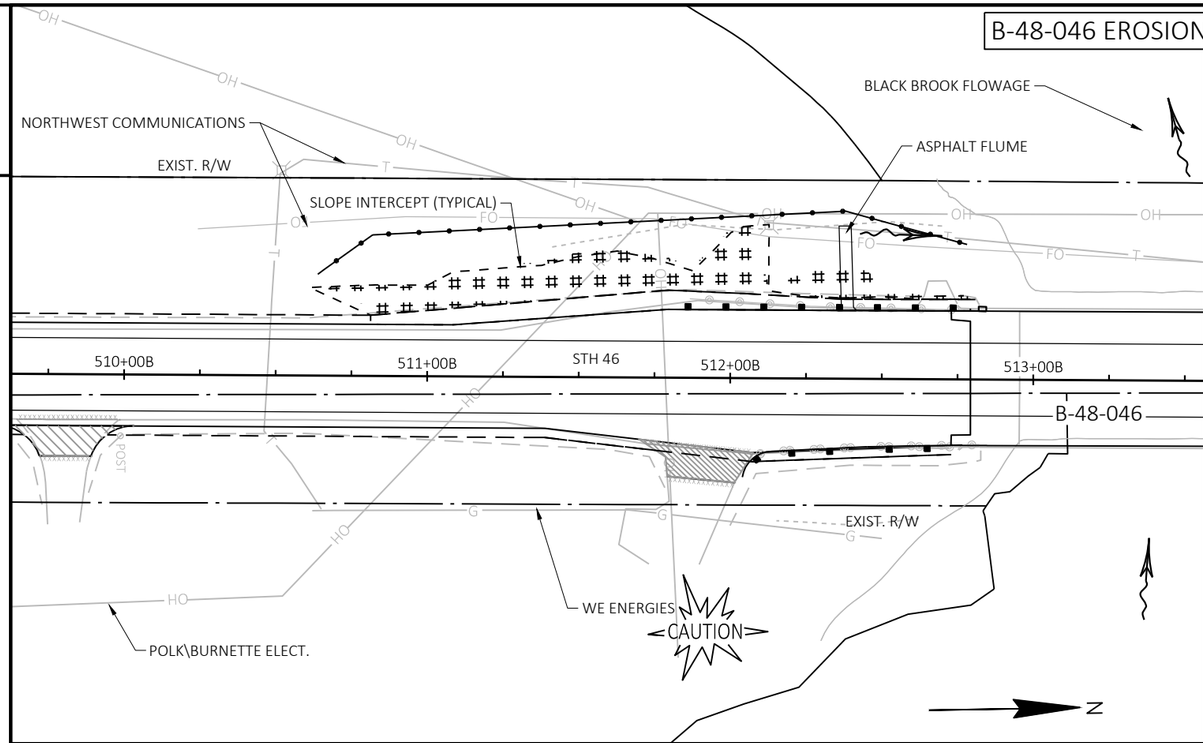

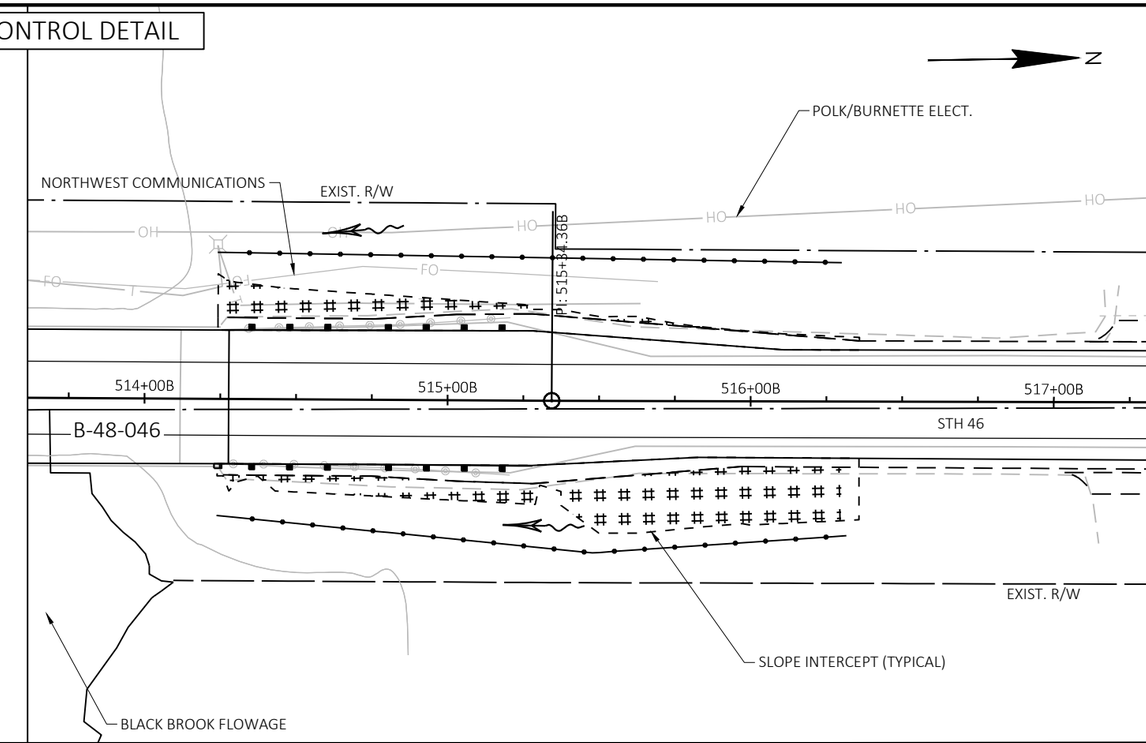

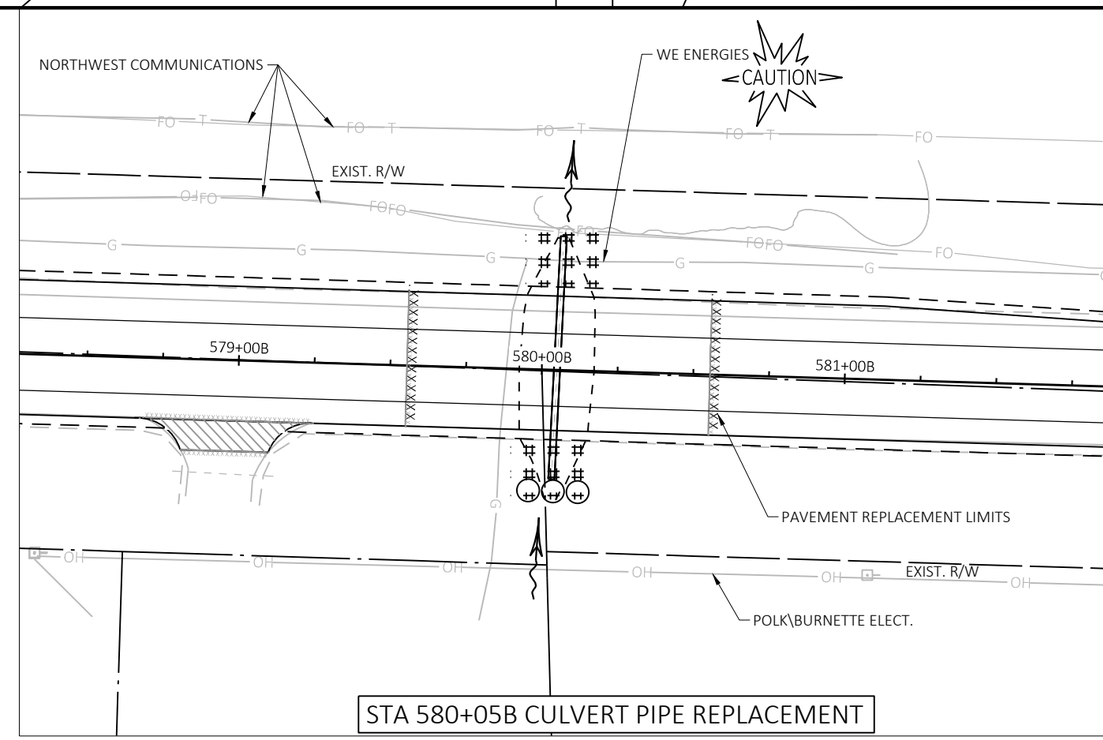

STA 580+05B CULVERT PIPE REPLACEMENT

LEGEND

- EROSION MAT URBAN CLASS I B
- SILT FENCE
- SLOPE INTERCEPT
- TEMPORARY DITCH CHECK
- CULVERT PIPE DITCH CHECK
- SURFACE WATER FLOW

PROJECT NO: 8072-00-70	HWY: STH 46	COUNTY: ST CROIX\POLK	EROSION CONTROL DETAIL	SHEET 26	E

FILE NAME : \\KLENGINEERING\DATA1\WDOTNW\19065-000 (STH 46)\CIVIL 3D\SHEETSPLAN\022001-EC.DWG
LAYOUT NAME - 03
PLOT DATE : 7/15/2021 9:13 AM
PLOT BY : JON BLOMQUIST
PLOT NAME :
PLOT SCALE : ##########

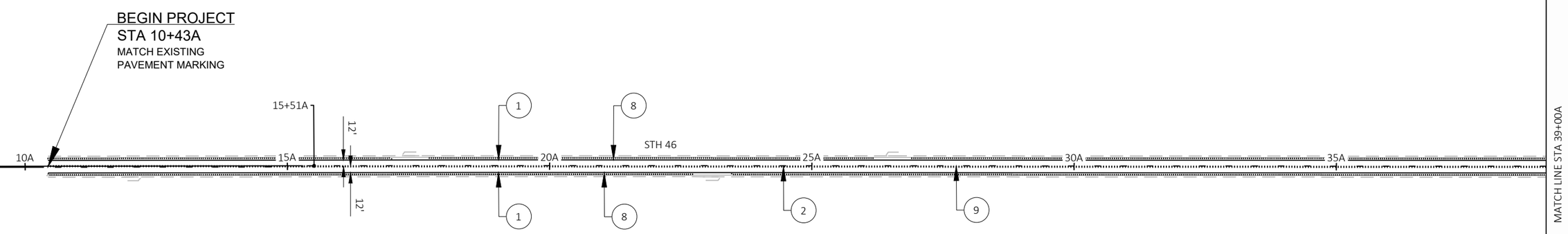

LEGEND

1	MARKING LINE GROOVED WET REF EPOXY 4-INCH, WHITE	6	MARKING DIAGONAL EPOXY 12-INCH YELLOW
2	MARKING LINE SAME DAY EPOXY 4-INCH, YELLOW *	7	MARKING ARROW EPOXY WHITE
3	MARKING LINE GROOVED WET REF EPOXY 8-INCH, WHITE	8	ASPHALTIC SHOULDER RUMBLE STRIPS 2-LANE, RURAL
4	MARKING CROSSWALK EPOXY TRANSVERSE LINE 6-INCH, WHITE	9	ASPHALTIC CENTER LINE RUMBLE STRIPS 2-LANE, RURAL
5	MARKING STOP LINE EPOXY 18-INCH, WHITE		

NOTE: PROPOSED LINEWORK SHOWN AS SCREENED FOR CLARITY.
* CL MARKINGS TO MATCH EXISTING MARKINGS
SEE SDD "PAVEMENT MARKING (INTERSECTIONS)"
SEE SDD "2-LANE RURAL CENTERLINE RUMBLE STRIP,MILLING"
SEE SDD "2-LANE RURAL SHOULDER RUMBLE STRIP, MILLING" FOR TYPE 1 RUMBLE STRIPS

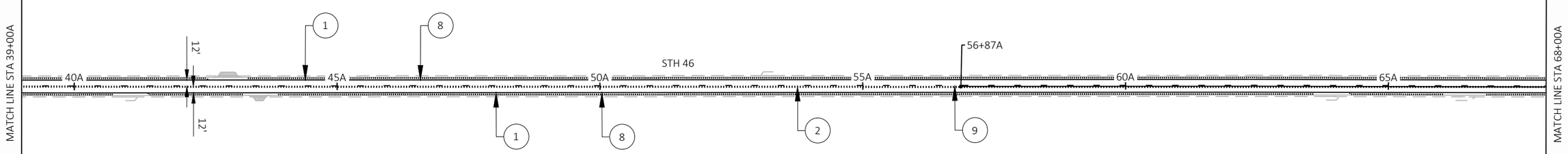

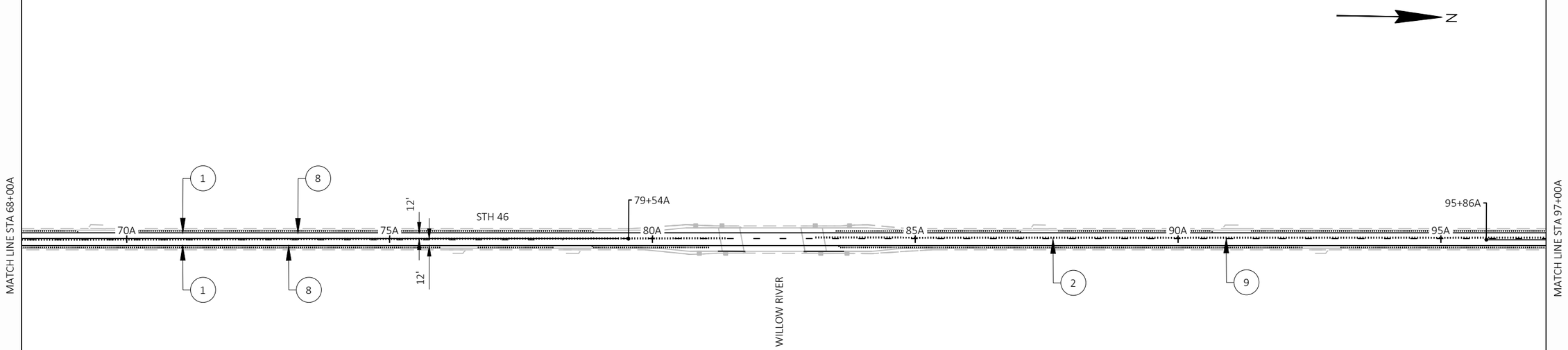

LEGEND

1	MARKING LINE GROOVED WET REF EPOXY 4-INCH, WHITE	6	MARKING DIAGONAL EPOXY 12-INCH YELLOW
2	MARKING LINE SAME DAY EPOXY 4-INCH, YELLOW *	7	MARKING ARROW EPOXY WHITE
3	MARKING LINE GROOVED WET REF EPOXY 8-INCH, WHITE	8	ASPHALTIC SHOULDER RUMBLE STRIPS 2-LANE, RURAL
4	MARKING CROSSWALK EPOXY TRANSVERSE LINE 6-INCH, WHITE	9	ASPHALTIC CENTER LINE RUMBLE STRIPS 2-LANE, RURAL
5	MARKING STOP LINE EPOXY 18-INCH, WHITE		

NOTE: PROPOSED LINEWORK SHOWN AS SCREENED FOR CLARITY.
* CL MARKINGS TO MATCH EXISTING MARKINGS
SEE SDD "PAVEMENT MARKING (INTERSECTIONS)"
SEE SDD "2-LANE RURAL CENTERLINE RUMBLE STRIP,MILLING"
SEE SDD "2-LANE RURAL SHOULDER RUMBLE STRIP, MILLING" FOR TYPE 1 RUMBLE STRIPS

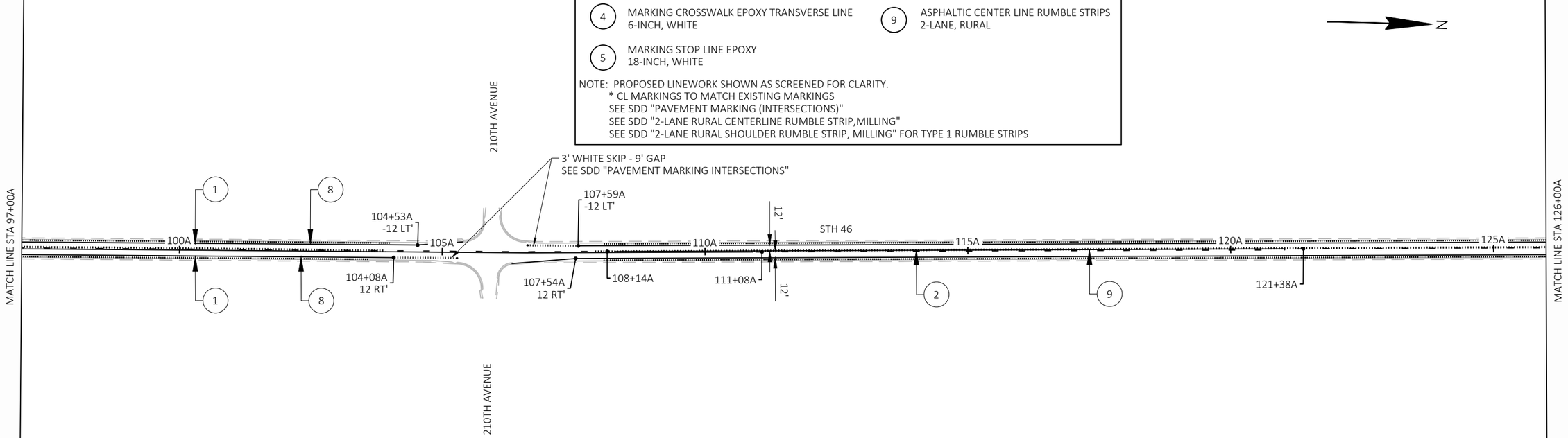

PROJECT NO: 8072-00-70	HWY: STH 46	COUNTY: ST. CROIX/POLK	PERMANENT PAVEMENT MARKING	SHEET 28	E

FILE NAME : \\KLENGINEERING\DATA1\WDOTNW\19065-000 (STH 46)\CIVIL 3D\SHEETSPLAN\023201-PSM.DWG
LAYOUT NAME - 068
PLOT DATE : 7/15/2021 9:14 AM PLOT BY : KL ENGINEERING PLOT NAME : PLOT SCALE : 1 IN:200 FT
WISDOT/CADDS SHEET 44

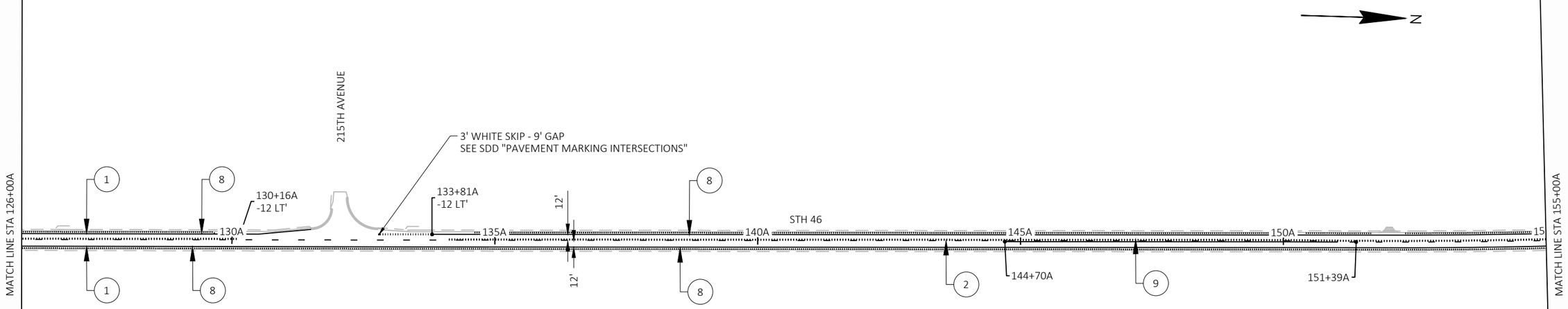

LEGEND

1	MARKING LINE GROOVED WET REF EPOXY 4-INCH, WHITE	6	MARKING DIAGONAL EPOXY 12-INCH YELLOW
2	MARKING LINE SAME DAY EPOXY 4-INCH, YELLOW *	7	MARKING ARROW EPOXY WHITE
3	MARKING LINE GROOVED WET REF EPOXY 8-INCH, WHITE	8	ASPHALTIC SHOULDER RUMBLE STRIPS 2-LANE, RURAL
4	MARKING CROSSWALK EPOXY TRANSVERSE LINE 6-INCH, WHITE	9	ASPHALTIC CENTER LINE RUMBLE STRIPS 2-LANE, RURAL
5	MARKING STOP LINE EPOXY 18-INCH, WHITE		

NOTE: PROPOSED LINEWORK SHOWN AS SCREENED FOR CLARITY.
* CL MARKINGS TO MATCH EXISTING MARKINGS
SEE SDD "PAVEMENT MARKING (INTERSECTIONS)"
SEE SDD "2-LANE RURAL CENTERLINE RUMBLE STRIP,MILLING"
SEE SDD "2-LANE RURAL SHOULDER RUMBLE STRIP, MILLING" FOR TYPE 1 RUMBLE STRIPS

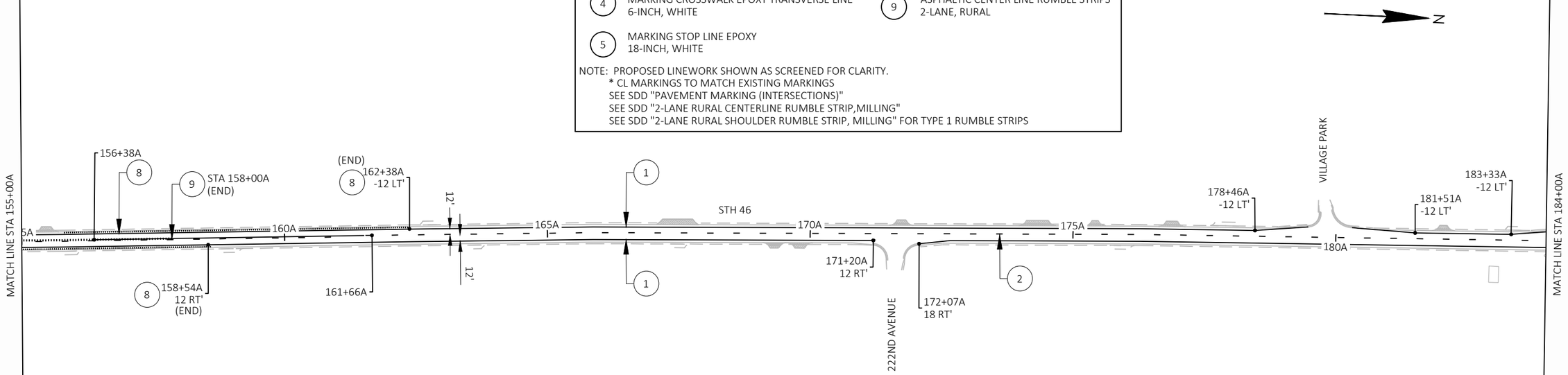

PROJECT NO: 8072-00-70	HWY: STH 46	COUNTY: ST. CROIX/POLK	PERMANENT PAVEMENT MARKING	SHEET 29	E

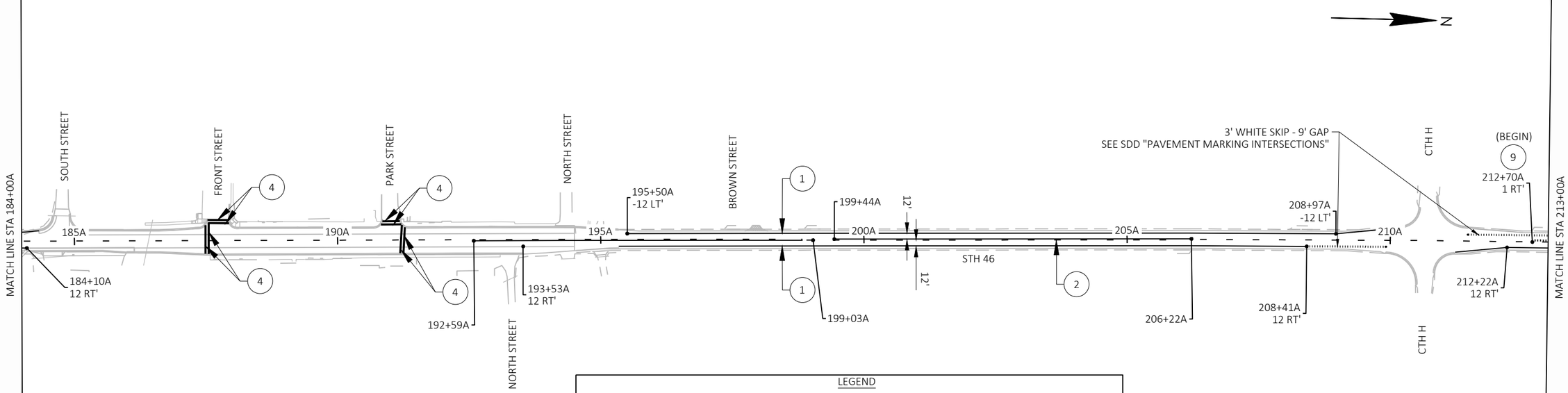

LEGEND

1	MARKING LINE GROOVED WET REF EPOXY 4-INCH, WHITE	6	MARKING DIAGONAL EPOXY 12-INCH YELLOW
2	MARKING LINE SAME DAY EPOXY 4-INCH, YELLOW *	7	MARKING ARROW EPOXY WHITE
3	MARKING LINE GROOVED WET REF EPOXY 8-INCH, WHITE	8	ASPHALTIC SHOULDER RUMBLE STRIPS 2-LANE, RURAL
4	MARKING CROSSWALK EPOXY TRANSVERSE LINE 6-INCH, WHITE	9	ASPHALTIC CENTER LINE RUMBLE STRIPS 2-LANE, RURAL
5	MARKING STOP LINE EPOXY 18-INCH, WHITE		

NOTE: PROPOSED LINEWORK SHOWN AS SCREENED FOR CLARITY.
* CL MARKINGS TO MATCH EXISTING MARKINGS
SEE SDD "PAVEMENT MARKING (INTERSECTIONS)"
SEE SDD "2-LANE RURAL CENTERLINE RUMBLE STRIP,MILLING"
SEE SDD "2-LANE RURAL SHOULDER RUMBLE STRIP, MILLING" FOR TYPE 1 RUMBLE STRIPS

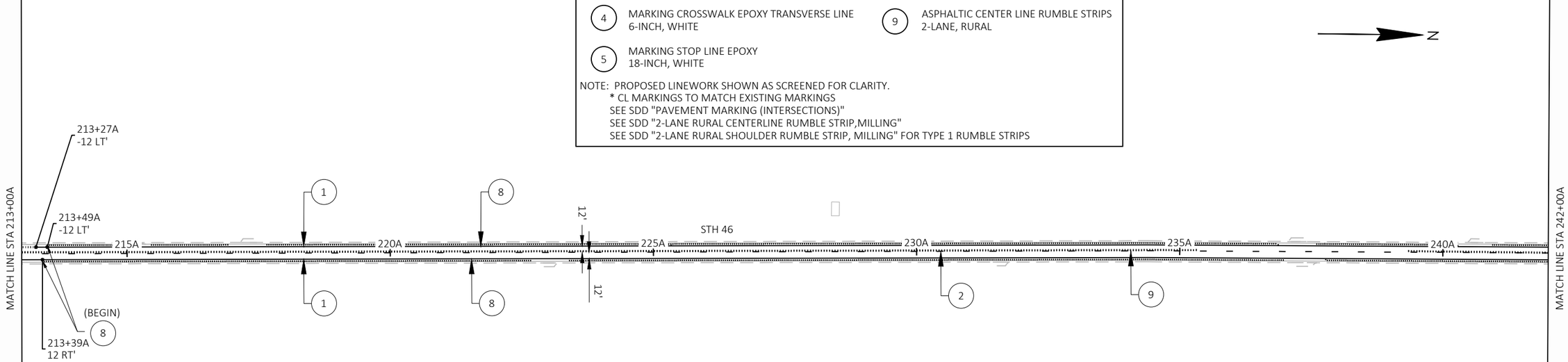

PROJECT NO: 8072-00-70	HWY: STH 46	COUNTY: ST. CROIX/POLK	PERMANENT PAVEMENT MARKING	SHEET 30	E

FILE NAME : \\KLENGINEERING\DATA1\WDOTNW\19065-000 (STH 46)\CIVIL 3D\SHEETSPLAN\023201-PSM.DWG
LAYOUT NAME - 184
PLOT DATE : 7/15/2021 9:15 AM PLOT BY : KL ENGINEERING PLOT NAME : PLOT SCALE : 1 IN:200 FT
WISDOT/CADDS SHEET 44

ST CROIX COUNTY

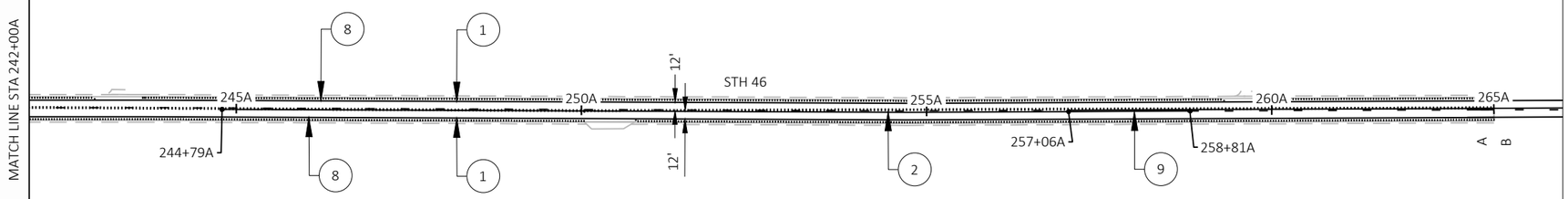

LEGEND

1	MARKING LINE GROOVED WET REF EPOXY 4-INCH, WHITE	6	MARKING DIAGONAL EPOXY 12-INCH YELLOW
2	MARKING LINE SAME DAY EPOXY 4-INCH, YELLOW *	7	MARKING ARROW EPOXY WHITE
3	MARKING LINE GROOVED WET REF EPOXY 8-INCH, WHITE	8	ASPHALTIC SHOULDER RUMBLE STRIPS 2-LANE, RURAL
4	MARKING CROSSWALK EPOXY TRANSVERSE LINE 6-INCH, WHITE	9	ASPHALTIC CENTER LINE RUMBLE STRIPS 2-LANE, RURAL
5	MARKING STOP LINE EPOXY 18-INCH, WHITE		

NOTE: PROPOSED LINEWORK SHOWN AS SCREENED FOR CLARITY.
* CL MARKINGS TO MATCH EXISTING MARKINGS
SEE SDD "PAVEMENT MARKING (INTERSECTIONS)"
SEE SDD "2-LANE RURAL CENTERLINE RUMBLE STRIP,MILLING"
SEE SDD "2-LANE RURAL SHOULDER RUMBLE STRIP, MILLING" FOR TYPE 1 RUMBLE STRIPS

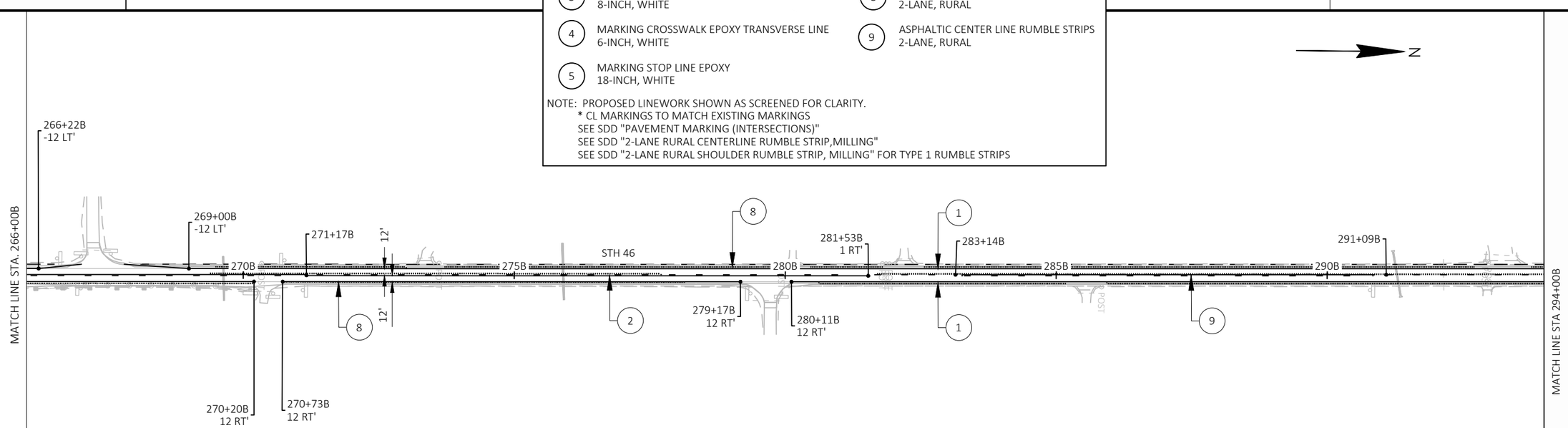

POLK COUNTY

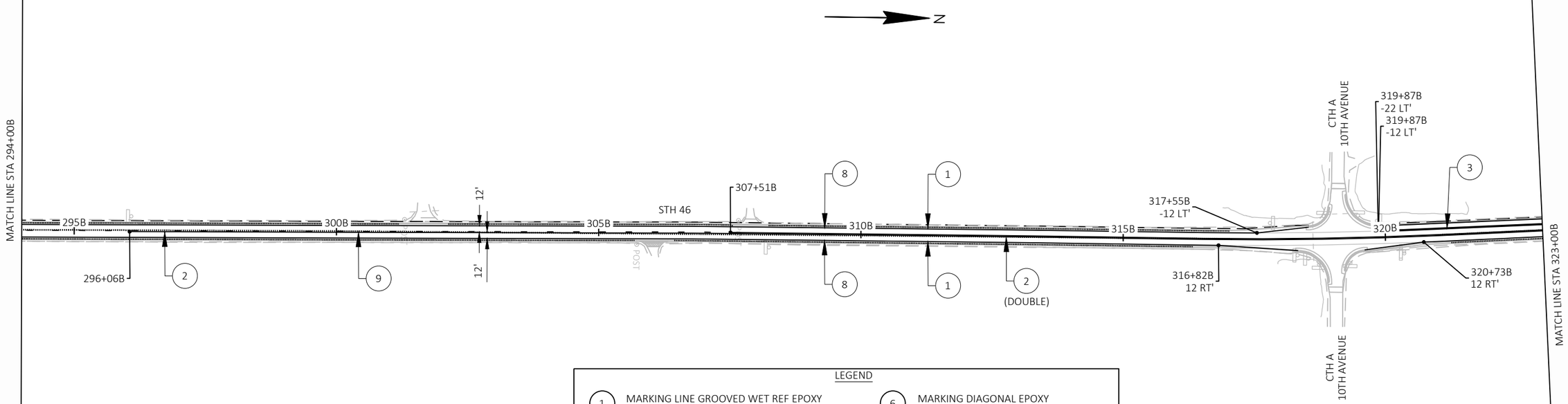

LEGEND

1	MARKING LINE GROOVED WET REF EPOXY 4-INCH, WHITE	6	MARKING DIAGONAL EPOXY 12-INCH YELLOW
2	MARKING LINE SAME DAY EPOXY 4-INCH, YELLOW *	7	MARKING ARROW EPOXY WHITE
3	MARKING LINE GROOVED WET REF EPOXY 8-INCH, WHITE	8	ASPHALTIC SHOULDER RUMBLE STRIPS 2-LANE, RURAL
4	MARKING CROSSWALK EPOXY TRANSVERSE LINE 6-INCH, WHITE	9	ASPHALTIC CENTER LINE RUMBLE STRIPS 2-LANE, RURAL
5	MARKING STOP LINE EPOXY 18-INCH, WHITE		

NOTE: PROPOSED LINEWORK SHOWN AS SCREENED FOR CLARITY.
* CL MARKINGS TO MATCH EXISTING MARKINGS
SEE SDD "PAVEMENT MARKING (INTERSECTIONS)"
SEE SDD "2-LANE RURAL CENTERLINE RUMBLE STRIP,MILLING"
SEE SDD "2-LANE RURAL SHOULDER RUMBLE STRIP, MILLING" FOR TYPE 1 RUMBLE STRIPS

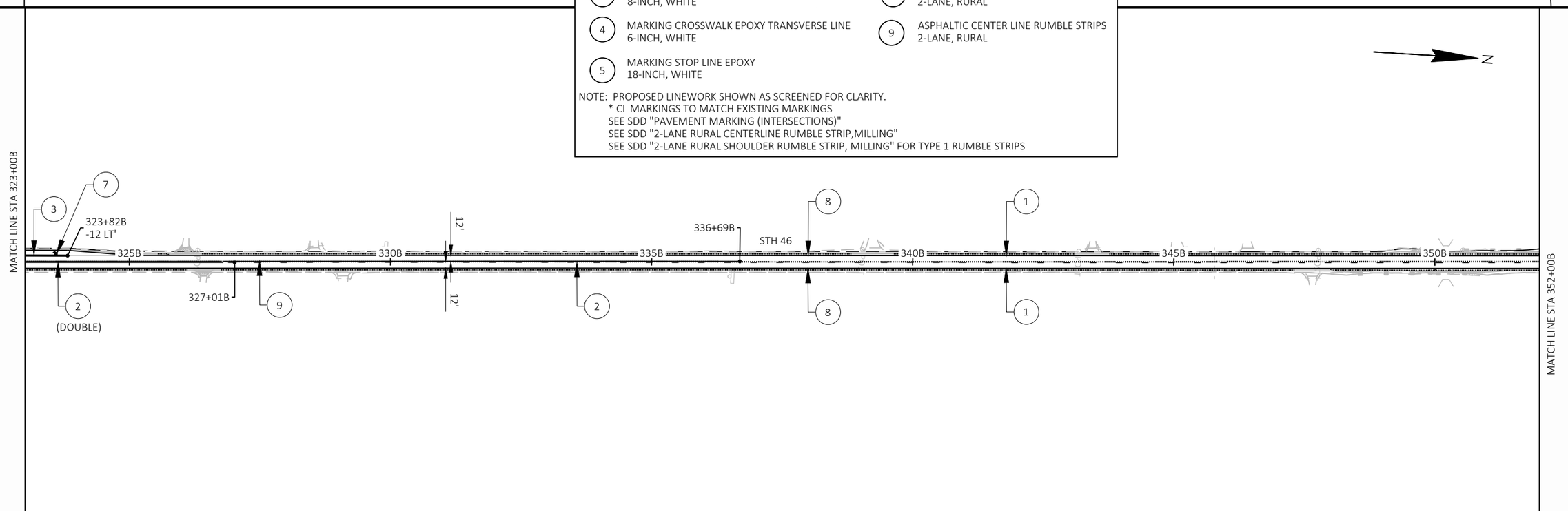

PROJECT NO: 8072-00-70	HWY: STH 46	COUNTY: ST. CROIX/POLK	PERMANENT PAVEMENT MARKING	SHEET 32	E

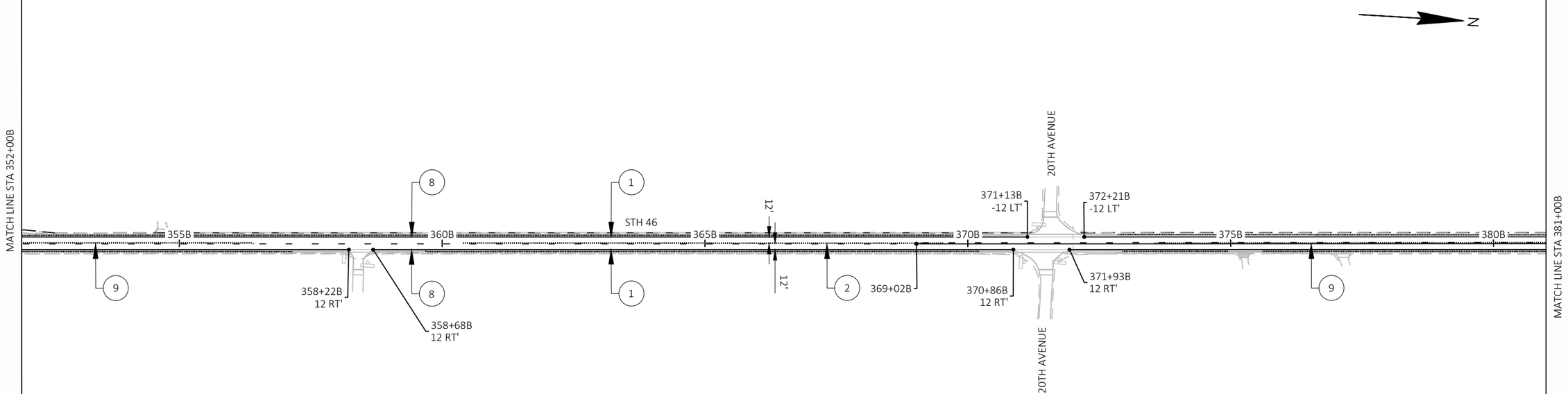

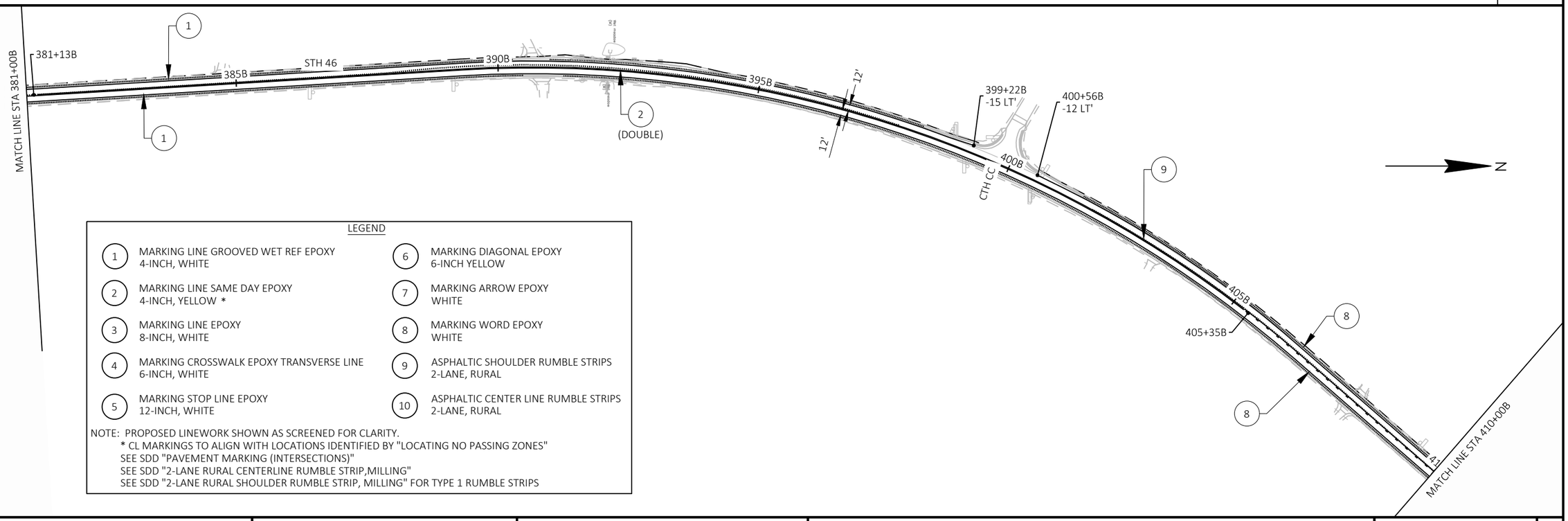

LEGEND

1	MARKING LINE GROOVED WET REF EPOXY 4-INCH, WHITE	6	MARKING DIAGONAL EPOXY 6-INCH YELLOW
2	MARKING LINE SAME DAY EPOXY 4-INCH, YELLOW *	7	MARKING ARROW EPOXY WHITE
3	MARKING LINE EPOXY 8-INCH, WHITE	8	MARKING WORD EPOXY WHITE
4	MARKING CROSSWALK EPOXY TRANSVERSE LINE 6-INCH, WHITE	9	ASPHALTIC SHOULDER RUMBLE STRIPS 2-LANE, RURAL
5	MARKING STOP LINE EPOXY 12-INCH, WHITE	10	ASPHALTIC CENTER LINE RUMBLE STRIPS 2-LANE, RURAL

NOTE: PROPOSED LINEWORK SHOWN AS SCREENED FOR CLARITY.
* CL MARKINGS TO ALIGN WITH LOCATIONS IDENTIFIED BY "LOCATING NO PASSING ZONES"
SEE SDD "PAVEMENT MARKING (INTERSECTIONS)"
SEE SDD "2-LANE RURAL CENTERLINE RUMBLE STRIP,MILLING"
SEE SDD "2-LANE RURAL SHOULDER RUMBLE STRIP, MILLING" FOR TYPE 1 RUMBLE STRIPS

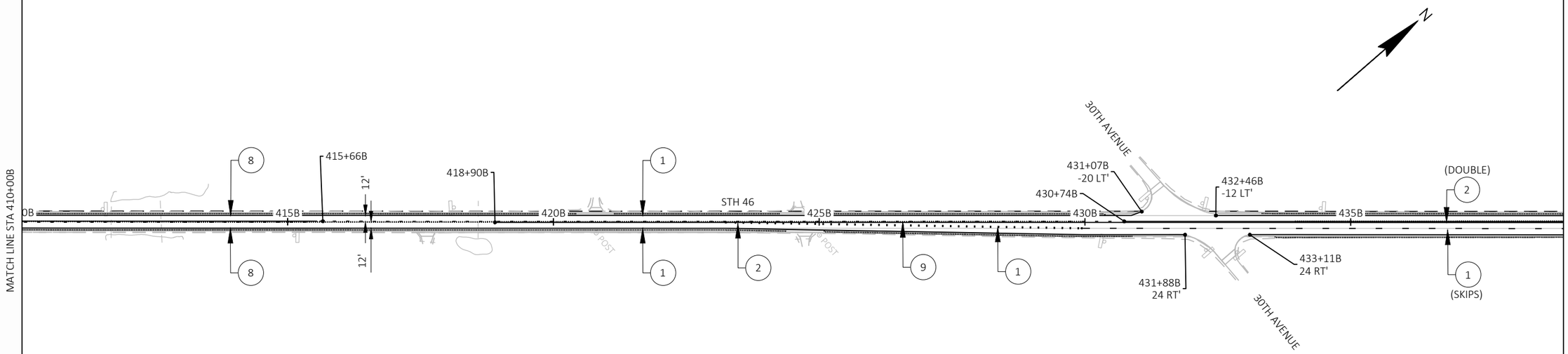

LEGEND

1	MARKING LINE GROOVED WET REF EPOXY 4-INCH, WHITE	6	MARKING DIAGONAL EPOXY 12-INCH YELLOW
2	MARKING LINE SAME DAY EPOXY 4-INCH, YELLOW *	7	MARKING ARROW EPOXY WHITE
3	MARKING LINE GROOVED WET REF EPOXY 8-INCH, WHITE	8	ASPHALTIC SHOULDER RUMBLE STRIPS 2-LANE, RURAL
4	MARKING CROSSWALK EPOXY TRANSVERSE LINE 6-INCH, WHITE	9	ASPHALTIC CENTER LINE RUMBLE STRIPS 2-LANE, RURAL
5	MARKING STOP LINE EPOXY 18-INCH, WHITE		

NOTE: PROPOSED LINEWORK SHOWN AS SCREENED FOR CLARITY.
* CL MARKINGS TO MATCH EXISTING MARKINGS
SEE SDD "PAVEMENT MARKING (INTERSECTIONS)"
SEE SDD "2-LANE RURAL CENTERLINE RUMBLE STRIP,MILLING"
SEE SDD "2-LANE RURAL SHOULDER RUMBLE STRIP, MILLING" FOR TYPE 1 RUMBLE STRIPS

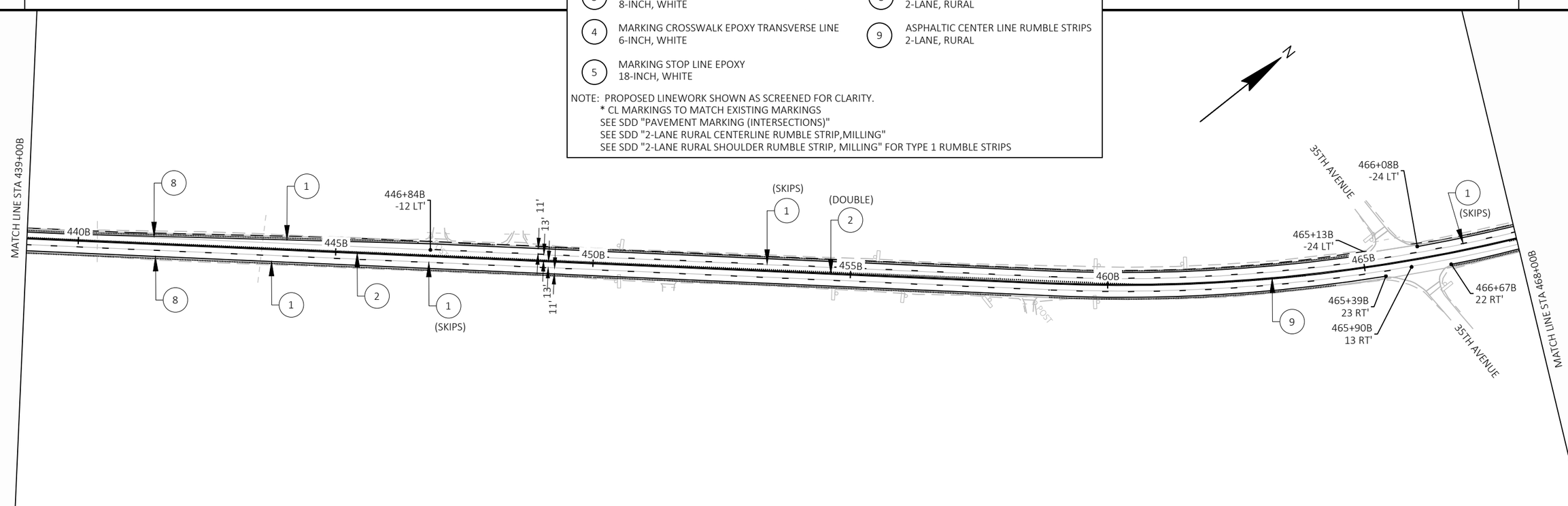

PROJECT NO: 8072-00-70	HWY: STH 46	COUNTY: ST. CROIX/POLK	PERMANENT PAVEMENT MARKING	SHEET 34	E

FILE NAME : \\KLENGINEERING\DATA1\WDOTNW\19065-000 (STH 46)\CIVIL 3D\SHEETSPLAN\023201-PSM.DWG
LAYOUT NAME - 410
PLOT DATE : 7/15/2021 9:15 AM PLOT BY : KL ENGINEERING PLOT NAME : PLOT SCALE : ############

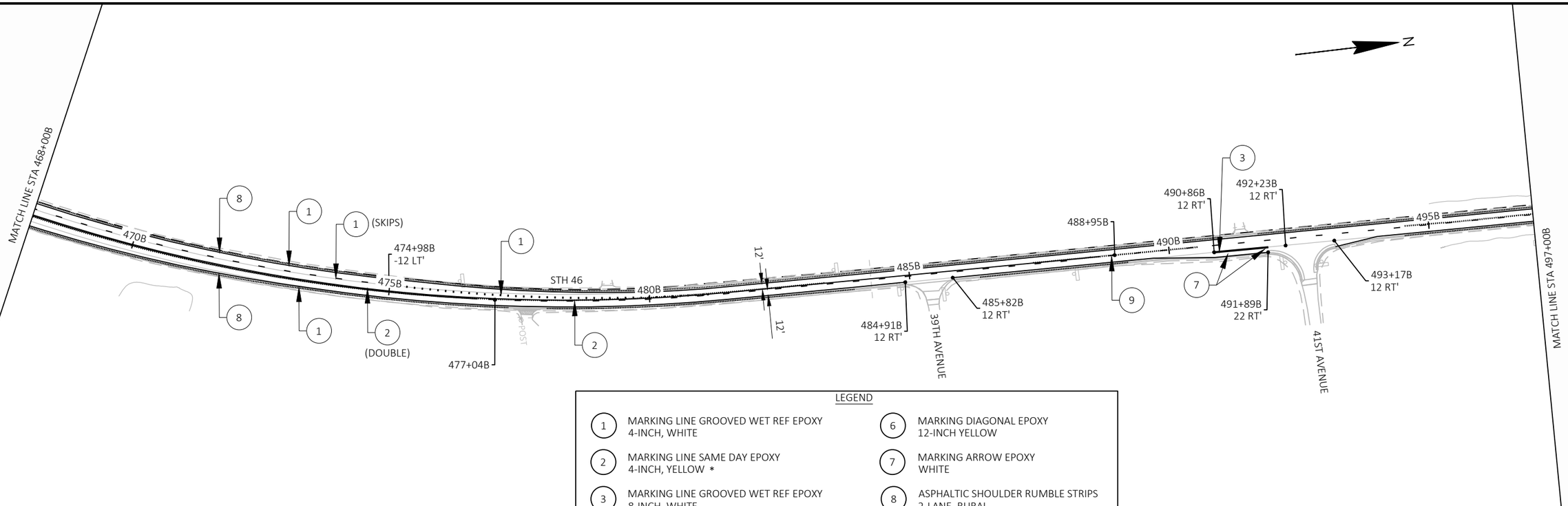

LEGEND

1	MARKING LINE GROOVED WET REF EPOXY 4-INCH, WHITE	6	MARKING DIAGONAL EPOXY 12-INCH YELLOW
2	MARKING LINE SAME DAY EPOXY 4-INCH, YELLOW *	7	MARKING ARROW EPOXY WHITE
3	MARKING LINE GROOVED WET REF EPOXY 8-INCH, WHITE	8	ASPHALTIC SHOULDER RUMBLE STRIPS 2-LANE, RURAL
4	MARKING CROSSWALK EPOXY TRANSVERSE LINE 6-INCH, WHITE	9	ASPHALTIC CENTER LINE RUMBLE STRIPS 2-LANE, RURAL
5	MARKING STOP LINE EPOXY 18-INCH, WHITE		

NOTE: PROPOSED LINEWORK SHOWN AS SCREENED FOR CLARITY.
* CL MARKINGS TO MATCH EXISTING MARKINGS
SEE SDD "PAVEMENT MARKING (INTERSECTIONS)"
SEE SDD "2-LANE RURAL CENTERLINE RUMBLE STRIP,MILLING"
SEE SDD "2-LANE RURAL SHOULDER RUMBLE STRIP, MILLING" FOR TYPE 1 RUMBLE STRIPS

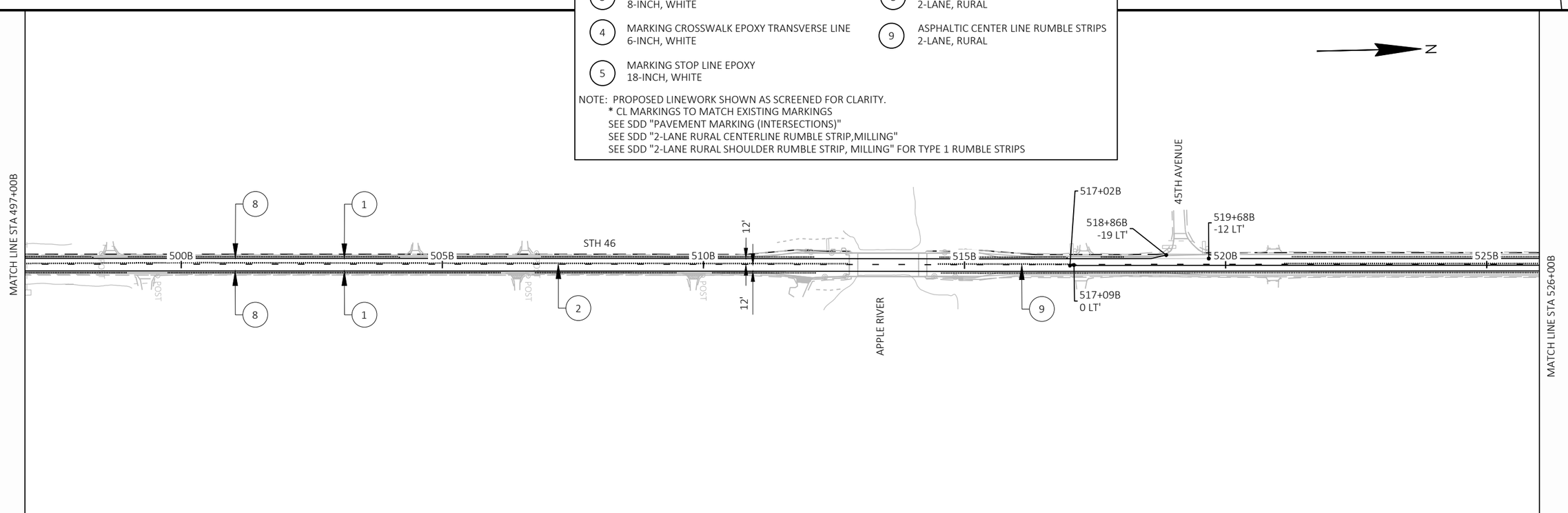

PROJECT NO: 8072-00-70	HWY: STH 46	COUNTY: ST. CROIX/POLK	PERMANENT PAVEMENT MARKING	SHEET 35	E

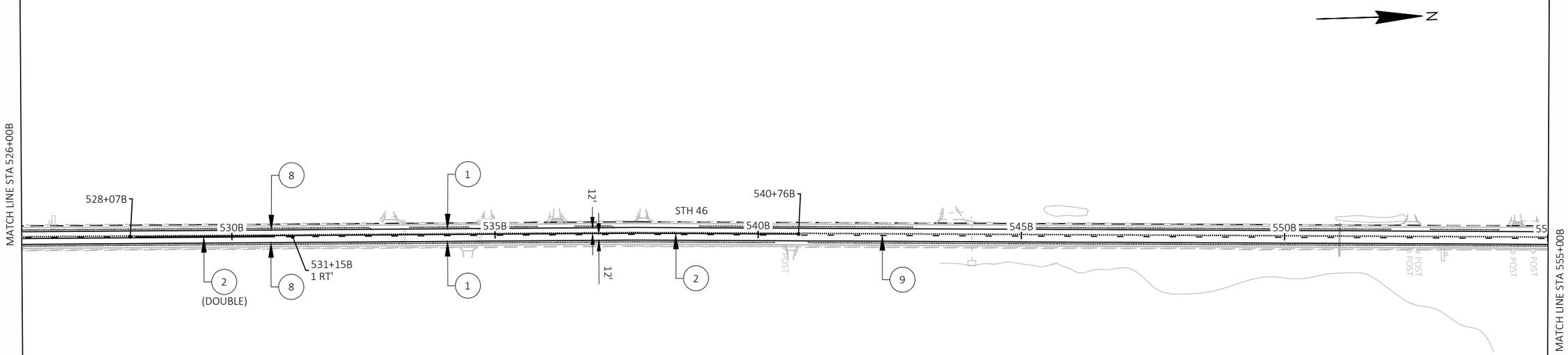

LEGEND

1	MARKING LINE GROOVED WET REF EPOXY 4-INCH, WHITE	6	MARKING DIAGONAL EPOXY 12-INCH YELLOW
2	MARKING LINE SAME DAY EPOXY 4-INCH, YELLOW *	7	MARKING ARROW EPOXY WHITE
3	MARKING LINE GROOVED WET REF EPOXY 8-INCH, WHITE	8	ASPHALTIC SHOULDER RUMBLE STRIPS 2-LANE, RURAL
4	MARKING CROSSWALK EPOXY TRANSVERSE LINE 6-INCH, WHITE	9	ASPHALTIC CENTER LINE RUMBLE STRIPS 2-LANE, RURAL
5	MARKING STOP LINE EPOXY 18-INCH, WHITE		

NOTE: PROPOSED LINEWORK SHOWN AS SCREENED FOR CLARITY.
* CL MARKINGS TO MATCH EXISTING MARKINGS
SEE SDD "PAVEMENT MARKING (INTERSECTIONS)"
SEE SDD "2-LANE RURAL CENTERLINE RUMBLE STRIP,MILLING"
SEE SDD "2-LANE RURAL SHOULDER RUMBLE STRIP, MILLING" FOR TYPE 1 RUMBLE STRIPS

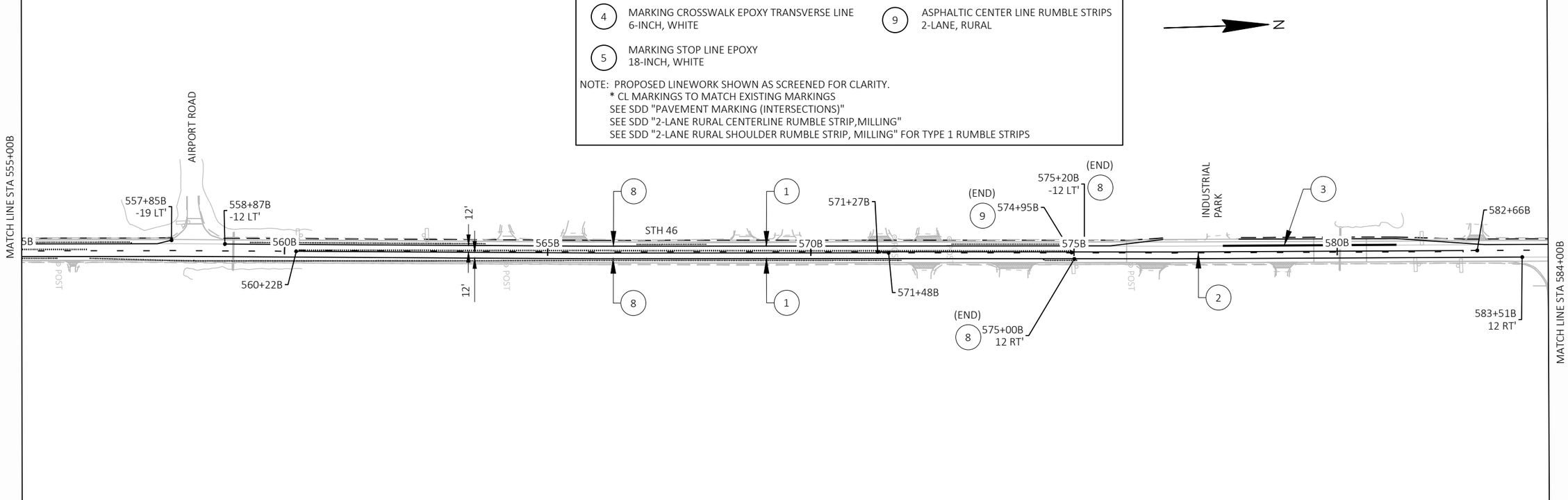

PROJECT NO: 8072-00-70	HWY: STH 46	COUNTY: ST. CROIX/POLK	PERMANENT PAVEMENT MARKING	SHEET 36	E

FILE NAME : \\KLENGINEERING\DATA1\WDOTNW\19065-000 (STH 46)\CIVIL 3D\SHEETSPLAN\023201-PSM.DWG
LAYOUT NAME - 526
PLOT DATE : 7/15/2021 9:15 AM PLOT BY : KL ENGINEERING PLOT NAME : PLOT SCALE : ##########

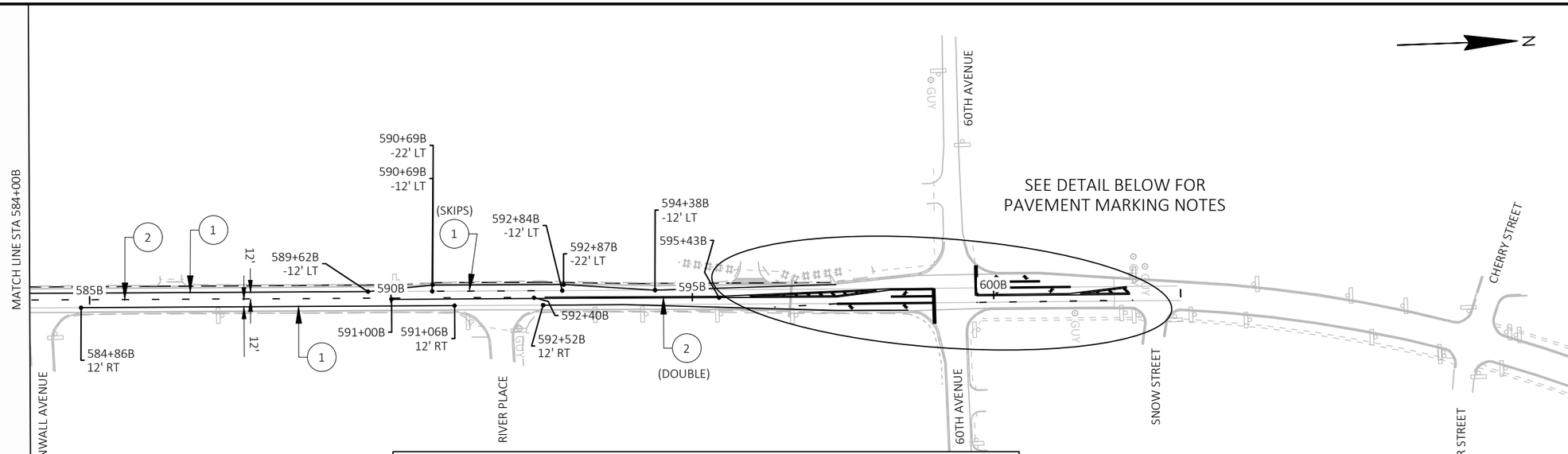

LEGEND

1	MARKING LINE GROOVED WET REF EPOXY 4-INCH, WHITE	6	MARKING DIAGONAL EPOXY 12-INCH YELLOW
2	MARKING LINE SAME DAY EPOXY 4-INCH, YELLOW *	7	MARKING ARROW EPOXY WHITE
3	MARKING LINE GROOVED WET REF EPOXY 8-INCH, WHITE	8	ASPHALTIC SHOULDER RUMBLE STRIPS 2-LANE, RURAL
4	MARKING CROSSWALK EPOXY TRANSVERSE LINE 6-INCH, WHITE	9	ASPHALTIC CENTER LINE RUMBLE STRIPS 2-LANE, RURAL
5	MARKING STOP LINE EPOXY 18-INCH, WHITE		

NOTE: PROPOSED LINEWORK SHOWN AS SCREENED FOR CLARITY.
* CL MARKINGS TO MATCH EXISTING MARKINGS
SEE SDD "PAVEMENT MARKING (INTERSECTIONS)"
SEE SDD "2-LANE RURAL CENTERLINE RUMBLE STRIP,MILLING"
SEE SDD "2-LANE RURAL SHOULDER RUMBLE STRIP, MILLING" FOR TYPE 1 RUMBLE STRIPS

PAVEMENT MARKING
DETAIL

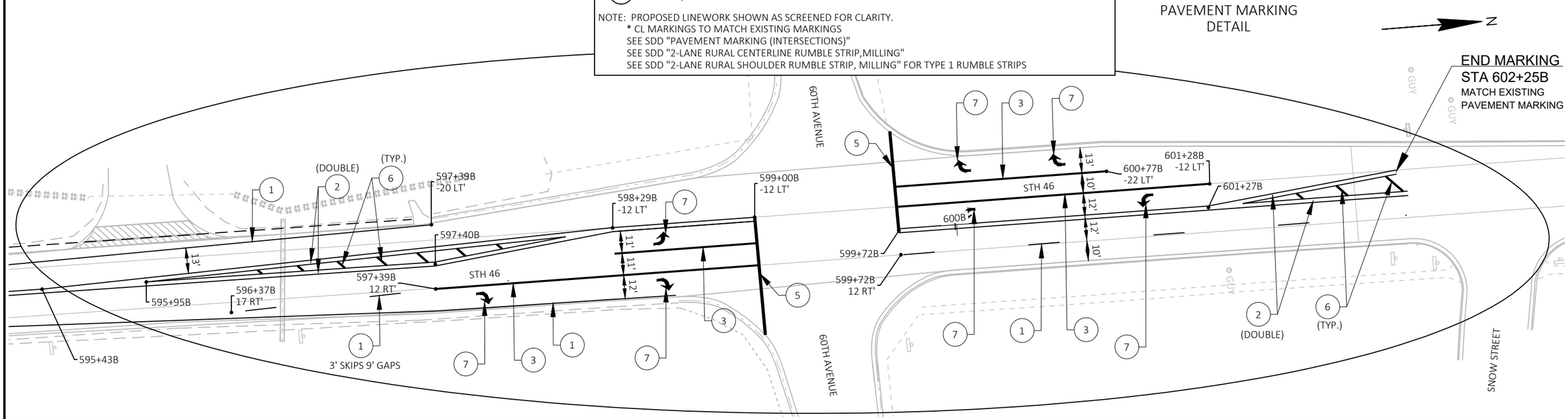

PROJECT NO: 8072-00-70	HWY: STH 46	COUNTY: ST. CROIX/POLK	PERMANENT PAVEMENT MARKING	SHEET 37	E

FILE NAME : \\KLENGINEERING\DATA1\WDOTNW\19065-000 (STH 46)\CIVIL 3D\SHEETSPLAN\023201-PSM.DWG
LAYOUT NAME - 584
PLOT DATE : 7/15/2021 9:15 AM PLOT BY : KL ENGINEERING PLOT NAME : PLOT SCALE : ##########

2

LEGEND

- EXISTING CONTROL CABINET
- EXISTING CONDUIT AND WIRING
- NONMETALLIC CONDUIT, 2" UNLESS OTHERWISE NOTED
- EXISTING SIGNAL HEAD, TRAFFIC SIGNAL STANDARD, PEDESTAL BASE
- (XX) EXISITING SIGNAL HEAD, TRAFFIC SIGNAL POLE, TRANSFORMER BASE
- EXISTING LUMINAIRE LED C, UNLESS OTHERWISE NOTED, TRAFFIC POLE, TRANSFORMER BASE
- LUMINAIRE LED C, UNLESS OTHERWISE NOTED, TRAFFIC POLE, TRANSFORMER BASE
- EXISTING LOOP DETECTOR
- PULL BOX
- LANE DESIGNATION FOR INFO ONLY

KEYED NOTES:

1. SPLICE LIGHTING CIRCUIT CONDUCTORS IN LB1 AND LB3 TO PROVIDE POWER TO LB2 AND LB4.
2. REMOVE EXISTING SIGNAL CABLE AND REPLACE WITH 2-12 UF CABLE GROUNDED

CONSTRUCTION NOTES:

1) THE LOCATION OF EXISTING AND PROPOSED UTILITY INSTALLATIONS ARE APPROXIMATE. THERE MAY BE OTHER UTILITY INSTALLATIONS WITHIN THE PROJECT AREA WHICH ARE NOT SHOWN.
2) THE LOCATION OF SIGNAL EQUIPMENT IS BASED ON COMBINATION OF FIELD SURVEY AND AS-BUILT DRAWINGS.
3) THE ENGINEER SHALL APPROVE THE FINAL LOCATION FOR ALL CONCRETE BASES IN THE FIELD PRIOR TO CONSTRUCTION.
4) PITCH ALL CONDUITS TOWARD PULLBOXES. INSTALL A 2" DRAIN DUCT TO DITCH OR STORM SEWER AS REQUIRED FOR DRAINAGE. THIS 2" DRAIN DUCT IS INCIDENTAL TO THE PULL BOX BID ITEM. DRAIN DUCT IS NOT SHOWN. DO NOT SPLICE IN PULLBOXES.
5) EXISTING LOOPS IN PAVEMENT SHALL BE PRESERVED FOR FUTURE USE.
6) LIGHTING UNITS SHALL CONSIST OF TYPE 5 CONCRETE BASES AND ALUMINUM POLES, 11 1/2 INCH BOLT CIRCLE TRANSFORMER BASES, 10 FT ARMS AND LED A LUMINAIRES, ALL PAID FOR SEPARATELY UNDER THEIR RESPECTIVE BID ITEMS.

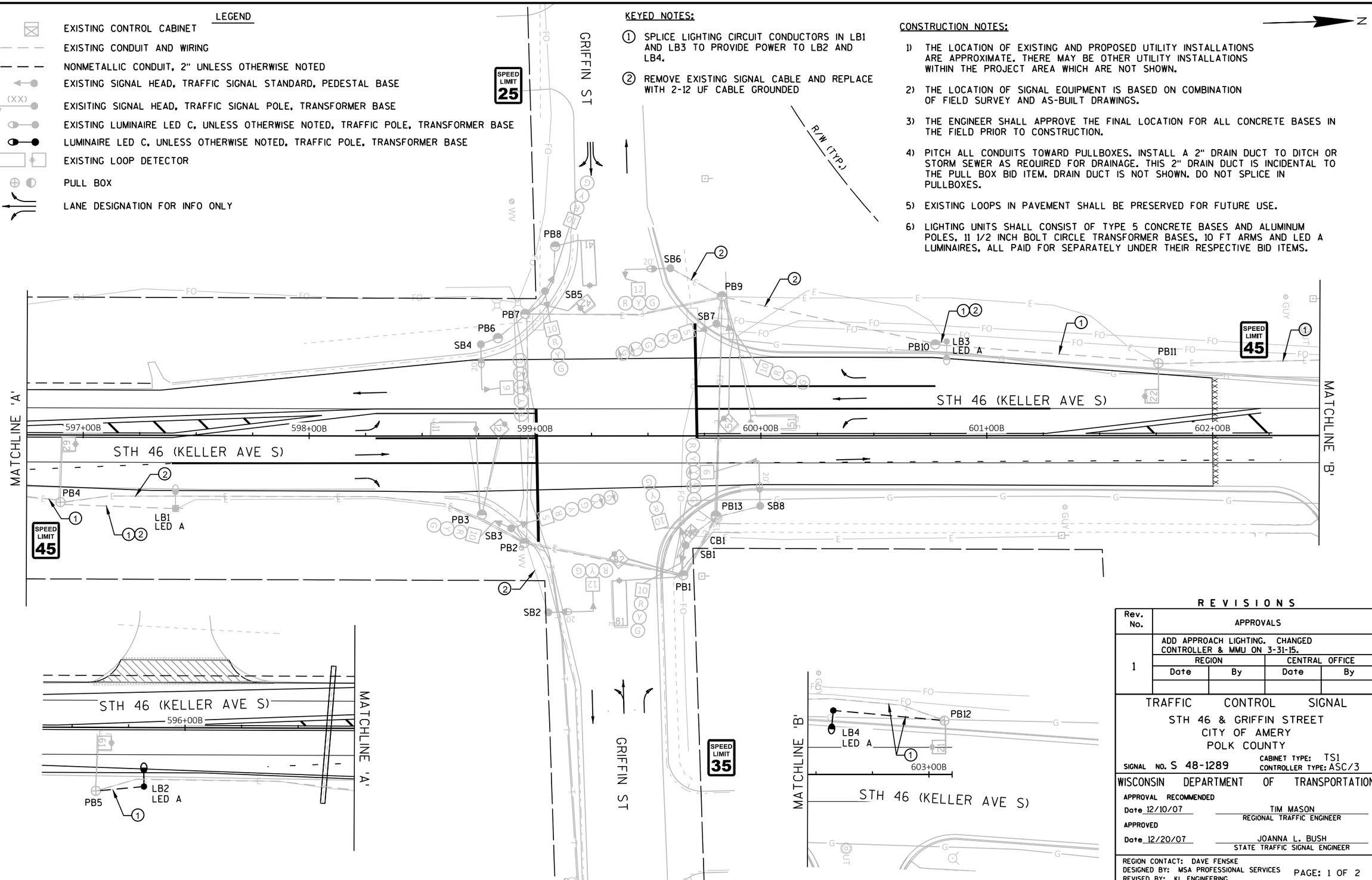

REVISIONS

Rev. No.	APPROVALS			
1	ADD APPROACH LIGHTING. CHANGED CONTROLLER & MMU ON 3-31-15.			
	REGION		CENTRAL OFFICE	
	Date	By	Date	By

TRAFFIC CONTROL SIGNAL
STH 46 & GRIFFIN STREET
CITY OF AMERY
POLK COUNTY

SIGNAL NO. S 48-1289
CABINET TYPE: TS1
CONTROLLER TYPE: ASC/3

WISCONSIN DEPARTMENT OF TRANSPORTATION

APPROVAL RECOMMENDED
Date 12/10/07 — TIM MASON, REGIONAL TRAFFIC ENGINEER

APPROVED
Date 12/20/07 — JOANNA L. BUSH, STATE TRAFFIC SIGNAL ENGINEER

REGION CONTACT: DAVE FENSKE
DESIGNED BY: MSA PROFESSIONAL SERVICES
REVISED BY: KL ENGINEERING

PAGE: 1 OF 2

PROJECT NO: 8072-00-70	HWY: STH 46	COUNTY: ST CROIX/POLK	ELECTRICAL MODIFICATION DETAIL	SHEET 38	E

SEQUENCE OF OPERATION

			φ1			φ2			φ3			φ4			FLASH
			CLEAR TO			CLEAR TO			CLEAR TO			CLEAR TO			
	HEAD NUMBERS	R/W	**			R/W	**		R/W	**		R/W	**		
RING 1	01 2,3	G	Y	-		-	-	-				-	-	-	-
	02 4,5,6	R	R	R		G	Y	R				R	R	R	R
	04 7,8,9	R	R	R		R	R	R				G	Y	R	R
	05 5,6	-	-	-		-	-	-				-	-	-	-
	06 1,2,3	R	R	R		R	R	R				R	R	R	R
	08 10,11,12	R	R	R		R	R	R				R	R	R	R
	08P														

NOT USED

NOT USED

			φ5			φ6			φ7			φ8		
			CLEAR TO			CLEAR TO			CLEAR TO			CLEAR TO		
	HEAD NUMBERS	R/W	**			R/W	**		R/W	**		R/W	**	
RING 2	01 2,3	-	-	-		-	-	-				-	-	-
	02 4,5,6	R	R	R		R	R	R				R	R	R
	04 7,8,9	R	R	R		R	R	R				R	R	R
	05 5,6	G	Y			-	-	-				-	-	-
	06 1,2,3	R	R	R		G	Y	R				R	R	R
	08 10,11,12	R	R	R		R	R	R				G	Y	R
	08P													

BARRIER

** CLEARANCE TO A PHASE IN CONFLICT WITH THIS PHASE ON (SEE CHART 1)

CHART 1

PHASE ON	NONCONFLICTING PHASE ALLOWED TO TIME CONCURRENTLY	PHASES IN CONFLICT WITH PHASE ON
1	5 OR 6	2,4,8
2	5 OR 6	1,4,8
4	8	1,2,5,6
5	1 OR 2	4,6,8
6	1 OR 2	4,5,8
8	4	1,2,5,6

N

DETECTOR LOGIC

LOOP NUMBER	DETECTOR NUMBER	AMPLIFIER CHANNEL NUMBER	DETECTOR OPERATION: CALLS AND EXTENDS	DETECTOR OPERATION: CALLS ONLY	DETECTOR OPERATION: EXTENDS ONLY	PHASE CALLED	PHASE EXTENDED	DETECTOR DISCONNECT PHASE	CALLING DELAY	EXTENSION STRETCH	LOOP SIZE (FEET)	NUMBER OF TURNS
11	1	1	X			1	1		(X=3")		6X20	3
12	1	1	X			1	1		(X=3")		6X6	4
21	2	2	X			2	2				6X6	5
22	2	2	X			2	2				6X6	4
41	4	3	X			4	4		(X=5")		6X20	2
42	4	3	X			4	4		(X=5")		6X6	3
51	5	4	X			5	5		(X=3")		6X20	2
52	5	4	X			5	5		(X=3")		6X6	3
61	6	5	X			6	6				6X6	6
62	6	5	X			6	6				6X6	5
81	8	6	X			8	8		(X=2")		6X20	2
82	8	6	X			8	8		(X=2")		6X6	3

CONTROLLER LOGIC

PHASE NUMBER	PHASE LOCKING	DUAL ENTRY W / Ø	PHASE RECALL	PHASE ACTIVE
1		6		X
2	X	6	MIN.	X
4		8		X
5		2		X
6	X	2	MIN.	X
8		4		X

OVERLAPS

O.L. "A" =
O.L. "B" =
O.L. "C" =
O.L. "D" =

TYPE OF INTERCONNECT COMMUNICATION	
NONE	
CLOSED LOOP TWISTED PAIR	
FIBER OPTIC NETWORK	
INTERSECTION ONLY (CELL MODEM)*	X

*LOCATION OF CELL MODEM
CONTROLLER NO: S-48-0222
SIGNAL SYSTEM: SS-48-0001

TYPE OF PRE-EMPT	
NONE	
RAILROAD	
EMERGENCY VEHICLE	X
GTT	X
TOMAR	
HARDWIRE	
OTHER	
LIFT BRIDGE	
QUEUE DETECTOR	

TYPE OF LIGHTING	
BY OTHER AGENCY	
IN TRAFFIC SIGNAL CABINET	X
IN SEPARATE DOT LIGHTING CABINET*	

EMERGENCY VEHICLE PREEMPTION ASSIGNMENT

EMERGENCY VEHICLE DETECTOR	A	B	C	D
PREEMPTION CHANNEL	1	2	3	4
MOVEMENT				
DIRECTION	SB	NB	EB	WB
PHASES	2+5	1+6	4	8

NOTES:
FULL CLEARANCE AND MINIMUM GREEN INTERVALS SHALL ALWAYS BE PROVIDED.

STH 46 & GRIFFIN STREET
CITY OF AMERY
POLK COUNTY

SIGNAL NO. S 48-1289

CONTROLLER TYPE: ASC/3 TS1

DATE 12/20/07 PAGE NO. 2 OF 2

2

ST CROIX COUNTY

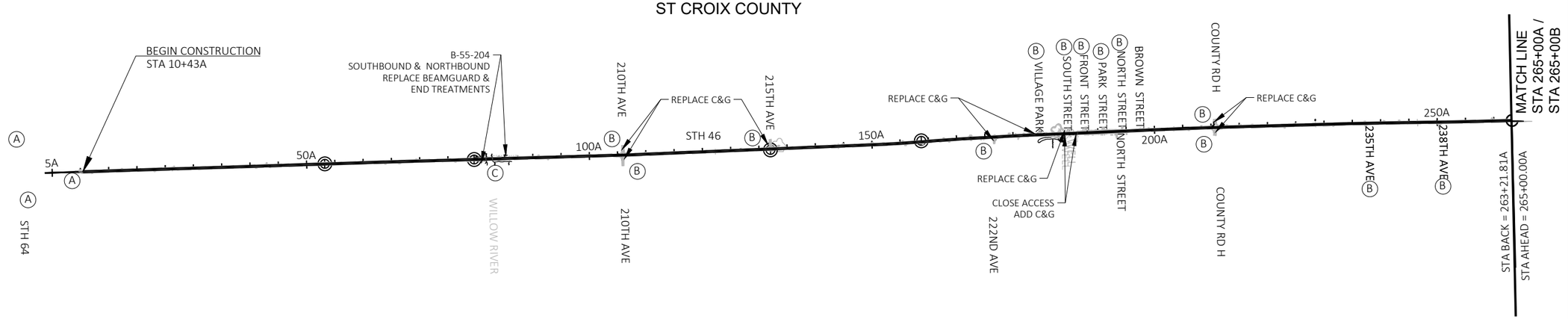

2

GENERAL NOTES:

DRAWING IS NOT TO SCALE.

ALL TRAFFIC CONTROL SIGNS AND DEVICES AND THEIR LOCATION SHALL BE IN CONFORMANCE WITH THE WISCONSIN MANUAL ON UNIFORM TRAFFIC CONTROL DEVICES (WMUTCD), THE PLANS, STANDARD SPECIFICATIONS, CONTRACT AND APPLICABLE STANDARD DETAIL DRAWINGS.

THE EXACT NUMBER, LOCATION AND SPACING OF ALL SIGNS AND DEVICES SHALL BE ADJUSTED TO FIT FIELD CONDITIONS AS DIRECTED BY THE ENGINEER.

PERFORM MAINLINE PAVEMENT MARKING OPERATIONS IN ACCORDANCE WITH SDD 15C9 "MOVING PAVEMENT MARKING OPERATION TWO-LANE TWO-WAY ROADWAY". FOLLOW SDD 15C12 "TRAFFIC CONTROL FOR LANE CLOSURE WITH FLAGGING OPERATION" FOR WORK OPERATIONS THAT REQUIRE ENCROACHMENT OR CLOSURE OF A TRAVEL LANE OF STH 46.

PLACE WO8-1 "BUMP" SIGNS IN ADVANCE OF THE LIMITS OF MILLING AND/OR PAVING LIMITS WHERE THE DRIVING SURFACE IS NOT AT THE SAME ELEVATION AS THE ADJACENT SURFACE, INCLUDING AT SIDE ROADS.

PLACE WO8-15 "GROOVED PAVEMENT" SIGNS IN ADVANCE OF THE LIMITS WHERE TRAFFIC WILL UTILIZE THE MILLED SURFACE, INCLUDING AT SIDE ROADS.

PLACE WO8-12 "NO CENTER LINE" SIGNS AT THE BEGINNING OF SEGMENTS WITHOUT CENTERLINE MARKINGS AND AT INTERVALS OF NO MORE THAN 2 MILES WITHIN THE WORK ZONE.

LOCATIONS AS SHOWN IN PLAN FOR SHOULDER CLOSURES ARE FOR INFORMATIONAL PURPOSES ONLY. ACTUAL TRAFFIC CONTROL REQUIREMENTS WILL BE DEPENDENT ON CONTRACTOR MEANS & METHODS AND/OR AS DIRECTED BY THE ENGINEER.

REPLACE CULVERT AT 580+06B HALF AT A TIME UTILIZING SINGLE LANE CLOSURE WITH FLAGGING.

POLK COUNTY

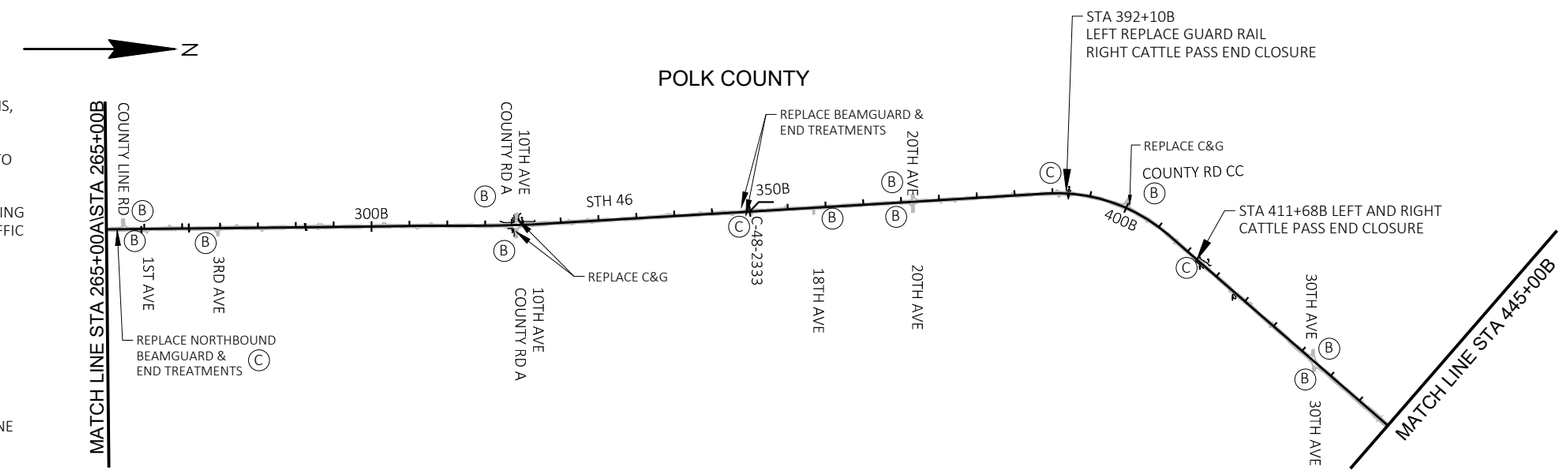

POLK COUNTY

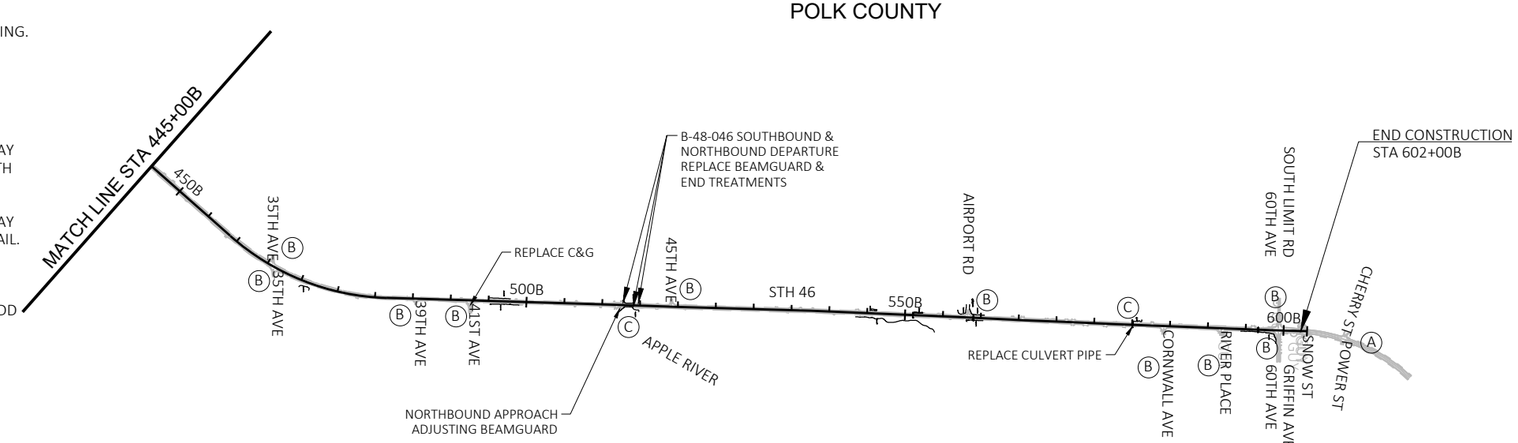

LEGEND:

(A) FOLLOW SDD "TRAFFIC CONTROL, ADVANCE WARNING SIGNS 45 M.P.H. OR GREATER TWO-WAY UNDIVIDED ROAD OPEN TO TRAFFIC". INCLUDE SUPPLEMENTAL M1-4 SIGNS (24"X24") FOR STH 46 ON ADVANCED WARNING SIGNS PLACED ON STH 64.

(B) FOLLOW SDD "TRAFFIC CONTROL, ADVANCE WARNING SIGNS 45 M.P.H. OR GREATER TWO-WAY UNDIVIDED ROAD OPEN TO TRAFFIC" FOR TYPICAL SIDEROAD APPROACH WARNING SIGN DETAIL.

(C) FOLLOW SDD "TRAFFIC CONTROL, WORK ON SHOULDER OR PARKING LANE, UNDIVIDED ROADWAY" FOR WORK THAT WILL TAKE PLACE OUTSIDE OF THE TRAVEL LANES OF STH 46. IF WORK, EQUIPMENT, MATERIALS, ETC. WILL ENCROACH INTO THE TRAVEL LANES OF STH 46, SDD "TRAFFIC CONTROL FOR LANE CLOSURE WITH FLAGGING OPERATION" SHALL BE UTILIZED.

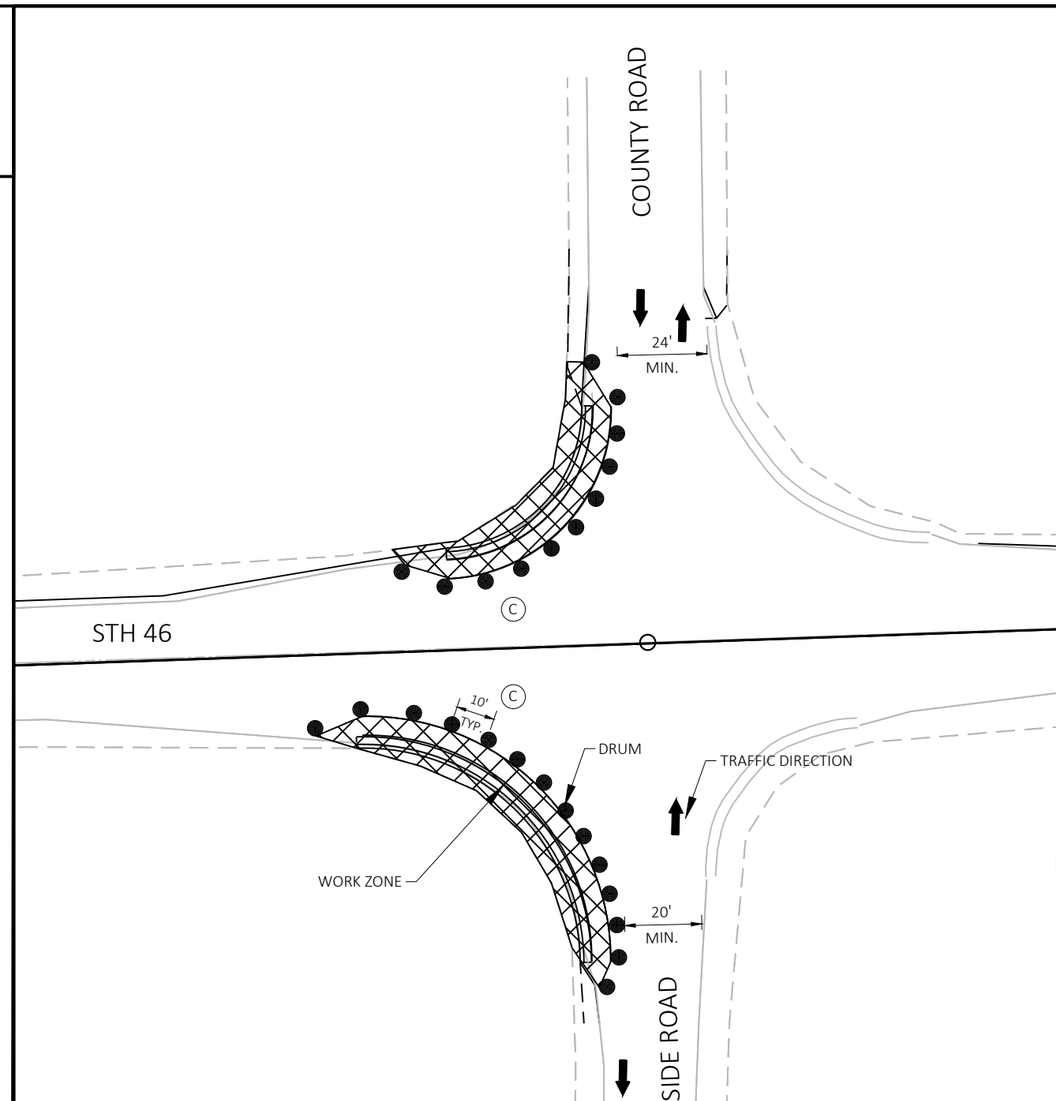

STAGE 1

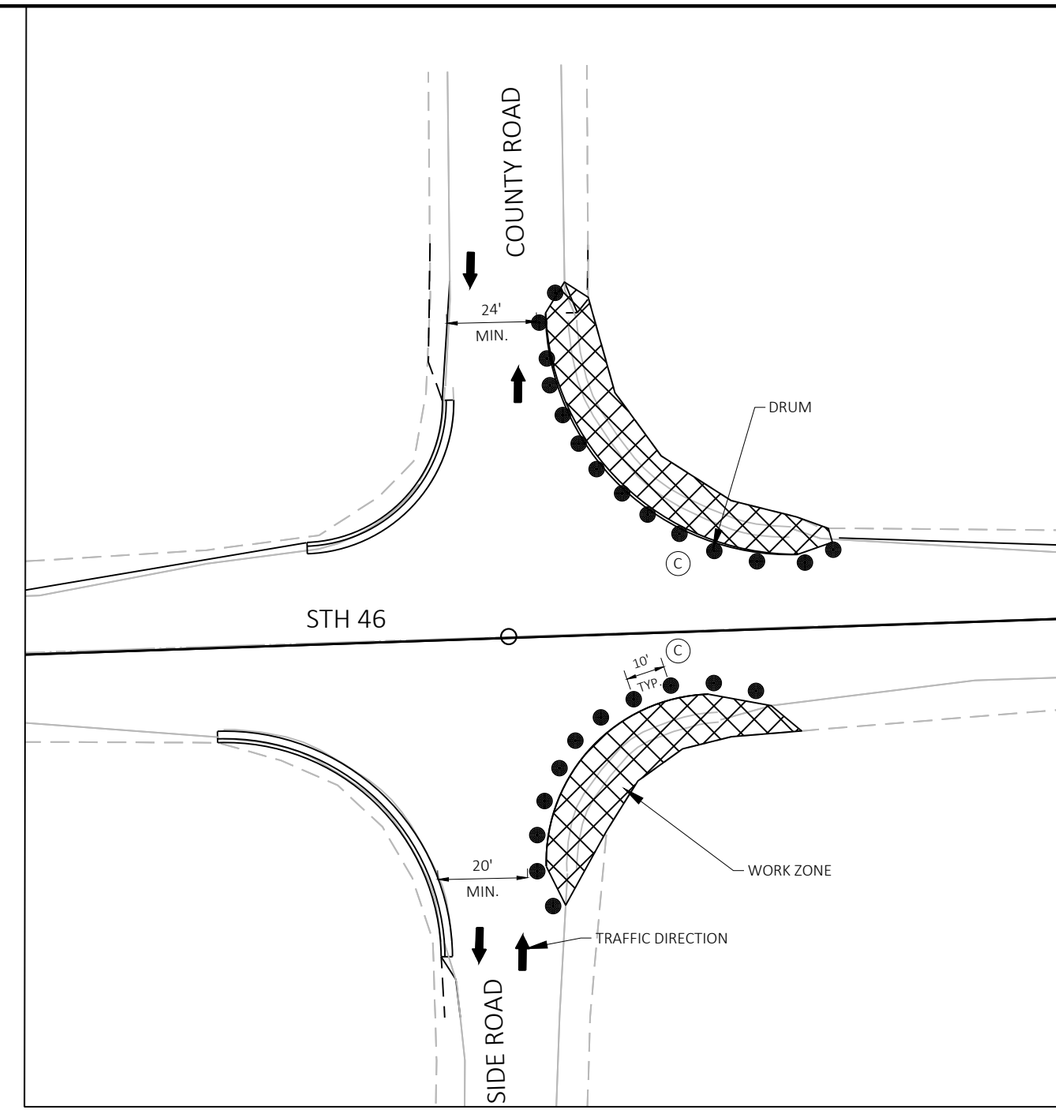

STAGE 2

NOTES:

PLACE DRUMS ALONG EDGE OF EXCAVATION DURING NON-WORKING HOURS

AFTER PLACEMENT OF ASPHALTIC PAVEMENT, REMOVE DRUMS

FOLLOW SDD 15C12 "TRAFFIC CONTROL FOR LANE CLOSURE WITH FLAGGING OPERATION" FOR WORK OPERATIONS THAT REQUIRE ENCROACHMENT INTO A TRAVEL LANE

(C) FOLLOW SDD 15D28 "TRAFFIC CONTROL, WORK ON SHOULDER OR PARKING LANE, UNDIVIDED ROADWAY" FOR WORK THAT WILL TAKE PLACE OUTSIDE OF THE TRAVEL LANES OF STH 46. IF WORK, EQUIPMENT, MATERIALS, ETC. WILL ENCROACH INTO THE TRAVEL LANES OF STH 46, SDD 15C12 "TRAFFIC CONTROL FOR LANE CLOSURE WITH FLAGGING OPERATION" SHALL BE UTILIZED. LOCATIONS AS SHOWN IN PLAN FOR SHOULDER CLOSURES ARE FOR INFORMATIONAL PURPOSES ONLY. ACTUAL TRAFFIC CONTROL REQUIREMENTS WILL BE DEPENDENT ON CONTRACTOR MEANS & METHODS AND/OR AS DIRECTED BY THE ENGINEER.

N

PROJECT NO: 8072-00-70	HWY: STH 46	COUNTY: ST. CROIX/POLK	TRAFFIC CONTROL - INTERSECTION STAGING	SHEET 41	E

Line	Item	Item Description	Unit	Total	8072-00-70 Qty	8072-00-71 Qty
0002	201.0105	Clearing	STA	10.000	10.000	
0004	203.0100	Removing Small Pipe Culverts	EACH	1.000	1.000	
0006	204.0110	Removing Asphaltic Surface	SY	3,425.000	3,425.000	
0008	204.0115	Removing Asphaltic Surface Butt Joints	SY	2,025.000	2,025.000	
0010	204.0120	Removing Asphaltic Surface Milling	SY	229,000.000	229,000.000	
0012	204.0150	Removing Curb & Gutter	LF	1,540.000	1,540.000	
0014	204.0165	Removing Guardrail	LF	1,769.000	1,769.000	
0016	204.9090.S	Removing (item description) 01. Electrical Conductors From Existing Conduit	LF	534.000	534.000	
0018	206.2000	Excavation for Structures Culverts (structure) 01. C-48-2333	LS	1.000	1.000	
0020	210.1100	Backfill Structure Type A	CY	23.000	23.000	
0022	211.0100	Prepare Foundation for Asphaltic Paving (project) 01. 8072-00-70	LS	1.000	1.000	
0024	211.0100	Prepare Foundation for Asphaltic Paving (project) 02. 8072-00-71	LS	1.000		1.000
0026	211.0400	Prepare Foundation for Asphaltic Shoulders	STA	964.000	2.000	962.000
0028	213.0100	Finishing Roadway (project) 01. 8072-00-70	EACH	1.000	1.000	
0030	305.0110	Base Aggregate Dense 3/4-Inch	TON	5,150.000	5,150.000	
0032	305.0120	Base Aggregate Dense 1 1/4-Inch	TON	400.000	400.000	
0034	305.0500	Shaping Shoulders	STA	1,114.000	1,114.000	
0036	305.0504.S	Hauling Excess Shoulder Material	CY	185.000		185.000
0038	455.0605	Tack Coat	GAL	30,150.000	27,200.000	2,950.000
0040	460.0105.S	HMA Percent Within Limits (PWL) Test Strip Volumetrics	EACH	2.000	2.000	
0042	460.0110.S	HMA Percent Within Limits (PWL) Test Strip Density	EACH	2.000	2.000	
0044	460.2000	Incentive Density HMA Pavement	DOL	4,287.000		4,287.000
0046	460.2005	Incentive Density PWL HMA Pavement	DOL	29,420.000	29,420.000	
0048	460.2007	Incentive Density HMA Pavement Longitudinal Joints	DOL	33,800.000	33,800.000	
0050	460.2010	Incentive Air Voids HMA Pavement	DOL	42,000.000	42,000.000	
0052	460.6644	HMA Pavement 4 MT 58-34 V	TON	24,650.000	22,200.000	2,450.000
0054	460.6645	HMA Pavement 5 MT 58-34 V	TON	21,100.000	19,000.000	2,100.000
0056	460.9000.S	Material Transfer Vehicle (project) 01. 8072-00-70	EACH	1.000	1.000	
0058	465.0105	Asphaltic Surface	TON	550.000	550.000	
0060	465.0110	Asphaltic Surface Patching	TON	500.000	500.000	
0062	465.0120	Asphaltic Surface Driveways and Field Entrances	TON	215.000	215.000	
0064	465.0310	Asphaltic Curb	LF	50.000	50.000	
0066	465.0315	Asphaltic Flumes	SY	35.000	35.000	
0068	465.0425	Asphaltic Shoulder Rumble Strips 2-Lane Rural	LF	89,315.000	89,315.000	
0070	465.0475	Asphalt Centerline Rumble Strips 2-Lane Rural	LF	44,396.000	44,396.000	
0072	502.4204	Adhesive Anchors No. 4 Bar	EACH	26.000	26.000	
0074	505.0400	Bar Steel Reinforcement HS Structures	LB	100.000	100.000	
0076	509.1500	Concrete Surface Repair	SF	15.000	15.000	
0078	509.9020.S	Epoxy Crack Sealing	LF	20.000	20.000	
0080	511.1200	Temporary Shoring (structure) C-48-2333	SF	147.000	147.000	
0082	516.0500	Rubberized Membrane Waterproofing	SY	5.000	5.000	
0084	520.3524	Culvert Pipe Class III-B 24-Inch	LF	165.000	165.000	
0086	520.8700	Cleaning Culvert Pipes	EACH	7.000	7.000	
0088	525.0324	Apron Endwalls for Culvert Pipe Aluminum 24-Inch	EACH	6.000	6.000	
0090	601.0411	Concrete Curb & Gutter 30-Inch Type D	LF	242.000	242.000	
0092	601.0557	Concrete Curb & Gutter 6-Inch Sloped 36-Inch Type D	LF	1,483.000	1,483.000	
0094	614.0010	Barrier System Grading Shaping Finishing	EACH	15.000	15.000	
0096	614.0400	Adjusting Steel Plate Beam Guard	LF	87.500	87.500	
0098	614.2300	MGS Guardrail 3	LF	350.000	350.000	

Line	Item	Item Description	Unit	Total	8072-00-70 Qty	8072-00-71 Qty
0100	614.2330	MGS Guardrail 3 K	LF	537.500	537.500	
0102	614.2500	MGS Thrie Beam Transition	LF	275.800	275.800	
0104	614.2610	MGS Guardrail Terminal EAT	EACH	15.000	15.000	
0106	618.0100	Maintenance And Repair of Haul Roads (project) 01. 8072-00-70	EACH	1.000	1.000	
0108	619.1000	Mobilization	EACH	1.000	0.900	0.100
0110	621.0100	Landmark Reference Monuments	EACH	8.000	8.000	
0112	624.0100	Water	MGAL	100.000	100.000	
0114	625.0500	Salvaged Topsoil	SY	5,250.000	5,250.000	
0116	627.0200	Mulching	SY	500.000	500.000	
0118	628.1504	Silt Fence	LF	4,000.000	4,000.000	
0120	628.1520	Silt Fence Maintenance	LF	1,000.000	1,000.000	
0122	628.1905	Mobilizations Erosion Control	EACH	4.000	4.000	
0124	628.1910	Mobilizations Emergency Erosion Control	EACH	4.000	4.000	
0126	628.2002	Erosion Mat Class I Type A	SY	2,000.000	2,000.000	
0128	628.2008	Erosion Mat Urban Class I Type B	SY	6,000.000	6,000.000	
0130	628.7010	Inlet Protection Type B	EACH	1.000	1.000	
0132	628.7504	Temporary Ditch Checks	LF	70.000	70.000	
0134	628.7555	Culvert Pipe Checks	EACH	20.000	20.000	
0136	629.0210	Fertilizer Type B	CWT	5.000	5.000	
0138	630.0130	Seeding Mixture No. 30	LB	130.000	130.000	
0140	630.0140	Seeding Mixture No. 40	LB	10.000	10.000	
0142	630.0200	Seeding Temporary	LB	50.000	50.000	
0144	630.0500	Seed Water	MGAL	140.000	140.000	
0146	633.5200	Markers Culvert End	EACH	28.000	28.000	
0148	638.2102	Moving Signs Type II	EACH	40.000	40.000	
0150	638.4000	Moving Small Sign Supports	EACH	40.000	40.000	
0152	642.5001	Field Office Type B	EACH	1.000	1.000	
0154	643.0300	Traffic Control Drums	DAY	6,000.000	6,000.000	
0156	643.0900	Traffic Control Signs	DAY	4,500.000	4,500.000	
0158	643.5000	Traffic Control	EACH	1.000	1.000	
0160	646.1040	Marking Line Grooved Wet Ref Epoxy 4-Inch	LF	114,947.000	114,947.000	
0162	646.3040	Marking Line Grooved Wet Ref Epoxy 8-Inch	LF	1,325.000	1,325.000	
0164	646.4520	Marking Line Same Day Epoxy 4-Inch	LF	57,065.000	57,065.000	
0166	646.5020	Marking Arrow Epoxy	EACH	9.000	9.000	
0168	646.6120	Marking Stop Line Epoxy 18-Inch	LF	133.000	133.000	
0170	646.7120	Marking Diagonal Epoxy 12-Inch	LF	70.000	70.000	
0172	646.7420	Marking Crosswalk Epoxy Transverse Line 6-Inch	LF	367.000	367.000	
0174	649.0105	Temporary Marking Line Paint 4-Inch	LF	115,920.000	115,920.000	
0176	649.0120	Temporary Marking Line Epoxy 4-Inch	LF	57,070.000	57,070.000	
0178	650.4500	Construction Staking Subgrade	LF	100.000	100.000	
0180	650.5000	Construction Staking Base	LF	100.000	100.000	
0182	650.5500	Construction Staking Curb Gutter and Curb & Gutter	LF	1,725.000	1,725.000	
0184	650.6000	Construction Staking Pipe Culverts	EACH	2.000	2.000	
0186	650.8000	Construction Staking Resurfacing Reference	LF	59,368.000	59,368.000	
0188	650.9910	Construction Staking Supplemental Control (project) 01. 8072-00-70	LS	1.000	1.000	
0190	652.0225	Conduit Rigid Nonmetallic Schedule 40 2-Inch	LF	70.000	70.000	
0192	652.0700.S	Install Conduit into Existing Item	EACH	2.000	2.000	
0194	654.0105	Concrete Bases Type 5	EACH	2.000	2.000	
0196	655.0305	Cable Type UF 2-12 AWG Grounded	LF	1,149.000	1,149.000	

Line	Item	Item Description	Unit	Total	8072-00-70 Qty	8072-00-71 Qty
0198	655.0610	Electrical Wire Lighting 12 AWG	LF	288.000	288.000	
0200	657.0255	Transformer Bases Breakaway 11 1/2-Inch Bolt Circle	EACH	2.000	2.000	
0202	657.0322	Poles Type 5-Aluminum	EACH	2.000	2.000	
0204	657.0705	Luminaire Arms Truss Type 4 1/2-Inch Clamp 10-FT	EACH	2.000	2.000	
0206	659.1115	Luminaires Utility LED A	EACH	2.000	2.000	
0208	690.0150	Sawing Asphalt	LF	5,195.000	5,195.000	
0210	690.0250	Sawing Concrete	LF	3.000	3.000	
0212	740.0440	Incentive IRI Ride	DOL	26,830.000	26,830.000	
0214	ASP.1T0A	On-the-Job Training Apprentice at $5.00/HR	HRS	2,400.000	2,400.000	
0216	ASP.1T0G	On-the-Job Training Graduate at $5.00/HR	HRS	2,000.000	2,000.000	
0218	SPV.0060	Special 01. Cattle Pass End Closure	EACH	4.000	4.000	
0220	SPV.0060	Special 02. Abandon Cattle Pass Sta 391+10'B'	EACH	1.000	1.000	
0222	SPV.0060	Special 03. Abandon Cattle Pass Sta 440+36'B'	EACH	1.000	1.000	
0224	SPV.0090	Special 01. Cleaning Ditch	LF	800.000	800.000	
0226	SPV.0090	Special 02. Grading, & Shaping Curb & Gutter	LF	1,725.000	1,725.000	
0228	SPV.0165	Special 01. Full Depth Wall Repair	SF	10.000	10.000	

ALL ITEMS ON THIS SHEET ARE CATEGORY 0010

3

CLEARING

STA	LOCATION	O/S	201.0105 CLEARING STA	REMARKS
183+00A	STH 46	RT	1	CULVERT END
228+50A	STH 46	LT	1	CULVERT END
349+00B - 352+50B	STH 46	LT	3	C-48-2333 END
497+04B	STH 46	RT	1	CULVERT END
544+06B	STH 46	RT	1	CULVERT END
	UNDISTRIBUTED		3	
	PROJECT 8072-00-70 TOTALS		10	

PREPARE FOUNDATION

FROM STA	-	TO STA	LOCATION	211.0100 FOR ASPHALTIC PAVING 8072-00-70 LS	211.0400 FOR ASPHALTIC SHOULDERS STA
10+43A	-	81+66A	STH 46	1	--
82+80A	-	263+22A	STH 46		2
265+00B	-	512+79B	STH 46		--
514+25B	-	602+00B	STH 46		--
			PROJECT 8072-00-70 TOTALS	1	2

REMOVING SMALL PIPE CULVERT

STATION	LOCATION	203.0100 REMOVING SMALL PIPE CULVERTS EACH	REMARKS
580+05	STH 46	1	75 LF 24 CMP
	PROJECT 8072-00-70 TOTALS	1	

3

PAVEMENT REMOVAL

CAT	STA	-	STA	LOCATION	204.0110 REMOVING ASPHALTIC SURFACE * SY	204.0120 REMOVING ASPHALTIC SURFACE MILLING SY	204.0115 REMOVING ASPHALTIC SURFACE BUTT JOINTS SY	204.0150 REMOVING CURB & GUTTER LF	690.0150 SAWING ASPHALT * LF	690.0250 SAWING CONCRETE LF	REMARKS
0010	10+43A	-	81+69A	STH 46	--	23,880	136	--	--	--	
	79+98A	-	81+69A	STH 46	--	190	202	--	--	--	B-55-204 SOUTH APPROACH
	82+87A	-	84+47A	STH 46	--	180	202	--	--	--	B-55-204 NORTH APPROACH
	82+87A	-	184+05A	STH 46	--	33,840	--	--	--	--	
	184+05A	-	195+73A	STH 46	--	3,370	137	--	--	--	25' WIDTH, 3.25" MILL DEPTH
	195+73A	-	263+22A	STH 46	--	22,590	185	--	--	--	
	265+00B	-	425+00B	STH 46	--	53,530	--	--	--	--	
	425+00B	-	480+00B	STH 46	--	26,580	--	--	--	--	PASSING LANE (VAR. WIDTH)
	480+00B	-	511+24B	STH 46	--	10,520	--	--	--	--	
	511+24B	-	512+79B	STH 46	--	560	199	--	--	--	B-48-046 SOUTH APPROACH
	514+28B	-	515+66B	STH 46	--	480	202	--	--	--	B-48-046 NORTH APPROACH
	515+66B	-	519+75B	STH 46	--	1,420	--	--	--	--	
	519+75B	-	576+00B	STH 46	--	24,980	--	--	--	--	
	576+00B	-	579+56B	STH 46	--	1,040	--	--	--	--	3.25" MILL DEPTH
	579+56B	-	580+55.5	STH 46	437	--	--	--	90	--	CULVERT REPLACEMENT
	580+55.5	-	579+39B	STH 46	--	7,390	--	--	--	--	3.25" MILL DEPTH
	579+39B	-	602+18B	STH 46	--	2,800	53	--	--	--	3.25" MILL DEPTH
8072-00-70 PAVEMENT REMOVAL SUBTOTAL					437	213,350	1,316	--	90	--	

* ADDITIONAL QUANTITES LISTED IN DRIVEWAY TABLE

CAT	STA	LOCATION		204.0110 REMOVING ASPHALTIC SURFACE * SY	204.0120 REMOVING ASPHALTIC SURFACE MILLING SY	204.0115 REMOVING ASPHALTIC SURFACE BUTT JOINTS SY	204.0150 REMOVING CURB & GUTTER LF	690.0150 SAWING ASPHALT * LF	690.0250 SAWING CONCRETE LF
	PREVIOUS PAVEMENT REMOVAL SUBTOTAL			437	213,350	1,316	--	90	--
0010	105+92A	210TH AVE (EAST)	EAST	57	362	27	116	151	--
	105+93A	210TH AVE (WEST)	WEST	65	353	28	133	168	--
	132+03A	215TH AVE	WEST	94	454	26	154	195	--
	171+65A	222ND AVE	EAST	50	218	29	84	129	--
	179+87A	VILLAGE PARK	WEST	57	242	25	99	138	--
	184+75A	SOUTH STREET	WEST	28	198	32	42	70	--
	184+75A	ACCESS RECONSTRUCT	EAST	296	--	--	15	220	3
	210+69A	CTH H (EAST)	EAST	75	446	30	150	191	--
	210+69A	CTH H (WEST)	WEST	87	536	34	145	194	--
	250+40A	238TH AVE	EAST	69	--	--	--	22	--
	267+25B	COUNTY LINE ROAD	WEST	--	205	26	--	--	--
	270+39B	1ST AVE	EAST	--	283	--	--	22	--
	279+73B	3RD AVE	EAST	--	171	25	--	--	--
	319+08B	CTH A/10TH AVE (EAST)	EAST	106	425	32	148	214	--
	319+12B	CTH A/10TH AVE (WEST)	WEST	106	778	32	152	214	--
	349+39B	C-48-2333		--	119	--	--	--	--
	358+43B	18TH AVE	EAST	--	92	22	--	--	--
	371+52B	20TH AVE (EAST)	EAST	--	190	29	--	--	--
	371+54B	20TH AVE (WEST)	WEST	--	202	28	--	--	--
	391+36B	CATTLE PASS		--	81	--	--	--	--
	399+82B	CTH CC	EAST	105	244	29	154	212	--
	431+64B	30TH AVE WEST	WEST	--	367	29	--	--	--
	432+32B	30TH AVE EAST	EAST	--	275	33	--	--	--
	465+75B	35TH AVE WEST	WEST	--	169	31	--	--	--
	465+99B	35TH AVE EAST	EAST	--	262	33	--	--	--
	485+41B	39TH AVE	EAST	--		26	--	--	--
	492+58B	41ST AVE	EAST	103	4,903	34	148	210	--
	519+14B	45TH AVE		--	1,620	28	--	--	--
	558+27B	AIRPORT ROAD	WEST	--	1,592	41	--	--	--
		UNDISTRIBUTED		40	863	--	--	--	--
		REMOVAL TABLE TOTAL		1,775	229,000	2,025	1,540	2,440	3
		DRIVEWAY TABLE TOTAL		1,650	--	--	--	2,755	--
		PROJECT 8072-00-70 TOTAL		3,425	229,000	2,025	1,540	5,195	3

ALL ITEMS ON THIS SHEET ARE CATEGORY 0010

HOT MIX ASPHALT (HMA) PAVEMENT

3

STA	-	STA	LOCATION	460.6644 4 MT 58-34 V LOWER LAYER TON	460.6645 5 MT 58-34 V UPPER LAYER TON	465.0110 ASPHALTIC SURFACE PATCHING TON	465.0105 ASPHALTIC SURFACE TON	455.0605 TACK GAL	REMARKS
10+43A	-	81+69A	STH 46	2,361	2,024	48	--	2,899	30' PAVED WIDTH
82+87A	-	184+05A	STH 46	3,331	2,855	67	--	4,079	30' PAVED WIDTH
184+05A	-	194+50A	STH 46	284	244	7	--	362	25' PAVED WIDTH
194+50A	-	263+22A	STH 46	2,271	1,946	46	--	2,781	30' PAVED WIDTH
265+00B	-	425+00B	STH 46	5,246	4,496	107	--	6,424	30' PAVED WIDTH
425+00B	-	480+00B	STH 46	2,605	2,233	37	--	3,191	PASSING LANES
480+00B	-	511+24B	STH 46	1,031	884	21	--	1,263	30' PAVED WIDTH
511+24B	-	512+79B	STH 46	64	55	1	--	91	B-48-046 SOUTH APPROACH
514+28B	-	515+62B	STH 46	57	49	1	--	83	B-48-046 NORTH APPROACH
514+68B	-	519+75B	STH 46	139	120	3	--	171	30' PAVED WIDTH
519+75B	-	576+00B	STH 46	2,425	2,078	40	--	2,969	40' PAVED WIDTH
576+00B		579+56B	STH 46	198	170	3	--	243	40' PAVED WIDTH
579+56B	-	580+56B	STH 46	43	37	12	147	105	CULVERT PIPE REPLACEMENT, 3.5" HMA
580+56B	-	597+30B	STH 46	724	620	11	--	887	40' PAVED WIDTH, 3.5" MILL & HMA DEPTH
597+30B	-	602+00B	STH 46	277	237	3	--	343	3.5" MILL AND HMA DEPTH
			HMA SUBTOTAL 1	21,056	18,048	406	147	25,891	

STA	LOCATION	460.6644 4 MT 58-34 V LOWER LAYER TON	460.6645 5 MT 58-34 V UPPER LAYER TON	465.0110 ASPHALTIC SURFACE PATCHING TON	465.0105 ASPHALTIC SURFACE TON	455.0605 TACK GAL
	HMA SUBTOTAL 1	21,056	18,048	406	147	25,891
105+92A	210TH AVE (EAST)	37	32	--	22	55
105+93A	210TH AVE (WEST)	36	31	--	25	55
132+03A	215TH AVE	46	39	--	29	68
171+65A	222ND AVE	23	20	--	16	36
179+87A	VILLAGE PARK	25	21	--	19	39
184+75A	ACCESS RECONSTRUCT	12	10	--	42	30
184+75A	SOUTH STREET	19	17	--	10	28
210+69B	CTH H (EAST)	45	38	--	28	65
210+69B	CTH H (WEST)	65	56	--	28	92
250+40B	238TH AVE	7	6	--	--	9
267+25B	COUNTY LINE ROAD	21	18	--	--	28
270+39B	RT SHLDR COUNTY LINE MGS	28	24	--	--	34
279+73B	3RD AVE	18	15	--	--	24
319+08B	CTH A/10TH AVE (EAST)	54	46	--	36	68
319+12B	CTH A/10TH AVE (WEST)	88	76	--	36	110
358+43B	18TH AVE	10	9	--	--	14
371+52B	20TH AVE (EAST)	20	17	--	--	27
371+54B	20TH AVE (WEST)	21	18	--	--	28
399+82B	CTH CC	49	42	--	36	62
431+64B	30TH AVE WEST	37	32	--	--	48
432+32B	30TH AVE EAST	29	24	--	--	37
465+75B	35TH AVE WEST	18	16	--	--	25
465+99B	35TH AVE EAST	27	23	--	--	36
485+41B	39TH AVE	19	16	--	--	26
492+58B	41ST AVE	74	63	--	35	93
519+14B	45TH AVE	19	16	--	--	25
558+27B	AIRPORT ROAD	19	16	--	--	26
	UNDISTRIBUTED	278	211	94	41	121
	PROJECT 8072-00-70 TOTALS	22,200	19,000	500	550	27,200

3

HMA PWL Mixture use Table

DESCRIPTION	STATION	MIX	UNDERLYING SURFACE	LOCATION	TONS	QMP to be used for: MIXTURE ACCEPTANCE	QMP to be used for: DENSITY ACCEPTANCE
LOWER LAYER	STA 10+43A - 602+18B	1.75" 4 MT 58-34 V	MILLED SURFACE	12 FT DRIVING LANE	15,441	PWL Incentive Air Voids HMA Pavement 460.2007	INCENTIVE DENSITY PWL HMA PAVEMENT 460.2005
UPPER LAYER	STA 10+43A - 602+18B	1.5" 5 MT 58-34 V	LOWER LAYER	12 FT DRIVING LANE	13,235	PWL Incentive Air Voids HMA Pavement 460.2007	INCENTIVE DENSITY PWL HMA PAVEMENT 460.2005
LOWER LAYER	STA 425+00B - 480+00B	1.75" 5 MT 58-34 V	MILLED SURFACE	12 FT PASSING LANES	1,035	PWL Incentive Air Voids HMA Pavement 460.2007	INCENTIVE DENSITY PWL HMA PAVEMENT 460.2005
UPPER LAYER	STA 425+00B - 480+00B	1.5" 5 MT 58-34 V	LOWER LAYER	12 FT PASSING LANES	888	PWL Incentive Air Voids HMA Pavement 460.2007	INCENTIVE DENSITY PWL HMA PAVEMENT 460.2005
LOWER LAYER	STA 10+43A - 602+18B	1.75" 4 MT 58-34 V	MILLED SURFACE	3' SHOULDER	5,477	PWL Incentive Air Voids HMA Pavement 460.2007	ACCEPTANCE TESTING BY DEPARTMENT, NOT ELIGIBLE FOR INCENTIVE OR DISINCENTVIE
UPPER LAYER	STA 10+43A - 602+18B	1.5" 5 MT 58-34 V	LOWER LAYER	3' SHOULDER	4,694	PWL Incentive Air Voids HMA Pavement 460.2007	ACCEPTANCE TESTING BY DEPARTMENT, NOT ELIGIBLE FOR INCENTIVE OR DISINCENTVIE
LOWER LAYER	VARIOUS	1.75" 4 MT 58-34 V	MILLED SURFACE	SIDEROADS	1,129	PWL Incentive Air Voids HMA Pavement 460.2007	ACCEPTANCE TESTING BY DEPARTMENT, NOT ELIGIBLE FOR INCENTIVE OR DISINCENTVIE
UPPER LAYER	VARIOUS	1.5" 5 MT 58-34 V	LOWER LAYER	SIDEROADS	967	PWL Incentive Air Voids HMA Pavement 460.2007	ACCEPTANCE TESTING BY DEPARTMENT, NOT ELIGIBLE FOR INCENTIVE OR DISINCENTVIE
CULVERT PATCHES	VARIOUS	6" ASPHALTIC SURFACE	BASE AGGREGATE	CULVERT PATCHES	550	QMP AS PER SS 465	ACCEPTANCE BY ORDINARY COMPACTION

HMA PERCENT WITHIN LIMITS (PWL) TEST STRIP

DESCRIPTION	MIX	UNDERLYING SURFACE	HMA PERCENT WITHIN LIMITS (PWL) TEST: 460.0105.S VOLUMETRICS EACH	460.0110.S. DENSITY EACH
LOWER LAYER	1.75" 4 MT 58-34 V	MILLED SURFACE	1	1
UPPER LAYER	1.5" 5 MT 58-34 V	LOWER LAYER	1	1
		PROJECT 8072-00-70 TOTALS	2	2

ALL ITEMS ON THIS SHEET ARE CATEGORY 0010

3

DRIVEWAY TABLE

STATION	LOCATION	DRIVEWAY MATERIAL	204.0110 * REMOVING ASPHALTIC SURFACE SY	465.0120 ASPHALTIC SURFACE DRIVEWAYS AND FIELD ENTRANCES TON	690.0150 * SAWING ASPHALT LF	305.0110 * BAD 3/4-INCH TON
ST CROIX COUNTY DRIVEWAYS						
12+07A	RT	BAD	--	--	--	3
17+35A	LT	BAD	--	--	--	3
23+12A	RT	BAD	--	--	--	3
26+24A	LT	BAD	--	--	--	3
40+89A	RT	BAD	--	--	--	3
42+93A	LT	HMA	52	7	81	--
43+54A	RT	HMA	29	4	45	--
53+21A	LT	BAD	--	--	--	3
63+89A	RT	BAD	--	--	--	3
66+46A	RT	BAD	--	--	--	4
69+43A	LT	BAD	--	--	--	3
76+31A	RT	BAD	--	--	--	3
76+48A	RT	BAD	--	--	--	3
87+35A	LT	BAD	--	--	--	4
91+02A	LT	BAD	--	--	--	3
92+71A	RT	BAD	--	--	--	2
106+51A	RT	BAD	--	--	--	3
109+91A	LT	BAD	--	--	--	3
126+80A	LT	BAD	--	--	--	3
132+20A	RT	BAD	--	--	--	3
133+44A	LT	BAD	--	--	--	3
144+88A	LT	BAD	--	--	--	3
150+11A	LT	HMA	28	4	44	--
152+00A	LT	HMA	25	3	38	--
155+46A	LT	HMA	34	4	55	--
155+92A	RT	BAD	--	--	--	3
158+96A	RT	BAD	--	--	--	4
162+72A	LT	BAD	--	--	--	3
163+65A	RT	BAD	--	--	--	2
167+52A	RT	BAD	--	--	--	3
167+50A	LT	HMA	90	11	142	--
169+13A	RT	HMA	30	4	49	--
169+80A	RT	HMA	32	4	54	--
171+72A	LT	HMA	37	5	60	--
174+32A	LT	HMA	68	9	112	--
175+40A	LT	HMA	25	3	41	--
175+95A	RT	BAD	--	--	--	4
176+88A	LT	HMA	36	4	57	--
177+88A	LT	BAD	--	--	--	5
180+87A	LT	HMA	34	4	52	--
182+04A	LT	HMA	23	3	38	--
183+54A	LT	BAD	--	--	--	3
184+60A	RT	HMA	134	15	155	13
194+82A	RT	BAD	--	--	--	3
197+66A	LT	BAD	--	--	--	3
197+95A	LT	HMA	25	3	40	--
199+19A	LT	BAD	--	--	--	3
205+86A	RT	BAD	--	--	--	3
208+52A	LT	BAD	--	--	--	4
212+98A	LT	BAD	--	--	--	2
215+15A	LT	HMA	20	3	56	--
		DWY SUBTOTAL 1	722	90	1,119	119
217+49A	LT	BAD	--	--	--	3
222+83A	RT	BAD	--	--	--	3
225+17A	LT	BAD	--	--	--	4
231+44A	RT	BAD	--	--	--	3
237+13A	RT	BAD	--	--	--	3
237+44A	LT	BAD	--	--	--	4
240+78A	LT	BAD	--	--	--	3
243+48A	LT	BAD	--	--	--	3
259+77A	LT	BAD	--	--	--	5
		ST CROIX COUNTY SUBTOTAL	722	90	1,119	150
POLK COUNTY DRIVEWAYS						
273+37A	LT	BAD	--	--	--	3
280+13A	LT	HMA	35	4	62	--
282+20A	LT	BAD	--	--	--	3
285+55A	RT	BAD	--	--	--	4
293+26A	LT	BAD	--	--	--	3
301+66A	LT	BAD	--	--	--	6
306+05A	RT	HMA	48	6	79	--
307+89A	LT	BAD	--	--	--	3
326+08A	LT	HMA	38	5	63	--
326+42A	RT	HMA	29	4	47	--
328+53A	LT	BAD	--	--	--	3
329+09A	RT	BAD	--	--	--	3
339+24A	LT	BAD	--	--	--	4
343+42A	LT	BAD	--	--	--	3
345+08A	LT	BAD	--	--	--	4
346+41A	LT	BAD	--	--	--	3
347+66A	RT	BAD	--	--	--	3
354+67A	LT	BAD	--	--	--	3
375+27A	RT	HMA	29	4	49	--
377+15A	RT	BAD	--	--	--	3
384+75A	LT	BAD	--	--	--	2
390+61A	LT	BAD	--	--	--	3
390+86A	RT	BAD	--	--	--	4
403+08A	RT	BAD	--	--	--	3
407+96A	LT	BAD	--	--	--	3
407+93A	RT	BAD	--	--	--	3
417+41	RT	BAD	--	--	--	3
420+80A	LT	BAD	--	--	--	3
424+59A	LT	BAD	--	--	--	3
424+73A	RT	BAD	--	--	--	3
446+99A	LT	BAD	--	--	--	4
448+51A	LT	BAD	--	--	--	5
451+26	RT	BAD	--	--	--	4
458+49A	RT	BAD	--	--	--	3
477+67A	RT	HMA	34	4	61	--
479+19A	LT	BAD	--	--	--	3
491+39A	LT	BAD	--	--	--	3
498+63A	LT	BAD	--	--	--	3
		POLK DWY SUBTOTAL 2	213	27	361	106
		DWY SUBTOTAL 2	213	27	361	106
499+34A	RT	BAD	--	--	--	4
504+49A	LT	BAD	--	--	--	2
506+57A	LT	BAD	--	--	--	2
507+49A	LT	BAD	--	--	--	3
506+43B	RT	HMA	29	4	46	--
509+81B	RT	HMA	32	4	51	--
511+91B	RT	HMA	30	4	58	--
517+28B	LT	BAD	--	--	--	3
517+22B	RT	BAD	--	--	--	3
520+93B	LT	BAD	--	--	--	3
520+91B	RT	BAD	--	--	--	3
533+00B	LT	BAD	--	--	--	4
534+48B	RT	BAD	--	--	--	3
534+87B	LT	BAD	--	--	--	3
536+17B	LT	HMA	31	4	65	--
537+80B	LT	BAD	--	--	--	3
540+62B	RT	BAD	--	--	--	2
543+70B	LT	BAD	--	--	--	6
552+40B	LT	BAD	--	--	--	3
554+43B	LT	HMA	23	3	42	--
555+98B	RT	HMA	20	2	48	--
564+21B	LT	BAD	--	--	--	4
565+48B	LT	HMA	56	7	113	--
568+72B	LT	BAD	--	--	--	5
569+55B	LT	BAD	--	--	--	4
571+31B	LT	HMA	48	6	95	--
572+40B	LT	HMA	56	7	103	--
572+15B	RT	HMA	41	7	102	--
573+82B	RT	HMA	86	11	151	--
576+46B	RT	HMA	64	8	117	--
577+73B	LT	BAD	--	--	--	5
578+95B	RT	HMA	44	6	85	--
582+64B	LT	HMA	39	5	74	--
586+36B	LT	BAD	--	--	--	5
595+95B	LT	HMA	65	8	125	--
		UNDISTRIBUTED	51	12	--	24
		POLK COUNTY TOTAL	928	125	1,636	200

* ADDITIONAL QUANTITES LISTED ELSEWHERE IN PLANS

POLK COUNTY PROJECT 8072-00-70 TOTALS	928	125	1,636	200
ST CROIX COUNTY PROJECT 8072-00-70 TOTALS	722	90	1,119	150
DRIVEWAY TOTALS	1,650	215	2,755	350
BASE AGGREGATE DENSE TABLE TOTAL	--	--	--	4,800
PAVEMENT REMOVAL TABLE TOTALS	1,773	--	2,440	--
PROJECT 8072-00-70 TOTAL	3,423	215	5,195	5,150

3

ALL ITEMS ON THIS SHEET ARE CATEGORY 0010

3

SHAPING SHOULDERS

STA	-	STA	O/S	LOCATION	305.0500 SHAPING SHOULDERS STA
10+43A	-	81+66A	LT	STH 46 SHOULDERS	71
82+80A	-	105+40A	LT	STH 46 SHOULDERS	23
106+59A	-	131+51A	LT	STH 46 SHOULDERS	25
132+78A	-	179+46A	LT	STH 46 SHOULDERS	47
180+31A	-	184+33A	LT	STH 46 SHOULDERS	4
194+50A	-	211+17A	LT	STH 46 SHOULDERS	17
211+47A	-	263+21A	LT	STH 46 SHOULDERS	52
265+00A	-	266+81A	LT	STH 46 SHOULDERS	2
267+86A	-	318+54A	LT	STH 46 SHOULDERS	51
319+87A	-	349+35A	LT	STH 46 SHOULDERS	29
351+73A	-	371+12A	LT	STH 46 SHOULDERS	19
372+22A	-	399+23A	LT	STH 46 SHOULDERS	27
400+53A	-	430+87A	LT	STH 46 SHOULDERS	30
432+46A	-	465+13A	LT	STH 46 SHOULDERS	33
466+09A	-	480+00A	LT	STH 46 SHOULDERS	14
480+00A	-	512+85A	LT	STH 46 SHOULDERS	33
514+25A	-	518+57A	LT	STH 46 SHOULDERS	4
519+69A	-	557+85A	LT	STH 46 SHOULDERS	38
558+77A	-	576+68A	LT	STH 46 SHOULDERS	18
578+21A	-	597+40A	LT	STH 46 SHOULDERS	19
				SHAPING SHLD SUBTOTAL 1	556

STA	-	STA		LOCATION	305.0500 SHAPING SHOULDERS STA
				SHAPING SHLD SUBTOTAL 1	556
10+43A	-	81+74A	RT	STH 46 SHOULDERS	71
82+90A	-	105+27A	RT	STH 46 SHOULDERS	22
106+35A	-	171+18A	RT	STH 46 SHOULDERS	65
172+07A	-	184+05A	RT	STH 46 SHOULDERS	12
193+51A	-	209+91A	RT	STH 46 SHOULDERS	16
211+22A	-	263+21A	RT	STH 46 SHOULDERS	52
265+00A	-	279+17A	RT	STH 46 SHOULDERS	14
280+11A	-	318+34A	RT	STH 46 SHOULDERS	38
319+65A	-	349+40A	RT	STH 46 SHOULDERS	30
351+33A	-	370+86A	RT	STH 46 SHOULDERS	20
371+91A	-	431+89A	RT	STH 46 SHOULDERS	60
433+12A	-	465+29A	RT	STH 46 SHOULDERS	32
466+68A	-	484+91A	RT	STH 46 SHOULDERS	18
485+84A	-	491+89A	RT	STH 46 SHOULDERS	6
493+18A	-	512+85A	RT	STH 46 SHOULDERS	20
514+23A	-	519+69A	RT	STH 46 SHOULDERS	5
519+69A	-	583+61A	RT	STH 46 SHOULDERS	64
584+76A	-	591+26A	RT	STH 46 SHOULDERS	7
592+25A	-	598+60A	RT	STH 46 SHOULDERS	6
				PROJECT 8072-00-70 TOTAL	1,114

BASE AGGREGATE

STA	-	STA	LOCATION	305.0110 3/4-INCH * TON	305.0120 1-1/4-INCH TON	624.0100 WATER MGAL	REMARKS
10+43A	-	81+69A	STH 46	385	--	7	
79+98A	-	81+69A	STH 46	10	--	1	B-55-204 SOUTH APPROACH
82+87A	-	84+47A	STH 46	10	--	1	B-55-204 NORTH APPROACH
82+87A	-	184+05A	STH 46	547	--	10	
184+05A	-	195+73A	STH 46	63	--	2	
195+73A	-	263+22A	STH 46	365	--	7	
265+00B	-	425+00B	STH 46	864	--	15	
425+00B	-	480+00B	STH 46	297	--	5	PASSING LANE (VAR. WIDTH)
480+00B	-	511+24B	STH 46	169	--	3	
511+24B	-	512+79B	STH 46	10	--	1	B-48-046 SOUTH APPROACH
514+28B	-	515+66B	STH 46	10	--	1	B-48-046 NORTH APPROACH
515+66B	-	519+75B	STH 46	22	--	1	
519+75B	-	576+65B	STH 46	307	--	6	
576+65B	-	579+56B	STH 46	16	--	1	THRU TURN LANE
579+56B	-	580+56B	STH 46	55	363	8	CULVERT REPLACEMENT
579+39B	-	580+56B	STH 46	6	--	1	
580+56B	-	602+18B	STH 46	117	--	2	
			SUBTOTAL 1	3,253	363	72	

STA	LOCATION	305.0110 3/4-INCH * TON	305.0120 1-1/4-INCH TON	624.0100 WATER MGAL	REMARKS
	SUBTOTAL 1	3,253	363	72	--
105+92	EAST	6	--	1	210TH AVE (EAST)
105+93	WEST	7	--	1	210TH AVE (WEST)
132+03	WEST	10	--	1	215TH AVE
171+65	EAST	5	--	1	222ND AVE
179+87	WEST	6	--	1	VILLAGE PARK
184+75	EAST	18	--	1	ACCESS RECONSTRUCT
210+69	EAST	9	--	1	CTH H (EAST)
210+69	WEST	8	--	1	CTH H (WEST)
250+40	EAST	8	--	1	238TH AVE
319+08	EAST	12	--	1	CTH RD/10TH AVE (EAST)
319+12	WEST	12	--	1	CTH RD/10TH AVE (WEST)
399+82	EAST	12	--	1	CTH CC
492+58	EAST	11	--	1	41ST AVE
584+17	EAST	10	--	1	CORNWALLVE
591+80	EAST	8	--	1	RIVER PLACE
	UNDISTRIBUTED	1,405	37	13	
BASE AGGREGATE TABLE TOTAL		4,800	400	100	
DRIVEWAY TABLE TOTAL		350	--	--	
PROJECT 8072-00-70 TOTAL		5,150	400	100	PROJECT 8072-00-70 TOTAL

* ADDITIONAL QUANTITES LISTED ELSEWHERE IN PLANS

ALL ITEMS ON THIS SHEET ARE CATEGORY 0010

3

GUARDRAIL ITEMS

STA	-	STA	LOCATION	O/S	204.0165 REMOVING GUARDRAIL LF	614.0400 ADJUSTING STEEL PLATE BEAM GUARD LF	614.2330 MGS GUARDRAIL 3 K LF	614.2300 MGS GUARDRAIL 3 LF	614.2500 MGS THRIE BEAM TRANSITION LF	614.2610 MGS GUARDRAIL TERMINAL EAT EACH	REMARKS
80+53A	-	81+66A	STH 46	LEFT	85	--	--	12.5	39.4	1	B-55-204 SB DEPARTURE
80+72A	-	81+84A	STH 46	RIGHT	85	--	--	12.5	39.4	1	B-55-204 NB APPOACH
82+87A	-	84+10A	STH 46	LEFT	123	--	--	37.5	39.4	1	B-55-204 SB APPROACH
82+90A	-	84+18A	STH 46	RIGHT	123	--	--	37.5	39.4	1	B-55-204 NB DEPARTURE
184+85A	-	185+39A	STH 46	RIGHT	54	--	--	--	--	--	DRIVEWAY
265+98B	-	270+04B	STH 46	RIGHT	355	--	300.0	--	--	2	COUNTY LINE RD SLOPE
348+31B	-	351+00B	STH 46	RIGHT	144	--	75.0	87.5	--	2	C-48-2333 NB
349+35B	-	352+04B	STH 46	LEFT	140	--	100.0	62.5	--	2	C-48-2333 SB
391+27B	-	393+57B	STH 46	LEFT	138	--	62.5	62.5	--	2	CATTLE PASS SB
391+46B	-	392+77B	STH 46	RIGHT	130	--	--	--	--	--	CATTLE PASS NB
511+79B	-	512+81B	STH 46	LEFT	98	--	--	12.5	39.4	1	B-48-046 SB DEPARTURE
514+25B	-	515+28B	STH 46	LEFT	98	--	--	12.5	39.4	1	B-48-046 SB APPROACH
514+30B	-	515+28B	STH 46	RIGHT	98	87.5	--	12.5	39.4	1	B-48-046 NB DEPARTURE
512+05B	-	512+81B	STH 46	RIGHT	98	--	--	--	--	--	B-48-046 NB APPROACH
			PROJECT 8072-00-70 TOTALS		1,769	87.5	537.5	350	275.8	15	

MISC. ASPHALTIC ITEMS

STA	-	STA	LOCATION	OFFSET	465.0310 ASPHALTIC CURB LF	465.0315 ASPHALTIC FLUMES SY
184+10A	-	185+00A	STH 46	RT	10	20
512+41B	-	512+81B	STH 46	23' LT	40	15
			PROJECT 8072-00-70 TOTALS		**50**	**35**

RUMBLE STRIPS

STA	-	STA	LOCATION	465.0425 ASPHALTIC SHOULDER RUMBLE STRIPS 2-LANE RURAL LF	465.0475 ASPHALTIC CENTERLINE RUMBLE STRIPS 2-LANE RURAL LF
10+43A	-	81+40A	STH 46	13,110	7,126
83+10A	-	106+00A	STH 46	3,837	2,081
106+00A	-	132+00A	STH 46	4,554	2,222
132+00A	-	162+40A	STH 46	5,238	2,378
212+70A	-	267+11A	STH 46	9,295	4,654
265+00B	-	319+00B	STH 46	9,184	4,365
319+00B	-	371+50B	STH 46	9,060	4,450
371+50B	-	432+00B	STH 46	11,098	5,241
432+00B	-	493+00B	STH 46	10,964	4,864
493+00B	-	558+25B	STH 46	10,675	5,546
558+25B	-	581+60B	STH 46	2,300	1,469
		PROJECT 8072-00-70 TOTALS		89,315	44,396

ALL ITEMS ON THIS SHEET ARE CATEGORY 0010

3

CULVERT PIPES

STATION	LOCATION	O/S	520.3524 CULVERT PIPE CLASS III-B 24-INCH LF	525.0324 APRON ENDWALLS FOR CULVERT PIPE ALUMINUM 24-INCH EACH	633.5200 MARKERS CULVERT END EACH	650.6000 CONSTRUCTION STAKING PIPE CULVERTS EACH
26+23A	STH 46	40.2 LT	--	--	1	--
183+07A	STH 46	31.2 LT	--	--	1	--
195+69A	STH 46	22.0 LT	--	--	1	--
246+52A	STH 46	58.80' RT	--	--	1	--
291+22B	STH 46	42.1' LT	--	1	-	--
291+35B	STH 46	36.7' RT	--	1	-	--
318+62B	STH 46	33.2' LT	--	--	1	--
318+63B	STH 46	42.3' RT	--	--	1	--
392+11B	STH 46	22.4' RT	80	2	2	1
418+58B	STH 46	30.6' RT	--	--	1	--
418+59B	STH 46	39.4' LT	--	--	1	--
443+52B	STH 46	66.4' RT	--	--	1	--
443+62B	STH 46	65.7' LT	--	--	1	--
471+14B	STH 46	61.5' LT	--	--	1	--
471+12B	STH 46	60.7' RT	--	--	1	--
484+25B	STH 46	36.2' RT	--	--	1	--
484+26B	STH 46	37.4' LT	--	--	1	--
497+04B	STH 46	48.5' RT	--	--	1	--
544+05B	STH 46	36.5' LT	--	--	1	--
544+06B	STH 46	48.4' RT	--	--	1	--
551+04B	STH 46	36.5' RT	--	--	1	--
551+05B	STH 46	25.7' LT	--	--	1	--
559+02B	STH 46	37.9' RT	--	--	1	--
559+03B	STH 46	34.3' LT	--	--	1	--
580+05B	STH 46	0.00' RT	85	2	2	1
580+06B	STH 46	39.1' LT	--	--	1	--
596+61B	STH 46	33.2' RT	--	--	1	--
596+66B	STH 46	27.5' LT	--	--	1	--
PROJECT 8072-00-70 TOTALS			165	6	28	2

NOTES: MINIMUM STEEL WALL THICKNESS IS 0.064-INCH.

CLEANING CULVERT PIPES

STA	LOCATION	520.8700 CLEANING CULVERT PIPES EACH	NOTES
133+65A	STH 46	1	24-INCH CPCS
195+55A	STH 46	1	18-INCH CPCS
269+64B	STH 46	1	24-INCH CPCS
291+29B	STH 46	1	24-INCH CPCS
551+04B	STH 46	1	24-INCH CPCS
559+03B	STH 46	1	24-INCH CPCS
596+63B	STH 46	1	24-INCH CPCS
PROJECT 8072-00-70 TOTALS		7	

3

CONCRETE CURB AND GUTTER

*ADDITIONAL QUANTITIES LISTED ELSEWHERE

STA	LOCATION	601.0557 6-INCH SLOPED 36-INCH TYPE D LF	601.0411 30-INCH TYPE D LF	650.5500 CONSTRUCTION STAKING CURB & GUTTER LF	SPV.0090.02 GRADING & SHAPING CURB & GUTTER LF	625.0500 *SALVAGED TOPSOIL SY	629.0210 *FERTLIZER TYPE B CWT	630.0130 SEEDING MIXTURE * NO 30 LB	628.2002 EROSION MAT CLASS I *TYPE A SY	630.0500 SEED WATER MGAL
105+92A	210TH AVE (EAST)	116	--	116	116	64	0.04	1.2	64	1.40
105+93A	210TH AVE (WEST)	133	--	133	133	74	0.05	1.3	74	1.70
132+03A	215TH AVE	154	--	154	154	86	0.05	1.5	86	1.90
171+65A	222ND AVE	84	--	84	84	47	0.03	0.8	47	1.00
179+87A	VILLAGE PARK	99	--	99	99	55	0.04	1.0	55	1.20
184+15A - 186+14A	STH 46 RT	--	200	200	200	--	0.07	--	111	2.50
184+50A	SOUTH STREET	--	42	42	42	23	0.02	0.4	23	0.50
210+69A	CTH H (EAST)	150	--	150	150	83	0.05	1.5	83	1.90
210+69A	CTH H (WEST)	145	--	145	145	81	0.05	1.5	81	1.80
319+08B	CTH A /10TH AVE (EAST)	148	--	148	148	82	0.05	1.5	82	1.80
319+12B	CTH A/10TH AVE (WEST)	152	--	152	152	84	0.05	1.5	84	1.90
399+82B	CTH CC	154	--	154	154	86	0.05	1.5	86	1.90
492+58B	41ST AVE	148	--	148	148	82	0.05	1.5	82	1.80
	TOTALS	1,483	242	1,725	1,725	847	0.61	15	958	21.3

ALL ITEMS ON THIS SHEET ARE CATEGORY 0010

3

RESTORATION ITEMS

FROM STA - TO STA	LOCATION	O/S	625.0500 SALVAGED TOPSOIL SY	627.0200 MULCH SY	629.0210 FERTILIZER TYPE B CWT	630.0130 SEEDING MIXTURE NO. 30 LB	628.1504 SILT FENCE LF	628.1520 FENCE MAINT. LF	628.2002 EROSION MAT CLASS I TYPE A SY	628.2004 EROSION MAT URBAN CLASS I TYPE B SY	628.7504 TEMPORARY DITCH CHECKS LF	628.7555 CULVERT PIPE CHECKS EACH	630.0200 SEEDING TEMPORARY LB	630.0500 SEED WATER MGAL
79+61A - 81+74A	STH 46	LT/RT	178	--	0.11	4	337	85	--	180	--	--	--	4.00
82+80A - 85+32A	STH 46	LT/RT	136	--	0.09	3	500	125	--	140	--	--	--	3.10
133+65A	STH 46	LT	--	--	0.01	1	--	--	11	--	--	--	--	--
133+65A	STH 46	RT	--	--	0.01	1	--	--	11	--	--	--	--	--
195+35A	STH 46	RT	--	--	0.01	1	--	--	11	--	20	--	--	--
195+69A	STH 46	LT	--	--	0.01	1	--	--	11	--	--	--	--	--
265+00B - 271+15B	STH 46	RT	470	--	0.30	9	530	135	470	--	10	--	--	10.5
269+64B	STH 46	LT	--	--	0.01	1	--	--	11	--	--	--	--	--
291+19B	STH 46	LT	--	--	0.01	1	--	--	11	--	--	--	--	--
291+33B	STH 46	RT	--	--	0.01	1	--	--	11	--	--	--	--	--
347+79B - 352+59B	STH 46	RT	946	--	0.60	18	522	130	--	950	--	--	--	21.2
347+79B - 352+59B	STH 46	LT	1,210	--	0.76	22	536	135	--	1,210	10	--	--	27.2
390+75B - 394+50B	STH 46	LT	634	--	0.40	12	384	95	--	630	10	--	--	14.2
391+01B - 394+13B	STH 46	RT	100	--	0.06	2	304	75	--	100	--	7	--	2.2
510+66B - 512+85B	STH 46	LT	238	--	0.15	5	220	55	--	240	--	--	--	5.3
514+25B - 516+34B	STH 46	LT	96	--	0.06	2	206	50	--	100	--	--	--	2.2
514+23B - 516+43B	STH 46	RT	250	--	0.16	5	209	50	--	250	--	--	--	5.6
551+04B	STH 46	LT/RT	--	--	0.01	1	--	--	22	--	--	--	--	--
559+03B	STH 46	LT/RT	--	--	0.01	1	--	--	22	--	--	--	--	--
579+50B - 580+50B	STH 46	LT/RT	32	--	0.02	5	--	--	32	--	--	7	--	0.7
596+63B		LT/RT	--	--	0.01	5	--	--	22	--	--	--	--	--
TOTAL FROM CURB AND GUTTER TABLE			847	--	0.61	15	--	--	958	--	--	--	--	21.3
TOTAL FROM CLEANING DITCHES			--	--	0.57	10	--	--	--	930	--	--	--	19.9
UNDISTRIBUTED			113	500	1.01	4	252	65	396	1,270	20	6	50	2.6
PROJECT 8072-00-70 TOTALS			5,250	500	5.00	130	4,000	1,000	2,000	6,000	70	20	50	140.0

EROSION CONTROL

LOCATION	628.1905 MOBILIZATIONS EROSION CONTROL EACH	628.1910 MOBILIZATIONS EMERGENCY EROSION CONTROL EACH	628.7010 INLET PROTECTION TYPE B EACH
STH 46	4	4	1
PROJECT 8072-00-70 TOTAL	4	4	1

BARRIER SYSTEM GRADING SHAPING FINISHING ITEM 614.0010

STA - STA	LOCATION	O/S	614.0010 BARRIER SYSTEM GRADING SHAPING FINISHING EACH	INFORMATION ONLY, ITEMS INCIDENTAL TO ITEM 614.0010: EXCAVATION COMMON CY	BORROW CY	REMARKS
80+19A - 81+66A	STH 46	LEFT	1	--	--	B-55-204 SB DEPARTURE
79+96A - 81+84A	STH 46	RIGHT	1	--	--	B-55-204 NB APPROACH
82+87A - 84+88A	STH 46	LEFT	1	--	--	B-55-204 SB APPROACH
82+90A - 85+32A	STH 46	RIGHT	1	--	--	B-55-204 NB DEPARTURE
265+37B - 270+63B	STH 46	RIGHT	2	3	83	COUNTY LINE RD SLOPE
347+79B - 351+50B	STH 46	RIGHT	2	3	384	C-48-2333 NB
348+81B - 352+58B	STH 46	LEFT	2	4	186	C-48-2333 SB
390+54B - 394+18B	STH 46	LEFT	2	2	188	CATTLE PASS SB
511+25B - 512+81B	STH 46	LEFT	1	--	18	B-48-046 SB DEPARTURE
514+25B - 516+35B	STH 46	LEFT	1	--	20	B-48-046 SB APPROACH
514+30B - 515+97B	STH 46	RIGHT	1	--	18	B-48-046 NB DEPARTURE
	PROJECT 8072-00-70 TOTAL		15	12	897	

ALL ITEMS ON THIS SHEET ARE CATEGORY 0010

3

TRAFFIC CONTROL

LOCATION	NO. OF DAYS (DAY)	643.0300 DRUMS EACH	643.0300 DRUMS (DAY)	643.0900 SIGNS EACH	643.0900 SIGNS (DAY)
ADVANCED WARNING	100	--	--	25	2,500
GROOVED PVT/UNEVEN LANES	35	--	--	27	945
210TH AVE (EAST)	14	25	350	1	14
210TH AVE (WEST)	14	25	350	1	14
215TH AVE	14	25	350	1	14
222ND AVE	14	25	350	1	14
VILLAGE PARK	14	25	350	1	14
CTH H (EAST)	14	25	350	1	14
CTH H (WEST)	14	25	350	1	14
CTH RD A/10TH AVE (EAST)	14	25	350	1	14
CTH RD A/10TH AVE (WEST)	14	25	350	1	14
CTH CC	14	25	350	1	14
41ST AVE	14	25	350	1	14
80+53A - 84+10A LT	7	15	105	3	21
80+72A - 84+18A RT	7	15	105	3	21
184+15B - 186+15B RT	14	15	210	3	42
265+98B - 270+00B RT	7	15	105	3	21
348+31B - 351+00B RT	7	15	105	3	21
349+35B - 352+04B LT	7	15	105	3	21
391+27B - 393+57B LT	7	10	70	3	21
438+00B - 443+00B RT	7	15	105	3	21
438+00B - 443+00B LT	7	15	105	3	21
511+79B - 515+28B LT	7	15	105	3	21
511+79B - 515+28B LT	7	15	105	3	21
512+05B - 515+28B RT	7	15	105	3	21
UNDISTRIBUTED			820		628
PROJECT 8072-00-70 TOTALS			**6,000**		**4,500**

MOVING SMALL SIGNS AND SUPPORTS

STA	INTERSECTION	638.4000 MOVING SMALL SIGN SUPPORTS EACH	638.2102 MOVING SIGNS TYPE II EACH
105+92A	210TH AVE (EAST)	2	2
105+93A	210TH AVE (WEST)	2	2
132+03A	215TH AVE	2	2
171+65A	222ND AVE	2	2
179+87A	VILLAGE PARK	2	2
184+08A	STH 46 RT	2	2
191+02A	PARK STREET	2	2
210+69A	CTH H (EAST)	2	2
210+69A	CTH H (WEST)	2	2
319+08A	CTH RD/10TH AVE (EAST)	2	2
319+12A	CTH RD/10TH AVE (WEST)	2	2
399+82A	CTH CC	2	2
492+58A	41ST AVE	2	2
	UNDISTRIBUTED	14	14
	PROJECT 8072-00-70 TOTALS	40	40

CONSTRUCTION STAKING

STA	-	STA	LOCATION	650.8000 RESURFACING REFERENCE LF	650.4500 SUBGRADE LF	650.5000 BASE LF	650.9910 SUPPLEMENTAL CONTROL 8072-00-70 LS
10+43A	-	81+69A	STH 46	7126	--	--	--
81+69A	-	106+00A	STH 46	2,431	--	--	--
106+00A	-	210+75A	STH 46	10,475	--	--	--
210+75A	-	267+11A	STH 46	5,636	--	--	--
265+00B	-	319+00B	STH 46	5,400	--	--	--
319+00B	-	371+50B	STH 46	5,250	--	--	--
371+50B	-	432+00B	STH 46	6,050	--	--	--
432+00B	-	493+00B	STH 46	6,100	--	--	--
493+00B	-	558+25B	STH 46	6,525	--	--	--
558+25B	-	602+00B	STH 46	4,375	100	100	--
PROJECT 8072-00-70 TOTALS				59,368	100	100	1

3

PAVEMENT MARKING

STA	-	STA	LOCATION	646.1040 MARKING LINE GROOVED WET REF EPOXY 4-INCH WHITE SOLID LF	646.1040 3' SKIPS LF	646.1040 12.5' SKIP LF	646.3040 8-INCH WHITE LF	647.4520 MARKING LINE SAME DAY EPOXY 4-INCH YELLOW SOLID LF	647.4520 DASHED LF	646.5020 MARKING ARROW EPOXY WHITE EACH	646.6180 MARKING STOP LINE EPOXY 18-INCH WHITE LF	646.7120 MARKING DIAGONAL EPOXY 12-INCH YELLOW LF	646.7420 MARKING CROSSWALK EPOXY TRANSVERSE LINE 6-INCH WHITE LF	649.0105 TEMPORARY MARKING LINE PAINT 4-INCH WHITE LF	649.0105 YELLOW LF	649.0120 TEMPORARY PAVEMENT MARKING EPOXY 4-INCH YELLOW LF
10+43A	-	81+69A	STH 46	14,244	--	--	--	3,103	1,762.5	--	--	--	--	--	9,730	4,870
81+69A	-	106+00A	STH 46	4,741	30	--	--	1,014	612.5	--	--	--	--	--	3,250	1,630
106+00A	-	210+75A	STH 46	18,355	--	--	--	4,211	2,550.0	--	--	--	367	--	13,520	6,760
210+75A	-	263+22A	STH 46	10,377	45	--	--	2,019	1,262.5	--	--	--	--	--	6,560	3,280
265+00B	--	319+00B	STH 46	10,466	--	--	--	5,859	1,062.5	--	--	--	--	--	13,840	6,920
319+00B	-	371+50B	STH 46	10,748	--	--	400	2,792	1,112.5	--	--	--	--	--	7,810	3,900
371+50B	-	432+00B	STH 46	11,894	--	44	--	8,240	887.5	--	--	--	--	50	18,260	9,130
432+00B	-	493+00B	STH 46	11,616	--	1,587	100	10,134	412.5	2	23	--	--	1,600	21,090	10,550
493+00B	-	558+25B	STH 46	13,050	--	--	--	2,638	1,562.5	--	--	--	--	--	8,400	4,200
558+25B	-	602+00B	STH 46	7,606	--	145	825	4,905	925.0	7	110	70	--	150	11,660	5,830
PROJECT 8072-00-70 TOTALS				114,947			1,325	57,065		9	133	70	367	115,920		57,070

TEMPORARY MARKING APPLIED ON MILLED SURFACE AND LOWER LAYER, TEMPORARY EPOXY ON SURFACE BEFORE MILLED RUMBLES

ALL ITEMS ON THIS SHEET ARE CATEGORY 0010

3

LIGHTING CONDUIT AND WIRE

FROM - TO	204.9090.S.01 REMOVING ELECTRICAL CONDUCTORS FROM EXISTING CONDUIT LF	652.0225 CONDUIT RIGID NONMETALLIC SCHEDULE 40 2-INCH LF	655.0305 CABLE TYPE UF 2-12 AWG GROUNDED LF	REMARKS
ALL ITEMS ARE CATEGORY 0010				
SB 2 - PB 2	48	--	48	EXISTING CONDUIT
PB 2 - PB 4	236	--	236	EXISTING CONDUIT
PB 4 - LB 1	68	--	136	EXISTING CONDUIT
PB 4 - PB 5	--	--	151	EXISTING CONDUIT
PB 5 - LB 2	--	20	33	--
SB 6 - PB 9	43	--	43	EXISTING CONDUIT
PB 9 - PB 10	116	--	116	EXISTING CONDUIT
PB 10 - LB 3	23	--	46	EXISTING CONDUIT
PB 10 - PB 11	--	--	121	EXISTING CONDUIT
PB 11 - PB 12	--	--	156	EXISTING CONDUIT
PB 12 - LB 4	--	50	63	--
PROJECT TOTALS	534	70	1,149	

PULLBOXES

PULLBOX NUMBER	STATION	OFFSET	R/L	652.0700.S INSTALL CONDUIT INTO EXISTING ITEM EACH
ALL ITEMS ARE CATEGORY 0010				
PB 5	595+60B	28.1'	RT	1
PB 12	603+05B	23.8'	LT	1
PROJECT TOTALS				2

STREET LIGHTS

LIGHT NUMBER	STATION	OFFSET	R/L	654.0105 CONCRETE BASES TYPE 5 EACH	657.0255 TRANSFORMER BASES BREAKAWAY 11 1/2-INCH BOLT CIRCLE EACH	657.0322 POLES TYPE 5 ALUMINUM EACH	657.0705 LUMINAIRE ARMS TRUSS TYPE 4 1/2-INCH CLAMP 10-FT EACH	659.1115 LUMINAIRES UTILITY LED A EACH	655.0610 ELECTRICAL WIRE LIGHTING 12 AWG LF
ALL ITEMS ARE CATEGORY 0010									
LB 2	595+82B	26.1'	RT	1	1	1	1	1	144
LB 4	602+62B	28.4'	LT	1	1	1	1	1	144
PROJECT TOTALS				2	2	2	2	2	288

ALL ITEMS ON THIS SHEET ARE CATEGORY 0010

3

CLEANING DITCH

STA	LOCATION	O/S	SPV.0090.01 CLEANING DITCH LF	* 628.2004 EROSION MAT URBAN CLASS I TYPE B SY	* 629.0210 FERTILIZER TYPE B CWT	* 630.0130 SEEDING MIXTURE NO. 30 LB	* 630.0140 SEEDING MIXTURE NO. 40 LB	630.0500 SEED WATER MGAL
133+44A - 133+65A	STH 46	LT	25	30	0.02	0.5	--	0.60
133+65A - 133+65A	STH 46	RT	40	50	0.03	0.8	--	1.00
176+96A - 178+95A	STH 46	RT	200	230	0.14	4.0	--	5.00
193+50A - 195+54A	STH 46	RT	150	170	0.11	--	3.0	3.70
228+50A - 228+50A	STH 46	LT	40	50	0.03	0.8	--	1.00
594+80B - 598+00B	STH 46	LT	200	230	0.14	--	4.0	5.00
	UNDISTRIBUTED		145	170	0.10	3.9	3.0	3.60
PROJECT 8072-00-70 TOTALS			800	930	0.57	10	10	19.9

* ADDITIONAL QUANTITIES LISTED ELSEWHERE

LANDMARK MONUMENTS

STA	LOCATION	621.0100 LANDMARK REFERENCE MONUMENTS EACH	REMARKS
53+15A	STH 46	1	
79+60A	STH 46	1	
132+02A	STH 46	1	
158+75A	STH 46	1	
267+20B	STH 46	1	
319+05B	STH 46	1	
344+25B	STH 46	1	
599+50B	STH 46	1	
PROJECT 8072-00-70 TOTAL		8	

CATTLE PASS

STA	LOCATION	END CLOSURE SPV.0060.01 EACH	ABANDON STA 391+10'B' SPV.0060.02 EACH	ABANDON STA 440+36'B' SPV.0060.03 EACH	REMARKS
392+10B	STH 46	2	1	--	RT END, GRADE TO 4:1
440+36B	STH 46	2	--	1	MATCH EXISTING
		4	1	1	

ALL ITEMS ON THIS SHEET ARE CATEGORY 0010

3

STA	-	STA	LOCATION	211.0100 PREPARE FOUNDATION FOR ASPHALTIC PAVING 8072-00-71 LS	305.0504.S HAULING EXCESS SHOULDER MATERIAL CY
10+43A	-	519+69B	STH 46	1	185
			8072-00-71 PROJECT TOTALS	1	185

PREPARE FOUNDATION FOR HMA SHOULDERS

FROM STA	-	TO STA	SIDE	211.0400 PREPARE FOUNDATION FOR ASPHALTIC SHOULDERS STA
10+43A	-	81+66A	LT	71
82+82A	-	105+40A	LT	23
106+59A	-	131+51A	LT	25
132+78A	-	179+46A	LT	47
180+31A	-	184+33A	LT	4
194+50A	-	211+17A	LT	17
211+47A	-	263+21A	LT	52
265+00A	-	266+81A	LT	2
267+86A	-	318+54A	LT	51
319+87A	-	349+35A	LT	29
351+73A	-	371+12A	LT	19
372+22A	-	399+23A	LT	27
400+53A	-	430+87A	LT	30
432+46A	-	465+13A	LT	33
466+09A	-	512+85A	LT	47
514+25A	-	518+57A	LT	4
10+43A	-	81+74A	RT	71
82+90A	-	105+28A	RT	22
106+35A	-	171+18A	RT	65
172+07A	-	184+05A	RT	12
193+51A	-	209+91A	RT	16
211+22A	-	263+21A	RT	52
265+00B	-	279+17B	RT	14
280+11B	-	318+34B	RT	38
319+65B	-	349+40B	RT	30
351+33B	-	370+86B	RT	20
371+91B	-	431+89B	RT	60
433+12B	-	465+29B	RT	32
466+68B	-	484+91B	RT	18
485+84B	-	491+89B	RT	6
493+18B	-	512+85B	RT	20
514+23B	-	519+69B	RT	5
PROJECT 8072-00-71 TOTALS				962

HOT MIXSPHALT (HMA) PAVEMENT

3

STA	-	STA		LOCATION	460.6644 4 MT58-34 V LOWER LAYER TON	460.6645 5 MT58-34 V UPPER LAYER TON	455.0605 TACK GAL	REMARKS
10+43A	-	81+66A	LT	STH 46 SHOULDERS	155	133	95	2'WIDENING
82+80A	-	106+59A	LT	STH 46 SHOULDERS	59	50	73	2'WIDENING
106+59A	-	132+78A	LT	STH 46 SHOULDERS	70	60	86	2'WIDENING
132+78A	-	180+31A	LT	STH 46 SHOULDERS	104	89	127	2'WIDENING
180+31A	-	185+16A	LT	STH 46 SHOULDERS	11	9	13	2'WIDENING
195+74A	-	211+47A	LT	STH 46 SHOULDERS	34	29	42	2'WIDENING
211+47A	-	263+22A	LT	STH 46 SHOULDERS	113	97	138	2'WIDENING
265+00B	-	267+86B	LT	STH 46 SHOULDERS	18	15	22	2'WIDENING
267+86B	-	319+87B	LT	STH 46 SHOULDERS	121	104	149	2'WIDENING
319+87B	-	324+00B	LT	STH 46 SHOULDERS	14	12	17	3'WIDENING
324+00B	-	351+73B	LT	STH 46 SHOULDERS	60	52	74	2'WIDENING
351+73B	-	372+22B	LT	STH 46 SHOULDERS	45	38	55	2'WIDENING
372+22B	-	400+53B	LT	STH 46 SHOULDERS	116	100	143	2'WIDENING
400+53B	-	432+46B	LT	STH 46 SHOULDERS	117	100	144	2'WIDENING
432+46B	-	466+09B	LT	STH 46 SHOULDERS	110	94	135	3'WIDENING
466+09B	-	480+00B	LT	STH 46 SHOULDERS	45	39	56	3'WIDENING
480+00B	-	512+79B	LT	STH 46 SHOULDERS	71	61	88	2'WIDENING
514+25B	-	519+69B	LT	STH 46 SHOULDERS	12	10	15	2'WIDENING
10+43A	-	81+74A	RT	STH 46 SHOULDERS	155	133	191	2'WIDENING
82+90A	-	106+35A	RT	STH 46 SHOULDERS	51	44	63	2'WIDENING
106+35A	-	172+07A	RT	STH 46 SHOULDERS	143	123	176	2'WIDENING
172+07A	-	184+06A	RT	STH 46 SHOULDERS	26	22	32	2'WIDENING
195+74A	-	211+22A	RT	STH 46 SHOULDERS	34	29	42	2'WIDENING
211+22A	-	263+22A	RT	STH 46 SHOULDERS	113	97	139	2'WIDENING
265+00B	-	280+11B	RT	STH 46 SHOULDERS	33	28	41	2'WIDENING
280+11B	-	319+65B	RT	STH 46 SHOULDERS	86	74	106	2'WIDENING
319+65B	-	351+33B	RT	STH 46 SHOULDERS	69	59	85	2'WIDENING
351+33B	-	371+91B	RT	STH 46 SHOULDERS	45	38	55	2'WIDENING
371+91B	-	425+00B	RT	STH 46 SHOULDERS	116	99	142	2'WIDENING
425+00B	-	431+89B	RT	STH 46 SHOULDERS	22	19	28	3'WIDENING
433+12B	-	466+68B	RT	STH 46 SHOULDERS	110	94	135	3'WIDENING
466+68B	-	485+84B	RT	STH 46 SHOULDERS	63	54	77	3'WIDENING
485+84B	-	493+18B	RT	STH 46 SHOULDERS	16	14	20	2'WIDENING
493+18B	-	512+79B	RT	STH 46 SHOULDERS	43	37	53	2'WIDENING
514+23B	-	519+69B	RT	STH 46 SHOULDERS	12	10	15	2'WIDENING
				UNDISTRIBUTED	38	34	78	
				PROJECT 8072-00-71 TOTALS	2,450	2,100	2,950	

4

R/W PROJECT NUMBER: 8072-00-20	SHEET NUMBER: 1

TLE ACQUISITION EXHIBIT
CYLON - AMERY
STH 64 TO SNOW STREET

STH 46 ST. CROIX COUNTY

THAT PART OF LOT 1 OF CERTIFIED SURVEY MAP RECORDED IN V. 17, P. 4479 AS DOC. 714134, ST. CROIX COUNTY REGISTER OF DEEDS, LOCATED IN AND INCLUDING THE NE 1/4 OF THE SE 1/4 OF SECTION 6, T31N, R16W, TOWN OF CYLON, ST CROIX COUNTY, WISCONSIN.

NOTES:
THIS EXHIBIT IS A GRAPHIC REPRESENTATION AND IS FOR REFERENCE PURPOSES ONLY. REFER TO THE CONVEYANCE DOCUMENT FOR PARCEL RELATED DETAILS.

THE PURPOSE OF THIS TLE IS FOR DITCH CLEANING FOR PIPE.

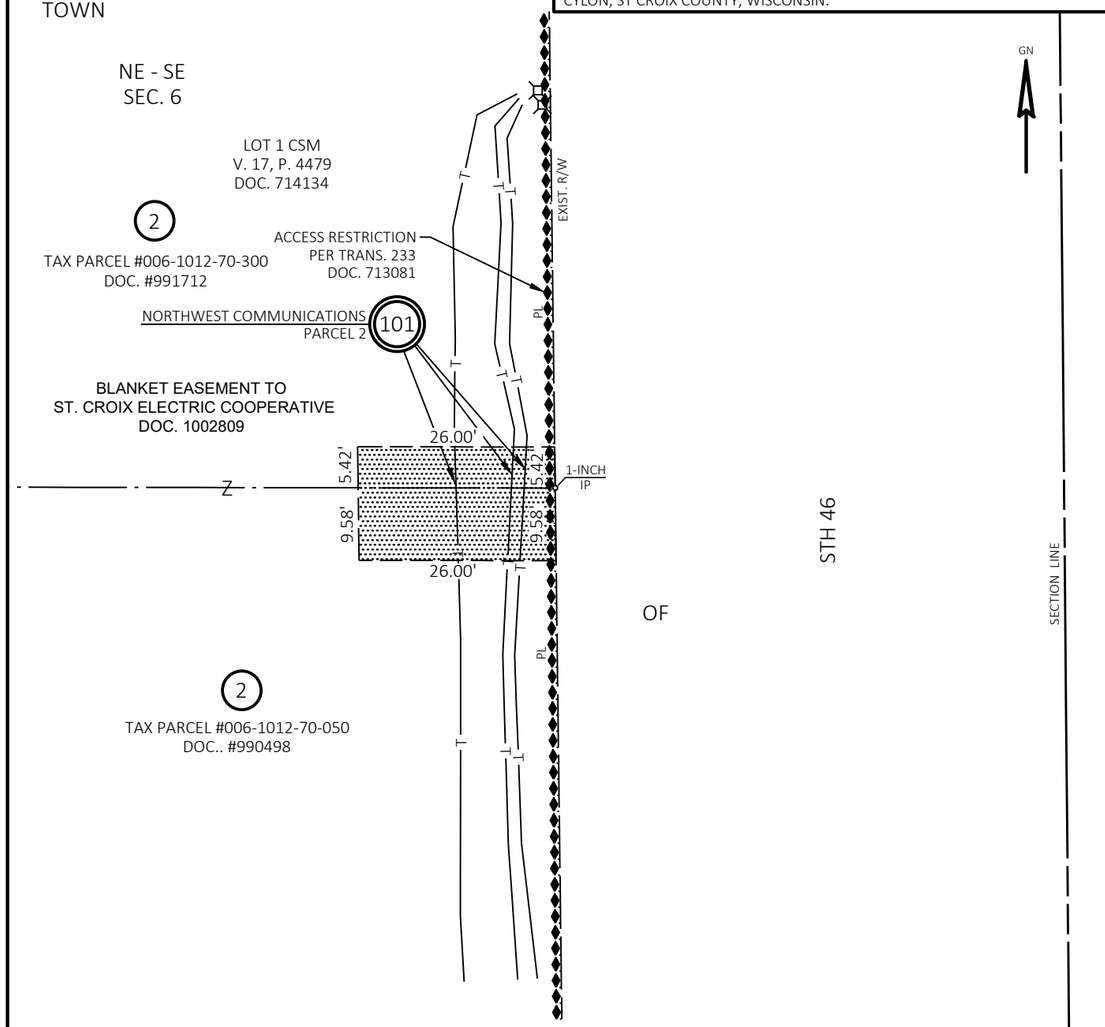

SCHEDULE OF LANDS & INTERESTS REQUIRED

OWNERS NAMES ARE SHOWN FOR REFERENCE PURPOSES ONLY AND ARE SUBJECT TO CHANGE PRIOR TO THE TRANSFER OF LAND INTERESTS TO THE DEPARTMENT

PARCEL NUMBER	OWNER(S)	INTEREST REQUIRED	TLE S.F.
2	ROBERT W. KRUEGER AND EVA M. KRUEGER, AS TRUSTEES OF THE B AND E KRUEGER TRUST	TLE	390

UTILITY INTERESTS REQUIRED

UTILITY NUMBER	UTILITY OWNER(S)	INTEREST REQUIRED
100	ST. CROIX ELECTRIC COOPERATIVE	TEMPORARY RELEASE OF RIGHTS
101	NORTHWEST COMMUNICATIONS	TEMPORARY RELEASE OF RIGHTS

4

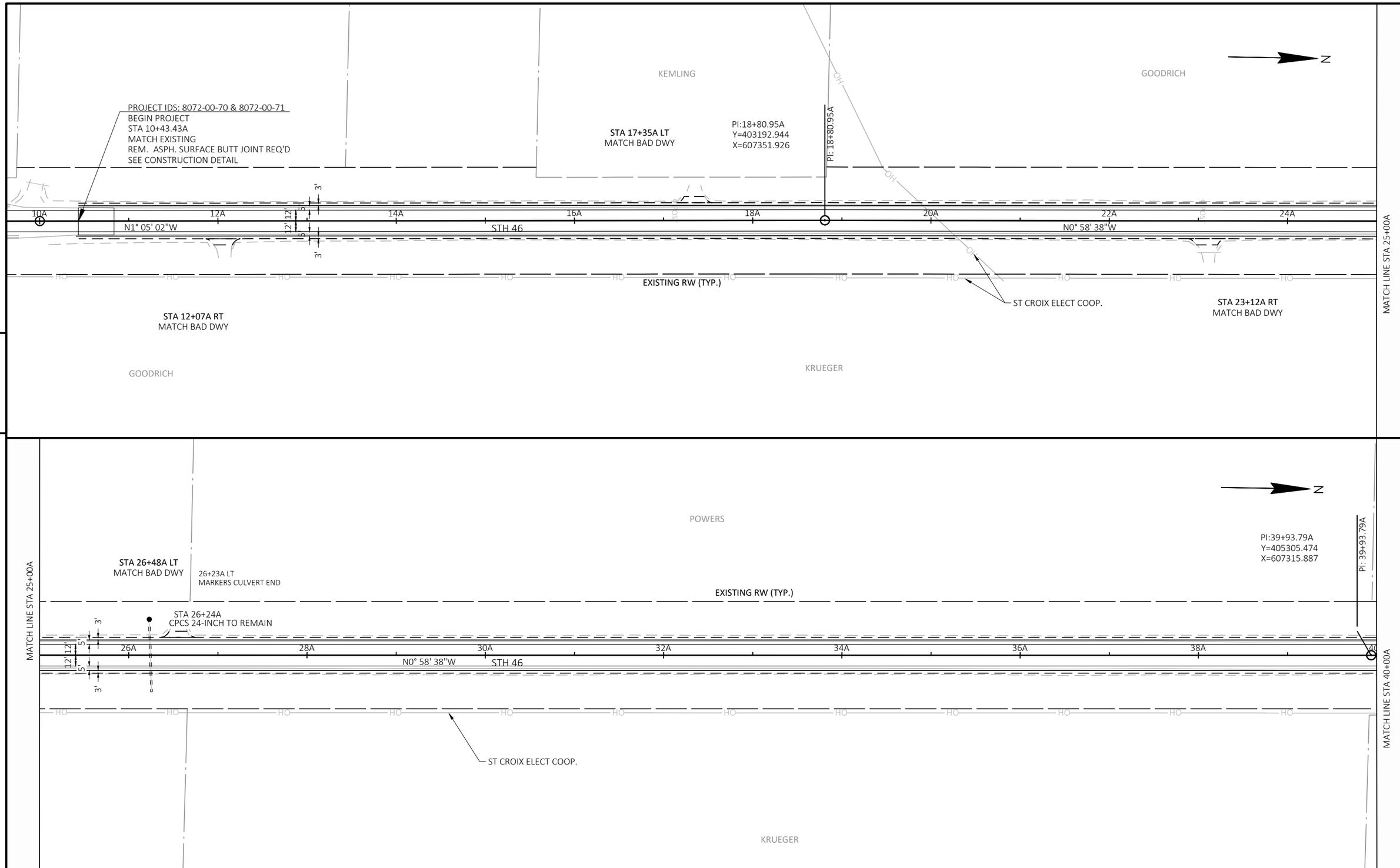

PROJECT NO: 8072-00-70	HWY: STH 46	COUNTY: ST. CROIX/POLK	PLAN SHEETS	SHEET 57	E

FILE NAME : \\KLENGINEERING\DATA1\WDOTNW\19065-000 (STH 46)\CIVIL 3D\SHEETSPLAN\051201-PD.DWG
LAYOUT NAME - 010
PLOT DATE : 7/15/2021 9:21 AM
PLOT BY : KL ENGINEERING
PLOT NAME :
PLOT SCALE : 1 IN:100 FT

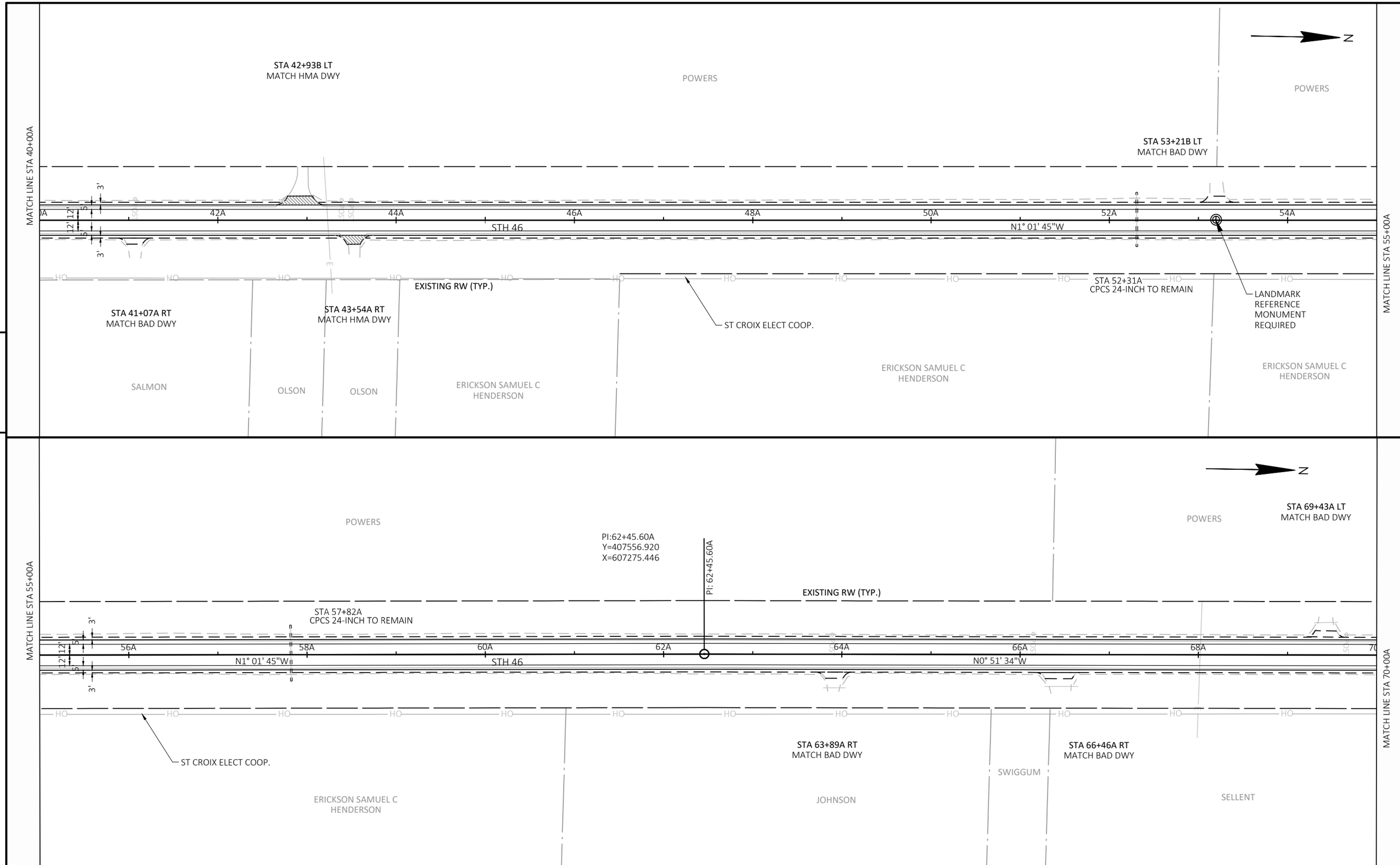

PROJECT NO: 8072-00-70	HWY: STH 46	COUNTY: ST. CROIX/POLK	PLAN SHEETS	SHEET 58	E

FILE NAME : \\KLENGINEERING\DATA1\WDOTNW\19065-000 (STH 46)\CIVIL 3D\SHEETSPLAN\051201-PD.DWG
LAYOUT NAME - 040
PLOT DATE : 7/15/2021 9:21 AM
PLOT BY : KL ENGINEERING
PLOT NAME :
PLOT SCALE : 1 IN:100 FT
WISDOT/CADDS SHEET 44

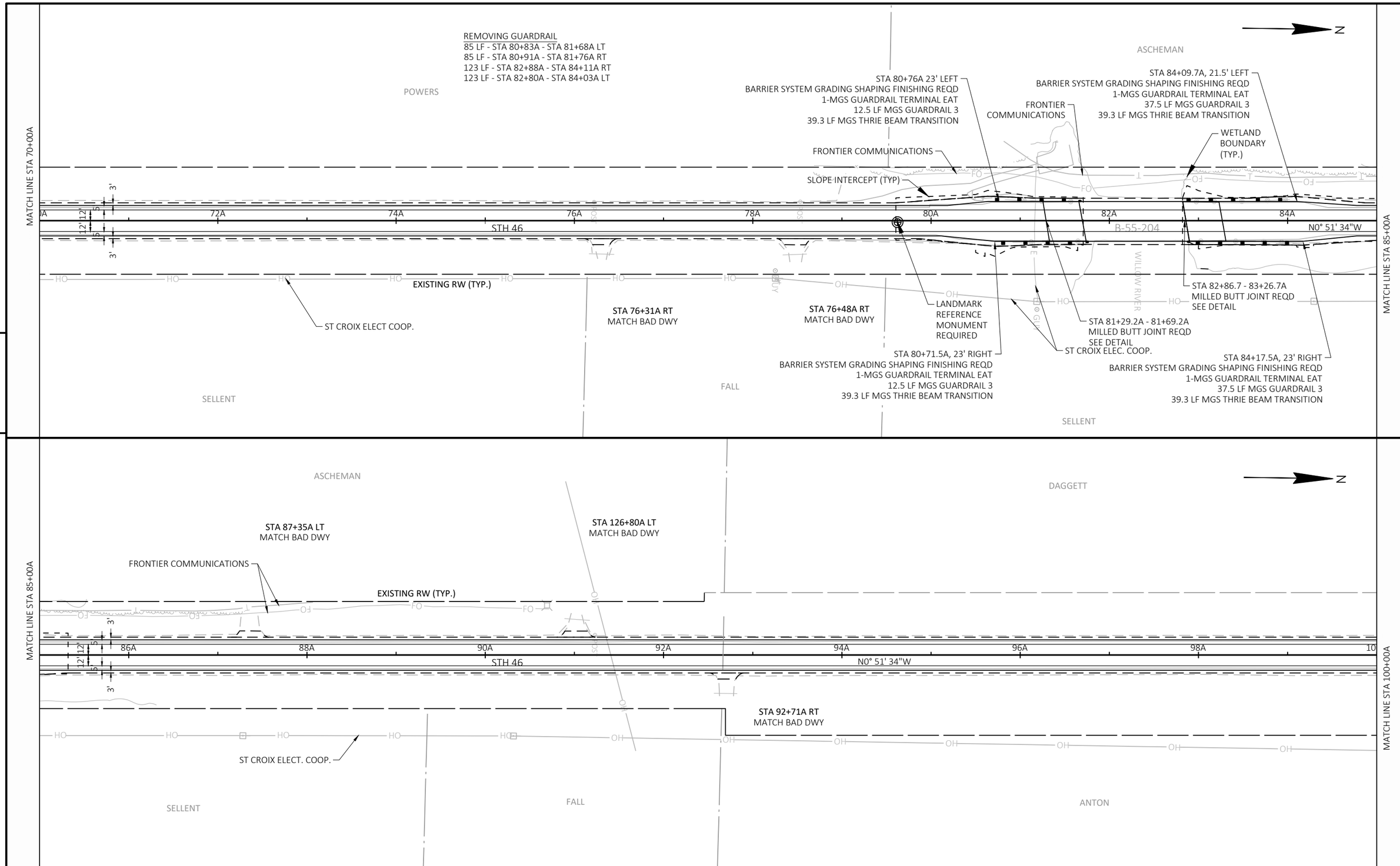

PROJECT NO: 8072-00-70	HWY: STH 46	COUNTY: ST. CROIX/POLK	PLAN SHEETS	SHEET 59	E

FILE NAME : \\KLENGINEERING\DATA1\WDOTNW\19065-000 (STH 46)\CIVIL 3D\SHEETSPLAN\051201-PD.DWG
LAYOUT NAME - 070
PLOT DATE : 7/15/2021 9:21 AM
PLOT BY : KL ENGINEERING
PLOT NAME :
PLOT SCALE : 1 IN:100 FT
WISDOT/CADDS SHEET 44

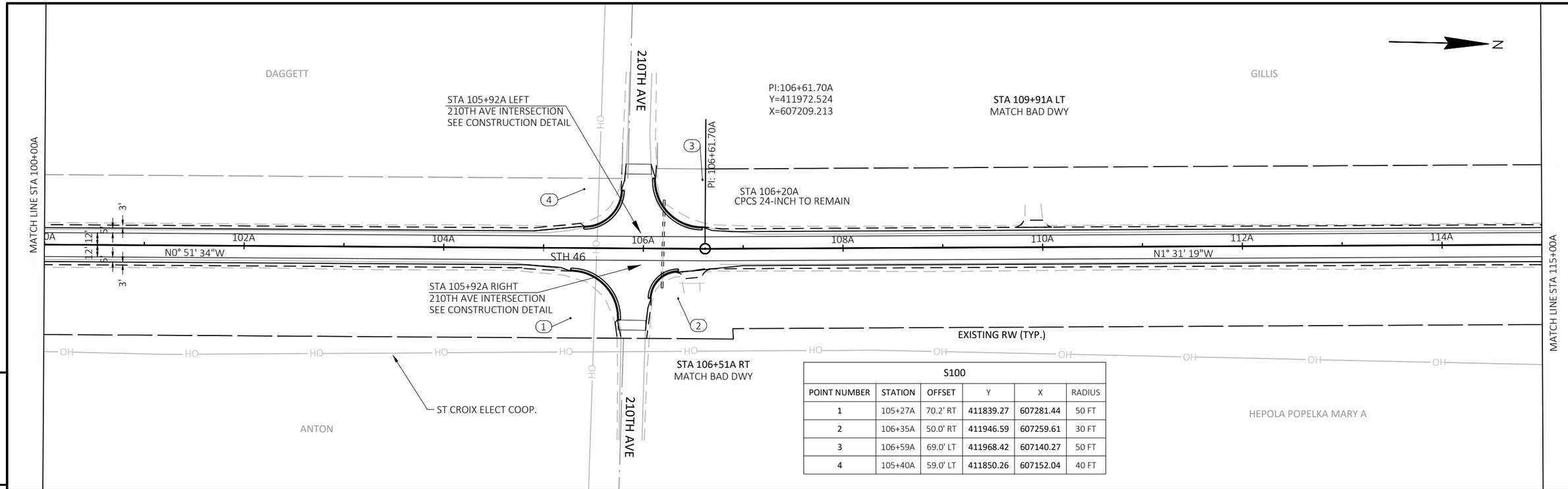

S100					
POINT NUMBER	STATION	OFFSET	Y	X	RADIUS
1	105+27A	70.2' RT	411839.27	607281.44	50 FT
2	106+35A	50.0' RT	411946.59	607259.61	30 FT
3	106+59A	69.0' LT	411968.42	607140.27	50 FT
4	105+40A	59.0' LT	411850.26	607152.04	40 FT

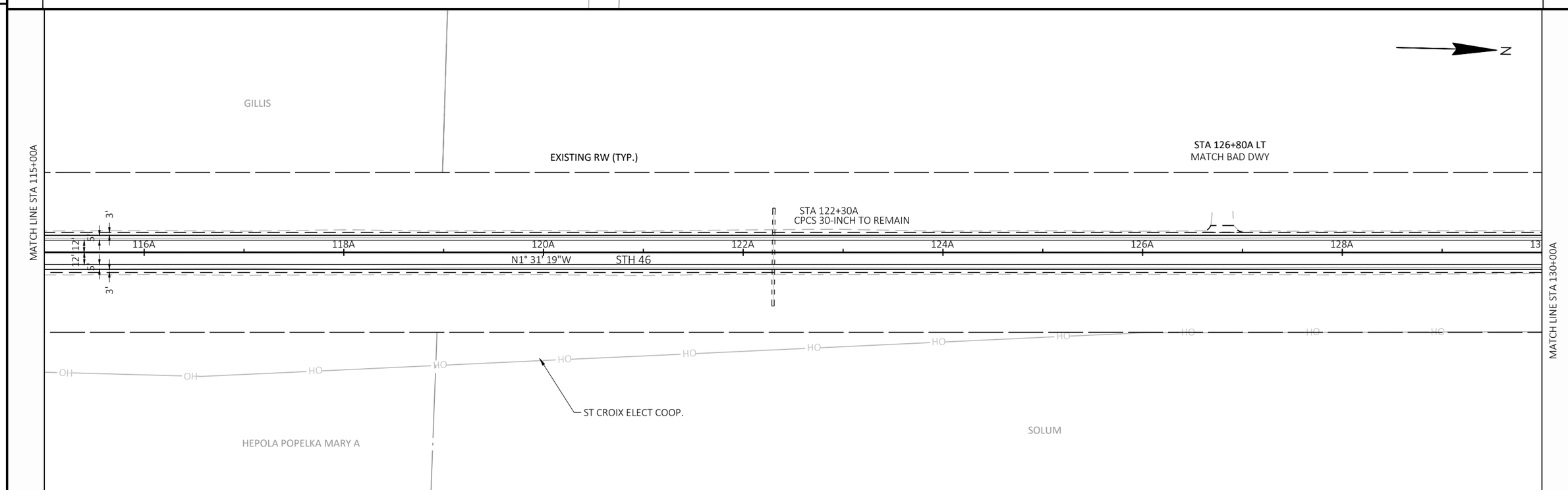

PROJECT NO: 8072-00-70	HWY: STH 46	COUNTY: ST. CROIX/POLK	PLAN SHEETS	SHEET 60	E

FILE NAME : \\KLENGINEERING\DATA1\WDOTNW\19065-000 (STH 46)\CIVIL 3D\SHEETSPLAN\051201-PD.DWG
LAYOUT NAME - 100
PLOT DATE : 7/15/2021 9:21 AM PLOT BY : KL ENGINEERING PLOT NAME : PLOT SCALE : 1 IN:100 FT

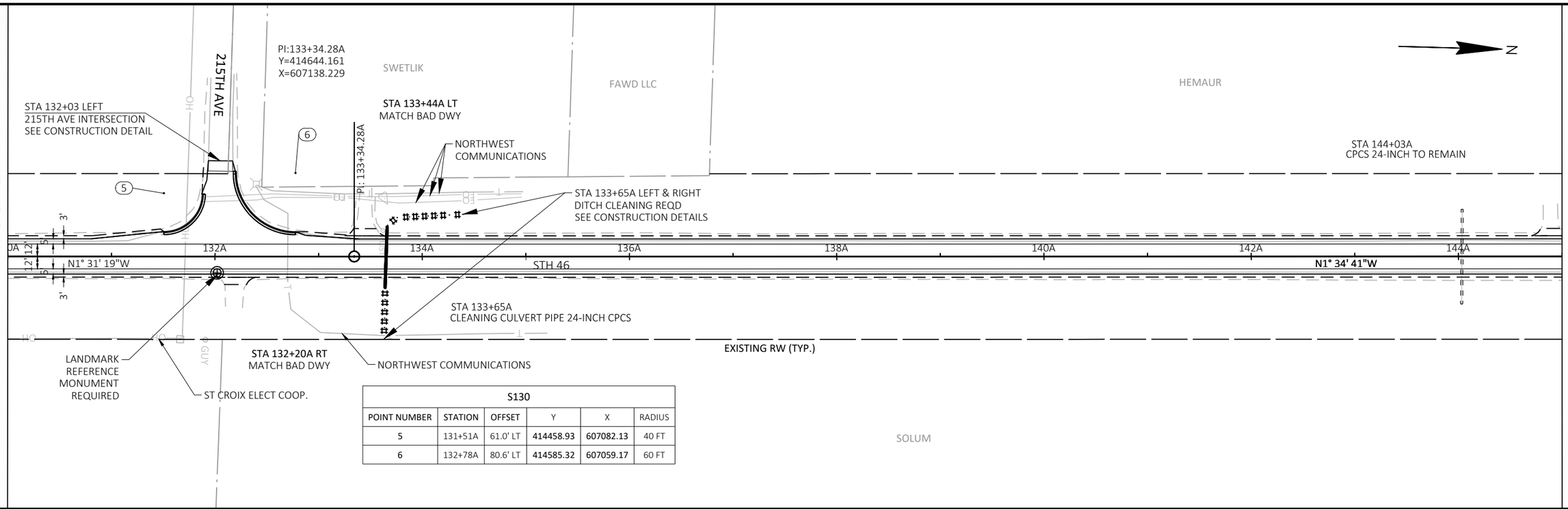

S130					
POINT NUMBER	STATION	OFFSET	Y	X	RADIUS
5	131+51A	61.0' LT	414458.93	607082.13	40 FT
6	132+78A	80.6' LT	414585.32	607059.17	60 FT

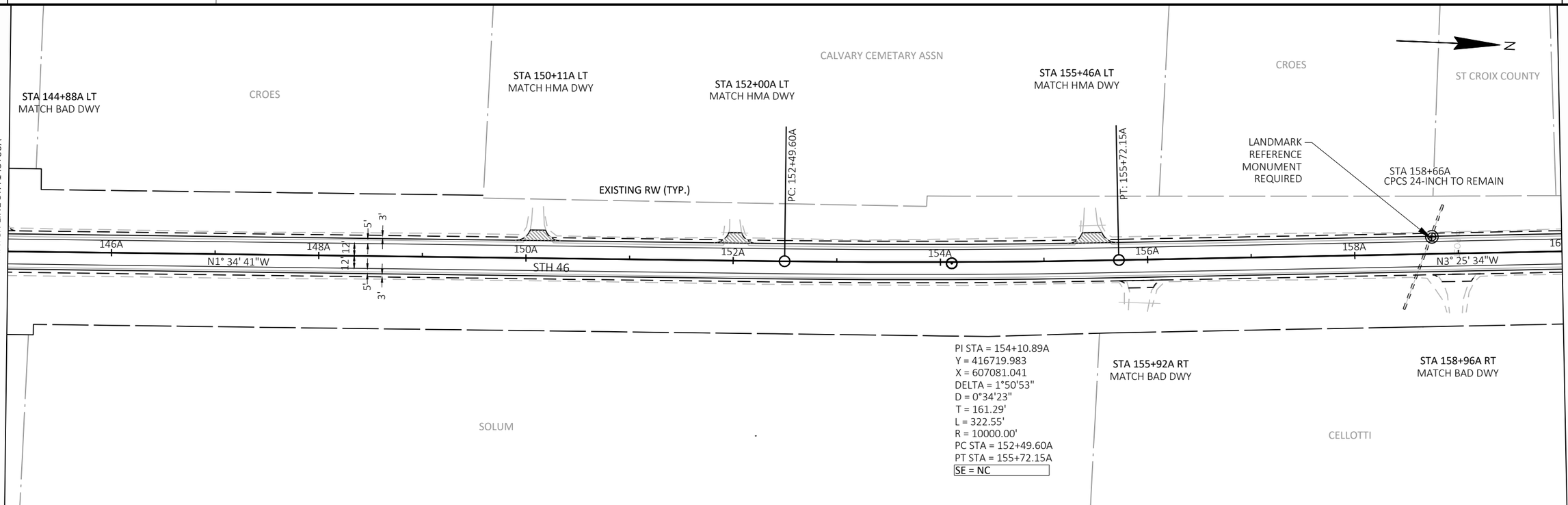

PROJECT NO: 8072-00-70	HWY: STH 46	COUNTY: ST. CROIX/POLK	PLAN SHEETS	SHEET 61	E

FILE NAME : \\KLENGINEERING\DATA1\WDOTNW\19065-000 (STH 46)\CIVIL 3D\SHEETSPLAN\051201-PD.DWG
LAYOUT NAME - 130
PLOT DATE : 7/15/2021 9:21 AM
PLOT BY : KL ENGINEERING
PLOT NAME :
PLOT SCALE : 1 IN:100 FT
WISDOT/CADDS SHEET 44

S160					
POINT NUMBER	STATION	OFFSET	Y	X	RADIUS
7	172+07A	48.0' RT	418515.55	607034.21	30 FT
8	171+18A	48.0' RT	418426.36	607037.88	30 FT

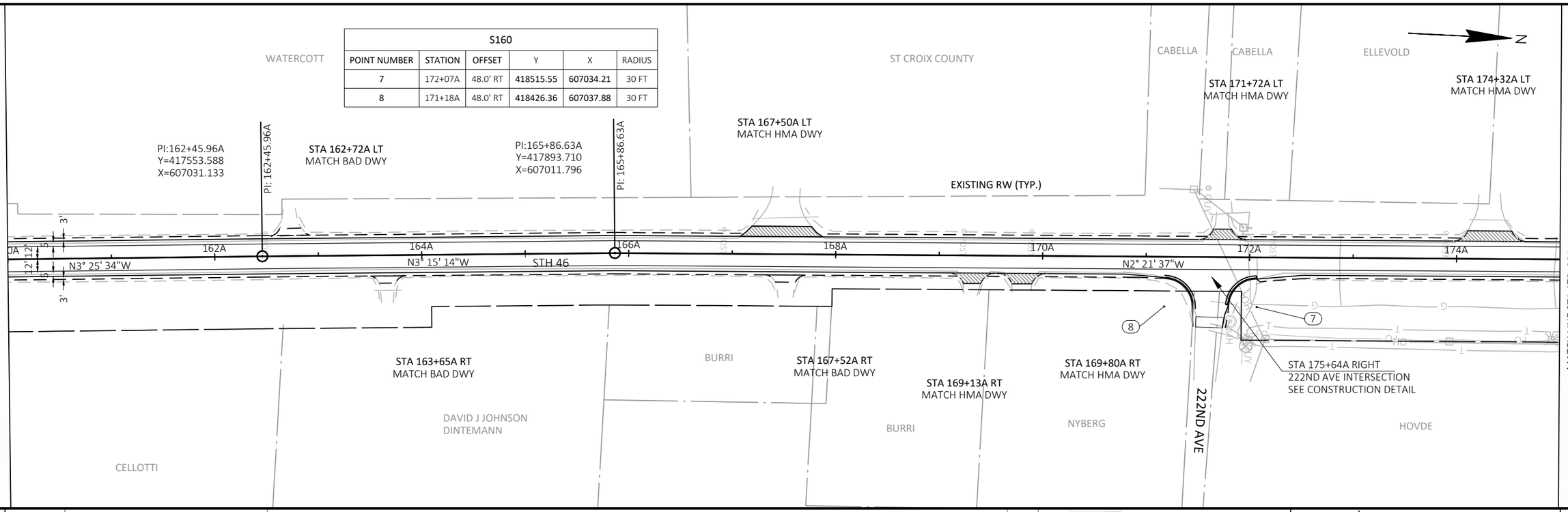

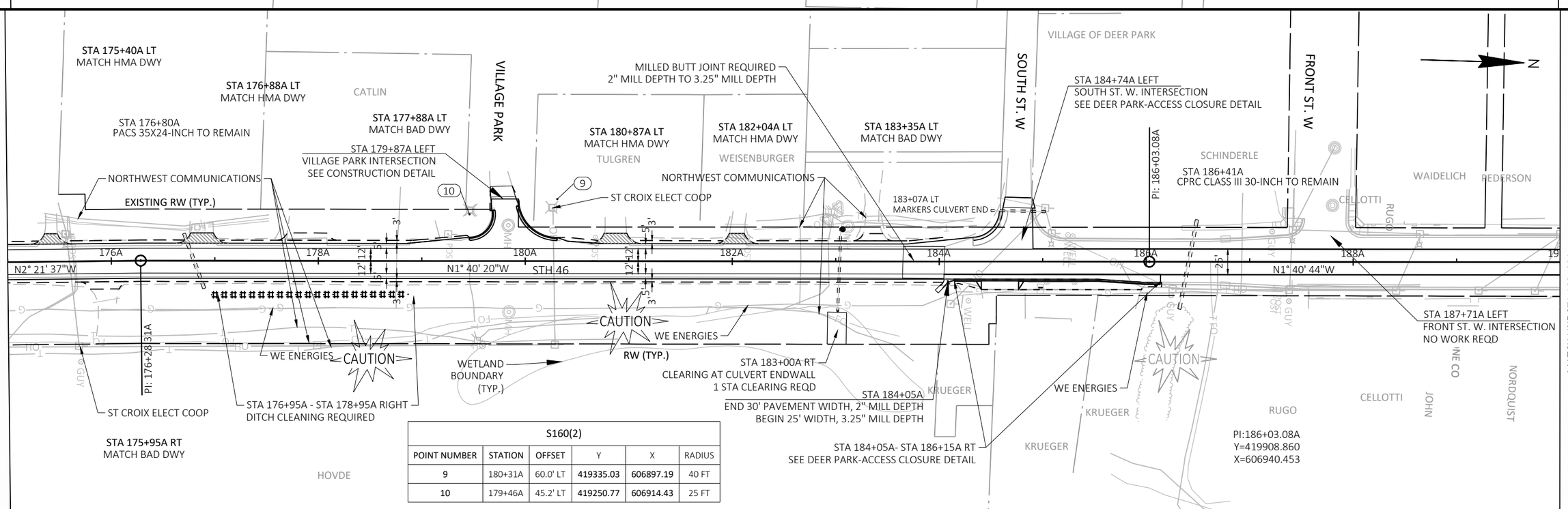

S160(2)					
POINT NUMBER	STATION	OFFSET	Y	X	RADIUS
9	180+31A	60.0' LT	419335.03	606897.19	40 FT
10	179+46A	45.2' LT	419250.77	606914.43	25 FT

5

5

PROJECT NO: 8072-00-70	HWY: STH 46	COUNTY: ST. CROIX/POLK	PLAN SHEETS	SHEET 62	E

FILE NAME : \\KLENGINEERING\DATA1\WDOTNW\19065-000 (STH 46)\CIVIL 3D\SHEETSPLAN\051201-PD.DWG
LAYOUT NAME - 160
PLOT DATE : 7/15/2021 9:21 AM
PLOT BY : KL ENGINEERING
PLOT NAME :
PLOT SCALE : 1 IN:100 FT
WISDOT/CADDS SHEET 44

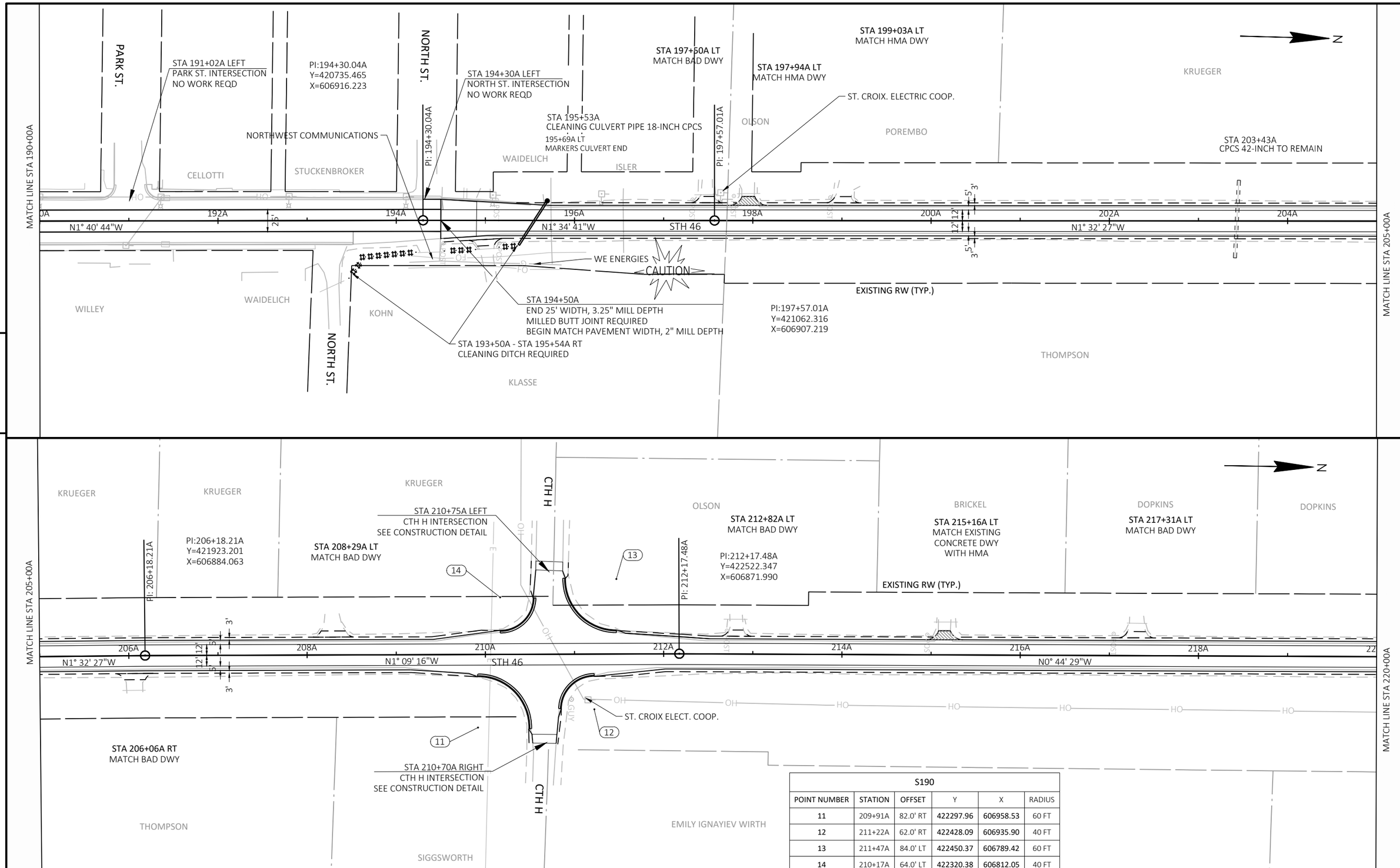

S190					
POINT NUMBER	STATION	OFFSET	Y	X	RADIUS
11	209+91A	82.0' RT	422297.96	606958.53	60 FT
12	211+22A	62.0' RT	422428.09	606935.90	40 FT
13	211+47A	84.0' LT	422450.37	606789.42	60 FT
14	210+17A	64.0' LT	422320.38	606812.05	40 FT

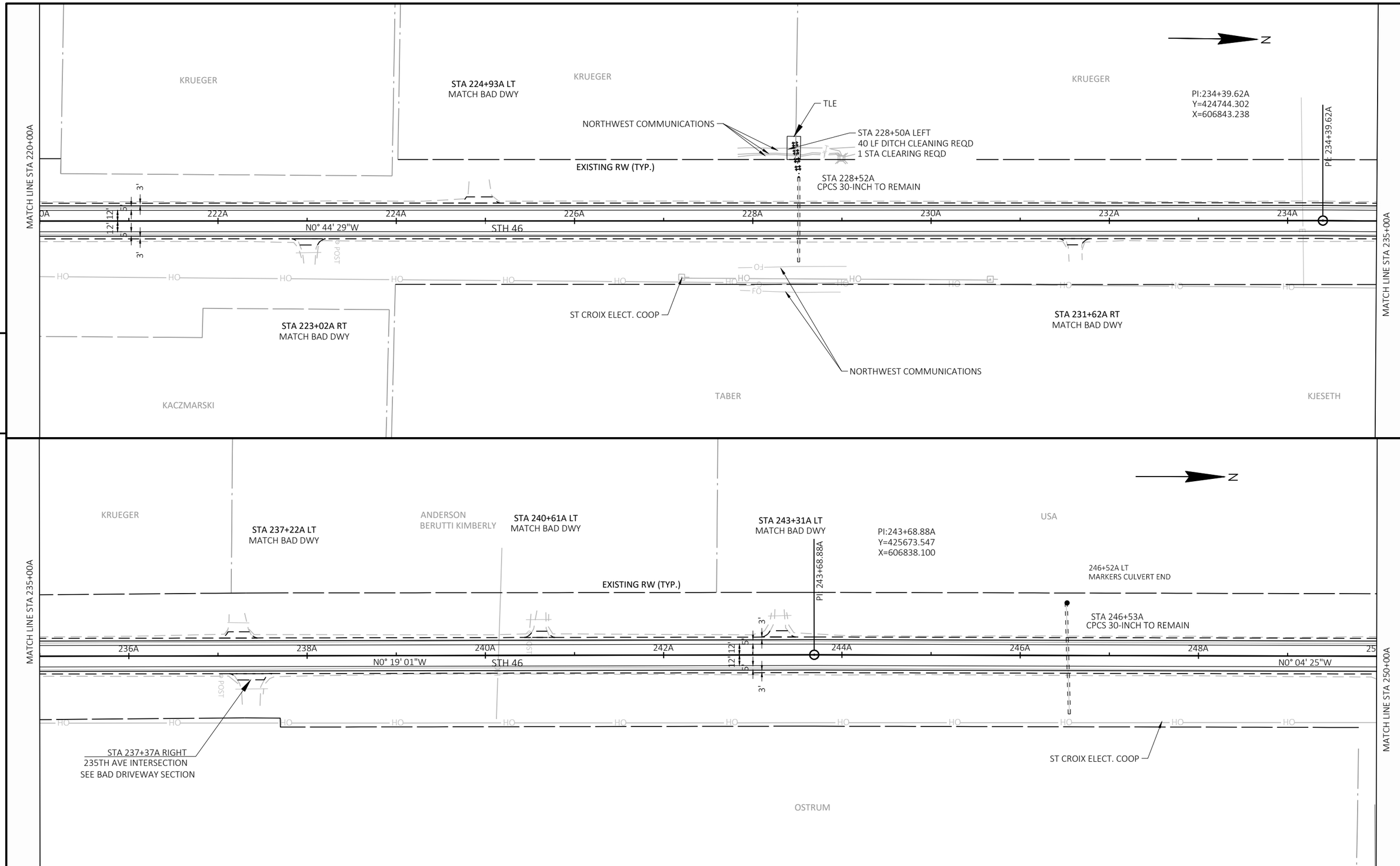

PROJECT NO: 8072-00-70	HWY: STH 46	COUNTY: ST. CROIX/POLK	PLAN SHEETS	SHEET 64	E

FILE NAME : \\KLENGINEERING\DATA1\WDOTNW\19065-000 (STH 46)\CIVIL 3D\SHEETSPLAN\051201-PD.DWG
LAYOUT NAME - 220
PLOT DATE : 7/15/2021 9:21 AM
PLOT BY : KL ENGINEERING
PLOT NAME :
PLOT SCALE : 1 IN:100 FT
WISDOT/CADDS SHEET 44

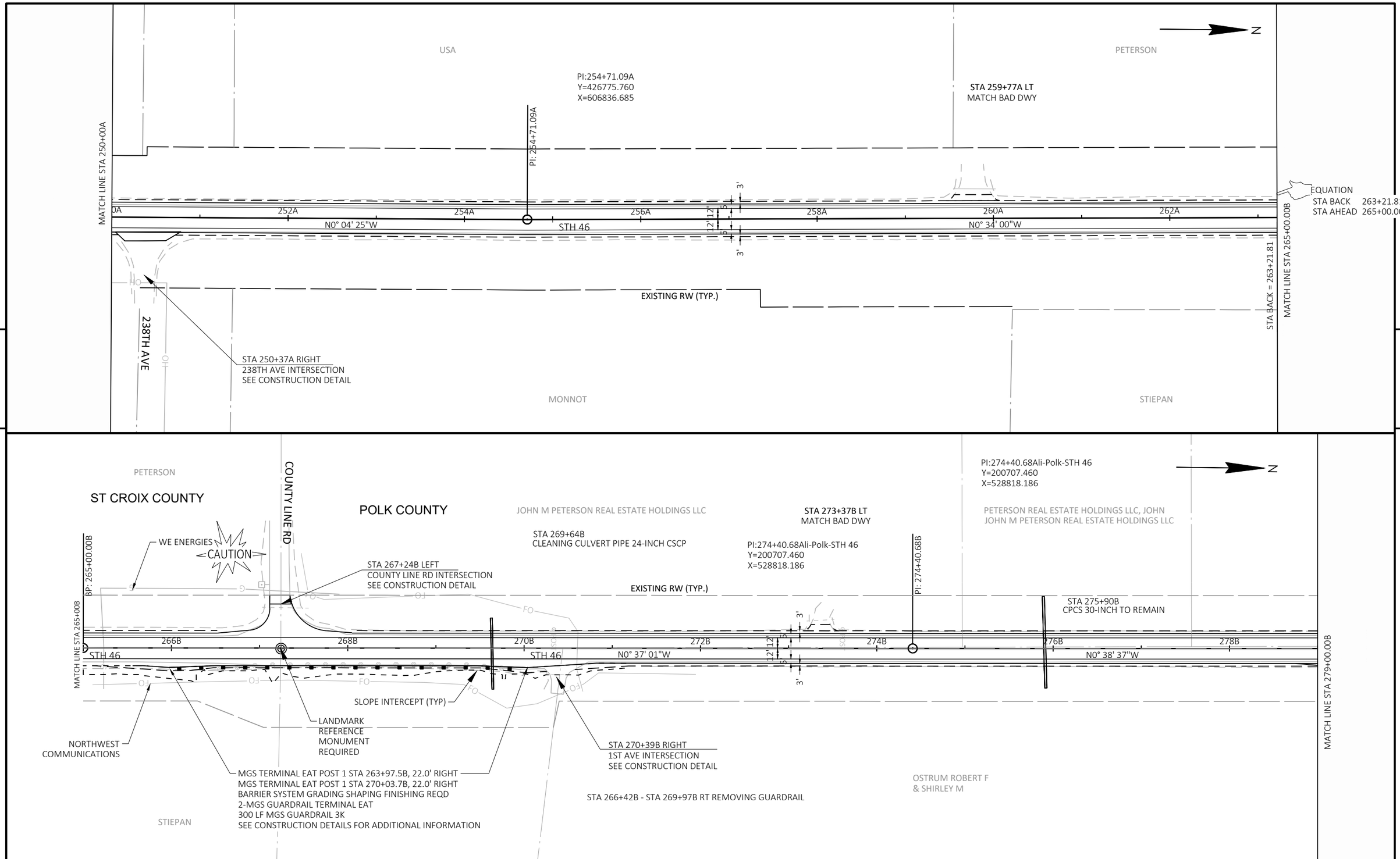

PROJECT NO: 8072-00-70	HWY: STH 46	COUNTY: ST. CROIX/POLK	PLAN SHEETS	SHEET 65	E

FILE NAME : \\KLENGINEERING\DATA1\WDOTNW\19065-000 (STH 46)\CIVIL 3D\SHEETSPLAN\051201-PD.DWG
LAYOUT NAME - 250
PLOT DATE : 7/15/2021 9:21 AM
PLOT BY : KL ENGINEERING
PLOT NAME :
PLOT SCALE : 1 IN:100 FT
WISDOT/CADDS SHEET 44

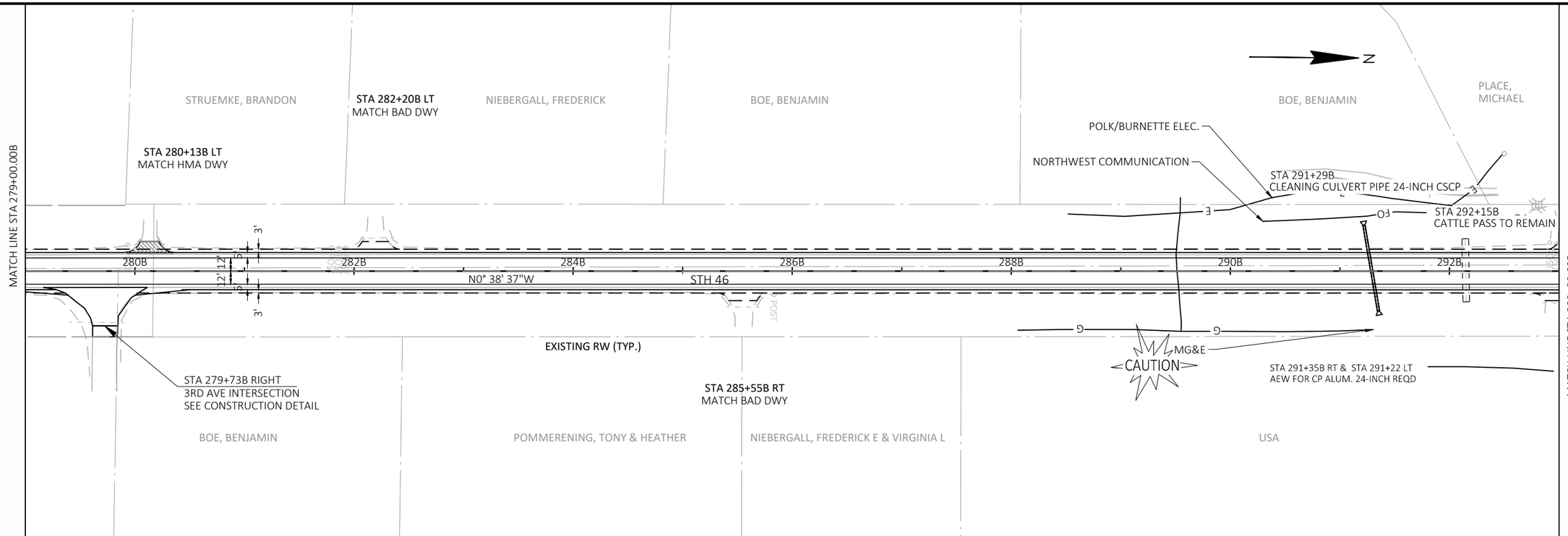

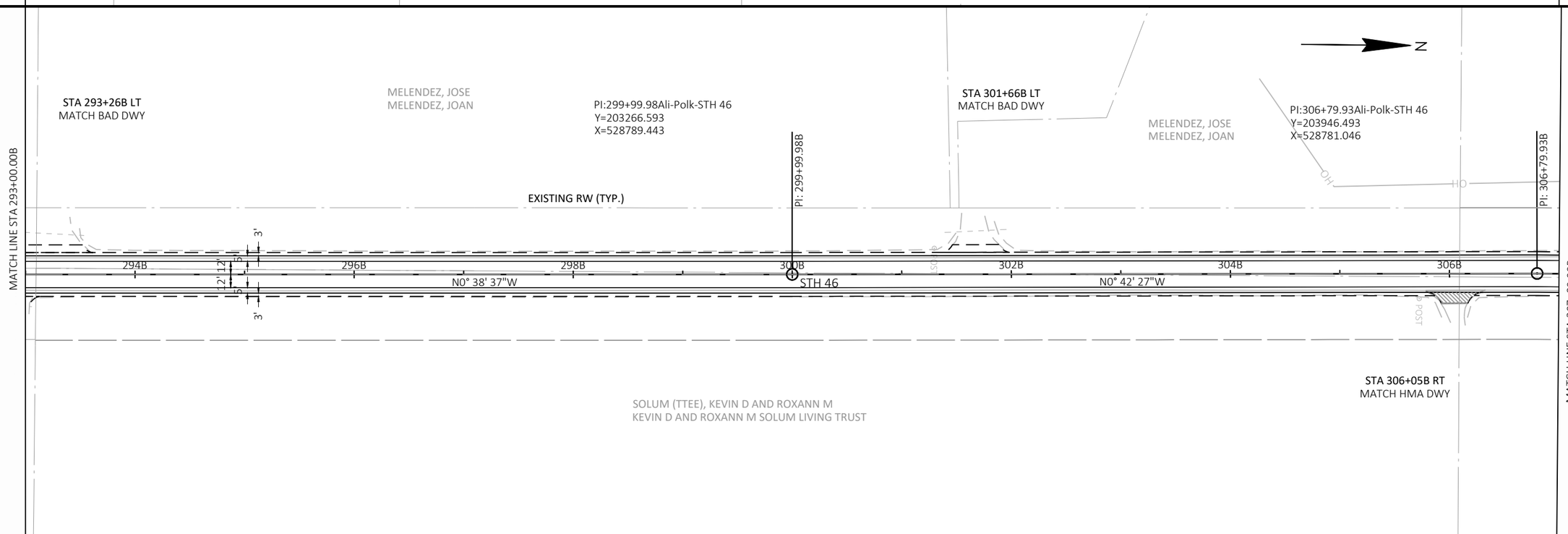

PROJECT NO: 8072-00-70	HWY: STH 46	COUNTY: ST. CROIX/POLK	PLAN SHEETS	SHEET 66	E

FILE NAME : \\KLENGINEERING\DATA1\WDOTNW\19065-000 (STH 46)\CIVIL 3D\SHEETSPLAN\051201-PD.DWG
LAYOUT NAME - P279
PLOT DATE : 7/15/2021 9:21 AM PLOT BY : KL ENGINEERING PLOT NAME : PLOT SCALE : 1 IN:100 FT

WISDOT/CADDS SHEET 44

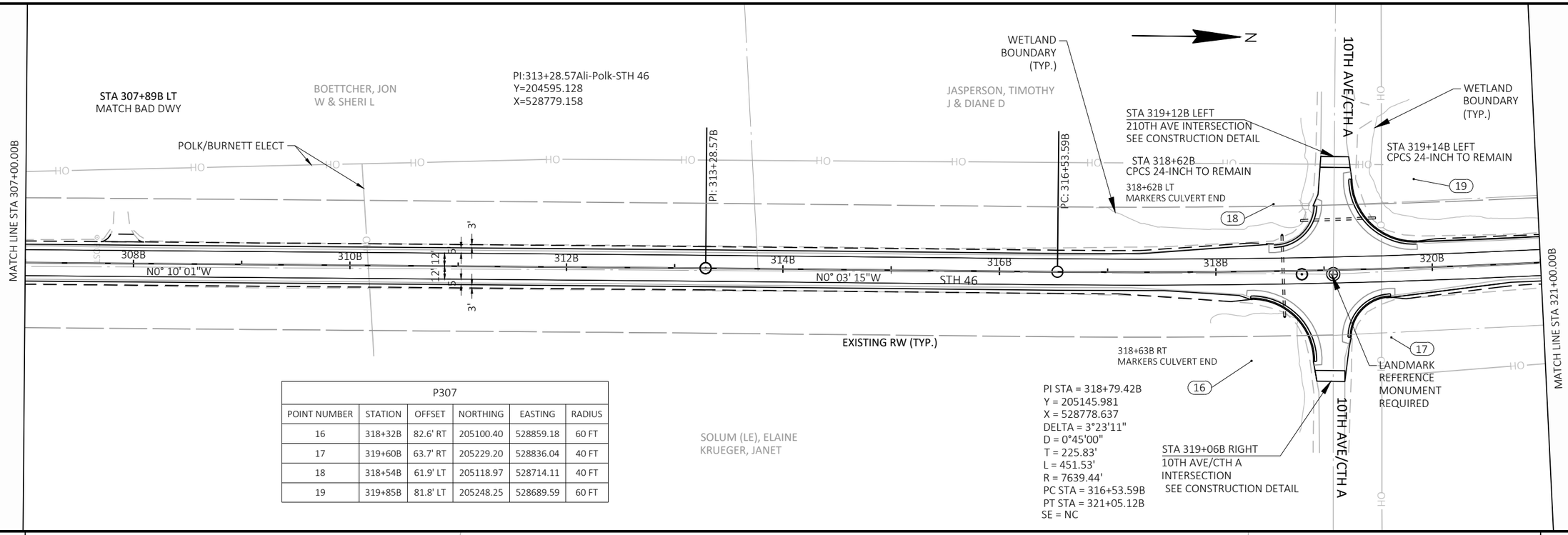

P307					
POINT NUMBER	STATION	OFFSET	NORTHING	EASTING	RADIUS
16	318+32B	82.6' RT	205100.40	528859.18	60 FT
17	319+60B	63.7' RT	205229.20	528836.04	40 FT
18	318+54B	61.9' LT	205118.97	528714.11	40 FT
19	319+85B	81.8' LT	205248.25	528689.59	60 FT

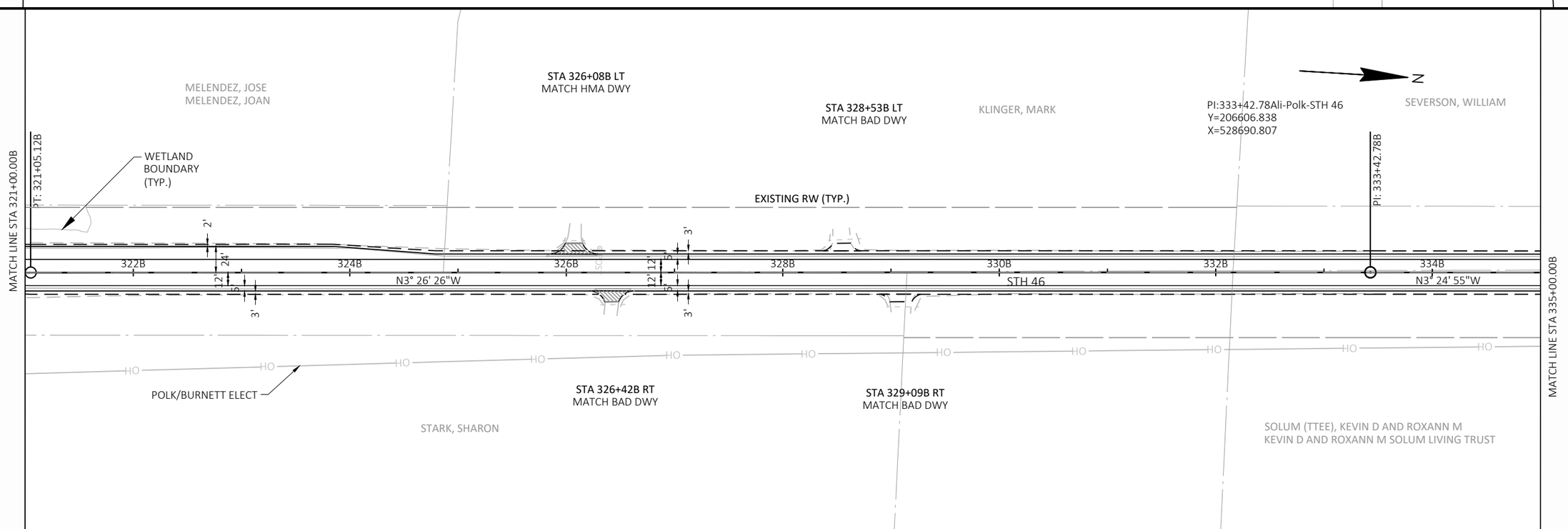

5

5

PROJECT NO: 8072-00-70	HWY: STH 46	COUNTY: ST. CROIX/POLK	PLAN SHEETS	SHEET 67	E

FILE NAME : \\KLENGINEERING\DATA1\WDOTNW\19065-000 (STH 46)\CIVIL 3D\SHEETSPLAN\051201-PD.DWG
LAYOUT NAME - P307
PLOT DATE : 7/15/2021 9:22 AM
PLOT BY : KL ENGINEERING
PLOT NAME :
PLOT SCALE : 1 IN:100 FT
WISDOT/CADDS SHEET 44

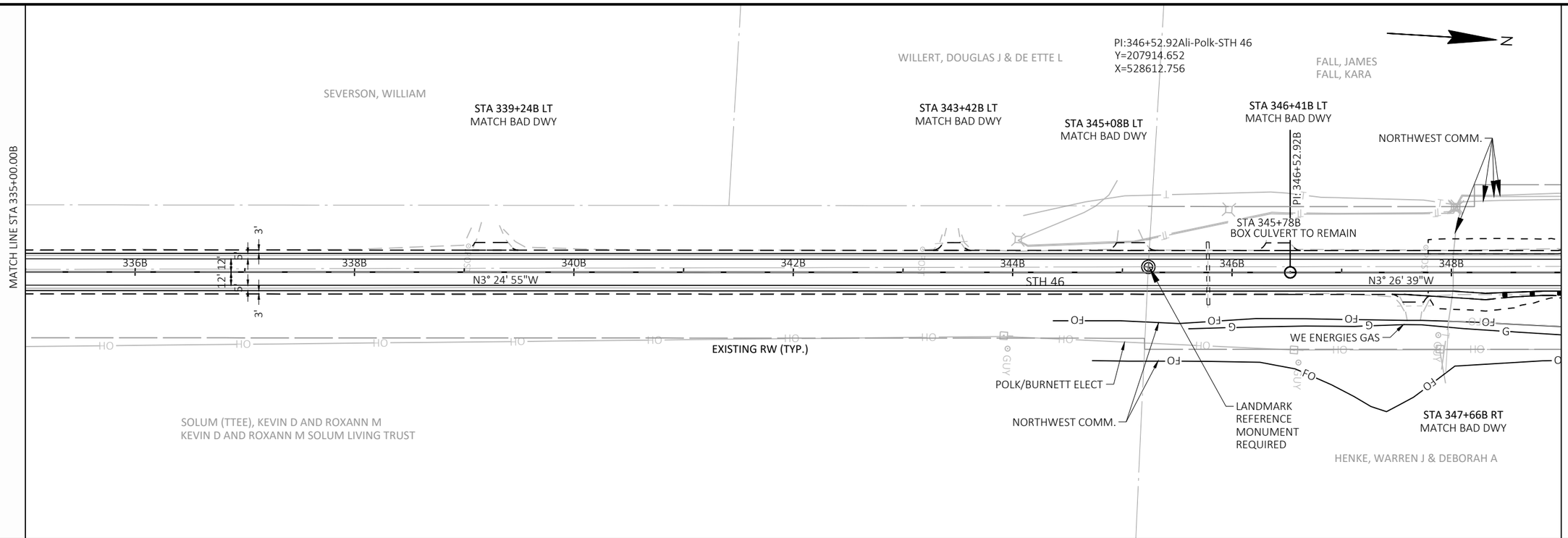

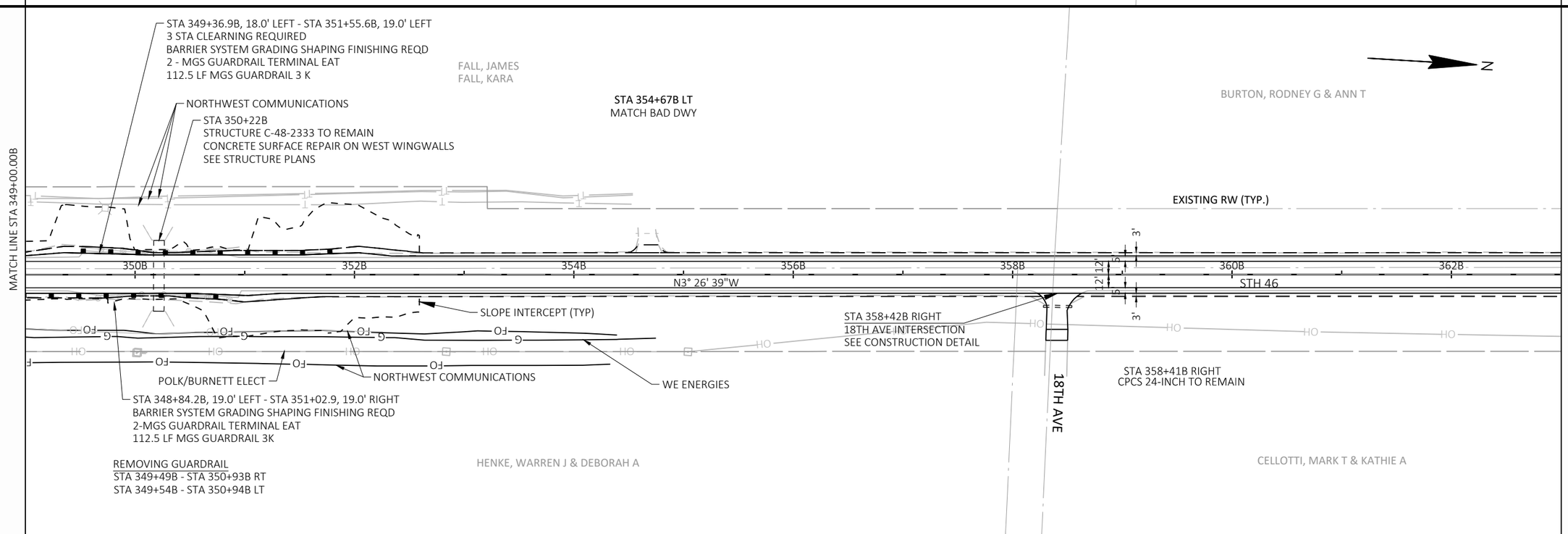

PROJECT NO: 8072-00-70	HWY: STH 46	COUNTY: ST. CROIX/POLK	PLAN SHEETS	SHEET 68	E

FILE NAME : \\KLENGINEERING\DATA1\WDOTNW\19065-000 (STH 46)\CIVIL 3D\SHEETSPLAN\051201-PD.DWG
LAYOUT NAME - P335
PLOT DATE : 7/15/2021 9:22 AM
PLOT BY : KL ENGINEERING
PLOT NAME :
PLOT SCALE : 1 IN:100 FT
WISDOT/CADDS SHEET 44

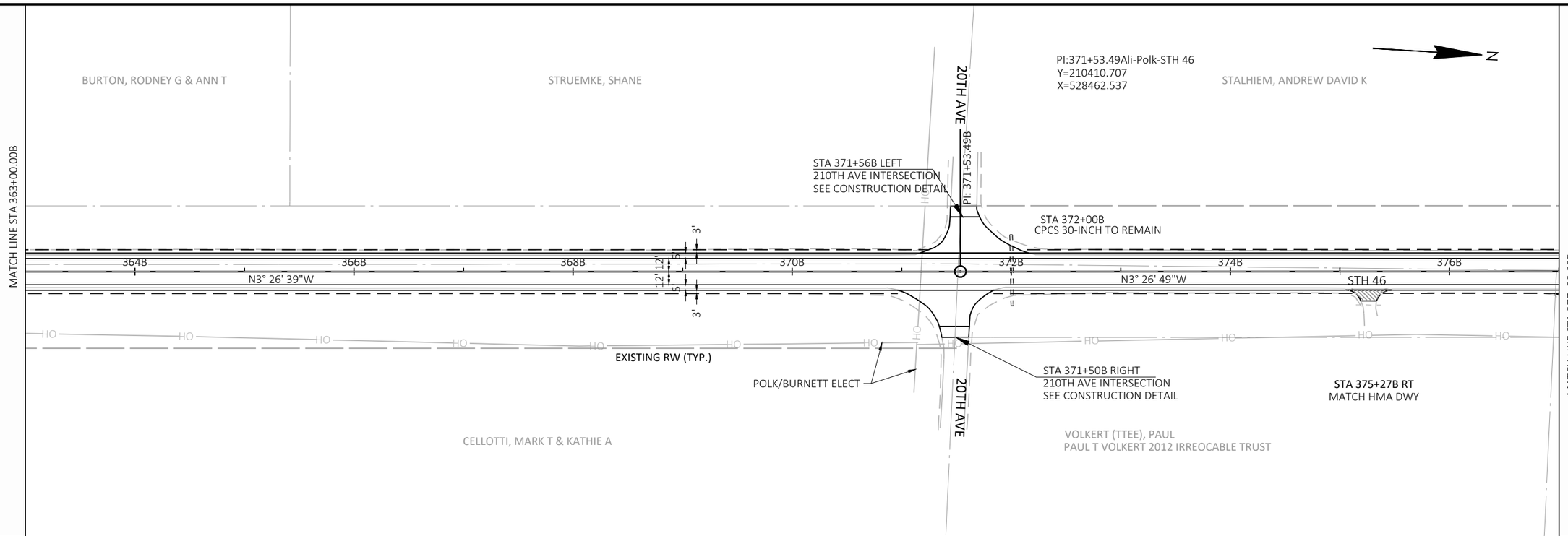

5

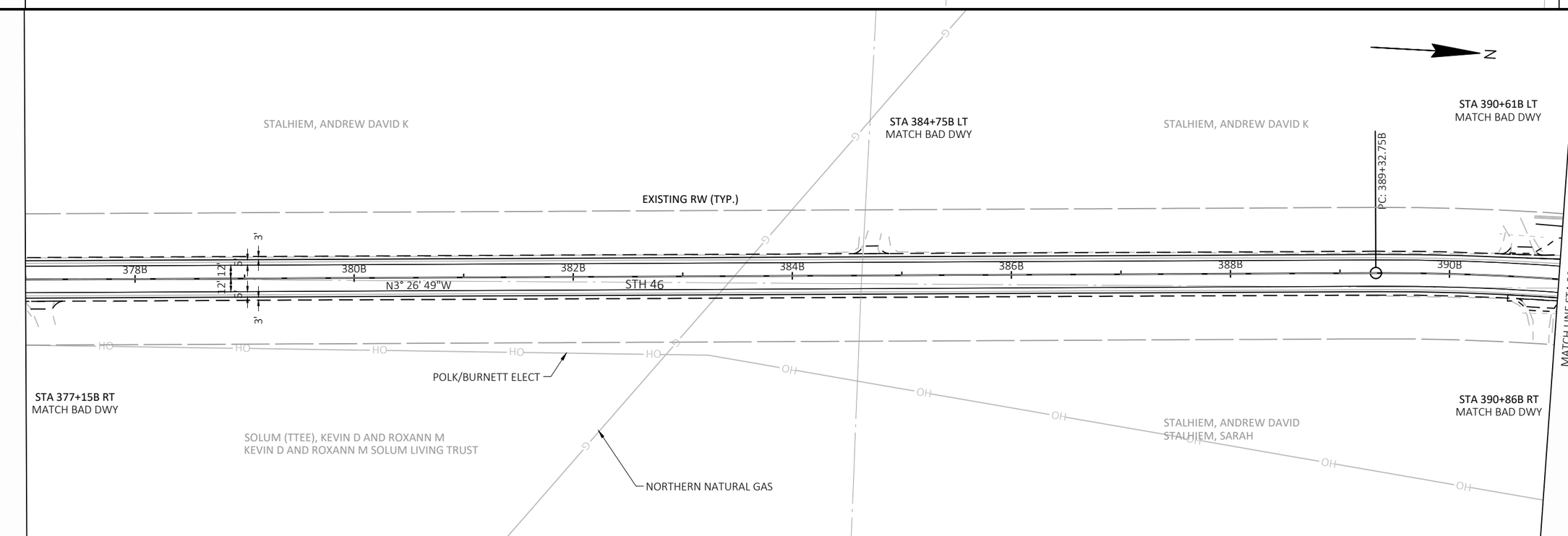

5

PROJECT NO: 8072-00-70	HWY: STH 46	COUNTY: ST. CROIX/POLK	PLAN SHEETS	SHEET 69	E

FILE NAME : \\KLENGINEERING\DATA1\WDOTNW\19065-000 (STH 46)\CIVIL 3D\SHEETSPLAN\051201-PD.DWG
LAYOUT NAME - P363
PLOT DATE : 7/15/2021 9:22 AM
PLOT BY : KL ENGINEERING
PLOT NAME :
PLOT SCALE : 1 IN:100 FT
WISDOT/CADDS SHEET 44

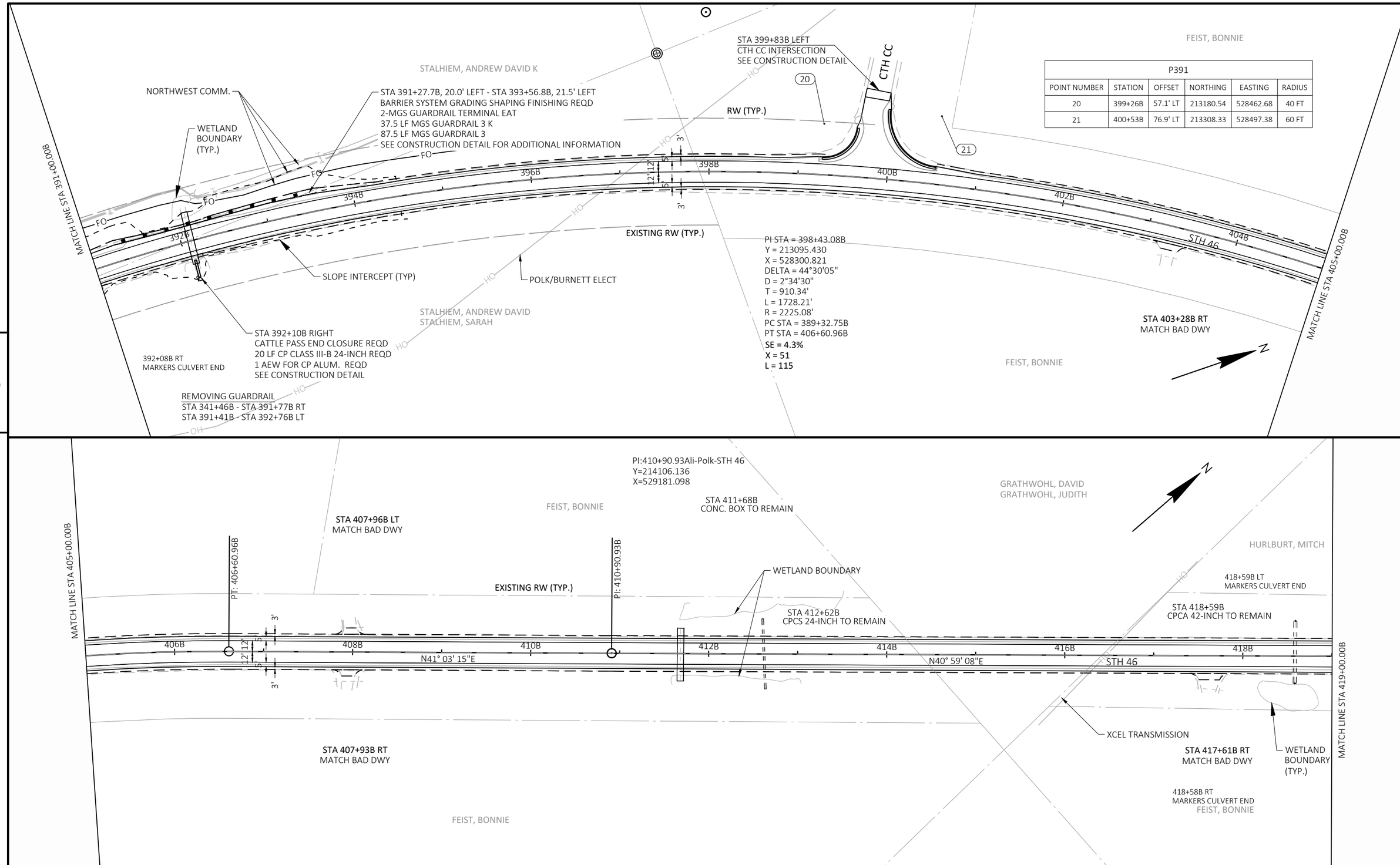

P391					
POINT NUMBER	STATION	OFFSET	NORTHING	EASTING	RADIUS
20	399+26B	57.1' LT	213180.54	528462.68	40 FT
21	400+53B	76.9' LT	213308.33	528497.38	60 FT

PROJECT NO: 8072-00-70	HWY: STH 46	COUNTY: ST. CROIX/POLK	PLAN SHEETS	SHEET 70	E

FILE NAME : \\KLENGINEERING\DATA1\WDOTNW\19065-000 (STH 46)\CIVIL 3D\SHEETSPLAN\051201-PD.DWG
LAYOUT NAME - P391
PLOT DATE : 7/15/2021 9:22 AM
PLOT BY : KL ENGINEERING
PLOT NAME :
PLOT SCALE : 1 IN:100 FT
WISDOT/CADDS SHEET 44

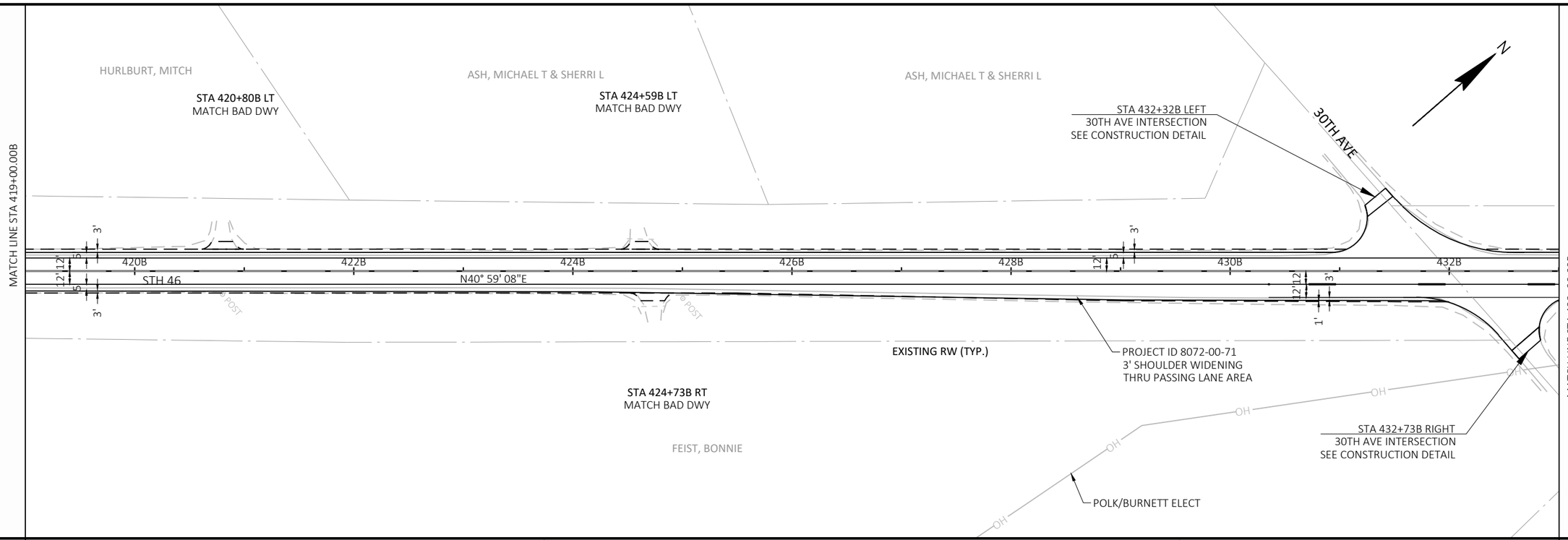

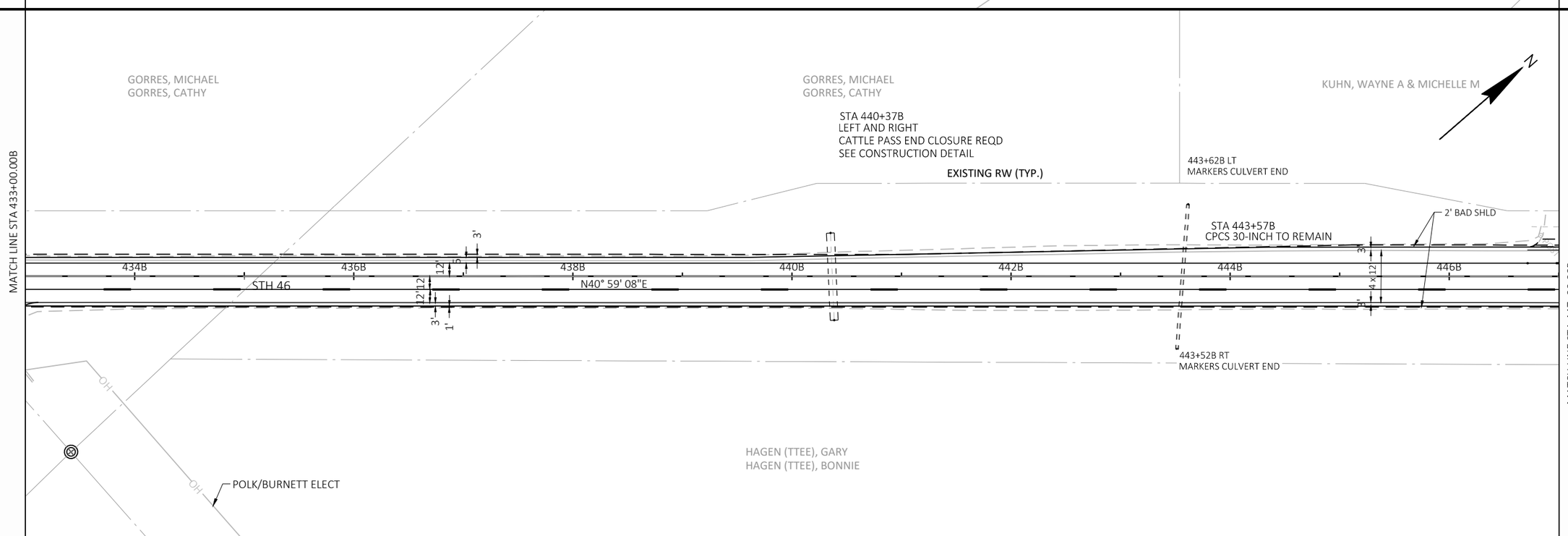

PROJECT NO: 8072-00-70	HWY: STH 46	COUNTY: ST. CROIX/POLK	PLAN SHEETS	SHEET 71	E

FILE NAME : \\KLENGINEERING\DATA1\WDOTNW\19065-000 (STH 46)\CIVIL 3D\SHEETSPLAN\051201-PD.DWG
LAYOUT NAME - P419
PLOT DATE : 7/15/2021 9:22 AM
PLOT BY : KL ENGINEERING
PLOT NAME :
PLOT SCALE : 1 IN:100 FT
WISDOT/CADDS SHEET 44

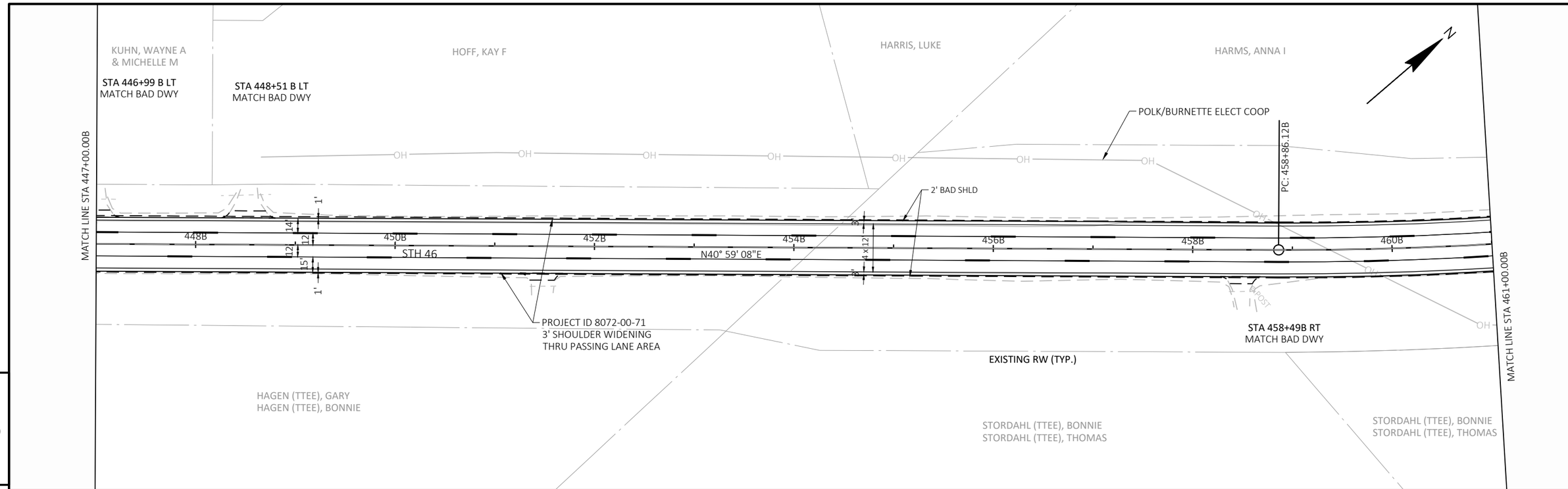

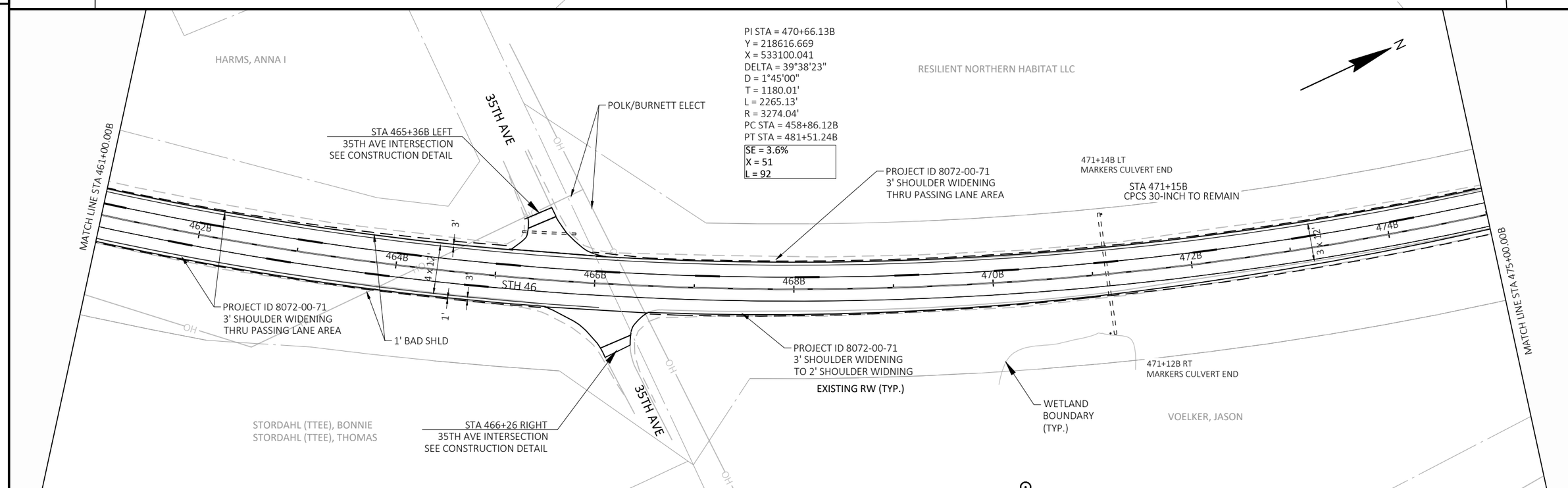

PROJECT NO: 8072-00-70	HWY: STH 46	COUNTY: ST. CROIX/POLK	PLAN SHEETS	SHEET 72	E

FILE NAME : \\KLENGINEERING\DATA1\WDOTNW\19065-000 (STH 46)\CIVIL 3D\SHEETSPLAN\051201-PD.DWG
LAYOUT NAME - P447
PLOT DATE : 7/15/2021 9:22 AM
PLOT BY : KL ENGINEERING
PLOT NAME :
PLOT SCALE : 1 IN:100 FT
WISDOT/CADDS SHEET 44

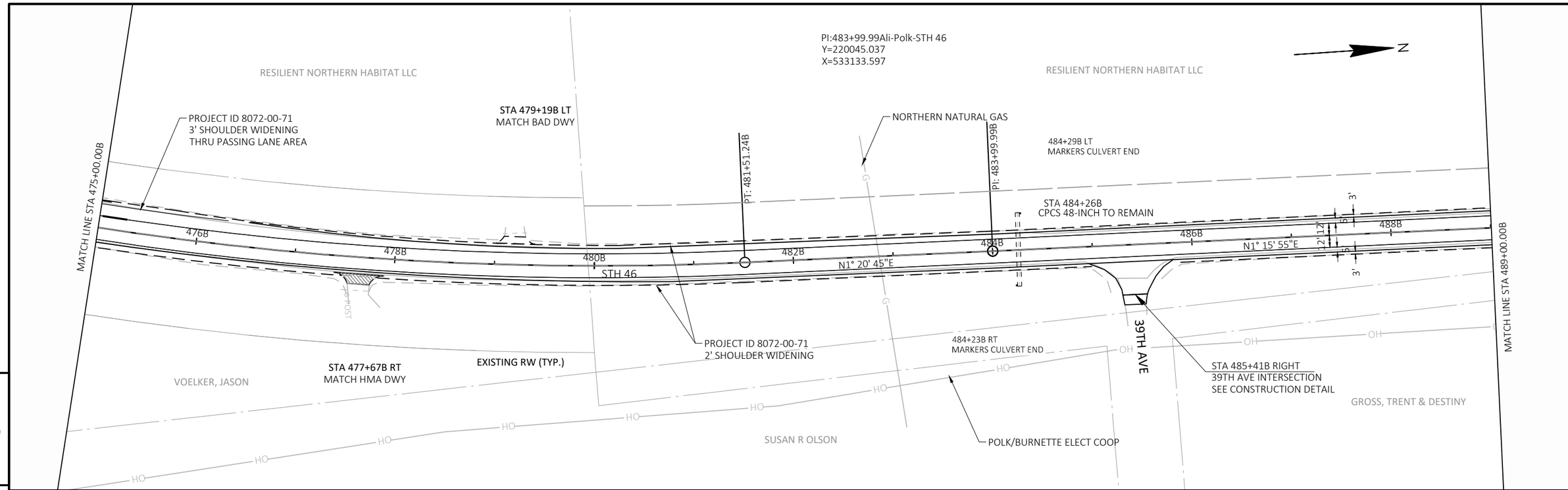

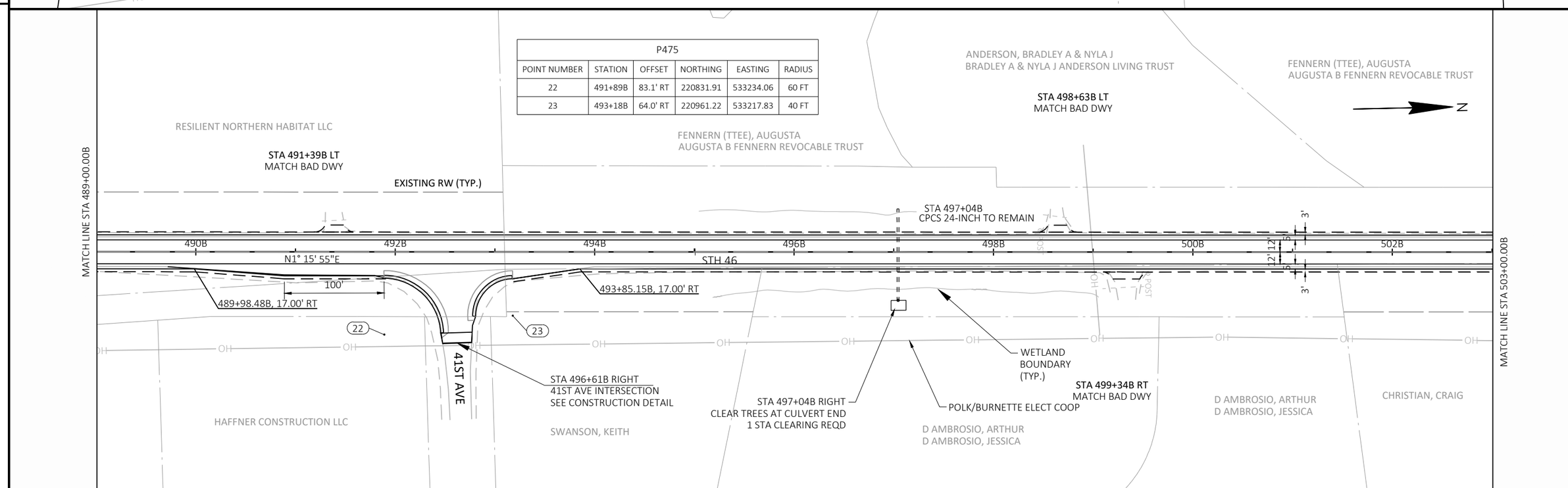

P475					
POINT NUMBER	STATION	OFFSET	NORTHING	EASTING	RADIUS
22	491+89B	83.1' RT	220831.91	533234.06	60 FT
23	493+18B	64.0' RT	220961.22	533217.83	40 FT

5

5

PROJECT NO: 8072-00-70	HWY: STH 46	COUNTY: ST. CROIX/POLK	PLAN SHEETS	SHEET 73	E

FILE NAME : \\KLENGINEERING\DATA1\WDOTNW\19065-000 (STH 46)\CIVIL 3D\SHEETSPLAN\051201-PD.DWG
LAYOUT NAME - P475
PLOT DATE : 7/15/2021 9:23 AM
PLOT BY : KL ENGINEERING
PLOT NAME :
PLOT SCALE : 1 IN:100 FT
WISDOT/CADDS SHEET 44

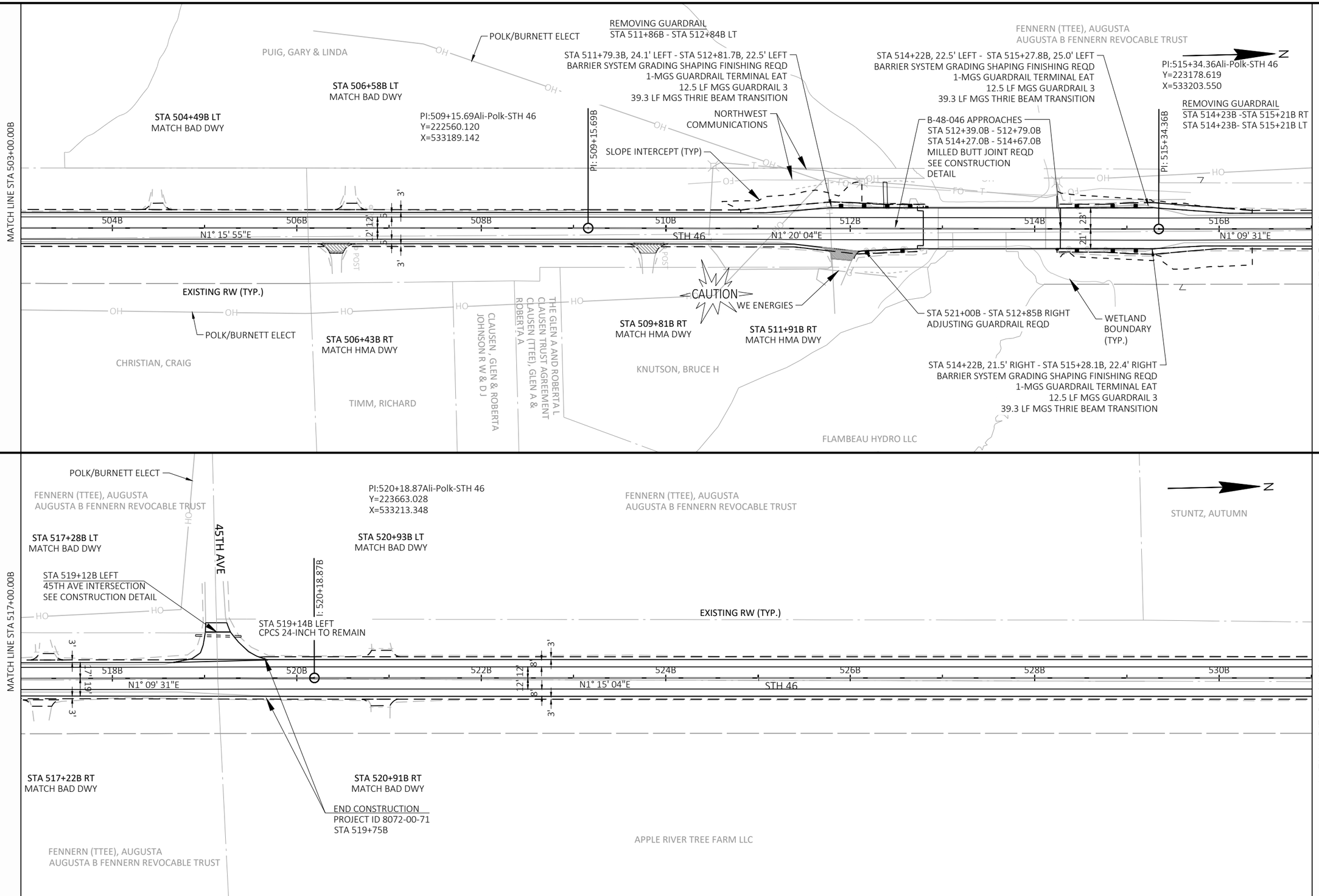

PROJECT NO: 8072-00-70	HWY: STH 46	COUNTY: ST. CROIX/POLK	PLAN SHEETS	SHEET 74	E

FILE NAME : \\KLENGINEERING\DATA1\WDOTNW\19065-000 (STH 46)\CIVIL 3D\SHEETSPLAN\051201-PD.DWG
LAYOUT NAME - P503
PLOT DATE : 7/15/2021 9:23 AM PLOT BY : KL ENGINEERING PLOT NAME : PLOT SCALE : 1 IN:100 FT

WISDOT/CADDS SHEET 44

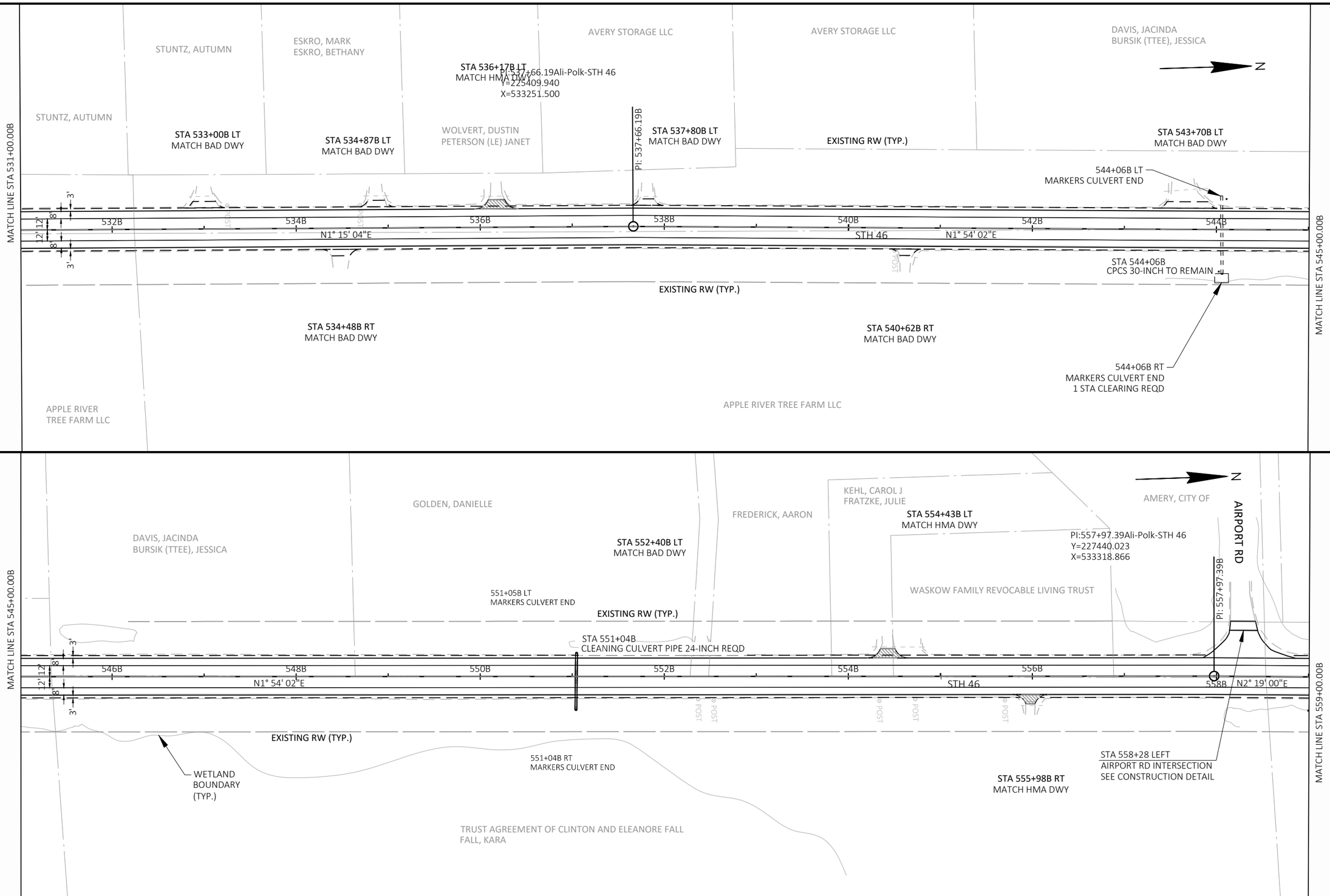

PROJECT NO: 8072-00-70	HWY: STH 46	COUNTY: ST. CROIX/POLK	PLAN SHEETS	SHEET 75	E

FILE NAME : \\KLENGINEERING\DATA1\WDOTNW\19065-000 (STH 46)\CIVIL 3D\SHEETSPLAN\051201-PD.DWG
LAYOUT NAME - P531
PLOT DATE : 7/15/2021 9:23 AM
PLOT BY : KL ENGINEERING
PLOT NAME :
PLOT SCALE : 1 IN:100 FT
WISDOT/CADDS SHEET 44

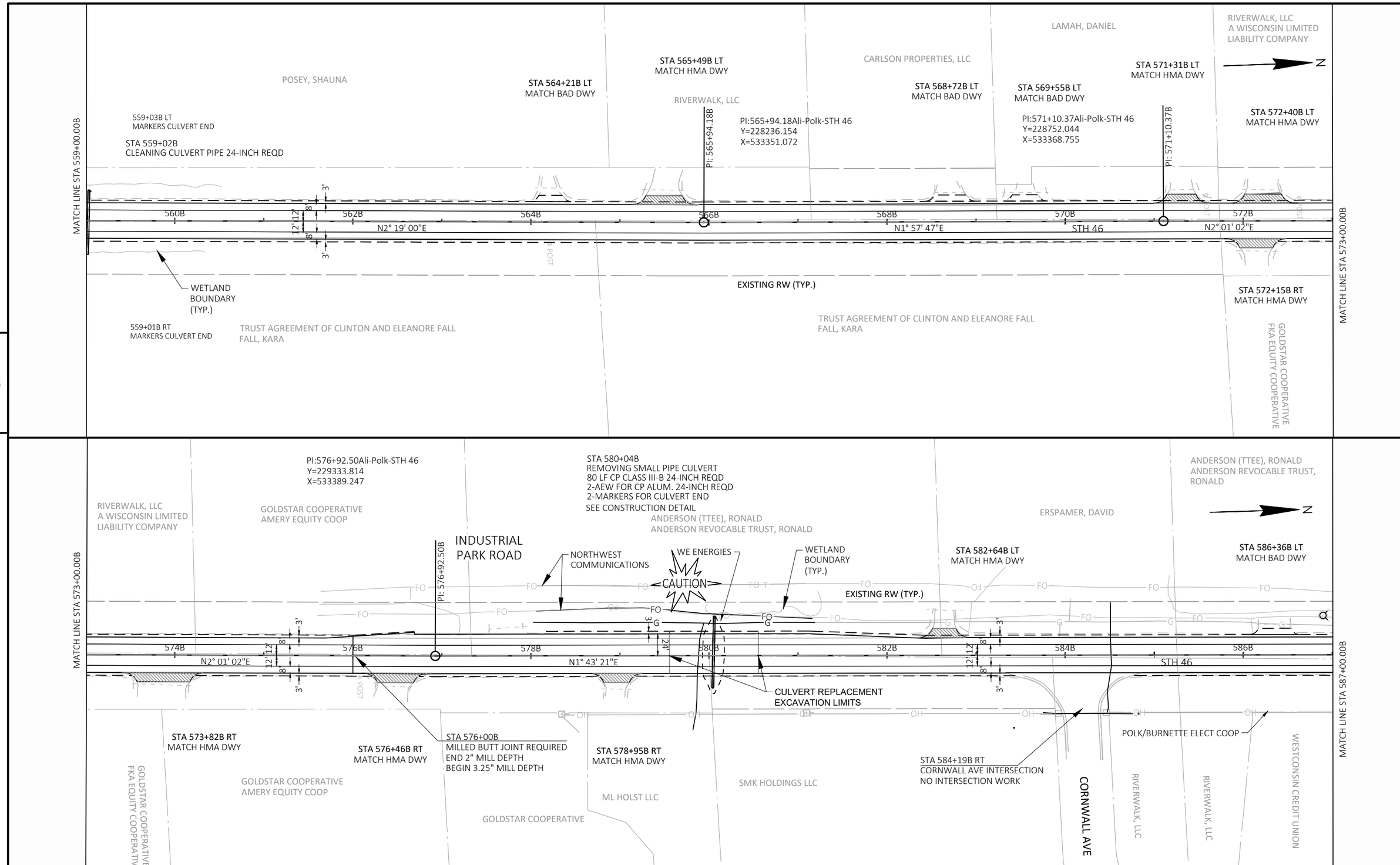

PROJECT NO: 8072-00-70	HWY: STH 46	COUNTY: ST. CROIX/POLK	PLAN SHEETS	SHEET 76	E

FILE NAME : \\KLENGINEERING\DATA1\WDOTNW\19065-000 (STH 46)\CIVIL 3D\SHEETSPLAN\051201-PD.DWG
LAYOUT NAME - P559
PLOT DATE : 7/15/2021 9:23 AM
PLOT BY : KL ENGINEERING
PLOT NAME :
PLOT SCALE : 1 IN:100 FT
WISDOT/CADDS SHEET 44

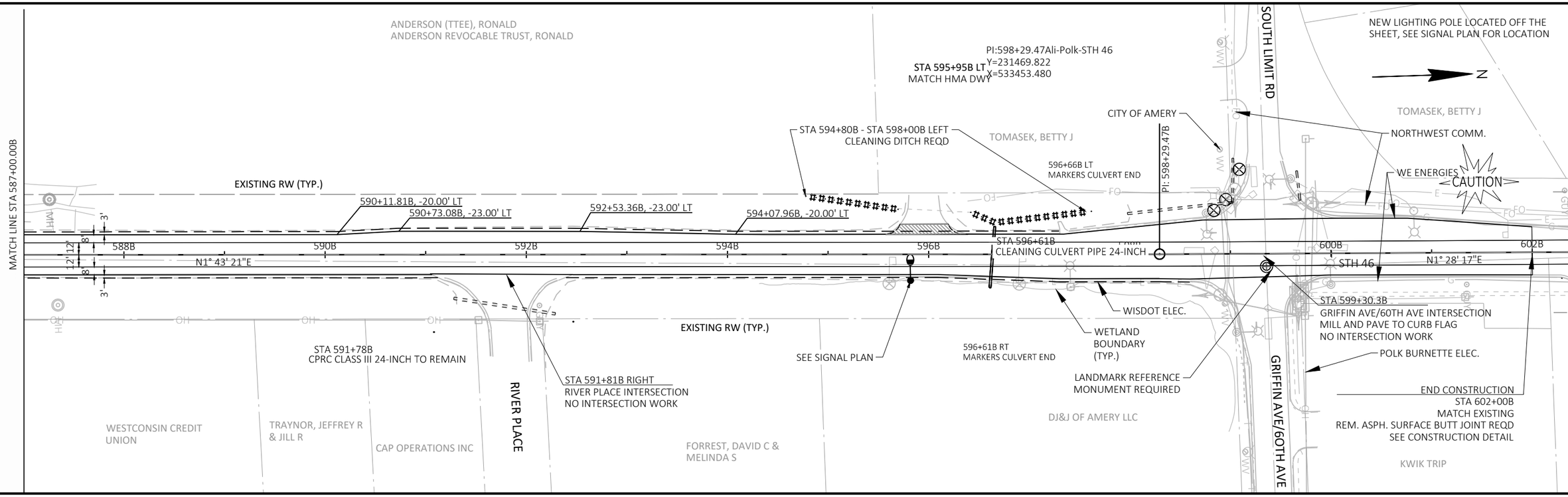

PROJECT NO: 8072-00-70	HWY: STH 46	COUNTY: ST. CROIX/POLK	PLAN SHEETS	SHEET 77	E

FILE NAME : \\KLENGINEERING\DATA1\WDOTNW\19065-000 (STH 46)\CIVIL 3D\SHEETSPLAN\051201-PD.DWG
LAYOUT NAME - P587
PLOT DATE : 7/15/2021 9:23 AM
PLOT BY : KL ENGINEERING
PLOT NAME :
PLOT SCALE : 1 IN:100 FT
WISDOT/CADDS SHEET 44

Standard Detail Drawing List

08D01-22A	CONCRETE CURB & GUTTER
08D01-22B	CONCRETE CURB, TIES AND CURB AND GUTTER APPLICATIONS
08D04-06	CONCRETE SURFACE DRAINS & ASPHALTIC FLUMES
08E08-03	TYPICAL INSTALLATIONS OF EROSION BALES / TEMPORARY DITCH CHECKS
08E09-06	SILT FENCE
08E10-02	INLET PROTECTION TYPE A, B, C AND D
08E15-01	CULVERT PIPE CHECK
08F01-11	APRON ENDWALLS FOR CULVERT PIPE
08F04-08	JOINT TIES FOR CONCRETE PIPE AND CONCRETE COLLAR DETAIL
09B02-10	CONDUIT
09C02-09	CONCRETE BASES, TYPES 1, 2, 5, & 6
09C03-04	TRANSFORMER/PEDESTAL BASES
09E01-15D	POLE MOUNTINGS FOR LIGHTING UNITS, TYPE 5 (30 FEET)
09E03-06	NON-FREEWAY LIGHTING UNIT POLE WIRING
13A10-02A	2-LANE RURAL SHOULDER RUMBLE STRIP, MILLING
13A10-02B	2-LANE RURAL SHOULDER RUMBLE STRIP, MILLING
13A10-02C	2-LANE RURAL SHOULDER RUMBLE STRIP, MILLING
13A10-02D	2-LANE RURAL SHOULDER RUMBLE STRIP, MILLING
13A11-03A	2-LANE RURAL CENTER LINE RUMBLE STRIP, MILLING
13A11-03B	2-LANE RURAL CENTER LINE RUMBLE STRIP, MILLING
13C19-03	HMA LONGITUDINAL JOINTS
14B42-07A	MIDWEST GUARDRAIL SYSTEM (MGS) GUARDRAIL
14B42-07B	MIDWEST GUARDRAIL SYSTEM (MGS) GUARDRAIL
14B42-07C	MIDWEST GUARDRAIL SYSTEM (MGS) GUARDRAIL
14B42-07D	MIDWEST GUARDRAIL SYSTEM (MGS) GUARDRAIL
14B44-04A	MIDWEST GUARDRAIL SYSTEM ENERGY ABSORBING TERMINAL (MGS)
14B44-04B	MIDWEST GUARDRAIL SYSTEM ENERGY ABSORBING TERMINAL (MGS)
14B44-04C	MIDWEST GUARDRAIL SYSTEM ENERGY ABSORBING TERMINAL (MGS)
14B45-05B	MIDWEST GUARDRAIL SYSTEM THRIE BEAM TRANSITION (MGS)
14B45-05C	MIDWEST GUARDRAIL SYSTEM THRIE BEAM TRANSITION (MGS)
14B45-05D	MIDWEST GUARDRAIL SYSTEM THRIE BEAM TRANSITION (MGS)
14B45-05E	MIDWEST GUARDRAIL SYSTEM THRIE BEAM TRANSITION (MGS)
14B45-05F	MIDWEST GUARDRAIL SYSTEM THRIE BEAM TRANSITION (MGS)
14B45-05G	MIDWEST GUARDRAIL SYSTEM THRIE BEAM TRANSITION (MGS)
14B45-05H	MIDWEST GUARDRAIL SYSTEM THRIE BEAM TRANSITION (MGS)
14B45-05I	MIDWEST GUARDRAIL SYSTEM THRIE BEAM TRANSITION (MGS)
14B45-05J	MIDWEST GUARDRAIL SYSTEM THRIE BEAM TRANSITION (MGS)
14B45-05K	MIDWEST GUARDRAIL SYSTEM THRIE BEAM TRANSITION (MGS)
14B45-05L	MIDWEST GUARDRAIL SYSTEM THRIE BEAM TRANSITION (MGS)
15A03-02A	FLEXIBLE MARKER POST FOR CULVERT END
15A03-02B	FLEXIBLE MARKER POST FOR CULVERT END
15C04-05	TRAFFIC CONTROL, ADVANCE WARNING SIGNS 45 M.P.H. OR GREATER TWO-WAY UNDIVIDED ROAD OPEN TO TRAFFIC
15C07-15C	PAVEMENT MARKING ARROWS
15C08-20A	LONGITUDINAL MARKING (MAINLINE)
15C08-20B	PAVEMENT MARKING (TURN LANES)
15C08-20C	PAVEMENT MARKING (TURN LANES)
15C11-09B	CHANNELIZING DEVICES DRUMS, CONES, BARRICADES AND VERTICAL PANELS
15C12-08	TRAFFIC CONTROL FOR LANE CLOSURE WITH FLAGGING OPERATION
15C33-04	STOP LINE AND CROSSWALK PAVEMENT MARKING
15C35-04A	PAVEMENT MARKING (INTERSECTIONS)
15C35-04B	PAVEMENT MARKING AND SIGNING (CLIMBING LANE & PASSING LANE)
15C35-04C	PAVEMENT MARKING AND SIGNING (CLIMBING LANE & PASSING LANE)
15D28-04	TRAFFIC CONTROL, WORK ON SHOULDER OR PARKING LANE, UNDIVIDED ROADWAY
15D39-02	TRAFFIC CONTROL, DROP-OFF SIGNING
15D44-02	TRAFFIC CONTROL, SIGNING ON ROADWAYS WITH MILLED SURFACES
15D51-01	TRAFFIC CONTROL, MOBILE OPERATIONS ON AN UNDIVIDED ROADWAY
16A01-07	LANDMARK REFERENCE MONUMENTS AND COVERS

6

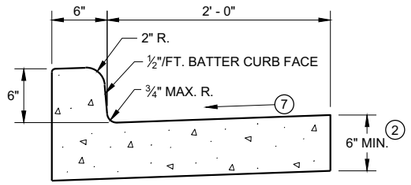

TYPES A[1] & D

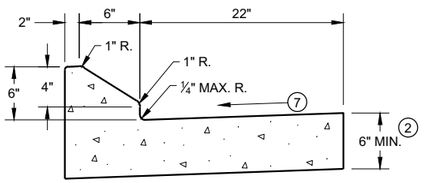

6" SLOPED CURB TYPES G[1] & J

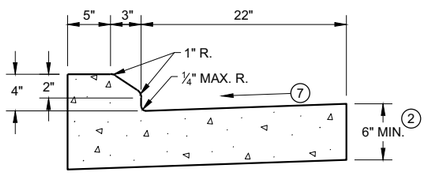

4" SLOPED CURB TYPES G[1] & J

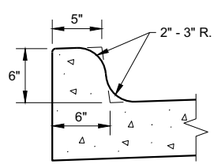

TYPES K[1] & L
(OPTIONAL CURB SHAPE)

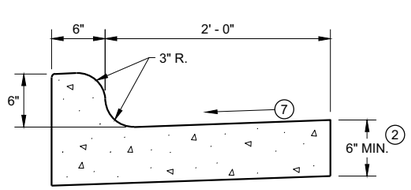

TYPES K[1] & L

CONCRETE CURB AND GUTTER 30"

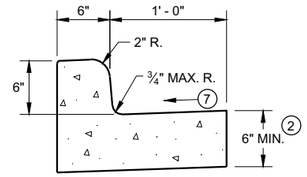

TYPES A[1] & D

CONCRETE CURB AND GUTTER 18"

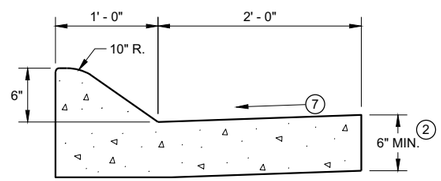

6" SLOPED CURB TYPES A[1] & D

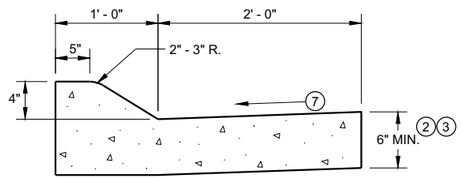

4" SLOPED CURB TYPES A[1] & D

CONCRETE CURB AND GUTTER 36"

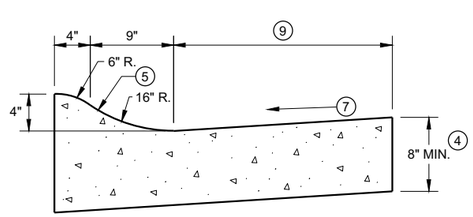

4" SLOPED CURB TYPES R[1] & T

TBT & TBTT	X
30"	22"
36"	28"

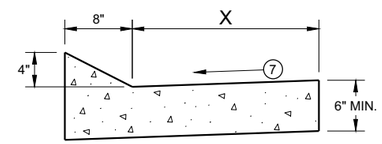

TYPES TBT & TBTT[1]

CONCRETE CURB AND GUTTER

GENERAL NOTES

DETAILS OF CONSTRUCTION AND WORKMANSHIP NOT SHOWN ON THIS DRAWING SHALL CONFORM TO THE PERTINENT REQUIREMENTS OF THE CONTRACT.

PAVEMENT TIES AND TIE BARS SHALL BE EPOXY COATED IN CONFORMANCE WITH SUBSECTION 505.2.6.2 OF THE STANDARD SPECIFICATIONS.

INTEGRAL CURB AND GUTTER SHALL CONFORM TO THE DETAILS SHOWN FOR CONCRETE CURB AND GUTTER INCLUDING THE TRANSVERSE GUTTER SLOPE.

UNLESS OTHERWISE SHOWN ON THE TYPICAL CROSS SECTIONS, THE BASE AGGREGATE AND COMMON EXCAVATION LIMITS ARE 2' - 0" BEHIND THE BACK OF CURBS.

1. TIE BARS ARE REQUIRED FOR CURB AND GUTTERS TYPES A, G, K, R, AND TBTT.
2. THE BOTTOM OF CURB AND GUTTER MAY BE CONSTRUCTED EITHER LEVEL OR PARALLEL TO THE SLOPE OF THE SUBGRADE OR BASE AGGREGATE PROVIDED A 6" MINIMUM GUTTER THICKNESS IS MAINTAINED.
3. USE 8" MINIMUM GUTTER THICKNESS WHEN USED WITH AN ADJACENT CONCRETE TRUCK APRON PLACED BEHIND BACK OF CURB.
4. THE BOTTOM OF CURB AND GUTTER MAY BE CONSTRUCTED EITHER LEVEL OR PARALLEL TO THE SLOPE OF THE SUBGRADE OR BASE AGGREGATE PROVIDED A 8" MINIMUM GUTTER THICKNESS IS MAINTAINED.
5. UNLESS OTHERWISE NOTED, FOR STAKING PURPOSES THE FACE OF CURB IS 6" FROM THE BACK OF CURB.
6. WHEN REVERSE SLOPE GUTTER IS REQUIRED, THE LOCATION(S) WILL BE SHOWN ELSEWHERE IN THE PLAN.
7. USE 4% GUTTER CROSS SLOPE UNLESS OTHERWISE NOTED IN THE PLANS.
8. INCLUDE LONGITUDINAL JOINT AND TIE BARS ALONG LANE EDGE WHEN CONCRETE PANEL WIDTH EXCEEDS THE MAXIMUM WIDTH PER TABLE BELOW. LONGITUDINAL JOINT(S) ARE NOT ALLOWED WITHIN TRAFFIC LANES AND BIKE LANES. LONGITUDINAL JOINT MAY BE SAWED.
9. CONCRETE CURB AND GUTTER 4-INCH SLOPED 30-INCH TYPE "R" AND "T" = 17 INCHES
   CONCRETE CURB AND GUTTER 4-INCH SLOPED 36-INCH TYPE "R" AND "T" = 23 INCHES

PAVEMENT THICKNESS AND MAXIMUM CONCRETE PANEL WIDTH TABLE

PAVEMENT THICKNESS	MAXIMUM PANEL WIDTH
LESS THAN 10"	12'
10" & ABOVE	15'

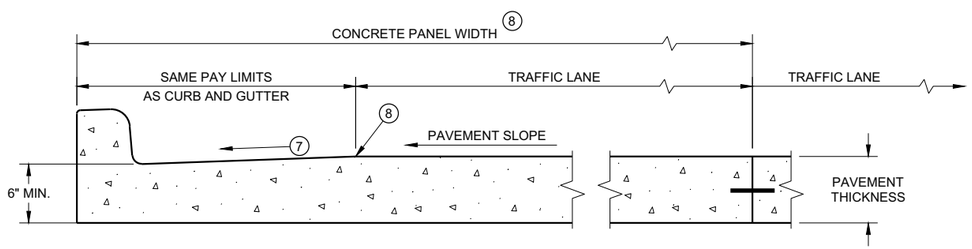

PARTIAL SECTION OF PAVEMENT *
WITH INTEGRAL CURB AND GUTTER

* BIKE LANE IS NOT SHOWN

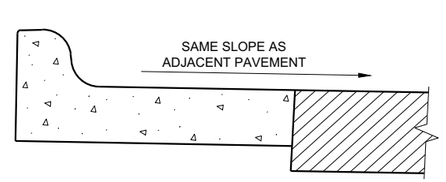

REVERSE SLOPE GUTTER[6]
(TYPICAL FOR ALL CURB & GUTTER TYPES)

CONCRETE CURB AND GUTTER

STATE OF WISCONSIN
DEPARTMENT OF TRANSPORTATION

6

SDD 08D01 - 22a

6

SDD 08D01 - 22a

GENERAL NOTES

DETAILS OF CONSTRUCTION AND WORKMANSHIP NOT SHOWN ON THIS DRAWING SHALL CONFORM TO THE PERTINENT REQUIREMENTS OF THE CONTRACT.

PAVEMENT TIES AND TIE BARS SHALL BE EPOXY COATED IN CONFORMANCE WITH SUBSECTION 505.2.6.2 OF THE STANDARD SPECIFICATIONS.

UNLESS OTHERWISE SHOWN ON THE TYPICAL CROSS SECTIONS, THE BASE AGGREGATE AND COMMON EXCAVATION LIMITS ARE 2' - 0" BEHIND THE BACK OF CURBS.

(1) TIE BARS ARE REQUIRED FOR CURB AND GUTTERS TYPES A, G, K, R, AND TBTT.

(2) THE BOTTOM OF CURB AND GUTTER MAY BE CONSTRUCTED EITHER LEVEL OR PARALLEL TO THE SLOPE OF THE SUBGRADE OR BASE AGGREGATE PROVIDED A 6" MINIMUM GUTTER THICKNESS IS MAINTAINED.

(9) REFER TO SDD 08D18 AND 08D19 FOR ADDITIONAL DRIVEWAY ENTRANCE CURB DETAILS.

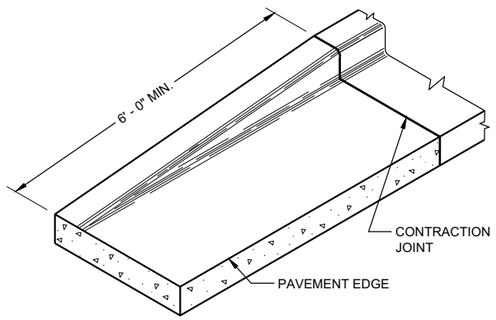

END SECTIONCURB AND GUTTER

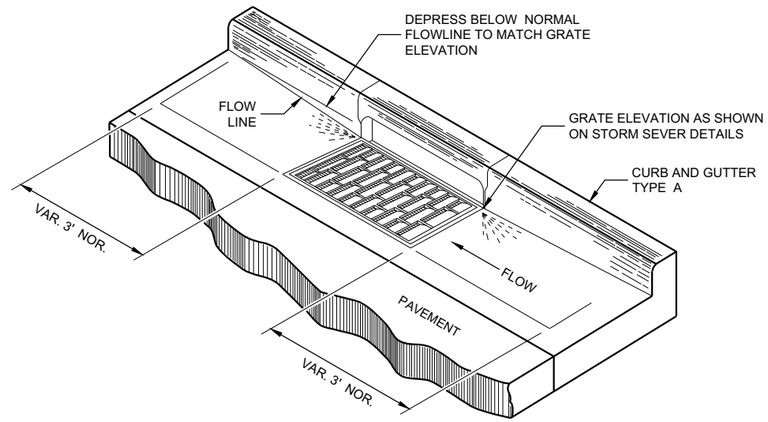

DETAIL OF CURB AND GUTTER AT INLETS
(TYPICAL H INLET COVER SHOWN)

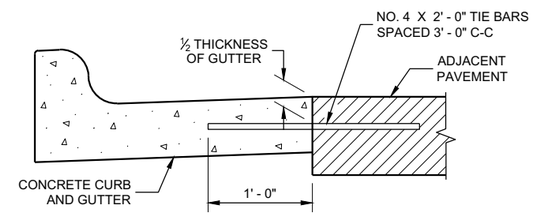

TYPICAL TIE BAR LOCATION (1)

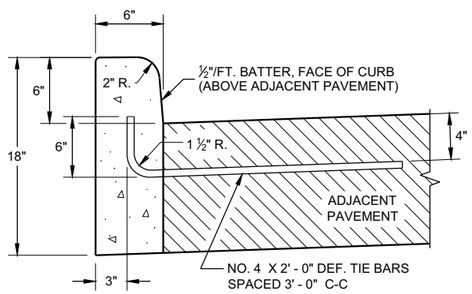

TYPES A (1) & D

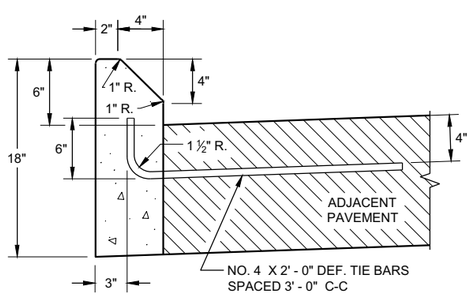

TYPES G (1) & J

CONCRETE CURB

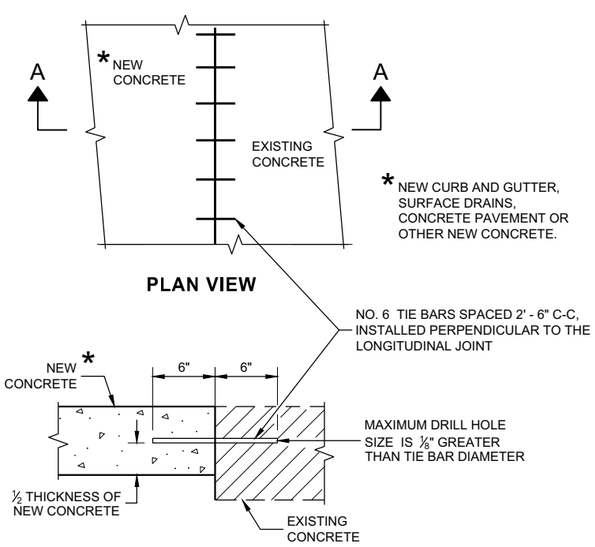

PLAN VIEW

SECTION A - A

TIE BARS DRILLED INTO EXISTING PAVEMENT

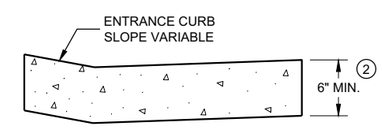

DRIVEWAY ENTRANCE CURB (9)
(WHEN DIRECTED BY THE ENGINEER)

CONCRETE CURB, TIES AND CURB AND GUTTER APPLICATIONS

STATE OF WISCONSIN
DEPARTMENT OF TRANSPORTATION

APPROVED
February 2021 — DATE
/S/ Rodnery Taylor — ROADWAY STANDARDS DEVE ENGINEER
FHWA

NOTE: TAPER CURB ENDS TO GUTTER IN 1' - 0"

ASPHALTIC FLUME

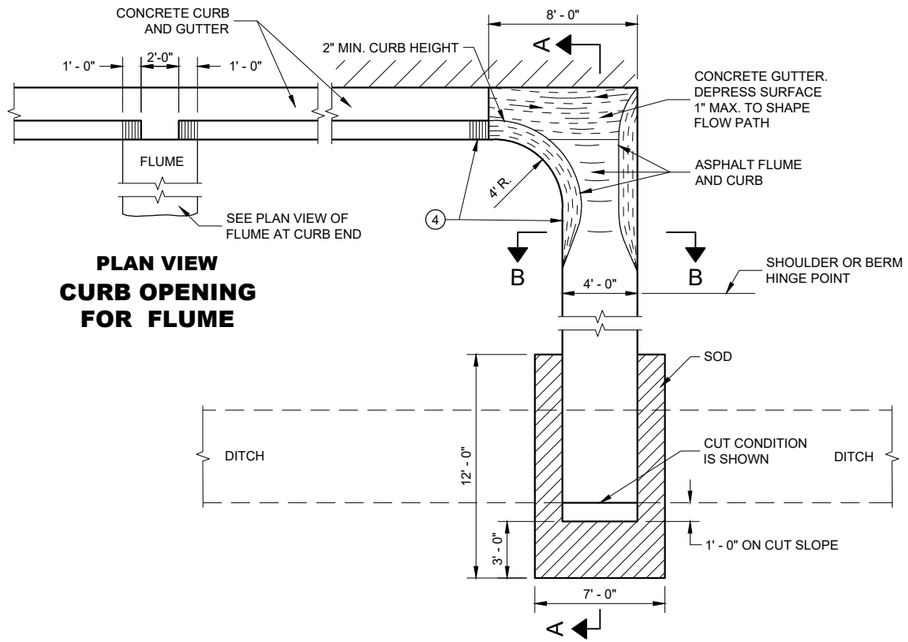

PLAN VIEW
CURB OPENING FOR FLUME

PLAN VIEW
FLUME AT CURB END

GENERAL NOTES

DETAILS OF CONSTRUCTION, MATERIALS AND WORKMANSHIP NOT SHOWN ON THIS DRAWING SHALL CONFORM TO PERTINENT REQUIREMENTS OF THE STANDARD SPECIFICATIONS AND APPLICABLE SPECIAL PROVISIONS.

4" X 4" - W3.0 X W3.0 CONCRETE REINFORCEMENT SHALL BE IN ACCORDANCE WITH AASHTO SPECIFICATION M55.

1. JOINTS SHALL BE ⅛" TO ¼" WIDE BY 1½" DEEP AND SPACED AT UNIFORM INTERVALS OF APPROXIMATELY 4 FEET.
2. GEOTEXTILE TYPE "R" SHALL UNDERLAY THE FULL LENGTH AND WIDTH OF THE CONCRETE SURFACE DRAIN AND RIPRAP.
3. CONCRETE SURFACE DRAIN WITHOUT CURB AND GUTTER MAY BE USED ON BACKSLOPES WHEN SPECIFIED.
4. ANGLE OF FLUME IN RELATION TO BACK OF CURB TO BE CONSTRUCTED PER THE PLAN DETAILS OR AS DIRECTED BY THE ENGINEER. ANGLE OF FLUME MAY BE OTHER THAN 90 DEGREES AS SHOWN.

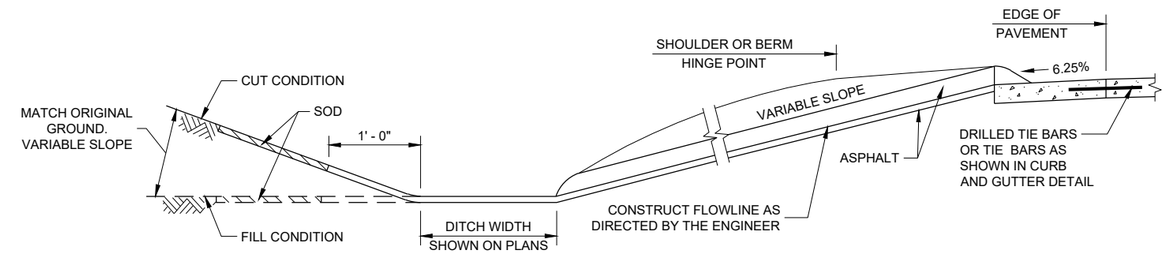

SECTION A - A

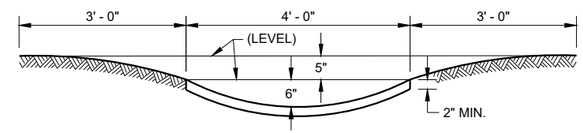

SECTION B - B

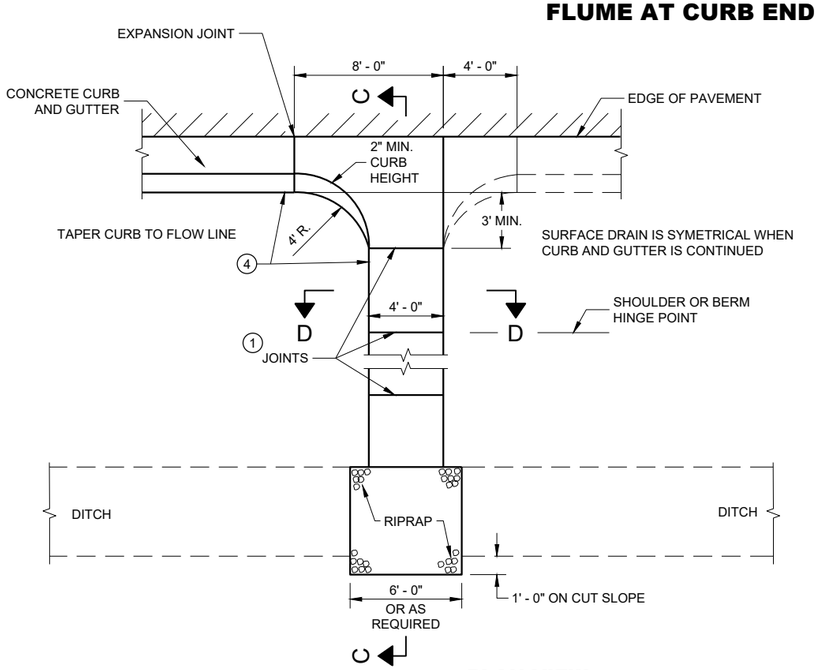

PLAN VIEW
CONCRETE SURFACE DRAIN

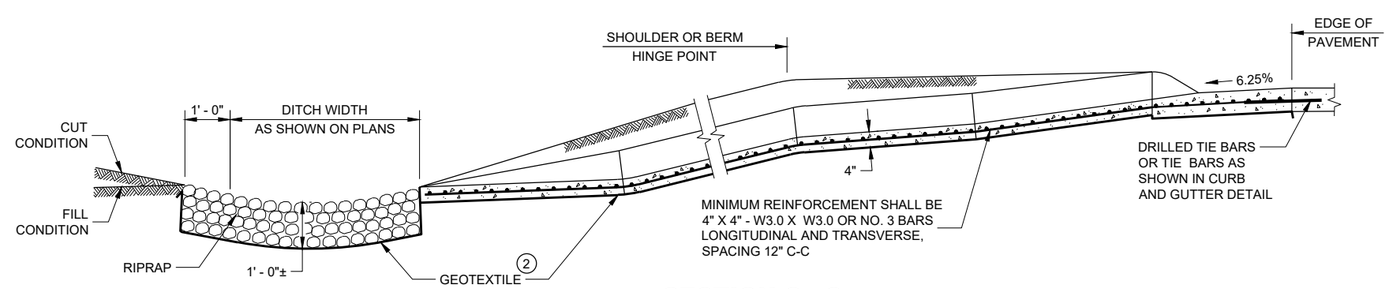

SECTION C - C

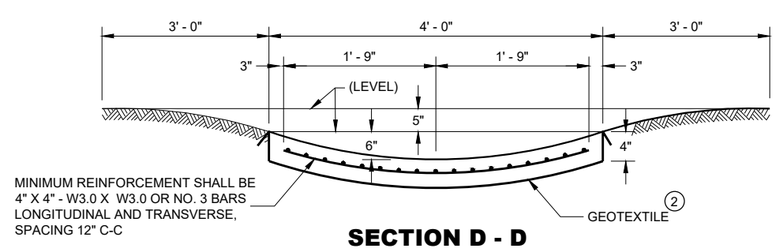

SECTION D - D

CONCRETE SURFACE DRAINS AND ASPHALTIC FLUMES

STATE OF WISCONSIN
DEPARTMENT OF TRANSPORTATION

APPROVED
November 2021 — DATE
/S/ Rodney Taylor — ROADWAY STANDARDS DEVE ENGINEER
FHWA

6

SDD 08D04 - 06

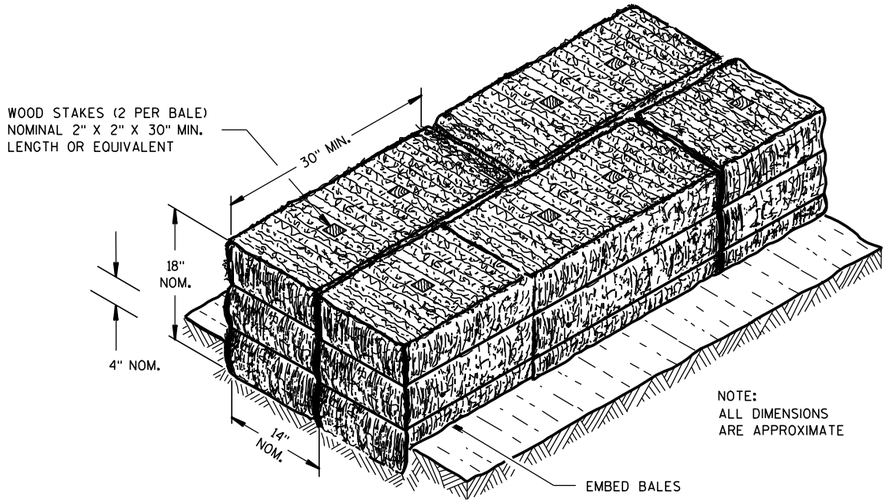

SECTION A-A

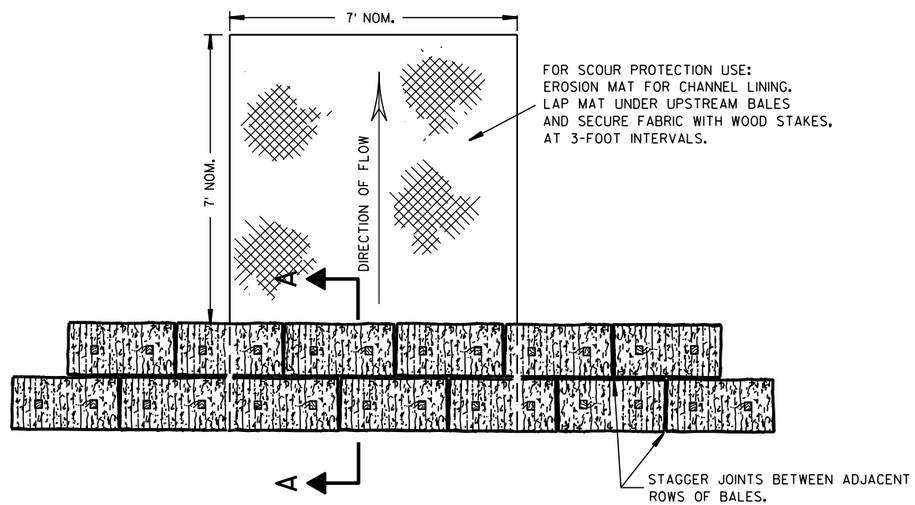

PLAN VIEW

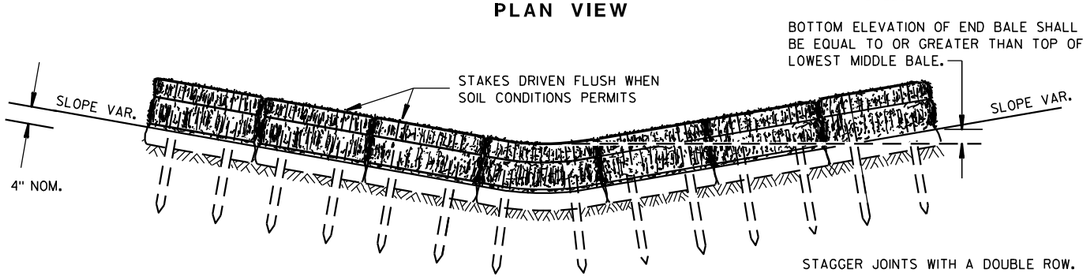

FRONT ELEVATION

TEMPORARY DITCH CHECK USING EROSION BALES ①

GENERAL NOTES

DETAILS OF CONSTRUCTION, MATERIALS AND WORKMANSHIP NOT SHOWN ON THIS DRAWING SHALL CONFORM TO THE PERTINENT REQUIREMENTS OF THE STANDARD SPECIFICATIONS AND THE APPLICABLE SPECIAL PROVISIONS.

① TEMPORARY DITCH CHECKS EITHER EROSION BALES OR MANUFACTURED SHALL BE PAID FOR UNDER THE BID ITEM OF TEMPORARY DITCH CHECK. THE DEPARTMENT WILL NOT PAY FOR TEMPORARY DITCH CHECKS CONSTRUCTED OF A SINGLE ROW OF EROSION BALES.

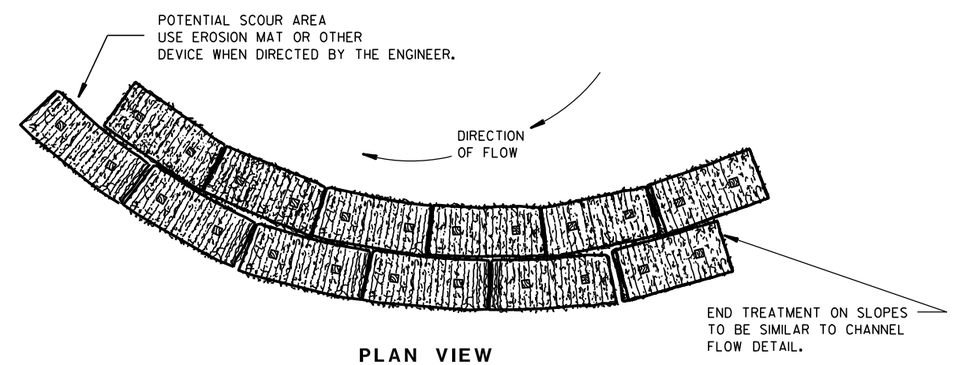

PLAN VIEW

WHEN ALTERING THE DIRECTION OF FLOW

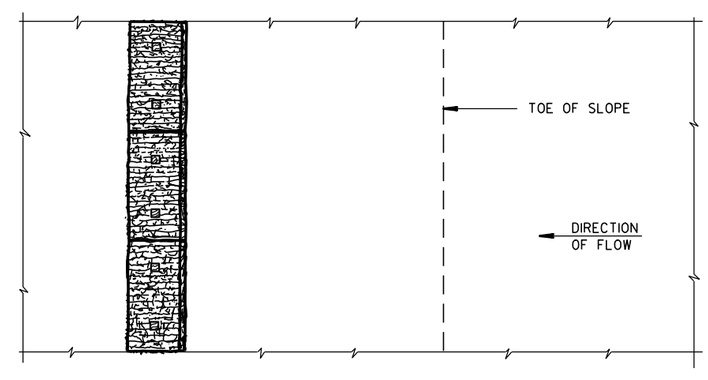

PLAN VIEW

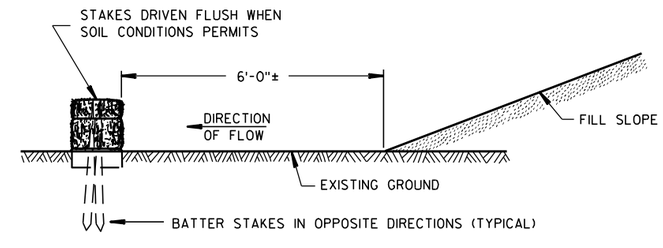

FRONT ELEVATION

WHEN EXISTING GROUND SLOPES AWAY FROM FILL SLOPE

EROSION BALES FOR SHEET FLOW

TYPICAL INSTALLATIONS OF EROSION BALES / TEMPORARY DITCH CHECKS

STATE OF WISCONSIN
DEPARTMENT OF TRANSPORTATION

APPROVED
6/04/02 — DATE
/S/ Beth Cann — CHIEF ROADWAY DEVELOPMENT ENGINEER
FHWA

6

6

S.D.D. 8 E 8-3

S.D.D. 8 E 8-3

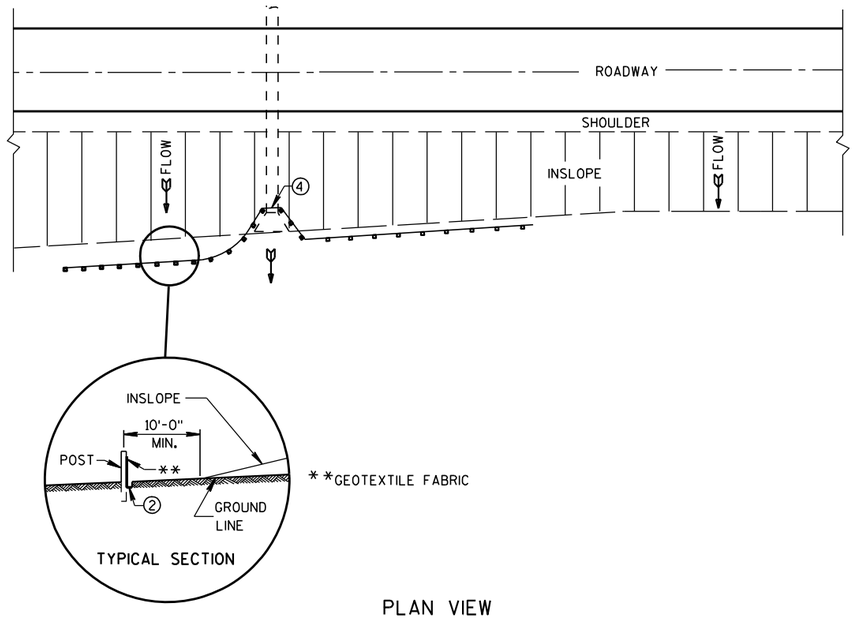

PLAN VIEW

TYPICAL APPLICATION OF SILT FENCE

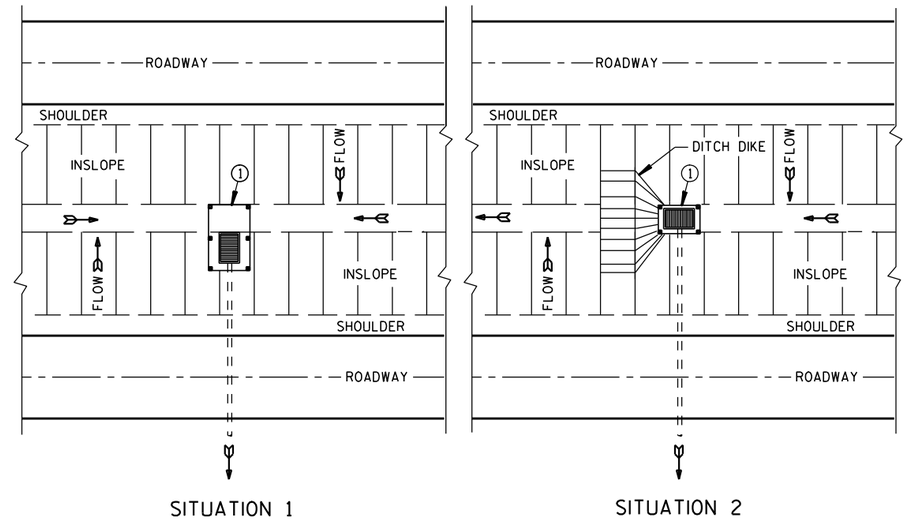

PLAN VIEW

SILT FENCE AT MEDIAN SURFACE DRAINS

GENERAL NOTES

DETAILS OF CONSTRUCTION NOT SHOWN ON THIS DRAWING SHALL CONFORM TO THE PERTINENT REQUIREMENTS OF THE STANDARD SPECIFICATIONS AND APPLICABLE SPECIAL PROVISIONS.

① HORIZONTAL BRACE REQUIRED WITH 2" X 4" WOODEN FRAME OR EQUIVALENT AT TOP OF POSTS.

② FOR MANUAL INSTALLATIONS THE TRENCH SHALL BE A MINIMUM OF 4" WIDE & 6" DEEP TO BURY AND ANCHOR THE GEOTEXTILE FABRIC. FOLD MATERIAL TO FIT TRENCH AND BACKFILL & COMPACT TRENCH WITH EXCAVATED SOIL.

③ WOOD POSTS SHALL BE A MINIMUM SIZE OF 1⅛" X 1⅛" OF OAK OR HICKORY.

④ SILT FENCE TO EXTEND ACROSS THE TOP OF THE PIPE.

⑤ CONSTRUCT SILT FENCE FROM A CONTINUOUS ROLL IF POSSIBLE BY CUTTING LENGTHS TO AVOID JOINTS. IF A JOINT IS NECESSARY USE ONE OF THE FOLLOWING TWO METHODS; A) OVERLAP THE END POSTS AND TWIST, OR ROTATE, AT LEAST 180 DEGREES. B) HOOK THE END OF EACH SILT FENCE LENGTH.

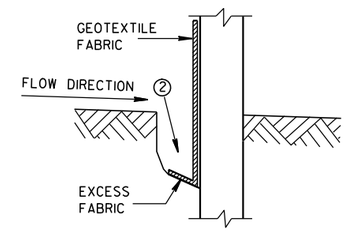

TRENCH DETAIL

NOTE: ADDITIONAL POST DEPTH OR TIE BACKS MAY BE REQUIRED IN UNSTABLE SOILS

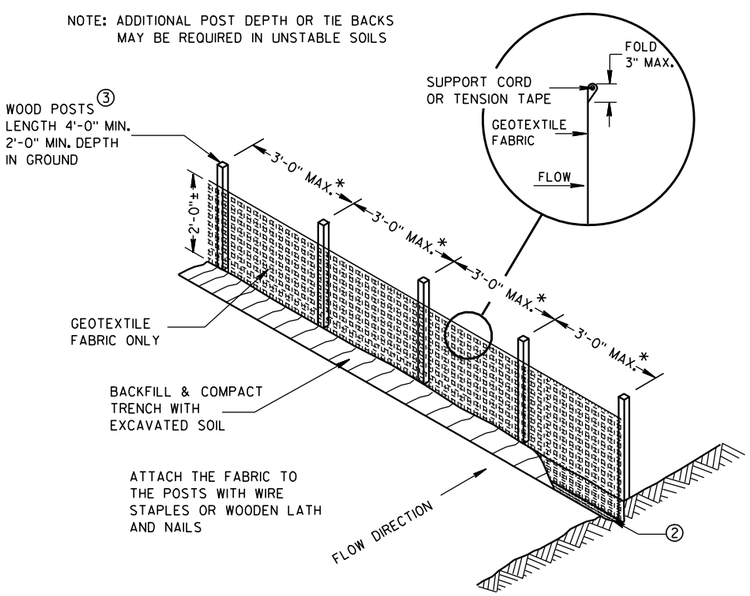

*NOTE: 8'-0" POST SPACING ALLOWED IF A WOVEN GEOTEXTILE FABRIC IS USED.

SILT FENCE

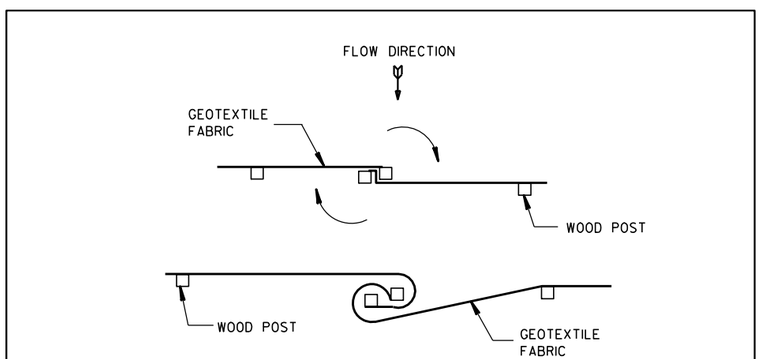

TWIST METHOD

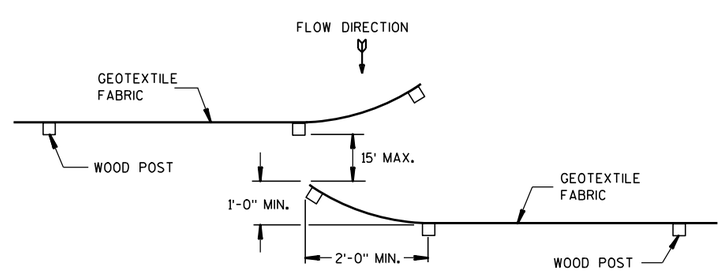

HOOK METHOD

JOINING TWO LENGTHS OF SILT FENCE ⑤

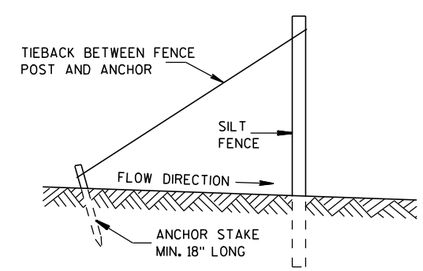

SILT FENCE TIE BACK

(WHEN REQUIRED BY THE ENGINEER)

SILT FENCE
STATE OF WISCONSIN DEPARTMENT OF TRANSPORTATION
APPROVED 4-29-05 DATE — /S/ Beth Cann... CHIEF ROADWAY DEVELOP... ...GINEER FHWA

6

6

S.D.D. 8 E 9-6

S.D.D. 8 E 9-6

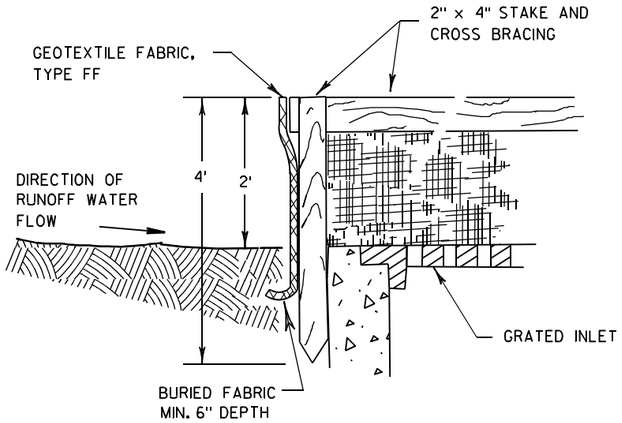

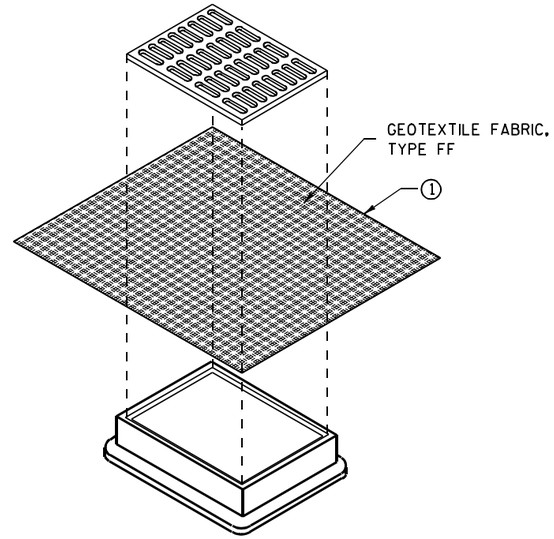

INLET PROTECTION, TYPE B
(WITHOUT CURB BOX)

(CAN BE INSTALLED IN ANY INLET WITHOUT A CURB BOX)

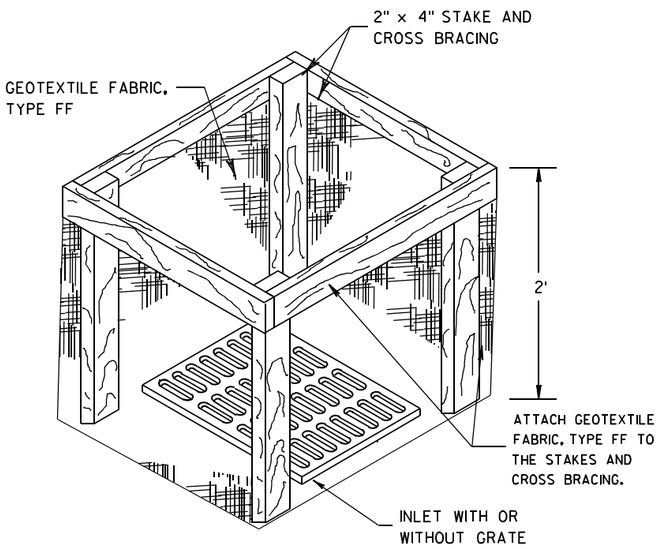

INLET PROTECTION, TYPE A

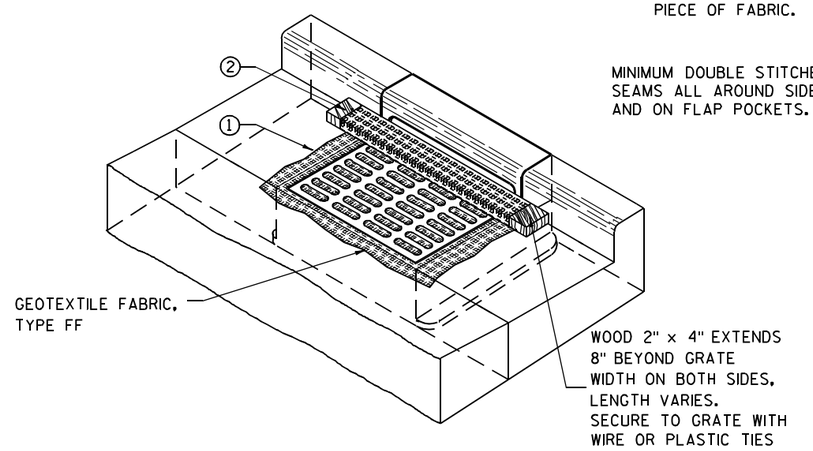

INLET PROTECTION, TYPE C (WITH CURB BOX)

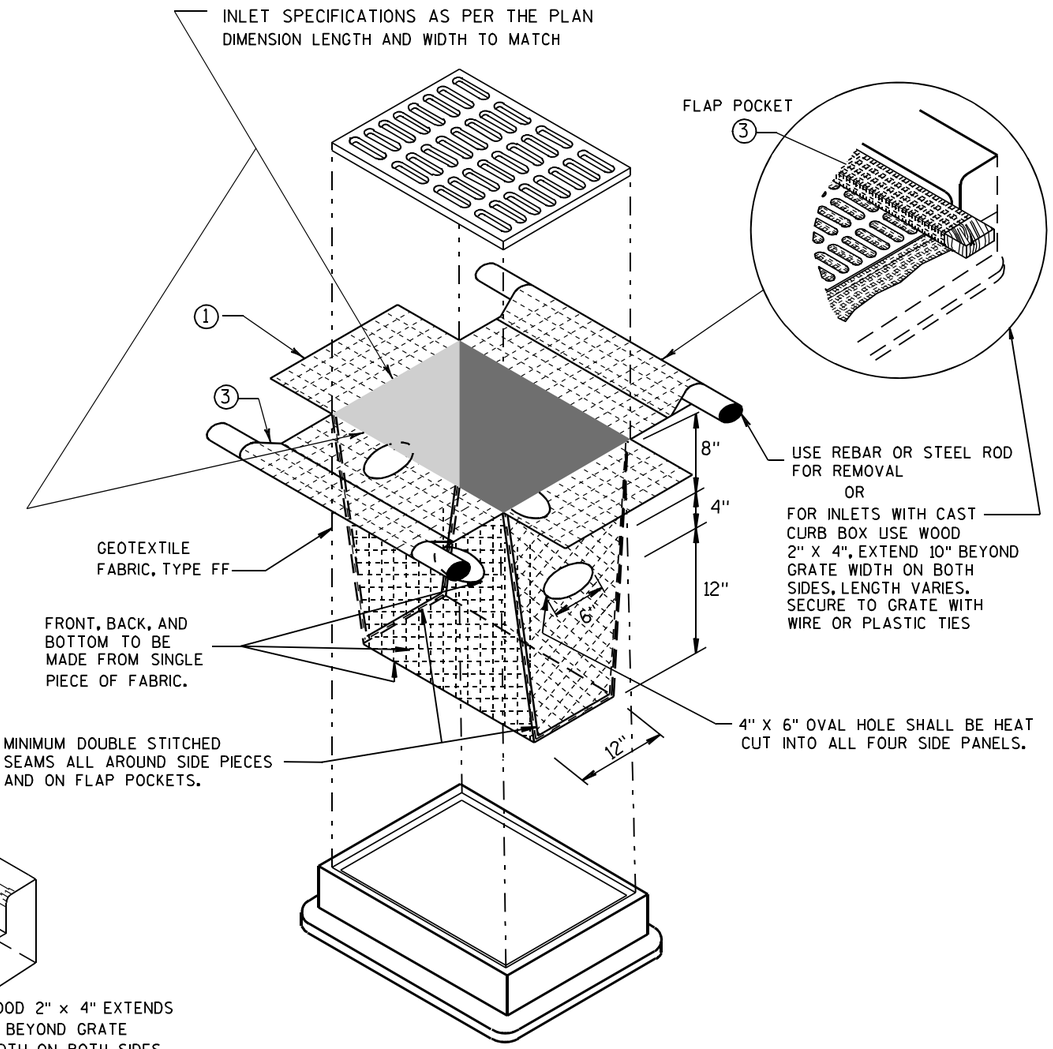

INLET PROTECTION, TYPE D

(CAN BE INSTALLED IN ANY INLET TYPE WITH
OR WITHOUT A CURB BOX AS PER NOTE 2)

GENERAL NOTES

INLET PROTECTION DEVICES SHALL BE MAINTAINED OR REPLACED AT THE DIRECTION OF THE ENGINEER.

MANUFACTURED ALTERNATIVES APPROVED AND LISTED ON THE DEPARTMENT'S EROSION CONTROL PRODUCT ACCEPTABILITY LIST MAY BE SUBSTITUTED.

WHEN REMOVING OR MAINTAINING INLET PROTECTION, CARE SHALL BE TAKEN SO THAT THE SEDIMENT TRAPPED ON THE GEOTEXTILE FABRIC DOES NOT FALL INTO THE INLET. ANY MATERIAL FALLING INTO THE INLET SHALL BE REMOVED IMMEDIATELY.

1 FINISHED SIZE, INCLUDING FLAP POCKETS WHERE REQUIRED, SHALL EXTEND A MINIMUM OF 10" AROUND THE PERIMETER TO FACILITATE MAINTENANCE OR REMOVAL.

2 FOR INLET PROTECTION, TYPE C (WITH CURB BOX), AN ADDITIONAL 18" OF FABRIC IS WRAPPED AROUND THE WOOD AND SECURED WITH STAPLES. THE WOOD SHALL NOT BLOCK THE ENTIRE HEIGHT OF THE CURB BOX OPENING.

3 FLAP POCKETS SHALL BE LARGE ENOUGH TO ACCEPT WOOD 2X4.

INSTALLATION NOTES

TYPE B & C

TRIM EXCESS FABRIC IN THE FLOW LINE TO WITHIN 3" OF THE GRATE.

THE CONTRACTOR SHALL DEMONSTRATE A METHOD OF MAINTENANCE, USING A SEWN FLAP, HAND HOLDS OR OTHER METHOD TO PREVENT ACCUMULATED SEDIMENT FROM ENTERING THE INLET.

TYPE D

DO NOT INSTALL INLET PROTECTION TYPE D IN INLETS SHALLOWER THAN 30", MEASURED FROM THE BOTTOM OF THE INLET TO THE TOP OF THE GRATE.

TRIM EXCESS FABRIC IN THE FLOW LINE TO WITHIN 3" OF THE GRATE.

THE INSTALLED BAG SHALL HAVE A MINIMUM SIDE CLEARANCE, BETWEEN THE INLET WALLS AND THE BAG, MEASURED AT THE BOTTOM OF THE OVERFLOW HOLES, OF 3". WHERE NECESSARY THE CONTRACTOR SHALL CINCH THE BAG, USING PLASTIC ZIP TIES, TO ACHIEVE THE 3" CLEARANCE. THE TIES SHALL BE PLACED AT A MAXIMUM OF 4" FROM THE BOTTOM OF THE BAG.

INLET PROTECTION
TYPE A, B, C, AND D

STATE OF WISCONSIN
DEPARTMENT OF TRANSPORTATION

APPROVED
10/16/02 — DATE
/S/ Beth Cannon — CHIEF ROADWAY DEVELOPMENT ENGINEER
FHWA

6

S.D.D. 8 E 10-2

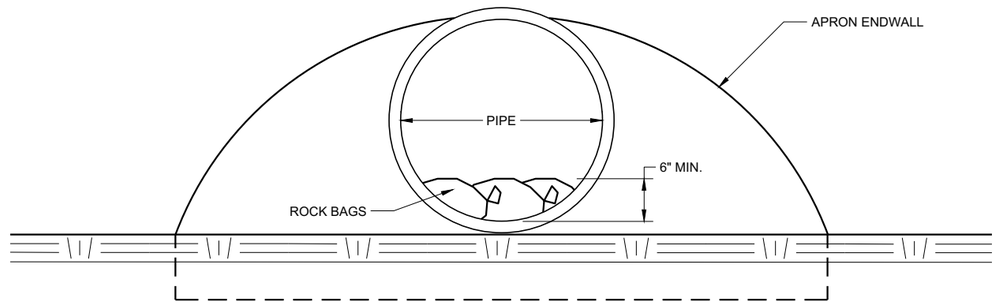

END VIEW

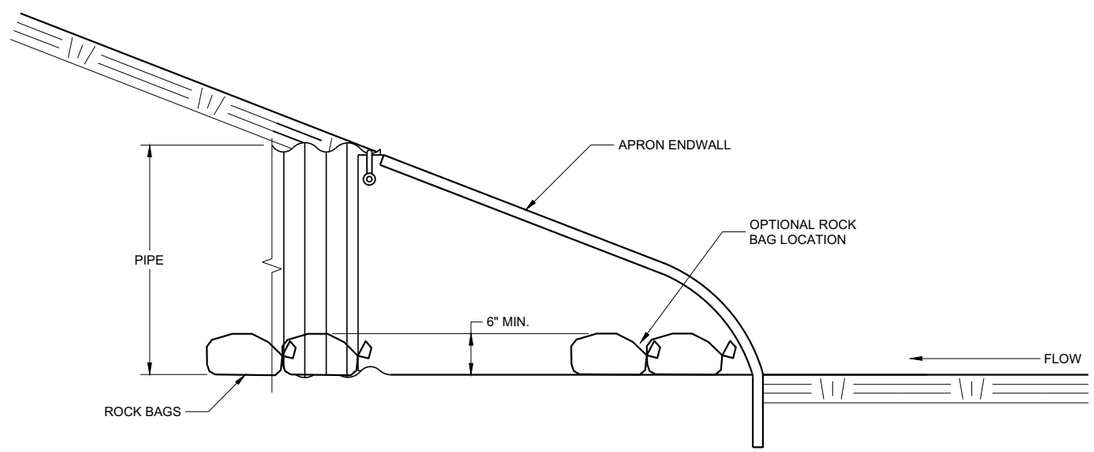

SIDE VIEW

CULVERT PIPE CHECK

(INSTALL ON INLET END ONLY)

CULVERT PIPE CHECK

STATE OF WISCONSIN
DEPARTMENT OF TRANSPORTATION

APPROVED
May 2019 — DATE
/S/ Daniel Schave — EROSION CONTROL ENGI
FHWA

6

6

SDD 08E15 - 01

SDD 08E15 - 01

METAL APRON ENDWALLS

PIPE DIA. (IN.)	MIN. THICK. (Inches) STEEL	MIN. THICK. (Inches) ALUM.	DIMENSIONS (Inches) A (±1")	B (MAX.)	H (±1")	L (±1 1/2")	L1 ①	L2 ①	W (±2")	APPROX. SLOPE	BODY
12	.064	.060	6	6	6	21	12	17 1/2	24	2 1/2 to 1	1 Pc.
15	.064	.060	7	8	6	26	14	21 3/4	30	2 1/2 to 1	1 Pc.
18	.064	.060	8	10	6	31	15	28 1/4	36	2 1/2 to 1	1 Pc.
21	.064	.060	9	12	6	36	18	29 5/8	42	2 1/2 to 1	1 Pc.
24	.064	.075	10	13	6	41	18	37 1/4	48	2 1/2 to 1	1 Pc.
30	.079	.075	12	16	8	51	18	52 1/4	60	2 1/2 to 1	1 Pc.
36	.079	.105	14	19	9	60	24	59 3/4	72	2 1/2 to 1	2 Pc.
42	.109	.105	16	22	11	69	24	75 5/8	84	2 1/2 to 1	2 Pc.
48	.109	.105	18	27	12	78	24	81	90	2 1/4 to 1	3 Pc.
54	.109	.105	18	30	12	84	30	85 1/2	102	2 1/4 to 1	3 Pc.
60	.109×	.105×	18	33	12	87	—	—	114	2 to 1	3 Pc.
66	.109×	.105×	18	36	12	87	—	—	120	2 to 1	3 Pc.
72	.109×	.105×	18	39	12	87	—	—	126	2 to 1	3 Pc.
78	.109×	.105×	18	42	12	87	—	—	132	1 1/2 to 1	3 Pc.
84	.109×	.105×	18	45	12	87	—	—	138	1 1/2 to 1	3 Pc.
90	.109×	.105×	18	37	12	87	—	—	144	1 1/2 to 1	3 Pc.
96	.109×	.105×	18	35	12	87	—	—	150	1 1/2 to 1	3 Pc.

× EXCEPT CENTER PANEL
SEE GENERAL NOTES

REINFORCED CONCRETE APRON ENDWALLS

PIPE DIA. (IN.)	DIMENSIONS (Inches) T	A	B	C	D	E	G	APPROX. SLOPE
12	2	4	24	48 7/8	72 7/8	24	2	3 to 1
15	2 1/4	6	27	46	73	30	2 1/4	3 to 1
18	2 1/2	9	27	46	73	36	2 1/2	3 to 1
21	2 3/4	9	36	37 1/2	73 1/2	42	2 3/4	3 to 1
24	3	9 1/2	43 1/2	30	73 1/2	48	3	3 to 1
27	3 1/4	10 1/2	49 1/2	24	73 1/2	54	3 1/4	3 to 1
30	3 1/2	12	54	19 3/4	73 1/2	60	3 1/2	3 to 1
36	4	15	63	34 3/4	97 3/4	72	4	3 to 1
42	4 1/2	21	63	35	98	78	4 1/2	3 to 1
48	5	24	72	26	98	84	5	3 to 1
54	5 1/2	27	65	*33 1/4-**35	*98 1/4-**100	90	5 1/2	2 2/5 to 1
60	6	*30-**35	60	39	99	96	5	2 to 1
66	6 1/2	*24-**30	*72-**78	*21-**27	99	102	5 1/2	2 to 1
72	7	*24-**36	78	21	99	108	6	2 to 1
78	7 1/2	*24-**36	78	21	99	114	6 1/2	2 to 1
84	8	36	90 1/2	21	111 1/2	120	6 1/2	1 1/2 to 1
90	8 1/2	41	87 1/2	24	111 1/2	132	6 1/2	1 1/2 to 1

*MINIMUM
**MAXIMUM

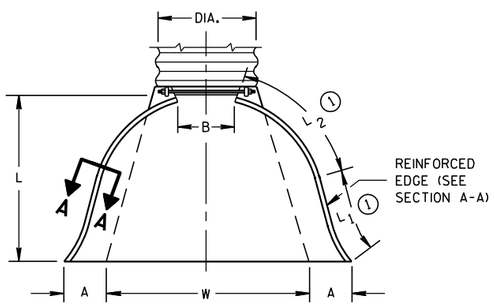

PLAN VIEW

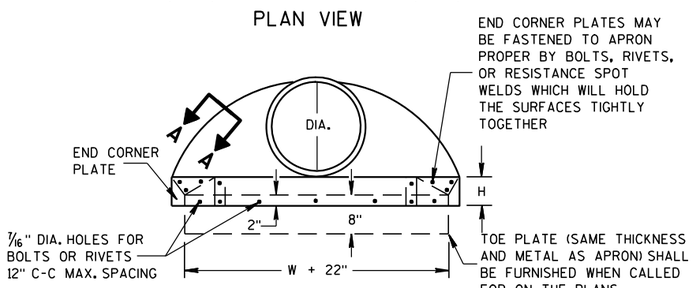

END VIEW

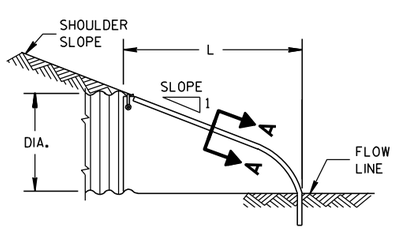

SIDE ELEVATION

METAL ENDWALLS

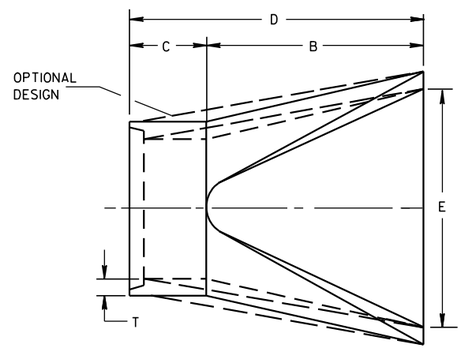

PLAN

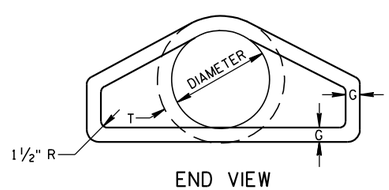

END VIEW

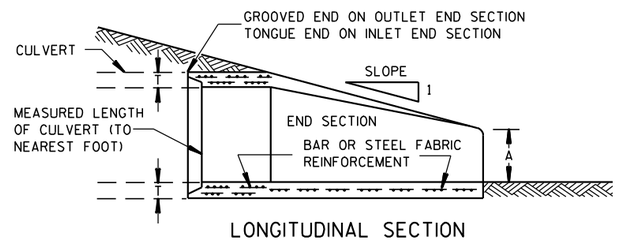

LONGITUDINAL SECTION

CONCRETE ENDWALLS

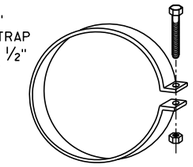

ALTERNATE FOR TYPE 1 CONNECTION

END SECTION CONNECTOR STRAP

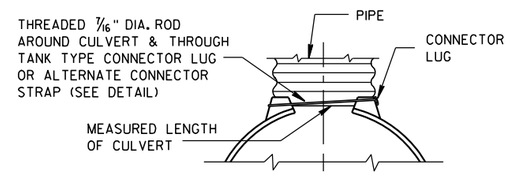

TYPE 1
FOR 12" THRU 24" CORR. PIPE

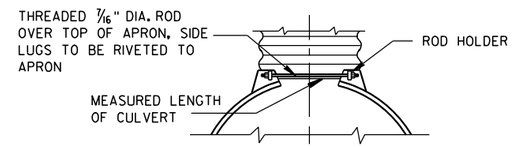

TYPE 2
FOR 30" THRU 96" CORR. PIPE

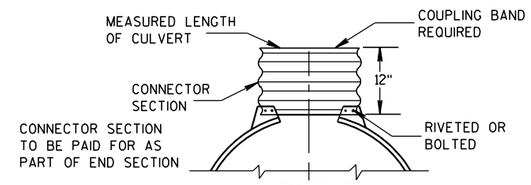

TYPE 3
FOR 42" THRU 96" CORR. PIPE

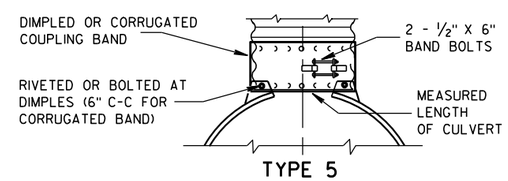

TYPE 5
ALTERNATE FOR:
ALL SIZES CORRUGATED CIRCULAR PIPE

NOTE: DIMPLED BAND FITS OVER OUTSIDE OF ENDWALL, AND CORRUGATED BAND FITS INSIDE ENDWALL. DIMPLED BAND MAY BE USED WITH HELICALLY CORRUGATED PIPE.

FOR CIRCUMFERENTIALLY CORRUGATED PIPE USE ENDWALL CONNECTION DETAILS 1, 2, 3 OR 5 AS APPLICABLE.

FOR HELICALLY CORRUGATED PIPE USE ENDWALL CONNECTION DETAILS 1, 2 OR 5.

FOR HELICALLY CORRUGATED PIPES WITH TWO CIRCUMFERENTIAL CORRUGATIONS AT EACH END USE ENDWALL CONNECTION DETAILS 1, 2 OR 3.

CONNECTION DETAILS

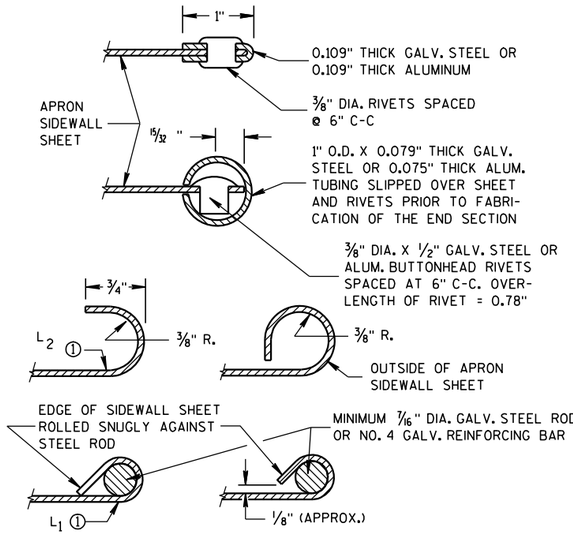

SECTION A-A

GENERAL NOTES

DETAILS OF CONSTRUCTION, MATERIALS AND WORKMANSHIP NOT SHOWN ON THIS DRAWING SHALL CONFORM TO THE PERTINENT REQUIREMENTS OF THE STANDARD SPECIFICATIONS AND THE APPLICABLE SPECIAL PROVISIONS.

CONCRETE CULVERT ENDWALLS MAY NOT BE USED WITH GALVANIZED STEEL OR ALUMINUM CULVERT PIPE OR VISE VERSA. GALVANIZED STEEL OR ALUMINUM ENDWALLS SHALL NORMALLY BE INSTALLED ON CULVERT PIPE OF THE SAME METAL.

ALL THREE PIECE STEEL APRON ENDWALLS FOR 60" DIAMETER PIPE AND LARGER SHALL HAVE 0.109" SIDES AND 0.138" CENTER PANELS. ALL THREE PIECE ALUMINUM APRON ENDWALLS FOR 60" DIAMETER PIPE AND LARGER SHALL HAVE 0.105" SIDES AND 0.134" CENTER PANELS. THE WIDTH OF CENTER PANELS SHALL BE GREATER THAN 20 PERCENT OF THE PIPE PERIMETER.

LAP SEAMS SHALL BE TIGHTLY JOINED BY GALVANIZED RIVETS OR BOLTS FOR STEEL UNITS AND ALUMINUM RIVETS AND BOLTS FOR ALUMINUM UNITS. FOR THE 60" THROUGH 96" DIAMETER APRON ENDWALL SIZES, THE REINFORCED EDGES AND CENTER PANEL SEAMS SHALL BE FURTHER REINFORCED WITH GALVANIZED STEEL OR ALUMINUM STIFFENER ANGLES. THE ANGLES SHALL BE ATTACHED BY GALVANIZED NUTS AND BOLTS FOR STEEL UNITS AND ALUMINUM NUTS AND BOLTS FOR ALUMINUM UNITS.

WHERE TWO OR MORE PIPES WITH APRON ENDWALLS ARE LAID ADJACENT TO EACH OTHER, THEY SHALL BE SEPARATED BY A DISTANCE SUFFICIENT TO PROVIDE A MINIMUM CLEARANCE OF 6 INCHES BETWEEN APRON ENDWALLS.

① FOR PIPE SIZES UP TO 60" DIAMETER, A 180° ROLLED EDGE MAY BE USED INSTEAD OF STEEL ROD REINFORCEMENT. SEE SECTION A-A.

APRON ENDWALLS FOR CULVERT PIPE

STATE OF WISCONSIN
DEPARTMENT OF TRANSPORTATION

APPROVED
11/30/94 — DATE
/S/ Rory L. Rhinesmith — CHIEF ROADWAY DEVELOPMENT ENGINEER
FHWA

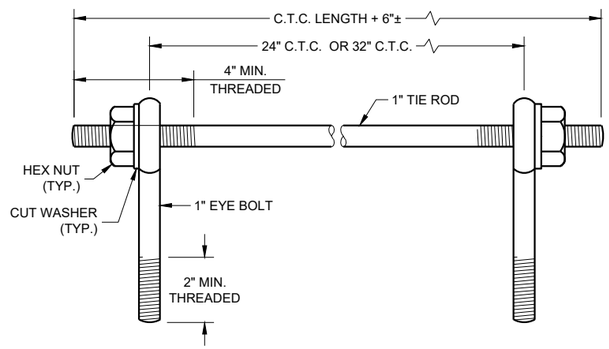

EYE BOLTS AND TIE ROD

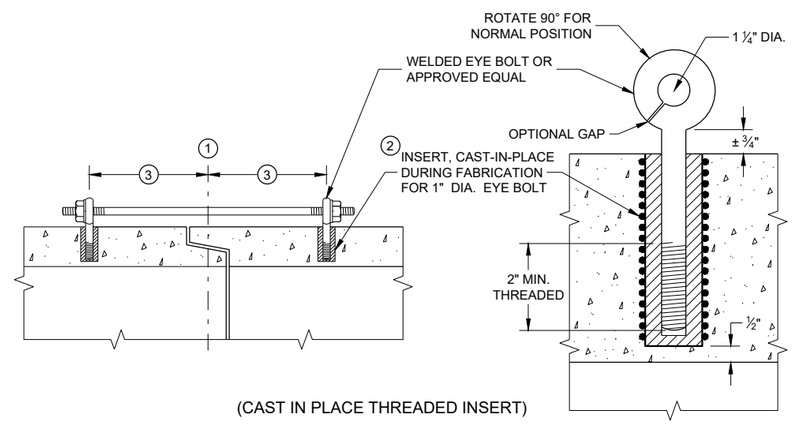

(CAST IN PLACE THREADED INSERT)

LONGITUDINAL SECTIONS

EYE BOLT AND TIE ROD ASSEMBLY (ALTERNATE NO. 1)

GENERAL NOTES

DETAILS OF CONSTRUCTION, MATERIALS, AND WORKMANSHIP NOT SHOWN ON THIS DRAWING SHALL CONFORM TO THE PERTINENT REQUIREMENTS OF THE STANDARD SPECIFICATIONS AND APPLICABLE SPECIAL PROVISIONS.

CONCRETE CULVERT AND STORM SEWER PIPE SHALL BE TIED TOGETHER IN THE MANNER ILLUSTRATED BY THIS DETAIL AT LOCATIONS DESIGNATED IN THE STANDARD SPECIFICATIONS AND THE PLAN. THE CONTRACTOR MAY USE EITHER ALTERNATE 1, 2 OR 3 FOR DRAINAGE STRUCTURES. ONLY ALTERNATE 1 AND 3 MAY BE USED FOR CATTLE PASSES, UNLESS OTHERWISE STATED IN THE CONTRACT. THE MATERIALS, FABRICATION AND WORK NECESSARY TO TIE THE PIPE BY THIS DETAIL WILL BE CONSIDERED INCIDENTAL TO THE PIPE AND APRON ENDWALLS IF REQUIRED.

DETAILED DRAWINGS FOR PROPOSED ALTERNATE DESIGNS FOR JOINT TIES SHALL BE SUBMITTED TO THE ENGINEER FOR APPROVAL.

JOINT TIES TO BE HOT-DIP GALVANIZED PER ASTM A 153.

1. CENTER LINE OF TONGUE AND GROOVE OR BELL AND SPIGOT JOINTS.
2. THE INSIDE OF THE THREADED INSERTS SHALL BE CLEAN TO ALLOW THE INSERTION OF THREADED EYE BOLTS.
3. HOLES SHALL BE CAST-IN-PLACE OR DRILLED PER THE APPLICABLE DETAIL, AND EQUAL DISTANCE FROM THE CENTERLINE OF THE JOINT.
4. BOLT PROJECTION INSIDE OF PIPE SHALL NOT EXCEED 2 INCHES.
5. OPENING TO BE ROD DIAMETER PLUS 1 INCH.
6. LENGTH ADEQUATE TO EXTEND TO WITHIN ½ INCH OF THE INNER SURFACE OF THE PIPE.
7. EYE BOLT LENGTH DETERMINED BY WALL THICKNESS, BELL THICKNESS AND BOLT PROJECTION INSIDE PIPE.

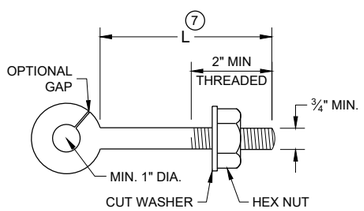

EYE BOLT 7

NOTE: TWO EYE BOLTS MAY BE USED WITH A 30" OR 38" LONG THREADED ROD IN LIEU OF THE 90° BENT TIE ROD.

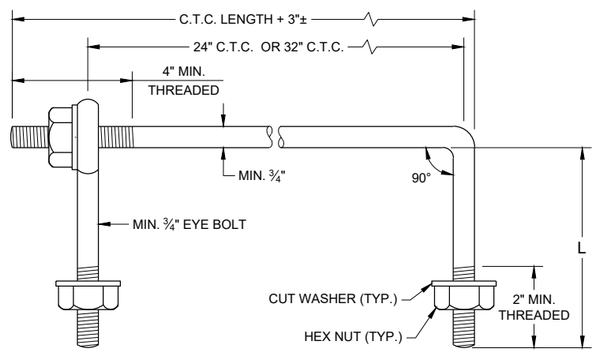

EYE BOLT AND TIE ROD

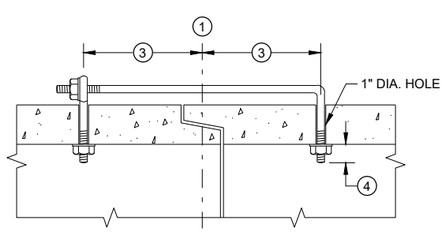

(TONGUE AND GROOVE PIPE)

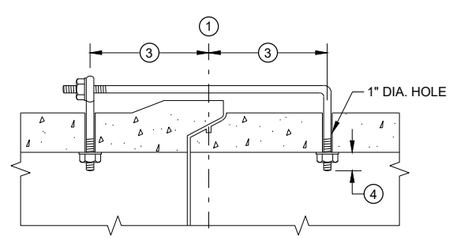

(MODIFIED BELL PIPE)

LONGITUDINAL SECTION

(JOINT TIES FOR 18" TO 66" DIA. CONCRETE PIPE)

EYE BOLT AND TIE ROD ASSEMBLY (ALTERNATE NO. 2)

ADJUSTABLE TIE ROD TABLE

PIPE DIAMETER	TIE ROD DIAMETER	D	L_1	N
12 - 60	⅝	⅝	5	½
66 - 84	¾	¾	5	½
90 - 144	1	1	7	1 7/16

DIMENSIONS SHOWN ARE IN INCHES

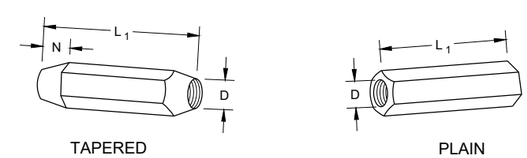

TAPERED PLAIN

RIGHT AND LEFT THREADS

SLEEVE NUTS

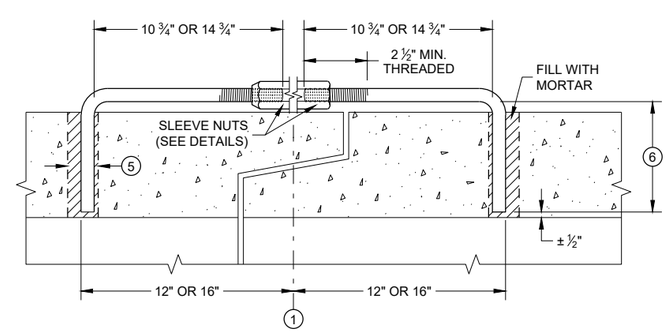

LONGITUDINAL SECTION

ADJUSTABLE TIE ROD (ALTERNATE NO. 3)

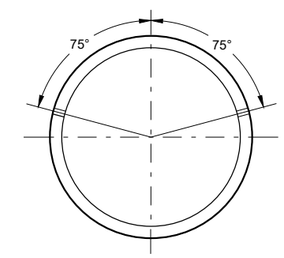

PLACEMENT OF (2) CAST-IN-PLACE INSERTS OR HOLES DURING FABRICATION FOR PIPE SECTIONS REQUIRING TIE RODS

TRANSVERSE SECTION

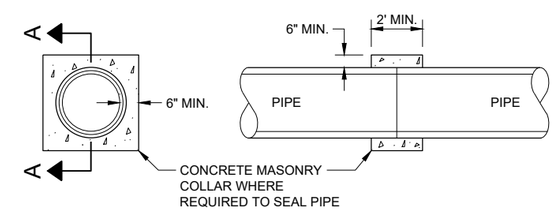

SECTION A - A

CONCRETE COLLAR DETAIL

JOINT TIES FO CONCRETE PIPE AND CONCRETE COLLAR DETAIL

STATE OF WISCONSIN
DEPARTMENT OF TRANSPORTATION

APPROVED
November 2021 — DATE
/S/ Rodney Taylor — ROADWAY STANDARDS DEVE ENGINEER
FHWA

6

SDD 08F04 - 08

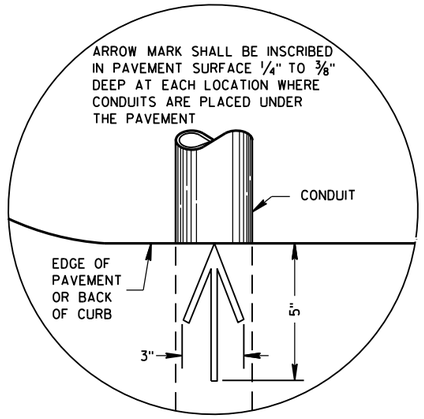

PLAN VIEW

ARROW MARK

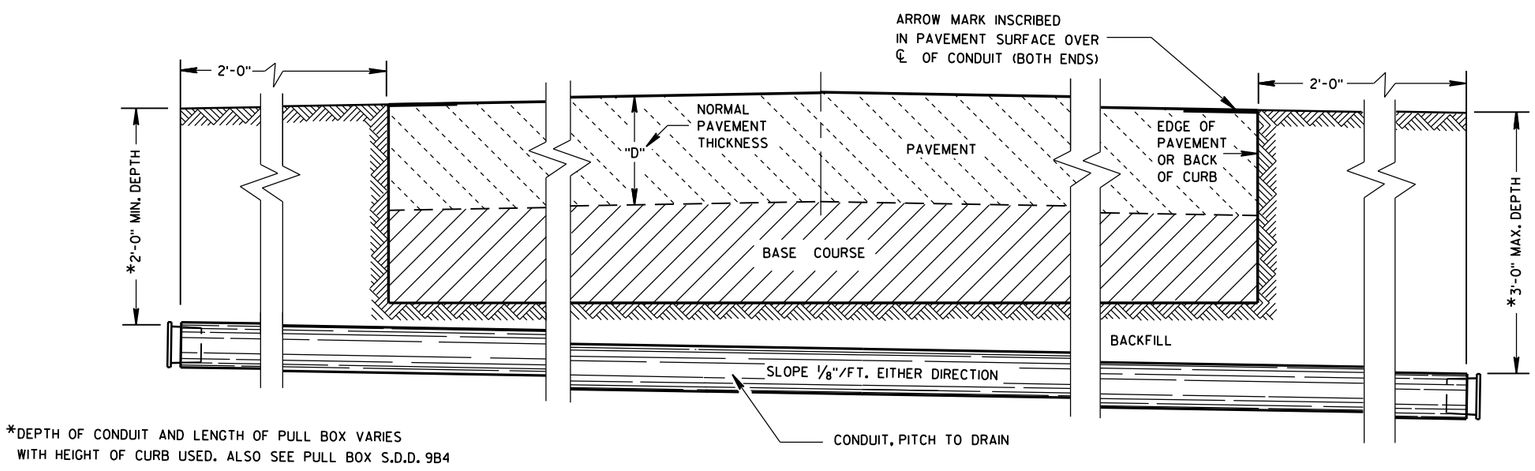

*DEPTH OF CONDUIT AND LENGTH OF PULL BOX VARIES WITH HEIGHT OF CURB USED. ALSO SEE PULL BOX S.D.D. 9B4

SIDE ELEVATION

DETAIL FOR CONDUIT UNDER PAVED HIGHWAYS

GENERAL NOTES

DETAILS OF CONSTRUCTION, MATERIALS AND WORKMANSHIP NOT SHOWN ON THIS DRAWING SHALL CONFORM TO THE PERTINENT REQUIREMENTS OF THE CONTRACT.

METALLIC (STANDARD SPECIFICATION 652.2.2) OR NONMETALLIC (STANDARD SPECIFICATION 652.2.3) CONDUIT SHALL BE FURNISHED AND PLACED AS SHOWN.

DEPTH OF CONDUIT INSTALLED BELOW THE TRAVELED WAY SHALL BE 24 INCHES MINIMUM AND 36 INCHES MAXIMUM.

DEPTH OF CONDUIT INSTALLED THAT IS NOT BELOW THE TRAVELED WAY SHALL BE 18 INCHES MINIMUM AND 36 INCHES MAXIMUM.

ANY EXCEPTION TO THE MAXIMUM DEPTH SHALL BE ONLY WITH THE WRITTEN APPROVAL OF THE ENGINEER.

THE TRENCH SHALL NOT BE BACKFILLED PRIOR TO INSPECTION OF THE CONDUIT.

ALL METALLIC CONDUIT RACEWAY ENDS SHALL BE REAMED AND THREADED.

ALL METALLIC CONDUIT IN WHICH WIRE OR CABLE IS TO BE INSTALLED SHALL BE BUSHED WITH APPROVED THREADED BUSHINGS BEFORE INSTALLATION OF THE WIRE OR CABLE.

ALL METALLIC CONDUITS IN WHICH WIRE OR CABLE IS NOT TO BE INSTALLED SHALL BE CAPPED WITH THREADED PROTECTIVE CAPS, AS APPROVED BY THE ENGINEER.

ALL NONMETALLIC CONDUIT SHALL BE CAPPED OR PLUGGED IMMEDIATELY AFTER INSTALLATION AND SHALL REMAIN CAPPED OR PLUGGED UNTIL WIRE/CABLES ARE INSTALLED.

NONMETALLIC CONDUITS IN WHICH WIRE OR CABLE IS NOT BEING INSTALLED SHALL REMAIN CAPPED OR PLUGGED.

BENDING OF PVC ELECTRICAL CONDUIT SHALL BE ACCOMPLISHED BY USING A BLANKET OR EMERSION TYPE TANK DESIGNED FOR THE PURPOSE OF BENDING PVC ELECTRICAL CONDUIT.

ALL CUT ENDS SHALL BE TRIMMED INSIDE AND OUTSIDE TO REMOVE ALL ROUGH EDGES ON NONMETALLIC CONDUIT. (SEE NEC 347.5)

WHEN REQUIRED TO CONNECT NONMETALLIC CONDUIT TO METALLIC CONDUIT, ONLY U.L. LISTED ADAPTER FITTINGS SHALL BE USED.

PRIOR TO CONDUIT ACCEPTANCE, CONDUIT CAPS OR PLUGS SHALL BE REMOVED, AND THE CAPS, PLUGS AND CONDUIT ENDS SHALL BE THOROUGHLY CLEANED AND THEN THE CAPS OR PLUGS REINSTALLED TO ENSURE THAT THE CAPS OR PLUGS CAN BE EASILY REMOVED IN THE FUTURE.

ALL CONDUIT BEING FURNISHED AND INSTALLED SHALL HAVE THE U.L. LABEL FIRMLY ATTACHED.

CONDUIT RUNS SHALL BE THE SAME SIZE OF CONDUIT FROM ONE END TO THE OTHER (FROM PULL BOX TO PULL BOX-OR-JUNCTION BOX TO JUNCTION BOX-OR-BASE TO BASE, ETC.).

TRACER WIRE SHALL BE INSTALLED AS STATED IN THE STANDARD SPECIFICATION, ITEM 652.3.1.1.

ALL CONDUIT RUNS SHALL BE STRAIGHT (WITHOUT BENDS) FROM PULL BOX TO PULL BOX, PULL BOX TO BASE AND BASE TO BASE AS SHOWN ON THE PLANS.

CONDUIT	
STATE OF WISCONSIN DEPARTMENT OF TRANSPORTATION	
APPROVED March, 2017 DATE	/S/ Ahmet Demirbilek STATE ELECTRICAL
FHWA	

FORM DEPTH SHALL BE NO MORE THAN 6" BELOW GRADE ON THE LOWER SIDE OF BASE

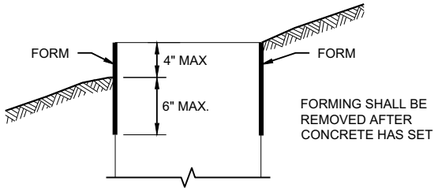

FORMING DETAIL

QUANTITY REQUIREMENTS	CONCRETE BASE TYPE		
	1	2	5 & 6
APPROX. CUBIC YARDS OF CONCRETE	0.40	0.57	0.40
LBS. OF HOOP BAR STEEL	NONE	23	16
LBS. OF VERTICAL BAR STEEL	NONE	60	18

GENERAL NOTES

DETAILS OF CONSTRUCTION, MATERIALS AND WORKMANSHIP NOT SHOWN ON THIS DRAWINGSHALL CONFORM TO THE PERTINENT REQUIREMENTS OF THE CONTRACT.

BASES SHALL BE EXCAVATED BY USE OF A CIRCULAR AUGER.

TOP SURFACES OF CONCRETE BASES SHALL BE TROWEL FINISHED SMOOTH AND LEVEL.

CONDUIT SIZES AND LOCATIONS SHALL BE SHOWN ON THE PLANS

THE FINAL OR TERMINATING CONCRETE BASE IN A CONDUIT RUN SHALL HAVE A 6" EXIT STUB INSTALLED FOR FUTURE CABLING USE. THE EXIT STUB SHALL BE SIZED AS USED THROUGHOUT THE CONDUIT RUN AS SHOWN A THE ENTRANCE OF THE BASE.

ENDS OF CONDUIT INSTALLED BELOW GRADE FRO FUTURE USE SHALL BE CAPPED IF METALLIC OR PLUGGED IF NON-METALLIC.

MINIMUM BENDING RADIUS OF CONDUIT IS EQUAL TO 6X THE DIAMETER.

CONDUIT HEIGHT ABOVE CONCRETE BASES SHALL BE 1 INCH. ALL METALLIC CONDUIT ENDS SHALL BE REAMED AND THREADED.

ALL CONDUIT ENDS AT THE TOP OF CONCRETE BASES SHALL BE CAPPED IF METALLIC OR PLUGGED IF NON-METALLIC IMMEDIATELY AFTER PLACEMENT AND BEFORE CONCRETE IS POURED. CONDUITS IN WHICH WIRE OR CABLE IS NOT INSTALLED SHALL REMAIN CAPPED OR PLUGGED.

BELL ENDS SHALL BE INSTALLED ON ALL PVC CONDUIT EXPOSED AT THE TOP OF CONCRETE BASES BEFORE INSTALLATION.

WHEN REQUIRED TO CONNECT NON-METALLIC CONDUIT TO METALLIC CONDUIT, ONLY ADAPTER FITTINGS, U.L. LISTED FOR ELECTRICAL USE, SHALL BE USED.

IF A BASE REQUIRES A DEEP FORM BECAUSE OF LOOSE DIRT OR FILL, THE FORM SHALL BE REMOVED BEFORE BACKFILLING AROUND THE BASE. BACKFILL SHALL BE TAMPED TIGHT AGAINST THE BARE CONCRETE BASE IN LAYERS OF 1 FOOT OR LESS.

A NO. 4 AWG STRANDED COPPER EQUIPMENT GROUNDING CONDUCTOR SHALL BE EXOTHERMICALLY WELDED TO THE EQUIPMENT GROUNDING ELECTRODE (GROUND ROD) FOR TYPE 2, TYPE 5 AND TYPE 6 BASES.

THE EQUIPMENT GROUNDING CONDUCTOR SHALL BE FURNISHED AND INSTALLED TO ENTER ALL BASE TYPES THROUGH A 1 INCH CONDUIT INSTALLED FOR GROUNDING PURPOSES, LEAVING A 4 FOOT COIL OF WIRE ABOVE THE CONCRETE BASE. THE EQUIPMENT GROUNDING CONDUCTOR SHALL BE NEATLY COILED AND THE COILS TIED TOGETHER.

ANCHOR RODS SHALL BE THREADED 12" IN LENGTH ON EACH END OF THE ROD. ANCHOR RODS SHALL BE MANUFACTURED IN ACCORDANCE WITH SECTION 654.2.1 OF THE STANDARD SPECIFICATIONS.

WASHERS AND LOCK WASHERS ARE REQUIRED ON ALL ANCHOR RODS.

WHEN ANCHOR RODS USING THE ALTERNATE "L" BEND ARE FURNISHED, THE 4 INCH"L" BEND SHALL BE IN ADDITION TO THE SPECIFIED ANCHOR ROD BAR LENGTH. THE "L" BEND SHALL NOT BE THREADED.

ANCHOR RODS SHALL BE INSTALLED WITH MISALIGNMENTS OF LESS THAN 1:40 FROM VERTICAL.

WELDING OF THE ANCHOR RODS TO THE CAGE IS UNACCEPTABLE. TIE WIRES SHALL BE USED.

BAR STEEL REINFORCEMENT SHALL BE COATED WITH POWDERED EPOXY RESIN IN ACCORDANCE WITH SECTION 505 OF THE STANDARD SPECIFICATIONS (LATEST EDITION).

(1) THE MINIMUM DEPTH OF CONDUIT EXITING THE CONCRETE BASE AND INSTALLED BELOW THE TRAVELED WAY SHALL BE 24 INCHES. THE MINIMUM DEPTH OF CONDUIT EXITING THE CONCRETE BASE THAT IS NOT INSTALLED BELOW THE TRAVELED WAY SHALL BE 18 INCHES. THE MAXIMUM DEPTH OF ALL CONDUIT SHALL BE 36 INCHES EXCEPT WITH WRITTEN APPROVAL OF THE ENGINEER.

(2) (4) 1" DIA. X 3' - 6" ANCHOR RODS.

(3) (4) 1" DIA. X 5' - 0" ANCHOR RODS.

(4) (6) NO. 6 X 6' - 8" BAR STEEL REINFORCEMENT.

(5) (7) NO. 4 X 5' - 1" BAR STEEL REINFORCEMENT @ 1' - 0" C - C.

(6) (4) 1" DIA. X 3' - 6" ANCHOR RODS.

(7) (6) NO. 4 X 4' - 8" BAR STEEL REINFORCEMENT.

(8) (5) NO. 4 X 5' - 1" BAR STELL REINFORCEMENT @ 1' - 0" C -C.

(9) EXOTHERMIC CONNECTION TO EUIPMENT GROUNDING CONDUCTOR

(10) ⅝" DIA. X 8' -0" COPPERCLAD EQUIPMENT GROUNDING ELECTRODE REQUIRED

(11) ANY ANCHOR ROD PROJECTION SHORTER THAN 2 ¾" OR LONGER THAN 3 ¼" SHALL REQUIRE THE BASE TO BE REMOVED AND REPLACED AT THE CONTRACTORS EXPENSE.

(12) FOR NON - BREAKAWAY INSTALLATIONS, 4 ½" ± ANCHOR ROD PROJECTION WITH THE USE OF LEVELING NUTS. RODENT SCREEN REQUIRED.

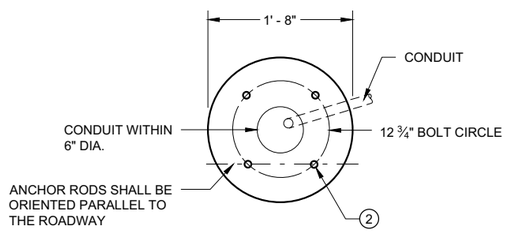

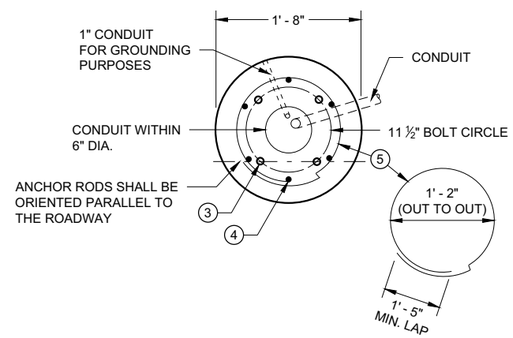

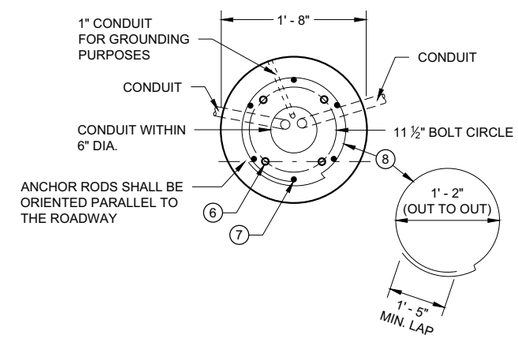

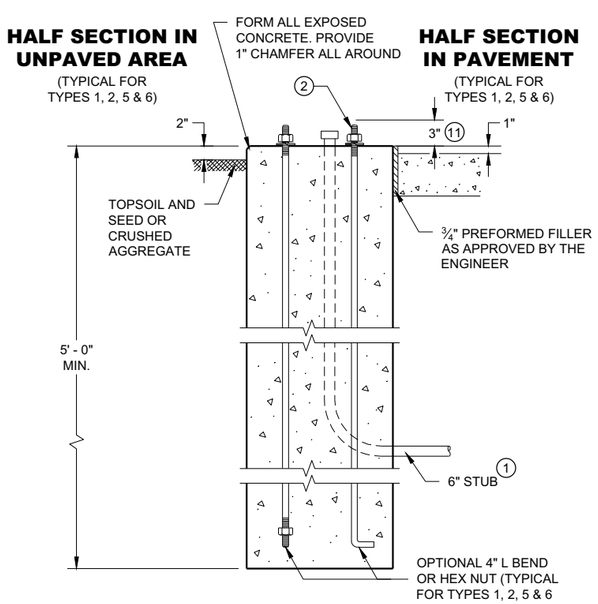

TYPE 1

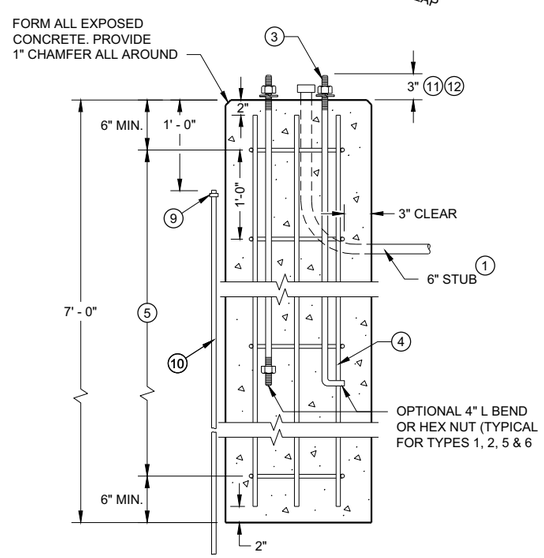

TYPE 2

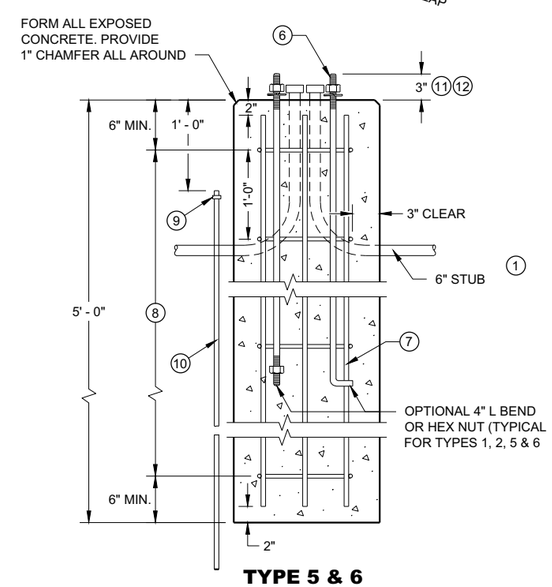

TYPE 5 & 6

CONCRETE BASES

CONCRETE BASES TYPES 1, 2, 5, & 6

STATE OF WISCONSIN
DEPARTMENT OF TRANSPORTATION

APPROVED
May 2019 — DATE
/S/ Ahmet Demirbilek — STATE ELECTRICAL ENGI
FHWA

6
SDD 09C02 - 09

GENERAL NOTES

DETAILS OF CONSTRUCTION, MATERIALS AND WORKMANSHIP NOT SHOWN ON THIS DRAWING SHALL CONFORM TO THE PERTINENT REQUIREMENTS OF THE CONTRACT.

FOUR (4) BOLTS SHALL BE FURNISHED WITH EACH TRANSFORMER BASE. BOLTS SHALL BE 1" DIAMETER, 4" IN LENGTH, WITH WASHERS, LOCK WASHERS AND NUTS. BOLTS, NUTS AND WASHERS SHALL BE MANUFACTURED IN ACCORDANCE WITH SECTION 531.2.2 OF THE STANDARD SPECIFICATIONS.

LEVELING SHIMS, IF NEEDED, SHALL BE DESIGNED FOR THE PURPOSE AND USED UNDER CAST BASES WHEN PLUMBING POLES OR STANDARDS DURING INSTALLATION. THE USE OF WASHERS IN LIEU OF PROPER LEVELING SHIMS IS NOT ACCEPTABLE.

SHIM LENGTH SHALL BE LONG ENOUGH TO COMPLETELY COVER THE AREA UNDER THE LENGTH AND WIDTH OF THE BASE MOUNTING FLANGE.

DOUBLE NUTTING IS NOT ACCEPTABLE FOR LEVELING OR MOUNTING PURPOSES.

A NEMA APPROVED, U.L. LISTED, COPPER WITH BRASS OR STAINLESS STEEL SET SCREW, DIRECT BURY RATED, MECHANICAL CONNECTOR (LUG), SIZED TO ACCEPT AWG. #10 TO #4 COPPER STRANDED WIRE SHALL BE FURNISHED AND INSTALLED IN THE PEDESTAL AND TRANSFORMER BASES.

THE MECHANICAL CONNECTOR SHALL BE INSTALLED USING A 1/4" - 20 (TPI) STAINLESS STEEL HEX HEAD BOLT OF SUFFICIENT LENGTH TO FIRMLY ATTACH THE LUG TO THE BASE.

SHOULD THE MANNER OF ATTACHMENT OF THE LUG REQUIRE WASHERS, HEX NUTS, LOCK WASHER - THEY SHALL BE STAINLESS STEEL AS IS THE BOLT. THE MANNER OF ATTACHMENT SHALL NOT BLOCK ACCESSIBILITY TO WIRE PLACEMENT IN THE CONNECTOR.

PEDESTAL BASE COLLAR THREADING SHALL BE TAPERED AND IN ACCORDANCE WITH NATIONAL PIPE THREADING DIMENSIONS.

BASE COLLAR THREADING SHALL EXTEND INTO THE BASE COLLAR WITH SUFFICIENT DEPTH TO ACCEPT THE INSTALLATION OF TRAFFIC SIGNAL STANDARDS TO A DEPTH OF 1 1/2", THEN TIGHTENING TO A POINT OF BEING IMMOVABLE.

THE ACCESS DOOR SHALL BE OF THE SAME MATERIAL AS THE BASE.

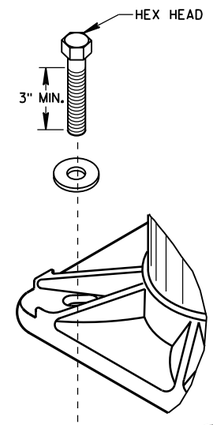

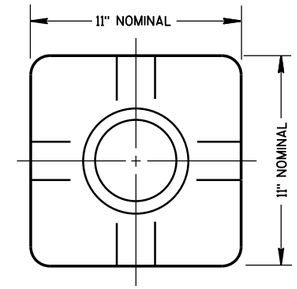

TOP VIEW
(PEDESTAL BASE)

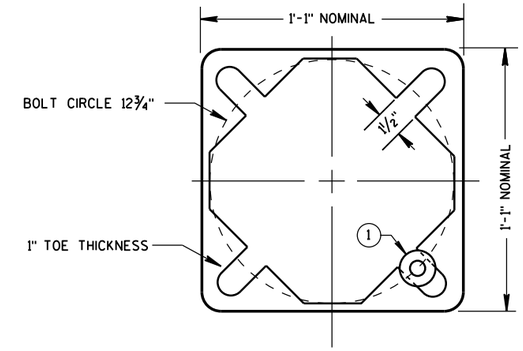

BOTTOM VIEW
(PEDESTAL BASE)

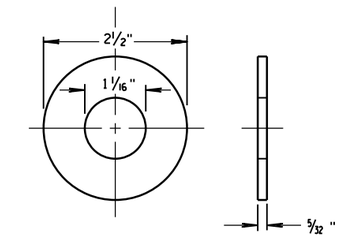

ZINC COATED STEEL WASHER
TO BE PROVIDED BY THE CONTRACTOR

PEDESTAL BASE WASHER (1)

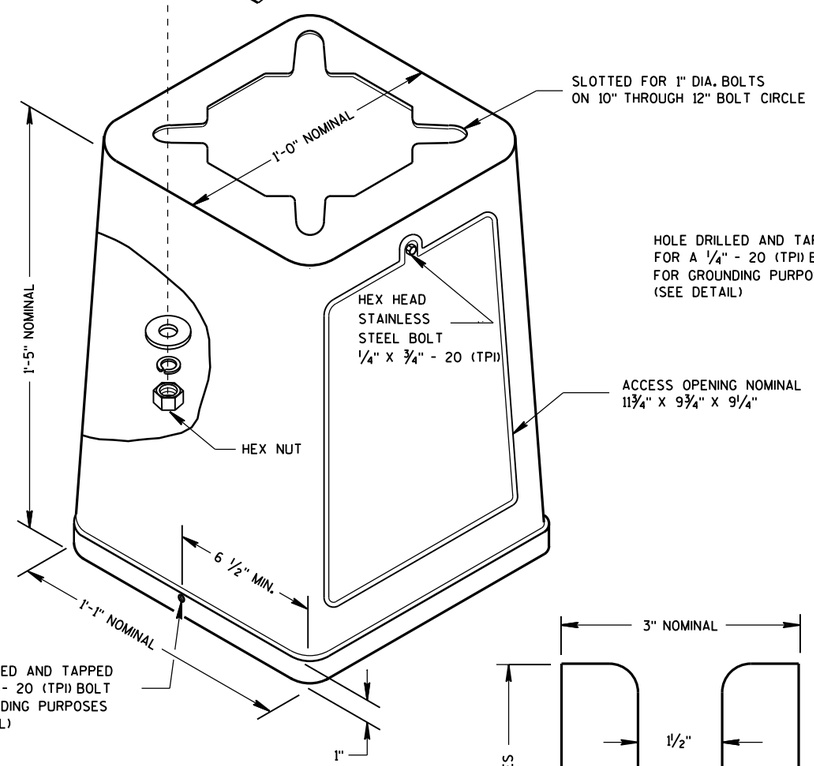

ISOMETRIC VIEW

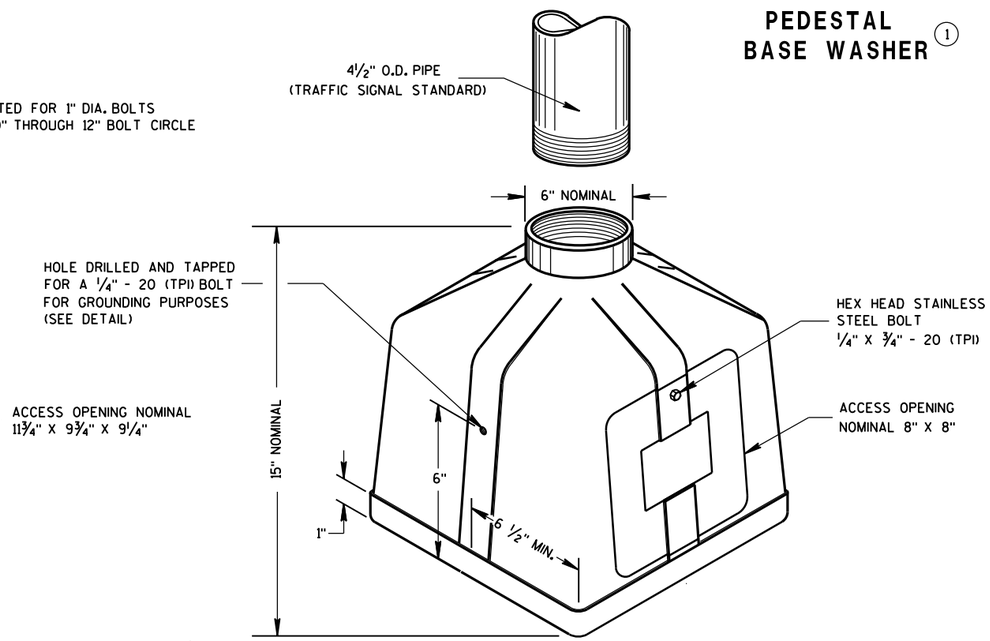

ISOMETRIC VIEW
PEDESTAL BASE

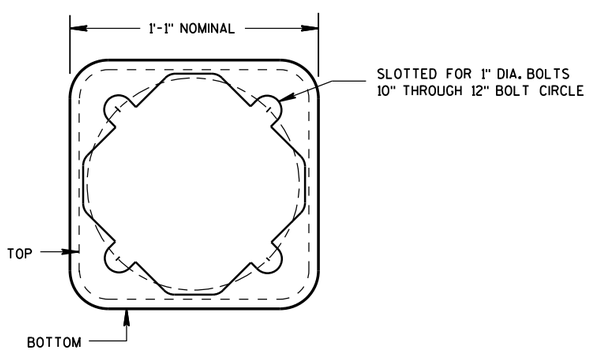

BOTTOM VIEW
(TRANSFORMER BASE)

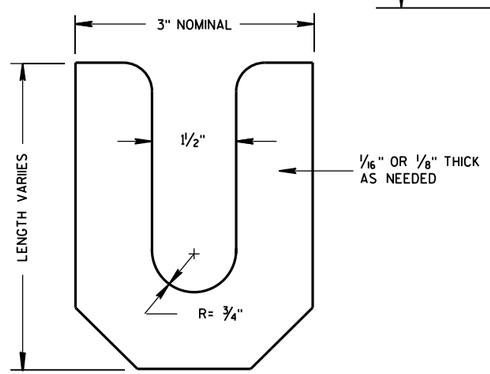

LEVELING SHIM

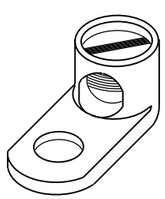

TYPICAL MECHANICAL CONNECTOR LUG

TO BE FURNISHED WITH EACH BASE

TRANSFORMER BASE

INTENDED FOR USE WITH TYPE 2, 3, 4, 5 & 6 POLES

TRANSFORMER/PEDESTAL BASES	
STATE OF WISCONSIN DEPARTMENT OF TRANSPORTATION	
APPROVED Sept. 2014 DATE	/S/ Ahmet Demirbilek STATE ELECTRICAL
FHWA	

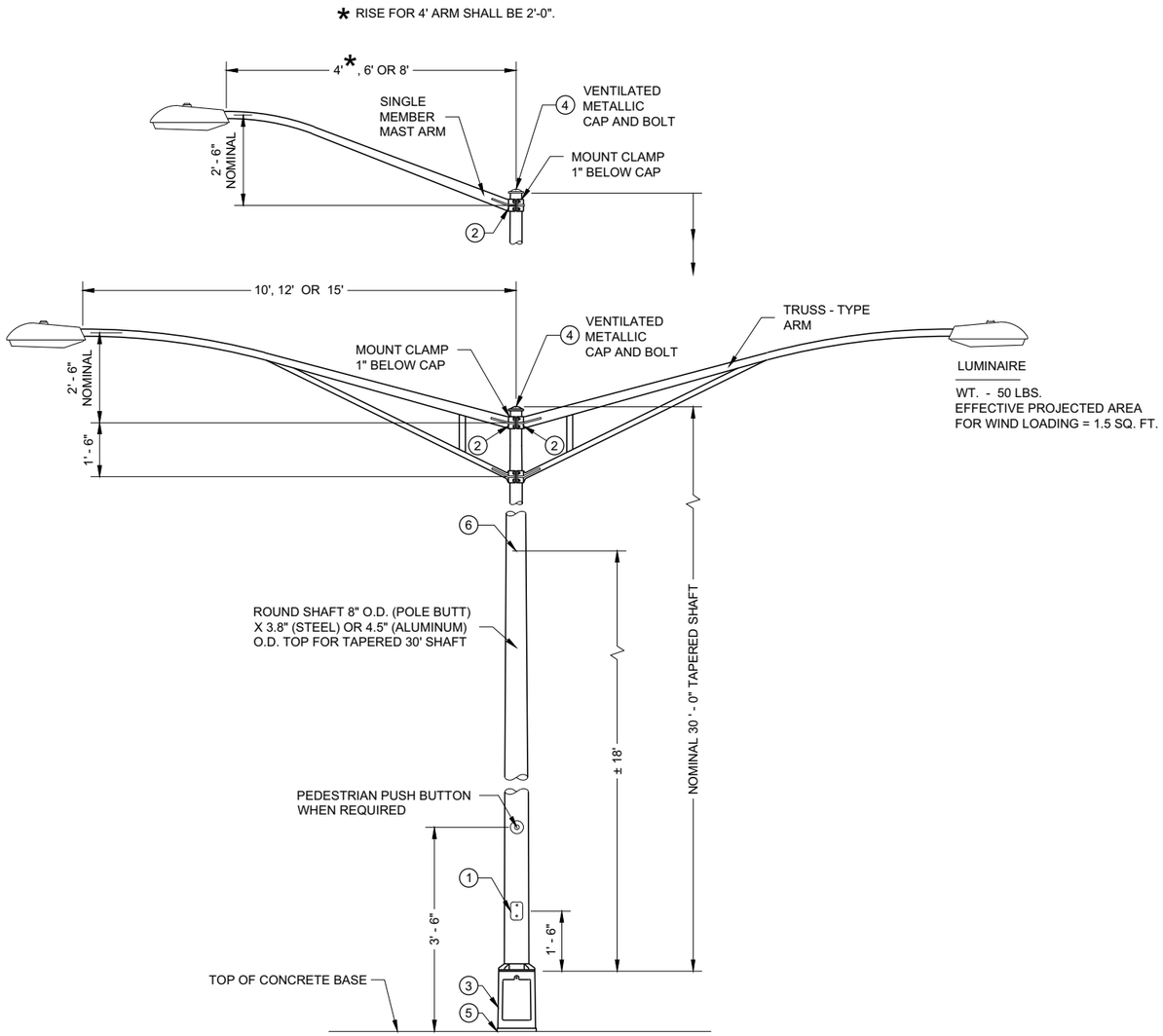

TYPE 5 POLE MOUNTING CONFIGURATION

(MAXIMUM LOAD)

LIGHTING ONLY

GENERAL NOTES

DETAILS OF CONSTRUCTION, MATERIALS AND WORKMANSHIP NOT SHOWN ON THIS DRAWING SHALL CONFORM TO THE PERTINENT REQUIREMENTS OF THE CONTRACT.

SECTION 657, POLES, OF THE STANDARD SPECIFICATIONS SHALL APPLY TO THIS DRAWING.

ALL TYPE 5 POLE MOUNTINGS SHALL BE DESIGNED TO INCLUDE TWIN 15' ARMS WITH LUMINAIRES.

POLES SHALL BE GALVANIZED STEEL OR ALUMINUM, AS CALLED FOR IN THE CONTRACT.

TYPE 5 ALUMINUM POLES SHALL BE CONSTRUCTED OF 6063 - T6 ALUMINUM ALLOY. SLEEVING INSIDE THE POLE IS NOT ACCEPTABLE.

TYPE 5 ALUMINUM POLES SHALL HAVE A MINIMUM WALL THICKNESS OF 0.1888".

TYPE 5 STEEL POLES SHALL HAVE A MINIMUM WALL THICKNESS OF U.S. STANDARD 11 GAGE (0.1196").

THE SLIPFITTER END OF THE LUMINAIRE MAST ARM SHALL BE A NOMINAL 2 ⅜ INCHES IN OUTSIDE DIAMETER. THE STRAIGHT PORTION OF THE SLIPFITTER END OF THE LUMINAIRE MAST ARM SHALL BE A NOMINAL 12 INCHES IN LENGTH.

WHEN TRANSFORMER BASES ARE USED, WIRE CONNECTIONS SHALL BE MADE IN THE TRANSFORMER BASE.

1. 4" X 6" REINFORCED HANDHOLE AND COVER ASSEMBLY WITH TWO (2) ¼" X ¾" - 20 TPI , STAINLESS STEEL, HEX HEAD BOLTS.
2. GROMMETS. 1" CHASE NIPPLES OR 1" CLOSE CONDUIT NIPPLES WITH BUSHINGS SHALL BE PROVIDED FOR 1 ⅜" HOLE IN POLE SHAFT FOR WIRING.
3. CAST ALUMINUM TRANSFORMER BASE, WHEN REQUIRED.
4. FURNISH AND INSTALL VENTILATED, CAST METALLIC (ALUMINUM ALLOY) CAPS. FASTEN CAPS WITH ONE (1) ¼" X ¾" - 20 TPI STAINLESS STEEL, HEX HEAD BOLT.
5. SHIMMING, IF NEEDED, SHALL BE LOCATED BETWEEN THE CONCRETE FOUNDATION AND POLE.
6. INTERNAL DUMBBELL - TYPE VIBRATION DAMPER.

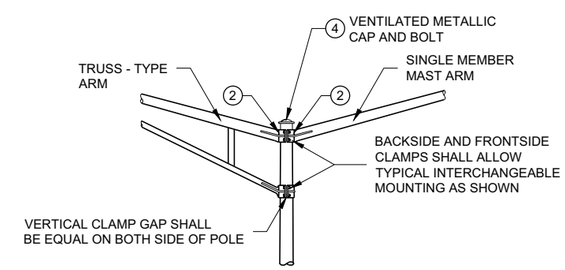

INTERCHANGEABLE MOUNTING DETAIL

6

6

POLE MOUNTINGS FOR LIGHTING UNITS, TYPE 5 (30 FEET)

STATE OF WISCONSIN
DEPARTMENT OF TRANSPORTAT

SDD 09E01 - 15d

SDD 09E01 - 15d

GENERAL NOTES

DETAILS OF CONSTRUCTION, MATERIALS AND WORKMANSHIP NOT SHOWN ON THIS DRAWING SHALL CONFORM TO THE PERTINENT REQUIREMENTS OF THE CONTRACT.

THE EQUIPMENT GROUND CONNECTOR SHALL BE TAPED WITH 3 WRAPS (MINIMUM) OF APPROVED RUBBER TAPE AND 3 WRAPS (MINIMUM) OF APPROVED VINYL TAPE TO COVER SHARP WIRE ENDS AFTER THE CONNECTION IS COMPLETED.

WHEN TRANSFORMER BASES ARE USED, ALL WIRING CONNECTIONS SHALL OCCUR WITHIN THE TRANSFORMER BASES.

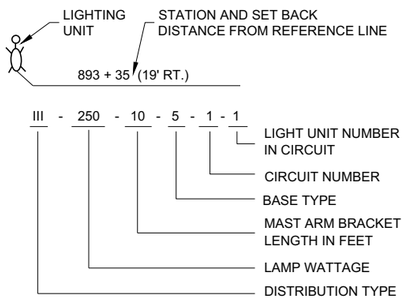

LIGHTING UNIT CODE
(TYPICAL)

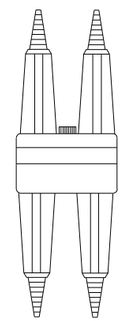

DETAIL "A"
BREAKAWAY DOUBLE POLE WITH WATERPROOF INSULATING BOOT

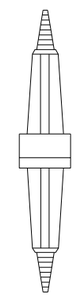

DETAIL "B"
BREAKAWAY SINGLE POLE WITH WATERPROOF INSULATING BOOT

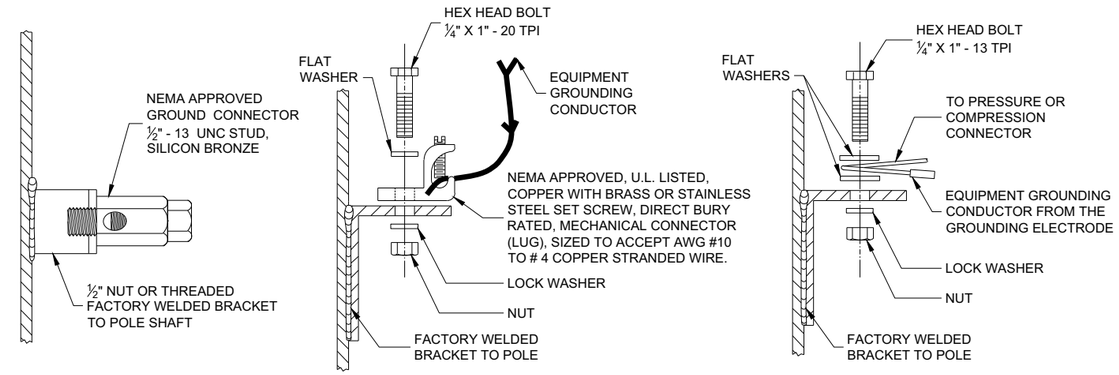

TYPICAL GROUNDING CONNECTIONS
NUT, BOLT AND WASHERS SHALL BE STAINLESS STEEL

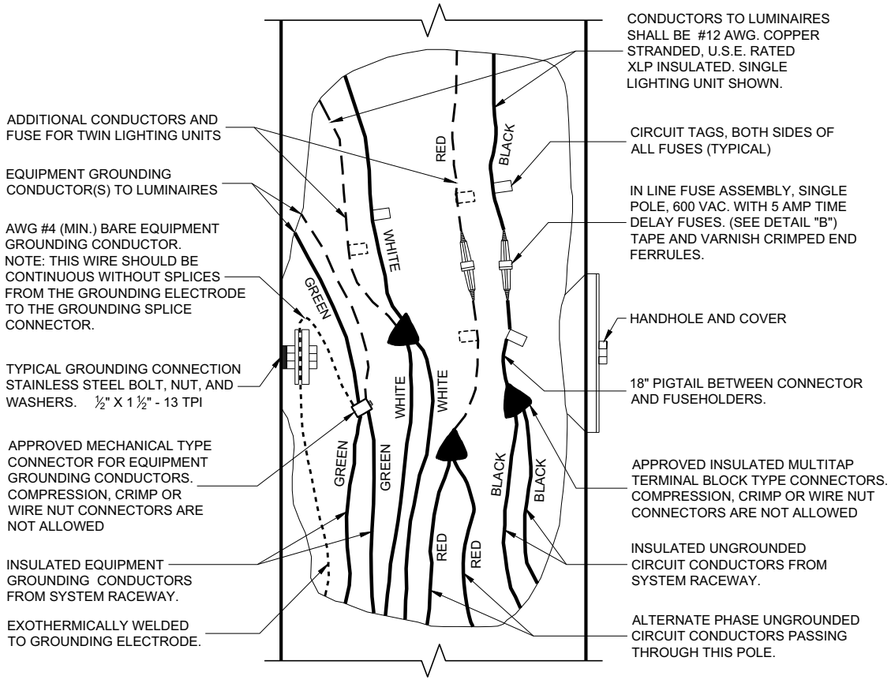

3 WIRE - 120, 240 OR 480 VAC (UNGROUNDED CONDUCTORS) WITH GROUNDING CONDUCTOR AND EQUIPMENT GROUNDING CONDUCTOR

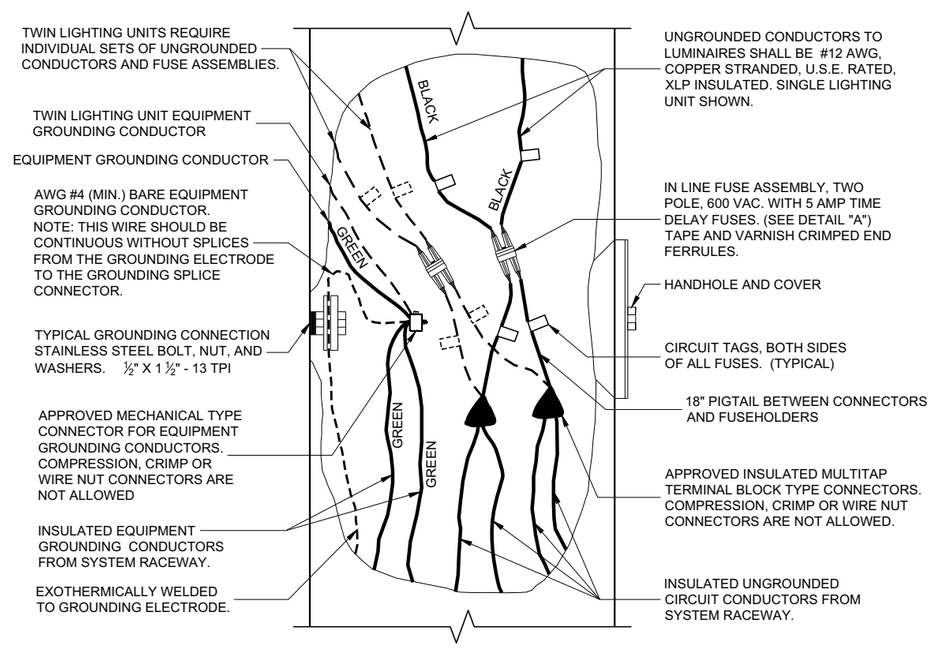

2 WIRE - 240 OR 480 VAC (UNGROUNDED CONDUCTORS) WITH EQUIPMENT GROUNDING CONDUCTOR

NON - FREEWAY LIGHTING UNIT POLE WIRING

STATE OF WISCONSIN
DEPARTMENT OF TRANSPORTATION

APPROVED
November 2018 /S/ Ahmet Demirbilek
DATE STATE ELECTRICAL ENGI
FHWA

6

6

SDD 09E03 - 06

SDD 09E03 - 06

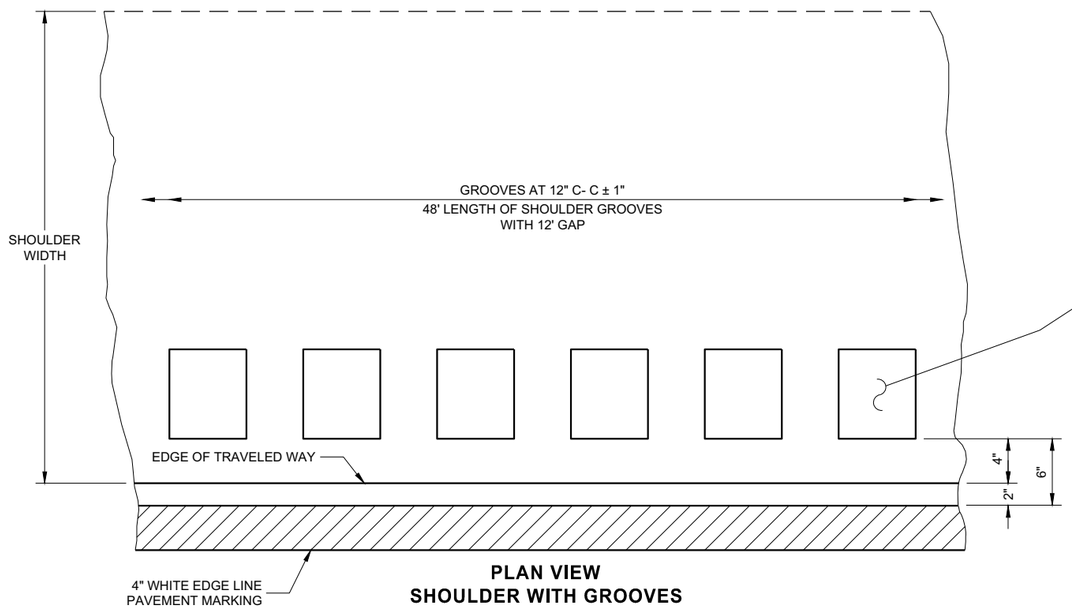

PLAN VIEW
SHOULDER WITH GROOVES

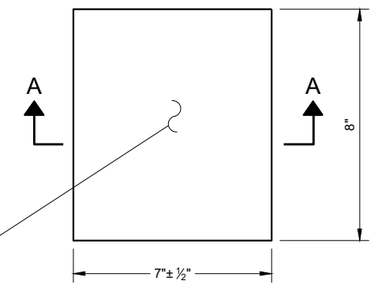

PLAN VIEW
(SINGLE GROOVE)

GENERAL NOTES

DETAILS OF CONSTRUCTION NO SHOWN ON THIS DRAWING SHALL CONFORM TO THE PERTINENT REQUIREMENTS OF THE STANDARD SPECIFICATIONS AND APPLICABLE SPECIAL PROVISIONS.

DO NOT MILL SHOULDER GROOVES THROUGH ANY INTERSECTION, MARKED CROSSWALK, NON-MOTORIZED PATH CROSSING, OR SNOWMOBILE CROSSING.

(1) SHOULDER GROOVES MAY BE OMITTED IN AREAS WITH HIGH CONCENTRATIONS OF DRIVEWAYS. WHEN DIRECTED BY THE ENGINEER.

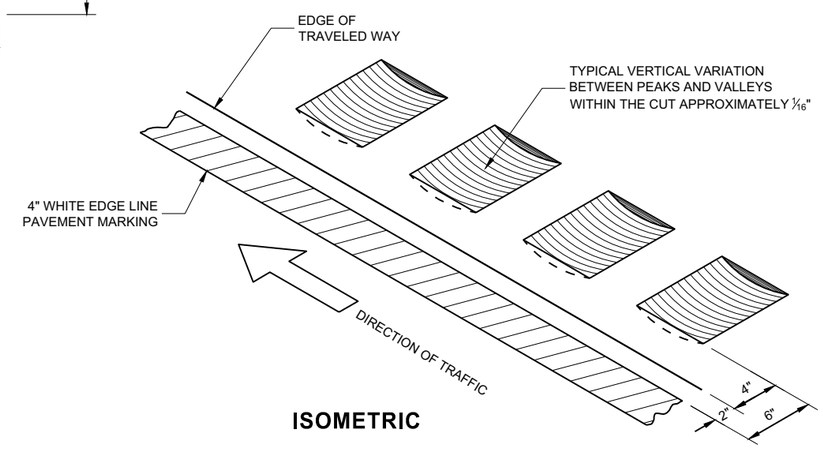

ISOMETRIC

PLACEMENT DETAIL FOR TYPE 1 MILLED RUMBLE STRIP

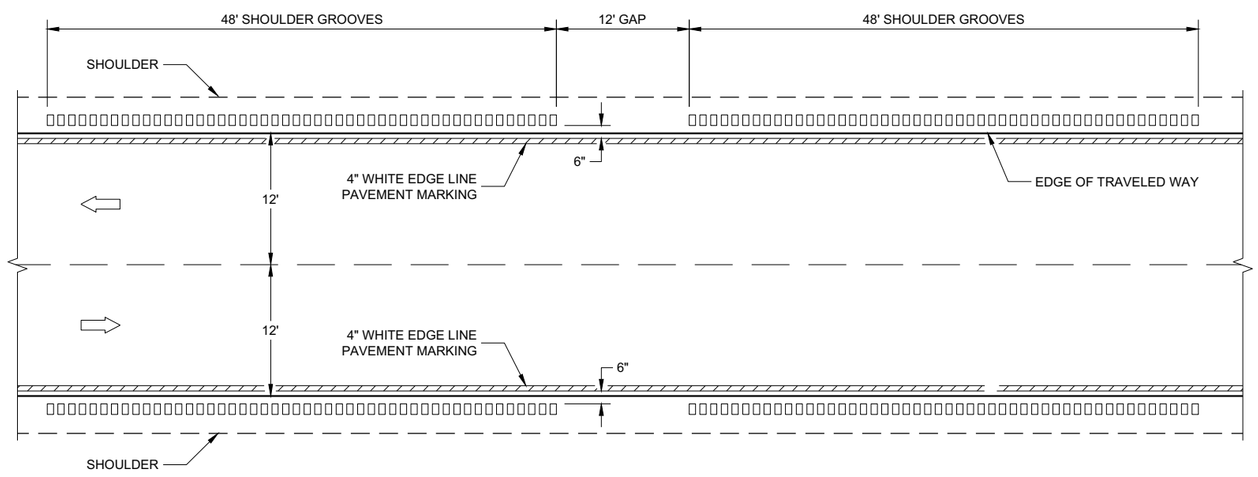

TYPE 1
2 - LANE SHOULDER RUMBLE STRIP

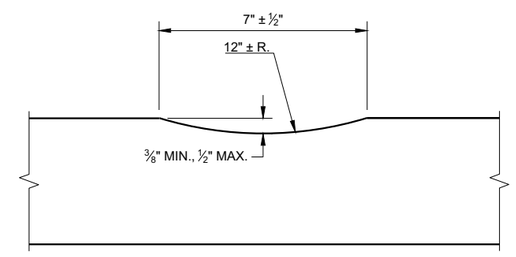

SECTION A - A

2-LANE RURAL SHOULDER RUMBLE STRIP, MILLING

STATE OF WISCONSIN
DEPARTMENT OF TRANSPORTATION

6

SDD 13A10 - 02a

6

SDD 13A10 - 02a

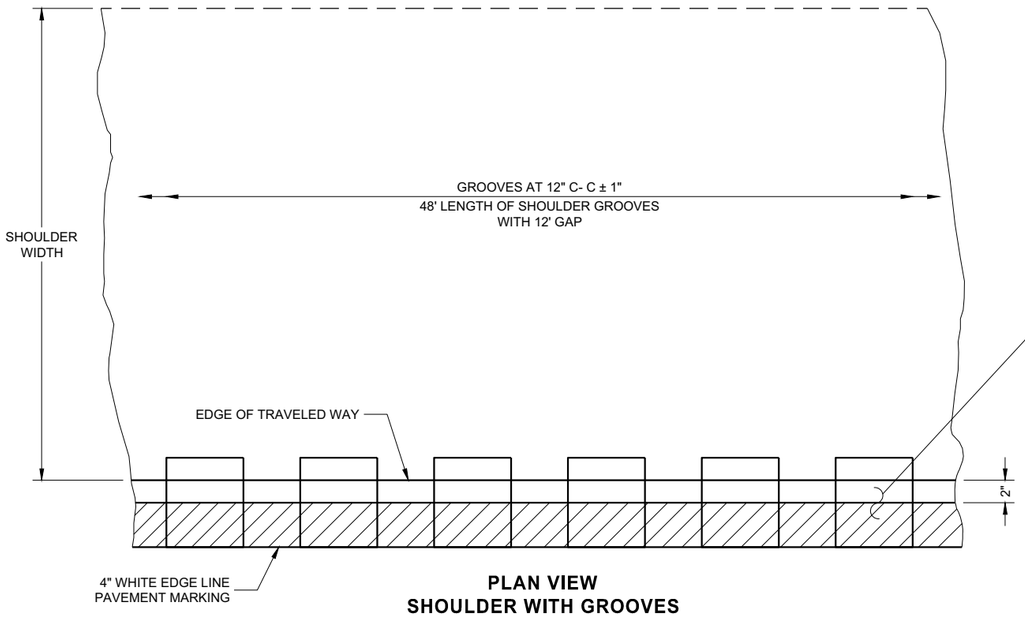

PLAN VIEW
SHOULDER WITH GROOVES

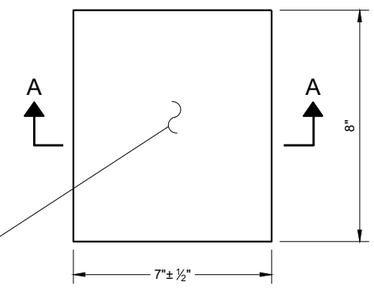

PLAN VIEW
(SINGLE GROOVE)

GENERAL NOTES

DETAILS OF CONSTRUCTION NO SHOWN ON THIS DRAWING SHALL CONFORM TO THE PERTINENT REQUIREMENTS OF THE STANDARD SPECIFICATIONS AND APPLICABLE SPECIAL PROVISIONS.

DO NOT MILL SHOULDER GROOVES THROUGH ANY INTERSECTION, MARKED CROSSWALK, NON-MOTORIZED PATH CROSSING, OR SNOWMOBILE CROSSING.

(1) SHOULDER GROOVES MAY BE OMITTED IN AREAS WITH HIGH CONCENTRATIONS OF DRIVEWAYS. WHEN DIRECTED BY THE ENGINEER.

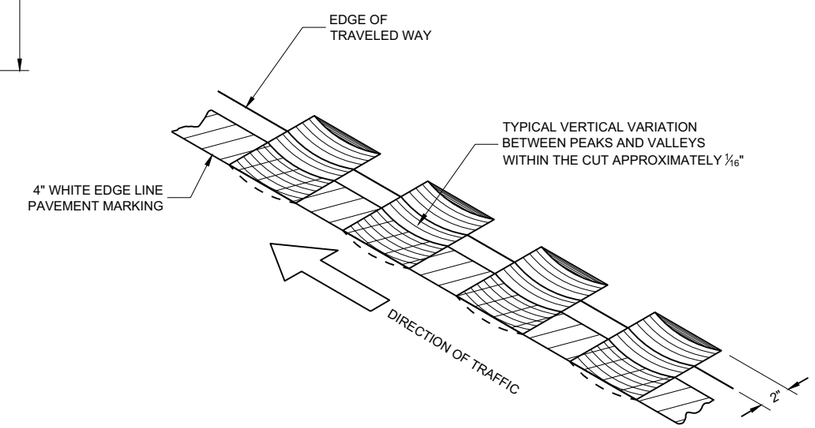

ISOMETRIC

PLACEMENT DETAIL FOR TYPE 2 MILLED RUMBLE STRIP

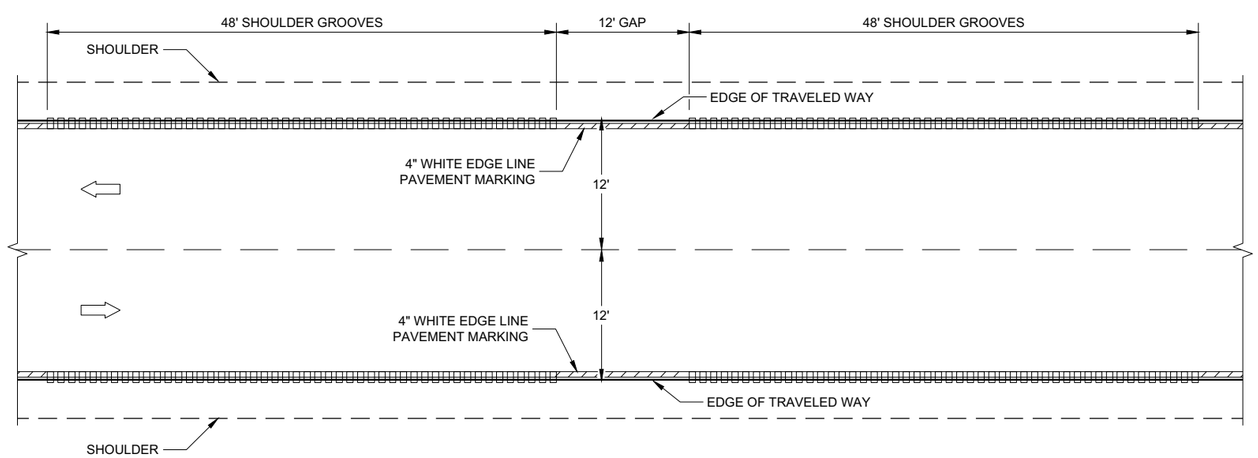

TYPE 2
2 - LANE SHOULDER RUMBLE STRIP

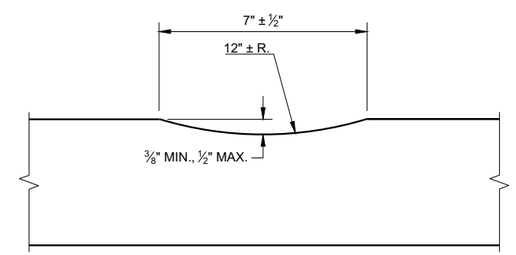

SECTION A - A

2-LANE RURAL SHOULDER RUMBLE STRIP, MILLING

STATE OF WISCONSIN
DEPARTMENT OF TRANSPORTATION

6

6

SDD 13A10 - 02b

SDD 13A10 - 02b

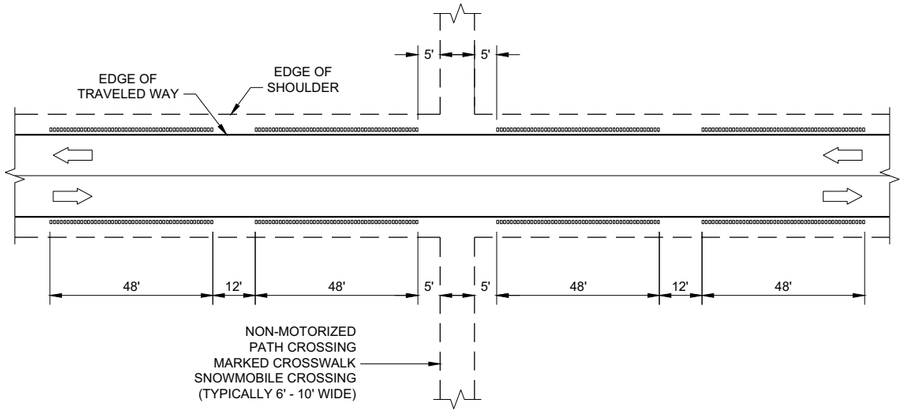

SHOULDER GROOVES AT MISCELLANEOUS CROSSINGS

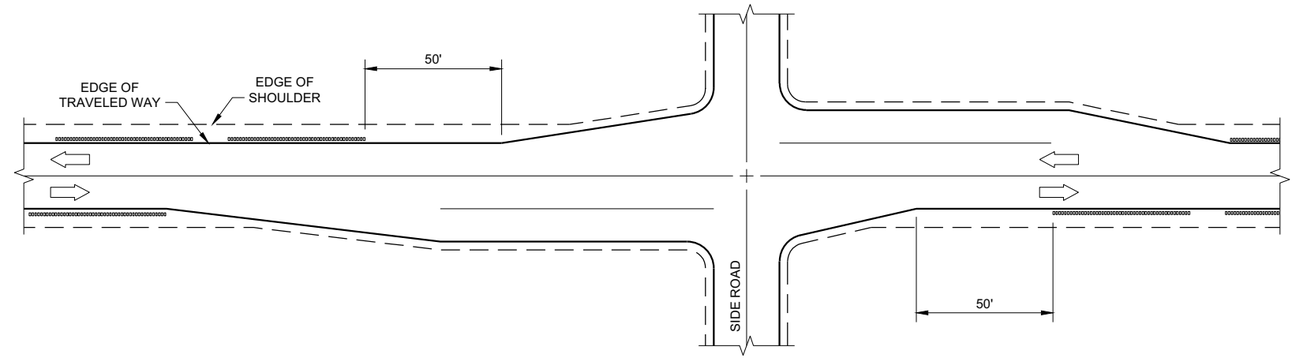

SHOULDER GROOVES AT RIGHT TURN LANE

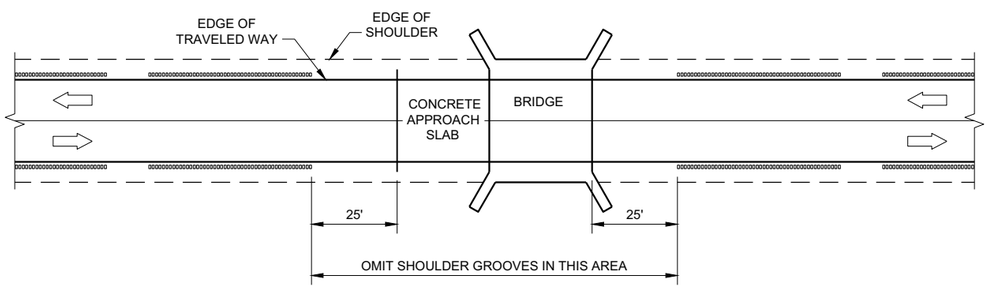

SHOULDER GROOVES AT BRIDGES

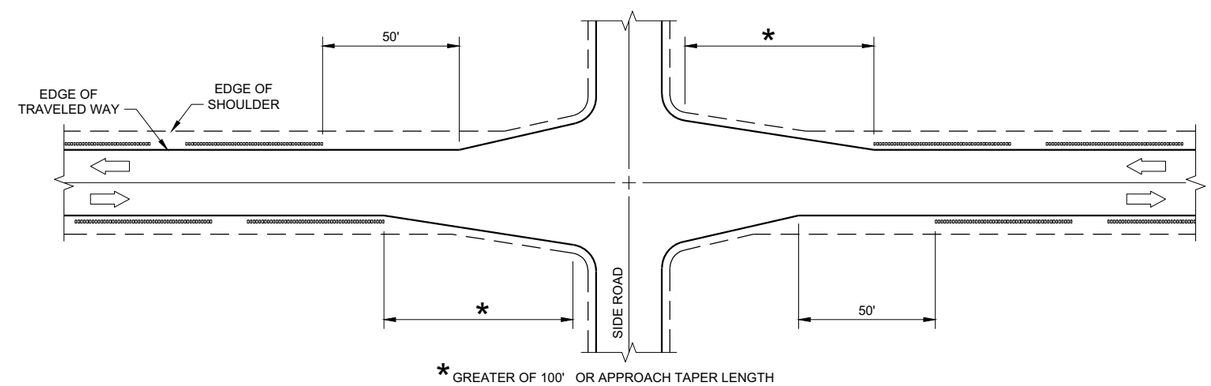

SHOULDER GROOVES AT INTERSECTIONS WITH APPROACH TAPER

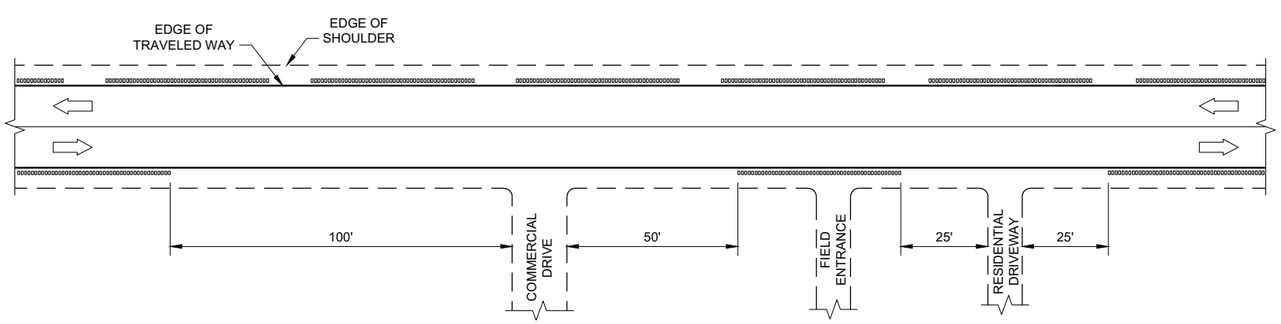

SHOULDER GROOVES AT DRIVEWAYS (1)

GENERAL NOTES

(1) SHOULDER GROOVES MAY BE OMITTED IN AREAS WITH HIGH CONCENTRATIONS OF DRIVEWAYS. WHEN DIRECTED BY THE ENGINEER.

2-LANE RURAL SHOULDER RUMBLE STRIP, MILLING

STATE OF WISCONSIN
DEPARTMENT OF TRANSPORTA

6

SDD 13A10 - 02c

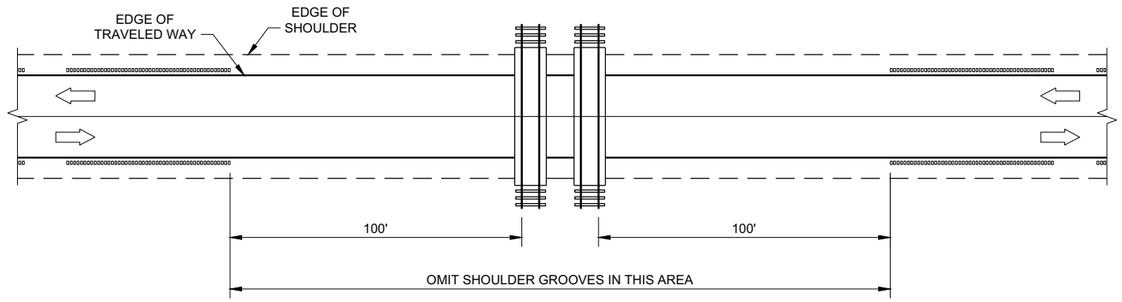

SHOULDER GROOVES AT RAILROADS

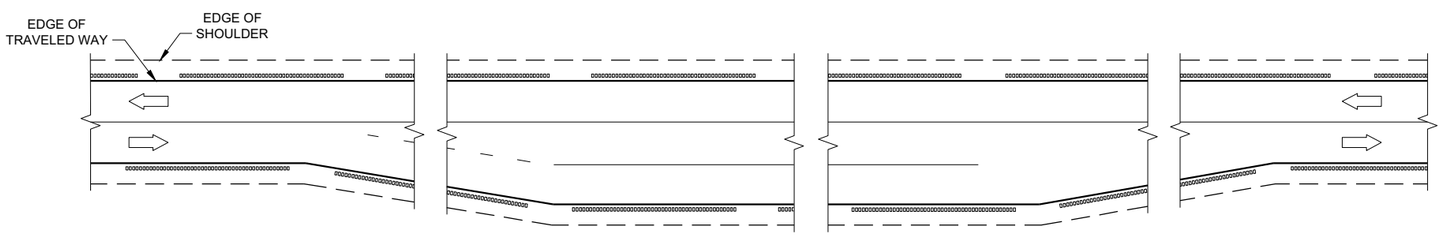

SHOULDER GROOVES AT PASSING AND CLIMBING LANES

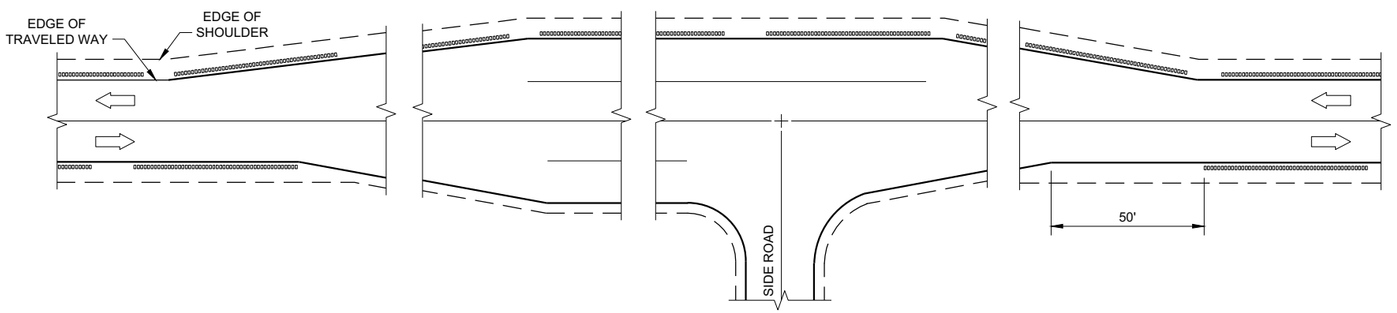

SHOULDER GROOVES AT BYPASS LANES

6

6

2-LANE RURAL SHOULDER RUMBLE STRIP, MILLING

STATE OF WISCONSIN
DEPARTMENT OF TRANSPORTATION

APPROVED
7/2018 — DATE
/S/ Rodney Taylor — ROADWAY STANDARDS DEVE ENGINEER

FHWA

SDD 13A10 - 02d

SDD 13A10 - 02d

GENERAL NOTES

DETAILS OF CONSTRUCTION NO SHOWN ON THIS DRAWING SHALL CONFORM TO THE PERTINENT REQUIREMENTS OF THE STANDARD SPECIFICATIONS AND APPLICABLE SPECIAL PROVISIONS.

DO NOT MILL CENTERLINE GROOVES THROUGH ANY INTERSECTION, MARKED CROSSWALK, NON-MOTORIZED PATH CROSSING, OR SNOWMOBILE CROSSING.

INSTALL PAVEMENT MARKING AFTER THE GROOVES ARE INSTALLED.

SEE SIGNING PLAN FOR SIGN REQUIREMENTS THAT MAY BE NEEDED.

(1) CENTERLINE GROOVES MAY BE OMITTED IN AREAS WITH HIGH CONCENTRATIONS OF DRIVEWAYS. WHEN DIRECTED BY THE ENGINEER.

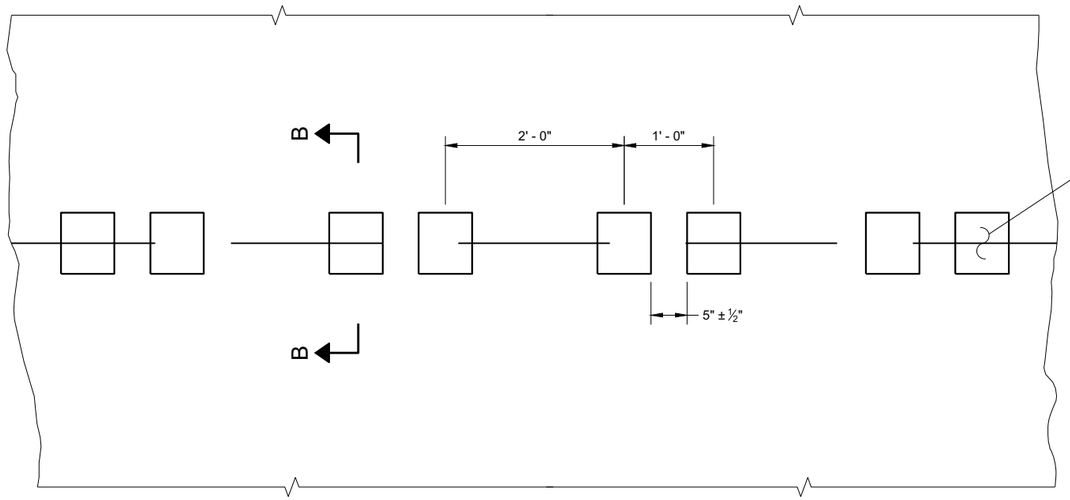

PLAN VIEW
SHOULDER WITH GROOVES

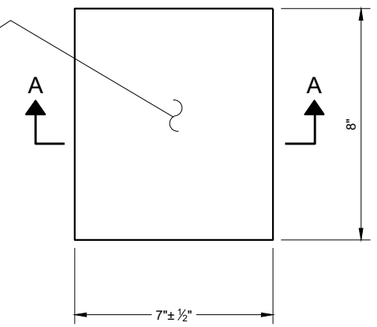

PLAN VIEW
(SINGLE GROOVE)

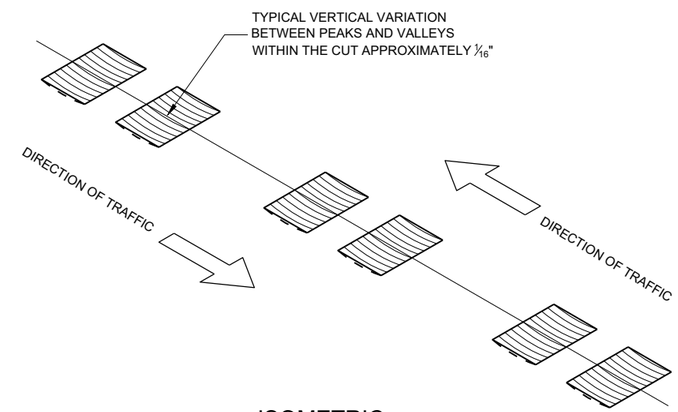

ISOMETRIC

PLACEMENT DETAIL FOR TYPE 1 MILLED RUMBLE STRIP

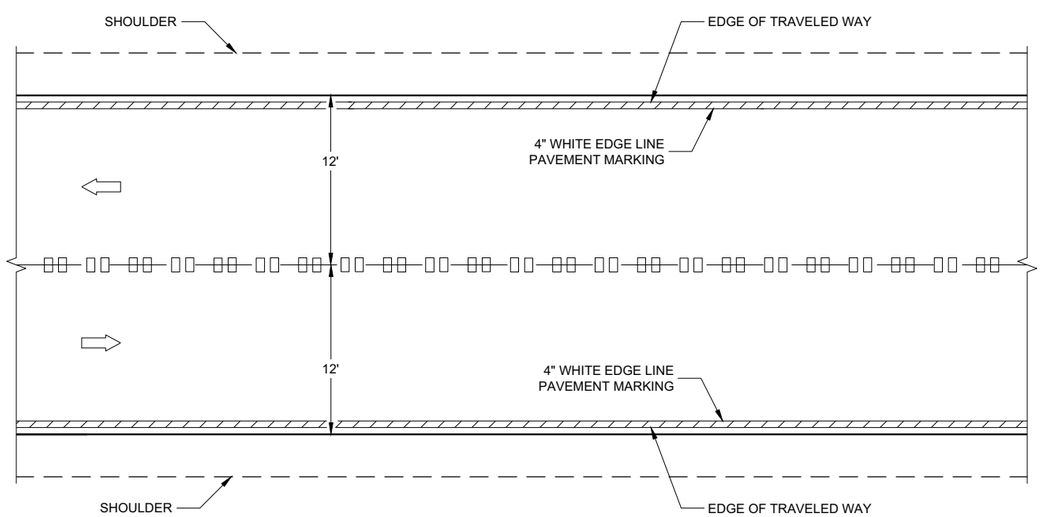

CENTERLINE GROOVES ON TWO-WAY ROADWAYS

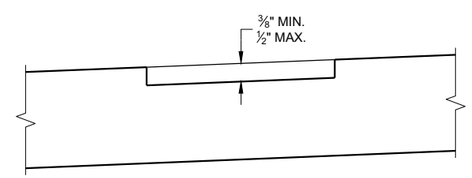

SECTION B - B
SUPERELEVATED ROADWAY

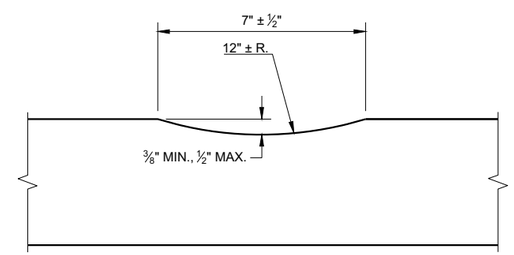

SECTION A - A

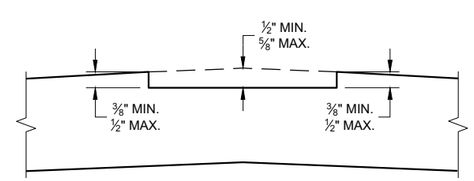

SECTION B - B
CROWNED ROADWAY

2-LANE RURAL
CENTER LINE RUMBLE STRIP, MILLING

STATE OF WISCONSIN
DEPARTMENT OF TRANSPORTATION

6

6

SDD 13A11 - 03a

SDD 13A11 - 03a

GENERAL NOTES

1. CENTERLINE GROOVES MAY BE OMITTED IN AREAS WITH HIGH CONCENTRATIONS OF DRIVEWAYS. WHEN DIRECTED BY THE ENGINEER.

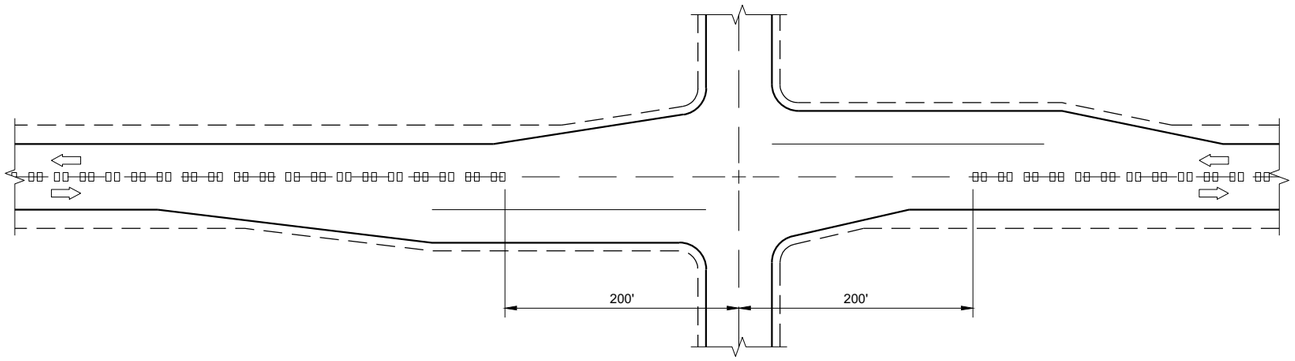

CENTERLINE GROOVES AT INTERSECTIONS

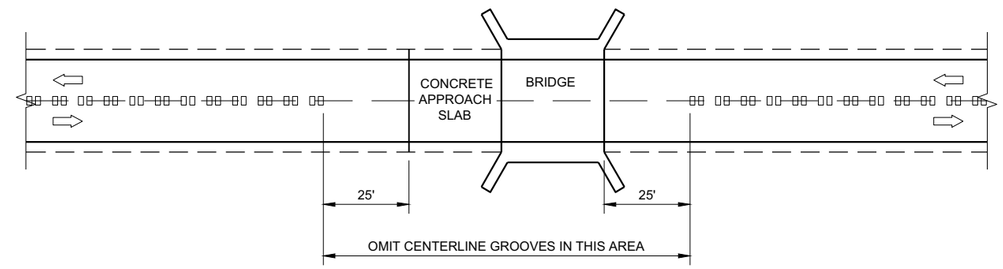

CENTERLINE GROOVES AT BRIDGES

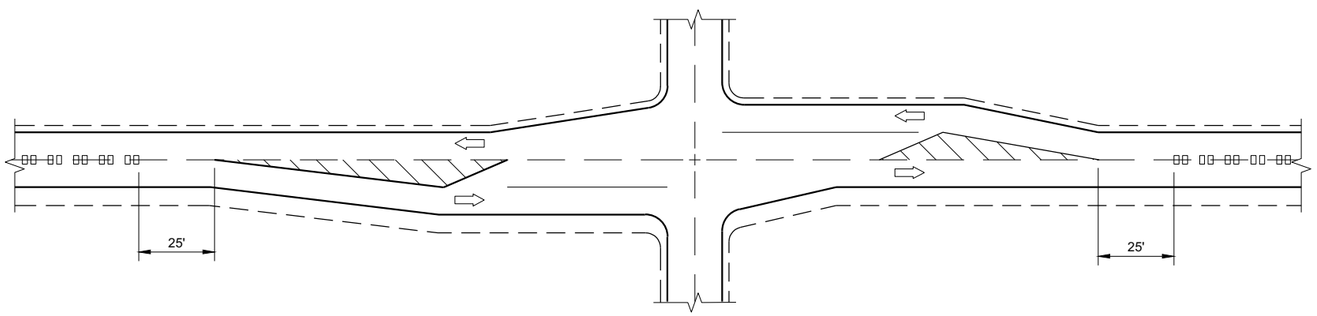

CENTERLINE GROOVES AT INTERSECTIONS (WITH LEFT TURN LANES)

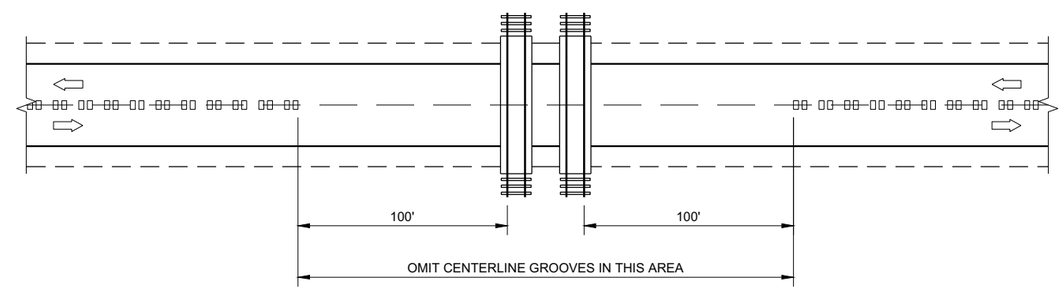

CENTERLINE GROOVES AT RAILROADS

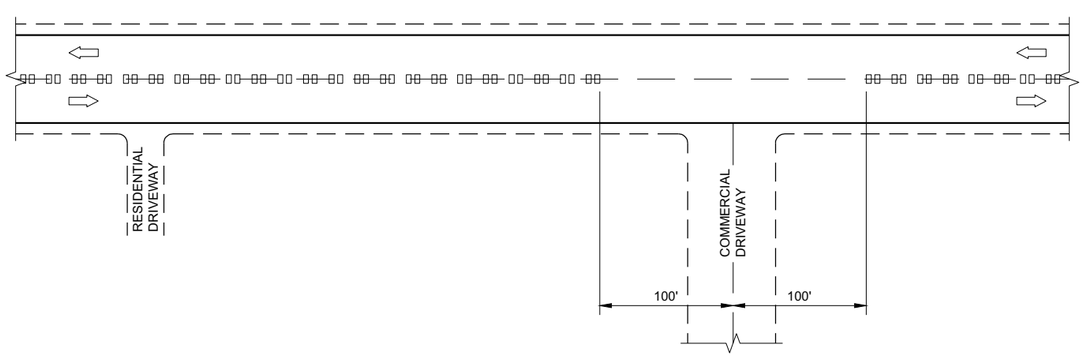

CENTERLINE GROOVES AT DRIVEWAYS (1)

2-LANE RURAL CENTERLINE RUMBLE STRIP, MILLING	
STATE OF WISCONSIN DEPARTMENT OF TRANSPORTATION	
APPROVED 7/2018 DATE	/S/ Rodney Taylor ROADWAY STANDARDS DEVE ENGINEER
FHWA	

6
SDD 13A11 - 03b

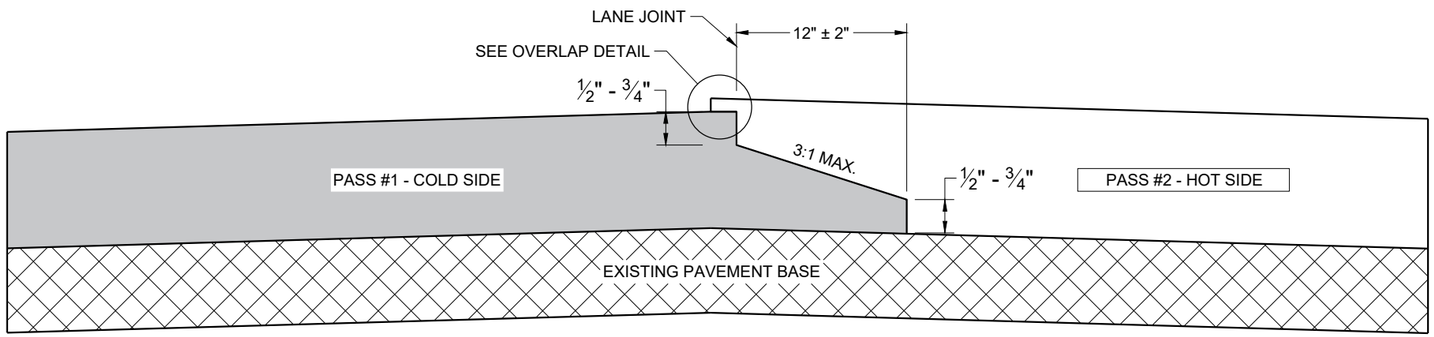

TYPICAL PAVEMENT CROSS SECTION
NOTCHED WEDGE JOINT

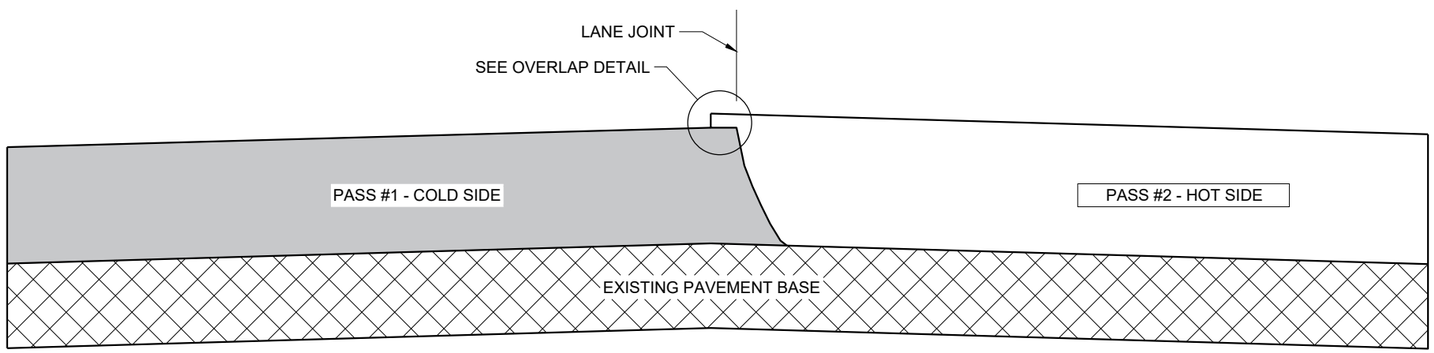

TYPICAL PAVEMENT CROSS SECTION
VERTICAL JOINT

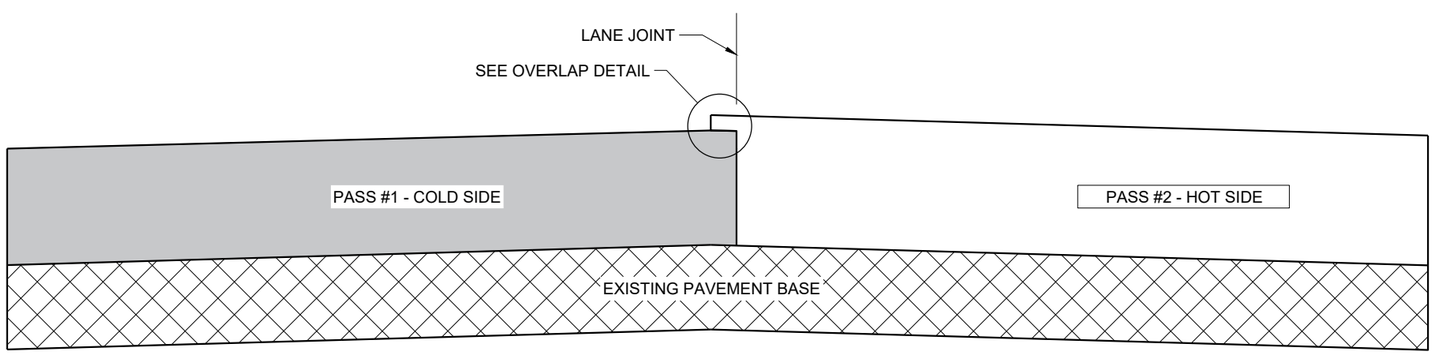

TYPICAL PAVEMENT CROSS SECTION
VERTICAL JOINT (MILLED)

GENERAL NOTES

IN ADDITION TO THE DETAILS PROVIDED IN THIS DRAWING, CONFORM TO STANDARD SPECIFICATION 450.3.2.8 FOR WHEN A NOTCHED WEDGE JOINT IS REQUIRED AND FOR GENERAL JOINT CONSTRUCTION REQUIREMENTS.

FOR ALL LONGITUDINAL JOINTS, ENSURE THE PAVER SCREED OVERLAPS THE PREVIOUSLY PLACED PAVEMENT BY 1" ± 0.5" AND THE HOT SIDE OF THE JOINT REMAINS HIGHER THAN THE COLD SIDE BY APPROXIMATELY 0.1" AFTER FINAL COMPACTION. (IT WILL BE FLUSH WHEN PAVING IN ECHELON.)

ONLY REMOVE THE LONGITUDINAL NOTCHED WEDGE JOINT FOR SMA PAVEMENT OR AS DIRECTED BY THE ENGINEER TO ADDRESS SPECIFIC LENGTHS OF JOINT DAMAGED BY TRAFFIC.

WHEN MILLING BACK OR REMOVING ANY LONGITUDINAL JOINT, LIMIT THE MATERIAL REMOVED TO 2" FROM THE TOP NOTCH OR FROM THE VERTICAL JOINT EDGE ON THE COLD SIDE OF THE JOINT.

USE LONGITUDINAL MILLED JOINT AS PLANS SHOW OR THE AS THE ENGINEER DIRECTS.

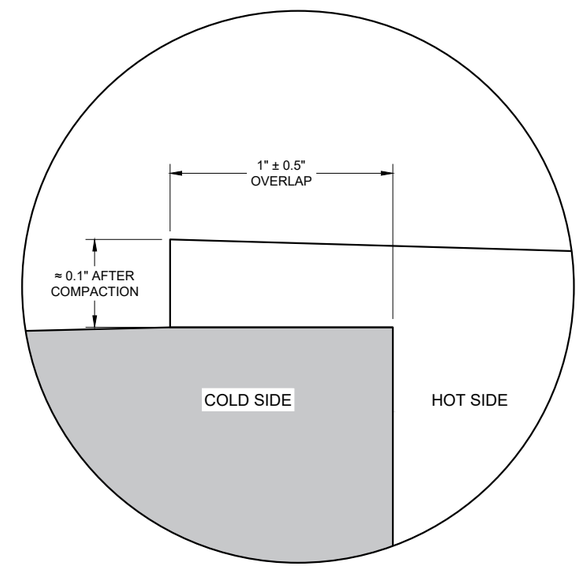

OVERLAP DETAIL (TYPICAL)

6

6

SDD 13C19 - 03

SDD 13C19 - 03

HMA LONGITUDINAL JOINTS

STATE OF WISCONSIN
DEPARTMENT OF TRANSPORTATION

APPROVED
November 2020 /S/ Steven Hefel
DATE HMA PAVEMENT ENGIN

FHWA

1. WOOD OR STEEL POSTS (w6X9 OR w6X8.5) MAY BE USED. DO NOT INTERMIX WOOD AND STEEL POSTS. INSTALL STEEL POSTS WITH HOLES ON APPROACHING TRAFFIC SIDE.
2. USE WOOD OR APPROVED PLASTIC BLOCKOUTS. WOOD BLOCKOUTS MAY BE CONSTRUCTED OUT OF TWO OR MORE WOOD BLOCKOUTS. SEE ALTERNATE WOOD BLOCKOUT DETAIL. DIMENSIONS OF APPROVED PLASTIC BLOCKOUTS MAY VARY.
3. IF ROCK IS ENCOUNTERED DURING EXCAVATION, PROVIDE A HOLE 12 INCHES IN DIAMETER EXTENDING 20 INCHES DEEP INTO THE ROCK. PLACE APPROXIMATELY 2 1/2" INCHES OF GRANULAR MATERIAL IN THE BOTTOM OF THE HOLE. CUT THE POSTS THE TO LENGTH AMD INSTALL. BACKFILL WITH EXCAVATED MATERIAL AND COMPACT. BACKFILL IS TO BE FREE OF LARGE ROCKS.
4. WHEN THE DISTANCE FROM BACK OF POST TO SHOULDER HINGE POINT IS LESS THAN 2 FEET INSTALL LONGER POST AT HALF POST SPACING (K).
5. FOR NEW MGS INSTALLATION TOP OF W-BEAM RAIL TOLERANCE IS ±1". FOR EXISTING MGS INSTALLATION TOP OF W-BEAM IS BETWEEN 27 ¾" TO 32".
6. WHEN USING STEEL POST AND WOOD BLOCKOUTS INSTALL FOUR 16D GALVANIZED NAILS. INSTALL NAILS AT THE BACK CORNERS OF THE BLOCK AND BEND THE NAILS OVER THE FLANGE OF THE STEEL POST.
7. TOTAL POST LENGTH FOR TYPE K IS 7' - 0". TOTAL POST LENGTH FOR OTHER MGS TYPES IS 6' - 0".

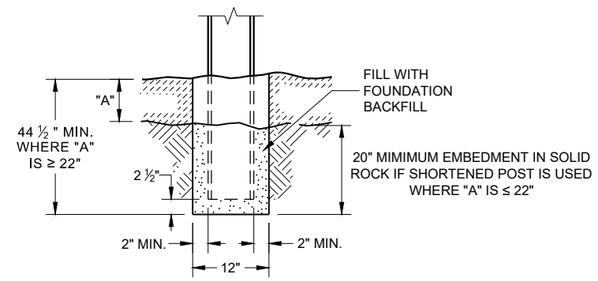

END VIEW
SETTING STEEL OR WOOD POST IN ROCK (3)

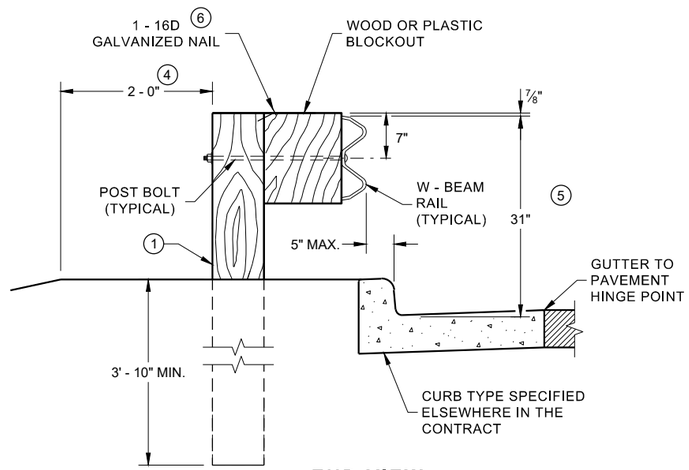

END VIEW
LOCATED ALONG A CURBED ROADWAY

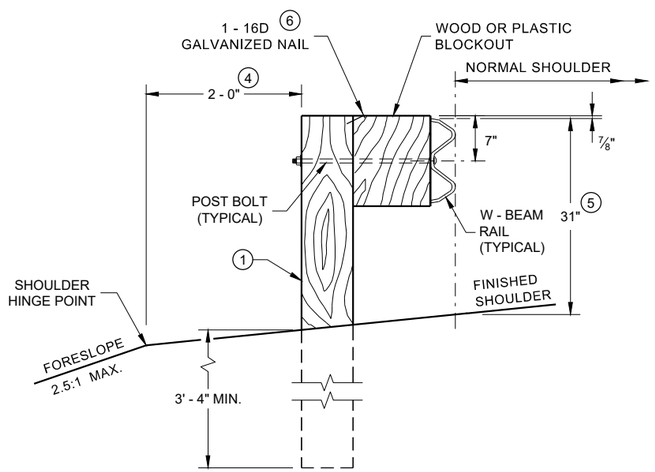

END VIEW
LOCATED ALONG A ROADWAY SHOULDER STANDARD INSTALLATION

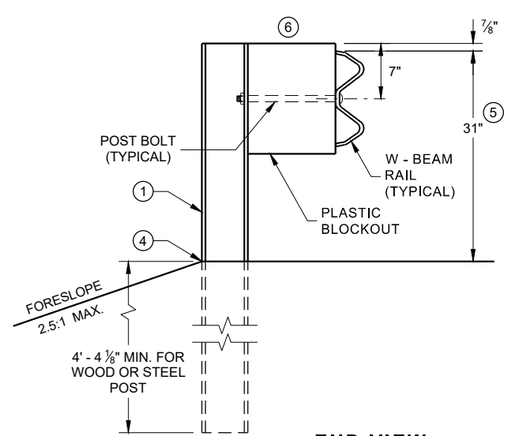

END VIEW
MGS LONGER POST AT HALFPOST SPACING W BEAM (K)

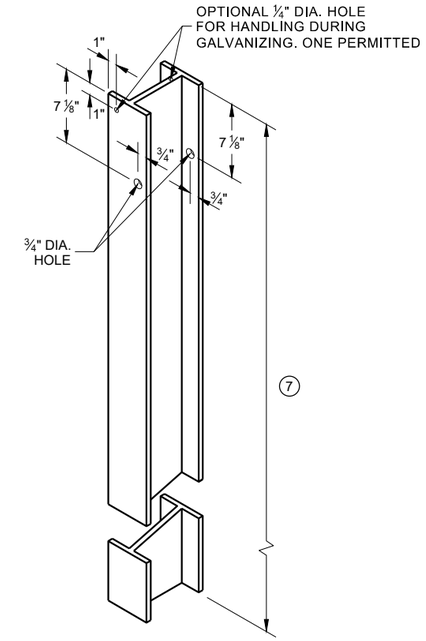

STEEL POST & HOLE PUNCHING DETAIL (W 6 X 9) (1)

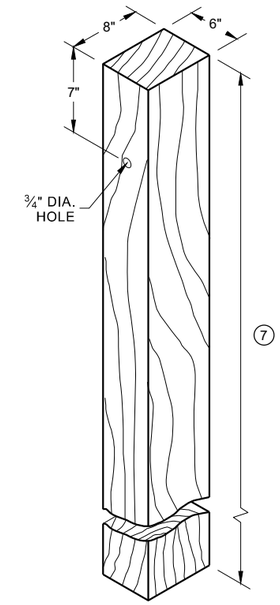

WOOD POST (6" X 8") NOMINAL (1)

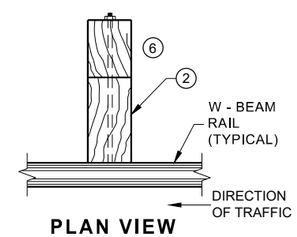

PLAN VIEW WOOD POST, BLOCKOUT & BEAM

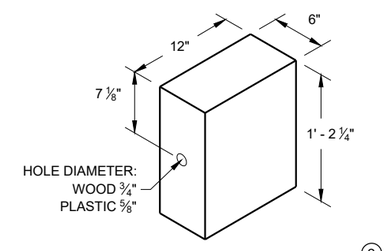

WOOD OR PLASTIC BLOCKOUT (2)

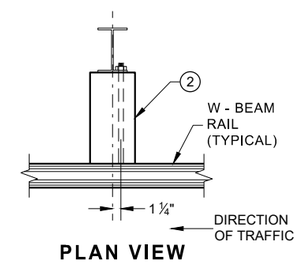

PLAN VIEW STEEL POST, PLASTIC BLOCKOUT & BEAM

MIDWEST GUARDRAIL SYSTEM (MGS) GUARDRAIL

STATE OF WISCONSIN
DEPARTMENT OF TRANSPORTA

6

SDD 14B42 - 07a

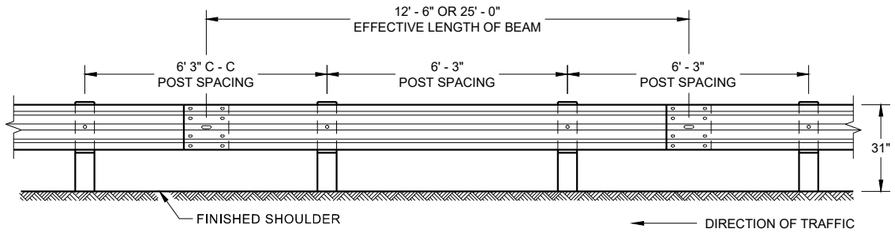

FRONT VIEW
POST SPACING STANDARD INSTALLATION

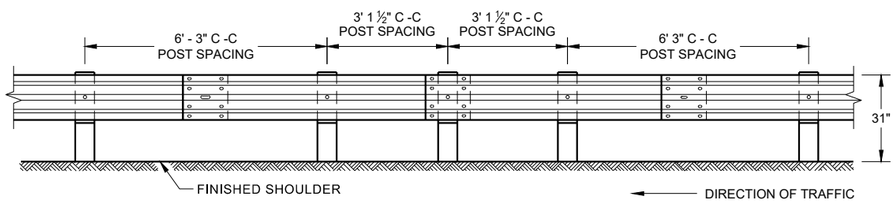

FRONT VIEW
HALF POST SPACING (HS) AND HALF POST SPACING WITH LONGER POSTS (K)

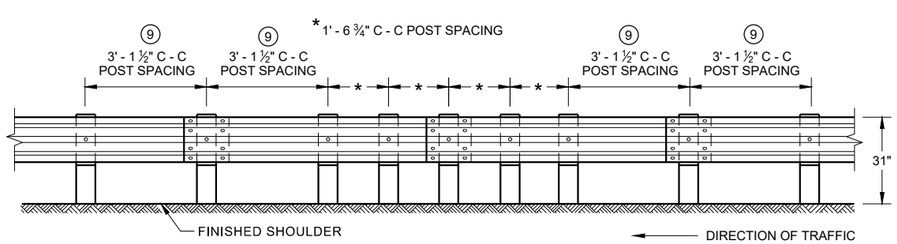

FRONT VIEW
QUARTER POST SPACING (QS)

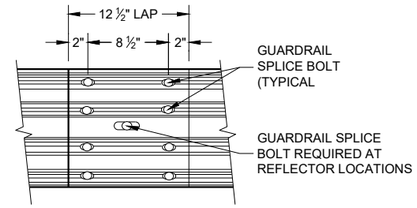

FRONT VIEW
MID-SPAN BEAM SPLICE

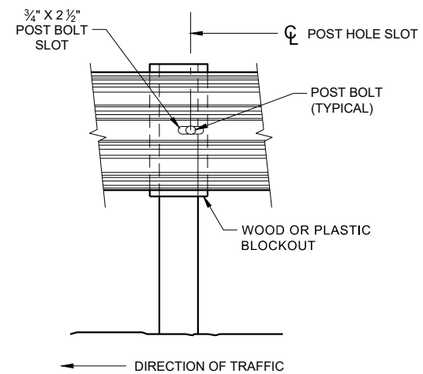

FRONT VIEW AT STEEL POST

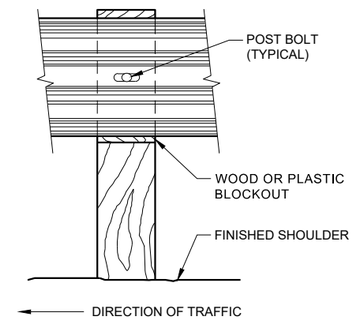

FRONT VIEW AT WOOD POST

GENERAL NOTES

8. DO NOT INSTALL REFLECTORS ON THE FIRST 50 FEET OF THE APPROACH END OF THE ENERGY ABSORBING TERMINAL.

9. 25 FEET OF HALF POST SPACING IS REQUIRED ON APPROACH AND DEPARTURE ENDS OF QUARTER POST SPACING.

POST BOLTS ARE A ⅝" DIAMETER ASTM A307 GUARDRAIL BOLT. A POST BOLT REQUIRES ⅝" DIAMETER A563A DOUBLE RECESSED (DR) HEAVY HEX NUT AND ⅝" DIAMETER F844 FLAT WASHER. POST BOLTS MAY BE LONGER IF MULTIPLE BLOCKOUTS ARE BEING USED.

GUARD RAIL SPLICE BOLTS ARE A ⅝" DIAMETER ASTM A307 GUARDRAIL HEAD BOLT. A GUARDRAIL SPLICE BOLT REQUIRES ⅝" DIAMETER A563A DOUBLE RECESSED (DR) HEAVY HEX NUT.

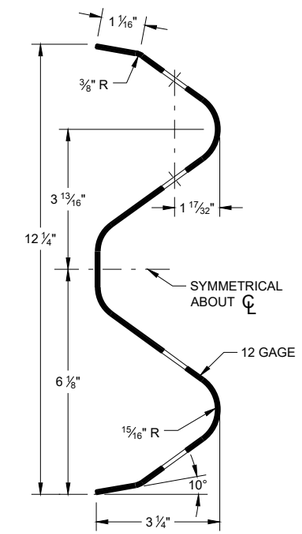

SECTION THRU W-BEAM RAIL

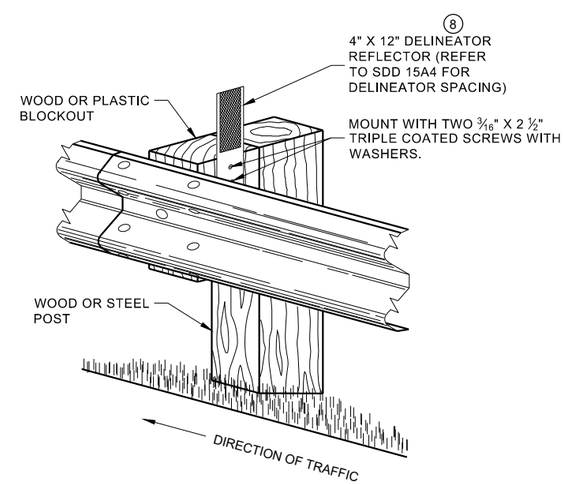

ONE SIDED REFLECTOR DETAIL AND TYPICAL INSTALLATION

MIDWEST GUARDRAIL SYSTEM (MGS) GUARDRAIL

STATE OF WISCONSIN
DEPARTMENT OF TRANSPORTA

6

SDD 14B42 - 07b

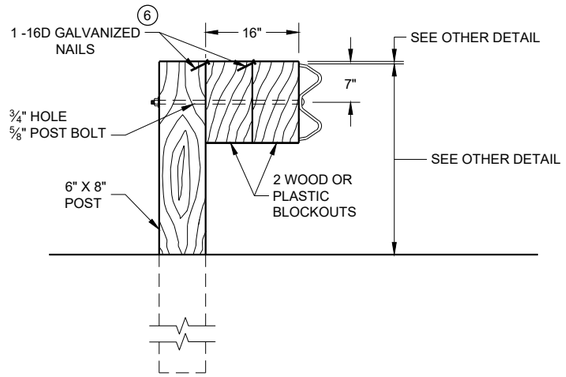

DETAIL FOR 16" BLOCKOUT DEPTH

IT IS ACCEPTABLE TO USE BLOCKOUTS UP TO 16" DEEP TO INCREASE THE POST OFFSET TO AVOID UNDERGROUND OBSTACLES. THERE IS NO LIMIT TO THE NUMBER OF POSTS THAT CAN HAVE ADDITIONAL BLOCKOUTS UP TO 16" DEEP.

NOTE:

1. ALL FILLETS SHALL HAVE A MINIMUM RADIUS OF 3/16".
2. IF THE BOLT EXTENDS MORE THAN ¼" FROM THE NUT THE BOLT SHOULD BE TRIMMED BACK.

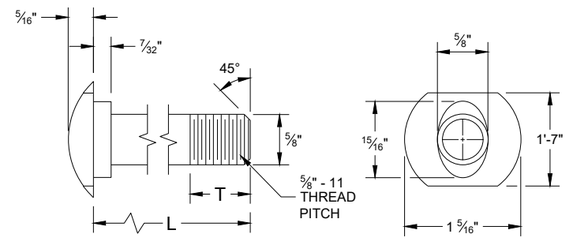

POST BOLT TABLE

L	T (MIN.)
1 ¼"	1 ⅛"
2"	1 ¾"
10"	4"
14"	4 1/16"
18"	4"
21"	4 1/16"
25"	4"

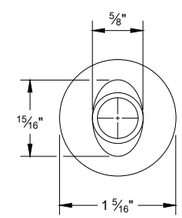

ALTERNATE BOLT HEAD

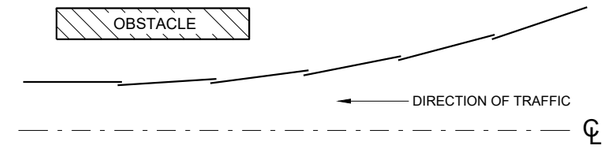

PLAN VIEW
BEAM LAPPING DETAIL

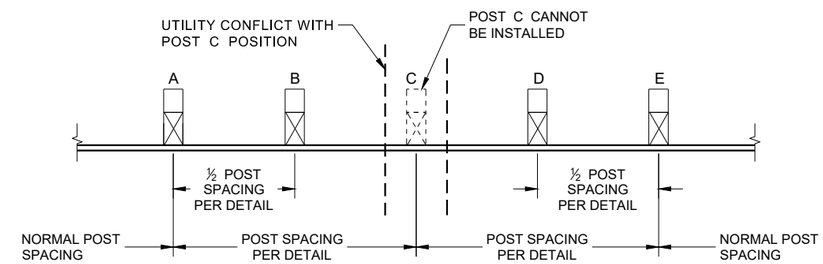

POST DRIVING FOR CONTINUOUS UNDERGROUND OBSTRUCTION

6

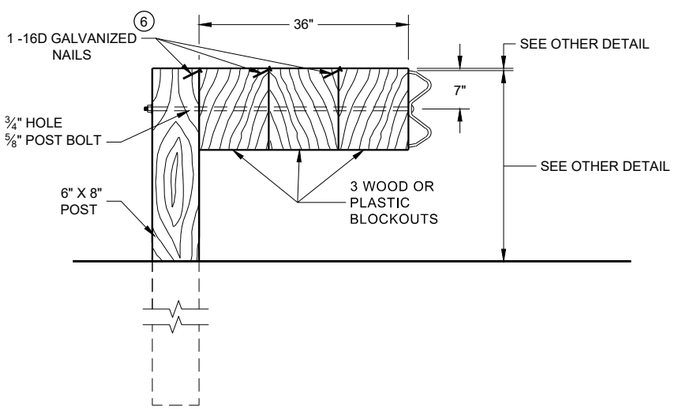

DETAIL FOR 36" BLOCKOUT DEPTH

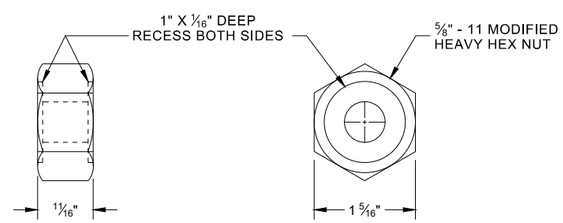

POST BOLT, SPLICE BOLT AND RECESS NUT

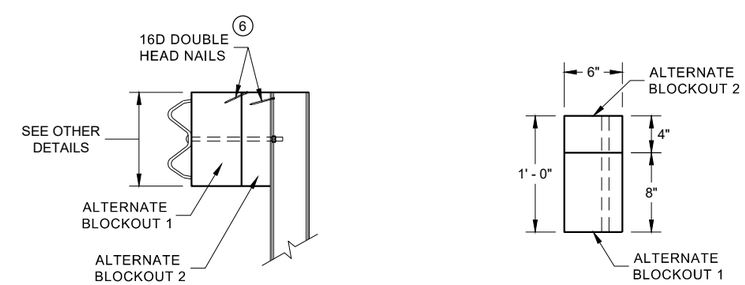

SIDE VIEW

PLAN VIEW

ALTERNATE WOOD BLOCKOUT DETAIL

NOTES: UNDER SPECIAL CIRCUMSTANCES, SUCH AS AVOIDING OBSTACLES THAT ARE NOT RELOCATED, IT IS ACCEPTABLE TO INSTALL ADDITIONAL BLOCKOUTS TO OBTAIN UP TO 36" DEPTH FOR ONE OR TWO POSTS IN A SECTION OF GUARDRAIL.

DO NOT USE 16" OR 36" BLOCKOUTS IF IT CAUSES THE POST TO BE DRIVEN BEYOND SHOULDER HINGE POINT OR CAUSES A FIXED OBJECT TO BE WITHIN THE DEFLECTION DISTANCE OF THE BARRIER.

(6) WHEN USING STEEL POST AD WOOD BLOCKOUTS, INSTALL FOUR 16D GALVANIZED NAILS. INSTALL NAILS AT THE BACK CORNERS OF THE BLOCK AND BEND THE NAILS OVER THE FLANGE OF THE STEEL POST.

MIDWEST GUARDRAIL SYSTEM (MGS) GUARDRAIL

STATE OF WISCONSIN
DEPARTMENT OF TRANSPORTA

SDD 14B42 - 07c

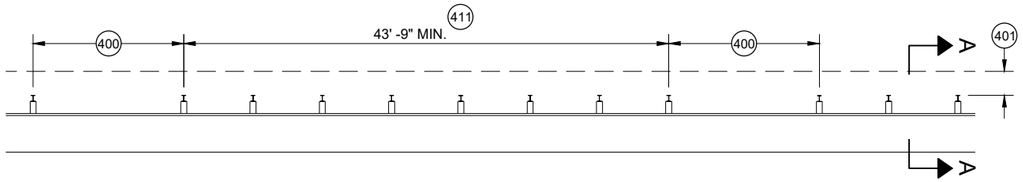

MISSING POST IN MGS GUARDRAIL

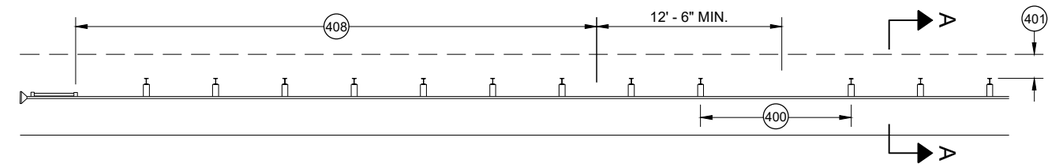

MISSING POST IN MGS GUARDRAIL NEAR EAT

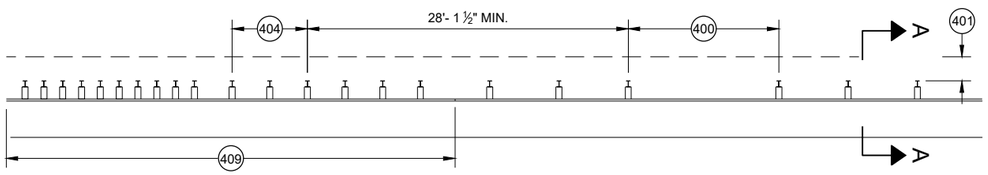

MISSING POST IN MGS GUARDRAIL NEAR AN APPROACH TRANSITION

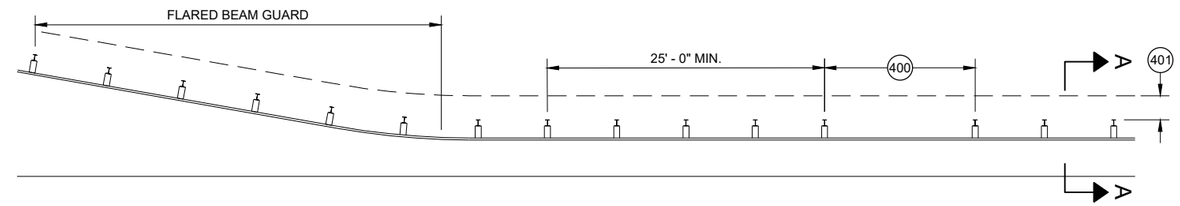

MISSING POST IN MGS GUARDRAIL NEAR FLARED BEAM GUARD

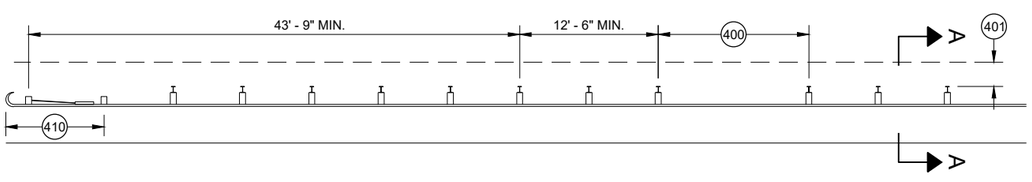

MISSING POST IN MGS GUARDRAIL NEAR A TYPE 2 END TERMINAL

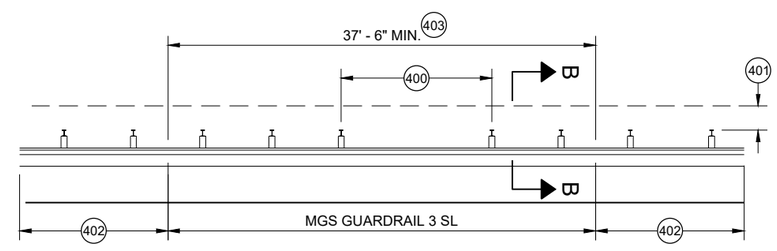

MISSING POST IN SHORT SPAN MGS GUARDRAIL NEAR CURB (SL) 407

400 MAX SPAN 12' - 6"
401 2' MIN.
402 MGS GUARDRAIL 3
403 NESTING BEAM GUARD
404 ASYMMETRIC TRANSITION
405 SOIL WELL DRAINED AND COMPACTED
406 SEE OTHER DRAWINGS IN THIS SDD
407 SEE OTHER DRAWINGS FOR MIN. SPACING BETWEEN SPANS
408 SEE SDD 14B44
409 SEE SDD 14B45
410 SEE SDD 14B47
411 MINIMUM DISTANCE BETWEEN MISSING POST SPANS.

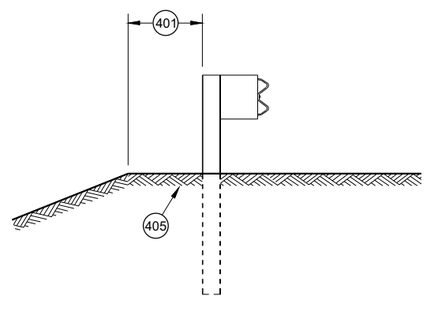

SECTION A - A 406

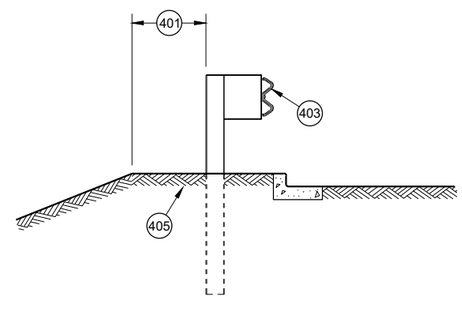

SECTION B - B 406

MIDWEST GUARDRAIL SYSTEM (MGS) GUARDRAIL

STATE OF WISCONSIN
DEPARTMENT OF TRANSPORTATION

APPROVED
May 2021 — DATE
/S/ Rodney Taylor — ROADWAY STANDARDS DEVE UNIT SUPERVISOR
FHWA

6

SDD 14B42 - 07d

GENERAL NOTES

(A) THE SLOPE IN THE AREA BOUNDED BY THE GRADELINE, THE HINGE POINT LINE (HPL) AND THE CLEAR ZONE LIMITS (CZL) SHALL BE 4:1 OR FLATTER.

(B) AFTER FINAL ASSEMBLY, RECHECK CABLE TO BE SURE IT IS TAUT AND HAS NOT RELAXED

(C) DIFFERENT MANUFACTURERS REQUIRE DIFFERENT PERFORATED W - BEAM RAIL END PANELS. SEE MANUFACTURER'S INFORMATION.

(D) ATTACH ALUMINUM SHEET TO E.A.T. HEAD USING 4 STAINLESS STEEL SELF - TAPPING SCREWS. ONE SCREW PER CORNER.

(E) HARDWARE MAY VARY BETWEEN MANUFACTURER. SEE MANUFACTURER'S DRAWING FOR INFORMATION.

DIMENSIONS MAY VARY, MANUFACTURER'S INFORMATION.

SEE SDD 14B42 FOR MORE INFORMATION.

* DO NOT ATTACH BLOCKOUTS TO POST 1 AND 2.

DO NOT INSTALL REFLECTORS ON THE FIRST 50 FEET OF THE APPROACH END OF THE ENERGY ABSORBING TERMINAL.

SEE MANUFACTURER'S DRAWING FOR SPLICE LOCATION, HARDWARE DIMENSIONS AND INSTALLATION INSTRUCTIONS.

THE CENTER OF THE UPPER 3 ½" DIAMETER HOLE ON POST NUMBER 3 THROUGH POST 9 IS TO BE FLUSH WITH THE GROUND LINE UP TO A MAXIMUM OF 2" ABOVE GROUND LINE. WOOD BLOCKS ON POSTS NUMBERED 3 THROUGH 9 MAY BE ADJUSTED UP TO 3" ABOVE THE TOP OF POST.

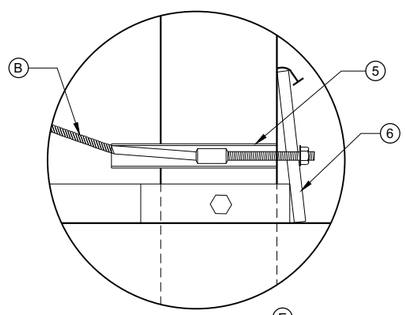

DETAIL "A" (E)

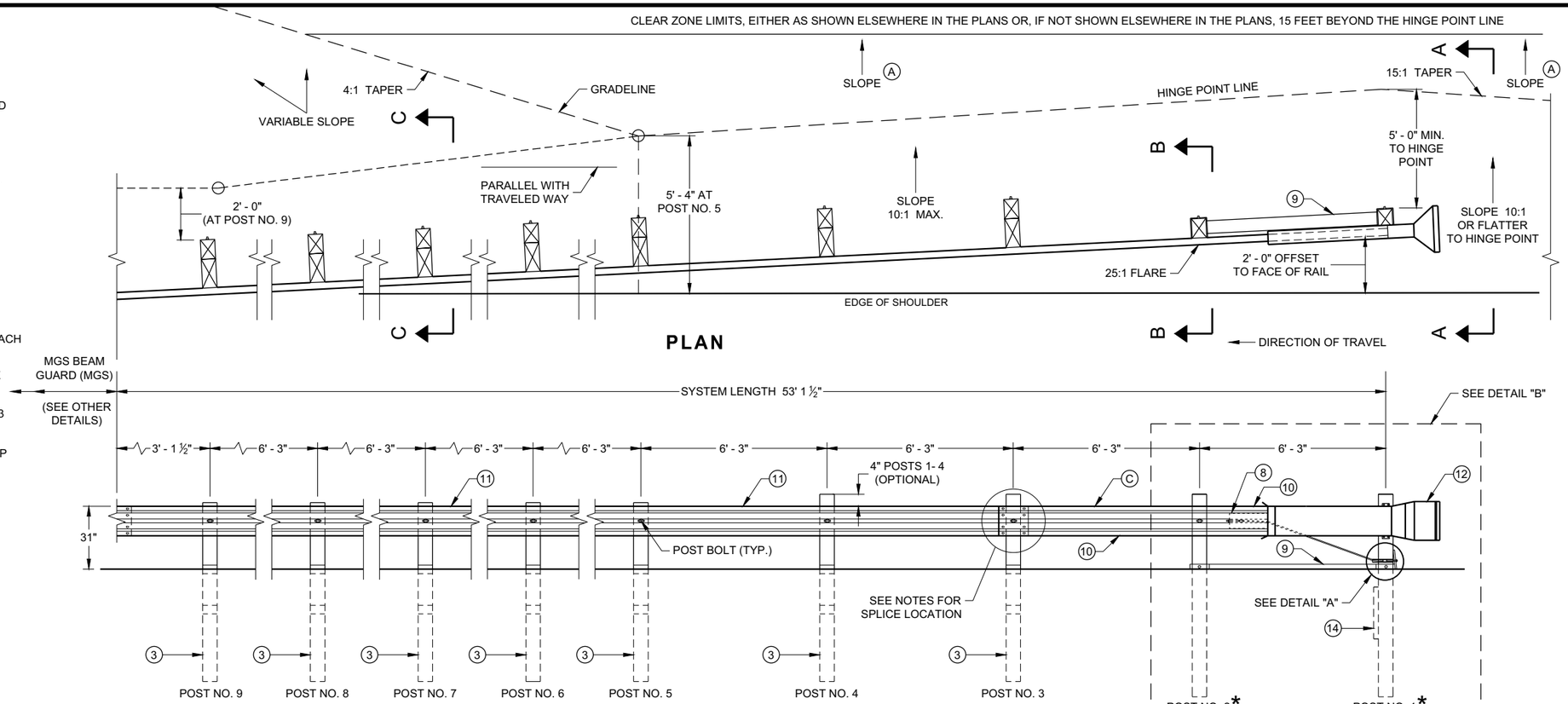

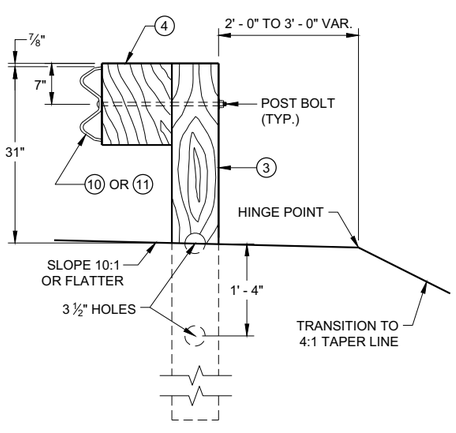

SECTION C - C
TYPICAL AT POST NOS. 3 - 9

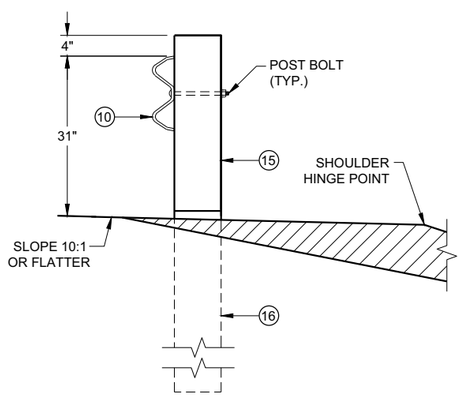

SECTION B - B
TYPICAL AT POST NO. 2*

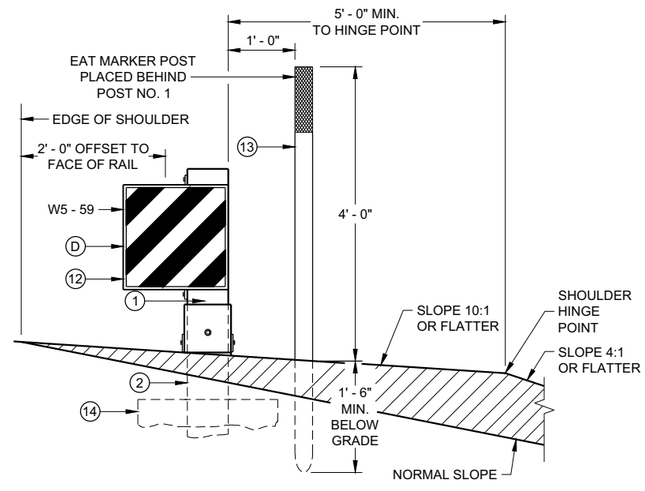

SECTION A - A
TYPICAL AT POST NO. 1*

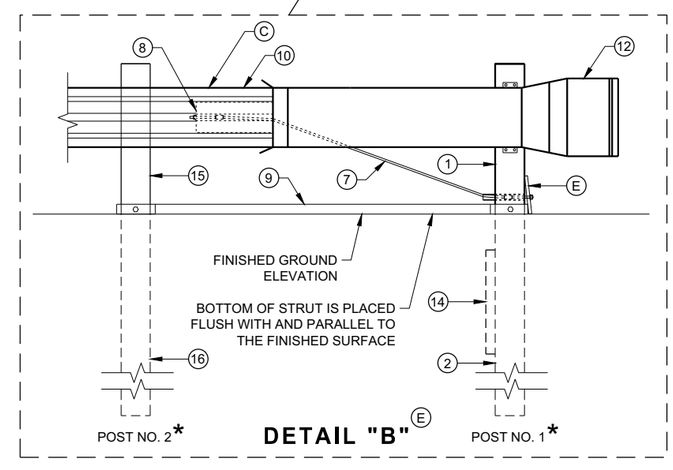

DETAIL "B" (E)

MIDWEST GUARDRAIL SYSTEM ENERGY ABSORBING TERMINAL (MGS)

STATE OF WISCONSIN
DEPARTMENT OF TRANSPORTAT

SDD 14B44 - 04a

BILL OF MATERIALS

PART NO.	DESCRIPTION MATERIALS PROVIDED BY MGS EAT MANUFACTURER. SEE MANUGACTURER'S DETAILS FOR MORE INFORMATION.
1	UPPER POST NO. 1 6" X 6" TUBE
2	LOWER POST NO. 1
3	WOOD CRT
4	WOOD BLOCKOUT
5	PIPE SLEEVE
6	BEARING PLATE
7	BCT CABLE ASSEMBLY
8	ANCHOR CABLE BOX
9	GROUND STRUT
10	PERFORATED W-BEAM RAIL END PANEL, 12'-6" LONG.
11	STANDARD W-BEAM RAIL. MULTIPLE SECTIONS REQUIRED. SECTIONS VARY IN LENGTH.
12	IMPACT HEAD
13	EAT MARKER POST - YELLOW (SEE APPROVED PRODUCTS LIST)
14	SOIL PLATE
15	UPPER POST NO. 2
16	LOWER POST NO. 2

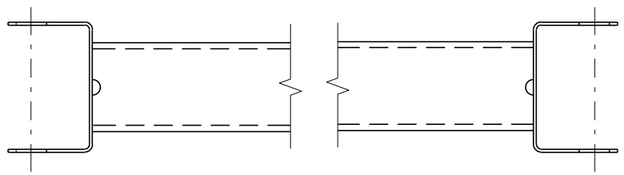

GENERIC GROUND STRUT 9 E

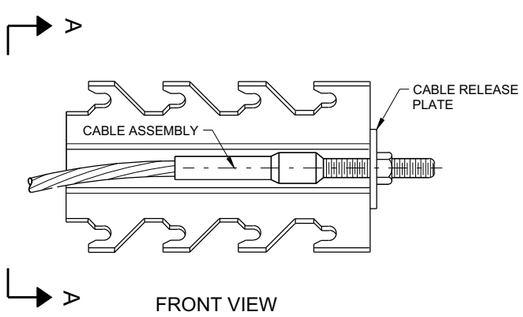

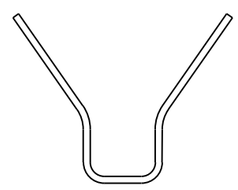

SECTION A - A

GENERIC ANCHOR CABLE BOX 9 E

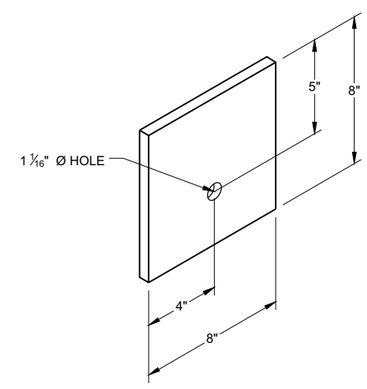

BEARING PLATE 6 E

6

6

SDD 14B44 - 04b

SDD 14B44 - 04b

MIDWEST GUARDRAIL SYSTEM ENERGY ABSORBING TERMINAL (MGS)

STATE OF WISCONSIN
DEPARTMENT OF TRANSPORTAT

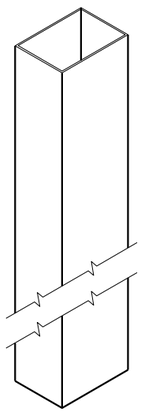

UPPER POST NO. 1 (1) (E)

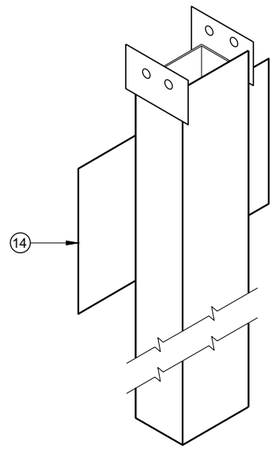

LOWER POST NO. 1 (2) (E)

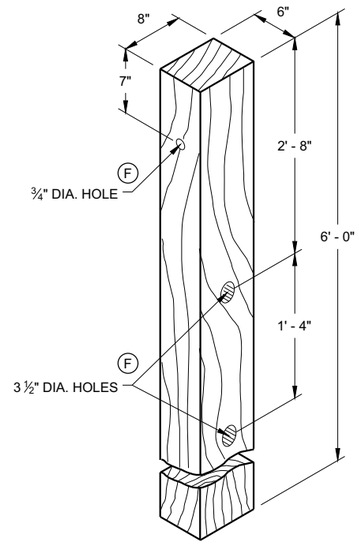

WOOD CRT POST (3) (E)

POSTS NUMBER 3-9

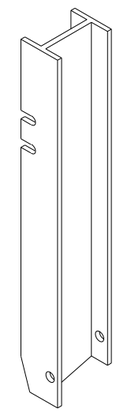

UPPER POST NO. 2 (15) (E)

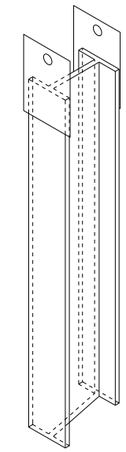

LOWER POST NO. 2 (16) (E)

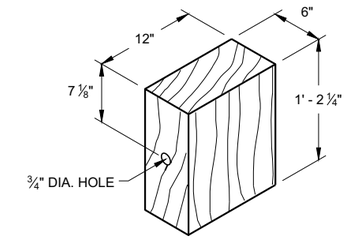

WOOD BLOCKOUT (4)

REQ'D. AT ALL POSTS EXCEPT POST NO'S 1 & 2

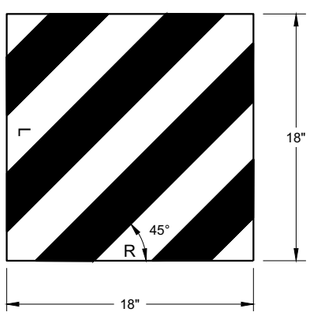

W5 - 59

REFLECTIVE SHEETING DETAIL (E)

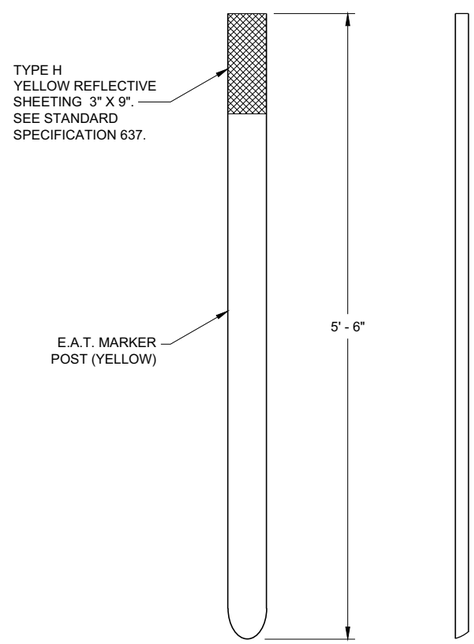

FRONT VIEW SIDE VIEW

E.A.T. MARKER POST (13)

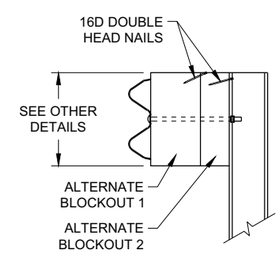

SIDE VIEW

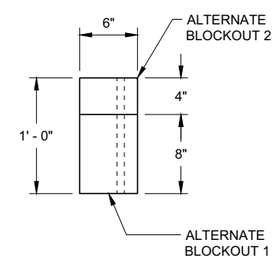

TOP VIEW

ALTERNATE WOOD BLOCKOUT DETAIL

MIDWEST GUARDRAIL SYSTEM ENERGY ABSORBING TERMINAL (MGS)

STATE OF WISCONSIN
DEPARTMENT OF TRANSPORTATION

APPROVED
7/2018 — DATE
/S/ Rodney Taylor — ROADWAY STANDARDS DEVE UNIT SUPERVISOR
FHWA

6

6

SDD 14B44 - 04c

SDD 14B44 - 04c

GENERAL NOTES

(2) OPTIONAL CURB AND GUTTER OR DRAINAGE FEATURE SEE PLAN FOR INFORMATION.

(3) WHEN USING STEEL POSTS AND WOOD BLOCKOUTS INSTALL FOUR 10D GALVANIZED NAILS. INSTALL NAILS AT THE BACK CORNERS OF THE BLOCK AND BEND THE NAILS OVER THE FLANGE OF THE STEEL POST.

(4) TOLERANCE FOR TOP OF W-BEAM RAIL IS ± 1".

(13) STEEL OR WOOD POST IS ACCEPTABLE AT POST 1. SEE SDD 14B42

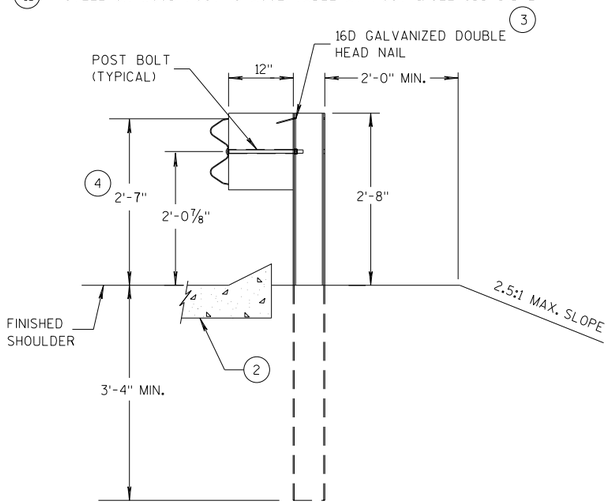

SECTION A-A (13)

POSTS 1-5

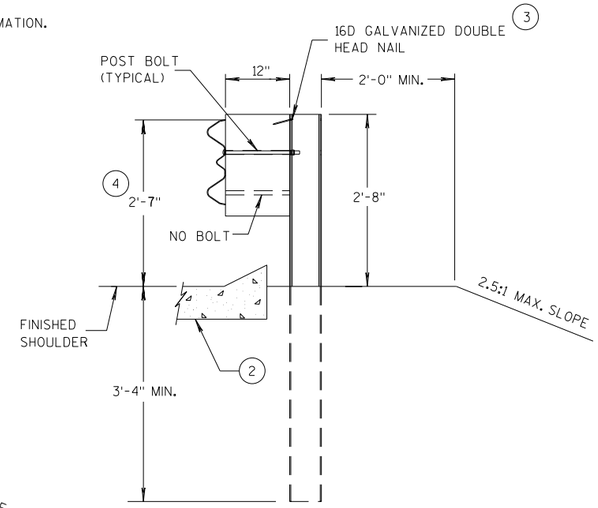

SECTION B-B

POST 6

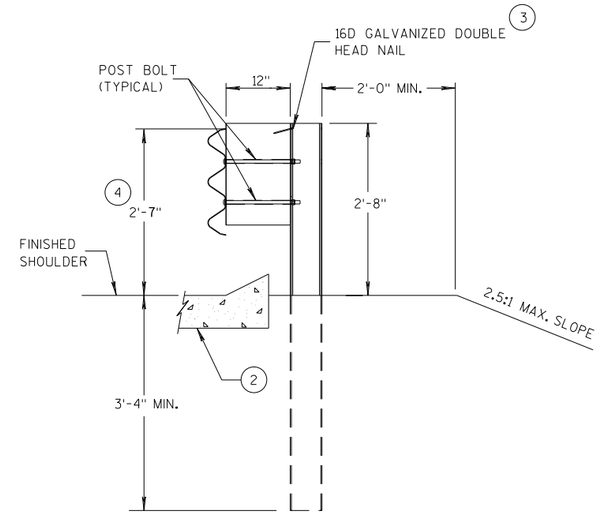

SECTION C-C

POSTS 7-11

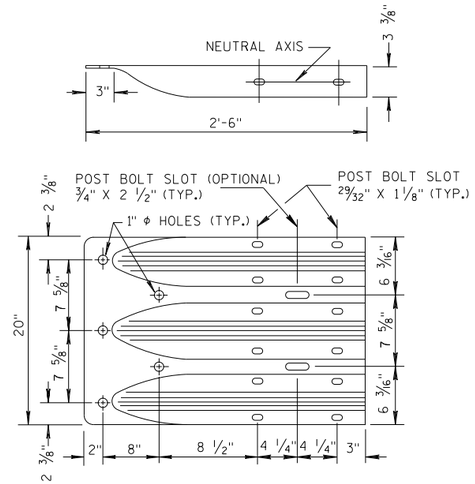

THRIE BEAM TERMINAL CONNECTOR

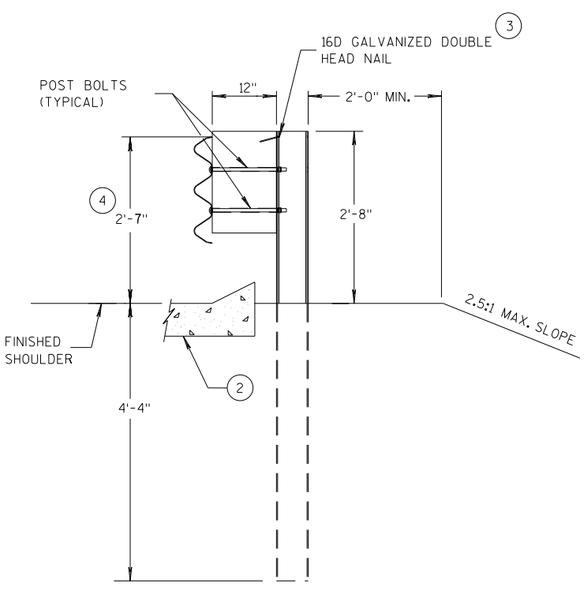

SECTION D-D

POSTS 12-17

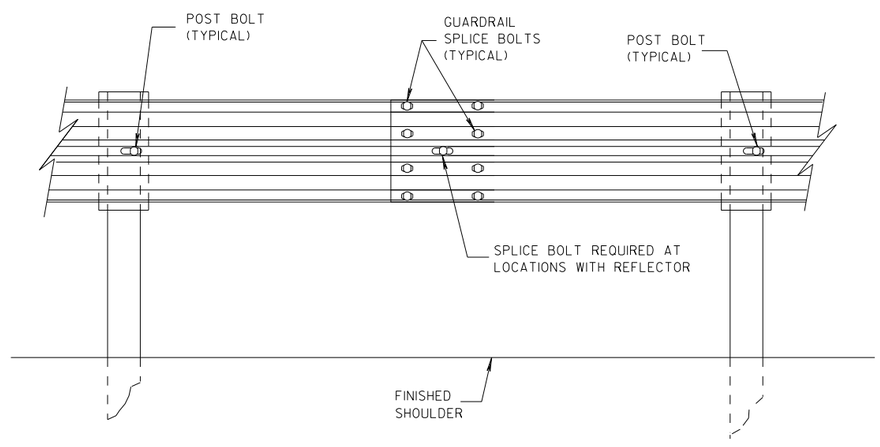

SPLICE DETAIL

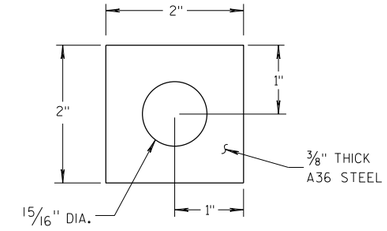

PLATE WASHER DETAIL

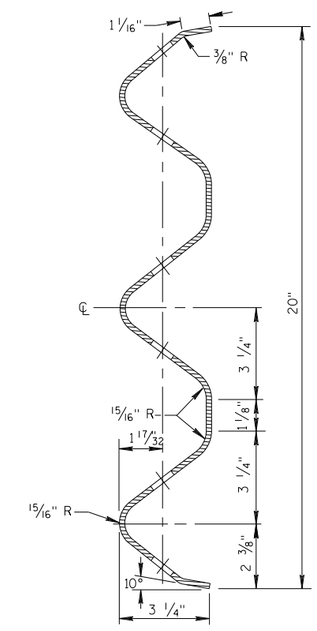

SECTION THRU THRIE BEAM RAIL ELEMENT

MIDWEST GUARDRAIL SYSTEM
THRIE BEAM TRANSITION (MGS)

STATE OF WISCONSIN
DEPARTMENT OF TRANSPORTATION

6

S.D.D. 14 B 45-5b

6

S.D.D. 14 B 45-5b

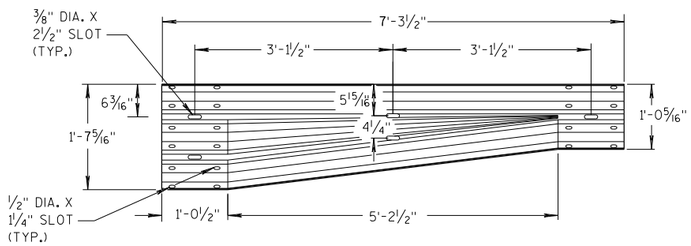

W-BEAM TO THRIE BEAM TRANSITION SECTION

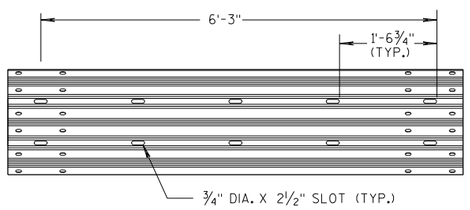

6'-3" THRIE BEAM SECTION

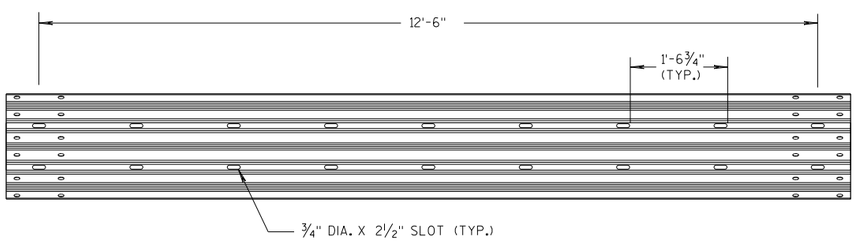

12'-6" THRIE BEAM SECTION

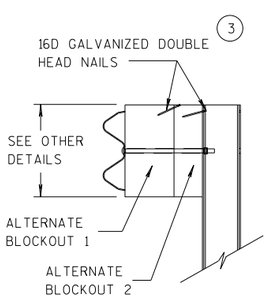

SIDE VIEW

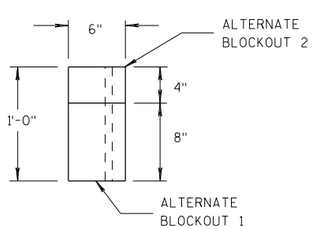

TOP VIEW

ALTERNATE WOOD BLOCKOUT DETAIL

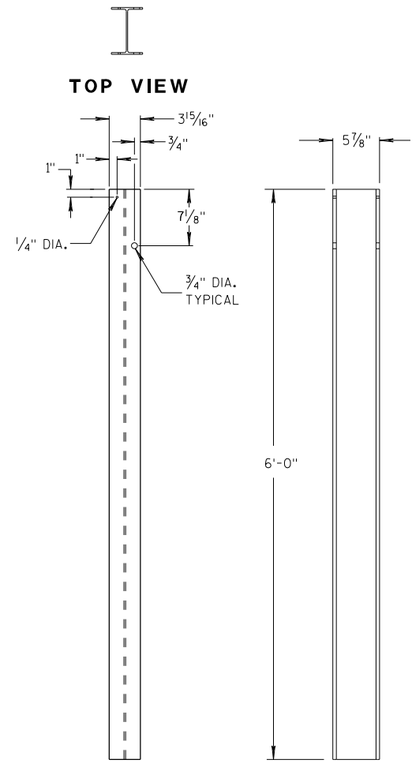

STEEL POSTS 1-5 (13)

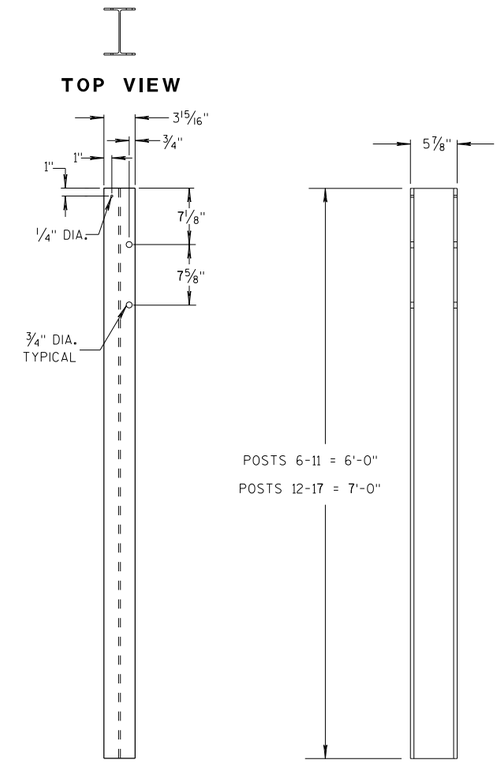

STEEL POSTS 6-17

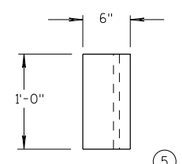

TOP VIEW (5)

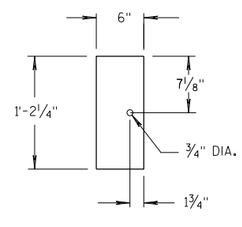

FRONT VIEW

BLOCKOUT POSTS 1-5

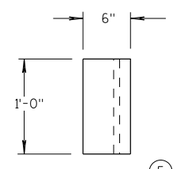

TOP VIEW (5)

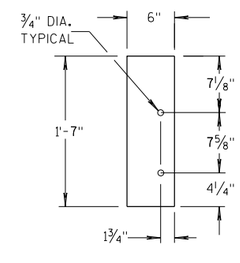

FRONT VIEW

BLOCKOUT POSTS 6-17

GENERAL NOTES

STEEL POSTS ARE W6X9 OR W6X8.5.

BOLT HOLES FOR POST ARE ON FRONT AND OF SIDE OF POST.

(3) WHEN USING STEEL POSTS AND WOOD BLOCKOUTS INSTALL FOUR 16D GALVANIZED NAILS. INSTALL NAILS AT THE BACK CORNERS OF THE BLOCK AND BEND THE NAILS OVER THE FLANGE OF THE STEEL POST.

(5) WOOD BLOCKS MAY BE CONSTRUCTED OUT OF 2 WOOD BLOCKS. SEE ALTERNATE WOOD BLOCK DETAIL.

(13) STEEL OR WOOD POST IS ACCEPTABLE AT POST 1. SEE SDD 14B42.

MIDWEST GUARDRAIL SYSTEM
THRIE BEAM TRANSITION (MGS)

STATE OF WISCONSIN
DEPARTMENT OF TRANSPOR

6

S.D.D. 14 B 45-5c

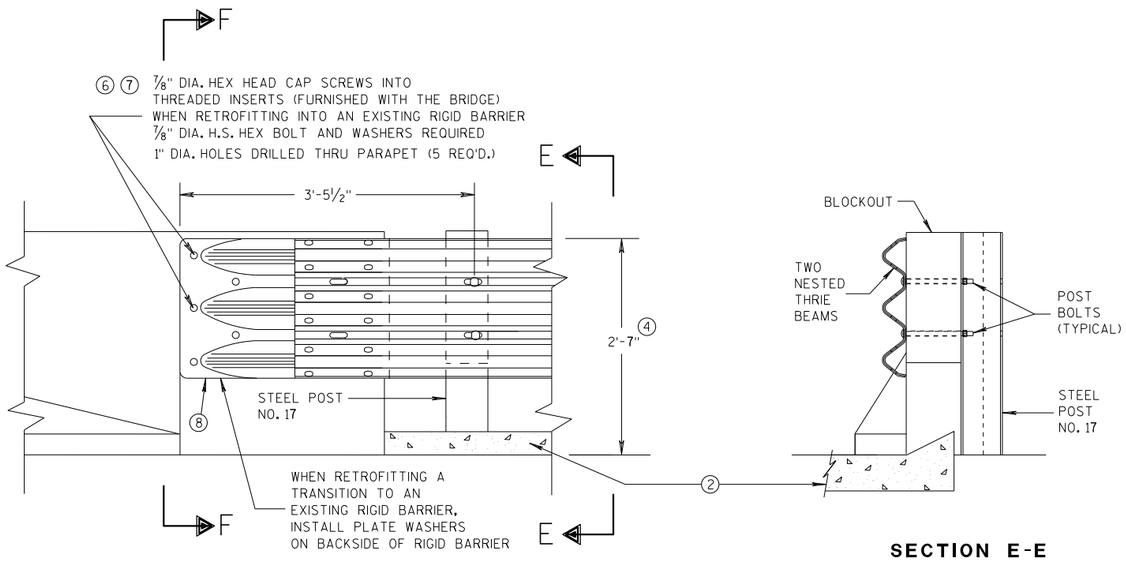

FRONT VIEW

SECTION E-E

THRIE BEAM CONNECTION TO BRIDGE PARAPET WITH SQUARE ENDS

GENERAL NOTES

THESE ARE TYPICAL CONNECTION DETAILS. ADJUST THE POSTION OF CONNECTIONS TO EXISTING BRIDGES TO FIT THE ACTUAL BRIDGE AND SITE DIMENSIONS.

② OPTIONAL CURB AND GUTTER OR DRAINAGE FEATURE SEE PLAN FOR INFORMATION.

④ TOLERANCE FOR TOP OF BEAM IS ± 1".

⑥ DRILLING BOLT HOLES THROUGH THE PARAPET, BOLTS, NUTS, WASHERS AND REPAIRING DAMAGED CONCRETE ARE INCIDENTAL TO THE CONTRACT.

⑦ BOLTS MAY BE A325 BOLTS OR A449 BOLTS. BOLT LENGTH AND THREADING LENGTH ARE TO ALLOW FOR A TIGHT CONNECTION BETWEEN RIGID BARRIER AND THRIE BEAM CONNECTION PLATE. CONTRACTOR IS TO FIELD VERIFY BOLT LENGTH AND THREAD LENGTH. ONE ROUND WASHER REQUIRED BETWEEN BOLT HEAD AND THRIE BEAM CONNECTOR PLATE. BOLTS THAT EXTEND THROUGH THE PARAPET AND OUT THE BACK FACE REQUIRE A HARDENED ROUND STEEL WASHER THAT IS 2" O.D. X 5/32" THICK AND ONE PLATE WASHER. REPAIR ANY DAMAGED CONCRETE FROM BOLT INSTALLATION.

⑧ THE RECESS FOR A W-BEAM CONNECTION, WHICH EXISTS ON SOME PARAPETS OF THIS TYPE, SHALL BE FILLED WITH A TREATED TIMBER BLOCKOUT. BLOCKOUT SIZE IS 1'-6" X 2'-0" X 3 1/2".

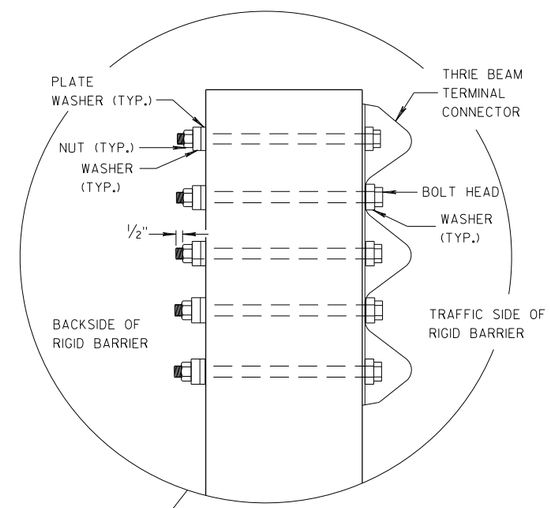

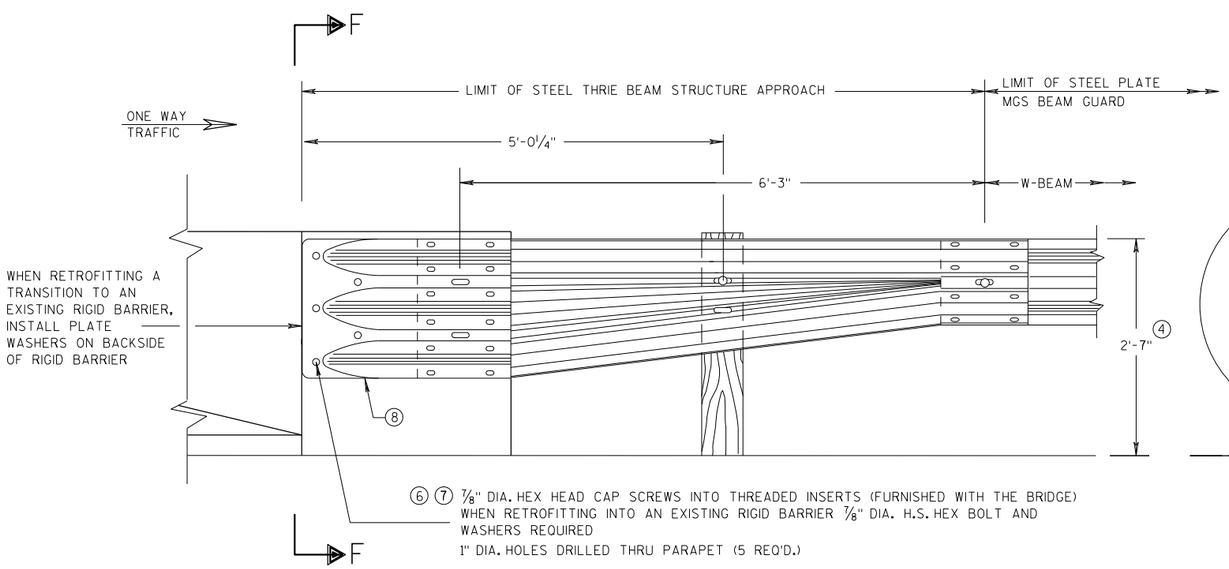

FRONT VIEW

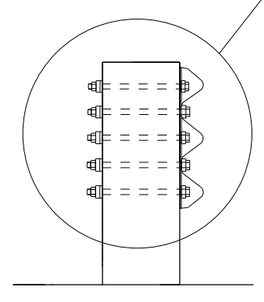

SECTION F-F

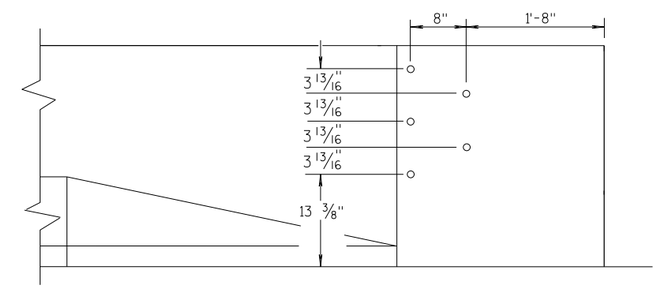

DRILL HOLE LOCATION

W BEAM TRANSITION AND CONNECTION TO BRIDGE PARAPETS WITH SQUARE ENDS

(USE ONLY ON THE TRAFFIC EXIT END OF ONE WAY BRIDGES)

MIDWEST GUARDRAIL SYSTEM THRIE BEAM TRANSITION (MGS)

STATE OF WISCONSIN
DEPARTMENT OF TRANSPORTATION

APPROVED
07/2018 — DATE
/S/ Rodney Taylor — ROADWAY STANDARDS D[illegible] UNIT SUPERVI[illegible]
FHWA

6

S.D.D. 14 B 45-5d

GENERAL NOTES

THESE ARE TYPICAL CONNECTION DETAILS. ADJUST THE POSTION OF CONNECTIONS TO EXISTING BRIDGES TO FIT THE ACTUAL BRIDGE AND SITE DIMENSIONS.

(2) OPTIONAL CURB AND GUTTER OR DRAINAGE FEATURE SEE PLAN FOR INFORMATION.

(4) TOLERANCE FOR TOP OF BEAM IS ± 1".

(6) DRILLING BOLT HOLES THROUGH THE PARAPET, BOLTS, NUTS, WASHERS AND REPAIRING DAMAGED CONCRETE ARE INCIDENTAL TO THE CONTRACT.

(7) BOLTS MAY BE A325 BOLTS OR A449 BOLTS. BOLT LENGTH AND THREADING LENGTH ARE TO ALLOW FOR A TIGHT CONNECTION BETWEEN RIGID BARRIER AND THRIE BEAM CONNECTION PLATE. CONTRACTOR IS TO FIELD VERIFY BOLT LENGTH AND THREAD LENGTH. ONE ROUND WASHER REQUIRED BETWEEN BOLT HEAD AND THRIE BEAM CONNECTOR PLATE. BOLTS THAT EXTEND THROUGH THE PARAPET AND OUT THE BACK FACE REQUIRE A HARDENED ROUND STEEL WASHER THAT IS 2" O.D. X 5/32" THICK AND ONE PLATE WASHER. REPAIR ANY DAMAGED CONCRETE FROM BOLT INSTALLATION.

(8) THE RECESS FOR A W-BEAM CONNECTION, WHICH EXISTS ON SOME PARAPETS OF THIS TYPE, SHALL BE FILLED WITH A TREATED TIMBER BLOCKOUT. BLOCKOUT SIZE IS 1'-6" X 2'-0" X 3 1/2".

(9) BOLT, NUT AND WASHERS NOT REQUIRED FOR THIS LOCATION WHEN RETROFITTING AN EXISTING PAPAPET AND THE HOLE IS EITHER ABOVE PARAPET OR WITHIN 4 INCHES OF THE EDGE OF PARAPET.

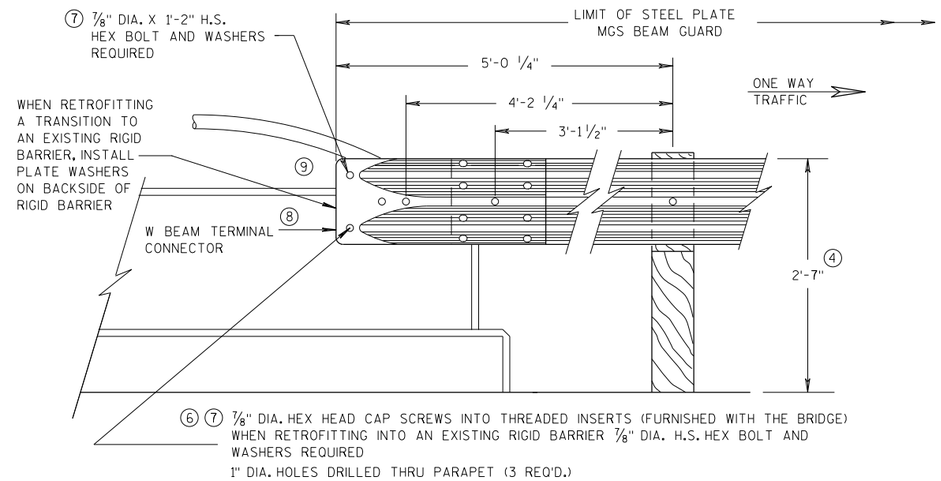

FRONT VIEW

W BEAM CONNECTION TO VERTICAL FACE PARAPET

(USE ONLY ON THE TRAFFIC EXIT END OF ONE WAY BRIDGES)

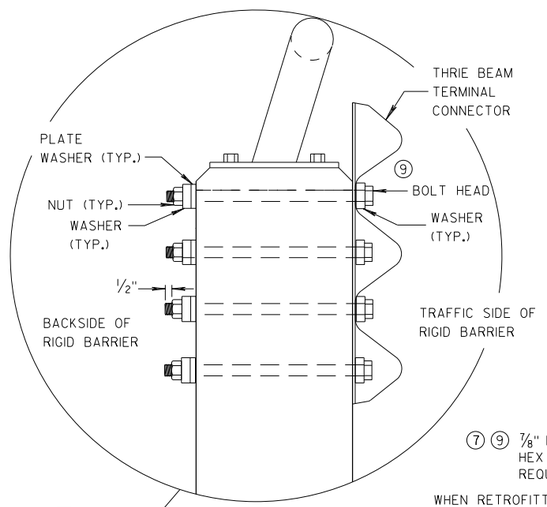

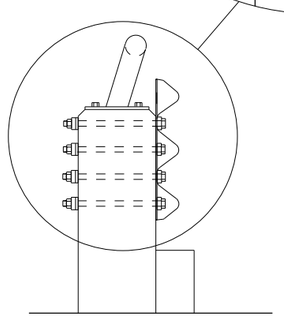

SECTION G-G

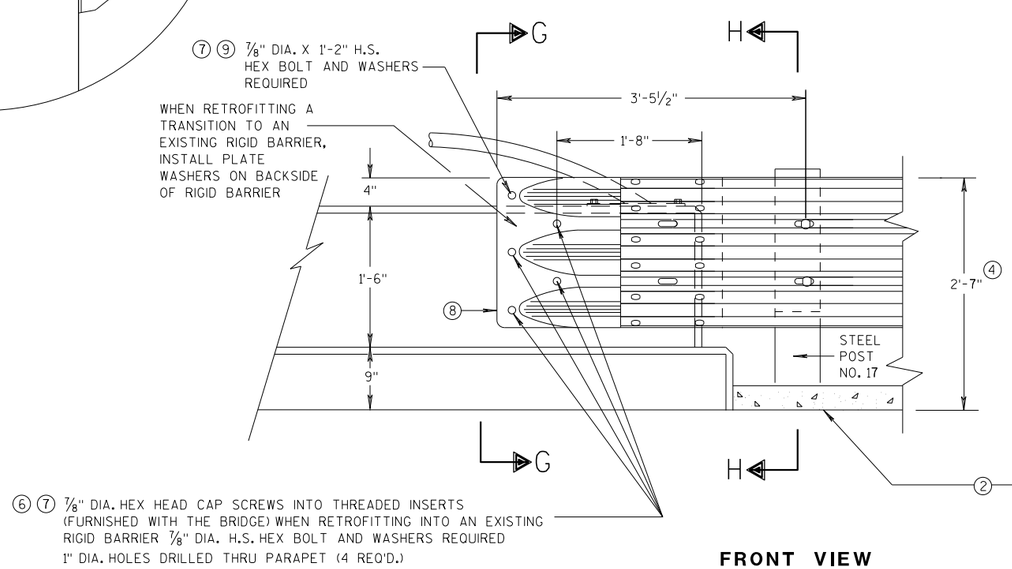

FRONT VIEW

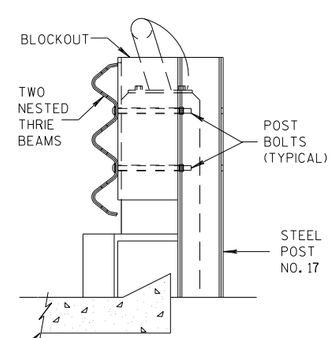

SECTION H-H

THRIE BEAM CONNECTION TO VERTICAL FACED PARAPETS

MIDWEST GUARDRAIL SYSTEM
THRIE BEAM TRANSITION (MGS)

STATE OF WISCONSIN
DEPARTMENT OF TRANSPORTATION

APPROVED
07/2018 — DATE
/S/ Rodney Taylor
ROADWAY STANDARDS D[illegible] UNIT SUPERVI[illegible]
FHWA

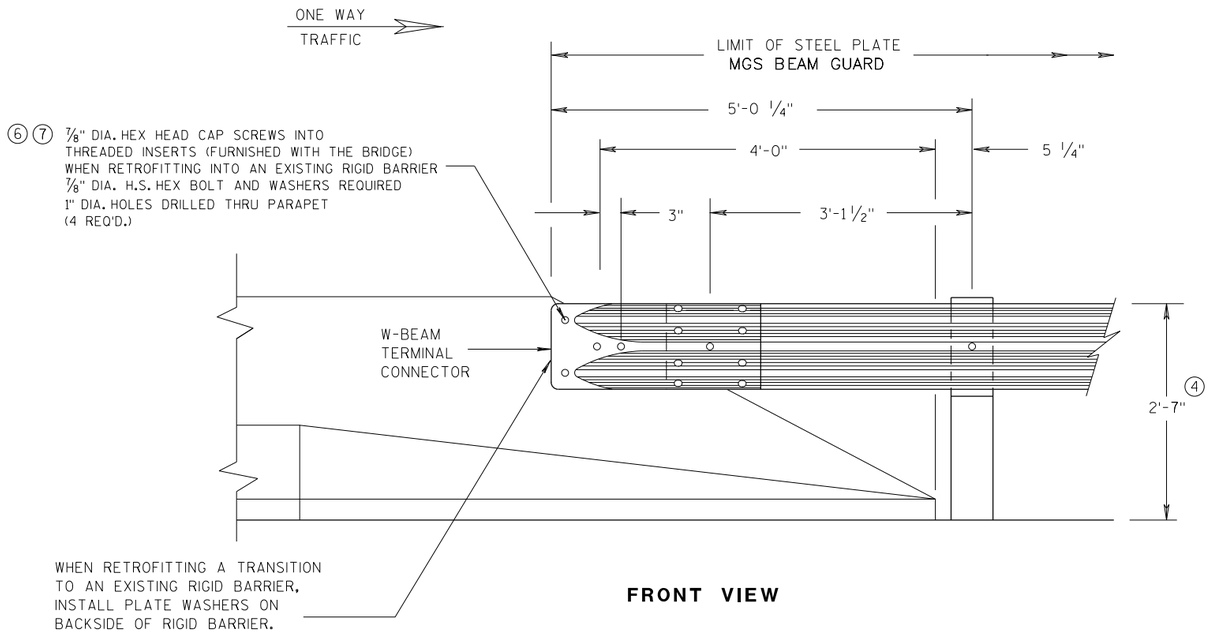

FRONT VIEW

W BEAM CONNECTION TO PARAPETS WITH SLOPED ENDS

(USE ONLY AT TRAFFIC EXIT END OF ONE WAY BRIDGE)

GENERAL NOTES

② OPTIONAL CURB AND GUTTER OR DRAINAGE FEATURE SEE PLAN FOR INFORMATION.

④ TOLERANCE FOR TOP OF BEAM IS ± 1".

⑥ DRILLING BOLT HOLES THROUGH THE PARAPET, BOLTS, NUTS, WASHERS AND REPAIRING DAMAGED CONCRETE ARE INCIDENTAL TO THE CONTRACT.

⑦ BOLTS MAY BE A325 BOLTS OR A449 BOLTS. BOLT LENGTH AND THREADING LENGTH ARE TO ALLOW FOR A TIGHT CONNECTION BETWEEN RIGID BARRIER AND THRIE BEAM CONNECTION PLATE. CONTRACTOR IS TO FIELD VERIFY BOLT LENGTH AND THREAD LENGTH. ONE ROUND WASHER REQUIRED BETWEEN BOLT HEAD AND THRIE BEAM CONNECTOR PLATE. BOLTS THAT EXTEND THROUGH THE PARAPET AND OUT THE BACK FACE REQUIRE A HARDENED ROUND STEEL WASHER THAT IS 2" O.D. X 5/32" THICK AND ONE PLATE WASHER. REPAIR ANY DAMAGED CONCRETE FROM BOLT INSTALLATION.

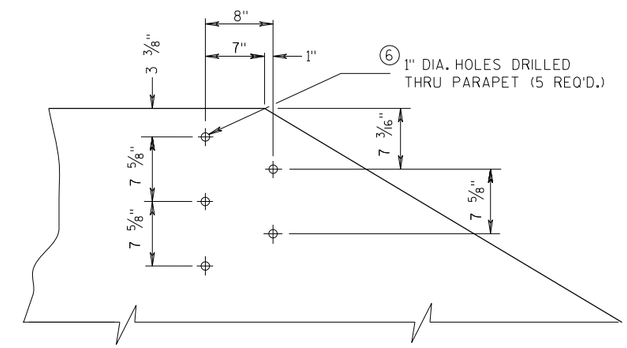

DRILL HOLE LOCATION AND PATTERN FOR THRIE BEAM CONNECTION

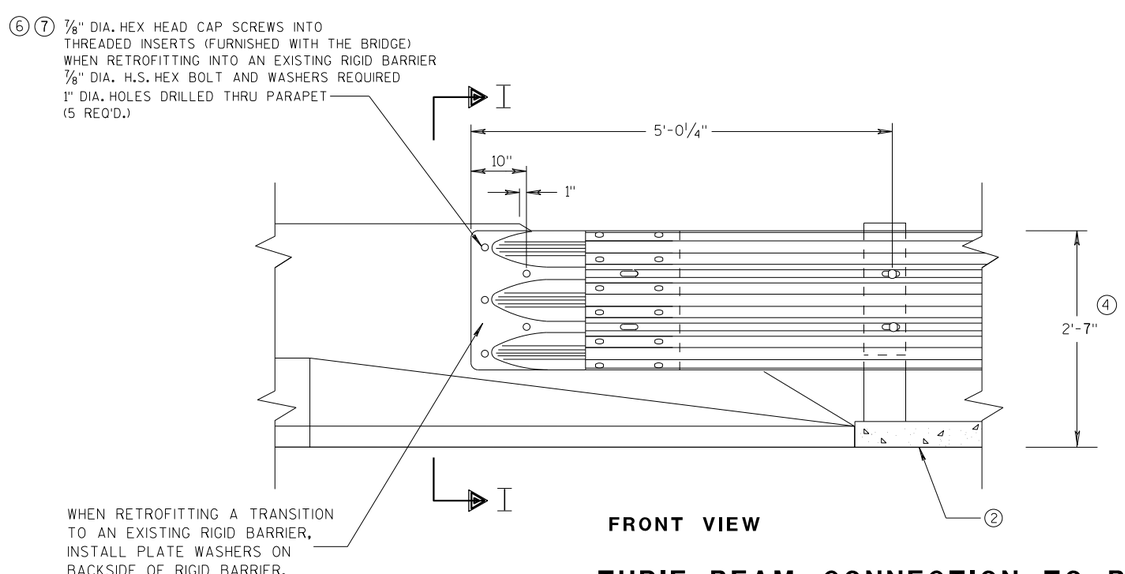

FRONT VIEW

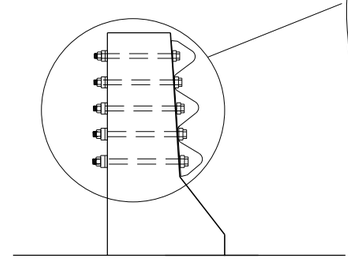

SECTION I-I

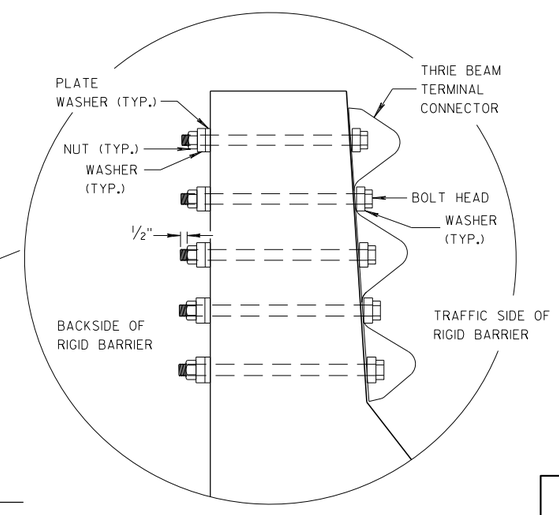

THRIE BEAM CONNECTION TO BRIDGE PARAPETS WITH SLOPED ENDS

MIDWEST GUARDRAIL SYSTEM THRIE BEAM TRANSITION (MGS)

STATE OF WISCONSIN
DEPARTMENT OF TRANSPORTATION

APPROVED
07/2018 /S/ Rodney Taylor
DATE ROADWAY STANDARDS DEVELOPMENT UNIT SUPERVISOR
FHWA

6

6

S.D.D. 14 B 45-5f

S.D.D. 14 B 45-5f

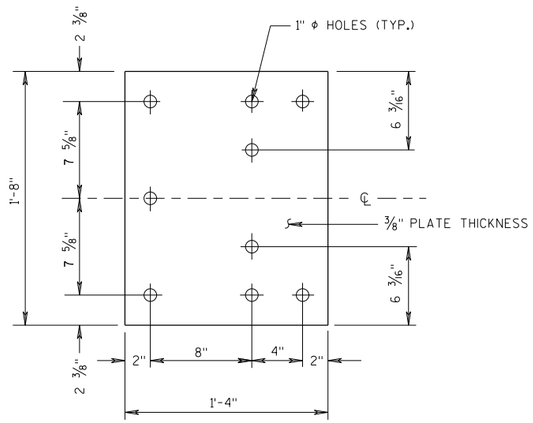

BACK-UP PLATE DETAIL

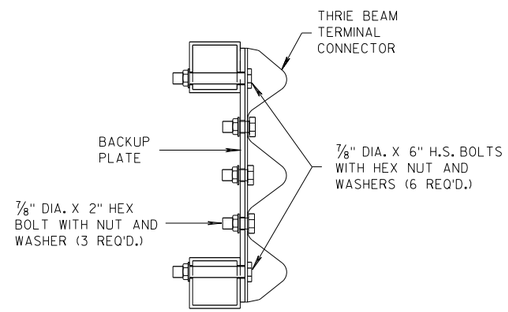

SECTION J-J

GENERAL NOTES

(4) TOLERANCE FOR TOP OF BEAM IS ± 1".

(6) DRILLING HOLES THROUGH THE PAPRPET, BOLTS, NUTS, WASHERS AND REPAIRING DAMAGED CONCRETE ARE INCIDENTAL TO THE CONTRACT.

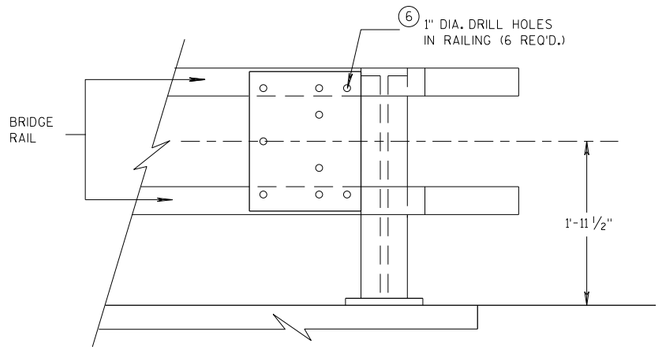

BACK-UP PLATE MOUNTING ONTO BRIDGE RAILING

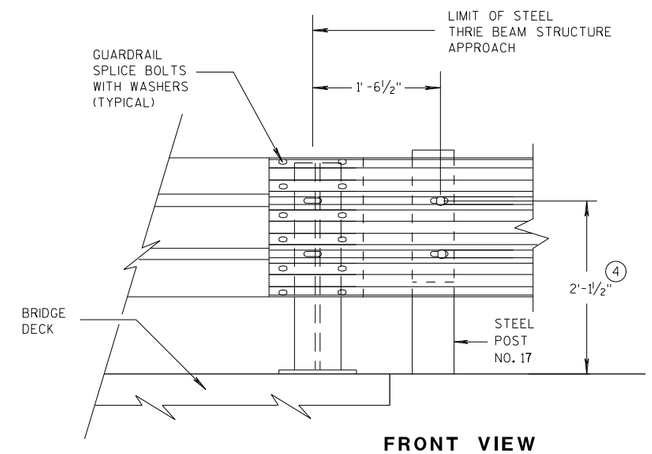

FRONT VIEW

THRIE BEAM CONNECTION TO STEEL RAILING TYPE "W"

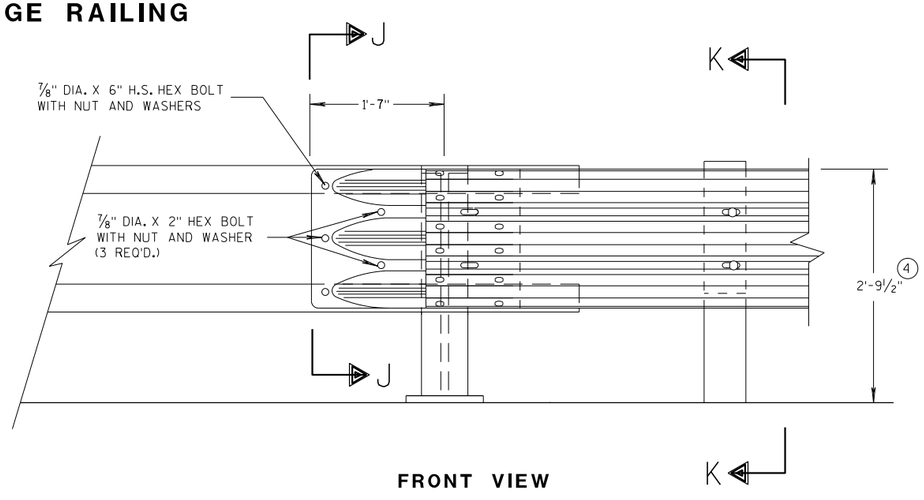

FRONT VIEW

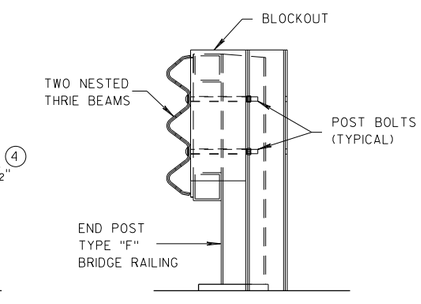

SECTION K-K

THRIE BEAM CONNECTION TO TUBULAR RAILING TYPE "F"

MIDWEST GUARDRAIL SYSTEM THRIE BEAM TRANSITION (MGS)

STATE OF WISCONSIN
DEPARTMENT OF TRANSPORTATION

APPROVED 07/2018 — DATE — FHWA

/S/ Rodney Taylor — ROADWAY STANDARDS DEVELOPMENT UNIT SUPERVISOR

6

S.D.D. 14 B 45-5g

GENERAL NOTES

(4) TOLERANCE FOR TOP OF W-BEAM RAIL IS ± 1".

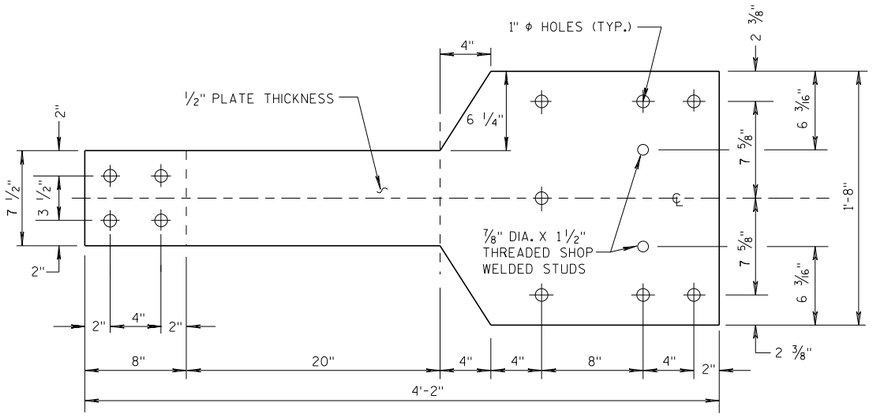

FRONT VIEW

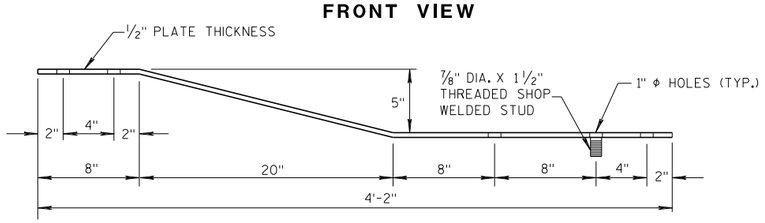

PLAN VIEW

BACK-UP PLATE DETAIL, TYPE "M"

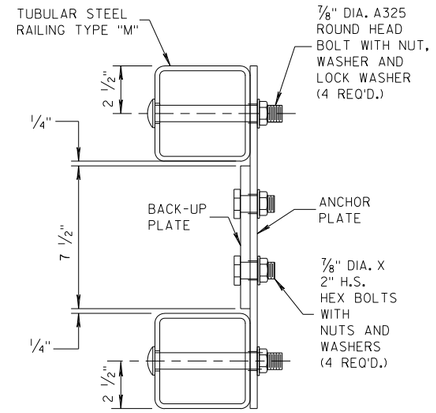

SECTION L-L

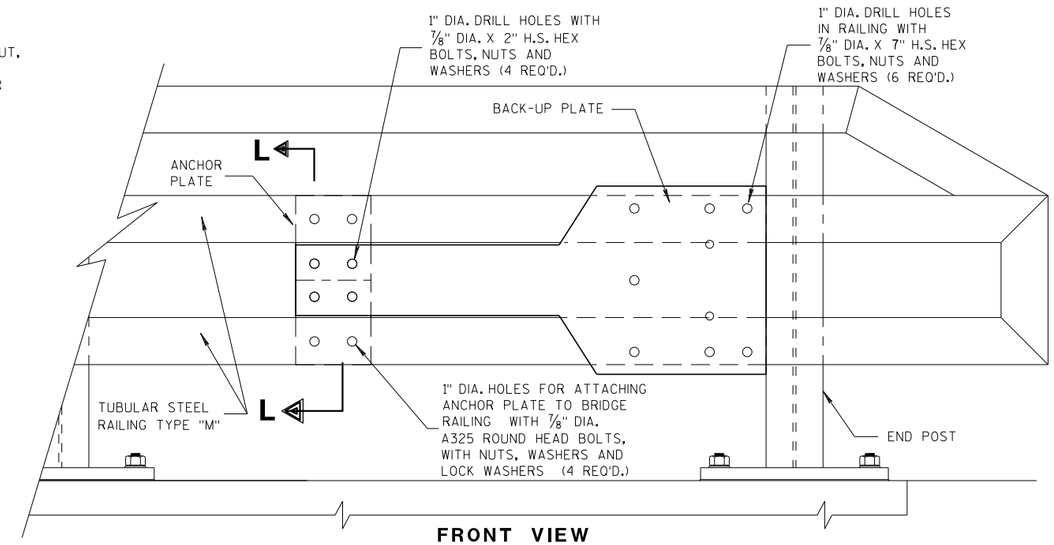

FRONT VIEW

ANCHOR AND BACK-UP PLATE MOUNTING TO BRIDGE RAILING, TYPE "M"

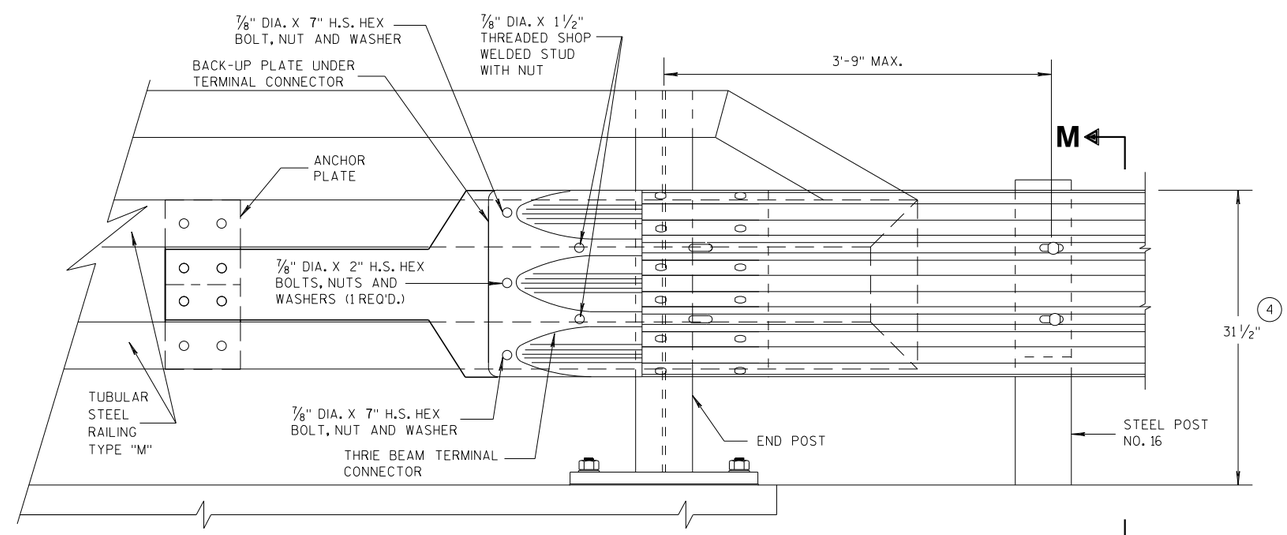

FRONT VIEW

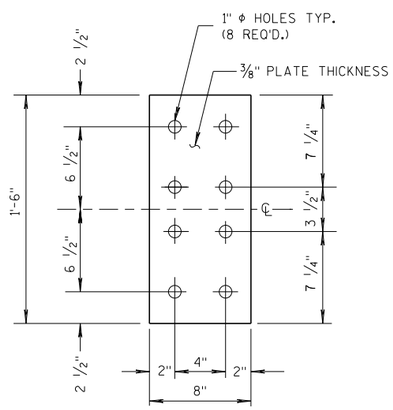

FRONT VIEW

ANCHOR PLATE DETAIL, TYPE "M"

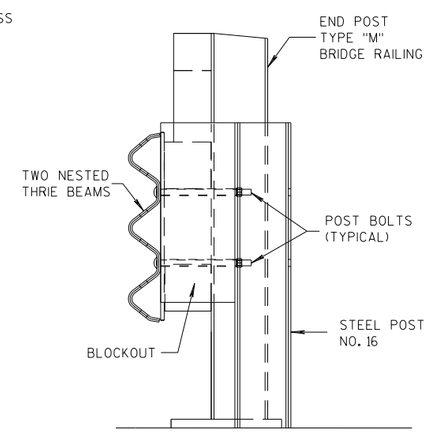

SECTION M-M

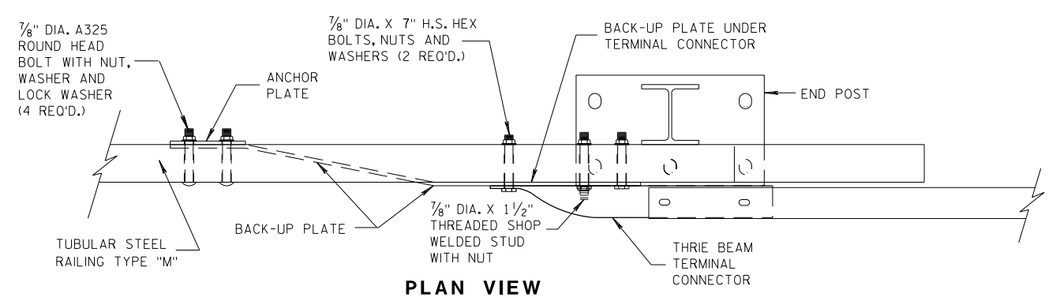

PLAN VIEW

THRIE BEAM CONNECTION TO TUBULAR RAILING, TYPE "M"

MIDWEST GUARDRAIL SYSTEM THRIE BEAM TRANSITION (MGS)

STATE OF WISCONSIN
DEPARTMENT OF TRANSPORTATION

APPROVED
07/2018 — DATE
/S/ Rodney Taylor — ROADWAY STANDARDS DEVELOPMENT UNIT SUPERVISOR
FHWA

6

S.D.D. 14 B 45-5h

GENERAL NOTES

COVER PLATE PANELS ARE 3/16" THICK.

ALL STIFFENERS ARE 1/4" THICK.

CONNECTOR PLATE SHALL BE FABRICATED FROM ASTM GRADE A36 STEEL AND GALVANIZED.

FOR GALVANIZED REQUIREMENTS, SEE SECTION 614 OF THE STANDARD SPECIFICATIONS.

ALL HOLE DIAMETERS SHALL BE 1".

FOR OPPOSITE SIDE INSTALLATION MIRROR DRAWINGS.

(10) STIFFENERS LOCATED AT THE OUTSIDE EDGES OF THE COVER PLATES SHALL BE WELDED AS FOLLOWS:
SINGLE BEVEL GROOVE WELD ON EXTERNAL SIDES AND 3/16" FILLET WELD BY 1" LONG SPACED AT 2" ON INTERNAL SIDES.

(11) STIFFENERS LOCATED ON THE INSIDE OF THE COVER PLATE SHALL BE WELDED AS FOLLOWS:
3/16" FILLET WELD BY 1" LONG SPACED AT 2".

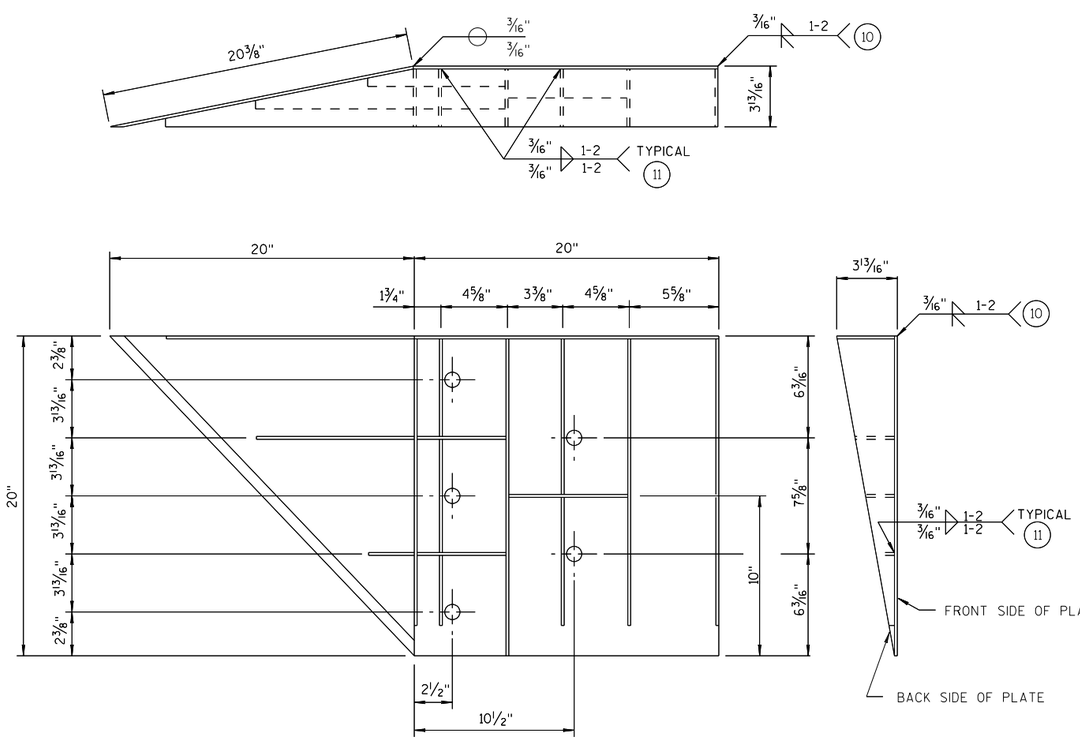

WELDING INSTRUCTION

(VIEWED FROM BACK SIDE OF PLATE)

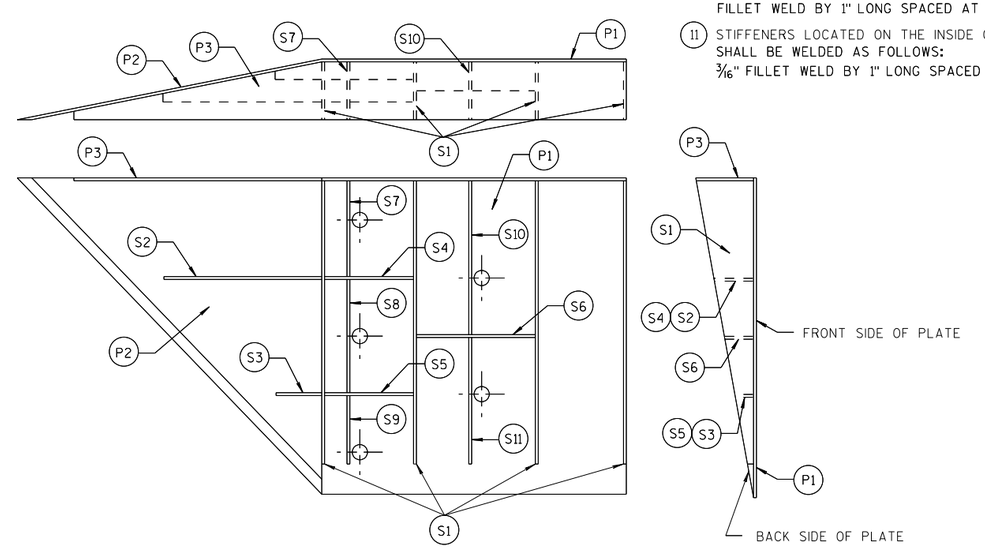

PLATE AND STIFFENER IDENTIFICATION

(VIEWED FROM BACK SIDE OF PLATE)

CONNECTOR PLATE DIMENSION (PER ASSEMBLY)

PLATE	QUANTITY	SHAPE	SIZE (A x B x C x D)	THICKNESS
P1	1		20" x 20"	3/16"
P2	1		20" x 20" x 28 9/16"	3/16"
P3	1		39" x 3 5/8" x 20" x 19 5/16"	3/16"
S1	4		18 7/16" x 3 5/8" x 18 3/4"	1/4"
S2	1		10 1/4" x 2 7/16" x 10 3/8" x 1/2"	1/4"
S3	1		3" x 1 1/16" x 3 1/8" x 1/2"	1/4"
S4	1		6 1/8" x 2 7/16"	1/4"
S5	1		6 1/8" x 1 1/16"	1/4"
S6	1		7 3/4" x 1 3/4"	1/4"
S7	1		2 9/16" x 6" x 3 5/8" x 5 7/8"	1/4"
S8	1		1 5/32" x 7 1/2" x 2 1/2" x 7 3/8"	1/4"
S9	1		6 1/16" x 6 3/16" x 1 3/32"	1/4"
S10	1		1 7/8" x 9 7/8" x 3 5/8" x 9 11/16"	1/4"
S11	1		8 1/2" x 8 3/4" x 1 13/16"	1/4"

SINGLE SLOPE CONNECTION PLATE

MIDWEST GUARDRAIL SYSTEM THRIE BEAM TRANSITION (MGS)

STATE OF WISCONSIN
DEPARTMENT OF TRANSPORTATION

APPROVED
7/2018 /S/ Rodney Taylor
DATE ROADWAY STANDARDS DEVELOPMENT UNIT SUPERVISOR
FHWA

GENERAL NOTES

CONNECTOR PLATE, DRILLING BOLT HOLES THROUGH THE PARAPET, BOLTS, NUTS, WASHERS AND REPAIRING DAMAGED CONCRETE ARE INCIDENTAL TO THE CONTRACT.

(2) OPTIONAL CURB AND GUTTER OR DRAINAGE FEATURE SEE PLAN FOR INFORMATION.

(7) BOLTS MAY BE A325 BOLTS OR A449 BOLTS. BOLT LENGTH AND THREADING LENGTH ARE TO ALLOW FOR A TIGHT CONNECTION BETWEEN RIGID BARRIER AND THRIE BEAM CONNECTION PLATE. CONTRACTOR IS TO FIELD VERIFY BOLT LENGTH AND THREAD LENGTH. ONE ROUND WASHER REQUIRED BETWEEN BOLT HEAD AND THRIE BEAM CONNECTOR PLATE. BOLTS THAT EXTEND THROUGH THE PARAPET AND OUT THE BACK FACE REQUIRE A HARDENED ROUND STEEL WASHER THAT IS 2" O.D. X 5/32" THICK AND ONE PLATE WASHER. REPAIR ANY DAMAGED CONCRETE FROM BOLT INSTALLATION.

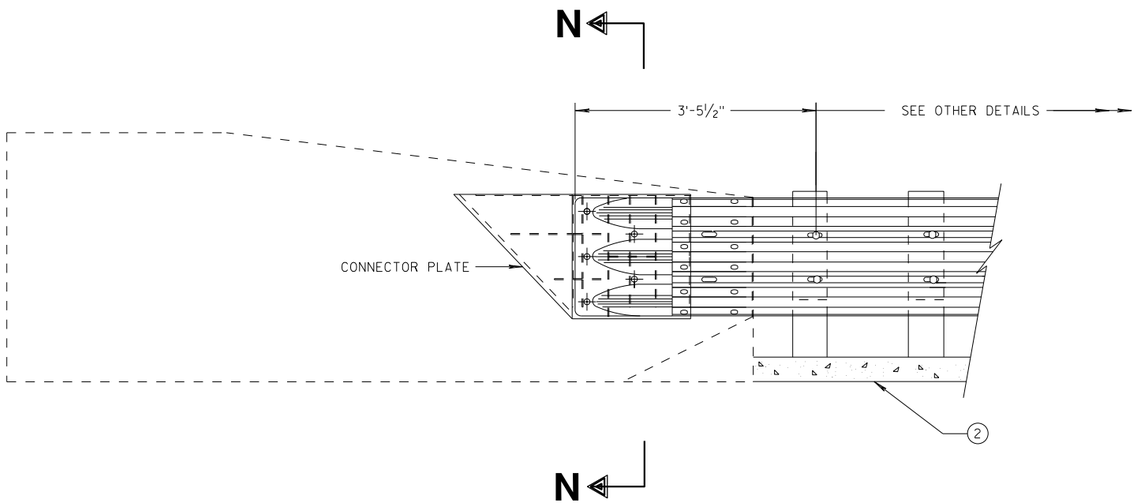

THRIE BEAM CONNECTION TO SINGLE SLOPE BARRIER

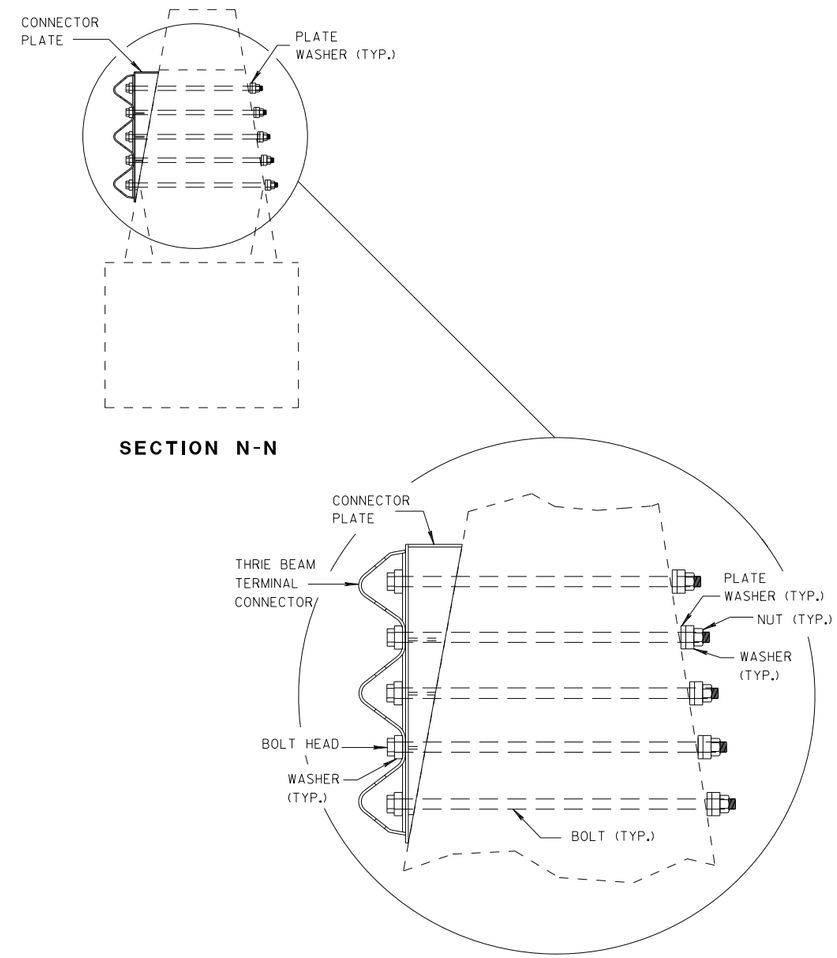

SECTION N-N

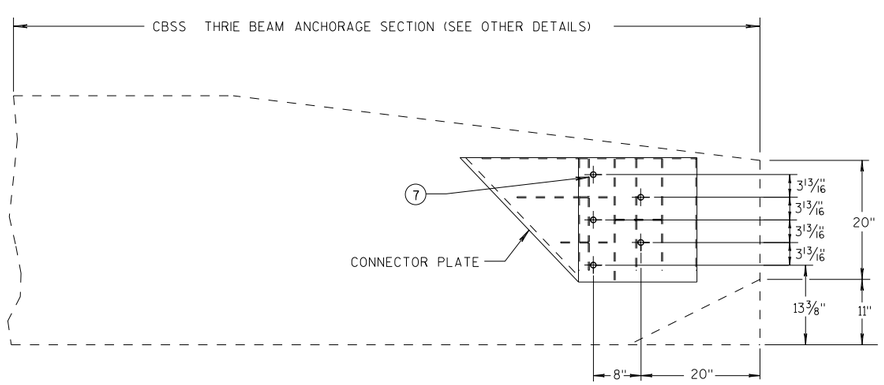

SINGLE SLOPE CONNECTION PLATE PLACEMENT

MIDWEST GUARDRAIL SYSTEM THRIE BEAM TRANSITION (MGS)

STATE OF WISCONSIN
DEPARTMENT OF TRANSPORTATION

APPROVED
7/2018 — DATE
/S/ Rodney Taylor — ROADWAY STANDARDS DI... UNIT SUPERVIS...NT
FHWA

6

S.D.D. 14 B 45-5j

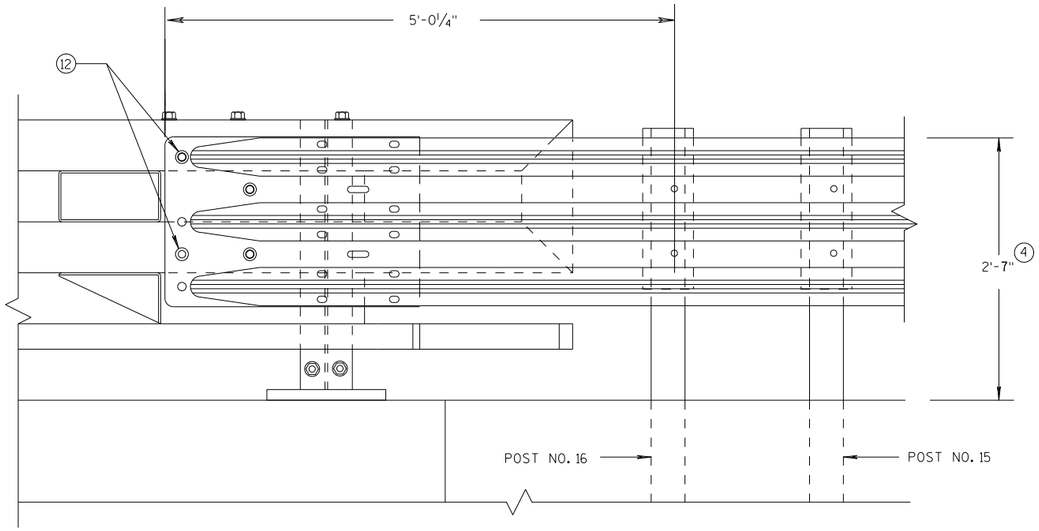

ELEVATION OF DETAIL AT NY3 END POST

THRIE BEAM RAIL ATTACHMENT

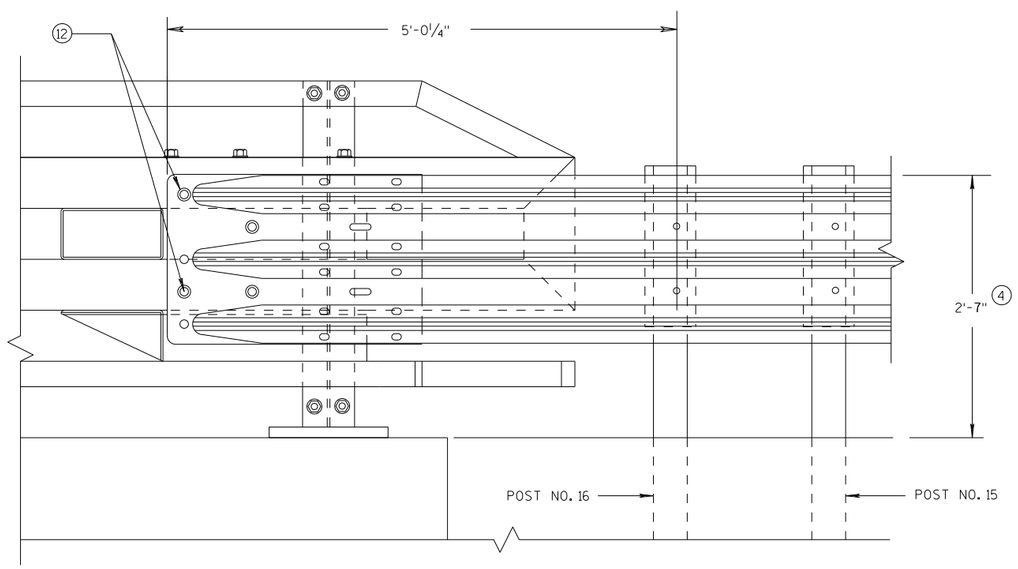

ELEVATION OF DETAIL AT NY4 END POST

THRIE BEAM RAIL ATTACHMENT

GENERAL NOTES

(4) TOLERANCE FOR TOP OF BEAM IS ± 1".

(12) BOLTS MAY BE A325 BOLTS OR A449 BOLTS. BOLT LENGTH AND THREADING LENGTH ARE TO ALLOW FOR A TIGHT CONNECTION BETWEEN RIGID BARRIER AND THRIE BEAM CONNECTION PLATE. CONTRACTOR IS TO FIELD VERIFY BOLT LENGTH AND THREAD LENGTH. ONE ROUND WASHER REQUIRED BETWEEN BOLT HEAD AND THRIE BEAM CONNECTOR PLATE. ON BACKSIDE OF PARAPET ONE ROUND WASHER, AND NUT REQUIRED. BOLT THREAD IS TO EXTEND ½-INCH BEYOND NUT.

MIDWEST GUARDRAIL SYSTEM
THRIE BEAM TRANSITION (MGS)

STATE OF WISCONSIN
DEPARTMENT OF TRANSPORTATION

APPROVED
7/2018
DATE
FHWA

/S/ Rodney Taylor
ROADWAY STANDARDS D
UNIT SUPERVIS

NT

6

S.D.D. 14 B 45-5k

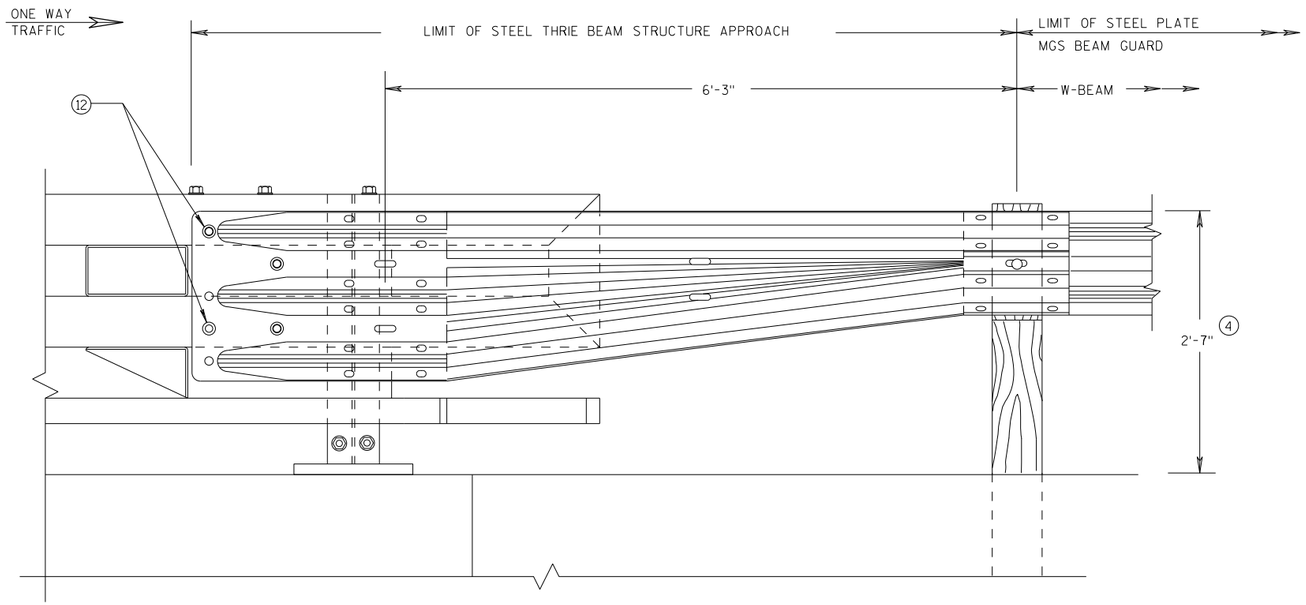

FRONT VIEW

W BEAM TRANSITION AND CONNECTION TO BRIDGE RAILING TYPE "NY3"

(USE ONLY ON THE TRAFFIC EXIT END OF ONE WAY BRIDGES)

GENERAL NOTES

(4) TOLERANCE FOR TOP OF BEAM IS ± 1".

(12) BOLTS MAY BE A325 BOLTS OR A449 BOLTS. BOLT LENGTH AND THREADING LENGTH ARE TO ALLOW FOR A TIGHT CONNECTION BETWEEN RIGID BARRIER AND THRIE BEAM CONNECTION PLATE. CONTRACTOR IS TO FIELD VERIFY BOLT LENGTH AND THREAD LENGTH. ONE ROUND WASHER REQUIRED BETWEEN BOLT HEAD AND THRIE BEAM CONNECTOR PLATE. ON BACKSIDE OF PARAPET ONE ROUND WASHER, AND NUT REQUIRED. BOLT THREAD IS TO EXTEND ½-INCH BEYOND NUT.

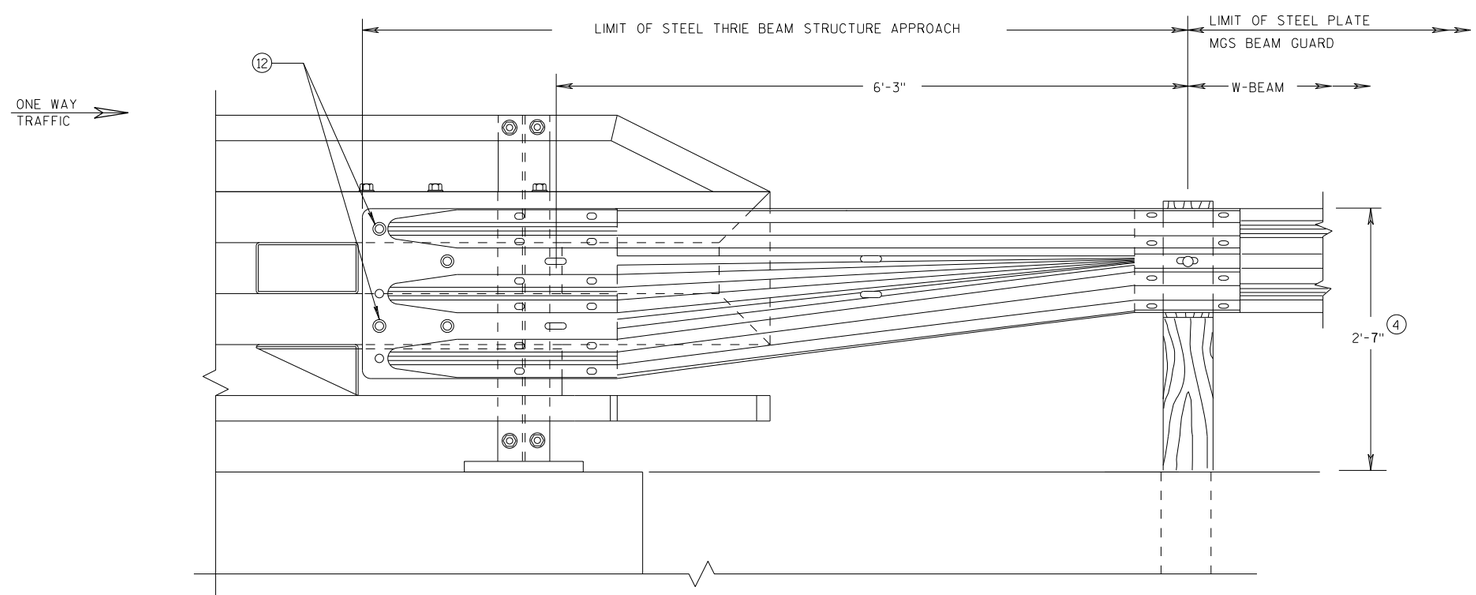

FRONT VIEW

W BEAM TRANSITION AND CONNECTION TO BRIDGE RAILING TYPE "NY4"

(USE ONLY ON THE TRAFFIC EXIT END OF ONE WAY BRIDGES)

MIDWEST GUARDRAIL SYSTEM THRIE BEAM TRANSITION (MGS)

STATE OF WISCONSIN
DEPARTMENT OF TRANSPORTATION

APPROVED
7/2018 — DATE
/S/ Rodney Taylor — ROADWAY STANDARDS DEVELOPMENT UNIT SUPERVISOR
FHWA

NT

6

S.D.D. 14 B 45-5L

GENERAL NOTES

DETAILS OF CONSTRUCTION, MATERIALS AND WORKMANSHIP NOT SHOWN ON THIS DRAWING SHALL CONFORM TO THE PERTINENT REQUIREMENTS OF THE STANDARD SPECIFICATIONS AND THE APPLICABLE SPECIAL PROVISIONS.

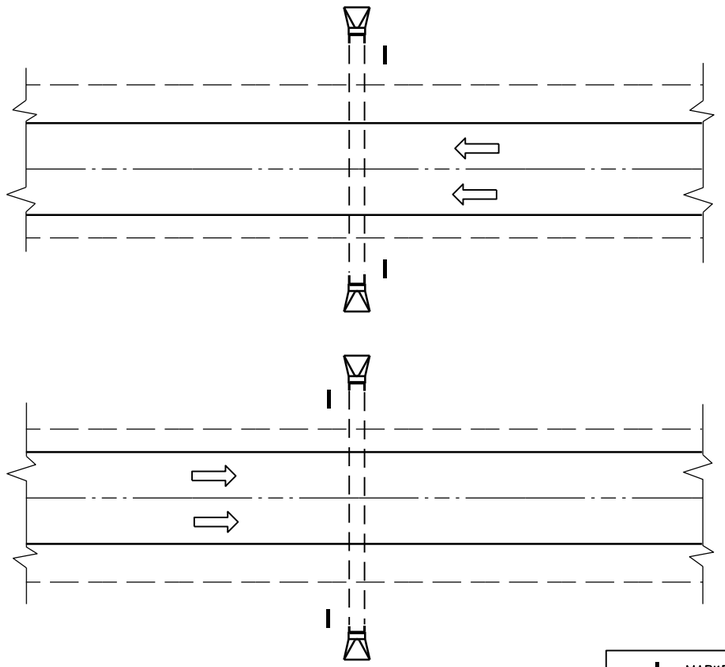

PLAN VIEW

DIVIDED HIGHWAY

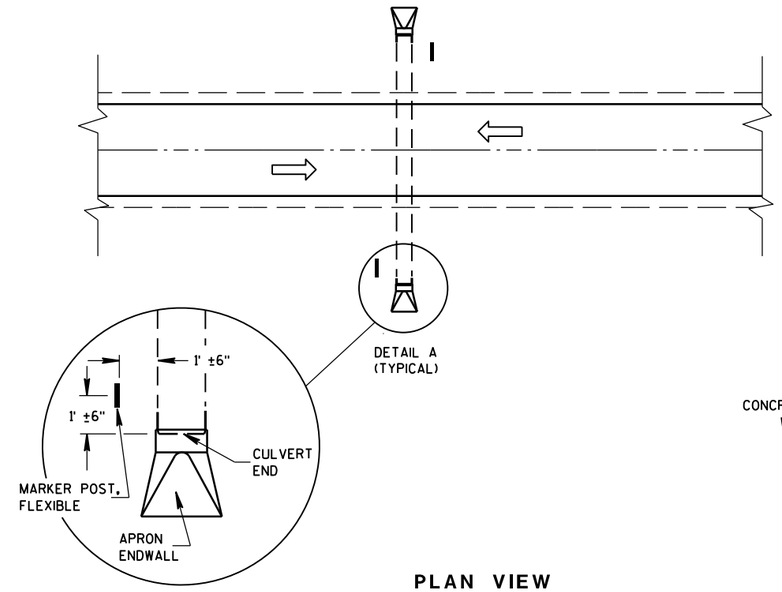

DETAIL A
(TYPICAL)

PLAN VIEW

UNDIVIDED HIGHWAY

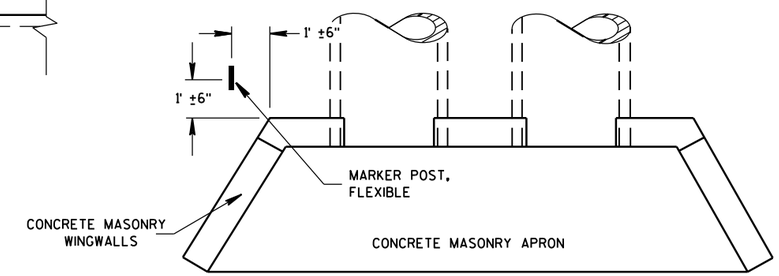

PLAN VIEW

CONCRETE MASONRY ENDWALLS FOR CULVERT PIPE AND PIPE ARCH

MARKER POST, FLEXIBLE

DIRECTION OF TRAFFIC FLOW

FLEXIBLE MARKER POST LOCATION

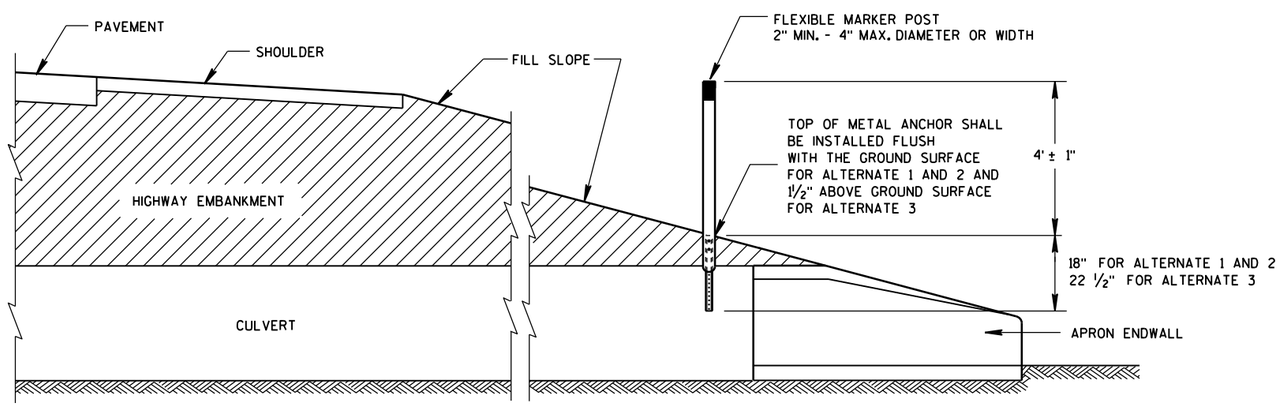

CROSS SECTION

FLEXIBLE MARKER POST

FLEXIBLE MARKER POST FOR CULVERT END

STATE OF WISCONSIN
DEPARTMENT OF TRANSPOR

6

6

S.D.D. 15 A 3-2a

S.D.D. 15 A 3-2a

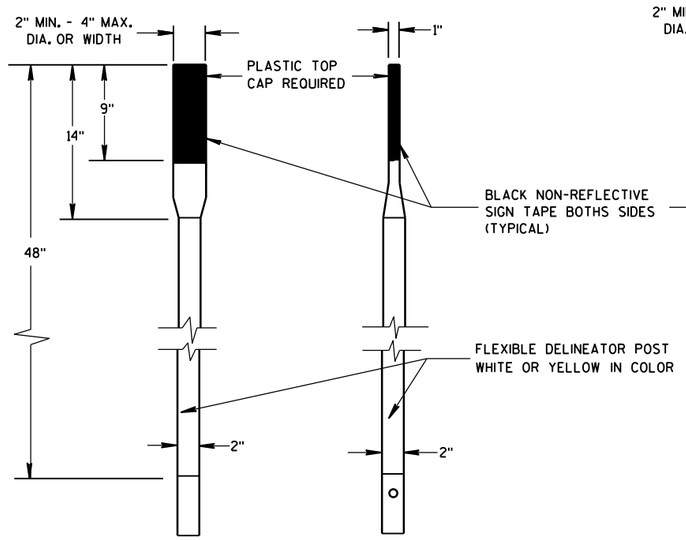

FRONT VIEW SIDE VIEW

ALTERNATE 1

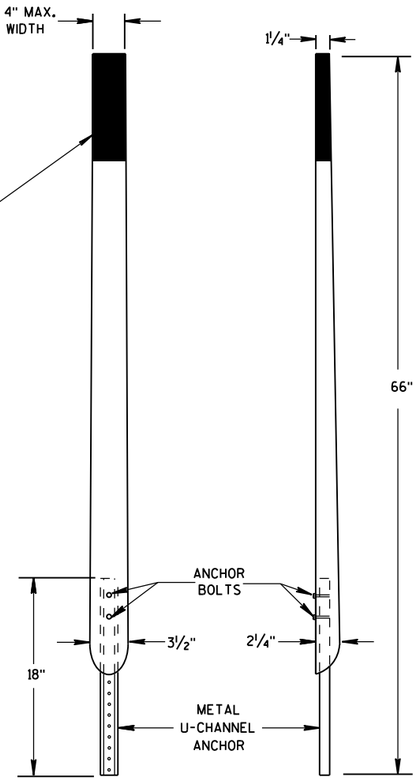

FRONT VIEW SIDE VIEW

ALTERNATE 2

FLEXIBLE MARKER POSTS

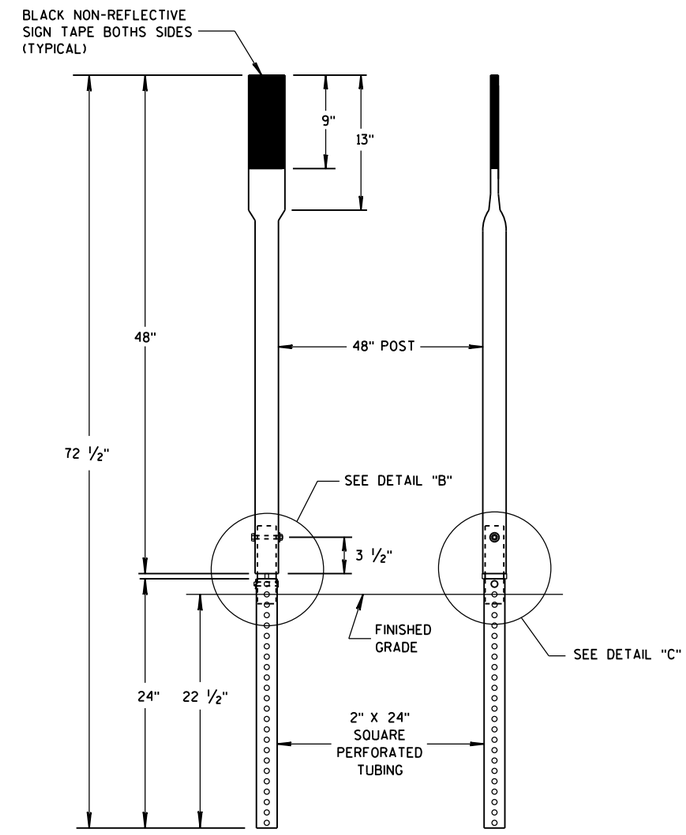

FRONT VIEW SIDE VIEW

ALTERNATE 3

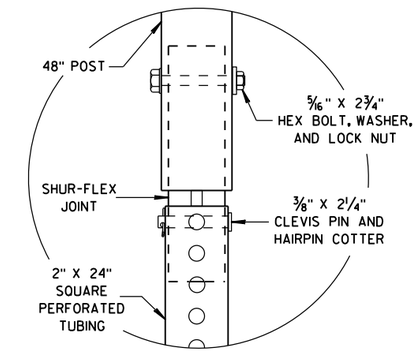

DETAIL B

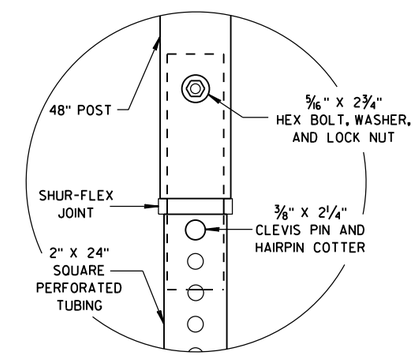

DETAIL C

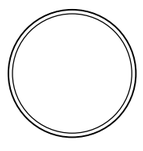

SECTION A-A

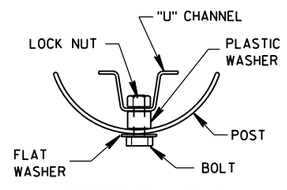

SECTION B-B

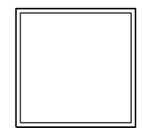

SECTION C-C

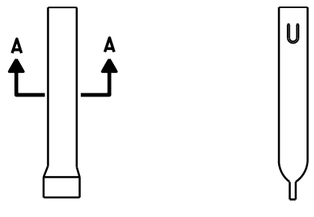

FRONT VIEW SIDE VIEW

ALTERNATE 1

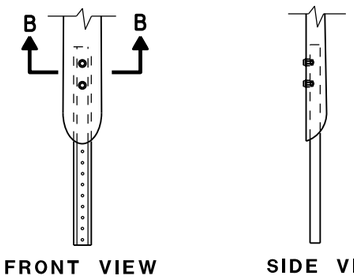

FRONT VIEW SIDE VIEW

ALTERNATE 2

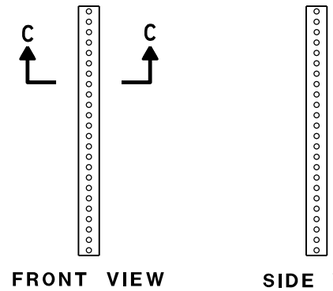

FRONT VIEW SIDE VIEW

ALTERNATE 3

FLEXIBLE MARKER POST ANCHORS

FLEXIBLE MARKER POST
FOR CULVERT END

STATE OF WISCONSIN
DEPARTMENT OF TRANSPORTATION

APPROVED
10/1/2012 /S/ Travis Feltes
DATE STATE TRAFFIC ENGINEER
FHWA

6

6

S.D.D. 15 A 3-2b

S.D.D. 15 A 3-2b

GENERAL NOTES

THE EXACT NUMBER, LOCATION, AND SPACING OF ALL SIGNS AND DEVICES SHALL BE ADJUSTED TO FIT FIELD CONDITIONS.

THE SPACING BETWEEN TRAFFIC CONTROL SIGNS SHOULD BE ADJUSTED TO NOT CONFLICT WITH AND SHOULD PROVIDE A MINIMUM OF 200 FEET (500 FEET DESIRABLE) CLEARANCE TO EXISTING SIGNS THAT WILL REMAIN IN PLACE.

ALL SIGNS ARE 48" X 48" UNLESS OTHERWISE NOTED.

SIGNS THAT WILL BE IN PLACE LESS THAN SEVEN CONTINUOUS DAYS AND NIGHTS MAY BE MOUNTED ON PORTABLE SUPPORTS.

IF A "STOP" SIGN MUST BE REMOVED FOR A WORK OPERATION, A TEMPORARY "STOP" SIGN SHALL BE PLACED PRIOR TO THE SIGN REMOVAL, OR A FLAGGER SHALL BE PROVIDED UNTIL THE SIGN IS REESTABLISHED.

* OMIT G20-1 SIGNS IF LENGTH OF WORK AREA IS 2 MILES OR LESS

** PLACE AN ADDITIONAL W20-1A "ROAD WORK AHEAD" SIGN IF WORK AREA WITHIN THE PROJECT IS SEPARATED BY MORE THAN 2 MILES FROM PREVIOUS WORK AREA.

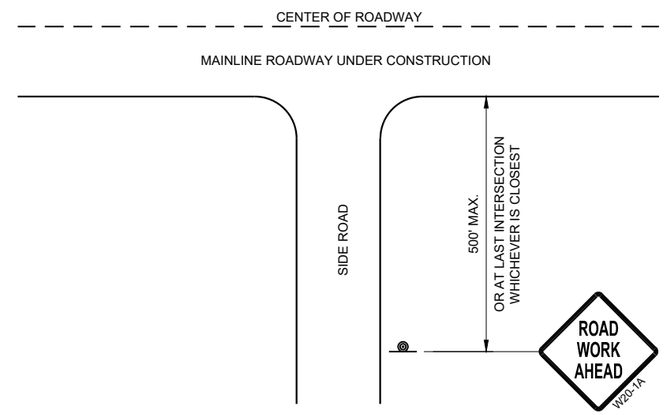

TYPICAL SIDE ROAD APPROACH WARNING SIGN DETAIL

LEGEND

- SIGN ON PERMANENT SUPPORT
- DIRECTION OF TRAFFIC
- WORK AREA

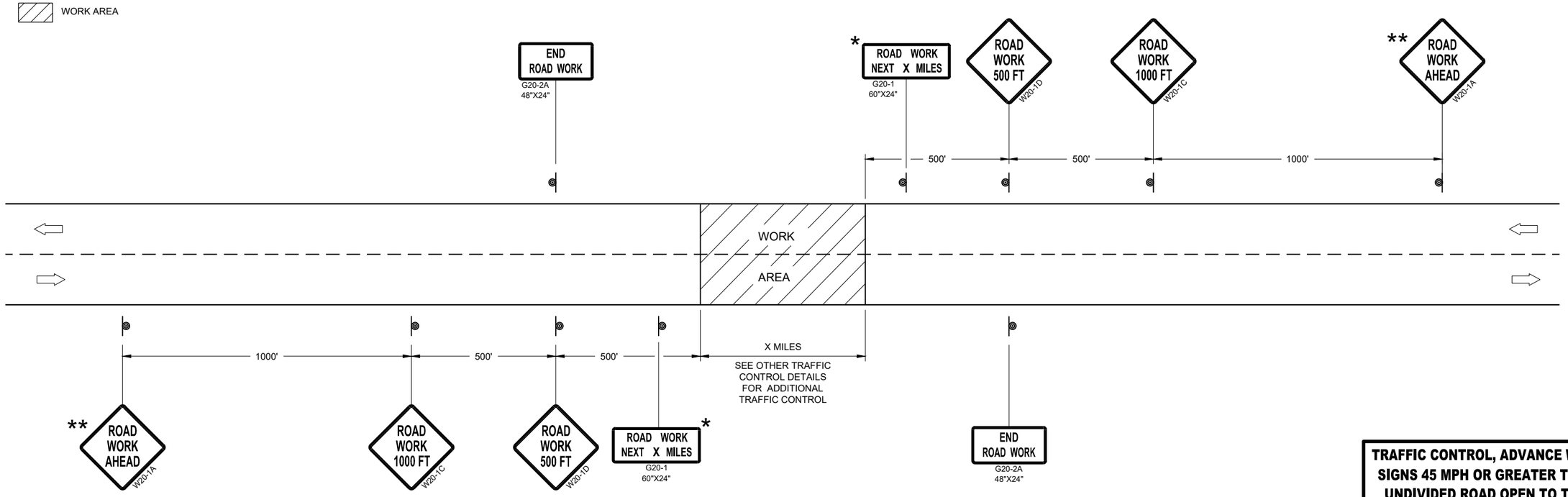

TRAFFIC CONTROL, ADVANCE WARNING SIGNS 45MPH OR GREATER

TRAFFIC CONTROL, ADVANCE WARNING SIGNS 45 MPH OR GREATER TWO-WAY UNDIVIDED ROAD OPEN TO TRAFFIC

STATE OF WISCONSIN
DEPARTMENT OF TRANSPORTATION

APPROVED
July 2018 — DATE
/S/ Andrew Heidtke — WORK ZONE ENGINEE
FHWA

6
SDD 15C04 - 05

GENERAL NOTES

DETAILS OF INSTALLATION, MATERIALS AND WORKMANSHIP NOT SHOWN ON THIS DRAWING SHALL CONFORM TO THE PERTINENT REQUIREMENTS OF THE STANDARD SPECIFICATIONS AND APPLICABLE SPECIAL PROVISIONS.

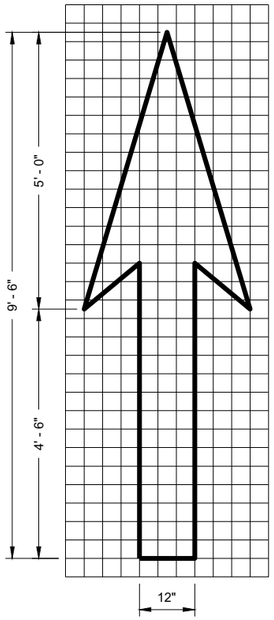

TYPE 1

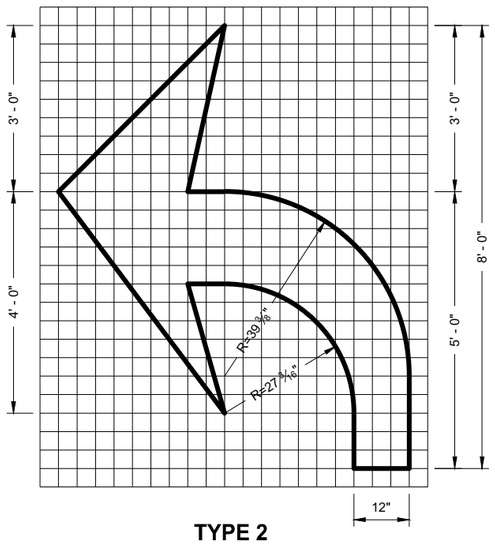

TYPE 2

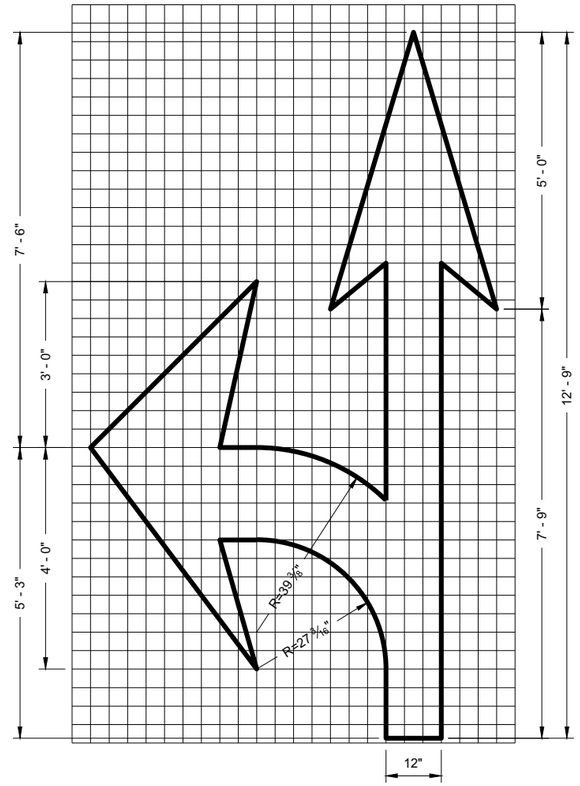

TYPE 3

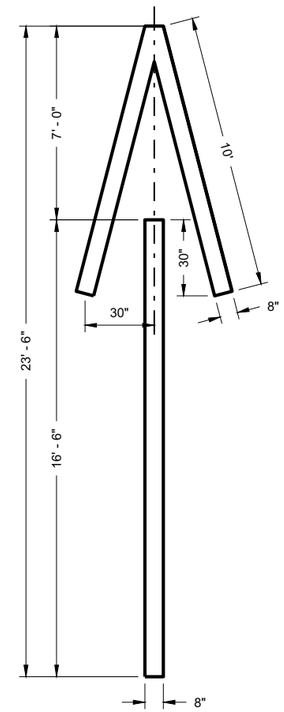

TYPE 4

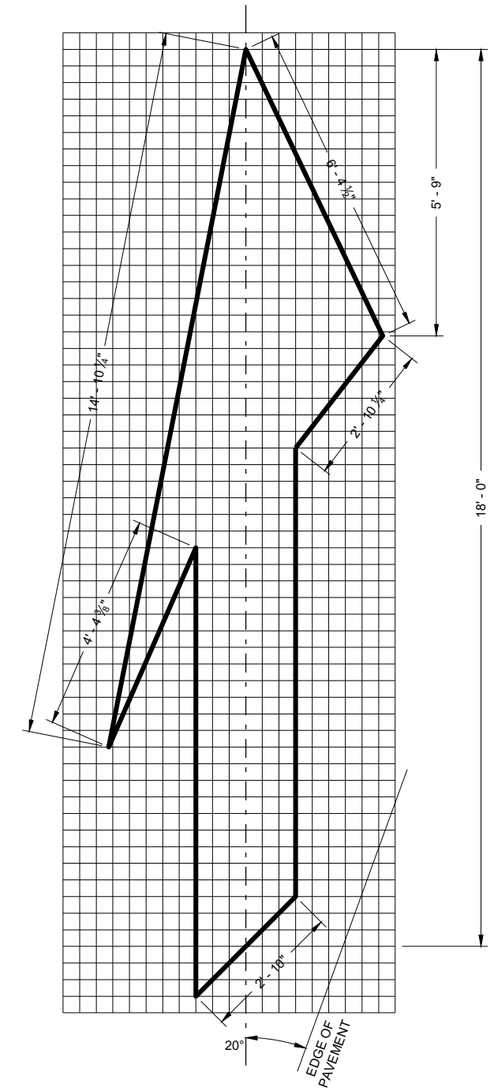

TYPE 5 LANE DROP ARROW

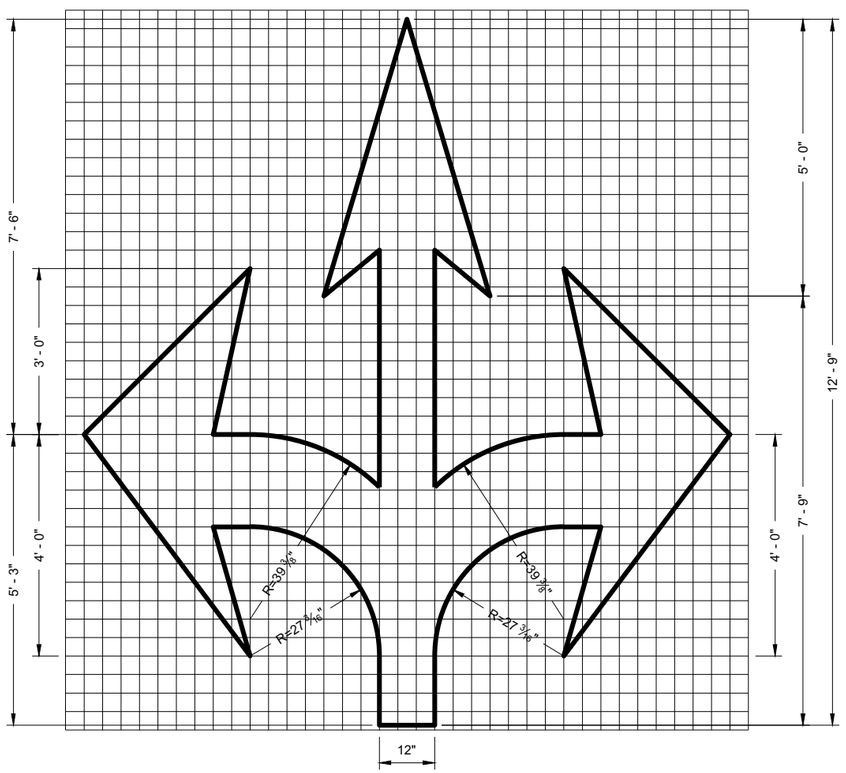

TYPE 6

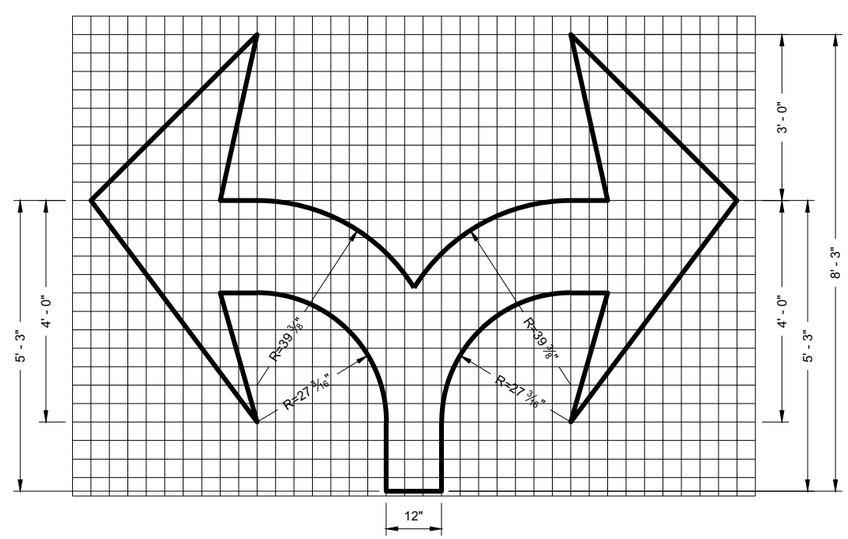

TYPE 7

6

6

PAVEMENT MARKING ARROWS

STATE OF WISCONSIN
DEPARTMENT OF TRANSPORTATION

APPROVED
November 2019 — DATE
/S/ Matthew Rauch — STATE SIGNING AND MAR ENGINEER
FHWA

SDD 15C07 - 15c

SDD 15C07 - 15c

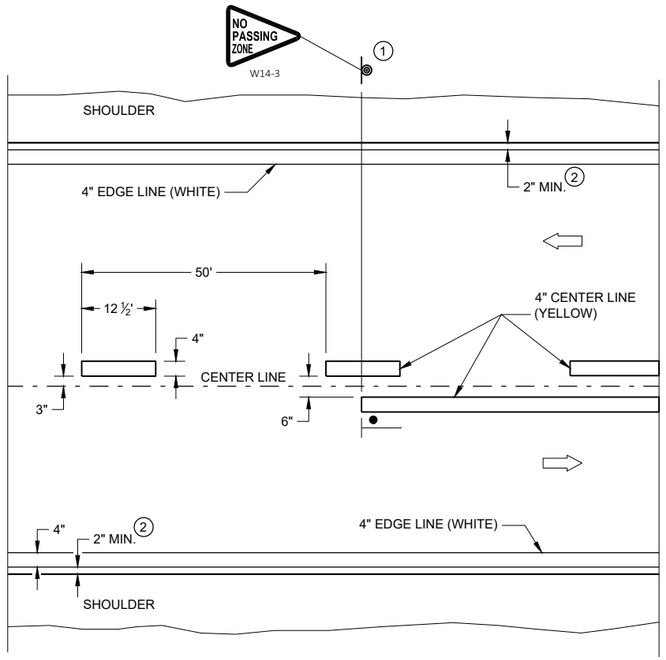

TWO WAY TRAFFIC

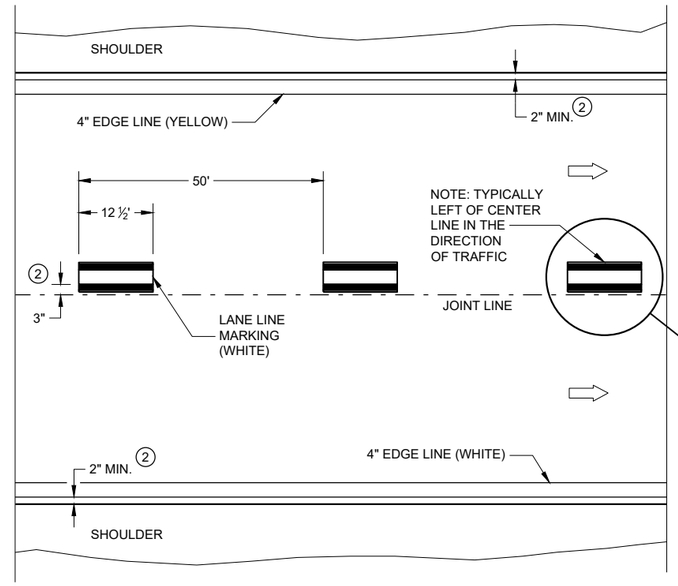

ONE WAY TRAFFIC

PERMANENT PAVEMENT MARKING

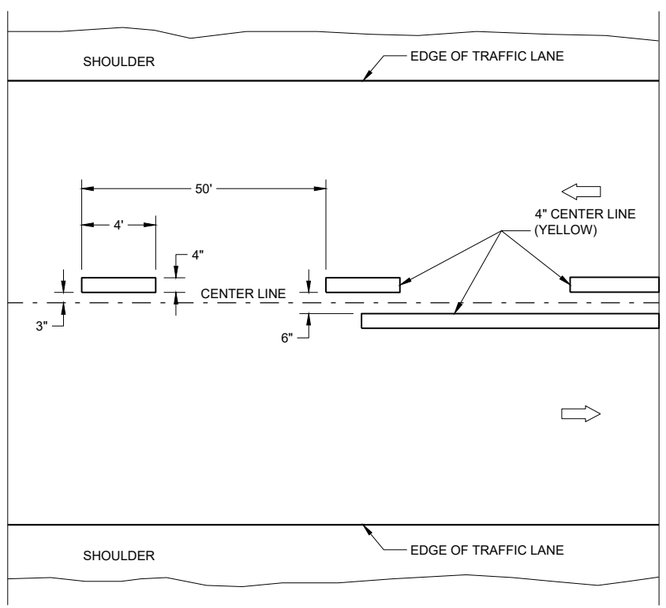

TWO WAY TRAFFIC

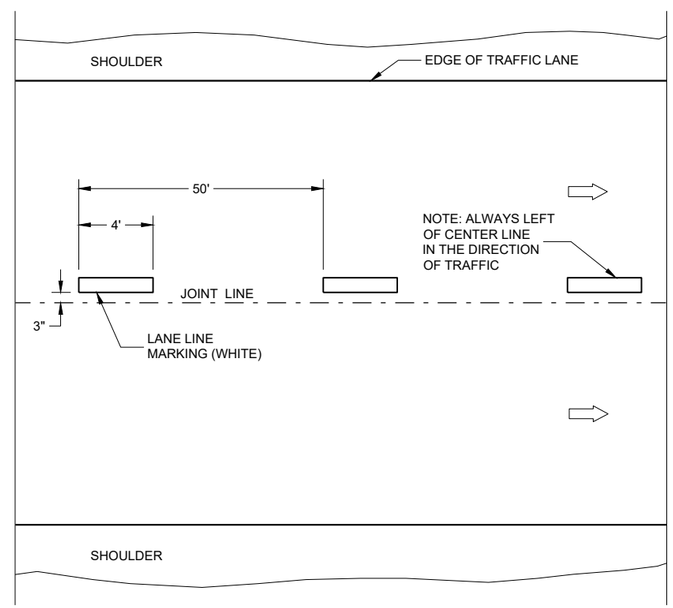

ONE WAY TRAFFIC

TEMPORARY PAVEMENT MARKING

GENERAL NOTES

DETAILS OF CONSTRUCTION NOT SHOWN ON THIS DRAWING SHALL CONFORM TO STANDARD SPECIFICATIONS AND SPECIAL PROVISIONS.

1. LOCATE THE NO PASSING ZONE W14-3 SIGN WITHIN 50 FEET OF THE "T" MARKING
2. MEASURE FROM EDGE OF MARKING TO JOINT LINE. THIS DOES NOT INCLUDE SPACE NEEDED FOR GROOVING OPERATIONS.

LEGEND

"T" MARKING

SIGN ON PERMANENT SUPPORT

DIRECTION OF TRAFFIC

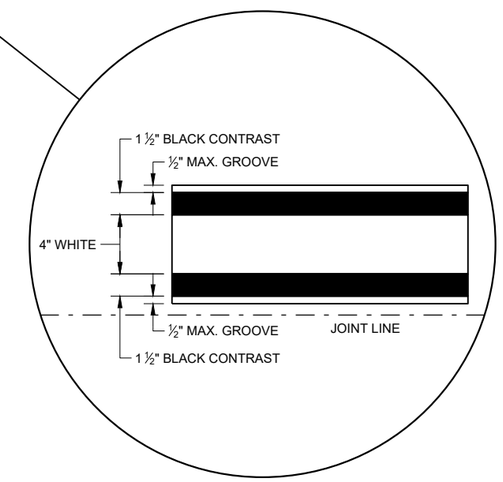

LONGITUDINAL MARKING (MAINLINE)

STATE OF WISCONSIN
DEPARTMENT OF TRANSPORTATION

APPROVED
February 2020 — DATE
/S/ Matthew Rauch — STATEWIDE SIGNING AND M ENGINEER
FHWA

6

SDD 15C08 - 20a

GENERAL NOTES

1. A SET OF ARROWS IS REQUIRED EVERY 400 FEET OR NEAR INTERSECTIONS OR DRIVEWAYS WITH TURNING TRAFFIC.
2. 8" WHITE
3. TURN BAY LENGTH OF LESS THAN 48' DOES NOT REQUIRE PAVEMENT ARROWS OR TEXT.

DIRECTION OF TRAFFIC

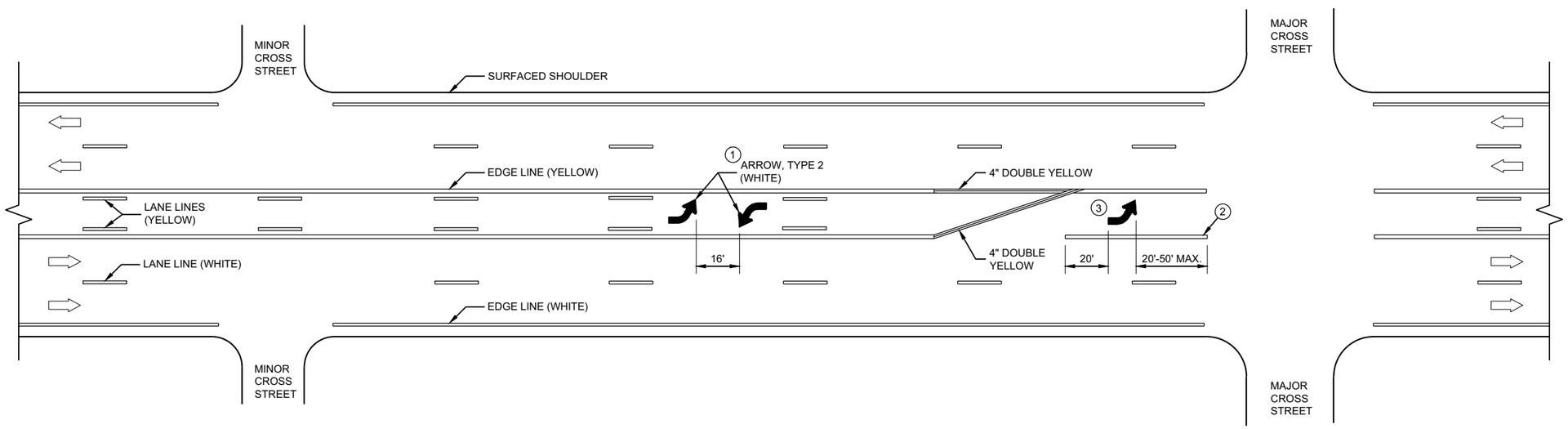

TWO WAY LEFT TURN LANE

PAVEMENT MARKING (TURN LANES)

STATE OF WISCONSIN
DEPARTMENT OF TRANSPORTAT

6

SDD 15C08 - 20b

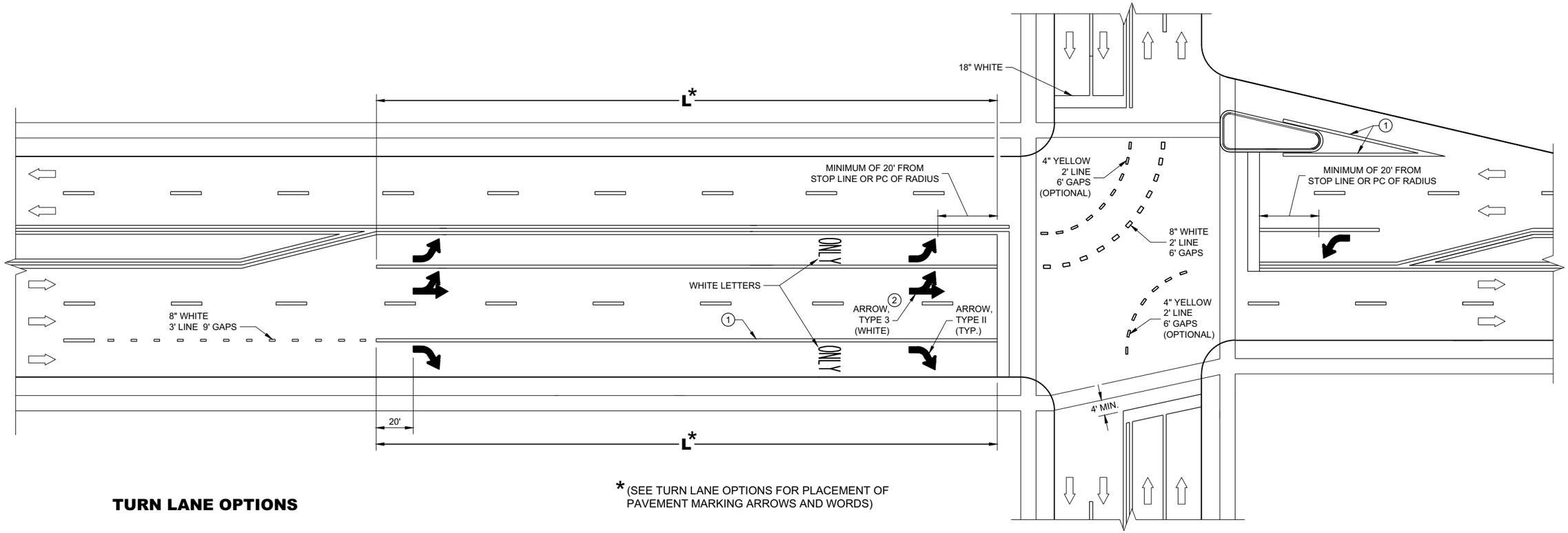

*(SEE TURN LANE OPTIONS FOR PLACEMENT OF PAVEMENT MARKING ARROWS AND WORDS)

TURN LANE OPTIONS

LENGTH OF TURN BAY (L) OF 0 - 47' DOES NOT REQUIRE PAVEMENT MARKING ARROWS OR WORDS

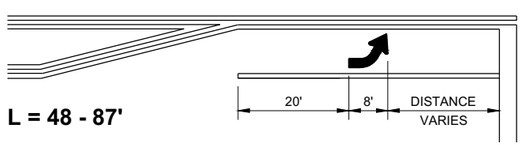

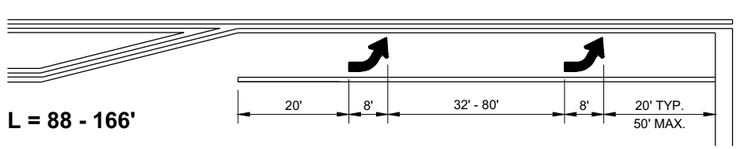

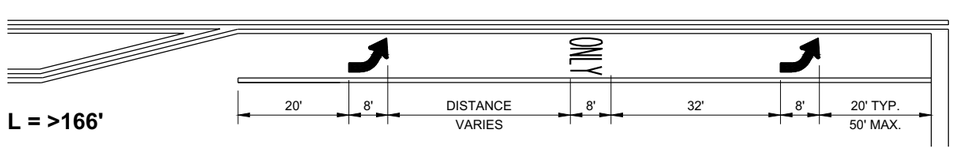

GENERAL NOTES

1. 8" WHITE
2. QUANTITY AND LOCATION OF TYPE 3 ARROWS ARE THE SAME AS THE TYPE II ARROWS IN THE ADJACENT TURN LANE. FOR TURN LANES WITH A PHYSICAL SEPARATION IN THE SAME DIRECTION OF TRAVEL, THE ARROWS AND "ONLY" MARKING MAY BE ELIMINATED.

⇨ DIRECTION OF TRAFFIC

L = LENGTH OF TURN BAY

PAVEMENT MARKING (TURN LANES)

STATE OF WISCONSIN
DEPARTMENT OF TRANSPORTA

6

SDD 15C08 - 20c

GENERAL NOTES

1. REFLECTIVE SHEETING SHALL FOLLOW THE REQUIREMENTS IN THE APPROVED PRODUCTS LISTING FOR SIGN SHEETING.
2. LOCATION OF WARNING LIGHTS WHEN SHOWN ON THE PLAN.

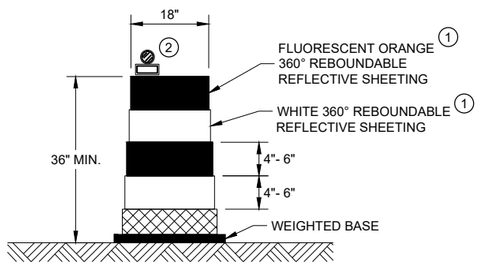

DRUM

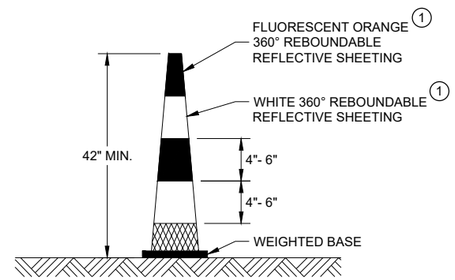

42" CONE

DO NOT USE IN TAPERS
½ SPACING OF DRUMS

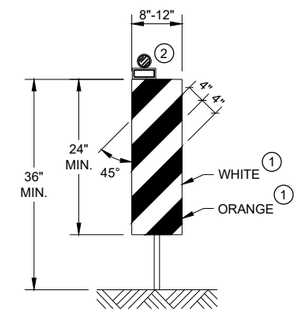

VERTICAL PANEL

THE STRIPES SHALL SLOPE DOWNWARD TO
THE TRAFFIC SIDE FOR CHANNELIZATION.

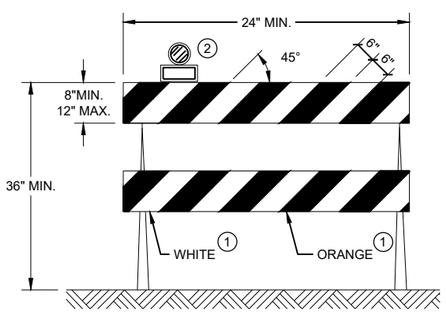

TYPE II BARRICADE

FOR RAILS LESS THAN 36" LONG, 4" WIDE STRIPES
MAY BE USED. ALL STRIPES SHALL SLOPE DOWNWARD
TO THE TRAFFIC SIDE FOR CHANNELIZATION.

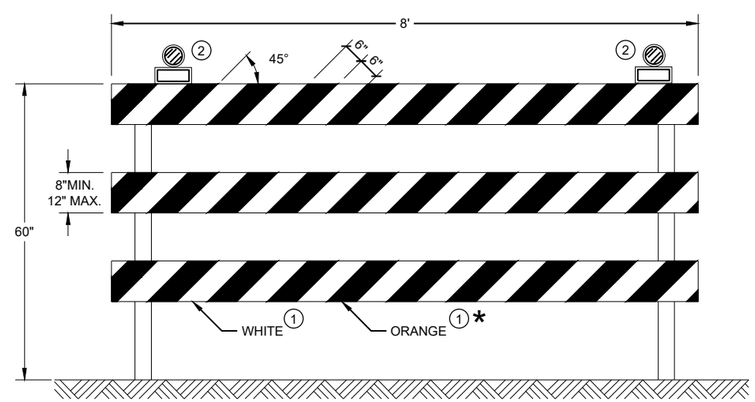

TYPE III BARRICADE

IF SIGN MOUNTED, DO NOT COVER MORE THAN 50% OF THE TOP
TWO RAILS OR 33% OF THE TOTAL AREA OF THE THREE RAILS.

* IF USED FOR A PERMANENT APPLICATION USE RED SHEETING.

CHANNELIZING DEVICES DRUMS, CONES, BARRICADES AND VERTICAL PANELS

STATE OF WISCONSIN
DEPARTMENT OF TRANSPORTATION

APPROVED
May 2021 — DATE
/S/ Andrew Heidtke — WORK ZONE ENGINEE
FHWA

6

SDD 15C11 - 09b

6

SDD 15C11 - 09b

LEGEND

SIGN ON PORTABLE OR PERMANENT SUPPORT

TEMPORARY PORTABLE RUMBLE STRIP ARRAY

DIRECTION OF TRAFFIC

WORK AREA

FLAGGER, EQUIPPED WITH STOP/SLOW PADDLE FASTENED ON SUPPORT STAFF

GENERAL NOTES

DETAILS OF TRAFFIC CONTROL DEVICES AND INSTALLATION NOT SHOWN ON THIS DRAWING SHALL CONFORM TO THE PERTINENT REQUIREMENTS OF THE STANDARD SPECIFICATIONS, THE SPECIAL PROVISIONS, AND THE MANUAL ON UNIFORM TRAFFIC CONTROL DEVICES.

ALL SIGNS ARE 48" X 48" UNLESS OTHERWISE NOTED.

"WO" SIGNS ARE THE SAME AS "W" SIGNS EXCEPT THE BACKGROUND IS ORANGE.

THE EXACT NUMBER, LOCATION AND SPACING OF ALL SIGNS, DEVICES, AND LOCATION OF ALL FLAGGERS SHALL BE ADJUSTED TO FIT FIELD CONDITIONS AS APPROVED BY THE ENGINEER.

THE FIRST ADVANCE WARNING SIGN SHOULD TYPICALLY BE LOCATED IN ADVANCE OF THE ANTICIPATED TRAFFIC BACKUP OR QUEUE.

WHEN A SIDE ROAD OR RAMP INTERSECTS THE FACILITY ON WHICH THE WORK IS BEING PERFORMED, ADDITIONAL TRAFFIC CONTROLS SHALL BE PROVIDED AS SPECIFIED IN THE PLANS AND/OR THE SPECIAL PROVISIONS OR AS APPROVED BY THE ENGINEER.

FLAGGING

FLAGGERS SHALL BE IN SIGHT OF EACH OTHER OR IN DIRECT COMMUNICATION AT ALL TIMES. THEY SHALL BE EQUIPPED WITH STOP/SLOW PADDLES FASTENED ON SUPPORT STAFFS. WHEN THE FLAGGING OPERATION IS NOT IN EFFECT REMOVE TEMPORARY PORTABLE RUMBLE STRIPS PRIOR TO COVERING OR REMOVING ALL ADVANCE SIGNING.

(1) FOR MOVING WORK OPERATIONS, POST ADDITIONAL W20-7A FLAGGER SIGNS AT APPROXIMATELY 3,500' INTERVALS IN THE MOVING WORK OPERATION OR AS APPROVED BY THE ENGINEER.

(2) SIGN NOT REQUIRED IF FLAGGING OPERATION OCCURS WITHIN A SIGNED ROAD WORK ZONE AREA.

WHEN THE DISTANCE BETWEEN FLAGGERS EXCEEDS 2 MILES, A PILOT CAR IS REQUIRED. WHEN CURVES REDUCE SIGHT DISTANCE BELOW 400', A PILOT CAR IS REQUIRED.

TEMPORARY PORTABLE RUMBLE STRIPS

UTILIZE TEMPORARY PORTABLE RUMBLE STRIPS ON ALL FLAGGING OPERATIONS.

(3) EACH TEMPORARY PORTABLE RUMBLE STRIP ARRAY CONSISTS OF THREE RUMBLE STRIPS PLACED TRANSVERSE ACROSS THE LANE AT THE LOCATIONS SHOWN. WITHIN EACH ARRAY, SPACING BETWEEN RUMBLE STRIPS SHALL BE 15 FEET ON CENTER

ONLY USE TEMPORARY PORTABLE RUMBLE STRIPS FROM THE APPROVED PRODUCTS LIST.

INSTALL TEMPORARY RUMBLE STRIPS PER MANUFACTURER'S RECOMMENDATIONS.

PLACE ADVANCE SIGNING PRIOR TO INSTALLING TEMPORARY RUMBLE STRIPS.

DO NOT INSTALL TEMPORARY PORTABLE RUMBLE STRIPS ON GRAVEL, MILLED SURFACES, OR ASPHALT THAT HAS BEEN PAVED LESS THAN 12 HOURS.

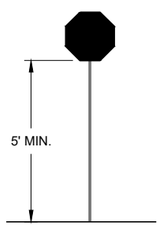

STOP/SLOW PADDLE ON SUPPORT STAFF

SIGN AND TEMPORARY RUMBLE STRIP ARRAY SPACING TABLE

SPEED LIMIT	SPACING "A"
25-30 MPH	200'
35-40 MPH	350'
45-55 MPH	500'

WO3-4

USE OF WO3-4 SIGN IS OPTIONAL. WHEN USED, THIS SIGN SHALL BE LOCATED BETWEEN THE W20-7A AND W20-4A SIGNS, USING SPACING "A".

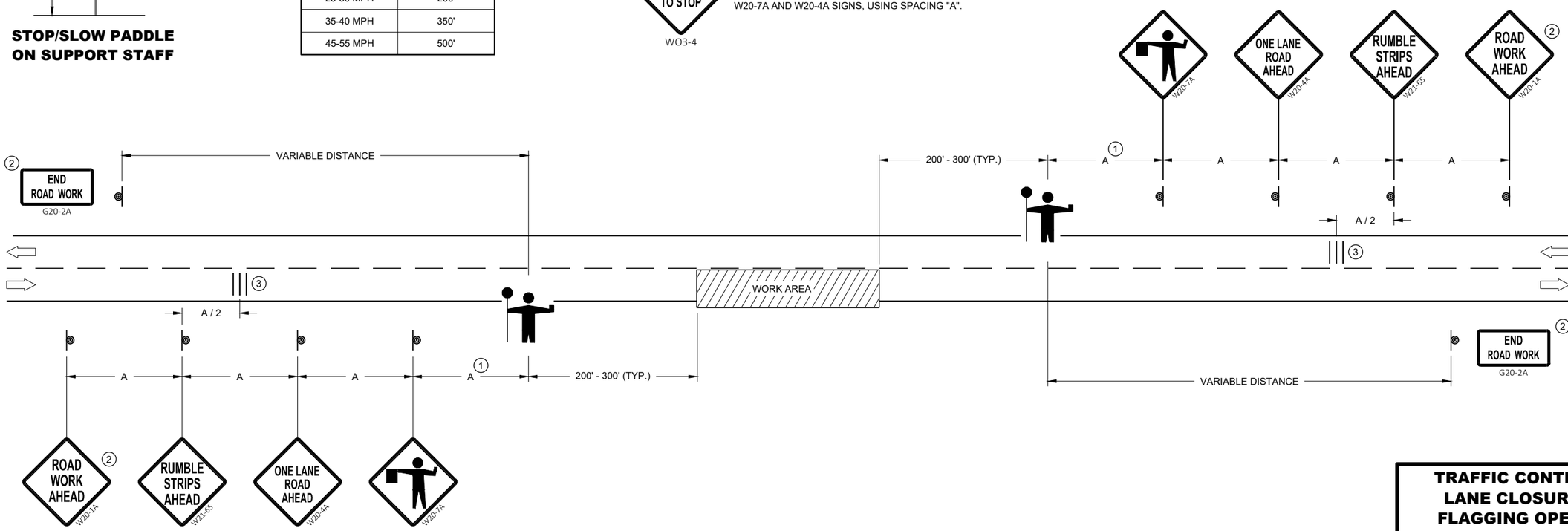

TRAFFIC CONTROL FOR LANE CLOSURE WITH FLAGGING OPERATION

STATE OF WISCONSIN
DEPARTMENT OF TRANSPORTATION

APPROVED
November 2021 /S/ Andrew Heidtke
DATE WORK ZONE ENGINEE
FHWA

6

SDD 15C12 - 08

GENERAL NOTES

STOP SIGN SHALL BE PLACED A MINIMUM OF 6 FEET TO A MAXIMUM OF 50 FEET FROM THE EDGELINE LOCATION.

1. 18-INCH STOP LINES MAY BE DELETED OR ADDED BY THE REGION MARKING ENGINEER BASED ON VISIBILITY AND SIGHT LINES.
2. NO STOP LINE IS REQUIRED IF STOP SIGN IS LESS THAN OR EQUAL TO 40 FEET FROM THE EDGELINE.
3. NO STOP LINE IS REQUIRED IF STOP SIGN IS LESS THAN OR EQUAL TO 30 FEET FROM THE FLANGELINE EXTENSION.
4. MOVE CLOSER TO THE EDGE OF TRAVEL LINE AS NEEDED FOR VISIBILITY AND SIGHT LINES (NO CLOSER THAN 4 FEET).
5. LADDER BAR CROSSWALKS SHOULD ONLY BE USED FOR MID BLOCK CROSSINGS. USE 2 - 6" TRANSVERSE LINES INSTEAD.

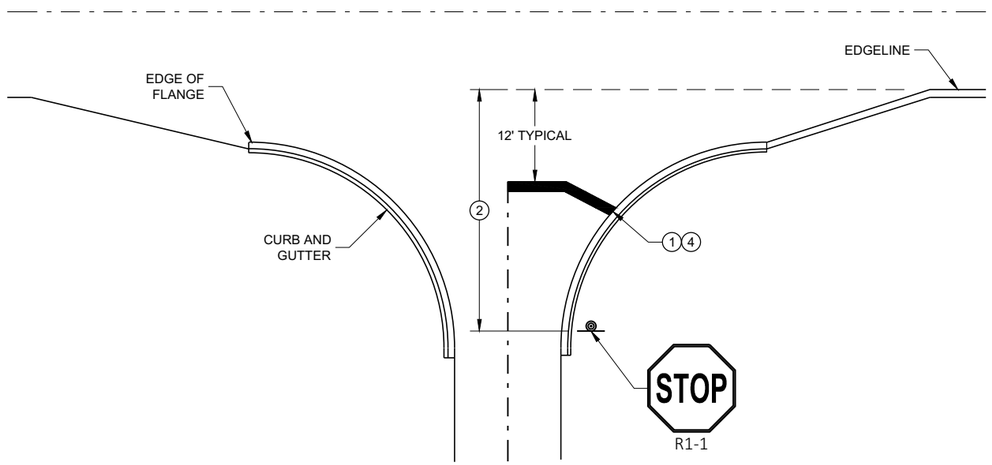

TYPICAL STOP LINE PAVEMENT MARKING WITH CURB AND GUTTER

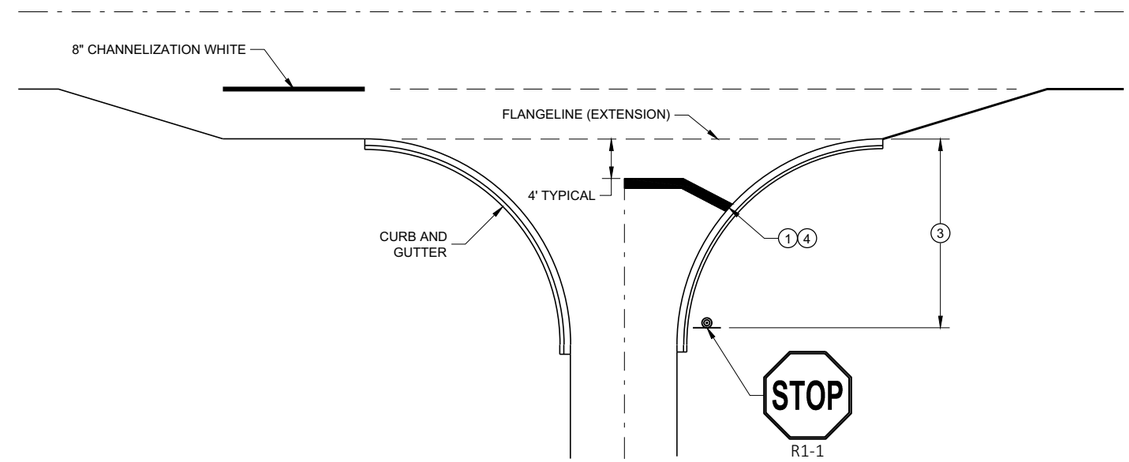

TYPICAL STOP LINE PAVEMENT MARKING FOR SIDEROADS WITH RIGHT TURN LANE

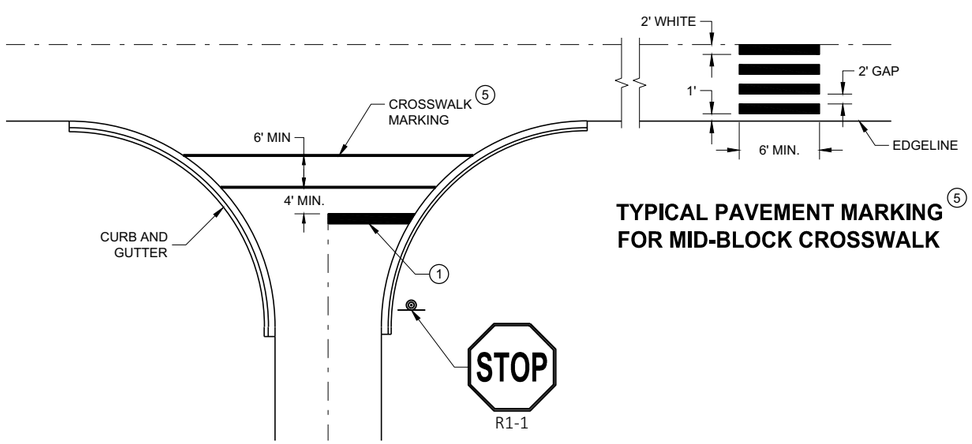

TYPICAL STOP LINE PAVEMENT MARKING FOR SIDEROADS WITH CROSSWALK MARKING

TYPICAL PAVEMENT MARKING 5 FOR MID-BLOCK CROSSWALK

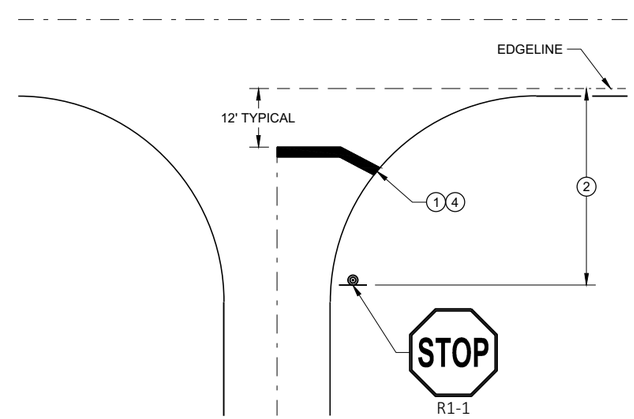

TYPICAL STOP LINE PAVEMENT MARKING WITHOUT CURB AND GUTTER

STOP LINE AND CROSSWALK PAVEMENT MARKING

STATE OF WISCONSIN
DEPARTMENT OF TRANSPORTATION

APPROVED
November 2019 — DATE
/S/ Matthew Rauch — STATE SIGNING AND MAF ENGINEER
FHWA

6

SDD 15C33 - 04

GENERAL NOTES

OMIT EDGE LINES THROUGH INTERSECTIONS. CONTINUE EDGE LINES THROUGH DRIVEWAYS.

1. WHEN DISTANCE "A" IS LESS THAN 250 FEET, OMIT LANE LINE.
2. WHEN DISTANCE "B" IS LESS THAN 100 FEET, OMIT CHANNELIZING LANE LINE.
3. BARRIER LINE ENDS AT SIDE ROAD PAVEMENT / SURFACE EDGE EXTENSION.
4. BARRIER LINE STARTS 500 FEET PRIOR TO THE BYPASS TAPER.

LEGEND

DIRECTION OF TRAVEL

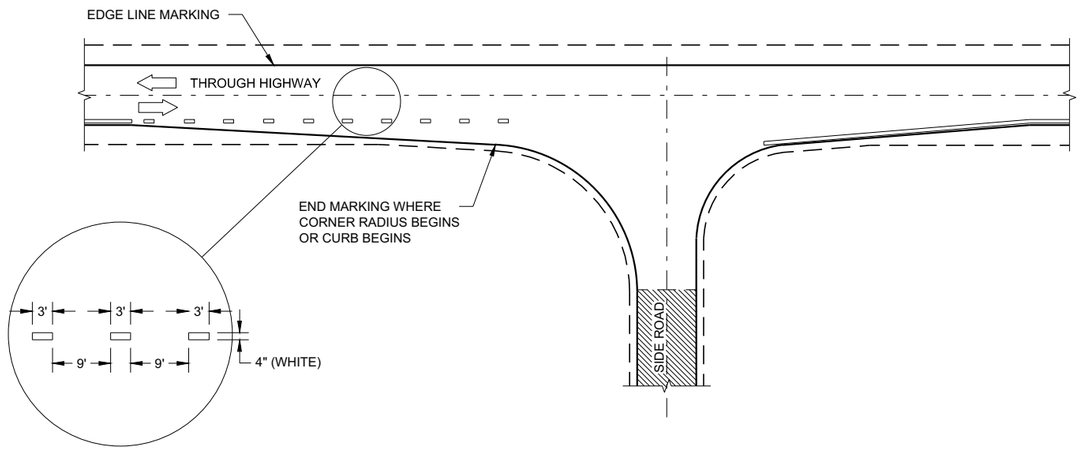

MINOR INTERSECTION

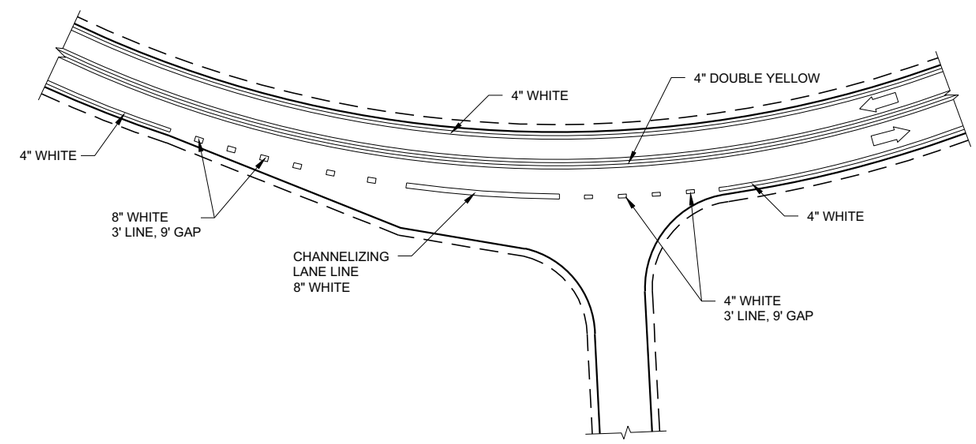

INTERSECTION ON OUTSIDE OF CURVE

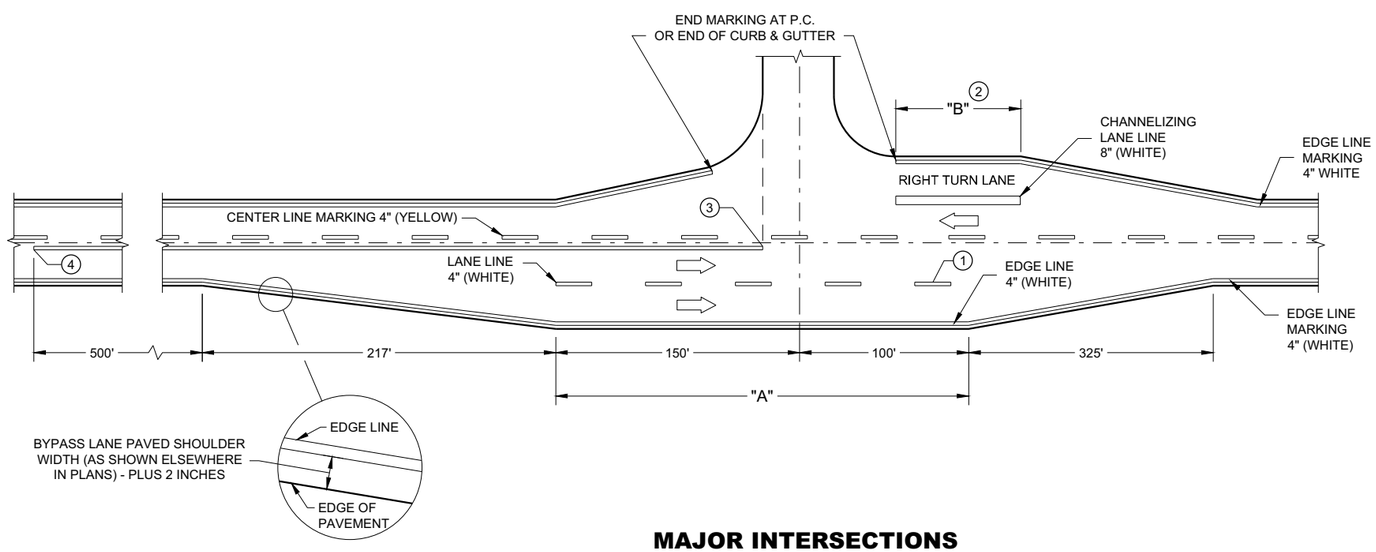

MAJOR INTERSECTIONS

(INTERSECTION WITH FULL RIGHT TURN LANE OR BYPASS LANE)

PAVEMENT MARKING (INTERSECTIONS)

STATE OF WISCONSIN
DEPARTMENT OF TRANSPORTAT

6

SDD 15C35 - 04a

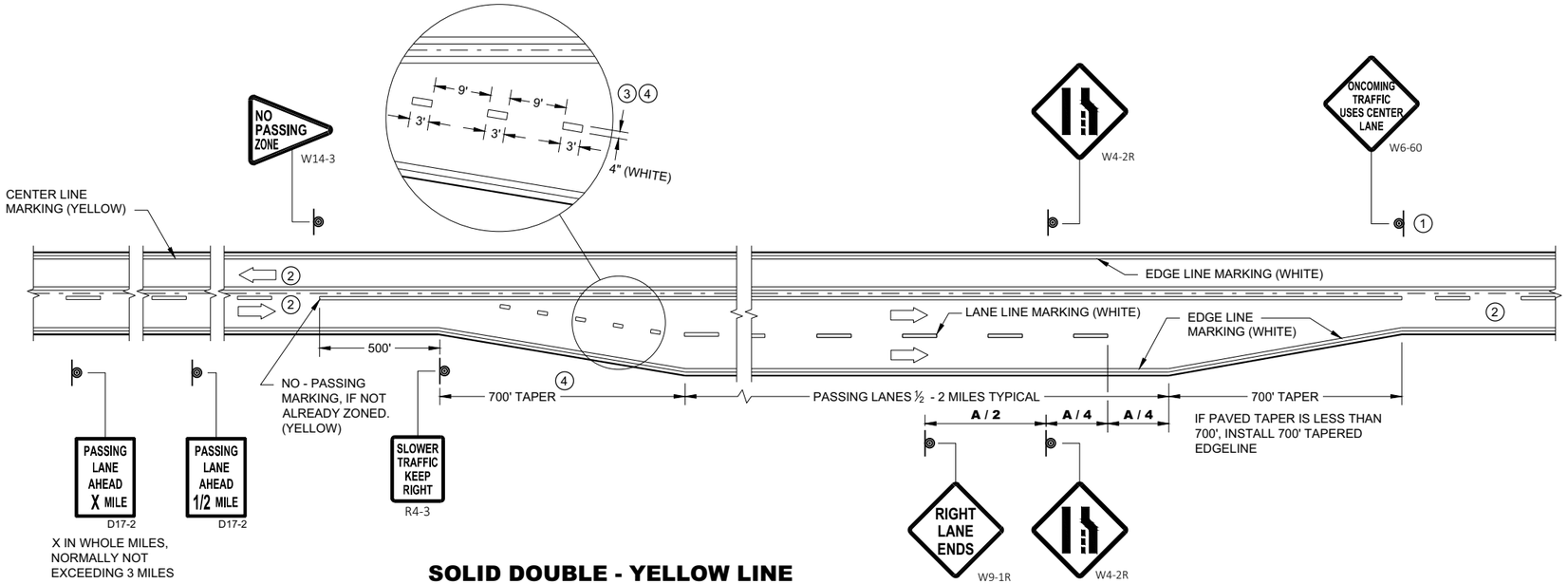

SOLID DOUBLE - YELLOW LINE (THROUGHOUT ENTIRE PASSING / CLIMBING LANE)

GENERAL NOTES

1. SIGN SHALL BE REPEATED AT 1 MILE INCREMENTS OR AT THE DISCRETION OF THE REGIONAL TRAFFIC ENGINEER.
2. THERE MAY BE SOLID YELLOW ON THE CENTERLINE DUE TO SIGHT CONDITIONS.
3. THE TAPER LENGTH OF THE DOTTED LINE PAVEMENT MARKING SHALL BE 700 FEET, 3' LINE, 9' GAP, EXCEPT RETRACE THE EXISTING LINE - GAP PATTERN WHERE EXISTING MARKINGS ARE IN PLACE.
4. WHEN THE ENTRANCE TAPER IS LESS THAN 700 FEET OR THE SHOULDER WIDTH IN THE PASSING / CLIMBING LANE IS LESS THAN THE ADJACENT HIGHWAY, DO NOT INSTALL DOTTED LINE PAVEMENT MARKING.
5. REPEAT EVERY 1 MILE UP UNTIL R4-53.

ARROW SYMBOL (⇨) SHOWS DIRECTION OF TRAVEL

DISTANCE TABLE

POSTED OR 85th PERCENTILE SPEED	DISTANCE "A"
45	775
50	885
55	990

6

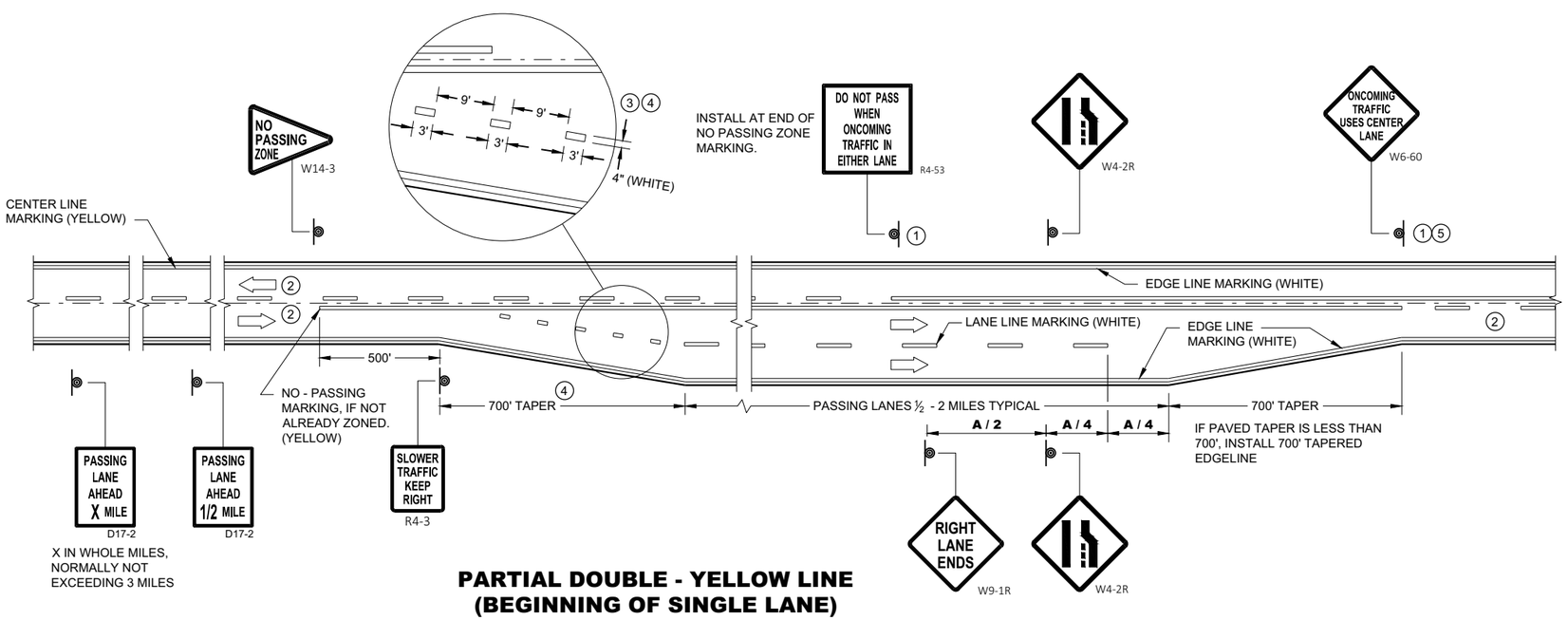

PARTIAL DOUBLE - YELLOW LINE (BEGINNING OF SINGLE LANE)

6

PAVEMENT MARKING & SIGNING (CLIMBING LANE & PASSING LANE)

STATE OF WISCONSIN
DEPARTMENT OF TRANSPORTATION

SDD 15C35 - 04b

SDD 15C35 - 04b

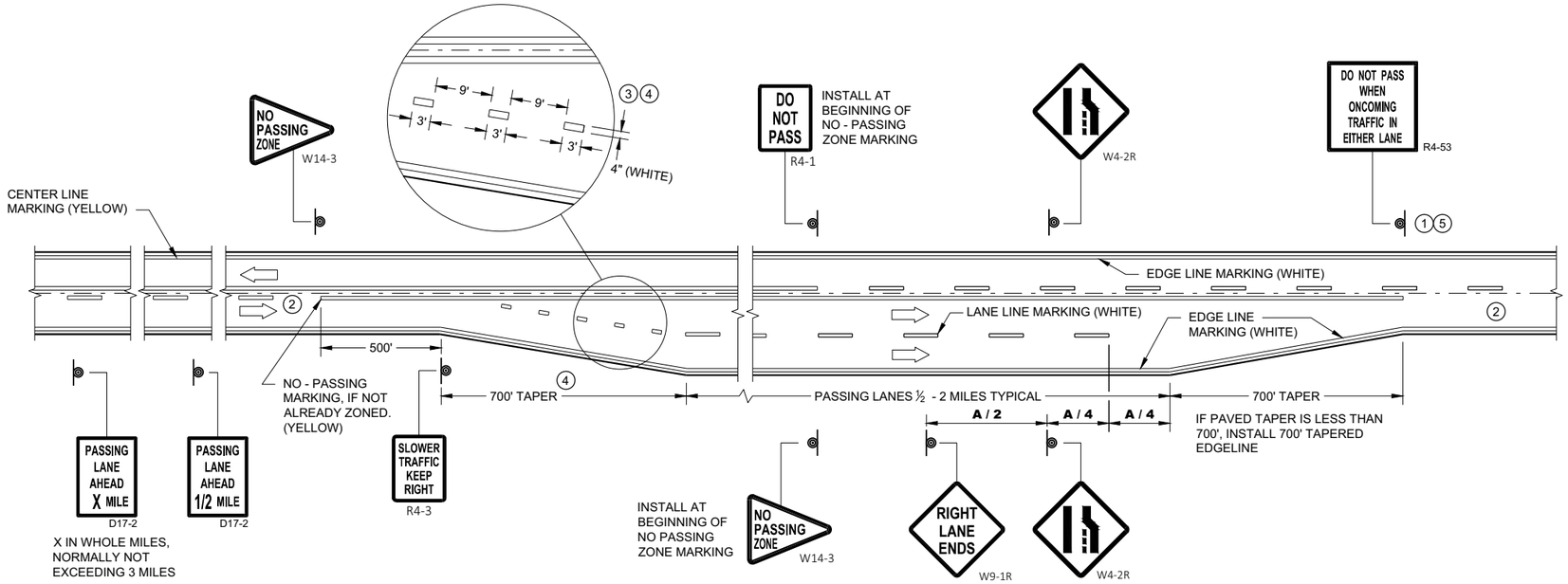

SOLID DOUBLE - YELLOW LINE (END OF SINGLE LANE)

GENERAL NOTES

1. SIGN SHALL BE REPEATED AT 1 MILE INCREMENTS OR AT THE DISCRETION OF THE REGIONAL TRAFFIC ENGINEER.
2. THERE MAY BE SOLID YELLOW ON THE CENTERLINE DUE TO SIGHT CONDITIONS.
3. THE TAPER LENGTH OF THE DOTTED LINE PAVEMENT MARKING SHALL BE 700 FEET, 3' LINE, 9' GAP, EXCEPT RETRACE THE EXISTING LINE - GAP PATTERN WHERE EXISTING MARKINGS ARE IN PLACE.
4. WHEN THE ENTRANCE TAPER IS LESS THAN 700 FEET OR THE SHOULDER WIDTH IN THE PASSING / CLIMBING LANE IS LESS THAN THE ADJACENT HIGHWAY, DO NOT INSTALL DOTTED LINE PAVEMENT MARKING.
5. REPEAT EVERY ONE MILE UP UNTIL NO PASSING ZONE.

ARROW SYMBOL (⇨) SHOWS DIRECTION OF TRAVEL

DISTANCE TABLE

POSTED OR 85th PERCENTILE SPEED	DISTANCE "A"
45	775
50	885
55	990

6

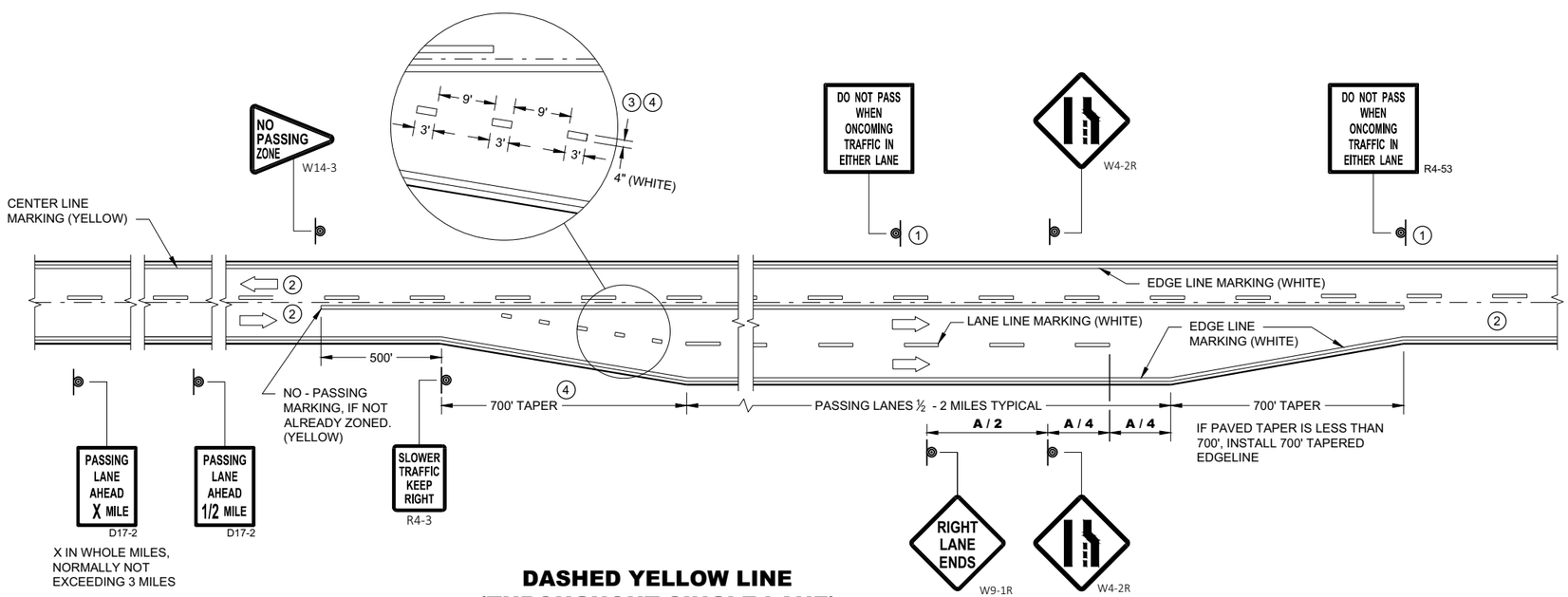

DASHED YELLOW LINE (THROUGHOUT SINGLE LANE)

6

PAVEMNET MARKING & SIGNING (CLIMBING LANE & PASSING LANE)

STATE OF WISCONSIN
DEPARTMENT OF TRANSPORTATION

APPROVED
November 2019 — DATE
/S/ Matthew Rauch — STATE SIGNING AND MAR ENGINEER
FHWA

SDD 15C35 - 04c

SDD 15C35 - 04c

LEGEND

- SIGN ON PERMANENT SUPPORT
- TRAFFIC CONTROL DRUM
- DIRECTION OF TRAFFIC
- WORK ZONE

GENERAL NOTES

ALL SIGNS ARE 48"X48" UNLESS OTHERWISE NOTED. IF NECESSARY DUE TO SPACE CONSTRAINTS IN URBAN AREAS, 36" X 36" SIGNS MAY BE USED IF APPROVED BY THE REGIONAL TRAFFIC UNIT.

"WO" SIGN IS THE SAME AS "W" SIGN EXCEPT THE BACKGROUND IS ORANGE.

ANY SIGNS TEMPORARY OR EXISTING, WHICH CONFLICT WITH THE TRAFFIC CONTROL "IN USE" SHALL BE REMOVED OR COVERED AS NEEDED AND AS APPROVED BY THE ENGINEER.

THE EXACT NUMBER, LOCATION, AND SPACING OF ALL SIGNS AND DEVICES SHALL BE ADJUSTED TO FIT FIELD CONDITIONS AS APPROVED BY THE ENGINEER.

CHANNELIZING DEVICES PLACED ADJACENT TO WORK AREA SHALL BE PULLED BACK FROM THE TRAVEL LANE WHEN WORK IS NOT IN PROGRESS.

SIGNS THAT WILL BE IN PLACE LESS THAN 7 CONTINUOUS DAYS AND NIGHTS MAY BE MOUNTED ON PORTABLE SUPPORTS.

W20-1A AND G20-2A SIGNS ARE NOT REQUIRED IF THE WORK AREA IS WITHIN A LARGER WORK ZONE WHERE THESE SIGNS ARE ALREADY PRESENT. G20-2A SIGNS MAY ALSO BE OMITTED IF DURATION OF WORK IS LESS THAN 7 CONTINUOUS DAYS AND NIGHTS.

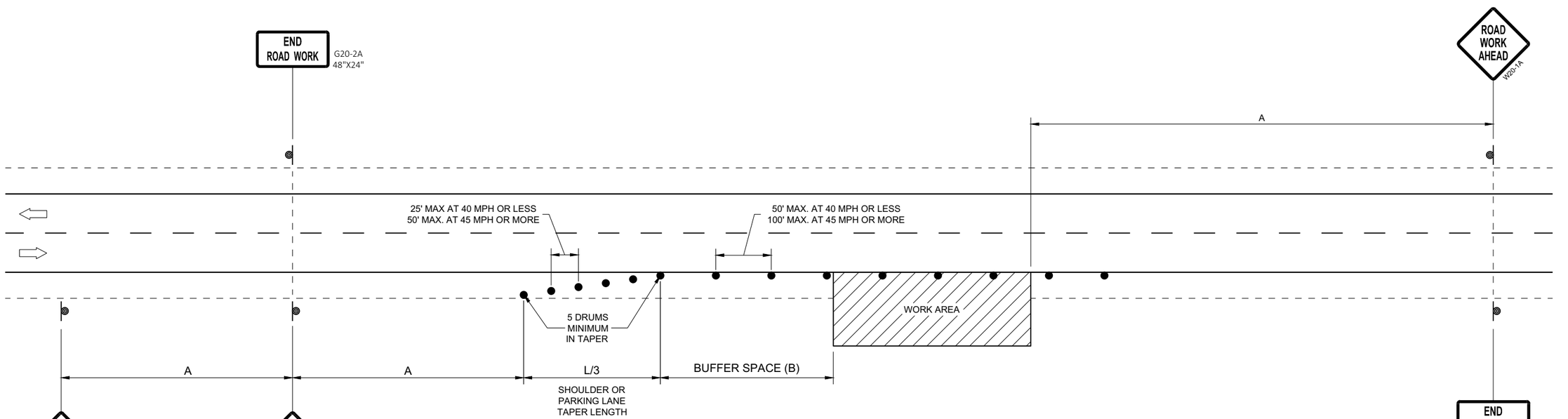

OR
IF TRAFFIC CONTROL DEVICES
ENCROACH ONTO TRAVELED WAY, USE

POSTED SPEED LIMIT PRIOR TO WORK STARTING (MPH)	ADVANCE WARNING SIGN SPACING (A) FEET	SHOULDER TAPER L / 3 W, LATERAL OFFSET (FT)						BUFFER SPACE (B) FEET
		3	4	5	6	7	8	
25	200'	10	14	17	21	24	28	55
30	200'	15	20	25	30	35	40	85
35	350'	20	27	34	40	47	54	120
40	350'	26	35	44	53	62	70	170
45	500'	45	59	74	89	104	119	220
50	500'	50	66	83	99	116	132	280
55	500'	54	73	91	109	127	145	335'

TRAFFIC CONTROL, WORK ON SHOULDER OR PARKING LANE, UNDIVIDED ROADWAY

STATE OF WISCONSIN
DEPARTMENT OF TRANSPORTATION

APPROVED
May 2020 — DATE
/S/ Andrew Heidtke — STATEWIDE WORK ZONE T SAFETY ENGINEER
FHWA

6

SDD 15D28 - 04

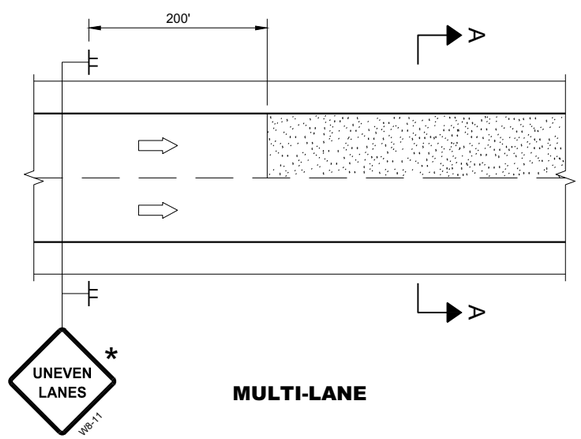

MULTI-LANE

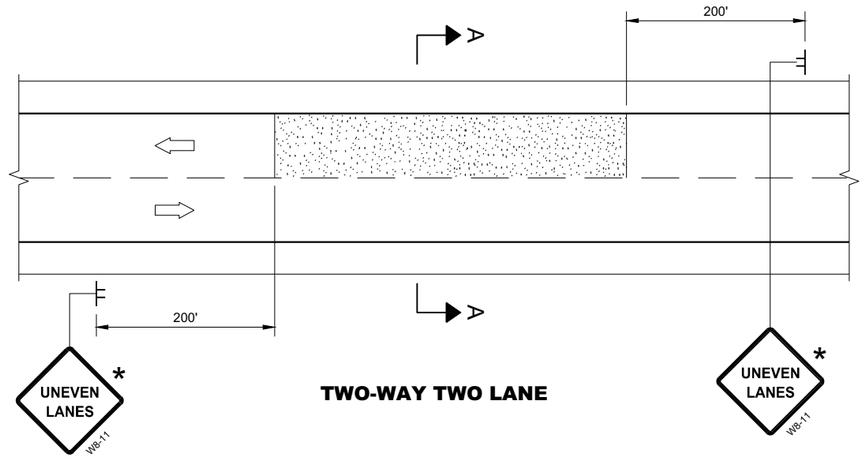

TWO-WAY TWO LANE

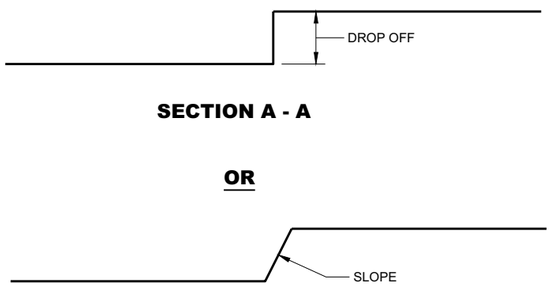

SECTION A - A

OR

SECTION A - A

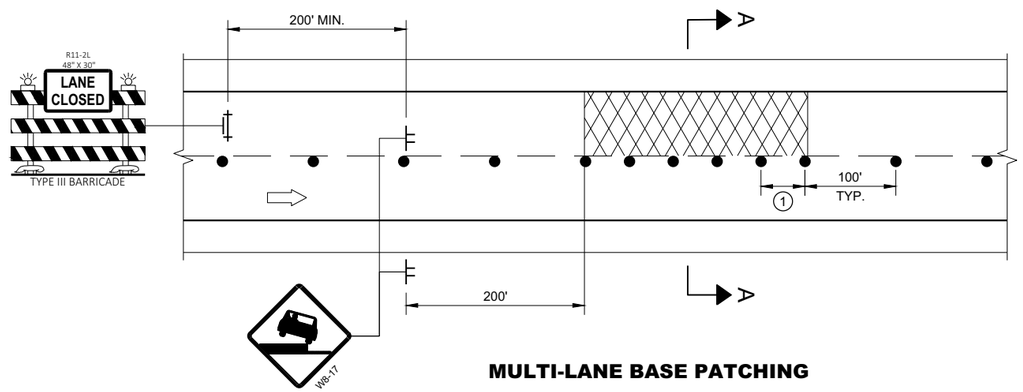

MULTI-LANE BASE PATCHING

ADJACENT LANE DROP-OFFS

GENERAL NOTES

FOR SPOT LOCATIONS USE ENGINEERING JUDGEMENT WHEN PLACING ADDITIONAL SIGNS.

ALL SIGNS ARE 48" X 48" UNLESS OTHERWISE NOTED.

"WO" SIGNS ARE THE SAME AS "W" SIGNS EXCEPT THE BACKGROUND IS ORANGE.

WARNING LIGHTS ARE NOT REQUIRED IF THE LANE CLOSURE IS A DAYTIME ONLY OPERATION.

* IF THE DROP-OFF IS CONTINUOUS ALONG THE PROJECT, PLACE ADDITIONAL SIGNS EVERY 1 MILE AND AFTER EVERY ENTRANCE RAMP.

(1) USE CLOSER SPACING WHEN DELINEATING DROP-OFF.

LEGEND

- SIGN ON TEMPORARY SUPPORT
- TRAFFIC CONTROL DRUM
- TYPE III BARRICADE WITH ATTACHED SIGN
- TYPE "A" WARNING LIGHT (FLASHING)
- DIRECTION OF TRAFFIC
- WORK AREA WITH DROP-OFF
- MILLED SURFACE

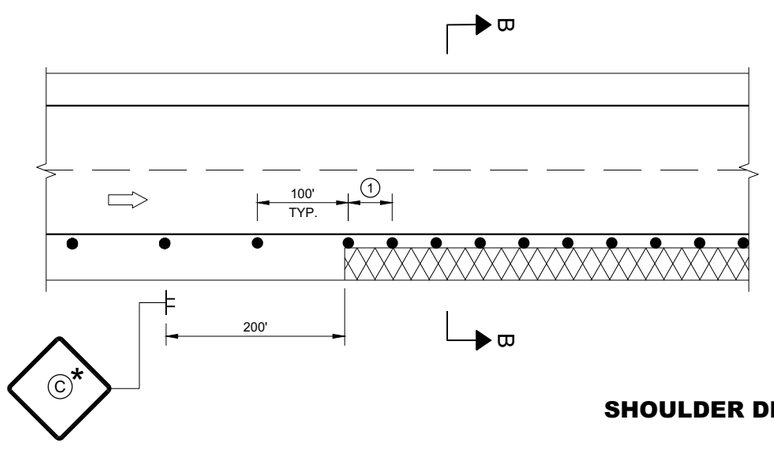

SHOULDER DROP-OFFS

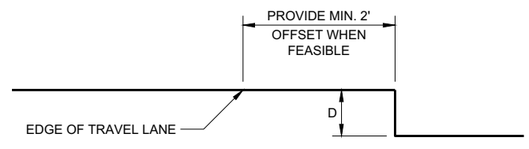

SECTION B - B

D	SIGN (C)
< 2" WITH A SLOPE STEEPER THAN 3:1	LOW SHOULDER WO8-9
2" < 6" WITH A SLOPE STEEPER THAN 3:1	SHOULDER DROP - OFF W8-9A PROVIDE A 3:1 OR FLATTER SLOPE OF MATERIAL ADJACENT TO THE PAVEMENT

TRAFFIC CONTROL, DROP-OFF SIGNING

STATE OF WISCONSIN
DEPARTMENT OF TRANSPORTATION

APPROVED
March 2018 — DATE
/S/ Andrew Heidtke — WORK ZONE ENGINEE
FHWA

GENERAL NOTES

DRAWING NOT TO SCALE. ALL SIGNS AND POSTS ON THIS SHEET SHALL BE PAID FOR WITH 'TRAFFIC CONTROL SIGNS' BID ITEM. ALL SIDE ROADS WHICH ARE UNDER CONSTRUCTION OF CURB AND GUTTER AND/OR GRADING SHALL BE ADEQUATELY SIGNED.

ALL SIGNS AND DEVICES SHALL BE IN CONFORMANCE WITH THE WISCONSIN MANUAL OF UNIFORM TRAFFIC CONTROL DEVICES (WMUTCD). SIGN LAYOUTS SHALL BE IN ACCORDANCE WITH THE WISDOT STANDARD SIGN PLATES.

"WO" SIGNS ARE THE SAME AS "W" SIGNS EXCEPT THAT THE BACKGROUND IS ORANGE.

ALL SIGNS ARE 48" X 48" UNLESS OTHERWISE NOTED.

THE EXACT NUMBER, LOCATION AND SPACING OF ALL SIGNS AND DEVICES SHALL BE ADJUSTED TO FIT FIELD CONDITIONS AS DIRECTED BY THE ENGINEER.

ALL SIGNS INAPPROPRIATE TO THE STATUS OF THE CONTROL ZONE, INCLUDING PRE-EXISTING SIGNS IN THE VICINITY, SHALL BE COVERED OR REMOVED AS DIRECTED BY THE ENGINEER.

SEE 15C34 FOR ADDITIONAL TRAFFIC CONTROL SIGNING WHEN CENTERLINE PAVEMENT MAKINGS ARE MISSING. 'DO NOT PASS' SIGNS MUST BE INSTALLED ON THE SAME DAY AS MILLING OPERATIONS.

(1) PLACE SIGNS 350' IN ADVANCE OF MILLED SURFACES AND AT 1 MILE INTERVALS, OR AS DIRECTED BY THE ENGINEER.

(2) PLACE SIGN 200' MIN. FROM INTERSECTION AND 200' MIN. AFTER ADVANCE WARNING SIGN SHOWN IN SDD 15C04.

LEGEND

SIGN ON TEMPORARY SUPPORT

DIRECTION OF TRAFFIC

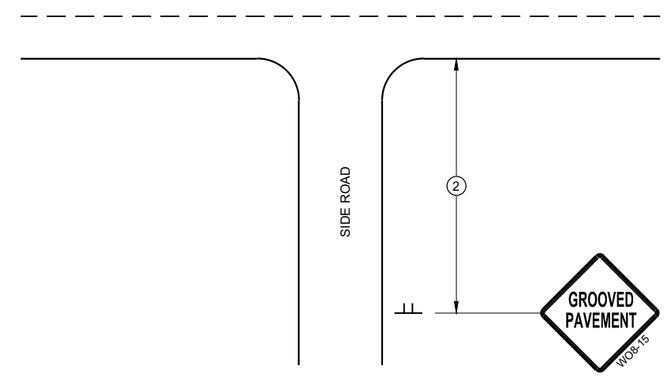

TYPICAL SIDE ROAD APPROACH SIGN DETAIL

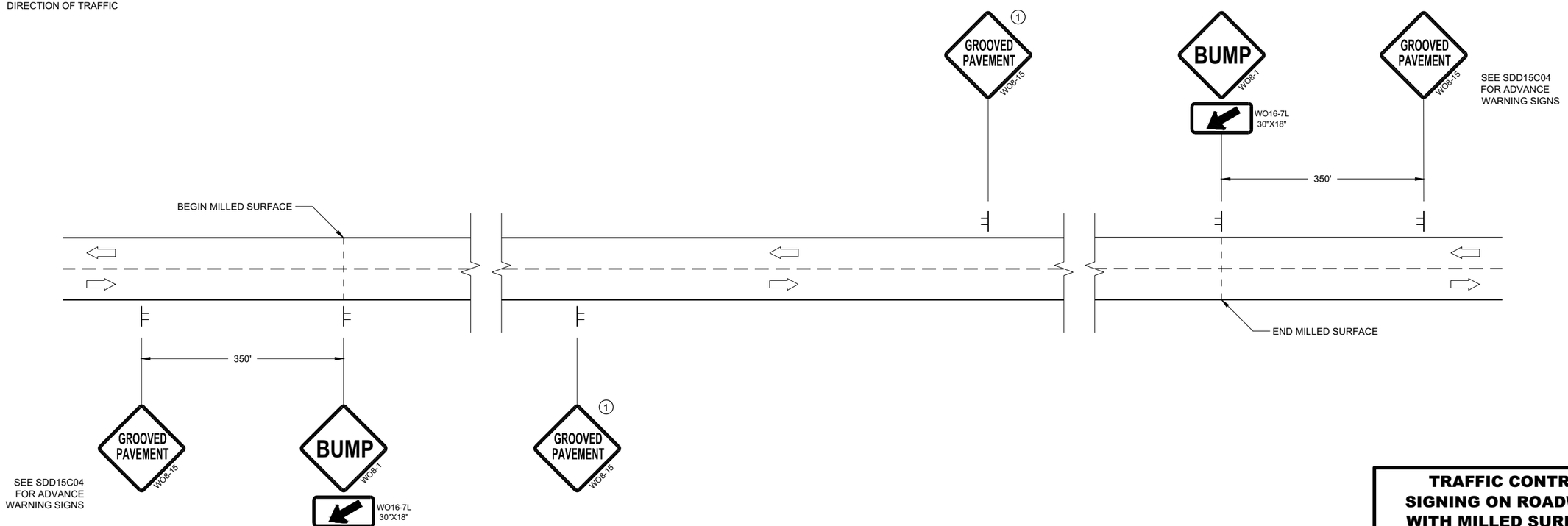

DETAIL FOR SIGNING ON MILLED SURFACES

TRAFFIC CONTROL, SIGNING ON ROADWAYS WITH MILLED SURFACES

STATE OF WISCONSIN
DEPARTMENT OF TRANSPORTATION

APPROVED
February 2020 — DATE
/S/ Andrew Heidtke — WORK ZONE ENGINEE
FHWA

6

SDD 15D44 - 02

6

SDD 15D44 - 02

LEGEND

V1 WORK VEHICLE

V2 SHADOW VEHICLE

TRUCK MOUNTED ATTENUATOR (TMA)

FLASHING ARROW PANEL (CAUTION)

WORK AREA

DIRECTION OF TRAFFIC

POSTED SPEED PRIOR TO WORK STARTING (MPH)	DECISION SIGHT DISTANCE (D)
0 - 25	550'
30	550'
35	700'
40	700'
45	900'
50	900'
55	1200'

GENERAL NOTES

ALL SIGNS ARE 48"X48" UNLESS OTHERWISE NOTED.

MOBILE IS WORK THAT MOVES CONTINUOUSLY OR MOVES AT LEAST THE DECISION SIGHT DISTANCE EVERY 15 MINUTES.

ALL VEHICLES SHALL BE EQUIPPED WITH TWO 360 DEGREE HIGH INTENSITY YELLOW FLASHING LIGHTS OR STROBE LIGHTS AND OPERATED WITH HEADLIGHTS TURNED ON.

ALL ARROW PANELS SHALL BE REAR FACING, TYPE "B" OR "C", AND DISPLAYING THE FLASHING CAUTION MODE. SIGNS PLACED ON VEHICLES MUST NOT OBSCURE THE ARROW PANEL.

USE AN ATTENUATOR ON THE REARMOST VEHICLE THAT BLOCKS ALL OR PART OF THE TRAFFIC LANE.

1 DISTANCE BETWEEN VEHICLES MAY INCREASE FROM THE ATTENUATOR'S ROLL AHEAD BASED ON TERRAIN, SIGHT DISTANCE, AND OTHER FACTORS. WHENEVER ADEQUATE STOPPING SIGHT DISTANCE EXISTS TO THE REAR, SHADOW VEHICLES SHOULD MAINTAIN THE MINIMUM DISTANCE FROM THE WORK VEHICLE AND PROCEED AT THE SAME SPEED AS THE WORK VEHICLE. SHADOW VEHICLES SHOULD SLOW DOWN IN ADVANCE OF VERTICAL OR HORIZONTAL CURVES THAT RESTRICT SIGHT DISTANCE.

2 ALIGN LEFT SIDE OF SHADOW VEHICLE WITH EDGE OF WORK AREA.

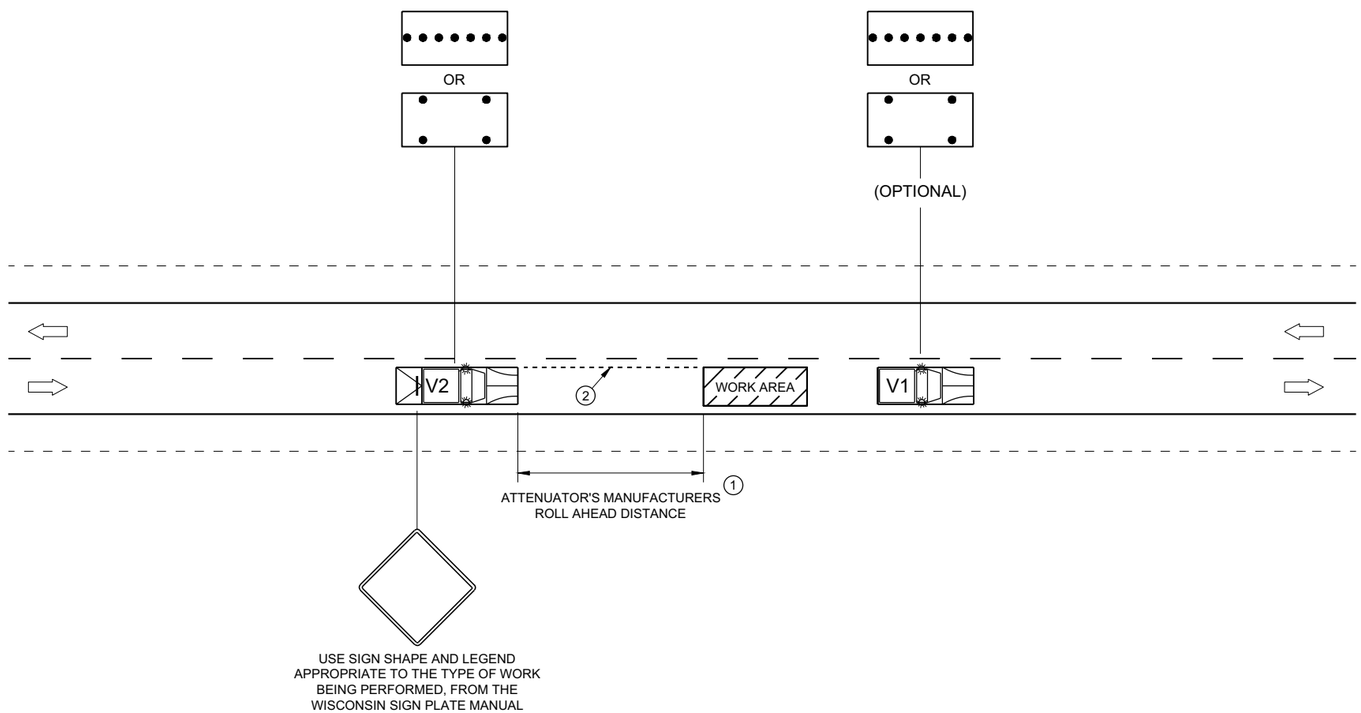

TRAFFIC CONTROL, MOBILE OPERATIONS ON AN UNDIVIDED ROADWAY

STATE OF WISCONSIN
DEPARTMENT OF TRANSPORTATION

APPROVED
February 2021 — DATE
/S/ Andrew Heidtke — STATEWIDE WORK ZONE T SAFETY ENGINEER
FHWA

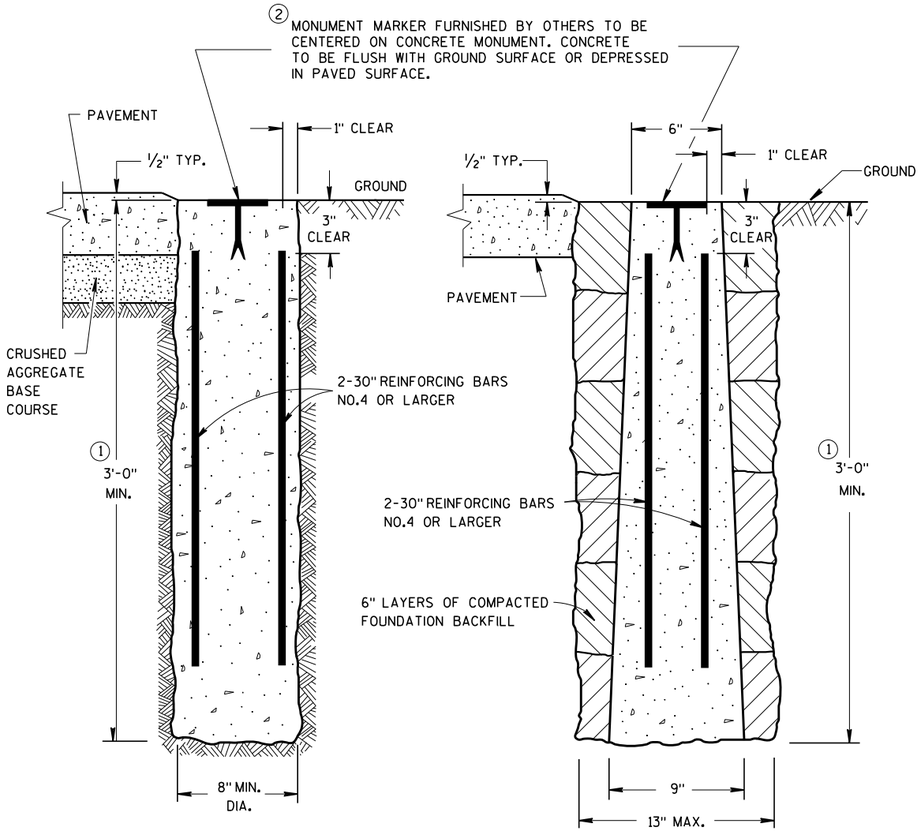

CAST-IN-PLACE

PRECAST

CONCRETE MONUMENTS

TYPE A

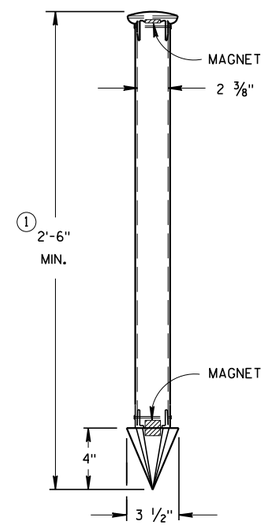

TYPE C

DRIVE-IN MONUMENT

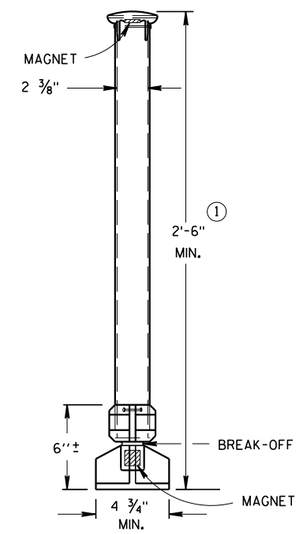

TYPE D
NON-DRIVEN
BREAK-OFF MONUMENT

ALUMINUM MONUMENTS

(INCLUDES MARKER)

GENERAL NOTES

DETAILS OF CONSTRUCTION, MATERIALS AND WORKMANSHIP NOT SHOWN ON THIS DRAWING SHALL CONFORM TO THE PERTINENT REQUIREMENTS OF THE STANDARD SPECIFICATIONS AND THE APPLICABLE SPECIAL PROVISIONS.

DETAILED DRAWINGS OF PROPOSED ALTERNATE DESIGNS FOR METAL MONUMENTS OR MONUMENT COVERS SHALL BE SUBMITTED TO THE ENGINEER FOR APPROVAL.

PERMANENT MAGNETS SHALL BE INSERTED NEAR THE TOP AND BOTTOM OF ALL ALUMINUM MONUMENTS SO THE MONUMENT CAN EASILY BE DETECTED BY A METAL DETECTOR.

THE CAST IRON MONUMENT COVER SHALL BE A "NON-ROCKING" TYPE. ADJUSTMENT OF THE COVER TO GRADE MAY BE ACCOMPLISHED BY THE USE OF MORTAR AND BRICK, OR BY EITHER PRECAST OR CAST-IN-PLACE REINFORCED CONCRETE GRADE RINGS.

MONUMENTS SHALL BE LOCATED AND PLACED AT THE DIRECTION OF THE ENGINEER.

ALUMINUM MONUMENTS AND MONUMENT COVERS SHALL BE MADE FROM AN ALUMINUM AND MAGNESIUM ALLOY AS DETERMINED BY THE MANUFACTURER.

THE MONUMENT COVERS DETAILED ON THIS DRAWING ARE NOT EQUAL ALTERNATES. MONUMENT COVERS SHALL BE CAST IRON UNLESS ALUMINUM IS SPECIFIED ELSEWHERE IN THE CONTRACT.

MONUMENT SHALL BE CAST-IN-PLACE CONCRETE UNLESS PRECAST CONCRETE OR ALUMINUM MONUMENTS ARE SPECIFIED IN THE CONTRACT OR PERMITTED BY THE ENGINEER

① MINIMUM LENGTH SHALL BE 4'-0" FOR MONUMENTS INSTALLED IN PAVED AREAS.

② AN OFFICIAL COUNTY MONUMENT MARKER SUPPLIED BY A COUNTY MAY BE REQUIRED FOR SOME SECTION CORNERS AND WITNESS MONUMENTS INSTEAD OF THIS WIS DOT MARKER.

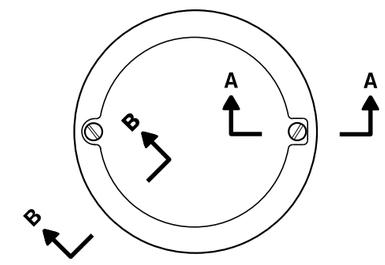

TOP VIEW

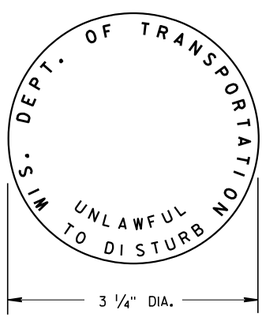

② **WIS DOT MONUMENT MARKER LOGO**

FOR TYPES "A", "C", & "D"

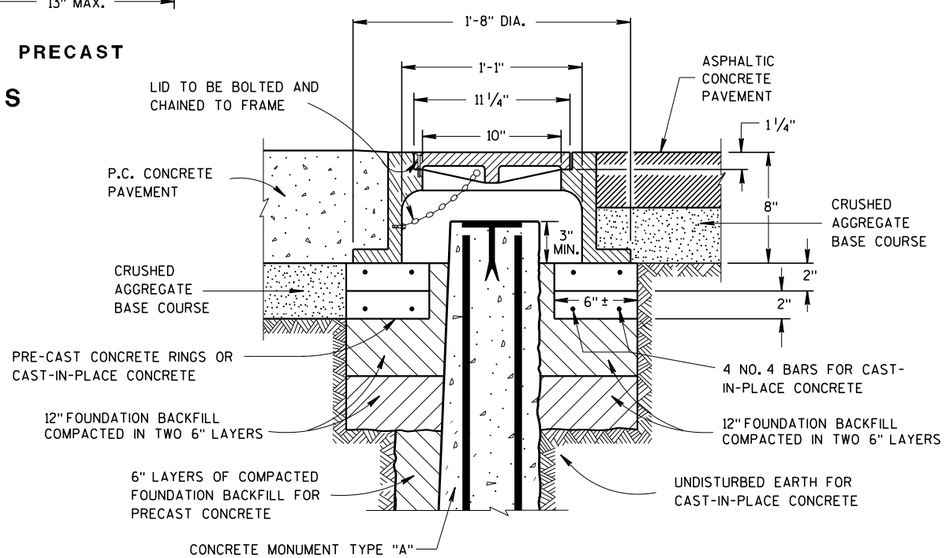

CAST IRON MONUMENT COVER

(APPROXIMATE WEIGHT 95 LBS)

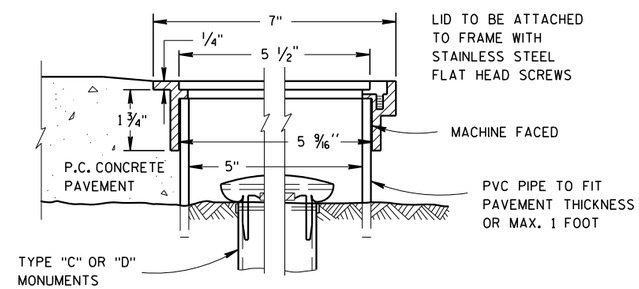

SECTION B-B SECTION A-A

ALUMINUM MONUMENT COVER

(APPROXIMATE WEIGHT 2 LBS)
(FOR CONCRETE PAVEMENT ONLY)

LANDMARK REFERENCE MONUMENTS AND COVERS

STATE OF WISCONSIN
DEPARTMENT OF TRANSPORTATION

APPROVED
March 2018 /S/ Raymond A. Kuzmanovi
DATE CHIEF SURVEYING AND M ENGINEER
FHWA

6

6

S.D.D. 16 A 1-7

S.D.D. 16 A 1-7

URBAN AREA

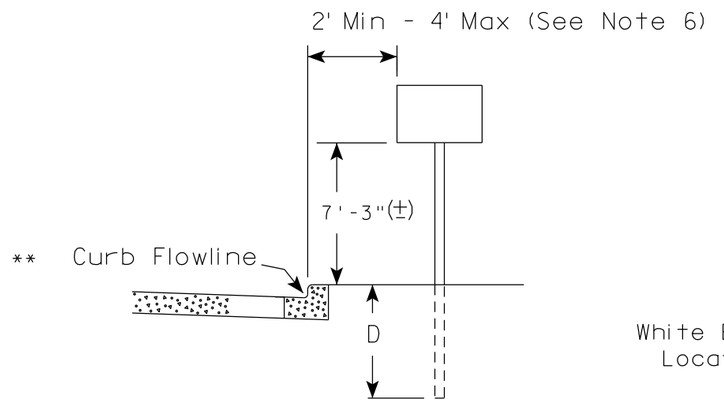

RURAL AREA (See Note 2)

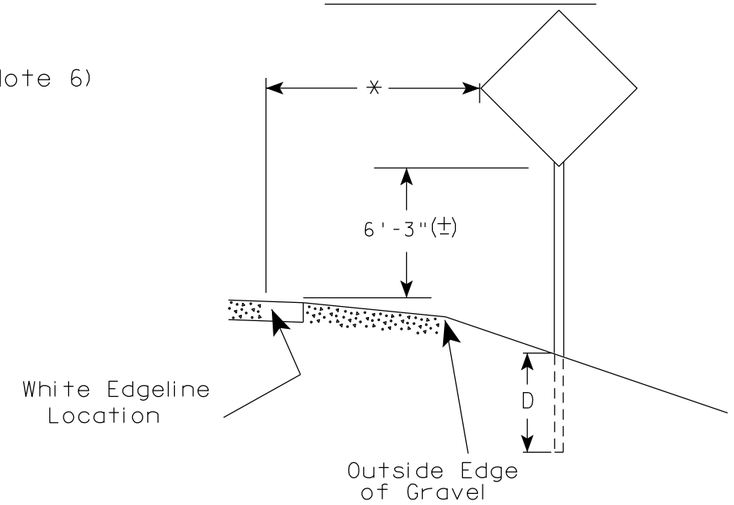

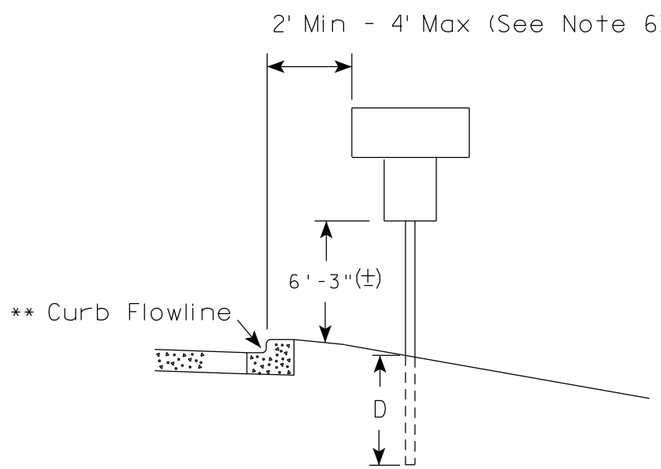

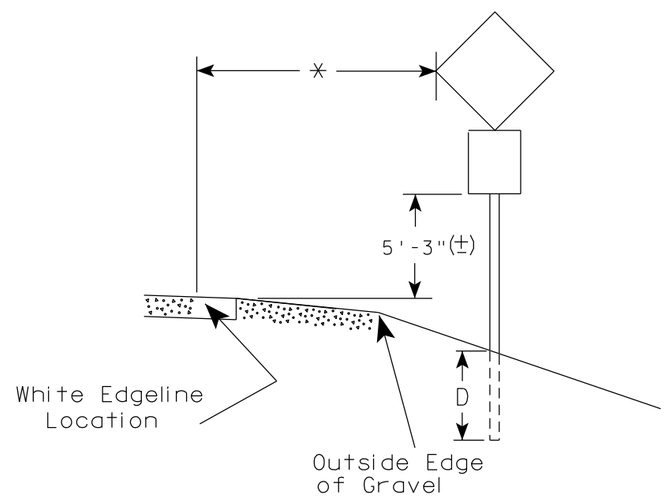

** The existence of curb and gutter does not in itself mandate the vertical clearance illustrated. That height is typically measured where there is sidewalk adjacent to the roadway or parking is permitted. In the absence of sidewalk vertical clearance is measured from the top of the curb. Offset of signs is measured from the flow line.

* 6 feet from edge of a paved shoulder or 12 feet from the edge of pavement (edge line location) or 2 feet from outside edge of gravel, whichever is greater unless directed by project engineer.

GENERAL NOTES

1. Signs wider than 4 feet or 20 sq.ft or larger, shall be mounted on multiple posts. Refer to plate A4-4.
2. If signs are mounted on or behind barrier wall, see A4-10 sign plate.
   The Double Arrow sign (W12-1D) shall be mounted at a height of 2'-3" (±). The Chevron sign (W1-8), Roundabout Chevron panel (R6-4B), Enhanced Reference Markers, Clearance Markers (W5-52), Mile Markers (D10 series), In Road Object Markers (W5-54) & End of Road Markers (W5-56) shall be mounted at a height of 4'-3" (±).
3. For expressways and freeways, mounting height is 7'- 3" (±) or 6'-3" (±) depending upon existence of a sub-sign.
4. Minimum mounting height for signs mounted on traffic signal poles is 5'- 3" (±).
5. Offset distance shall be consistent with existing signs or consistent throughout length of project.
6. The (±) tolerance for mounting height is 3 inches.
7. Folding signs shall be mounted at a height of 5'-3" (±) or as directd by the Engineer.

POST EMBEDMENT DEPTH

Area of Sign Installation (Sq.Ft.)	D (Min)
20 or Less	4'
Greater than 20	5'

TYPICAL INSTALLATION OF PERMANENT TYPE II SIGNS ON SINGLE POSTS

WISCONSIN DEPT OF TRANSPORTATION

APPROVED Matthew R Rauch for State Traffic Engineer

DATE 5/13/2020 PLATE NO. A4-3.22

7

7

PROJECT NO:	HWY:	COUNTY:		SHEET NO: 136	E

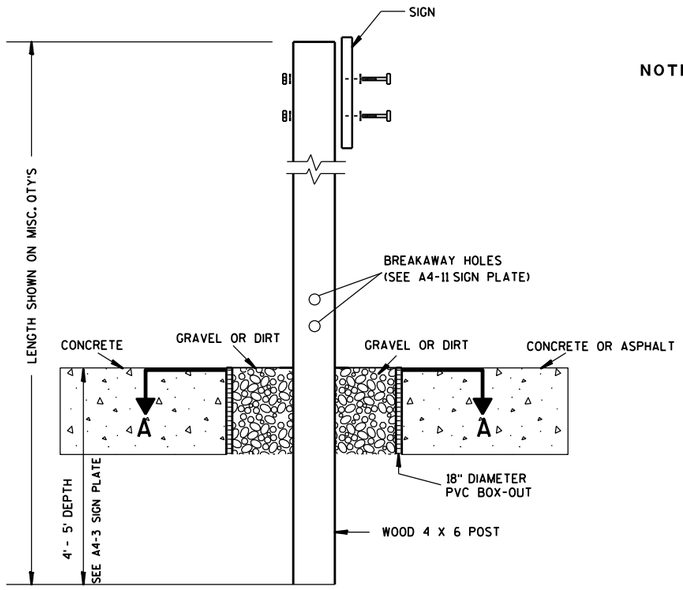

ELEVATION VIEW

DETAIL OF WOOD 4 X 6 SIGN POST IN BOX-OUT

NOTES:
1. ALL MATERIAL TO BE APPROVED BY ENGINEER PRIOR TO INSTALLATION
2. SEE SIGN PLATE A4-8 FOR SIGN HARDWARE REQUIREMENTS
3. 18 INCH X 18 INCH SQUARE BOX-OUTS MAY BE USED FOR INSTALLATIONS IN EXISTING CONCRETE OR ASPHALT LOCATIONS.

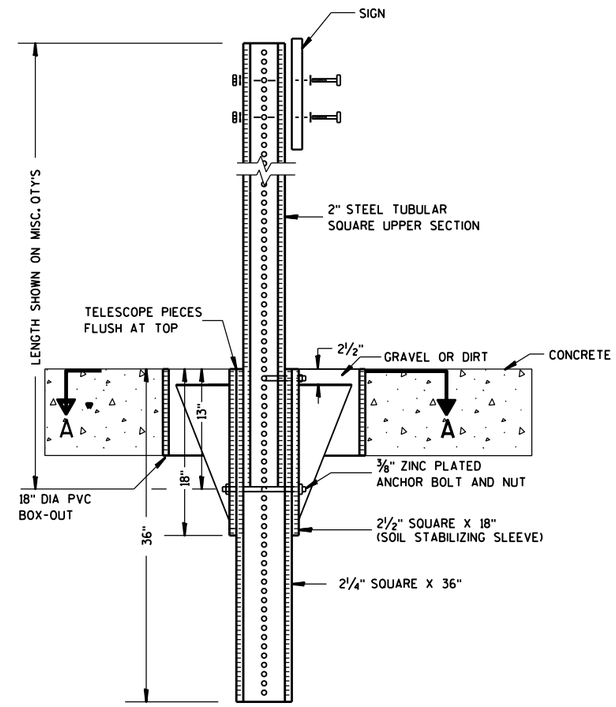

ELEVATION VIEW

DETAIL OF STEEL 2 X 2 SIGN POST IN BOX-OUT

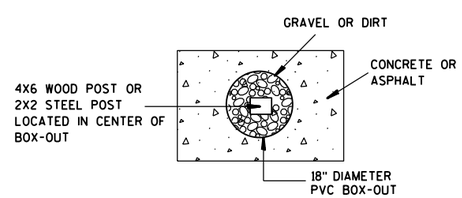

PLAN VIEW

FOR NEW CONCRETE/ASPHALT INSTALLATIONS

SIGN POST
BOX-OUTS
A4-3B

WISCONSIN DEPT OF TRANSPORTATION

APPROVED Matthew R Rauch
for State Traffic Engineer

DATE 1/27/14 PLATE NO. A4-3B.1

PROJECT NO:	HWY:	COUNTY:		SHEET NO:	E

URBAN AREA

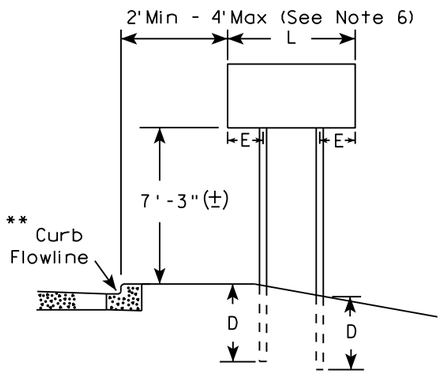

RURAL AREA (See Note 3)

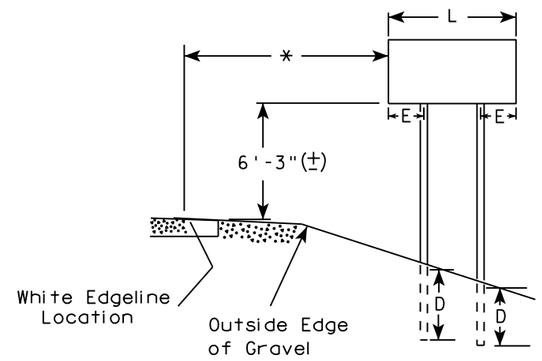

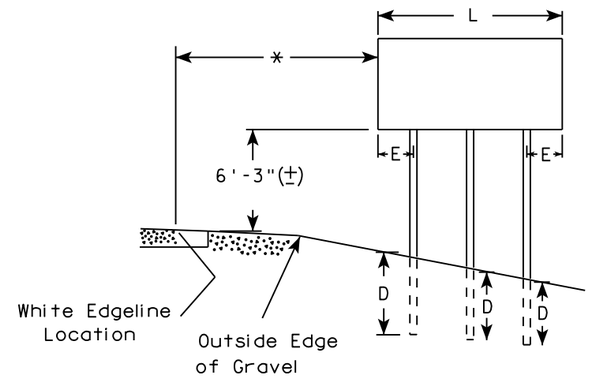

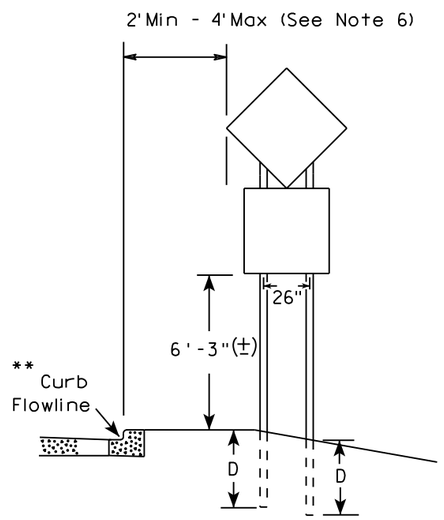

48" DIAMOND WARNING SIGN

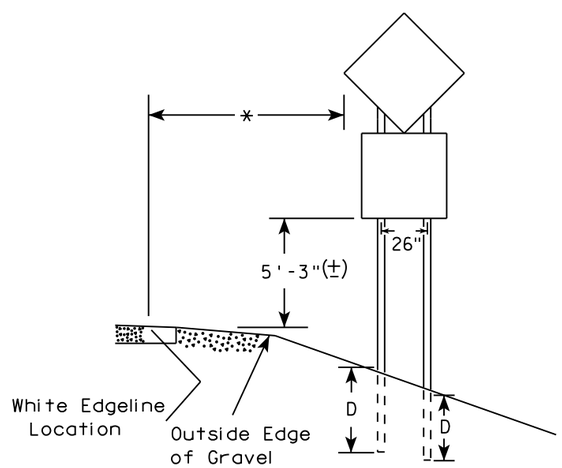

48" DIAMOND WARNING SIGN

SIGN SHAPE OTHER THAN DIAMOND (TWO POSTS REQUIRED)	
L	E
*** Greater than 48" Less than 60"	12"
60" to 108"	L/5

SIGN SHAPE OTHER THAN DIAMOND (THREE POSTS REQUIRED)	
L	E
Greater than 108" to 144"	12"

GENERAL NOTES

1. For 3 or 4 post installations, individual post spacing shall be greater than 3'-6".
2. See tables below for required number of posts.
3. For expressways and freeways, mounting height is 7'-3" (±) or 6'-3" (±) depending upon existence of sub-sign.
4. The (±) tolerance for mounting height is 3 inches.
5. J-Assemblies are considered to be one sign for mounting height.
6. Offset distance shall be consistent with existing signs or consistent throughout length of project.
7. Folding signs shall be mounted at a height of 5'-3" (±) or as directed by the engineer.
8. The Double Arrow sign (W12-1) shall be mounted at a height of 2'-3" (±). The Chevron sign (W1-8), Roundabout Chevron panel (R6-4B), Clearance Markers (W5-52), Mile Markers (D10 series), In Road Object Markers (W5-54) & End of Road Markers (W5-56) shall be mounted at a height of 4"-3" (±).

* 6 feet from edge of a paved shoulder or 12 feet from the edge of pavement (edge line location) or 2 feet from outside edge of gravel, whichever is greater unless directed by project engineer.

** The existence of curb and gutter does not in itself mandate the vertical clearance illustrated. That height is typically measured where there is sidewalk adjacent to the roadway or parking is permitted. In the absence of sidewalk vertical clearance is measured from the top of the curb. Offset of signs is measured from the flow line.

*** See A4-3 sign plate for signs 4' or less in width and less than 20 S.F. in area.

POST EMBEDMENT DEPTH

Area of Sign Installation (Sq. Ft.)	D (Min)
20 or Less	4'
Greater than 20	5'

TYPICAL INSTALLATION OF TYPE II SIGNS ON MULTIPLE POSTS

WISCONSIN DEPT OF TRANSPORTATION

APPROVED Matthew R Rauch
For State Traffic Engineer

DATE 8/21/17 PLATE NO. A4-4.15

7

7

PROJECT NO:	HWY:	COUNTY:		SHEET NO: 138	E

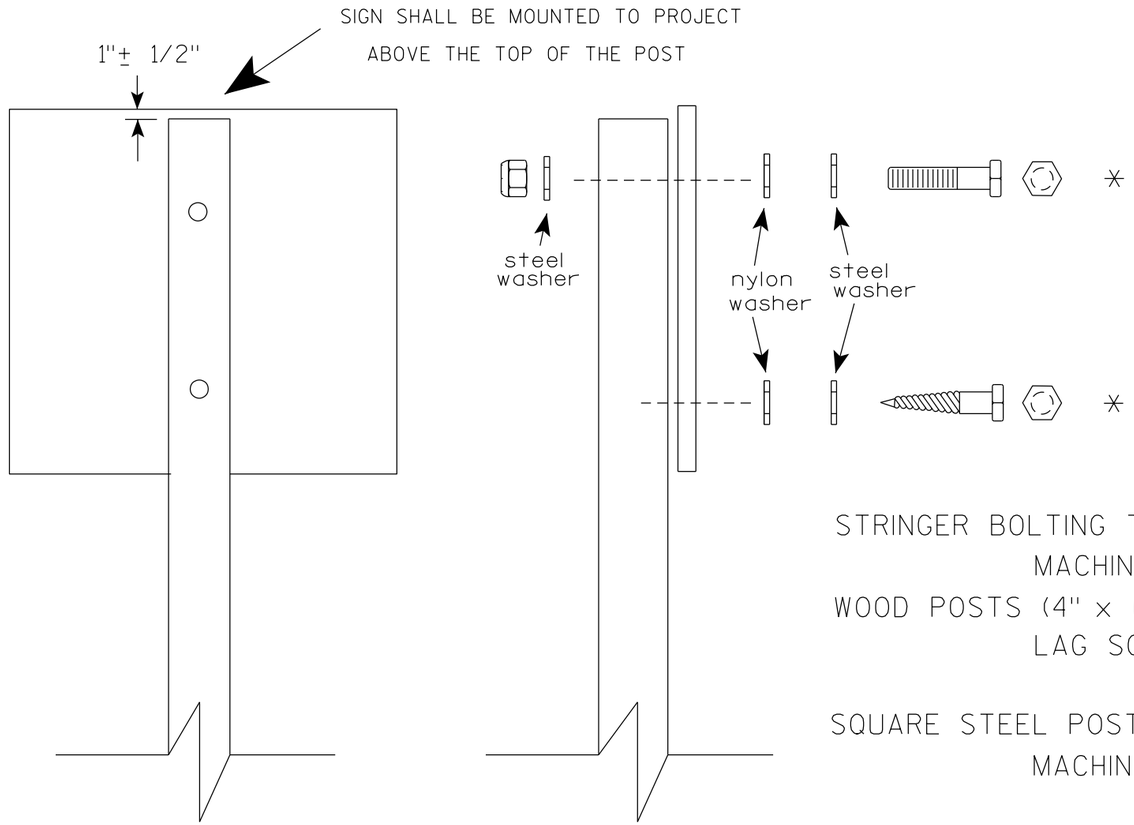

Nuts, bolts and lags used for mounting signs shall have hexagonal heads and shall be either :

a. Hot dip galvanized in accordance with ASTM Designation: A 153, Class D, or SC 3

b. Electro-galvanized in accordance with ASTM Designation : B 633, TYPE III, SC 3.

Threads on bolts and nuts shall be manufactured with sufficient allowance for the cadmium plate or galvanized coating to permit the nuts to run freely on the bolts.

STRINGER BOLTING TO ALUMINUM SIGNS (SEE SIGN PLATE A4-18)

MACHINE BOLTS - 5/16" X 1-3/4" Length w/ lock nuts

WOOD POSTS (4" x 6")

LAG SCREWS - 3/8" X 3" (NO STRINGERS ON BACK OF SIGN)
3/8" X 4" (STRINGERS ON BACK OF SIGN)

SQUARE STEEL POSTS (2" x 2")

MACHINE BOLTS - 3/8" X 3-1/4" Length w/ nuts (NO STRINGER ON BACK OF SIGN)
3/8" X 5" Length w/ nuts (STRINGERS ON BACK OF SIGN)

RIVETS - 9/32 " (6605-9-6) BULB-TITE, TRI-FOLD, ALUMINUM BODY/MANDREL
O.D. FLANGE .720-.765 INCH, GRIP RANGE .042-.375 INCH

WASHERS (ALL POSTS) -

1-1/4" O.D. X 3/8" I.D. X 1/16" STEEL
1-1/4" O.D. X 3/8" I.D. X .080 NYLON

* Two different fastening systems are shown for illustration purposes. On any individual sign, either one or the other system shall be used. Actual number of fasteners per sign varies with the sign area, but normally there are two. For a single post installation, all signs greater than 9 sq. ft. require the use of 3 fasteners.

ATTACHMENT OF SIGNS TO POSTS

WISCONSIN DEPT OF TRANSPORTATION

APPROVED Matthew R Rauch
for State Traffic Engineer

DATE 4/1/2020 PLATE NO. A4-8.9

TELESCOPIC TUBING ANCHORS
TWO PIECE SYSTEM

2 1/4" SQUARE
12 GAUGE
PERFORATED
GALVANIZED FINISH

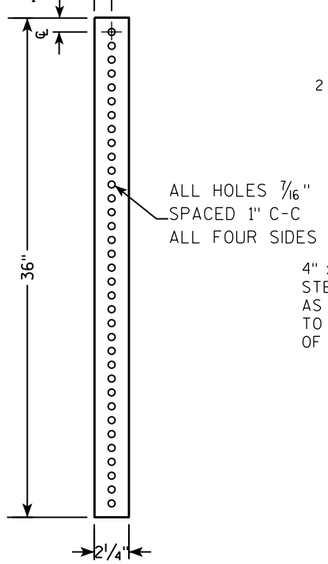

2 1/2" SQUARE
12 GAUGE
OMNI-DIRECTIONAL
PERFORATED
SOIL STABILIZING SLEEVE
GALVANIZED FINISH

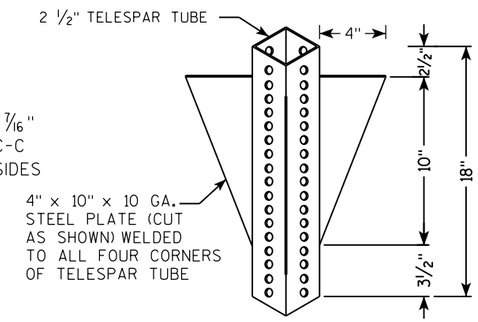

DETAIL OF TUBULAR STEEL SIGN POST
(IN POURED CONCRETE OR ASPHALT)

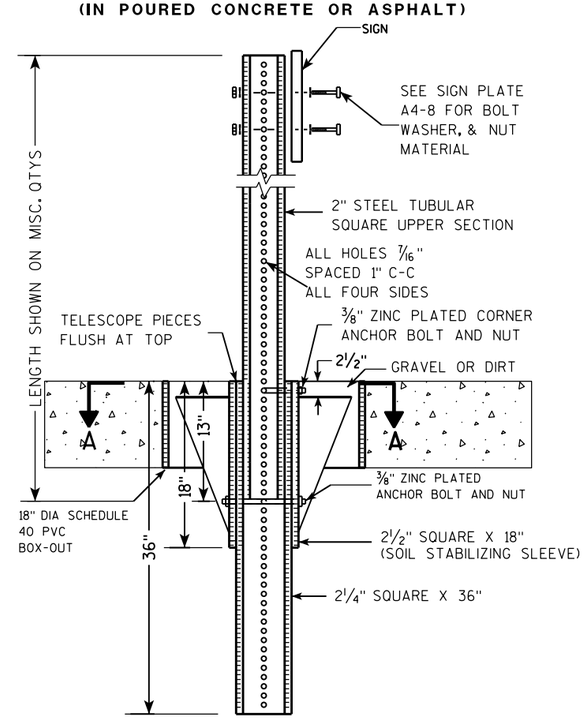

DETAIL OF TUBULAR STEEL SIGN POST
(IN LOCATIONS OTHER THAN POURED CONCRETE OR ASPHALT)

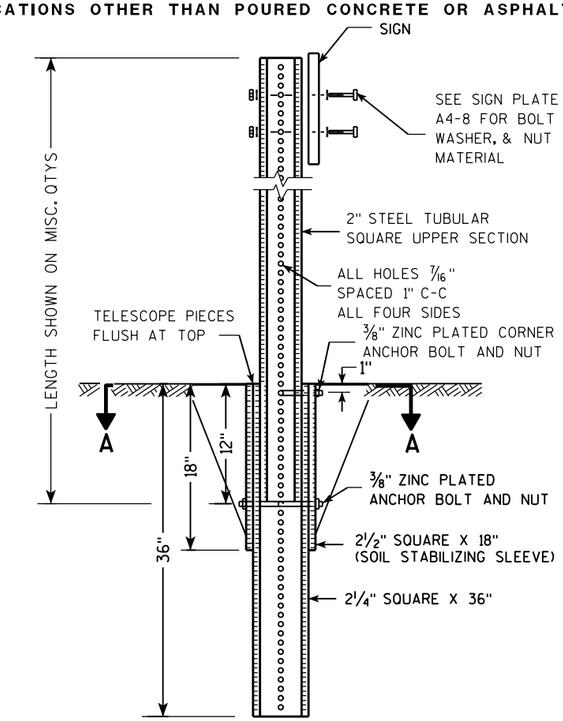

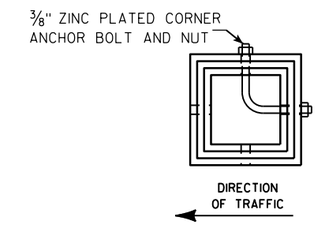

SECTION A-A

Area of Sign Installation (Sq. Ft.)	Number of Required Posts
9 or less	1
Greater than 9 less than or equal to 18	2
Greater than 18 less than or equal to 27	3

Signs wider than 3 feet or larger than 9 sq. ft shall be mounted on multiple posts (see above table).

TUBULAR STEEL
SIGN POST
A4-9

WISCONSIN DEPT OF TRANSPORTATION

APPROVED Matthew R Rauch
for State Traffic Engineer

DATE 2/05/15 PLATE A4-9.9

7

7

PROJECT NO:	HWY:	COUNTY:		SHEET NO:	E

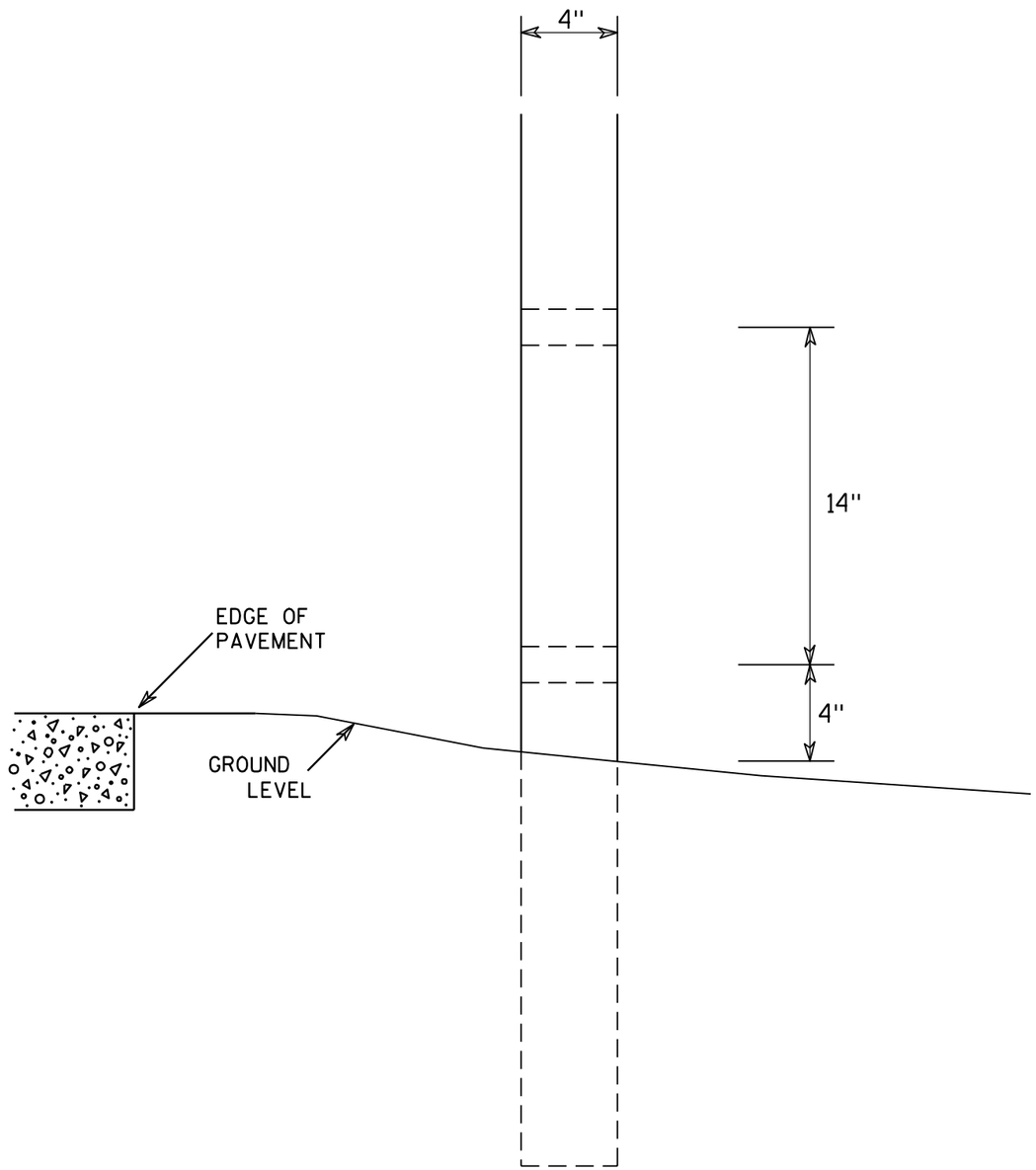

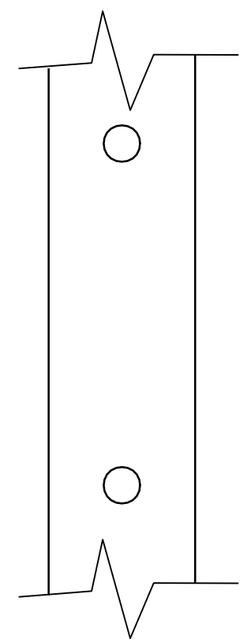

SIDE VIEW

GENERAL NOTES

1. All 4 x 6 Wood Posts shall be modified by having two 1½" diameter holes drilled perpendicular to the roadway centerline.

4 X 6 WOOD POST MODIFICATIONS

WISCONSIN DEPT OF TRANSPORTATION

APPROVED Chester J Spang for State Traffic Engineer

DATE 3/27/97 PLATE NO. A4-11.2

PROJECT NO:	HWY:	COUNTY:		SHEET NO: 141	E

BANDING

SINGLE SIGN

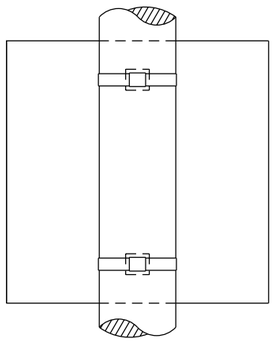

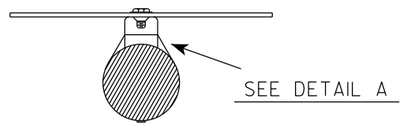

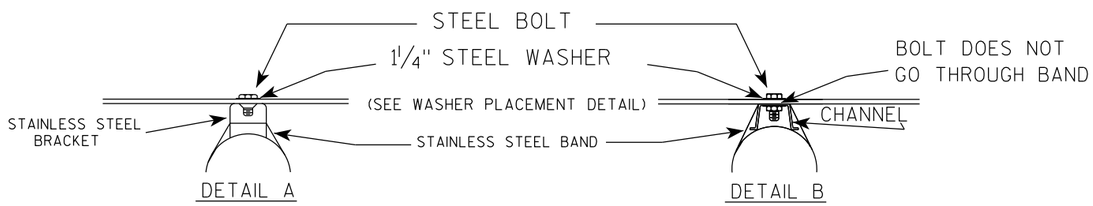

WASHER PLACEMENT

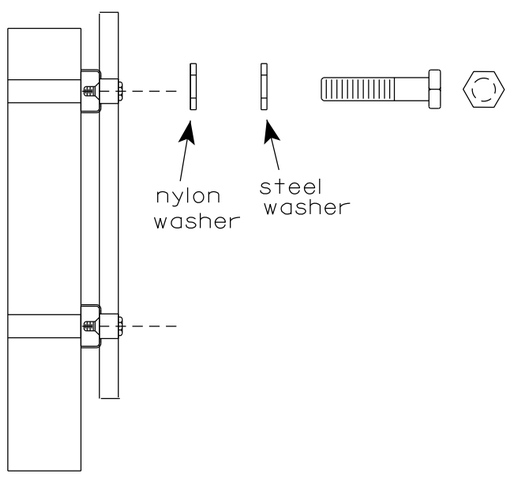

WASHERS (ALL POSTS) -
1-1/4" O.D. X 3/8" I.D. X 1/16" STEEL
1-1/4" O.D. X 3/8" I.D. X .080 NYLON
FOR ALL TYPE H SIGNS

GENERAL NOTES

1. Any sign over 3 feet in width shall use the V-Block banding method. See A5-10 standard plate.
2. Signs 3 feet or greater in height shall have three bracket bands installed. Signs less than 3 feet in height shall have two bracket bands installed.
3. Banding and assembly bracket shall be stainless steel. All bands shall be 3/4" in width and 0.025" thickness.
4. ALL SIGN MOUNTING BOLTS AND WASHERS SHALL BE EITHER:
   a. Hot dip or mechanically galvanized in accordance with ASTM Designation: A 153, Class D
   b. Electro-galvanized in accordance with ASTM designation: B 633, Type III, SC 3

"J" ASSEMBLY

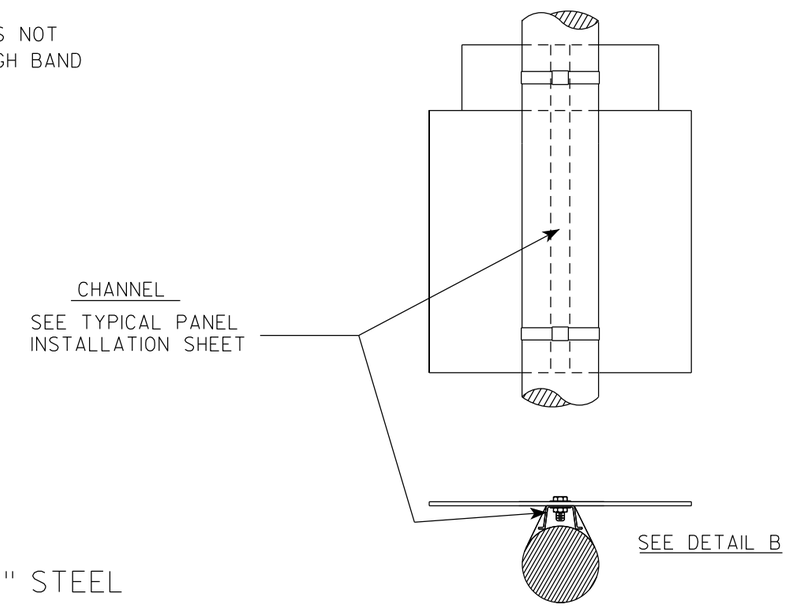

STANDARD SIGN
SIGN BANDING DETAILS

WISCONSIN DEPT OF TRANSPORTATION

APPROVED Matthew R Rauch for State Traffic Engineer

DATE 6/10/19 PLATE NO. A5-9.4

PROJECT NO:	HWY:	COUNTY:		SHEET NO: 142	E

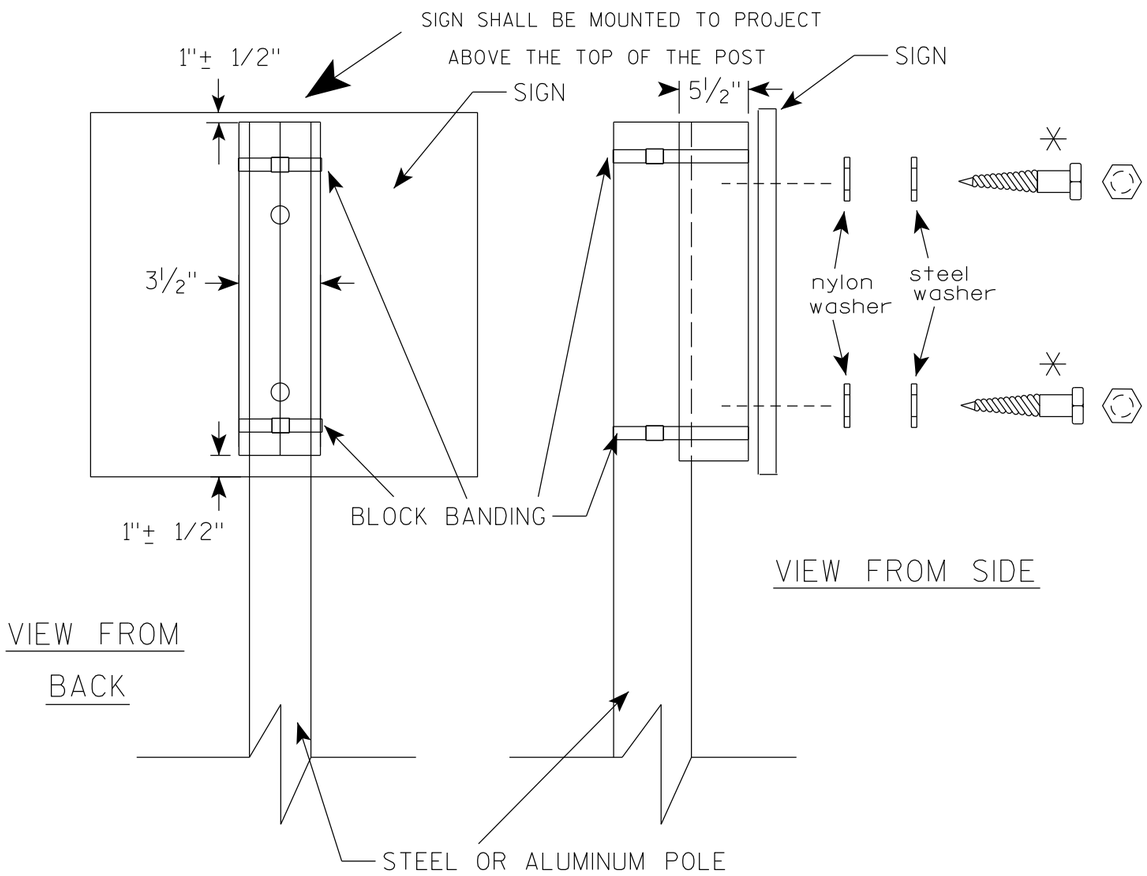

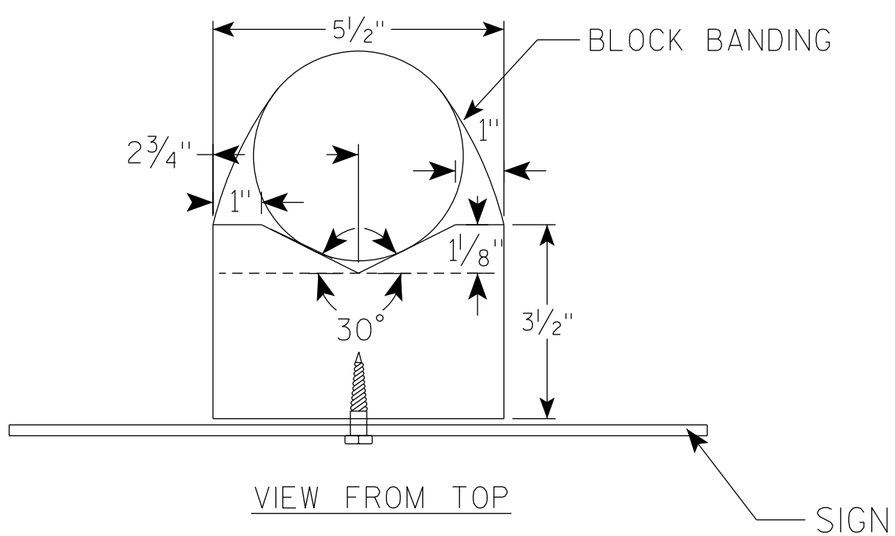

GENERAL NOTES

1. WOOD 4"X6" POST MATERIAL SHALL CONFORM TO 507.2.2 OF THE WisDOT STANDARD SPECIFICATIONS
2. BLOCK BANDING AND CLIPS SHALL BE STAINLESS STEEL, 3/4" WIDTH AND 0.025" THICKNESS
3. SIGNS 3' OR GREATER IN HEIGHT SHALL UTILIZE 3 BLOCK BANDS. SIGNS UNDER 3' IN HEIGHT SHALL UTILIZE 2 BLOCK BANDS
4. ACTUAL NUMBER OF FASTENERS PER SIGN VARIES WITH THE SIGN AREA, BUT NORNALLY THERE ARE TWO. FOR SIGNS GREATER THAN 9 S.F. 3 FASTENERS SHALL BE USED.
5. ALL SIGN MOUNTING BOLTS AND WASHERS SHALL BE EITHER:
   a. Hot dip or mechanically galvanized in accordance with ASTM Designation: A 153, Class D
   b. Electro-galvanized in accordance with ASTM Designation : B 633, TYPE III, SC 3
6. ALL BOLTS SHALL HAVE HEXAGONAL HEADS.
7. STEEL WASHERS SHALL BE 1 1/4" O.D. X 3/8" I.D. X 1/16"
8. NYLON WASHERS SHALL BE 1 1/4" O.D. X 3/8" I.D. X .080 FOR TYPE H OR TYPE F FACE SIGN

✳ LAG BOLTS SHALL BE 3/8" X 2 1/2"

BLOCK BANDING DETAIL
(V-BLOCK OPTION)

WISCONSIN DEPT OF TRANSPORTATION

APPROVED Matthew R Rauch
For State Traffic Engineer

DATE 6/10/19 PLATE NO. A5-10.2

PROJECT NO:				SHEET NO: 143	E

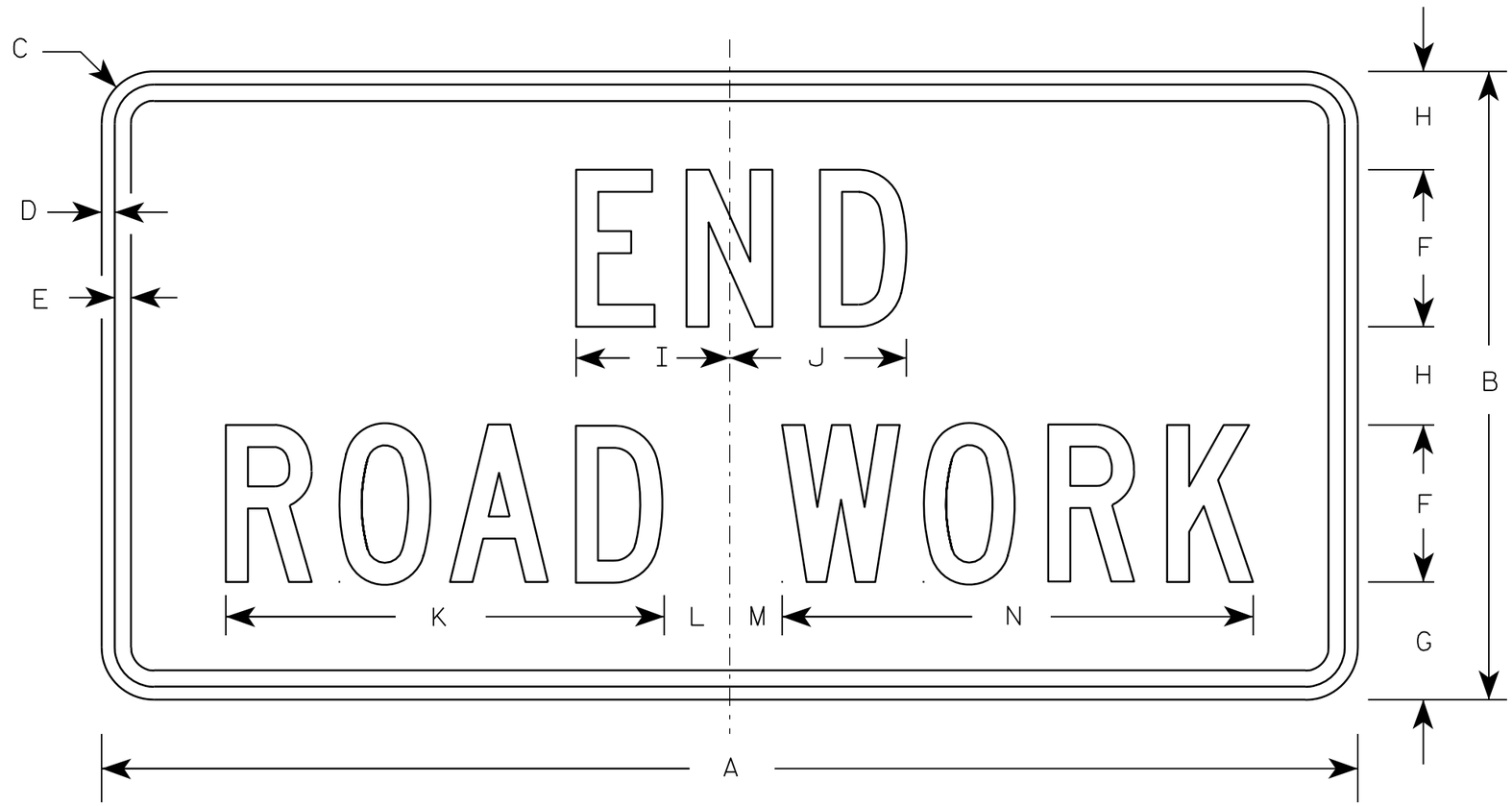

G20-2A

NOTES

1. Sign is Type II - Type F Reflective - reference WIS DOT Standard Specification for HIGHWAY and STRUCTURE CONSTRUCTION latest edition.
2. Color:
   Background - Orange
   Message - Black
3. Message Series - C
4. Corners may be square or rounded when base material is plywood but borders shall be rounded as shown. When base material is metal, the corners and borders shall be rounded.

Metric equivalent for this sign is:

SIZE	
1	900 mm X 450 mm
2	1200 mm X 600 mm
3	1200 mm X 600 mm
4	1200 mm X 600 mm
5	1200 mm X 600 mm

SIZE	A	B	C	D	E	F	G	H	I	J	K	L	M	N	O	P	Q	R	S	T	U	V	W	X	Y	Z	Area sq. ft.	Area m2
1	36	18	1 1/8	3/8	1/2	4	3 3/4	2 1/2	4 1/8	4 1/8	11 1/8	2	1	12 1/8													4.5	0.41
2	48	24	1 1/2	1/2	5/8	6	4 1/2	3 3/4	5 7/8	6 3/4	16 3/4	2 1/2	1 3/4	18 1/2													8.0	0.72
3	48	24	1 1/2	1/2	5/8	6	4 1/2	3 3/4	5 7/8	6 3/4	16 3/4	2 1/2	1 3/4	18 1/2													8.0	0.72
4	48	24	1 1/2	1/2	5/8	6	4 1/2	3 3/4	5 7/8	6 3/4	16 3/4	2 1/2	1 3/4	18 1/2													8.0	0.72
5	48	24	1 1/2	1/2	5/8	6	4 1/2	3 3/4	5 7/8	6 3/4	16 3/4	2 1/2	1 3/4	18 1/2													8.0	0.72

STANDARD SIGN

G20-2A

WISCONSIN DEPT OF TRANSPORTATION

APPROVED Matthew R Rauch
for State Traffic Engineer

DATE 9/30/09 PLATE NO. G20-2A.8

PROJECT NO:	HWY:	COUNTY:		SHEET NO: 144	E

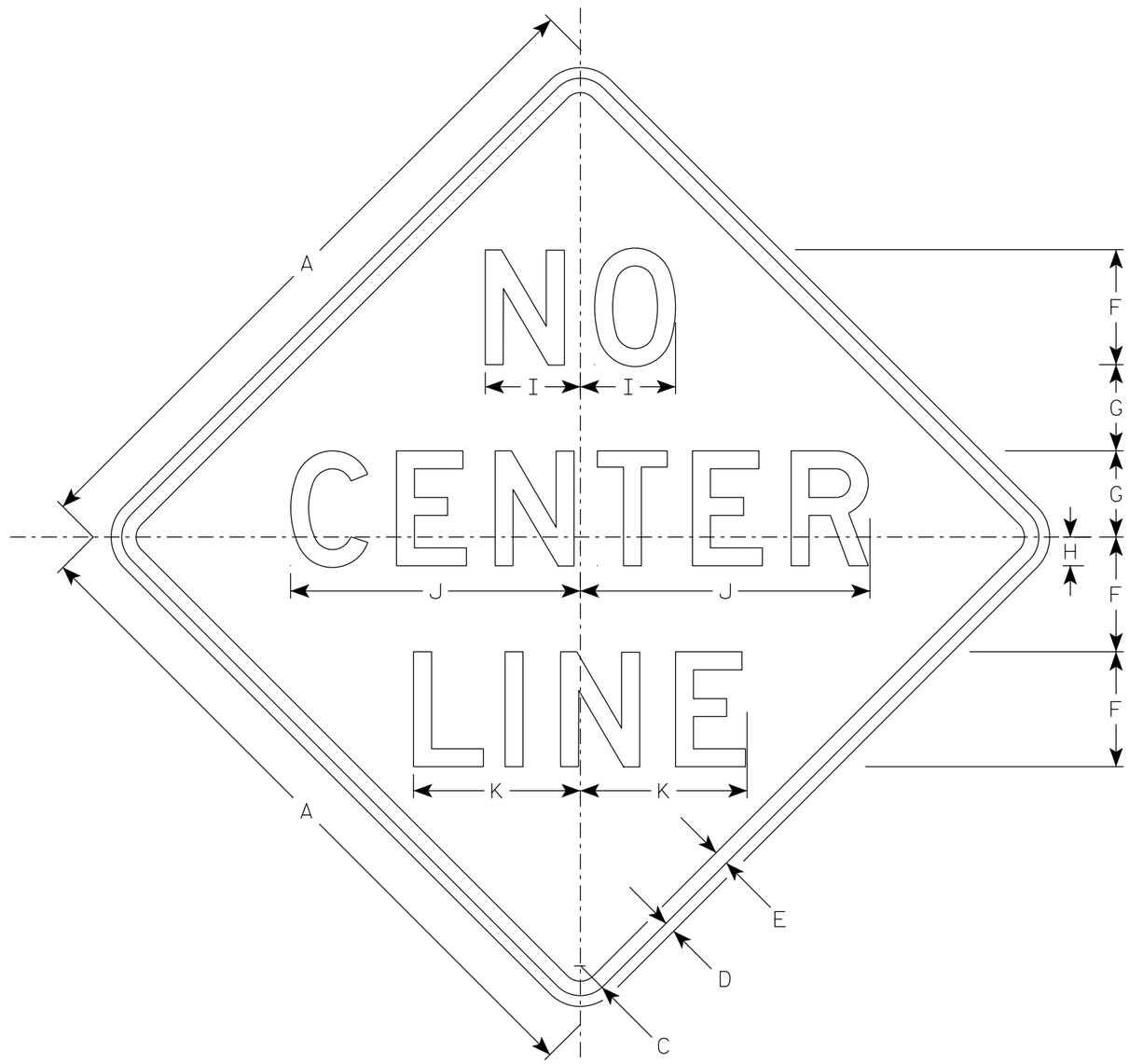

W8-12

NOTES

1. Sign is Type II - Type F Reflective
2. Color:
   Background - Orange
   Message - Black
3. Message Series - D
4. Corners may be square or rounded when base material is plywood but borders shall be rounded as shown. When base material is metal, the corners and borders shall be rounded.

SIZE	A	B	C	D	E	F	G	H	I	J	K	L	M	N	O	P	Q	R	S	T	U	V	W	X	Y	Z	Area sq. ft.
1	36		1 5/8	5/8	3/4	6	4 1/2	1 1/2	5 1/8	16	9																9.0
2S	48		2 1/4	3/4	1	8	6	2	6 5/8	20 1/4	11 5/8																16.0
2M	48		2 1/4	3/4	1	8	6	2	6 5/8	20 1/4	11 5/8																16.0
3	48		2 1/4	3/4	1	8	6	2	6 5/8	20 1/4	11 5/8																16.0
4	48		2 1/4	3/4	1	8	6	2	6 5/8	20 1/4	11 5/8																16.0
5	48		2 1/4	3/4	1	8	6	2	6 5/8	20 1/4	11 5/8																16.0

STANDARD SIGN
W8-12

WISCONSIN DEPT OF TRANSPORTATION

APPROVED Matthew R Rauch
for State Traffic Engineer

DATE 4/30/2020 PLATE NO. W8-12.4

PROJECT NO: | HWY: | COUNTY: | SHEET NO: 145 | E

7

NOTES

1. Sign is Type II - Type F Reflective
2. Color:
   Background - Orange
   Message - Black
3. Message Series - C
4. Corners may be square or rounded when base material is plywood but borders shall be rounded as shown. When base material is metal, the corners and borders shall be rounded.

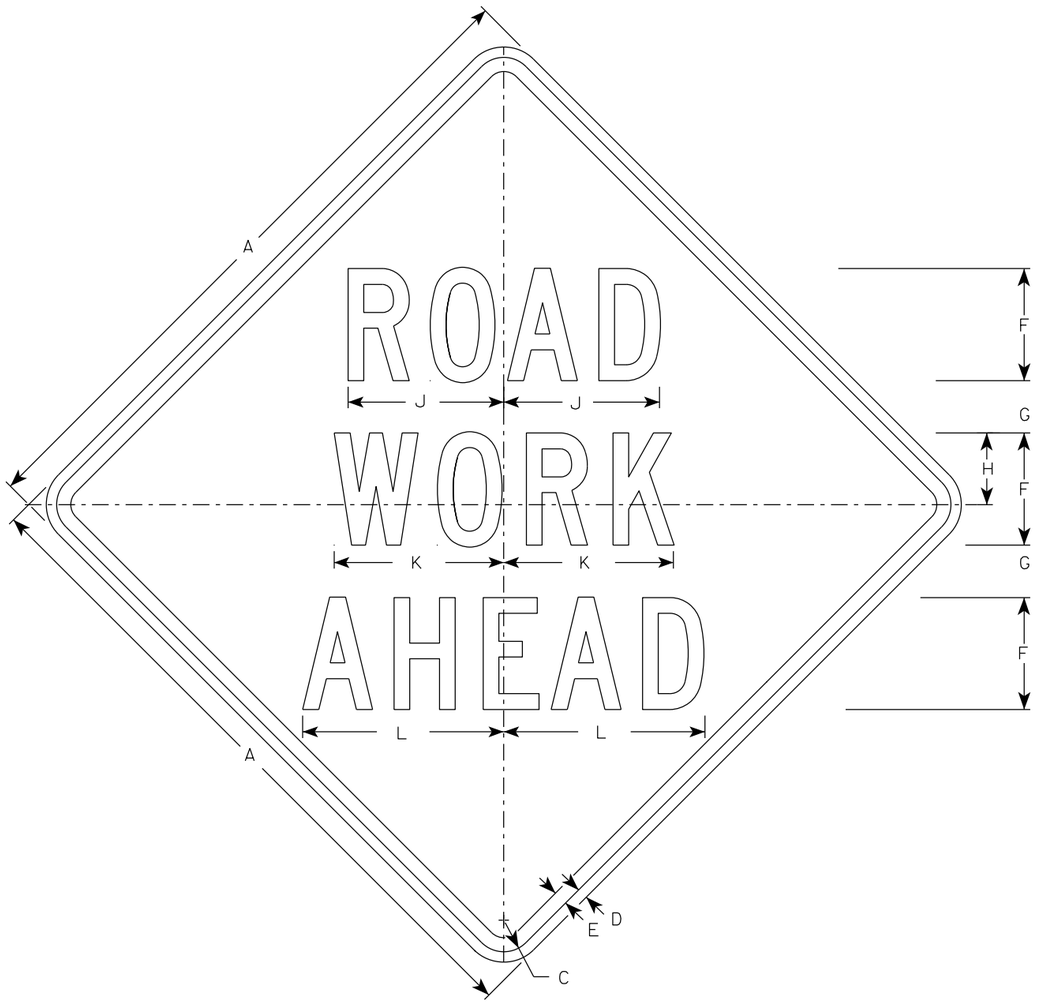

W20-1A

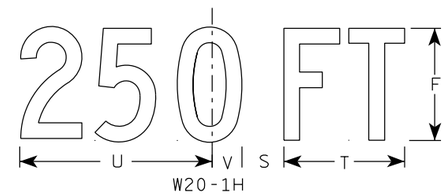

W20-1H

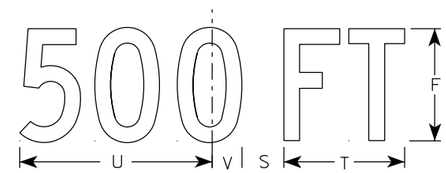

W20-1D

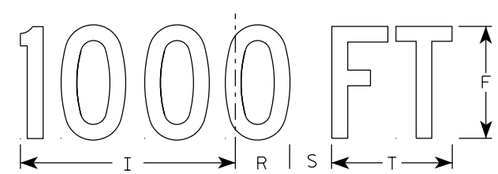

W20-1C

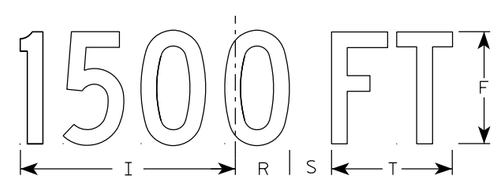

W20-1B

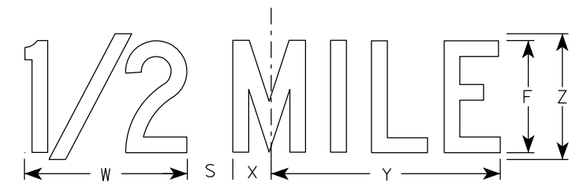

W20-1G

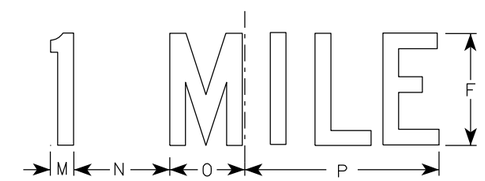

W20-1F

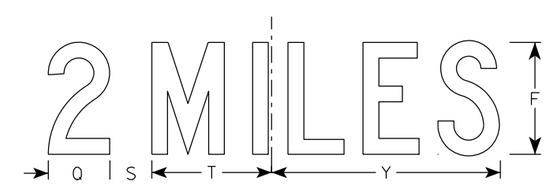

W20-1E

SIZE	A	B	C	D	E	F	G	H	I	J	K	L	M	N	O	P	Q	R	S	T	U	V	W	X	Y	Z	Area sq. ft.
1	36		1 5/8	5/8	3/4	5	2 5/8	3 1/4	10 1/8	7	7 5/8	8 7/8	1 1/8	4 1/2	3 1/2	9	3 1/4	2 1/2	2 1/4	5 5/8	9	1 3/8	8	1 3/4	10 3/4	6	9.0
2S	48		2 1/4	3/4	1	8	3 3/4	5 1/8	15 3/8	11 1/8	12 1/8	14 3/8	1 5/8	6 7/8	5 3/8	13 7/8	4 3/8	3 7/8	3	8 5/8	13 3/4	2 1/8	11 7/8	2 3/4	16 3/8	9	16.0
2M	48		2 1/4	3/4	1	8	3 3/4	5 1/8	15 3/8	11 1/8	12 1/8	14 3/8	1 5/8	6 7/8	5 3/8	13 7/8	4 3/8	3 7/8	3	8 5/8	13 3/4	2 1/8	11 7/8	2 3/4	16 3/8	9	16.0
3	48		2 1/4	3/4	1	8	3 3/4	5 1/8	15 3/8	11 1/8	12 1/8	14 3/8	1 5/8	6 7/8	5 3/8	13 7/8	4 3/8	3 7/8	3	8 5/8	13 3/4	2 1/8	11 7/8	2 3/4	16 3/8	9	16.0
4	48		2 1/4	3/4	1	8	3 3/4	5 1/8	15 3/8	11 1/8	12 1/8	14 3/8	1 5/8	6 7/8	5 3/8	13 7/8	4 3/8	3 7/8	3	8 5/8	13 3/4	2 1/8	11 7/8	2 3/4	16 3/8	9	16.0
5	48		2 1/4	3/4	1	8	3 3/4	5 1/8	15 3/8	11 1/8	12 1/8	14 3/8	1 5/8	6 7/8	5 3/8	13 7/8	4 3/8	3 7/8	3	8 5/8	13 3/4	2 1/8	11 7/8	2 3/4	16 3/8	9	16.0

STANDARD SIGN
W20-1A, B, C, D, E, F, G & H

WISCONSIN DEPT OF TRANSPORTATION

APPROVED Matthew R Rauch
For State Traffic Engineer
DATE 3/25/2020 PLATE NO. W20-1.11

PROJECT NO:

SHEET NO: E

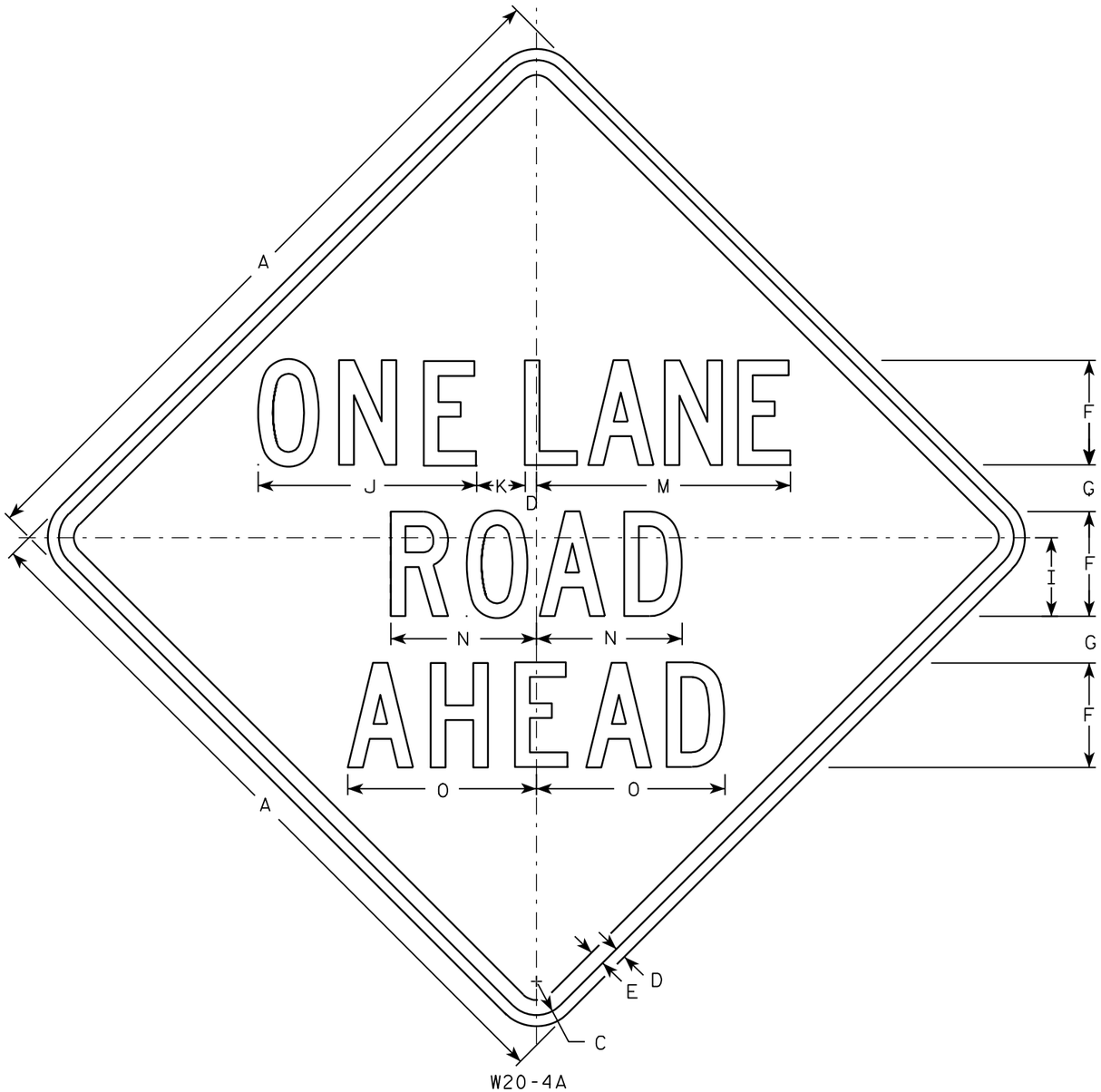

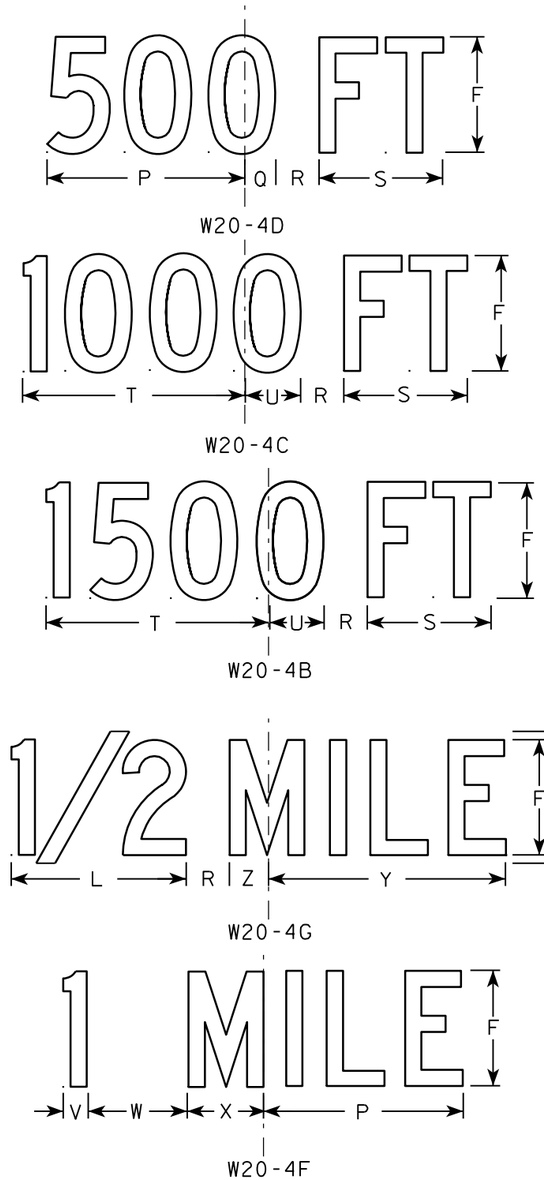

NOTES

1. Sign is Type II - Type F Reflective - reference WIS DOT Standard Specification for HIGHWAY and STRUCTURE CONSTRUCTION latest edition.
2. Color:
   Background - Orange
   Message - Black
3. Message Series - C
4. Corners may be square or rounded when base material is plywood but borders shall be rounded as shown. When base material is metal, the corners and borders shall be rounded.

SIZE	A	B	C	D	E	F	G	H	I	J	K	L	M	N	O	P	Q	R	S	T	U	V	W	X	Y	Z	Area sq. ft.
1	36		1 5/8	5/8	3/4	5	2 3/8	6	3 3/4	10 3/8	2 3/8	8	13 1/2	7	8 7/8	9	1 3/8	1 7/8	5 5/8	10 1/8	2 1/2	1 1/8	4 1/2	3 1/2	10 3/4	1 3/4	9.0
2S	48		2 1/4	3/4	1	7	3 1/8	8	5 1/4	14 5/8	3 1/4	10 5/8	17 3/4	9 3/4	12 5/8	12	1 7/8	2 5/8	7 1/2	13 1/2	3 3/8	1 1/2	6	4 5/8	14 3/8	2 3/8	16.0
2M	48		2 1/4	3/4	1	7	3 1/8	8	5 1/4	14 5/8	3 1/4	10 5/8	17 3/4	9 3/4	12 5/8	12	1 7/8	2 5/8	7 1/2	13 1/2	3 3/8	1 1/2	6	4 5/8	14 3/8	2 3/8	16.0
3	48		2 1/4	3/4	1	7	3 1/8	8	5 1/4	14 5/8	3 1/4	10 5/8	17 3/4	9 3/4	12 5/8	12	1 7/8	2 5/8	7 1/2	13 1/2	3 3/8	1 1/2	6	4 5/8	14 3/8	2 3/8	16.0
4	48		2 1/4	3/4	1	7	3 1/8	8	5 1/4	14 5/8	3 1/4	10 5/8	17 3/4	9 3/4	12 5/8	12	1 7/8	2 5/8	7 1/2	13 1/2	3 3/8	1 1/2	6	4 5/8	14 3/8	2 3/8	16.0
5	48		2 1/4	3/4	1	7	3 1/8	8	5 1/4	14 5/8	3 1/4	10 5/8	17 3/4	9 3/4	12 5/8	12	1 7/8	2 5/8	7 1/2	13 1/2	3 3/8	1 1/2	6	4 5/8	14 3/8	2 3/8	16.0

STANDARD SIGN
W20-4A, B, C, D, F & G

WISCONSIN DEPT OF TRANSPORTATION

APPROVED Matthew R Rauch
for State Traffic Engineer

DATE 3/18/11 PLATE NO. W20-4.9

PROJECT NO:

SHEET NO: 147 E

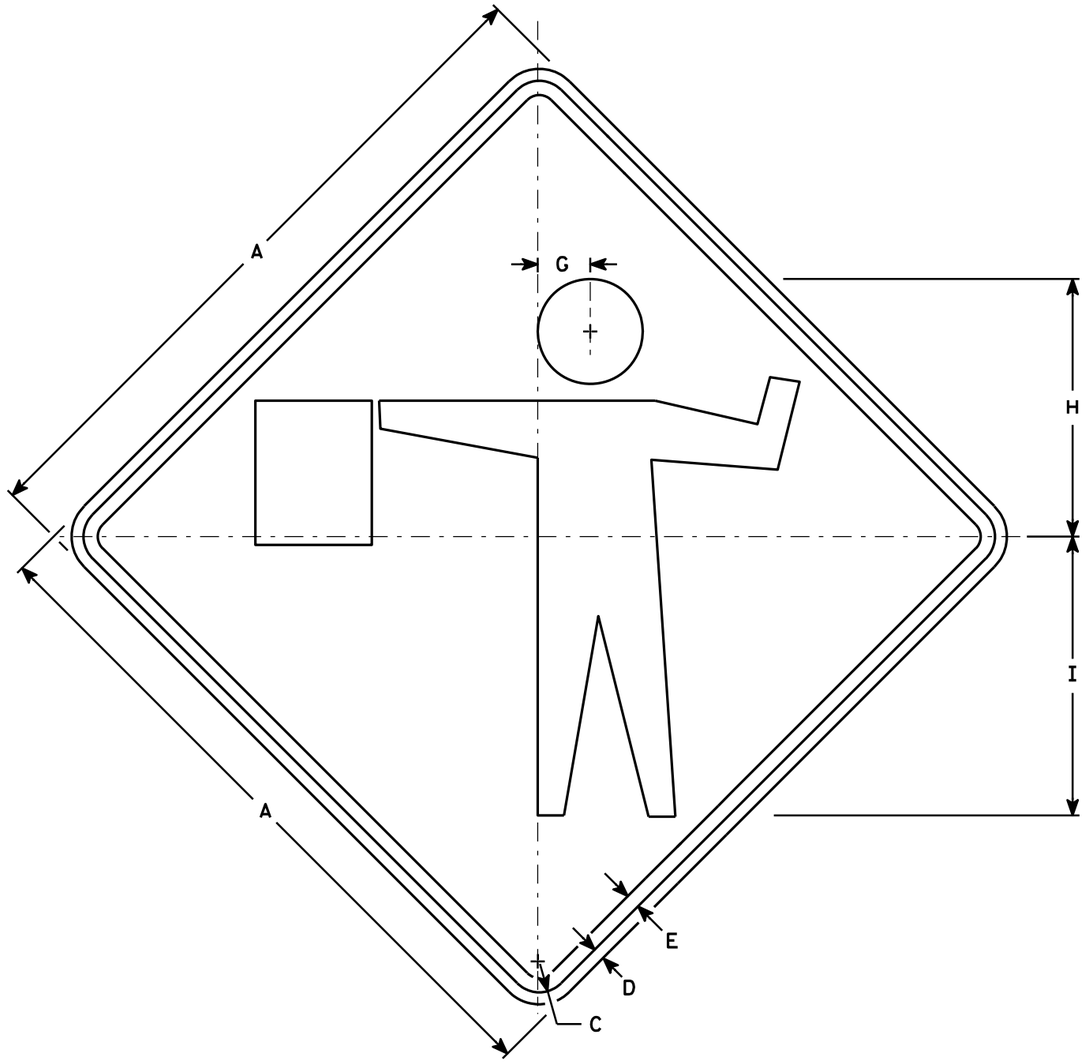

W20-7A

NOTES

1. Sign is Type II - Type F Reflective - reference WIS DOT Standard Specification for HIGHWAY and STRUCTURE CONSTRUCTION latest edition.
2. Color:
   Background - Orange
   Message - Black
3. Corners may be square or rounded when base material is plywood but borders shall be rounded as shown. When base material is metal, the corners and borders shall be rounded.

SIZE	A	B	C	D	E	F	G	H	I	J	K	L	M	N	O	P	Q	R	S	T	U	V	W	X	Y	Z	Area sq. ft.
1	36		1 5/8	5/8	3/4		2 3/4	13 1/2	14 5/8																		9.00
2S	48		2 1/4	3/4	1		3 3/4	18	19 1/2																		16.00
2M	48		2 1/4	3/4	1		3 3/4	18	19 1/2																		16.00
3	48		2 1/4	3/4	1		3 3/4	18	19 1/2																		16.00
4	48		2 1/4	3/4	1		3 3/4	18	19 1/2																		16.00
5	48		2 1/4	3/4	1		3 3/4	18	19 1/2																		16.00

STANDARD SIGN
W20-7A

WISCONSIN DEPT OF TRANSPORTATION

APPROVED Matthew R Rauch
for State Traffic Engineer

DATE 3/18/11 PLATE NO. W20-7A.5

PROJECT NO: | HWY: | COUNTY: | SHEET NO: 148 | E

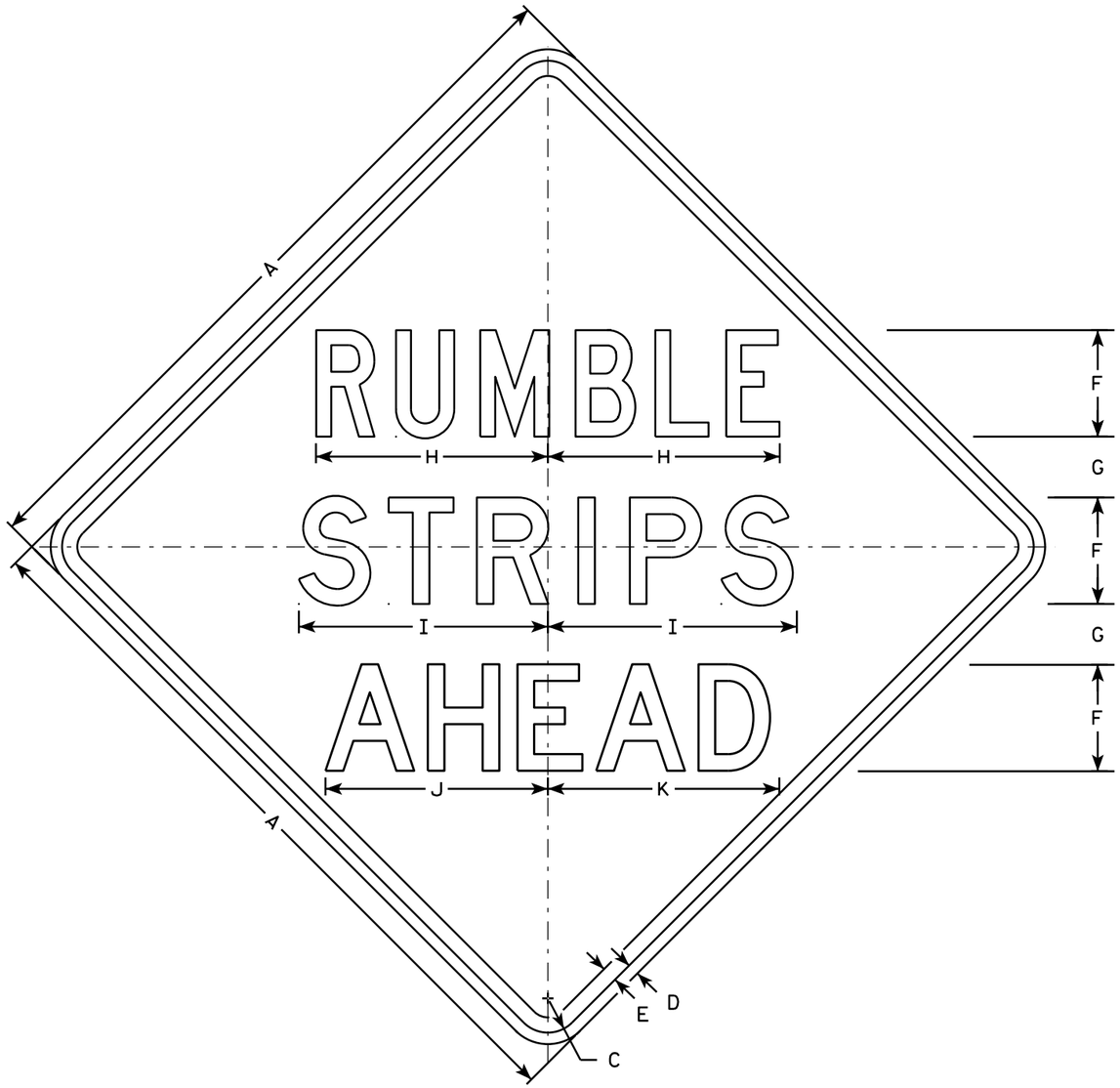

W21-65

NOTES

1. Sign is Type II - Type F Reflective
2. Color:
   Background - Orange
   Message - Black
3. Message Series - see note 5
4. Corners may be square or rounded when base material is plywood but borders shall be rounded as shown. When base material is metal, the corners and borders shall be rounded.
5. Line 1 is Series C
   Lines 2 and 3 are Series D

SIZE	A	B	C	D	E	F	G	H	I	J	K	L	M	N	O	P	Q	R	S	T	U	V	W	X	Y	Z	Area sq. ft.
1	36		1 5/8	5/8	3/4	5	3 1/4	10 7/8	11 5/8	11	11 5/8																9.0
2S	48		2 1/4	3/4	1	7	4	15 1/4	16 3/8	14 5/8	15 1/4																16.0
2M	48		2 1/4	3/4	1	7	4	15 1/4	16 3/8	14 5/8	15 1/4																16.0
3	48		2 1/4	3/4	1	7	4	15 1/4	16 3/8	14 5/8	15 1/4																16.0
4	48		2 1/4	3/4	1	7	4	15 1/4	16 3/8	14 5/8	15 1/4																16.0
5	48		2 1/4	3/4	1	7	4	15 1/4	16 3/8	14 5/8	15 1/4																16.0

STANDARD SIGN

W21-65

WISCONSIN DEPT OF TRANSPORTATION

APPROVED Matthew R Rauch
for State Traffic Engineer

DATE 5/28/14 PLATE W21-65.1

PROJECT NO: | HWY: | COUNTY: | SHEET NO: E

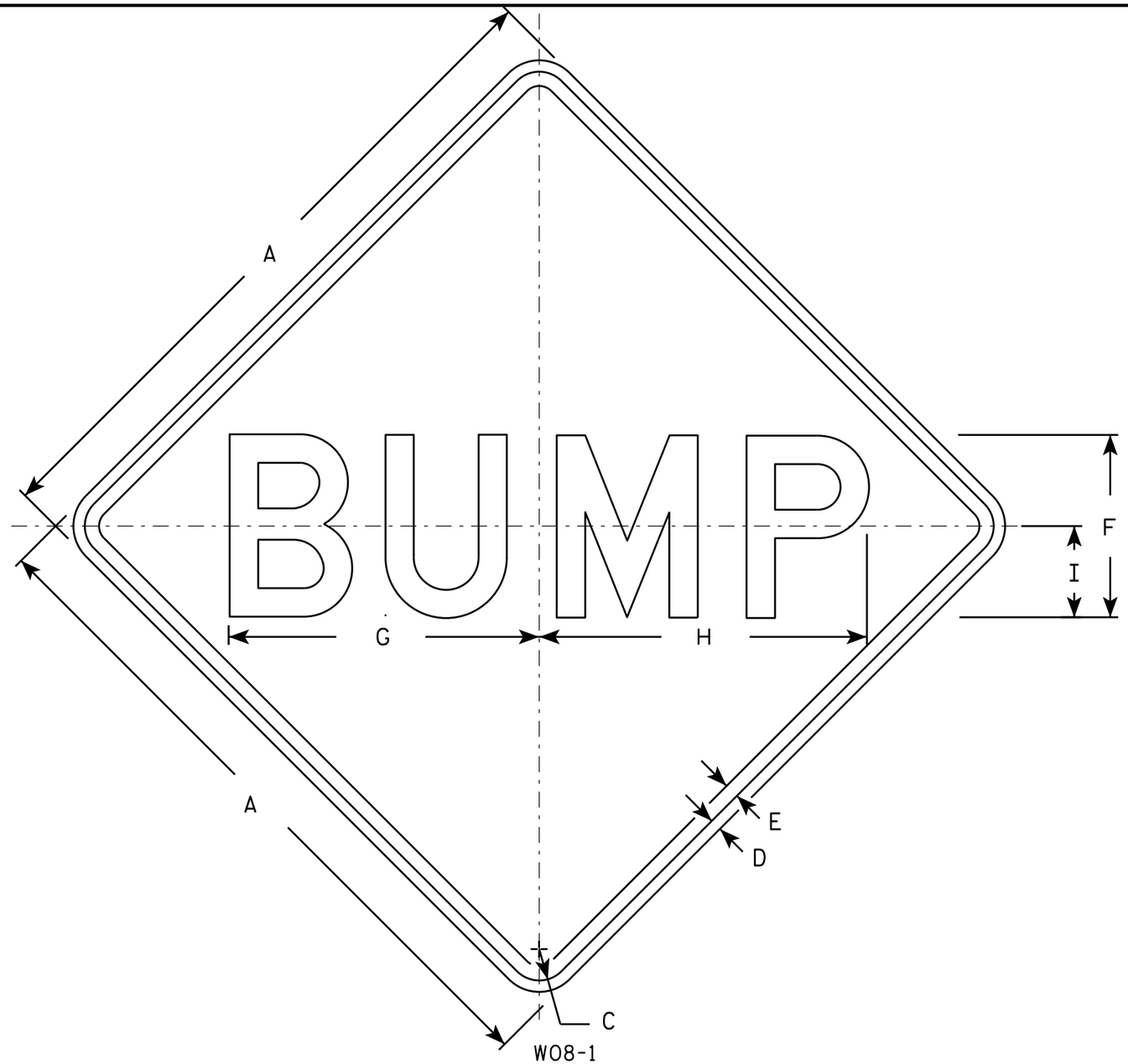

NOTES

1. Sign is Type II - Type F Reflective - reference WIS DOT Standard Specification for HIGHWAY and STRUCTURE CONSTRUCTION latest edition.
2. Color:
   Background - Orange
   Message - Black
3. Message Series - D
4. Corners may be square or rounded when base material is plywood but borders shall be rounded as shown. When base material is metal, the corners and borders shall be rounded.

SIZE	A	B	C	D	E	F	G	H	I	J	K	L	M	N	O	P	Q	R	S	T	U	V	W	X	Y	Z	Area sq. ft.
1	36		1 5/8	5/8	3/4	10	16 7/8	17 7/8	5																		9.0
2S	48		2 1/4	3/4	1	12	20 3/8	21 5/8	6																		16.0
2M	48		2 1/4	3/4	1	12	20 3/8	21 5/8	6																		16.0
3	48		2 1/4	3/4	1	12	20 3/8	21 5/8	6																		16.0
4	48		2 1/4	3/4	1	12	20 3/8	21 5/8	6																		16.0
5	48		2 1/4	3/4	1	12	20 3/8	21 5/8	6																		16.0

STANDARD SIGN
W08-1

WISCONSIN DEPT OF TRANSPORTATION

APPROVED Matthew R Rauch
for State Traffic Engineer

DATE 11/20/13 PLATE 150 W08-1.1

PROJECT NO: | HWY: | COUNTY: | SHEET NO: | E

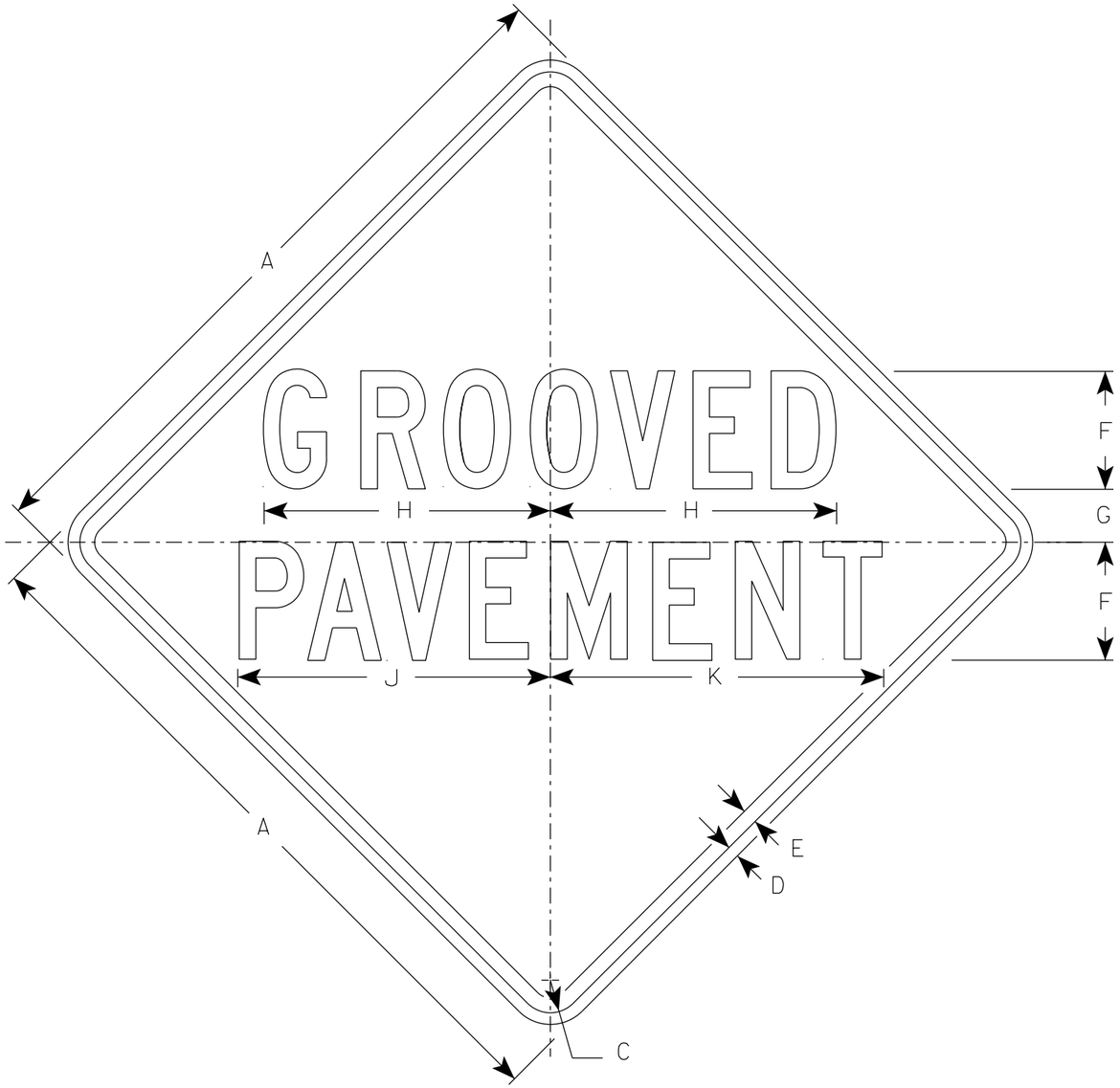

W08-15

NOTES

1. Sign is Type II - Type F Reflective
2. Color:
   Background - Orange
   Message - Black
3. Message Series - C
4. Corners may be square or rounded when base material is plywood but borders shall be rounded as shown. When base material is metal, the corners and borders shall be rounded.

SIZE	A	B	C	D	E	F	G	H	I	J	K	L	M	N	O	P	Q	R	S	T	U	V	W	X	Y	Z	Area sq. ft.
1	36		1 5/8	5/8	3/4	6	2 5/8	14 1/2		15 7/8	17																9.0
2S	48		2 1/4	3/4	1	8	3 1/2	19 3/8		21 1/4	22 5/8																16.0
2M	48		2 1/4	3/4	1	8	3 1/2	19 3/8		21 1/4	22 5/8																16.0
3	48		2 1/4	3/4	1	8	3 1/2	19 3/8		21 1/4	22 5/8																16.0
4	48		2 1/4	3/4	1	8	3 1/2	19 3/8		21 1/4	22 5/8																16.0
5	48		2 1/4	3/4	1	8	3 1/2	19 3/8		21 1/4	22 5/8																16.0

STANDARD SIGN
W08-15

WISCONSIN DEPT OF TRANSPORTATION

APPROVED Matthew R Rauch
for State Traffic Engineer

DATE 4/16/2020 PLATE NO. W08-15.1

PROJECT NO: | HWY: | COUNTY: | SHEET NO: 151 | E

STATE PROJECT NUMBER
8072-00-70

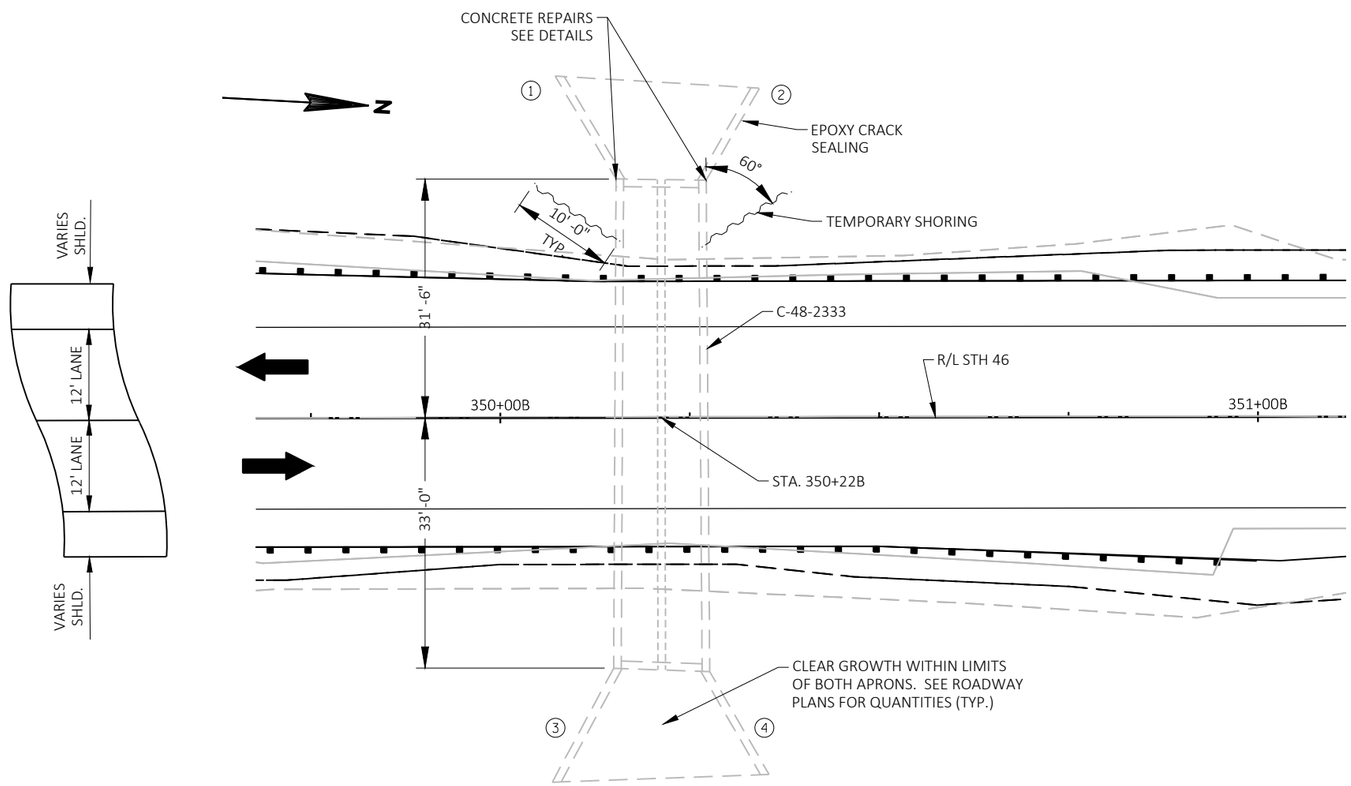

PLAN

(BOX CULVERT REPAIR)

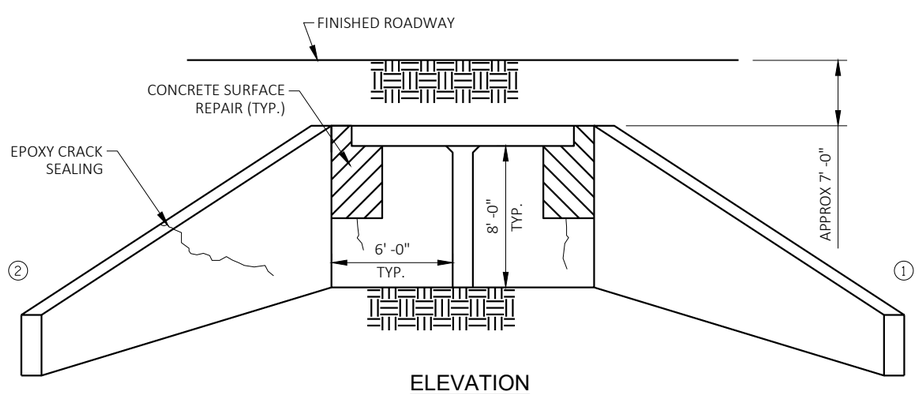

ELEVATION

(LOOKING EAST)

DESIGN DATA

LIVE LOAD:
RATING FACTORS PER WBM 45.8.2.1 FOR IN SERVICE BOX CULVERTS WITH FILLS > 6.0 FT
INVENTORY RATING FACTOR: 1.0
OPERATING RATING FACTOR: 1.67
WISCONSIN STANDARD PERMIT VEHICLE (WIS-SPV) = 190 KIPS

MATERIAL PROPERTIES:
CONCRETE MASONRY CULVERTS.....f'c = 3,500 P.S.I.

BAR STEEL REINFORCEMENT
HIGH STRENGTH, GRADE 60.....fy = 60,000 P.S.I.

TRAFFIC DATA

STH 46
A.A.D.T. = 4,900 (2022)
A.A.D.T. = 6,100 (2042)
RDS = 55 MPH

LIST OF DRAWINGS

1. GENERAL PLAN
2. REPAIR DETAILS

LEGEND

(1) INDICATES WING NUMBER

TEMPORARY SHORING

TOTAL ESTIMATED QUANTITIES

ITEM NUMBER	ITEM DESCRIPTION	UNIT	TOTAL
206.2000	EXCAVATION FOR CULVERTS C-48-2333	LS	1
210.1100	BACKFILL STRUCTURE TYPE A	CY	23
502.4204	ADHESIVE ANCHORS NO. 4 BAR	EACH	26
505.0400	BAR STEEL REINFORCEMENT HS STRUCTURES	LB	100
509.1500	CONCRETE SURFACE REPAIR	SF	15
509.9020.S	EPOXY CRACK SEALING	LF	20
511.1200	TEMPORARY SHORING C-48-2333	SF	147
516.0500	RUBBERIZED MEMBRANE WATERPROOFING	SY	5
SPV.0165	FULL DEPTH WALL REPAIR	SF	10

WISCONSIN
CHAD D. HALVERSON
E-34364
MADISON, WI
PROFESSIONAL ENGINEER

06-03-2021

STRUCTURE DESIGN CONTACTS
BUREAU OF STRUCTURES:
AARON BONK (608) 261-0261
CONSULTANT:
CHAD HALVERSON (608) 663-1218

NO.	DATE	REVISION	BY

KL Engineering
[A] Better Experience

STATE OF WISCONSIN
DEPARTMENT OF TRANSPORTATION

ACCEPTED SDR 08/18/21
CHIEF STRUCTURES DESIGN ENGINEER DATE

STRUCTURE C-48-2333

S.T.H. 46 OVER DRAINAGE

COUNTY POLK | TOWN ~~/CITY/VILLAGE~~ BLACKBROOK

DESIGN SPEC. REHABILITATION N/A

DESIGNED BY CDH | DESIGN CK'D. CAH | DRAWN BY STD | PLANS CK'D. CDH

GENERAL PLAN

SHEET 1 OF 2

152

8

8

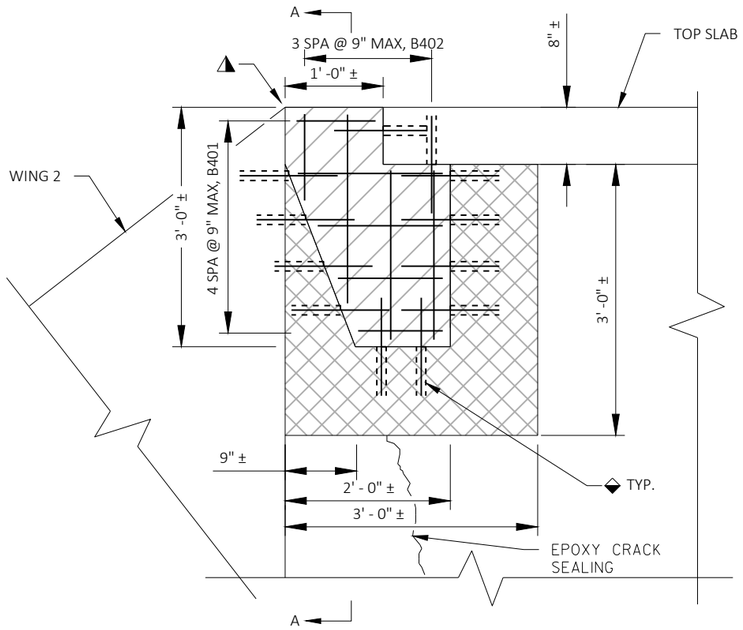

ELEVATION

NORTH WEST END OF BARREL

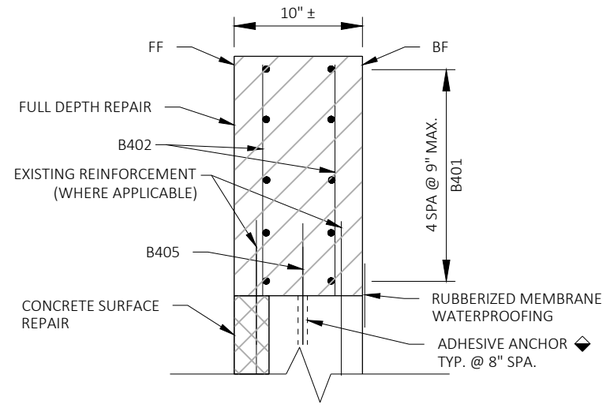

SECTION A - A

GENERAL NOTES

DIMENSIONS SHOWN ARE BASED ON FIELD SURVEY.

ALL CONCRETE REMOVAL NOT COVERED WITH A CONCRETE REPAIR SHALL BE DEFINED BY A 1/2 INCH DEEP SAWCUT, UNLESS SPECIFIED OTHERWISE.

UTILIZE EXISTNG BAR STEEL REINFORCEMENT AND EXTEND 24 BAR DIAMETERS INTO NEW WORK, UNLESS SPECIFIED OTHERWISE.

THE FIRST OR FIRST TWO DIGITS OF THE BAR MARK SIGNIFIES THE BAR SIZE.

PERFORM EPOXY CRACK SEALING, CONCRETE SURFACE REPAIR, AND FULL DEPTH WALL REPAIR AT LOCATIONS DIRECTED BY THE ENGINEER.

BAR STEEL REINFORCEMENT SHALL BE EMBEDDED 2" CLEAR UNLESS OTHERWISE SHOWN OR NOTED.

CUT BARS IN THE FIELD AS REQUIRED TO FIT. PAY QUANTITY BASED ON QUANTITY SHOWN IN BILL OF BARS TABLE.

LEGEND

CONCRETE SURFACE REPAIR

FULL DEPTH WALL REPAIR. PROVIDE NO. 4 BARS AT 9" MAX SPACING EACH FACE, EACH WAY.

ADHESIVE ANCHORS NO. 4 BAR. EMBED 5" IN CONCRETE. PLACE AT 8" SPA AT CENTER OF WALL. FIELD BEND BARS AS REQUIRED TO FIT.

MAINTAIN MINIMUM EDGE DISTANCE OF 3-INCHES FOR A #4 BAR.

BACKFILL PAY LIMITS. BACKFILL BEYOND BACKFILL PAY LIMITS SHALL BE INCIDENTAL TO EXCAVATION FOR STRUCTURES. LIMITS OF EXCAVATION SHALL BE DETERMINED BY THE CONTRACTOR.

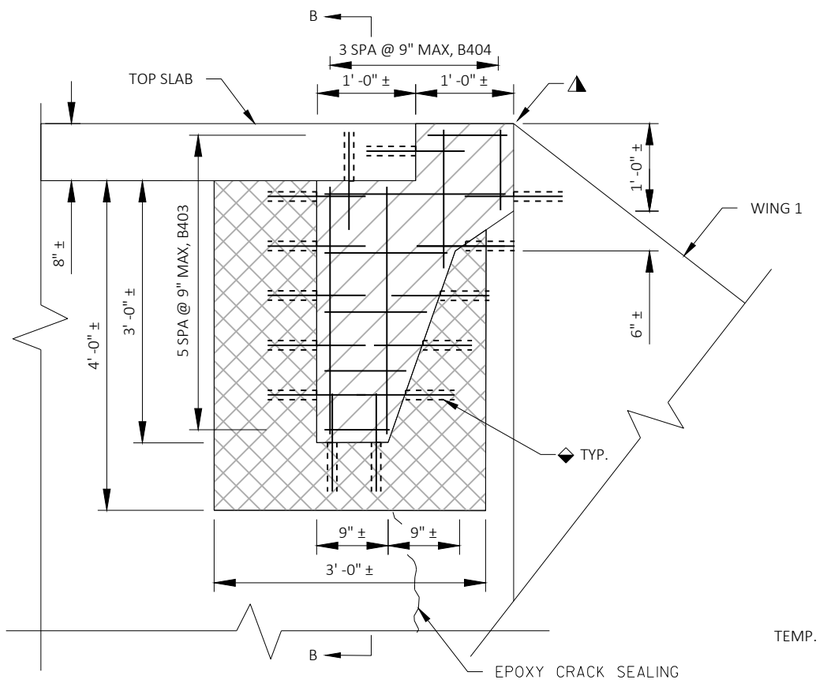

ELEVATION

SOUTH WEST END OF BARREL

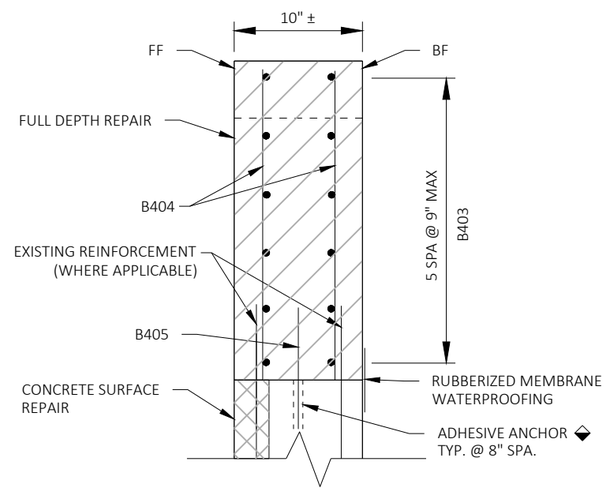

SECTION B - B

BILL OF BARS

TOTAL = 100 LBS UNCOATED

BAR MARK	NO. REQ'D.	LENGTH	COAT	BENT	LOCATION
B401	10	2'-0"			NW BACKWALL - HORIZ
B402	8	3'-0"			NW BACKWALL - VERTICAL
B403	12	3'-0"			SW BACKWALL - HORIZ
B404	8	4'-0"			SW BACKWALL - VERTICAL
B405	26	2'-0"			ADHESIVE ANCHORS

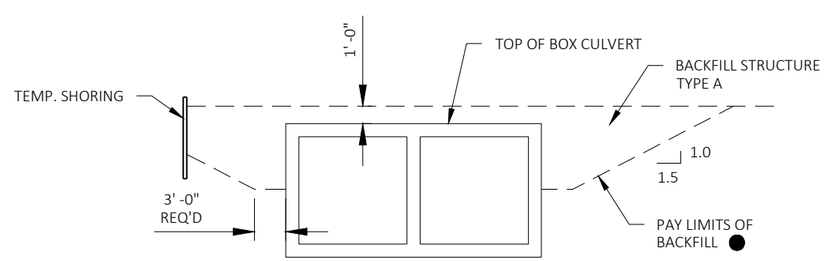

BACK FILL DETAIL

NO.	DATE	REVISION	BY

STATE OF WISCONSIN
DEPARTMENT OF TRANSPORTATION

STRUCTURE C-48-2333

DRAWN BY STD | PLANS CK'D. CDH

REPAIR DETAILS

SHEET 2 OF 2

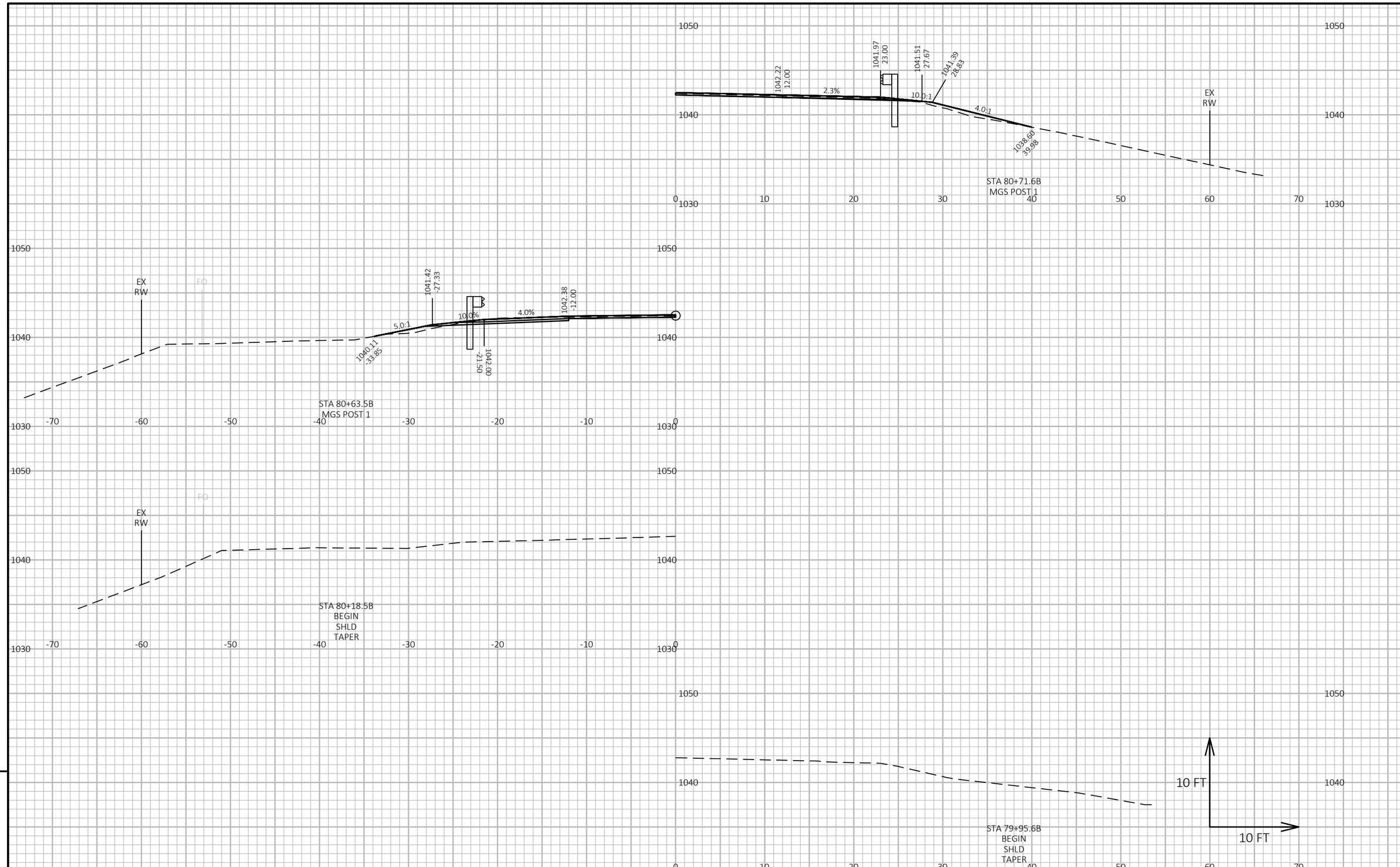

9

9

PROJECT NO: 8072-00-70	HWY: STH 46	COUNTY: ST. CROIX/POLK	CROSS SECTIONS: MGS TERMINAL GRADING	SHEET 154	E

FILE NAME : \\KLENGINEERING\DATA1\WDOTNW\19065-000 (STH 46)\CIVIL 3D\SHEETSPLAN\090201-XS.DWG
LAYOUT NAME - 01

PLOT DATE : 7/15/2021 9:26 AM PLOT BY : JON BLOMQUIST PLOT NAME : **PLOT SCALE :** 1 IN:10 FT HORZ. / 1 IN:10 FT VERT.

WISDOT/CADDS SHEET 49

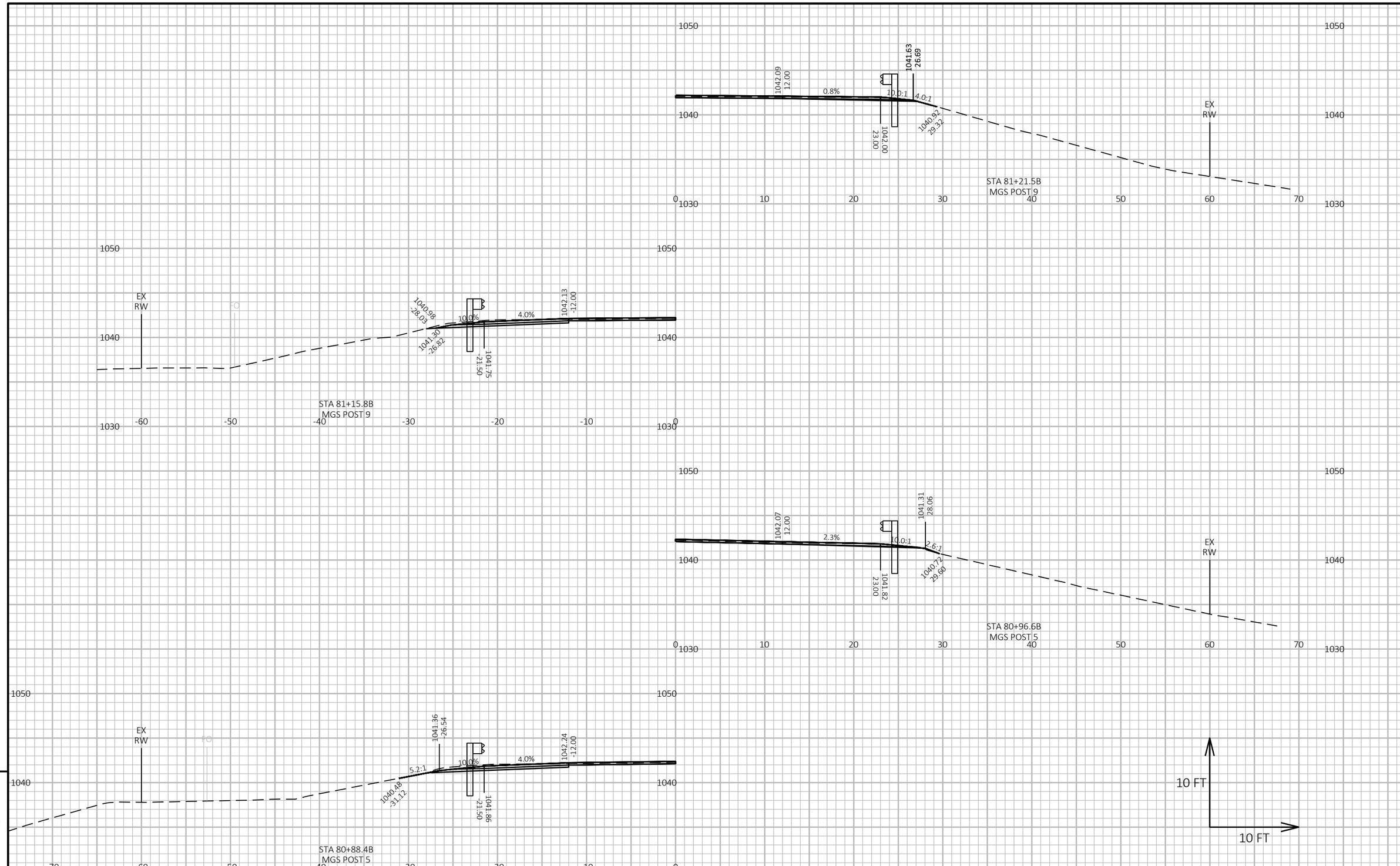

PROJECT NO: 8072-00-70	HWY: STH 46	COUNTY: ST. CROIX/POLK	CROSS SECTIONS: MGS TERMINAL GRADING	SHEET 155	E

FILE NAME : \\KLENGINEERING\DATA1\WDOTNW\19065-000 (STH 46)\CIVIL 3D\SHEETSPLAN\090201-XS.DWG
LAYOUT NAME - 02
PLOT DATE : 7/15/2021 9:26 AM
PLOT BY : JON BLOMQUIST
PLOT NAME :
PLOT SCALE : 1 IN:10 FT HORZ. / 1 IN:10 FT VERT.
WISDOT/CADDS SHEET 49

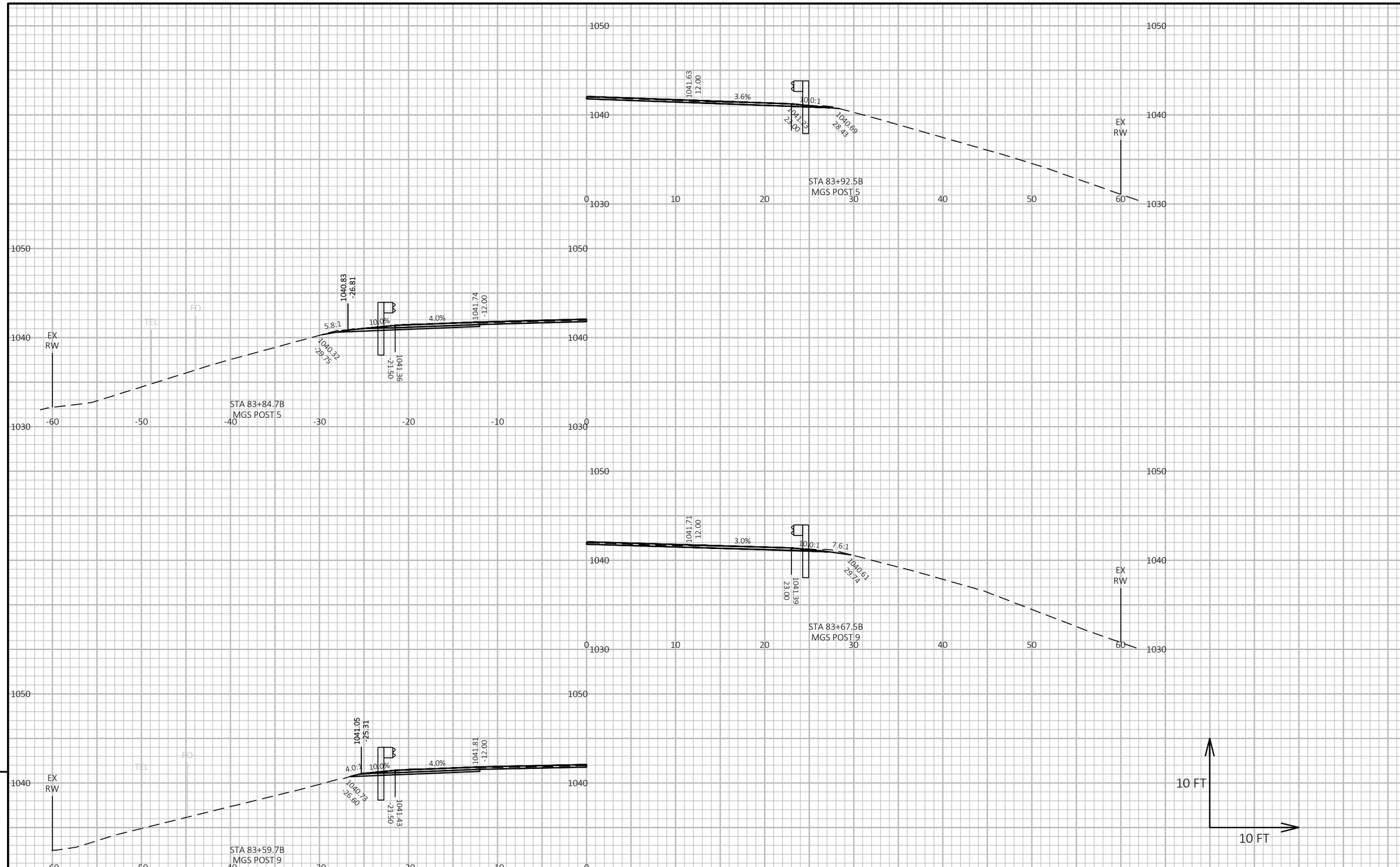

9

9

PROJECT NO: 8072-00-70	HWY: STH 46	COUNTY: ST. CROIX/POLK	CROSS SECTIONS: MGS TERMINAL GRADING	SHEET 156	E

FILE NAME : \\KLENGINEERING\DATA1\WDOTNW\19065-000 (STH 46)\CIVIL 3D\SHEETSPLAN\090201-XS.DWG
LAYOUT NAME - 03
PLOT DATE : 7/15/2021 9:26 AM
PLOT BY : JON BLOMQUIST
PLOT NAME :
PLOT SCALE : 1 IN:10 FT HORZ. / 1 IN:10 FT VERT.
WISDOT/CADDS SHEET 49

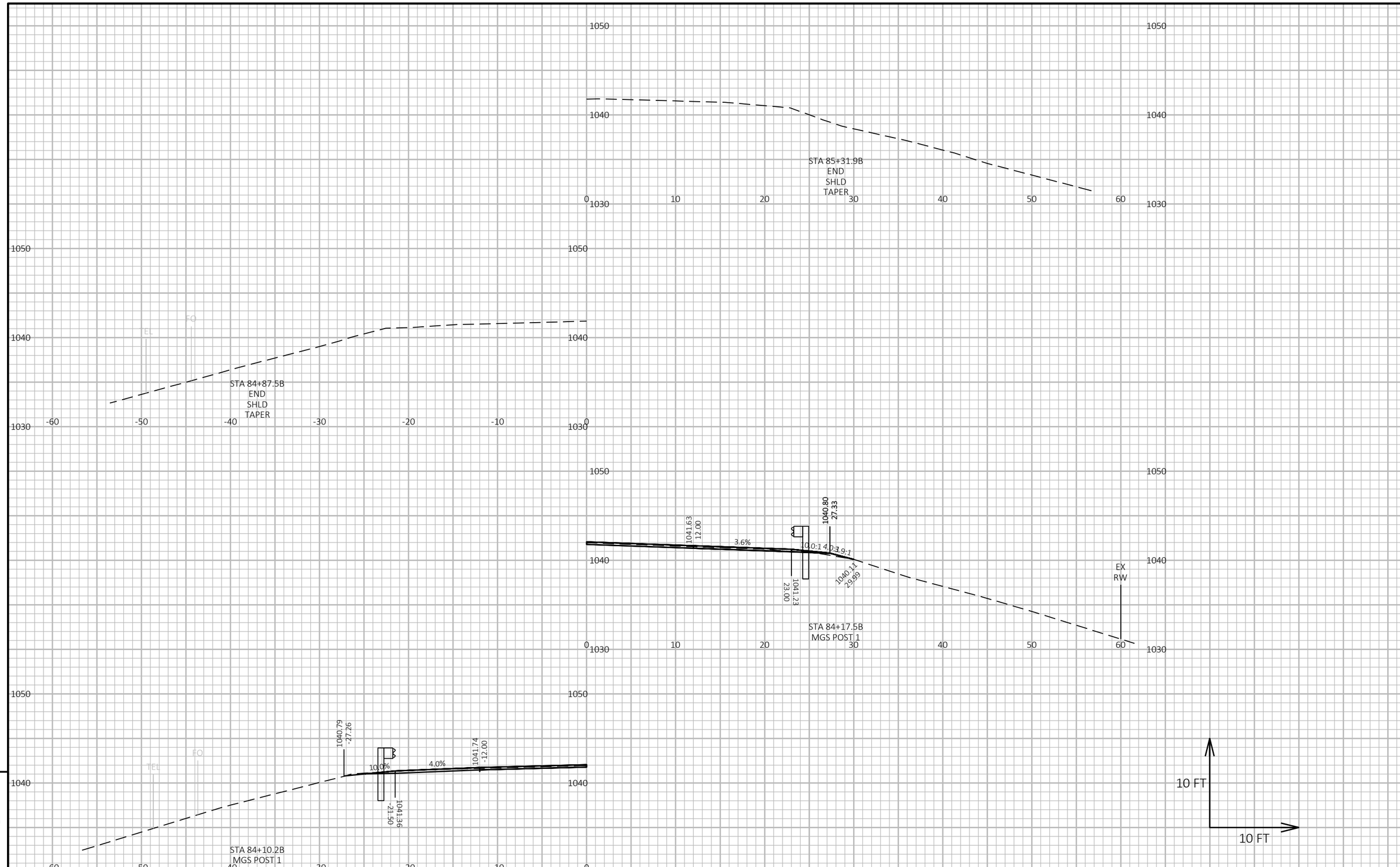

9

9

PROJECT NO: 8072-00-70	HWY: STH 46	COUNTY: ST. CROIX/POLK	CROSS SECTIONS: MGS TERMINAL GRADING	SHEET 157	E

FILE NAME : \\KLENGINEERING\DATA1\WDOTNW\19065-000 (STH 46)\CIVIL 3D\SHEETSPLAN\090201-XS.DWG
LAYOUT NAME - 04
PLOT DATE : 7/15/2021 9:26 AM
PLOT BY : JON BLOMQUIST
PLOT NAME :
PLOT SCALE : 1 IN:10 FT HORZ. / 1 IN:10 FT VERT.
WISDOT/CADDS SHEET 49

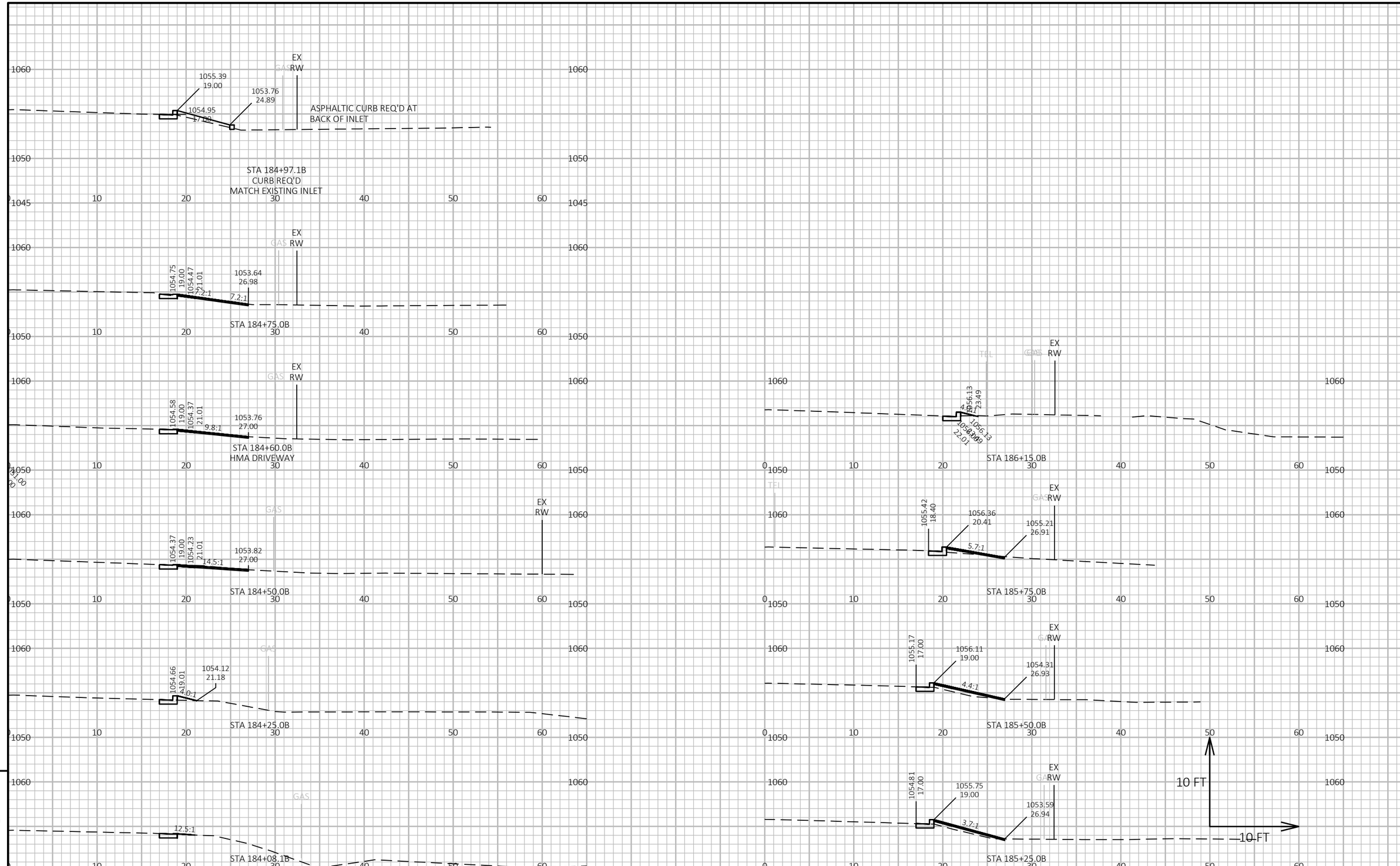

PROJECT NO: 8072-00-70	HWY: STH 46	COUNTY: ST CROIX/POLK	CROSS SECTIONS: GRADING, SHAPING & FINISHING CURB & GUTTER	SHEET 158	E

FILE NAME : \\KLENGINEERING\DATA1\WDOTNW\19065-000 (STH 46)\CIVIL 3D\SHEETSPLAN\090201-XS.DWG
LAYOUT NAME - 05
PLOT DATE : 7/15/2021 9:26 AM
PLOT BY : JON BLOMQUIST
PLOT NAME :
PLOT SCALE : 1 IN:10 FT HORZ. / 1 IN:10 FT VERT.
WISDOT/CADDS SHEET 49

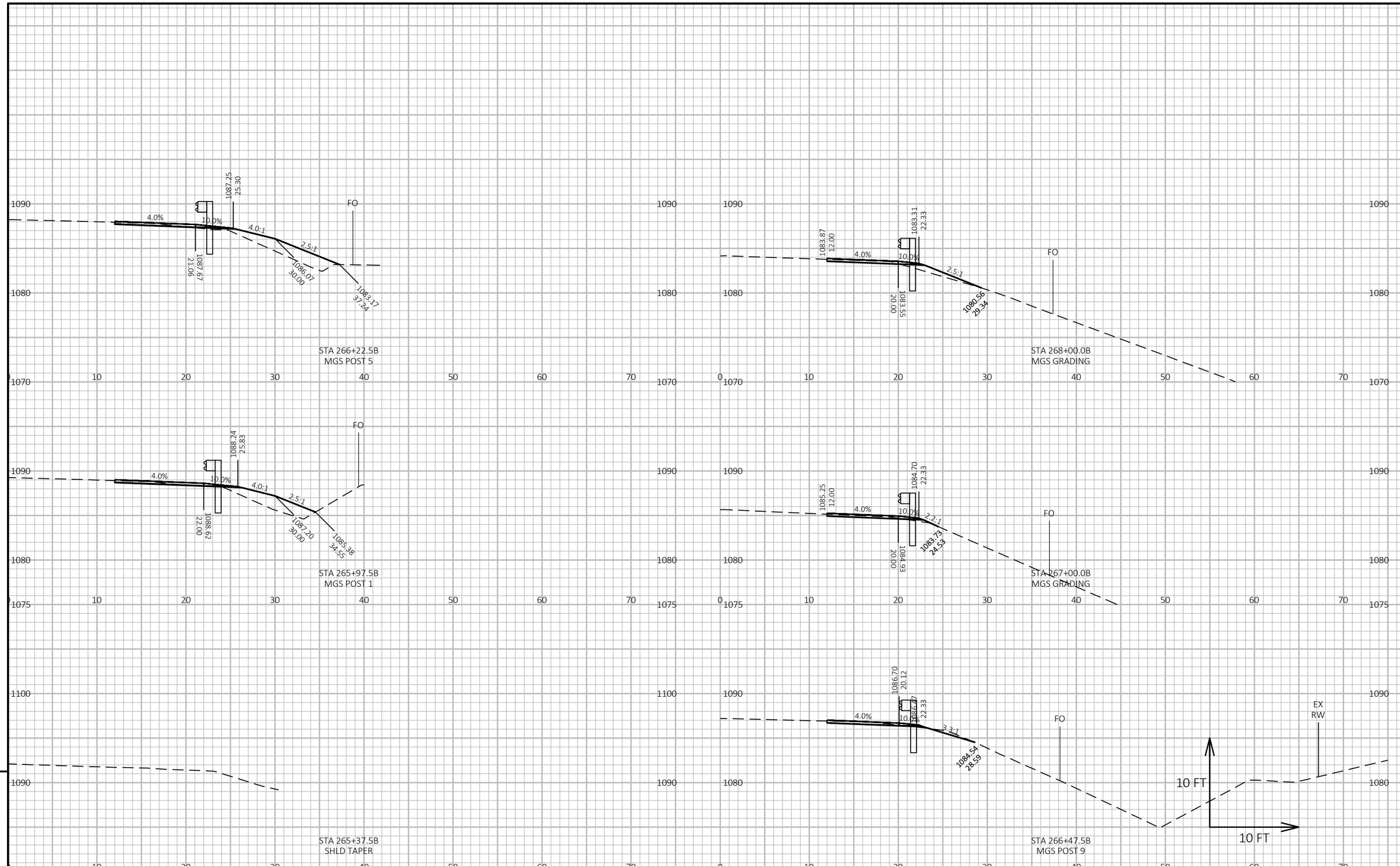

9

9

PROJECT NO: 8072-00-70	HWY: STH 46	COUNTY: ST. CROIX\POLK	CROSS SECTIONS: BARRIER SYSTEM GRADING SHAPING FINISHING	SHEET 159	E

FILE NAME : \\KLENGINEERING\DATA1\WDOTNW\19065-000 (STH 46)\CIVIL 3D\SHEETSPLAN\090202-XS.DWG
LAYOUT NAME - 01

PLOT DATE : 7/15/2021 9:28 AM PLOT BY : JON BLOMQUIST PLOT NAME : **PLOT SCALE :** 1 IN:10 FT HORZ. / 1 IN:10 FT VERT.

WISDOT/CADDS SHEET 49

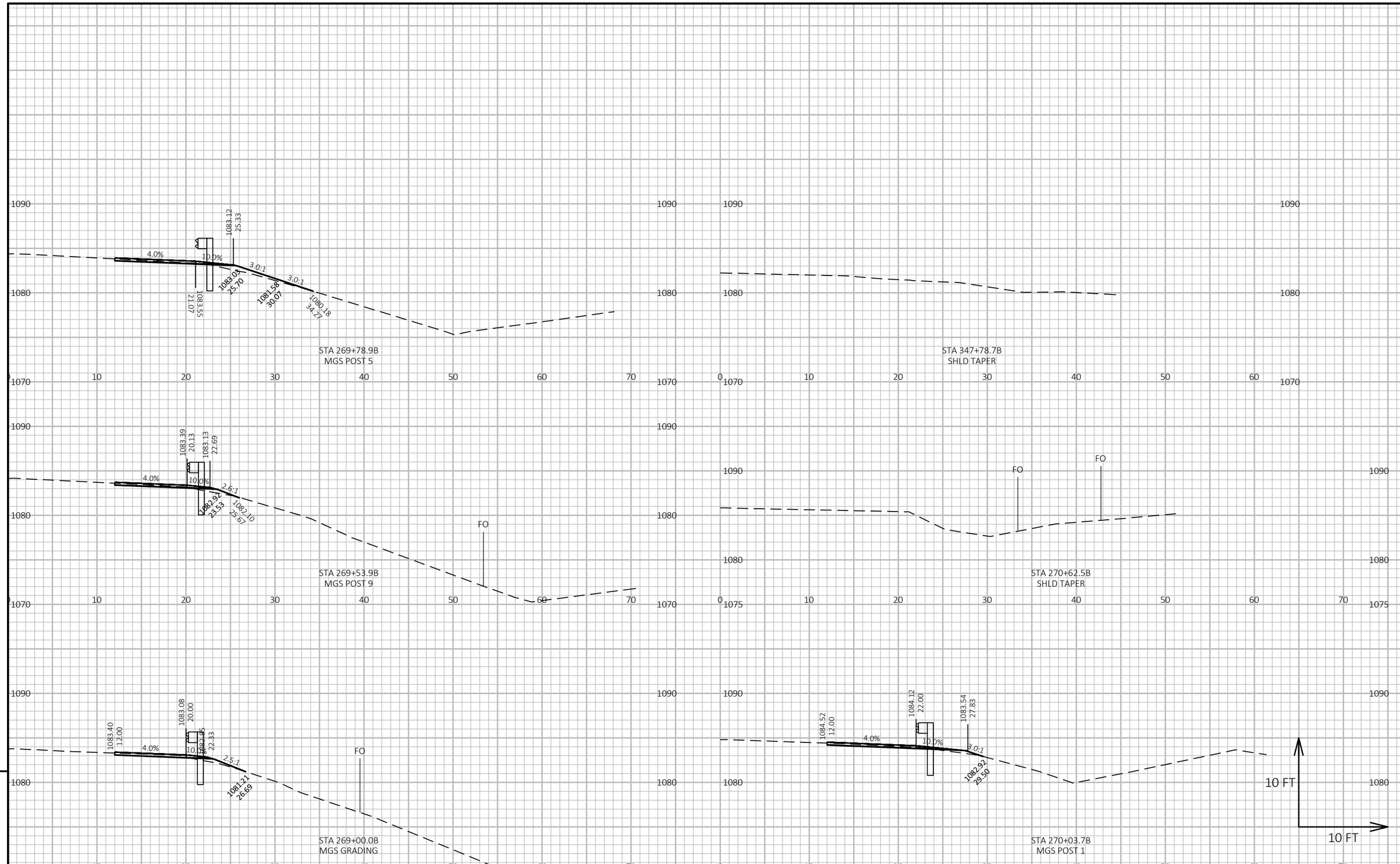

PROJECT NO: 8072-00-70	HWY: STH 46	COUNTY: ST. CROIX\POLK	CROSS SECTIONS: BARRIER SYSTEM GRADING SHAPING FINISHING	SHEET 160	E

FILE NAME : \\KLENGINEERING\DATA1\WDOTNW\19065-000 (STH 46)\CIVIL 3D\SHEETSPLAN\090202-XS.DWG
LAYOUT NAME - 02
PLOT DATE : 7/15/2021 9:28 AM
PLOT BY : JON BLOMQUIST
PLOT NAME :
PLOT SCALE : 1 IN:10 FT HORZ. / 1 IN:10 FT VERT.
WISDOT/CADDS SHEET 49

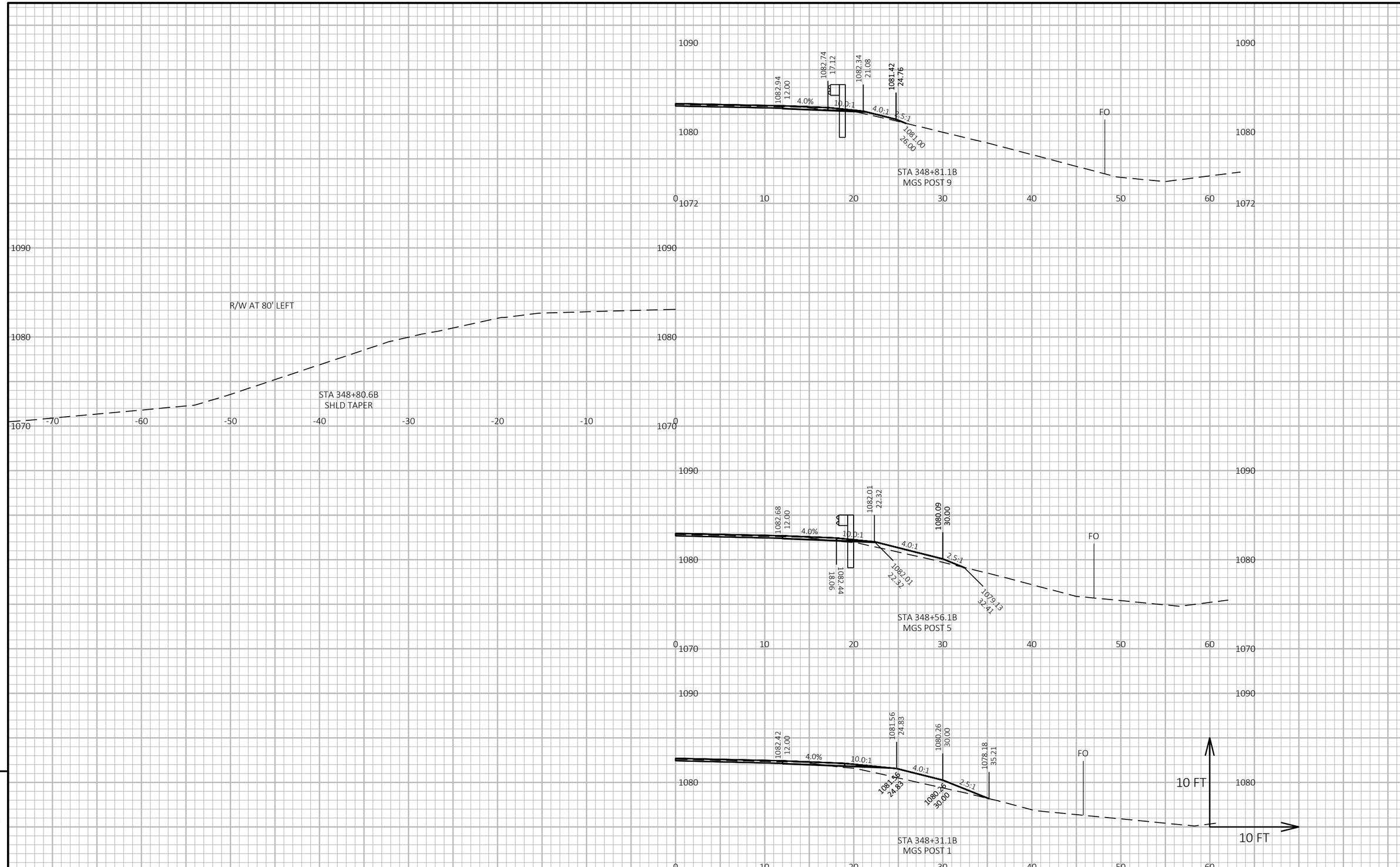

PROJECT NO: 8072-00-70	HWY: STH 46	COUNTY: ST. CROIX\POLK	CROSS SECTIONS: BARRIER SYSTEM GRADING SHAPING FINISHING	SHEET 161	E

FILE NAME : \\KLENGINEERING\DATA1\WDOTNW\19065-000 (STH 46)\CIVIL 3D\SHEETSPLAN\090202-XS.DWG
LAYOUT NAME - 03
PLOT DATE : 7/15/2021 9:28 AM
PLOT BY : JON BLOMQUIST
PLOT NAME :
PLOT SCALE : 1 IN:10 FT HORZ. / 1 IN:10 FT VERT.
WISDOT/CADDS SHEET 49

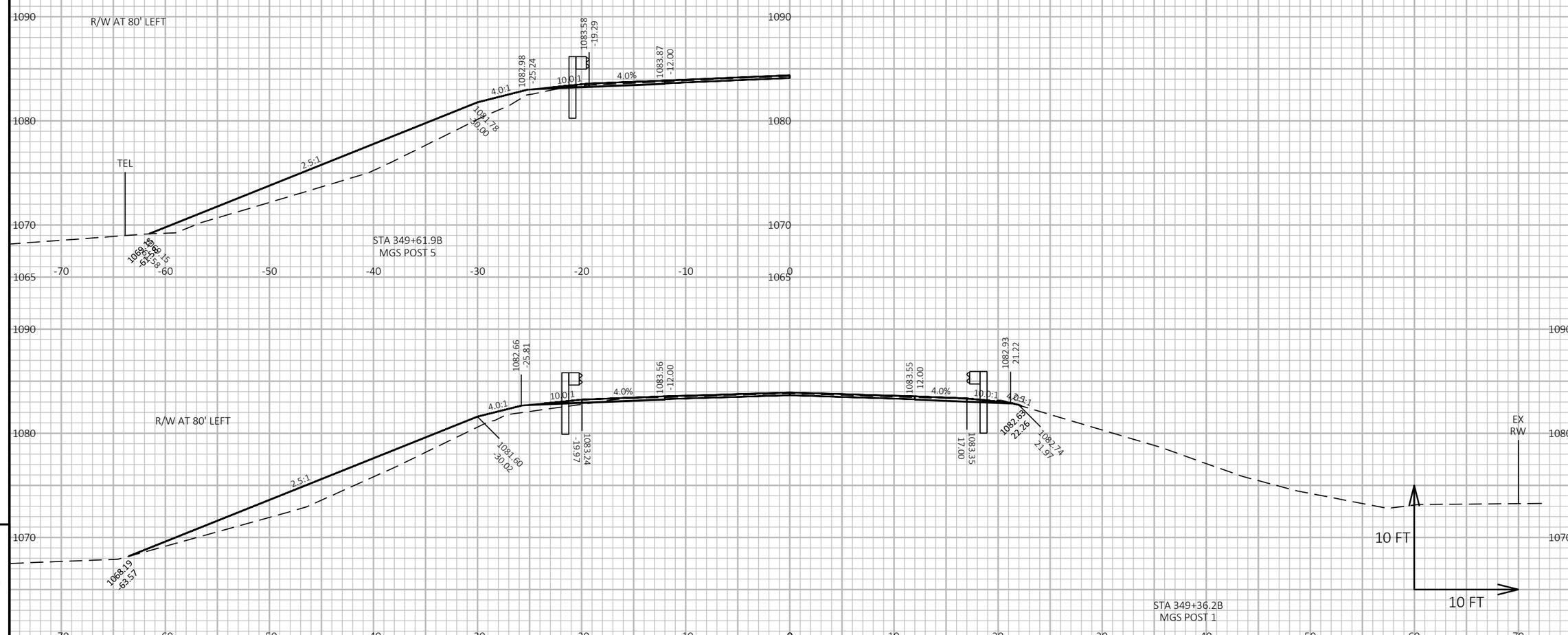

9

9

PROJECT NO: 8072-00-70	HWY: STH 46	COUNTY: ST. CROIX\POLK	CROSS SECTIONS: BARRIER SYSTEM GRADING SHAPING FINISHING	SHEET 162	E

FILE NAME : \\KLENGINEERING\DATA1\WDOTNW\19065-000 (STH 46)\CIVIL 3D\SHEETSPLAN\090202-XS.DWG
LAYOUT NAME - 04
PLOT DATE : 7/15/2021 9:28 AM
PLOT BY : JON BLOMQUIST
PLOT NAME :
PLOT SCALE : 1 IN:10 FT HORZ. / 1 IN:10 FT VERT.
WISDOT/CADDS SHEET 49

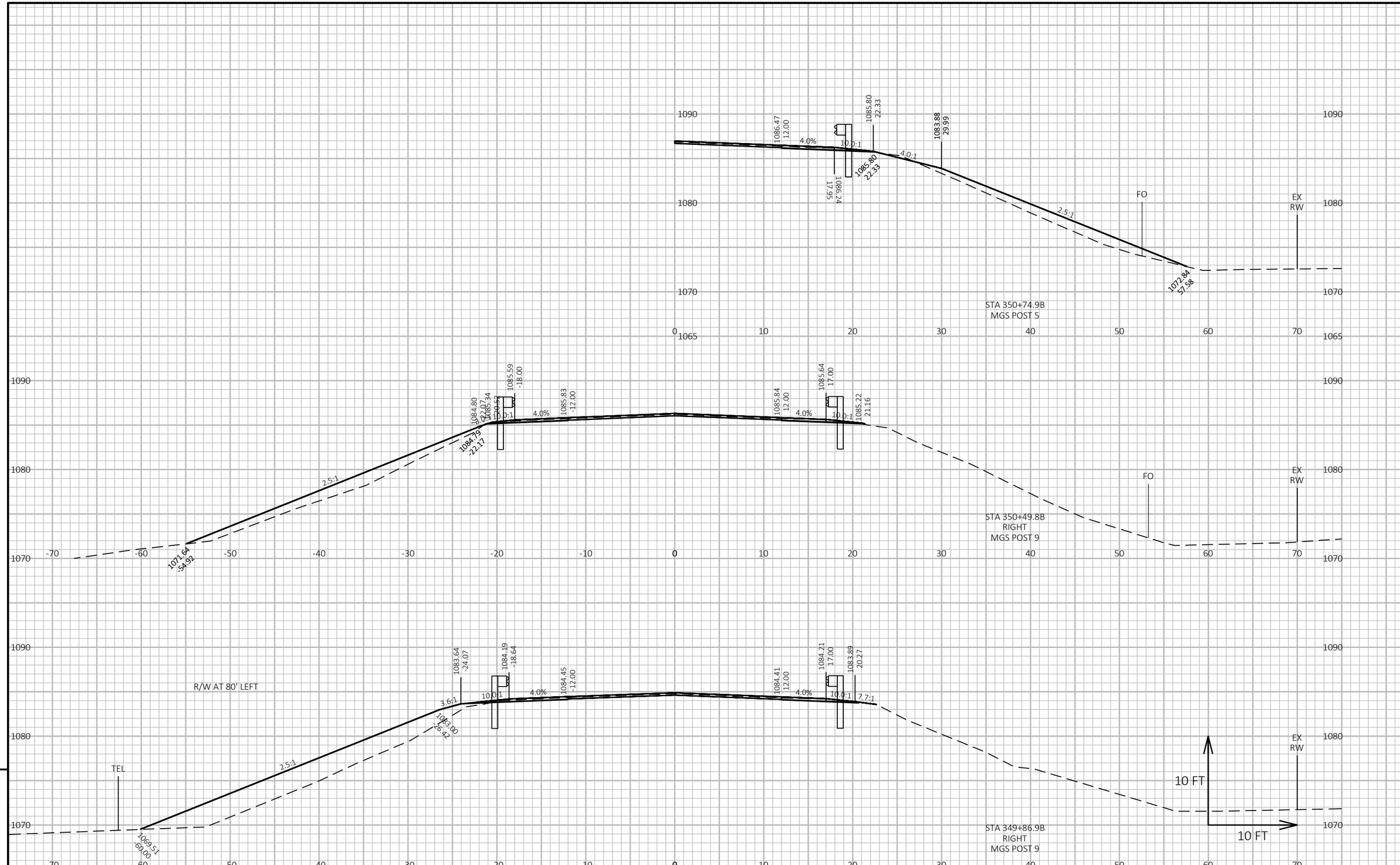

PROJECT NO: 8072-00-70	HWY: STH 46	COUNTY: ST. CROIX\POLK	CROSS SECTIONS: BARRIER SYSTEM GRADING SHAPING FINISHING	SHEET 163	E

FILE NAME : \\KLENGINEERING\DATA1\WDOTNW\19065-000 (STH 46)\CIVIL 3D\SHEETSPLAN\090202-XS.DWG
LAYOUT NAME - 05
PLOT DATE : 7/15/2021 9:28 AM
PLOT BY : JON BLOMQUIST
PLOT NAME :
PLOT SCALE : 1 IN:10 FT HORZ. / 1 IN:10 FT VERT.
WISDOT/CADDS SHEET 49

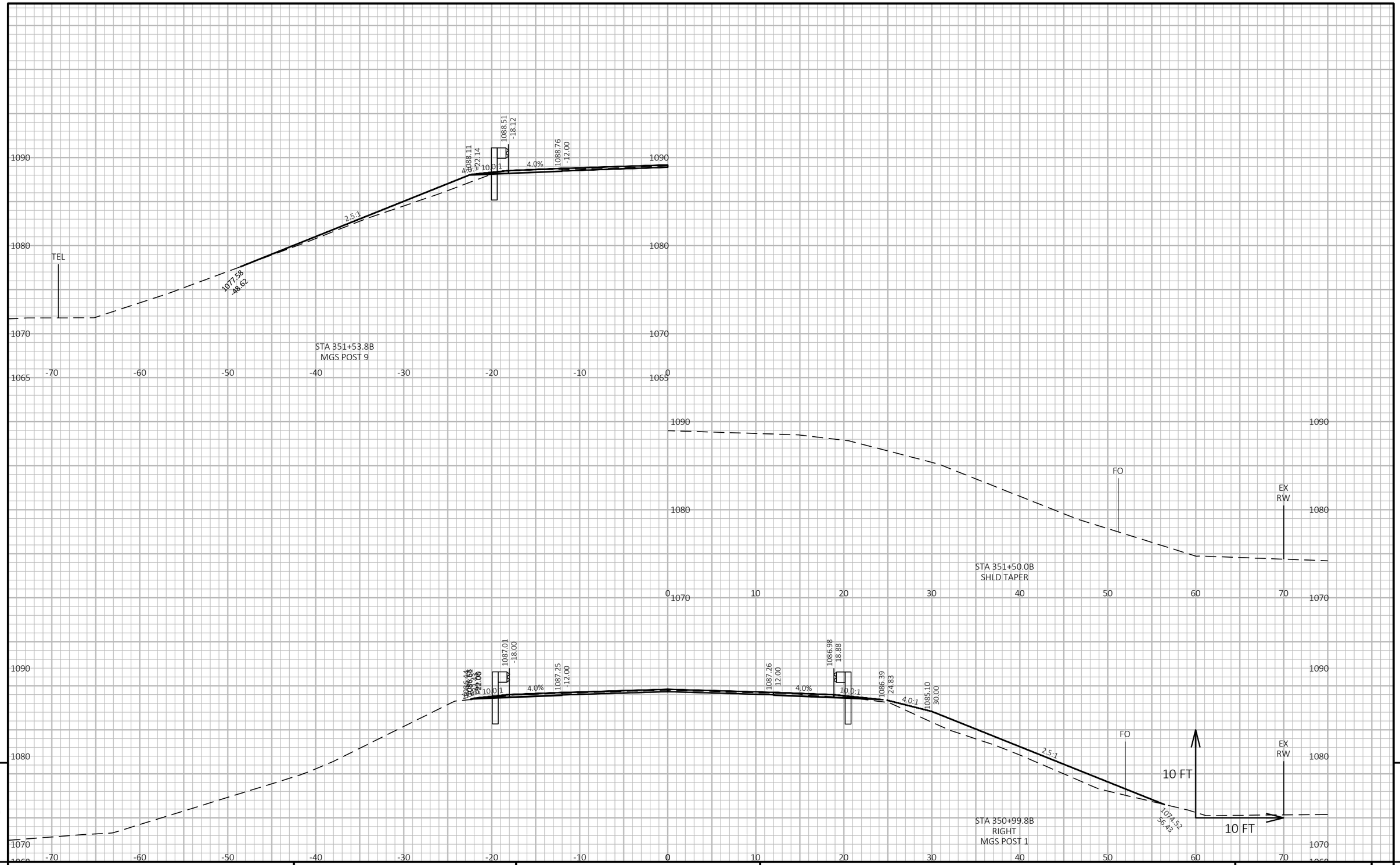

PROJECT NO: 8072-00-70	HWY: STH 46	COUNTY: ST. CROIX\POLK	CROSS SECTIONS: BARRIER SYSTEM GRADING SHAPING FINISHING	SHEET 164	E

FILE NAME : \\KLENGINEERING\DATA1\WDOTNW\19065-000 (STH 46)\CIVIL 3D\SHEETSPLAN\090202-XS.DWG
LAYOUT NAME - 06
PLOT DATE : 7/15/2021 9:28 AM
PLOT BY : JON BLOMQUIST
PLOT NAME :
PLOT SCALE : 1 IN:10 FT HORZ. / 1 IN:10 FT VERT.
WISDOT/CADDS SHEET 49

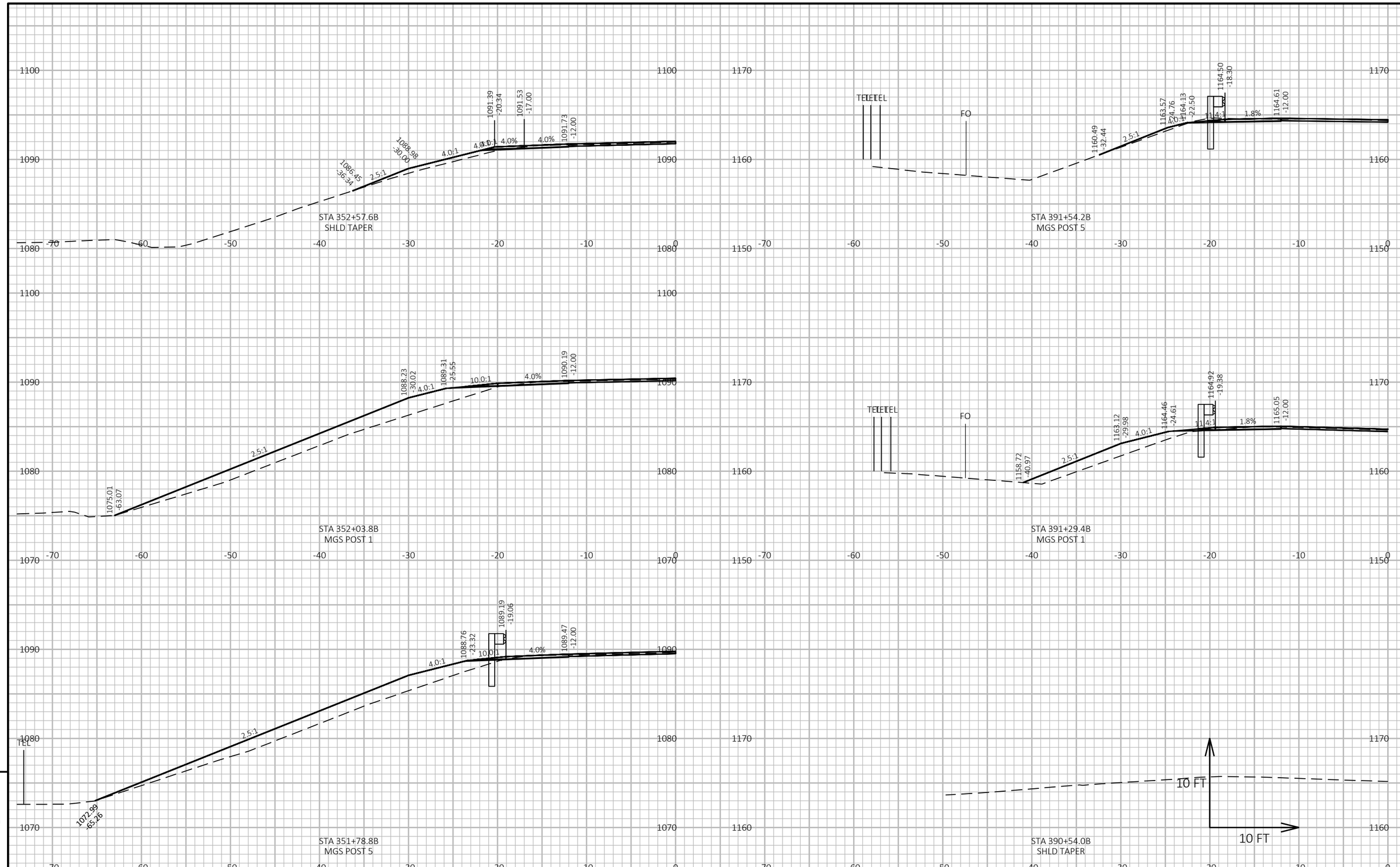

9

9

PROJECT NO: 8072-00-70	HWY: STH 46	COUNTY: ST. CROIX\POLK	CROSS SECTIONS: BARRIER SYSTEM GRADING SHAPING FINISHING	SHEET 165	E

FILE NAME : \\KLENGINEERING\DATA1\WDOTNW\19065-000 (STH 46)\CIVIL 3D\SHEETSPLAN\090202-XS.DWG
LAYOUT NAME - 07
PLOT DATE : 7/15/2021 9:28 AM
PLOT BY : JON BLOMQUIST
PLOT NAME :
PLOT SCALE : 1 IN:10 FT HORZ. / 1 IN:10 FT VERT.
WISDOT/CADDS SHEET 49

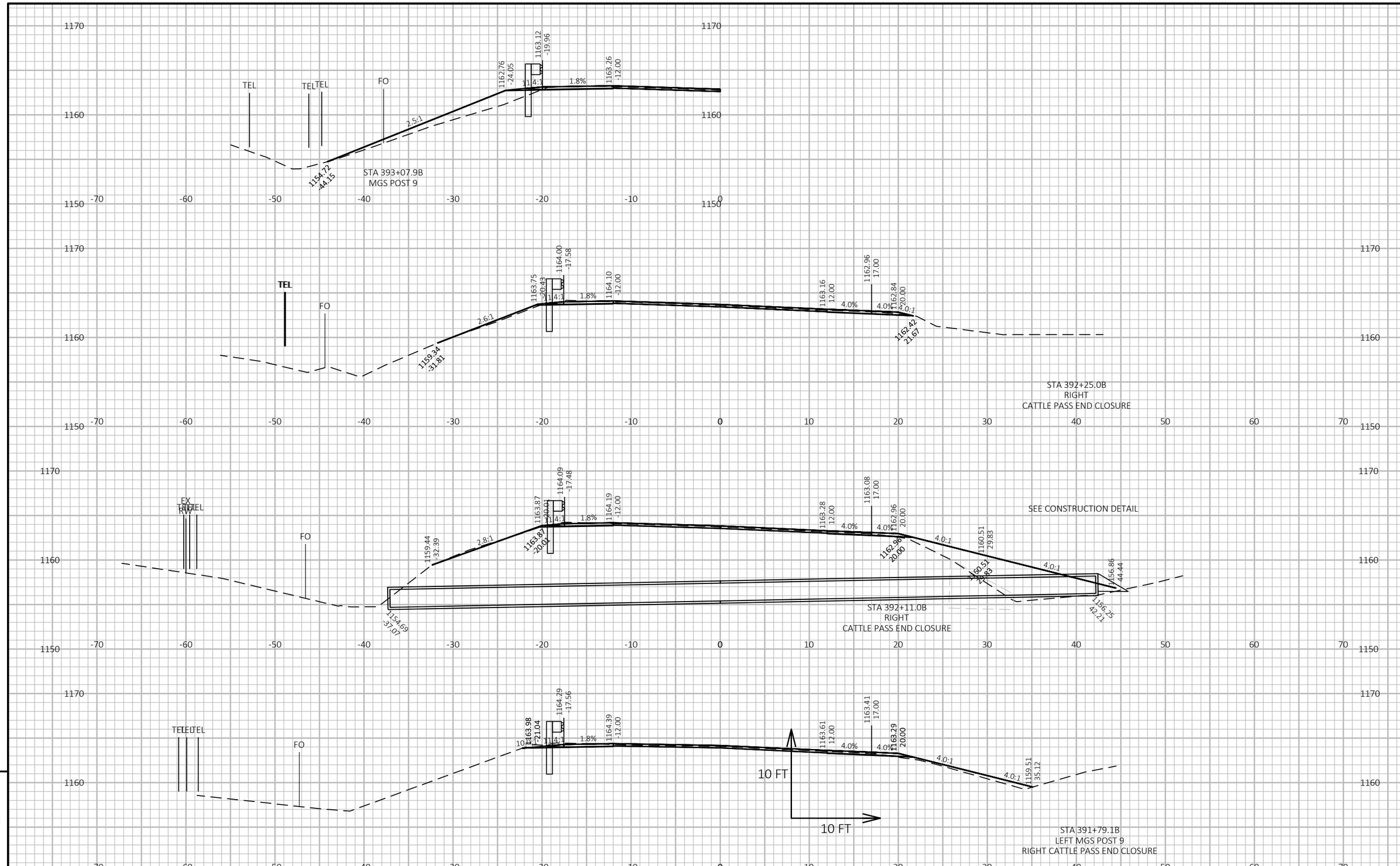

9

9

PROJECT NO: 8072-00-70	HWY: STH 46	COUNTY: ST. CROIX\POLK	CROSS SECTIONS: BARRIER SYSTEM GRADING SHAPING FINISHING	SHEET 166	E

FILE NAME : \\KLENGINEERING\DATA1\WDOTNW\19065-000 (STH 46)\CIVIL 3D\SHEETSPLAN\090202-XS.DWG
LAYOUT NAME - 08
PLOT DATE : 9/21/2021 4:07 PM
PLOT BY : JON BLOMQUIST
PLOT NAME :
PLOT SCALE : 1 IN:10 FT HORZ. / 1 IN:10 FT VERT.
WISDOT/CADDS SHEET 49

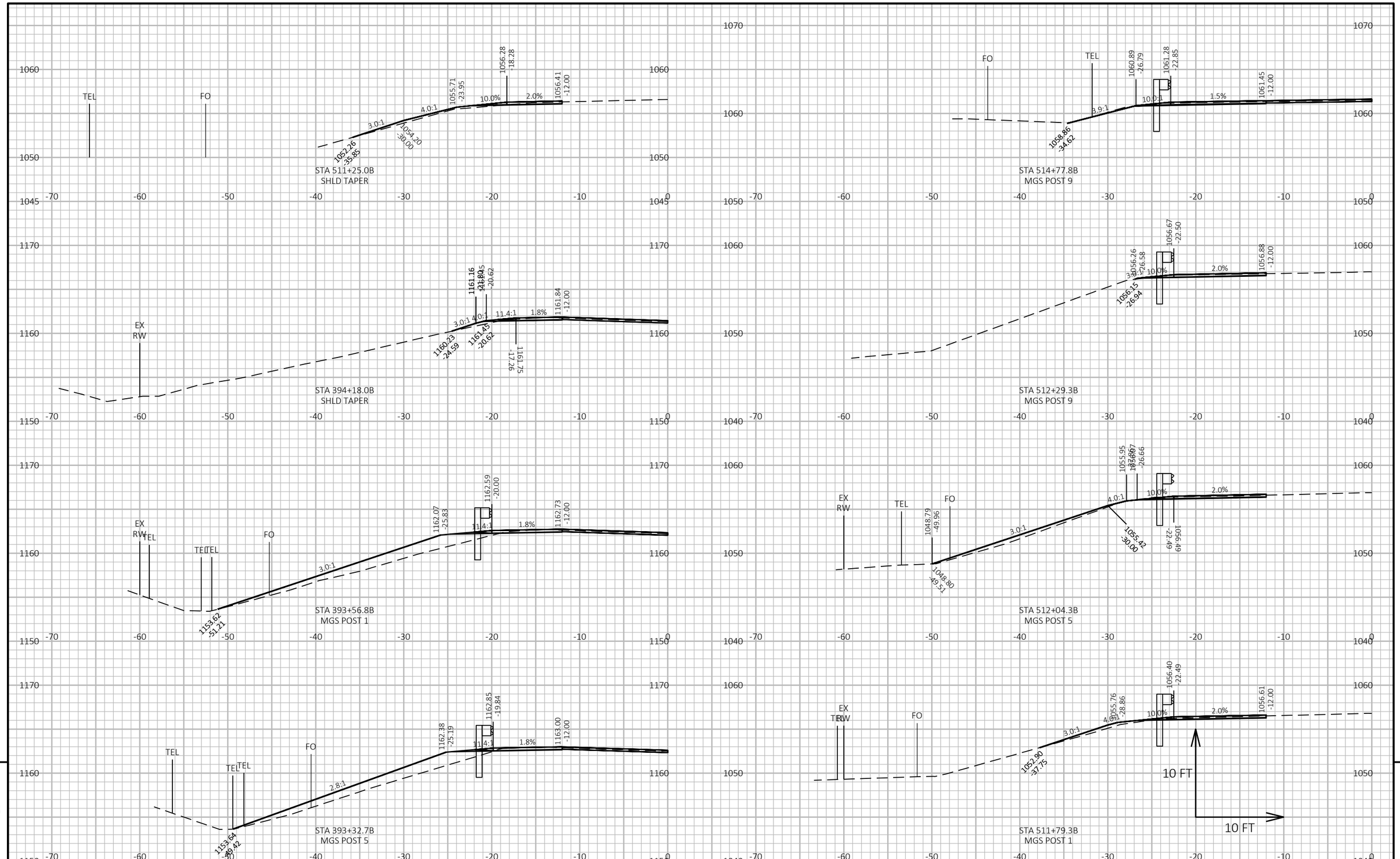

PROJECT NO: 8072-00-70	HWY: STH 46	COUNTY: ST. CROIX\POLK	CROSS SECTIONS: BARRIER SYSTEM GRADING SHAPING FINISHING	SHEET 167	E

FILE NAME : \\KLENGINEERING\DATA1\WDOTNW\19065-000 (STH 46)\CIVIL 3D\SHEETSPLAN\090202-XS.DWG
LAYOUT NAME - 09
PLOT DATE : 7/15/2021 9:29 AM
PLOT BY : JON BLOMQUIST
PLOT NAME :
PLOT SCALE : 1 IN:10 FT HORZ. / 1 IN:10 FT VERT.
WISDOT/CADDS SHEET 49

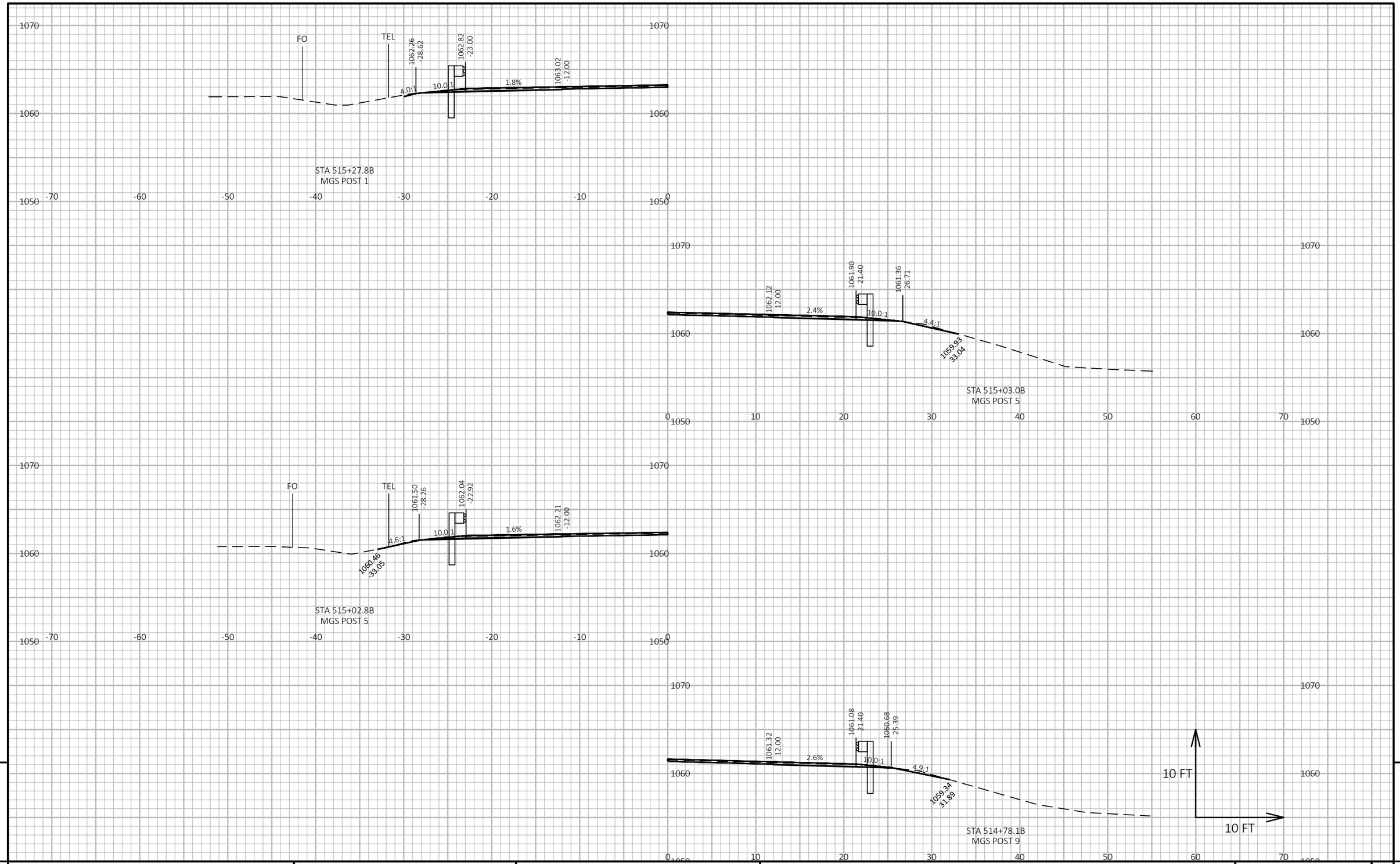

9

9

PROJECT NO: 8072-00-70	HWY: STH 46	COUNTY: ST. CROIX\POLK	CROSS SECTIONS: BARRIER SYSTEM GRADING SHAPING FINISHING	SHEET 168	E

FILE NAME : \\KLENGINEERING\DATA1\WDOTNW\19065-000 (STH 46)\CIVIL 3D\SHEETSPLAN\090202-XS.DWG
LAYOUT NAME - 10
PLOT DATE : 7/15/2021 9:29 AM
PLOT BY : JON BLOMQUIST
PLOT NAME :
PLOT SCALE : 1 IN:10 FT HORZ. / 1 IN:10 FT VERT.
WISDOT/CADDS SHEET 49

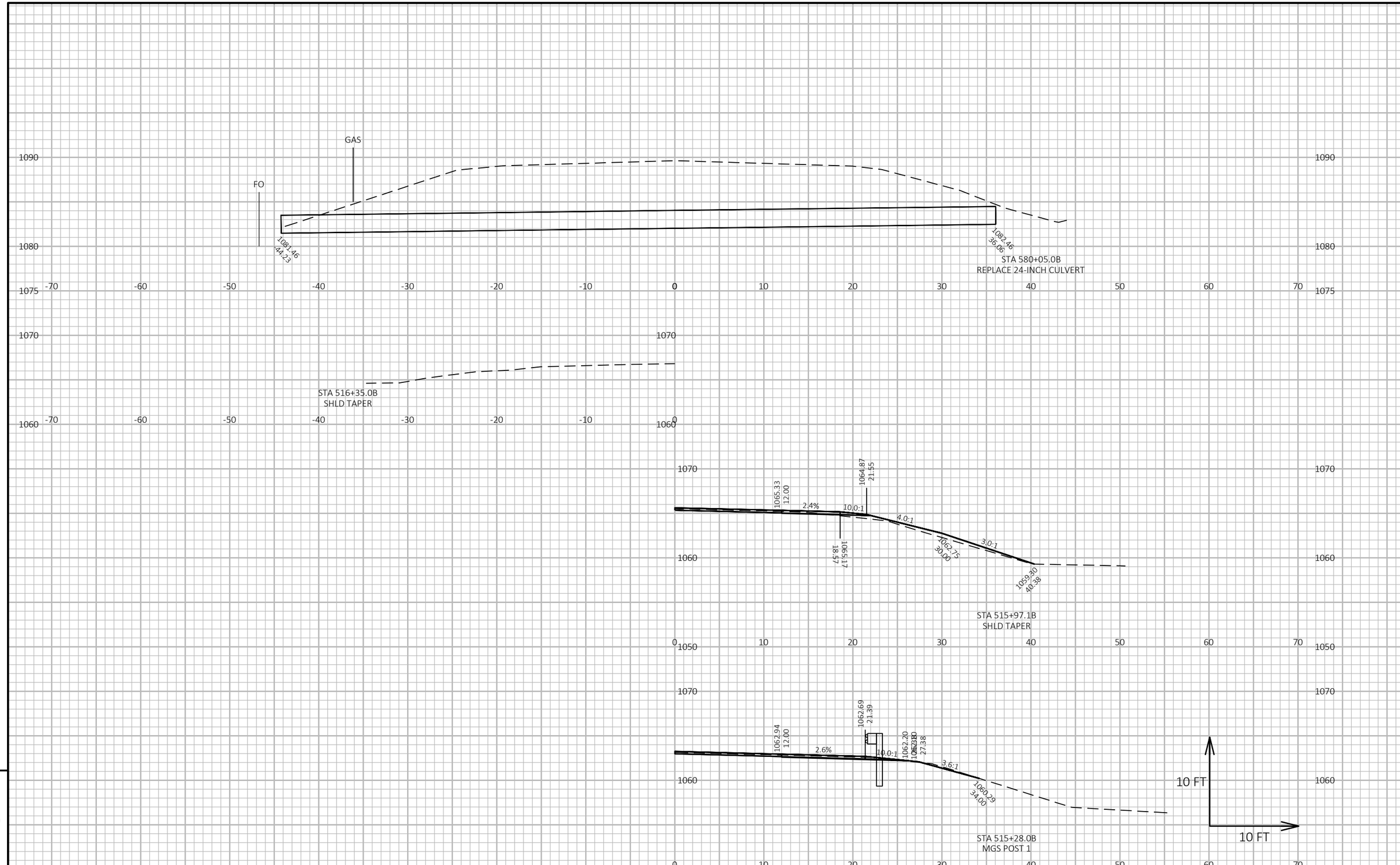

9

9

PROJECT NO: 8072-00-70	HWY: STH 46	COUNTY: ST CROIX\POLK	CROSS SECTIONS: BARRIER SYSTEM GRADING SHAPING FINISHING	SHEET 169	E

FILE NAME : \\KLENGINEERING\DATA1\WDOTNW\19065-000 (STH 46)\CIVIL 3D\SHEETSPLAN\090202-XS.DWG
LAYOUT NAME - 11
PLOT DATE : 7/15/2021 9:29 AM
PLOT BY : JON BLOMQUIST
PLOT NAME :
PLOT SCALE : 1 IN:10 FT HORZ. / 1 IN:10 FT VERT.
WISDOT/CADDS SHEET 49

Wisconsin Department of Transportation

Dedicated people creating transportation solutions through innovation and exceptional service.

http://www.dot.wisconsin.gov