LAX

Apr 12, 2022

PROJECT ID: 5730-00-71

WITH: 5730-00-80

COUNTY: VERNON

ORDER OF SHEETS

Section No.	1	Title
Section No.	2	Typical Sections and Details
Section No.	3	Estimate of Quantities
Section No.	3	Miscellaneous Quantities
Section No.	4	Right of Way Plat
Section No.	5	Plan and Profile
Section No.	6	Standard Detail Drawings
Section No.	7	Sign Plates
Section No.	8	Structure Plans
Section No.	9	Computer Earthwork Data
Section No.	9	Cross Sections

TOTAL SHEETS = 176

STATE PROJECT	FEDERAL PROJECT	
	PROJECT	CONTRACT
5730-00-71	WISC 2022289	1

STATE OF WISCONSIN
DEPARTMENT OF TRANSPORTATION

PLAN OF PROPOSED IMPROVEMENT

VIROQUA - RICHLAND CENTER

MAHONEY RD TO S JUNCTION STH 131

STH 56
VERNON COUNTY

STATE PROJECT NUMBER
5730-00-71

N

DESIGN DESIGNATION 5730-00-01

A.A.D.T.	2023	=	2400
A.A.D.T.	2043	=	2600
D.H.V.		=	11.1
D.D.		=	60/40
T.		=	11.0%
DESIGN SPEED		=	60 MPH
ESALS		=	600,000

NET EXCEPTION TO CL LENGTH
B-62-755
STA 325+98 - STA 333+23

NET EXCEPTION TO CL LENGTH
B-62-91
STA 166+57 - STA 166+99

NET EXCEPTION TO CL LENGTH
B-62-26
STA 421+57 - STA 423+17

NET EXCEPTION TO CL LENGTH
B-62-23
STA 595+73 - STA 596+22

BEGIN PROJECT
STA 7+75
X = 706218.40
Y = 147422.97

END PROJECT
STA 619+24
X = 758969.06
Y = 131208.76

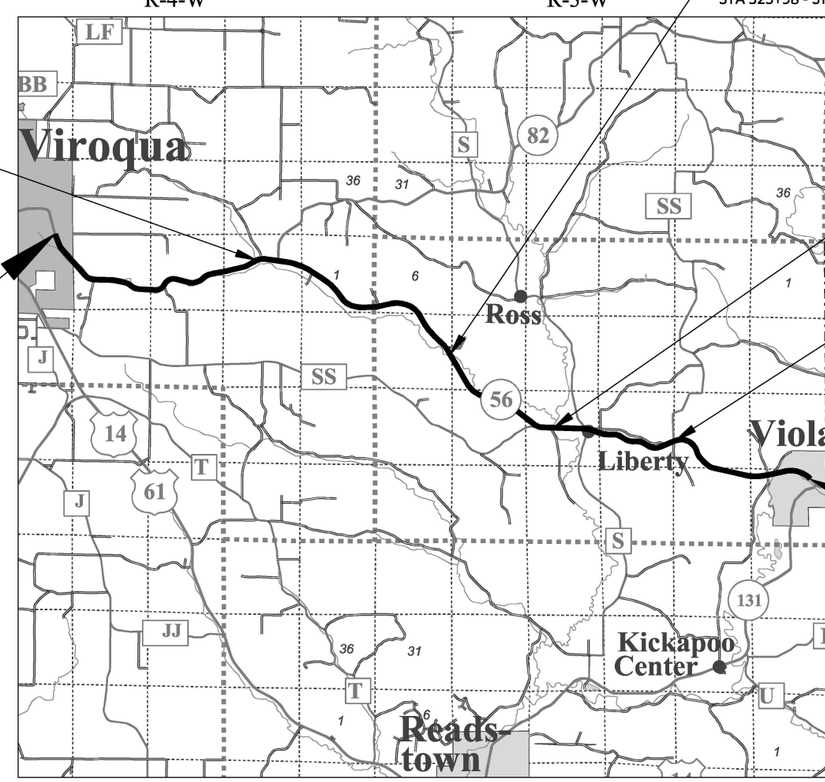

CONVENTIONAL SYMBOLS

PLAN
- CORPORATE LIMITS
- PROPERTY LINE
- LOT LINE
- LIMITED HIGHWAY EASEMENT
- EXISTING RIGHT OF WAY
- PROPOSED OR NEW R/W LINE
- SLOPE INTERCEPT
- REFERENCE LINE (300'EB')
- EXISTING CULVERT
- PROPOSED CULVERT (Box or Pipe)
- COMBUSTIBLE FLUIDS (CAUTION)
- MARSH AREA
- WOODED OR SHRUB AREA

PROFILE
- GRADE LINE
- ORIGINAL GROUND
- MARSH OR ROCK PROFILE (To be noted as such) (ROCK)
- SPECIAL DITCH (LABEL)
- GRADE ELEVATION (95.36)
- CULVERT (Profile View)

UTILITIES
- ELECTRIC (E)
- FIBER OPTIC (FO)
- GAS (G)
- SANITARY SEWER (SAN)
- STORM SEWER (SS)
- TELEPHONE (T)
- WATER (W)
- UTILITY PEDESTAL
- POWER POLE
- TELEPHONE POLE

LAYOUT
SCALE 0 — 2 MI

TOTAL NET LENGTH OF CENTERLINE = 11.396 MI

HORIZONTAL POSITIONS SHOWN ON THIS PLAN ARE WISCONSIN COUNTY COORDINATES, VERNON COUNTY, NAD83 (2011), IN U.S. SURVEY FEET. VALUES ARE GRID COORDINATES, GRID BEARINGS, AND GRID DISTANCES. GRID DISTANCE MAY BE USED AS GROUND DISTANCES.

ELEVATION SHOWN ON THIS PLAN ARE REFERENCE TO NORTH AMERICAN VERTICAL DATUM OF 1988, NAVD 88 (2012).

STATE OF WISCONSIN
DEPARTMENT OF TRANSPORTATION

PREPARED BY

Surveyor	WISDOT
Designer	CORY MIKSHOWSKY
Project Manager	JAY ADAMS
Regional Examiner	SW REGION
Regional Supervisor	REINY YAHNKE

APPROVED FOR THE DEPARTMENT

DATE: 10/26/21 (Signature)

E

GENERAL NOTES

THE LOCATIONS OF EXISTING AND PROPOSED UTILITY INSTALLATIONS AS SHOWN ON THE PLANS ARE APPROXIMATE. THERE MAY BE OTHER UTILITY INSTALLATIONS WITHIN THE PROJECT AREA THAT ARE NOT SHOWN.

THERE ARE NO KNOWN UTILITY CONFLICTS WITHIN THE PROJECT AREA. HOWEVER, IT IS THE CONTRACTOR'S RESPONSIBILITY TO CONFIRM THIS.

THE ENGINEER SHALL ADJUST THE LOCATIONS OF ITEMS UNDER THIS CONTRACT TO AVOID CONFLICT WITH THE EXISTING UTILITY FACILITIES.

RIGHT OF WAY LINES SHOWN ON THE CROSS SECTIONS ARE APPROXIMATE.

ALL RADII ARE MEASURED TO EDGE OF PAVEMENT UNLESS OTHERWISE SHOWN OR NOTED ON THE PLAN.

CONTRACTOR SHALL MAINTAIN ACCESS TO ALL DRIVEWAYS AT ALL TIMES EXCEPT WHEN SIDEWALK WORK REQUIRES THE DRIVEWAY TO BE CLOSED. COORDINATE CONSTRUCTION ACTIVITES WITH PROPERTY OWNERS WHEN DRIVEWAY CLOSURE IS REQUIRED.

PRIOR TO THE PLACEMENT OF MGS GUARDRAIL, THE SHOULDERS SHALL BE IN PLACE, SHAPED AND COMPACTED UNLESS SHOWN OTHERWISE.

THE CONTRACTOR'S PAVING OPERATIONS SHALL BE CONSISTENT WITH THE PLAN TYPICAL SECTIONS AND CONSTRUCTED TO PREVENT HMA LONGITUDINAL JOINTS FROM BEING LOCATED WITHIN A DRIVING, TURNING, BIKE OR PARKING LANE.

HMA PAVEMENT WEIGHT CALCULATIONS ARE BASED ON 112 LB/SY/IN.

PLACE 3.5" HMA PAVEMENT IN TWO EQUAL LIFTS.

APPLY TACK COAT AT A RATE OF 0.05 GAL/SY BETWEEN LAYERS OF HMA PAVEMENT.

CONTRACTOR WILL BE RESPONSIBLE FOR RESHAPING AND SEEDING ANY PREVIOUSLY GRASSED AREAS WHICH ARE DISTURBED BY HIS OPERATION OUTSIDE OF THE NORMAL CONSTRUCTION LIMITS.

DESIGN CONTACTS

JAY ADAMS
PROJECT MANAGER
WISDOT SW REGION
3550 MORMON COULEE ROAD
LA CROSSE, WI 54601
PHONE: 608-785-9027
EMAIL: Jay.Adams@dot.wi.gov

CORY MIKSHOWSKY
PROJECT DESIGNER
WISDOT SW REGION
3550 MORMON COULEE ROAD
LA CROSSE, WI 54601
PHONE: 608-397-1230
EMAIL: Cory.Mikshowsky@dot.wi.gov

ENVIRONMENTAL CONTACT

KAREN KALVELAGE
ENVIRONMENTAL ANALYSIS & REVIEW SPECIALIST
WISCONSIN DEPT. OF NATURAL RESOURCES
SOUTH CENTRAL REGION
3550 MORMON COULEE RD
LA CROSSE, WI 54601
PHONE: 608-785-9115
Email: Karen.Kalvelage@wisconsin.gov

UTILITY CONTACTS

Dairyland Power Cooperative - Electricity
Rob Maly
3200 East Ave S
P.O. Box 817
La Crosse, WI 54602-0817
(608) 788-4000
Rob.Maly@DairylandPower.com

Midwest Natural Gas, Inc. - Gas/Petroleum
Rick Schermerhorn
3600 State Highway 157
P.O. Box 429
La Crosse, WI 54602-0429
(608) 781-1011
ricks@midwestnaturalgas.com

Mediacom Wisconsin LLC - Communication Line
Craig Eggert
1240 Highway 52
Chatfield, MN 55923
(563) 419-5160
ceggert@mediacomcc.com

Vernon Communications Cooperative - Communication Line
Scott Frederick
103 N Main St
Westby, WI 54667
(608) 634-3136
sfrederick@vernoncom.coop

Vernon Electric Cooperative - Electricity
Cole Cary
110 Saugstad Rd
Westby, WI 54667-1199
(608) 634-3121
ccary@vernonelectric.org

City of Viroqua - Sewer
Sarah Grainger
202 N Main St
Viroqua, WI 54665
(608) 637-7154
sgrainger@viroqua-wisconsin.com

Madison Gas & Electric Co. - Gas/Petroleum
Shaun Endres
PO Box 1231
Madison, WI 53701-1231
(608) 252-7224
sendres@mge.com

DIGGERS HOTLINE
Dial 811 or (800)242-8511
www.DiggersHotline.com

RUNOFF COEFFICIENT TABLE

	HYDROLOGIC SOIL GROUP											
	A			B			C			D		
	SLOPE RANGE (PERCENT)			SLOPE RANGE (PERCENT)			SLOPE RANGE (PERCENT)			SLOPE RANGE (PERCENT)		
LAND USE:	0-2	2-6	6 & OVER	0-2	2-6	6 & OVER	0-2	2-6	6 & OVER	0-2	2-6	6 & OVER
ROW CROPS	.08 .22	.16 .30	.22 .38	.12 .26	.20 .34	.27 .44	.15 .30	.24 .37	.33 .50	.19 .34	.28 .41	.38 .56
MEDIAN STRIP-TURF	.19 .24	.20 .26	.24 .30	.19 .25	.22 .28	.26 .33	.20 .26	.23 .30	.30 .37	.20 .27	.25 .32	.30 .40
SIDE SLOPE-TURF			.25 .32			.27 .34			.28 .36			.30 .38
PAVEMENT:												
ASPHALT	.70 - .95											
CONCRETE	.80 - .95											
BRICK	.70 - .80											
DRIVES, WALKS	.75 - .85											
ROOFS	.75 - .95											
GRAVEL ROADS, SHOULDERS	.40 - .60											

TOTAL PROJECT AREA = 0.41 ACRES
TOTAL AREA EXPECTED TO BE DISTURBED BY CONSTRUCTION ACTIVITIES = 0.41 ACRES

STANDARD ABBREVIATIONS

AE, AEW	APRON ENDWALL	LC.	LONG CHORD
A.D.T.	AVERAGE DAILY TRAFFIC	NO.	NUMBER
A.A.D.T.	ANNUAL AVERAGE DAILY TRAFFIC	P.C.	POINT OF CURVATURE
C/L	CENTER LINE	P.I.	POINT OF INTERSECTION
Δ	CENTRAL ANGLE OR DELTA	P.T.	POINT OF TANGENCY
CY	CUBIC YARD	R	RADIUS
C&G	CURB AND GUTTER	R.C.C.P.	REINFORCED CONCRETE CULVERT PIPE
D.H.V.	DESIGN HOURLY VOLUME	SDD	STANDARD DETAIL DRAWING(S)
ESALS	EQUIVALENT SINGLE AXLE LOADS	S.E.	SUPERELEVATION
F.E.	FIELD ENTRANCE	T	TANGENT
CWT	HUNDRED WEIGHT	T.L.E.	TEMPORARY LIMITED EASEMENT
INL	INLET	TYP	TYPICAL
L.	LENGTH OF CURVE	VAR	VARIABLE

ORDER OF SECTION 2 SHEETS

GENERAL NOTES
PROJECT OVERVIEW
TYPICAL SECTIONS
PAVEMENT CORE SUMMARY
CONSTRUCTION DETAILS
INTERSECTION DETAILS
SUPERELEVATION TABLES

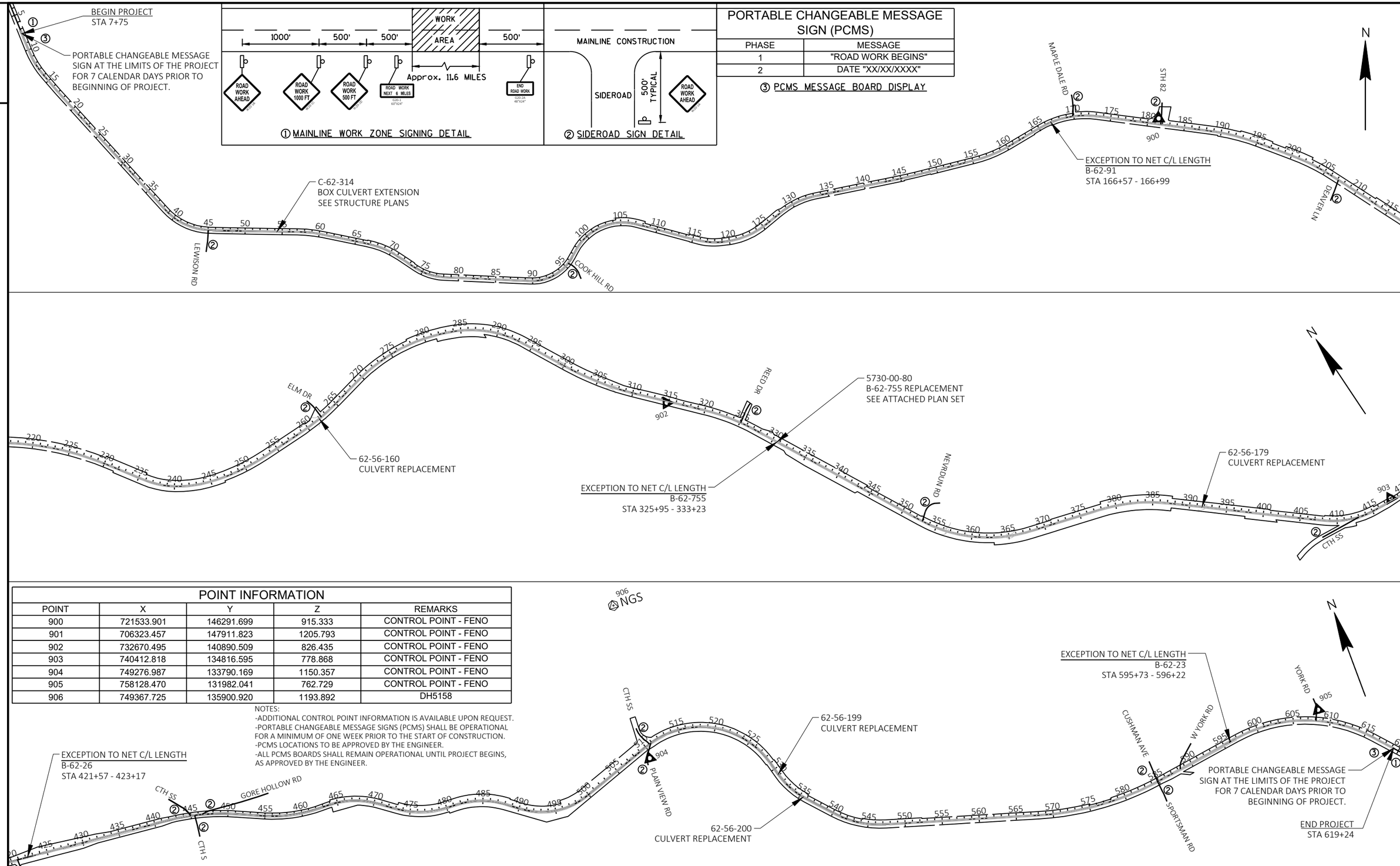

POINT INFORMATION

POINT	X	Y	Z	REMARKS
900	721533.901	146291.699	915.333	CONTROL POINT - FENO
901	706323.457	147911.823	1205.793	CONTROL POINT - FENO
902	732670.495	140890.509	826.435	CONTROL POINT - FENO
903	740412.818	134816.595	778.868	CONTROL POINT - FENO
904	749276.987	133790.169	1150.357	CONTROL POINT - FENO
905	758128.470	131982.041	762.729	CONTROL POINT - FENO
906	749367.725	135900.920	1193.892	DH5158

NOTES:
-ADDITIONAL CONTROL POINT INFORMATION IS AVAILABLE UPON REQUEST.
-PORTABLE CHANGEABLE MESSAGE SIGNS (PCMS) SHALL BE OPERATIONAL FOR A MINIMUM OF ONE WEEK PRIOR TO THE START OF CONSTRUCTION.
-PCMS LOCATIONS TO BE APPROVED BY THE ENGINEER.
-ALL PCMS BOARDS SHALL REMAIN OPERATIONAL UNTIL PROJECT BEGINS, AS APPROVED BY THE ENGINEER.

PROJECT NO: 5730-00-71	HWY: STH 56	COUNTY: VERNON	PROJECT OVERVIEW	SHEET 3	E

FILE NAME : N:\PDS\C3D\57300001\SHEETSPLAN\020201_PO.DWG
LAYOUT NAME - 020201
PLOT DATE : 10/14/2021 1:56 PM
PLOT BY : MEYER, BRYTON ROBERT
PLOT NAME :
PLOT SCALE : 1 IN:1200 FT
WISDOT/CADDS SHEET 42

*PAVED 2' SHOULDER OCCURS IN SELECT AREAS

**DEPTH VARIES, SEE CORING LOG FOR DETAILS

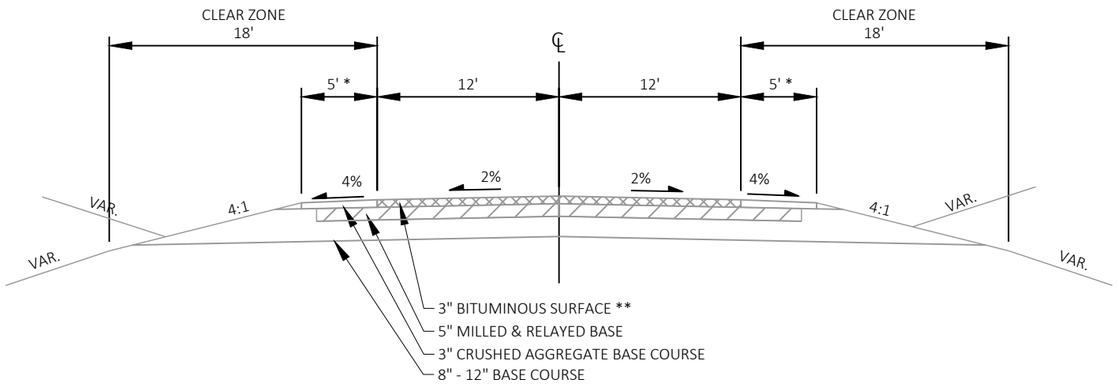

TYPICAL EXISTING SECTION STH 56
STA 7+75 - STA 427+16
STA 547+94 - STA 583+70
STA 596+85 - STA 619+24

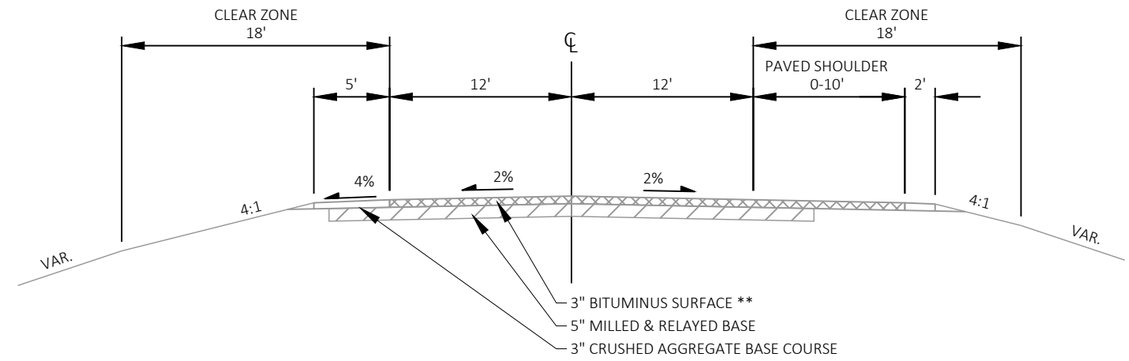

TYPICAL EXISTING SECTION STH 56
STA 427+16 - STA 439+85
STA 583+70 - STA 596+85

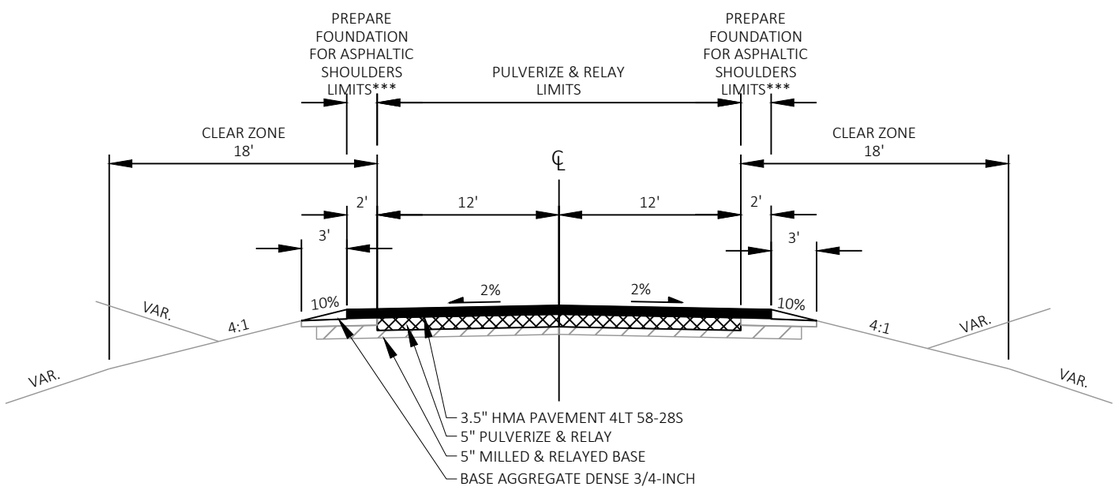

TYPICAL PROPOSED SECTION STH 56
STA 7+75 - STA 427+15
STA 547+94 - STA 587+15
STA 597+82 - STA 619+24

***PAVED 2' SHOULDER OCCURS IN SELECT AREAS, THESE AREAS ARE TO BE PULVERIZED & RELAYED. EXISTING GRAVEL SHOULDER THROUGHOUT PROJECT LIMITS CONSISTS OF WEEDS/DELETERIOUS MATERIAL, WILL NEED TO BE REMOVED.

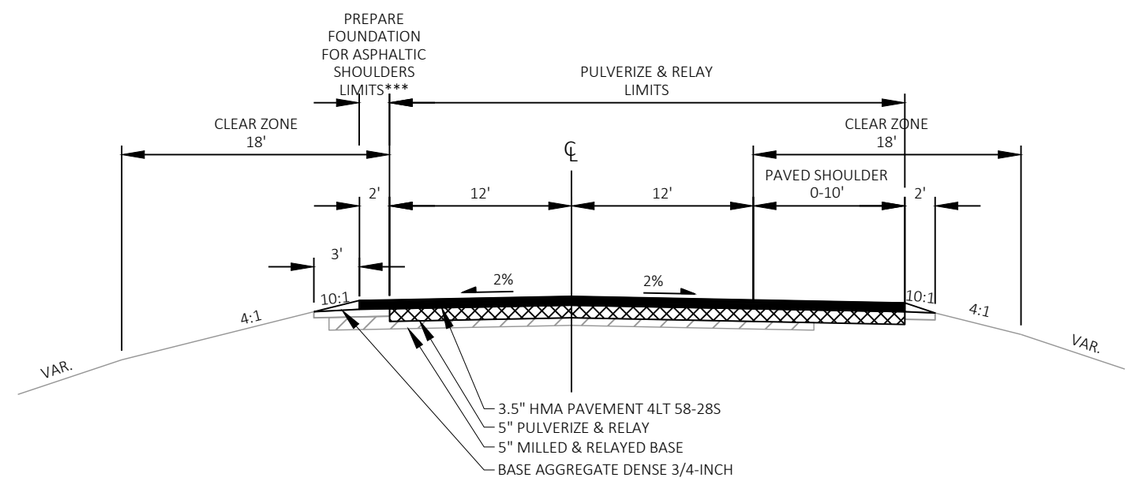

TYPICAL PROPOSED SECTION STH 56
STA 427+15 - STA 440+00
STA 587+15 - STA 597+82

**DEPTH VARIES, SEE CORING LOG FOR DETAILS

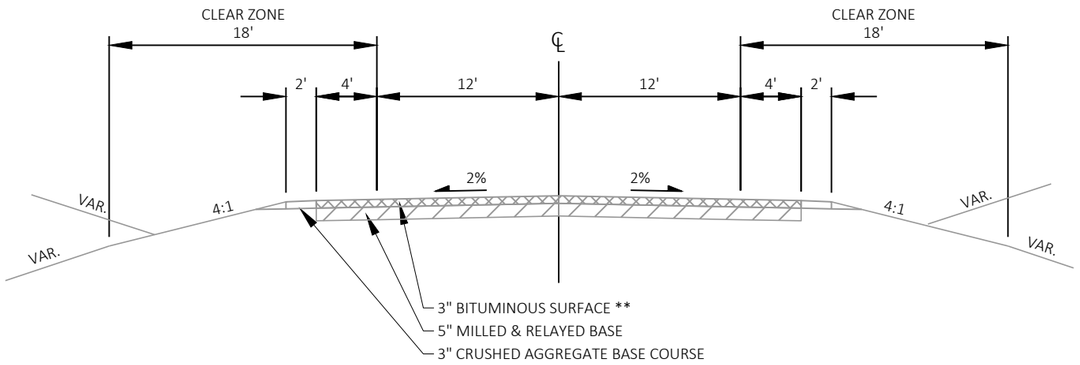

TYPICAL EXISTING SECTION STH 56
STA 439+85 - STA 547+94

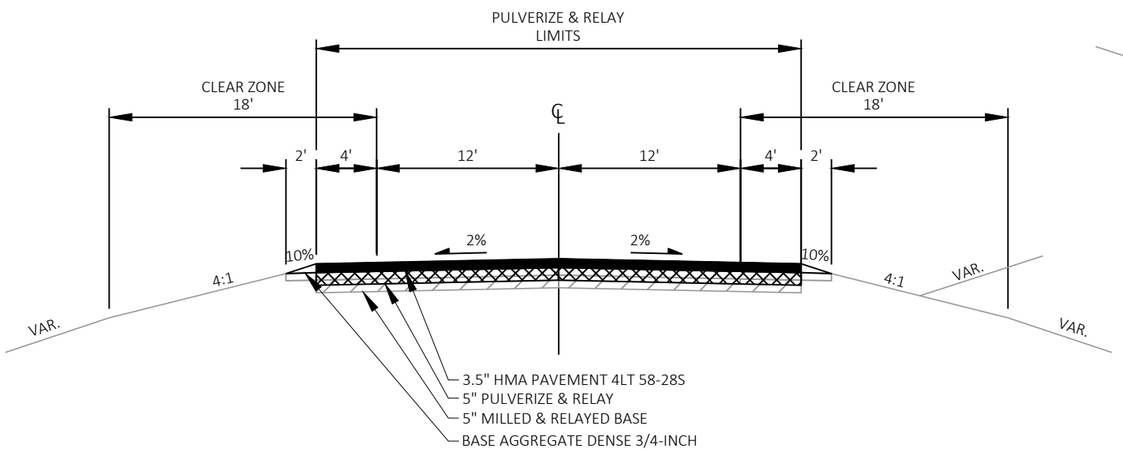

TYPICAL PROPOSED SECTION STH 56
STA 440+00 - STA 547+94

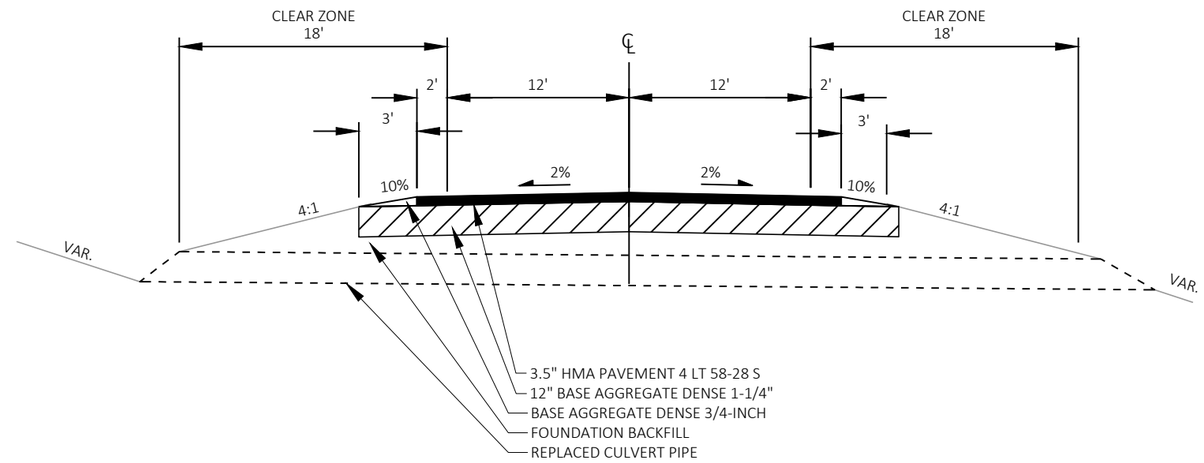

TYPICAL CULVERT REPLACEMENT
STA 261+96
STA 391+93
STA 530+61
STA 535+01

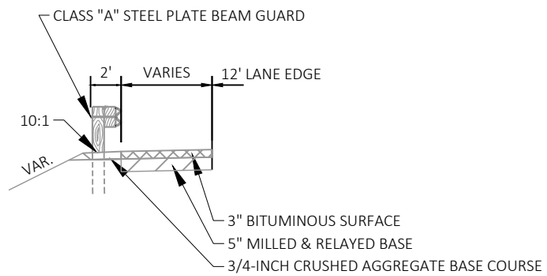

TYPICAL EXISTING SECTION WITH BEAMGUARD

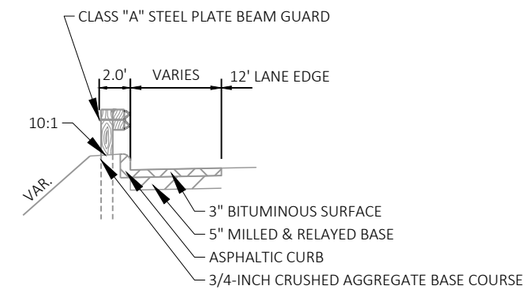

TYPICAL EXISTING ASPHALT CURB & BEAM GUARD SECTION

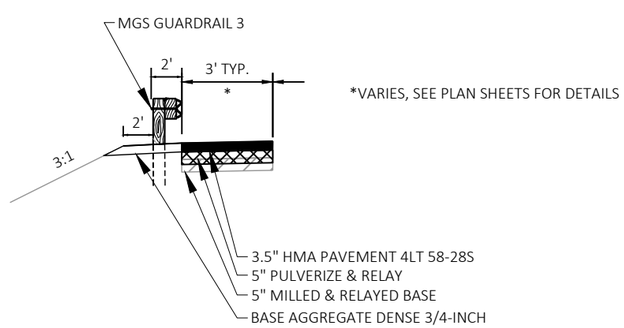

TYPICAL FINISHED SECTION WITH BEAMGUARD

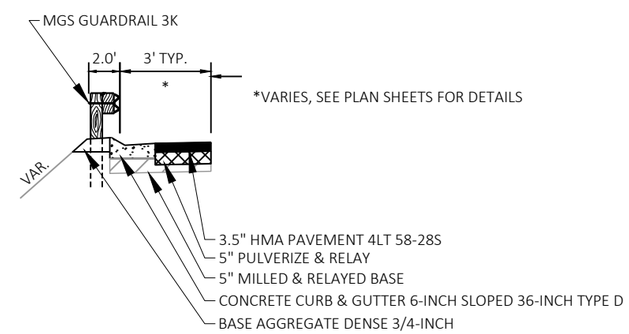

TYPICAL FINISHED CONCRETE CURB & BEAM GUARD SECTION

STA 473+88 - STA 479+83
STA 490+80 - STA 500+75

NOTES:
DATE CORINGS TAKEN: 6/2/19
FOR REFERENCE PURPOSES ONLY
ALL OFFSETS ARE FROM EXISTING CENTERLINE

CORING SUMMARY

Coring Number	Log Mile	Station	Offset	Curve or Tangent	Bituminous Surface Thickness	Comment
	0.00	2+82	-	-	-	MAHONEY RD
C-1	0.12	9+16	6.0' RT	TANGENT	2.0"	CUT
C-2	0.46	27+10	9.0' RT	TANGENT	2.5"	FILL
	0.80	45+06	-	-	-	LEWISON RD
C-3	0.83	46+64	3.0' RT	TANGENT	2.75"	FILL
C-4	1.16	64+07	12.0' RT	TANGENT	2.5"	CUT/FILL
C-5	1.55	84+66	6.0' LT	TANGENT	3.5"	FILL
	1.76	95+75	-	-	-	COOK HILL RD
C-6	2.02	109+48	6.0' RT	TANGENT	3.0"	CUT/FILL
C-7	2.43	131+12	9.0' RT	CURVE	2.5"	FILL
C-8	2.75	148+02	3.0' LT	TANGENT	2.75"	CUT/FILL
C-9	3.07	164+92	12.0' RT	CURVE	2.75"	CUT/FILL
	3.16	169+67	-	-	-	MAPLE DALE RD
C-10	3.35	179+70	6.0' RT	TANGENT	2.5"	FILL
	3.39	181+81	-	-	-	STH 82 EAST
C-11	3.72	199+24	9.0' RT	TANGENT	3.25"	FILL
C-12	4.09	218+77	3.0' RT	TANGENT	3.5"	FILL
C-13	4.48	239+36	12.0' RT	TANGENT	2.5"	FILL
C-14	4.81	256+79	6.0' RT	TANGENT	1.75"	FILL
C-15	5.12	273+16	3.0' RT	CURVE	3.0"	FILL
C-16	5.51	293+75	9.0' RT	CURVE	2.0"	FILL
C-17	5.89	313+81	12.0' RT	TANGENT	2.0"	FILL
	6.10	324+90	-	-	-	REED DRIVE
C-18	6.25	332+82	6.0' RT	TANGENT	3.0"	FILL
C-19	6.62	352+36	3.0' RT	TANGENT	2.5"	FILL
C-20	6.98	371+36	6.0' LT	TANGENT	3.5"	FILL
C-21	7.40	393+54	9.0' LT	TANGENT	2.75"	FILL
	7.74	411+49	-	-	-	CTH 'SS'
C-22	7.90	419+94	12.0' LT	TANGENT	4.0"	FILL
C-23	8.26	438+95	16.0' RT	TANGENT	5.0"	FILL (WIDE SHOULDER)

CORING SUMMARY CONT'D

NOTES:
DATE CORINGS TAKEN: 6/2/19
FOR REFERENCE PURPOSES ONLY
ALL OFFSETS ARE FROM EXISTING CENTERLINE

Coring Number	Log Mile	Station	Offset	Curve or Tangent	Bituminous Surface Thickness	Comment
	8.37	444+76	-	-	-	CTH 'S'
C-24	8.62	457+96	14.0' RT	CURVE	4.0"	FILL
C-25	9.06	481+19	9.0' RT	CURVE	4.5"	CUT
C-26	9.45	501+78	6.0' RT	TANGENT	5.0"	CUT
C-27	9.94	527+65	3.0' RT	CURVE	3.5"	FILL
C-28	10.38	550+88	12.0' RT	TANGENT	3.5"	CUT
C-29	10.72	568+84	9.0' RT	TANGENT	2.5"	CUT
	11.09	588+37	-	-	-	RIVER RD
C-30	11.14	591+01	3.0' RT	TANGENT	2.5"	FILL
C-31	11.48	608+96	6.0' RT	CURVE	4"	FILL
Average Thickness					3.1"	-

PWL MIXTURE USE TABLE

Location	Station	Mixture Use:	Underlying Surface	Bid Item	Tons	Thickness	Quality Management Program to be used for:	
							Mixture Acceptance	*Density Acceptance*
12 foot Driving Lane	7+75 to 166+57 166+99 to 325+98 333+23 to 421+57 423+17 to 595+80 596+15 to 619+24	Upper Layer	4 LT 58-28S	4 LT 58-28S	15,729	1 ¾ "	PWL Incentive Air Voids HMA Pavement 460.2010	Incentive Density PWL HMA Pavement 460.2005
12 foot Driving Lane	7+75 to 166+57 166+99 to 325+98 333+23 to 421+57 423+17 to 595+80 596+15 to 619+24	Lower Layer	Pulverized & Relayed HMA Surface	4 LT 58-28S	15,729	1 ¾ "	PWL Incentive Air Voids HMA Pavement 460.2010	Incentive Density PWL HMA Pavement 460.2005
2 foot shoulder	7+75 to 166+57 166+99 to 325+98 333+23 to 421+57 423+17 to 595+80 596+15 to 619+24	Upper Layer	4 LT 58-28S	4 LT 58-28S	3,452	1 ¾ "	PWL Incentive Air Voids HMA Pavement 460.2010	Acceptance testing by the department; Not eligible for incentive
2 foot shoulder	7+75 to 166+57 166+99 to 325+98 333+23 to 421+57 423+17 to 595+80 596+15 to 619+24	Lower Layer	Pulverized & Relayed HMA Surface	4 LT 58-28S	3,452	1 ¾ "	PWL Incentive Air Voids HMA Pavement 460.2010	Acceptance testing by the department; Not eligible for incentive
Side Roads	7+75 to 619+24	Upper Layer	4 LT 58-28S	4 LT 58-28S	446	1 ¾ "	PWL Incentive Air Voids HMA Pavement 460.2010	Acceptance testing by the department; Not eligible for incentive
Side Roads	7+75 to 619+24	Lower Layer	Varies	4 LT 58-28S	446	1 ¾ "	PWL Incentive Air Voids HMA Pavement 460.2010	Acceptance testing by the department; Not eligible for incentive
Driveways/Field Entrance	7+75 to 619+24	Upper Layer	Varies	Asphaltic Surface Driveways and Field Entrances	187	3 ½ "	QMP as per SS 465.	Acceptance by ordinary compaction

2

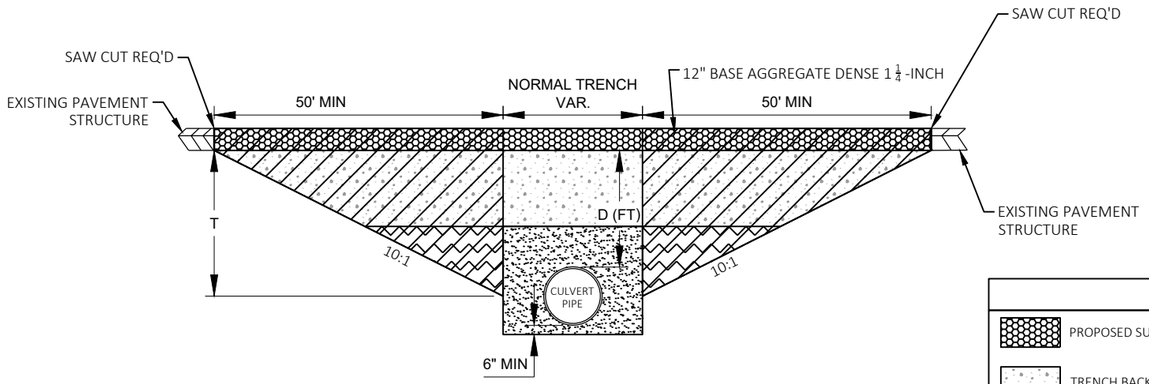

TRANSITION CUT DEPTH (T) = THE LESSER OF DEPTH TO CENTER OF PIPE OR 5 FT.
DO NOT EXTEND TRANSITION CUT BELOW HORIZONTAL CENTER OF PIPE

CULVERT PIPE DETAIL FOR D < 6 FT

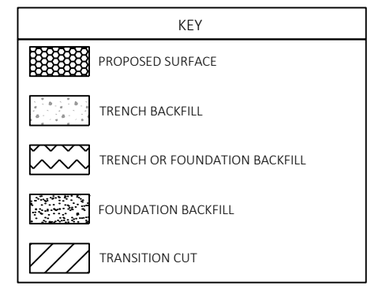

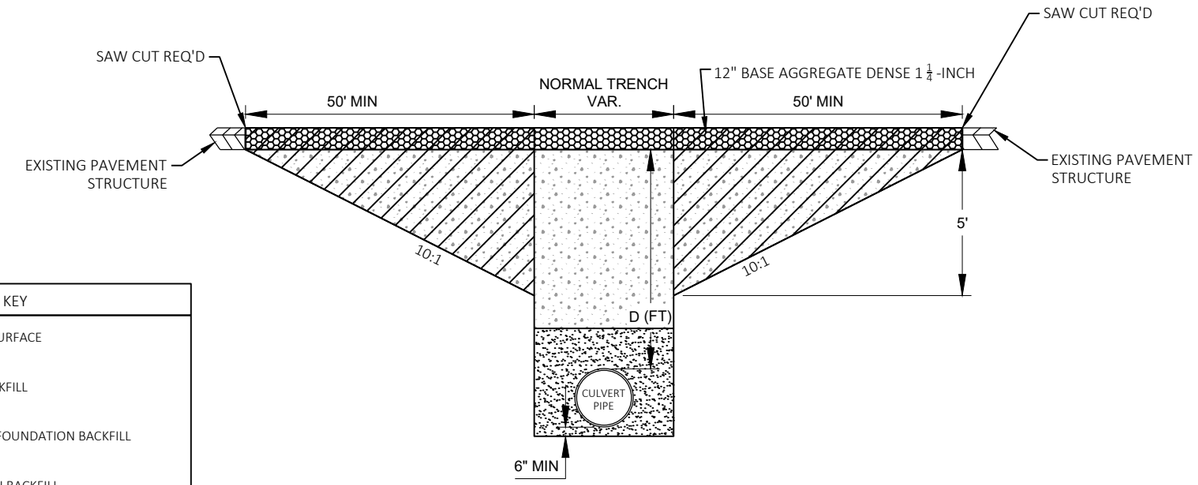

CULVERT PIPE DETAIL FOR D > 6 FT

2

NOTES

- TRANSITION CUT IS PAID AS EXCAVATION COMMON.
- TRANSITION CUT WIDTH IS FROM SUBGRADE SHOULDER POINT TO SUBGRADE SHOULDER POINT.
- BACKFILL THE TRANSITION CUT AREAS WITH FOUNDATION AND TRENCH BACKFILL AS SPECIFIED IN STANDARD SPEC 520.
- PERFORM CULVERT PIPE REMOVAL & INSTALLATION BEFORE PULVERIZE & RELAY OPERATION.
- CONTRACTOR SHALL BE RESPONSIBLE TO MAINTAIN 1 1/4-INCH BASE AGGREGATE DRIVING SURFACE UNTIL PULVERIZE & RELAY OPERATION.

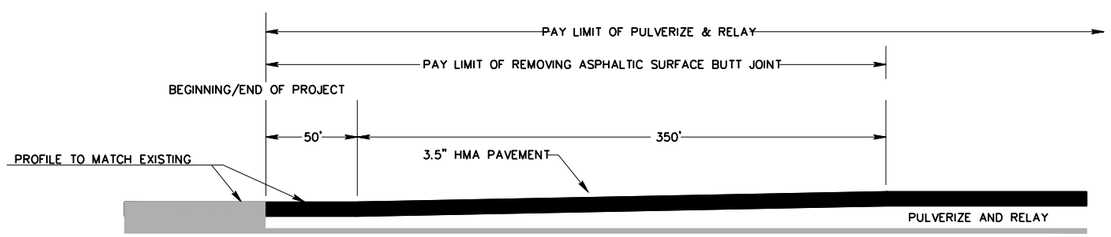

MAINLINE REMOVING ASPHALTIC SURFACE BUTT JOINTS DETAIL

STA 7+75 - STA 11+75
STA 162+57 - STA 166+57
STA 166+99 - STA 170+99
STA 321+98 - STA 325+98
STA 333+23 - STA 337+23
STA 417+57 - STA 421+57
STA 423+17 - STA 427+17
STA 591+73 - STA 595+73
STA 596+22 - STA 600+22
STA 615+24 - STA 619+24

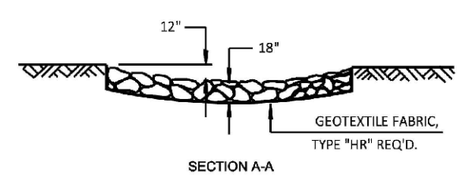

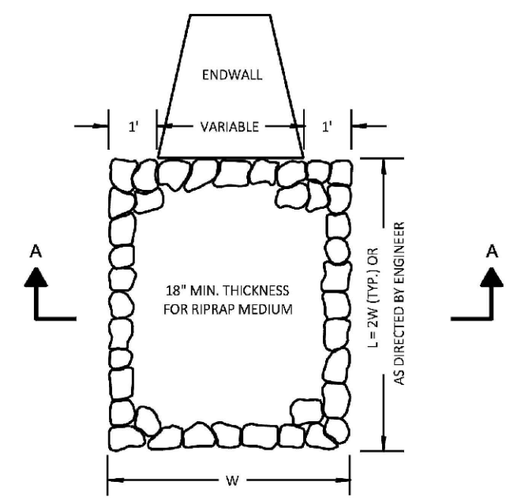

PIPE RIPRAP DETAIL

PROJECT NO: 5730-00-71	HWY: STH 56	COUNTY: VERNON	CONSTRUCTION DETAILS	SHEET 9	E

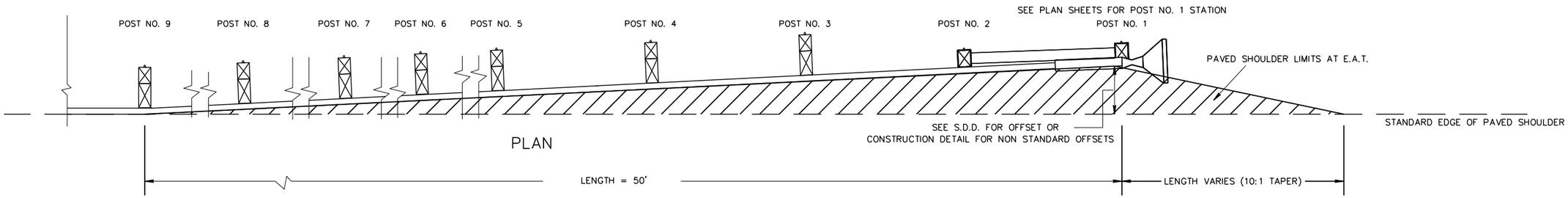

SHOULDER PAVING DETAIL AT E.A.T. (NEW INSTALLATIONS)

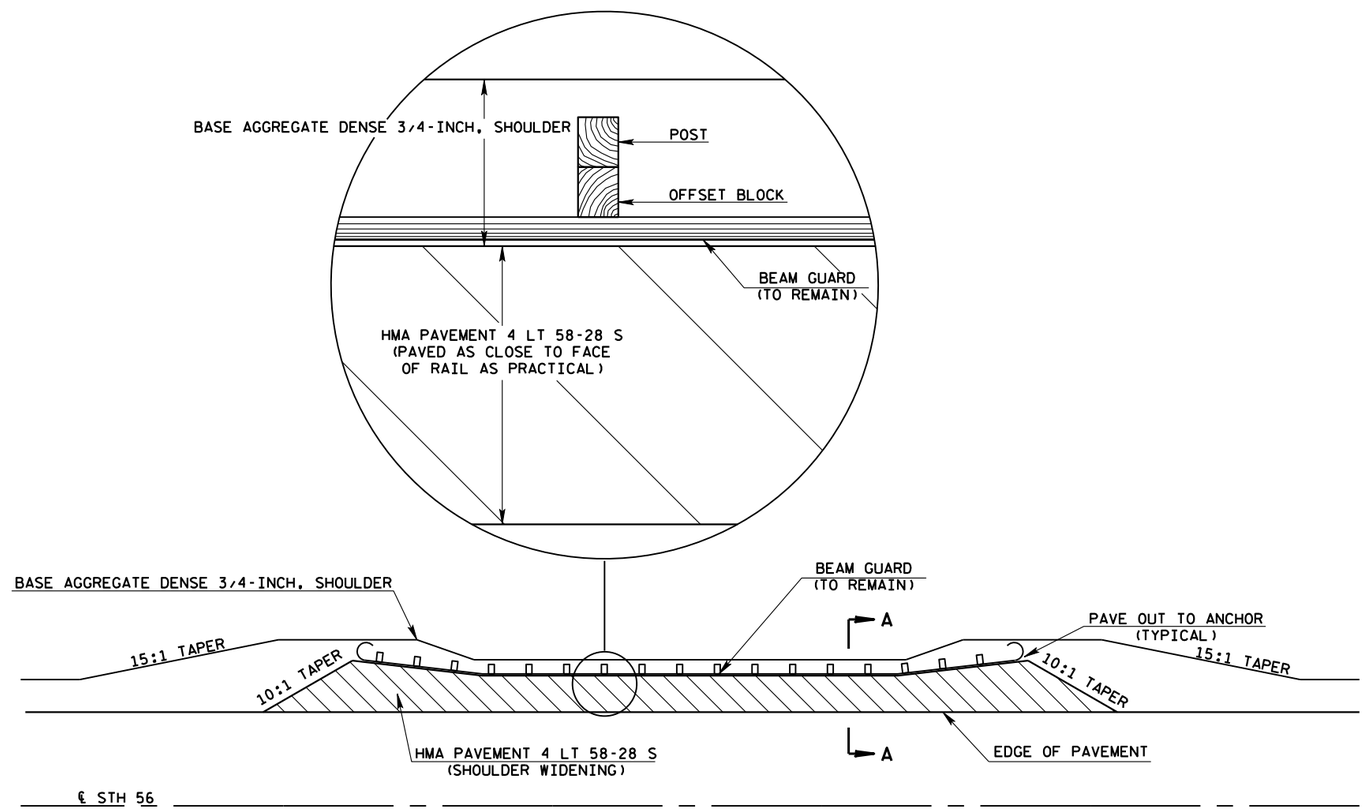

SHOULDER PAVING DETAIL AT BEAMGUARD (EXISTING LOCATIONS)

2

LEWISON RD & STH 56

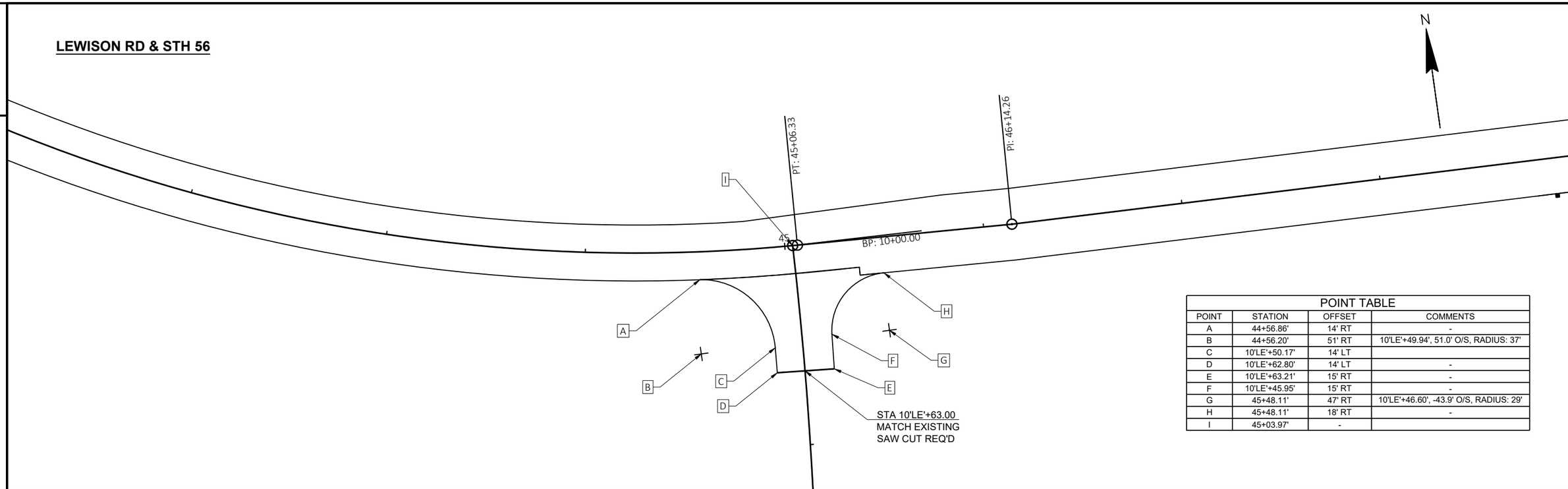

POINT TABLE

POINT	STATION	OFFSET	COMMENTS
A	44+56.86'	14' RT	-
B	44+56.20'	51' RT	10'LE'+49.94', 51.0' O/S, RADIUS: 37'
C	10'LE'+50.17'	14' LT	
D	10'LE'+62.80'	14' LT	-
E	10'LE'+63.21'	15' RT	-
F	10'LE'+45.95'	15' RT	-
G	45+48.11'	47' RT	10'LE'+46.60', -43.9' O/S, RADIUS: 29'
H	45+48.11'	18' RT	-
I	45+03.97'	-	

COOK HILL RD & STH 56

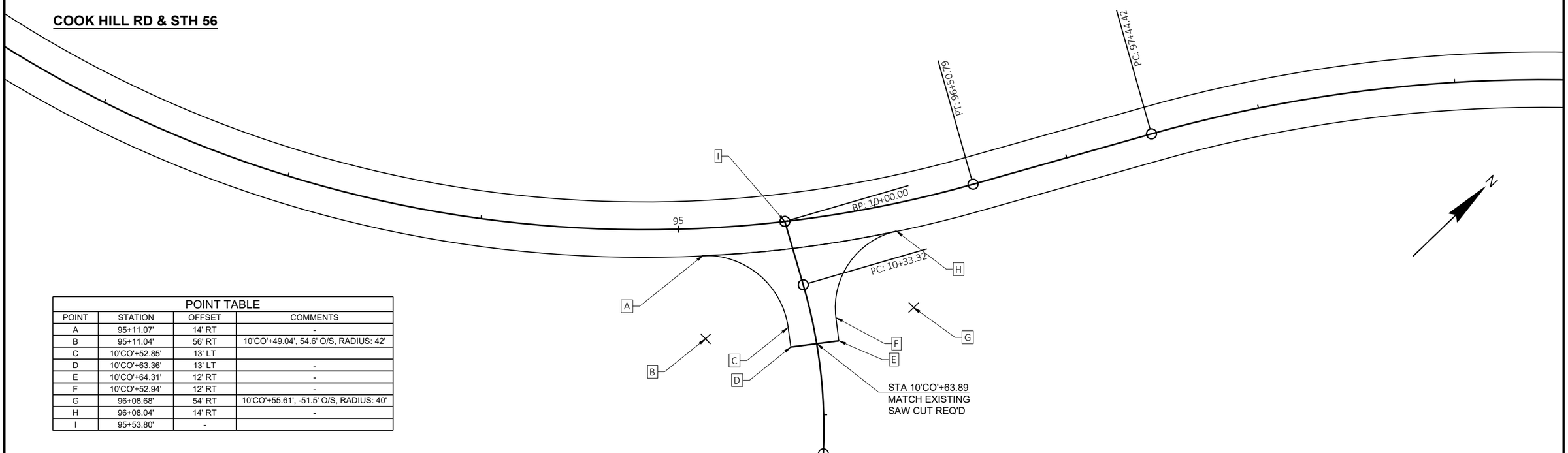

POINT TABLE

POINT	STATION	OFFSET	COMMENTS
A	95+11.07'	14' RT	-
B	95+11.04'	56' RT	10'CO'+49.04', 54.6' O/S, RADIUS: 42'
C	10'CO'+52.85'	13' LT	
D	10'CO'+63.36'	13' LT	-
E	10'CO'+64.31'	12' RT	-
F	10'CO'+52.94'	12' RT	-
G	96+08.68'	54' RT	10'CO'+55.61', -51.5' O/S, RADIUS: 40'
H	96+08.04'	14' RT	-
I	95+53.80'	-	

2

PROJECT NO: 5730-00-71	HWY: STH 56	COUNTY: VERNON	INTERSECTION DETAILS	SHEET 11	E

2

MAPLE DALE RD & STH 56

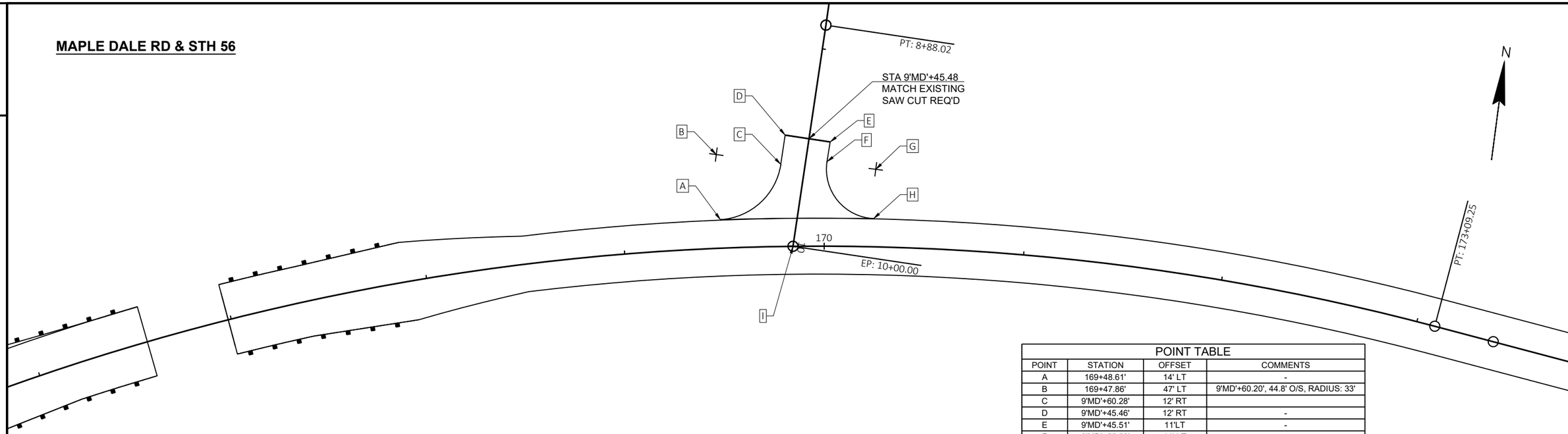

POINT TABLE			
POINT	STATION	OFFSET	COMMENTS
A	169+48.61'	14' LT	-
B	169+47.86'	47' LT	9'MD'+60.20', 44.8' O/S, RADIUS: 33'
C	9'MD'+60.28'	12' RT	
D	9'MD'+45.46'	12' RT	-
E	9'MD'+45.51'	11'LT	-
F	9'MD'+55.50'	11' LT	-
G	170+24.94'	39' LT	9'MD'+55.74', -35.3' O/S, RADIUS: 25'
H	170+24.44'	14' LT	-
I	169+84.38'	-	

STATE ROUTE 82 E & STH 56

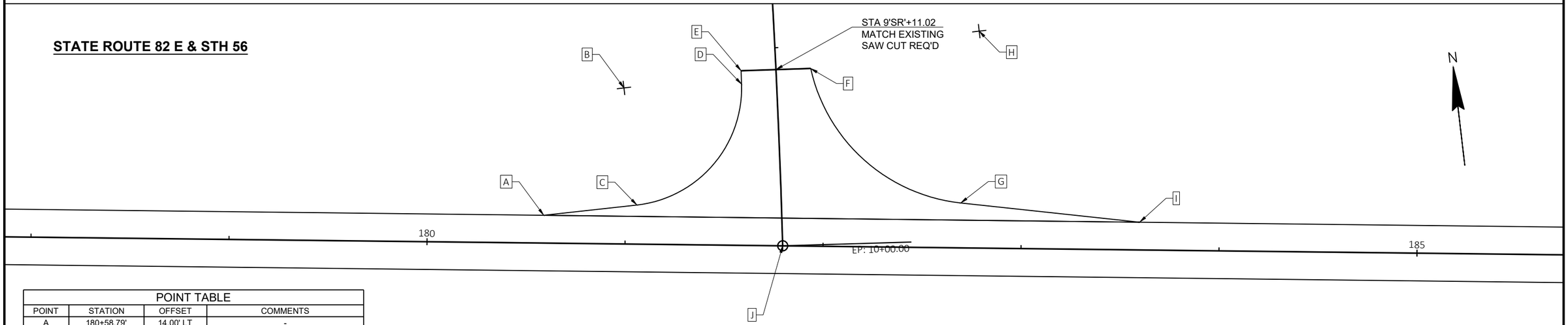

POINT TABLE			
POINT	STATION	OFFSET	COMMENTS
A	180+58.79'	14.00' LT	-
B	180+98.58'	79' LT	9'SR'+16.71', 77.1' O/S, RADIUS: 58'
C	9'SR'+76.92'	73' RT	-
D	9'SR'+17.54'	18' RT	-
E	9'SR'+10.75'	18' RT	-
F	9'SR'+11.54'	18' LT	-
G	9'SR'+81.36'	91' LT	-
H	182+77.64'	110' LT	8'SR'+96.85', -103.5' O/S, RADIUS: 89'
I	183+59.80'	14' LT	-
J	181+79.66'	-	-

2

DEAVER LANE & STH 56

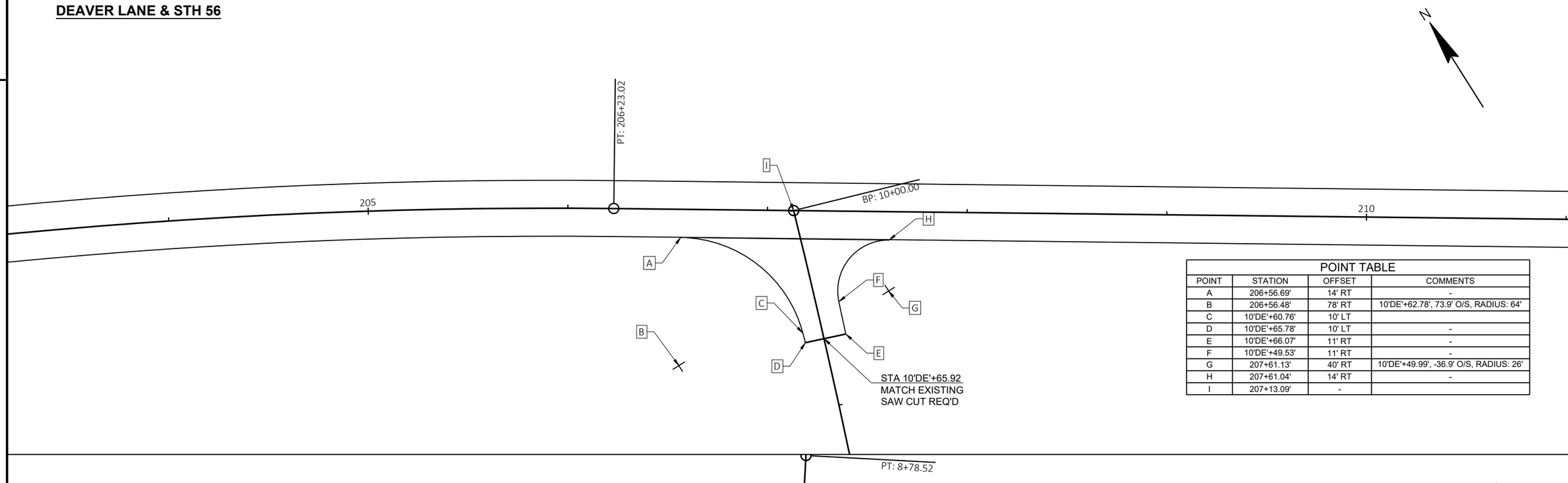

POINT TABLE			
POINT	STATION	OFFSET	COMMENTS
A	206+56.69'	14' RT	-
B	206+56.48'	78' RT	10'DE'+62.78', 73.9' O/S, RADIUS: 64'
C	10'DE'+60.76'	10' LT	
D	10'DE'+65.78'	10' LT	-
E	10'DE'+66.07'	11' RT	-
F	10'DE'+49.53'	11' RT	-
G	207+61.13'	40' RT	10'DE'+49.99', -36.9' O/S, RADIUS: 26'
H	207+61.04'	14' RT	-
I	207+13.09'	-	

ELM DR & STH 56

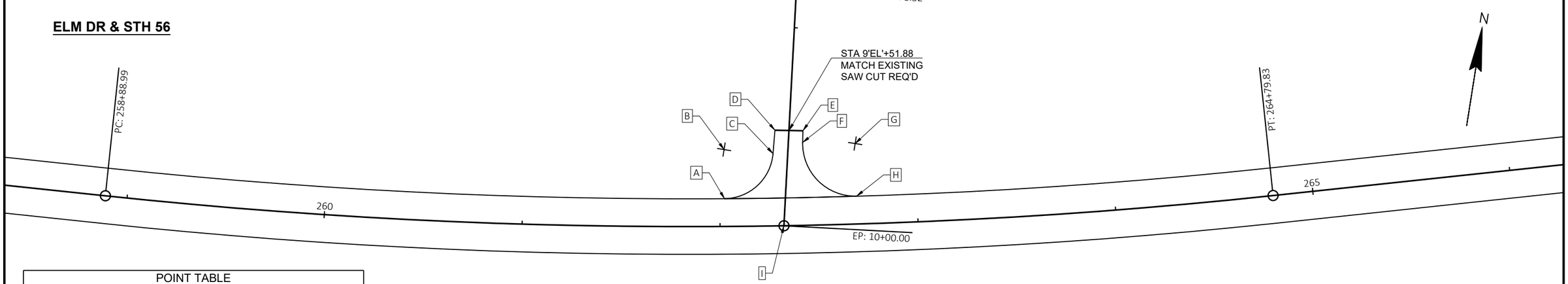

POINT TABLE			
POINT	STATION	OFFSET	COMMENTS
A	262+02.32'	14' LT	-
B	262+02.29'	39' LT	9'EL'+63.22', 32.2' O/S, RADIUS: 25'
C	9'EL'+63.92'	7' RT	-
D	9'EL'+52.10'	7' RT	-
E	9'EL'+51.67'	7' LT	-
F	9'EL'+57.51'	7' LT	-
G	262+69.47'	41' LT	9'EL'+56.69', -33.7' O/S, RADIUS: 27'
H	262+69.41'	14' LT	-
I	262+32.23'	-	-

2

REED DR & STH 56

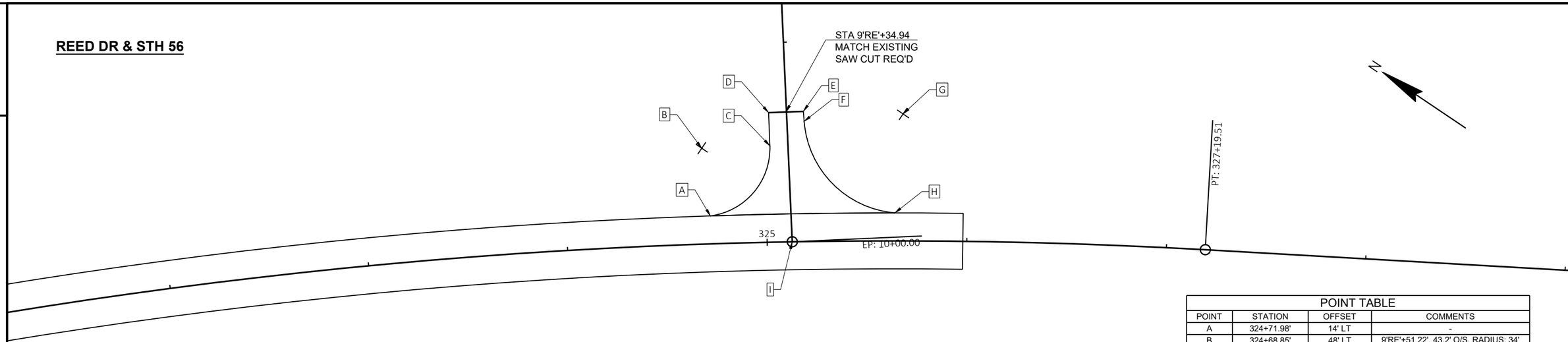

POINT TABLE			
POINT	STATION	OFFSET	COMMENTS
A	324+71.98'	14' LT	-
B	324+68.85'	48' LT	9'RE'+51.22', 43.2' O/S, RADIUS: 34'
C	9'RE'+51.46'	9' RT	
D	9'RE'+34.88'	9' RT	-
E	9'RE'+35.00'	9' LT	-
F	9'RE'+40.01'	9' LT	-
G	325+67.96'	64' LT	9'RE'+38.52', -58.3' O/S, RADIUS: 50'
H	325+63.95'	14' LT	-
I	325+12.55'	-	

NEVRDUN RD & STH 56

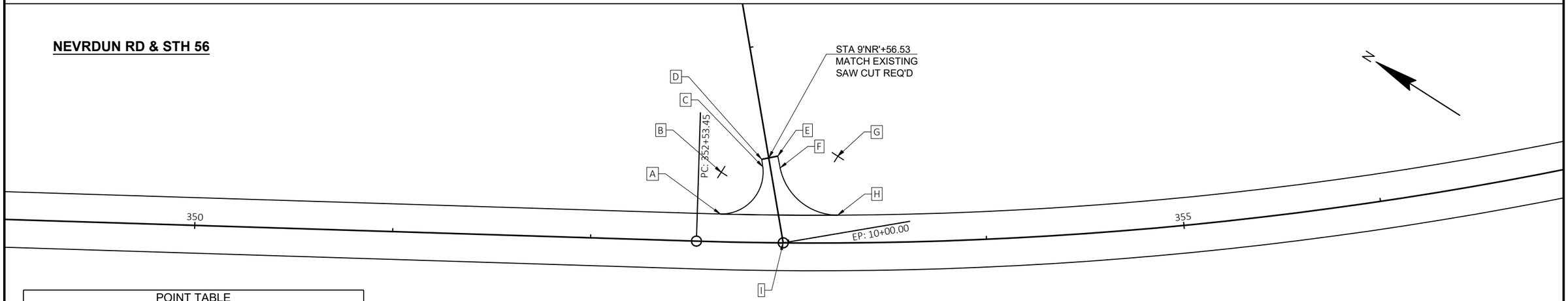

POINT TABLE			
POINT	STATION	OFFSET	COMMENTS
A	352+65.21'	14' LT	-
B	352+65.12'	35' LT	9'NR'+59.60', 24.8' O/S, RADIUS: 21'
C	9'NR'+60.43'	4' RT	-
D	9'NR'+56.64'	4' RT	-
E	9'NR'+56.39'	5' LT	-
F	9'NR'+62.48'	5' LT	-
G	353+25.18'	44' LT	9'NR'+61.55', -34.6' O/S, RADIUS: 30'
H	353+24.92'	14' LT	-
I	352+97.28'	-	-

CTH SS & STH 56

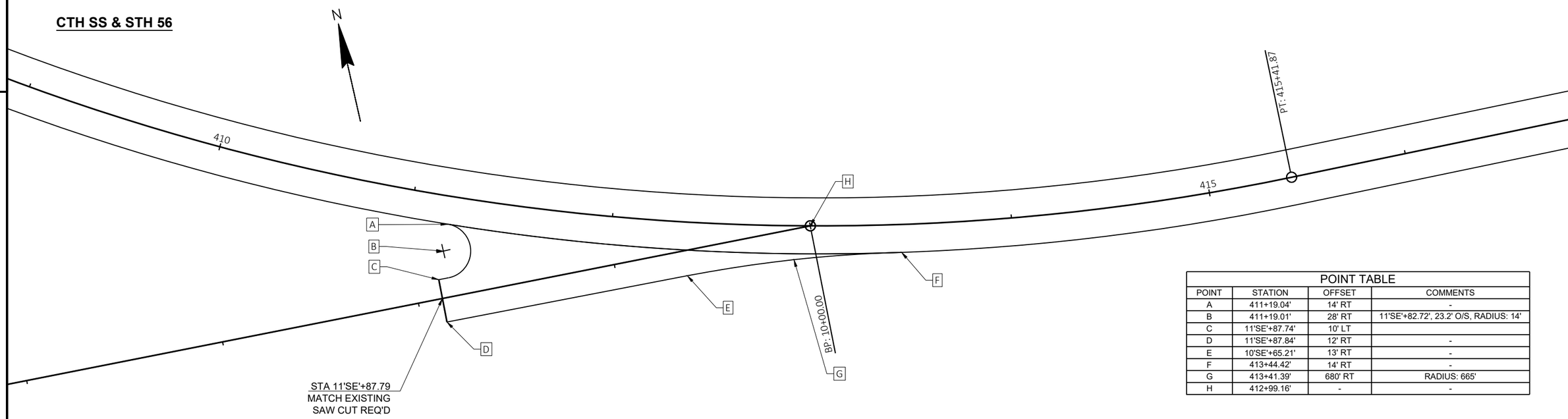

POINT TABLE

POINT	STATION	OFFSET	COMMENTS
A	411+19.04'	14' RT	-
B	411+19.01'	28' RT	11'SE'+82.72', 23.2' O/S, RADIUS: 14'
C	11'SE'+87.74'	10' LT	
D	11'SE'+87.84'	12' RT	-
E	10'SE'+65.21'	13' RT	-
F	413+44.42'	14' RT	-
G	413+41.39'	680' RT	RADIUS: 665'
H	412+99.16'	-	-

WILLOW RD & STH 56

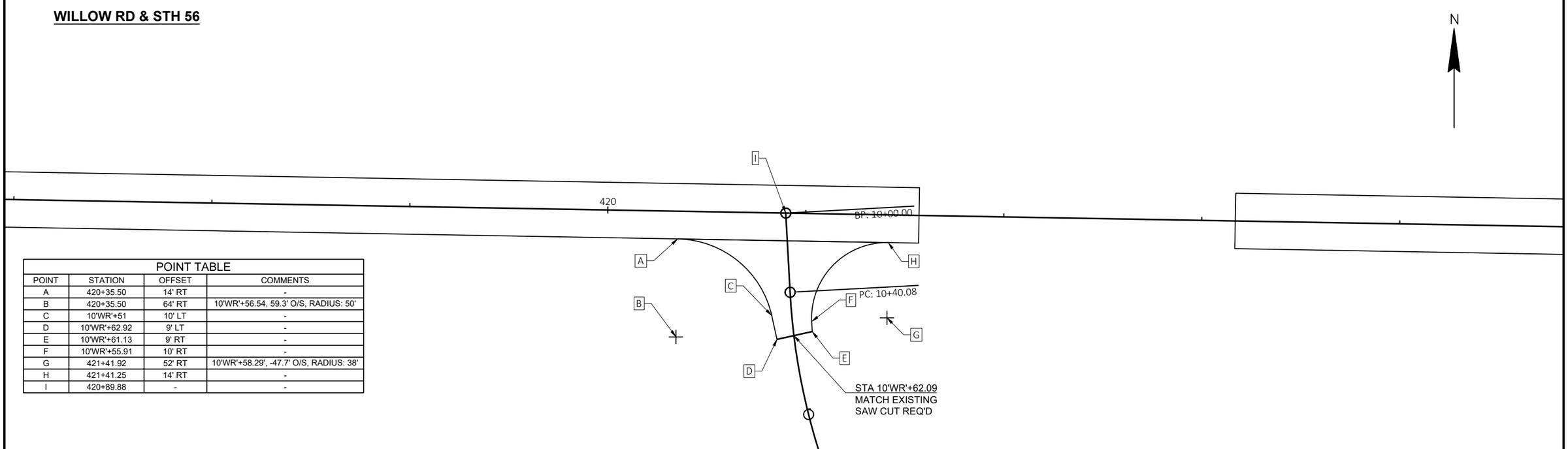

POINT TABLE

POINT	STATION	OFFSET	COMMENTS
A	420+35.50	14' RT	-
B	420+35.50	64' RT	10'WR'+56.54, 59.3' O/S, RADIUS: 50'
C	10'WR'+51	10' LT	-
D	10'WR'+62.92	9' LT	-
E	10'WR'+61.13	9' RT	-
F	10'WR'+55.91	10' RT	-
G	421+41.92	52' RT	10'WR'+58.29', -47.7' O/S, RADIUS: 38'
H	421+41.25	14' RT	-
I	420+89.88	-	-

2

CTH SS & STH 56

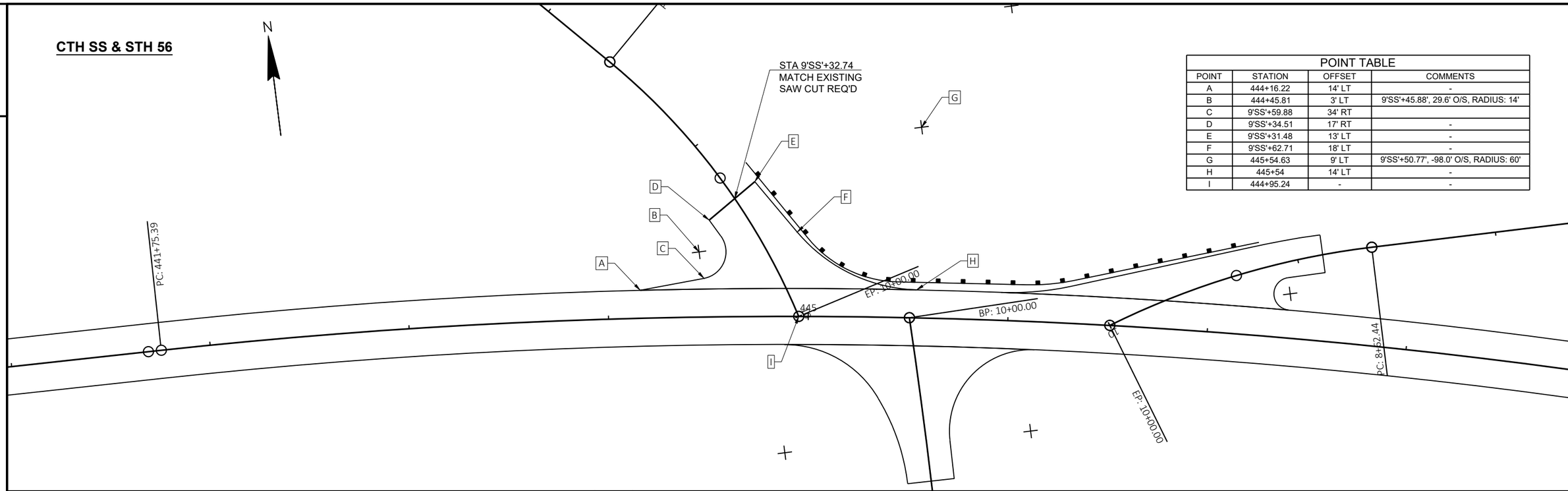

POINT TABLE			
POINT	STATION	OFFSET	COMMENTS
A	444+16.22	14' LT	-
B	444+45.81	3' LT	9'SS'+45.88', 29.6' O/S, RADIUS: 14'
C	9'SS'+59.88	34' RT	
D	9'SS'+34.51	17' RT	-
E	9'SS'+31.48	13' LT	-
F	9'SS'+62.71	18' LT	-
G	445+54.63	9' LT	9'SS'+50.77', -98.0' O/S, RADIUS: 60'
H	445+54	14' LT	-
I	444+95.24	-	-

2

CTH S & STH 56

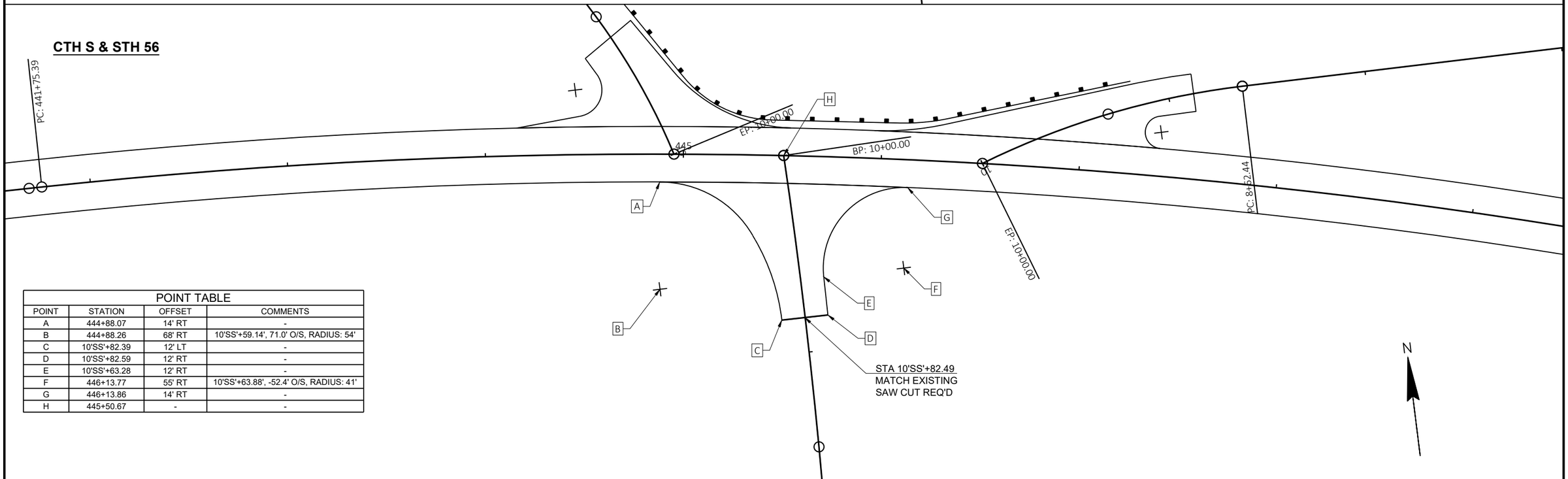

POINT TABLE			
POINT	STATION	OFFSET	COMMENTS
A	444+88.07	14' RT	-
B	444+88.26	68' RT	10'SS'+59.14', 71.0' O/S, RADIUS: 54'
C	10'SS'+82.39	12' LT	-
D	10'SS'+82.59	12' RT	-
E	10'SS'+63.28	12' RT	-
F	446+13.77	55' RT	10'SS'+63.88', -52.4' O/S, RADIUS: 41'
G	446+13.86	14' RT	-
H	445+50.67	-	-

GORE HOLLOW RD & STH 56

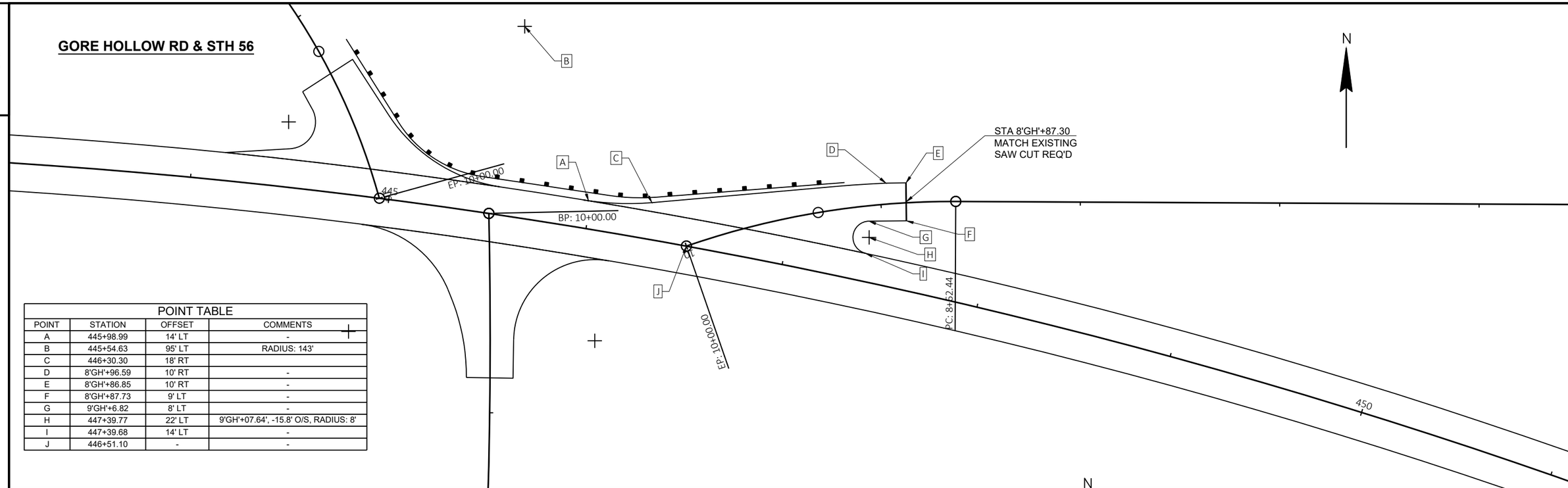

POINT TABLE			
POINT	STATION	OFFSET	COMMENTS
A	445+98.99	14' LT	-
B	445+54.63	95' LT	RADIUS: 143'
C	446+30.30	18' RT	
D	8'GH'+96.59	10' RT	-
E	8'GH'+86.85	10' RT	-
F	8'GH'+87.73	9' LT	-
G	9'GH'+6.82	8' LT	-
H	447+39.77	22' LT	9'GH'+07.64', -15.8' O/S, RADIUS: 8'
I	447+39.68	14' LT	-
J	446+51.10	-	-

CTH SS & STH 56

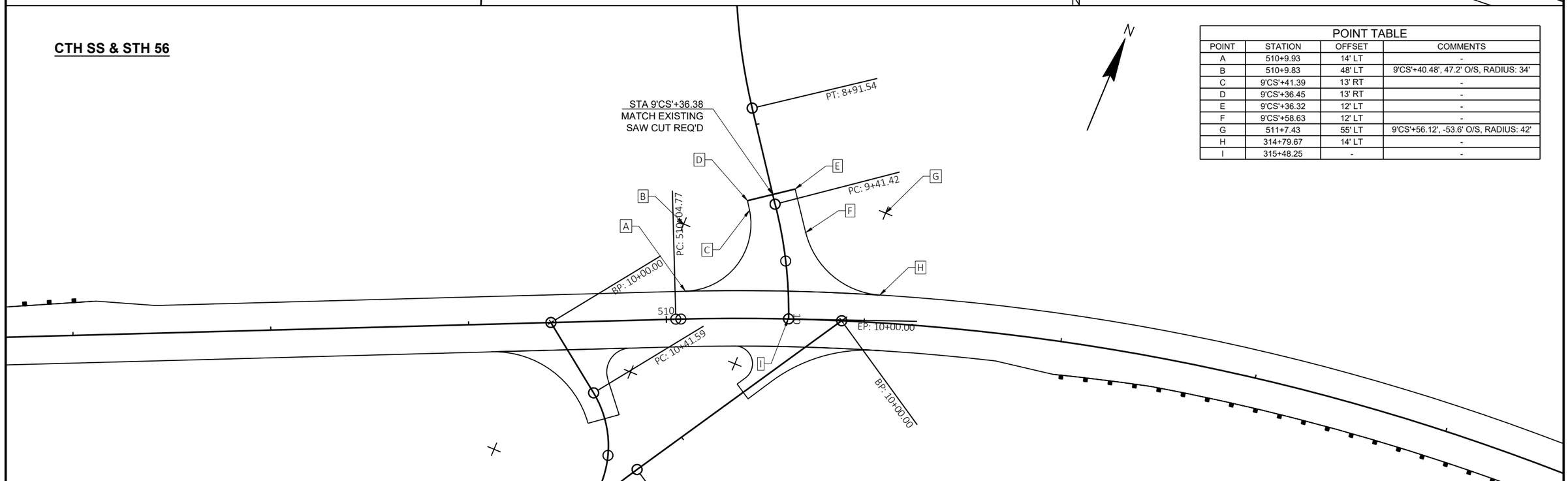

POINT TABLE			
POINT	STATION	OFFSET	COMMENTS
A	510+9.93	14' LT	-
B	510+9.83	48' LT	9'CS'+40.48', 47.2' O/S, RADIUS: 34'
C	9'CS'+41.39	13' RT	-
D	9'CS'+36.45	13' RT	-
E	9'CS'+36.32	12' LT	-
F	9'CS'+58.63	12' LT	-
G	511+7.43	55' LT	9'CS'+56.12', -53.6' O/S, RADIUS: 42'
H	314+79.67	14' LT	-
I	315+48.25	-	-

PROJECT NO: 5730-00-71	HWY: STH 56	COUNTY: VERNON	INTERSECTION DETAILS	SHEET 17	E

PLAIN VIEW RD & STH 56

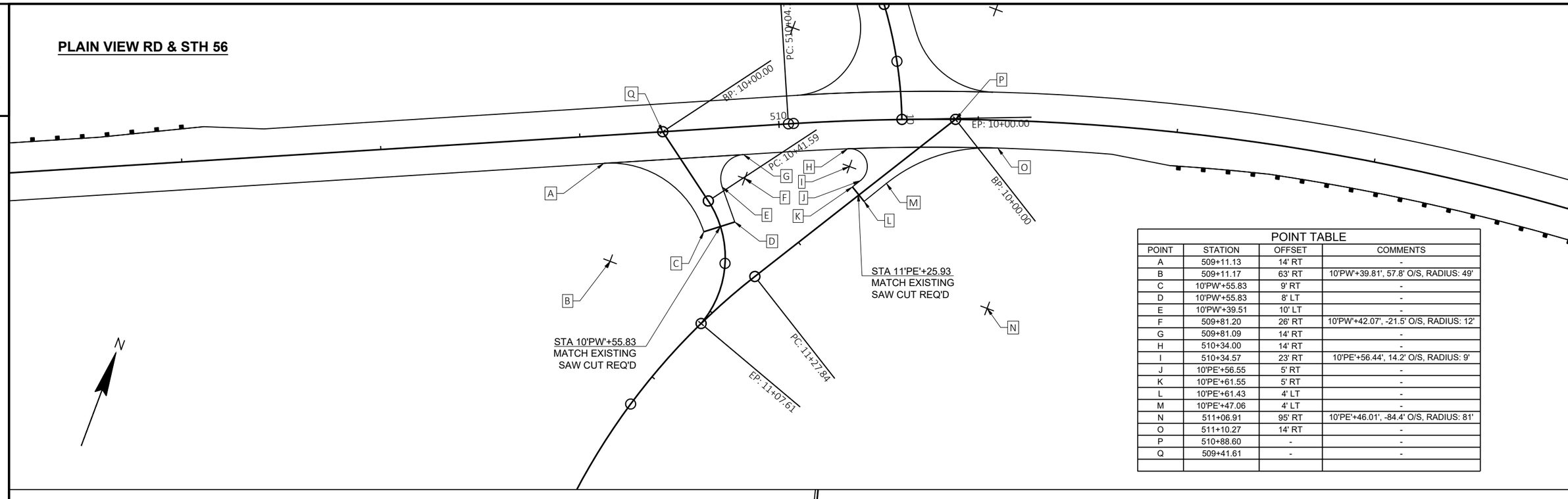

POINT TABLE			
POINT	STATION	OFFSET	COMMENTS
A	509+11.13	14' RT	-
B	509+11.17	63' RT	10'PW'+39.81', 57.8' O/S, RADIUS: 49'
C	10'PW'+55.83	9' RT	-
D	10'PW'+55.83	8' LT	-
E	10'PW'+39.51	10' LT	-
F	509+81.20	26' RT	10'PW'+42.07', -21.5' O/S, RADIUS: 12'
G	509+81.09	14' RT	-
H	510+34.00	14' RT	-
I	510+34.57	23' RT	10'PE'+56.44', 14.2' O/S, RADIUS: 9'
J	10'PE'+56.55	5' RT	-
K	10'PE'+61.55	5' RT	-
L	10'PE'+61.43	4' LT	-
M	10'PE'+47.06	4' LT	-
N	511+06.91	95' RT	10'PE'+46.01', -84.4' O/S, RADIUS: 81'
O	511+10.27	14' RT	-
P	510+88.60	-	-
Q	509+41.61	-	-

CUSHMAN AVE & STH 56

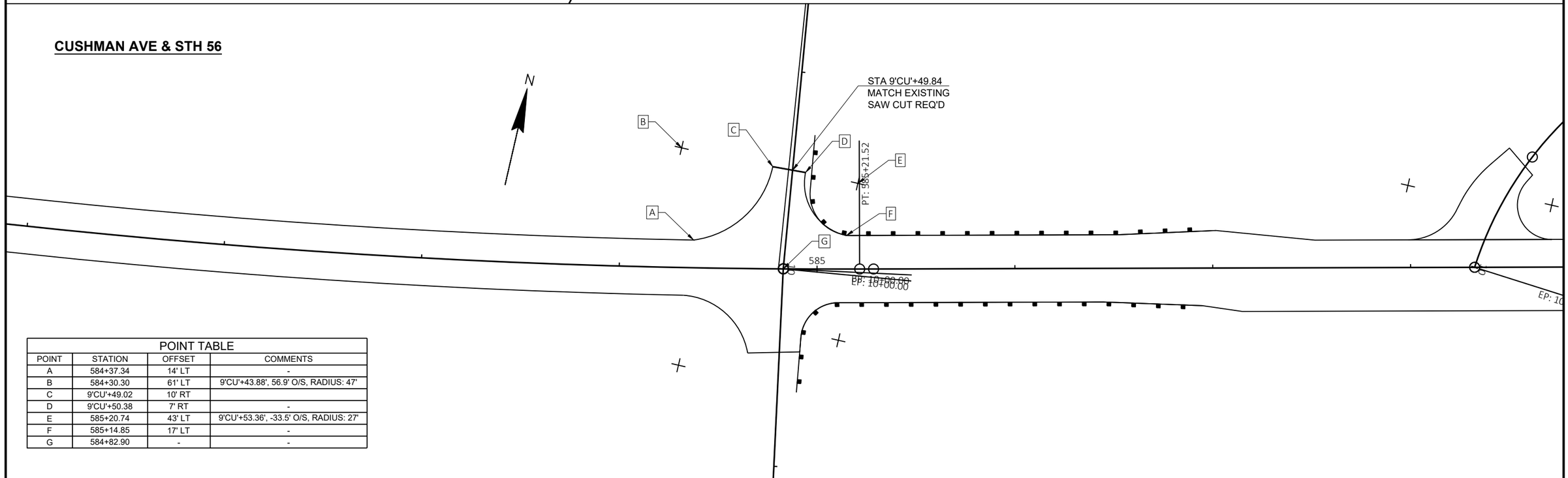

POINT TABLE			
POINT	STATION	OFFSET	COMMENTS
A	584+37.34	14' LT	-
B	584+30.30	61' LT	9'CU'+43.88', 56.9' O/S, RADIUS: 47'
C	9'CU'+49.02	10' RT	
D	9'CU'+50.38	7' RT	-
E	585+20.74	43' LT	9'CU'+53.36', -33.5' O/S, RADIUS: 27'
F	585+14.85	17' LT	-
G	584+82.90	-	-

SPORTSMAN RD & STH 56

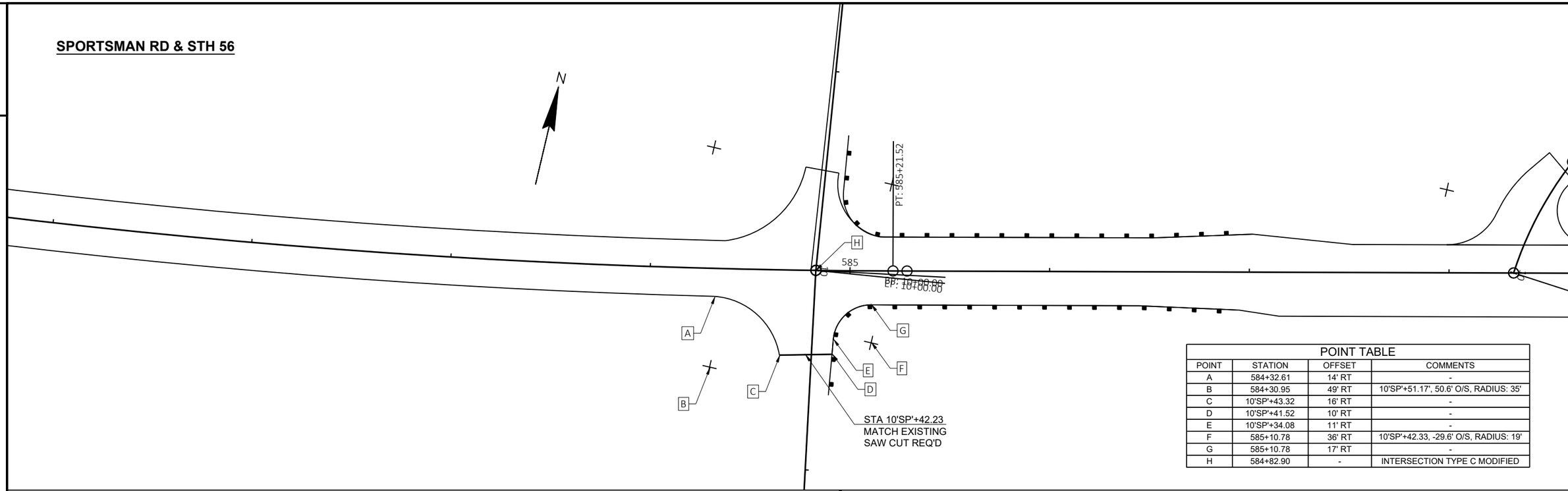

POINT TABLE

POINT	STATION	OFFSET	COMMENTS
A	584+32.61	14' RT	-
B	584+30.95	49' RT	10'SP'+51.17', 50.6' O/S, RADIUS: 35'
C	10'SP'+43.32	16' RT	-
D	10'SP'+41.52	10' RT	-
E	10'SP'+34.08	11' RT	-
F	585+10.78	36' RT	10'SP'+42.33, -29.6' O/S, RADIUS: 19'
G	585+10.78	17' RT	-
H	584+82.90	-	INTERSECTION TYPE C MODIFIED

W YORK RD & STH 56

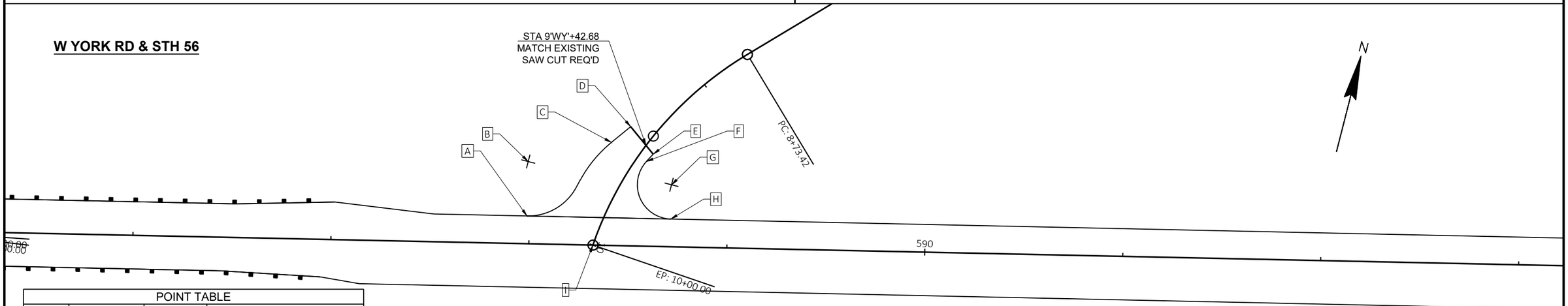

POINT TABLE

POINT	STATION	OFFSET	COMMENTS
A	587+98.78	14' LT	-
B	587+98.78	42' LT	9'WY'+76.58', 46.5' O/S, RADIUS: 28'
C	9'WY'+51.27	15' RT	-
D	9'WY'+39.96	12 RT	-
E	9'WY'+44.08	6' LT	-
F	9'WY'+49.24	5' LT	-
G	588+71.40	31' LT	9'WY'+51.91', -22.0' O/S, RADIUS: 17'
H	588+71.40	14' LT	-
I	588+32.22	-	-

W YORK RD & STH 56

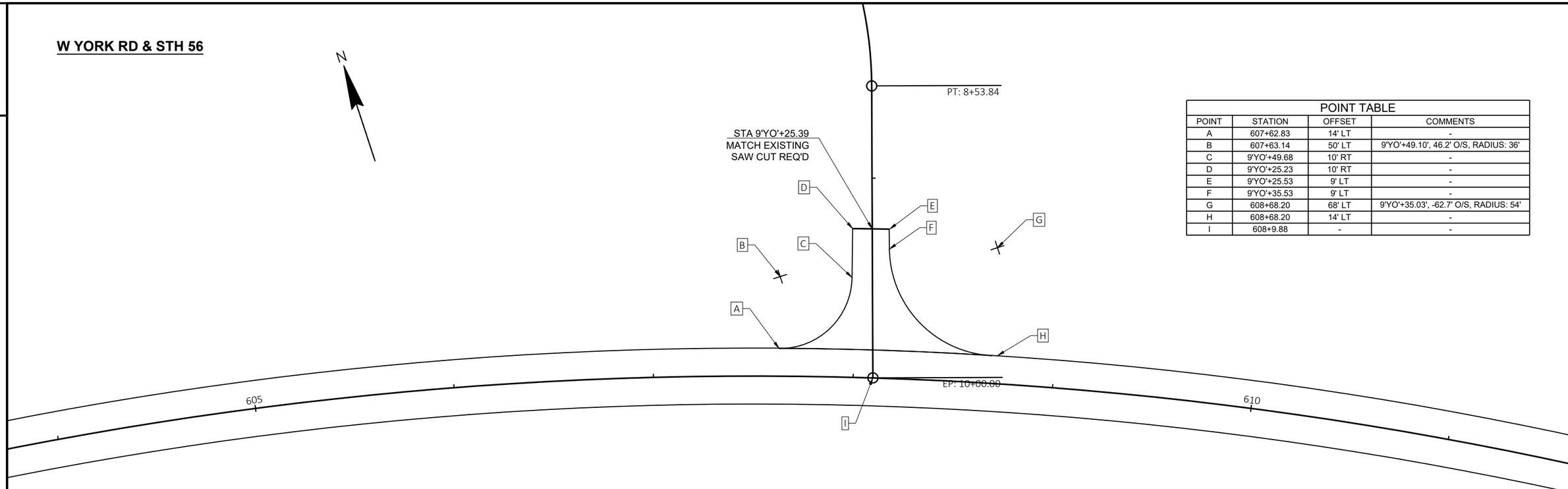

POINT TABLE			
POINT	STATION	OFFSET	COMMENTS
A	607+62.83	14' LT	-
B	607+63.14	50' LT	9'YO'+49.10', 46.2' O/S, RADIUS: 36'
C	9'YO'+49.68	10' RT	-
D	9'YO'+25.23	10' RT	-
E	9'YO'+25.53	9' LT	-
F	9'YO'+35.53	9' LT	-
G	608+68.20	68' LT	9'YO'+35.03', -62.7' O/S, RADIUS: 54'
H	608+68.20	14' LT	-
I	608+9.88	-	-

2

Superelevation Region	Station	Description	Left Outside Shoulder	Left Outside Lane	Right Outside Lane	Right Outside Shoulder
Project Limits	0+00.00'	Begin Alignment	-2.00%	-2.00%	-2.00%	-2.00%
1	8+57.20'	End Normal Crown	-2.00%	-2.00%	-2.00%	-2.00%
	9+10.54'	Level Crown	-2.00%	-2.00%	0.00%	0.00%
	9+63.87'	Reverse Crown	-2.00%	-2.00%	2.00%	2.00%
	10+70.54'	Begin Full Super	-6.00%	-6.00%	6.00%	6.00%
	13+53.79'	End Full Super	-6.00%	-6.00%	6.00%	6.00%
	14+60.46'	Reverse Crown	-2.00%	-2.00%	2.00%	2.00%
	15+13.79'	Level Crown	-2.00%	-2.00%	0.00%	0.00%
	15+67.12'	Begin Normal Crown	-2.00%	-2.00%	-2.00%	-2.00%
2	36+72.29'	End Normal Crown	-2.00%	-2.00%	-2.00%	-2.00%
	37+25.55'	Level Crown	-2.00%	-2.00%	0.00%	0.00%
	37+78.81'	Reverse Crown	-2.00%	-2.00%	2.00%	2.00%
	39+09.29'	Begin Full Super	-6.90%	-6.90%	-6.90%	-6.90%
	44.44.99'	End Full Super	-6.90%	-6.90%	-6.90%	-6.90%
	45+75.47'	Reverse Crown	-2.00%	-2.00%	2.00%	2.00%
	46+28.73'	Level Crown	-2.00%	-2.00%	0.00%	0.00%
	46+81.99'	Begin Normal Crown	-2.00%	-2.00%	-2.00%	-2.00%
3	55+50.42'	End Normal Crown	-2.00%	-2.00%	-2.00%	-2.00%
	56+03.76'	Level Crown	0.00%	0.00%	-2.00%	-2.00%
	56+57.09'	Reverse Crown	2.00%	2.00%	-2.00%	-2.00%
	57+55.76'	Begin Full Super	5.70%	5.70%	-5.70%	-5.70%
	60+03.31'	End Full Super	5.70%	5.70%	-5.70%	-5.70%
	61+01.98'	Reverse Crown	2.00%	2.00%	-2.00%	-2.00%
	61+55.31'	Level Crown	0.00%	0.00%	-2.00%	-2.00%
	62+08.64'	Begin Normal Crown	-2.00%	-2.00%	-2.00%	-2.00%
4	65+22.46'	End Normal Crown	-2.00%	-2.00%	-2.00%	-2.00%
	65+70.46'	Level Crown	0.00%	0.00%	-2.00%	-2.00%
	66+18.46'	Reverse Crown	2.00%	2.00%	-2.00%	-2.00%
	67+02.46'	Begin Full Super	5.50%	5.50%	-5.50%	-5.50%
	70+86.21'	End Full Super	5.50%	5.50%	-5.50%	-5.50%
	72+60.13'	Transition	0.00%	0.00%	0.00%	0.00%
5	74+50.00'	Begin Full Super	-6.00%	-6.00%	6.00%	6.00%
	77+48.45'	End Full Super	-6.00%	-6.00%	6.00%	6.00%
	78+50.45'	Reverse Crown	-2.00%	-2.00%	2.00%	2.00%
	79+01.45'	Level Crown	-2.00%	-2.00%	0.00%	0.00%
	79+52.45'	Begin Normal Crown	-2.00%	-2.00%	-2.00%	-2.00%

Superelevation Region	Station	Description	Left Outside Shoulder	Left Outside Lane	Right Outside Lane	Right Outside Shoulder
6	88+32.45'	End Normal Crown	-2.00%	-2.00%	-2.00%	-2.00%
	88+76.78'	Level Crown	-2.00%	-2.00%	0.00%	0.00%
	89+21.12'	Reverse Crown	-2.00%	-2.00%	2.00%	2.00%
	90+09.78'	Begin Full Super	-6.00%	-6.00%	6.00%	6.00%
	96+06.46'	End Full Super	-6.00%	-6.00%	6.00%	6.00%
	96+97.61'	Transition	0.00%	0.00%	0.00%	0.00%
7	97+88.75'	Begin Full Super	6.00%	6.00%	-6.00%	-6.00%
	106+77.24'	End Full Super	6.00%	6.00%	-6.00%	-6.00%
	107+65.91'	Reverse Crown	2.00%	2.00%	-2.00%	-2.00%
	108+10.24'	Level Crown	0.00%	0.00%	-2.00%	-2.00%
	108+54.58'	Begin Normal Crown	-2.00%	-2.00%	-2.00%	-2.00%
8	113+57.02'	End Normal Crown	-2.00%	-2.00%	-2.00%	-2.00%
	114+10.36'	Level Crown	-2.00%	-2.00%	0.00%	0.00%
	114+63.69'	Reverse Crown	-2.00%	-2.00%	2.00%	2.00%
	115+70.36'	Begin Full Super	-6.00%	-6.00%	6.00%	6.00%
	125+09.56'	End Full Super	-6.00%	-6.00%	6.00%	6.00%
	126+85.24'	Transition	0.00%	0.00%	0.00%	0.00%
9	128+61.04'	Begin Full Super	6.00%	6.00%	-6.00%	-6.00%
	132+76.13'	End Full Super	6.00%	6.00%	-6.00%	-6.00%
	133+82.80'	Reverse Crown	2.00%	2.00%	-2.00%	-2.00%
	134+36.13'	Level Crown	0.00%	0.00%	-2.00%	-2.00%
	134+89.47'	Begin Normal Crown	-2.00%	-2.00%	-2.00%	-2.00%
10	143+53.24'	End Normal Crown	-2.00%	-2.00%	-2.00%	-2.00%
	144+06.58'	Level Crown	-2.00%	-2.00%	0.00%	0.00%
	144+59.91'	Reverse Crown	-2.00%	-2.00%	2.00%	2.00%
	144+78.58'	Begin Full Super	-2.70%	-2.70%	2.70%	2.70%
	146+97.24'	End Full Super	-2.70%	-2.70%	2.70%	2.70%
	147+15.90'	Reverse Crown	-2.00%	-2.00%	2.00%	2.00%
	147+69.24'	Level Crown	-2.00%	-2.00%	0.00%	0.00%
	148+22.57'	Begin Normal Crown	-2.00%	-2.00%	-2.00%	-2.00%

2

2

Superelevation Region	Station	Description	Left Outside Shoulder	Left Outside Lane	Right Outside Lane	Right Outside Shoulder
11	153+67.76'	End Normal Crown	-2.00%	-2.00%	-2.00%	-2.00%
	154+21.10'	Level Crown	-2.00%	-2.00%	0.00%	0.00%
	154+74.43'	Reverse Crown	-2.00%	-2.00%	2.00%	2.00%
	155+73.10'	Begin Full Super	-5.70%	-5.70%	5.70%	5.70%
	159+82.47'	End Full Super	-5.70%	-5.70%	5.70%	5.70%
	160+81.13'	Reverse Crown	-2.00%	-2.00%	2.00%	2.00%
	161+34.47'	Level Crown	-2.00%	-2.00%	0.00%	0.00%
	161+87.80'	Begin Normal Crown	-2.00%	-2.00%	-2.00%	-2.00%
12	163+44.81'	End Normal Crown	-2.00%	-2.00%	-2.00%	-2.00%
	163+98.06'	Level Crown	0.00%	0.00%	-2.00%	-2.00%
	164+51.32'	Reverse Crown	-2.00%	2.00%	-2.00%	-2.00%
	165+65.81'	Begin Full Super	6.30%	6.30%	-6.30%	-6.30%
	172+53.25'	End Full Super	6.30%	6.30%	-6.30%	-6.30%
	173+67.74'	Reverse Crown	-2.00%	2.00%	-2.00%	-2.00%
	174+21.00'	Level Crown	0.00%	0.00%	-2.00%	-2.00%
	174+74.25'	Begin Normal Crown	-2.00%	-2.00%	-2.00%	-2.00%
13	187+07.34'	End Normal Crown	-2.00%	-2.00%	-2.00%	-2.00%
	187+60.67'	Level Crown	-2.00%	0.00%	-2.00%	-2.00%
	188+14.00'	Reverse Crown	-2.00%	2.00%	-2.00%	-2.00%
	188+80.67'	Begin Full Super	-2.00%	4.50%	-4.50%	-4.50%
	194+40.86'	End Full Super	-2.00%	4.50%	-4.50%	-4.50%
	195+07.53'	Reverse Crown	-2.00%	2.00%	-2.00%	-2.00%
	195+60.86'	Level Crown	-2.00%	0.00%	-2.00%	-2.00%
	196+14.20'	Begin Normal Crown	-2.00%	-2.00%	-2.00%	-2.00%
14	198+65.94'	End Normal Crown	-2.00%	-2.00%	-2.00%	-2.00%
	199+19.27'	Level Crown	-2.00%	0.00%	-2.00%	-2.00%
	199+72.60'	Reverse Crown	-2.00%	2.00%	-2.00%	-2.00%
	200+39.27'	Begin Full Super	-2.00%	4.50%	-4.50%	-4.50%
	205+83.02'	End Full Super	-2.00%	4.50%	-4.50%	-4.50%
	206+49.69'	Reverse Crown	-2.00%	2.00%	-2.00%	-2.00%
	207+03.02'	Level Crown	-2.00%	0.00%	-2.00%	-2.00%
	207+56.35'	Begin Normal Crown	-2.00%	-2.00%	-2.00%	-2.00%
15	215+45.00'	End Normal Crown	-2.00%	-2.00%	-2.00%	-2.00%
	245+98.24'	Level Crown	0.00%	0.00%	-2.00%	-2.00%
	216+51.48'	Reverse Crown	2.00%	2.00%	-2.00%	-2.00%
	217+34.00'	Begin Full Super	5.10%	5.10%	-5.10%	-5.10%
	230+00.85'	End Full Super	5.10%	5.10%	-5.10%	-5.10%
	230+83.37'	Reverse Crown	2.00%	2.00%	-2.00%	-2.00%
	231+36.61'	Level Crown	0.00%	0.00%	-2.00%	-2.00%
	231+89.85'	Begin Normal Crown	-2.00%	-2.00%	-2.00%	-2.00%

Superelevation Region	Station	Description	Left Outside Shoulder	Left Outside Lane	Right Outside Lane	Right Outside Shoulder
16	234+17.37'	End Normal Crown	-2.00%	-2.00%	-2.00%	-2.00%
	234+70.70'	Level Crown	-2.00%	-2.00%	0.00%	0.00%
	235+24.03'	Reverse Crown	-2.00%	-2.00%	2.00%	2.00%
	236+30.70'	Begin Full Super	-6.00%	-6.00%	6.00%	6.00%
	239+58.18'	End Full Super	-6.00%	-6.00%	6.00%	6.00%
17	240+63.84'	Begin Full Super	-5.90%	-5.90%	5.90%	5.90%
	245+07.44'	End Full Super	-5.90%	-5.90%	5.90%	5.90%
	245+53.61'	Transition	-5.20%	-5.20%	5.20%	5.20%
18	245+99.77'	Begin Full Super	-4.50%	-4.50%	4.50%	4.50%
	252+84.84'	End Full Super	-4.50%	-4.50%	4.50%	4.50%
	253+51.50'	Reverse Crown	-2.00%	-2.00%	2.00%	2.00%
	254+04.84'	Level Crown	-2.00%	-2.00%	0.00%	0.00%
	254+58.17'	Begin Normal Crown	-2.00%	-2.00%	-2.00%	-2.00%
19	257+53.51'	End Normal Crown	-2.00%	-2.00%	-2.00%	-2.00%
	258+06.99'	Level Crown	-2.00%	-2.00%	0.00%	0.00%
	258+60.46'	Reverse Crown	-2.00%	-2.00%	2.00%	2.00%
	259+29.99'	Begin Full Super	-4.60%	-4.60%	4.60%	4.60%
	264+38.84'	End Full Super	-4.60%	-4.60%	4.60%	4.60%
	265+08.36'	Reverse Crown	-2.00%	-2.00%	2.00%	2.00%
	265+61.84'	Level Crown	-2.00%	-2.00%	0.00%	0.00%
	266+15.31'	Begin Normal Crown	-2.00%	-2.00%	-2.00%	-2.00%
20	267+91.77'	End Normal Crown	-2.00%	-2.00%	-2.00%	-2.00%
	268+45.01'	Level Crown	0.00%	0.00%	-2.00%	-2.00%
	268+98.26'	Reverse Crown	2.00%	2.00%	-2.00%	-2.00%
	269+96.77'	Begin Full Super	5.70%	5.70%	-5.70%	-5.70%
	281+78.29'	End Full Super	5.70%	5.70%	-5.70%	-5.70%
21	283+70.47'	Begin Full Super	6.00%	6.00%	-6.00%	-6.00%
	293+18.80'	End Full Super	6.00%	6.00%	-6.00%	-6.00%
	294+25.47'	Reverse Crown	2.00%	2.00%	-2.00%	-2.00%
	294+78.80'	Level Crown	0.00%	0.00%	-2.00%	-2.00%
	295+32.14'	Begin Normal Crown	-2.00%	-2.00%	-2.00%	-2.00%

2

2

Superelevation Region	Station	Description	Left Outside Shoulder	Left Outside Lane	Right Outside Lane	Right Outside Shoulder
22	298+95.55'	End Normal Crown	-2.00%	-2.00%	-2.00%	-2.00%
	299+49.06'	Level Crown	-2.00%	-2.00%	0.00%	0.00%
	300+02.57'	Reverse Crown	-2.00%	-2.00%	2.00%	2.00%
	300+48.06'	Begin Full Super	-3.70%	-3.70%	3.70%	3.70%
	310+22.67'	End Full Super	-3.70%	-3.70%	3.70%	3.70%
	310+68.16'	Reverse Crown	-2.00%	-2.00%	2.00%	2.00%
	311+21.67'	Level Crown	-2.00%	-2.00%	0.00%	0.00%
	311+75.18'	Begin Normal Crown	-2.00%	-2.00%	-2.00%	-2.00%
23	318+49.82'	End Normal Crown	-2.00%	-2.00%	-2.00%	-2.00%
	319+03.29'	Level Crown	0.00%	0.00%	-2.00%	-2.00%
	319+56.77'	Reverse Crown	2.00%	2.00%	-2.00%	-2.00%
	320+26.29'	Begin Full Super	4.60%	4.60%	-4.60%	-4.60%
	326+78.51'	End Full Super	4.60%	4.60%	-4.60%	-4.60%
	327+48.03'	Reverse Crown	2.00%	2.00%	-2.00%	-2.00%
	328+01.51'	Level Crown	0.00%	0.00%	-2.00%	-2.00%
	328+54.99'	Begin Normal Crown	-2.00%	-2.00%	-2.00%	-2.00%
24	350+99.12'	End Normal Crown	-2.00%	-2.00%	-2.00%	-2.00%
	351+52.36'	Level Crown	-2.00%	-2.00%	0.00%	0.00%
	352+05.61'	Reverse Crown	-2.00%	-2.00%	2.00%	2.00%
	353+04.12'	Begin Full Super	-5.70%	-5.70%	5.70%	5.70%
	367+56.54'	End Full Super	-5.70%	-5.70%	5.70%	5.70%
	368+55.05'	Reverse Crown	-2.00%	-2.00%	2.00%	2.00%
	369+08.30'	Level Crown	-2.00%	-2.00%	0.00%	0.00%
	369+61.54'	Begin Normal Crown	-2.00%	-2.00%	-2.00%	-2.00%
25	376+10.50'	End Normal Crown	-2.00%	-2.00%	-2.00%	-2.00%
	376+63.84'	Level Crown	0.00%	0.00%	-2.00%	-2.00%
	377+17.17'	Reverse Crown	2.00%	2.00%	-2.00%	-2.00%
	378+02.50'	Begin Full Super	5.20%	5.20%	-5.20%	-5.20%
	387+07.01'	End Full Super	5.20%	5.20%	-5.20%	-5.20%
	387+92.34'	Reverse Crown	2.00%	2.00%	-2.00%	-2.00%
	388+45.67'	Level Crown	0.00%	0.00%	-2.00%	-2.00%
	388+99.01'	Begin Normal Crown	-2.00%	-2.00%	-2.00%	-2.00%
26	406+46.40'	End Normal Crown	-2.00%	-2.00%	-2.00%	-2.00%
	406+99.65'	Level Crown	-2.00%	-2.00%	0.00%	0.00%
	407+52.91	Reverse Crown	-2.00%	-2.00%	2.00%	2.00%
	408+67.40'	Begin Full Super	-6.30%	-6.30%	6.30%	6.30%
	414+85.87'	End Full Super	-6.30%	-6.30%	6.30%	6.30%
	416+00.36'	Reverse Crown	-2.00%	-2.00%	2.00%	2.00%
	416+53.62'	Level Crown	-2.00%	-2.00%	0.00%	0.00%
	417+06.87'	Begin Normal Crown	-2.00%	-2.00%	-2.00%	-2.00%

Superelevation Region	Station	Description	Left Outside Shoulder	Left Outside Lane	Right Outside Lane	Right Outside Shoulder
27	440+42.05'	End Normal Crown	-2.00%	-2.00%	-2.00%	-2.00%
	440+95.39'	Level Crown	0.00%	0.00%	-2.00%	-2.00%
	441+48.72'	Reverse Crown	2.00%	2.00%	-2.00%	-2.00%
	442+15.39'	Begin Full Super	4.50%	4.50%	-4.50%	-4.50%
	450+84.94'	End Full Super	4.50%	4.50%	-4.50%	-4.50%
	451+51.60'	Reverse Crown	2.00%	2.00%	-2.00%	-2.00%
	452+04.94'	Level Crown	0.00%	0.00%	-2.00%	-2.00%
	452+58.27'	Begin Normal Crown	-2.00%	-2.00%	-2.00%	-2.00%
28	453+14.26'	End Normal Crown	-2.00%	-2.00%	-2.00%	-2.00%
	453+67.72'	Level Crown	-2.00%	-2.00%	0.00%	0.00%
	454+21.17'	Reverse Crown	-2.00%	-2.00%	2.00%	2.00%
	455+14.72'	Begin Full Super	-5.50%	-5.50%	5.50%	5.50%
	461+90.70'	End Full Super	-5.50%	-5.50%	5.50%	5.50%
	463+08.93'	Transition	0.00%	0.00%	0.00%	0.00%
29	464+27.15'	Begin Full Super	6.00%	6.00%	-6.00%	-6.00%
	470+03.90'	End Full Super	6.00%	6.00%	-6.00%	-6.00%
	471+82.66'	Transition	0.00%	0.00%	0.00%	0.00%
30	473+61.41'	Begin Full Super	-6.00%	-6.00%	6.00%	6.00%
	479+36.56'	End Full Super	-6.00%	-6.00%	6.00%	6.00%
	480+67.46'	Transition	0.00%	0.00%	0.00%	0.00%
31	481+98.35'	Begin Full Super	6.00%	6.00%	-6.00%	-6.00%
	487+44.16'	End Full Super	6.00%	6.00%	-6.00%	-6.00%
	489+00.70'	Transition	0.00%	0.00%	0.00%	0.00%
32	490+87.24'	Begin Full Super	-6.00%	-6.00%	6.00%	6.00%
	499+23.52'	End Full Super	-6.00%	-6.00%	6.00%	6.00%
	500+30.19'	Reverse Crown	-2.00%	-2.00%	2.00%	2.00%
	500+83.52'	Level Crown	-2.00%	-2.00%	0.00%	0.00%
	501+36.86'	Begin Normal Crown	-2.00%	-2.00%	-2.00%	-2.00%

2

2

Superelevation Region	Station	Description	Left Outside Shoulder	Left Outside Lane	Right Outside Lane	Right Outside Shoulder
33	508+44.77'	End Normal Crown	-2.00%	-2.00%	-2.00%	-2.00%
	508+98.10'	Level Crown	-2.00%	0.00%	-2.00%	-2.00%
	509+51.43'	Reverse Crown	-2.00%	2.00%	-2.00%	-2.00%
	510+58.10'	Begin Full Super	-2.00%	6.00%	-6.00%	-6.00%
	528+48.44'	End Full Super	-2.00%	6.00%	-6.00%	-6.00%
	529+95.20'	Transition	0.00%	0.00%	0.00%	0.00%
34	531+41.95'	Begin Full Super	-6.00%	-6.00%	6.00%	-2.00%
	535+40.76'	End Full Super	-6.00%	-6.00%	6.00%	-2.00%
	536+47.43'	Reverse Crown	-2.00%	-2.00%	2.00%	-2.00%
	537+00.76'	Level Crown	-2.00%	-2.00%	0.00%	-2.00%
	537+54.10'	Begin Normal Crown	-2.00%	-2.00%	-2.00%	-2.00%
35	538+55.20'	End Normal Crown	-2.00%	-2.00%	-2.00%	-2.00%
	539+08.37'	Level Crown	-2.00%	-2.00%	0.00%	0.00%
	539+61.55'	Reverse Crown	-2.00%	-2.00%	2.00%	2.00%
	540+81.20'	Begin Full Super	-6.50%	-6.50%	6.50%	6.50%
	546+70.56'	End Full Super	-6.50%	-6.50%	6.50%	6.50%
	547+90.21'	Reverse Crown	-2.00%	-2.00%	2.00%	2.00%
	548+43.39'	Level Crown	-2.00%	-2.00%	0.00%	0.00%
	548+96.56'	Begin Normal Crown	-2.00%	-2.00%	-2.00%	-2.00%
36	566+83.55'	End Normal Crown	-2.00%	-2.00%	-2.00%	-2.00%
	567+37.06'	Level Crown	-2.00%	-2.00%	0.00%	0.00%
	567+90.57'	Reverse Crown	-2.00%	-2.00%	2.00%	2.00%
	568+36.06'	Begin Full Super	-3.70%	-3.70%	3.70%	3.70%
	584+88.52'	End Full Super	-3.70%	-3.70%	3.70%	3.70%
	585+34.01'	Reverse Crown	-2.00%	-2.00%	2.00%	2.00%
	585+87.52'	Level Crown	-2.00%	-2.00%	0.00%	0.00%
	586+41.04'	Begin Normal Crown	-2.00%	-2.00%	-2.00%	-2.00%
37	595+47.70'	End Normal Crown	-2.00%	-2.00%	-2.00%	-2.00%
	596+01.15'	Level Crown	0.00%	0.00%	-2.00%	-2.00%
	596+54.61'	Reverse Crown	2.00%	2.00%	-2.00%	-2.00%
	597+48.15'	Begin Full Super	5.50%	5.50%	-5.50%	-5.50%
	615+63.87'	End Full Super	5.50%	5.50%	-5.50%	-5.50%
	616+57.41'	Reverse Crown	2.00%	2.00%	-2.00%	-2.00%
	617+10.87'	Level Crown	0.00%	0.00%	-2.00%	-2.00%
	617+64.32'	Begin Normal Crown	-2.00%	-2.00%	-2.00%	-2.00%
Project Limits	620+93.19'	End Alignment	-2.00%	-2.00%	-2.00%	-2.00%

2

5730-00-71

Line	Item	Item Description	Unit	Total	Qty
0002	201.0105	Clearing	STA	6.000	6.000
0004	201.0205	Grubbing	STA	6.000	6.000
0006	203.0100	Removing Small Pipe Culverts	EACH	4.000	4.000
0008	203.0220	Removing Structure (structure) 01. C-62-314	EACH	1.000	1.000
0012	204.0110	Removing Asphaltic Surface	SY	4,319.000	4,319.000
0014	204.0115	Removing Asphaltic Surface Butt Joints	SY	10,667.000	10,667.000
0016	204.0165	Removing Guardrail	LF	11,846.000	11,846.000
0018	205.0100	Excavation Common	CY	1,552.000	1,552.000
0022	206.2000	Excavation for Structures Culverts (structure) 01. C-62-314	LS	1.000	1.000
0026	208.0100	Borrow	CY	594.000	594.000
0028	208.1500.S	Temporary Lane Shift During Culvert Work	EACH	4.000	4.000
0032	210.2500	Backfill Structure Type B	TON	725.000	725.000
0034	211.0400	Prepare Foundation for Asphaltic Shoulders	STA	608.000	608.000
0036	213.0100	Finishing Roadway (project) 01. 5730-00-71	EACH	1.000	1.000
0040	305.0110	Base Aggregate Dense 3/4-Inch	TON	3,027.000	3,027.000
0042	305.0120	Base Aggregate Dense 1 1/4-Inch	TON	4,249.000	4,249.000
0044	311.0110	Breaker Run	TON	75.000	75.000
0048	325.0100	Pulverize and Relay	SY	172,884.000	172,884.000
0050	374.1020.S	QMP Pulverize and Relay Compaction	SY	172,884.000	172,884.000
0056	455.0605	Tack Coat	GAL	10,025.000	10,025.000
0058	460.0105.S	HMA Percent Within Limits (PWL) Test Strip Volumetrics	EACH	1.000	1.000
0060	460.0110.S	HMA Percent Within Limits (PWL) Test Strip Density	EACH	1.000	1.000
0062	460.2005	Incentive Density PWL HMA Pavement	DOL	39,250.000	39,250.000
0064	460.2007	Incentive Density HMA Pavement Longitudinal Joints	DOL	24,070.000	24,070.000
0066	460.2010	Incentive Air Voids HMA Pavement	DOL	39,250.000	39,250.000
0068	460.5224	HMA Pavement 4 LT 58-28 S	TON	39,253.000	39,253.000
0072	465.0120	Asphaltic Surface Driveways and Field Entrances	TON	187.000	187.000
0074	465.0475	Asphalt Centerline Rumble Strips 2-Lane Rural	LF	57,443.000	57,443.000
0082	502.4205	Adhesive Anchors No. 5 Bar	EACH	46.000	46.000
0086	504.0100	Concrete Masonry Culverts	CY	70.000	70.000
0088	505.0400	Bar Steel Reinforcement HS Structures	LB	6,800.000	6,800.000
0090	505.0600	Bar Steel Reinforcement HS Coated Structures	LB	3,740.000	3,740.000
0096	511.1200	Temporary Shoring (structure) 01. C-62-314	SF	300.000	300.000
0098	516.0500	Rubberized Membrane Waterproofing	SY	20.000	20.000
0100	520.9700.S	Culvert Pipe Liners (size) 01. 24-INCH	LF	52.000	52.000
0102	520.9700.S	Culvert Pipe Liners (size) 02. 30-INCH	LF	134.000	134.000
0104	520.9700.S	Culvert Pipe Liners (size) 03. 48-INCH	LF	176.000	176.000
0106	520.9750.S	Cleaning Culvert Pipes for Liner Verification	EACH	4.000	4.000
0110	521.1024	Apron Endwalls for Culvert Pipe Steel 24-Inch	EACH	6.000	6.000
0112	521.1030	Apron Endwalls for Culvert Pipe Steel 30-Inch	EACH	3.000	3.000
0118	521.3124	Culvert Pipe Corrugated Steel 24-Inch	LF	110.000	110.000
0120	521.3130	Culvert Pipe Corrugated Steel 30-Inch	LF	6.000	6.000
0122	522.0424	Culvert Pipe Reinforced Concrete Class IV 24-Inch	LF	136.000	136.000
0124	522.1024	Apron Endwalls for Culvert Pipe Reinforced Concrete 24-Inch	EACH	6.000	6.000
0126	524.0124	Culvert Pipe Salvaged 24-Inch	LF	40.000	40.000
0128	524.0624	Apron Endwalls for Culvert Pipe Salvaged 24-Inch	EACH	2.000	2.000
0136	601.0557	Concrete Curb & Gutter 6-Inch Sloped 36-Inch Type D	LF	1,572.000	1,572.000
0142	606.0200	Riprap Medium	CY	59.000	59.000
0144	606.0300	Riprap Heavy	CY	35.000	35.000

5730-00-71

Line	Item	Item Description	Unit	Total	Qty
0154	614.0010	Barrier System Grading Shaping Finishing	EACH	12.000	12.000
0158	614.0200	Steel Thrie Beam Structure Approach	LF	21.000	21.000
0160	614.0370	Steel Plate Beam Guard Energy Absorbing Terminal	EACH	2.000	2.000
0162	614.0400	Adjusting Steel Plate Beam Guard	LF	1,440.000	1,440.000
0164	614.2300	MGS Guardrail 3	LF	10,005.000	10,005.000
0166	614.2340	MGS Guardrail 3 L	LF	212.000	212.000
0168	614.2350	MGS Guardrail Short Radius	LF	182.000	182.000
0170	614.2500	MGS Thrie Beam Transition	LF	276.000	276.000
0172	614.2610	MGS Guardrail Terminal EAT	EACH	23.000	23.000
0174	614.2630	MGS Guardrail Short Radius Terminal	EACH	4.000	4.000
0176	618.0100	Maintenance And Repair of Haul Roads (project) 01. 5730-00-71	EACH	1.000	1.000
0180	619.1000	Mobilization	EACH	0.450	0.450
0182	624.0100	Water	MGAL	967.000	967.000
0184	625.0500	Salvaged Topsoil	SY	1,430.000	1,430.000
0186	627.0200	Mulching	SY	1,260.000	1,260.000
0188	628.1504	Silt Fence	LF	2,308.000	2,308.000
0190	628.1520	Silt Fence Maintenance	LF	2,308.000	2,308.000
0192	628.1905	Mobilizations Erosion Control	EACH	3.000	3.000
0194	628.1910	Mobilizations Emergency Erosion Control	EACH	3.000	3.000
0196	628.2004	Erosion Mat Class I Type B	SY	1,790.000	1,790.000
0202	628.7504	Temporary Ditch Checks	LF	25.000	25.000
0204	628.7555	Culvert Pipe Checks	EACH	12.000	12.000
0206	629.0210	Fertilizer Type B	CWT	3.100	3.100
0208	630.0120	Seeding Mixture No. 20	LB	90.000	90.000
0210	630.0200	Seeding Temporary	LB	90.000	90.000
0212	630.0500	Seed Water	MGAL	223.000	223.000
0214	633.5100	Markers ROW	EACH	4.000	4.000
0216	633.5200	Markers Culvert End	EACH	14.000	14.000
0218	634.0616	Posts Wood 4x6-Inch X 16-FT	EACH	5.000	5.000
0220	637.2230	Signs Type II Reflective F	SF	27.800	27.800
0222	638.2602	Removing Signs Type II	EACH	5.000	5.000
0224	638.3000	Removing Small Sign Supports	EACH	5.000	5.000
0228	643.0300	Traffic Control Drums	DAY	14,840.000	14,840.000
0230	643.0420	Traffic Control Barricades Type III	DAY	182.000	182.000
0234	643.0900	Traffic Control Signs	DAY	1,827.000	1,827.000
0238	643.1050	Traffic Control Signs PCMS	DAY	14.000	14.000
0240	643.5000	Traffic Control	EACH	0.550	0.550
0242	645.0105	Geotextile Type C	SY	125.000	125.000
0246	645.0120	Geotextile Type HR	SY	245.000	245.000
0248	646.1020	Marking Line Epoxy 4-Inch	LF	114,624.000	114,624.000
0250	646.1040	Marking Line Grooved Wet Ref Epoxy 4-Inch	LF	120,874.000	120,874.000
0252	646.6105	Marking Stop Line Paint 18-Inch	LF	72.000	72.000
0254	648.0100	Locating No-Passing Zones	MI	11.580	11.580
0256	649.0105	Temporary Marking Line Paint 4-Inch	LF	112,691.000	112,691.000
0258	649.0120	Temporary Marking Line Epoxy 4-Inch	LF	112,691.000	112,691.000
0266	650.5500	Construction Staking Curb Gutter and Curb & Gutter	LF	1,572.000	1,572.000
0268	650.6500	Construction Staking Structure Layout (structure) 01. C-62-314	LS	1.000	1.000
0272	650.8000	Construction Staking Resurfacing Reference	LF	61,149.000	61,149.000
0274	650.9910	Construction Staking Supplemental Control (project) 01. 5730-00-71	LS	1.000	1.000

5730-00-71

Line	Item	Item Description	Unit	Total	Qty
0278	650.9920	Construction Staking Slope Stakes	LF	614.000	614.000
0280	690.0150	Sawing Asphalt	LF	1,054.000	1,054.000
0286	740.0440	Incentive IRI Ride	DOL	46,320.000	46,320.000
0290	ASP.1T0A	On-the-Job Training Apprentice at $5.00/HR	HRS	2,400.000	2,400.000
0292	ASP.1T0G	On-the-Job Training Graduate at $5.00/HR	HRS	3,200.000	3,200.000
0296	SPV.0060	Special 02. Temporary Water Diversion Culvert C-62-314	EACH	1.000	1.000
0298	SPV.0070	Special 01. Sprayed Asphaltic Shoulder Treatment	GAL	240.000	240.000
0302	SPV.0180	Special 01. Asphaltic Binder Enhanced Friction Surface Treatment	SY	11,854.000	11,854.000

3

REMOVALS

STATION	TO	STATION	LOCATION	204.0110 REMOVING ASPHALTIC SURFACE SY	204.0115 REMOVING ASPHALTIC SURFACE BUTT JOINTS SY	211.0400 PREPARE FOUNDATION FOR ASPHALTIC SHOULDERS STA	325.0100 PULVERIZE AND RELAY SY	REMARKS
7+75	-	166+56	-	-	2,133	159	42,349	Mainline
166+99	-	325+98	-	-	2,133	162	42,397	Mainline
333+23	-	421+57	-	-	2,133	91	23,557	Mainline
423+17	-	427+15	-	-	1,067	4	1,061	Mainline
427+15	-	439+85	-	-	-	13	4,798	Mainline
439+85	-	547+94	-	-	-	108	38,432	Mainline
547+94	-	583+70	-	-	-	36	9,536	Mainline
583+70	-	595+72	-	-	1,067	12	4,541	Mainline
596+21	-	596+85	-	-	1,067	1	242	Mainline
596+85	-	619+24	RT	-	1,067	22	5,971	Mainline
10'LE'+14	-	10'LE'+63	RT	213	-	-	-	Lewison Rd
10'CO'+14	-	10'CO'+63	RT	202	-	-	-	Cook Hill Rd
9'MD'+85	-	9'MD'+45	LT	139	-	-	-	Maple Dale Rd
9'SR'+85	-	9'SR'+11	LT	695	-	-	-	STH 82
10'DE'+14	-	10'DE'+65	RT	201	-	-	-	Deaver Ln
9'EL'+85	-	9'EL'+51	LT	88	-	-	-	Elm Dr
9'RE'+85	-	9'RE'+34	LT	181	-	-	-	Reed Dr
9'NR'+85	-	9'NR'+56	LT	58	-	-	-	Nevrdun Rd
10'SE'+62	-	11'SE'+87	RT	426	-	-	-	CTH SS
10'WR'+14	-	10'WR'+62	RT	193	-	-	-	Willow Rd
9'SS'+84	-	9'SS'+32	LT	259	-	-	-	CTH SS
10'SS'+14	-	10'SS'+82	RT	314	-	-	-	CTH SS
9'GH'+69	-	8'GH'+87	LT	270	-	-	-	Gore Hollow Rd
10'PW'+16	-	10'PW'+55	RT	102	-	-	-	Plain View Rd
9'CS'+85	-	9'CS'+36	LT	205	-	-	-	CTH SS
10'PE'+22	-	10'PE'+61	RT	65	-	-	-	Plain View Rd
9'CU'+83	-	9'CU'+49	LT	121	-	-	-	Cushman Ave
10'SP'+15	-	10'SP'+42	RT	114	-	-	-	Sportsman Rd
9'WY'+85	-	9'WY'+42	LT	145	-	-	-	W York Rd
9'YO'+85	-	9'YO'+25	LT	218	-	-	-	York Rd
PROJECT			-	110	-	-	-	Driveways
			TOTAL 0010	4,319	10,667	608	172,884	

CLEARING & GRUBBING

STATION	TO	STATION	LOCATION	201.0105 CLEARING STA	201.0205 GRUBBING STA	REMARKS
49+42	-	54+70	RT	6	6	
			TOTAL 0010	6	6	

EARTHWORK SUMMARY

STATION - STATION	LOCATION	AVAILABLE MATERIAL (1) CY	UNEXPANDED FILL CY	EXPANDED FILL (2) FACTOR 1.30 CY	MASS ORDINATE +/- (3) CY	208.0100 BORROW CY
49+27 - 54+60	MAINLINE	0	457	594	-594	594
	TOTALS =	0	457	594	-594	594

BASE AGGREGATE

STATION	TO	STATION	LOCATION	305.0110 BASE AGGREGATE DENSE 3/4-INCH TON	305.0120 BASE AGGREGATE DENSE 1 1/4-INCH TON	REMARKS
PROJECT				2,547	-	SHOULDERS
PROJECT				-	3,076	SUPERELEVATION ADJUSTMENT
PROJECT				-	853	CULVERT REPLACEMENT AREAS
PROJECT				200	-	GUARDRAIL GRADING
UNDISTRIBUTED				280	320	-
			TOTAL 0010	3,027	4,249	

3

3

ASPHALT PAVEMENT

STATION	TO	STATION	LOCATION	455.0605 TACK COAT GAL	460.5224 HMA PAVEMENT 4 LT 58-28 S TON	465.0120 ASPHALTIC SURFACE DRIVEWAYS AND FIELD ENTRANCES TON	SPV.0180.01 SPECIAL (01. ASPHALTIC BINDER ENHANCED FRICTION SURFACE TREATMENT) SY	REMARKS
7+75	-	427+16	-	6,409	25,120	-	-	MAINLINE
427+16	-	439+85	-	254	995	-	-	MAINLINE
439+85	-	547+94	-	1,967	7,710	-	-	MAINLINE
547+94	-	583+70	-	557	2,181	-	-	MAINLINE
583+70	-	596+85	-	253	989	-	-	MAINLINE
596+85		619+24	-	349	1,366	-	-	MAINLINE
10'LE'+14	-	10'LE'+63	-	11	42	-	-	LEWISON RD
10'CO'+14	-	10'CO'+63	-	11	40	-	-	COOK HILL RD
9'MD'+85	-	9'MD'+45	-	7	28	-	-	MAPLE DALE RD
9'SR'+85	-	9'SR'+11	-	35	137	-	-	STH 82
10'DE'+14	-	10'DE'+65	-	11	40	-	-	DEAVER LN
9'EL'+85	-	9'EL'+51	-	5	18	-	-	ELM DR
9'RE'+85	-	9'RE'+34	-	10	36	-	-	REED DR
9'NR'+85	-	9'NR'+56	-	3	12	-	-	NEVERDUN RD
10'SE'+62	-	11'SE'+87	-	22	84	-	-	CTH SS
10'WR'+14	-	10'WR'+62	-	10	38	-	-	WILLOW RD
9'SS'+84	-	9'SS'+32	-	13	51	-	-	CTH SS
10'SS'+14	-	10'SS'+82	-	16	62	-	-	CTH SS
9'GH'+69	-	8'GH'+87	-	14	53	-	-	GORE HOLLOW RD
9'OH'+80	-	9'OH'+49	-	15	58	-	-	OLD 56
10'PW'+16	-	10'PW'+55	-	6	20	-	-	PLAIN VIEW RD
9'CS'+85	-	9'CS'+36	-	11	41	-	-	CTH SS
10'PE'+22	-	10'PE'+61	-	4	13	-	-	PLAIN VIEW RD
9'CU'+83	-	9'CU'+49	-	7	24	-	-	CUSHMAN AVE
10'SP'+15	-	10'SP'+42	-	6	23	-	-	SPORTSMAN RD
9'WY'+85	-	9'WY'+42	-	8	29	-	-	W YORK RD
9'YO'+85	-	9'YO'+25	-	11	43	-	-	YORK RD
66+58	-	77+99	-	-	-	-	3,550	HIGH FRICTION SURFACE TREATMENT
473+08	-	499+77	-	-	-	-	8,304	HIGH FRICTION SURFACE TREATMENT
	PROJECT		-	-	-	187	-	DRIVEWAYS (15 TOTAL)
			TOTAL 0010	10,025	39,253	187	11,854	

CONCRETE CURB & GUTTER

STATION	TO	STATION	LOCATION	601.0557 CONCRETE CURB & GUTTER 6-INCH SLOPED 36-INCH TYPE D LF	REMARKS
473+88	-	479+83	LT	589	-
490+80	-	500+75	LT	983	-
			TOTAL 0010	1,572	

3

3

CULVERT PIPE LINERS

STATION	CULVERT	LOCATION	520.9700.S.01 CULVERT PIPE LINERS (SIZE) (24-INCH) LF	520.9700.S.02 CULVERT PIPE LINERS (SIZE) (30-INCH) LF	520.9700.S.03 CULVERT PIPE LINERS (SIZE) (48-INCH) LF	520.9750.S CLEANING CULVERT PIPES FOR LINER VERIFICATION EACH	* 521.1024 APRON ENDWALLS FOR CULVERT PIPE STEEL 24-INCH EACH	* 521.1030 APRON ENDWALLS FOR CULVERT PIPE STEEL 30-INCH EACH	* 606.0200 RIPRAP MEDIUM CY	* 628.7555 CULVERT PIPE CHECKS EACH	* 645.0120 GEOTEXTILE TYPE HR SY	REMARKS
465+47	62-56-186	RT & LT	-	70	-	1	-	1	6	1	16	30-INCH CMCP
470+42	62-56-187	RT & LT	-	64	-	1	-	1	6	1	16	30-INCH CMCP
497+81	62-56-192	RT & LT	-	-	176	1	-	-	8	1	24	48-INCH CMCP
545+34	62-56-202	RT & LT	52	-	-	1	1	-	4	1	14	24-INCH RCCP
		TOTAL 0010	52	134	176	4	1	2	24	4	70	

CULVERT MAINTENANCE

STATION	CULVERT	LOCATION	203.0100 REMOVING SMALL PIPE CULVERTS EACH	205.0100 EXCAVATION COMMON CY	208.1500.S TEMPORARY LANE SHIFT DURING CULVERT WORK EACH	521.1024 APRON ENDWALLS FOR CULVERT PIPE STEEL 24-INCH EACH	521.1030 APRON ENDWALLS FOR CULVERT PIPE STEEL 30-INCH EACH	521.3124 CULVERT PIPE CORRUGATED STEEL 24-INCH LF	521.3130 CULVERT PIPE CORRUGATED STEEL 30-INCH LF	522.0424 CULVERT PIPE REINFORCED CONCRETE CLASS IV 24-INCH LF	522.1024 APRON ENDWALLS FOR CULVERT PIPE REINFORCED CONCRETE 24-INCH EACH	524.0124 CULVERT PIPE SALVAGED 24-INCH LF	524.0624 APRON ENDWALLS FOR CULVERT PIPE SALVAGED 24-INCH EACH	606.0200 RIPRAP MEDIUM CY	628.7555 CULVERT PIPE CHECKS EACH	633.5200 MARKERS CULVERT END EACH	645.0120 GEOTEXTILE TYPE HR SY	JOINT TIES (FOR INFORMATIONAL PURPOSES ONLY)	REMARKS
261+92	62-56-160	RT & LT	1	388	1	-	-	-	-	64	2	-	-	4	1	2	14	22	24-INCH RCCP
298+87	62-56-166	RT	-	-	-	-	-	-	-	-	-	16	1	2	-	1	7	10	24-INCH RCCP
306+23	62-56-168	RT	-	-	-	-	-	-	-	-	1	4	-	2	-	1	7	4	24-INCH RCCP
355+25	62-56-173	RT & LT	-	-	-	-	-	-	-	-	-	16	1	4	1	1	14	10	24-INCH RCCP
364+82	62-56-174	RT & LT	-	-	-	-	-	-	-	-	1	4	-	4	1	1	14	4	24-INCH RCCP
391+92	62-56-179	RT & LT	1	388	1	-	-	-	-	72	2	-	-	4	1	2	14	24	24-INCH RCCP
513+16	62-56-195	RT & LT	-	-	-	1	-	16	-	-	-	-	-	4	1	1	14	-	24-INCH CMCP
533+30	62-56-199	RT & LT	1	388	1	2	-	50	-	-	-	-	-	4	1	2	14	-	24-INCH CMCP
537+67	62-56-200	RT & LT	1	388	1	2	-	44	-	-	-	-	-	4	1	2	14	-	24-INCH CMCP
550+27	62-56-203	LT	-	-	-	-	1	-	6	-	-	-	-	3	1	1	8	-	30-INCH CMCP
		TOTAL 0010	4	1,552	4	5	1	110	6	136	6	40	2	35	8	14	120		

GUARDRAIL

STATION	TO	STATION	LOCATION	204.0165 REMOVING GUARDRAIL LF	614.0200 STEEL THRIE BEAM STRUCTURE APPROACH LF	614.0370 STEEL PLATE BEAM GUARD ENERGY ABSORBING TERMINAL EACH	614.0400 ADJUSTING STEEL PLATE BEAM GUARD LF	614.2300 MGS GUARDRAIL 3 LF	614.2340 MGS GUARDRAIL 3 L LF	614.2350 MGS GUARDRAIL SHORT RADIUS LF	614.2500 MGS THRIE BEAM TRANSITION LF	614.2610 MGS GUARDRAIL TERMINAL EAT EACH	614.2630 MGS GUARDRAIL SHORT RADIUS TERMINAL EACH	SPV.0070.01 SPECIAL (01. SPRAYED ASPHALTIC SHOULDER TREATMENT) GAL	REMARKS
27+72	-	29+82	LT	-	-	-	210	-	-	-	-	-	-	-	
45+80	-	48+97	LT	-	-	-	317	-	-	-	-	-	-	-	
45+99	-	48+77	RT	-	-	-	278	-	-	-	-	-	-	-	
134+10	-	137+84	LT	-	-	-	374	-	-	-	-	-	-	-	
134+48	-	137+09	RT	-	-	-	261	-	-	-	-	-	-	-	
49+99	-	55+44	RT	-	-	1	-	-	-	-	-	-	-	-	TIE INTO EXISTING
52+32	-	57+97	LT	-	-	-	-	459	-	-	-	2	-	40	
59+04	-	66+93	LT	-	-	-	-	683	-	-	-	2	-	-	
71+25	-	74+74	RT	-	-	-	-	243	-	-	-	2	-	30	
71+31	-	73+29	LT	-	-	-	-	145	-	43	-	1	1	15	
148+17	-	154+51	RT	-	-	-	-	528	-	-	-	2	-	-	
165+62	-	167+93	RT	-	-	-	-	-	-	-	79	2	-	-	
165+83	-	167+89	LT	-	21	1	-	-	-	-	39	1	-	-	
444+69	-	447+22	LT	-	-	-	-	127	-	76	-	1	1	-	
463+26	-	507+12	LT	-	-	-	-	4,275	-	-	-	2	-	-	
511+98	-	548+05	RT	-	-	-	-	3,495	-	-	-	2	-	155	
584+89	-	586+94	RT	-	-	-	-	25	106	28	-	1	1	-	
584+98	-	587+01	LT	-	-	-	-	25	106	35	-	1	1	-	
594+69	-	597+10	RT	-	-	-	-	-	-	-	79	2	-	-	
594+83	-	597+24	LT	-	-	-	-	-	-	-	79	2	-	-	
49+99	-	54+94	RT	495	-	-	-	-	-	-	-	-	-	-	
52+57	-	57+97	LT	540	-	-	-	-	-	-	-	-	-	-	
59+04	-	66+93	LT	789	-	-	-	-	-	-	-	-	-	-	
71+31	-	73+29	LT	198	-	-	-	-	-	-	-	-	-	-	
71+35	-	74+12	RT	277	-	-	-	-	-	-	-	-	-	-	
148+17	-	154+52	RT	635	-	-	-	-	-	-	-	-	-	-	
165+91	-	167+62	LT	131	-	-	-	-	-	-	-	-	-	-	
166+17	-	167+77	RT	117	-	-	-	-	-	-	-	-	-	-	
444+87	-	447+22	LT	253	-	-	-	-	-	-	-	-	-	-	
463+26	-	507+12	LT	4,386	-	-	-	-	-	-	-	-	-	-	
512+98	-	547+55	RT	3,457	-	-	-	-	-	-	-	-	-	-	
585+13	-	586+58	LT	145	-	-	-	-	-	-	-	-	-	-	
585+18	-	586+61	RT	143	-	-	-	-	-	-	-	-	-	-	
595+04	-	596+80	RT	137	-	-	-	-	-	-	-	-	-	-	
595+10	-	596+94	LT	143	-	-	-	-	-	-	-	-	-	-	
			TOTAL 0010	11,846	21	2	1,440	10,005	212	182	276	23	4	240	

BARRIER SYSTEM GRADING

STATION	TO	STATION	LOCATION	614.0010 BARRIER SYSTEM GRADING SHAPING FINISHING EACH	FOR INFORMATIONAL PURPOSES ONLY: CONSTRUCTION STAKING SLOPE STAKES LF	BORROW CY	TOPSOIL SY	EROSION MAT CLASS I TYPE A SY	MULCH SY	FERTILIZER CWT	SEEDING MIXTURE NO. 20 LB	SEEDING TEMPORARY LB	SEED WATER MGAL
48+52	-	49+52	RT	1	100	98	193	193	0	0.1	5.2	5.2	17
57+27	-	58+27	LT	1	100	8	102	0	102	0.1	2.7	2.7	9
58+79	-	59+79	LT	1	100	24	127	0	127	0.1	3.4	3.4	11
73+99	-	74+99	RT	1	100	7	104	0	104	0.1	2.8	2.8	9
147+92	-	148+92	RT	1	100	13	126	126	0	0.1	3.4	3.4	11
153+76	-	154+76	RT	1	100	15	181	181	0	0.1	4.9	4.9	15
165+37	-	166+37	RT	1	100	2	83	0	83	0.1	2.2	2.2	7
167+18	-	168+18	RT	1	100	37	160	0	160	0.1	4.3	4.3	14
167+14	-	168+14	LT	1	100	4	133	0	133	0.1	3.6	3.6	11
547+30	-	548+30	RT	1	100	11	60	0	103	0.1	2.8	2.8	9
596+35	-	597+35	RT	1	100	7	94	0	94	0.1	2.5	2.5	8
9+17'GH'	-	9+92'GH'	RT	1	100	14	70	70	0	0.0	1.9	1.9	6
			TOTAL 0010	12	1200	240	1433	570	906	1	40	40	127

3

WATER

STATION	TO	STATION	LOCATION	624.0100 WATER MGAL	REMARKS
7+75	-	619+24		662	PULVERIZE & RELAY COMPACTION
7+75	-	619+24		305	DUST CONTROL
			TOTAL 0010	967	

EROSION CONTROL

STATION	TO	STATION	LOCATION	625.0500 SALVAGED TOPSOIL SY	627.0200 MULCHING SY	628.1504 SILT FENCE LF	628.1520 SILT FENCE MAINTENANCE LF	628.1905 MOBILIZATIONS EROSION CONTROL EACH	628.1910 MOBILIZATIONS EMERGENCY EROSION CONTROL EACH	628.2004 EROSION MAT CLASS I TYPE B SY	628.7504 TEMPORARY DITCH CHECKS LF	629.0210 FERTILIZER TYPE B CWT	630.0120 SEEDING MIXTURE NO. 20 LB	630.0200 SEEDING TEMPORARY LB	630.0500 SEED WATER MGAL	REMARKS
7+75	-	619+24	PROJECT	-	-	-	-	3	3	-	-	-	-	-		-
49+27	-	54+80	RT	1430	-	612	612	-	-	1430	20	1.0	40	40	0	EMBANKMENT CONSTRUCTION
48+63	-	49+27	RT	-	-	85	85	-	-	-	-	-	-	-	122	GUARDRAIL GRADING
57+25	-	58+29	LT	-	-	110	110	-	-	-	-	-	-	-	0	GUARDRAIL GRADING
58+79	-	59+79	LT	-	-	110	110	-	-	-	-	-	-	-	0	GUARDRAIL GRADING
73+99	-	75+01	RT	-	-	113	113	-	-	-	-	-	-	-	0	GUARDRAIL GRADING
147+90	-	148+93	RT	-	-	108	108	-	-	-	-	-	-	-	0	GUARDRAIL GRADING
153+77	-	154+77	RT	-	-	105	105	-	-	-	-	-	-	-	0	GUARDRAIL GRADING
165+35	-	166+38	RT	-	-	104	104	-	-	-	-	-	-	-	0	GUARDRAIL GRADING
167+17	-	168+14	LT	-	-	102	102	-	-	-	-	-	-	-	0	GUARDRAIL GRADING
167+20	-	168+17	RT	-	-	100	100	-	-	-	-	-	-	-	0	GUARDRAIL GRADING
547+33	-	548+38	RT	-	-	110	110	-	-	-	-	-	-	-	0	GUARDRAIL GRADING
596+31	-	597+41	RT	-	-	110	110	-	-	-	-	-	-	-	0	GUARDRAIL GRADING
9'GH'+21	-	9'GH'+92	RT	-	-	79	79	-	-	-	-	-	-	-	0	GUARDRAIL GRADING
261+10	-	261+20	LT & RT	-	88	-	-	-	-	-	-	0.2	4	4	0	CULVERT REPLACEMENT
298+85	-	299+00	RT	-	44	-	-	-	-	-	-	0.1	2	2	8	CULVERT MAINTENANCE
306+10	-	306+30	RT	-	44	-	-	-	-	-	-	0.1	2	2	4	CULVERT MAINTENANCE
355+05	-	355+25	LT & RT	-	88	-	-	-	-	-	-	0.2	4	4	4	CULVERT MAINTENANCE
364+80	-	365+00	RT	-	44	-	-	-	-	-	-	0.1	2	2	8	CULVERT MAINTENANCE
391+10	-	391+30	LT & RT	-	88	-	-	-	-	-	-	0.2	4	4	4	CULVERT REPLACEMENT
513+05	-	513+25	RT	-	44	-	-	-	-	-	-	0.1	2	2	8	CULVERT MAINTENANCE
531+15	-	531+35	LT & RT	-	88	-	-	-	-	-	-	0.2	4	4	4	CULVERT REPLACEMENT
535+10	-	535+30	LT & RT	-	88	-	-	-	-	-	-	0.2	4	4	8	CULVERT REPLACEMENT
550+05	-	550+25	LT	-	44	-	-	-	-	-	-	0.1	2	2	8	CULVERT MAINTENANCE
UNDISTRIBUTED				-	600	460	460	-	-	360	5	0.6	20	20	45	-
			TOTAL 0010	1,430	1,260	2,308	2,308	3	3	1,790	25	3.1	90	90	223	

3

3

MARKERS ROW

STATION	OFFSET	633.5100 MARKERS ROW EACH	REMARKS
52+20	41.70' RT	1	PT 306
52+20	80.00' RT	1	PT 305
54+40	41.87' RT	1	PT 303
54+40	80.00' RT	1	PT 304
	TOTAL 0010	4	

PERMANENT SIGNING

STATION	TO STATION	SIGN CODE	SIGN DESCRIPTION	634.0616 POSTS WOOD 4X6-INCH X 16-FT EACH	637.2230 SIGNS TYPE II REFLECTIVE F SF	638.2602 REMOVING SIGNS TYPE II EACH	638.3000 REMOVING SMALL SIGN SUPPORTS EACH	REMARKS
VARIES		W14-3	NO PASSING ZONE	-	-	5	5	MOVING NO PASSING ZONE PENNANT
VARIES		W14-3	NO PASSING ZONE	5	27.80	-	-	NO PASSING ZONE PENNANT (5.56 SF)
			TOTAL 0010	5	27.80	5	5	

3

TRAFFIC CONTROL

STATION	TO	STATION	LOCATION	643.0300 TRAFFIC CONTROL DRUMS DAY	643.0420 TRAFFIC CONTROL BARRICADES TYPE III DAY	643.0900 TRAFFIC CONTROL SIGNS DAY	643.1050 TRAFFIC CONTROL SIGNS PCMS DAY	643.5000 TRAFFIC CONTROL EACH	REMARKS
7+75	-	619+24	PROJECT	-	-	-	-	0.55	PROJECT 5730-00-71
7+75	-	619+24	PROJECT	-	182	-	-	-	ADVANCE WARNING
7+75	-	619+24	LT & RT	-	-	-	14	-	ADVANCE NOTIFICATION
7+75	-	619+24	LT & RT	-	-	1827	-	-	ADVANCE WARNING
27+72	-	29+82	LT	455	-	-	-	-	ADJUSTING GUARDRAIL
45+80		48+97	LT	525	-	-	-	-	ADJUSTING GUARDRAIL
45+99		48+77	RT	490	-	-	-	-	ADJUSTING GUARDRAIL
49+99	-	54+94	RT	595	-	-	-	-	GUARDRAIL REMOVAL/BOX CULVERT EXTENSION
52+32	-	57+97	LT	630	-	-	-	-	GUARDRAIL REMOVAL & INSTALLATION
59+04	-	66+93	LT	735	-	-	-	-	GUARDRAIL REMOVAL & INSTALLATION
71+31	-	73+29	LT	490	-	-	-	-	GUARDRAIL REMOVAL & INSTALLATION
71+25	-	74+74	RT	525	-	-	-	-	GUARDRAIL REMOVAL & INSTALLATION
134+10		137+84	LT	525	-	-	-	-	ADJUSTING GUARDRAIL
134+48		137+09	RT	490	-	-	-	-	ADJUSTING GUARDRAIL
148+17	-	154+52	RT	665	-	-	-	-	GUARDRAIL REMOVAL & INSTALLATION
165+83	-	167+89	LT	455	-	-	-	-	GUARDRAIL REMOVAL & INSTALLATION
165+62	-	167+93	RT	455	-	-	-	-	GUARDRAIL REMOVAL & INSTALLATION
327+65		331+70	LT & RT	560	-	-	-	-	ADJUSTING GUARDRAIL
420+54		424+22	LT & RT	560	-	-	-	-	ADJUSTING GUARDRAIL
444+69	-	447+22	LT	490	-	-	-	-	GUARDRAIL REMOVAL & INSTALLATION
463+26	-	507+12	LT	2,415	-	-	-	-	GUARDRAIL REMOVAL & INSTALLATION
511+98	-	548+05	RT	2,030	-	-	-	-	GUARDRAIL REMOVAL & INSTALLATION
585+13	-	586+58	LT	420	-	-	-	-	GUARDRAIL REMOVAL & INSTALLATION
585+18	-	586+61	RT	420	-	-	-	-	GUARDRAIL REMOVAL & INSTALLATION
594+69	-	597+10	RT	455	-	-	-	-	GUARDRAIL REMOVAL & INSTALLATION
594+83	-	597+24	LT	455	-	-	-	-	GUARDRAIL REMOVAL & INSTALLATION
			TOTAL 0010	14,840	182	1,827	14	0.55	

3

PAVEMENT MARKING

STATION	TO	STATION	465.0475 ASPHALT CENTERLINE RUMBLE STRIPS 2-LANE RURAL LF	646.1020 MARKING LINE EPOXY 4-INCH Yellow LF	646.1020 MARKING LINE EPOXY 4-INCH Yellow 12.5' LF	646.1040 MARKING LINE GROOVED WET REF EPOXY 4-INCH WHITE LF	646.6105 MARKING STOP LINE PAINT 18-INCH WHITE LF	649.0105 TEMPORARY MARKING LINE PAINT 4-INCH YELLOW LF	649.0120 TEMPORARY MARKING LINE EPOXY 4-INCH YELLOW LF	REMARKS
7+75	-	15+46	771	1542	-	1542	-	1542	1542	DOUBLE YELLOW
15+46	-	26+07	1061	1061	266	2122	-	1146	1146	SOLID/SKIP
26+07	-	28+19	212	-	53	424	-	17	17	SINGLE SKIP
28+19	-	39+80	1161	1161	291	2322	-	1254	1254	SOLID/SKIP
39+80	-	179+62	13382	27964	-	27832	-	27964	27964	DOUBLE YELLOW
179+62	-	181+68	-	206	52	206	-	223	223	SINGLE SKIP
181+68	-	383+79	19311	40422		40258	-	40422	40422	DOUBLE YELLOW
383+79	-	405+44	2165	2165	542	4330	-	2339	2339	SOLID/SKIP
405+44	-	420+75	1331	3062		2852	-	3062	3062	DOUBLE YELLOW
420+75	-	431+31	856	1056	264	2112	-	1141	1141	SOLID/SKIP
431+31	-	432+74	143	-	36	286	-	12	12	SINGLE SKIP
432+74	-	443+72	1098	1098	275	2196	-	1186	1186	SOLID/SKIP
443+72	-	544+31	9259	20118	-	19595	-	20118	20118	DOUBLE YELLOW
544+31	-	555+45	1114	1114	279	2228	-	1204	1204	SOLID/SKIP
555+45	-	558+88	343	-	86	686	-	28	28	SINGLE SKIP
558+88	-	570+18	1130	1130	283	2260	-	1,221	1221	SOLID/SKIP
570+18	-	619+24	4106	9812	-	9623	-	9,812	9812	DOUBLE YELLOW
9'SR'+11	-	181+79	-	80	-	110	24	-	-	STH 82
11'SE'+88	-	412+99	-	36	-	60	12	-	-	CTH SS
9'SS9+32	-	444+95	-	70	-	90	12	-	-	CTH S NORTH
10'SS'+82	-	445+50	-	60	-	80	12	-	-	CTH S SOUTH
9'CS'+36	-	314+48	-	40	-	100	12	-	-	CTH SS
		TOTAL 0010	57,443	114,624		120,874	72	112,691	112,691	

LOCATING NO-PASSING ZONES

STATION	TO	STATION	LOCATION	648.0100 LOCATING NO-PASSING ZONES MI	REMARKS
7+75	-	619+24	PROJECT	11.58	SPOTTING SIGHT DISTANCE 0.21 MILES (1108 FEET)
			TOTAL 0010	11.58	

3

CONSTRUCTION STAKING

STATION	TO	STATION	650.5500 CONSTRUCTION STAKING CURB GUTTER AND CURB & GUTTER LF	650.6500.01 CONSTRUCTION STAKING STRUCTURE LAYOUT (STRUCTURE) (01. C-62-314) LS	650.8000 CONSTRUCTION STAKING RESURFACING REFERENCE LF	650.9910.01 CONSTRUCTION STAKING SUPPLEMENTAL CONTROL (PROJECT) (01. 5730-00-71) LS	650.9920 CONSTRUCTION STAKING SLOPE STAKES LF	REMARKS
7+75	-	619+24	1,572	-	61,149	1	614	PROJECT
PROJECT			-	1	-	-	-	BOX CULVERT EXTENSION
		TOTAL 0010	1,572	1	61,149	1	614	

SAWING ASPHALT

STATION	TO	STATION	LOCATION	690.0150 SAWING ASPHALT LF	REMARKS
7+75		-		24	STH 56
261+39		-		24	CULVERT REPLACEMENT
262+45		-		24	CULVERT REPLACEMENT
391+39		-		24	CULVERT REPLACEMENT
392+45		-		24	CULVERT REPLACEMENT
532+77		-		24	CULVERT REPLACEMENT
533+83		-		24	CULVERT REPLACEMENT
537+14		-		24	CULVERT REPLACEMENT
538+20		-		24	CULVERT REPLACEMENT
10'LE'+63		-		29	Lewison Rd
10'CO'+64		-		25	Cook Hill Rd
9'MD'+45		-		23	Maple Dale Rd
9'SR'+11		-		35	STH 82
10'DE'+66		-		21	Deaver Ln
9'EL'+52		-		14	Elm Dr
9'RE'+35		-		17	Reed Dr
9'NR'+56		-		9	Nevrdun Rd
11'SE'+88		-		22	CTH SS
10'WR'+62		-		18	Willow Rd
9'SS'+32		-		30	CTH SS
10'SS'+82		-		24	CTH SS
8'GH'+87		-		19	Gore Hollow Rd
10'PW'+56		-		16	Plain View Rd
9'CS'+36		-		25	CTH SS
11'PE'+26		-		10	Plain View Rd
9'CU'+50		-		17	Cushman Ave
10'SP'+42		-		26	Sportsman Rd
9'WY'+43		-		18	W York Rd
9'YO'+25		-		18	York Rd
619+24		-		24	STH 56
PROJECT				398	PRIVATE DRIVEWAYS
			TOTAL 0010	1,054	

3

4

STATE OF WISCONSIN
DEPARTMENT OF TRANSPORTATION
TRANSPORTATION PROJECT PLAT TITLE SHEET
5730-00-21
VIROQUA - RICHLAND CENTER
MAHONEY RD TO S JUNCTION STH 131
STH 56
VERNON COUNTY

CONVENTIONAL SYMBOLS

SECTION LINE
QUARTER LINE
SIXTEENTH LINE
NEW REFERENCE LINE
NEW R/W LINE
EXISTING R/W OR HE LINE
PROPERTY LINE
LOT, TIE & OTHER MINOR LINES
SLOPE INTERCEPT
CORPORATE LIMITS
UNDERGROUND FACILITY (COMMUNICATIONS, ELECTRIC, ETC)
NEW R/W (FEE OR HE) (HATCHING VARIES BY OWNER)
TEMPORARY LIMITED EASEMENT AREA
EASEMENT AREA (PERMANENT LIMITED OR RESTRICTED DEVELOPMENT)
TRANSMISSION STRUCTURES
BUILDING
TO BE REMOVED
BRIDGE

SECTION CORNER SYMBOL
SECTION CORNER MONUMENT
GEODETIC SURVEY MONUMENT
SIXTEENTH CORNER MONUMENT
SIGN
OFF-PREMISE SIGN
R/W MONUMENT (TO BE SET)
NON-MONUMENTED R/W POINT
FOUND IRON PIN (1-INCH UNLESS NOTED)

	COMPENSABLE	NON-COMPENSABLE
ELECTRIC POLE		
TELEPHONE POLE		
PEDESTAL (LABEL TYPE) (TV, TEL, ELEC, ETC.)		

ACCESS RESTRICTED BY ACQUISITION
NO ACCESS (BY STATUTORY AUTHORITY)
ACCESS RESTRICTED (BY PREVIOUS PROJECT OR CONTROL)
NO ACCESS (NEW HIGHWAY)
PARCEL NUMBER
UTILITY NUMBER
PARALLEL OFFSETS

CONVENTIONAL ABBREVIATIONS

ACCESS RIGHTS	AR	POINT OF INTERSECTION	PI
ACRES	AC	PROPERTY LINE	PL
AHEAD	AH	RECORDED AS	(100')
ALUMINUM	ALUM	REEL / IMAGE	R/I
AND OTHERS	ET AL	REFERENCE LINE	R/L
BACK	BK	REMAINING	REM
BLOCK	BLK	RESTRICTIVE DEVELOPMENT EASEMENT	RDE
CENTERLINE	C/L	RIGHT	RT
CERTIFIED SURVEY MAP	CSM	RIGHT OF WAY	R/W
CONCRETE	CONC	SECTION	SEC
COUNTY	CO	SEPTIC VENT	SEPV
COUNTY TRUNK HIGHWAY	CTH	SQUARE FEET	SF
DISTANCE	DIST	STATE TRUNK HIGHWAY	STH
CORNER	COR	STATION	STA
DOCUMENT NUMBER	DOC	TELEPHONE PEDESTAL	TP
EASEMENT	EASE	TEMPORARY LIMITED EASEMENT	TLE
EXISTING	EX	TRANSPORTATION PROJECT PLAT	TPP
GAS VALVE	GV	UNITED STATES HIGHWAY	USH
GRID NORTH	GN	VOLUME	V
HIGHWAY EASEMENT	HE		
IDENTIFICATION	ID		
LAND CONTRACT	LC		
LEFT	LT		
MONUMENT	MON		
NATIONAL GEODETIC SURVEY	NGS		
NUMBER	NO		
OUTLOT	OL		
PAGE	P		
POINT OF TANGENCY	PT		
PERMANENT LIMITED EASEMENT	PLE		
POINT OF BEGINNING	POB		
POINT OF CURVATURE	PC		
POINT OF COMPOUND CURVE	PCC		

CURVE DATA

LONG CHORD	LCH
LONG CHORD BEARING	LCB
RADIUS	R
DEGREE OF CURVE	D
CENTRAL ANGLE	Δ/DELTA
LENGTH OF CURVE	L
TANGENT	T
DIRECTION AHEAD	DA
DIRECTION BACK	DB

CONVENTIONAL UTILITY SYMBOLS

W	WATER
G	GAS
T	TELEPHONE
OH	OVERHEAD TRANSMISSION LINES
E	ELECTRIC
TV	CABLE TELEVISION
FO	FIBER OPTIC
SAN	SANITARY SEWER
SS	STORM SEWER

R5W | R4W | R3W

T13N

T12N

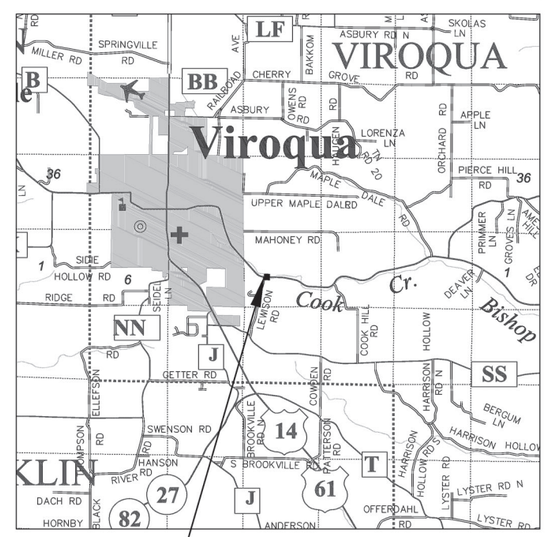

GN

PROJECT LOCATION

LAYOUT
SCALE 0 1 MI.

THE NOTES,CONVENTIONAL SIGNS, AND ABBREVIATIONS ARE ASSOCIATED WITH EACH TRANSPORTATION PROJECT PLAT FOR PROJECT 5730-00-21

NOTES:

POSITIONS SHOWN ON THIS PLAT ARE WISCONSIN COORDINATE REFERENCE SYSTEM COORDINATES (WISCRS) VERNON COUNTY, NAD83(2011), IN U.S. SURVEY FEET. VALUES SHOWN ARE GRID COORDINATES, GRID BEARINGS, AND GRID DISTANCES. GRID DISTANCES MAY BE USED AS GROUND DISTANCES.

ALL NEW RIGHT-OF-WAY MONUMENTS WILL BE TYPE 2 (TYPICALLY ¾" X 24" IRON REBARS), UNLESS OTHERWISE NOTED, AND WILL BE PLACED PRIOR TO THE COMPLETION OF THE PROJECT.

ALL RIGHT-OF-WAY LINES DEPICTED IN THE NON-ACQUISITION AREAS ARE INTENDED TO RE-ESTABLISH EXISTING RIGHT-OF-WAY LINES AS DETERMINED FROM PREVIOUS PROJECTS, OTHER RECORDED DOCUMENTS, OR FROM CENTERLINE OF EXISTING PAVEMENTS.

RIGHT-OF-WAY BOUNDARIES ARE DEFINED WITH COURSES OF THE PERIMETER OF THE HIGHWAY LANDS REFERENCED TO THE U.S. PUBLIC LAND SURVEY SYSTEM OR OTHER "SURVEYS" OF PUBLIC RECORD.

DIMENSIONING FOR THE NEW RIGHT-OF-WAY IS MEASURED ALONG AND PERPENDICULAR TO THE NEW REFERENCE LINES.

PROPERTY LINES SHOWN ON THIS PLAT ARE DRAWN FROM DATA DERIVED FROM MAPS AND DOCUMENTS OF PUBLIC RECORD AND/OR EXISTING OCCUPATIONAL LINES. THIS PLAT MAY NOT BE A TRUE REPRESENTATION OF EXISTING PROPERTY LINES, EXCLUDING RIGHT-OF-WAY, AND SHOULD NOT BE USED AS A SUBSTITUTE FOR AN ACCURATE FIELD SURVEY.

FOR THE CURRENT ACCESS/DRIVEWAY INFORMATION, CONTACT THE PLANNING UNIT OF THE WISCONSIN DEPARTMENT OF TRANSPORTATION OFFICE IN LACROSSE

PARCEL IDENTIFICATION NUMBERS MAY NOT POINT TO ALL AREAS OF ACQUISITION, AS NOTED ON THE SCHEDULE OF LANDS & INTERESTS REQUIRED.

INFORMATION FOR THE BASIS OF EXISTING RIGHT-OF-WAY POINT OF REFERENCE AND ACCESS CONTROL ARE LISTED ON THE DETAIL SHEET.

4

PROJECT NUMBER 5730-00-21 - 4. 01
SHEET 2 OF 2
AMENDMENT NO:

FILE NAME : X:\UZ\W\WITSW\156925_STH 56 BOX CULVERT\4.01 TI.DWG
LAYOUT NAME: .02
PLOT DATE : 9/16/2015 3:04 PM PLOT BY : NICK ENGH PLOT NAME :

519368

TRANSPORTATION PROJECT PLAT NO: 5730-00-21 - 4.01

THAT PART OF THE NORTHEAST 1/4 OF THE SOUTHWEST 1/4 OF SECTION 4, TOWNSHIP 12 NORTH, RANGE 4 WEST, TOWN OF VIROQUA, VERNON COUNTY, WISCONSIN

RELOCATION ORDER STH 56 VIROQUA - RICHALND CENTER (MAHONEY RD TO S JUNCTION STH 131) VERNON COUNTY

TO PROPERLY ESTABLISH, LAY OUT, WIDEN, ENLARGE, EXTEND, CONSTRUCT, RECONSTRUCT, IMPROVE, OR MAINTAIN A PORTION OF THE HIGHWAY DESIGNATED ABOVE, THE STATE OF WISCONSIN DEPARTMENT OF TRANSPORTATION DEEMS IT NECESSARY TO RELOCATE OR CHANGE SAID HIGHWAY AND ACQUIRE CERTAIN LANDS AND INTERESTS OR RIGHTS IN LANDS FOR THE ABOVE PROJECT.

TO EFFECT THIS CHANGE, PURSUANT TO AUTHORITY GRANTED UNDER SECTION 84.02 (3), 84.09, AND 84.30, WISCONSIN STATUTES, THE DEPARTMENT OF TRANSPORTATION HEREBY ORDERS THAT:
1. THAT PORTION OF SAID HIGHWAY AS SHOWN ON THIS PLAT IS LAID OUT AND ESTABLISHED TO THE LINES AND WIDTHS AS SO SHOWN FOR THE ABOVE PROJECT.
2. THE LANDS OR INTERESTS OR RIGHTS IN LANDS AS SHOWN ON THIS PLAT ARE REQUIRED BY THE DEPARTMENT FOR THE ABOVE PROJECT AND SHALL BE ACQUIRED IN THE NAME OF THE STATE OF WISCONSIN, PURSUANT TO THE PROVISIONS OF SECTION 84.09 (1) OR (2), WISCONSIN STATUTES.

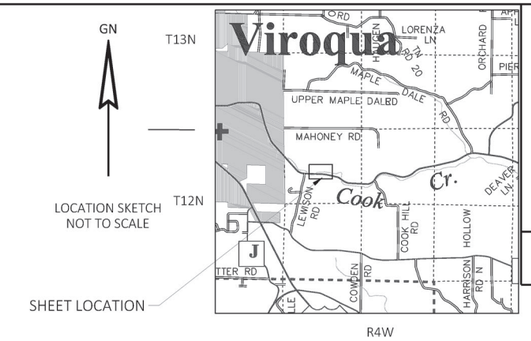

LOCATION SKETCH
NOT TO SCALE

SHEET LOCATION

MARILYN HAUGE
REGISTER OF DEEDS
VERNON COUNTY, WI
519368
02/24/2021 03:00 PM
RECORDING FEE: 25.00
TRANSFER FEE: 0.00
PAGE COUNT: 2

** This document has been electronically recorded and returned to the submitter. **

RESERVED FOR REGISTER OF DEEDS
PROJECT NUMBER 5730-00-21 4.01
SHEET 1 OF 2

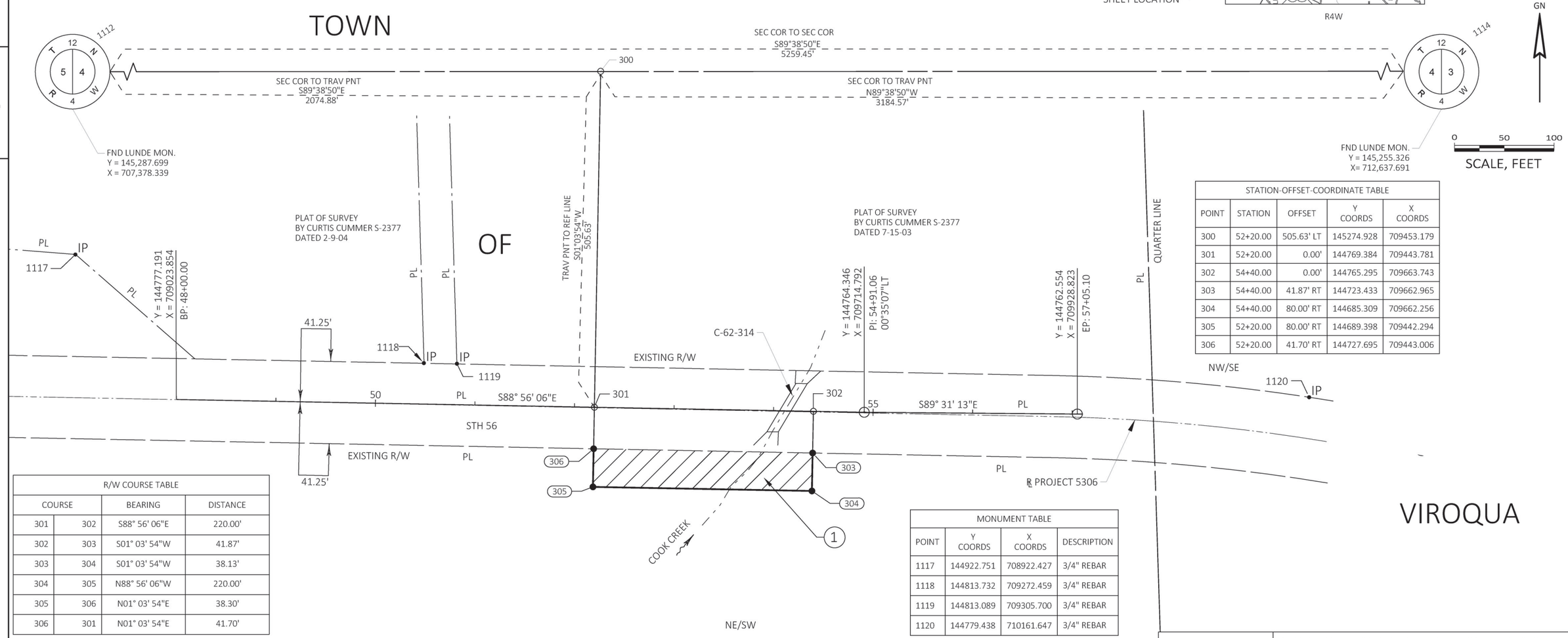

STATION-OFFSET-COORDINATE TABLE				
POINT	STATION	OFFSET	Y COORDS	X COORDS
300	52+20.00	505.63' LT	145274.928	709453.179
301	52+20.00	0.00'	144769.384	709443.781
302	54+40.00	0.00'	144765.295	709663.743
303	54+40.00	41.87' RT	144723.433	709662.965
304	54+40.00	80.00' RT	144685.309	709662.256
305	52+20.00	80.00' RT	144689.398	709442.294
306	52+20.00	41.70' RT	144727.695	709443.006

R/W COURSE TABLE			
COURSE		BEARING	DISTANCE
301	302	S88° 56' 06"E	220.00'
302	303	S01° 03' 54"W	41.87'
303	304	S01° 03' 54"W	38.13'
304	305	N88° 56' 06"W	220.00'
305	306	N01° 03' 54"E	38.30'
306	301	N01° 03' 54"E	41.70'

MONUMENT TABLE			
POINT	Y COORDS	X COORDS	DESCRIPTION
1117	144922.751	708922.427	3/4" REBAR
1118	144813.732	709272.459	3/4" REBAR
1119	144813.089	709305.700	3/4" REBAR
1120	144779.438	710161.647	3/4" REBAR

FOR ADDITIONAL INFORMATION REFER TO THE TITLE SHEET RECORDED AS SHEET 2 OF 2.

SCHEDULE OF LANDS & INTERESTS REQUIRED						
PARCEL NUMBER	OWNERS	INTEREST REQUIRED	R/W NEW ACRES	R/W EXISTING ACRES	R/W TOTAL ACRES	TLE ACRES
1	MARK P. SOLVERSON OR RONDI L. SOLVERSON, TRUSTEES OF THE MARK AND RONDI SOLVERSON TRUST DATED FEBRUARY 12, 2009	FEE	0.19	--	0.19	--

OWNERS NAMES ARE SHOWN FOR REFERENCE PURPOSES ONLY, AND ARE SUBJECT TO CHANGE PRIOR TO THE TRANSFER OF LAND INTERESTS TO THE DEPARTMENT

NOTES:

POSITIONS SHOWN ON THIS PLAT ARE WISCONSIN COORDINATE REFERENCE SYSTEM COORDINATES (WISCRS), VERNON COUNTY, NAD83 (2011) IN US SURVEY FEET. VALUES SHOWN ARE GRID COORDINATES, GRID BEARINGS, AND GRID DISTANCES. GRID DISTANCES MAY BE USED AS GROUND DISTANCES.

ALL NEW RIGHT-OF-WAY MONUMENTS WILL BE TYPE 2 (TYPICALLY 3/4"X24" IRON REBARS) UNLESS OTHERWISE NOTED, AND WILL BE PLACED PRIOR TO THE COMPLETION OF THE PROJECT.

FOR CURRENT ACCESS/DRIVEWAY INFORMATION, CONTACT THE PLANNING UNIT OF THE WISCONSIN DEPARTMENT OF TRANSPORTATION OFFICE IN LACROSSE.

EXISTING HIGHWAY RIGHT-OF-WAY SHOWN HEREIN IS BASED ON THE FOLLOWING POINTS OF REFERENCE: EXISTING HIGHWAY RIGHT-OF-WAY FOR STH 56 ESTABLISHED FROM PROJECT 5306 AND DOC. NO. 147529 AND EXISTING MONUMENTS.

SEH
10 N BRIDGE ST
CHIPPEWA FALLS WI 54729

I,JASON L. CANCE PROFESSIONAL LAND SURVEYOR, HEREBY CERTIFY THAT IN FULL COMPLIANCE WITH THE PROVISIONS OF SECTION 84.095 OF THE WISCONSIN STATUTES AND UNDER THE DIRECTION OF THE WISCONSIN DEPARTMENT OF TRANSPORTATION SOUTHWEST REGION. I HAVE SURVEYED AND MAPPED THIS TRANSPORTATION PROJECT PLAT AND SUCH PLAT CORRECTLY REPRESENTS ALL EXTERIOR BOUNDARIES OF THE SURVEYED LAND.

SIGNATURE: DATE: 2-19-2021

PRINT NAME: JASON L CANCE

REGISTRATION NUMBER: S-2688

WISCONSIN JASON L. CANCE S-2688 CHIPPEWA FALLS WI LAND SURVEYOR

THIS PLAT AND RELOCATION ORDER ARE APPROVED FOR THE WISCONSIN DEPARTMENT OF TRANSPORTATION SOUTHWEST REGION

SIGNATURE: DATE: 2/23/2021

PRINT NAME: CORY SCHLAGEL

FILE NAME : X:\UZ\W\WITSW\156925_STH 56 BOX CULVERT\4.01 NEW.DWG
APPRAISAL PLAT DATE : 2-19-2021
PLOT DATE : 2/19/2021 11:50 AM PLOT BY : NICK ENGH PLOT NAME : PLOT SCALE : 1 IN:100 FT

5730-00-21 4.01

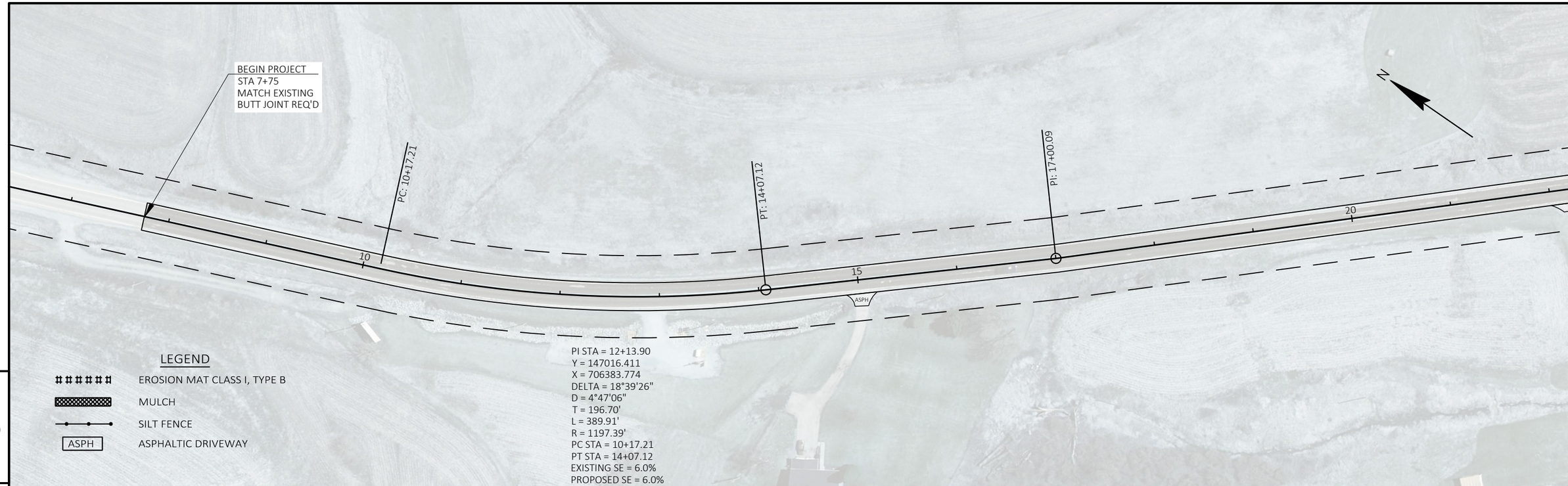

5

5

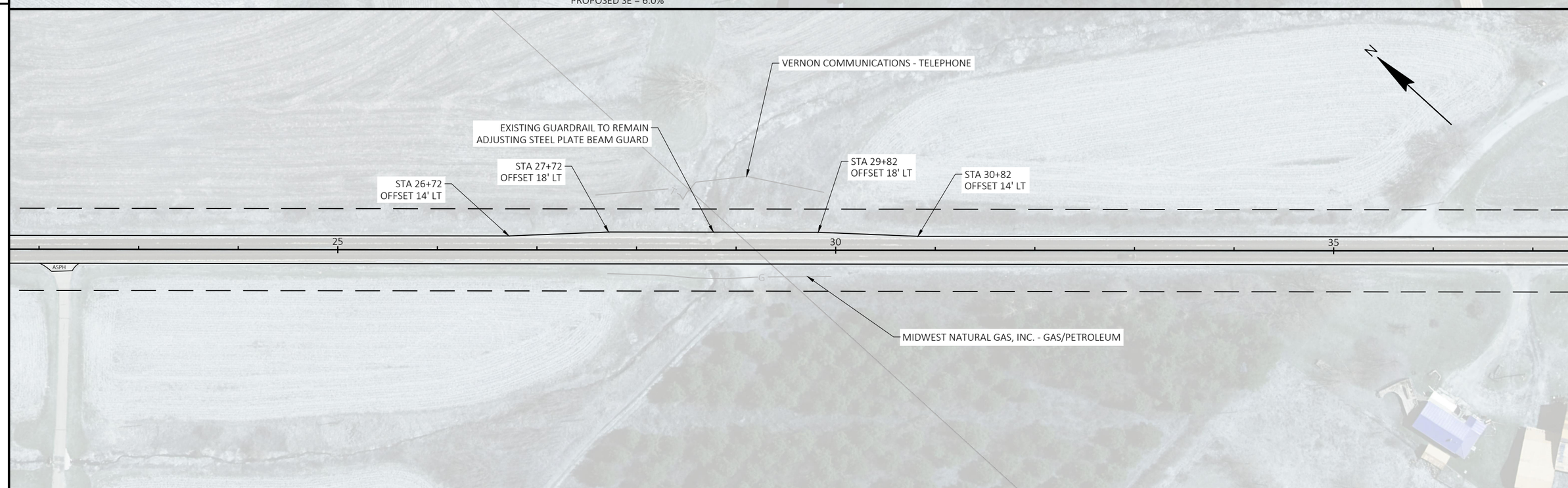

PROJECT NO: 5730-00-71	HWY: STH 56	COUNTY: VERNON	PLAN	SHEET 38	E

FILE NAME : \\LAXRTOPFLPPI01\N3PUBLIC\PDS\C3D\57300001\SHEETSPLAN\050201_PN.DWG
LAYOUT NAME - 1
PLOT DATE : 10/18/2021 7:25 AM PLOT BY : MIKSHOWSKY, CORY J PLOT NAME : PLOT SCALE : 1 IN:100 FT

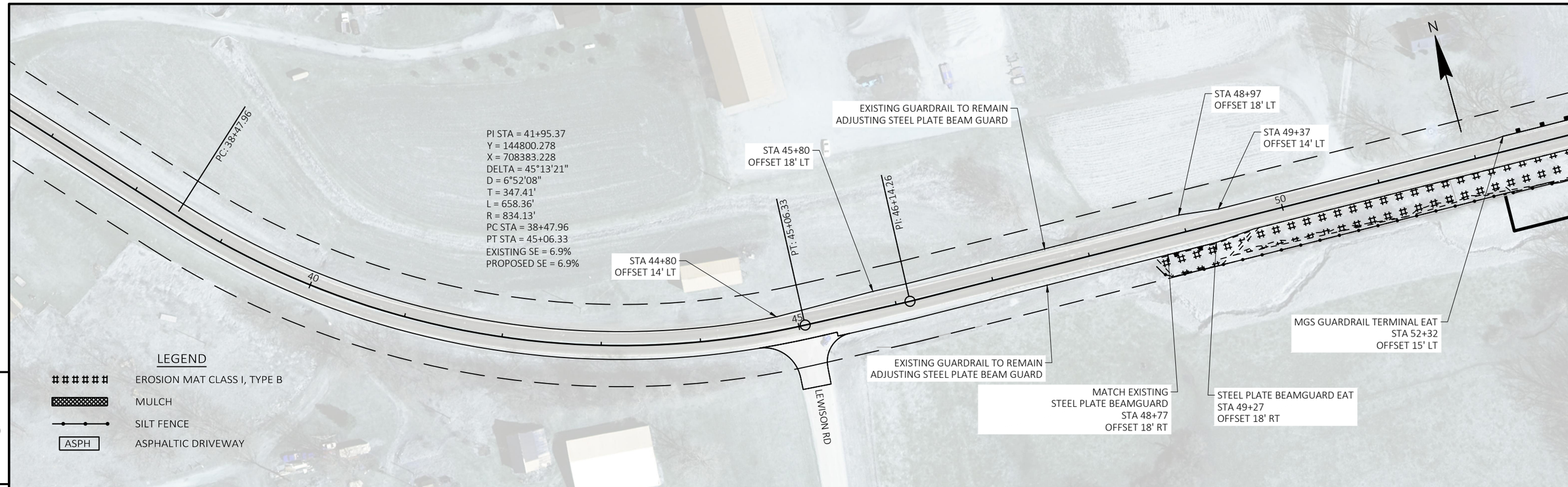

5

5

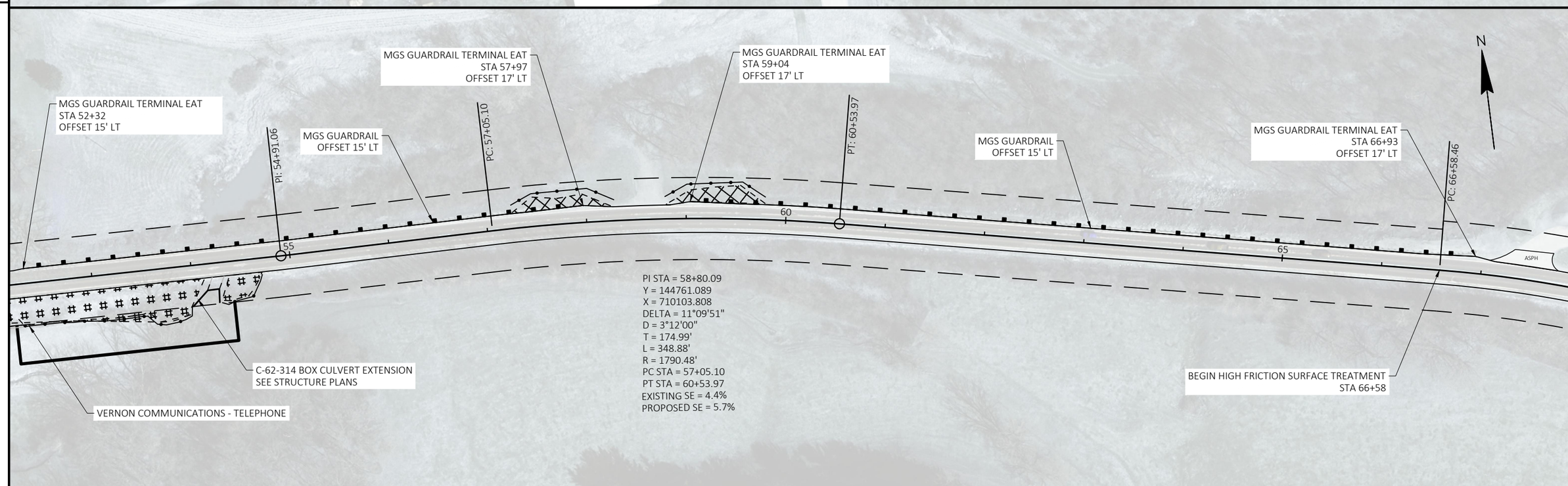

PROJECT NO: 5730-00-71	HWY: STH 56	COUNTY: VERNON	PLAN	SHEET 39	E

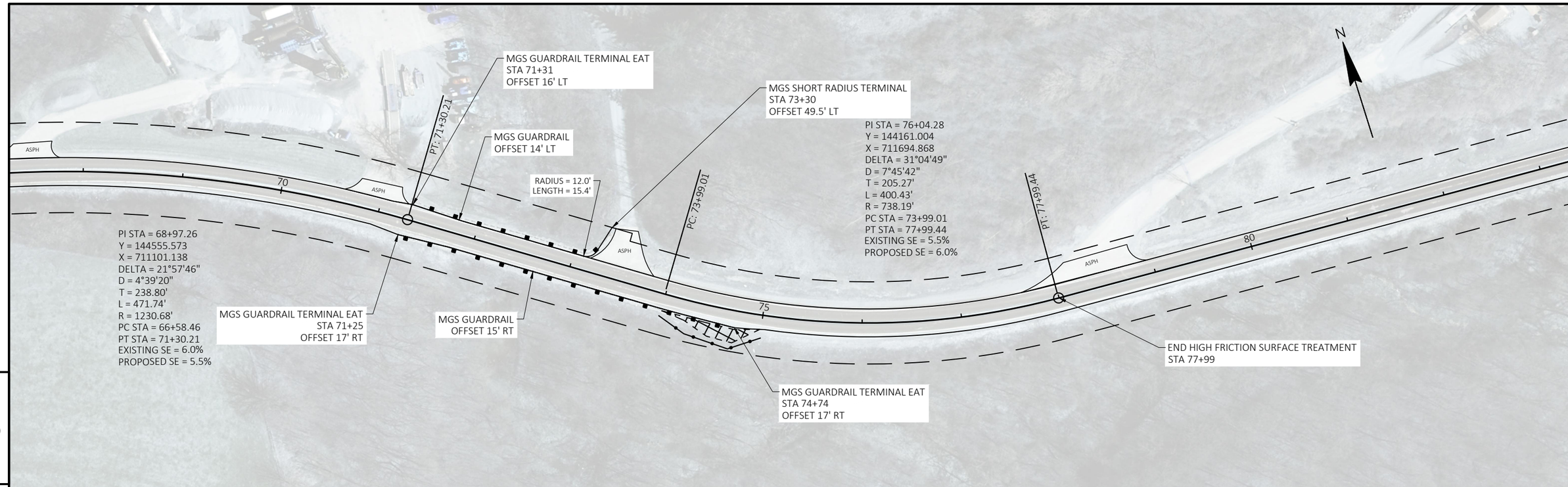

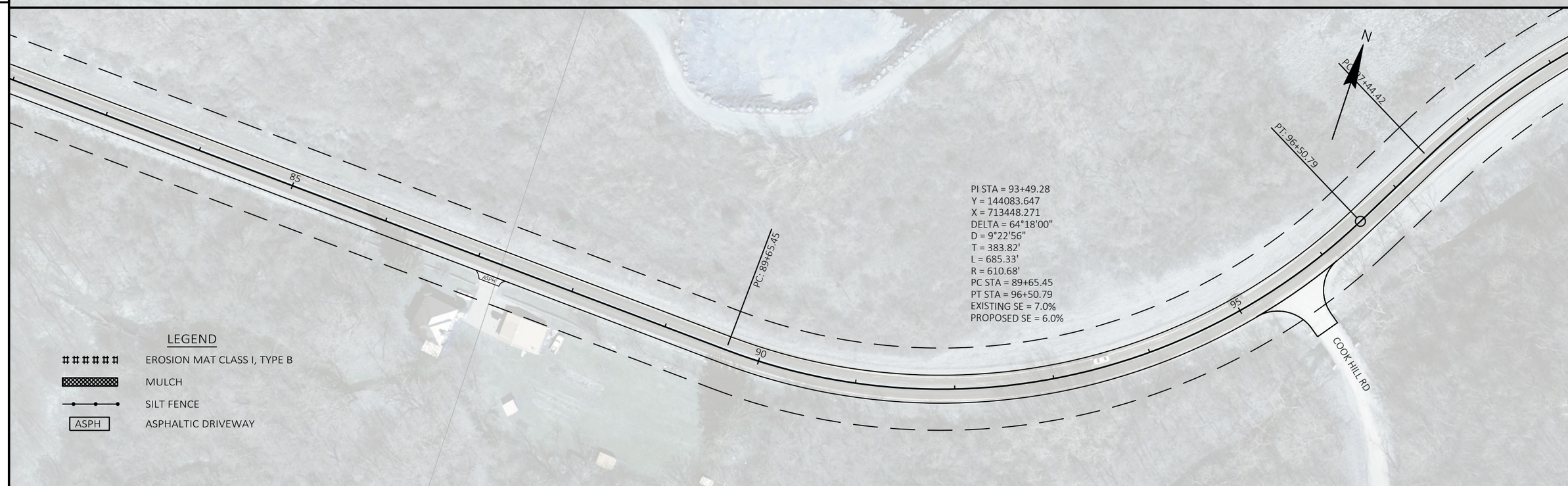

PROJECT NO: 5730-00-71	HWY: STH 56	COUNTY: VERNON	PLAN	SHEET 40	E

FILE NAME : \\LAXRTOPFLPPI01\N3PUBLIC\PDS\C3D\57300001\SHEETSPLAN\050201_PN.DWG
LAYOUT NAME - 3
PLOT DATE : 10/18/2021 7:25 AM
PLOT BY : MIKSHOWSKY, CORY J
PLOT NAME :
PLOT SCALE : 1 IN:100 FT

LEGEND

EROSION MAT CLASS I, TYPE B

MULCH

SILT FENCE

ASPH — ASPHALTIC DRIVEWAY

N

PT: 107+21.57

105

100

110

PI STA = 103+22.06
Y = 145013.279
X = 713947.279
DELTA = 76°44'42"
D = 7°51'14"
T = 577.63'
L = 977.15'
R = 729.51'
PC STA = 97+44.42
PT STA = 107+21.57
EXISTING SE = 7.0%
PROPOSED SE = 6.0%

5

5

N

PC: 128+07.71

PC: 115+17.03

PT: 125+62.89

115

125

120

PI STA = 120+82.94
Y = 144512.372
X = 715820.468
DELTA = 54°17'12"
D = 5°11'26"
T = 565.92'
L = 1045.86'
R = 1103.83'
PC STA = 115+17.03
PT STA = 125+62.89
EXISTING SE = 5.2%
PROPOSED SE = 6.0%

PROJECT NO: 5730-00-71	HWY: STH 56	COUNTY: VERNON	PLAN	SHEET 41	E

FILE NAME : \\LAXRTOPFLPPI01\N3PUBLIC\PDS\C3D\57300001\SHEETSPLAN\050201_PN.DWG
LAYOUT NAME - 4

PLOT DATE : 10/18/2021 7:25 AM PLOT BY : MIKSHOWSKY, CORY J PLOT NAME : PLOT SCALE : 1 IN:100 FT

WISDOT/CADDS SHEET 44

LEGEND

EROSION MAT CLASS I, TYPE B

MULCH

SILT FENCE

ASPH — ASPHALTIC DRIVEWAY

N

PT: 133+29.46

EXISTING GUARDRAIL TO REMAIN
ADJUSTING STEEL PLATE BEAM GUARD

VERNON COMMUNICATIONS - TELEPHONE

130

135

140

PI STA = 130+73.85
Y = 145194.672
X = 716653.610
DELTA = 27°51'16"
D = 5°20'19"
T = 266.14'
L = 521.75'
R = 1073.23'
PC STA = 128+07.71
PT STA = 133+29.46
EXISTING SE = 6.0%
PROPOSED SE = 6.0%

VERNON COMMUNICATIONS - TELEPHONE

EXISTING GUARDRAIL TO REMAIN
ADJUSTING STEEL PLATE BEAM GUARD

5

5

PI STA = 145+87.93
Y = 145497.621
X = 718147.814
DELTA = 2°38'14"
D = 0°59'20"
T = 133.35'
L = 266.66'
R = 5793.33'
PC STA = 144+54.58
PT STA = 147+21.24
EXISTING SE = 0.0%
PROPOSED SE = 2.7%

PC: 144+54.58

PT: 147+21.24

N

PI STA = 157+79.57
Y = 145787.903
X = 719303.603
DELTA = 16°32'17"
D = 3°14'18"
T = 257.14'
L = 510.69'
R = 1769.29'
PC STA = 155+22.43
PT STA = 160+33.13
EXISTING SE = 4.5%
PROPOSED SE = 5.7%

PC: 155+22.43

145

150

155

ASPH

MGS GUARDRAIL
OFFSET 15' RT

VERNON ELECTRIC - ELECTRICITY

MGS GUARDRAIL TERMINAL EAT
STA 148+17
OFFSET 17' RT

VERNON ELECTRIC - ELECTRICITY

MGS GUARDRAIL TERMINAL EAT
STA 154+52
OFFSET 15' RT

PROJECT NO: 5730-00-71	HWY: STH 56	COUNTY: VERNON	PLAN	SHEET 42	E

FILE NAME : \\LAXRTOPFLPPI01\N3PUBLIC\PDS\C3D\57300001\SHEETSPLAN\050201_PN.DWG
LAYOUT NAME - 5

PLOT DATE : 10/18/2021 7:26 AM PLOT BY : MIKSHOWSKY, CORY J PLOT NAME : PLOT SCALE : 1 IN:100 FT

WISDOT/CADDS SHEET 44

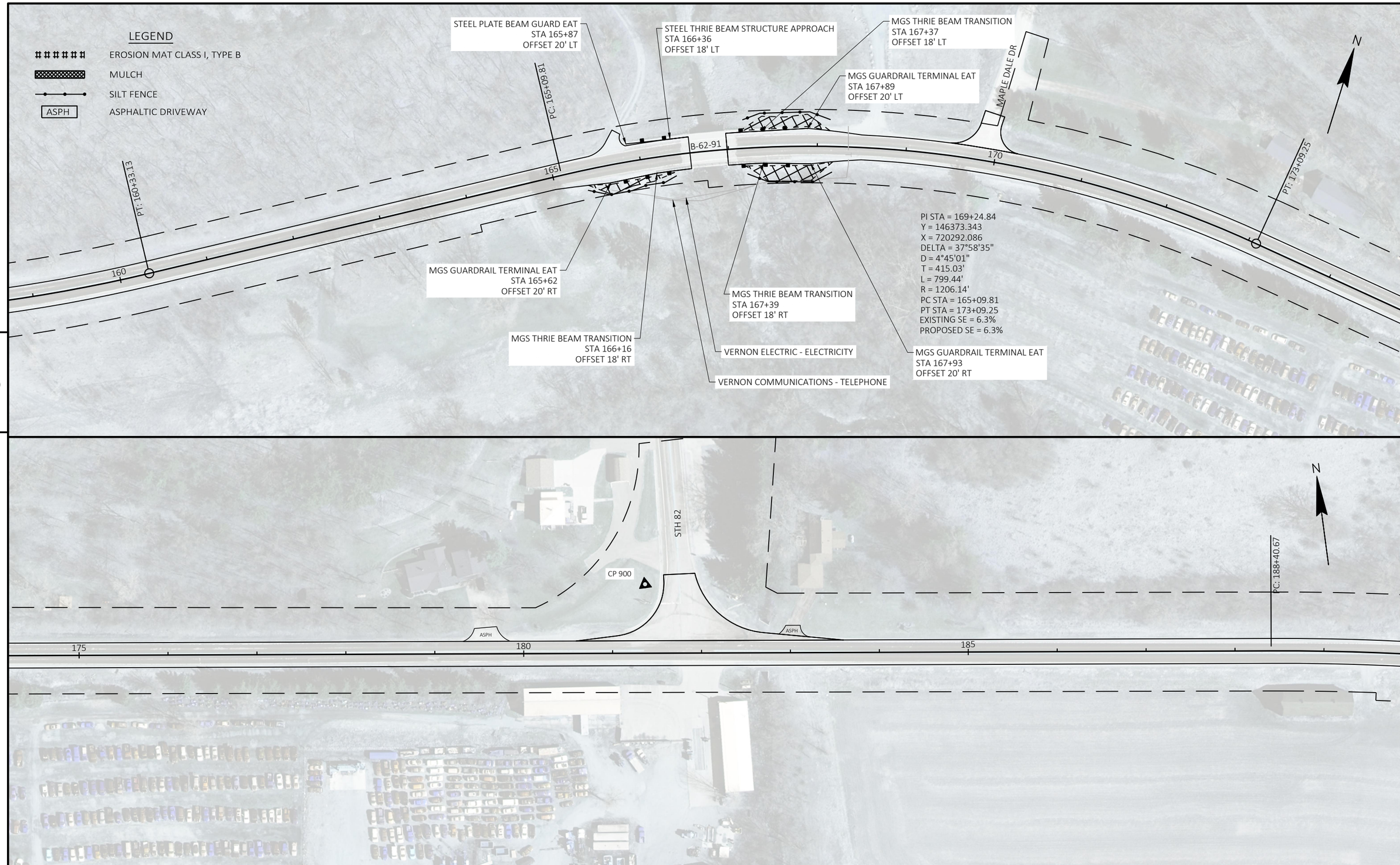

PROJECT NO: 5730-00-71	HWY: STH 56	COUNTY: VERNON	PLAN	SHEET 43	E

FILE NAME : \\LAXRTOPFLPPI01\N3PUBLIC\PDS\C3D\57300001\SHEETSPLAN\050201_PN.DWG
LAYOUT NAME - 6
PLOT DATE : 10/18/2021 7:26 AM
PLOT BY : MIKSHOWSKY, CORY J
PLOT NAME :
PLOT SCALE : 1 IN:100 FT

LEGEND

EROSION MAT CLASS I, TYPE B

MULCH

SILT FENCE

ASPH — ASPHALTIC DRIVEWAY

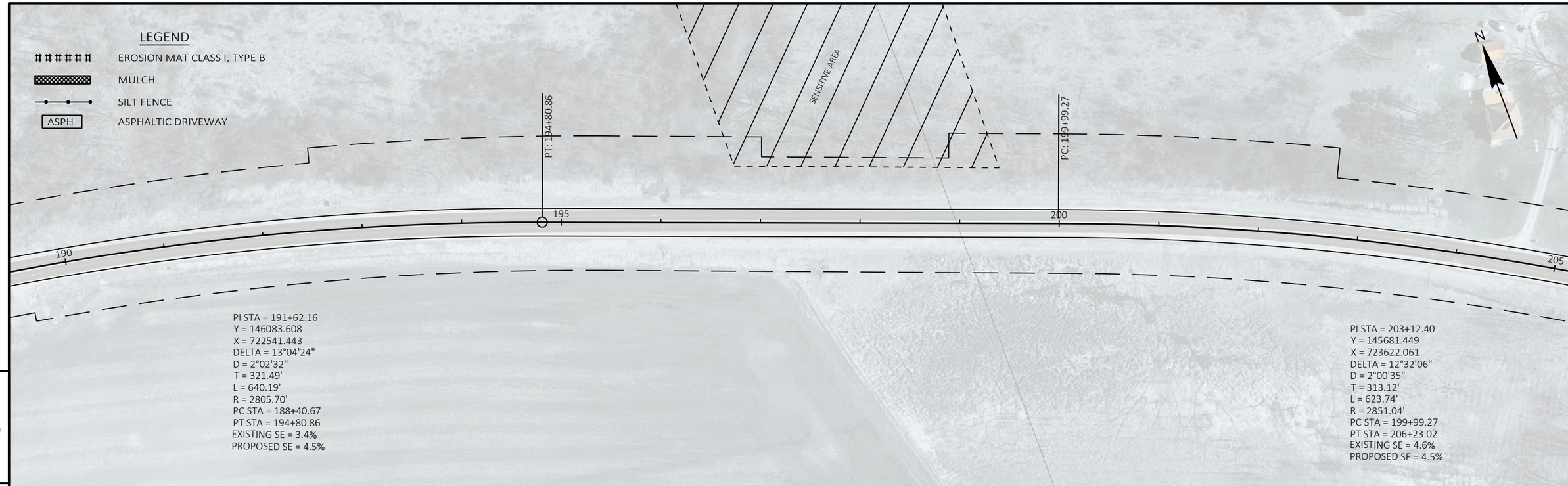

PI STA = 191+62.16
Y = 146083.608
X = 722541.443
DELTA = 13°04'24"
D = 2°02'32"
T = 321.49'
L = 640.19'
R = 2805.70'
PC STA = 188+40.67
PT STA = 194+80.86
EXISTING SE = 3.4%
PROPOSED SE = 4.5%

PI STA = 203+12.40
Y = 145681.449
X = 723622.061
DELTA = 12°32'06"
D = 2°00'35"
T = 313.12'
L = 623.74'
R = 2851.04'
PC STA = 199+99.27
PT STA = 206+23.02
EXISTING SE = 4.6%
PROPOSED SE = 4.5%

5

5

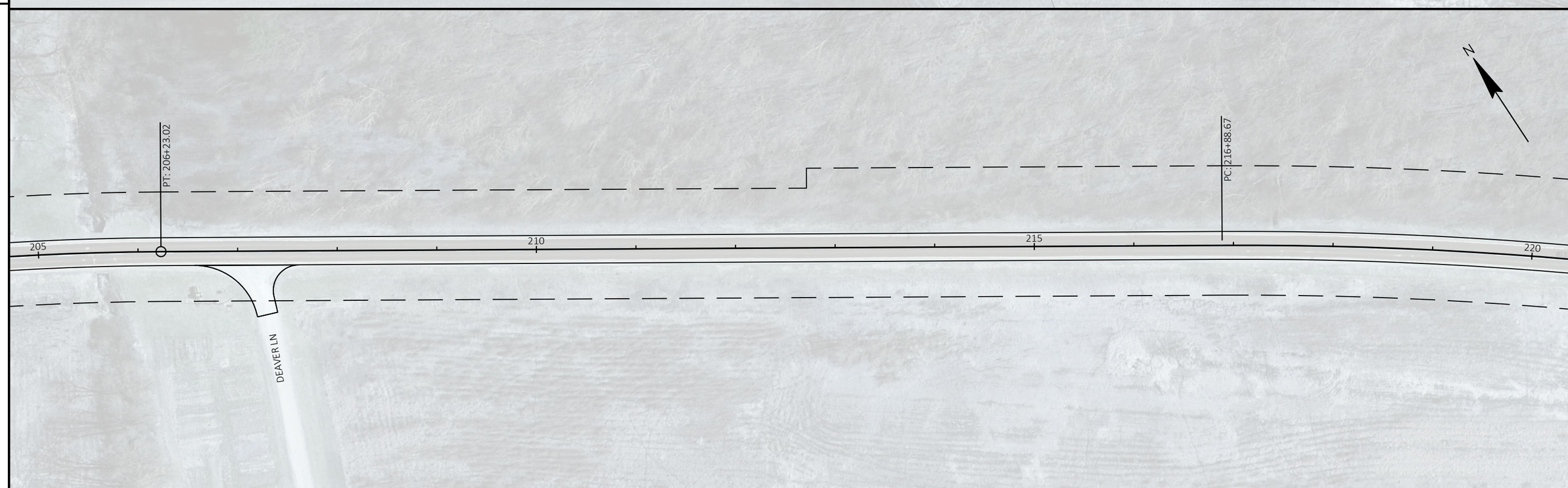

PROJECT NO: 5730-00-71	HWY: STH 56	COUNTY: VERNON	PLAN	SHEET 44	E

LEGEND

EROSION MAT CLASS I, TYPE B

MULCH

SILT FENCE

ASPH — ASPHALTIC DRIVEWAY

N

PT: 230+46.17

220 225 230 235

PI STA = 223+74.61
Y = 144558.493
X = 725354.693
DELTA = 20°17'52"
D = 1°29'43"
T = 685.94'
L = 1357.51'
R = 3831.91'
PC STA = 216+88.67
PT STA = 230+46.17
EXISTING SE = 5.1%
PROPOSED SE = 5.1%

5 5

PI STA = 237+97.07
Y = 143407.277
X = 726214.472
DELTA = 21°42'25"
D = 5°00'00"
T = 219.70'
L = 434.14'
R = 1145.92'
PC STA = 235+77.37
PT STA = 240+11.51
EXISTING SE = 5.3%
PROPOSED SE = 6.0%

PI STA = 242+88.23
Y = 143147.607
X = 726637.567
DELTA = 19°11'21"
D = 3°30'00"
T = 276.72'
L = 548.26'
R = 1637.02'
PC STA = 240+11.51
PT STA = 245+59.77
EXISTING SE = 4.8%
PROPOSED SE = 5.9%

PI STA = 249+44.59
Y = 143006.115
X = 727283.801
DELTA = 15°18'04"
D = 2°00'00"
T = 384.82'
L = 765.06'
R = 2864.80'
PC STA = 245+59.77
PT STA = 253+24.83
EXISTING SE = 4.3%
PROPOSED SE = 4.5%

N

PC: 235+77.37

PCC: 240+11.51

PCC: 245+59.77

235 240 245 250

PROJECT NO: 5730-00-71	HWY: STH 56	COUNTY: VERNON	PLAN	SHEET 45	E

FILE NAME : \\LAXRTOPFLPPI01\N3PUBLIC\PDS\C3D\57300001\SHEETSPLAN\050201_PN.DWG
LAYOUT NAME - 8

PLOT DATE : 10/18/2021 7:27 AM PLOT BY : MIKSHOWSKY, CORY J PLOT NAME : PLOT SCALE : 1 IN:100 FT

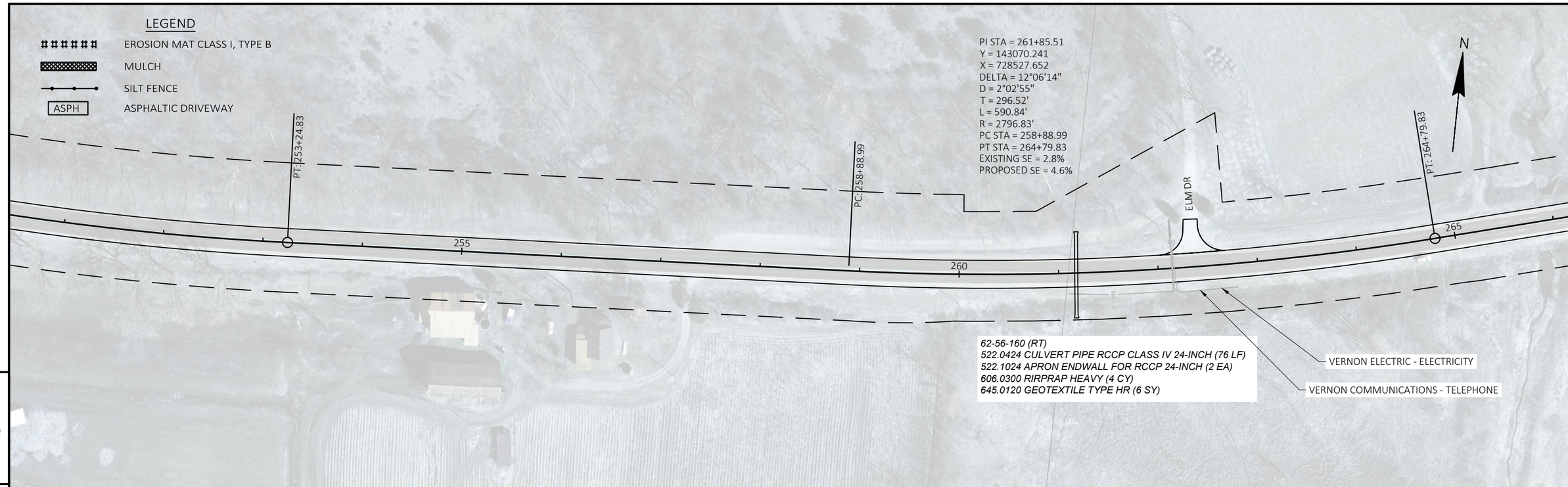

5

5

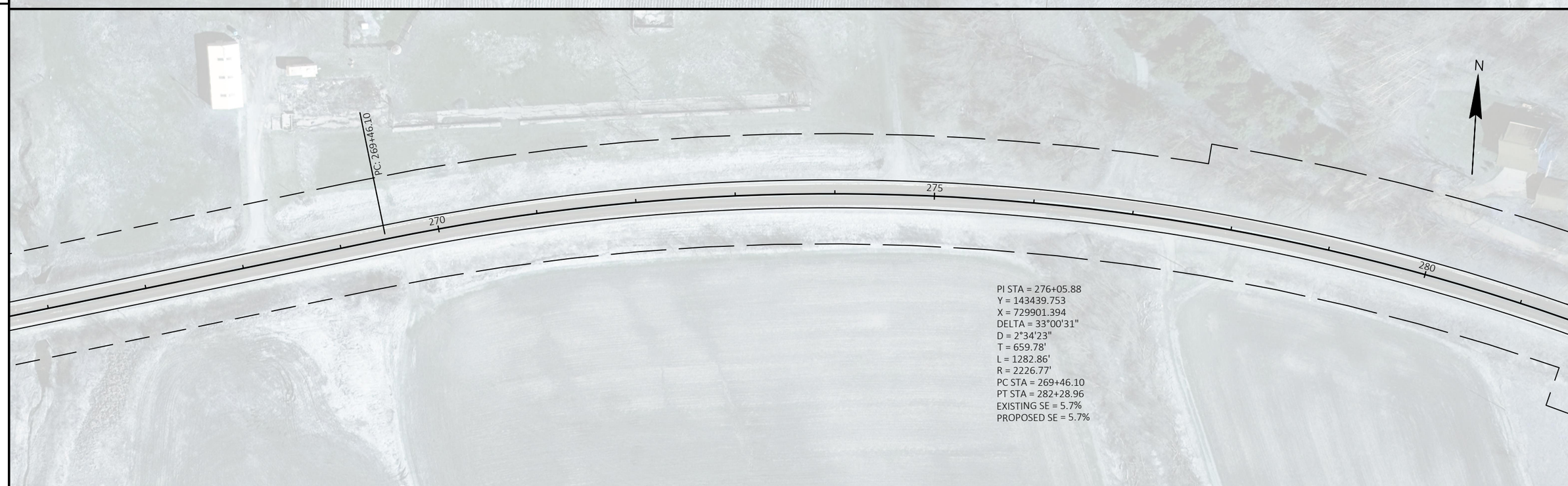

PROJECT NO: 5730-00-71	HWY: STH 56	COUNTY: VERNON	PLAN	SHEET 46	E

FILE NAME : \\LAXRTOPFLPPI01\N3PUBLIC\PDS\C3D\57300001\SHEETSPLAN\050201_PN.DWG
LAYOUT NAME - 9
PLOT DATE : 10/18/2021 7:28 AM PLOT BY : MIKSHOWSKY, CORY J PLOT NAME : PLOT SCALE : 1 IN:100 FT

LEGEND

- EROSION MAT CLASS I, TYPE B
- MULCH
- SILT FENCE
- ASPH — ASPHALTIC DRIVEWAY

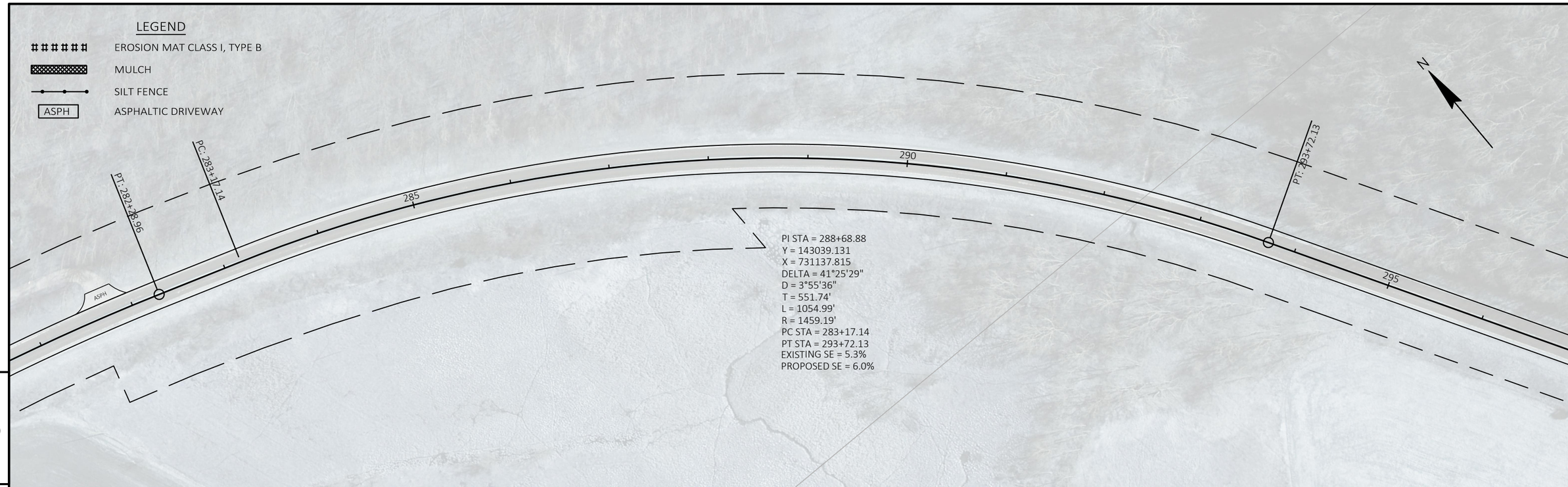

5

5

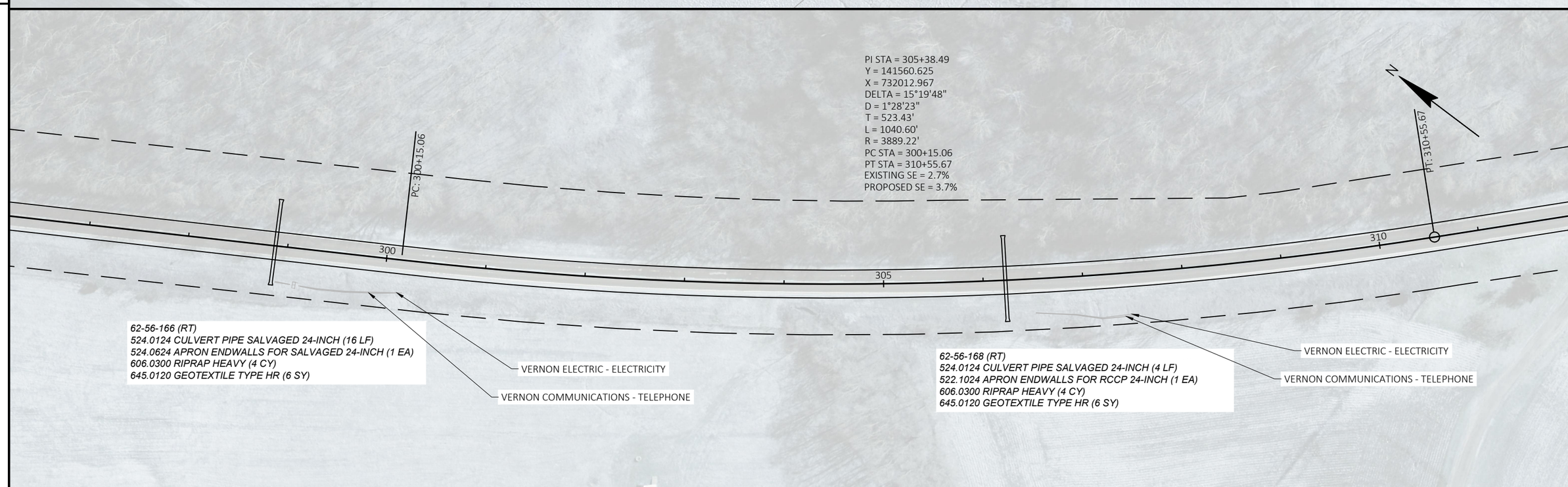

PROJECT NO: 5730-00-71	HWY: STH 56	COUNTY: VERNON	PLAN	SHEET 47	E

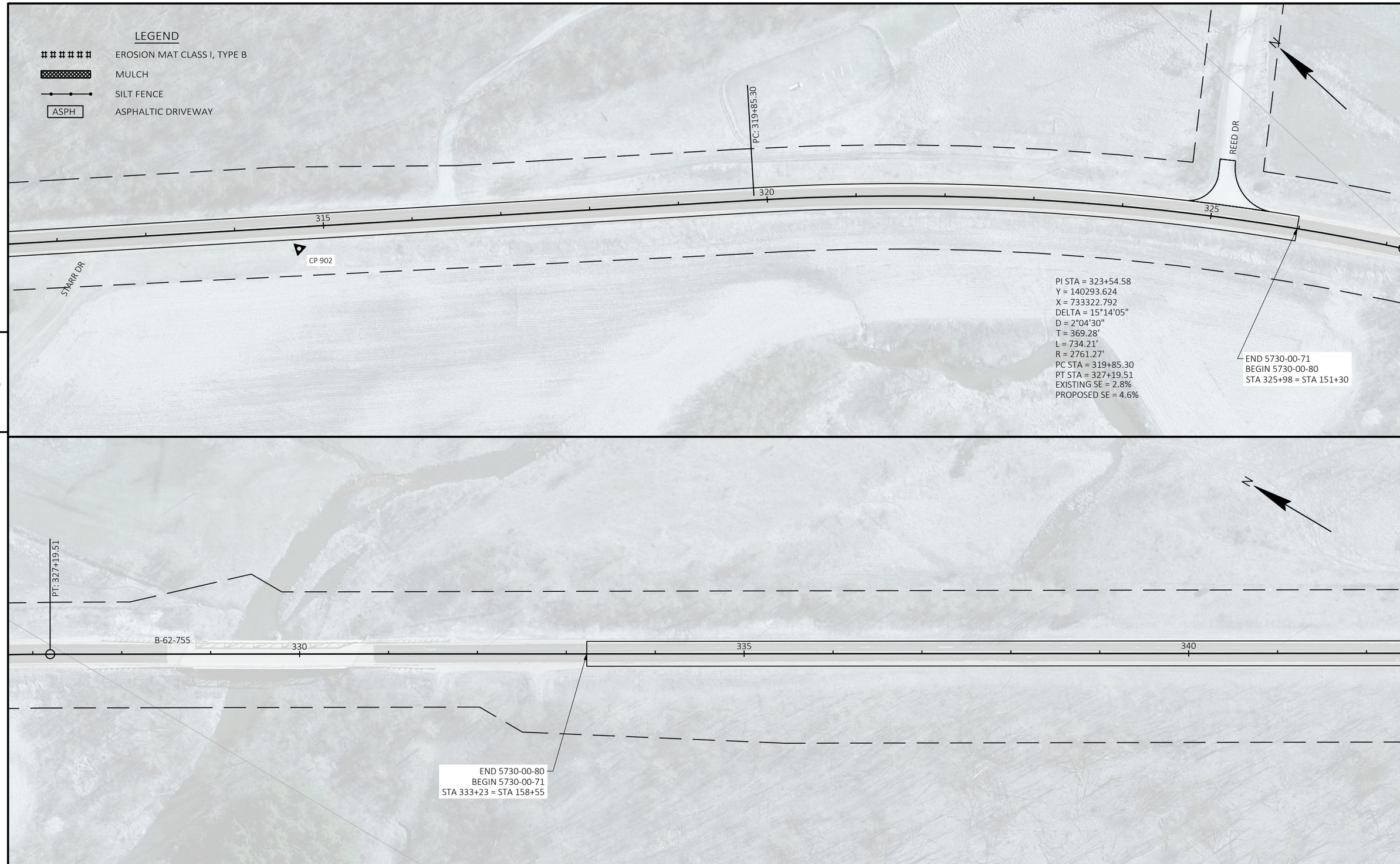

5

5

PROJECT NO: 5730-00-71	HWY: STH 56	COUNTY: VERNON	PLAN	SHEET 48	E

FILE NAME : \\LAXRTOPFLPPI01\N3PUBLIC\PDS\C3D\57300001\SHEETSPLAN\050201_PN.DWG
LAYOUT NAME - 11
PLOT DATE : 10/18/2021 7:29 AM PLOT BY : MIKSHOWSKY, CORY J PLOT NAME : PLOT SCALE : 1 IN:100 FT

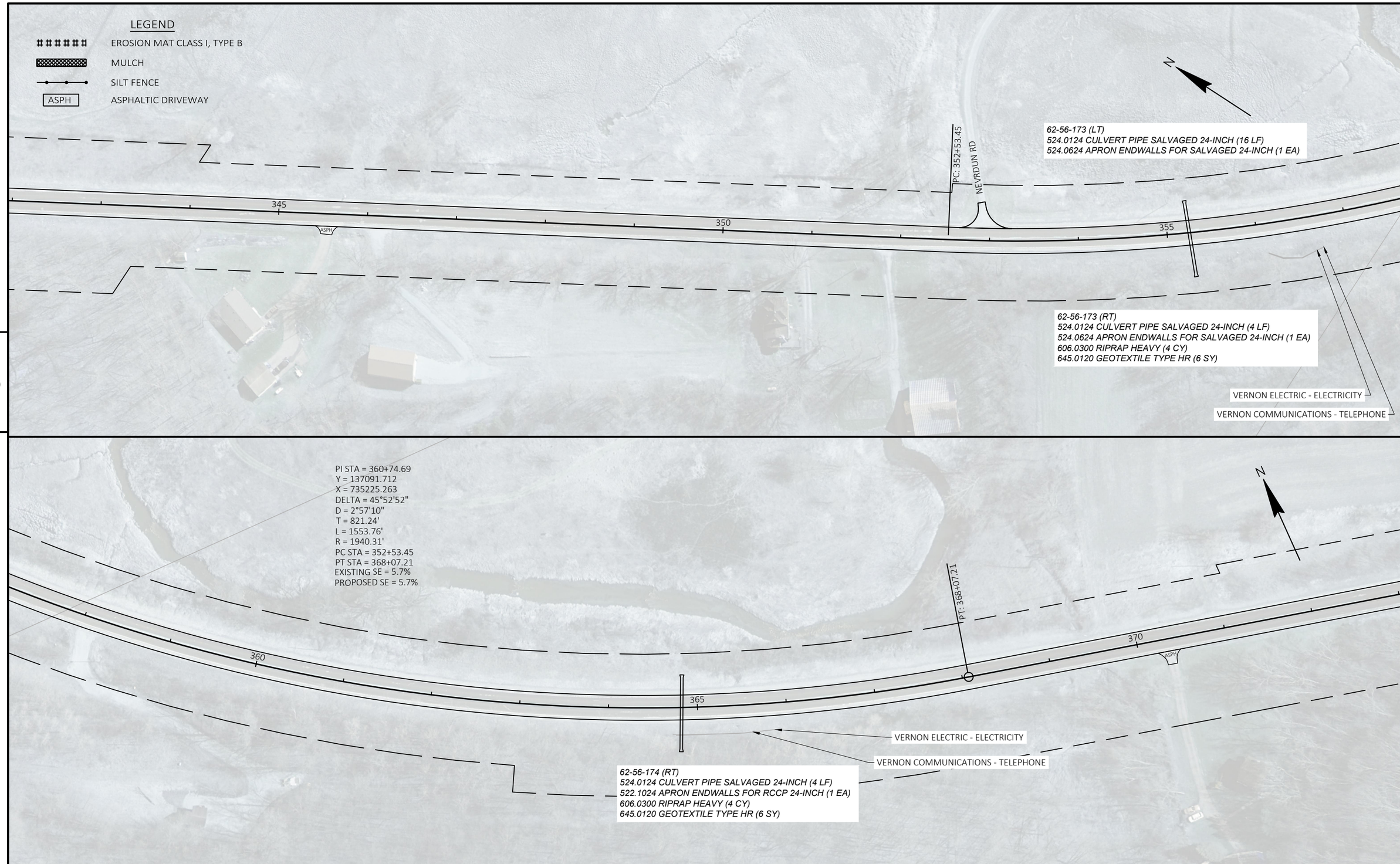

5

5

PROJECT NO: 5730-00-71	HWY: STH 56	COUNTY: VERNON	PLAN	SHEET 49	E

FILE NAME : \\LAXRTOPFLPPI01\N3PUBLIC\PDS\C3D\57300001\SHEETSPLAN\050201_PN.DWG
LAYOUT NAME - 12
PLOT DATE : 10/18/2021 7:30 AM PLOT BY : MIKSHOWSKY, CORY J PLOT NAME : PLOT SCALE : 1 IN:100 FT

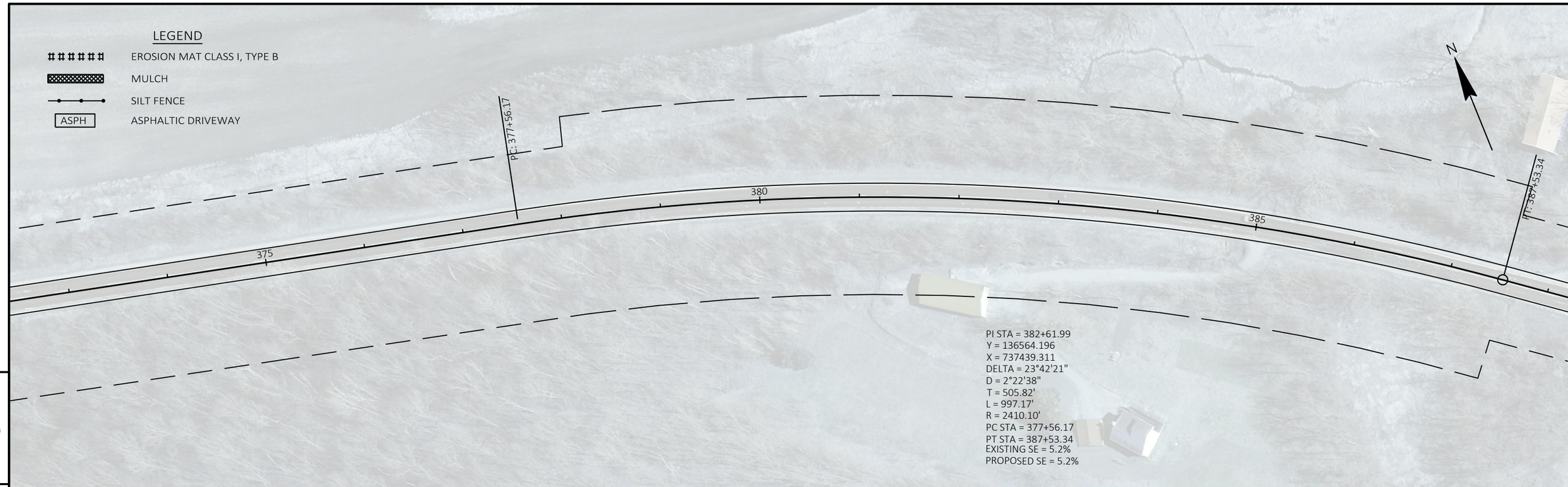

5

5

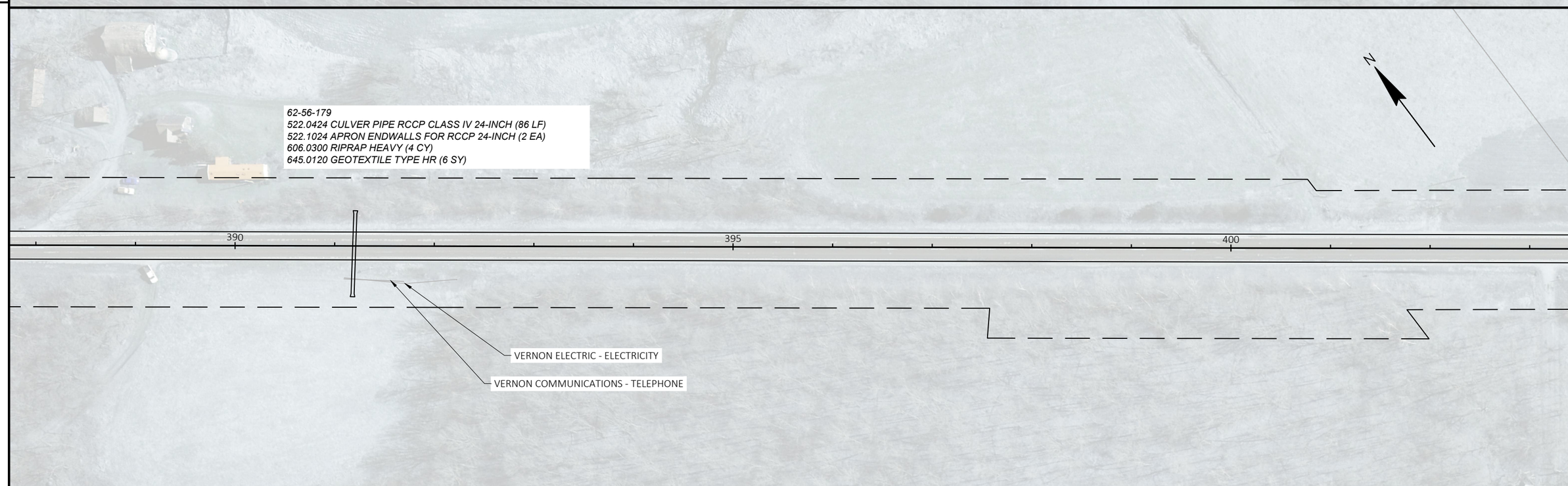

PROJECT NO: 5730-00-71	HWY: STH 56	COUNTY: VERNON	PLAN	SHEET 50	E

FILE NAME : \\LAXRTOPFLPPI01\N3PUBLIC\PDS\C3D\57300001\SHEETSPLAN\050201_PN.DWG
LAYOUT NAME - 13
PLOT DATE : 10/18/2021 7:31 AM PLOT BY : MIKSHOWSKY, CORY J PLOT NAME : PLOT SCALE : 1 IN:100 FT

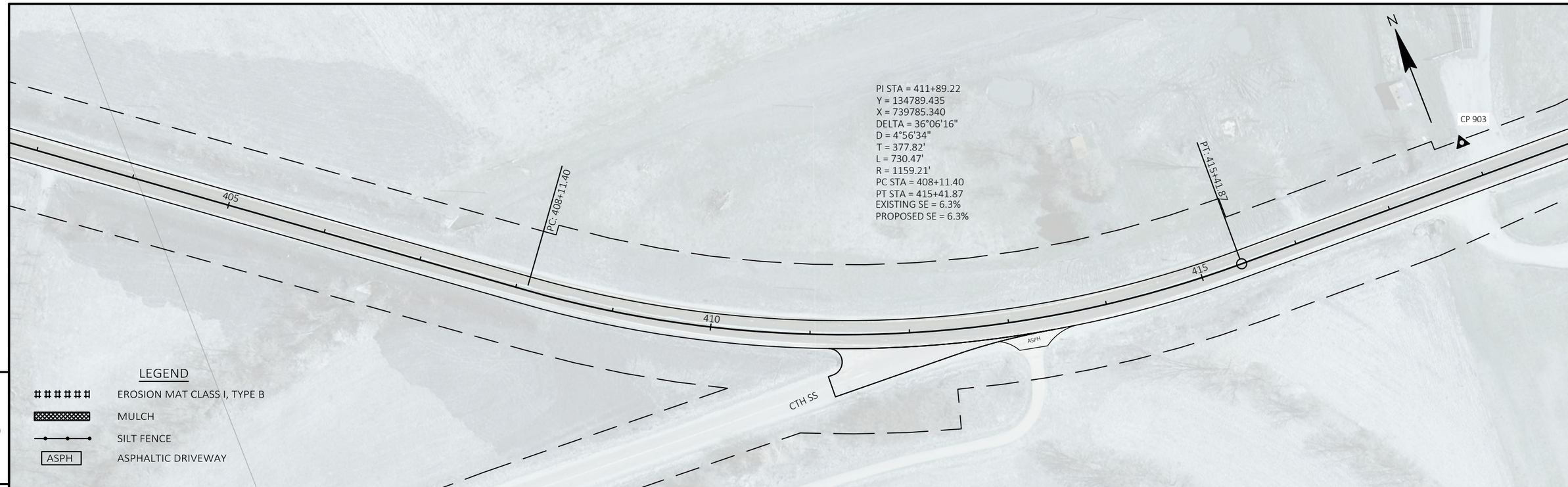

5

5

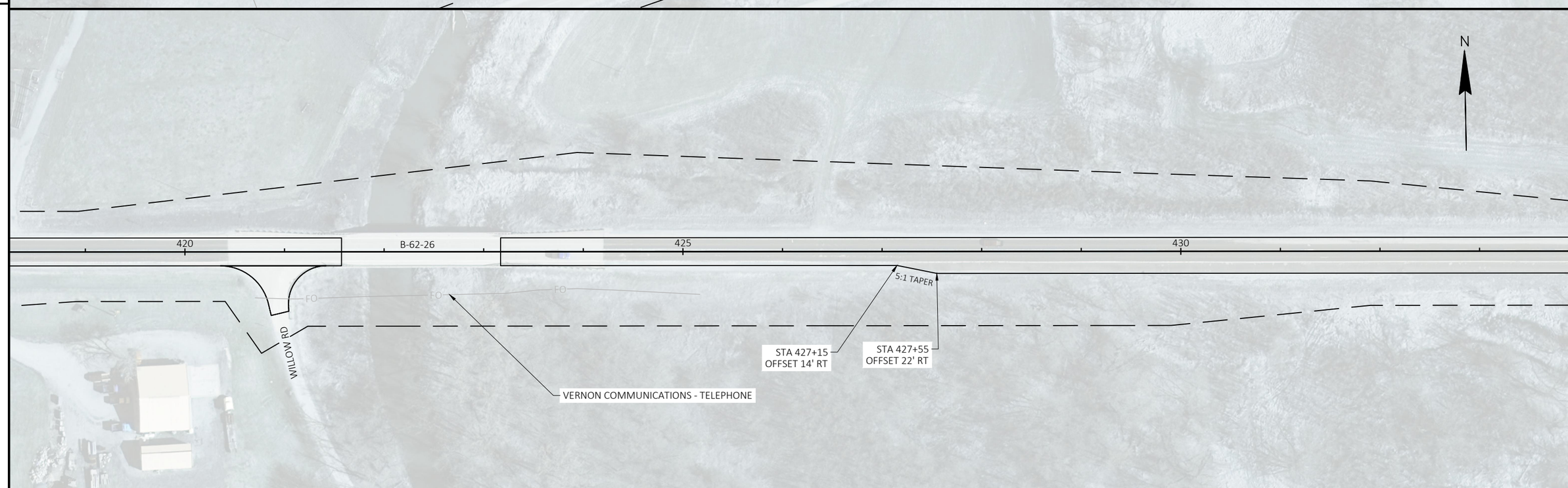

PROJECT NO: 5730-00-71	HWY: STH 56	COUNTY: VERNON	PLAN	SHEET 51	E

FILE NAME : \\LAXRTOPFLPPI01\N3PUBLIC\PDS\C3D\57300001\SHEETSPLAN\050201_PN.DWG
LAYOUT NAME - 14
PLOT DATE : 10/18/2021 7:31 AM PLOT BY : MIKSHOWSKY, CORY J PLOT NAME : PLOT SCALE : 1 IN:100 FT

PROJECT NO: 5730-00-71	HWY: STH 56	COUNTY: VERNON	PLAN	SHEET 52	E

FILE NAME : \\LAXRTOPFLPPI01\N3PUBLIC\PDS\C3D\57300001\SHEETSPLAN\050201_PN.DWG
LAYOUT NAME - 15
PLOT DATE : 10/18/2021 7:32 AM PLOT BY : MIKSHOWSKY, CORY J PLOT NAME : PLOT SCALE : 1 IN:100 FT

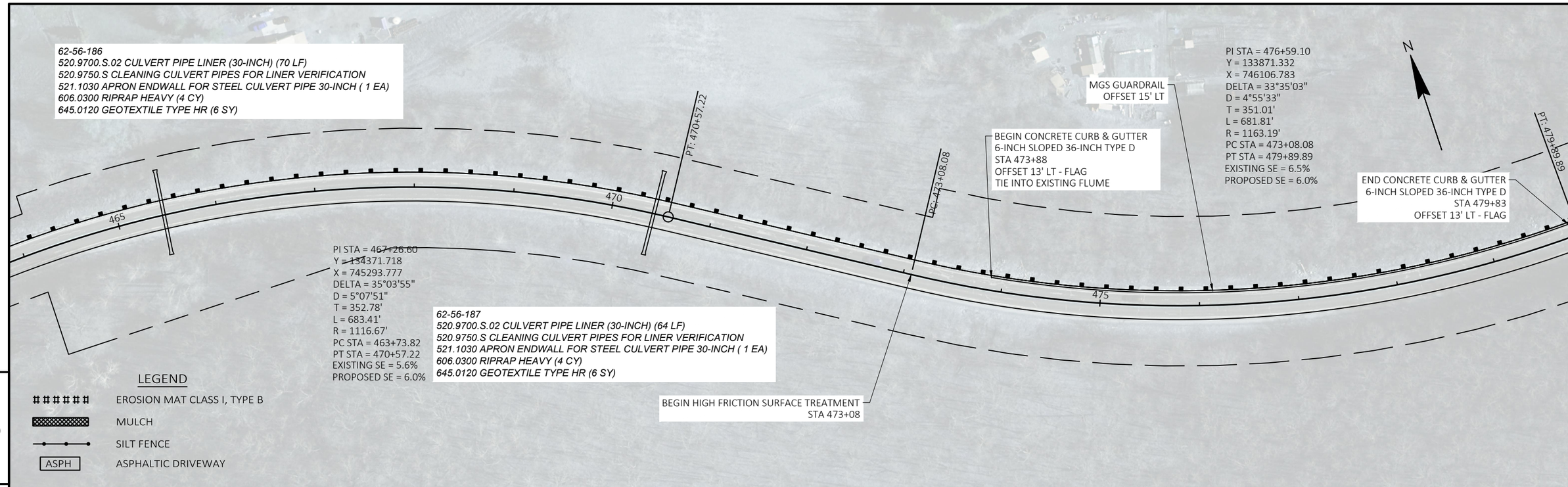

PROJECT NO: 5730-00-71	HWY: STH 56	COUNTY: VERNON	PLAN	SHEET 53	E

FILE NAME : \\LAXRTOPFLPPI01\N3PUBLIC\PDS\C3D\57300001\SHEETSPLAN\050201_PN.DWG
LAYOUT NAME - 16
PLOT DATE : 10/18/2021 7:32 AM PLOT BY : MIKSHOWSKY, CORY J PLOT NAME : PLOT SCALE : 1 IN:100 FT

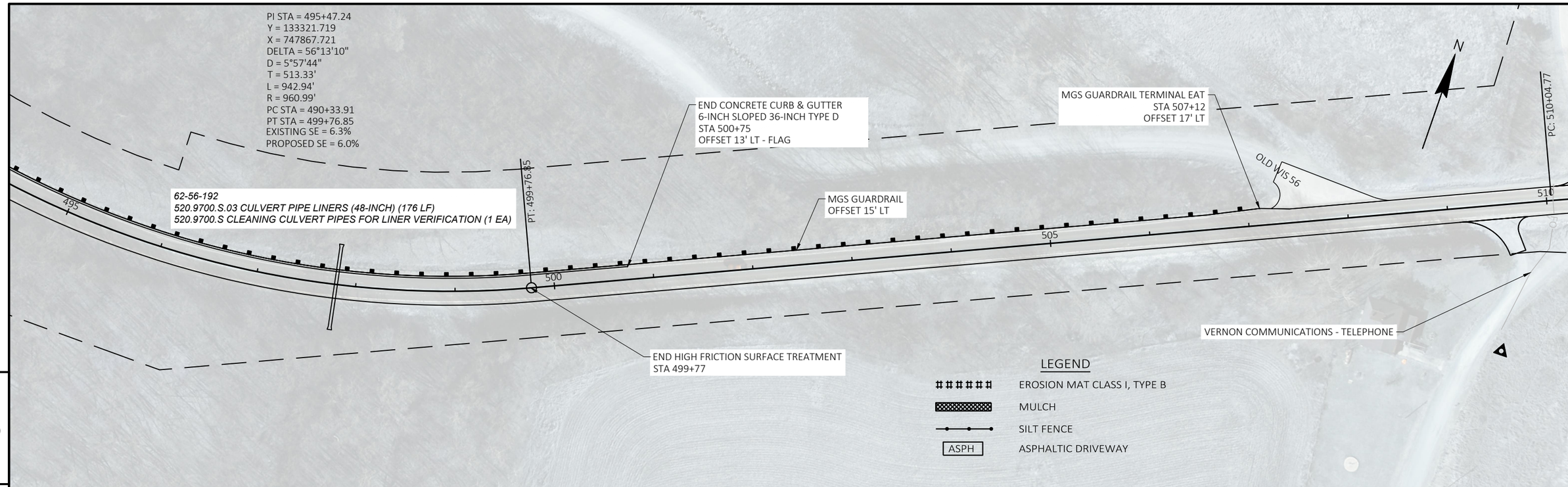

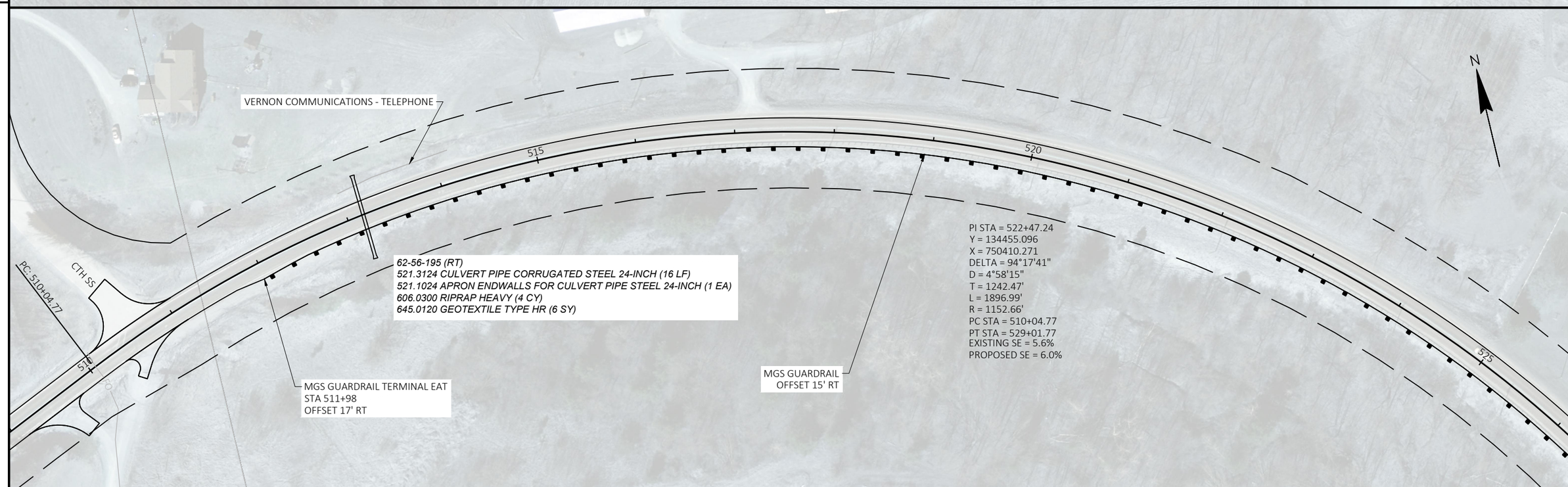

5

5

PROJECT NO: 5730-00-71	HWY: STH 56	COUNTY: VERNON	PLAN	SHEET 54	E

FILE NAME : \\LAXRTOPFLPPI01\N3PUBLIC\PDS\C3D\57300001\SHEETSPLAN\050201_PN.DWG
LAYOUT NAME - 17
PLOT DATE : 10/18/2021 7:32 AM
PLOT BY : MIKSHOWSKY, CORY J
PLOT NAME :
PLOT SCALE : 1 IN:100 FT

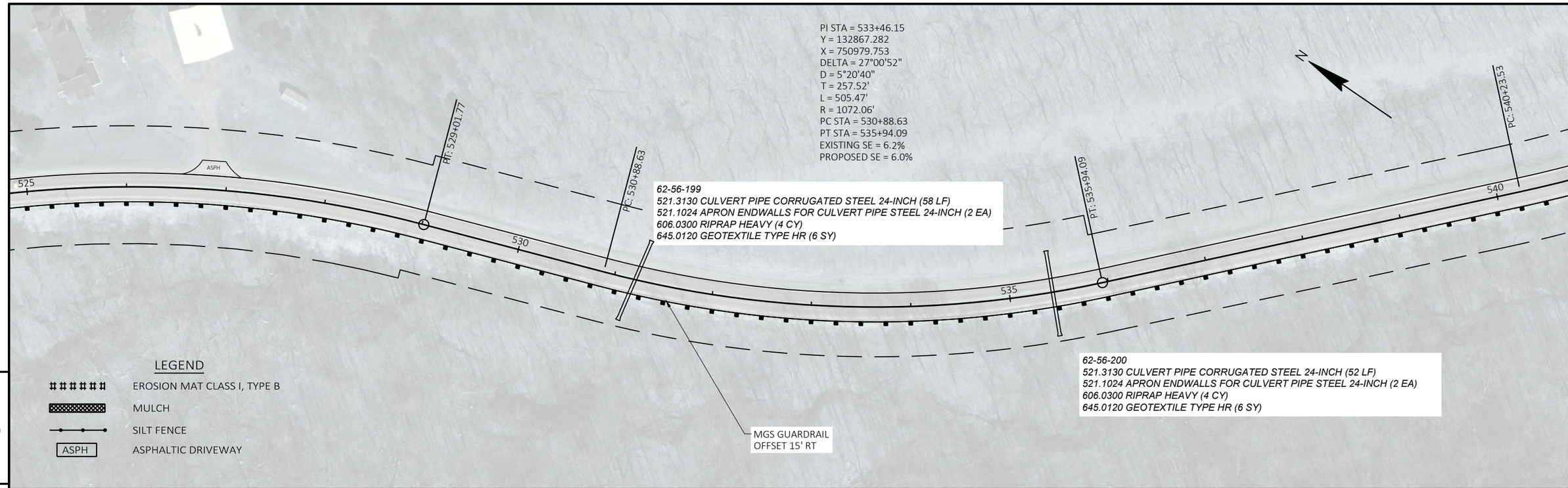

5

5

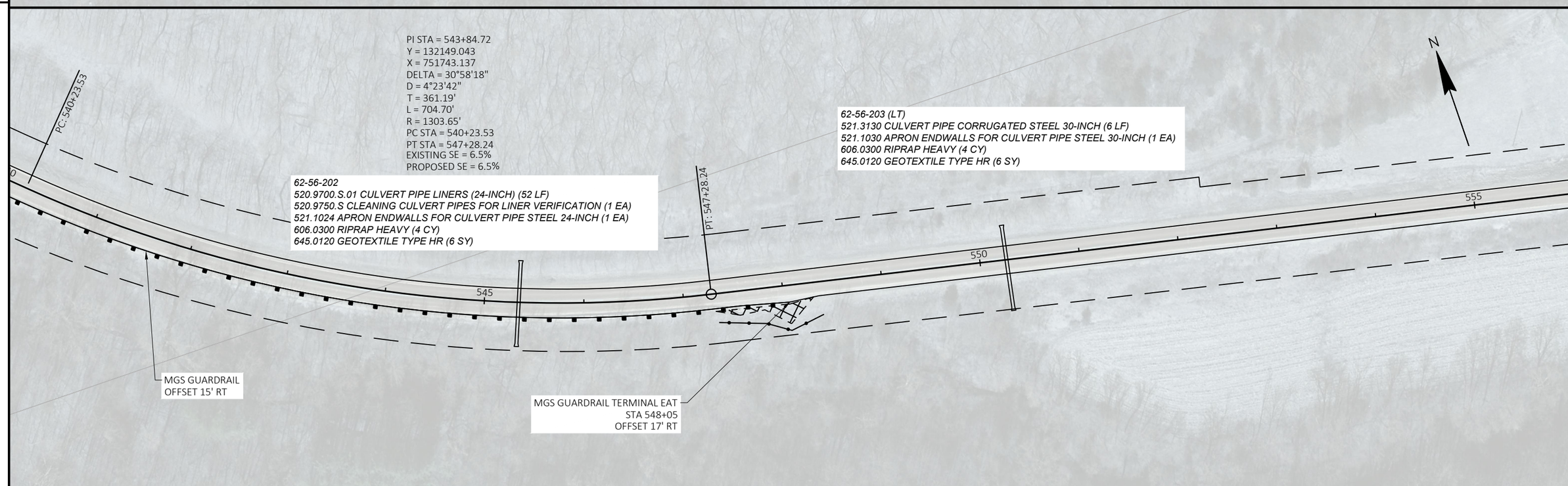

PROJECT NO: 5730-00-71	HWY: STH 56	COUNTY: VERNON	PLAN	SHEET 55	E

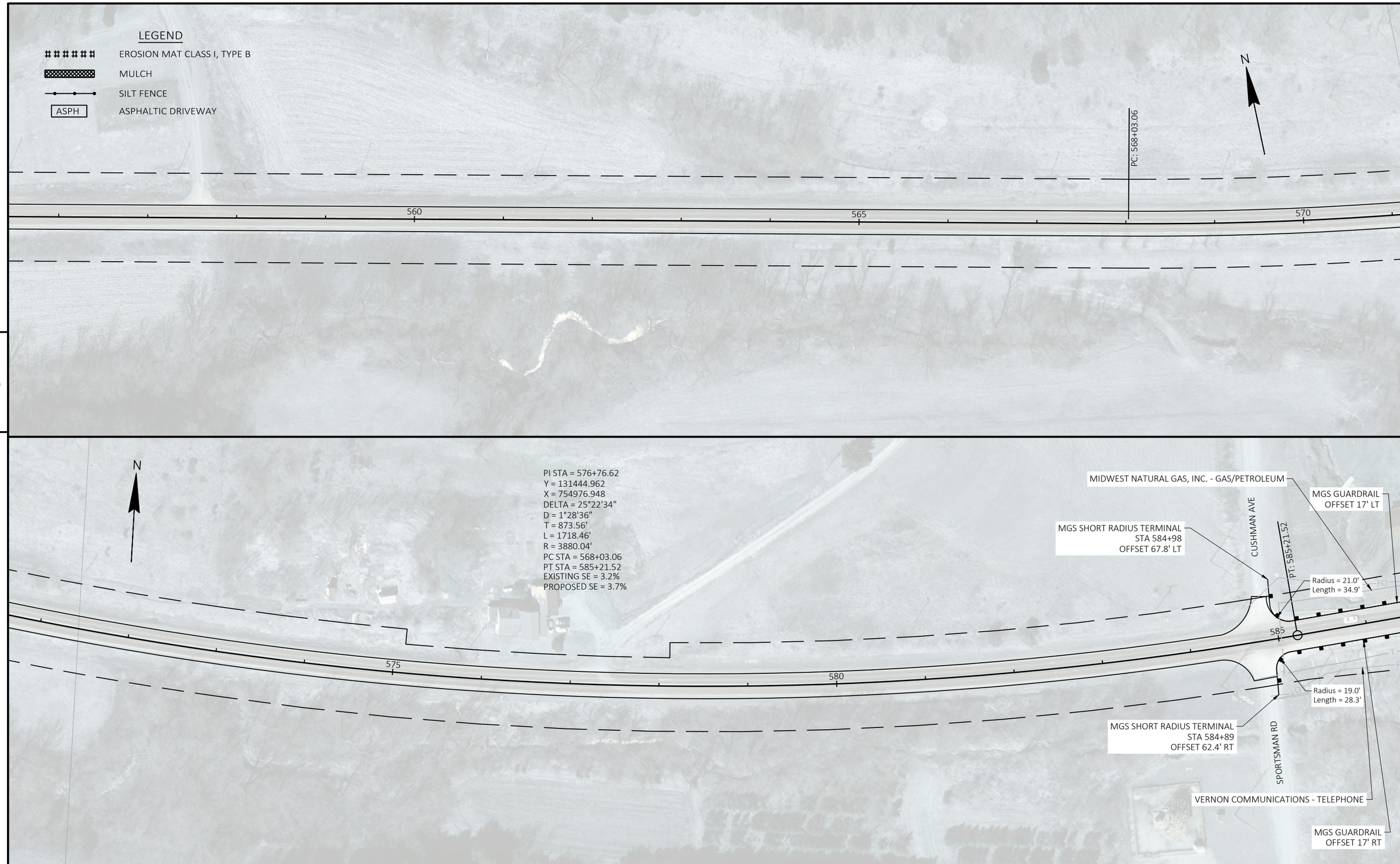

PROJECT NO: 5730-00-71	HWY: STH 56	COUNTY: VERNON	PLAN	SHEET 56	E

FILE NAME : \\LAXRTOPFLPPI01\N3PUBLIC\PDS\C3D\57300001\SHEETSPLAN\050201_PN.DWG
LAYOUT NAME - 19
PLOT DATE : 10/18/2021 7:33 AM PLOT BY : MIKSHOWSKY, CORY J PLOT NAME : PLOT SCALE : 1 IN:100 FT

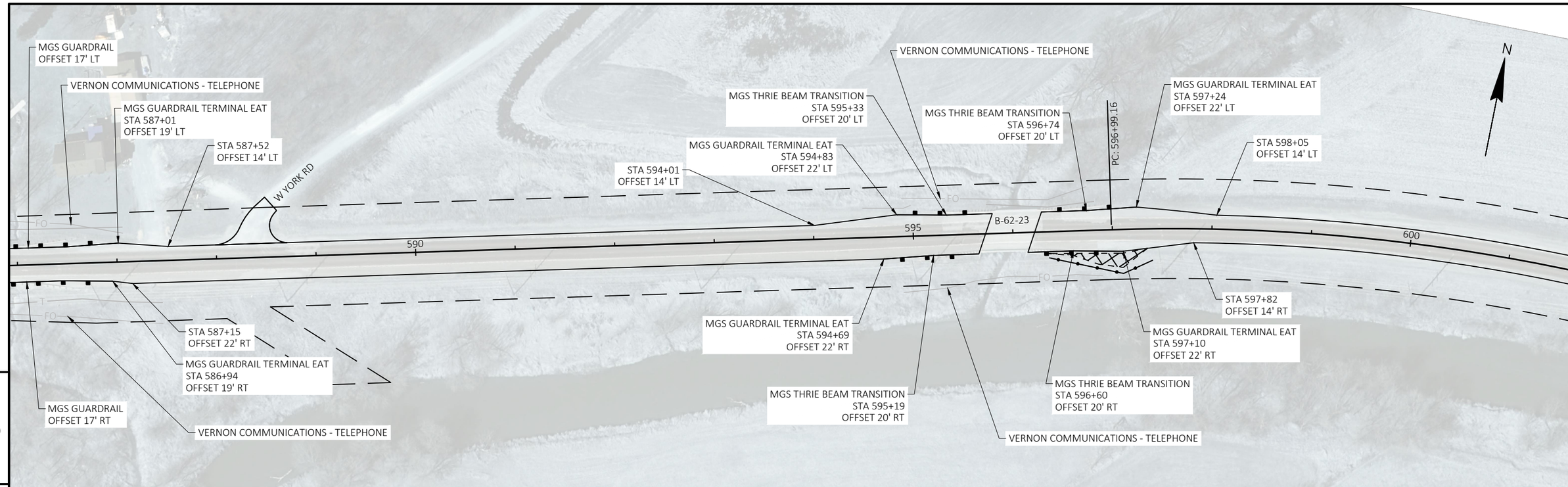

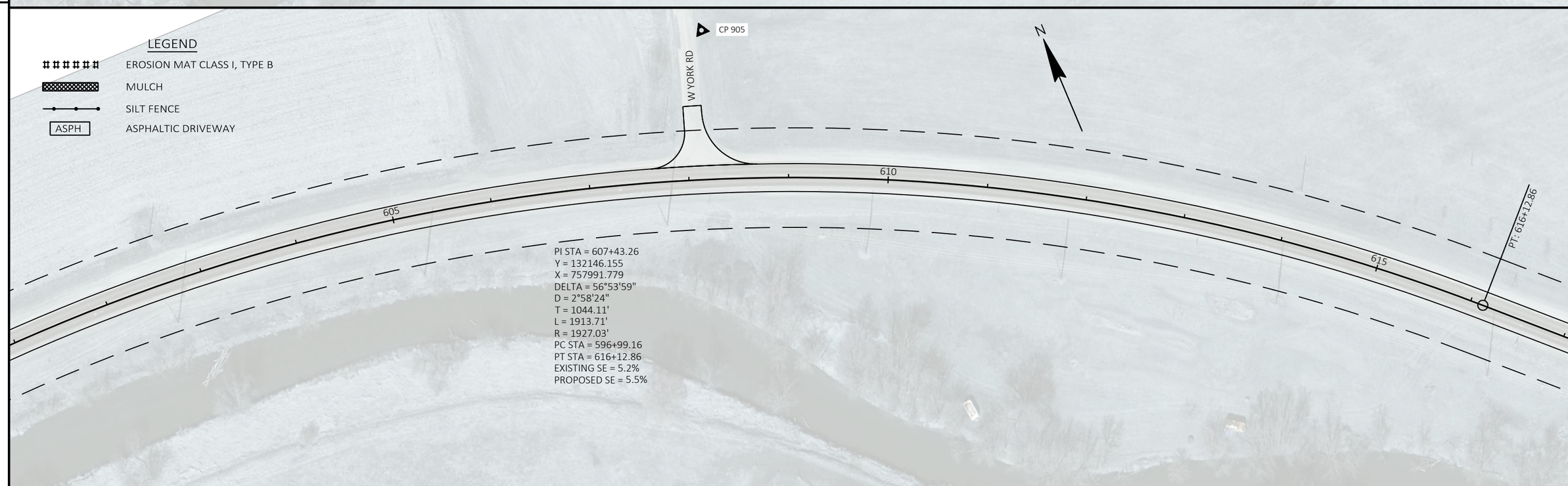

PROJECT NO: 5730-00-71	HWY: STH 56	COUNTY: VERNON	PLAN	SHEET 57	E

FILE NAME : \\LAXRTOPFLPPI01\N3PUBLIC\PDS\C3D\57300001\SHEETSPLAN\050201_PN.DWG
LAYOUT NAME - 20
PLOT DATE : 10/18/2021 7:33 AM PLOT BY : MIKSHOWSKY, CORY J PLOT NAME : PLOT SCALE : 1 IN:100 FT

WISDOT/CADDS SHEET 44

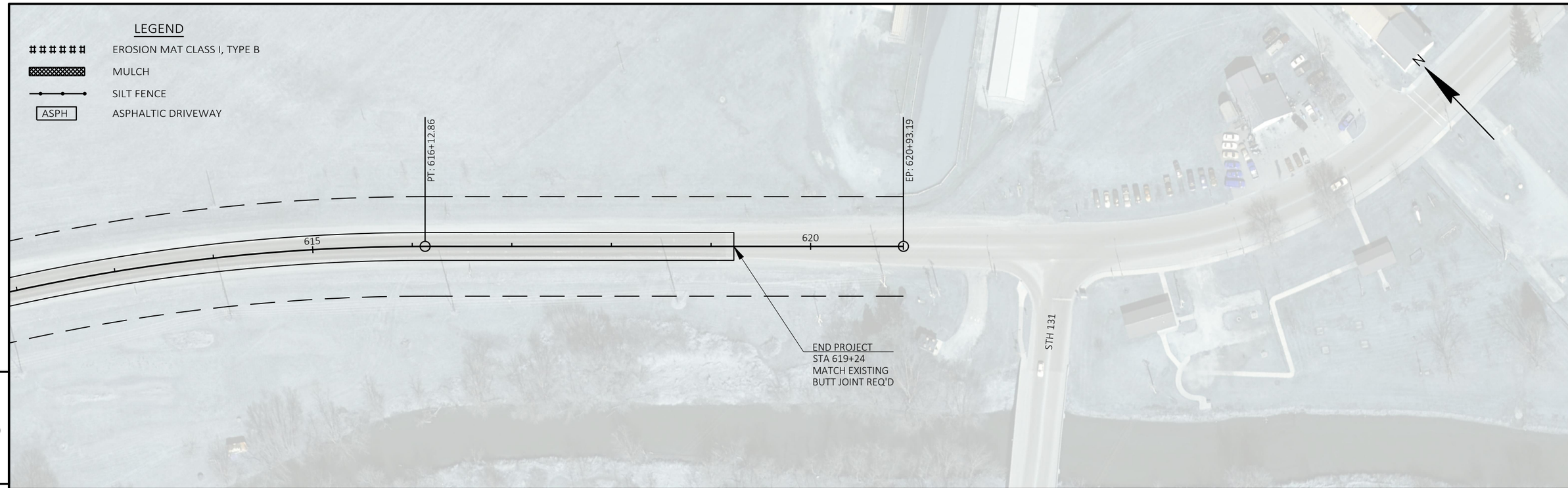

5

5

PROJECT NO: 5730-00-71	HWY: STH 56	COUNTY: VERNON	PLAN	SHEET 58	E

Standard Detail Drawing List

08D01-22A	CONCRETE CURB & GUTTER
08D01-22B	CONCRETE CURB, TIES AND CURB AND GUTTER APPLICATIONS
08D22-01	DRIVEWAYS WITHOUT CURB & GUTTER RESURFACING PROJECTS RURAL
08E08-03	TYPICAL INSTALLATIONS OF EROSION BALES / TEMPORARY DITCH CHECKS
08E09-06	SILT FENCE
08E15-01	CULVERT PIPE CHECK
08F01-11	APRON ENDWALLS FOR CULVERT PIPE
08F04-07	JOINT TIES FOR CONCRETE PIPE AND CONCRETE COLLAR DETAIL
13A11-03A	2-LANE RURAL CENTER LINE RUMBLE STRIP, MILLING
13A11-03B	2-LANE RURAL CENTER LINE RUMBLE STRIP, MILLING
13C19-03	HMA LONGITUDINAL JOINTS
14B20-11A	STEEL THRIE BEAM STRUCTURE APPROACH
14B20-11B	STEEL THRIE BEAM STRUCTURE APPROACH, CONNECTION TO SQUARE END PARAPETS
14B20-11C	STEEL THRIE BEAM STRUCTURE APPROACH, CONNECTION TO VERTICAL FACED PARAPETS
14B20-11D	STEEL THRIE BEAM STRUCTURE APPROACH, CONNECTION TO SLOPED END PARAPETS
14B20-11E	STEEL THRIE BEAM STRUCTURE APPROACH, CONNECTION TO BRIDGE RAILING TYPES "F" AND "W"
14B20-11F	STEEL THRIE BEAM STRUCTURE APPROACH, CONNECTION TO BRIDGE RAILING TYPE "M"
14B20-11G	STEEL THRIE BEAM STRUCTURE APPROACH, CONNECTOR PLATE DETAIL
14B20-11H	STEEL THRIE BEAM STRUCTURE APPROACH, SINGLE SLOPE ATTACHMENT
14B24-09A	STEEL PLATE BEAM GUARD ENERGY ABSORBING TERMINAL
14B24-09B	STEEL PLATE BEAM GUARD ENERGY ABSORBING TERMINAL
14B24-09C	STEEL PLATE BEAM GUARD ENERGY ABSORBING TERMINAL
14B29-01	SAFETY EDGE
14B42-07A	MIDWEST GUARDRAIL SYSTEM (MGS) GUARDRAIL
14B42-07B	MIDWEST GUARDRAIL SYSTEM (MGS) GUARDRAIL
14B42-07C	MIDWEST GUARDRAIL SYSTEM (MGS) GUARDRAIL
14B42-07D	MIDWEST GUARDRAIL SYSTEM (MGS) GUARDRAIL
14B43-04A	MIDWEST GUARDRAIL SYSTEM LONG SPAN MGS (L)
14B43-04B	MIDWEST GUARDRAIL SYSTEM LONG SPAN MGS (L)
14B43-04C	MIDWEST GUARDRAIL SYSTEM LONG SPAN MGS (L)
14B44-04A	MIDWEST GUARDRAIL SYSTEM ENERGY ABSORBING TERMINAL (MGS)
14B44-04B	MIDWEST GUARDRAIL SYSTEM ENERGY ABSORBING TERMINAL (MGS)
14B44-04C	MIDWEST GUARDRAIL SYSTEM ENERGY ABSORBING TERMINAL (MGS)
14B45-05A	MIDWEST GUARDRAIL SYSTEM THRIE BEAM TRANSITION (MGS)
14B45-05B	MIDWEST GUARDRAIL SYSTEM THRIE BEAM TRANSITION (MGS)
14B45-05C	MIDWEST GUARDRAIL SYSTEM THRIE BEAM TRANSITION (MGS)
14B45-05D	MIDWEST GUARDRAIL SYSTEM THRIE BEAM TRANSITION (MGS)
14B45-05E	MIDWEST GUARDRAIL SYSTEM THRIE BEAM TRANSITION (MGS)
14B45-05F	MIDWEST GUARDRAIL SYSTEM THRIE BEAM TRANSITION (MGS)
14B45-05G	MIDWEST GUARDRAIL SYSTEM THRIE BEAM TRANSITION (MGS)
14B45-05H	MIDWEST GUARDRAIL SYSTEM THRIE BEAM TRANSITION (MGS)
14B45-05I	MIDWEST GUARDRAIL SYSTEM THRIE BEAM TRANSITION (MGS)
14B45-05J	MIDWEST GUARDRAIL SYSTEM THRIE BEAM TRANSITION (MGS)
14B45-05K	MIDWEST GUARDRAIL SYSTEM THRIE BEAM TRANSITION (MGS)
14B45-05L	MIDWEST GUARDRAIL SYSTEM THRIE BEAM TRANSITION (MGS)
14B53-01A	SHORT RADIUS BEAM GUARD (MGS) SHORT RADIUS TERMINAL (MGS)
14B53-01B	SHORT RADIUS BEAM GUARD (MGS) SHORT RADIUS TERMINAL (MGS)
14B53-01C	SHORT RADIUS BEAM GUARD (MGS) SHORT RADIUS TERMINAL (MGS)
14B53-01D	SHORT RADIUS BEAM GUARD (MGS) SHORT RADIUS TERMINAL (MGS)
14B53-01E	SHORT RADIUS BEAM GUARD (MGS) SHORT RADIUS TERMINAL (MGS)
14B53-01F	SHORT RADIUS BEAM GUARD (MGS) SHORT RADIUS TERMINAL (MGS)
14B53-01G	SHORT RADIUS BEAM GUARD (MGS) SHORT RADIUS TERMINAL (MGS)
14B53-01H	SHORT RADIUS BEAM GUARD (MGS) SHORT RADIUS TERMINAL (MGS)
14B53-01I	SHORT RADIUS BEAM GUARD (MGS) SHORT RADIUS TERMINAL (MGS)
15A01-13A	MARKER POST FOR RIGHT-OF-WAY
15A01-13B	FLEXIBLE MARKER POST FOR RIGHT-OF-WAY
15A03-02A	FLEXIBLE MARKER POST FOR CULVERT END
15A03-02B	FLEXIBLE MARKER POST FOR CULVERT END
15C04-05	TRAFFIC CONTROL, ADVANCE WARNING SIGNS 45 M.P.H. OR GREATER TWO-WAY UNDIVIDED ROAD OPEN TO TRAFFIC
15C08-20A	LONGITUDINAL MARKING (MAINLINE)
15C11-09B	CHANNELIZING DEVICES DRUMS, CONES, BARRICADES AND VERTICAL PANELS
15C12-07	TRAFFIC CONTROL FOR LANE CLOSURE WITH FLAGGING OPERATION
15C19-06A	MOVING PAVEMENT MARKING OPERATION TWO-LANE TWO-WAY ROADWAY
15C33-04	STOP LINE AND CROSSWALK PAVEMENT MARKING
15C35-04A	PAVEMENT MARKING (INTERSECTIONS)
15D39-02	TRAFFIC CONTROL, DROP-OFF SIGNING
15D45-03	TRAFFIC CONTROL, SIGNING ON ROADWAYS WITH LOOSE GRAVEL

6

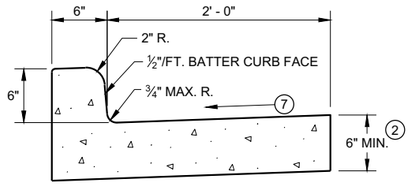

TYPES A[1] & D

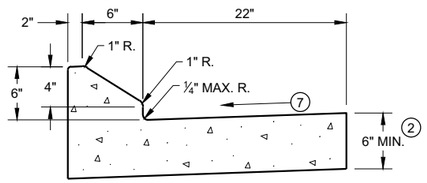

6" SLOPED CURB TYPES G[1] & J

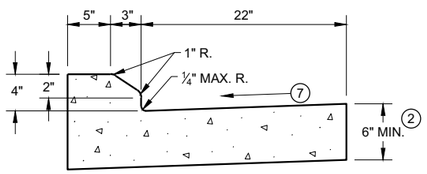

4" SLOPED CURB TYPES G[1] & J

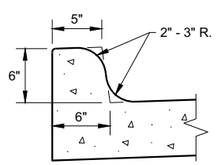

TYPES K[1] & L
(OPTIONAL CURB SHAPE)

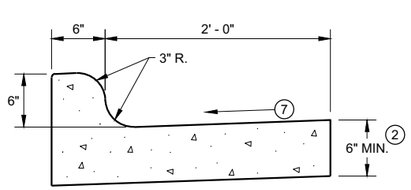

TYPES K[1] & L

CONCRETE CURB AND GUTTER 30"

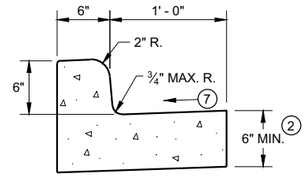

TYPES A[1] & D

CONCRETE CURB AND GUTTER 18"

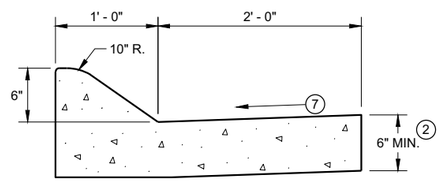

6" SLOPED CURB TYPES A[1] & D

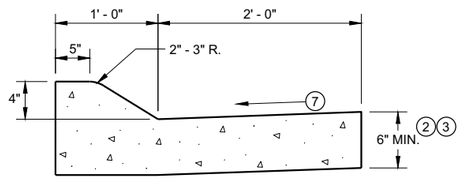

4" SLOPED CURB TYPES A[1] & D

CONCRETE CURB AND GUTTER 36"

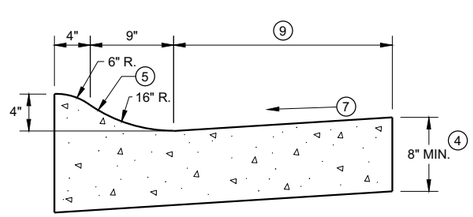

4" SLOPED CURB TYPES R[1] & T

TBT & TBTT	X
30"	22"
36"	28"

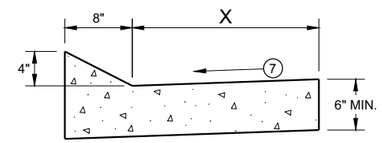

TYPES TBT & TBTT[1]

CONCRETE CURB AND GUTTER

PAVEMENT THICKNESS AND MAXIMUM CONCRETE PANEL WIDTH TABLE

PAVEMENT THICKNESS	MAXIMUM PANEL WIDTH
LESS THAN 10"	12'
10" & ABOVE	15'

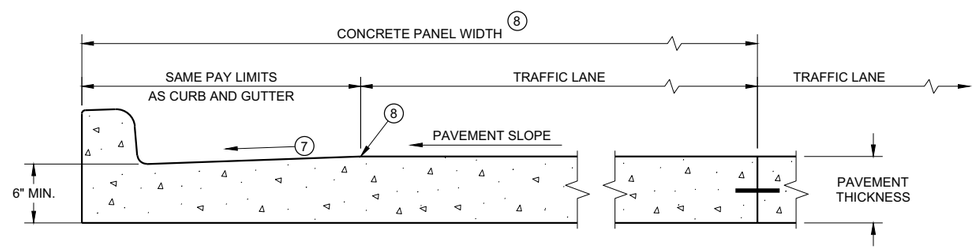

PARTIAL SECTION OF PAVEMENT *
WITH INTEGRAL CURB AND GUTTER

* BIKE LANE IS NOT SHOWN

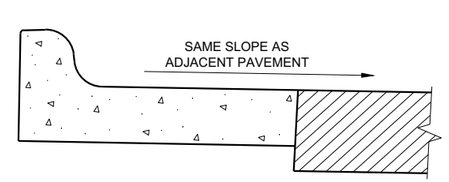

REVERSE SLOPE GUTTER[6]
(TYPICAL FOR ALL CURB & GUTTER TYPES)

GENERAL NOTES

DETAILS OF CONSTRUCTION AND WORKMANSHIP NOT SHOWN ON THIS DRAWING SHALL CONFORM TO THE PERTINENT REQUIREMENTS OF THE CONTRACT.

PAVEMENT TIES AND TIE BARS SHALL BE EPOXY COATED IN CONFORMANCE WITH SUBSECTION 505.2.6.2 OF THE STANDARD SPECIFICATIONS.

INTEGRAL CURB AND GUTTER SHALL CONFORM TO THE DETAILS SHOWN FOR CONCRETE CURB AND GUTTER INCLUDING THE TRANSVERSE GUTTER SLOPE.

UNLESS OTHERWISE SHOWN ON THE TYPICAL CROSS SECTIONS, THE BASE AGGREGATE AND COMMON EXCAVATION LIMITS ARE 2' - 0" BEHIND THE BACK OF CURBS.

1. TIE BARS ARE REQUIRED FOR CURB AND GUTTERS TYPES A, G, K, R, AND TBTT.
2. THE BOTTOM OF CURB AND GUTTER MAY BE CONSTRUCTED EITHER LEVEL OR PARALLEL TO THE SLOPE OF THE SUBGRADE OR BASE AGGREGATE PROVIDED A 6" MINIMUM GUTTER THICKNESS IS MAINTAINED.
3. USE 8" MINIMUM GUTTER THICKNESS WHEN USED WITH AN ADJACENT CONCRETE TRUCK APRON PLACED BEHIND BACK OF CURB.
4. THE BOTTOM OF CURB AND GUTTER MAY BE CONSTRUCTED EITHER LEVEL OR PARALLEL TO THE SLOPE OF THE SUBGRADE OR BASE AGGREGATE PROVIDED A 8" MINIMUM GUTTER THICKNESS IS MAINTAINED.
5. UNLESS OTHERWISE NOTED, FOR STAKING PURPOSES THE FACE OF CURB IS 6" FROM THE BACK OF CURB.
6. WHEN REVERSE SLOPE GUTTER IS REQUIRED, THE LOCATION(S) WILL BE SHOWN ELSEWHERE IN THE PLAN.
7. USE 4% GUTTER CROSS SLOPE UNLESS OTHERWISE NOTED IN THE PLANS.
8. INCLUDE LONGITUDINAL JOINT AND TIE BARS ALONG LANE EDGE WHEN CONCRETE PANEL WIDTH EXCEEDS THE MAXIMUM WIDTH PER TABLE BELOW. LONGITUDINAL JOINT(S) ARE NOT ALLOWED WITHIN TRAFFIC LANES AND BIKE LANES. LONGITUDINAL JOINT MAY BE SAWED.
9. CONCRETE CURB AND GUTTER 4-INCH SLOPED 30-INCH TYPE "R" AND "T" = 17 INCHES
   CONCRETE CURB AND GUTTER 4-INCH SLOPED 36-INCH TYPE "R" AND "T" = 23 INCHES

CONCRETE CURB AND GUTTER

STATE OF WISCONSIN
DEPARTMENT OF TRANSPORTAT

6

SDD 08D01 - 22a

GENERAL NOTES

DETAILS OF CONSTRUCTION AND WORKMANSHIP NOT SHOWN ON THIS DRAWING SHALL CONFORM TO THE PERTINENT REQUIREMENTS OF THE CONTRACT.

PAVEMENT TIES AND TIE BARS SHALL BE EPOXY COATED IN CONFORMANCE WITH SUBSECTION 505.2.6.2 OF THE STANDARD SPECIFICATIONS.

UNLESS OTHERWISE SHOWN ON THE TYPICAL CROSS SECTIONS, THE BASE AGGREGATE AND COMMON EXCAVATION LIMITS ARE 2' - 0" BEHIND THE BACK OF CURBS.

(1) TIE BARS ARE REQUIRED FOR CURB AND GUTTERS TYPES A, G, K, R, AND TBTT.

(2) THE BOTTOM OF CURB AND GUTTER MAY BE CONSTRUCTED EITHER LEVEL OR PARALLEL TO THE SLOPE OF THE SUBGRADE OR BASE AGGREGATE PROVIDED A 6" MINIMUM GUTTER THICKNESS IS MAINTAINED.

(9) REFER TO SDD 08D18 AND 08D19 FOR ADDITIONAL DRIVEWAY ENTRANCE CURB DETAILS.

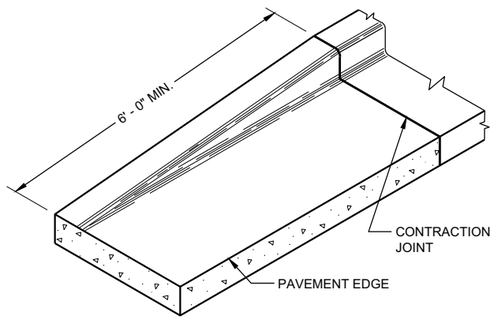

END SECTIONCURB AND GUTTER

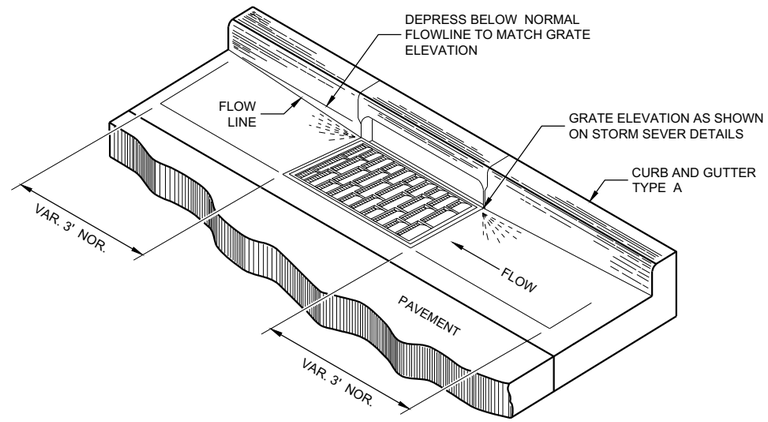

DETAIL OF CURB AND GUTTER AT INLETS
(TYPICAL H INLET COVER SHOWN)

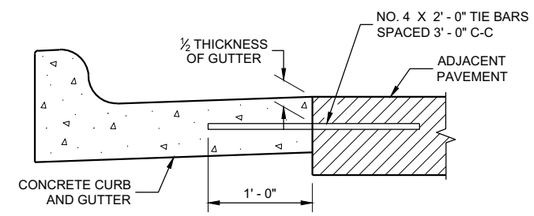

TYPICAL TIE BAR LOCATION (1)

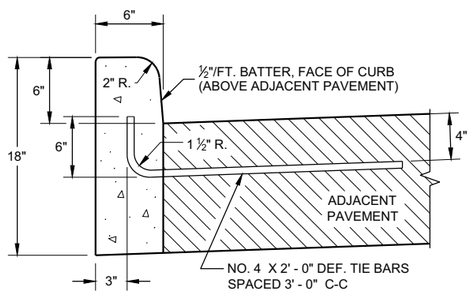

TYPES A (1) & D

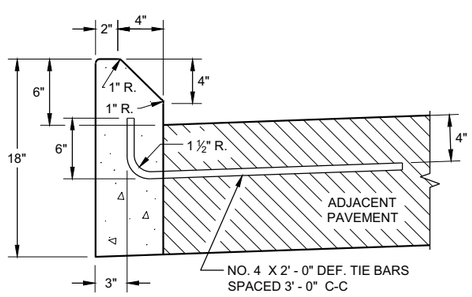

TYPES G (1) & J

CONCRETE CURB

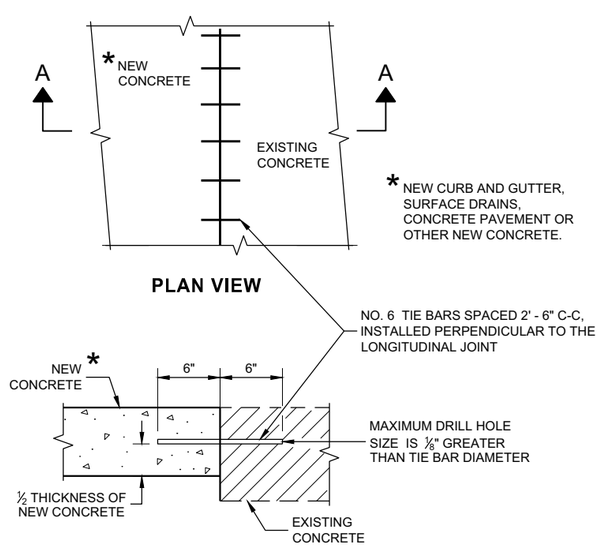

PLAN VIEW

SECTION A - A

TIE BARS DRILLED INTO EXISTING PAVEMENT

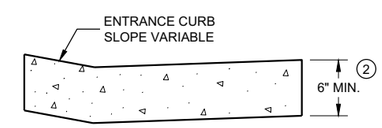

DRIVEWAY ENTRANCE CURB (9)
(WHEN DIRECTED BY THE ENGINEER)

CONCRETE CURB, TIES AND CURB AND GUTTER APPLICATIONS

STATE OF WISCONSIN
DEPARTMENT OF TRANSPORTATION

APPROVED
February 2021 — DATE
/S/ Rodnery Taylor — ROADWAY STANDARDS DEVE ENGINEER
FHWA

W MIN. = 16'
W MAX. = 24'

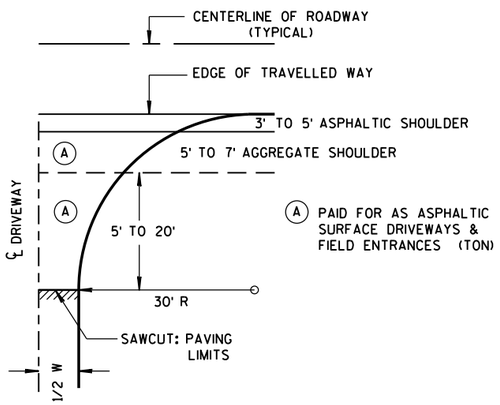

PLAN VIEW
HALF SECTION

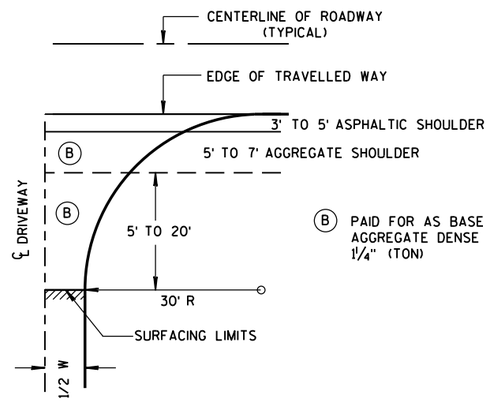

PLAN VIEW
HALF SECTION

GENERAL NOTES

1. DESIGN WILL DETERMINE FINAL DRIVEWAY ASPHALTIC THICKNESS BASED ON TYPE OF USAGE AND LOADINGS.

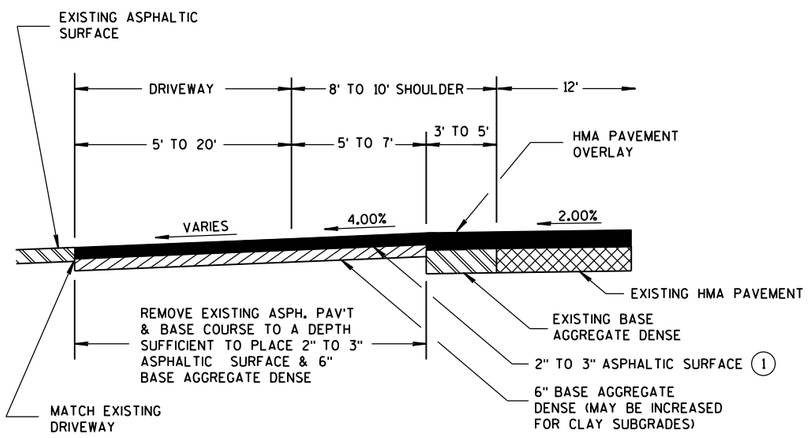

PROFILE VIEW

RURAL ENTRANCE WITH ASPHALTIC SURFACE

RESURFACING PROJECTS

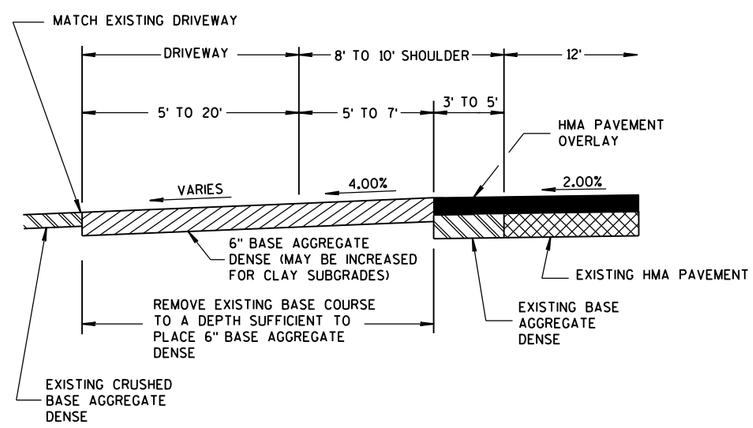

PROFILE VIEW

RURAL ENTRANCE WITH AGGREGATE SURFACE

6" BASE AGGREGATE DENSE
RESURFACING PROJECTS

DRIVEWAYS WITHOUT CURB & GUTTER RESURFACING PROJECTS RURAL

STATE OF WISCONSIN
DEPARTMENT OF TRANSPORTATION

APPROVED
December, 2016 /S/ Rodney Taylor
DATE ROADWAY STANDARDS UNIT SUPERV ENT
FHWA

S.D.D. 8 D 22-1

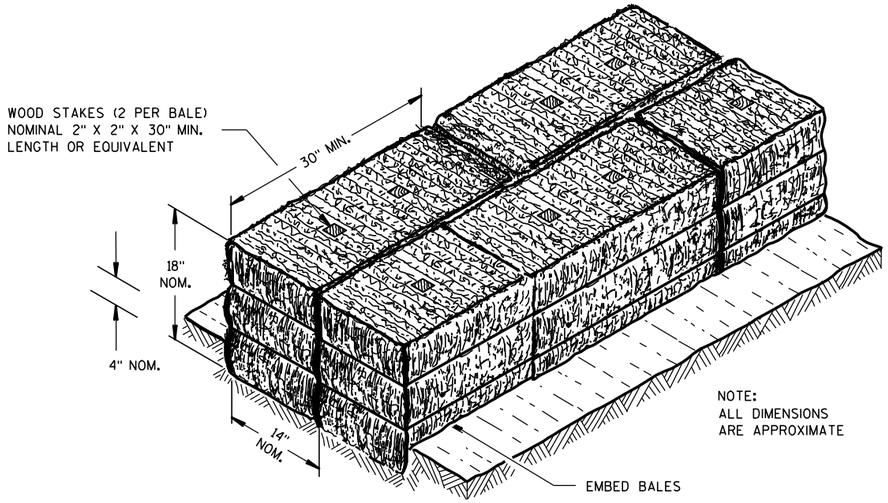

SECTION A-A

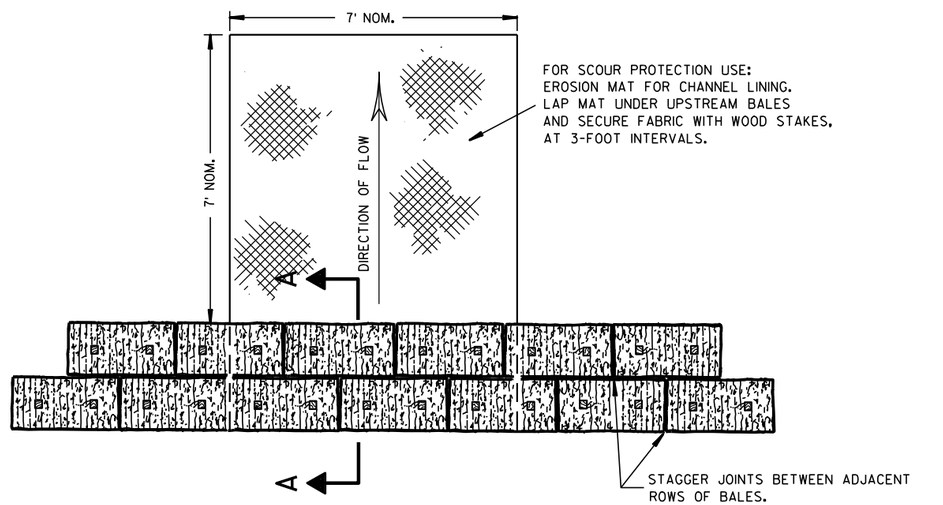

PLAN VIEW

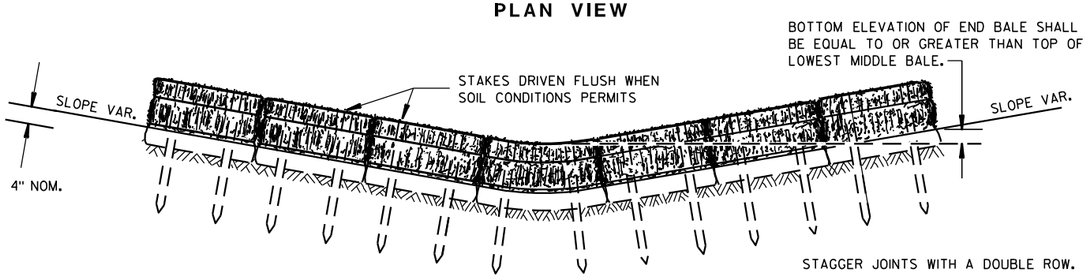

FRONT ELEVATION

TEMPORARY DITCH CHECK USING EROSION BALES ①

GENERAL NOTES

DETAILS OF CONSTRUCTION, MATERIALS AND WORKMANSHIP NOT SHOWN ON THIS DRAWING SHALL CONFORM TO THE PERTINENT REQUIREMENTS OF THE STANDARD SPECIFICATIONS AND THE APPLICABLE SPECIAL PROVISIONS.

① TEMPORARY DITCH CHECKS EITHER EROSION BALES OR MANUFACTURED SHALL BE PAID FOR UNDER THE BID ITEM OF TEMPORARY DITCH CHECK. THE DEPARTMENT WILL NOT PAY FOR TEMPORARY DITCH CHECKS CONSTRUCTED OF A SINGLE ROW OF EROSION BALES.

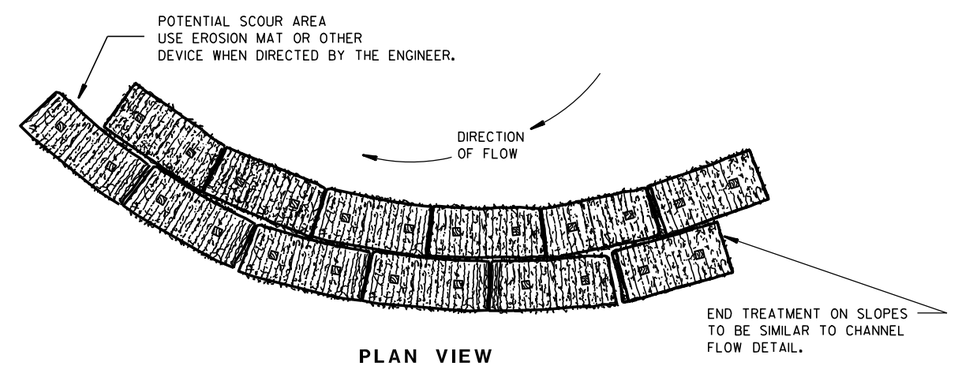

PLAN VIEW

WHEN ALTERING THE DIRECTION OF FLOW

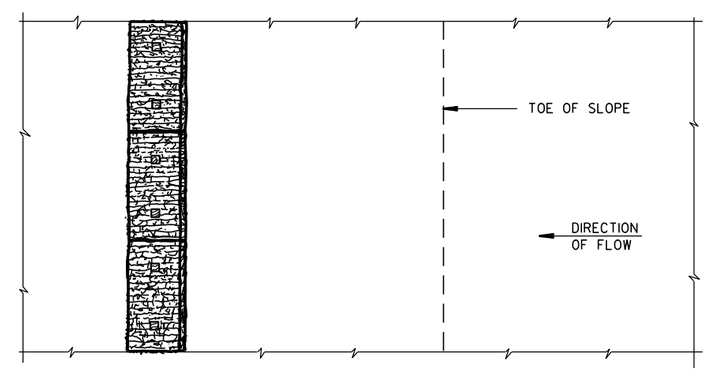

PLAN VIEW

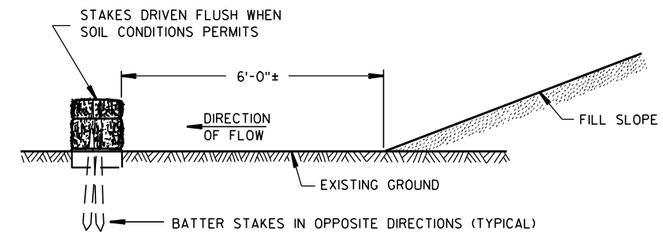

FRONT ELEVATION

WHEN EXISTING GROUND SLOPES AWAY FROM FILL SLOPE

EROSION BALES FOR SHEET FLOW

TYPICAL INSTALLATIONS OF EROSION BALES / TEMPORARY DITCH CHECKS

STATE OF WISCONSIN
DEPARTMENT OF TRANSPORTATION

APPROVED
6/04/02 — DATE
/S/ Beth Cann — CHIEF ROADWAY DEVELOPMENT ENGINEER
FHWA

6
S.D.D. 8 E 8-3

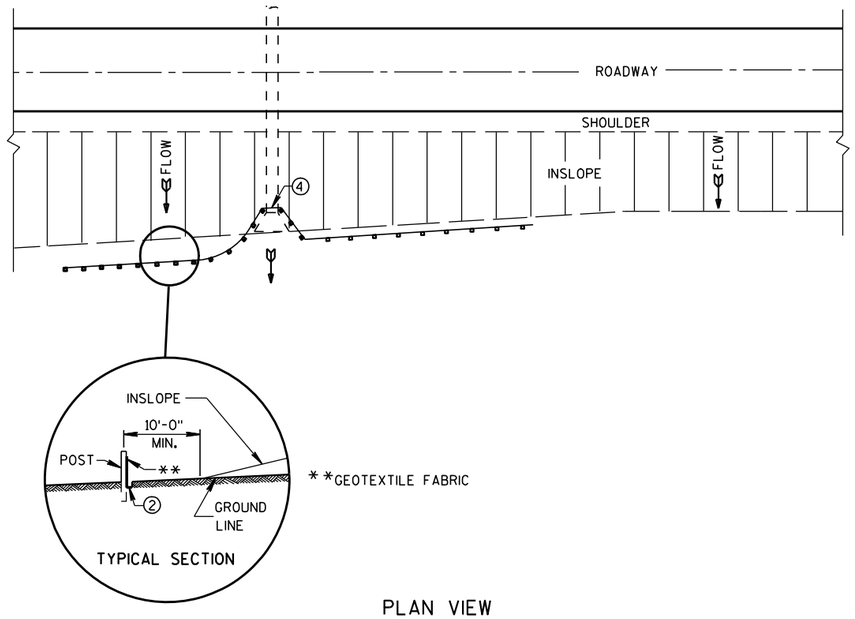

PLAN VIEW

TYPICAL APPLICATION OF SILT FENCE

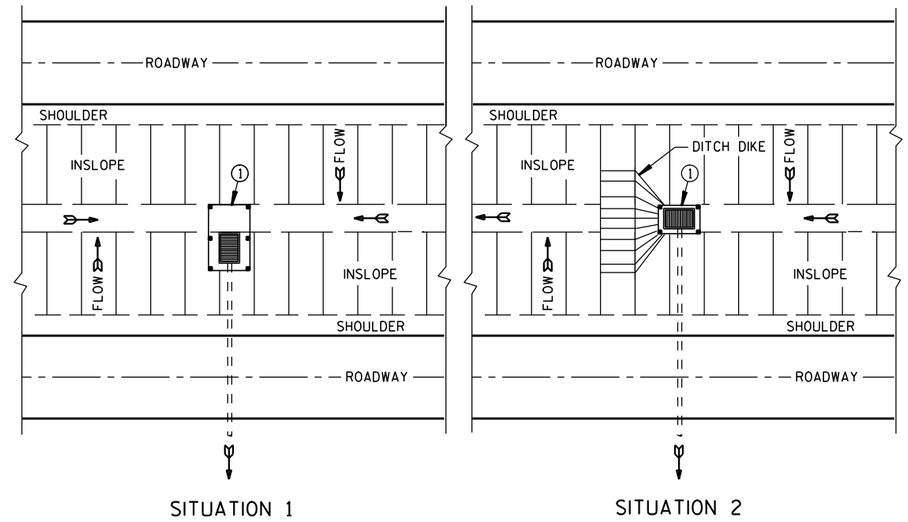

PLAN VIEW

SILT FENCE AT MEDIAN SURFACE DRAINS

GENERAL NOTES

DETAILS OF CONSTRUCTION NOT SHOWN ON THIS DRAWING SHALL CONFORM TO THE PERTINENT REQUIREMENTS OF THE STANDARD SPECIFICATIONS AND APPLICABLE SPECIAL PROVISIONS.

① HORIZONTAL BRACE REQUIRED WITH 2" X 4" WOODEN FRAME OR EQUIVALENT AT TOP OF POSTS.

② FOR MANUAL INSTALLATIONS THE TRENCH SHALL BE A MINIMUM OF 4" WIDE & 6" DEEP TO BURY AND ANCHOR THE GEOTEXTILE FABRIC. FOLD MATERIAL TO FIT TRENCH AND BACKFILL & COMPACT TRENCH WITH EXCAVATED SOIL.

③ WOOD POSTS SHALL BE A MINIMUM SIZE OF 1⅛" X 1⅛" OF OAK OR HICKORY.

④ SILT FENCE TO EXTEND ACROSS THE TOP OF THE PIPE.

⑤ CONSTRUCT SILT FENCE FROM A CONTINUOUS ROLL IF POSSIBLE BY CUTTING LENGTHS TO AVOID JOINTS. IF A JOINT IS NECESSARY USE ONE OF THE FOLLOWING TWO METHODS; A) OVERLAP THE END POSTS AND TWIST, OR ROTATE, AT LEAST 180 DEGREES. B) HOOK THE END OF EACH SILT FENCE LENGTH.

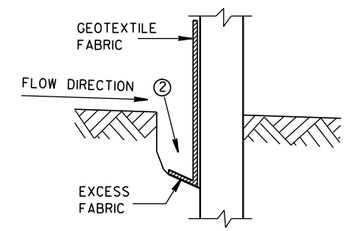

TRENCH DETAIL

NOTE: ADDITIONAL POST DEPTH OR TIE BACKS MAY BE REQUIRED IN UNSTABLE SOILS

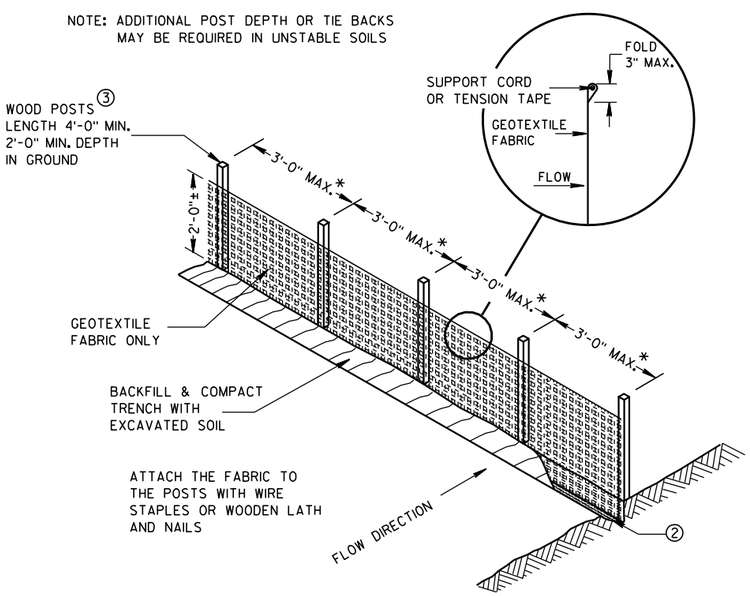

*NOTE: 8'-0" POST SPACING ALLOWED IF A WOVEN GEOTEXTILE FABRIC IS USED.

SILT FENCE

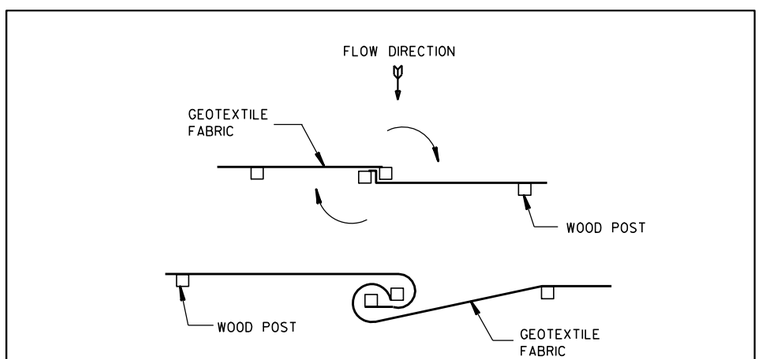

TWIST METHOD

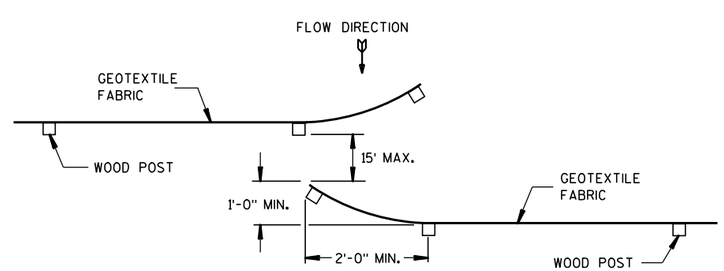

HOOK METHOD

JOINING TWO LENGTHS OF SILT FENCE ⑤

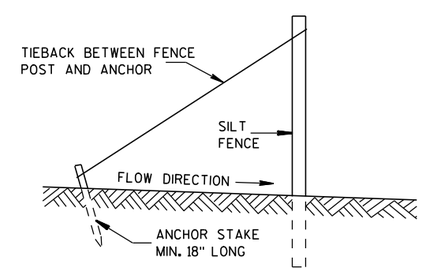

SILT FENCE TIE BACK

(WHEN REQUIRED BY THE ENGINEER)

SILT FENCE
STATE OF WISCONSIN DEPARTMENT OF TRANSPORTATION
APPROVED 4-29-05 DATE — /S/ Beth Cann-- CHIEF ROADWAY DEVELOP ENGINEER FHWA

6

6

S.D.D. 8 E 9-6

S.D.D. 8 E 9-6

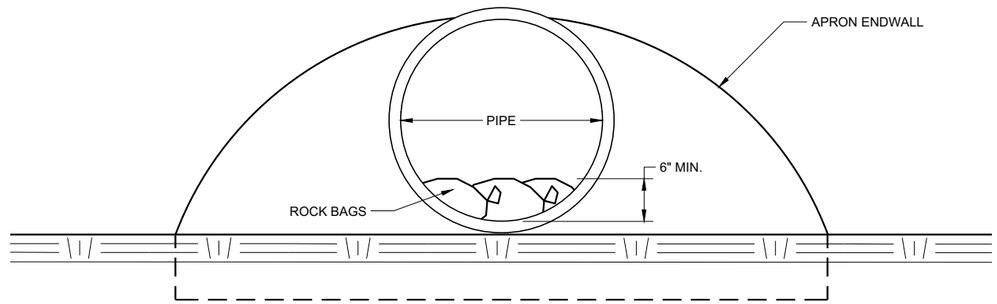

END VIEW

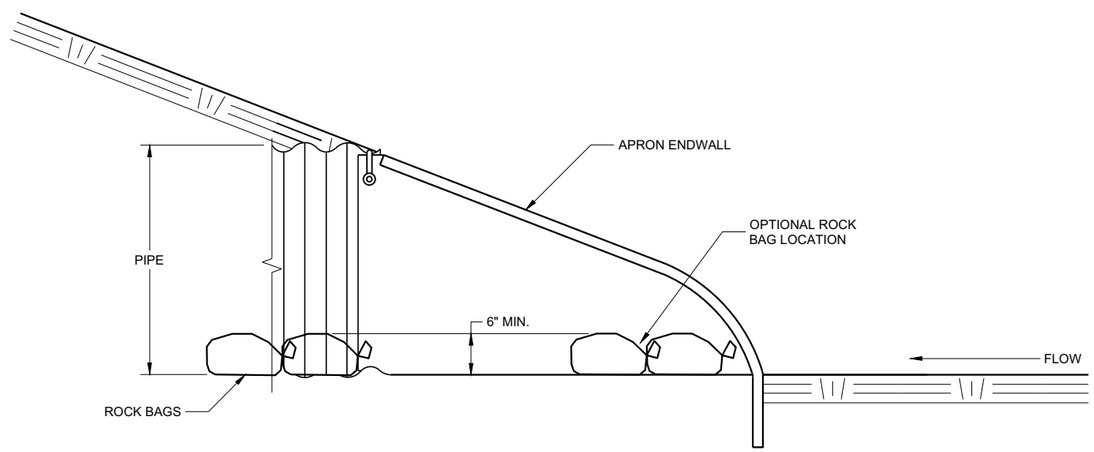

SIDE VIEW

CULVERT PIPE CHECK

(INSTALL ON INLET END ONLY)

CULVERT PIPE CHECK

STATE OF WISCONSIN
DEPARTMENT OF TRANSPORTATION

APPROVED
May 2019 — DATE
/S/ Daniel Schave — EROSION CONTROL ENGI
FHWA

6

6

SDD 08E15 - 01

SDD 08E15 - 01

METAL APRON ENDWALLS

PIPE DIA. (IN.)	MIN. THICK. (Inches) STEEL	MIN. THICK. (Inches) ALUM.	DIMENSIONS (Inches) A (±1")	B (MAX.)	H (±1")	L (±1 1/2")	L1 ①	L2 ①	W (±2")	APPROX. SLOPE	BODY
12	.064	.060	6	6	6	21	12	17 1/2	24	2 1/2 to 1	1 Pc.
15	.064	.060	7	8	6	26	14	21 3/4	30	2 1/2 to 1	1 Pc.
18	.064	.060	8	10	6	31	15	28 1/4	36	2 1/2 to 1	1 Pc.
21	.064	.060	9	12	6	36	18	29 5/8	42	2 1/2 to 1	1 Pc.
24	.064	.075	10	13	6	41	18	37 1/4	48	2 1/2 to 1	1 Pc.
30	.079	.075	12	16	8	51	18	52 1/4	60	2 1/2 to 1	1 Pc.
36	.079	.105	14	19	9	60	24	59 3/4	72	2 1/2 to 1	2 Pc.
42	.109	.105	16	22	11	69	24	75 5/8	84	2 1/2 to 1	2 Pc.
48	.109	.105	18	27	12	78	24	81	90	2 1/4 to 1	3 Pc.
54	.109	.105	18	30	12	84	30	85 1/2	102	2 1/4 to 1	3 Pc.
60	.109×	.105×	18	33	12	87	—	—	114	2 to 1	3 Pc.
66	.109×	.105×	18	36	12	87	—	—	120	2 to 1	3 Pc.
72	.109×	.105×	18	39	12	87	—	—	126	2 to 1	3 Pc.
78	.109×	.105×	18	42	12	87	—	—	132	1 1/2 to 1	3 Pc.
84	.109×	.105×	18	45	12	87	—	—	138	1 1/2 to 1	3 Pc.
90	.109×	.105×	18	37	12	87	—	—	144	1 1/2 to 1	3 Pc.
96	.109×	.105×	18	35	12	87	—	—	150	1 1/2 to 1	3 Pc.

× EXCEPT CENTER PANEL
SEE GENERAL NOTES

REINFORCED CONCRETE APRON ENDWALLS

PIPE DIA. (IN.)	DIMENSIONS (Inches) T	A	B	C	D	E	G	APPROX. SLOPE
12	2	4	24	48 7/8	72 7/8	24	2	3 to 1
15	2 1/4	6	27	46	73	30	2 1/4	3 to 1
18	2 1/2	9	27	46	73	36	2 1/2	3 to 1
21	2 3/4	9	36	37 1/2	73 1/2	42	2 3/4	3 to 1
24	3	9 1/2	43 1/2	30	73 1/2	48	3	3 to 1
27	3 1/4	10 1/2	49 1/2	24	73 1/2	54	3 1/4	3 to 1
30	3 1/2	12	54	19 3/4	73 1/2	60	3 1/2	3 to 1
36	4	15	63	34 3/4	97 3/4	72	4	3 to 1
42	4 1/2	21	63	35	98	78	4 1/2	3 to 1
48	5	24	72	26	98	84	5	3 to 1
54	5 1/2	27	65	*33 1/4-**35	*98 1/4-**100	90	5 1/2	2 2/5 to 1
60	6	*30-**35	60	39	99	96	5	2 to 1
66	6 1/2	*24-**30	*72-**78	*21-**27	99	102	5 1/2	2 to 1
72	7	*24-**36	78	21	99	108	6	2 to 1
78	7 1/2	*24-**36	78	21	99	114	6 1/2	2 to 1
84	8	36	90 1/2	21	111 1/2	120	6 1/2	1 1/2 to 1
90	8 1/2	41	87 1/2	24	111 1/2	132	6 1/2	1 1/2 to 1

*MINIMUM
**MAXIMUM

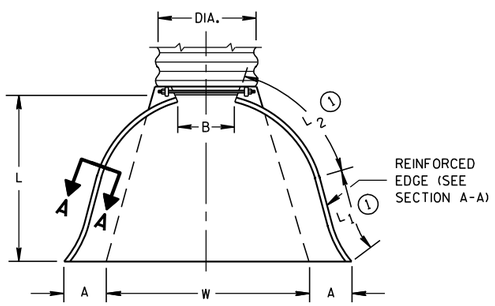

PLAN VIEW

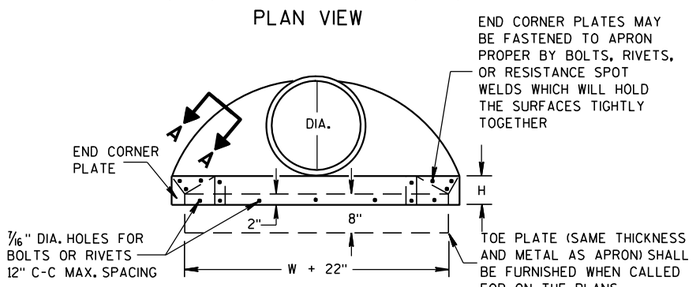

END VIEW

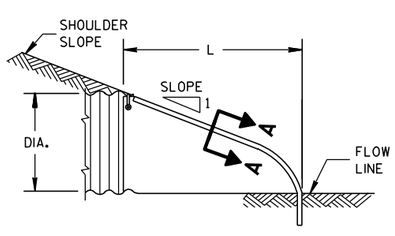

SIDE ELEVATION

METAL ENDWALLS

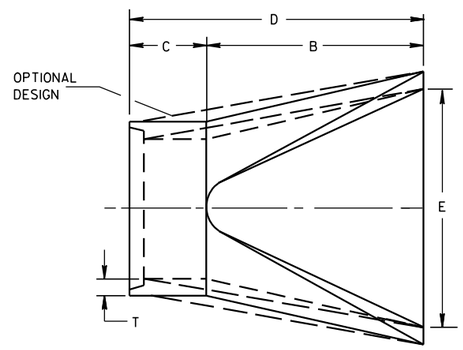

PLAN

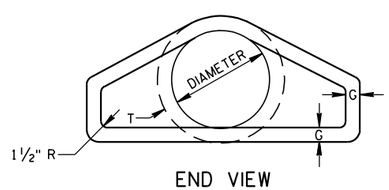

END VIEW

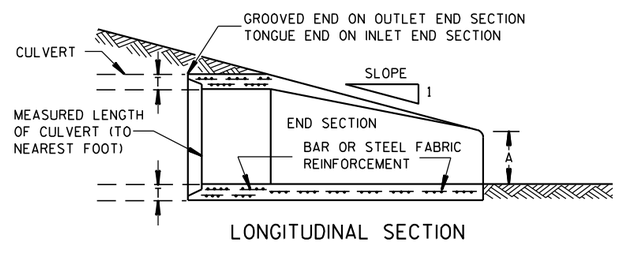

LONGITUDINAL SECTION

CONCRETE ENDWALLS

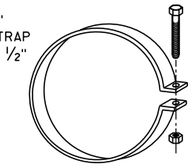

ALTERNATE FOR TYPE 1 CONNECTION

END SECTION CONNECTOR STRAP

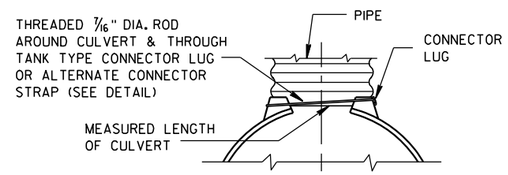

TYPE 1
FOR 12" THRU 24" CORR. PIPE

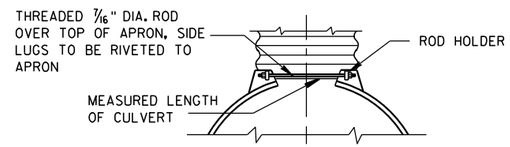

TYPE 2
FOR 30" THRU 96" CORR. PIPE

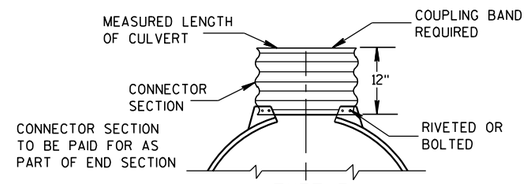

TYPE 3
FOR 42" THRU 96" CORR. PIPE

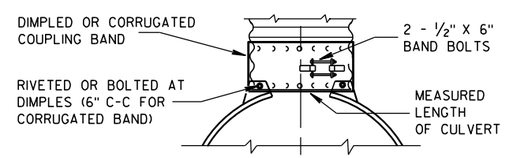

TYPE 5
ALTERNATE FOR:
ALL SIZES CORRUGATED CIRCULAR PIPE

NOTE: DIMPLED BAND FITS OVER OUTSIDE OF ENDWALL, AND CORRUGATED BAND FITS INSIDE ENDWALL. DIMPLED BAND MAY BE USED WITH HELICALLY CORRUGATED PIPE.

FOR CIRCUMFERENTIALLY CORRUGATED PIPE USE ENDWALL CONNECTION DETAILS 1, 2, 3 OR 5 AS APPLICABLE.

FOR HELICALLY CORRUGATED PIPE USE ENDWALL CONNECTION DETAILS 1, 2 OR 5.

FOR HELICALLY CORRUGATED PIPES WITH TWO CIRCUMFERENTIAL CORRUGATIONS AT EACH END USE ENDWALL CONNECTION DETAILS 1, 2 OR 3.

CONNECTION DETAILS

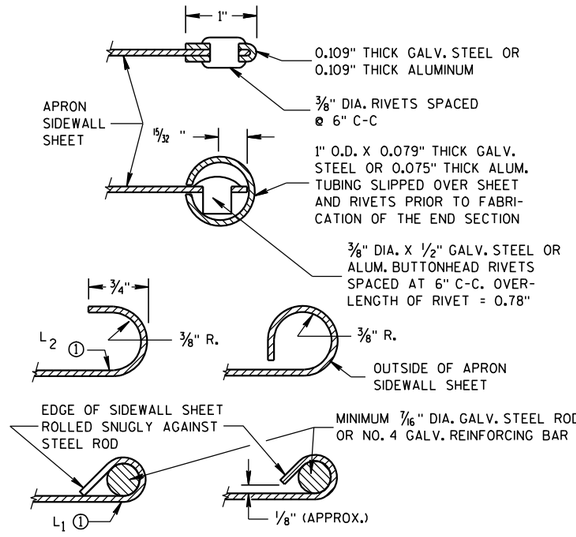

SECTION A-A

GENERAL NOTES

DETAILS OF CONSTRUCTION, MATERIALS AND WORKMANSHIP NOT SHOWN ON THIS DRAWING SHALL CONFORM TO THE PERTINENT REQUIREMENTS OF THE STANDARD SPECIFICATIONS AND THE APPLICABLE SPECIAL PROVISIONS.

CONCRETE CULVERT ENDWALLS MAY NOT BE USED WITH GALVANIZED STEEL OR ALUMINUM CULVERT PIPE OR VISE VERSA. GALVANIZED STEEL OR ALUMINUM ENDWALLS SHALL NORMALLY BE INSTALLED ON CULVERT PIPE OF THE SAME METAL.

ALL THREE PIECE STEEL APRON ENDWALLS FOR 60" DIAMETER PIPE AND LARGER SHALL HAVE 0.109" SIDES AND 0.138" CENTER PANELS. ALL THREE PIECE ALUMINUM APRON ENDWALLS FOR 60" DIAMETER PIPE AND LARGER SHALL HAVE 0.105" SIDES AND 0.134" CENTER PANELS. THE WIDTH OF CENTER PANELS SHALL BE GREATER THAN 20 PERCENT OF THE PIPE PERIMETER.

LAP SEAMS SHALL BE TIGHTLY JOINED BY GALVANIZED RIVETS OR BOLTS FOR STEEL UNITS AND ALUMINUM RIVETS AND BOLTS FOR ALUMINUM UNITS. FOR THE 60" THROUGH 96" DIAMETER APRON ENDWALL SIZES, THE REINFORCED EDGES AND CENTER PANEL SEAMS SHALL BE FURTHER REINFORCED WITH GALVANIZED STEEL OR ALUMINUM STIFFENER ANGLES. THE ANGLES SHALL BE ATTACHED BY GALVANIZED NUTS AND BOLTS FOR STEEL UNITS AND ALUMINUM NUTS AND BOLTS FOR ALUMINUM UNITS.

WHERE TWO OR MORE PIPES WITH APRON ENDWALLS ARE LAID ADJACENT TO EACH OTHER, THEY SHALL BE SEPARATED BY A DISTANCE SUFFICIENT TO PROVIDE A MINIMUM CLEARANCE OF 6 INCHES BETWEEN APRON ENDWALLS.

① FOR PIPE SIZES UP TO 60" DIAMETER, A 180° ROLLED EDGE MAY BE USED INSTEAD OF STEEL ROD REINFORCEMENT. SEE SECTION A-A.

APRON ENDWALLS FOR CULVERT PIPE

STATE OF WISCONSIN
DEPARTMENT OF TRANSPORTATION

APPROVED
11/30/94 — DATE
/S/ Rory L. Rhinesmith — CHIEF ROADWAY DEVELOPMENT ENGINEER
FHWA

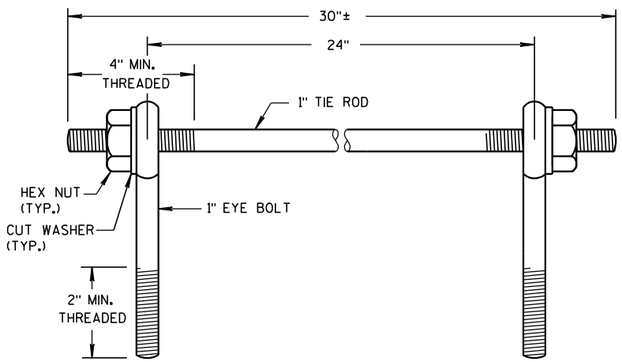

EYE BOLTS AND TIE ROD

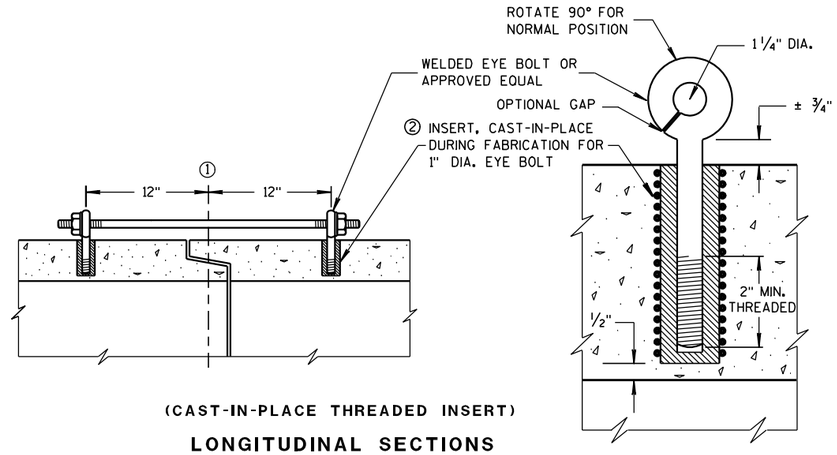

(CAST-IN-PLACE THREADED INSERT)

LONGITUDINAL SECTIONS

EYE BOLT AND TIE ROD ASSEMBLY (ALTERNATE NO. 1)

GENERAL NOTES

DETAILS OF CONSTRUCTION, MATERIALS, AND WORKMANSHIP NOT SHOWN ON THIS DRAWING SHALL CONFORM TO THE PERTINENT REQUIREMENTS OF THE STANDARD SPECIFICATIONS AND APPLICABLE SPECIAL PROVISIONS.

CONCRETE CULVERT AND STORM SEWER PIPE SHALL BE TIED TOGETHER IN THE MANNER ILLUSTRATED BY THIS DETAIL AT LOCATIONS DESIGNATED IN THE STANDARD SPECIFICATIONS AND THE PLAN. THE CONTRACTOR MAY USE EITHER ALTERNATE 1, 2 OR 3 FOR DRAINAGE STRUCTURES. ONLY ALTERNATE 1 AND 3 MAY BE USED FOR CATTLE PASSES, UNLESS OTHERWISE STATED IN THE CONTRACT. THE MATERIALS, FABRICATION AND WORK NECESSARY TO TIE THE PIPE BY THIS DETAIL WILL BE CONSIDERED INCIDENTAL TO THE PIPE AND APRON ENDWALLS IF REQUIRED.

DETAILED DRAWINGS FOR PROPOSED ALTERNATE DESIGNS FOR JOINT TIES SHALL BE SUBMITTED TO THE ENGINEER FOR APPROVAL.

JOINT TIES TO BE HOT-DIP GALVANIZED PER ASTM A 153.

① ℄ OF TONGUE AND GROOVE OR BELL AND SPIGOT JOINTS.

② THE INSIDE OF THE THREADED INSERTS SHALL BE CLEAN TO ALLOW THE INSERTION OF THREADED EYE BOLTS.

③ HOLES SHALL BE CAST-IN-PLACE OR DRILLED 12 INCHES FROM ℄ OF TONGUE AND GROOVE.

④ BOLT PROJECTION INSIDE OF PIPE SHALL NOT EXCEED 2 INCHES.

⑤ OPENING TO BE ROD DIAMETER PLUS 1 INCH.

⑥ LENGTH ADEQUATE TO EXTEND TO WITHIN 1/2 INCH OF THE INNER SURFACE OF THE PIPE.

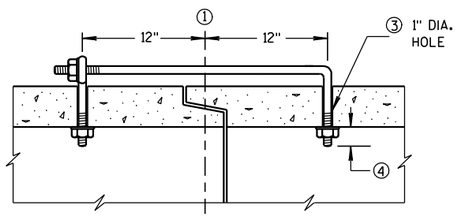

(TONGUE & GROOVE PIPE)

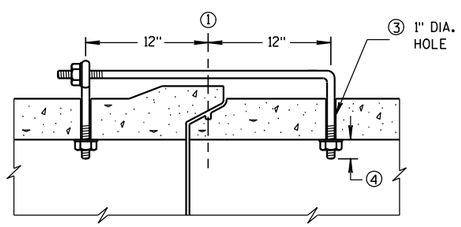

(MODIFIED BELL PIPE)

LONGITUDINAL SECTION

EYE BOLT DIMENSION TABLE

PIPE SIZE	L = LENGTH	
	TONGUE & GROOVE PIPE	MODIFIED BELL PIPE
18" TO 24"	4 1/2"	6 1/4"
30"	5"	7"
36"	5 1/2"	7"
42"	6"	
48"	6 1/2"	
60"	7 1/2"	
66"	8"	

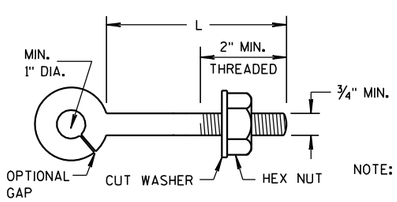

EYE BOLT

NOTE:

NOTE: TWO EYE BOLTS MAY BE USED WITH A 30" LONG THREADED ROD IN LIEU OF THE 90° BENT TIE ROD.

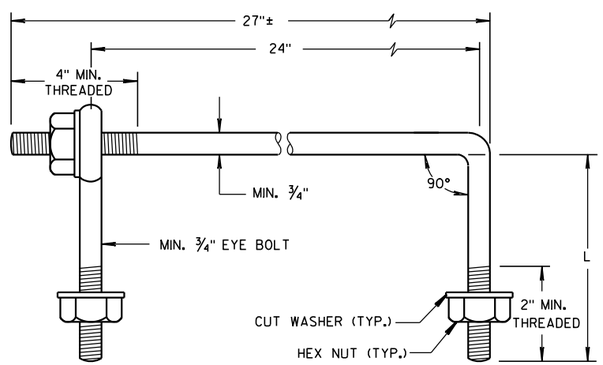

EYE BOLT AND TIE ROD

(JOINT TIES FOR 18" TO 66" DIA. CONCRETE PIPE)

EYE BOLT AND TIE ROD ASSEMBLY (ALTERNATE NO. 2)

ADJUSTABLE TIE ROD TABLE

PIPE DIAMETER	TIE ROD DIAMETER	D	L_1	N
12-60	5/8	5/8	5	1/2
66-84	3/4	3/4	5	1/2
90-108	1	1	7	1 7/16

DIMENSIONS SHOWN ARE IN INCHES

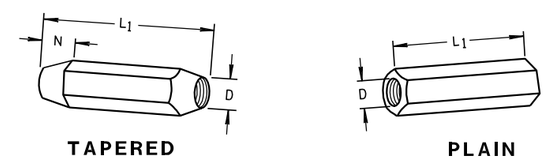

TAPERED PLAIN

RIGHT AND LEFT THREADS

SLEEVE NUTS

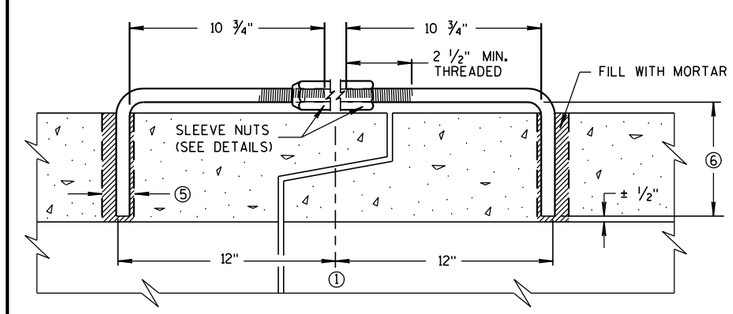

LONGITUDINAL SECTION

(JOINT TIES FOR 12" TO 108" DIA. CONCRETE PIPE)

ADJUSTABLE TIE ROD (ALTERNATE NO. 3)

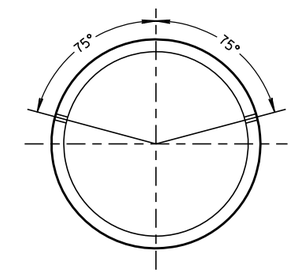

PLACEMENT OF (2) CAST-IN-PLACE INSERTS OR HOLES DURING FABRICATION FOR PIPE SECTIONS REQUIRING TIE RODS

TRANSVERSE SECTION

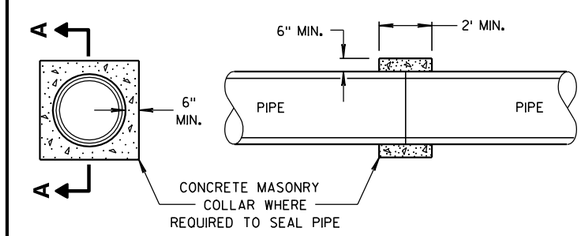

SECTION A-A

CONCRETE COLLAR DETAIL

JOINT TIES FOR CONCRETE PIPE AND CONCRETE COLLAR DETAIL

STATE OF WISCONSIN
DEPARTMENT OF TRANSPORTATION

APPROVED
6/5/2012 /S/ Jerry H. Zogg
DATE ROADWAY STANDARDS DEVELOPMENT ENGINEER
FHWA

6

6

S.D.D. 8 F 4-7

S.D.D. 8 F 4-7

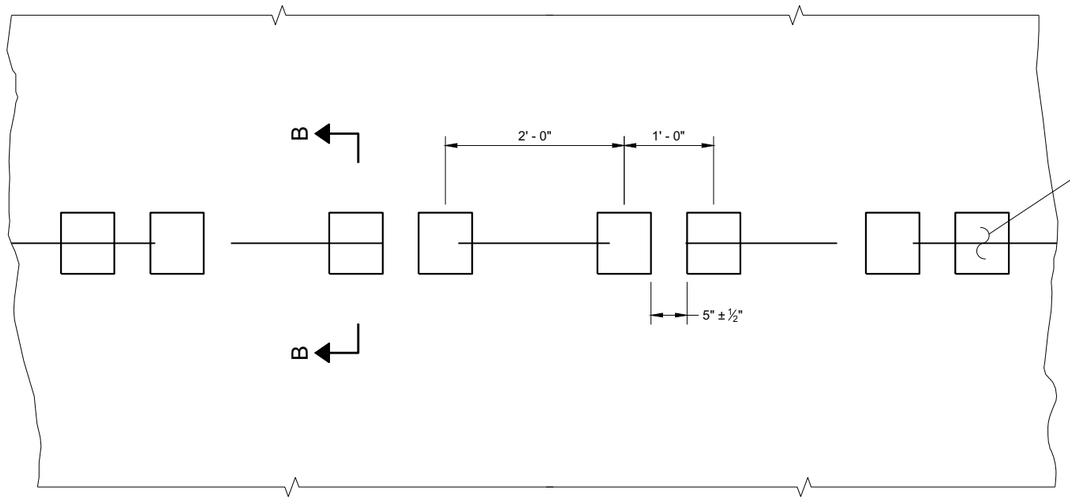

PLAN VIEW
SHOULDER WITH GROOVES

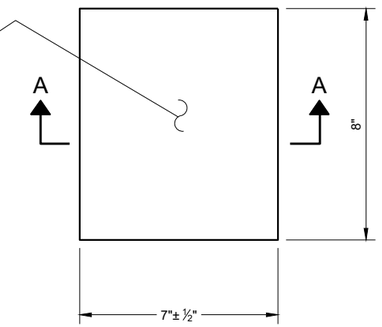

PLAN VIEW
(SINGLE GROOVE)

PLACEMENT DETAIL FOR TYPE 1 MILLED RUMBLE STRIP

GENERAL NOTES

DETAILS OF CONSTRUCTION NO SHOWN ON THIS DRAWING SHALL CONFORM TO THE PERTINENT REQUIREMENTS OF THE STANDARD SPECIFICATIONS AND APPLICABLE SPECIAL PROVISIONS.

DO NOT MILL CENTERLINE GROOVES THROUGH ANY INTERSECTION, MARKED CROSSWALK, NON-MOTORIZED PATH CROSSING, OR SNOWMOBILE CROSSING.

INSTALL PAVEMENT MARKING AFTER THE GROOVES ARE INSTALLED.

SEE SIGNING PLAN FOR SIGN REQUIREMENTS THAT MAY BE NEEDED.

(1) CENTERLINE GROOVES MAY BE OMITTED IN AREAS WITH HIGH CONCENTRATIONS OF DRIVEWAYS. WHEN DIRECTED BY THE ENGINEER.

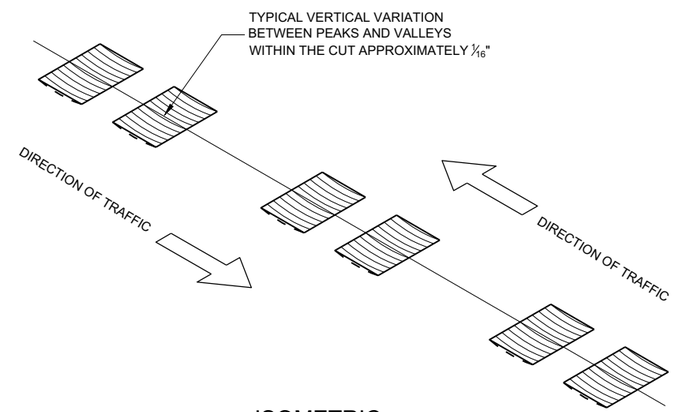

ISOMETRIC

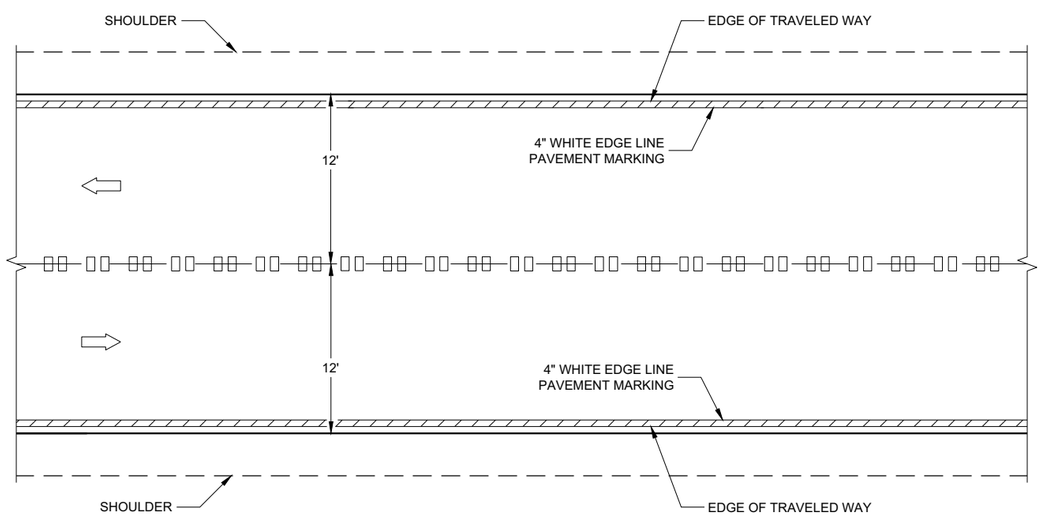

CENTERLINE GROOVES ON TWO-WAY ROADWAYS

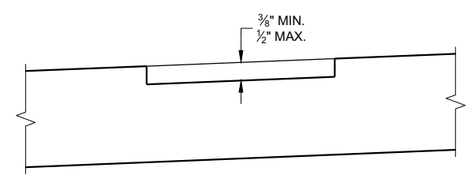

SECTION B - B
SUPERELEVATED ROADWAY

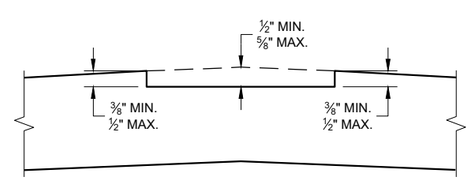

SECTION B - B
CROWNED ROADWAY

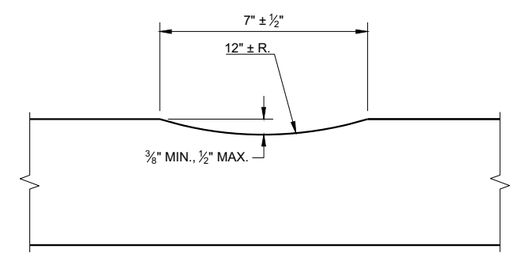

SECTION A - A

2-LANE RURAL
CENTER LINE RUMBLE STRIP, MILLING

STATE OF WISCONSIN
DEPARTMENT OF TRANSPORTAT

6

6

SDD 13A11 - 03a

SDD 13A11 - 03a

GENERAL NOTES

1. CENTERLINE GROOVES MAY BE OMITTED IN AREAS WITH HIGH CONCENTRATIONS OF DRIVEWAYS. WHEN DIRECTED BY THE ENGINEER.

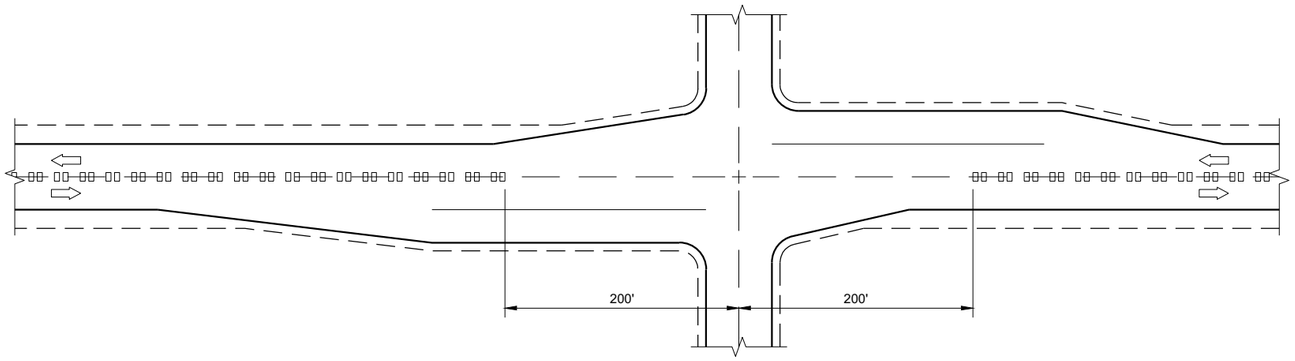

CENTERLINE GROOVES AT INTERSECTIONS

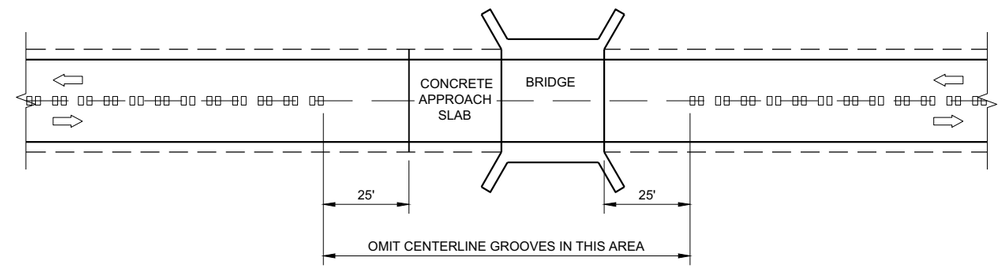

CENTERLINE GROOVES AT BRIDGES

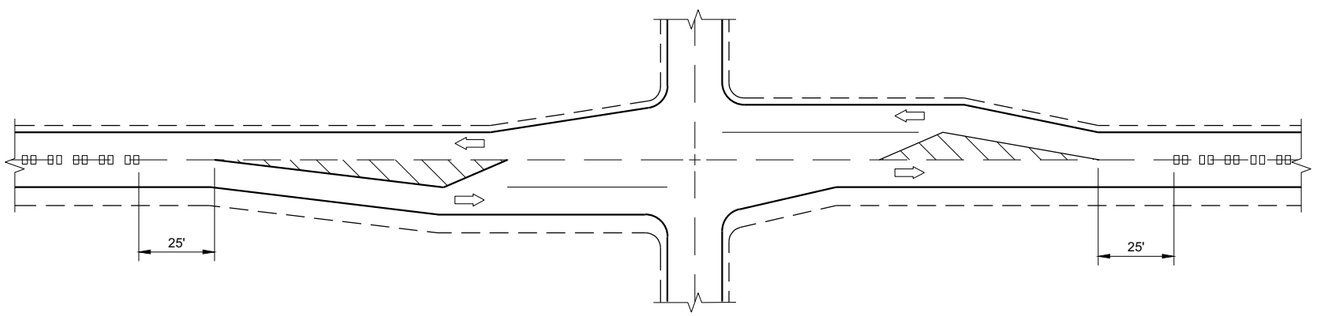

CENTERLINE GROOVES AT INTERSECTIONS (WITH LEFT TURN LANES)

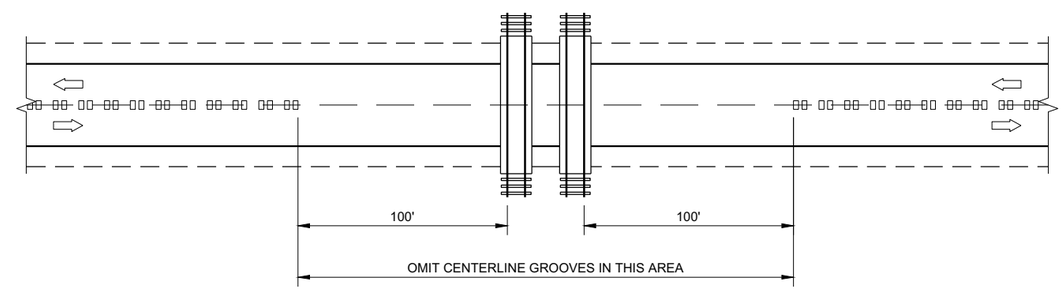

CENTERLINE GROOVES AT RAILROADS

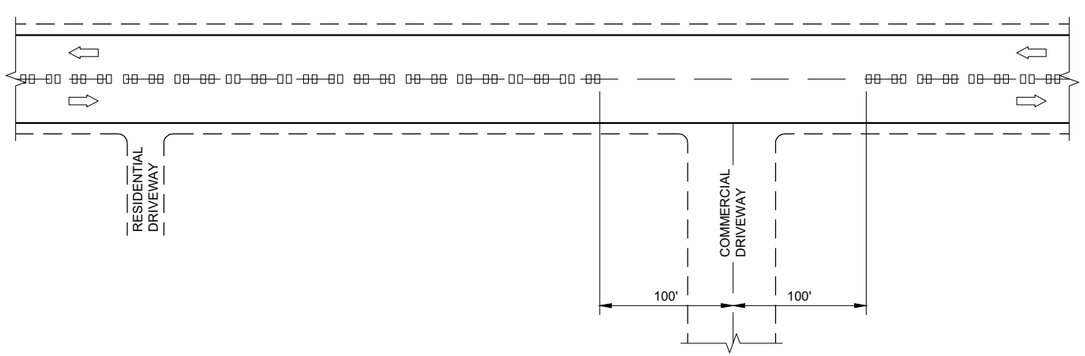

CENTERLINE GROOVES AT DRIVEWAYS (1)

6

6

SDD 13A11 - 03b

SDD 13A11 - 03b

2-LANE RURAL CENTERLINE RUMBLE STRIP, MILLING

STATE OF WISCONSIN
DEPARTMENT OF TRANSPORTATION

APPROVED

7/2018 — DATE

/S/ Rodney Taylor — ROADWAY STANDARDS DEVE ENGINEER

FHWA

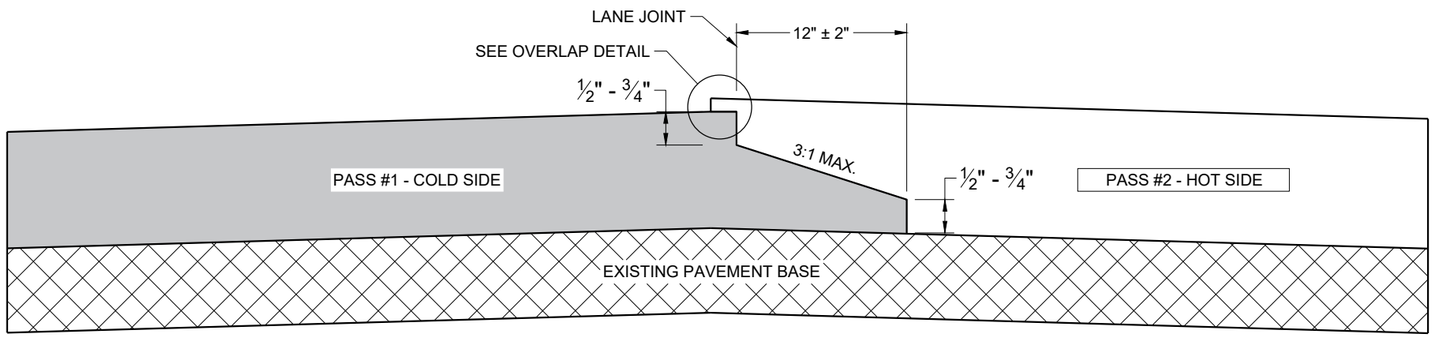

TYPICAL PAVEMENT CROSS SECTION
NOTCHED WEDGE JOINT

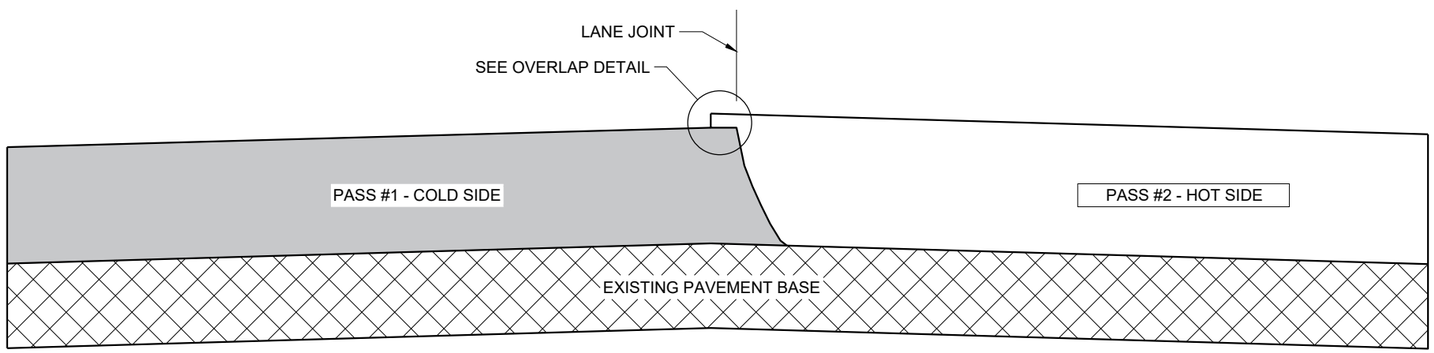

TYPICAL PAVEMENT CROSS SECTION
VERTICAL JOINT

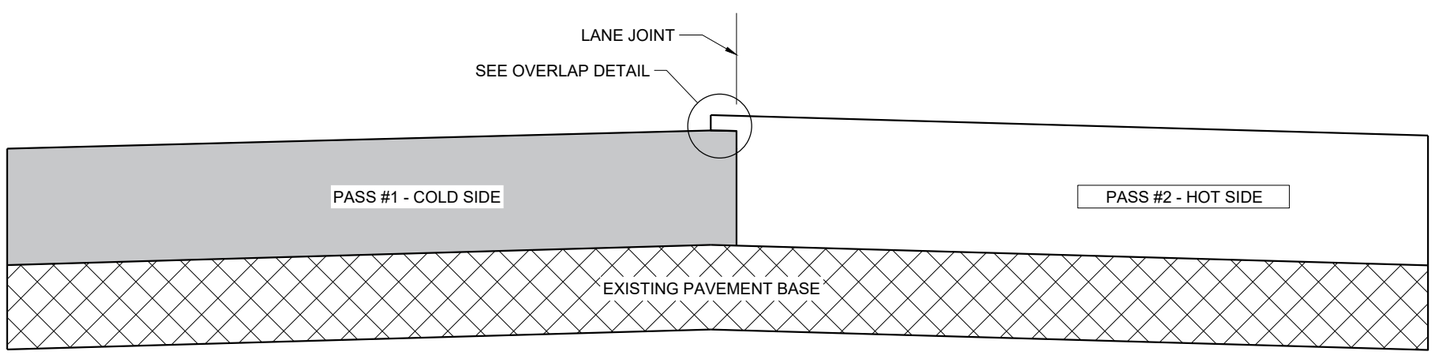

TYPICAL PAVEMENT CROSS SECTION
VERTICAL JOINT (MILLED)

GENERAL NOTES

IN ADDITION TO THE DETAILS PROVIDED IN THIS DRAWING, CONFORM TO STANDARD SPECIFICATION 450.3.2.8 FOR WHEN A NOTCHED WEDGE JOINT IS REQUIRED AND FOR GENERAL JOINT CONSTRUCTION REQUIREMENTS.

FOR ALL LONGITUDINAL JOINTS, ENSURE THE PAVER SCREED OVERLAPS THE PREVIOUSLY PLACED PAVEMENT BY 1" ± 0.5" AND THE HOT SIDE OF THE JOINT REMAINS HIGHER THAN THE COLD SIDE BY APPROXIMATELY 0.1" AFTER FINAL COMPACTION. (IT WILL BE FLUSH WHEN PAVING IN ECHELON.)

ONLY REMOVE THE LONGITUDINAL NOTCHED WEDGE JOINT FOR SMA PAVEMENT OR AS DIRECTED BY THE ENGINEER TO ADDRESS SPECIFIC LENGTHS OF JOINT DAMAGED BY TRAFFIC.

WHEN MILLING BACK OR REMOVING ANY LONGITUDINAL JOINT, LIMIT THE MATERIAL REMOVED TO 2" FROM THE TOP NOTCH OR FROM THE VERTICAL JOINT EDGE ON THE COLD SIDE OF THE JOINT.

USE LONGITUDINAL MILLED JOINT AS PLANS SHOW OR THE AS THE ENGINEER DIRECTS.

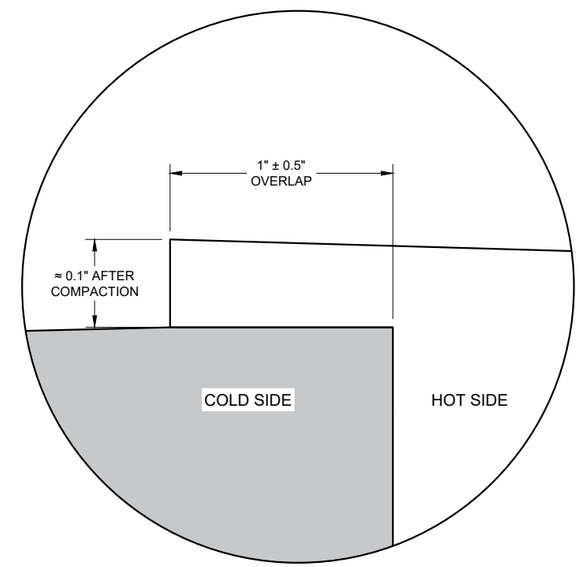

OVERLAP DETAIL (TYPICAL)

6

6

SDD 13C19 - 03

SDD 13C19 - 03

HMA LONGITUDINAL JOINTS

STATE OF WISCONSIN
DEPARTMENT OF TRANSPORTATION

APPROVED
November 2020 /S/ Steven Hefel
DATE HMA PAVEMENT ENGIN

FHWA

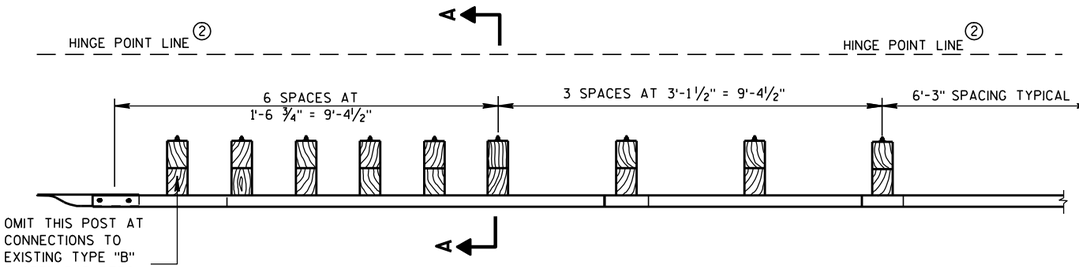

PLAN VIEW

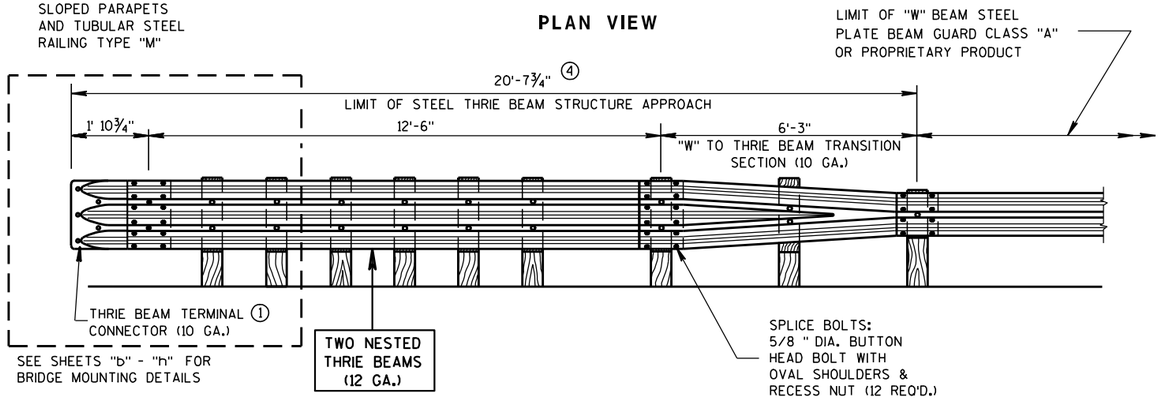

FRONT VIEW

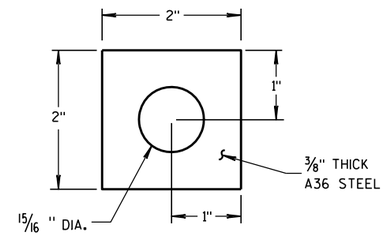

PLATE WASHER DETAIL

GENERAL NOTES

BOLT THE THRIE BEAM TO ALL POSTS AND BLOCKOUTS. DRILL OR PUNCH BOLT HOLES IN THE BEAM IF THE POST SPACING IS LESS THAN 6'-3".

DO NOT USE STEEL POSTS AND NOTCHED PLASTIC BLOCKOUTS IN THE STEEL THRIE BEAM STRUCTURAL APPROACH AND THE TRANSITION SECTION OF STEEL PLATE BEAM GUARD, CLASS "A" INSTALLATIONS.

IF ROCK IS ENCOUNTERED, REMOVE ROCK TO FULL DEPTH OF POST PLUS 2 1/2", AND 12" DIAMETER AROUND POST. SEE 14B15 FOR MORE DETAILS.

① BRIDGE RAILING TYPE "W" DOES NOT REQUIRE A TERMINAL CONNECTOR.

② MINIMUM EMBEDMENT SHALL BE 4'-0". WHERE EXISTING CONDITIONS DO NOT PERMIT THE APPROPRIATE EARTHWORK SHOWN ON THE PLAN TYPICAL SECTIONS OR DETAILS, THE ENGINEER MAY ALLOW THE REDUCTION OR ELIMINATION OF THE 2 FOOT DISTANCE TO THE HINGE POINT. OTHERWISE BUILD AS THE PLAN SHOWS OR AS THE ENGINEER DIRECTS. IF THE 2 FOOT DISTANCE TO THE HINGE POINT IS REDUCED OR ELIMINATED, INCREASE THE POST EMBEDMENT DEPTH TO 4'-6" OR MORE.

③ POST BOLTS ARE 5/8" DIAMETER ASTM A307 BUTTON HEAD BOLT. A POST BOLT REQUIRES A 5/8" DIAMETER A563A DOUBLE RECESSED (DR) HEAVY HEX AND A 5/8" DIAMETER F844 FLAT WASHER. LENGTH OF POST BOLT MAY VARY.

④ ALL WOOD POSTS MUST BE 6" X 8" AND AT LEAST 7'-0" LONG.

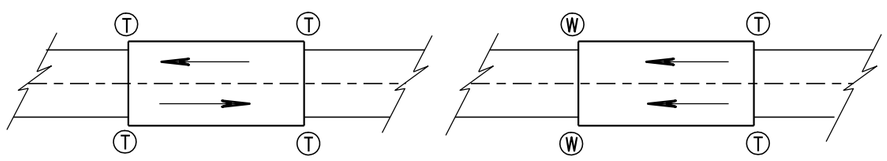

TWO WAY TRAFFIC

ONE WAY TRAFFIC

Ⓣ THRIE BEAM CONNECTION

Ⓦ W-BEAM CONNECTION WHEN REQUIRED

TYPICAL LOCATIONS OF THRIE BEAM AND W-BEAM CONNECTIONS TO BRIDGE

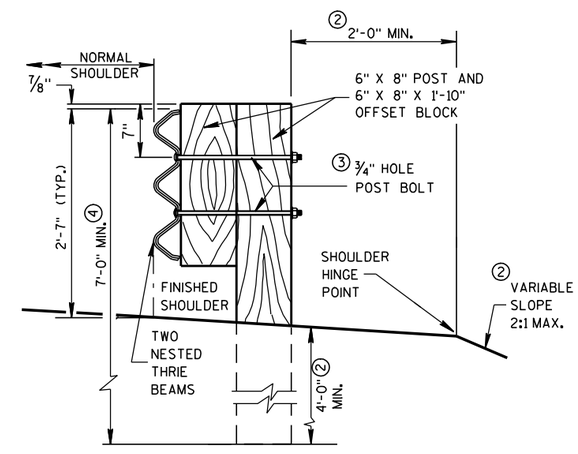

SECTION A-A

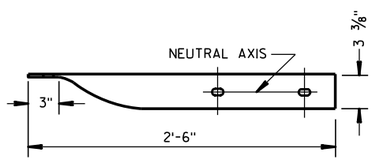

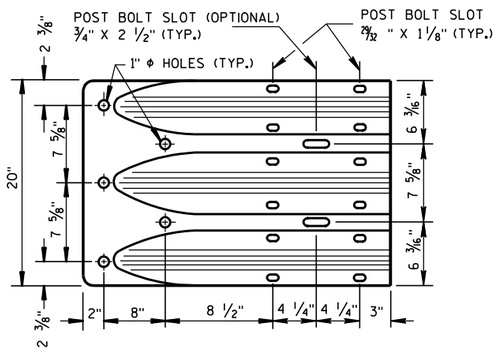

THRIE BEAM TERMINAL CONNECTOR

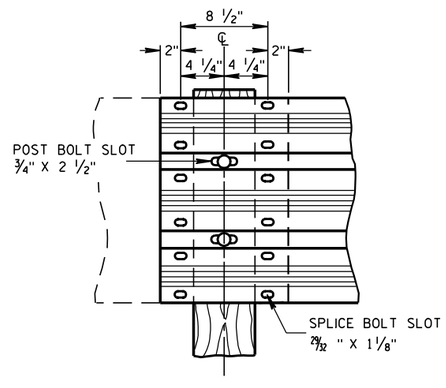

THRIE BEAM SPLICE

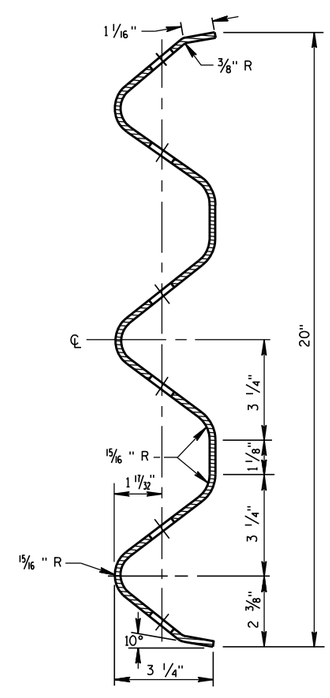

SECTION THRU THRIE BEAM RAIL ELEMENT

STEEL THRIE BEAM STRUCTURE APPROACH

STATE OF WISCONSIN
DEPARTMENT OF TRANSPORTATION

APPROVED

8/31/2012 — DATE

/S/ Jerry H. Zogg — ROADWAY STANDARDS DEVELOPMENT ENGINEER

FHWA

6

6

S.D.D. 14 B 20-11a

S.D.D. 14 B 20-11a

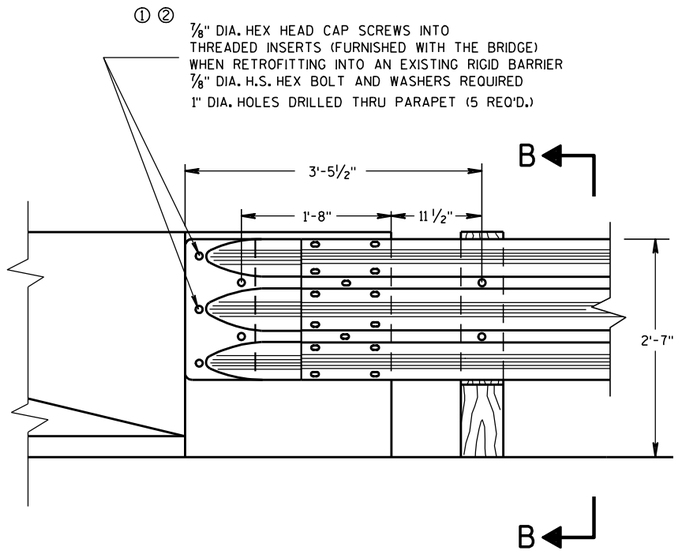

FRONT VIEW

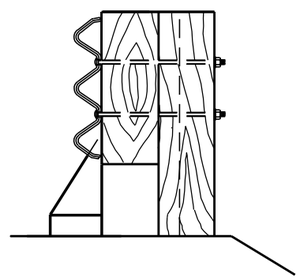

SECTION B-B

THRIE BEAM CONNECTION TO BRIDGE PARAPET WITH SQUARE ENDS

GENERAL NOTES

THESE ARE TYPICAL CONNECTION DETAILS. ADJUST THE POSTION OF CONNECTIONS TO EXISTING BRIDGES TO FIT THE ACTUAL BRIDGE AND SITE DIMENSIONS.

BOLTS, NUTS AND WASHERS SHALL CONFORM TO ASTM A325, A449 AND GALVANIZED PER STANDARD SPECIFICATIONS 614.

① DRILLING BOLT HOLES THROUGH THE PARAPET, BOLTS, NUTS, WASHERS AND REPAIRING DAMAGED CONCRETE ARE INCIDENTAL TO THE CONTRACT.

② BOLTS MAY BE A325 BOLTS OR A449 BOLTS. BOLT LENGTH AND THREADING LENGTH ARE TO ALLOW FOR A TIGHT CONNECTION BETWEEN RIGID BARRIER AND THRIE BEAM CONNECTION PLATE. CONTRACTOR IS TO FIELD VERIFY BOLT LENGTH AND THREAD LENGTH. ONE ROUND WASHER REQUIRED BETWEEN BOLT HEAD AND THRIE BEAM TERMINAL CONNECTOR. BOLTS THAT EXTEND THROUGH THE PARAPET AND OUT THE BACK FACE REQUIRE A HARDENED ROUND STEEL WASHER THAT IS 2" O.D. X ⅝" THICK AND ONE PLATE WASHER. REPAIR ANY DAMAGED CONCRETE FROM BOLT INSTALLATION.

③ THE RECESS FOR A W-BEAM CONNECTION, WHICH EXISTS ON SOME PARAPETS OF THIS TYPE, SHALL BE FILLED WITH A TREATED TIMBER BLOCKOUT. BLOCKOUT SIZE IS 1'-6" X 2'-0" X 3½".

④ W6 X 9 OR W6 X 8.5 STEEL POSTS AND NOTCHED PLASTIC BLOCKOUTS ARE ACCEPTABLE ALTERNATIVES FOR 6" X 8" WOOD POST WITH WOOD OR PLASTIC BLOCKOUTS. USE APPROVED NOTCHED PLASTIC BLOCKOUTS WITH STEEL POSTS.

DO NOT USE STEEL POSTS AND NOTCHED PLASTIC BLOCKOUTS IN THE STEEL THRIE BEAM STRUCTURAL APPROACH AND THE TRANSITION SECTION OF STEEL PLATE BEAM GUARD, CLASS "A" INSTALLATIONS.

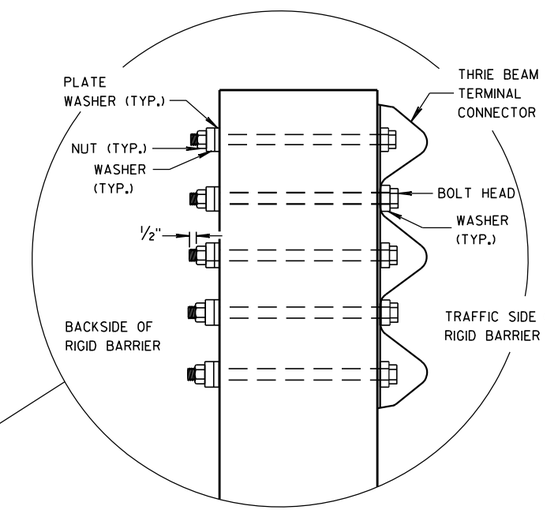

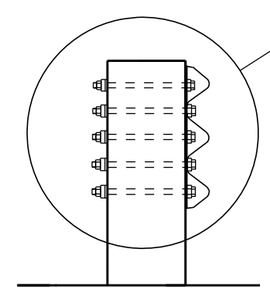

SECTION C-C

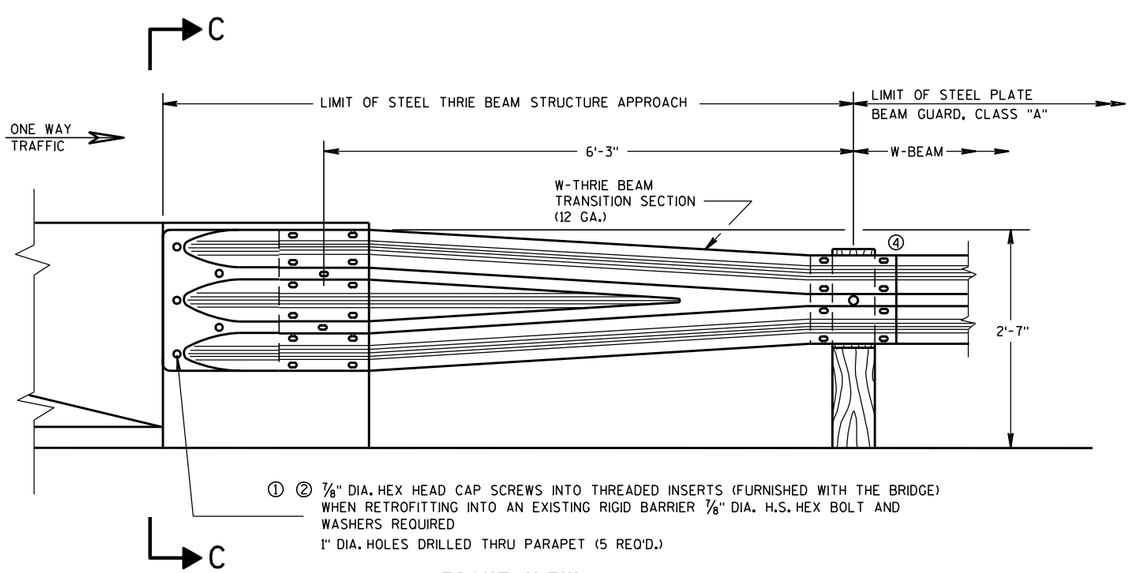

FRONT VIEW

W BEAM TRANSITION AND CONNECTION TO BRIDGE PARAPETS WITH SQUARE ENDS

(USE ONLY ON THE TRAFFIC EXIT END OF ONE WAY BRIDGES)

STEEL THRIE BEAM STRUCTURE APPROACH, CONNECTION TO SQUARE END PARAPETS

STATE OF WISCONSIN
DEPARTMENT OF TRANSPORTATION

APPROVED

8/31/2012	/S/ Jerry H. Zogg
DATE	ROADWAY STANDARDS DEVELOPMENT ENGINEER

FHWA

GENERAL NOTES

THESE ARE TYPICAL CONNECTION DETAILS. ADJUST THE POSTION OF CONNECTIONS TO EXISTING BRIDGES TO FIT THE ACTUAL BRIDGE AND SITE DIMENSIONS.

BOLTS, NUTS AND WASHERS SHALL CONFORM TO ASTM A325, A449 AND GALVANIZED PER STANDARD SPECIFICATIONS 614.

① DRILLING BOLT HOLES THROUGH THE PARAPET, BOLTS, NUTS, WASHERS AND REPAIRING DAMAGED CONCRETE ARE INCIDENTAL TO THE CONTRACT.

② BOLTS MAY BE A325 BOLTS OR A449 BOLTS. BOLT LENGTH AND THREADING LENGTH ARE TO ALLOW FOR A TIGHT CONNECTION BETWEEN RIGID BARRIER AND THRIE BEAM CONNECTION PLATE. CONTRACTOR IS TO FIELD VERIFY BOLT LENGTH AND THREAD LENGTH. ONE ROUND WASHER REQUIRED BETWEEN BOLT HEAD AND THRIE BEAM TERMINAL CONNECTOR. BOLTS THAT EXTEND THROUGH THE PARAPET AND OUT THE BACK FACE REQUIRE A HARDENED ROUND STEEL WASHER THAT IS 2" O.D. X 5/8" THICK AND ONE PLATE WASHER. REPAIR ANY DAMAGED CONCRETE FROM BOLT INSTALLATION.

③ THE RECESS FOR A W-BEAM CONNECTION, WHICH EXISTS ON SOME PARAPETS OF THIS TYPE, SHALL BE FILLED WITH A TREATED TIMBER BLOCKOUT. BLOCKOUT SIZE IS 1'-6" X 2'-0" X 3 1/2".

④ W6 X 9 OR W6 X 8.5 STEEL POSTS AND NOTCHED PLASTIC BLOCKOUTS ARE ACCEPTABLE ALTERNATIVES FOR 6" X 8" WOOD POST WITH WOOD OR PLASTIC BLOCKOUTS. USE APPROVED NOTCHED PLASTIC BLOCKOUTS WITH STEEL POSTS.

⑤ BOLT, NUT AND WASHERS NOT REQUIRED FOR THIS LOCATION WHEN RETROFITTING AN EXISTING PAPAPET AND THE HOLE IS EITHER ABOVE PARAPET OR WITHIN 4 INCHES OF THE EDGE OF PARAPET.

DO NOT USE STEEL POSTS AND NOTCHED PLASTIC BLOCKOUTS IN THE STEEL THRIE BEAM STRUCTURAL APPROACH AND THE TRANSITION SECTION OF STEEL PLATE BEAM GUARD, CLASS "A" INSTALLATIONS.

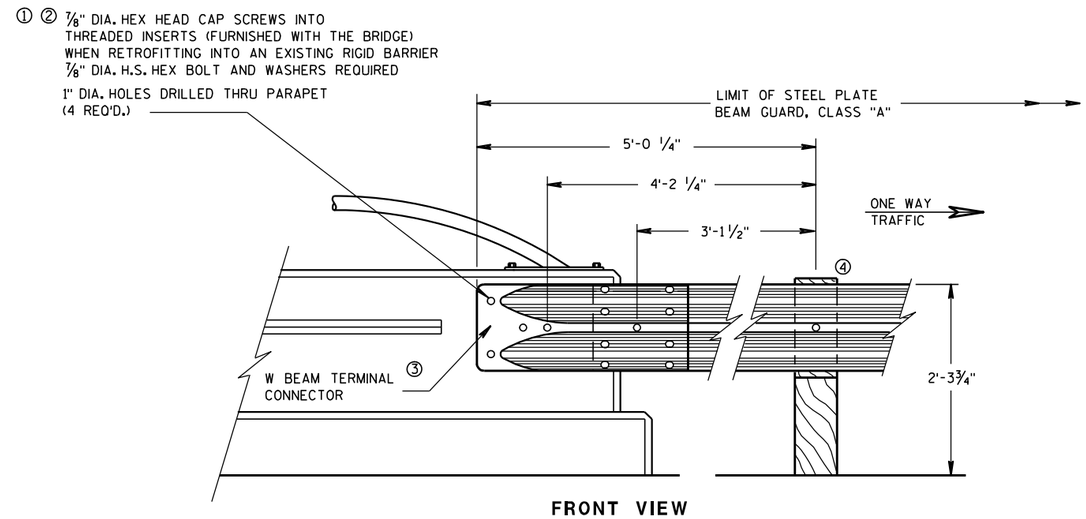

FRONT VIEW

W BEAM CONNECTION TO VERTICAL FACE PARAPET

(USE ONLY ON THE TRAFFIC EXIT END OF ONE WAY BRIDGES)

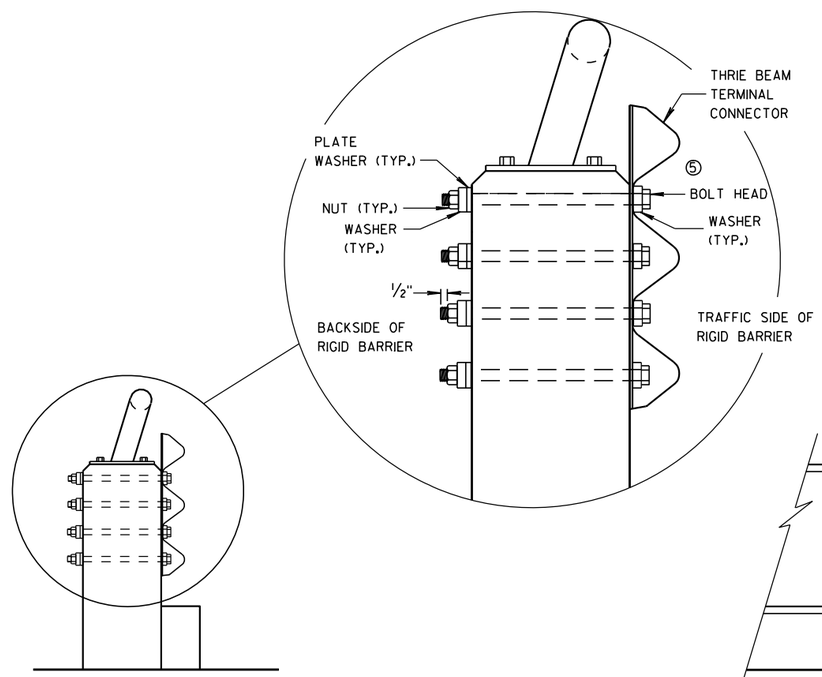

SECTION E-E

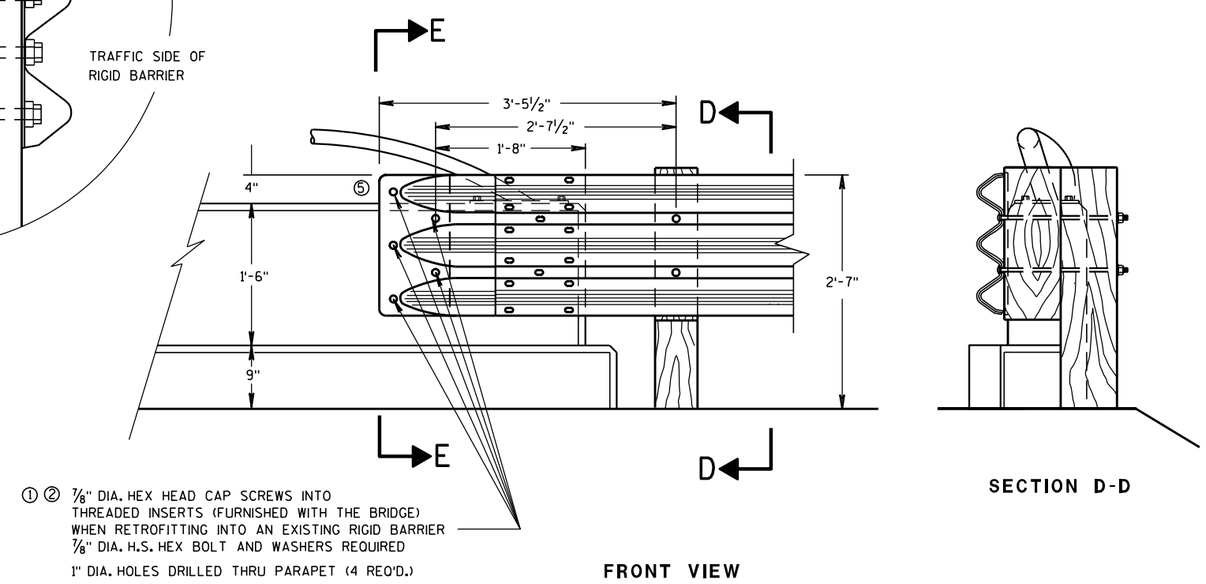

FRONT VIEW

SECTION D-D

THRIE BEAM CONNECTION TO VERTICAL FACED PARAPETS

STEEL THRIE BEAM STRUCTURE APPROACH, CONNECTION TO VERTICAL FACED PARAPETS	
STATE OF WISCONSIN DEPARTMENT OF TRANSPORTATION	
APPROVED 8/31/2012 DATE	/S/ Jerry H. Zogg ROADWAY STANDARDS DEVELOPMENT ENGINEER
FHWA	

6

6

S.D.D. 14 B 20-11c

S.D.D. 14 B 20-11c

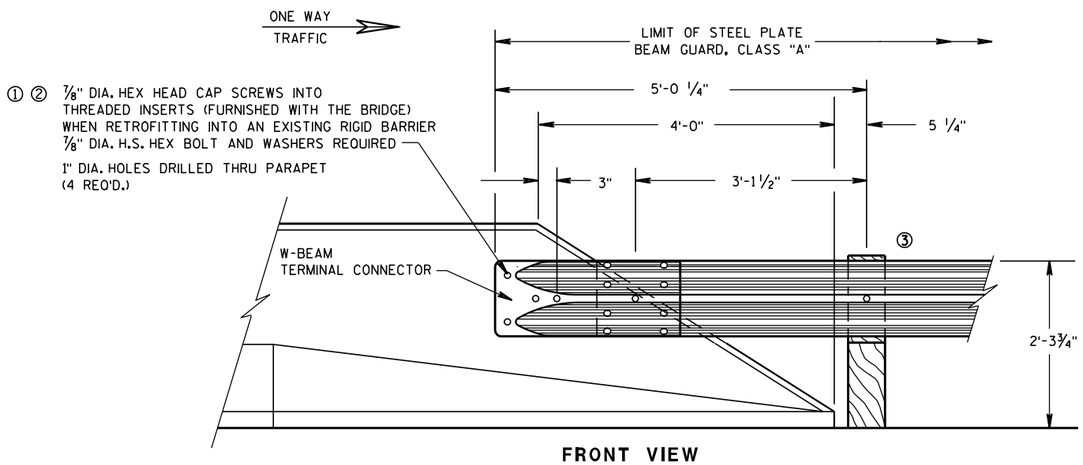

FRONT VIEW

W BEAM CONNECTION TO PARAPETS WITH SLOPED ENDS

(USE ONLY AT TRAFFIC EXIT END OF ONE WAY BRIDGE)

GENERAL NOTES

THESE ARE TYPICAL CONNECTION DETAILS. ADJUST THE POSTION OF CONNECTIONS TO EXISTING BRIDGES TO FIT THE ACTUAL BRIDGE AND SITE DIMENSIONS.

BOLTS, NUTS AND WASHERS SHALL CONFORM TO ASTM A325, A449 AND GALVANIZED PER STANDARD SPECIFICATIONS 614.

① DRILLING BOLT HOLES THROUGH THE PARAPET, BOLTS, NUTS, WASHERS AND REPAIRING DAMAGED CONCRETE ARE INCIDENTAL TO THE CONTRACT.

② BOLTS MAY BE A325 BOLTS OR A449 BOLTS. BOLT LENGTH AND THREADING LENGTH ARE TO ALLOW FOR A TIGHT CONNECTION BETWEEN RIGID BARRIER AND THRIE BEAM CONNECTION PLATE. CONTRACTOR IS TO FIELD VERIFY BOLT LENGTH AND THREAD LENGTH. ONE ROUND WASHER REQUIRED BETWEEN BOLT HEAD AND THRIE BEAM TERMINAL CONNECTOR. BOLTS THAT EXTEND THROUGH THE PARAPET AND OUT THE BACK FACE REQUIRE A HARDENED ROUND STEEL WASHER THAT IS 2" O.D. X ⅝" THICK AND ONE PLATE WASHER. REPAIR ANY DAMAGED CONCRETE FROM BOLT INSTALLATION.

③ W6 X 9 OR W6 X 8.5 STEEL POSTS AND NOTCHED PLASTIC BLOCKOUTS ARE ACCEPTABLE ALTERNATIVES FOR 6" X 8" WOOD POST WITH WOOD OR PLASTIC BLOCKOUTS. USE APPROVED NOTCHED PLASTIC BLOCKOUTS WITH STEEL POSTS.

DO NOT USE STEEL POSTS AND NOTCHED PLASTIC BLOCKOUTS IN THE STEEL THRIE BEAM STRUCTURAL APPROACH AND THE TRANSITION SECTION OF STEEL PLATE BEAM GUARD, CLASS "A" INSTALLATIONS.

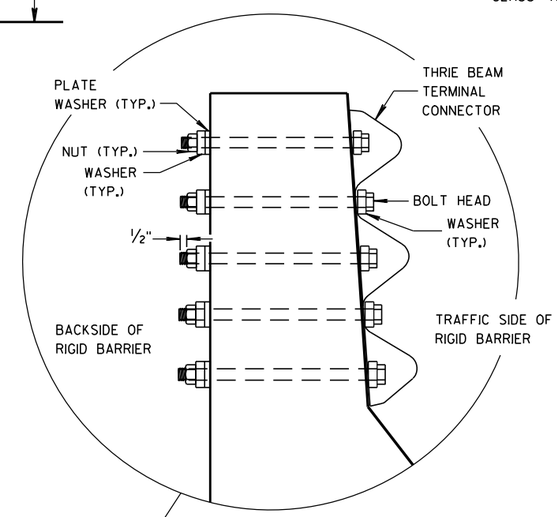

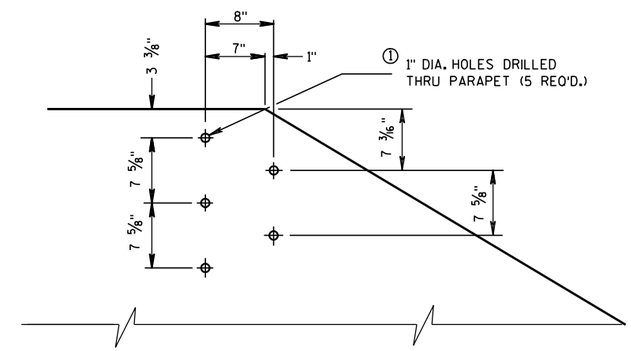

DRILL HOLE LOCATION AND PATTERN FOR THRIE BEAM CONNECTION

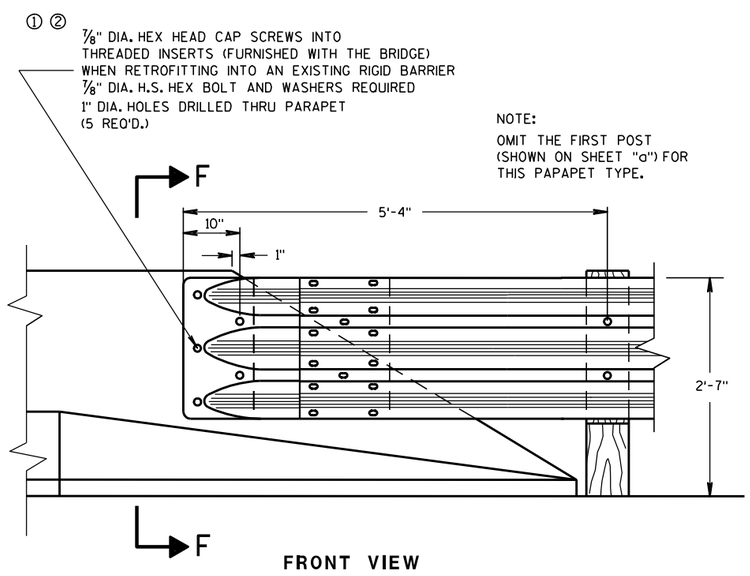

FRONT VIEW

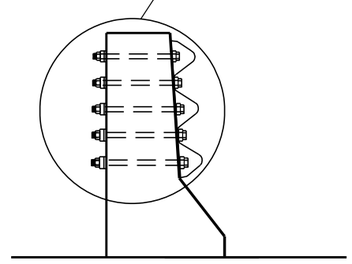

SECTION F-F

THRIE BEAM CONNECTION TO BRIDGE PARAPETS WITH SLOPED ENDS

STEEL THRIE BEAM STRUCTURE APPROACH, CONNECTION TO SLOPED END PARAPETS

STATE OF WISCONSIN
DEPARTMENT OF TRANSPORTATION

APPROVED
8/31/2012 — DATE
/S/ Jerry H. [illegible] — ROADWAY STANDARDS DEVELOPMENT ENGINEER
FHWA

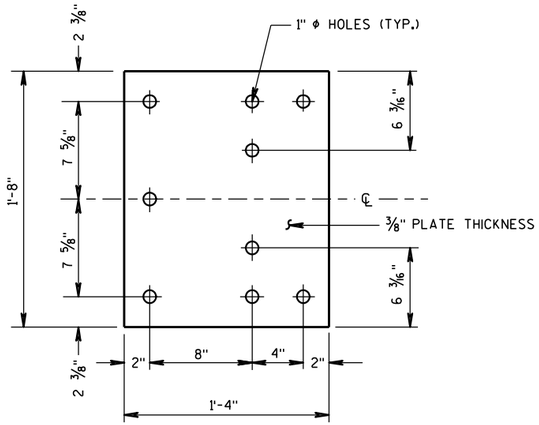

BACK-UP PLATE DETAIL

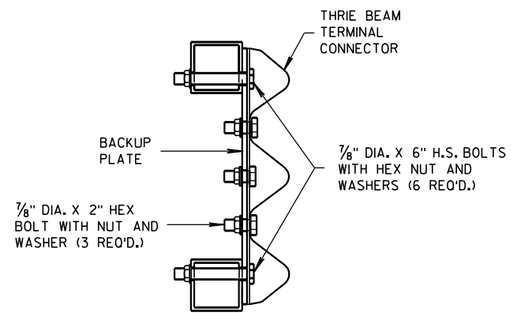

SECTION G-G

GENERAL NOTES

BOLTS, PLATES, NUTS AND WASHERS SHALL CONFORM TO THE REQUIREMENTS OF ASTM SPECIFICATION A 325 AND BE GALVANIZED IN ACCORDANCE WITH ASTM A 153.

① DRILLING BOLT HOLES THROUGH THE PARAPET, BOLTS, NUTS, WASHERS AND REPAIRING DAMAGED CONCRETE ARE INCIDENTAL TO THE CONTRACT.

② VARY THIS DIMENSION DEPENDING ON ABUTMENT TYPE, WINGWALL DETAILS, AND ANGLE OF SKEW. PLACE THE FIRST WOOD POST OFF THE BRIDGE SHALL AS CLOSE AS FEASIBLE TO THE STEEL END POST.

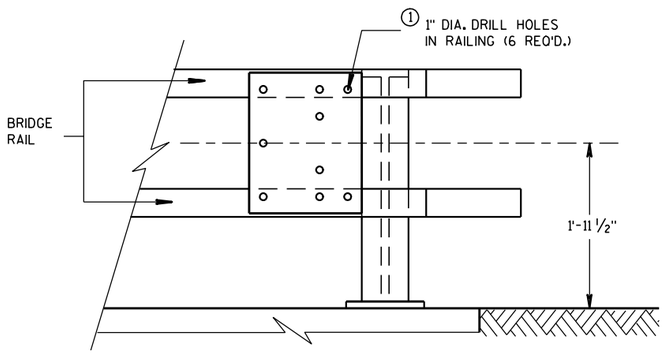

BACK-UP PLATE MOUNTING ONTO BRIDGE RAILING

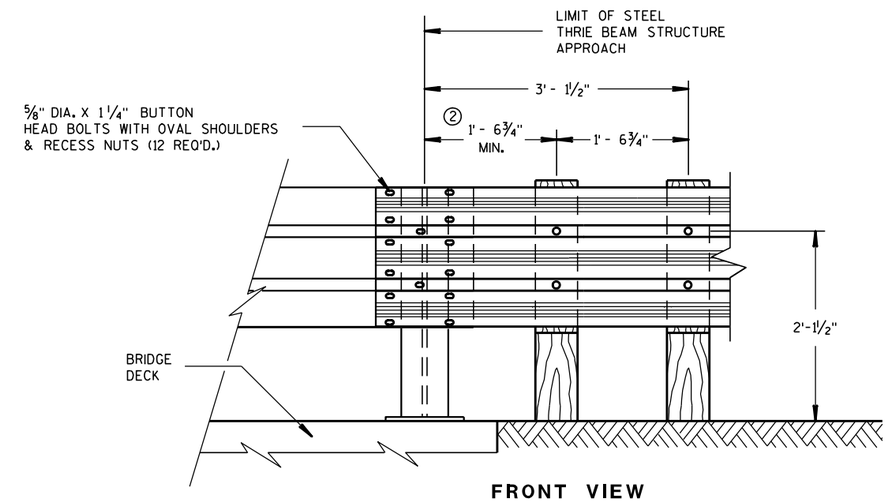

FRONT VIEW

THRIE BEAM CONNECTION TO STEEL RAILING TYPE "W"

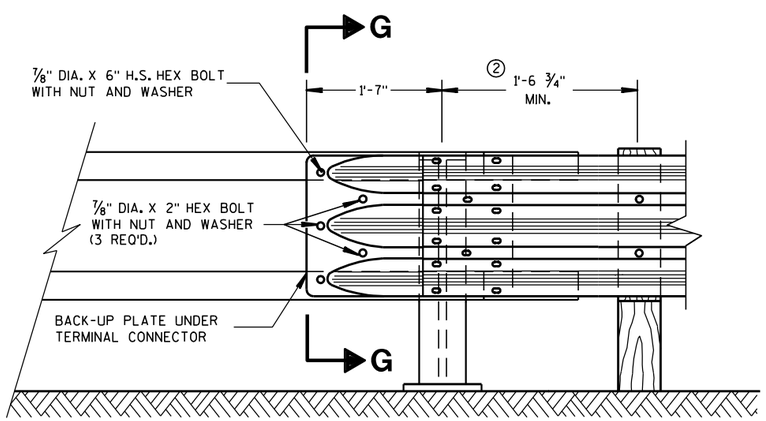

FRONT VIEW

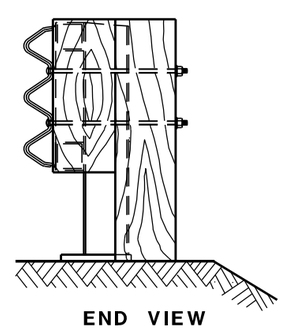

END VIEW

THRIE BEAM CONNECTION TO TUBULAR RAILING TYPE "F"

STEEL THRIE BEAM STRUCTURE APPROACH, CONNECTION TO BRIDGE RAILING TYPES "F" AND "W"	
STATE OF WISCONSIN DEPARTMENT OF TRANSPORTATION	
APPROVED 8/31/2012 DATE	/S/ Jerry H. Zogg ROADWAY STANDARDS ENGINEER
FHWA	ENT

GENERAL NOTES

① VARY THIS DIMENSION DEPENDING ON ABUTMENT TYPE, WINGWALL DETAILS, AND ANGLE OF SKEW. PLACE THE FIRST WOOD POST OFF THE BRIDGE SHALL BE AS CLOSE AS FEASIBLE TO THE STEEL END POST.

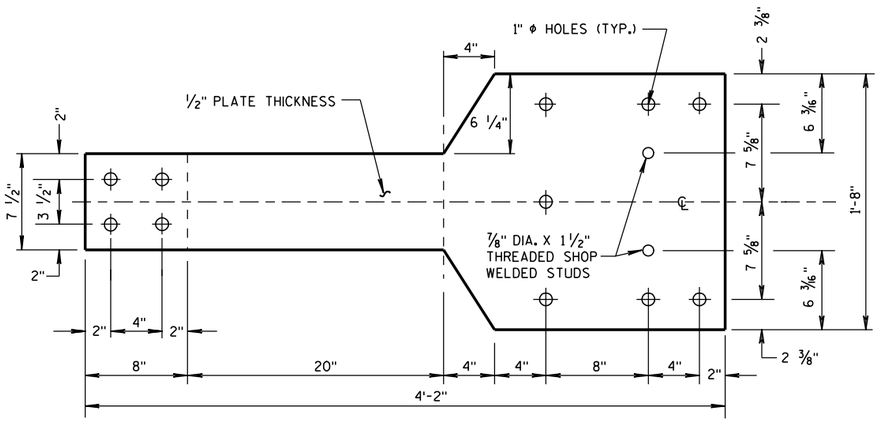

FRONT VIEW

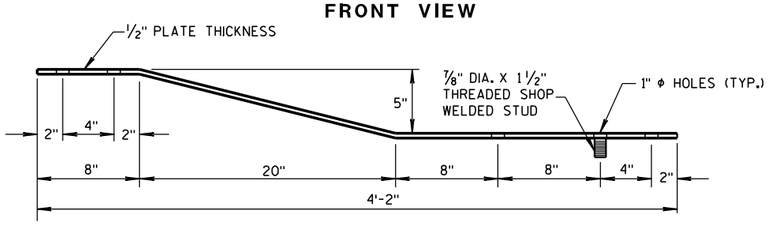

PLAN VIEW

BACK-UP PLATE DETAIL, TYPE "M"

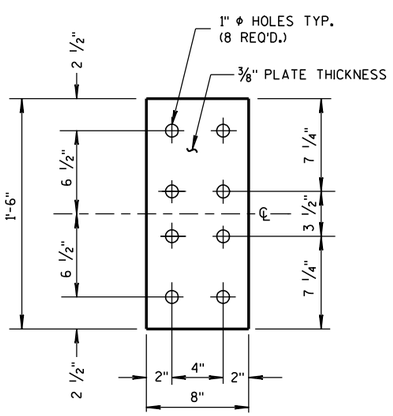

FRONT VIEW

ANCHOR PLATE DETAIL, TYPE "M"

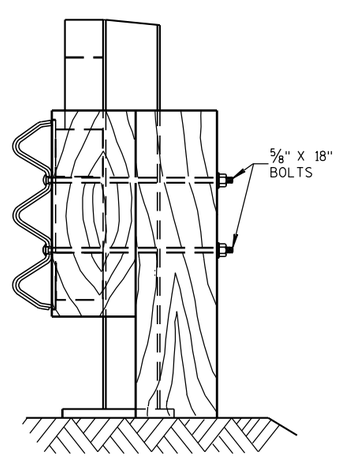

SECTION I-I

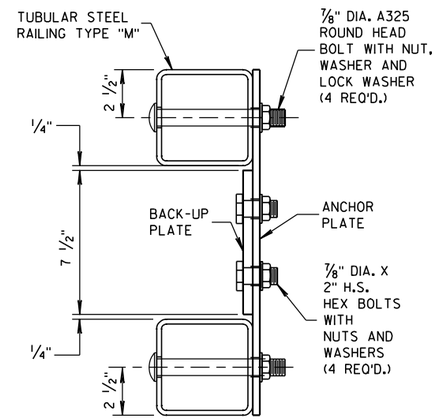

SECTION H-H

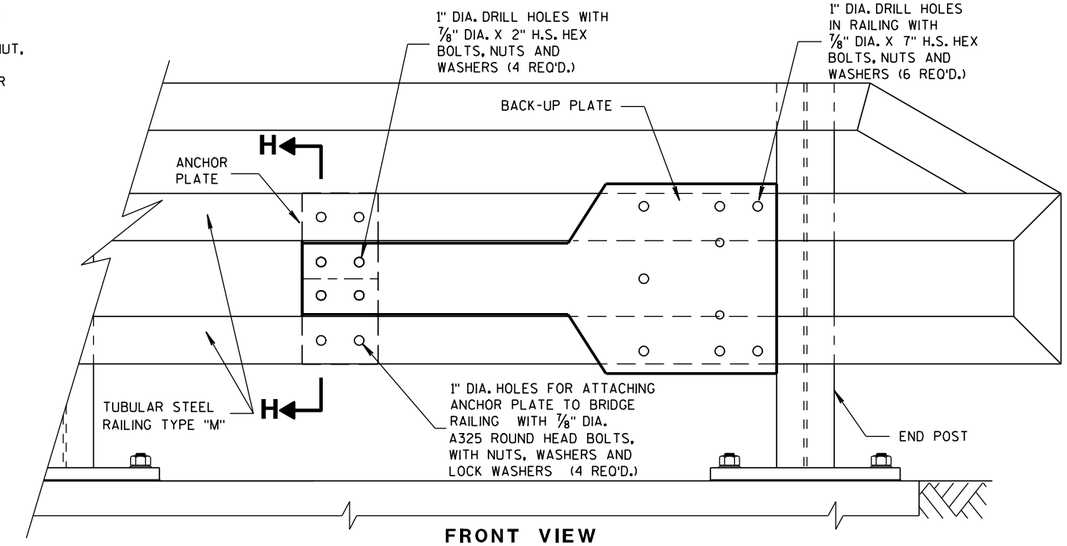

FRONT VIEW

ANCHOR AND BACK-UP PLATE MOUNTING TO BRIDGE RAILING, TYPE "M"

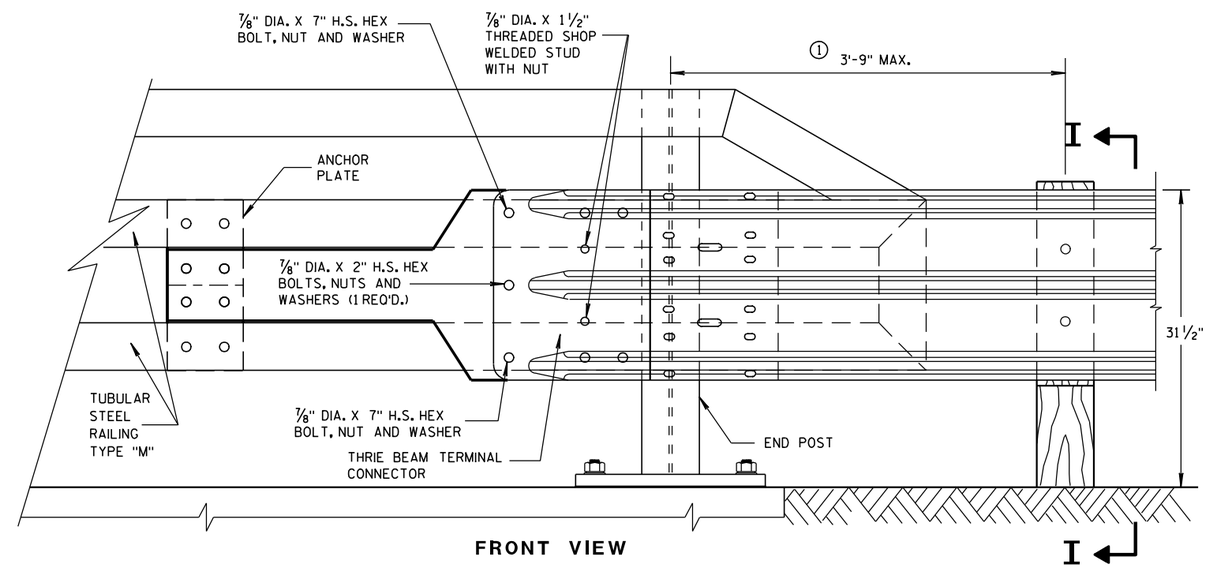

FRONT VIEW

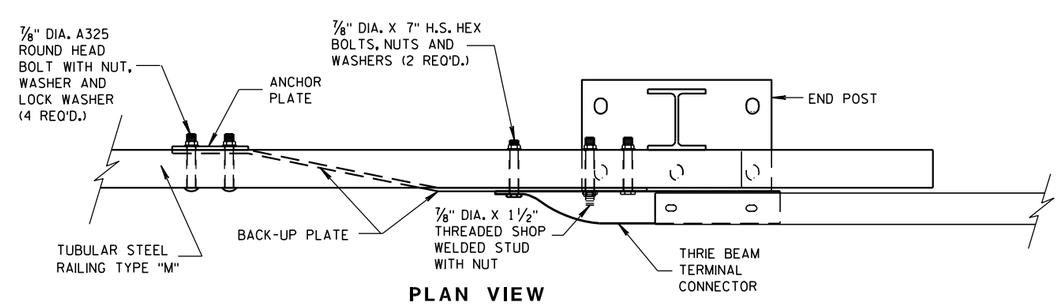

PLAN VIEW

THRIE BEAM CONNECTION TO TUBULAR RAILING, TYPE "M"

STEEL THRIE BEAM STRUCTURE APPROACH, CONNECTION TO BRIDGE RAILING TYPE "M"

STATE OF WISCONSIN
DEPARTMENT OF TRANSPORTATION

APPROVED

8/31/2012 — DATE

/S/ Jerry H. [illegible] — ROADWAY STANDARDS DEVELOPMENT ENGINEER

FHWA

GENERAL NOTES

COVER PLATE PANELS ARE 3/16" THICK.

ALL STIFFENERS ARE 1/4" THICK.

CONNECTOR PLATE SHALL BE FABRICATED FROM ASTM GRADE A36 STEEL AND GALVANIZED.

FOR GALVANIZED REQUIREMENTS, SEE SECTION 614 OF THE STANDARD SPECIFICATIONS.

ALL HOLE DIAMETERS SHALL BE 1".

FOR OPPOSITE SIDE INSTALLATION MIRROR DRAWINGS.

(1) STIFFENERS LOCATED AT THE OUTSIDE EDGES OF THE COVER PLATES SHALL BE WELDED AS FOLLOWS:
SINGLE BEVEL GROOVE WELD ON EXTERNAL SIDES AND 3/16" FILLET WELD BY 1" LONG SPACED AT 2" ON INTERNAL SIDES.

(2) STIFFENERS LOCATED ON THE INSIDE OF THE COVER PLATE SHALL BE WELDED AS FOLLOWS:
3/16" FILLET WELD BY 1" LONG SPACED AT 2".

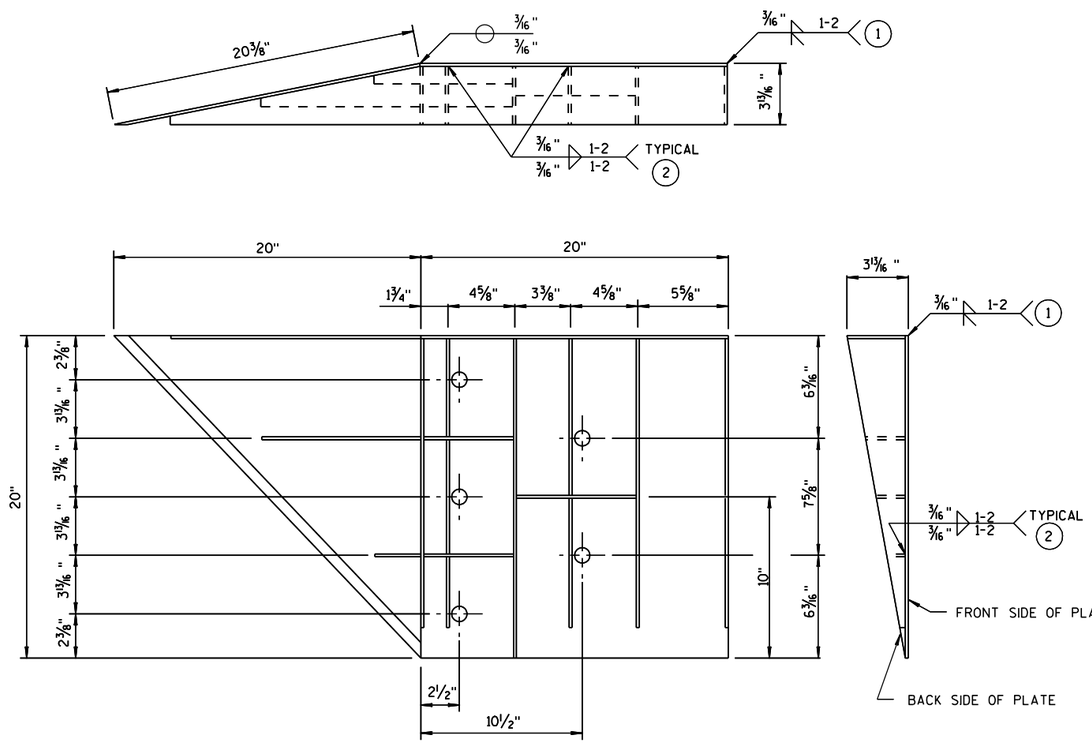

WELDING INSTRUCTION

(VIEWED FROM BACK SIDE OF PLATE)

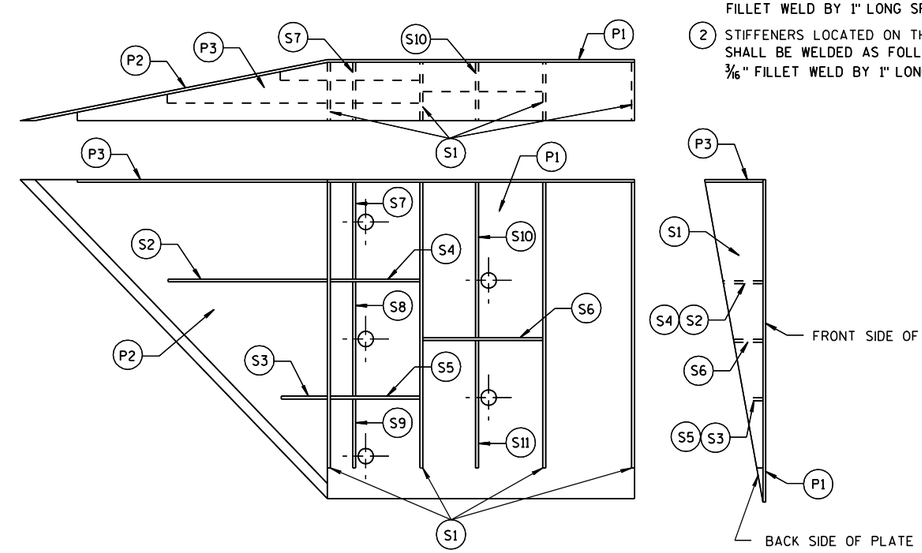

PLATE AND STIFFENER IDENTIFICATION

(VIEWED FROM BACK SIDE OF PLATE)

CONNECTOR PLATE DIMENSION (PER ASSEMBLY)

PLATE	QUANTITY	SHAPE	SIZE (A x B x C x D)	THICKNESS
P1	1		20" x 20"	3/16"
P2	1		20" x 20" x 28 9/16"	3/16"
P3	1		39" x 3 5/8" x 20" x 19 5/16"	3/16"
S1	4		18 7/16" x 3 5/8" x 18 3/4"	1/4"
S2	1		10 1/4" x 2 7/16" x 10 3/8" x 1/2"	1/4"
S3	1		3" x 1 1/16" x 3 1/8" x 1/2"	1/4"
S4	1		6 1/8" x 2 7/16"	1/4"
S5	1		6 1/8" x 1 1/16"	1/4"
S6	1		7 3/4" x 1 3/4"	1/4"
S7	1		2 9/16" x 6" x 3 5/8" x 5 7/8"	1/4"
S8	1		1 5/32" x 7 1/2" x 2 1/2" x 7 3/8"	1/4"
S9	1		6 1/16" x 6 3/16" x 1 3/32"	1/4"
S10	1		1 7/8" x 9 7/8" x 3 5/8" x 9 11/16"	1/4"
S11	1		8 1/2" x 8 3/4" x 1 13/16"	1/4"

STEEL THRIE BEAM STRUCTURE APPROACH

STEEL THRIE BEAM STRUCTURE APPROACH, CONNECTOR PLATE DETAIL

STATE OF WISCONSIN
DEPARTMENT OF TRANSPORTATION

APPROVED
8/31/2012 — DATE
/S/ Jerry H. [illegible] — ROADWAY STANDARDS DEVELOPMENT ENGINEER
FHWA

6

S.D.D. 14 B 20-11g

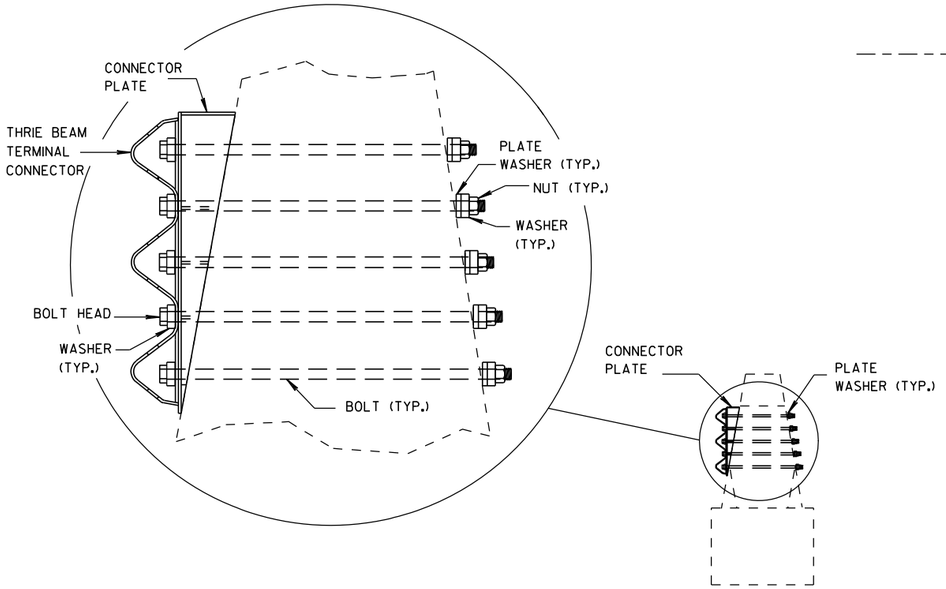

SECTION J-J

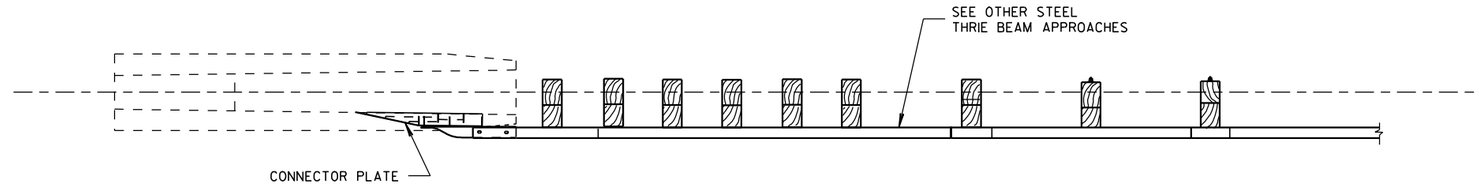

PLAN VIEW

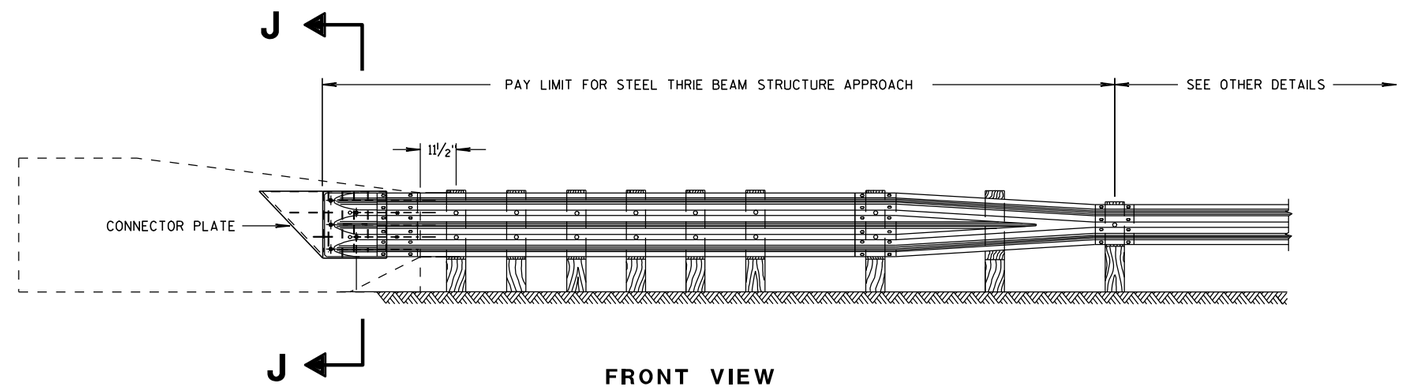

FRONT VIEW

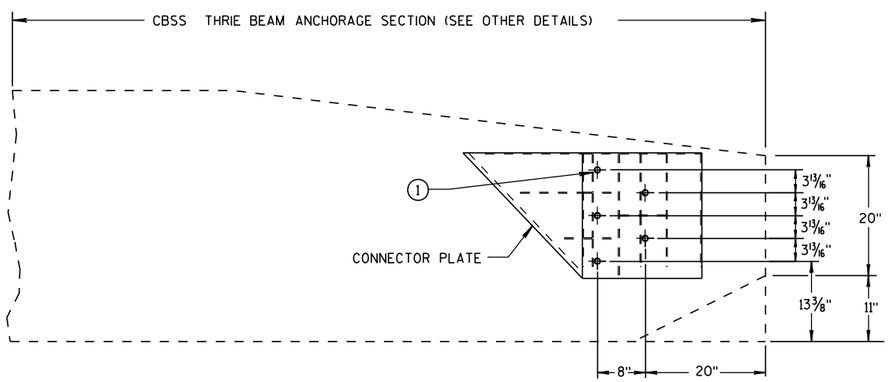

CONNECTOR PLATE LOCATION

GENERAL NOTES

CONSTRUCT PER STANDARD SPECIFICATION 614.

CONNECTOR PLATE, DRILLING HOLES THROUGH PARAPET, BOLTS, NUTS, WASHERS AND REPAIRING DAMAGED CONCRETE ARE INCIDENTAL TO THE CONTRACT.

(1) BOLTS MAY BE A325 BOLTS OR A449 BOLTS. BOLT LENGTH AND THREADING LENGTH ARE TO ALLOW FOR A TIGHT CONNECTION BETWEEN RIGID BARRIER AND THRIE BEAM CONNECTION PLATE. CONTRACTOR IS TO FIELD VERIFY BOLT LENGTH AND THREAD LENGTH. ONE ROUND WASHER REQUIRED BETWEEN BOLT HEAD AND THRIE BEAM TERMINAL CONNECTOR. BOLTS THAT EXTEND THROUGH THE PARAPET AND OUT THE BACK FACE REQUIRE A HARDENED ROUND STEEL WASHER THAT IS 2" O.D. X 5/8" THICK AND ONE PLATE WASHER. REPAIR ANY DAMAGED CONCRETE FROM BOLT INSTALLATION.

STEEL THRIE BEAM STRUCTURE APPROACH

STEEL THRIE BEAM STRUCTURE APPROACH, SINGLE SLOPE ATTACHMENT

STATE OF WISCONSIN
DEPARTMENT OF TRANSPORTATION

APPROVED
8/31/2012 — DATE
/S/ Jerry H. Zogg — ROADWAY STANDARDS DEVELOPMENT ENGINEER
FHWA

BILL OF MATERIALS

NOTE NO.	DESCRIPTION
1	WOOD BREAKAWAY TERMINAL POST: 5½" X 7½" X 3'-9"
2	STEEL TUBE TS 8" X 6" X 0.188", 6'-0"
4	WOOD BREAKAWAY CRT POST: 6" X 8" X 6'-0"
5	WOOD OFFSET BLOCKS: 6' X 8" X 1'-2"
6	PIPE SLEEVE: 2" X 5 ½" STANDARD PIPE
7	BEARING PLATE
8	BCT CABLE ASSEMBLY
9	CABLE ANCHOR BOX
10	STRUT & YOKE
11	STEEL PLATE BEAM, END PANEL 12 GA.
12	STEEL PLATE BEAM: 12 GA. 13'-6½"
13	IMPACT HEAD
14	0.040" ALUMINUM SHEET WITH REFLECTIVE SHEETING TYPE F PER SECTION 637 OF THE STANDARD SPECIFICATIONS

GENERAL NOTES

FOLLOW MANUFACTURE'S BOLTING RECOMMENDATIONS.

(A) THE SLOPE IN THE AREA BOUNDED BY THE GRADELINE, THE HINGE POINT LINE (HPL), AND THE CLEAR ZONE LIMITS (CZL) SHALL BE 4:1 OR FLATTER.

(B) AFTER FINAL ASSEMBLY, RECHECK CABLE TO BE SURE IT IS TAUT AND HAS NOT RELAXED.

(D) THE TOP OF THE STEEL TUBE ON POSTS 1 AND 2 SHALL NOT BE MORE THAN 3" ABOVE THE FINISH GROUND ELEVATION.

(E) THE CENTER OF THE UPPER 3½" DIAMETER HOLE ON POST 3 THROUGH 8 SHALL BE ¾" ABOVE THE FINISHED GROUND LINE.

(F) ATTACH ALUMINUM SHEET TO E.A.T. HEAD USING 4 STAINLESS STEEL SELF-TAPPING SCREWS. ONE SCREW PER CORNER.

STEEL POSTS SHALL NOT BE ALLOWED FOR USE WITH ENERGY ABSORBING TERMINALS.

DO NOT INSTALL REFLECTORS ON THE FIRST 50 FEET OF THE APPROACH END OF THE ENERGY ABSORBING TERMINAL.

* DO NOT ATTACH BLOCKOUTS TO POSTS 1 AND 2.

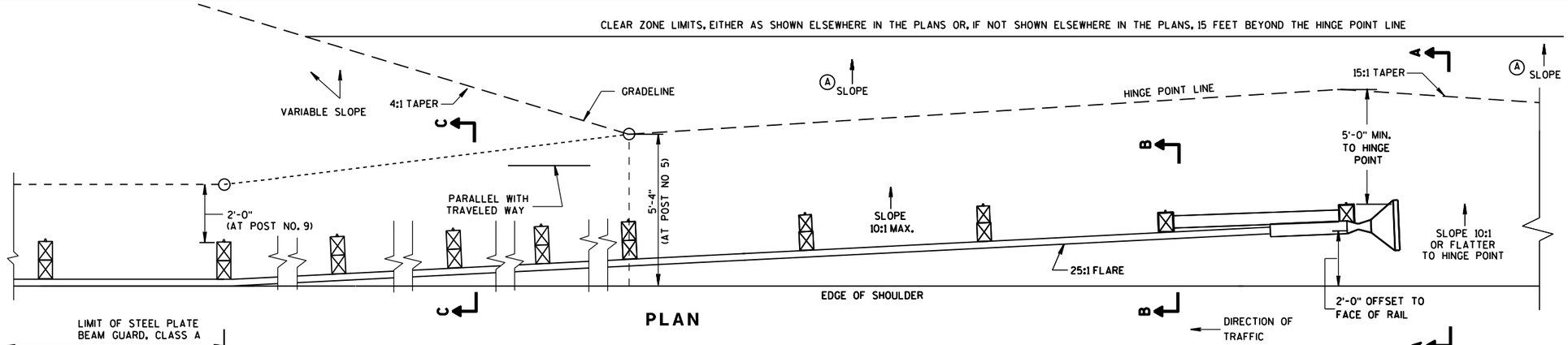

PLAN

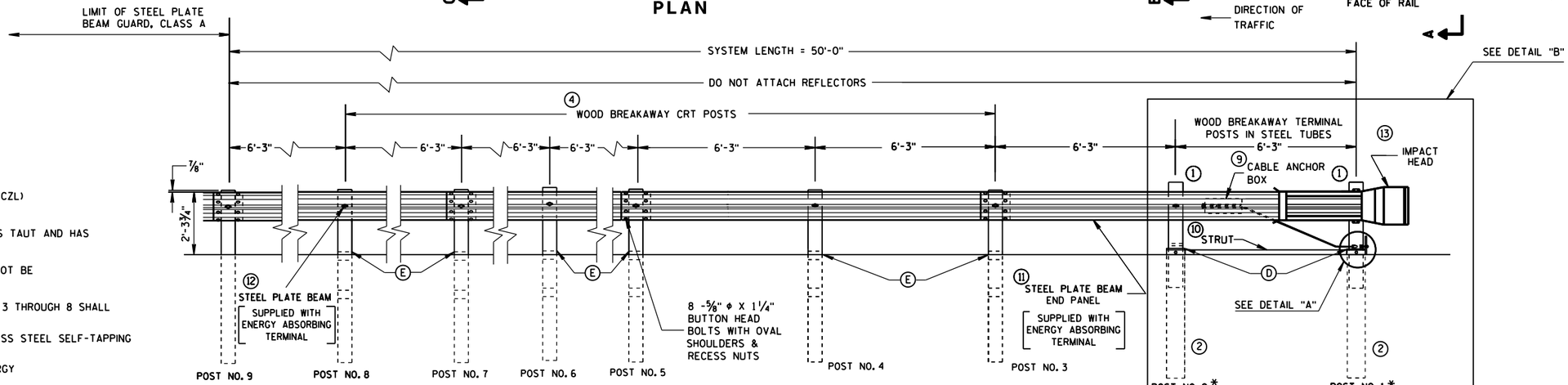

ELEVATION

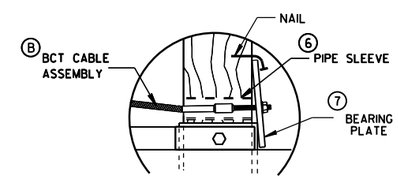

DETAIL "A"

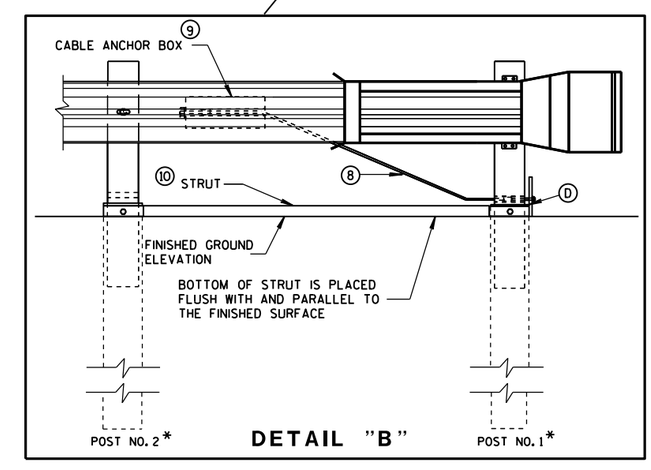

DETAIL "B"

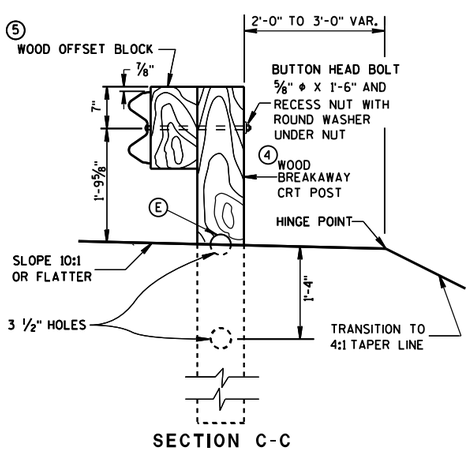

SECTION C-C
TYPICAL AT POST NOS. 6, 8

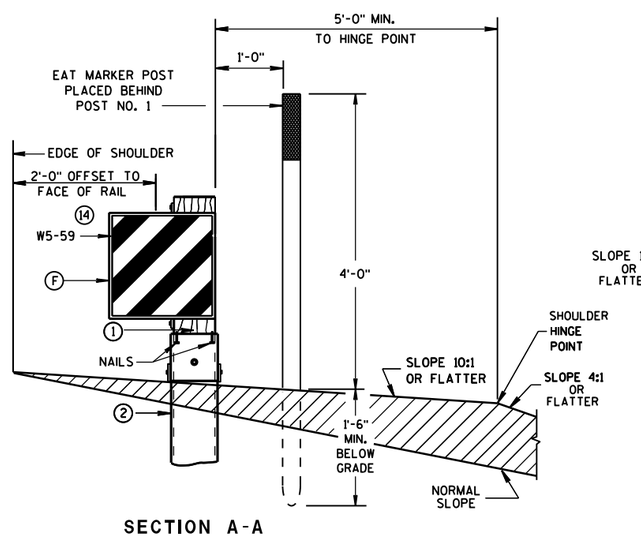

SECTION A-A
TYPICAL AT POST NO. 1*

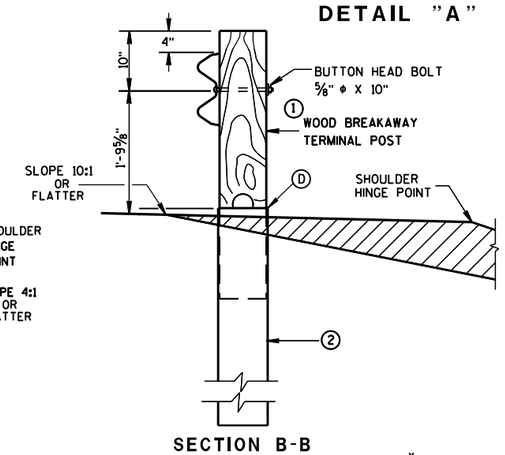

SECTION B-B
TYPICAL AT POST NO. 2*

STEEL PLATE BEAM GUARD
ENERGY ABSORBING TERMINAL

STATE OF WISCONSIN
DEPARTMENT OF TRANSPORTATION

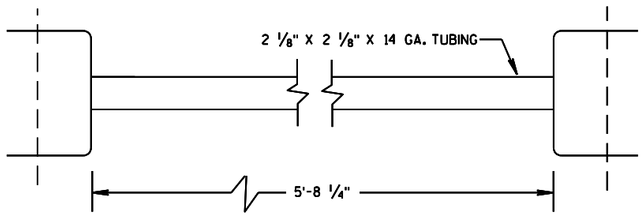

⑩ STRUT DETAIL

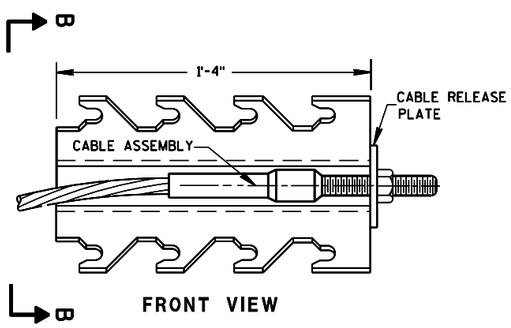

FRONT VIEW

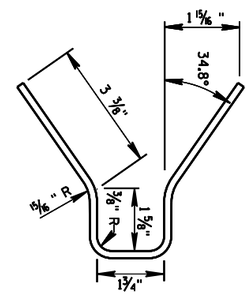

SECTION B-B

⑨ CABLE ANCHOR BOX

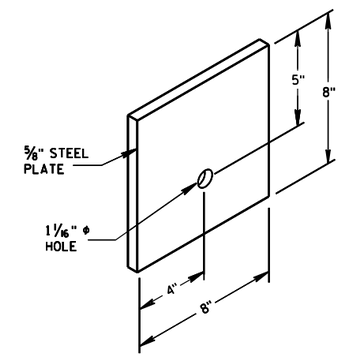

⑦ STEEL BEARING PLATE

6

6

S.D.D. 14 B 24-9b

S.D.D. 14 B 24-9b

STEEL PLATE BEAM GUARD
ENERGY ABSORBING TERMINAL

STATE OF WISCONSIN
DEPARTMENT OF TRANSPO

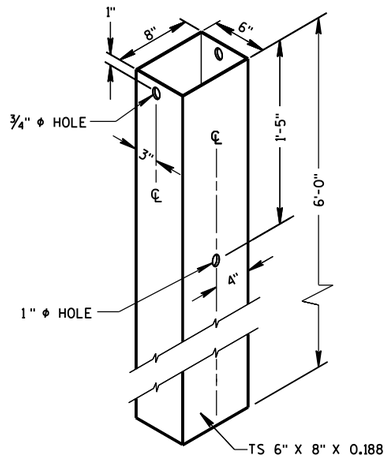

② 72" STEEL TUBE
(POSTS NO. 1-2

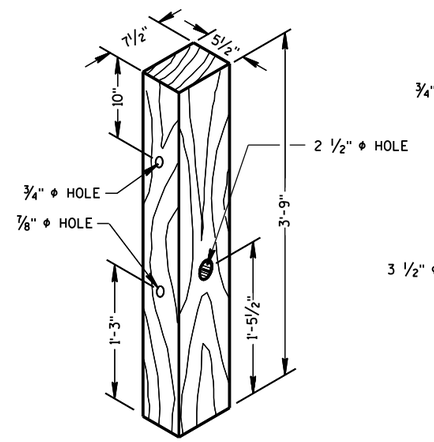

① TERMINAL POST

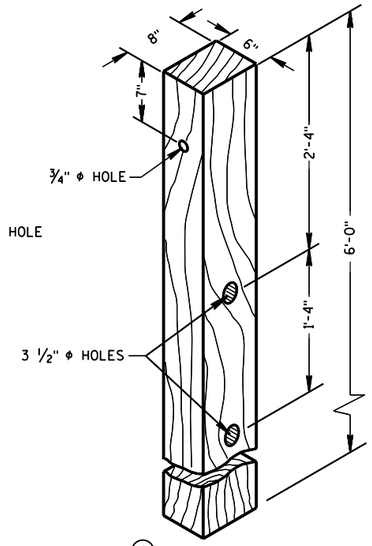

④ CRT POST
(POSTS NO'S 5-8

WOOD BREAKAWAY POSTS

GENERAL NOTES

WHEN ROCK IS ENCOUNTERED DURING EXCAVATION, A 12 INCH DIA. POST HOLE EXTENDING 20 INCHES DEEP INTO THE ROCK MAY BE USED IF APPROVED BY THE ENGINEER. GRANULAR MATERIAL SHALL BE PLACED IN THE BOTTOM OF THE HOLE APPROXIMATELY 2 ½" INCHES DEEP TO PROVIDE DRAINAGE. THE SOIL TUBES SHALL BE FIELD CUT TO LENGTH, PLACED IN THE HOLE AND BACKFILLED WITH ADEQUATELY COMPACTED MATERIAL EXCAVATED FROM THE HOLE.

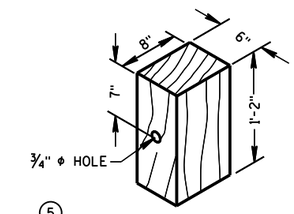

⑤ WOOD OFFSET BLOCK
REQ'D. AT ALL POSTS EXCEPT POST NO'S 1 & 2

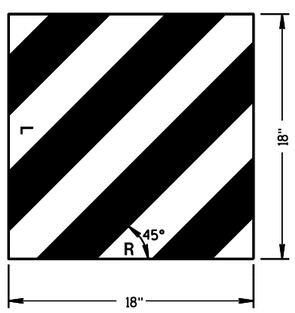

⑭ REFLECTIVE SHEETING DETAILS

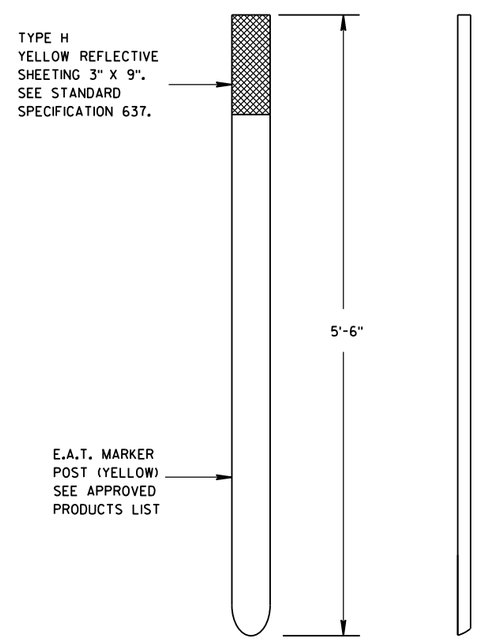

FRONT VIEW SIDE VIEW

E.A.T. MARKER POST

STEEL PLATE BEAM GUARD
ENERGY ABSORBING TERMINAL

STATE OF WISCONSIN
DEPARTMENT OF TRANSPORTATION

APPROVED
June 2017 /S/ Rodney Taylor
DATE ROADWAY STANDARDS UNIT SUPERV. ENT
FHWA

6

6

S.D.D. 14 B 24-9c

S.D.D. 14 B 24-9c

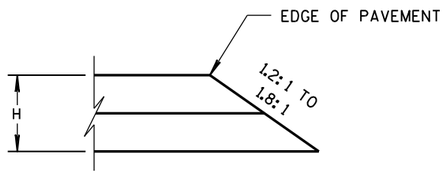

CONSTRUCTED WITH FINAL TWO LAYERS

FOR H 5" OR LESS

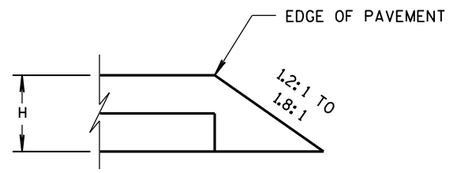

CONSTRUCTED WITH FINAL LAYER

FOR H 5" OR LESS

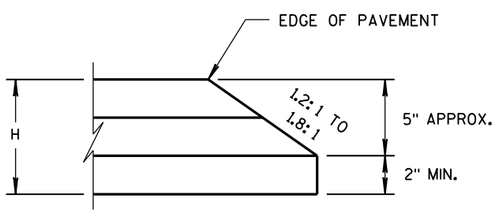

CONSTRUCTED WITH FINAL TWO LAYERS

FOR H GREATER THAN 5"

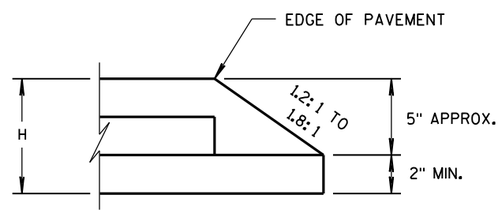

CONSTRUCTED WITH FINAL LAYER

FOR H GREATER THAN 5"

HMA PAVEMENT AND HMA OVERLAYS

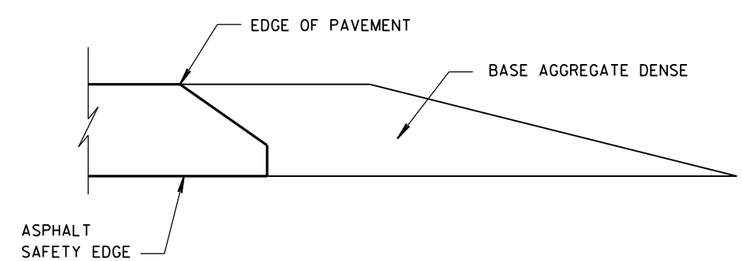

FINISHED SHOULDER AGGREGATE PLACEMENT

6

6

S.D.D. 14 B 29-1

SAFETY EDGE SM

STATE OF WISCONSIN
DEPARTMENT OF TRANSPORTATION

APPROVED

11/30/2012 — DATE

/S/ Jerry H. Zogg — ROADWAY STANDARDS DEVELOPMENT ENGINEER

FHWA

S.D.D. 14 B 29-1

1. WOOD OR STEEL POSTS (w6X9 OR w6X8.5) MAY BE USED. DO NOT INTERMIX WOOD AND STEEL POSTS. INSTALL STEEL POSTS WITH HOLES ON APPROACHING TRAFFIC SIDE.
2. USE WOOD OR APPROVED PLASTIC BLOCKOUTS. WOOD BLOCKOUTS MAY BE CONSTRUCTED OUT OF TWO OR MORE WOOD BLOCKOUTS. SEE ALTERNATE WOOD BLOCKOUT DETAIL. DIMENSIONS OF APPROVED PLASTIC BLOCKOUTS MAY VARY.
3. IF ROCK IS ENCOUNTERED DURING EXCAVATION, PROVIDE A HOLE 12 INCHES IN DIAMETER EXTENDING 20 INCHES DEEP INTO THE ROCK. PLACE APPROXIMATELY 2 1/2" INCHES OF GRANULAR MATERIAL IN THE BOTTOM OF THE HOLE. CUT THE POSTS THE TO LENGTH AMD INSTALL. BACKFILL WITH EXCAVATED MATERIAL AND COMPACT. BACKFILL IS TO BE FREE OF LARGE ROCKS.
4. WHEN THE DISTANCE FROM BACK OF POST TO SHOULDER HINGE POINT IS LESS THAN 2 FEET INSTALL LONGER POST AT HALF POST SPACING (K).
5. FOR NEW MGS INSTALLATION TOP OF W-BEAM RAIL TOLERANCE IS ±1". FOR EXISTING MGS INSTALLATION TOP OF W-BEAM IS BETWEEN 27 ¾" TO 32".
6. WHEN USING STEEL POST AND WOOD BLOCKOUTS INSTALL FOUR 16D GALVANIZED NAILS. INSTALL NAILS AT THE BACK CORNERS OF THE BLOCK AND BEND THE NAILS OVER THE FLANGE OF THE STEEL POST.
7. TOTAL POST LENGTH FOR TYPE K IS 7' - 0". TOTAL POST LENGTH FOR OTHER MGS TYPES IS 6' - 0".

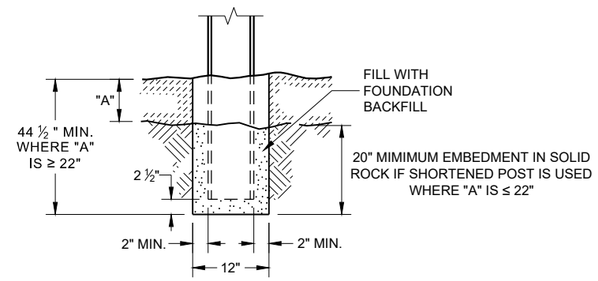

END VIEW
SETTING STEEL OR WOOD POST IN ROCK (3)

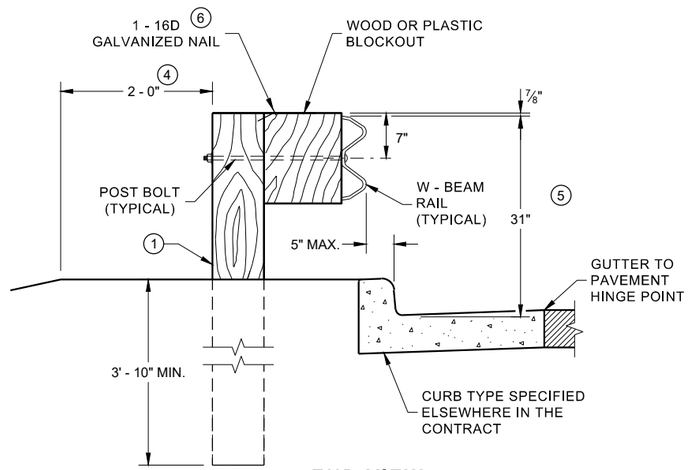

END VIEW
LOCATED ALONG A CURBED ROADWAY

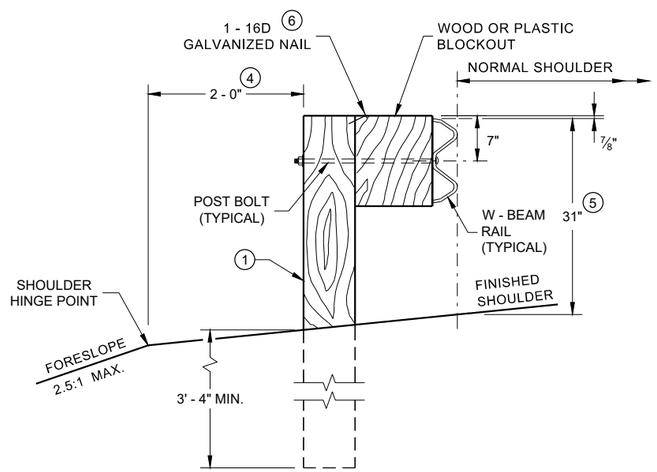

END VIEW
LOCATED ALONG A ROADWAY SHOULDER STANDARD INSTALLATION

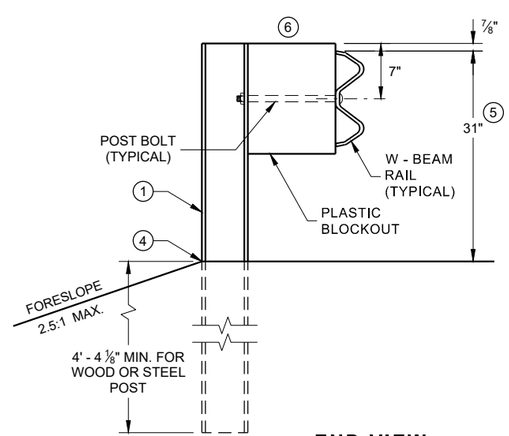

END VIEW
MGS LONGER POST AT HALFPOST SPACING W BEAM (K)

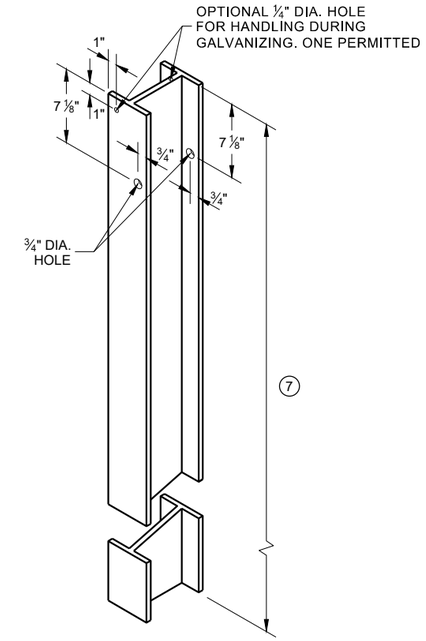

STEEL POST & HOLE PUNCHING DETAIL (W 6 X 9) (1)

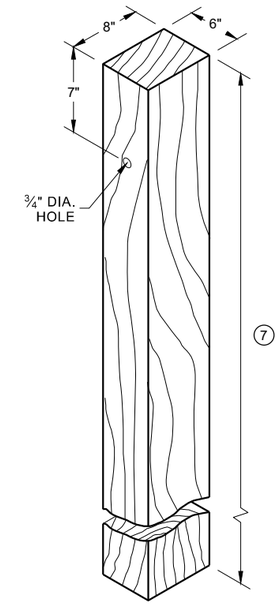

WOOD POST (6" X 8") NOMINAL (1)

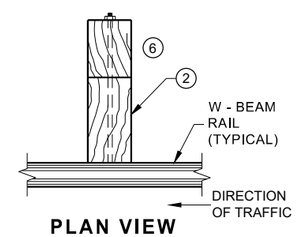

PLAN VIEW WOOD POST, BLOCKOUT & BEAM

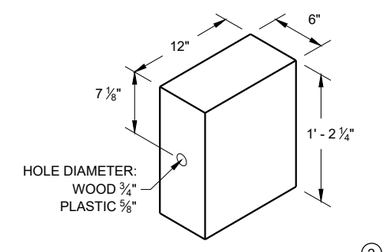

WOOD OR PLASTIC BLOCKOUT (2)

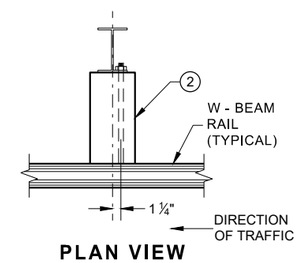

PLAN VIEW STEEL POST, PLASTIC BLOCKOUT & BEAM

MIDWEST GUARDRAIL SYSTEM (MGS) GUARDRAIL

STATE OF WISCONSIN
DEPARTMENT OF TRANSPORTATION

6

6

SDD 14B42 - 07a

SDD 14B42 - 07a

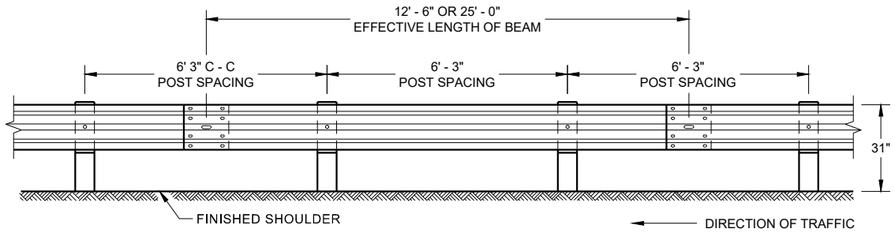

FRONT VIEW
POST SPACING STANDARD INSTALLATION

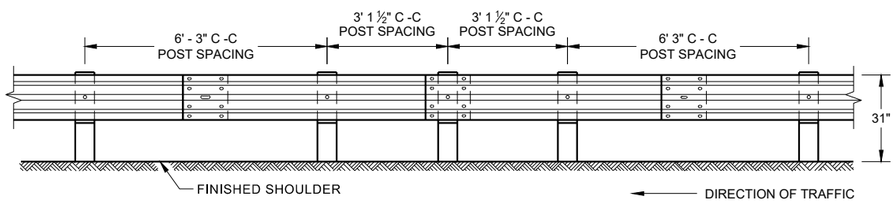

FRONT VIEW
HALF POST SPACING (HS) AND HALF POST SPACING WITH LONGER POSTS (K)

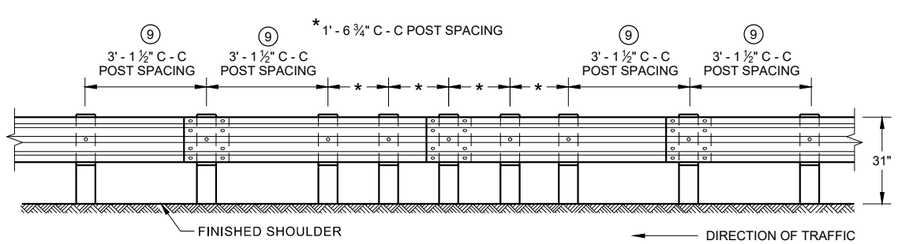

FRONT VIEW
QUARTER POST SPACING (QS)

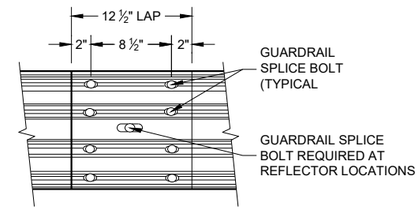

FRONT VIEW
MID-SPAN BEAM SPLICE

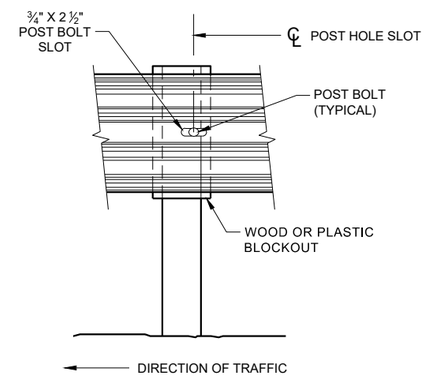

FRONT VIEW AT STEEL POST

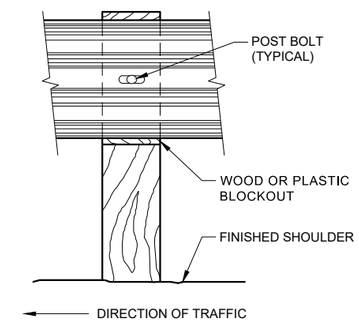

FRONT VIEW AT WOOD POST

GENERAL NOTES

8 DO NOT INSTALL REFLECTORS ON THE FIRST 50 FEET OF THE APPROACH END OF THE ENERGY ABSORBING TERMINAL.

9 25 FEET OF HALF POST SPACING IS REQUIRED ON APPROACH AND DEPARTURE ENDS OF QUARTER POST SPACING.

POST BOLTS ARE A ⅝" DIAMETER ASTM A307 GUARDRAIL BOLT. A POST BOLT REQUIRES ⅝" DIAMETER A563A DOUBLE RECESSED (DR) HEAVY HEX NUT AND ⅝" DIAMETER F844 FLAT WASHER. POST BOLTS MAY BE LONGER IF MULTIPLE BLOCKOUTS ARE BEING USED.

GUARD RAIL SPLICE BOLTS ARE A ⅝" DIAMETER ASTM A307 GUARDRAIL HEAD BOLT. A GUARDRAIL SPLICE BOLT REQUIRES ⅝" DIAMETER A563A DOUBLE RECESSED (DR) HEAVY HEX NUT.

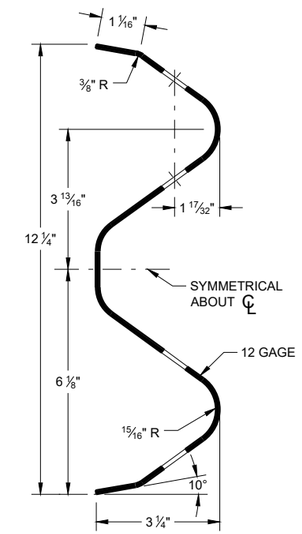

SECTION THRU W-BEAM RAIL

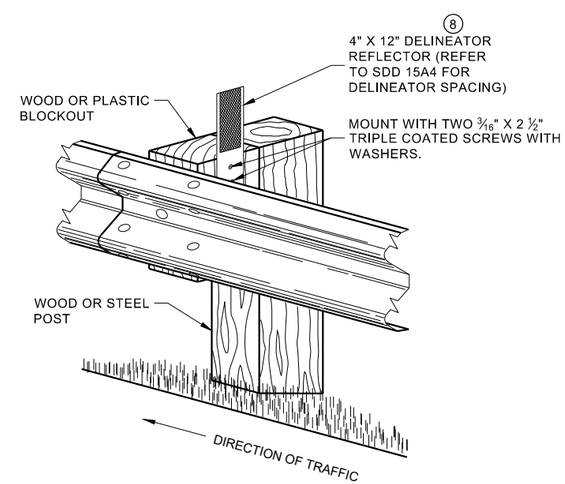

ONE SIDED REFLECTOR DETAIL AND TYPICAL INSTALLATION

MIDWEST GUARDRAIL SYSTEM (MGS) GUARDRAIL

STATE OF WISCONSIN
DEPARTMENT OF TRANSPORTAT

6

SDD 14B42 - 07b

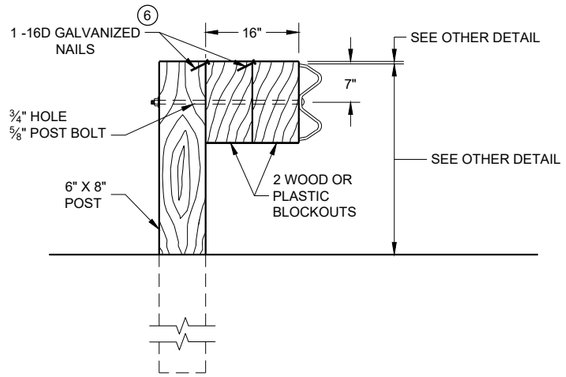

DETAIL FOR 16" BLOCKOUT DEPTH

IT IS ACCEPTABLE TO USE BLOCKOUTS UP TO 16" DEEP TO INCREASE THE POST OFFSET TO AVOID UNDERGROUND OBSTACLES. THERE IS NO LIMIT TO THE NUMBER OF POSTS THAT CAN HAVE ADDITIONAL BLOCKOUTS UP TO 16" DEEP.

NOTE:

1. ALL FILLETS SHALL HAVE A MINIMUM RADIUS OF 3/16".
2. IF THE BOLT EXTENDS MORE THAN ¼" FROM THE NUT THE BOLT SHOULD BE TRIMMED BACK.

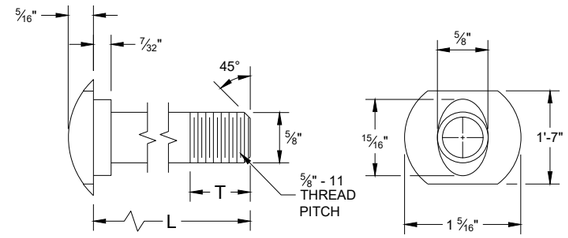

POST BOLT TABLE

L	T (MIN.)
1 ¼"	1 ⅛"
2"	1 ¾"
10"	4"
14"	4 1/16"
18"	4"
21"	4 1/16"
25"	4"

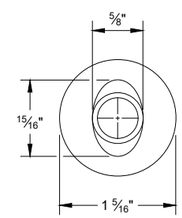

ALTERNATE BOLT HEAD

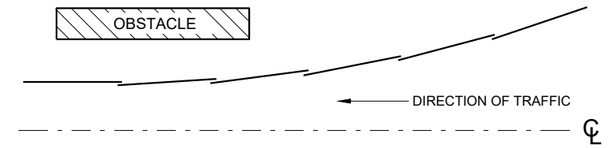

PLAN VIEW
BEAM LAPPING DETAIL

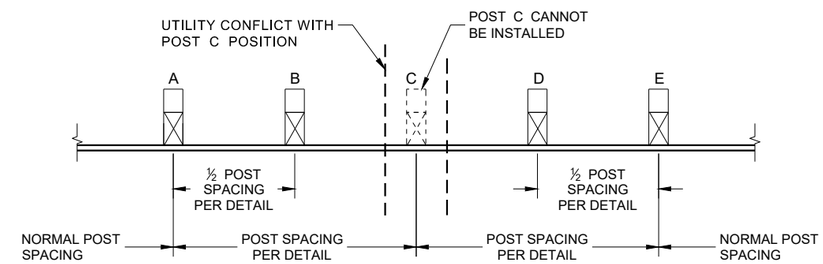

POST DRIVING FOR CONTINUOUS UNDERGROUND OBSTRUCTION

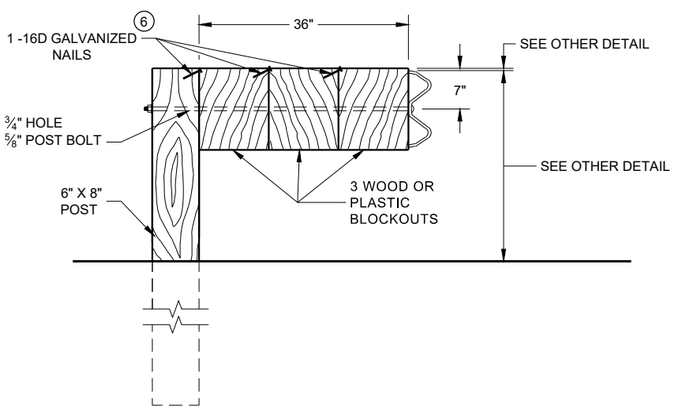

DETAIL FOR 36" BLOCKOUT DEPTH

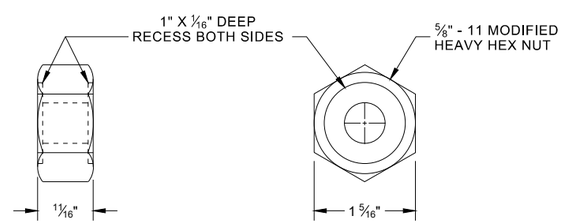

POST BOLT, SPLICE BOLT AND RECESS NUT

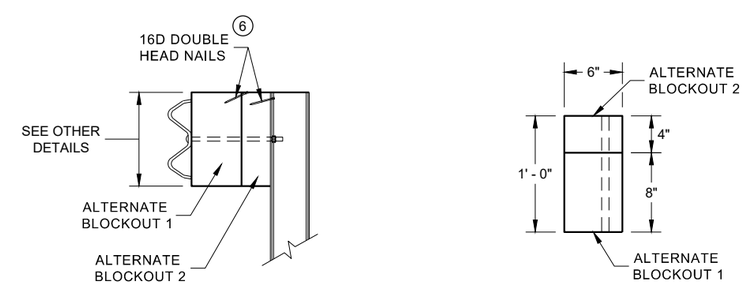

SIDE VIEW

PLAN VIEW

ALTERNATE WOOD BLOCKOUT DETAIL

NOTES: UNDER SPECIAL CIRCUMSTANCES, SUCH AS AVOIDING OBSTACLES THAT ARE NOT RELOCATED, IT IS ACCEPTABLE TO INSTALL ADDITIONAL BLOCKOUTS TO OBTAIN UP TO 36" DEPTH FOR ONE OR TWO POSTS IN A SECTION OF GUARDRAIL.

DO NOT USE 16" OR 36" BLOCKOUTS IF IT CAUSES THE POST TO BE DRIVEN BEYOND SHOULDER HINGE POINT OR CAUSES A FIXED OBJECT TO BE WITHIN THE DEFLECTION DISTANCE OF THE BARRIER.

(6) WHEN USING STEEL POST AD WOOD BLOCKOUTS, INSTALL FOUR 16D GALVANIZED NAILS. INSTALL NAILS AT THE BACK CORNERS OF THE BLOCK AND BEND THE NAILS OVER THE FLANGE OF THE STEEL POST.

MIDWEST GUARDRAIL SYSTEM (MGS) GUARDRAIL

STATE OF WISCONSIN
DEPARTMENT OF TRANSPORTA

6

SDD 14B42 - 07c

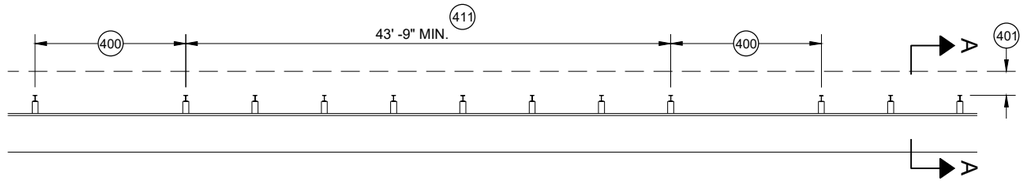

MISSING POST IN MGS GUARDRAIL

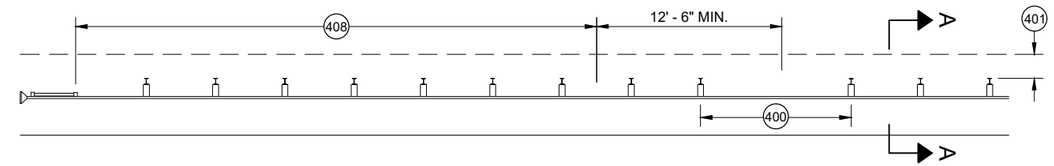

MISSING POST IN MGS GUARDRAIL NEAR EAT

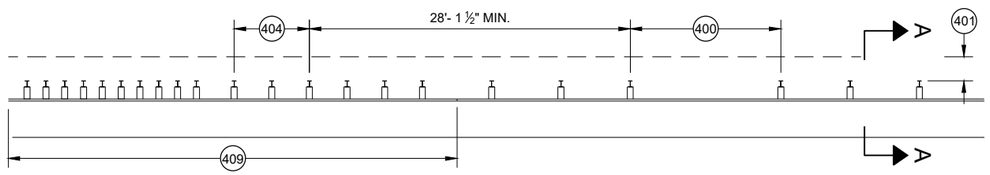

MISSING POST IN MGS GUARDRAIL NEAR AN APPROACH TRANSITION

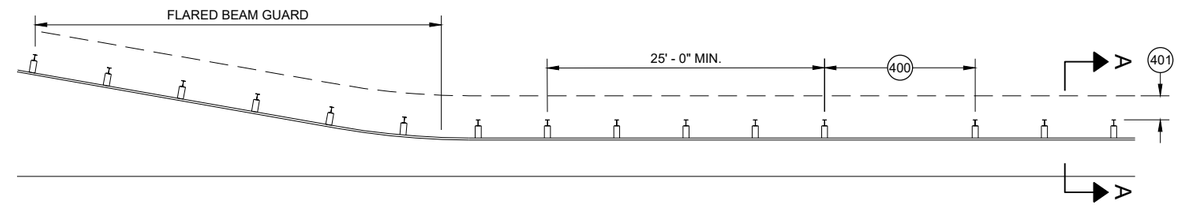

MISSING POST IN MGS GUARDRAIL NEAR FLARED BEAM GUARD

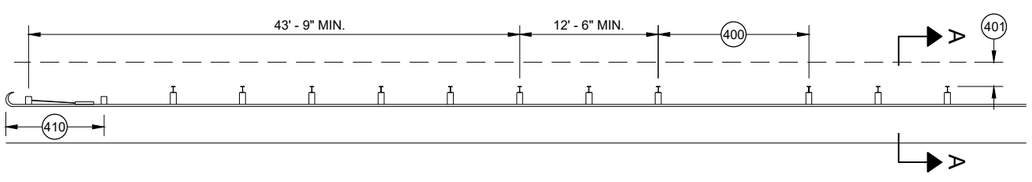

MISSING POST IN MGS GUARDRAIL NEAR A TYPE 2 END TERMINAL

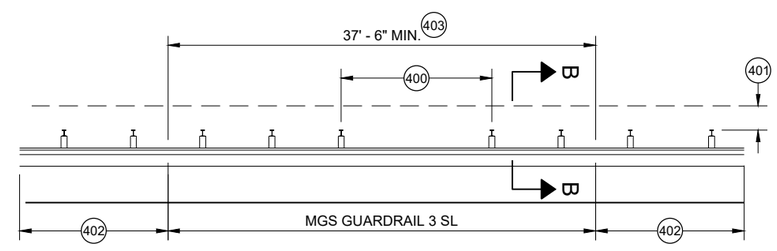

MISSING POST IN SHORT SPAN MGS GUARDRAIL NEAR CURB (SL) 407

400 MAX SPAN 12' - 6"
401 2' MIN.
402 MGS GUARDRAIL 3
403 NESTING BEAM GUARD
404 ASYMMETRIC TRANSITION
405 SOIL WELL DRAINED AND COMPACTED
406 SEE OTHER DRAWINGS IN THIS SDD
407 SEE OTHER DRAWINGS FOR MIN. SPACING BETWEEN SPANS
408 SEE SDD 14B44
409 SEE SDD 14B45
410 SEE SDD 14B47
411 MINIMUM DISTANCE BETWEEN MISSING POST SPANS.

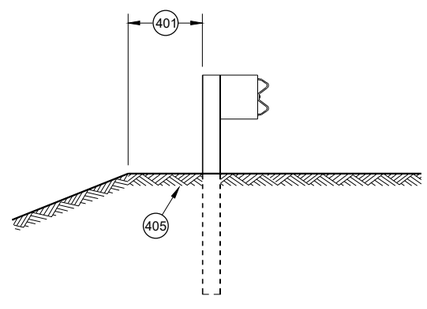

SECTION A - A 406

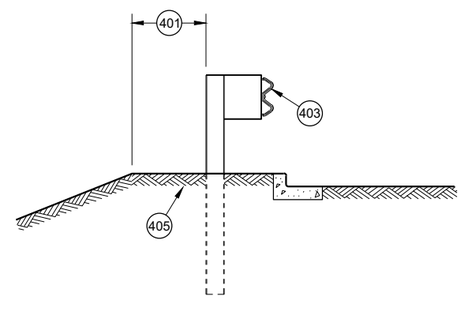

SECTION B - B 406

MIDWEST GUARDRAIL SYSTEM (MGS) GUARDRAIL

STATE OF WISCONSIN
DEPARTMENT OF TRANSPORTATION

APPROVED
May 2021 — DATE
/S/ Rodney Taylor — ROADWAY STANDARDS DEVE UNIT SUPERVISOR
FHWA

6

SDD 14B42 - 07d

GENERAL NOTES

POSTS 1 THROUGH 3 ARE CRT POSTS.
ALL OTHER POSTS SHALL BE WOOD OR STEEL.

SEE SDD 14 B 42 FOR MORE DETAILS.

(A) FLARE FOR MGS EAT SHOWN. IF INSTALLING MGS NO FLARE NEEDED.

(B) VALUES SHOWN ON DRAWING REPRESENT THE MAXIMUM LENGTH. SHORTER DIMENSIONS ARE POSSIBLE. SEE OTHER SECTION OF PLAN FOR MORE INFORMATION.

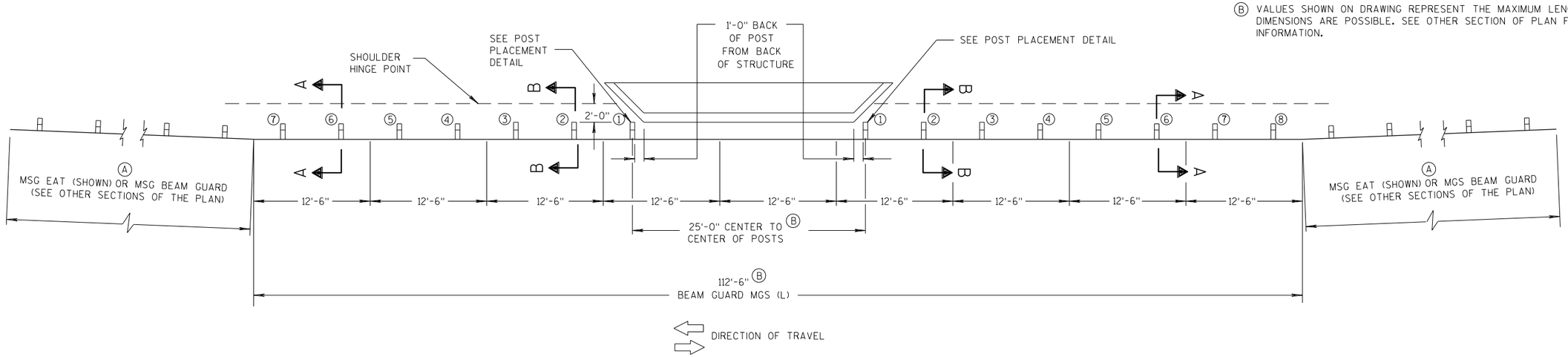

PLAN VIEW

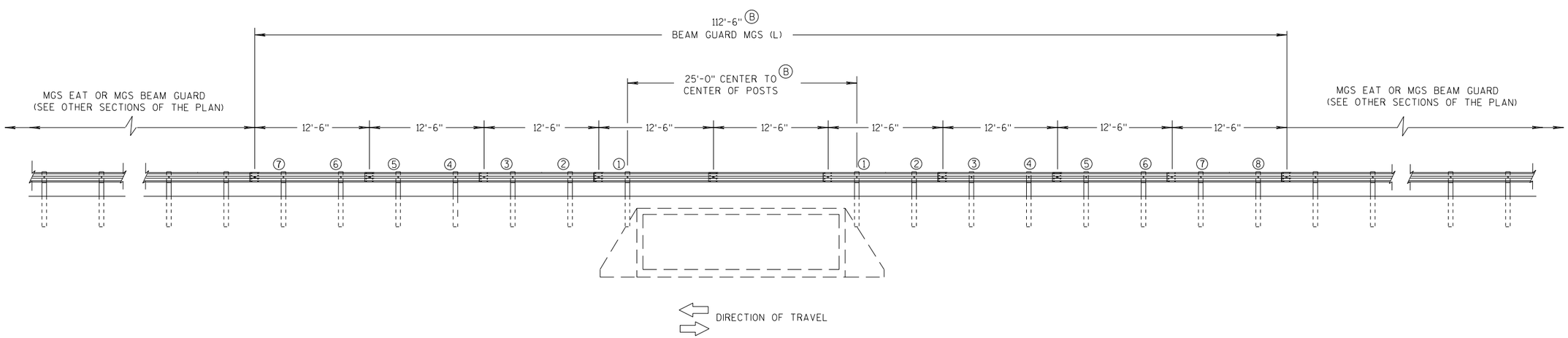

ELEVATION VIEW

MIDWEST GUARDRAIL SYSTEM LONG SPAN MGS (L) TWO-WAY TRAFFIC

MIDWEST GUARDRAIL SYSTEM LONG SPAN MGS (L)

STATE OF WISCONSIN
DEPARTMENT OF TRANSPORTATION

6
S.D.D. 14 B 43-4a

GENERAL NOTES

POSTS 1 THROUGH 3 ARE CRT POSTS.
ALL OTHER POSTS SHALL BE WOOD OR STEEL.

SEE SDD 14 B 42 FOR MORE DETAILS.

(A) FLARE FOR MGS EAT SHOWN. IF INSTALLING MGS NO FLARE NEEDED.

(B) VALUES SHOWN ON DRAWING REPRESENT THE MAXIMUM LENGTH. SHORTER DIMENSIONS ARE POSSIBLE. SEE OTHER SECTION OF PLAN FOR MORE INFORMATION.

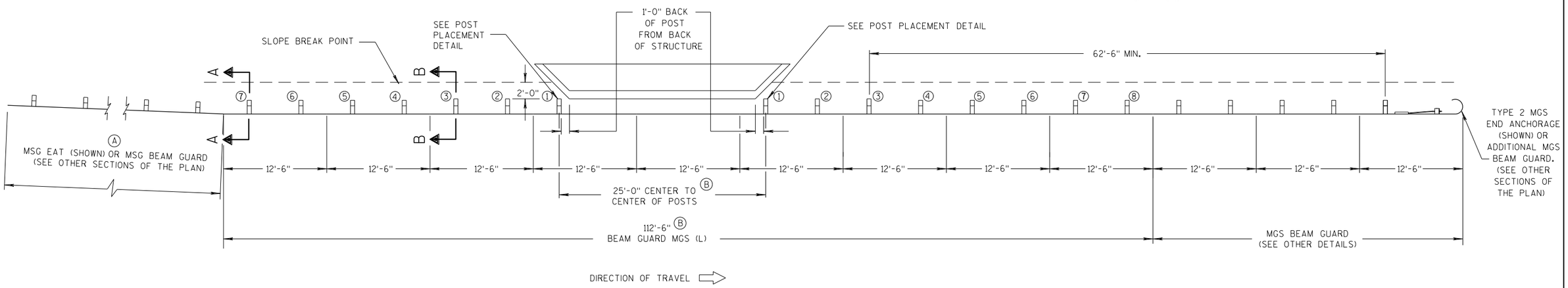

PLAN VIEW

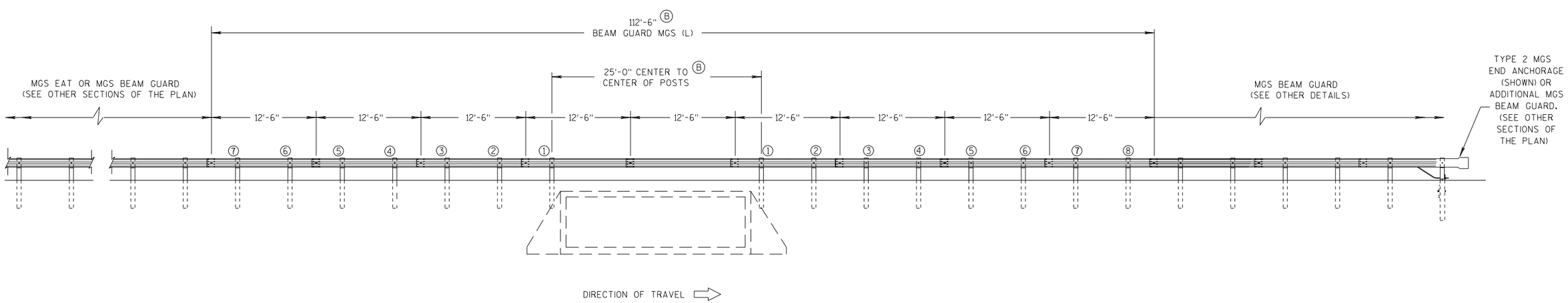

ELEVATION VIEW

MIDWEST GUARDRAIL SYSTEM LONG SPAN MGS (L) ONE-WAY TRAFFIC

MIDWEST GUARDRAIL SYSTEM LONG SPAN MGS (L)

STATE OF WISCONSIN
DEPARTMENT OF TRANSPORTATION

6
S.D.D. 14 B 43-4b

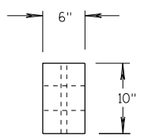

PLAN VIEW

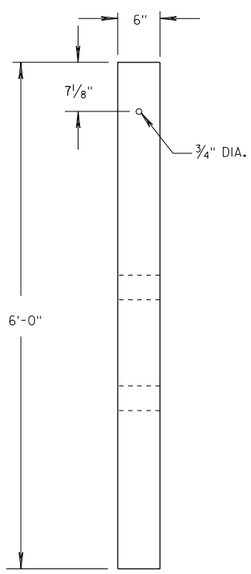

FRONT VIEW

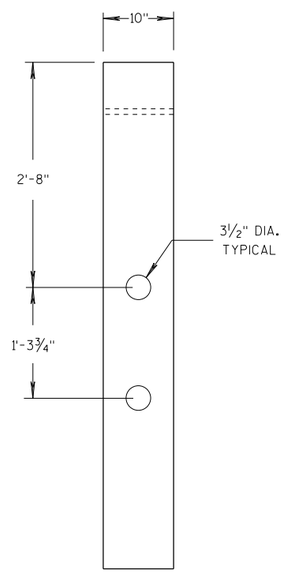

SIDE VIEW

CRT WOOD POST

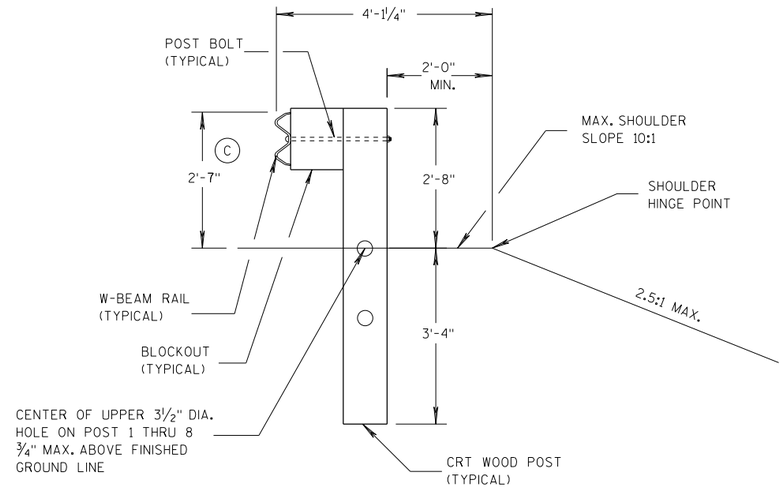

SECTION B-B

POSTS NO. 1-3

SEE OTHER DETAILS

GENERAL NOTES

(C) TOLERANCE FOR TOP OF W-BEAM RAIL IS ± 1".

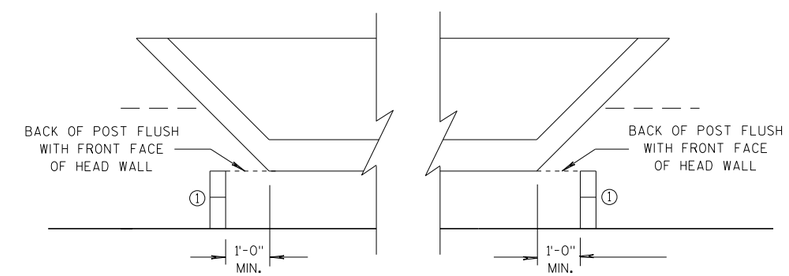

POST PLACEMENT DETAIL

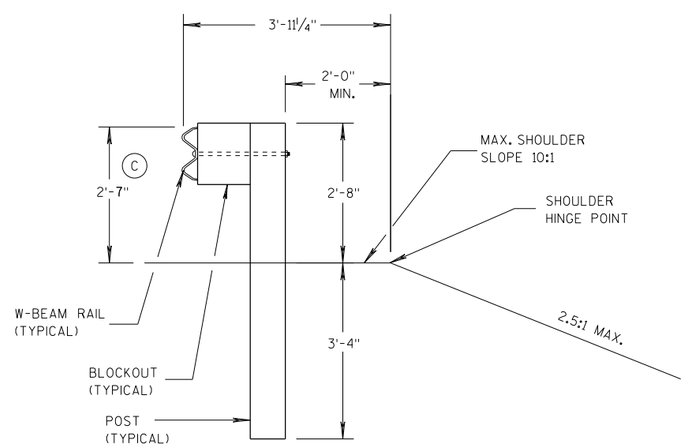

SECTION A-A

POSTS NO. 4-8

SEE OTHER DETAILS

MIDWEST GUARDRAIL SYSTEM
LONG SPAN MGS (L)

STATE OF WISCONSIN
DEPARTMENT OF TRANSPORTATION

APPROVED
07/2018
DATE
FHWA

/S/ Rodney Taylor
ROADWAY STANDARDS DEVELOPMENT ENGINEER

NT

6

6

S.D.D. 14 B 43-4c

S.D.D. 14 B 43-4c

GENERAL NOTES

(A) THE SLOPE IN THE AREA BOUNDED BY THE GRADELINE, THE HINGE POINT LINE (HPL) AND THE CLEAR ZONE LIMITS (CZL) SHALL BE 4:1 OR FLATTER.

(B) AFTER FINAL ASSEMBLY, RECHECK CABLE TO BE SURE IT IS TAUT AND HAS NOT RELAXED

(C) DIFFERENT MANUFACTURERS REQUIRE DIFFERENT PERFORATED W - BEAM RAIL END PANELS. SEE MANUFACTURER'S INFORMATION.

(D) ATTACH ALUMINUM SHEET TO E.A.T. HEAD USING 4 STAINLESS STEEL SELF - TAPPING SCREWS. ONE SCREW PER CORNER.

(E) HARDWARE MAY VARY BETWEEN MANUFACTURER. SEE MANUFACTURER'S DRAWING FOR INFORMATION.

DIMENSIONS MAY VARY, MANUFACTURER'S INFORMATION.

SEE SDD 14B42 FOR MORE INFORMATION.

* DO NOT ATTACH BLOCKOUTS TO POST 1 AND 2.

DO NOT INSTALL REFLECTORS ON THE FIRST 50 FEET OF THE APPROACH END OF THE ENERGY ABSORBING TERMINAL.

SEE MANUFACTURER'S DRAWING FOR SPLICE LOCATION, HARDWARE DIMENSIONS AND INSTALLATION INSTRUCTIONS.

THE CENTER OF THE UPPER 3 ½" DIAMETER HOLE ON POST NUMBER 3 THROUGH POST 9 IS TO BE FLUSH WITH THE GROUND LINE UP TO A MAXIMUM OF 2" ABOVE GROUND LINE. WOOD BLOCKS ON POSTS NUMBERED 3 THROUGH 9 MAY BE ADJUSTED UP TO 3" ABOVE THE TOP OF POST.

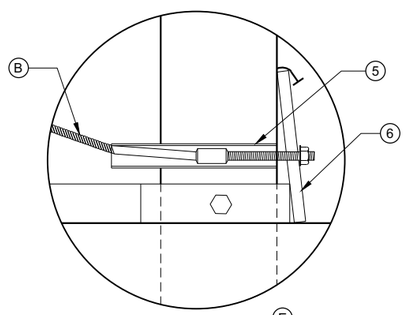

DETAIL "A" (E)

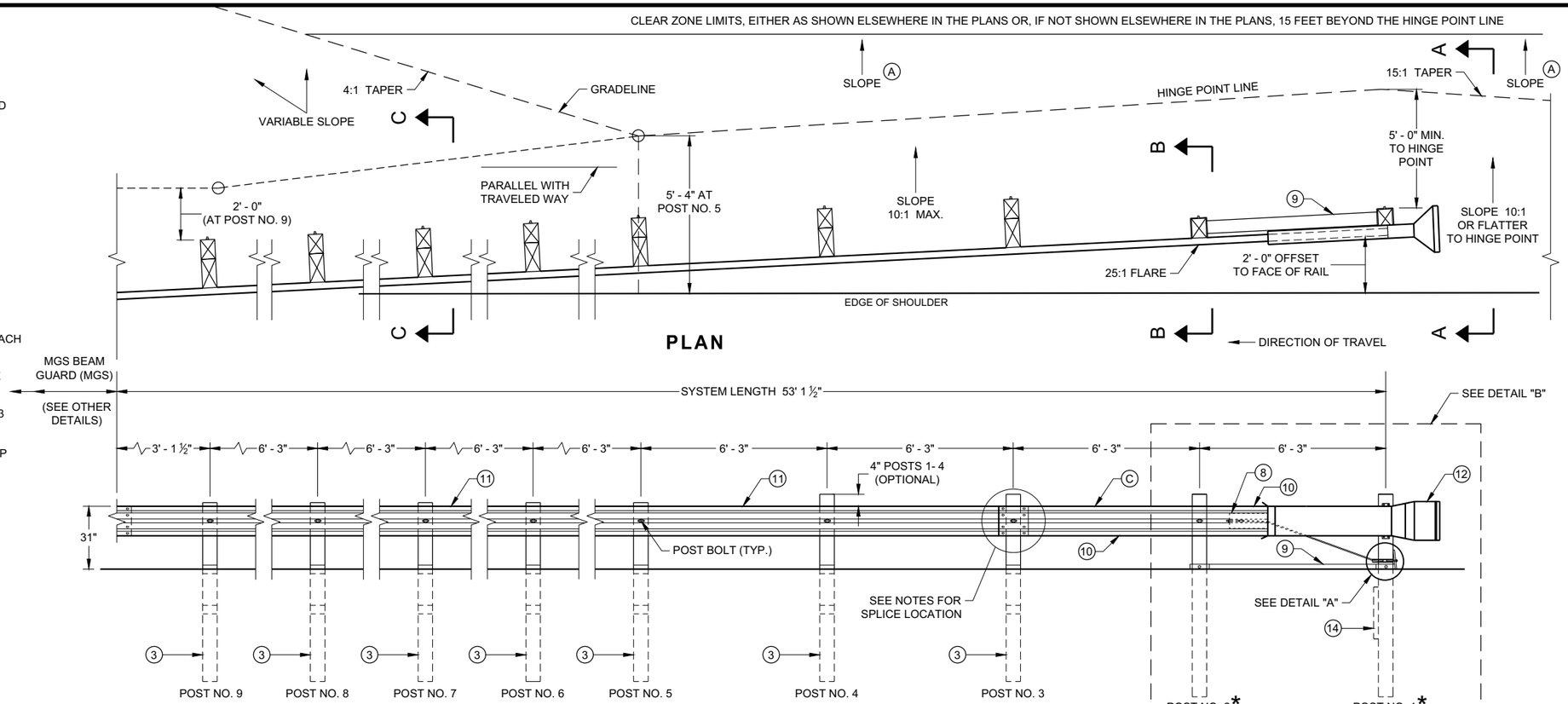

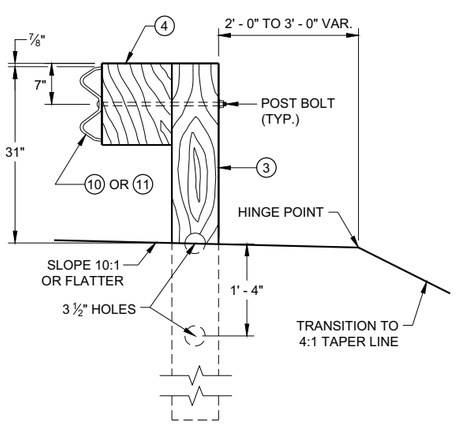

SECTION C - C
TYPICAL AT POST NOS. 3 - 9

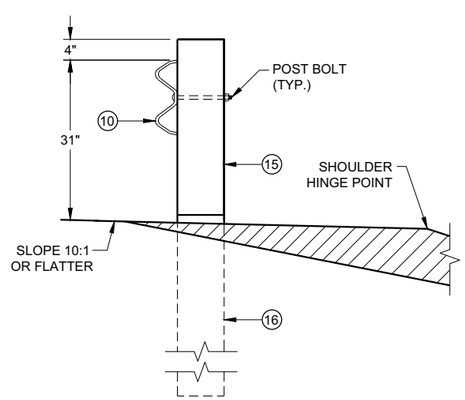

SECTION B - B
TYPICAL AT POST NO. 2*

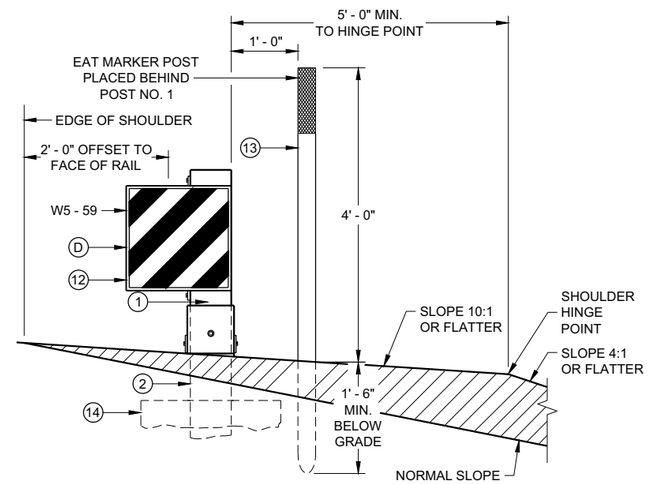

SECTION A - A
TYPICAL AT POST NO. 1*

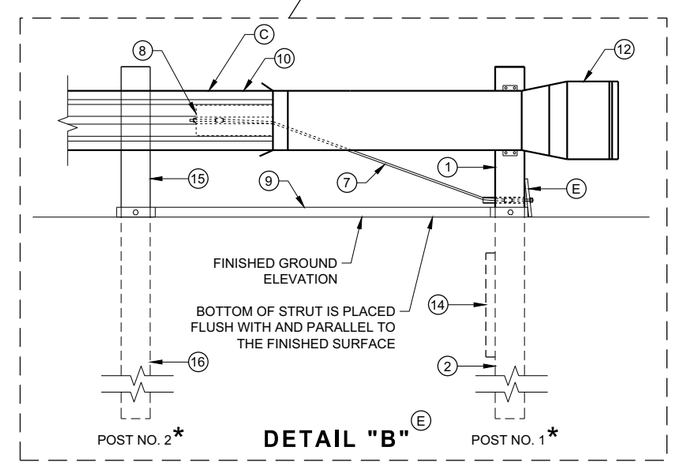

DETAIL "B" (E)

MIDWEST GUARDRAIL SYSTEM ENERGY ABSORBING TERMINAL (MGS)

STATE OF WISCONSIN
DEPARTMENT OF TRANSPORTATION

6

6

SDD 14B44 - 04a

SDD 14B44 - 04a

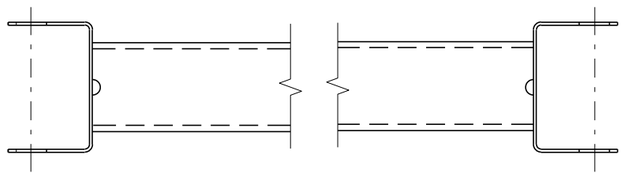

GENERIC GROUND STRUT (9)(E)

BILL OF MATERIALS

PART NO.	DESCRIPTION MATERIALS PROVIDED BY MGS EAT MANUFACTURER. SEE MANUGACTURER'S DETAILS FOR MORE INFORMATION.
1	UPPER POST NO. 1 6" X 6" TUBE
2	LOWER POST NO. 1
3	WOOD CRT
4	WOOD BLOCKOUT
5	PIPE SLEEVE
6	BEARING PLATE
7	BCT CABLE ASSEMBLY
8	ANCHOR CABLE BOX
9	GROUND STRUT
10	PERFORATED W-BEAM RAIL END PANEL, 12'-6" LONG.
11	STANDARD W-BEAM RAIL. MULTIPLE SECTIONS REQUIRED. SECTIONS VARY IN LENGTH.
12	IMPACT HEAD
13	EAT MARKER POST - YELLOW (SEE APPROVED PRODUCTS LIST)
14	SOIL PLATE
15	UPPER POST NO. 2
16	LOWER POST NO. 2

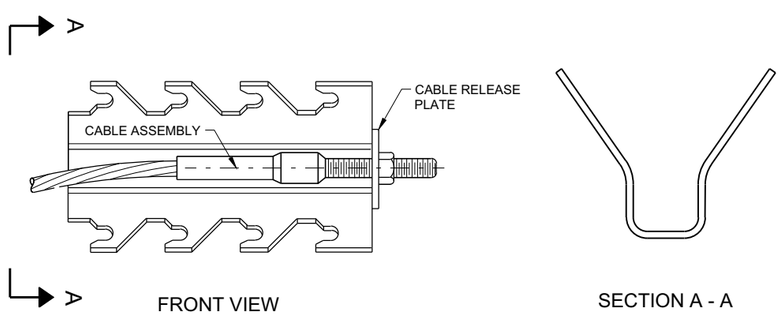

GENERIC ANCHOR CABLE BOX (9)(E)

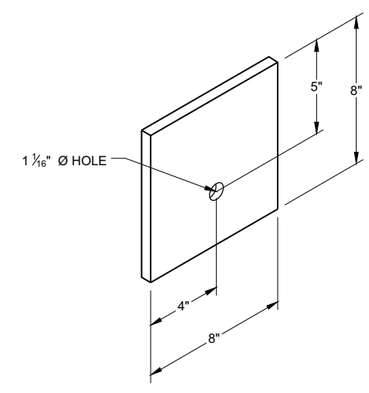

BEARING PLATE (6)(E)

MIDWEST GUARDRAIL SYSTEM ENERGY ABSORBING TERMINAL (MGS)

STATE OF WISCONSIN
DEPARTMENT OF TRANSPORTATION

6

6

SDD 14B44 - 04b

SDD 14B44 - 04b

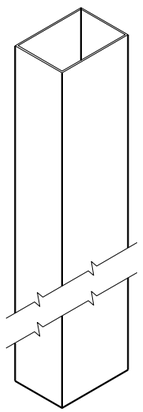

UPPER POST NO. 1 (1) (E)

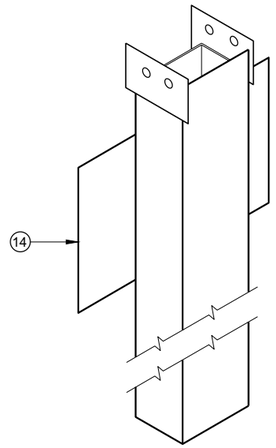

LOWER POST NO. 1 (2) (E)

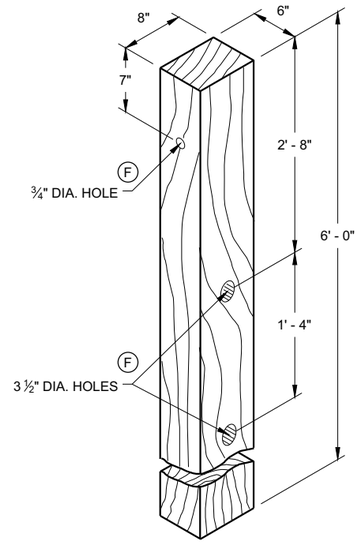

WOOD CRT POST (3) (E)
POSTS NUMBER 3-9

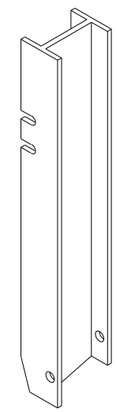

UPPER POST NO. 2 (15) (E)

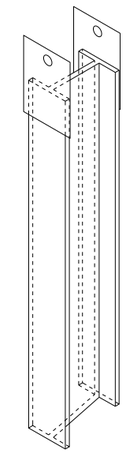

LOWER POST NO. 2 (16) (E)

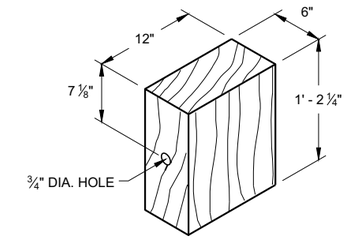

WOOD BLOCKOUT (4)
REQ'D. AT ALL POSTS EXCEPT POST NO'S 1 & 2

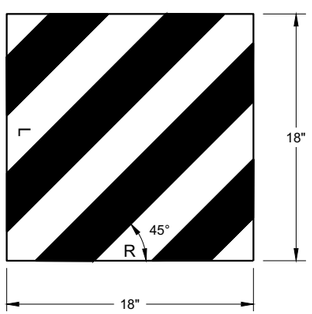

W5 - 59

REFLECTIVE SHEETING DETAIL (E)

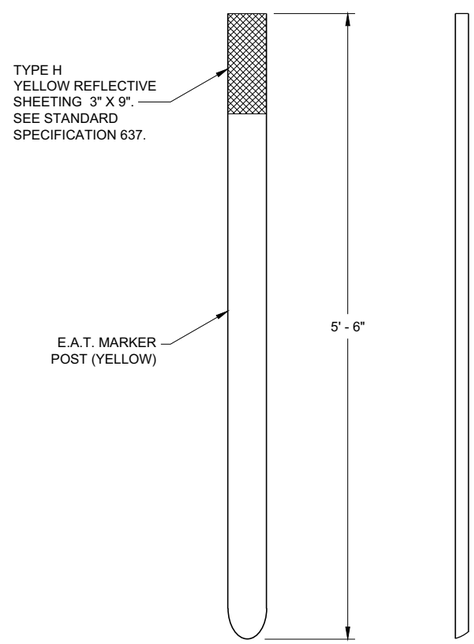

FRONT VIEW SIDE VIEW

E.A.T. MARKER POST (13)

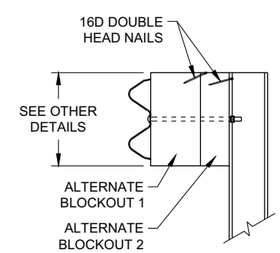

SIDE VIEW

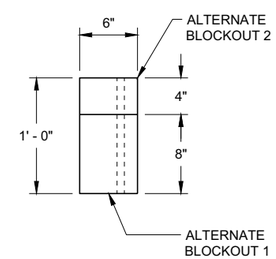

TOP VIEW

ALTERNATE WOOD BLOCKOUT DETAIL

MIDWEST GUARDRAIL SYSTEM ENERGY ABSORBING TERMINAL (MGS)

STATE OF WISCONSIN
DEPARTMENT OF TRANSPORTATION

APPROVED
7/2018 — DATE
/S/ Rodney Taylor — ROADWAY STANDARDS DEVE UNIT SUPERVISOR
FHWA

6

6

SDD 14B44 - 04c

SDD 14B44 - 04c

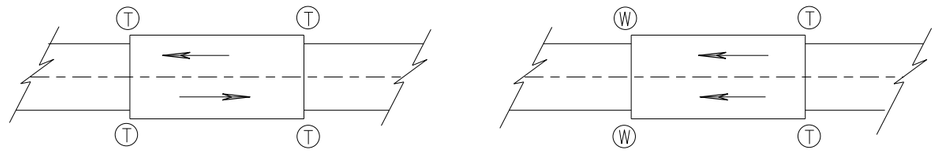

TWO WAY TRAFFIC **ONE WAY TRAFFIC**

(T) THRIE BEAM CONNECTION

(W) W-BEAM CONNECTION WHEN REQUIRED

TYPICAL LOCATIONS OF THRIE BEAM AND W-BEAM CONNECTIONS TO BRIDGE

GENERAL NOTES

IF ROCK IS ENCOUNTERED, REMOVE ROCK TO FULL DEPTH OF POST PLUS 2½", AND 12" DIAMETER AROUND POST. SEE 14B42 FOR MORE DETAILS.

TRANSITION USES STEEL POSTS ONLY.

SEE STANDARD DETAIL DRAWING 14 B 42 FOR MORE INFORMATION.

POST 2 THROUGH 17 USES STEEL POST ONLY

(1) BRIDGE RAILING TYPE "W" DOES NOT REQUIRE A TERMINAL CONNECTOR.

(2) OPTIONAL CURB AND GUTTER OR DRAINAGE FEATURE SEE PLAN FOR INFORMATION.

(13) STEEL OR WOOD POST IS ACCEPTABLE AT POST 1. SEE SDD14B42

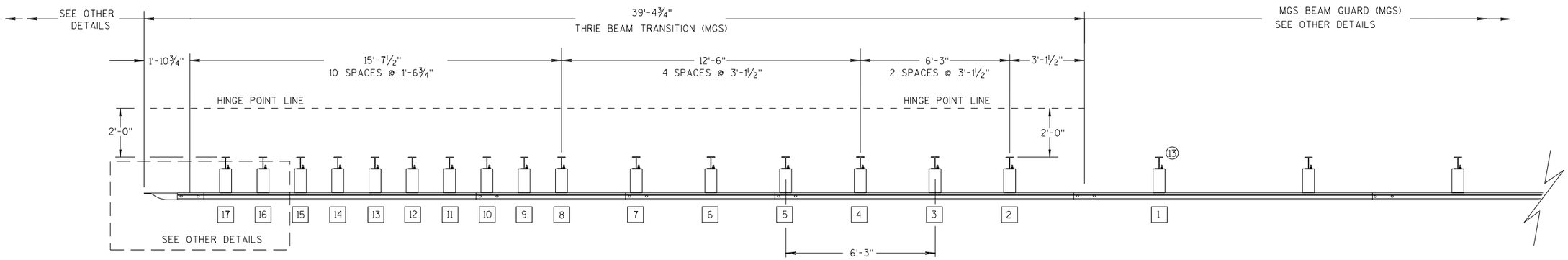

PLAN VIEW

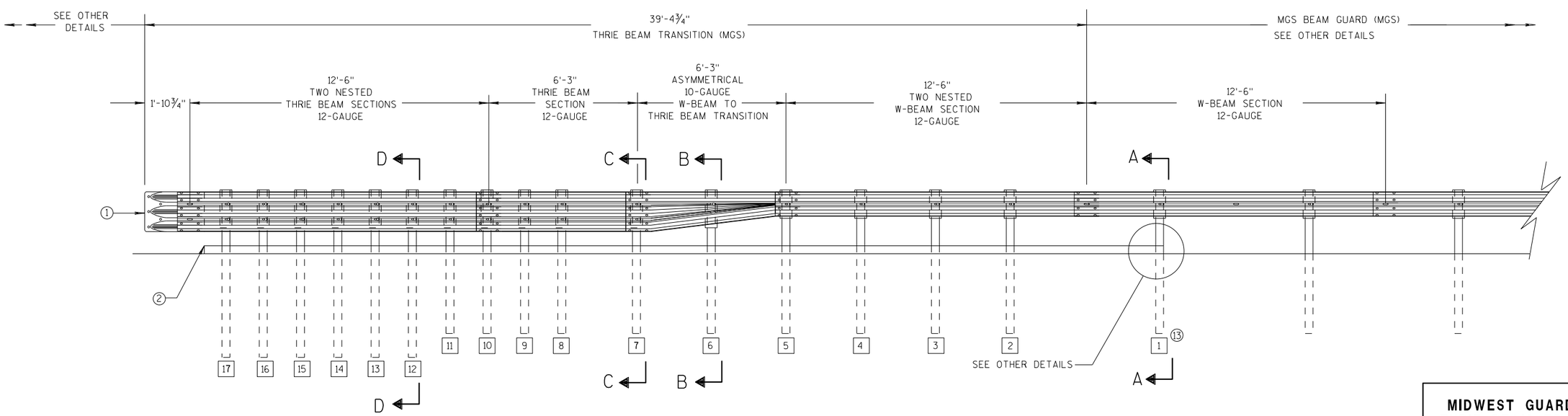

ELEVATION VIEW

MIDWEST GUARDRAIL SYSTEM THRIE BEAM TRANSITION

MIDWEST GUARDRAIL SYSTEM THRIE BEAM TRANSITION (MGS)

STATE OF WISCONSIN
DEPARTMENT OF TRANSPOR

6

S.D.D. 14 B 45-5a

GENERAL NOTES

(2) OPTIONAL CURB AND GUTTER OR DRAINAGE FEATURE SEE PLAN FOR INFORMATION.

(3) WHEN USING STEEL POSTS AND WOOD BLOCKOUTS INSTALL FOUR 10D GALVANIZED NAILS. INSTALL NAILS AT THE BACK CORNERS OF THE BLOCK AND BEND THE NAILS OVER THE FLANGE OF THE STEEL POST.

(4) TOLERANCE FOR TOP OF W-BEAM RAIL IS ± 1".

(13) STEEL OR WOOD POST IS ACCEPTABLE AT POST 1. SEE SDD 14B42

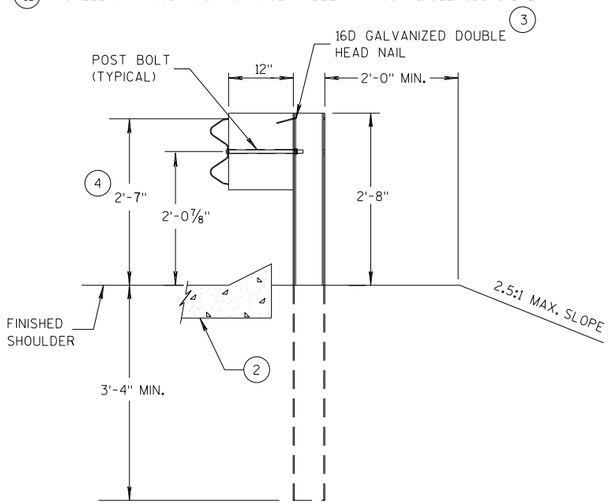

SECTION A-A (13)

POSTS 1-5

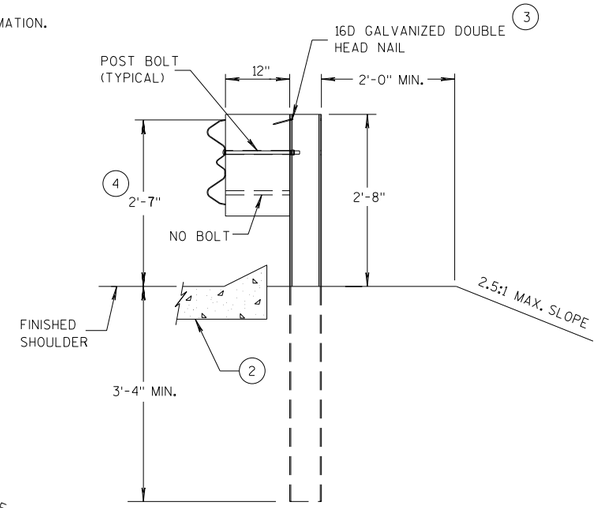

SECTION B-B

POST 6

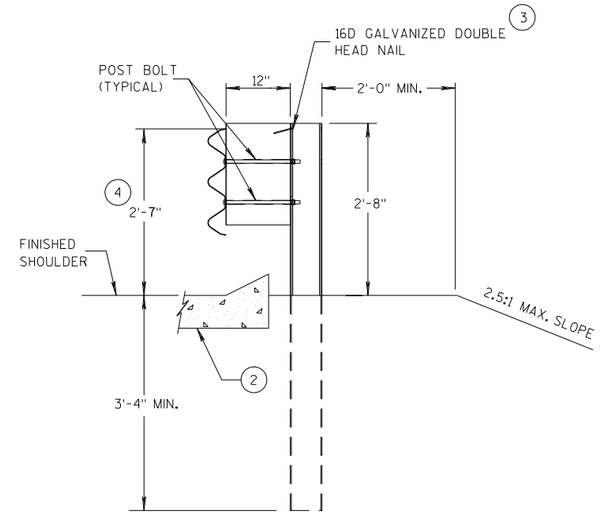

SECTION C-C

POSTS 7-11

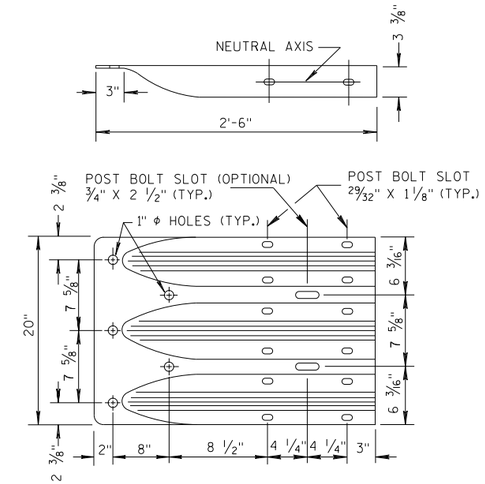

THRIE BEAM TERMINAL CONNECTOR

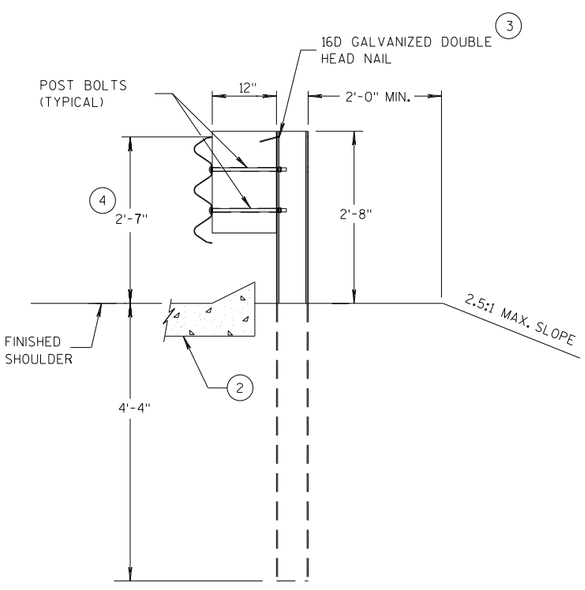

SECTION D-D

POSTS 12-17

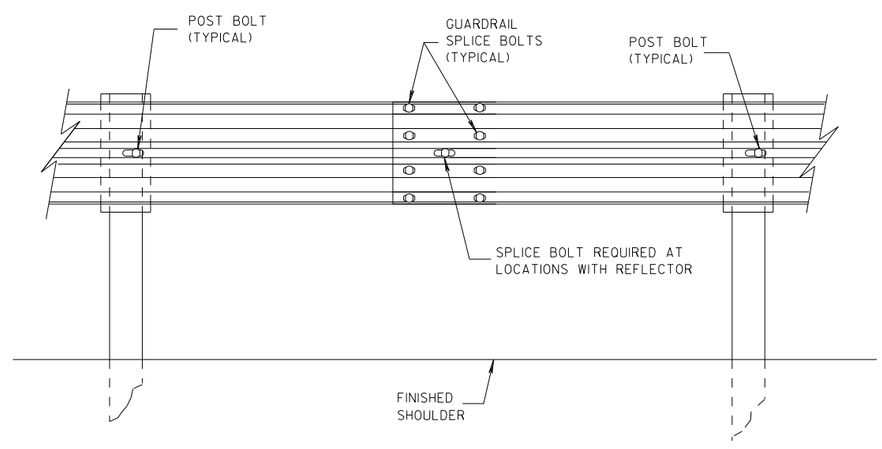

SPLICE DETAIL

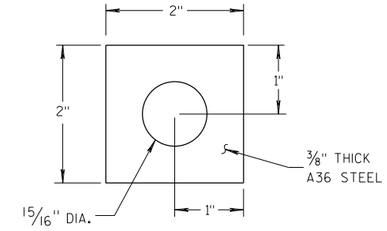

PLATE WASHER DETAIL

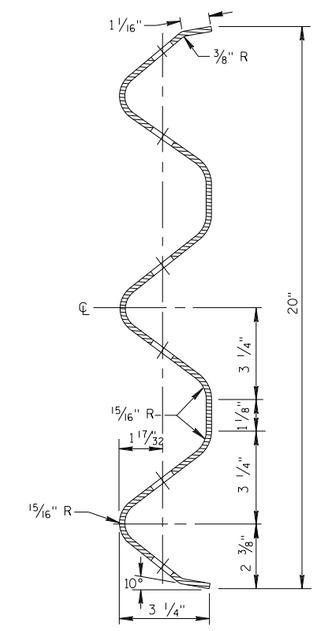

SECTION THRU THRIE BEAM RAIL ELEMENT

MIDWEST GUARDRAIL SYSTEM
THRIE BEAM TRANSITION (MGS)

STATE OF WISCONSIN
DEPARTMENT OF TRANSPORT

6

S.D.D. 14 B 45-5b

6

S.D.D. 14 B 45-5b

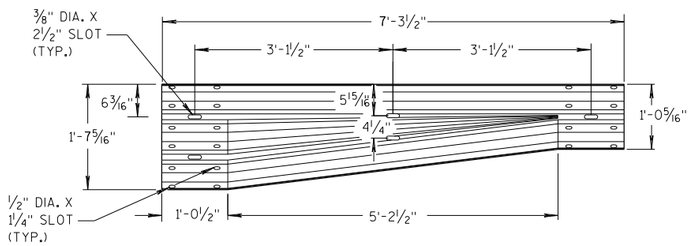

W-BEAM TO THRIE BEAM TRANSITION SECTION

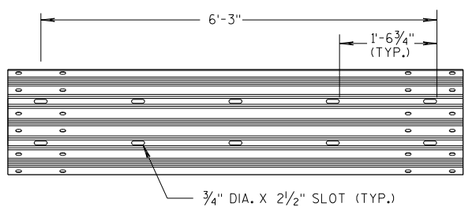

6'-3" THRIE BEAM SECTION

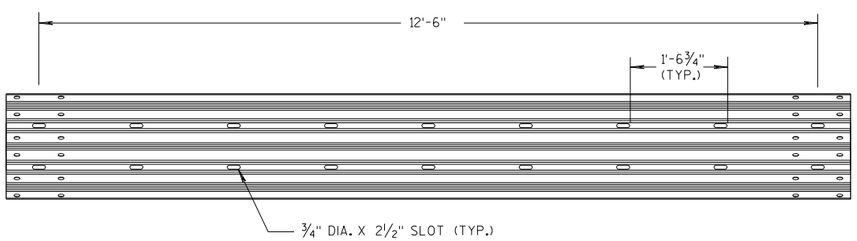

12'-6" THRIE BEAM SECTION

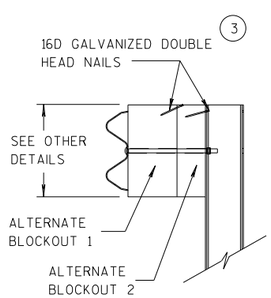

SIDE VIEW

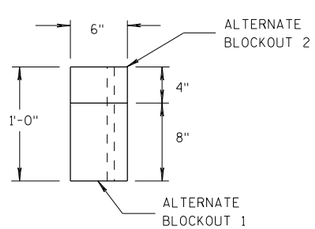

TOP VIEW

ALTERNATE WOOD BLOCKOUT DETAIL

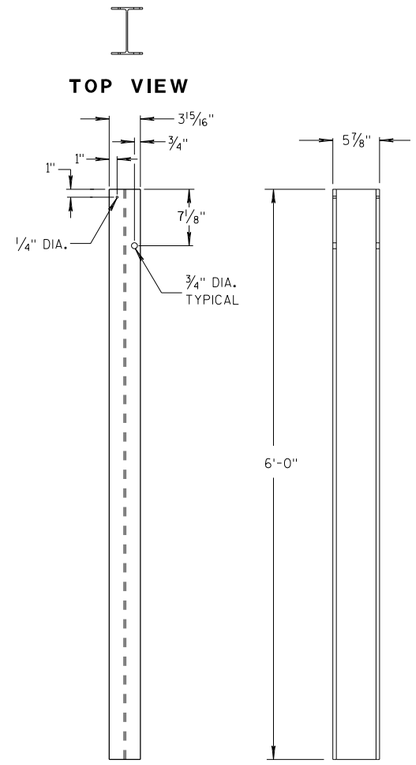

STEEL POSTS 1-5 (13)

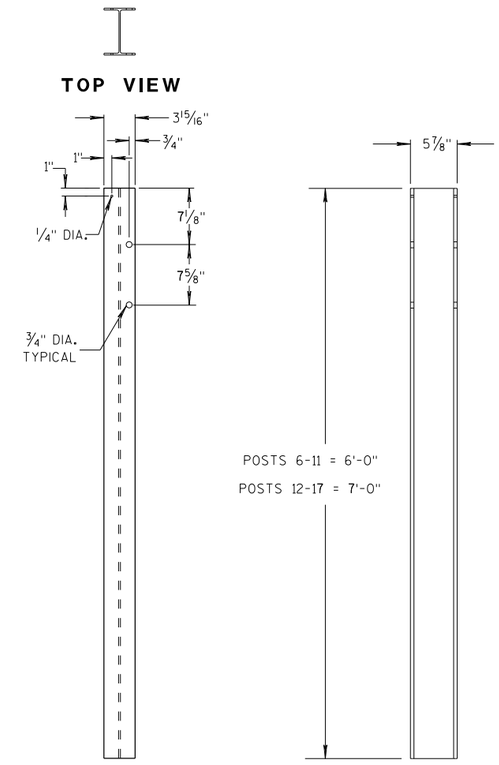

STEEL POSTS 6-17

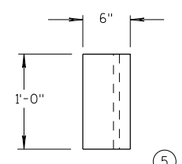

TOP VIEW (5)

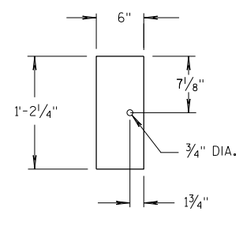

FRONT VIEW

BLOCKOUT POSTS 1-5

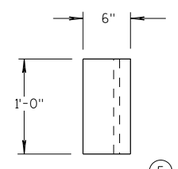

TOP VIEW (5)

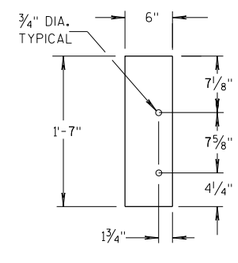

FRONT VIEW

BLOCKOUT POSTS 6-17

GENERAL NOTES

STEEL POSTS ARE W6X9 OR W6X8.5.

BOLT HOLES FOR POST ARE ON FRONT AND OF SIDE OF POST.

(3) WHEN USING STEEL POSTS AND WOOD BLOCKOUTS INSTALL FOUR 16D GALVANIZED NAILS. INSTALL NAILS AT THE BACK CORNERS OF THE BLOCK AND BEND THE NAILS OVER THE FLANGE OF THE STEEL POST.

(5) WOOD BLOCKS MAY BE CONSTRUCTED OUT OF 2 WOOD BLOCKS. SEE ALTERNATE WOOD BLOCK DETAIL.

(13) STEEL OR WOOD POST IS ACCEPTABLE AT POST 1. SEE SDD 14B42.

MIDWEST GUARDRAIL SYSTEM THRIE BEAM TRANSITION (MGS)

STATE OF WISCONSIN
DEPARTMENT OF TRANSPOR

6

S.D.D. 14 B 45-5c

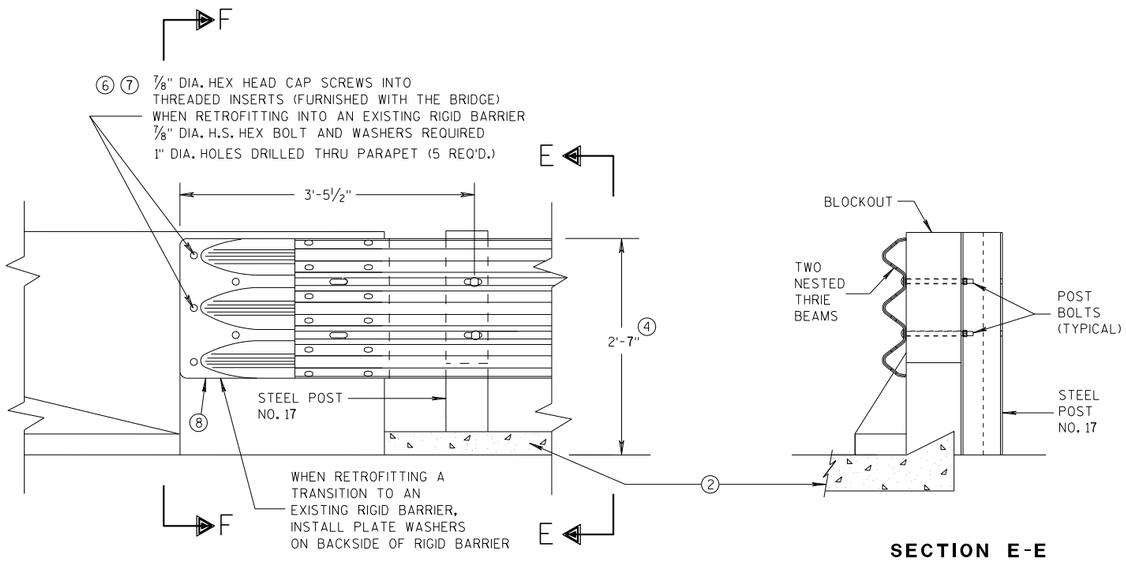

FRONT VIEW

SECTION E-E

THRIE BEAM CONNECTION TO BRIDGE PARAPET WITH SQUARE ENDS

GENERAL NOTES

THESE ARE TYPICAL CONNECTION DETAILS. ADJUST THE POSTION OF CONNECTIONS TO EXISTING BRIDGES TO FIT THE ACTUAL BRIDGE AND SITE DIMENSIONS.

② OPTIONAL CURB AND GUTTER OR DRAINAGE FEATURE SEE PLAN FOR INFORMATION.

④ TOLERANCE FOR TOP OF BEAM IS ± 1".

⑥ DRILLING BOLT HOLES THROUGH THE PARAPET, BOLTS, NUTS, WASHERS AND REPAIRING DAMAGED CONCRETE ARE INCIDENTAL TO THE CONTRACT.

⑦ BOLTS MAY BE A325 BOLTS OR A449 BOLTS. BOLT LENGTH AND THREADING LENGTH ARE TO ALLOW FOR A TIGHT CONNECTION BETWEEN RIGID BARRIER AND THRIE BEAM CONNECTION PLATE. CONTRACTOR IS TO FIELD VERIFY BOLT LENGTH AND THREAD LENGTH. ONE ROUND WASHER REQUIRED BETWEEN BOLT HEAD AND THRIE BEAM CONNECTOR PLATE. BOLTS THAT EXTEND THROUGH THE PARAPET AND OUT THE BACK FACE REQUIRE A HARDENED ROUND STEEL WASHER THAT IS 2" O.D. X 5/32" THICK AND ONE PLATE WASHER. REPAIR ANY DAMAGED CONCRETE FROM BOLT INSTALLATION.

⑧ THE RECESS FOR A W-BEAM CONNECTION, WHICH EXISTS ON SOME PARAPETS OF THIS TYPE, SHALL BE FILLED WITH A TREATED TIMBER BLOCKOUT. BLOCKOUT SIZE IS 1'-6" X 2'-0" X 3 1/2".

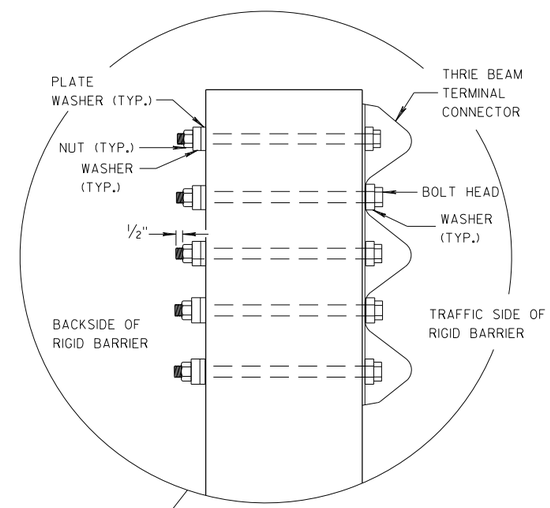

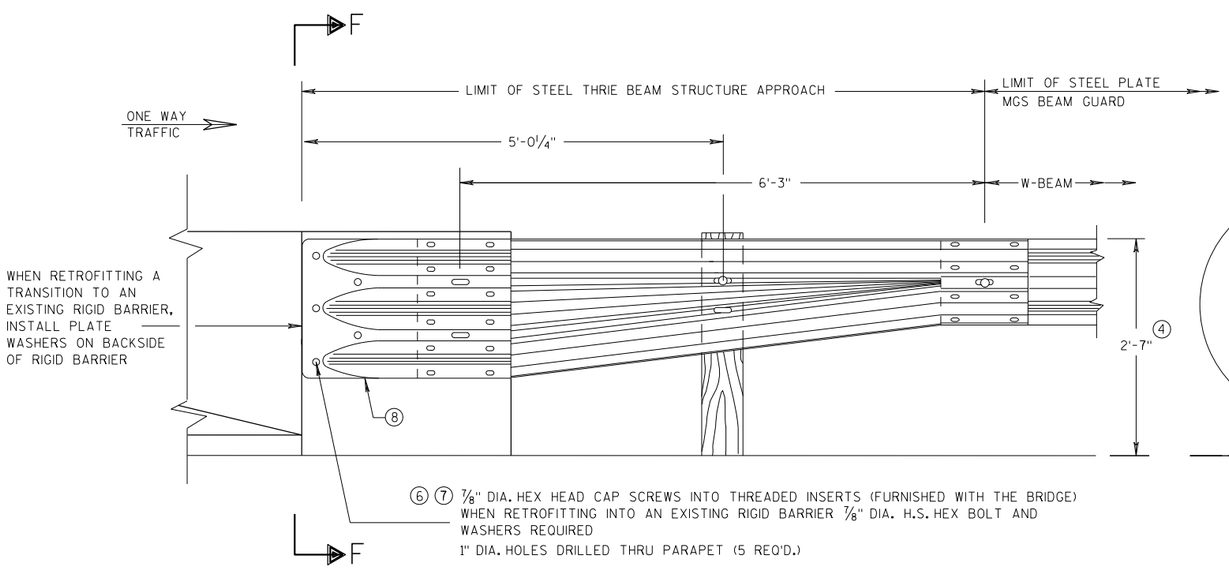

FRONT VIEW

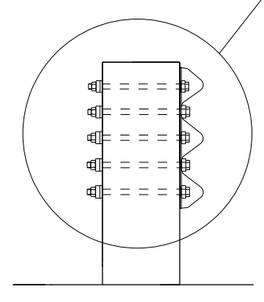

SECTION F-F

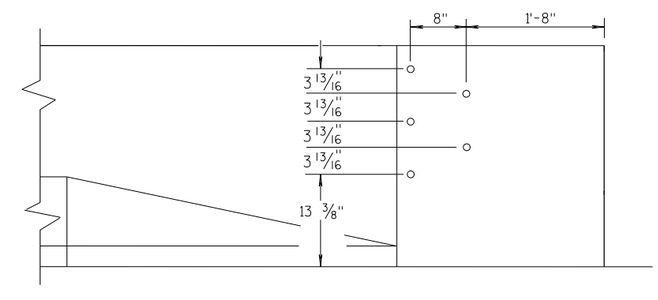

DRILL HOLE LOCATION

W BEAM TRANSITION AND CONNECTION TO BRIDGE PARAPETS WITH SQUARE ENDS

(USE ONLY ON THE TRAFFIC EXIT END OF ONE WAY BRIDGES)

MIDWEST GUARDRAIL SYSTEM THRIE BEAM TRANSITION (MGS)

STATE OF WISCONSIN
DEPARTMENT OF TRANSPORTATION

APPROVED
07/2018 — DATE
/S/ Rodney Taylor — ROADWAY STANDARDS DEVELOPMENT UNIT SUPERVISOR
FHWA

6

S.D.D. 14 B 45-5d

GENERAL NOTES

THESE ARE TYPICAL CONNECTION DETAILS. ADJUST THE POSTION OF CONNECTIONS TO EXISTING BRIDGES TO FIT THE ACTUAL BRIDGE AND SITE DIMENSIONS.

(2) OPTIONAL CURB AND GUTTER OR DRAINAGE FEATURE SEE PLAN FOR INFORMATION.

(4) TOLERANCE FOR TOP OF BEAM IS ± 1".

(6) DRILLING BOLT HOLES THROUGH THE PARAPET, BOLTS, NUTS, WASHERS AND REPAIRING DAMAGED CONCRETE ARE INCIDENTAL TO THE CONTRACT.

(7) BOLTS MAY BE A325 BOLTS OR A449 BOLTS. BOLT LENGTH AND THREADING LENGTH ARE TO ALLOW FOR A TIGHT CONNECTION BETWEEN RIGID BARRIER AND THRIE BEAM CONNECTION PLATE. CONTRACTOR IS TO FIELD VERIFY BOLT LENGTH AND THREAD LENGTH. ONE ROUND WASHER REQUIRED BETWEEN BOLT HEAD AND THRIE BEAM CONNECTOR PLATE. BOLTS THAT EXTEND THROUGH THE PARAPET AND OUT THE BACK FACE REQUIRE A HARDENED ROUND STEEL WASHER THAT IS 2" O.D. X 5/32" THICK AND ONE PLATE WASHER. REPAIR ANY DAMAGED CONCRETE FROM BOLT INSTALLATION.

(8) THE RECESS FOR A W-BEAM CONNECTION, WHICH EXISTS ON SOME PARAPETS OF THIS TYPE, SHALL BE FILLED WITH A TREATED TIMBER BLOCKOUT. BLOCKOUT SIZE IS 1'-6" X 2'-0" X 3 1/2".

(9) BOLT, NUT AND WASHERS NOT REQUIRED FOR THIS LOCATION WHEN RETROFITTING AN EXISTING PAPAPET AND THE HOLE IS EITHER ABOVE PARAPET OR WITHIN 4 INCHES OF THE EDGE OF PARAPET.

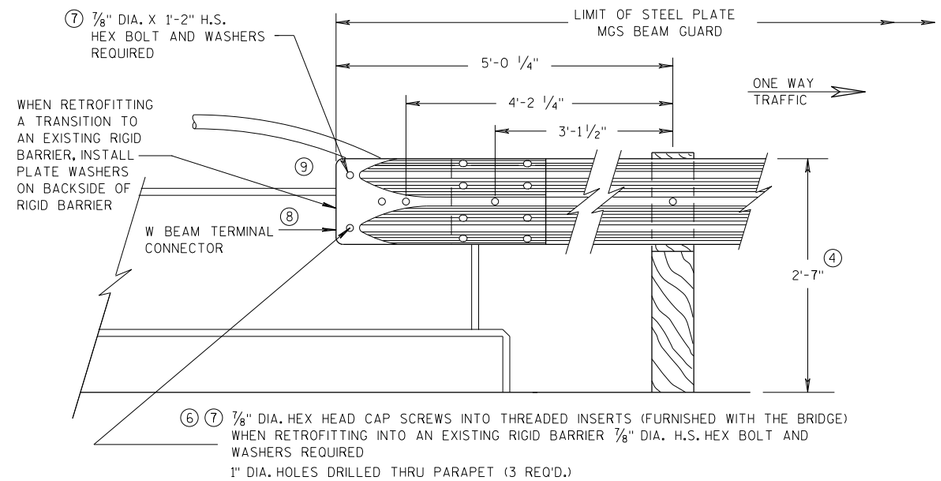

FRONT VIEW

W BEAM CONNECTION TO VERTICAL FACE PARAPET

(USE ONLY ON THE TRAFFIC EXIT END OF ONE WAY BRIDGES)

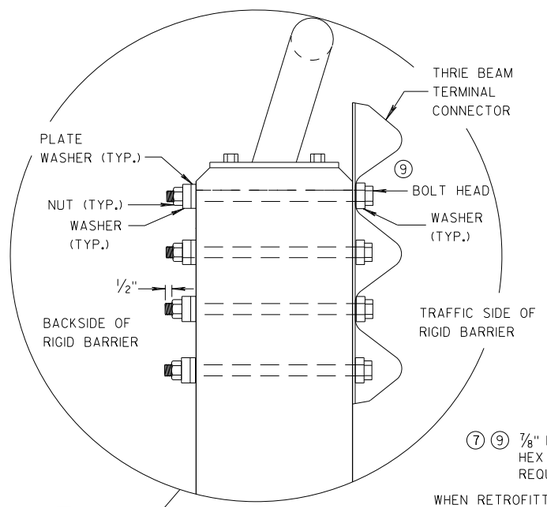

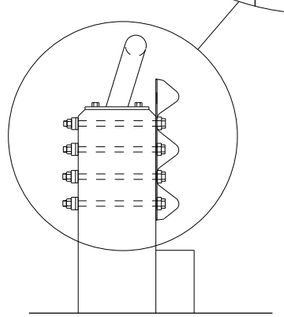

SECTION G-G

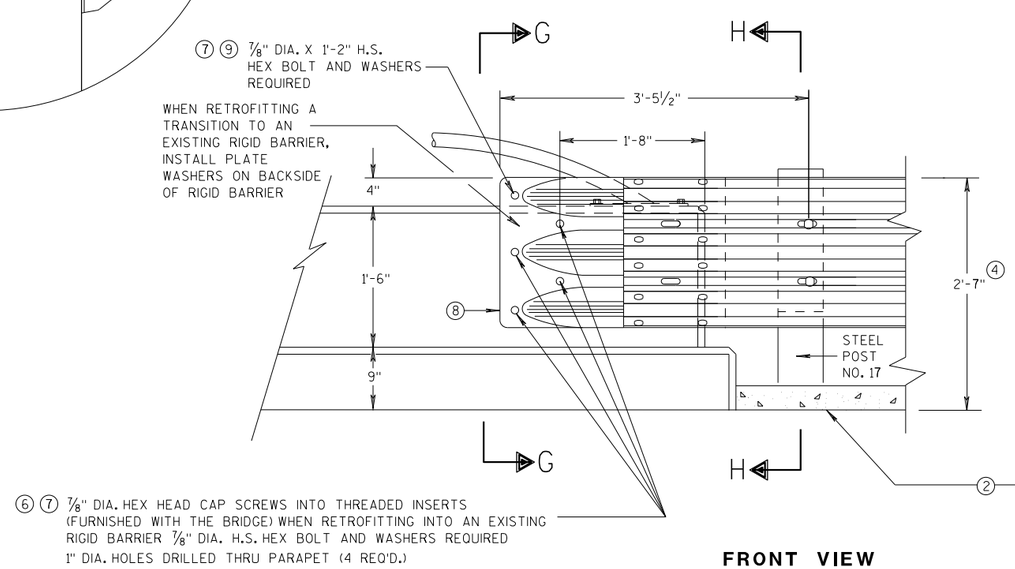

FRONT VIEW

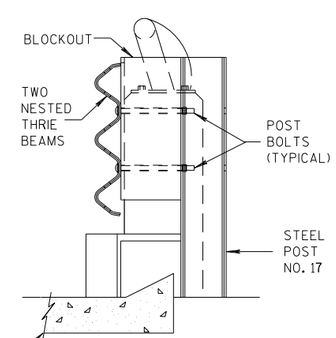

SECTION H-H

THRIE BEAM CONNECTION TO VERTICAL FACED PARAPETS

MIDWEST GUARDRAIL SYSTEM
THRIE BEAM TRANSITION (MGS)

STATE OF WISCONSIN
DEPARTMENT OF TRANSPORTATION

APPROVED
07/2018 — DATE
/S/ Rodney Taylor
ROADWAY STANDARDS D[illegible] UNIT SUPERVI[illegible]
FHWA

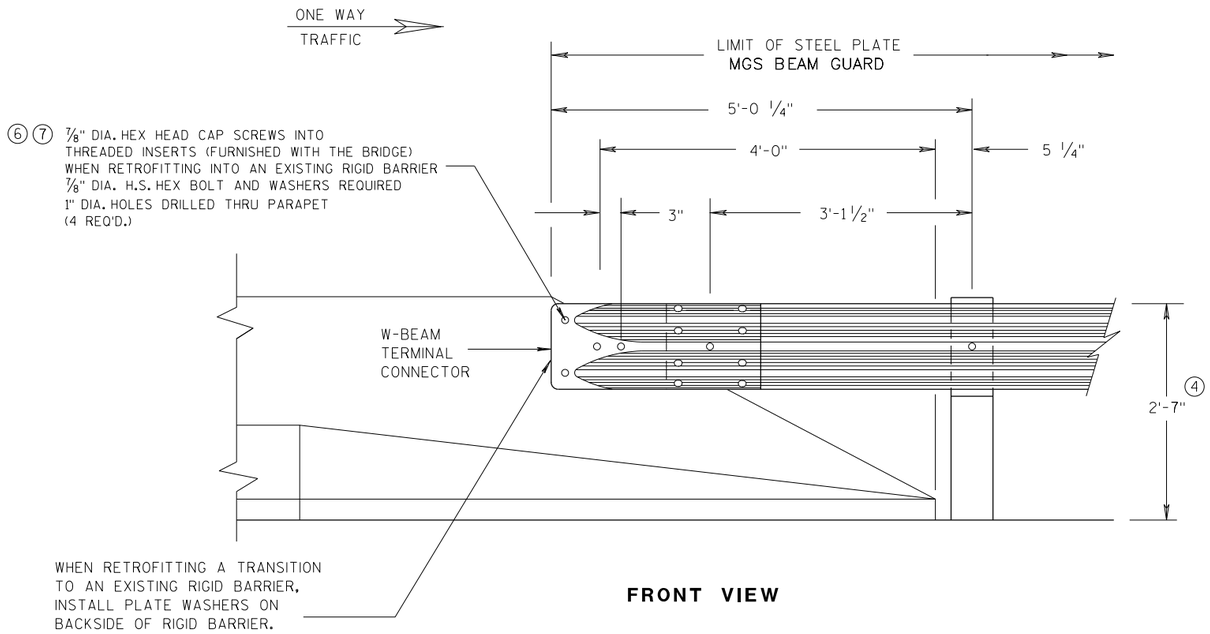

FRONT VIEW

W BEAM CONNECTION TO PARAPETS WITH SLOPED ENDS

(USE ONLY AT TRAFFIC EXIT END OF ONE WAY BRIDGE)

GENERAL NOTES

② OPTIONAL CURB AND GUTTER OR DRAINAGE FEATURE SEE PLAN FOR INFORMATION.

④ TOLERANCE FOR TOP OF BEAM IS ± 1".

⑥ DRILLING BOLT HOLES THROUGH THE PARAPET, BOLTS, NUTS, WASHERS AND REPAIRING DAMAGED CONCRETE ARE INCIDENTAL TO THE CONTRACT.

⑦ BOLTS MAY BE A325 BOLTS OR A449 BOLTS. BOLT LENGTH AND THREADING LENGTH ARE TO ALLOW FOR A TIGHT CONNECTION BETWEEN RIGID BARRIER AND THRIE BEAM CONNECTION PLATE. CONTRACTOR IS TO FIELD VERIFY BOLT LENGTH AND THREAD LENGTH. ONE ROUND WASHER REQUIRED BETWEEN BOLT HEAD AND THRIE BEAM CONNECTOR PLATE. BOLTS THAT EXTEND THROUGH THE PARAPET AND OUT THE BACK FACE REQUIRE A HARDENED ROUND STEEL WASHER THAT IS 2" O.D. X 5/32" THICK AND ONE PLATE WASHER. REPAIR ANY DAMAGED CONCRETE FROM BOLT INSTALLATION.

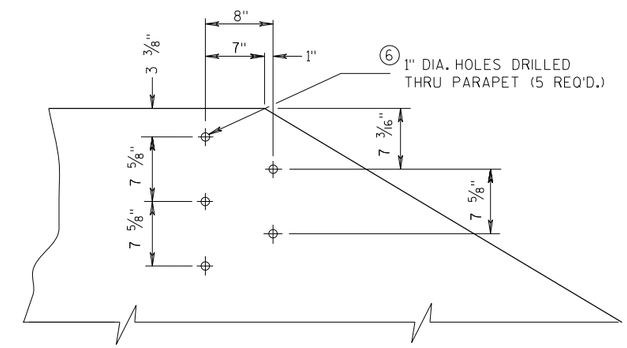

DRILL HOLE LOCATION AND PATTERN FOR THRIE BEAM CONNECTION

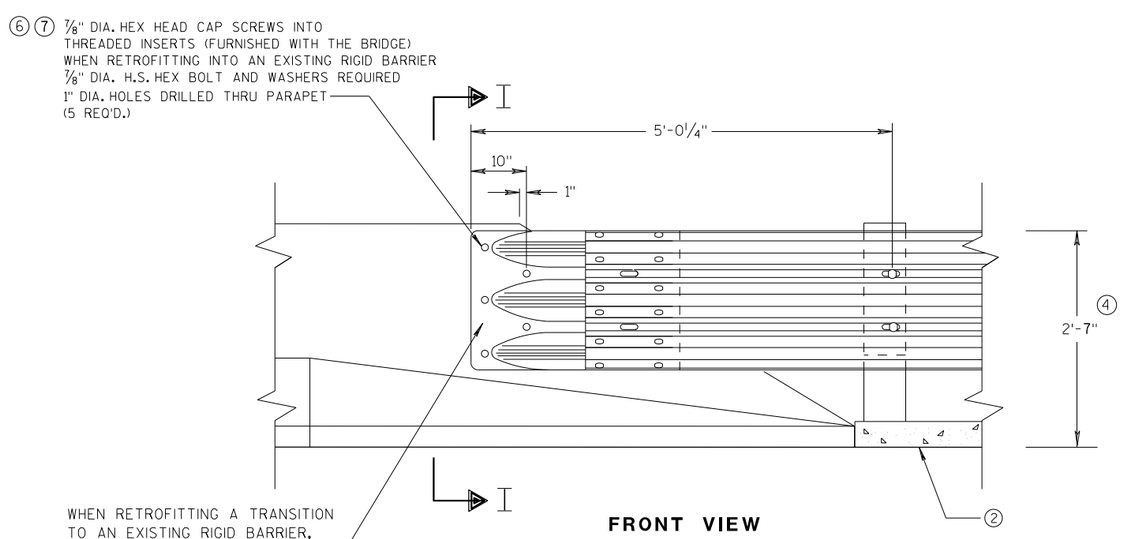

FRONT VIEW

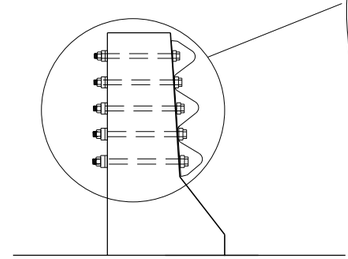

SECTION I-I

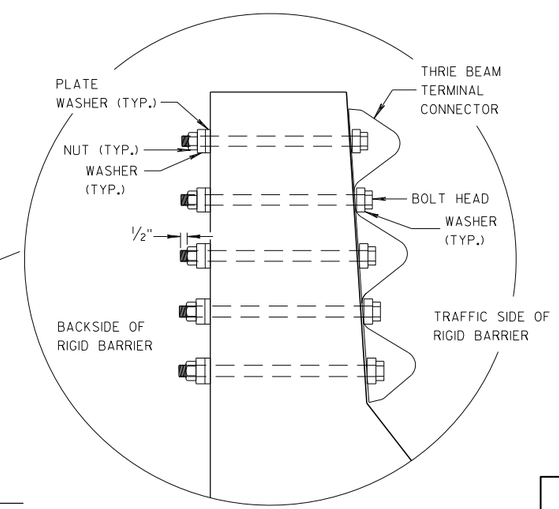

THRIE BEAM CONNECTION TO BRIDGE PARAPETS WITH SLOPED ENDS

MIDWEST GUARDRAIL SYSTEM THRIE BEAM TRANSITION (MGS)

STATE OF WISCONSIN
DEPARTMENT OF TRANSPORTATION

APPROVED
07/2018 — DATE
/S/ Rodney Taylor — ROADWAY STANDARDS DEVELOPMENT UNIT SUPERVISOR
FHWA

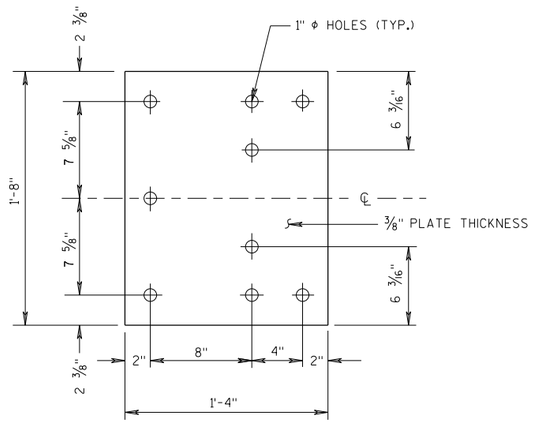

BACK-UP PLATE DETAIL

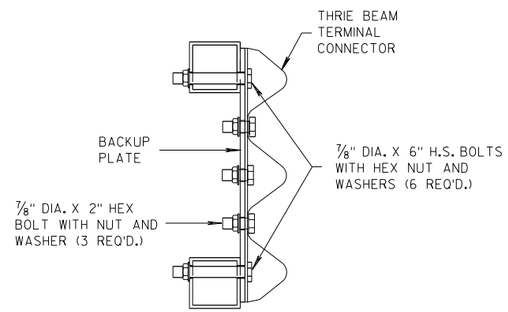

SECTION J-J

GENERAL NOTES

(4) TOLERANCE FOR TOP OF BEAM IS ± 1".

(6) DRILLING HOLES THROUGH THE PAPRPET, BOLTS, NUTS, WASHERS AND REPAIRING DAMAGED CONCRETE ARE INCIDENTAL TO THE CONTRACT.

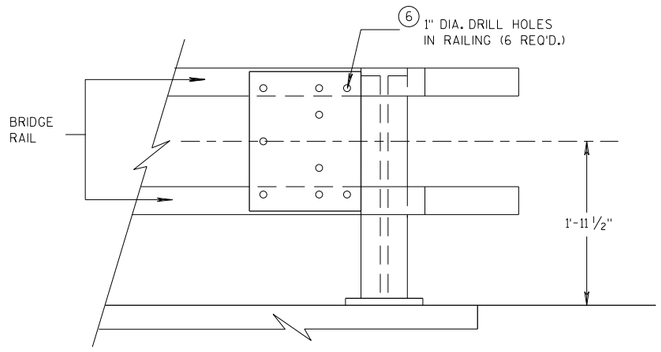

BACK-UP PLATE MOUNTING ONTO BRIDGE RAILING

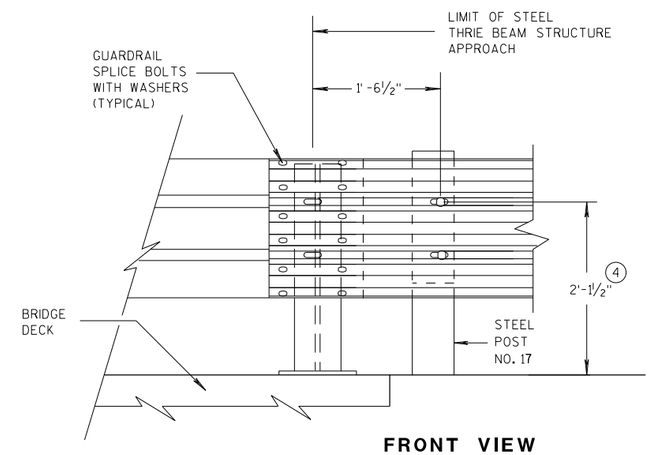

FRONT VIEW

THRIE BEAM CONNECTION TO STEEL RAILING TYPE "W"

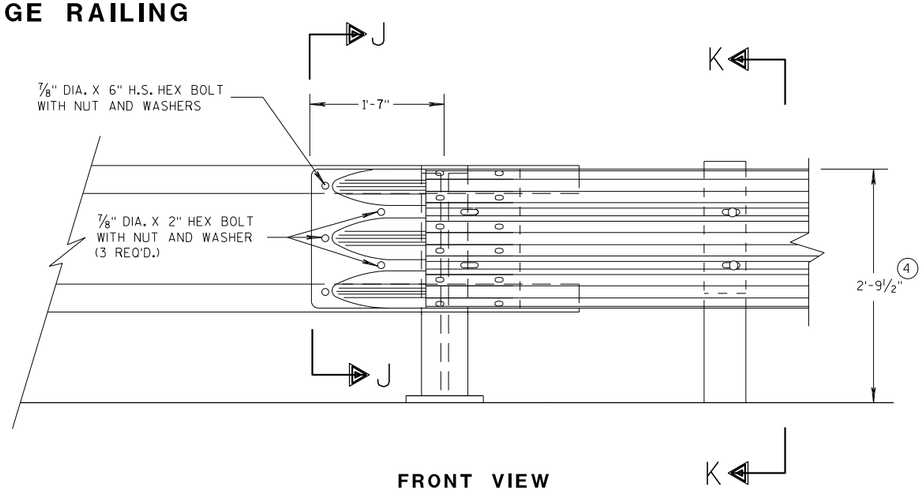

FRONT VIEW

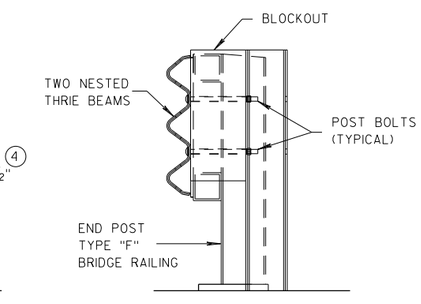

SECTION K-K

THRIE BEAM CONNECTION TO TUBULAR RAILING TYPE "F"

MIDWEST GUARDRAIL SYSTEM THRIE BEAM TRANSITION (MGS)

STATE OF WISCONSIN
DEPARTMENT OF TRANSPORTATION

APPROVED 07/2018 — DATE — FHWA

/S/ Rodney Taylor — ROADWAY STANDARDS DEVELOPMENT UNIT SUPERVISOR

S.D.D. 14 B 45-5g

GENERAL NOTES

(4) TOLERANCE FOR TOP OF W-BEAM RAIL IS ± 1".

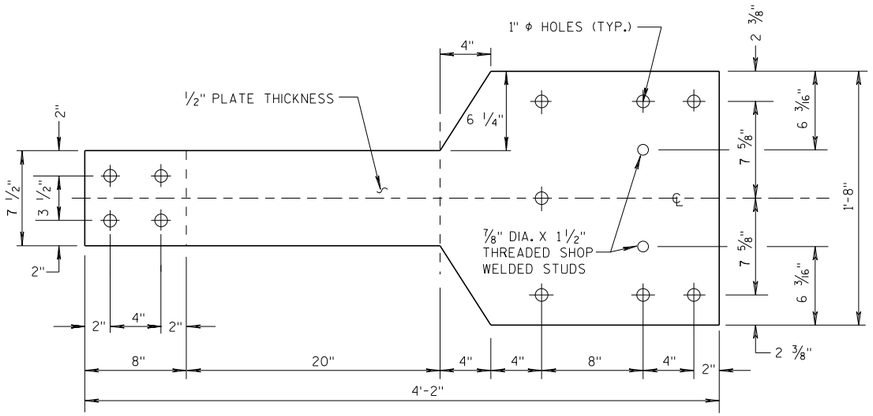

FRONT VIEW

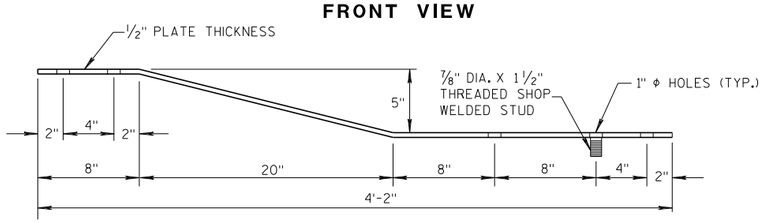

PLAN VIEW

BACK-UP PLATE DETAIL, TYPE "M"

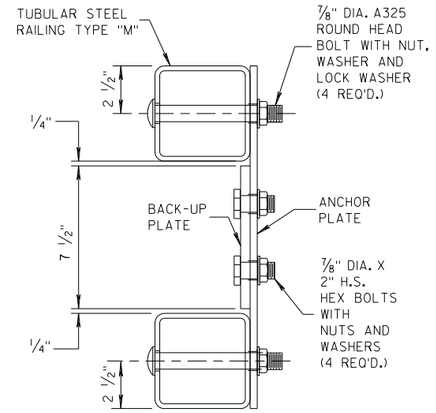

SECTION L-L

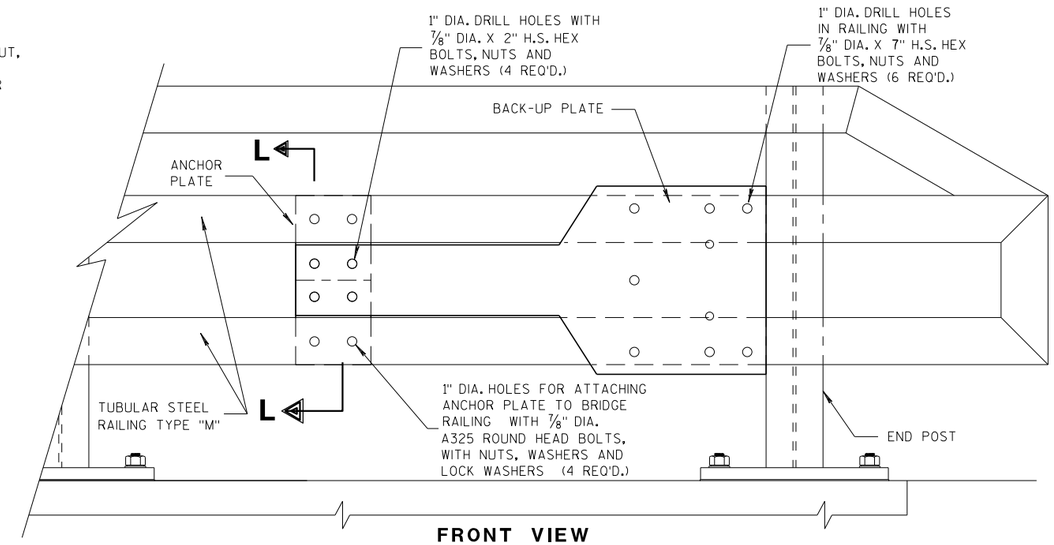

FRONT VIEW

ANCHOR AND BACK-UP PLATE MOUNTING TO BRIDGE RAILING, TYPE "M"

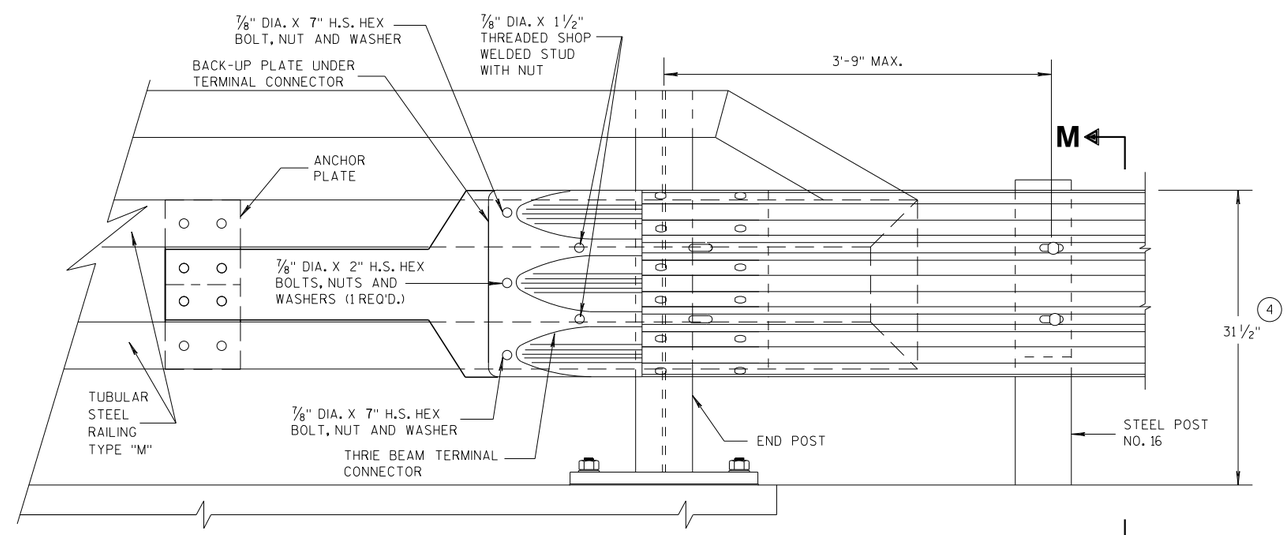

FRONT VIEW

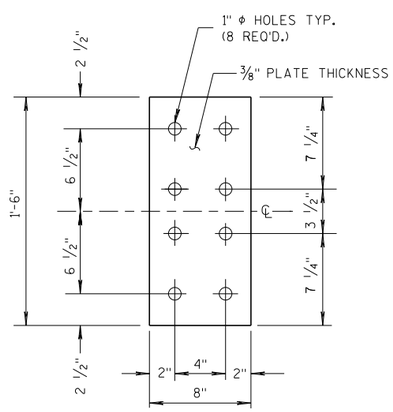

FRONT VIEW

ANCHOR PLATE DETAIL, TYPE "M"

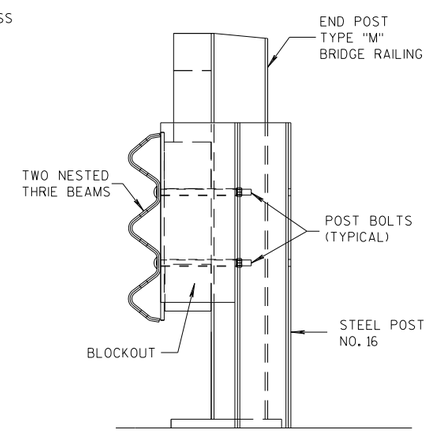

SECTION M-M

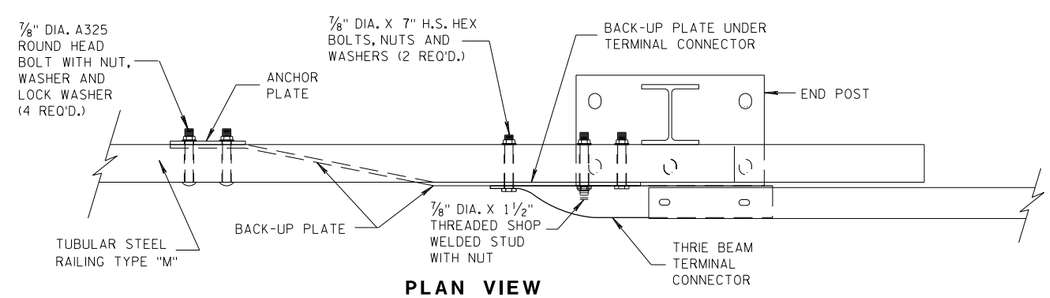

PLAN VIEW

THRIE BEAM CONNECTION TO TUBULAR RAILING, TYPE "M"

MIDWEST GUARDRAIL SYSTEM THRIE BEAM TRANSITION (MGS)

STATE OF WISCONSIN
DEPARTMENT OF TRANSPORTATION

APPROVED
07/2018 — DATE
/S/ Rodney Taylor — ROADWAY STANDARDS DEVELOPMENT UNIT SUPERVISOR
FHWA

6

S.D.D. 14 B 45-5h

GENERAL NOTES

COVER PLATE PANELS ARE 3/16" THICK.

ALL STIFFENERS ARE 1/4" THICK.

CONNECTOR PLATE SHALL BE FABRICATED FROM ASTM GRADE A36 STEEL AND GALVANIZED.

FOR GALVANIZED REQUIREMENTS, SEE SECTION 614 OF THE STANDARD SPECIFICATIONS.

ALL HOLE DIAMETERS SHALL BE 1".

FOR OPPOSITE SIDE INSTALLATION MIRROR DRAWINGS.

(10) STIFFENERS LOCATED AT THE OUTSIDE EDGES OF THE COVER PLATES SHALL BE WELDED AS FOLLOWS:
SINGLE BEVEL GROOVE WELD ON EXTERNAL SIDES AND 3/16" FILLET WELD BY 1" LONG SPACED AT 2" ON INTERNAL SIDES.

(11) STIFFENERS LOCATED ON THE INSIDE OF THE COVER PLATE SHALL BE WELDED AS FOLLOWS:
3/16" FILLET WELD BY 1" LONG SPACED AT 2".

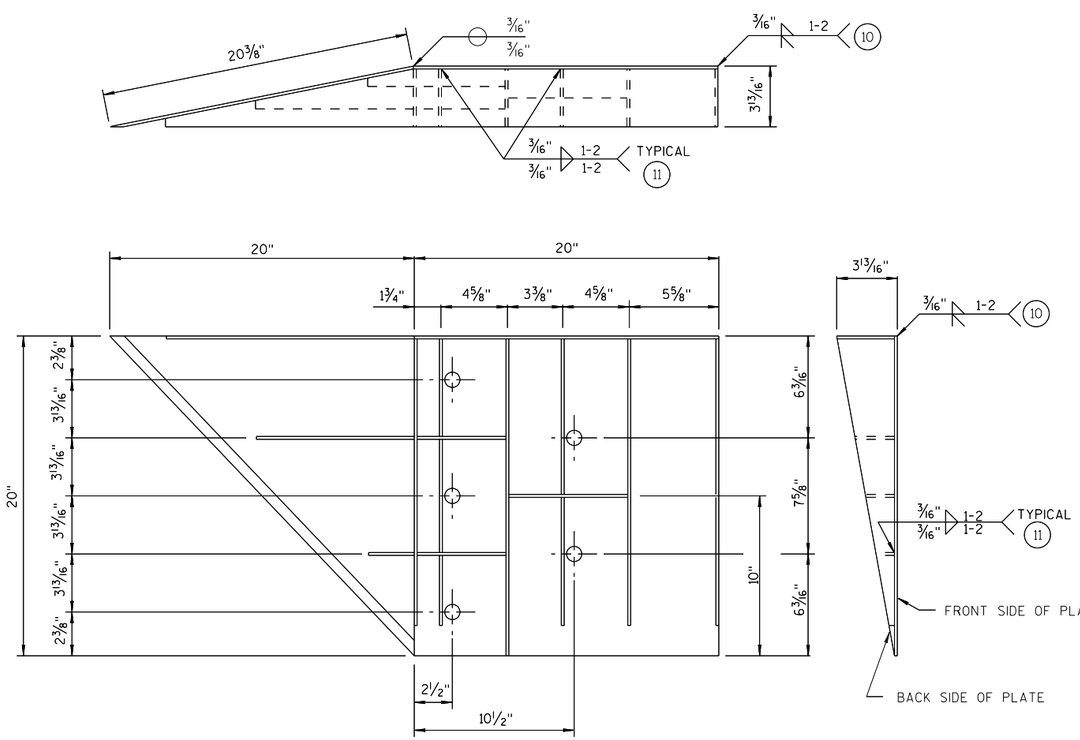

WELDING INSTRUCTION

(VIEWED FROM BACK SIDE OF PLATE)

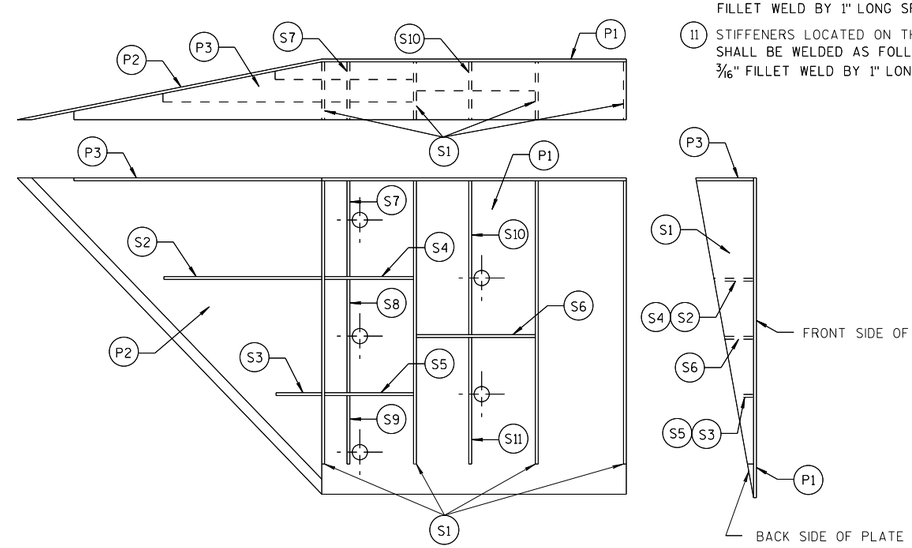

PLATE AND STIFFENER IDENTIFICATION

(VIEWED FROM BACK SIDE OF PLATE)

CONNECTOR PLATE DIMENSION (PER ASSEMBLY)				
PLATE	QUANTITY	SHAPE	SIZE (A x B x C x D)	THICKNESS
P1	1		20" x 20"	3/16"
P2	1		20" x 20" x 28 9/16"	3/16"
P3	1		39" x 3 5/8" x 20" x 19 5/16"	3/16"
S1	4		18 7/16" x 3 5/8" x 18 3/4"	1/4"
S2	1		10 1/4" x 2 7/16" x 10 3/8" x 1/2"	1/4"
S3	1		3" x 1 1/16" x 3 1/8" x 1/2"	1/4"
S4	1		6 1/8" x 2 7/16"	1/4"
S5	1		6 1/8" x 1 1/16"	1/4"
S6	1		7 3/4" x 1 3/4"	1/4"
S7	1		2 9/16" x 6" x 3 5/8" x 5 7/8"	1/4"
S8	1		1 5/32" x 7 1/2" x 2 1/2" x 7 3/8"	1/4"
S9	1		6 1/16" x 6 3/16" x 1 3/32"	1/4"
S10	1		1 7/8" x 9 7/8" x 3 5/8" x 9 11/16"	1/4"
S11	1		8 1/2" x 8 3/4" x 1 13/16"	1/4"

SINGLE SLOPE CONNECTION PLATE

MIDWEST GUARDRAIL SYSTEM THRIE BEAM TRANSITION (MGS)

STATE OF WISCONSIN
DEPARTMENT OF TRANSPORTATION

APPROVED
7/2018 /S/ Rodney Taylor
DATE ROADWAY STANDARDS DEVELOPMENT UNIT SUPERVISOR
FHWA

6
S.D.D. 14 B 45-5i

GENERAL NOTES

CONNECTOR PLATE, DRILLING BOLT HOLES THROUGH THE PARAPET, BOLTS, NUTS, WASHERS AND REPAIRING DAMAGED CONCRETE ARE INCIDENTAL TO THE CONTRACT.

(2) OPTIONAL CURB AND GUTTER OR DRAINAGE FEATURE SEE PLAN FOR INFORMATION.

(7) BOLTS MAY BE A325 BOLTS OR A449 BOLTS. BOLT LENGTH AND THREADING LENGTH ARE TO ALLOW FOR A TIGHT CONNECTION BETWEEN RIGID BARRIER AND THRIE BEAM CONNECTION PLATE. CONTRACTOR IS TO FIELD VERIFY BOLT LENGTH AND THREAD LENGTH. ONE ROUND WASHER REQUIRED BETWEEN BOLT HEAD AND THRIE BEAM CONNECTOR PLATE. BOLTS THAT EXTEND THROUGH THE PARAPET AND OUT THE BACK FACE REQUIRE A HARDENED ROUND STEEL WASHER THAT IS 2" O.D. X 5/32" THICK AND ONE PLATE WASHER. REPAIR ANY DAMAGED CONCRETE FROM BOLT INSTALLATION.

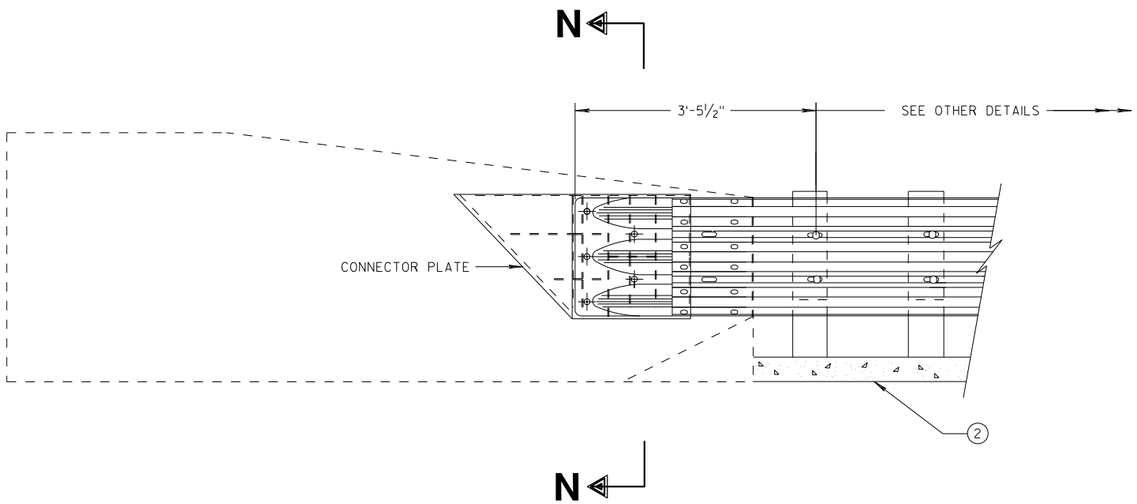

THRIE BEAM CONNECTION TO SINGLE SLOPE BARRIER

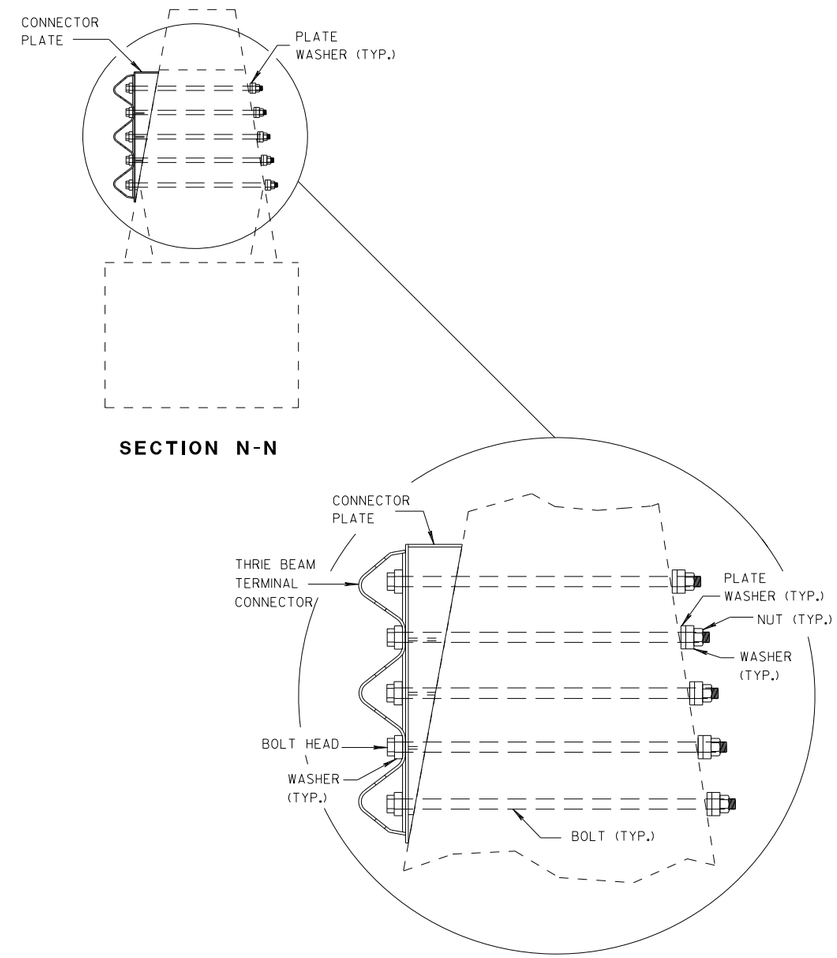

SECTION N-N

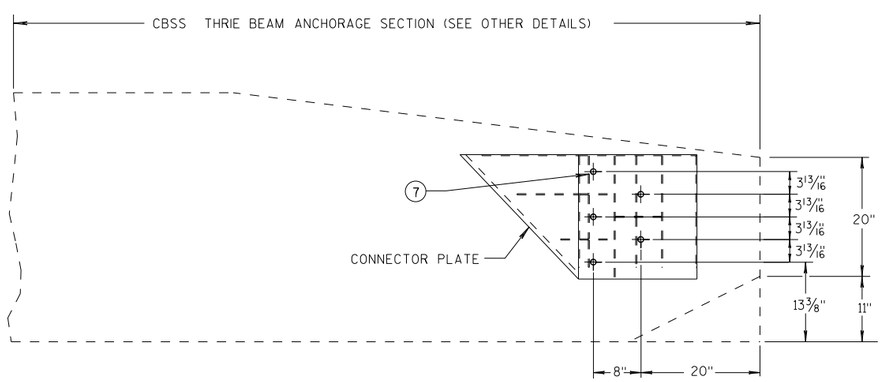

SINGLE SLOPE CONNECTION PLATE PLACEMENT

MIDWEST GUARDRAIL SYSTEM THRIE BEAM TRANSITION (MGS)

STATE OF WISCONSIN
DEPARTMENT OF TRANSPORTATION

APPROVED
7/2018 — DATE
/S/ Rodney Taylor — ROADWAY STANDARDS DI UNIT SUPERVIS NT
FHWA

6

S.D.D. 14 B 45-5j

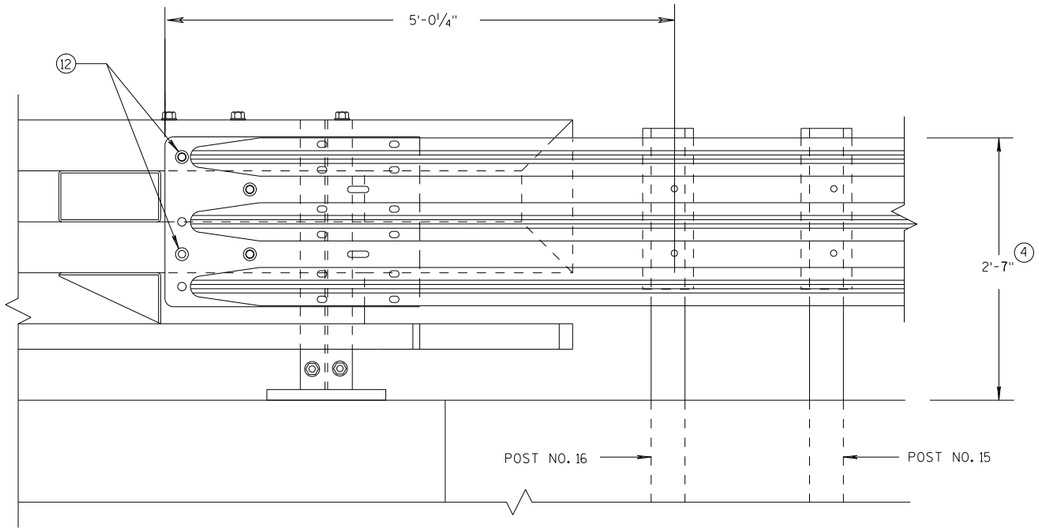

ELEVATION OF DETAIL AT NY3 END POST

THRIE BEAM RAIL ATTACHMENT

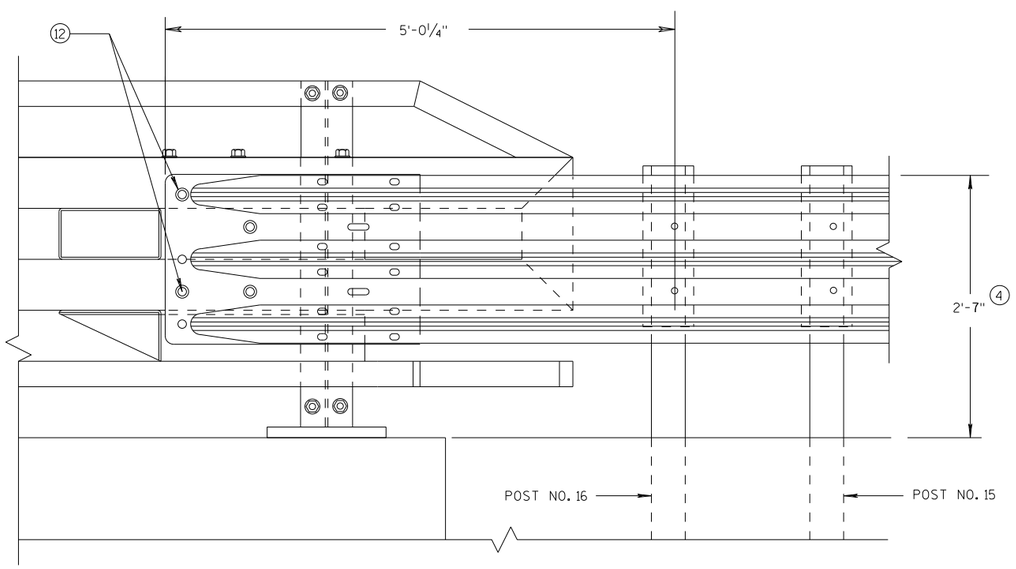

ELEVATION OF DETAIL AT NY4 END POST

THRIE BEAM RAIL ATTACHMENT

GENERAL NOTES

(4) TOLERANCE FOR TOP OF BEAM IS ± 1".

(12) BOLTS MAY BE A325 BOLTS OR A449 BOLTS. BOLT LENGTH AND THREADING LENGTH ARE TO ALLOW FOR A TIGHT CONNECTION BETWEEN RIGID BARRIER AND THRIE BEAM CONNECTION PLATE. CONTRACTOR IS TO FIELD VERIFY BOLT LENGTH AND THREAD LENGTH. ONE ROUND WASHER REQUIRED BETWEEN BOLT HEAD AND THRIE BEAM CONNECTOR PLATE. ON BACKSIDE OF PARAPET ONE ROUND WASHER, AND NUT REQUIRED. BOLT THREAD IS TO EXTEND ½-INCH BEYOND NUT.

MIDWEST GUARDRAIL SYSTEM
THRIE BEAM TRANSITION (MGS)

STATE OF WISCONSIN
DEPARTMENT OF TRANSPORTATION

APPROVED
7/2018
DATE
FHWA

/S/ Rodney Taylor
ROADWAY STANDARDS D
UNIT SUPERVIS

NT

6

S.D.D. 14 B 45-5k

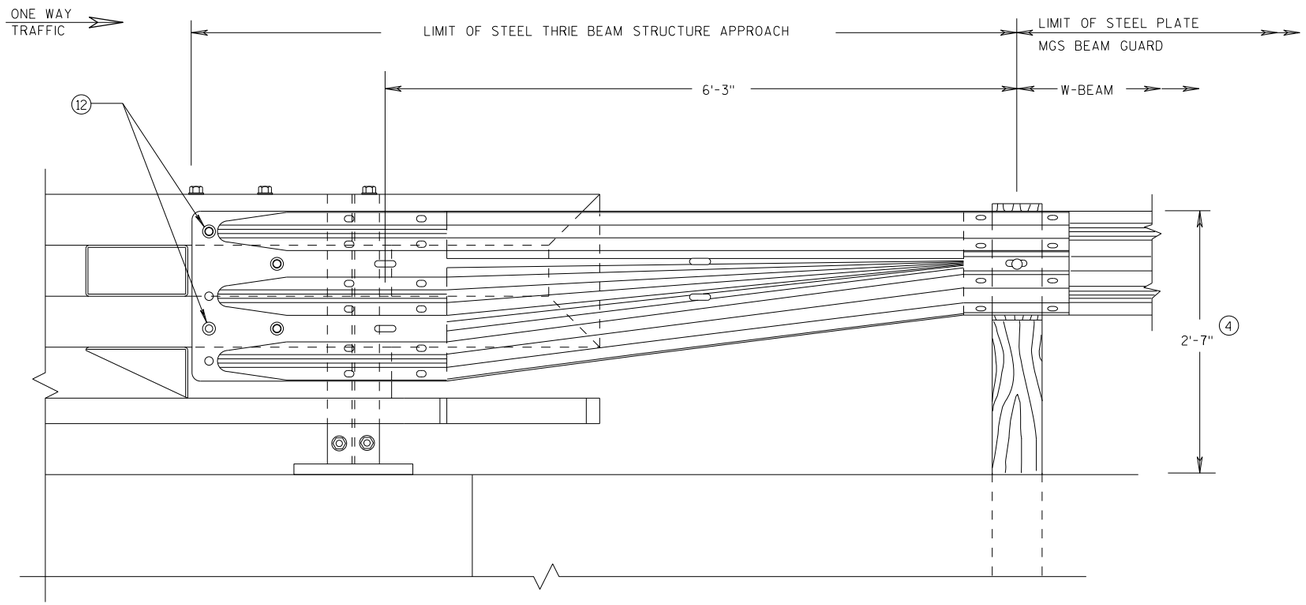

FRONT VIEW

W BEAM TRANSITION AND CONNECTION TO BRIDGE RAILING TYPE "NY3"

(USE ONLY ON THE TRAFFIC EXIT END OF ONE WAY BRIDGES)

GENERAL NOTES

(4) TOLERANCE FOR TOP OF BEAM IS ± 1".

(12) BOLTS MAY BE A325 BOLTS OR A449 BOLTS. BOLT LENGTH AND THREADING LENGTH ARE TO ALLOW FOR A TIGHT CONNECTION BETWEEN RIGID BARRIER AND THRIE BEAM CONNECTION PLATE. CONTRACTOR IS TO FIELD VERIFY BOLT LENGTH AND THREAD LENGTH. ONE ROUND WASHER REQUIRED BETWEEN BOLT HEAD AND THRIE BEAM CONNECTOR PLATE. ON BACKSIDE OF PARAPET ONE ROUND WASHER, AND NUT REQUIRED. BOLT THREAD IS TO EXTEND ½-INCH BEYOND NUT.

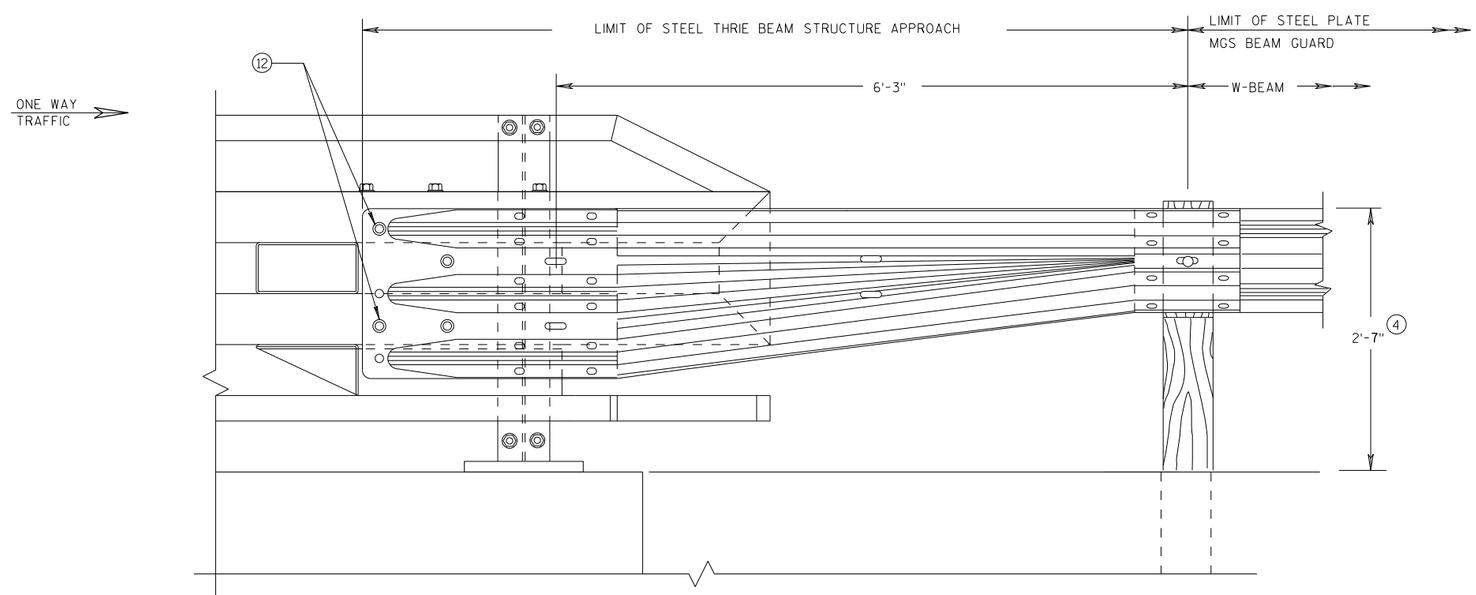

FRONT VIEW

W BEAM TRANSITION AND CONNECTION TO BRIDGE RAILING TYPE "NY4"

(USE ONLY ON THE TRAFFIC EXIT END OF ONE WAY BRIDGES)

MIDWEST GUARDRAIL SYSTEM THRIE BEAM TRANSITION (MGS)

STATE OF WISCONSIN
DEPARTMENT OF TRANSPORTATION

APPROVED
7/2018 — DATE
/S/ Rodney Taylor — ROADWAY STANDARDS DEVELOPMENT UNIT SUPERVISOR
FHWA

NT

6

S.D.D. 14 B 45-5L

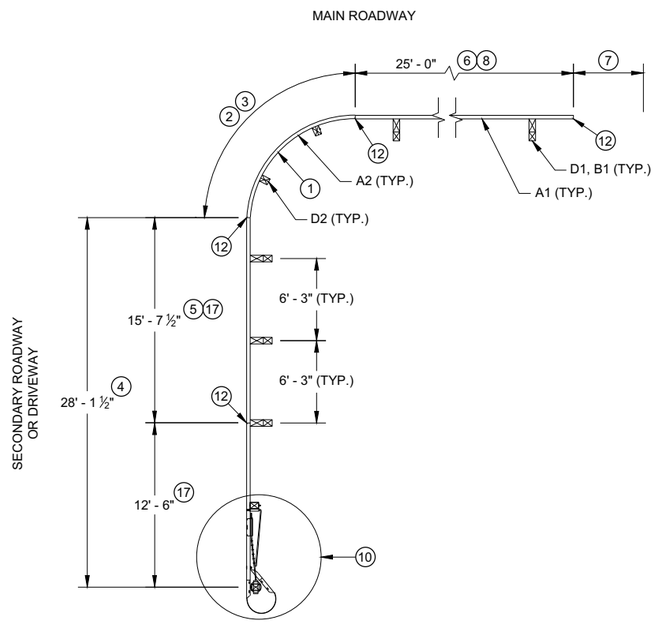

PLAN VIEW

SHORT RADIUS BEAM GUARD WITH SHORT RADIUS TERMINAL ON SECONDARY ROAD OR DRIVEWAY

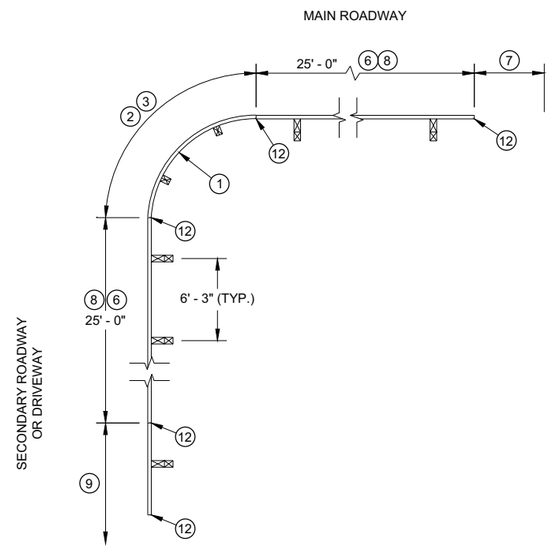

PLAN VIEW

SHORT RADIUS BEAM GUARD WITH EAT, ADDITIONAL BEAM GUARD OR TRANSITION TO RIGID BARRIER ON SECONDARY ROAD OR DRIVEWAY

TABLE FOR RADIUS OF 32' AND LESS

RADIUS (FT)	LENGTH (FT)	WIDTH (FT)
8	25	15
16	30	15
24	40	20
32	50	30

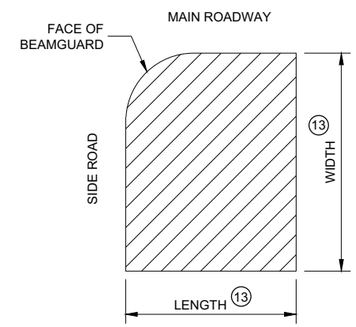

AREA FREE OF FIXED OBJECTS FOR RADIUS 32' AND LESS 16

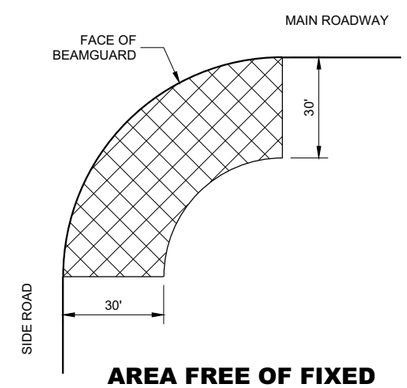

AREA FREE OF FIXED OBJECTS FOR RADIUS GREATER THAN 32'

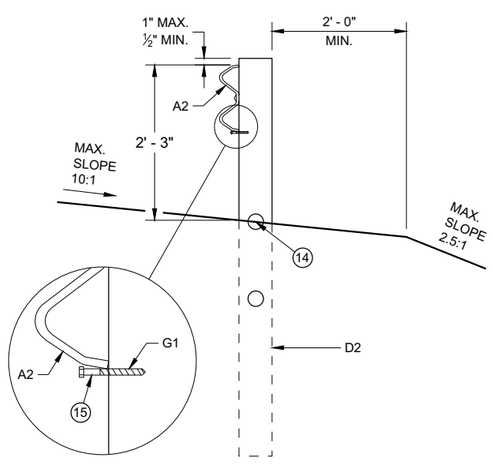

CONTROLLED RELEASE TERMINAL POST (CRT) IN RADIUS

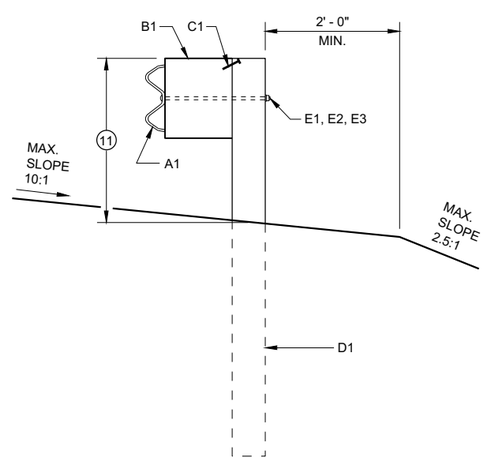

BEAM GUARD POSTS IN HEIGHT TRANSITION

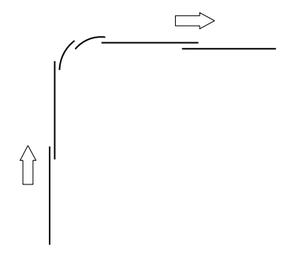

LAP SPLICE DETAIL

GENERAL NOTES

SEE PLANS FOR OTHER BARRIER SYSTEM AND LOCATION SPECIFICS.

SEE SDD 14B42 FOR MORE INFORMATION ON BEAM GUARD INSTALLATION, PARTS, MATERIALS, AND INSTALLATION INFORMATION.

GALVANIZE PARTS AFTER FABRICATION.

WELDING TO FOLLOW CURRENT REQUIREMENTS OF THE AMERICAN WELDING SOCIETY STRUCTURAL WELDING CODE ANSI / AWS D1.1.

UNLESS NOTED OTHERWISE, ALL PLATES ARE FLAT AND FREE OF WARP.

UNLESS NOTED OTHERWISE, ALL EDGES ARE SMOOTH, STRAIGHT AND VERTICAL.

ALL CUTS AND HOLES, EXCEPT IN BEAM GUARD RAIL ARE TO BE MACHINED OR MACHINE FLAME CUT.

UNLESS NOTED OTHERWISE, CUT OR PROVIDE BOLTS THAT ARE ¼" TO ½" BEYOND THE NUT.

DRAWINGS ARE NOT TO SCALE.

1. RADIUS MEASURE FROM INSIDE OF RAIL. LENGTH OF BEAM GUARD SHORT RADIUS GUARD MEASURED ALONG TRAFFIC SIDE OF RAIL. RADIUS BETWEEN 8 FEET TO 150 FEET. SEE PLAN FOR REQUIRED RADIUS. BEAM GUARD RAIL IN RADIUS IS SHOP BENT. ODD RAIL LENGTH OR FIELD CUTS MAY BE REQUIRED.
2. CONTROLLED RELEASE TERMINAL (CRT) POSTS ARE USED IN THE RADIUS. CONTROLLED RELEASE TERMINAL (CRT) POSTS ARE SPACED 6' - 3". SEE PLAN FOR NUMBER OF CONTROLLED RELEASE (CRT) POSTS.
3. WITHIN RADIUS BEAM GUARD RAILS ARE NOT BOLTED TO POSTS. BEAM GUARD RAIL IS RESTED ON TOP OF LAG SCREW.
4. MINIMUM LENGTH OF BEAM GUARD ALONG SIDE ROAD OR DRIVEWAY TO INSTALL SHORT RADIUS TERMINAL. BEAM GUARD IS PAID WITH BEAM GUARD ITEM.
5. ODD LENGTH OF BEAM GUARD REQUIRED TO INSTALL SHORT RADIUS TERMINAL.
6. MINIMUM AMOUNT OF BEAM GUARD TO BE INSTALLED PRIOR TO TRANSITION TO RIGID BARRIER. ADDITIONAL BEAM GUARD, OR EAT. BEAM GUARD PAID FOR WITH BEAM GUARD ITEM. SEE PLANS FOR MORE DETAIL.
7. BEAM GUARD, EAT, OR TRANSITION TO RIGID BARRIER. SEE PLAN.
8. TOP OF BEAM GUARD BY THE RADIUS IS 27". HEIGHT OF BEAM GUARD IS 31" BY TRANSITION TO RIGID BARRIER, ADDITIONAL BEAM GUARD OR EAT.
9. ADDITIONAL BEAM GUARD, EAT OR TRANSITION TO RIGID BARRIER. BEAM GUARD SHOWN. SEE PLAN FOR DETAILS.
10. SHORT RADIUS TERMINAL (SEE OTHER DETAILS).
11. HEIGHT VARIES. SEE NOTE 8 AND 8.
12. BEAM GUARD RAIL SPLICE LOCATION. SPLICE LOCATION REQUIRES PART F1 AND F2. SEE SDD 14B42 FOR DETAILS.
13. SEE TABLE FOR VALUES.
14. MAXIMUM HEIGHT FOR CENTER OF HOLE IS ¾" ABOVE FINISHED GROUND ±1".
15. DRILL POST $^{15}/_{64}$" DIA. PILOT HOLE. DO NOT HAMMER LAG SCREW INTO POST.
16. SMALL SIGNS ON BREAKAWAY HARDWARE ARE ACCEPTABLE.
17. TOP OF RAIL HEIGHT IS 27" WHEN USING A SHORT RADIUS TERMINAL (CRT).

SHORT RADIUS BEAM GUARD (MGS) SHORT RADIUS TERMINAL (MGS)

STATE OF WISCONSIN
DEPARTMENT OF TRANSPORTATION

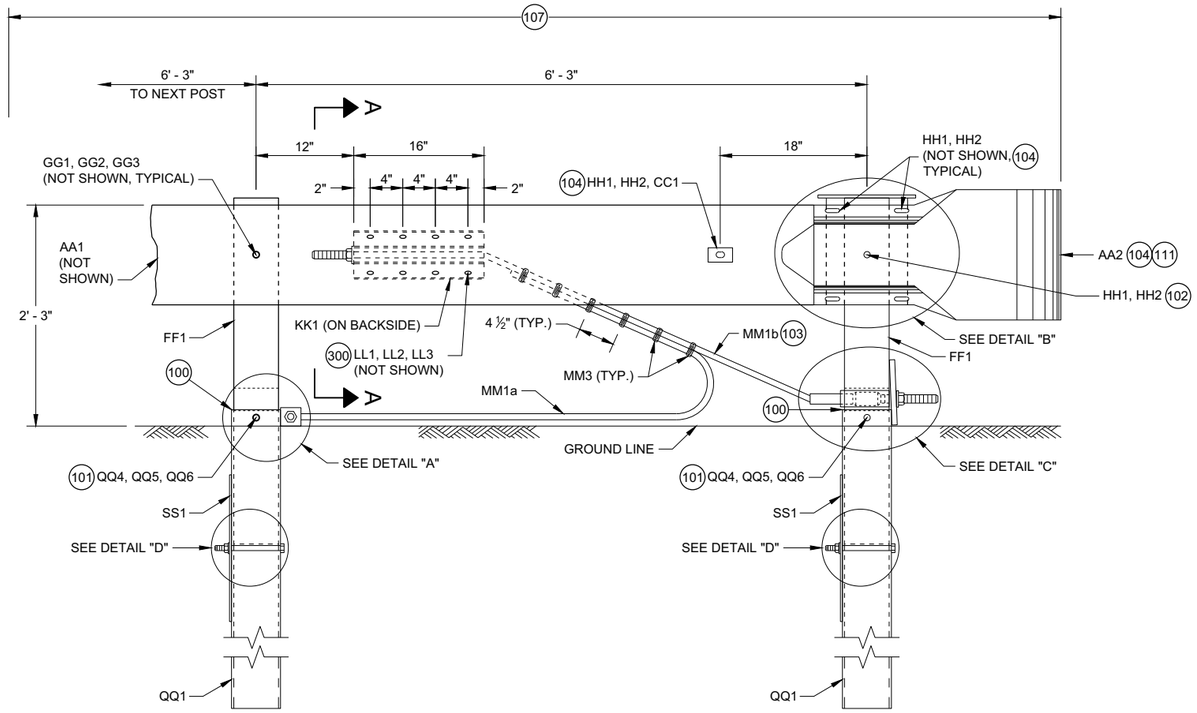

PROFILE VIEW

SHORT RADIUS TERMINAL

GENERAL NOTES

100 TOP OF FOUNDATION TUBE 2 INCHES MAXIMUM ABOVE FINISHED GROUND.

101 WASHERS REQUIRED BETWEEN BOLT HEAD AND FOUNDATION TUBE AND BETWEEN NUT AND FOUNDATION TUBE.

102 SPLICE BOLT AND NUT CONNECTS BEAM GUARD RAIL, W-BEAM SECTION BUFFER, AND STEEL PIPE ASSEMBLY. NO WASHER REQUIRED. SEE DETAIL "B".

103 CABLE IS TAUT.

104 ADJUST AA2 AND BB1 TO FIT.

105 BREAK POINT OF SHOULDER.

106 TACK WELD CABLE CONNECTOR TUBE PLATE TO CABLE CONNECTION TUBE. SEE DETAIL "A" PROFILE VIEW.

107 PAY LIMIT FOR BEAM GUARD.

108 SQUARE WASHER BETWEEN HEAD OF BOLT AND TRAFFIC FACE OF BEAM GUARD. ROUND WASHER REQUIRED BETWEEN NUT AND BB1.

109 CUT OR PROVIDE THREADED STUD THAT IS FLUSH WITH FACE OF BEAM GUARD RAIL KK1 (PLUS OR MINUS ½" TOLERANCE). DEBURR AFTER CUTTING.

110 SEE STEEL PIPE ASSEMBLY DETAILS.

111 ATTACH UU2 WITH UU3. SHOP APPLY UU1 TO UU2.

112 FOUR (4) HH1 AND HH2 REQUIRED TO ATTACH AA1 TO AA2.

113 FOUR (4) HH1 AND HH2 REQUIRED TO ATTACH AA2 TO BB1.

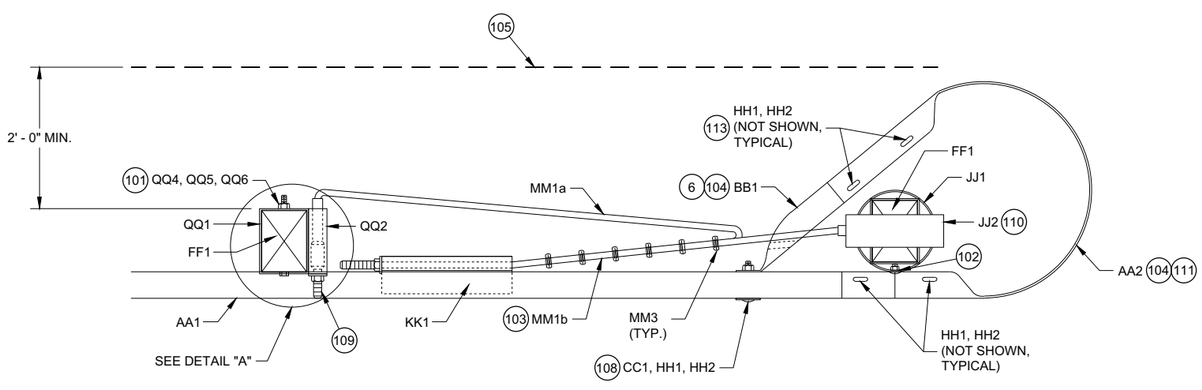

TOP VIEW

SHORT RADIUS TERMINAL

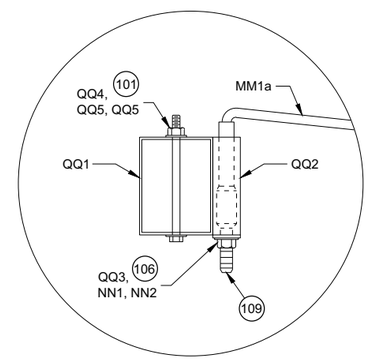

TOP VIEW

DETAIL "A"

(WOOD BREAKAWAY AND BEAM GUARD RAIL POSTS NOT SHOWN)

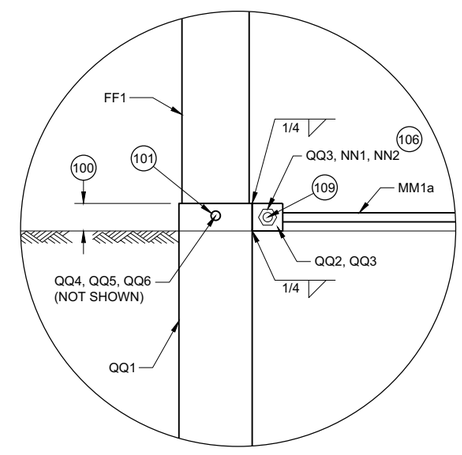

PROFILE VIEW

DETAIL "A"

6

6

SDD 14B53 - 01b

SDD 14B53 - 01b

SHORT RADIUS BEAM GUARD (MGS) SHORT RADIUS TERMINAL (MGS)

STATE OF WISCONSIN
DEPARTMENT OF TRANSPORTAT

GENERAL NOTES

(200) TWO (2) NAILS SPACED 4 INCHES CENTER TO CENTER.

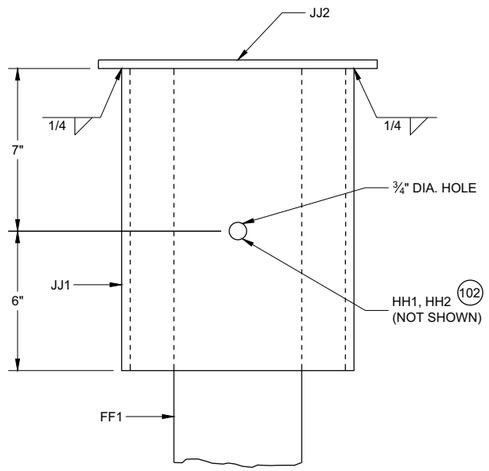

PROFILE VIEW

DETAIL "B"
STEEL PIPE ASSEMBLY
(BEAM GUARD AND W BEAM END SECTION NOT SHOWN)

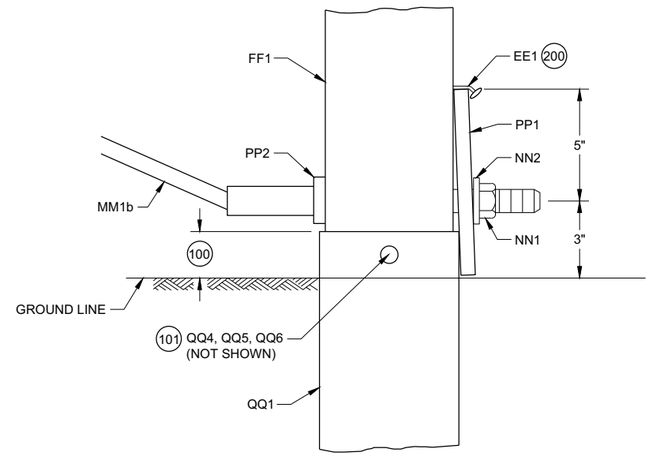

PROFILE VIEW

DETAIL "C"

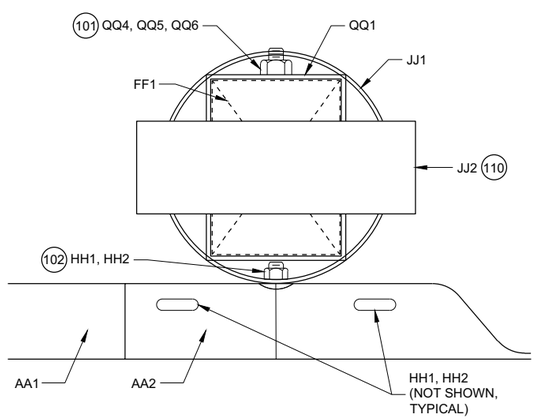

PLAN VIEW

DETAIL "B"
STEEL PIPE ASSEMBLY

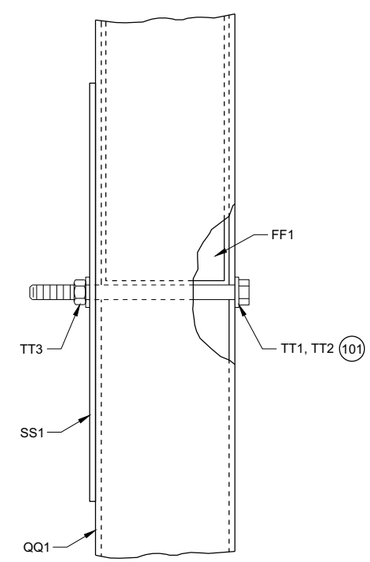

PROFILE VIEW

DETAIL "D"

SHORT RADIUS BEAM GUARD (MGS) SHORT RADIUS TERMINAL (MGS)

STATE OF WISCONSIN
DEPARTMENT OF TRANSPORTAT

6

6

SDD 14B53 - 01c

SDD 14B53 - 01c

GENERAL NOTES

300 WASHERS REQUIRED BETWEEN BOLT HEAD AND BEAM GUARD RAIL AND BETWEEN NUT AND ANCHOR BRACKET. EIGHT (8) LL1 AND LL3 REQUIRED. SIXTEEN (16) LL2 REQUIRED.

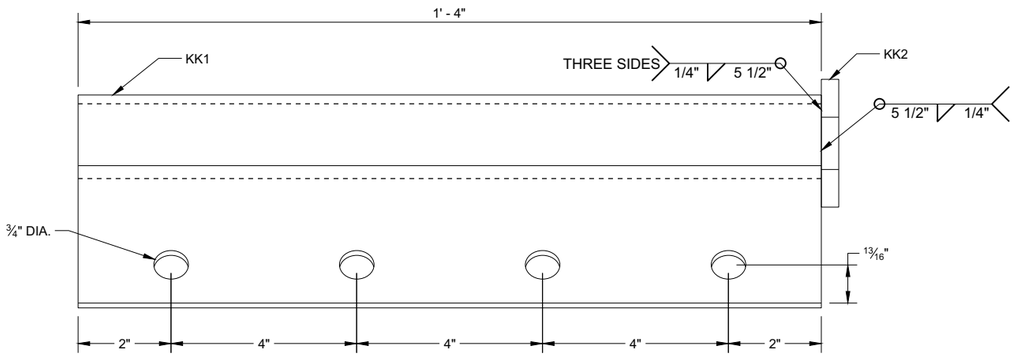

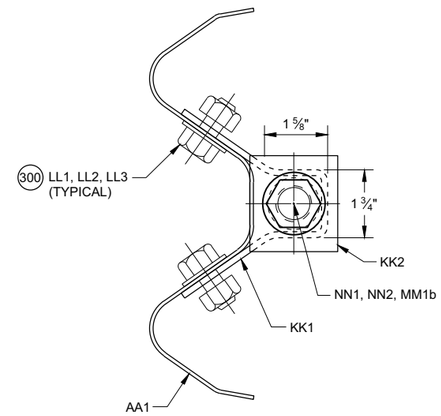

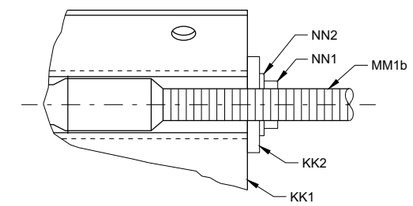

SECTION A - A

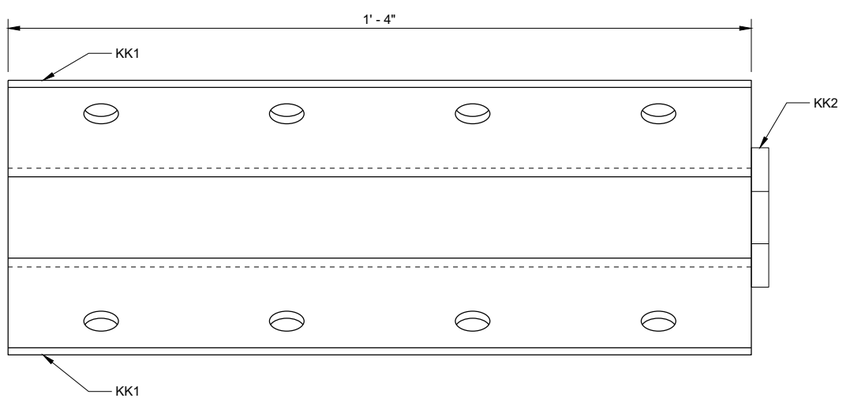

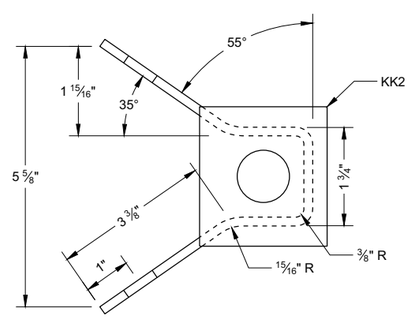

ANCHOR BRACKET (KK1, KK2)

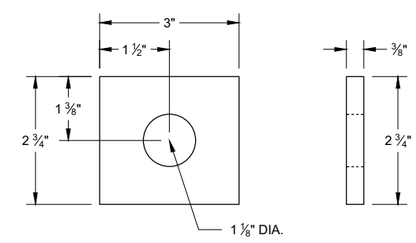

ANCHOR BRACKET BEARING PLATE (KK2)

6

6

SDD 14B53 - 01d

SDD 14B53 - 01d

SHORT RADIUS BEAM GUARD (MGS) SHORT RADIUS TERMINAL (MGS)

STATE OF WISCONSIN
DEPARTMENT OF TRANSPORTAT

GENERAL NOTES

(400) CROSS SECTION OF PART IS TO FIT OVER AA1 .

(401) CROSS SECTION OF PART IS TO FIT OVER OR UNDER AA1 .

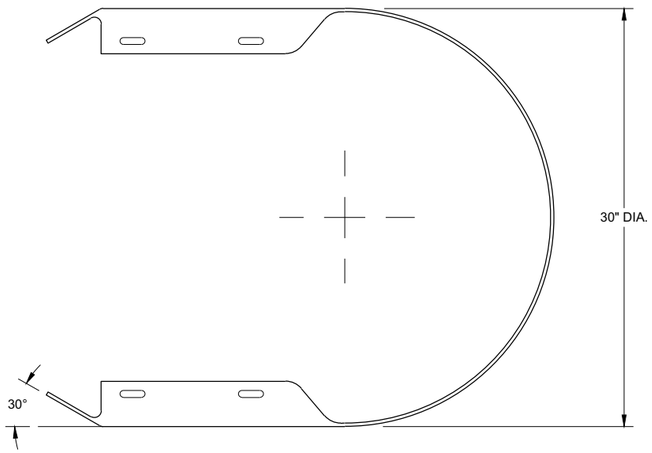

TOP VIEW

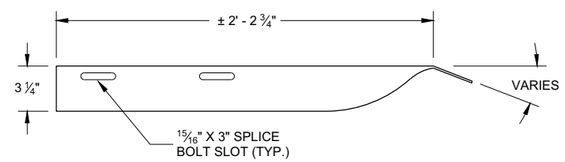

TOP VIEW

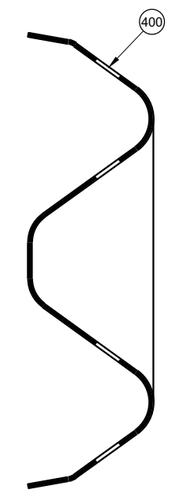

SECTION B -B

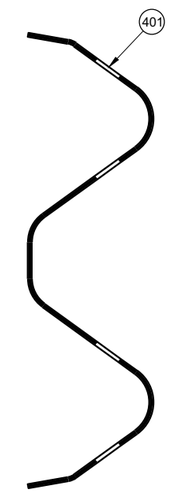

SECTION C -C

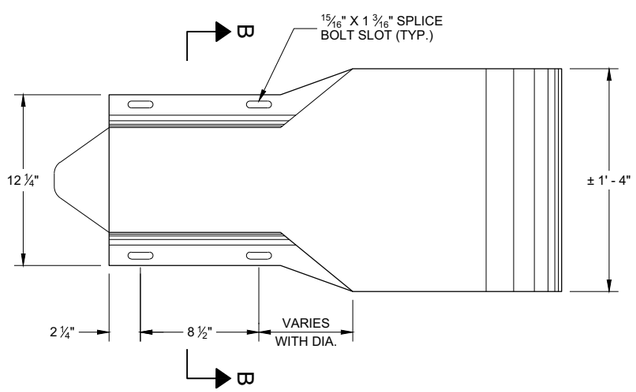

PROFILE VIEW

W BEAM
END SECTION BUFFER (AA2)

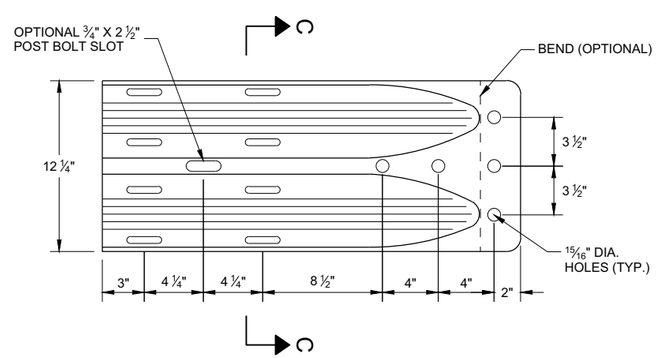

PROFILE VIEW

W BEAM
TERMINAL CONNECTOR (BB1)

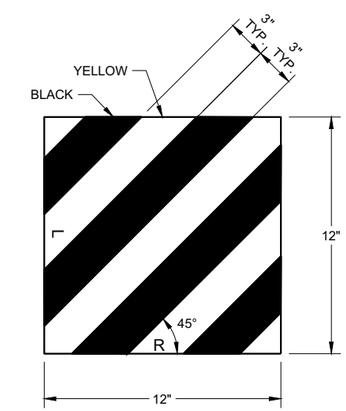

REFLECTIVE SHEETING (UU1, UU2)

SHORT RADIUS BEAM GUARD (MGS) SHORT RADIUS TERMINAL (MGS)

STATE OF WISCONSIN
DEPARTMENT OF TRANSPORTAT

6

6

SDD 14B53 - 01e

SDD 14B53 - 01e

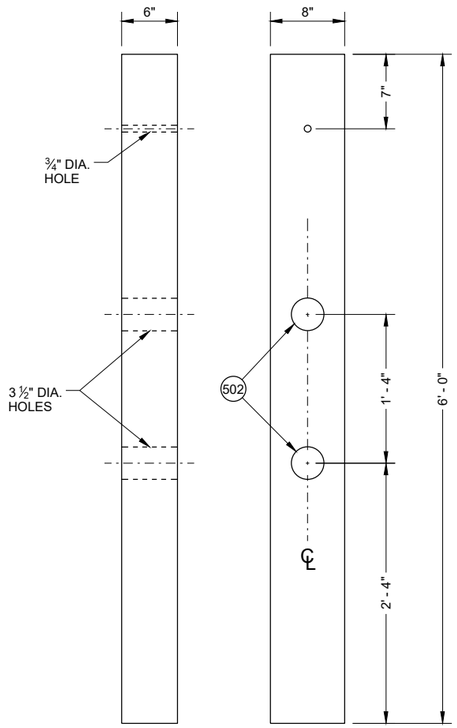

FRONT VIEW SIDE VIEW

CONTROLLED RELEASE POST (CRT) (DD2)

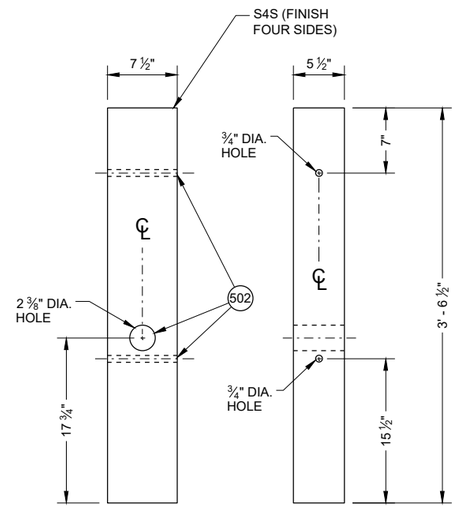

FRONT VIEW SIDE VIEW

WOOD BREAKAWAY POST (FF1)

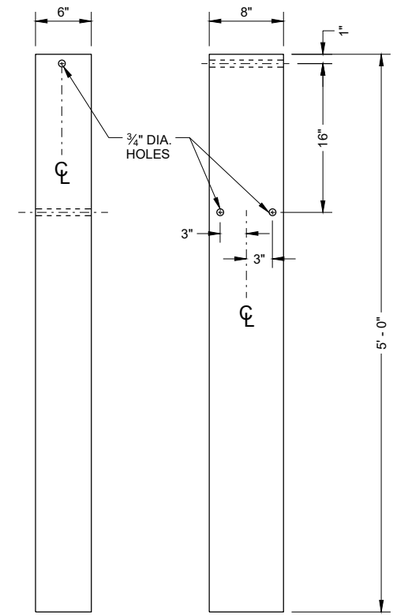

FRONT VIEW SIDE VIEW

FOUNDATION TUBE (QQ1) 500

GENERAL NOTES

500 SEE DETAIL "D" FOR LOCATION AND ATTACHMENT OF SS1.

501 FOR MM1a THREADED STUD ONLY REQUIRED ON ONE END. SWAGED FITTING REQUIRED.

502 LOCATE HOLES ON THE CENTERLINE OF THE SIDE OF THE POST.

503 MM1a MAY HAVE ONE THREADED STUD 4 INCHES LONG. SEE NOTE 109.

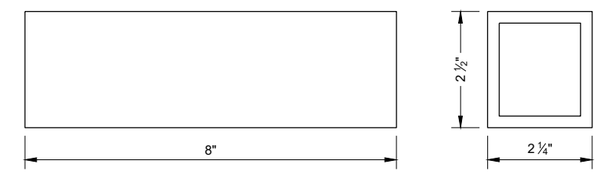

FOUNDATION TUBE - ANCHOR CABLE TUBE (QQ2)

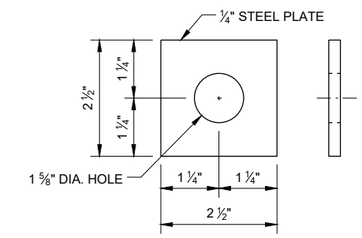

ANCHOR CABLE TUBE END PLATE (QQ3)

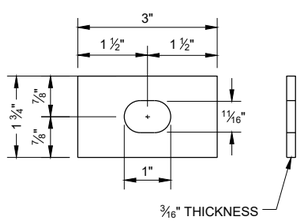

RECTANGULAR PLATE WASHER (CC1)

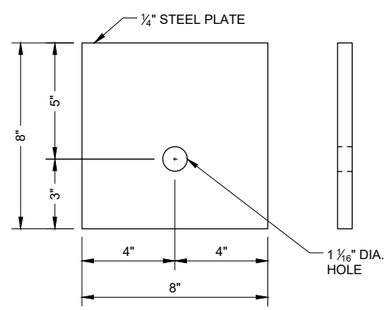

BEARING PLATE (PP1)

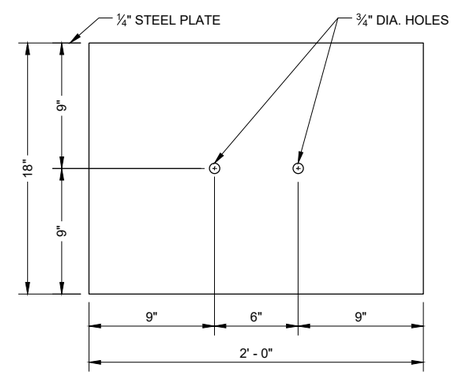

SOIL PLATE (SS1)

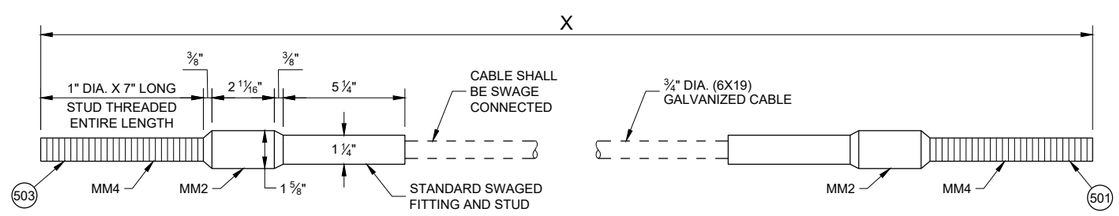

CABLE ASSEMBLY (MM1a, MM1b)

"X" LENGTH

MM1b	9' - 0"
MM1b	6' - 8"

SHORT RADIUS BEAM GUARD (MGS) SHORT RADIUS TERMINAL (MGS)

STATE OF WISCONSIN
DEPARTMENT OF TRANSPORTAT

6

SDD 14B53 - 01f

BILL OF MATERIALS - SHORT RADIUS BEAM GUARD (MGS)

PART	DESCRIPTION	MATERIALS SPECIFICATIONS	NOTES
A1	BEAM GUARD RAIL	AASHTO M180, CLASS A, TYPE 2	
		APPROVED PRODUCER	
A2	BEAM GUARD RAIL - SHOP BENT	INDICATE ON BACK OF RAIL THE RADIUS THAT RAIL WAS BENT TO. SHOP BEND RADIUS IS TO THE NEAREST FOOT. FOLLOW AASHTO M180 ON HOW TO MARK RADIUS INFORMATION.	
		AASHTO M180, CLASS A, TYPE 2	
		APPROVED PRODUCER	
B1	BLOCK - WOOD	WISDOT SPEC. 614	SEE SDD 14B42
C1	NAIL	ASTM A153 HOT DIP CLASS D	
		ASTM F1667 TYPE 1 STYLE 12 (16 DOUBLE HEAD)	
D1	POST-STRONG POST-WOOD	WISDOT SPEC. 614	SEE SDD 14B42
D2	POST-CRT-WOOD	WISDOT SPEC. 614	
E1	POST BOLT	ASTM A307 GRADE A OR SAE J429 GRADE 2	5/8" DIA. SEE SDD 14B42 FOR BOLT GEOMETRY
		AASHTO M180	
		GALV. HOT DIP TO AASHTO M232 CLASS C / ASTM A153 CLASS C / ASTM F2329 OR GALV. MECHANICALLY TO AASHTO M298 CLASS 50, TYPE 1 / ASTM B695 CLASS 50, TYPE 1	
		UNC	
E2	POST BOLT - WASHER	ASTM F436 TYPE 1 (HARDEN TYPICALLY USED WITH STEEL) OR ASTM F844 (UNHARDENED TYPICALLY WITH WOOD)	5/8" DIA.
		GALV. AASHTO M111 / ASTM A 123 OR GALV. HOT DIP. TO AASHTO M232 CLASS C / ASTM A153 CLASS C / ASTM F2329	
E3	POST BOLT - NUT	AASHTO M180 DOUBLE RECESSED HEAVY HEX HEAD	5/8" DIA. SEE SDD 14B42 FOR BOLT GEOMETRY
		GALV. HOT DIP TO AASHTO M232 CLASS C / ASTM A153 CLASS C / ASTM F2329 OR GALV. MECHANICALLY TO AASHTO M298 CLASS 50, TYPE 1 / ASTM B695 CLASS 50, TYPE 1	
		UNC	
		OVER TAPPED NUTS OVER-SIZE AS SPECIFIED IN AASHTO 291 / ASTM A 563	
		ASTM A563 GRADE A HEAVY HEX HEAD	
F1	SPLICE BOLT	GALV. HOT DIP TO AASHTO M232 CLASS C / ASTM A153 CLASS C / ASTM F2329 OR GALV. MECHANICALLY TO AASHTO M298 CLASS 50, TYPE 1 / ASTM B695 CLASS 50, TYPE 1	5/8" DIA. SEE SDD 14B42 FOR BOLT GEOMETRY
		ASTM A307 GRADE A OR SAE J429 GRADE 2	
		UNC	
		AASHTO M180	

PART	DESCRIPTION	MATERIALS SPECIFICATIONS	NOTES
F2	SPLICE BOLT - NUT	ASTM A563 GRADE A	5/8" DIA. SEE SDD 14B42 FOR BOLT GEOMETRY
		AASHTO M180 DOUBLE RECESSED HEAVY HEX HEAD	
		GALV. HOT DIP TO AASHTO M232 CLASS C/ASTM A153 CLASS C/ASTM F2329 OR GALV. MECHANICALLY TO AASHTO M298 CLASS 50, TYPE 1/ASTM B695 CLASS 50, TYPE 1	
		OVER TAPPED NUTS OVER-SIZE AS SPECIFIED IN AASHTO 291 / ASTM A 563	
		UNC	
G1	LAG SCREW	ASTM A308 GRADE A ASTM A153 CLASS D	1/2" DIA. 6" LONG
H1	DELINEATOR - BEAM GUARD		SEE SDD 14B42 FOR MORE INFORMATION
H2	DELINEATION - SHEETING	YELLOW OR WHITE	
		WISDOT SPEC 637 TYPE SH	
		APPROVED PRODUCT LIST	
J1	FOUNDATION BACKFILL	STANDARD SPEC. 614	
AA1	BEAM GUARD RAIL - PUNCHED	AASHTO M180, CLASS A, TYPE 2	
		APPROVED PRODUCER	
AA2	BEAM GUARD RAIL - END SECTION BUFFER	AASHTO M180, CLASS A, TYPE 2	
		APPROVED PRODUCER	
BB1	BEAM GUARD RAIL - TERMINAL CONNECTOR MODIFIED	AASHTO M180, CLASS A, TYPE 2	
		APPROVED PRODUCER	
CC1	SHORT RADIUS - SQUARE WASHER	AASHTO M180	
		GALV. AASHTO M111 / ASTM A123	
EE1	NAIL	ASTM A153 HOT DIP CLASS D	
		ASTM F1667 TYPE 1 STYLE 12 (16 DOUBLE HEADED)	
FF1	POST - BCT - WOOD	S4S FINISH ON 4 SIDES	
		WISDOT SPEC. 614	
GG1	POST BOLT	ASTM A307 GRADE A OR SAE J429 GRADE 2	3/8" DIA. SEE SDD 14B42 FOR BOLT GEOMETRY
		AASHTO M180	
		GALV. HOT DIP TO AASHTO M232 CLASS C/ASTM A153 CLASS C/ASTM F2329 OR GALV. MECHANICALLY TO AASHTO M298 CLASS 50, TYPE 1/ASTM B695 CLASS 50, TYPE 1	
		UNC	
GG2	POST BOLT - WASHER	ASTM F436 TYPE 1 (HARDEN TYPICALLY USED WITH STEEL) OR ASTM F844 (UNHARDENED TYPICALLY WITH WOOD)	3/8" DIA.
		GALV. AASHTO M111 / ASTM A 123 OR GALV. HOT DIP. TO AASHTO M232 CLASS C/ASTM A153 CLASS C / ASTM F2329	

SHORT RADIUS BEAM GUARD (MGS) SHORT RADIUS TERMINAL (MGS)

STATE OF WISCONSIN
DEPARTMENT OF TRANSPORTA

BILL OF MATERIALS - SHORT RADIUS BEAM GUARD (MGS)

PART	DESCRIPTION	MATERIALS SPECIFICATIONS	NOTES
GG3	POST BOLT - NUT	ASTM A563 GRADE A	⅜" DIA. SEE 14B42 FOR GEOMETRY
		AASHTO M180 DOUBLE RECESSED HEAVY HEX HEAD	
		GALV. HOT DIP TO AASHTO M232 CLASS C / ASTM A153 CLASS C / ASTM F2329 OR GALV. MECHANICALLY TO AASHTO M298 CLASS 50, TYPE 1 / ASTM B695 CLASS 50, TYPE 1	
		UNC	
		OVER TAPPED NUTS OVER-SIZE AS SPECIFIED IN AASHTO 291 / ASTM A 563	
		ASTM A563 GRADE A HEAVY HEX HEAD	
HH1	SPLICE BOLT	GALV. HOT DIP TO AASHTO M232 CLASS C / ASTM A153 CLASS C / ASTM F2329 OR GALV. MECHANICALLY TO AASHTO M298 CLASS 50, TYPE 1 / ASTM B695 CLASS 50, TYPE 1	⅜" DIA. SEE SDD 14B42 FOR BOLT GEOMETRY
		ASTM A307 GRADE A OR SAE J429 GRADE 2	
		UNC	
		AASHTO M180 HEAD GEOMETRY	
HH2	SPLICE BOLT - NUT	ASTM A563 GRADE A	⅜" DIA. SEE SDD 14B42 FOR BOLT GEOMETRY
		AASHTO M180 DOUBLE RECESSED HEAVY HEX HEAD	
		GALV. HOT DIP TO AASHTO M232 CLASS C / ASTM A153 CLASS C / ASTM F2329 OR GALV. MECHANICALLY TO AASHTO M298 CLASS 50, TYPE 1 / ASTM B695 CLASS 50, TYPE 1	
		OVER TAPPED NUTS OVER-SIZE AS SPECIFIED IN AASHTO 291 / ASTM A 563	
		UNC	
JJ1	PIPE - STEEL	ASTM A53 GALVANIZED GRADE B SCHEDULE 40	10" O.D.
JJ2	TOP PLATE	ASTM A36 MIN. STRENGTH 36 KSI, OR ASTM A529 MAX. STRENGTH 50 KSI, OR ASTM A572 MAX STRENGTH 50 KSI OR ASTM A709 MAX STRENGTH 50 KSI OR ASTM A992 MAX STRENGTH 50 KSI	DIMENSIONS ⅜" X 4" X 1' - 0"
		GALV. AASHTO M111 / ASTM A123	
KK1	ANCHOR BRACKET	ASTM A36 MIN. STRENGTH 36 KSI, OR ASTM A529 MAX. STRENGTH 50 KSI, OR ASTM A572 MAX STRENGTH 50 KSI OR ASTM A709 MAX STRENGTH 50 KSI OR ASTM A992 MAX STRENGTH 50 KSI	
		GALV. AASHTO M111 / ASTM A123	
KK2	ANCHOR BRACKET - BEARING PLATE	ASTM A36 MIN. STRENGTH 36 KSI, OR ASTM A529 MAX. STRENGTH 50 KSI, OR ASTM A572 MAX STRENGTH 50 KSI OR ASTM A709 MAX STRENGTH 50 KSI OR ASTM A992 MAX STRENGTH 50 KSI	
		GALV. AASHTO M111 / ASTM A123	
LL1	ANCHOR BRACKET - BOLT	ASTM A307 GRADE B HEAVY HEX HEAD OR SAE J429 GRADE 2 HEAVY HEX HEAD	⅝" DIA.
		GALV. HOT DIP TO AASHTO M232 CLASS C / ASTM A153 CLASS C / ASTM F2329 OR GALV. MECHANICALLY TO AASHTO M298 CLASS 50, TYPE 1 / ASTM B695 CLASS 50, TYPE 1	
		UNC	

PART	DESCRIPTION	MATERIALS SPECIFICATIONS	NOTES
LL2	ANCHOR BRACKET - WASHER	ASTM F436 TYPE 1 (HARDEN WASHER ONLY)	⅝" DIA.
		GALV. AASHTO M111 / ASTM A123 OR GALV. HOT DIP TO AASHTO M232 CLASS C / ASTM A153 CLASS C / ASTM F2329	
LL3	ANCHOR BRACKET - NUT	ASTM A563 GRADE A	⅝" DIA.
		GALV. HOT DIP TO AASHTO M232 CLASS C / ASTM A153 CLASS C / ASTM F2329 OR GALV. MECHANICALLY TO AASHTO M298 CLASS 50, TYPE 1 / ASTM B695 CLASS 50, TYPE 1	
		OVER TAPPED NUTS OVER-SIZE AS SPECIFIED IN AASHTO 291 / ASTM A 563	
		UNC	
MM1a	ANCHOR CABLE	AASHTO M30 / ASTM A741 INDEPENDENT WIRE CORE (IWRC) OR WIRE STRAND CORE (WCS), IMPROVED PLOW STEEL (IPS), 6X19, TYPE II OR IIc CLASS C ZINC COATED	
MM1b	ANCHOR CABLE	AASHTO M30 / ASTM A741 INDEPENDENT WIRE CORE (IWRC) OR WIRE STRAND CORE (WCS), IMPROVED PLOW STEEL (IPS), 6X19, TYPE II OR IIc CLASS C ZINC COATED	
MM2	ANCHOR CABLE - SWAGE FITTING	ASTM A576 GRADE 1035	
		SWAGE FITTINGS ARE TO BE FACTORY SWEDGED. WITH A BREAKING STRENGTH 40,000 LBS.	
		GALV. AASHTO M111 / ASTM A123	
		ASME B30.26 FORGED, CAST, OR DIE STAMPED WITH THE FOLLOWING INTO CONNECTION: NAME OF MANUFACTURER OR TRADEMARK OF CONNECTION'S MANUFACTURER, SIZE OR RATED LOAD, GRADE.	
MM3	WIRE ROPE CABLE CLAMPS	FF-C-450D TYPE 1 CLASS 1	¾"
		ASTM A153 HOT DIP CLASS D	
MM4	ANCHOR CABLE - SWAGE FITTING - STUD	ASTM F3125 GRADE A325 TYPE 1 OR SAE GRADE 5 OR ASTM A449 TYPE 1 HEAVY HEX HEAD	
		GALV. HOT DIP TO AASHTO M232 CLASS C / ASTM A153 CLASS C / ASTM F2329 OR GALV. MECHANICALLY TO AASHTO M298 CLASS 50, TYPE 1 / ASTM B695 CLASS 50, TYPE 1	
		UNC	
NN1	ANCHOR CABLE - NUT	ASTM A563 GRADE A	1" DIA.
		AASHTO M180 DOUBLE RECESSED HEAVY HEX HEAD	
		GALV. HOT DIP TO AASHTO M232 CLASS C / ASTM A153 CLASS C / ASTM F2329 OR GALV. MECHANICALLY TO AASHTO M298 CLASS 50, TYPE 1 / ASTM B695 CLASS 50, TYPE 1	
		OVER TAPPED NUTS OVER-SIZE AS SPECIFIED IN AASHTO 291 / ASTM A 563	
		UNC	
NN2	ANCHOR CABLE - NUT - WASHER	ASTM F436 TYPE 1 (HARDEN WASHER ONLY)	1" DIA.
		GALV. AASHTO M111 / ASTM A123 OR GALV. HOT DIP TO AASHTO M232 CLASS C / ASTM A153 CLASS C / ASTM F2329	

SHORT RADIUS BEAM GUARD (MGS) SHORT RADIUS TERMINAL (MGS)

STATE OF WISCONSIN
DEPARTMENT OF TRANSPORTAT

6

SDD 14B53 - 01h

BILL OF MATERIALS - SHORT RADIUS BEAM GUARD (MGS)

PART	DESCRIPTION	MATERIALS SPECIFICATIONS	NOTES
PP1	BEARING PLATE AT POST	ASTM A36 MIN. STRENGTH 36 KSI, OR ASTM A529 MAX. STRENGTH 50 KSI, OR ASTM A572 MAX STRENGTH 50 KSI OR ASTM A709 MAX STRENGTH 50 KSI OR ASTM A992 MAX STRENGTH 50 KSI	
		GALV. AASHTO M111 / ASTM A123	
PP2	PIPE - STEEL	ASTM A53 GALVANIZED GRADE B SCHEDULE 40	2" DIA. x 6" LONG
QQ1	FOUNDATION TUBE	ASTM A500 GRADE B	8" X 6" X 3/16"
		GALV. AASHTO M111 / ASTM A123	
QQ2	SHORT RADIUS - FOUNDATION TUBE - ANCHOR CABLE - TUBE	ASTM A500 GRADE B	DIMENSIONS 2 1/2" X 2 1/4" X 1/4" X 8"
		GALV. AASHTO M111 / ASTM A123	
QQ3	SHORT RADIUS - SOIL TUBE - ANCHOR CABLE - TUBE - END PLATE	ASTM A36 MIN. STRENGTH 36 KSI, OR ASTM A529 MAX. STRENGTH 50 KSI, OR ASTM A572 MAX STRENGTH 50 KSI OR ASTM A709 MAX STRENGTH 50 KSI OR ASTM A992 MAX STRENGTH 50 KSI	DIMENSIONS 2 1/2" X 2 1/2" X 1/4"
		GALV. AASHTO M111 / ASTM A123	
QQ4	GROUND STRUT AND YOKE - BOLT	GALV. HOT DIP TO AASHTO M232 CLASS C / ASTM A153 CLASS C / ASTM F2329 OR GALV. MECHANICALLY TO AASHTO M298 CLASS 50, TYPE 1 / ASTM B695 CLASS 50, TYPE 1	5/8 DIA.
		ASTM A307 GRADE B HEAVY HEX HEAD OR SAE J429 GRADE 2 HEAVY HEX HEAD	
		UNC	
QQ5	GROUND PLATE AND YOKE - WASHER	ASTM F436 TYPE 1 (HARDEN WASHER ONLY)	5/8 DIA.
		GALV. AASHTO M111 / ASTM A123 OR GALV. HOT DIP TO AASHTO M232 CLASS C / ASTM A153 CLASS C / ASTM F2329	
QQ6	GROUND STRUT AND YOKE - NUT	HEAVY HEX	5/8 DIA.
		UNC	
		ASTM A563 GRADE A	
		OVER TAPPED NUTS AS SPECIFIED IN AASHTO 291 / ASTM A 563	
		GALV. HOT DIP TO AASHTO M232 CLASS C / ASTM A153 CLASS C / ASTM F2329 OR GALV. MECHANICALLY TO AASHTO M298 CLASS 50, TYPE 1 / ASTM B695 CLASS 50, TYPE 1	

PART	DESCRIPTION	MATERIALS SPECIFICATIONS	NOTES
SS1	SOIL PLATE	ASTM A36 MIN. STRENGTH 36 KSI, OR ASTM A529 MAX. STRENGTH 50 KSI, OR ASTM A572 MAX STRENGTH 50 KSI OR ASTM A709 MAX STRENGTH 50 KSI OR ASTM A992 MAX STRENGTH 50 KSI	
		GALV. AASHTO M111 / A123	
TT1	SOIL PLATE - BOLT	ASTM A307 GRADE B HEAVY HEX HEAD OR SAE J429 GRADE 2 HEAVY HEX HEAD	5/8 DIA.
		GALV. HOT DIP TO AASHTO M232 CLASS C / ASTM A153 CLASS C / ASTM F2329 OR GALV. MECHANICALLY TO AASHTO M298 CLASS 50, TYPE 1 / ASTM B695 CLASS 50, TYPE 1	
		UNC	
TT2	SOIL PLATE - WASHER	ASTM F436 TYPE 1 (HARDEN WASHER ONLY)	5/8 DIA.
		GALV. AASHTO M111 / ASTM A123 OR GALV. HOT DIP TO AASHTO M232 CLASS C / ASTM A153 CLASS C / ASTM F2329	
TT3	SOIL PLATE - NUT	GALV. HOT DIP TO AASHTO M232 CLASS C / ASTM A153 CLASS C / ASTM F2329 OR GALV. MECHANICALLY TO AASHTO M298 CLASS 50, TYPE 1 / ASTM B695 CLASS 50, TYPE 1	5/8 DIA.
UU1	OBJECT MARKER - SHEETING	MUTCD / WISDOT OBJECT MARKER TYPE 3	PATTERN AND COLOR FOR SHEETING. SHEETING TYPE FOR MARKER.
		WISDOT SPEC 637 TYPE F	
		APPROVED PRODUCT LIST	
UU2	OBJECT MARKER - ALUMINUM PLATE	WISDOT SPEC 637 ALUMINUM PLATE	MATERIAL AND THICKNESS OF MATERIALS
UU3	OBJECT MARKER - SCREWS	STAINLESS SELF-TAPPING SCREWS	
VV1	FOUNDATION BACKFILL	WISDOT SPEC 614	

SHORT RADIUS BEAM GUARD (MGS) SHORT RADIUS TERMINAL (MGS)

STATE OF WISCONSIN
DEPARTMENT OF TRANSPORTATION

APPROVED
June 2017 — DATE
/S/ Rodney Taylor — ROADWAY STANDARDS DEVE ENGINEER
FHWA

6
SDD 14B53 - 01i

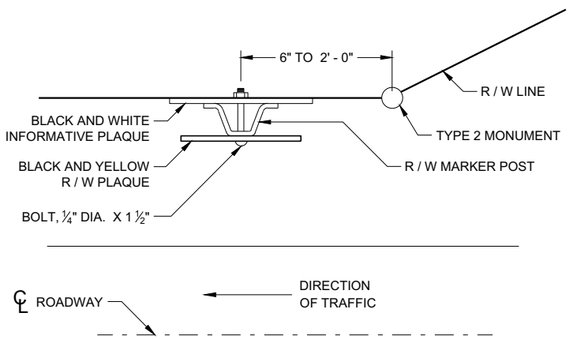

PLAN VIEW
STEEL MARKER POST

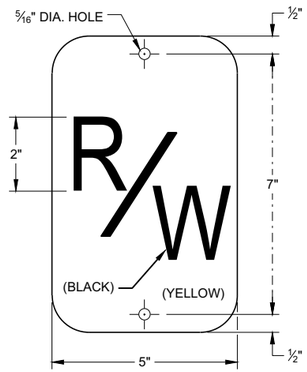

R / W PLAQUE

THE RIGHT-OF-WAY PLAQUE AND INFORMATIVE PLAQUE WILL BE FURNISHED BY THE WISCONSIN DEPARTMENT OF TRANSPORTATION.

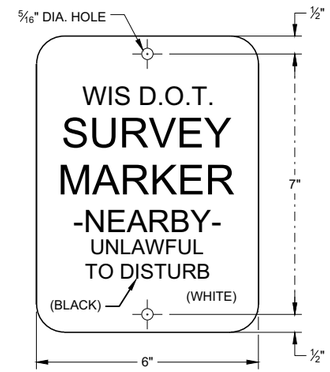

INFORMATIVE PLAQUE

GENERAL NOTES

DETAILS OF CONSTRUCTION NOT SHOWN ON THIS DRAWING SHALL CONFORM TO THE PERTINENT REQUIREMENTS OF THE STANDARD SPECIFICATIONS AND THE APPLICABLE SPECIAL PROVISIONS.

A STEEL MARKER POST FOR RIGHT -OF-WAY SHALL BE PLACED IN THE RIGHT-OF-WAY WITH THE BACK OF THE POST ON THE LONGER RIGHT-OF-WAY TANGENT, 6 INCHES TO 24 INCHES FROM EACH TYPE 2 MONUMENT TO SERVE AS A GUARD POST, AND AT OTHER LOCATIONS AS SHOWN ON THE PLANS OR AS DIRECTED BY THE ENGINEER.

THE "R/W" PLAQUE SHALL FACE THE ROADWAY AND THE INFROMATIVE PLAQUE SHALL FACE AWAY FROM THE ROADWAY. "R/W" AND INFORMATIVE PLAQUES WILL BE FURNISHED BY THE WISCONSIN DEPARTMENT OF TRANSPORTATION.

STEEL MARKER POSTS SHALL MEET THE MINIMUM MATERIAL REQUIREMENTS FOR STEEL DELINEATOR POSTS; EXCEPT POSTS PAINTED WITH FEDERAL YELLOW ENAMEL NEED NOT BE ZINC COATED.

(1) IN AREAS OF SOLID ROCK, DRILL A BORE HOLE 2" GREATER THAN THE WIDEST DIMENSION OF THE POST CROSS SECTION INTO THE ROCK A MINIMUM DEPTH OF 12 INCHES. CUT OR SPLICE THE POST SO THAT A MINIMUM LENGTH OF 3' - 10" PROTRUDES ABOVE THE GROUND. BLOW OUT THE BORE HOLE IN THE ROCK USING COMPRESSED AIR. FILL THE BORE HOLE WITH CEMENT GROUT OR EQUIVALENT, DEPENDING ON THE STABILITY OF THE ROCK.

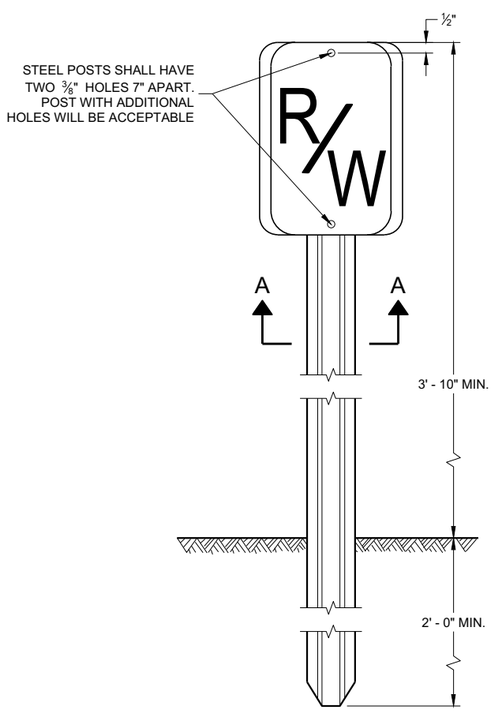

FRONT VIEW
STEEL MARKER POST

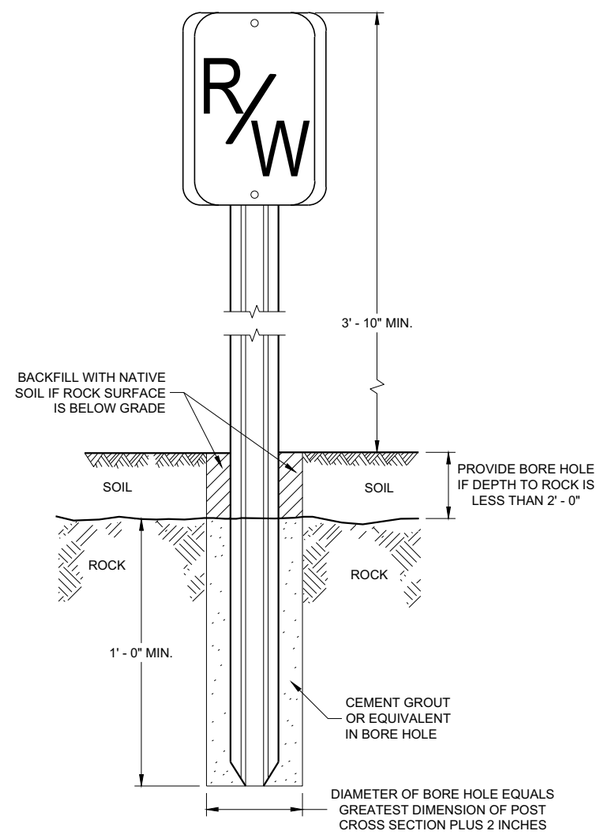

FRONT VIEW
ROCK INSTALLATION (1)

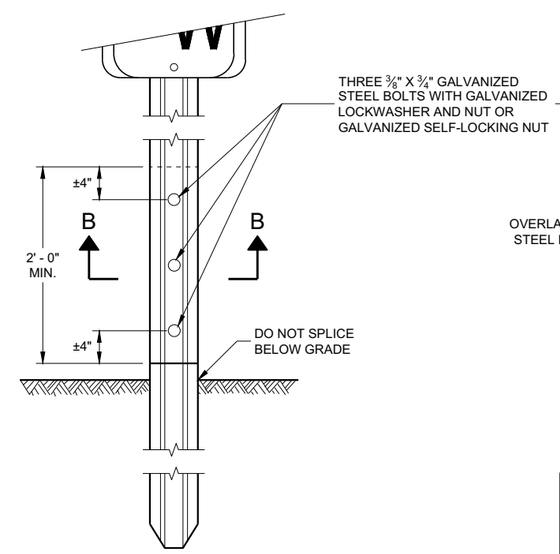

FRONT VIEW
SPLICE DETAIL

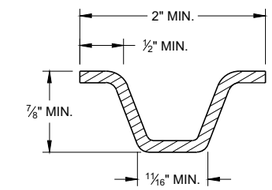

MIN. WEIGHT 1.12 LB./FT.
SECTION A - A

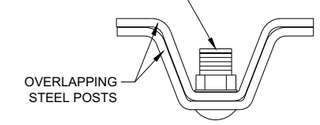

SECTION B - B

MARKER POST
FOR RIGHT - OF - WAY

STATE OF WISCONSIN
DEPARTMENT OF TRANSPORTATION

APPROVED
2/18/2016 — DATE
/S/ Ray Kumapayi — CHIEF SURVEYING AND MA ENGINEER
FHWA

6

6

SDD 15A01 - 13a

SDD 15A01 - 13a

GENERAL NOTES

DETAILS OF CONSTRUCTION NOT SHOWN ON THIS DRAWING SHALL CONFORM TO THE PERTINENT REQUIREMENTS OF THE STANDARD SPECIFICATIONS AND THE APPLICABLE SPECIAL PROVISIONS.

A FLEXIBLE MARKER POST FOR RIGHT -OF-WAY SHALL BE PLACED IN THE RIGHT-OF-WAY WITH THE BACK OF THE POST ON THE LONGER RIGHT-OF-WAY TANGENT, 6 INCHES TO 24 INCHES FROM EACH TYPE 2 MONUMENT TO SERVE AS A GUARD POST, AND AT OTHER LOCATIONS AS SHOWN ON THE PLANS OR AS DIRECTED BY THE ENGINEER.

THE RIGHT-OF-WAY STICKER DIMENSIONS SHALL BE 2 ¼" X 17" AND THE STICKER SHALL BE MADE OF A NON-RELECTIVE VINYL MATERIAL. THE RIGHT-OF-WAY STICKER SHALL FACE THE ROADWAY.

INSTALL PER DEPTH OF MANUFACTURER'S RECOMMENDATION BUT NOT LESS THAN 18 INCHES BELOW GRADE FROM THE BOTTOM OF THE METAL U-CHANNEL ANCHOR.

1. FLEXIBLE MARKER POSTS SHALL BE INCLUDED IN THE APPROVED PRODUCTS LIST FOR MARKER POSTS AND SHALL BE FEDERAL YELLOW IN COLOR.
2. IN AREAS OF SOLID ROCK, DRILL A BORE HOLE 2" GREATER THAN THE WIDEST DIMENSION OF THE POST CROSS SECTION INTO THE ROCK A MINIMUM DEPTH OF 12 INCHES. CUT OR SPLICE THE POST SO THAT A MINIMUM LENGTH OF 4' - 0" PROTRUDES ABOVE THE GROUND. BLOW OUT THE BORE HOLE IN THE ROCK USING COMPRESSED AIR.

   FILL THE BORE HOLE WITH CEMENT GROUT OR EQUIVALENT, DEPENDING ON THE STABILITY OF THE ROCK.

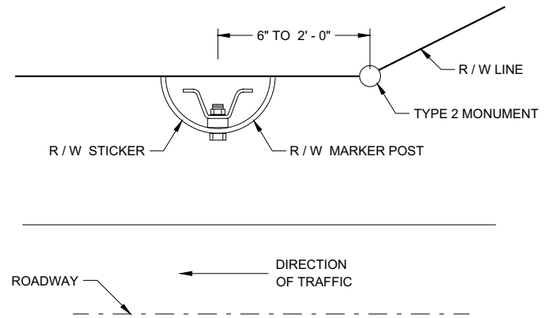

PLAN VIEW

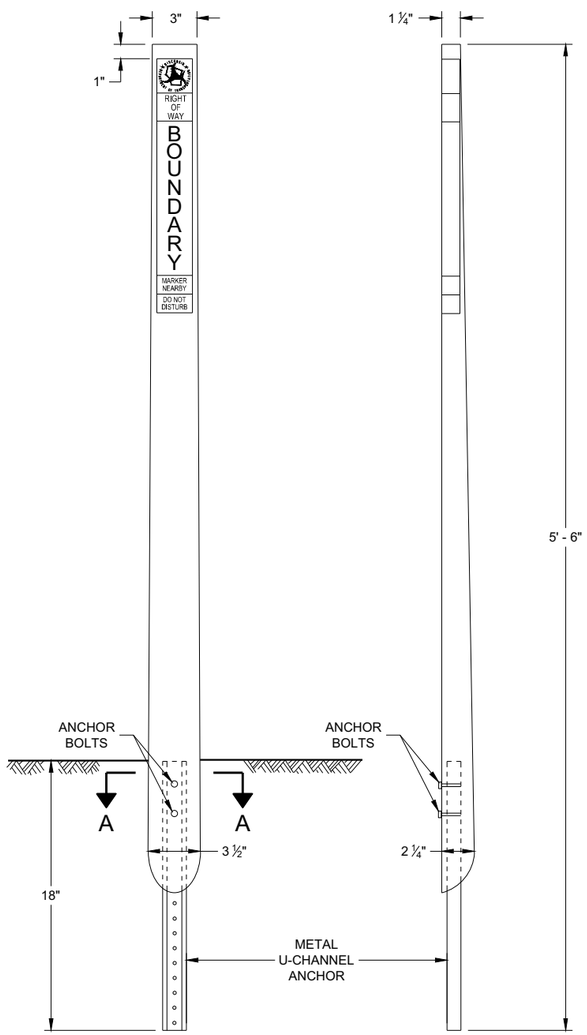

FRONT VIEW **SIDE VIEW**

FLEXIBLE MARKER POST FOR (1) RIGHT-OF-WAY

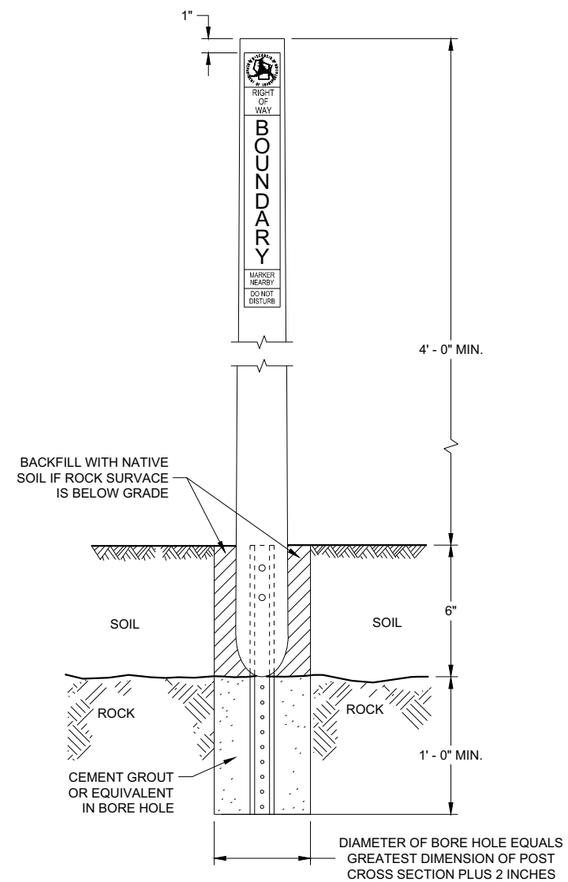

FRONT VIEW (1)(2)
ROCK INSTALLATION

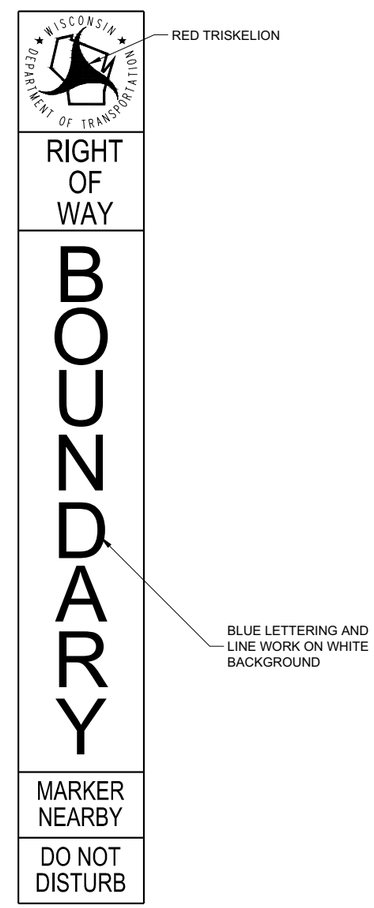

RIGHT-OF-WAY STICKER

THE RIGHT-OF-WAY STICKER SHALL BE ATTACHED 1" FROM THE TOP OF THE RIGHT-OF-WAY POST PRIOR TO DELIVERY.

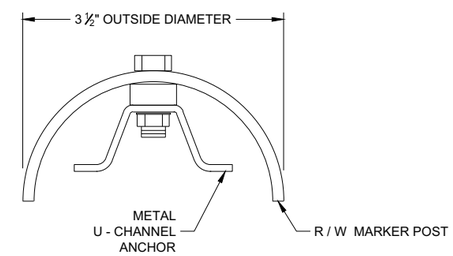

SECTION A - A

FLEXIBLE MARKER POST FOR RIGHT - OF -WAY

STATE OF WISCONSIN
DEPARTMENT OF TRANSPORTATION

APPROVED
00-00-00 — DATE
/S/ <AUTHOR> — CHIEF SURVEYING AND MA ENGINEER
FHWA

6

SDD 15A01 - 13b

GENERAL NOTES

DETAILS OF CONSTRUCTION, MATERIALS AND WORKMANSHIP NOT SHOWN ON THIS DRAWING SHALL CONFORM TO THE PERTINENT REQUIREMENTS OF THE STANDARD SPECIFICATIONS AND THE APPLICABLE SPECIAL PROVISIONS.

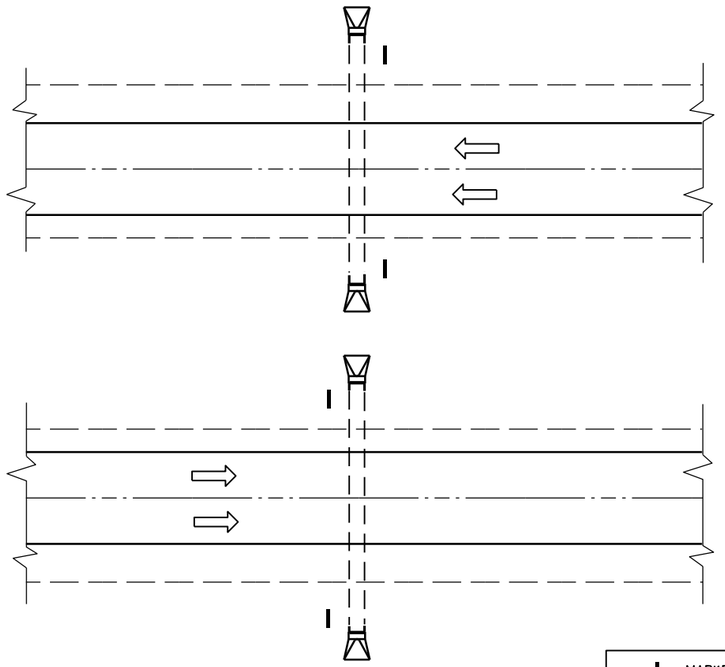

PLAN VIEW

DIVIDED HIGHWAY

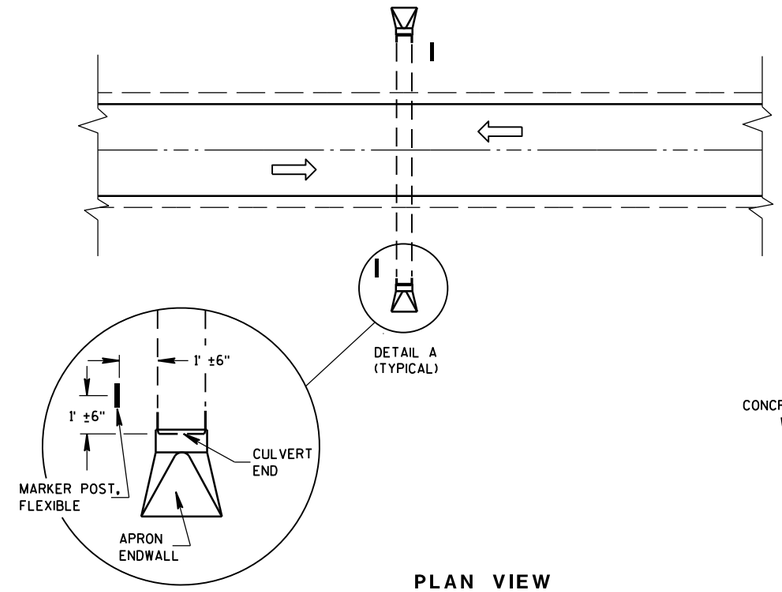

DETAIL A
(TYPICAL)

PLAN VIEW

UNDIVIDED HIGHWAY

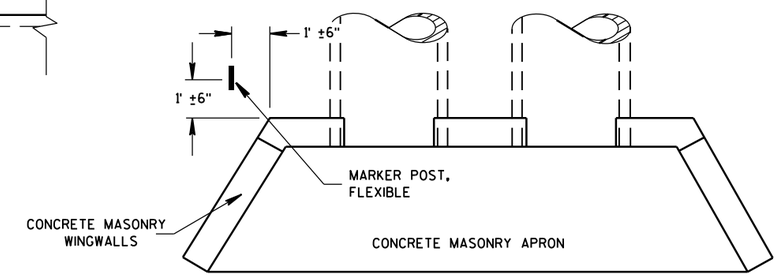

PLAN VIEW

CONCRETE MASONRY ENDWALLS FOR CULVERT PIPE AND PIPE ARCH

MARKER POST, FLEXIBLE

DIRECTION OF TRAFFIC FLOW

FLEXIBLE MARKER POST LOCATION

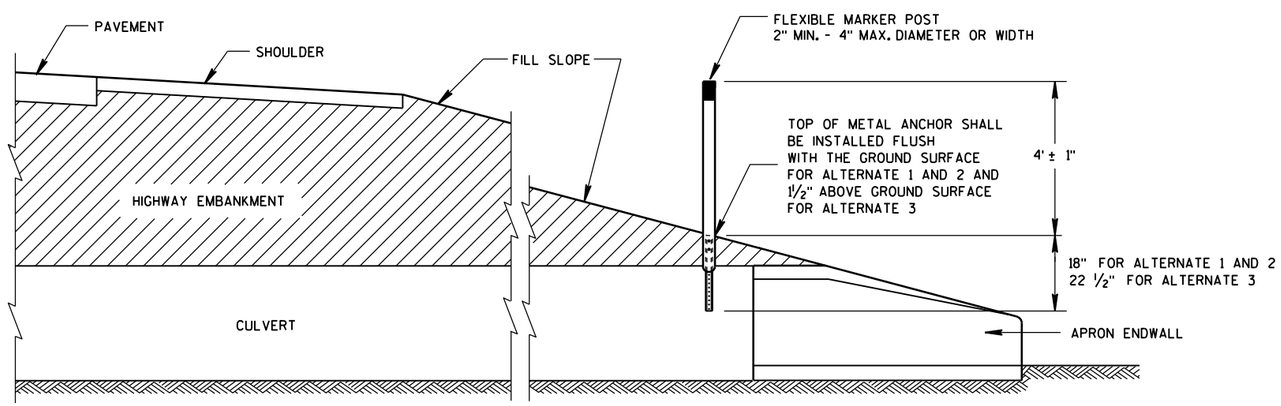

CROSS SECTION

FLEXIBLE MARKER POST

FLEXIBLE MARKER POST FOR CULVERT END

STATE OF WISCONSIN
DEPARTMENT OF TRANSPOR

6

6

S.D.D. 15 A 3-2a

S.D.D. 15 A 3-2a

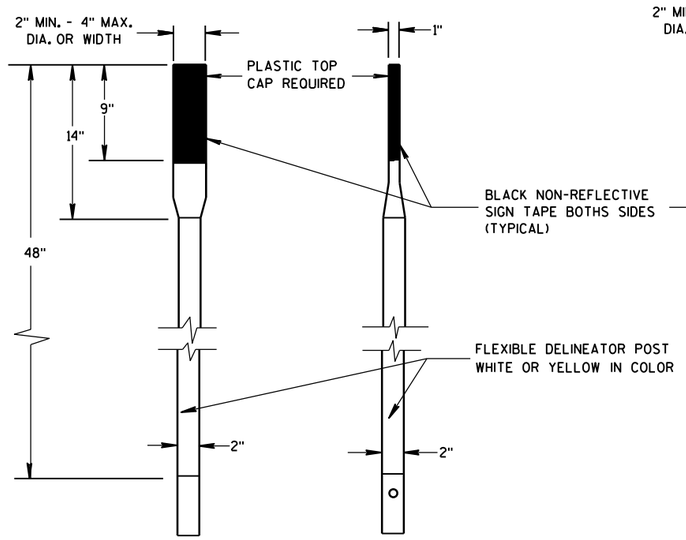

FRONT VIEW SIDE VIEW

ALTERNATE 1

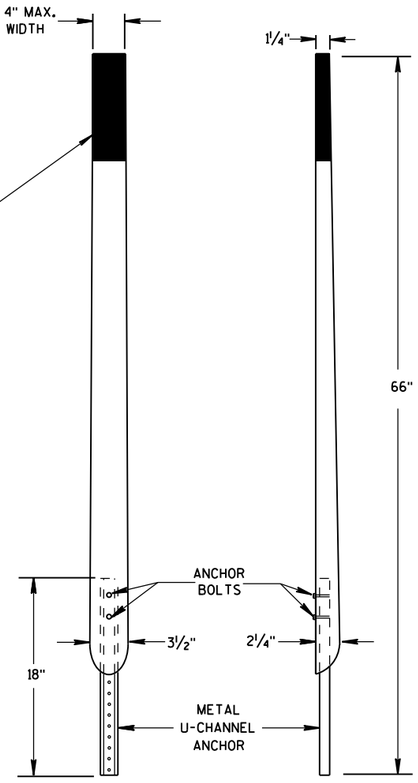

FRONT VIEW SIDE VIEW

ALTERNATE 2

FLEXIBLE MARKER POSTS

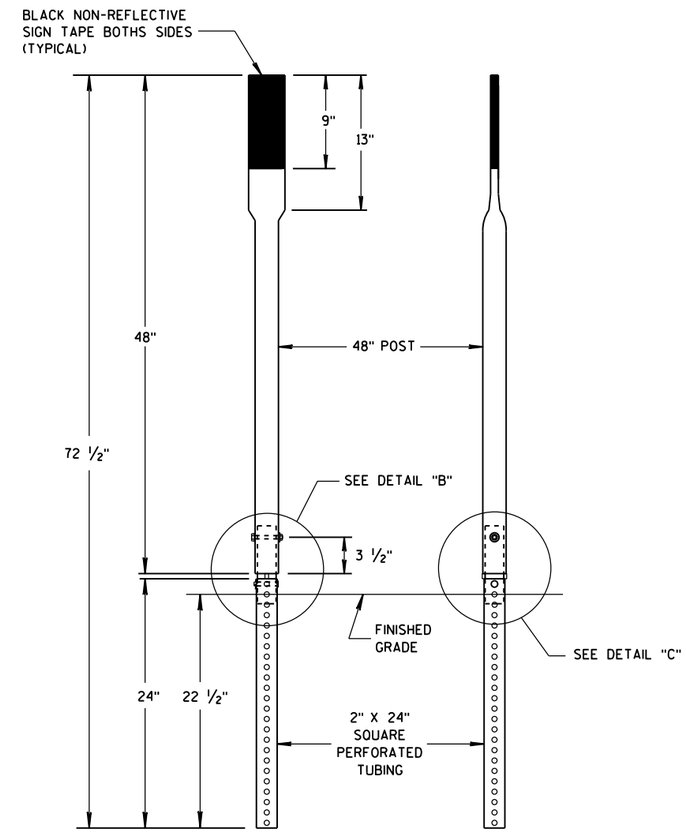

FRONT VIEW SIDE VIEW

ALTERNATE 3

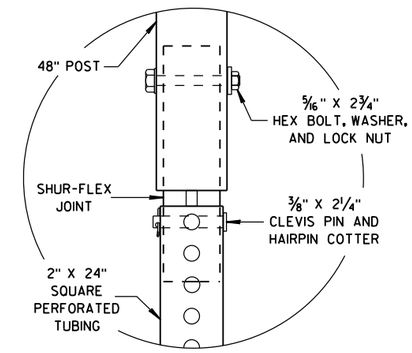

DETAIL B

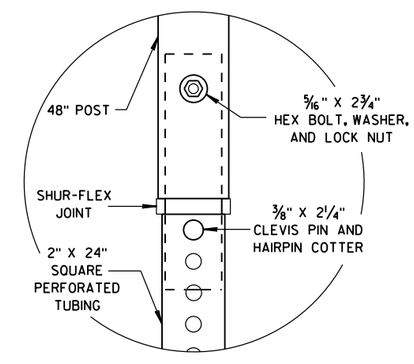

DETAIL C

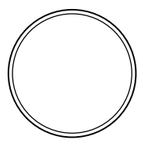

SECTION A-A

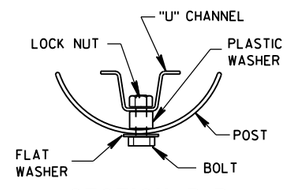

SECTION B-B

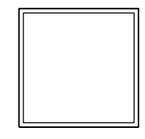

SECTION C-C

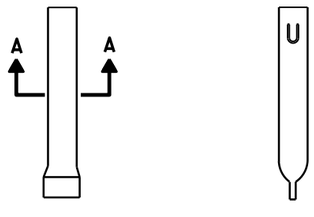

FRONT VIEW SIDE VIEW

ALTERNATE 1

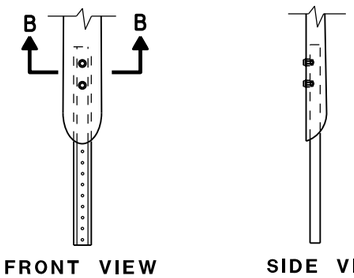

FRONT VIEW SIDE VIEW

ALTERNATE 2

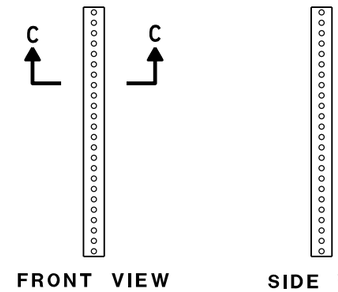

FRONT VIEW SIDE VIEW

ALTERNATE 3

FLEXIBLE MARKER POST ANCHORS

FLEXIBLE MARKER POST
FOR CULVERT END

STATE OF WISCONSIN
DEPARTMENT OF TRANSPORTATION

APPROVED
10/1/2012 /S/ Travis Feltes
DATE STATE TRAFFIC ENGINEER
FHWA

6

6

S.D.D. 15 A 3-2b

S.D.D. 15 A 3-2b

GENERAL NOTES

THE EXACT NUMBER, LOCATION, AND SPACING OF ALL SIGNS AND DEVICES SHALL BE ADJUSTED TO FIT FIELD CONDITIONS.

THE SPACING BETWEEN TRAFFIC CONTROL SIGNS SHOULD BE ADJUSTED TO NOT CONFLICT WITH AND SHOULD PROVIDE A MINIMUM OF 200 FEET (500 FEET DESIRABLE) CLEARANCE TO EXISTING SIGNS THAT WILL REMAIN IN PLACE.

ALL SIGNS ARE 48" X 48" UNLESS OTHERWISE NOTED.

SIGNS THAT WILL BE IN PLACE LESS THAN SEVEN CONTINUOUS DAYS AND NIGHTS MAY BE MOUNTED ON PORTABLE SUPPORTS.

IF A "STOP" SIGN MUST BE REMOVED FOR A WORK OPERATION, A TEMPORARY "STOP" SIGN SHALL BE PLACED PRIOR TO THE SIGN REMOVAL, OR A FLAGGER SHALL BE PROVIDED UNTIL THE SIGN IS REESTABLISHED.

* OMIT G20-1 SIGNS IF LENGTH OF WORK AREA IS 2 MILES OR LESS

** PLACE AN ADDITIONAL W20-1A "ROAD WORK AHEAD" SIGN IF WORK AREA WITHIN THE PROJECT IS SEPARATED BY MORE THAN 2 MILES FROM PREVIOUS WORK AREA.

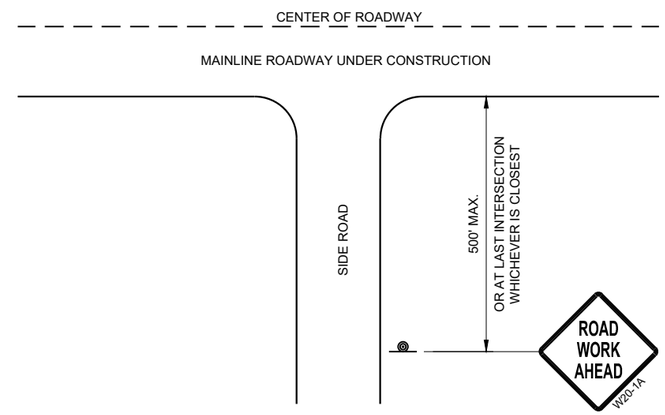

TYPICAL SIDE ROAD APPROACH WARNING SIGN DETAIL

LEGEND

- SIGN ON PERMANENT SUPPORT
- DIRECTION OF TRAFFIC
- WORK AREA

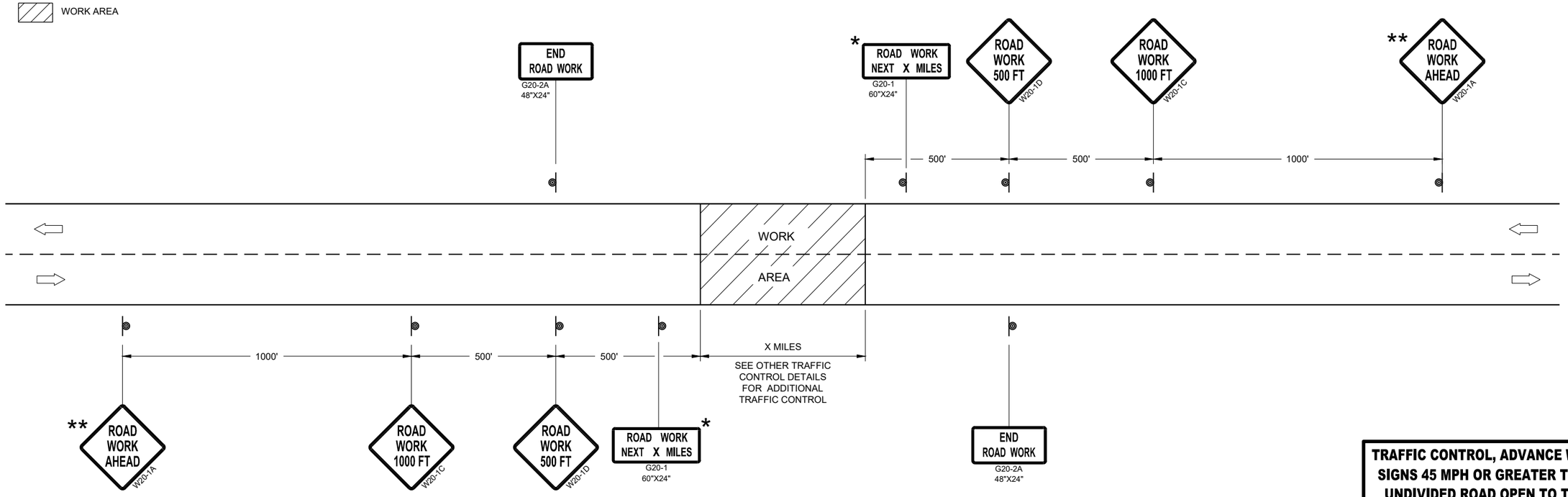

TRAFFIC CONTROL, ADVANCE WARNING SIGNS 45MPH OR GREATER

TRAFFIC CONTROL, ADVANCE WARNING SIGNS 45 MPH OR GREATER TWO-WAY UNDIVIDED ROAD OPEN TO TRAFFIC

STATE OF WISCONSIN
DEPARTMENT OF TRANSPORTATION

APPROVED
July 2018 — DATE
/S/ Andrew Heidtke — WORK ZONE ENGINEE
FHWA

6
SDD 15C04 - 05

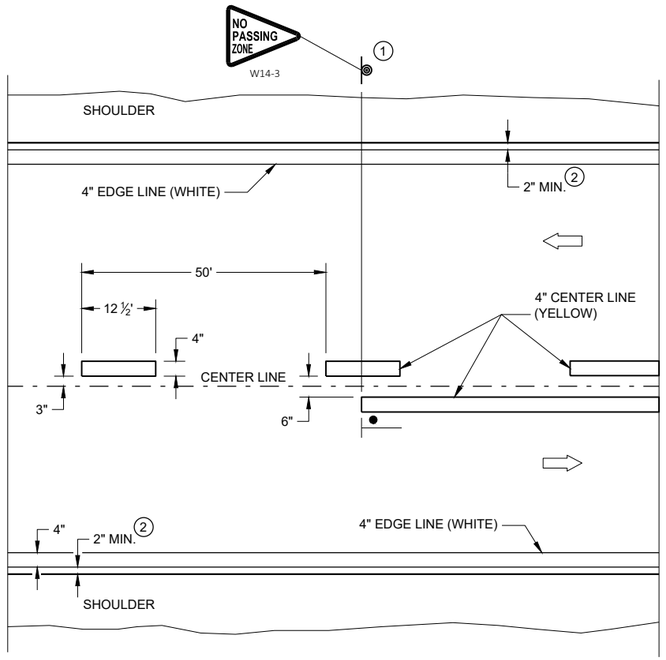

TWO WAY TRAFFIC

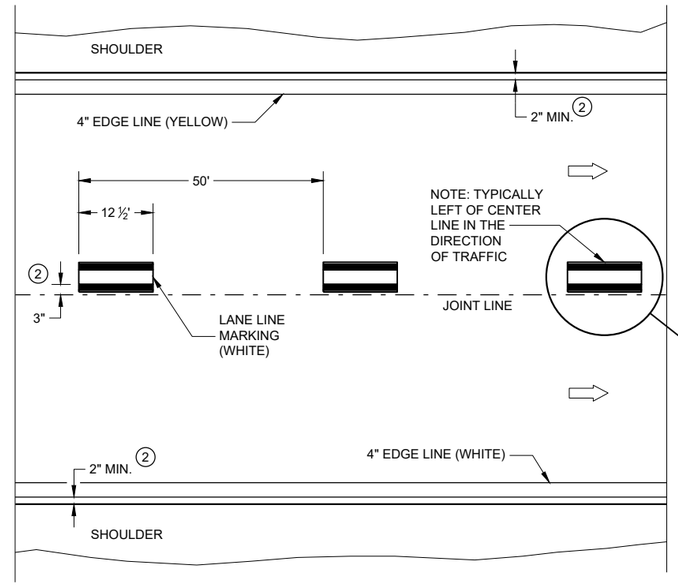

ONE WAY TRAFFIC

PERMANENT PAVEMENT MARKING

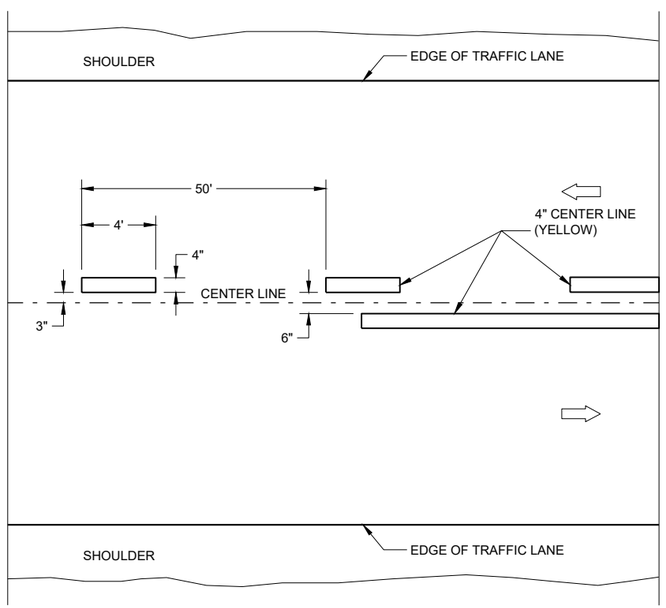

TWO WAY TRAFFIC

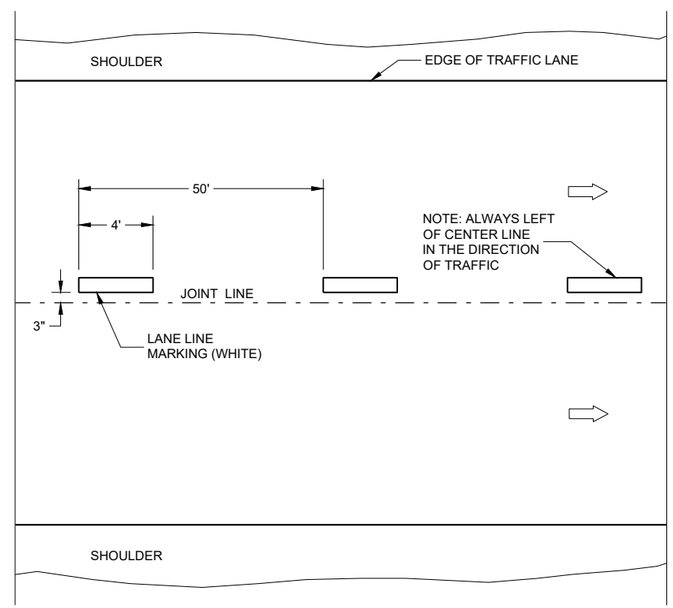

ONE WAY TRAFFIC

TEMPORARY PAVEMENT MARKING

GENERAL NOTES

DETAILS OF CONSTRUCTION NOT SHOWN ON THIS DRAWING SHALL CONFORM TO STANDARD SPECIFICATIONS AND SPECIAL PROVISIONS.

1. LOCATE THE NO PASSING ZONE W14-3 SIGN WITHIN 50 FEET OF THE "T" MARKING
2. MEASURE FROM EDGE OF MARKING TO JOINT LINE. THIS DOES NOT INCLUDE SPACE NEEDED FOR GROOVING OPERATIONS.

LEGEND

"T" MARKING

SIGN ON PERMANENT SUPPORT

DIRECTION OF TRAFFIC

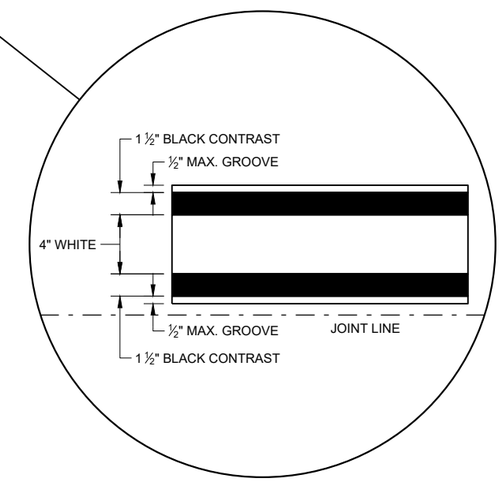

LONGITUDINAL MARKING (MAINLINE)

STATE OF WISCONSIN
DEPARTMENT OF TRANSPORTATION

APPROVED
February 2020 — DATE
/S/ Matthew Rauch — STATEWIDE SIGNING AND M ENGINEER
FHWA

6

SDD 15C08 - 20a

GENERAL NOTES

1. REFLECTIVE SHEETING SHALL FOLLOW THE REQUIREMENTS IN THE APPROVED PRODUCTS LISTING FOR SIGN SHEETING.
2. LOCATION OF WARNING LIGHTS WHEN SHOWN ON THE PLAN.

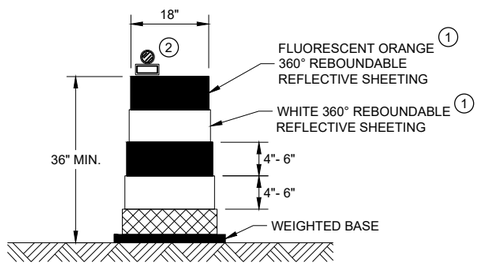

DRUM

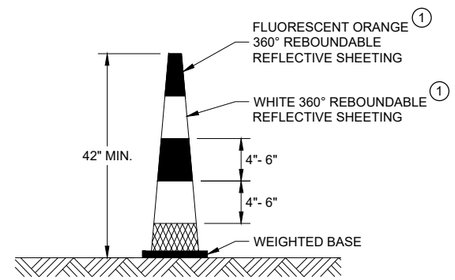

42" CONE

DO NOT USE IN TAPERS
½ SPACING OF DRUMS

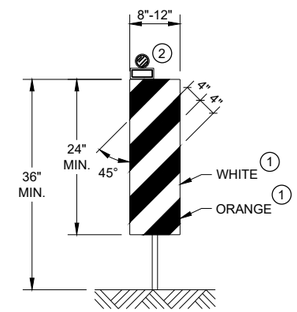

VERTICAL PANEL

THE STRIPES SHALL SLOPE DOWNWARD TO
THE TRAFFIC SIDE FOR CHANNELIZATION.

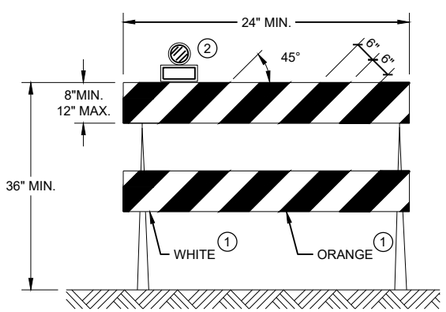

TYPE II BARRICADE

FOR RAILS LESS THAN 36" LONG, 4" WIDE STRIPES
MAY BE USED. ALL STRIPES SHALL SLOPE DOWNWARD
TO THE TRAFFIC SIDE FOR CHANNELIZATION.

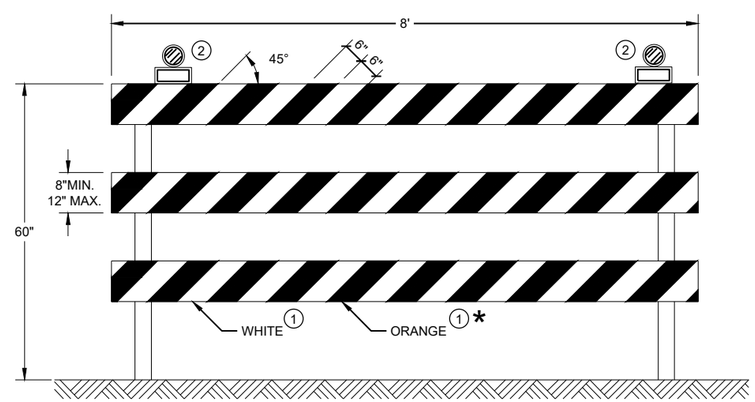

TYPE III BARRICADE

IF SIGN MOUNTED, DO NOT COVER MORE THAN 50% OF THE TOP
TWO RAILS OR 33% OF THE TOTAL AREA OF THE THREE RAILS.

* IF USED FOR A PERMANENT APPLICATION USE RED SHEETING.

CHANNELIZING DEVICES DRUMS, CONES, BARRICADES AND VERTICAL PANELS

STATE OF WISCONSIN
DEPARTMENT OF TRANSPORTATION

APPROVED
May 2021 — DATE
/S/ Andrew Heidtke — WORK ZONE ENGINEE
FHWA

6

6

SDD 15C11 - 09b

SDD 15C11 - 09b

LEGEND

SIGN ON PORTABLE OR PERMANENT SUPPORT

TEMPORARY PORTABLE RUMBLE STRIP ARRAY

DIRECTION OF TRAFFIC

WORK AREA

FLAGGER, EQUIPPED WITH STOP/SLOW PADDLE FASTENED ON SUPPORT STAFF

GENERAL NOTES

DETAILS OF TRAFFIC CONTROL DEVICES AND INSTALLATION NOT SHOWN ON THIS DRAWING SHALL CONFORM TO THE PERTINENT REQUIREMENTS OF THE STANDARD SPECIFICATIONS, THE SPECIAL PROVISIONS, AND THE MANUAL ON UNIFORM TRAFFIC CONTROL DEVICES.

ALL SIGNS ARE 48" X 48" UNLESS OTHERWISE NOTED.

"WO" SIGNS ARE THE SAME AS "W" SIGNS EXCEPT THE BACKGROUND IS ORANGE.

THE EXACT NUMBER, LOCATION AND SPACING OF ALL SIGNS, DEVICES, AND LOCATION OF ALL FLAGGERS SHALL BE ADJUSTED TO FIT FIELD CONDITIONS AS APPROVED BY THE ENGINEER.

THE FIRST ADVANCE WARNING SIGN SHOULD TYPICALLY BE LOCATED IN ADVANCE OF THE ANTICIPATED TRAFFIC BACKUP OR QUEUE.

WHEN A SIDE ROAD OR RAMP INTERSECTS THE FACILITY ON WHICH THE WORK IS BEING PERFORMED, ADDITIONAL TRAFFIC CONTROLS SHALL BE PROVIDED AS SPECIFIED IN THE PLANS AND/OR THE SPECIAL PROVISIONS OR AS APPROVED BY THE ENGINEER.

FLAGGING

FLAGGERS SHALL BE IN SIGHT OF EACH OTHER OR IN DIRECT COMMUNICATION AT ALL TIMES. THEY SHALL BE EQUIPPED WITH STOP/SLOW PADDLES FASTENED ON SUPPORT STAFFS. WHEN THE FLAGGING OPERATION IS NOT IN EFFECT REMOVE TEMPORARY PORTABLE RUMBLE STRIPS PRIOR TO COVERING OR REMOVING ALL ADVANCE SIGNING.

(1) FOR MOVING WORK OPERATIONS, POST ADDITIONAL W20-7A FLAGGER SIGNS AT APPROXIMATELY 3,500' INTERVALS IN THE MOVING WORK OPERATION OR AS APPROVED BY THE ENGINEER.

(2) SIGN NOT REQUIRED IF FLAGGING OPERATION OCCURS WITHIN A SIGNED ROAD WORK ZONE AREA.

WHEN THE DISTANCE BETWEEN FLAGGERS EXCEEDS 2 MILES, A PILOT CAR IS REQUIRED. WHEN CURVES REDUCE SIGHT DISTANCE BELOW 400', A PILOT CAR IS REQUIRED.

TEMPORARY PORTABLE RUMBLE STRIPS

UTILIZE TEMPORARY PORTABLE RUMBLE STRIPS ON ALL FLAGGING OPERATIONS.

(3) EACH TEMPORARY PORTABLE RUMBLE STRIP ARRAY CONSISTS OF THREE RUMBLE STRIPS SPACED ACCORDING TO MANUFACTURER'S RECOMMENDATION, PLACED TRANSVERSE ACROSS THE LANE AT LOCATIONS SHOWN.

ONLY USE TEMPORARY PORTABLE RUMBLE STRIPS FOR THE APPROVED PRODUCTS LIST.

INSTALL TEMPORARY RUMBLE STRIPS PER MANUFACTURER'S RECOMMENDATIONS.

PLACE ADVANCE SIGNING PRIOR TO INSTALLING TEMPORARY RUMBLE STRIPS.

DO NOT INSTALL TEMPORARY PORTABLE RUMBLE STRIPS ON GRAVEL, MILLED SURFACES, OR ASPHALT THAT HAS BEEN PAVED LESS THAN 12 HOURS.

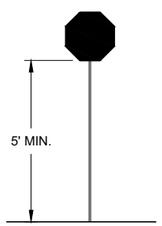

STOP/SLOW PADDLE ON SUPPORT STAFF

SIGN AND TEMPORARY RUMBLE STRIP ARRAY SPACING TABLE

SPEED LIMIT	SPACING "A"
25-30 MPH	200'
35-40 MPH	350'
45-55 MPH	500'

USE OF WO3-4 SIGN IS OPTIONAL. WHEN USED, THIS SIGN SHALL BE LOCATED BETWEEN THE W20-7A AND W20-4A SIGNS, USING SPACING "A".

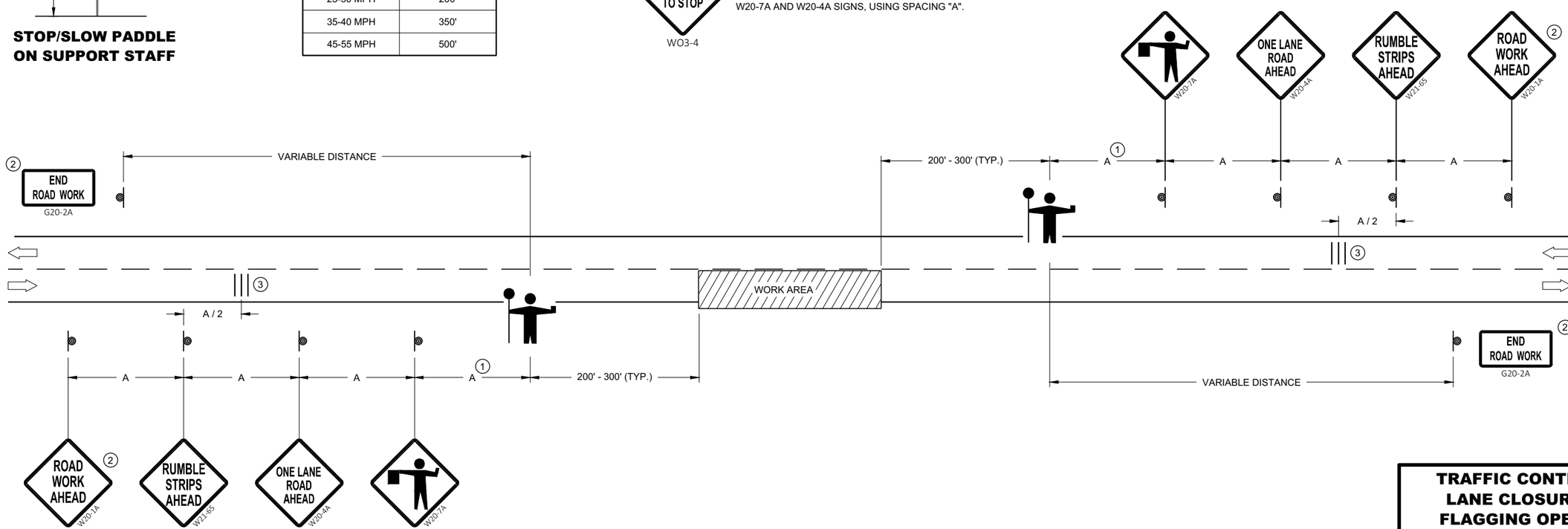

TRAFFIC CONTROL FOR LANE CLOSURE WITH FLAGGING OPERATION

TRAFFIC CONTROL FOR LANE CLOSURE WITH FLAGGING OPERATION

STATE OF WISCONSIN
DEPARTMENT OF TRANSPORTATION

APPROVED
May 2019 — DATE
/S/ Andrew Heidtke — WORK ZONE ENGINEE
FHWA

6
SDD 15C12 - 07

LEGEND

V1 LEAD VEHICLE

V2 MARKING VEHICLE

V3 SHADOW VEHICLE

TRUCK MOUNTED ATTENUATOR (TMA)

SIGN ON TEMPORARY SUPPORT

DIRECTION OF TRAFFIC

FLASHING ARROW PANEL (CAUTION)

GENERAL NOTES

ALL VEHICLES SHALL BE EQUIPPED WITH TWO 360 DEGREE HIGH INTENSITY YELLOW FLASHING LIGHTS OR STROBE LIGHTS AND OPERATED WITH HEADLIGHTS TURNED ON.

ALL VEHICLES SHALL BE EQUIPPED WITH REAR FACING TYPE B OR C FLASHING ARROW PANEL OPERATING IN CAUTION MODE. SIGNS PLACED ON VEHICLES MUST NOT OBSCURE THE ARROW PANEL.

ALL SIGNS ARE 48" X 48" UNLESS OTHERWISE SPECIFIED.

DISTANCE BETWEEN VEHICLES MAY VARY ACCORDING TO TERRAIN, SIGHT DISTANCE, PAINT DRYING TIME, AND OTHER FACTORS. WHENEVER ADEQUATE STOPPING SIGHT DISTANCE EXISTS TO THE REAR, SHADOW VEHICLES SHOULD MAINTAIN THE MINIMUM DISTANCE FROM THE WORK VEHICLE AND PROCEED AT THE SAME SPEED AS THE WORK VEHICLE. SHADOW VEHICLES SHOULD SLOW DOWN IN ADVANCE OF VERTICAL AND HORIZONTAL CURVES THAT RESTRICT SIGHT DISTANCE.

THE WORK AND SHADOW VEHICLES SHOULD PULL OVER PERIODICALLY TO ALLOW TRAFFIC TO PASS.

WHEN NO WORK ACTIVITY IS TAKING PLACE, REMOVE OR LAY STATIONARY SIGNS AND SUPPORTS FLAT ON THE GRADE WITH UPRIGHTS ORIENTED PARALLEL TO AND DOWNSTREAM FROM TRAFFIC.

CONES SHOULD BE USED BETWEEN THE MARKING AND SHADOW VEHICLE AT 100 FOOT SPACING. CONES MAY BE OMITTED ON PAINTED LINE IF APPROVED BY THE ENGINEER. CONSIDER PAVEMENT MARKING DRY OR CURE TIMES AND TRAFFIC VOLUME.

CONES SHALL BE A MINIMUM OF 28" FOR WET PAVEMENT MARKING .

(1) SIGNS SHALL BE REPEATED APPROXIMATELY EVERY THREE MILES.

(2) IF CONSTRUCTION WORK ZONE SIGNS ARE IN PLACE, W20-1A OR W21-63 ARE NOT REQUIRED.

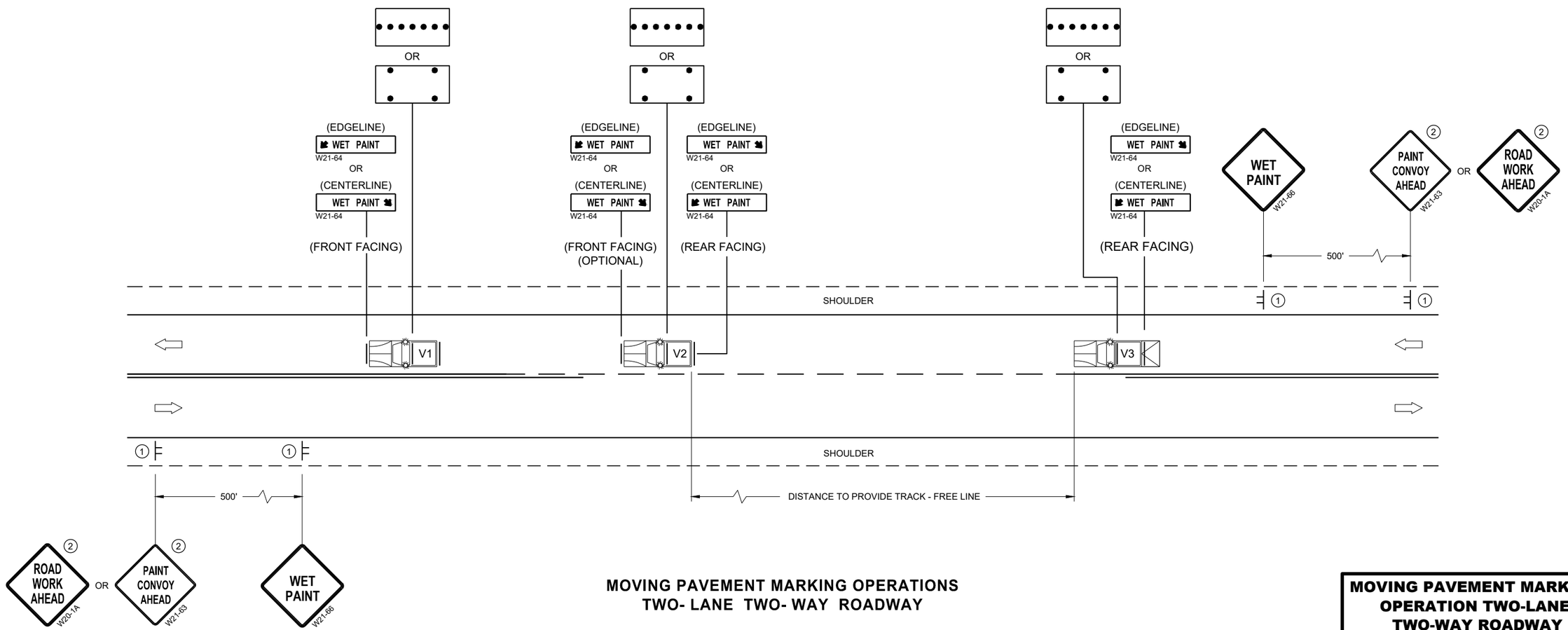

MOVING PAVEMENT MARKING OPERATIONS
TWO- LANE TWO- WAY ROADWAY

MOVING PAVEMENT MARKING OPERATION TWO-LANE TWO-WAY ROADWAY

STATE OF WISCONSIN
DEPARTMENT OF TRANSPORTATION

APPROVED
November 2019 — DATE
/S/ Andrew Heidtke — WORK ZONE ENGINEE
FHWA

6

SDD 15C19 - 06a

GENERAL NOTES

STOP SIGN SHALL BE PLACED A MINIMUM OF 6 FEET TO A MAXIMUM OF 50 FEET FROM THE EDGELINE LOCATION.

1. 18-INCH STOP LINES MAY BE DELETED OR ADDED BY THE REGION MARKING ENGINEER BASED ON VISIBILITY AND SIGHT LINES.
2. NO STOP LINE IS REQUIRED IF STOP SIGN IS LESS THAN OR EQUAL TO 40 FEET FROM THE EDGELINE.
3. NO STOP LINE IS REQUIRED IF STOP SIGN IS LESS THAN OR EQUAL TO 30 FEET FROM THE FLANGELINE EXTENSION.
4. MOVE CLOSER TO THE EDGE OF TRAVEL LINE AS NEEDED FOR VISIBILITY AND SIGHT LINES (NO CLOSER THAN 4 FEET).
5. LADDER BAR CROSSWALKS SHOULD ONLY BE USED FOR MID BLOCK CROSSINGS. USE 2 - 6" TRANSVERSE LINES INSTEAD.

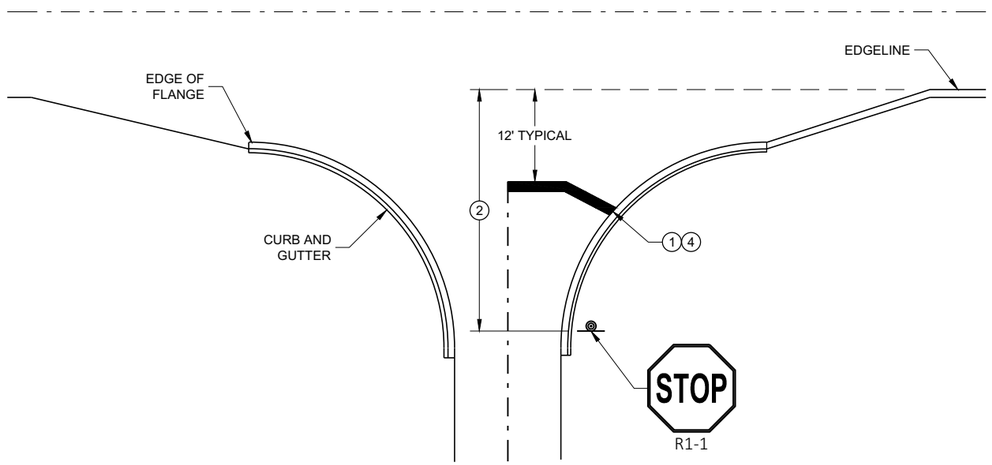

TYPICAL STOP LINE PAVEMENT MARKING WITH CURB AND GUTTER

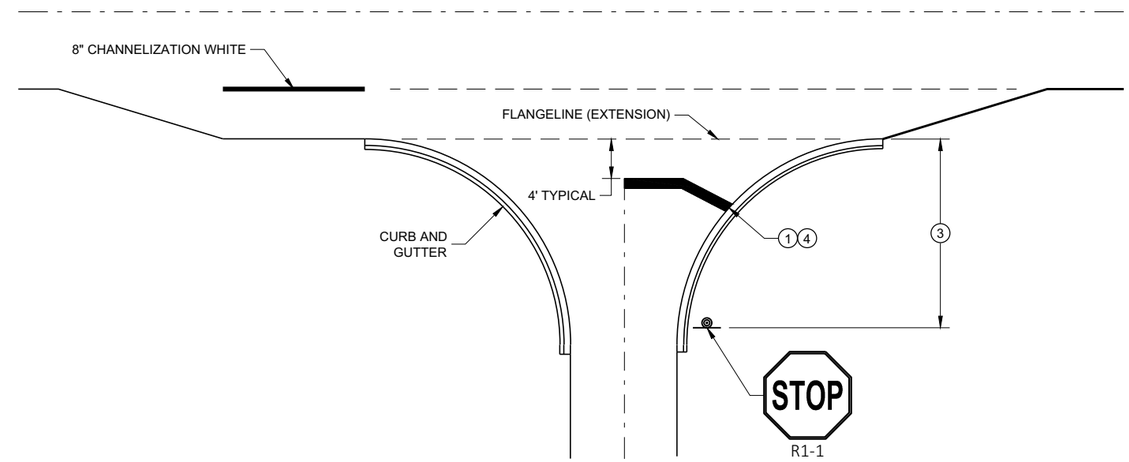

TYPICAL STOP LINE PAVEMENT MARKING FOR SIDEROADS WITH RIGHT TURN LANE

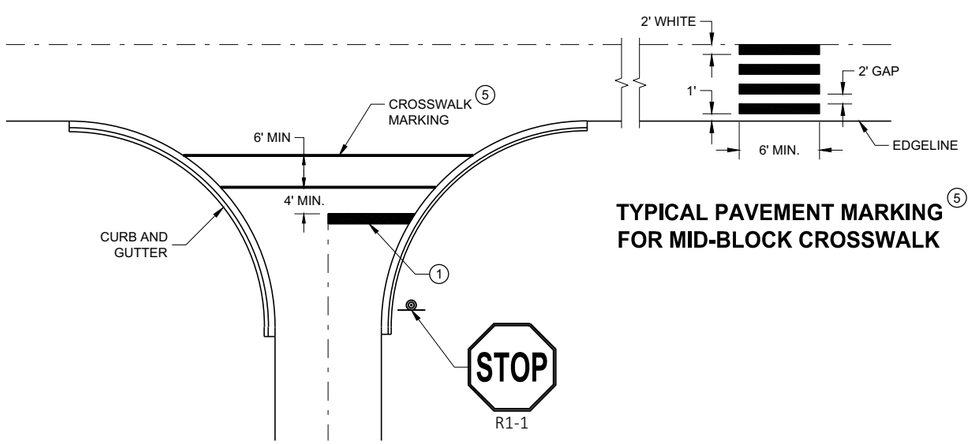

TYPICAL STOP LINE PAVEMENT MARKING FOR SIDEROADS WITH CROSSWALK MARKING

TYPICAL PAVEMENT MARKING 5 FOR MID-BLOCK CROSSWALK

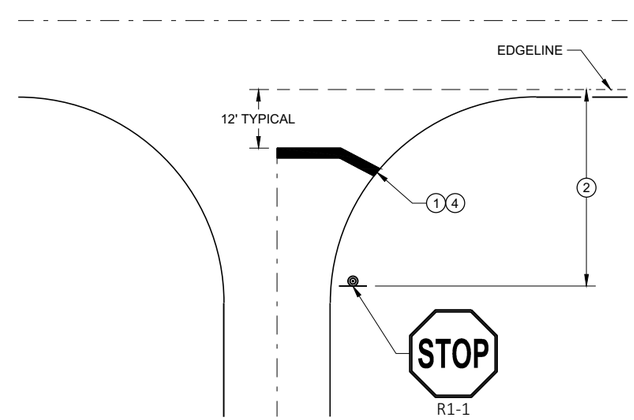

TYPICAL STOP LINE PAVEMENT MARKING WITHOUT CURB AND GUTTER

STOP LINE AND CROSSWALK PAVEMENT MARKING

STATE OF WISCONSIN
DEPARTMENT OF TRANSPORTATION

APPROVED
November 2019 — DATE
/S/ Matthew Rauch — STATE SIGNING AND MAF ENGINEER
FHWA

6

SDD 15C33 - 04

GENERAL NOTES

OMIT EDGE LINES THROUGH INTERSECTIONS. CONTINUE EDGE LINES THROUGH DRIVEWAYS.

1. WHEN DISTANCE "A" IS LESS THAN 250 FEET, OMIT LANE LINE.
2. WHEN DISTANCE "B" IS LESS THAN 100 FEET, OMIT CHANNELIZING LANE LINE.
3. BARRIER LINE ENDS AT SIDE ROAD PAVEMENT / SURFACE EDGE EXTENSION.
4. BARRIER LINE STARTS 500 FEET PRIOR TO THE BYPASS TAPER.

LEGEND

DIRECTION OF TRAVEL

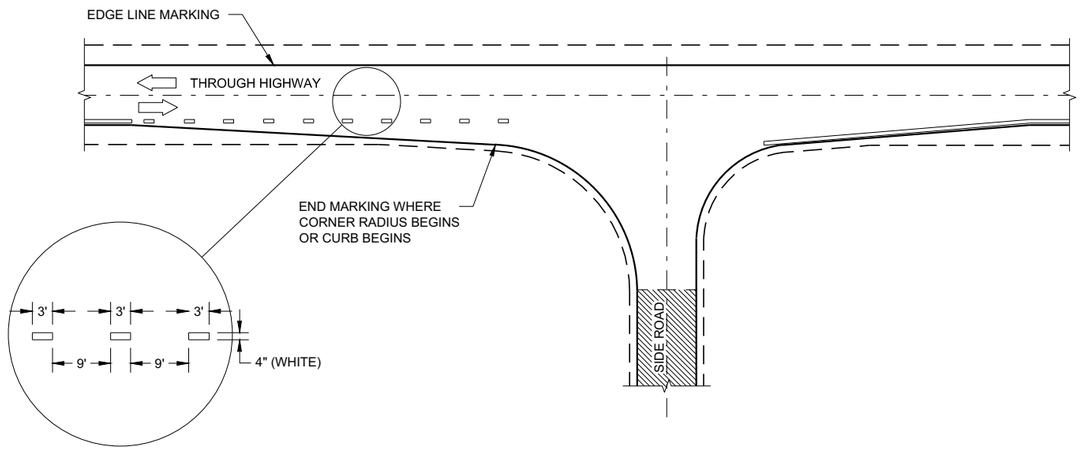

MINOR INTERSECTION

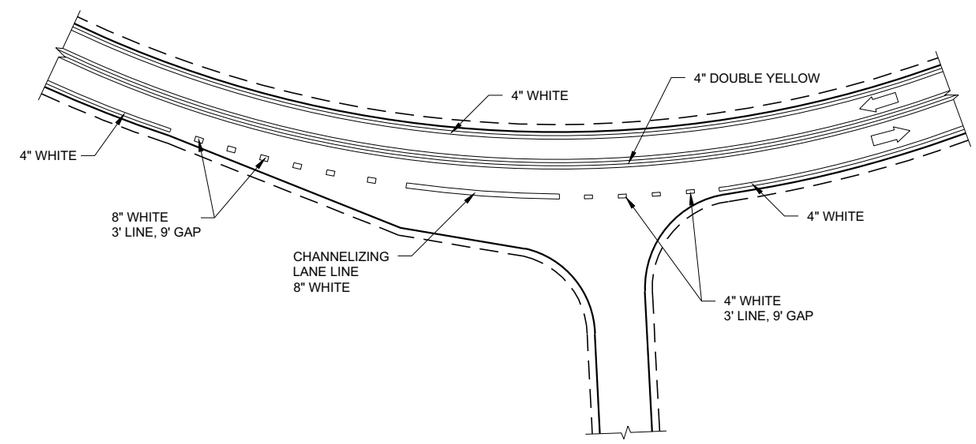

INTERSECTION ON OUTSIDE OF CURVE

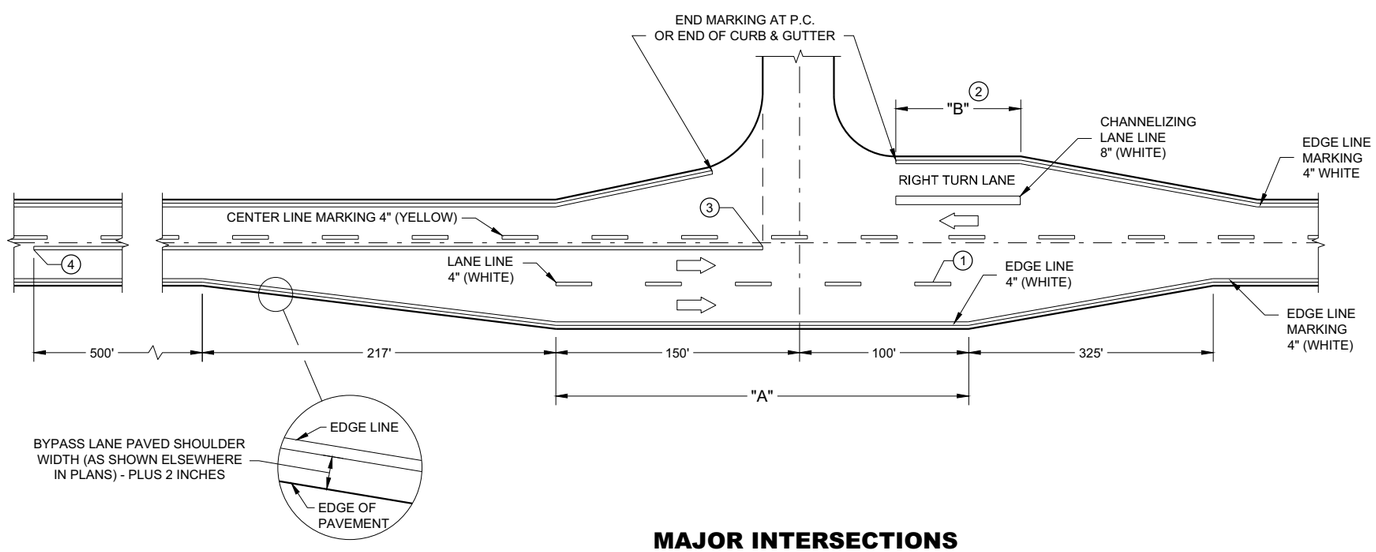

MAJOR INTERSECTIONS

(INTERSECTION WITH FULL RIGHT TURN LANE OR BYPASS LANE)

6

6

SDD 15C35 - 04a

SDD 15C35 - 04a

PAVEMENT MARKING (INTERSECTIONS)

STATE OF WISCONSIN
DEPARTMENT OF TRANSPORTAT

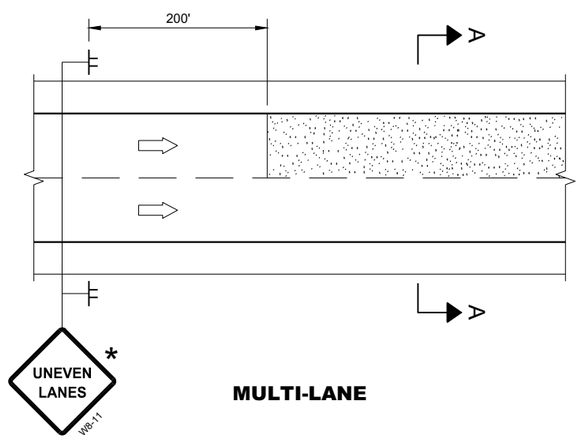

MULTI-LANE

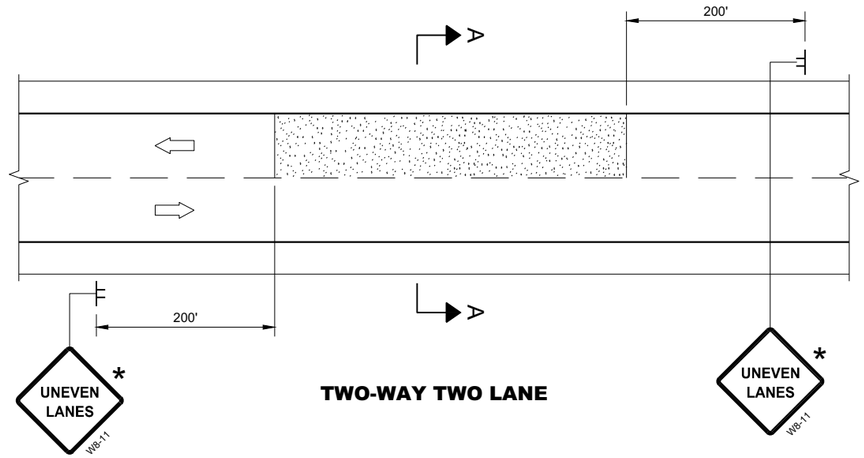

TWO-WAY TWO LANE

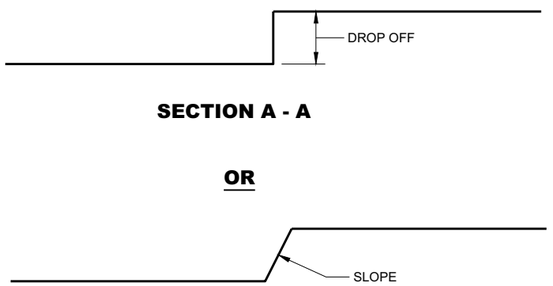

SECTION A - A

SECTION A - A

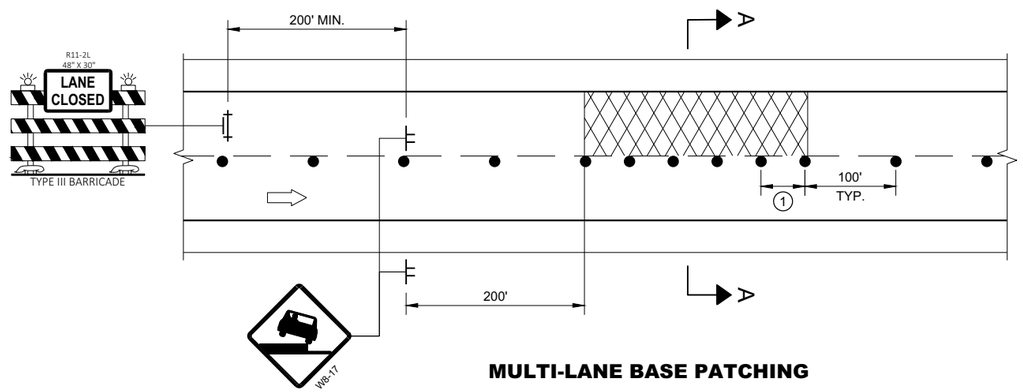

MULTI-LANE BASE PATCHING

ADJACENT LANE DROP-OFFS

GENERAL NOTES

FOR SPOT LOCATIONS USE ENGINEERING JUDGEMENT WHEN PLACING ADDITIONAL SIGNS.

ALL SIGNS ARE 48" X 48" UNLESS OTHERWISE NOTED.

"WO" SIGNS ARE THE SAME AS "W" SIGNS EXCEPT THE BACKGROUND IS ORANGE.

WARNING LIGHTS ARE NOT REQUIRED IF THE LANE CLOSURE IS A DAYTIME ONLY OPERATION.

* IF THE DROP-OFF IS CONTINUOUS ALONG THE PROJECT, PLACE ADDITIONAL SIGNS EVERY 1 MILE AND AFTER EVERY ENTRANCE RAMP.

(1) USE CLOSER SPACING WHEN DELINEATING DROP-OFF.

LEGEND

- SIGN ON TEMPORARY SUPPORT
- TRAFFIC CONTROL DRUM
- TYPE III BARRICADE WITH ATTACHED SIGN
- TYPE "A" WARNING LIGHT (FLASHING)
- DIRECTION OF TRAFFIC
- WORK AREA WITH DROP-OFF
- MILLED SURFACE

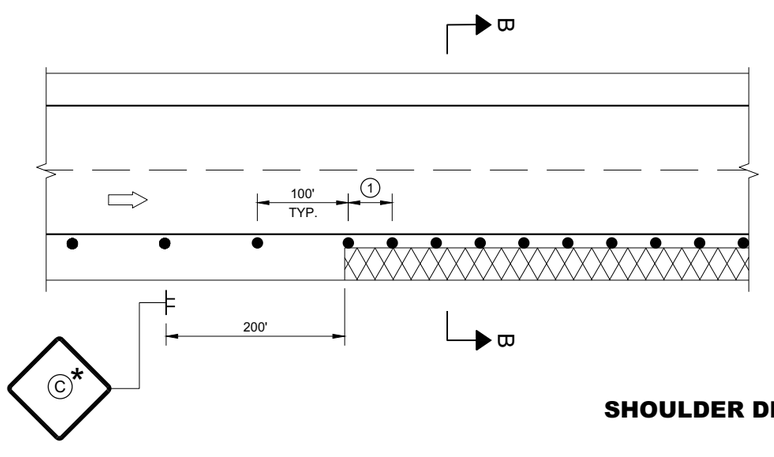

SHOULDER DROP-OFFS

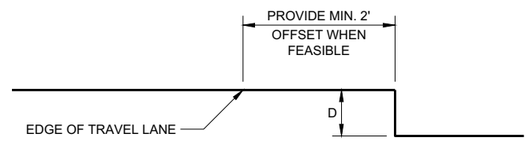

SECTION B - B

D	SIGN (C)
< 2" WITH A SLOPE STEEPER THAN 3:1	LOW SHOULDER WO8-9
2" < 6" WITH A SLOPE STEEPER THAN 3:1	SHOULDER DROP - OFF W8-9A PROVIDE A 3:1 OR FLATTER SLOPE OF MATERIAL ADJACENT TO THE PAVEMENT

TRAFFIC CONTROL, DROP-OFF SIGNING

STATE OF WISCONSIN
DEPARTMENT OF TRANSPORTATION

APPROVED
March 2018 — DATE
/S/ Andrew Heidtke — WORK ZONE ENGINEE
FHWA

GENERAL NOTES

DRAWING NOT TO SCALE. ALL SIGNS AND POSTS ON THIS SHEET SHALL BE PAID FOR WITH 'TRAFFIC CONTROL SIGNS' BID ITEM. ALL SIDE ROADS WHICH ARE UNDER CONSTRUCTION OF CURB AND GUTTER AND/OR GRADING SHALL BE ADEQUATELY SIGNED.

ALL SIGNS AND DEVICES SHALL BE IN CONFORMANCE WITH THE WISCONSIN MANUAL OF UNIFORM TRAFFIC CONTROL DEVICES (WMUTCD). SIGN LAYOUTS SHALL BE IN ACCORDANCE WITH THE WISDOT STANDARD SIGN PLATES.

"WO" SIGNS ARE THE SAME AS "W" SIGNS EXCEPT THAT THE BACKGROUND IS ORANGE.

ALL SIGNS ARE 48" X 48" UNLESS OTHERWISE NOTED.

THE EXACT NUMBER, LOCATION AND SPACING OF ALL SIGNS AND DEVICES SHALL BE ADJUSTED TO FIT FIELD CONDITIONS AS DIRECTED BY THE ENGINEER.

ALL SIGNS INAPPROPRIATE TO THE STATUS OF THE CONTROL ZONE, INCLUDING PRE-EXISTING SIGNS IN THE VICINITY, SHALL BE COVERED OR REMOVED AS DIRECTED BY THE ENGINEER.

SEE 15C34 FOR ADDITIONAL TRAFFIC CONTROL SIGNING WHEN CENTERLINE PAVEMENT MAKINGS ARE MISSING. 'DO NOT PASS' SIGNS MUST BE INSTALLED ON THE SAME DAY AS MILLING OPERATIONS.

1. PLACE SIGNS 350' IN ADVANCE OF CHIP SEALED OR LOOSE GRAVEL SURFACES AND AT 1 MILE INTERVALS, OR AS DIRECTED BY THE ENGINEER.
2. PLACE SIGN 200' MIN. FROM INTERSECTION AND 200' MIN. AFTER ADVANCE WARNING SIGN SHOWN IN SDD 15C04.
3. ADD WO8-1 OR WO8-2 SIGN WHEN THE CONDITION IS PRESENT.

LEGEND

SIGN ON TEMPORARY SUPPORT

DIRECTION OF TRAFFIC

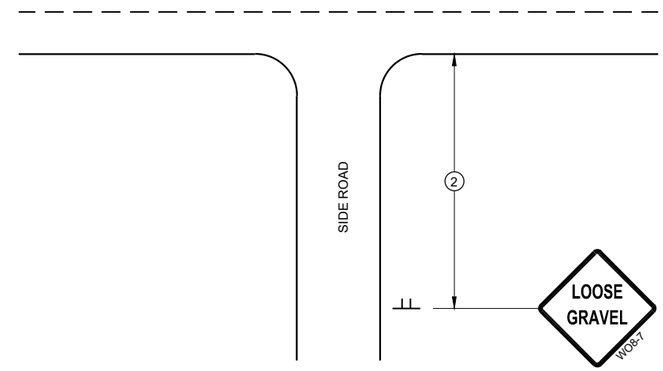

TYPICAL SIDE ROAD APPROACH SIGN DETAIL

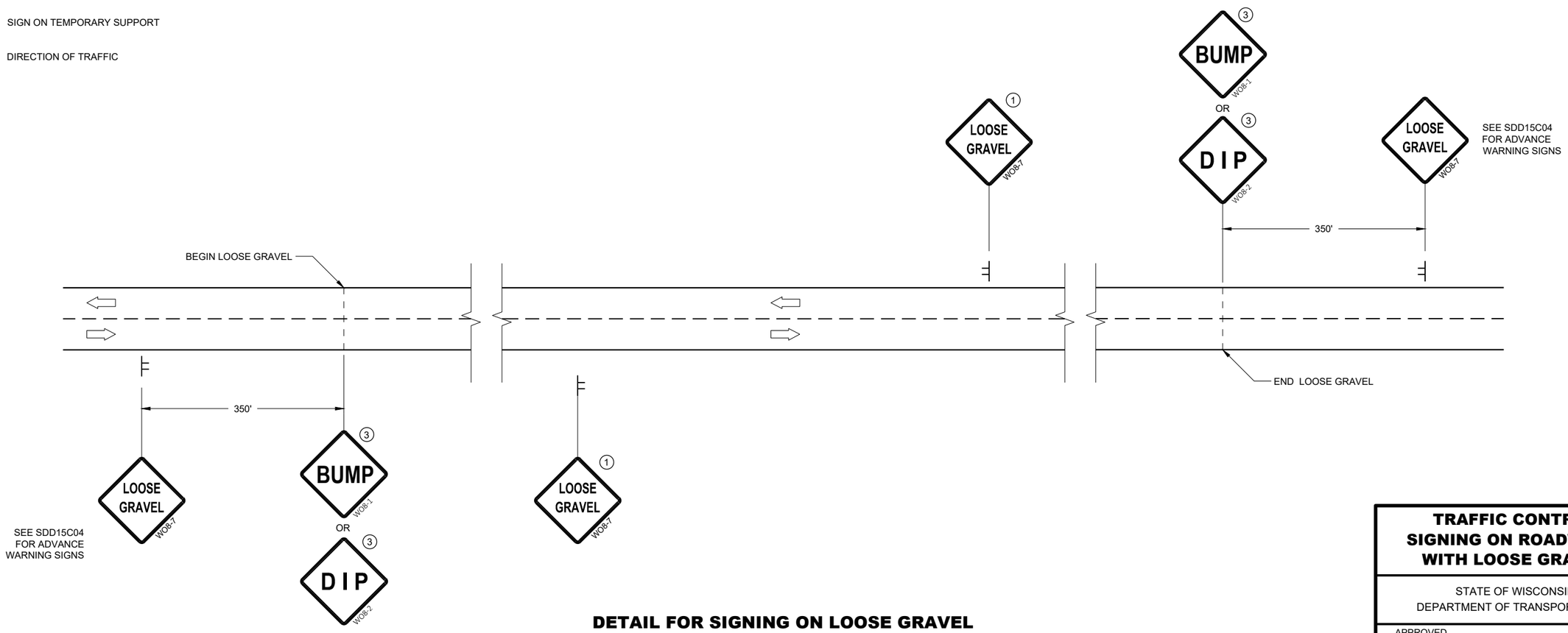

DETAIL FOR SIGNING ON LOOSE GRAVEL OR CHIP SEALED SURFACES

TRAFFIC CONTROL SIGNING ON ROADWAYS WITH LOOSE GRAVEL

STATE OF WISCONSIN
DEPARTMENT OF TRANSPORTATION

APPROVED
February 2021 — DATE
/S/ Andrew Heidtke — WORK ZONE ENGINEE
FHWA

6

SDD 15D45 - 03

URBAN AREA

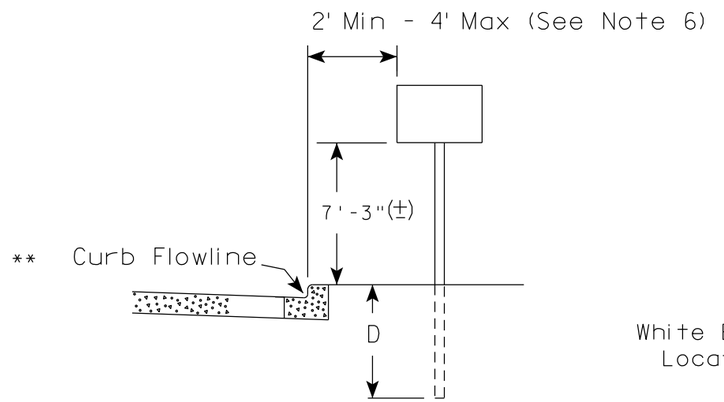

RURAL AREA (See Note 2)

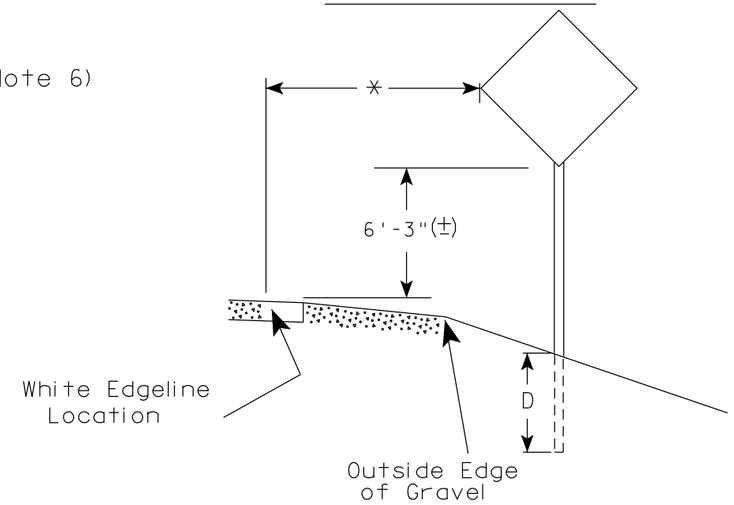

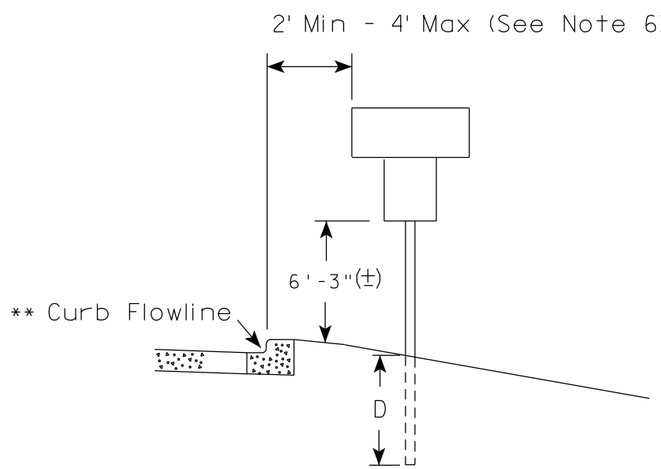

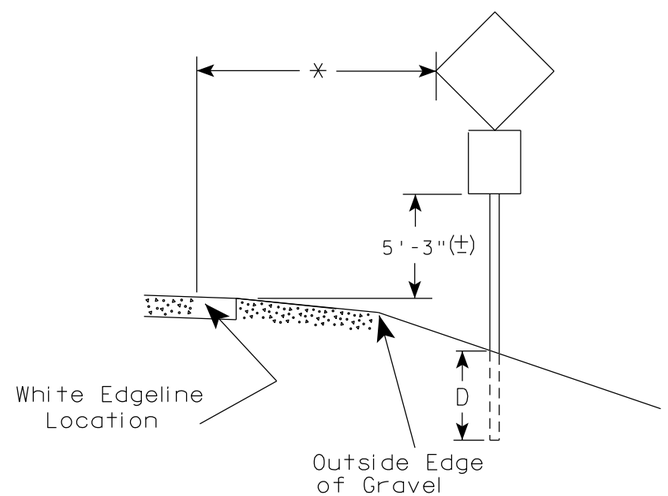

** The existence of curb and gutter does not in itself mandate the vertical clearance illustrated. That height is typically measured where there is sidewalk adjacent to the roadway or parking is permitted. In the absence of sidewalk vertical clearance is measured from the top of the curb. Offset of signs is measured from the flow line.

* 6 feet from edge of a paved shoulder or 12 feet from the edge of pavement (edge line location) or 2 feet from outside edge of gravel, whichever is greater unless directed by project engineer.

GENERAL NOTES

1. Signs wider than 4 feet or 20 sq.ft or larger, shall be mounted on multiple posts. Refer to plate A4-4.
2. If signs are mounted on or behind barrier wall, see A4-10 sign plate.
   The Double Arrow sign (W12-1D) shall be mounted at a height of 2'-3" (±). The Chevron sign (W1-8), Roundabout Chevron panel (R6-4B), Enhanced Reference Markers, Clearance Markers (W5-52), Mile Markers (D10 series), In Road Object Markers (W5-54) & End of Road Markers (W5-56) shall be mounted at a height of 4'-3" (±).
3. For expressways and freeways, mounting height is 7'- 3" (±) or 6'-3" (±) depending upon existence of a sub-sign.
4. Minimum mounting height for signs mounted on traffic signal poles is 5'- 3" (±).
5. Offset distance shall be consistent with existing signs or consistent throughout length of project.
6. The (±) tolerance for mounting height is 3 inches.
7. Folding signs shall be mounted at a height of 5'-3" (±) or as directd by the Engineer.

POST EMBEDMENT DEPTH

Area of Sign Installation (Sq.Ft.)	D (Min)
20 or Less	4'
Greater than 20	5'

TYPICAL INSTALLATION OF PERMANENT TYPE II SIGNS ON SINGLE POSTS

WISCONSIN DEPT OF TRANSPORTATION

APPROVED Matthew R Rauch for State Traffic Engineer

DATE 5/13/2020 PLATE NO. A4-3.22

7 7

PROJECT NO:	HWY:	COUNTY:		SHEET NO: 127	E

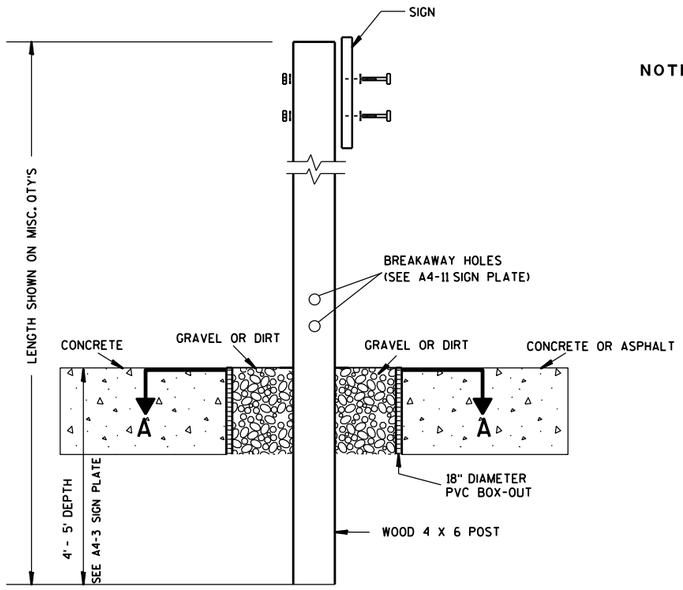

ELEVATION VIEW

DETAIL OF WOOD 4 X 6 SIGN POST IN BOX-OUT

NOTES:
1. ALL MATERIAL TO BE APPROVED BY ENGINEER PRIOR TO INSTALLATION
2. SEE SIGN PLATE A4-8 FOR SIGN HARDWARE REQUIREMENTS
3. 18 INCH X 18 INCH SQUARE BOX-OUTS MAY BE USED FOR INSTALLATIONS IN EXISTING CONCRETE OR ASPHALT LOCATIONS.

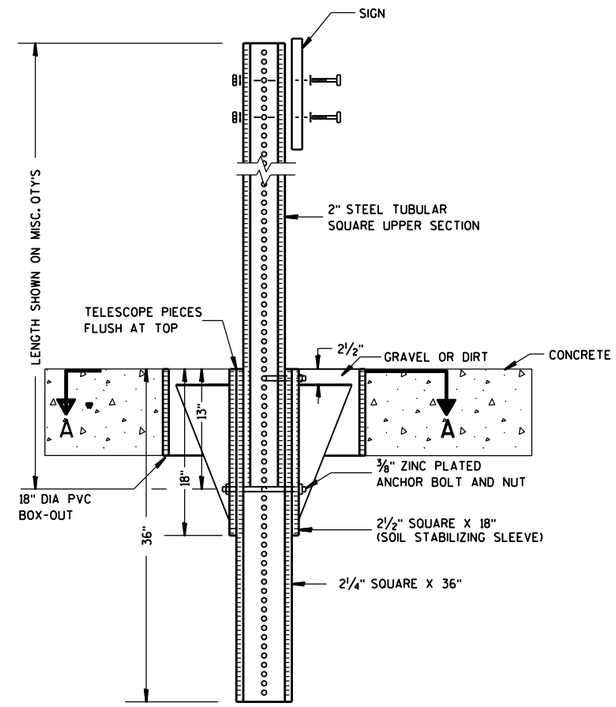

ELEVATION VIEW

DETAIL OF STEEL 2 X 2 SIGN POST IN BOX-OUT

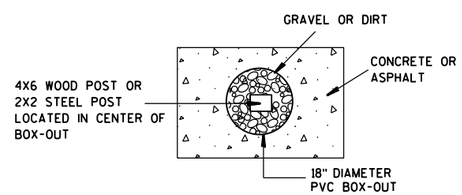

PLAN VIEW

FOR NEW CONCRETE/ASPHALT INSTALLATIONS

SIGN POST
BOX-OUTS
A4-3B

WISCONSIN DEPT OF TRANSPORTATION

APPROVED Matthew R Rauch
for State Traffic Engineer

DATE 1/27/14 PLATE NO. A4-3B.1

PROJECT NO:	HWY:	COUNTY:		SHEET NO:	E

URBAN AREA

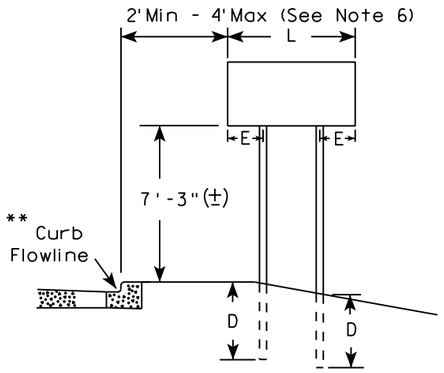

RURAL AREA (See Note 3)

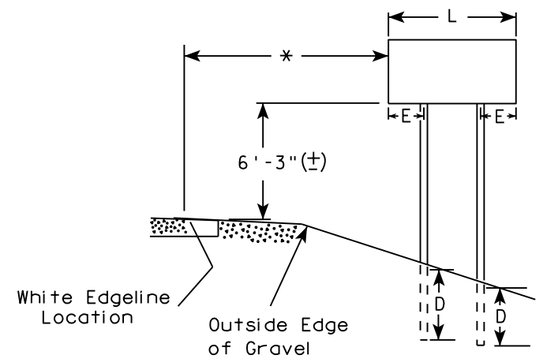

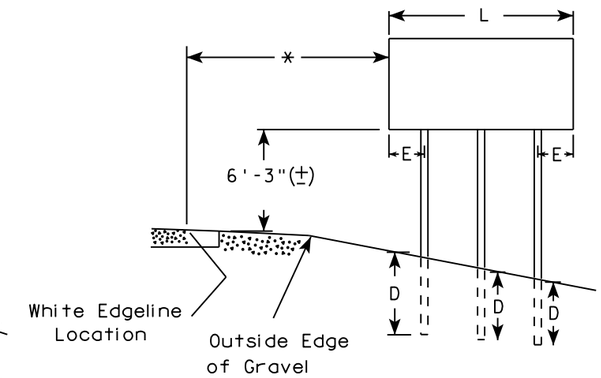

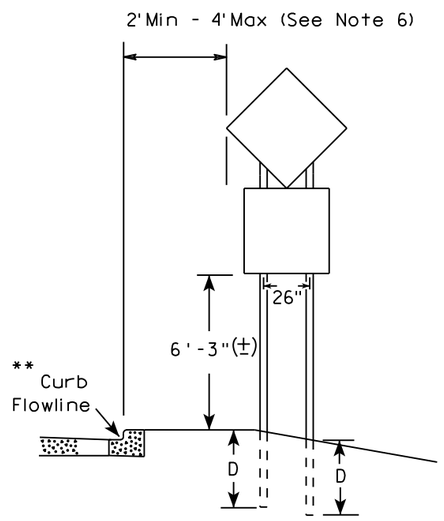

48" DIAMOND WARNING SIGN

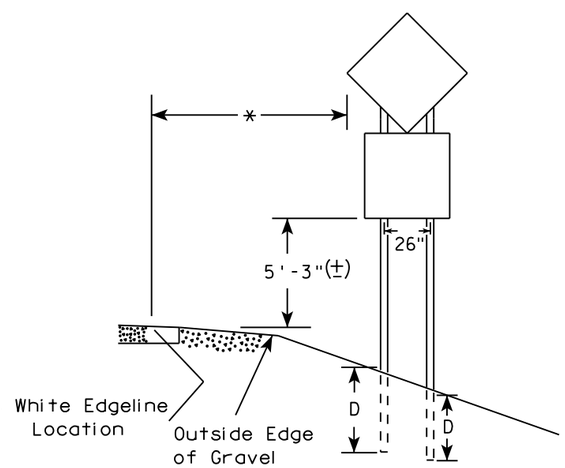

48" DIAMOND WARNING SIGN

SIGN SHAPE OTHER THAN DIAMOND (TWO POSTS REQUIRED)	
L	E
*** Greater than 48" Less than 60"	12"
60" to 108"	L/5

SIGN SHAPE OTHER THAN DIAMOND (THREE POSTS REQUIRED)	
L	E
Greater than 108" to 144"	12"

GENERAL NOTES

1. For 3 or 4 post installations, individual post spacing shall be greater than 3'-6".
2. See tables below for required number of posts.
3. For expressways and freeways, mounting height is 7'-3" (±) or 6'-3" (±) depending upon existence of sub-sign.
4. The (±) tolerance for mounting height is 3 inches.
5. J-Assemblies are considered to be one sign for mounting height.
6. Offset distance shall be consistent with existing signs or consistent throughout length of project.
7. Folding signs shall be mounted at a height of 5'-3" (±) or as directed by the engineer.
8. The Double Arrow sign (W12-1) shall be mounted at a height of 2'-3" (±). The Chevron sign (W1-8), Roundabout Chevron panel (R6-4B), Clearance Markers (W5-52), Mile Markers (D10 series), In Road Object Markers (W5-54) & End of Road Markers (W5-56) shall be mounted at a height of 4"-3" (±).

* 6 feet from edge of a paved shoulder or 12 feet from the edge of pavement (edge line location) or 2 feet from outside edge of gravel, whichever is greater unless directed by project engineer.

** The existence of curb and gutter does not in itself mandate the vertical clearance illustrated. That height is typically measured where there is sidewalk adjacent to the roadway or parking is permitted. In the absence of sidewalk vertical clearance is measured from the top of the curb. Offset of signs is measured from the flow line.

*** See A4-3 sign plate for signs 4' or less in width and less than 20 S.F. in area.

POST EMBEDMENT DEPTH

Area of Sign Installation (Sq. Ft.)	D (Min)
20 or Less	4'
Greater than 20	5'

TYPICAL INSTALLATION OF TYPE II SIGNS ON MULTIPLE POSTS

WISCONSIN DEPT OF TRANSPORTATION

APPROVED Matthew R Rauch
For State Traffic Engineer

DATE 8/21/17 PLATE NO. A4-4.15

7

7

PROJECT NO:	HWY:	COUNTY:		SHEET NO: 129	E

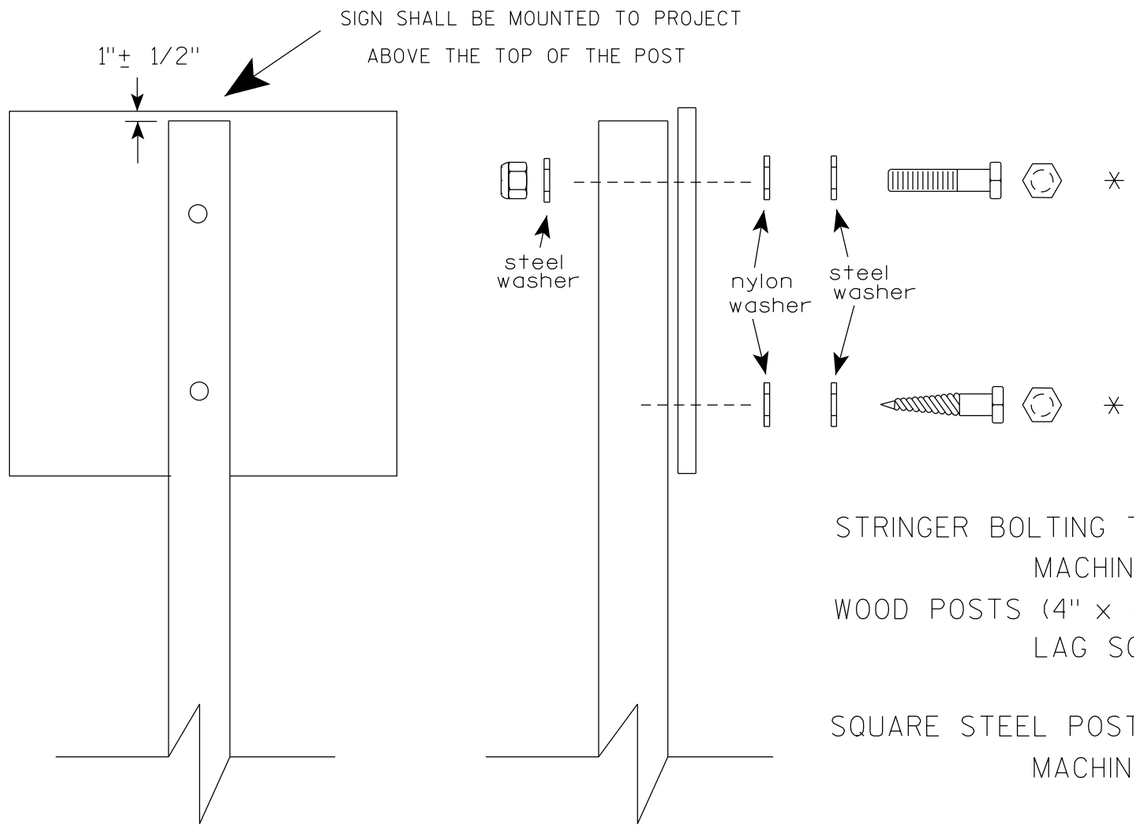

Nuts, bolts and lags used for mounting signs shall have hexagonal heads and shall be either :

a. Hot dip galvanized in accordance with ASTM Designation: A 153, Class D, or SC 3

b. Electro-galvanized in accordance with ASTM Designation : B 633, TYPE III, SC 3.

Threads on bolts and nuts shall be manufactured with sufficient allowance for the cadmium plate or galvanized coating to permit the nuts to run freely on the bolts.

STRINGER BOLTING TO ALUMINUM SIGNS (SEE SIGN PLATE A4-18)

MACHINE BOLTS - 5/16" X 1-3/4" Length w/ lock nuts

WOOD POSTS (4" x 6")

LAG SCREWS - 3/8" X 3" (NO STRINGERS ON BACK OF SIGN)
3/8" X 4" (STRINGERS ON BACK OF SIGN)

SQUARE STEEL POSTS (2" x 2")

MACHINE BOLTS - 3/8" X 3-1/4" Length w/ nuts (NO STRINGER ON BACK OF SIGN)
3/8" X 5" Length w/ nuts (STRINGERS ON BACK OF SIGN)

RIVETS - 9/32 " (6605-9-6) BULB-TITE, TRI-FOLD, ALUMINUM BODY/MANDREL
O.D. FLANGE .720-.765 INCH, GRIP RANGE .042-.375 INCH

WASHERS (ALL POSTS) -

1-1/4" O.D. X 3/8" I.D. X 1/16" STEEL
1-1/4" O.D. X 3/8" I.D. X .080 NYLON

* Two different fastening systems are shown for illustration purposes. On any individual sign, either one or the other system shall be used. Actual number of fasteners per sign varies with the sign area, but normally there are two. For a single post installation, all signs greater than 9 sq. ft. require the use of 3 fasteners.

ATTACHMENT OF SIGNS TO POSTS

WISCONSIN DEPT OF TRANSPORTATION

APPROVED Matthew R Rauch
for State Traffic Engineer

DATE 4/1/2020 PLATE NO. A4-8.9

TELESCOPIC TUBING ANCHORS
TWO PIECE SYSTEM

2 1/4 " SQUARE
12 GAUGE
PERFORATED
GALVANIZED FINISH

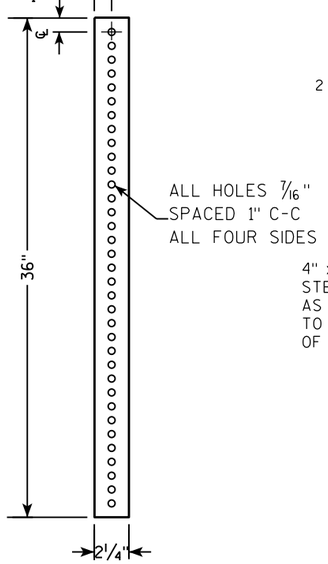

2 1/2 " SQUARE
12 GAUGE
OMNI-DIRECTIONAL
PERFORATED
SOIL STABILIZING SLEEVE
GALVANIZED FINISH

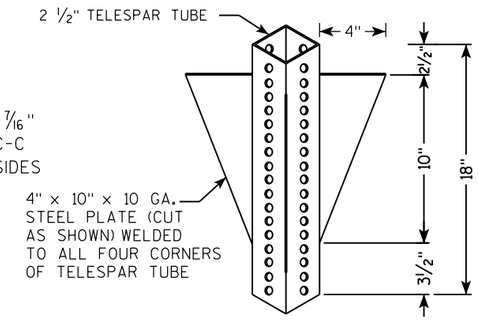

DETAIL OF TUBULAR STEEL SIGN POST
(IN POURED CONCRETE OR ASPHALT)

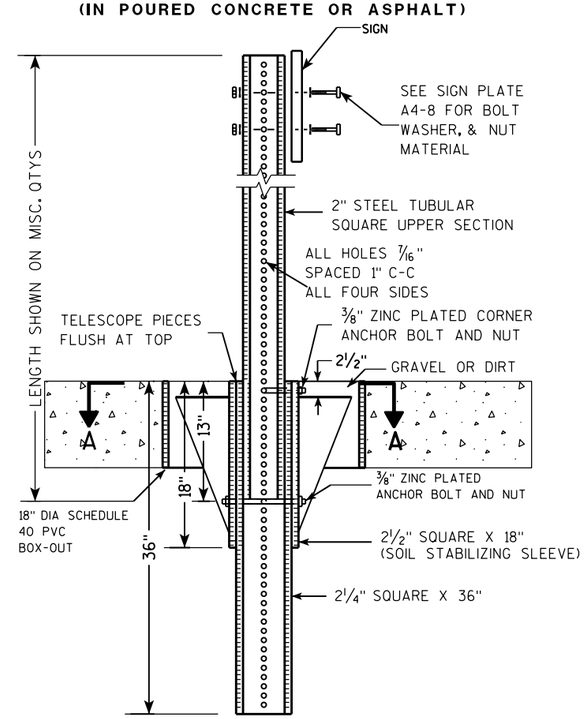

DETAIL OF TUBULAR STEEL SIGN POST
(IN LOCATIONS OTHER THAN POURED CONCRETE OR ASPHALT)

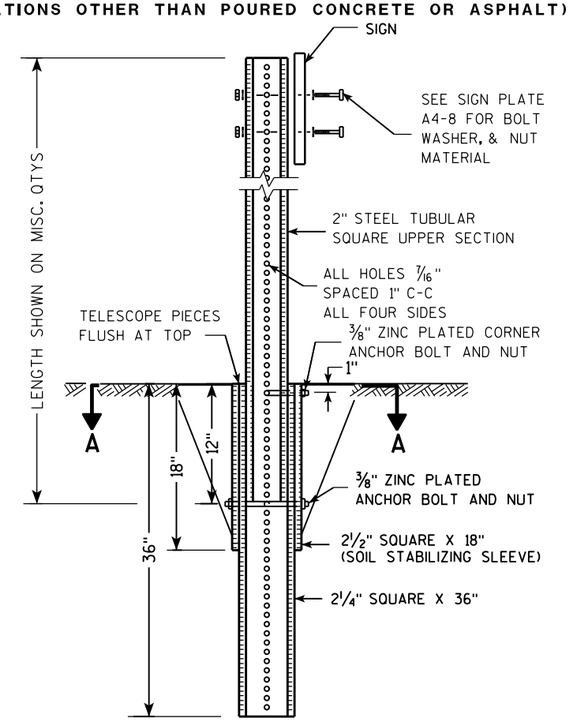

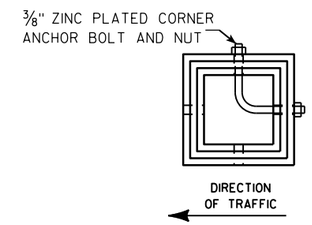

SECTION A-A

Area of Sign Installation (Sq. Ft.)	Number of Required Posts
9 or less	1
Greater than 9 less than or equal to 18	2
Greater than 18 less than or equal to 27	3

Signs wider than 3 feet or larger than 9 sq. ft shall be mounted on multiple posts (see above table).

TUBULAR STEEL
SIGN POST
A4-9

WISCONSIN DEPT OF TRANSPORTATION

APPROVED Matthew R Rauch
for State Traffic Engineer

DATE 2/05/15 PLATE A4-9.9

PROJECT NO:	HWY:	COUNTY:		SHEET NO:	E

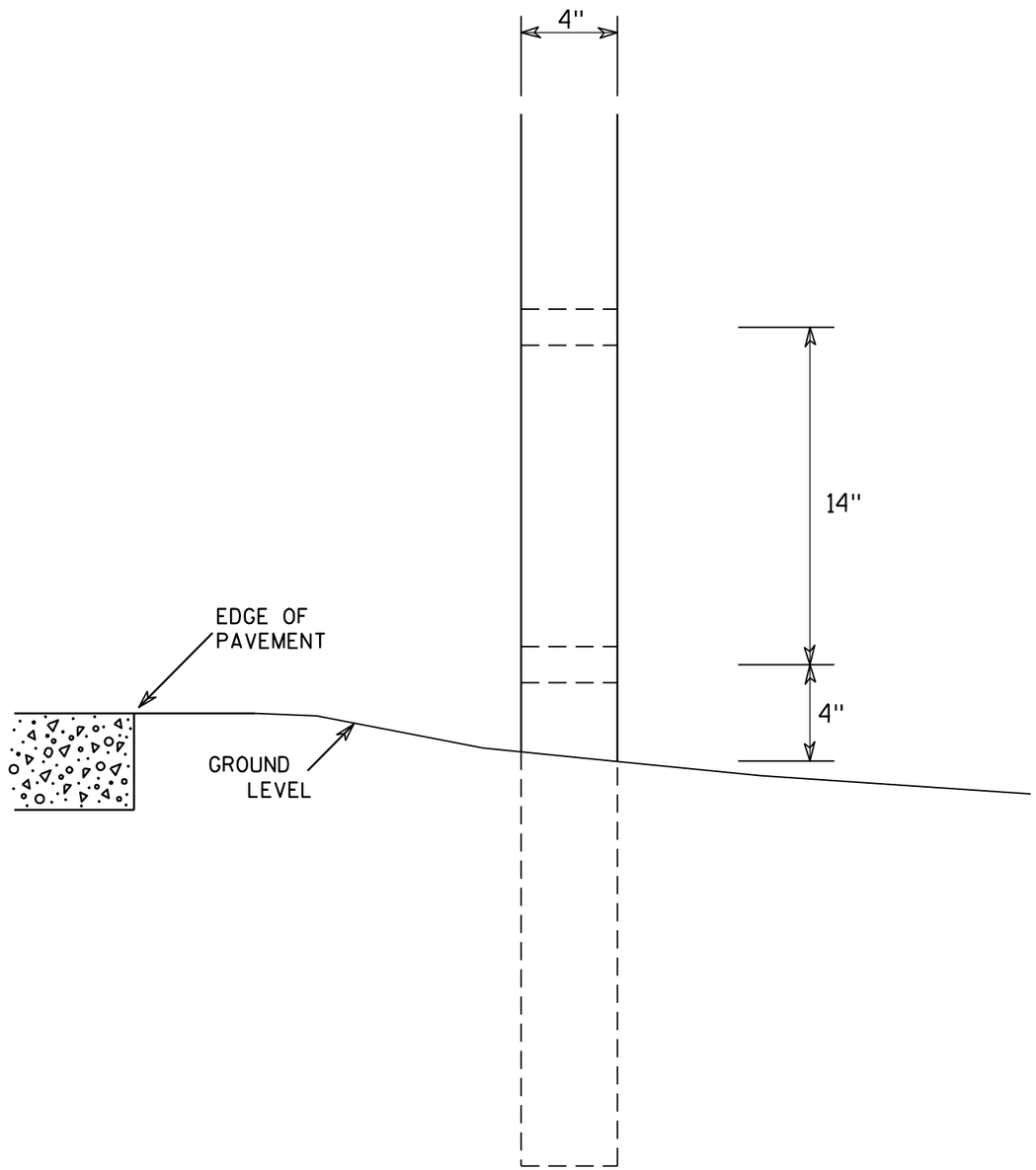

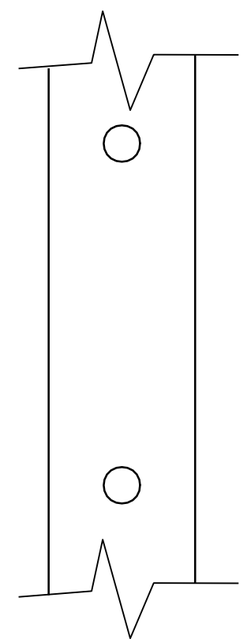

SIDE VIEW

GENERAL NOTES

1. All 4 x 6 Wood Posts shall be modified by having two 1½" diameter holes drilled perpendicular to the roadway centerline.

7

7

4 X 6 WOOD POST MODIFICATIONS

WISCONSIN DEPT OF TRANSPORTATION

APPROVED Chester J Spang for State Traffic Engineer

DATE 3/27/97 PLATE NO. A4-11.2

PROJECT NO:	HWY:	COUNTY:		SHEET NO: 132	E

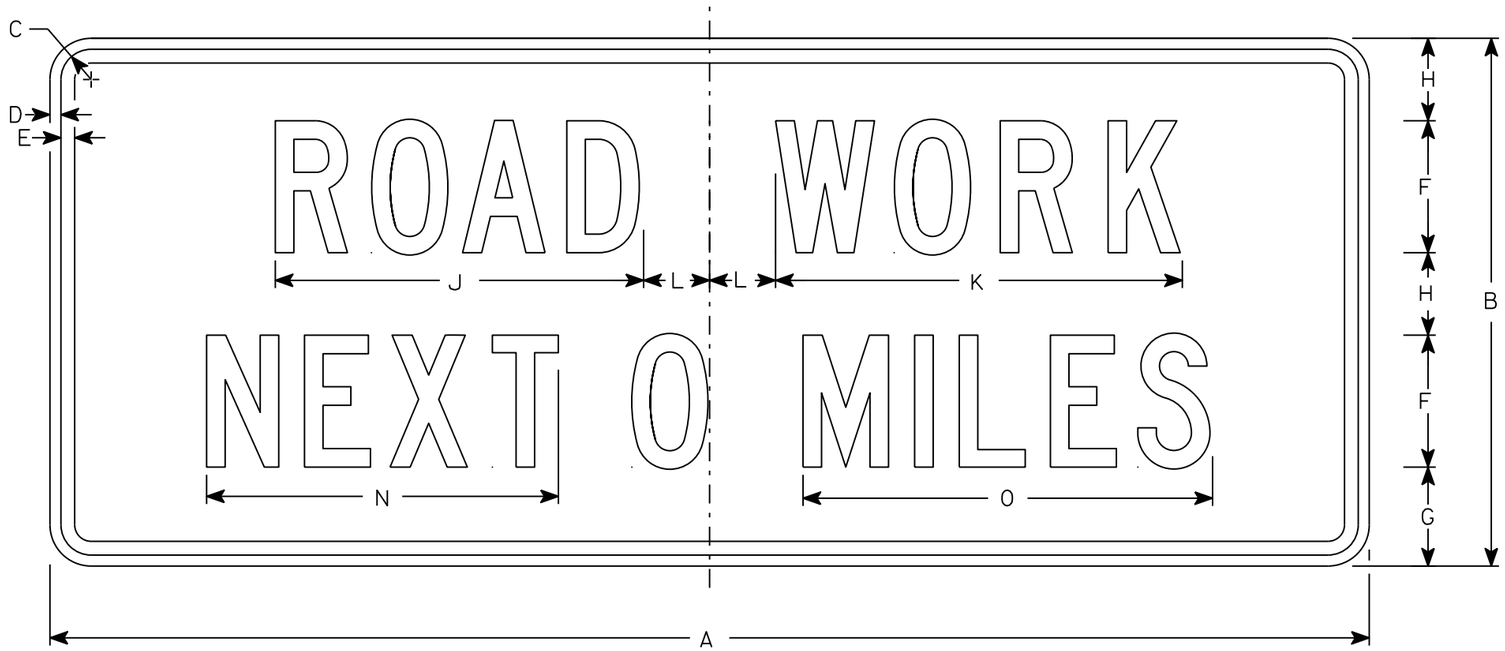

G20-1

NOTES

1. Sign is Type II - Type F Reflective
2. Color:
   Background - Orange
   Message - Black
3. Message Series - C
4. Corners may be square or rounded when base material is plywood but borders shall be rounded as shown. When base material is metal, the corners and borders shall be rounded.
5. Round distance to nearest whole Mile and substitute appropriate numerals and optically adjust spacing to achieve proper balance

SIZE	A	B	C	D	E	F	G	H	I	J	K	L	M	N	O	P	Q	R	S	T	U	V	W	X	Y	Z	Area sq. ft.
1																											
2	60	24	1 3/8	1/2	5/8	6	4 1/2	3 3/4		16 3/4	18 1/2	3		16	18 5/8												10
3																											
4	60	24	1 3/8	1/2	5/8	6	4 1/2	3 3/4		16 3/4	18 1/2	3		16	18 5/8												10
5																											

STANDARD SIGN
G20-1

WISCONSIN DEPT OF TRANSPORTATION

APPROVED Matthew R Rauch
for State Traffic Engineer
DATE 3/14/17 PLATE NO. G20-1.8

PROJECT NO: | HWY: | COUNTY: | SHEET NO: 133 | E

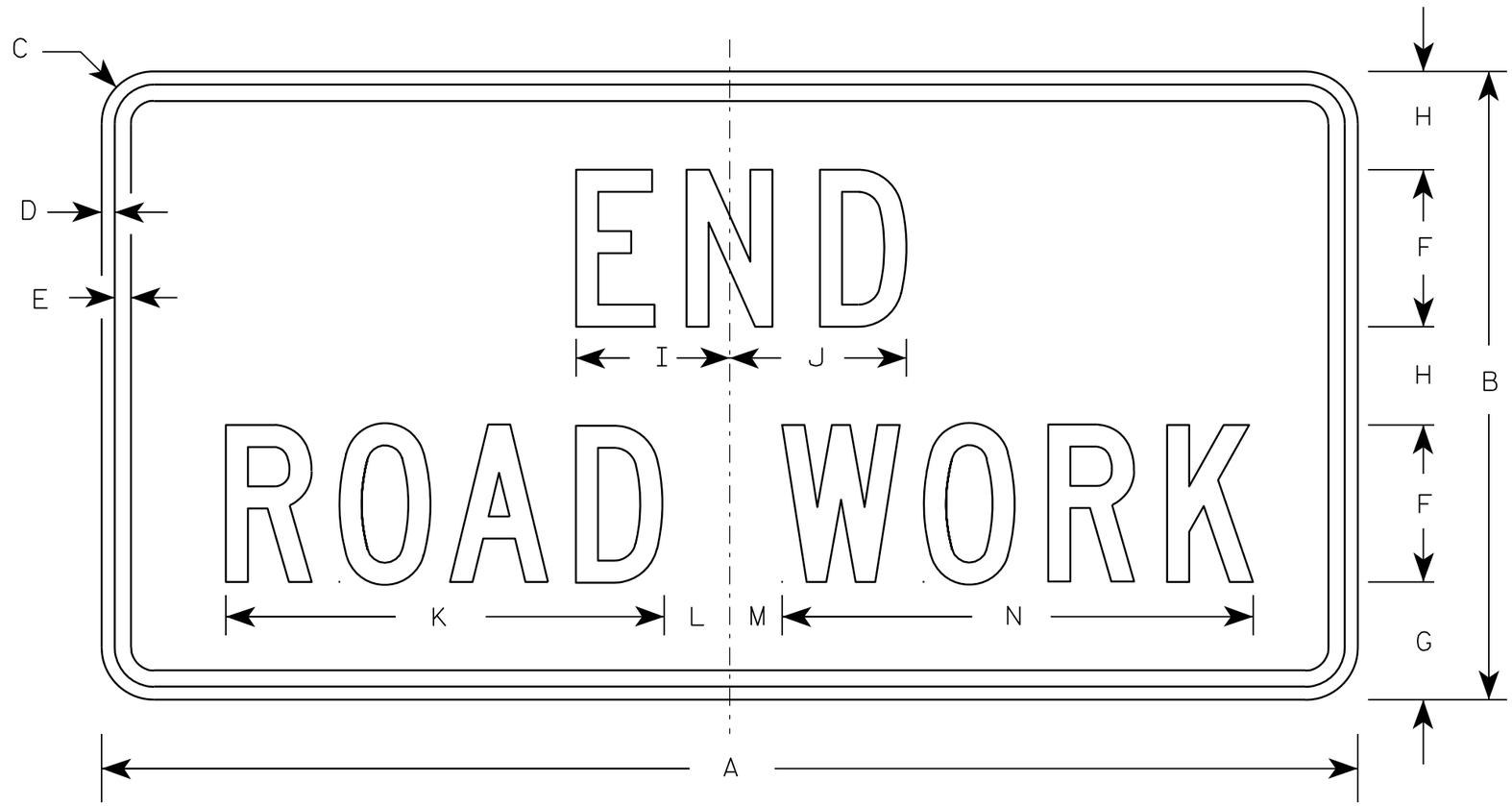

G20-2A

NOTES

1. Sign is Type II - Type F Reflective - reference WIS DOT Standard Specification for HIGHWAY and STRUCTURE CONSTRUCTION latest edition.
2. Color:
   Background - Orange
   Message - Black
3. Message Series - C
4. Corners may be square or rounded when base material is plywood but borders shall be rounded as shown. When base material is metal, the corners and borders shall be rounded.

Metric equivalent for this sign is:

SIZE	
1	900 mm X 450 mm
2	1200 mm X 600 mm
3	1200 mm X 600 mm
4	1200 mm X 600 mm
5	1200 mm X 600 mm

SIZE	A	B	C	D	E	F	G	H	I	J	K	L	M	N	O	P	Q	R	S	T	U	V	W	X	Y	Z	Area sq. ft.	Area m2
1	36	18	1 1/8	3/8	1/2	4	3 3/4	2 1/2	4 1/8	4 1/8	11 1/8	2	1	12 1/8													4.5	0.41
2	48	24	1 1/2	1/2	5/8	6	4 1/2	3 3/4	5 7/8	6 3/4	16 3/4	2 1/2	1 3/4	18 1/2													8.0	0.72
3	48	24	1 1/2	1/2	5/8	6	4 1/2	3 3/4	5 7/8	6 3/4	16 3/4	2 1/2	1 3/4	18 1/2													8.0	0.72
4	48	24	1 1/2	1/2	5/8	6	4 1/2	3 3/4	5 7/8	6 3/4	16 3/4	2 1/2	1 3/4	18 1/2													8.0	0.72
5	48	24	1 1/2	1/2	5/8	6	4 1/2	3 3/4	5 7/8	6 3/4	16 3/4	2 1/2	1 3/4	18 1/2													8.0	0.72

STANDARD SIGN

G20-2A

WISCONSIN DEPT OF TRANSPORTATION

APPROVED Matthew R Rauch
for State Traffic Engineer

DATE 9/30/09 PLATE NO. G20-2A.8

PROJECT NO:	HWY:	COUNTY:		SHEET NO: 134	E

NOTES

1. Sign is Type II- Type F Reflective
2. Color:
   Background - Yellow
   Message - Black
3. Message Series - Lines 1 and 2 are Series D.
   Line 3 is series C.
4. Corners and borders shall be rounded on all base materials for this sign.

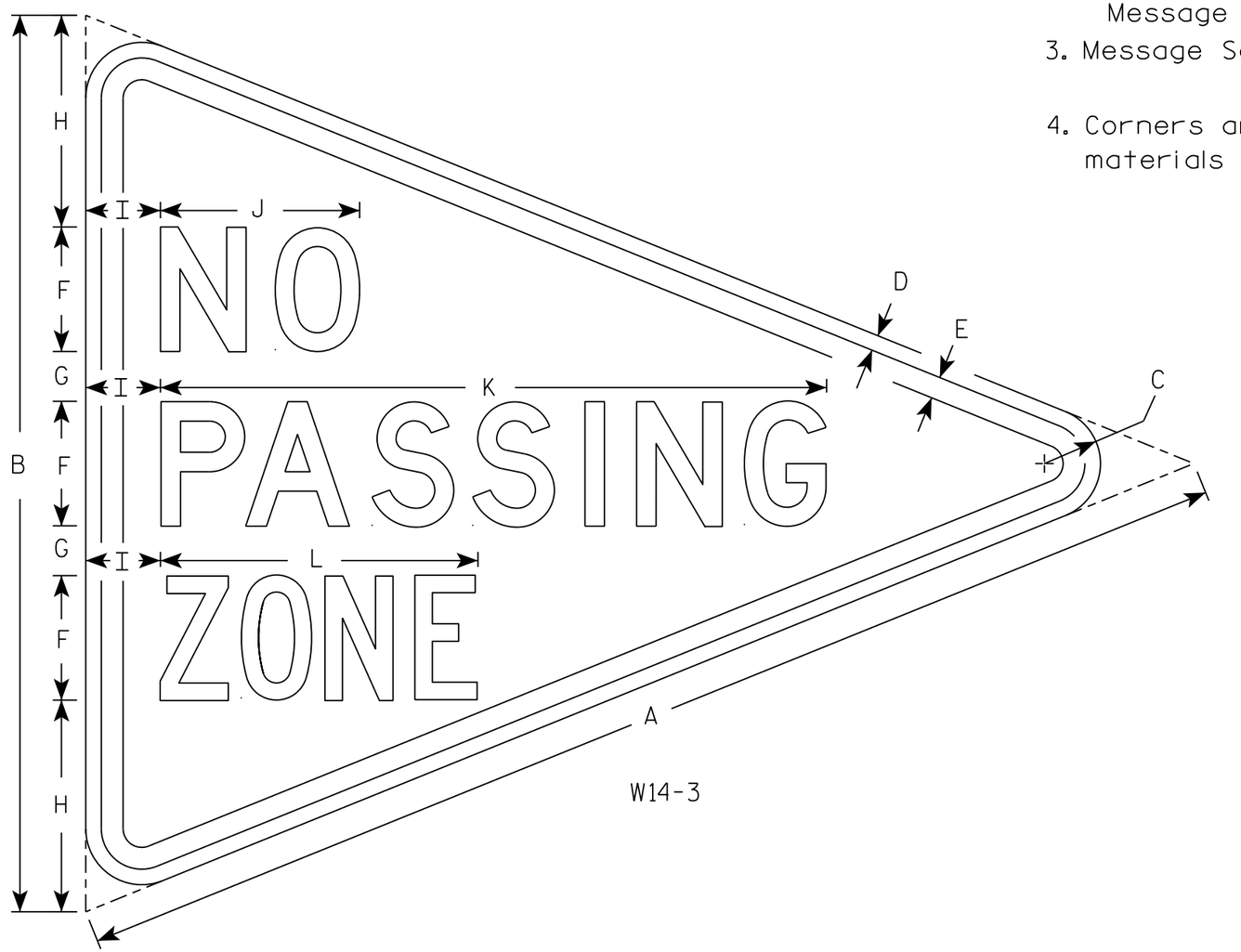

W14-3

SIZE	A	B	C	D	E	F	G	H	I	J	K	L	M	N	O	P	Q	R	S	T	U	V	W	X	Y	Z	Area sq. ft.
1																											
2S	48	36	2 1/4	5/8	7/8	5	2	8 1/2	3	8	26 3/4	12 3/4															5.56
2M																											
3																											
4																											
5																											

STANDARD SIGN
W14-3

WISCONSIN DEPT OF TRANSPORTATION

APPROVED Matthew R Rauch
for State Traffic Engineer
DATE 3/21/17 PLATE NO. W14-3.10

PROJECT NO: | HWY: | COUNTY: | SHEET NO: 135 | E

NOTES

1. Sign is Type II - Type F Reflective
2. Color:
   Background - Orange
   Message - Black
3. Message Series - C
4. Corners may be square or rounded when base material is plywood but borders shall be rounded as shown. When base material is metal, the corners and borders shall be rounded.

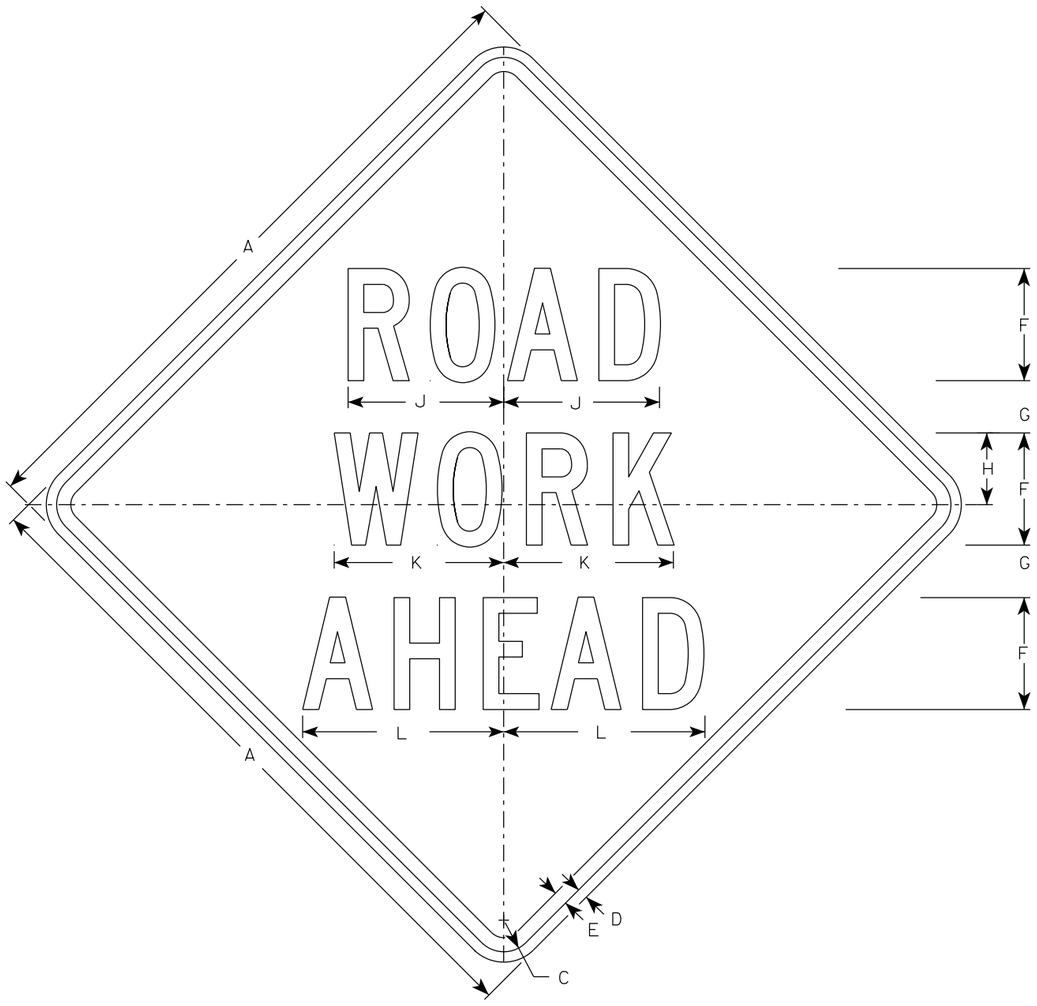

W20-1A

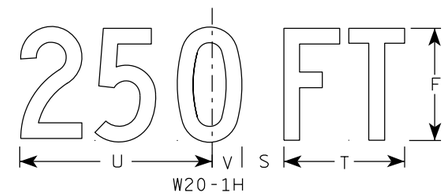

W20-1H

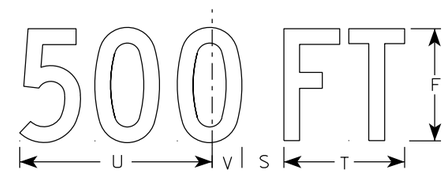

W20-1D

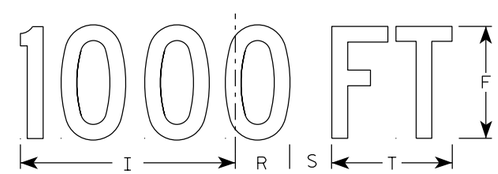

W20-1C

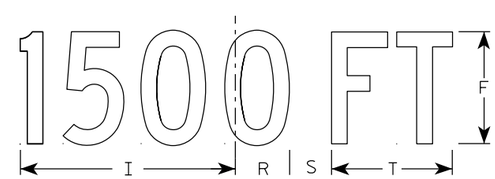

W20-1B

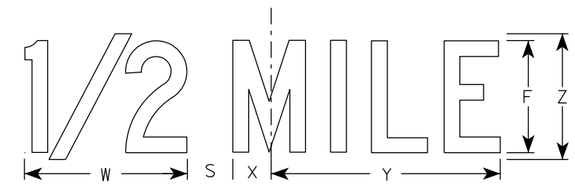

W20-1G

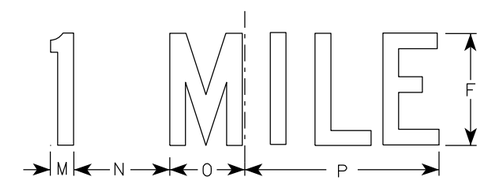

W20-1F

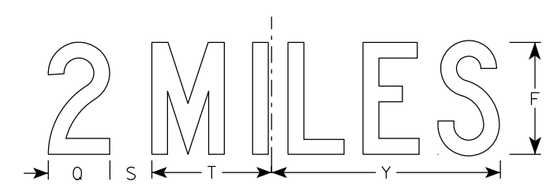

W20-1E

SIZE	A	B	C	D	E	F	G	H	I	J	K	L	M	N	O	P	Q	R	S	T	U	V	W	X	Y	Z	Area sq. ft.
1	36		1 5/8	5/8	3/4	5	2 5/8	3 1/4	10 1/8	7	7 5/8	8 7/8	1 1/8	4 1/2	3 1/2	9	3 1/4	2 1/2	2 1/4	5 5/8	9	1 3/8	8	1 3/4	10 3/4	6	9.0
2S	48		2 1/4	3/4	1	8	3 3/4	5 1/8	15 3/8	11 1/8	12 1/8	14 3/8	1 5/8	6 7/8	5 3/8	13 7/8	4 3/8	3 7/8	3	8 5/8	13 3/4	2 1/8	11 7/8	2 3/4	16 3/8	9	16.0
2M	48		2 1/4	3/4	1	8	3 3/4	5 1/8	15 3/8	11 1/8	12 1/8	14 3/8	1 5/8	6 7/8	5 3/8	13 7/8	4 3/8	3 7/8	3	8 5/8	13 3/4	2 1/8	11 7/8	2 3/4	16 3/8	9	16.0
3	48		2 1/4	3/4	1	8	3 3/4	5 1/8	15 3/8	11 1/8	12 1/8	14 3/8	1 5/8	6 7/8	5 3/8	13 7/8	4 3/8	3 7/8	3	8 5/8	13 3/4	2 1/8	11 7/8	2 3/4	16 3/8	9	16.0
4	48		2 1/4	3/4	1	8	3 3/4	5 1/8	15 3/8	11 1/8	12 1/8	14 3/8	1 5/8	6 7/8	5 3/8	13 7/8	4 3/8	3 7/8	3	8 5/8	13 3/4	2 1/8	11 7/8	2 3/4	16 3/8	9	16.0
5	48		2 1/4	3/4	1	8	3 3/4	5 1/8	15 3/8	11 1/8	12 1/8	14 3/8	1 5/8	6 7/8	5 3/8	13 7/8	4 3/8	3 7/8	3	8 5/8	13 3/4	2 1/8	11 7/8	2 3/4	16 3/8	9	16.0

STANDARD SIGN
W20-1A, B, C, D, E, F, G & H

WISCONSIN DEPT OF TRANSPORTATION

APPROVED Matthew R Rauch
For State Traffic Engineer
DATE 3/25/2020 PLATE NO. W20-1.11

PROJECT NO:

SHEET NO: 136 E

INDICATES WING
EXIST = EXISTING
IF = INSIDE FACE
OF = OUTSIDE FACE

NOTE:
EXISTING SINGLE CELL CONCRETE BOX CULVERT C-62-314 AT R/L STH 56 STA 54+11.74, A 10' WIDE X 10' HIGH X APPROX 56'-7"± LONG BARREL TO REMAIN. EXTEND APPROX 18' OF INLET BARREL. REPLACE WINGWALLS AND APRON AS DETAILED IN THESE PLANS.

☆ EXIST INLET, APRON AND WINGWALLS TO BE REMOVED. CONSTRUCT NEW 18' BOX, APRON, AND WINGWALLS FROM FRONT FACE OF EXISTING BOX HEADER. MATCH INVERT ELEVATION AND MATCH BOX GRADE.

STATE PROJECT NUMBER
5730-00-71

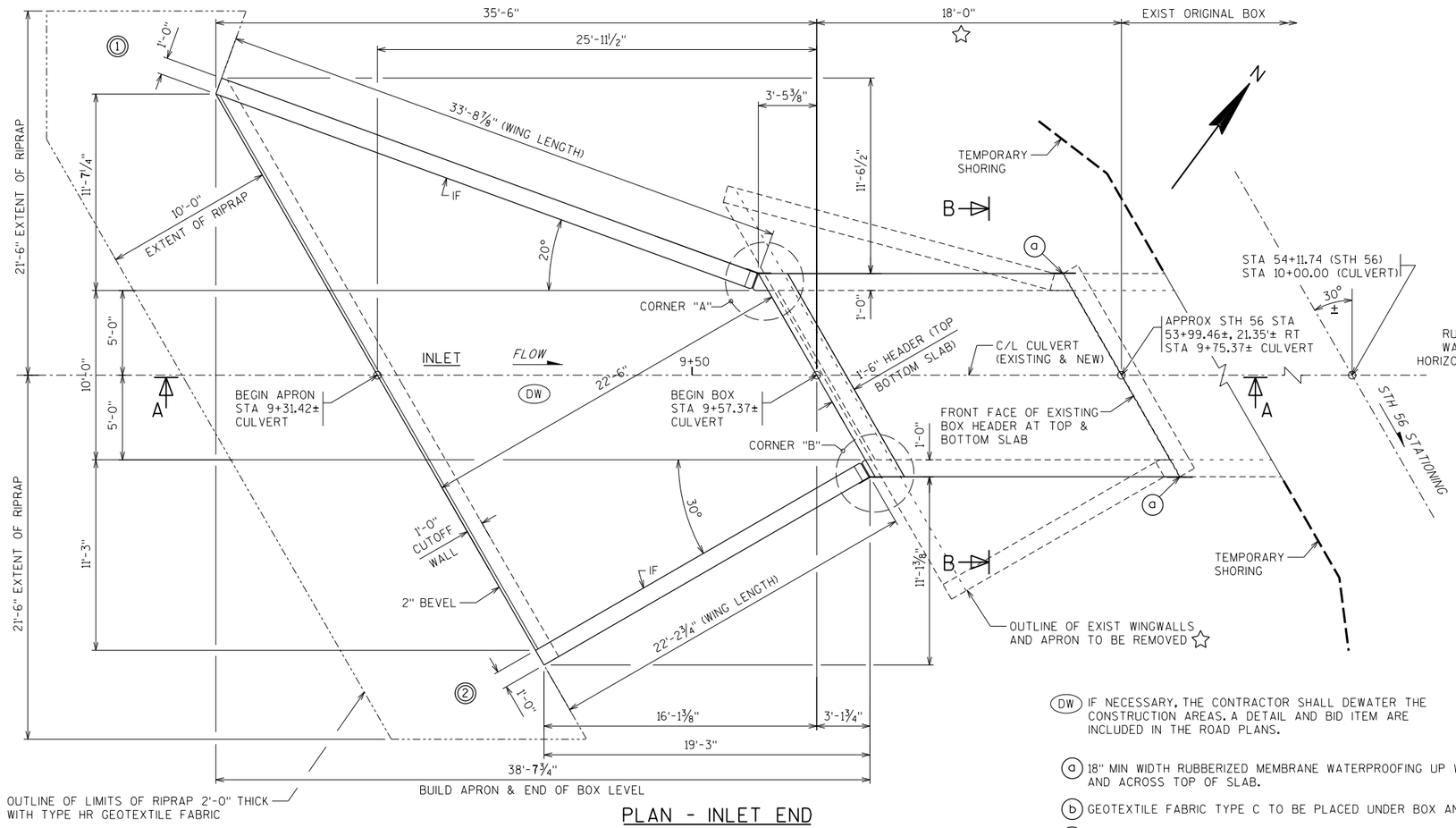

PLAN - INLET END

EXIST SINGLE CELL CONCRETE BOX CULVERT
SEE SHEET 2 FOR CORNER "A" & "B"

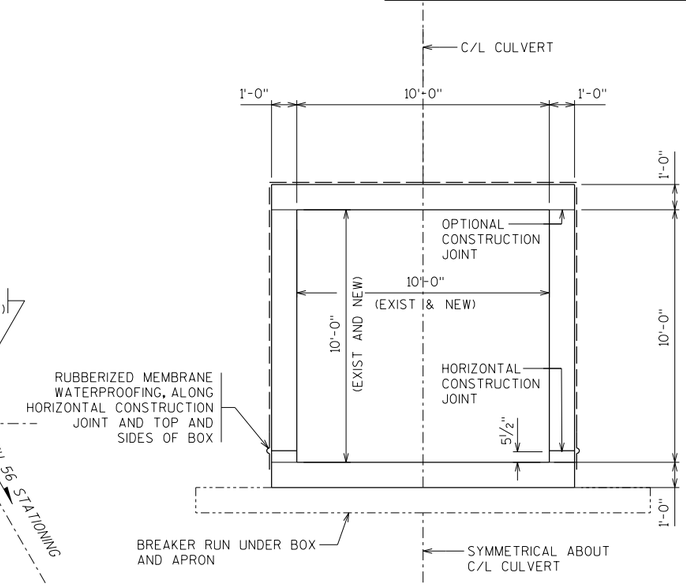

SECTION B-B
CROSS SECTION THRU NEW BOX

DESIGN DATA

LIVE LOAD:
DESIGN RATING = HL-93
INVENTORY RATING FACTOR: RF=1.0
OPERATING RATING FACTOR: RF=1.67
WISCONSIN STANDARD PERMIT VEHICLE (WIS-SPV): 190 KIPS
EARTH LOAD = DESIGNED FOR 8' FEET OF FILL

MATERIAL PROPERTIES:
CONCRETE MASONRY _____ f'c = 3.5 ksi
HIGH STRENGTH BAR STEEL REINFORCEMENT
AASHTO GRADE 60 _____ fy = 60 ksi

(DW) IF NECESSARY, THE CONTRACTOR SHALL DEWATER THE CONSTRUCTION AREAS. A DETAIL AND BID ITEM ARE INCLUDED IN THE ROAD PLANS.

(a) 18" MIN WIDTH RUBBERIZED MEMBRANE WATERPROOFING UP WALLS AND ACROSS TOP OF SLAB.

(b) GEOTEXTILE FABRIC TYPE C TO BE PLACED UNDER BOX AND APRON.

(c) 2'-0" THICK RIPRAP. GEOTEXTILE FABRIC TYPE HR TO BE PLACED UNDER RIPRAP.

BENCH MARK (DATUM)

SEE ROADWAY DRAWINGS

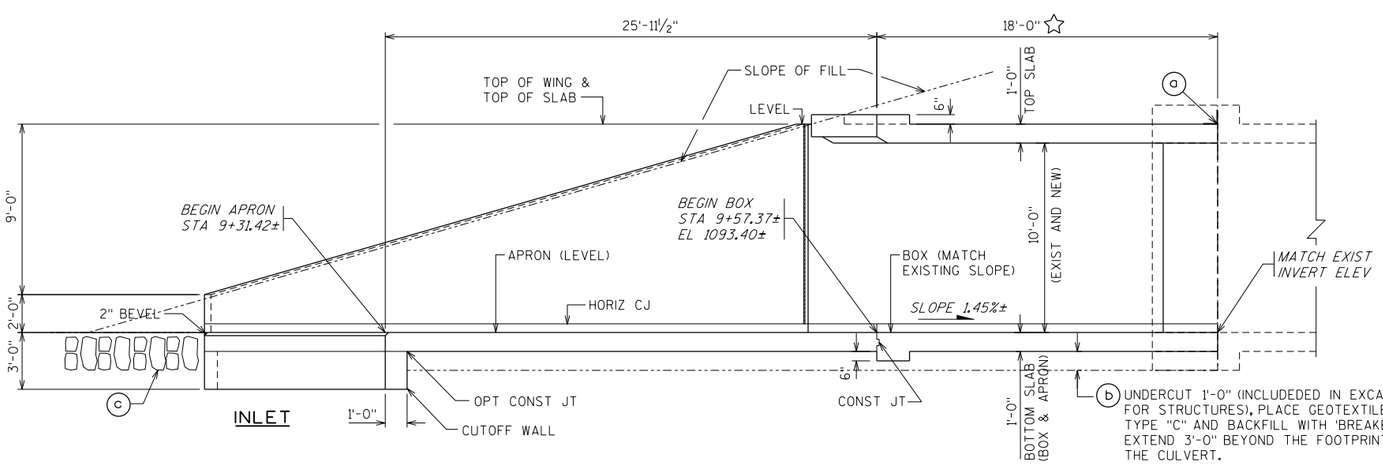

(b) UNDERCUT 1'-0" (INCLUDEDED IN EXCAVATION FOR STRUCTURES), PLACE GEOTEXTILE FABRIC TYPE "C" AND BACKFILL WITH 'BREAKER RUN'. EXTEND 3'-0" BEYOND THE FOOTPRINT OF THE CULVERT.

SECTION A-A

LIST OF DRAWINGS

1 GENERAL PLAN
2 BOX SECTION, CORNER LAYOUTS AND QUANTITIES
3 DETAILS
4 DETAILS
5 DETAILS
6 BILL OF REINFORCEMENT

WISCONSIN PROFESSIONAL ENGINEER
CHRISTOPHER J. BLUM
E-33157
MADISON
WI
1/31/2022

SEH CONTACT: CHRIS BLUM, PE, 608.620.6192
WISDOT BRIDGE OFFICE CONTACT: AARON BONK, PE, 608.261.0261

NO.	DATE	REVISION	BY

SEH
SHORT ELLIOTT HENDRICKSON INC.

STATE OF WISCONSIN
DEPARTMENT OF TRANSPORTATION
ACCEPTED SDR 01/31/22
CHIEF STRUCTURES DESIGN ENGINEER DATE

STRUCTURE C-62-314
STH 56 OVER DRAINAGE WAY

COUNTY	TOWN
VERNON	VIROQUA

DESIGN SPEC. REHABILITATION N/A

DESIGNED BY	DESIGN CK'D.	DRAWN BY	PLANS CK'D.
CJB	NCK	NCM/RAD	CJB

GENERAL PLAN

SHEET 1 OF 6
137

8

8

PLOT TIME: 9:11:08 AM
PLOT DATE: 1/31/2022
FILE NAME : X:\UZ\WI\WITSW\156925\5-final-dsgn\51-drawings\20-Struct\culvert\c62314gl.dgn

STATE PROJECT NUMBER
5730-00-71

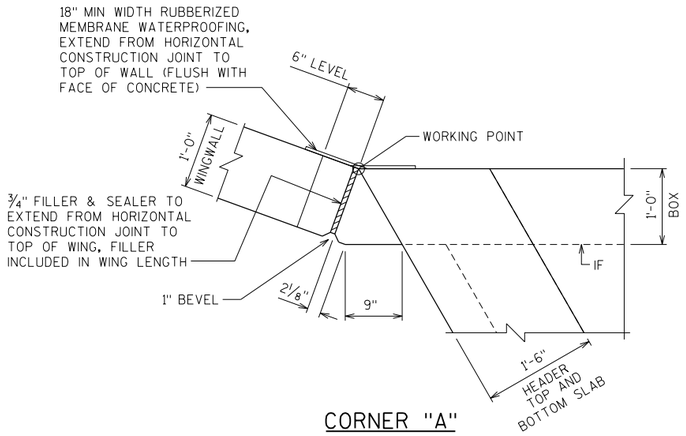

CORNER "A"

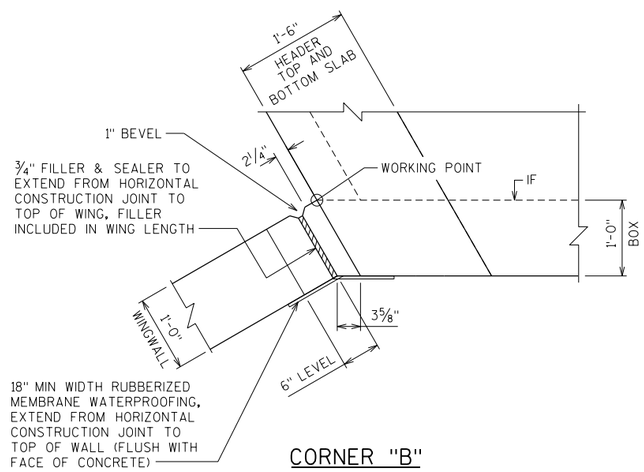

CORNER "B"

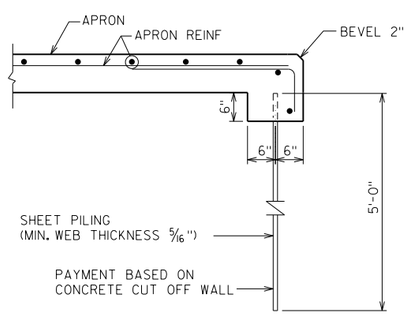

ALTERNATE CUTOFF WALL

GENERAL NOTES

DRAWINGS SHALL NOT BE SCALED.

DIMENSIONS SHOWN ARE BASED ON THE ORIGINAL STRUCTURE PLANS AND INSPECTION REPORTS.

MATCH EXIST DIMENSIONS AND ELEVATIONS EXCEPT AS OTHERWISE SHOWN OR NOTED.

BAR STEEL REINFORCEMENT SHALL BE EMBEDDED 2" CLEAR UNLESS OTHERWISE SHOWN OR NOTED. PROTECT REBAR STEEL IN THE AREA OF EXTENSION DURING REMOVAL OF CONCRETE.

3/4" CHAMFER ON ALL EXPOSED CONCRETE EDGES.

SEAL ALL EXPOSED HORIZONTAL AND VERTICAL SURFACES OF 3/4" FILLER WITH NON-STAINING GRAY NON-ASPHALTIC JOINT SEALER (1" DEEP AND HOLD 1/8" BELOW SURFACE OF CONCRETE.

FILLER SHALL CONFORM TO THE REQUIREMENTS OF AASHTO DESIGNATION :M153 TYPE 1, 2, OR 3 OR AASHTO DESIGNATION : M213.

THE EXIST GROUND LINE SHALL BE THE UPPER LIMITS OF EXCAVATION FOR STRUCTURES.

CONTRACTOR WILL BE RESPONSIBLE FOR LOCATING ALL EXISTING UTILITIES. SEE ROADWAY PLANS FOR EXISTING UTILITY LOCATIONS.

THE CONTRACTOR SHALL SUPPLY A NEW NAME PLATE IN ACCORDANCE WITH SECTION 502.3.11 OF THE STANDARD SPECIFICATIONS AND THE STANDARD DETAIL DRAWINGS. NAME PLATE TO SHOW ORIGINAL CONSTRUCTION YEAR.

ALL CONCRETE REMOVAL SHALL BE DEFINED BY A 1" DEEP SAWCUT.

THE CONCRETE IN THE CUT OFF WALL MAY BE PLACED UNDERWATER IF THE EXCAVATION CANNOT BE DEWATERED.

THE "ALTERNATE CUT OFF WALL" DETAIL SHOWN ON THIS SHEET MAY BE USED IN LIEU OF THE CAST-IN-PLACE CONCRETE CUT OFF WALLS. PAYMENT SHALL BE BASED ON CONCRETE CUT OFF WALLS.

THE BACKFILL QUANTITIES ARE BASED ON THE PAY LIMITS SHOWN ON THE PLANS AND MAY NOT REFLECT ACTUAL PLACED QUANTITIES. "BACKFILL STRUCTURE TYPE B" REQUIRED ON THE BOX CULVERT SIDES AND BEHIND APRON WINGS FOR 3 FEET. BACKFILL PLACED BEYOND PAY LIMITS OR EXCEEDING PLAN QUANTITIES SHALL BE INCIDENTAL TO EXCAVATION FOR STRUCTURES.

THE FIRST OR FIRST TWO DIGITS OF THE BAR MARK SIGNIFIES THE BAR SIZE.

UTILIZE EXISTING BAR STEEL REINFORCEMENT WHERE SHOWN AND EXTEND 24 BAR DIAMETERS INTO NEW WORK, UNLESS SPECIFIED OTHERWISE.

☆ UNDER CUT 1'-0", EXCAVATION FOR UNDER CUT TO BE INCLUDED IN EXCAVATION FOR STRUCTURES. PLACE "GEOTEXTILE TYPE C" AND BACKFILL WITH "BREAKER RUN".

IN LIEU OF USING BREAKER RUN FOR THE BOX CONSTRUCTION PLATFORM, THE CONTRACTOR MAY ELECT TO SUBSTITUTE #1 OR #2 CONCRETE COARSE AGGREGATE, SELECT CRUSHED MATERIAL OR OTHER GRANULAR MATERIAL AS APPROVED BY THE ENGINEER. THE CONTRACTOR IS RESPONSIBLE FOR BASE STABILITY WITH ANY SUBSTITUTED MATERIAL. THE REGION GEOTECHNICAL ENGINEER MAY BE CONTACTED TO DETERMINE IF "OTHER GRANULAR MATERIAL" IS ACCEPTABLE.

TOTAL ESTIMATED QUANTITIES - C-62-314

	BID ITEM NUMBERS	BID ITEMS	UNIT	TOTALS
4	203.0220	REMOVING STRUCTURE C-62-314	EA	1
5	206.2000	EXCAVATION FOR STRUCTURES CULVERTS C-62-314	LS	1
1	210.2500	BACKFILL STRUCTURE TYPE B	TON	725
3	311.0110	BREAKER RUN	TON	75
	502.4205	ADHESIVE ANCHORS NO. 5 BARS	EA	46
	504.0100	CONCRETE MASONRY CULVERTS	CY	70
	505.0400	BAR STEEL REINFORCEMENT HS STRUCTURES	LB	6,800
	505.0600	BAR STEEL REINFORCEMENT HS COATED STRUCTURES	LB	3,740
	511.1200	TEMPORARY SHORING C-62-314	SF	300
2	516.0500	RUBBERIZED MEMBRANE WATERPROOFING	SY	20
	606.0300	RIPRAP HEAVY	CY	35
	645.0105	GEOTEXTILE TYPE C	SY	125
	645.0120	GEOTEXTILE TYPE HR	SY	55
	SPV.0060.02	TEMPORARY WATER DIVERSION CULVERT C-62-314	EA	1
		NON-BID ITEMS		
		FILLER	SIZE	3/4"
		NAMEPLATE	EA	1

1. A FACTOR OF 2.0 WAS USED TO CONVERT CUBIC YARDS TO TONS.
2. DOES NOT INCLUDE RUBBERIZED MEMBRANE WATERPROOFING REQUIRED AT OPTIONAL CONSTRUCTION JOINT.
3. A FACTOR OF 1.8 WAS USED TO CONVERT CUBIC YARDS TO TONS.
4. REMOVAL ONLY CONSISTS OF A PORTION OF THE BOX AT THE INLET AND FOR REMOVAL OF THE INLET WINGS AND APRON. PROTECT ITEMS TO REMAIN DURING REMOVAL.
5. EXCAVATION CONSISTS OF REQUIRED WORK AT INLET TO EXTEND THE EXISTING BOX.

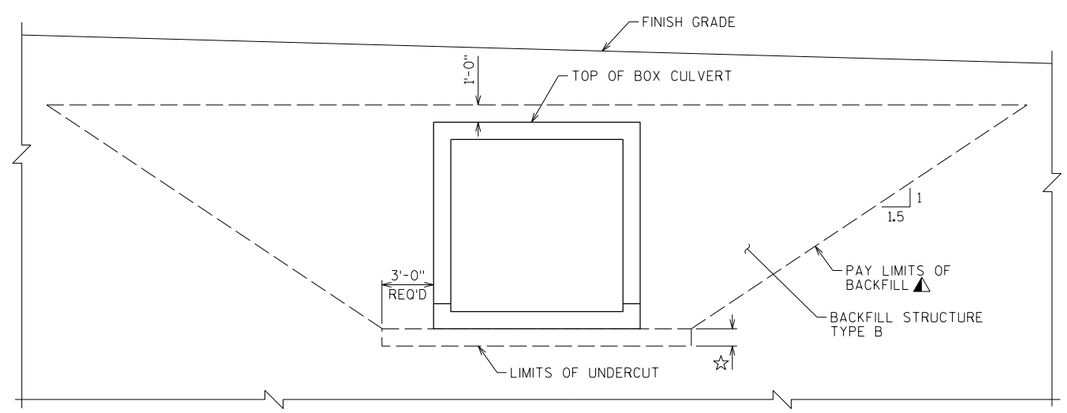

TYPICAL SECTION
THRU BOX CULVERT

◭ BACKFILL PAY LIMITS. BACKFILL BEYOND BACKFILL PAY LIMITS SHALL BE INCIDENTAL TO EXCAVATION FOR STRUCTURES. LIMITS OF EXCAVATION SHALL BE DETERMINED BY THE CONTRACTOR.

NO.	DATE	REVISION	BY

STATE OF WISCONSIN
DEPARTMENT OF TRANSPORTATION
STRUCTURES DESIGN SECTION

STRUCTURE C-62-314

DRAWN BY NCM/RAD | PLANS CK'D. CJB

BOX SECTION, CORNER LAYOUTS AND QUANTITIES

SHEET 2 OF 6

8

8

FILE NAME : X:\DZ\W\WITSW\156925\5-final-dsgn\5i-drawings\20-Struct\culvert\c62314g2.dgn
PLOT DATE: 1/31/2022 PLOT TIME: 9:11:09 AM

STATE PROJECT NUMBER

5730-00-71

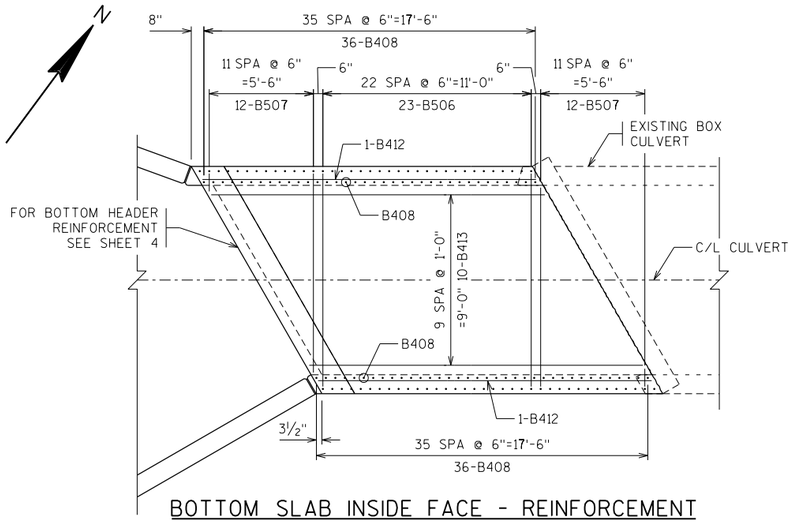

BOTTOM SLAB INSIDE FACE - REINFORCEMENT

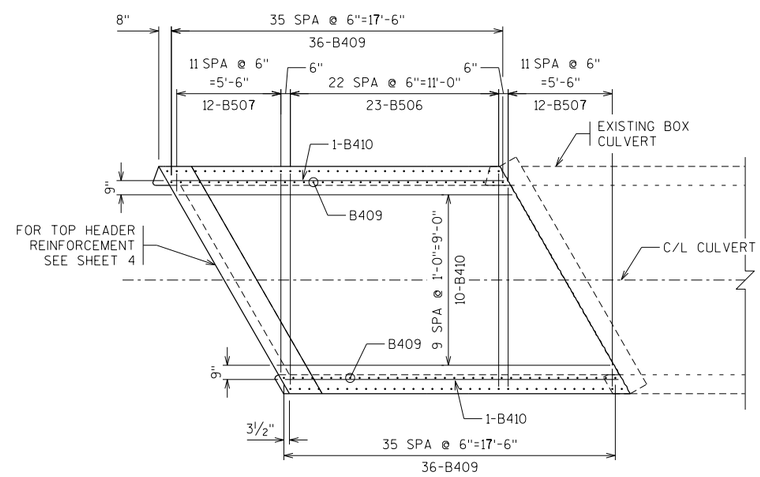

TOP SLAB INSIDE FACE - REINFORCEMENT

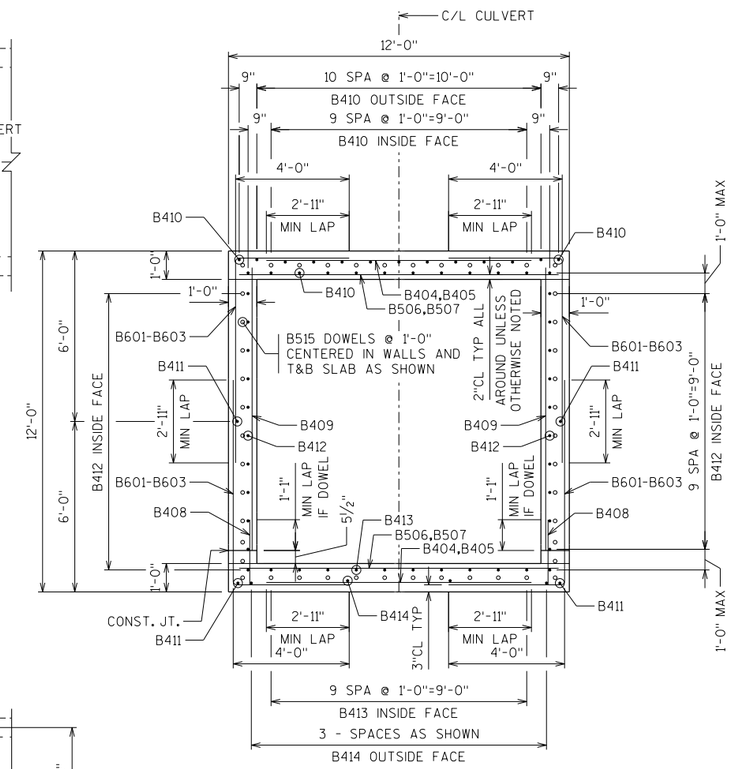

CROSS SECTION THRU BOX - REINFORCEMENT

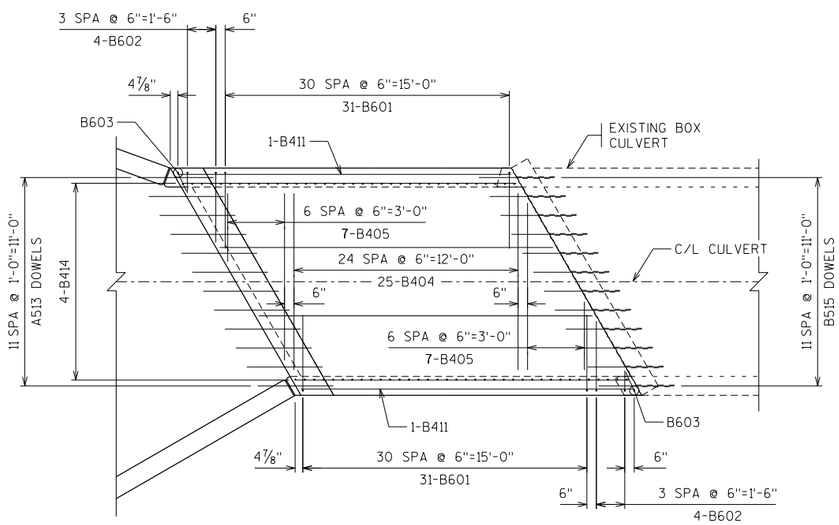

BOTTOM SLAB OUTSIDE FACE - REINFORCEMENT

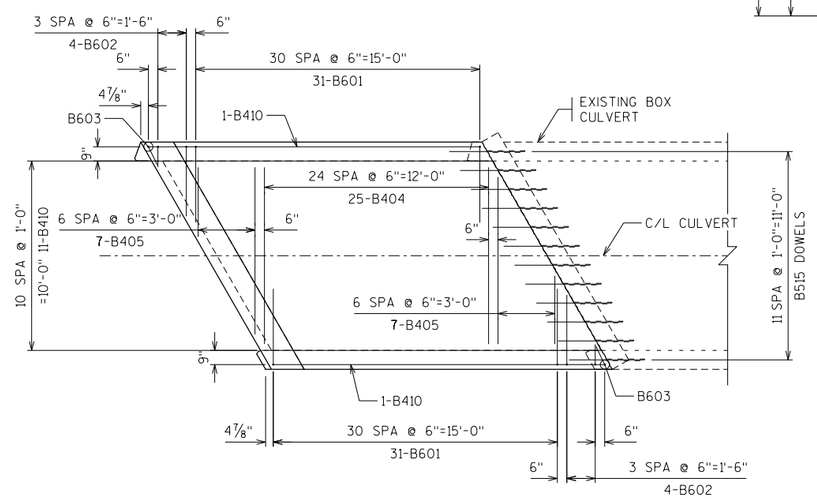

TOP SLAB OUTSIDE FACE - REINFORCEMENT

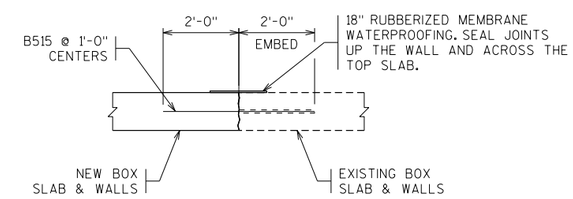

CONSTRUCTION JOINT DETAIL

(ALL WALLS AND TOP & BOTTOM SLAB

IF = INSIDE FACE
OF = OUTSIDE FACE

T = TOP
B = BOTTOM

EF = EACH FACE
FF = FRONT FACE
BF = BACK FACE

NO.	DATE	REVISION	BY

STATE OF WISCONSIN
DEPARTMENT OF TRANSPORTATION

STRUCTURES DESIGN SECTION

STRUCTURE C-62-314

DRAWN BY NCM/RAD | PLANS CK'D. CJB

DETAILS

SHEET 3 OF 6

8

8

PLOT TIME: 9:11:09 AM

PLOT DATE: 1/31/2022

FILE NAME : X:\UZ\W\WITSW\156925\5-final-dsgn\5l-drawings\20-Struct\culvert\c62314dl.dgn

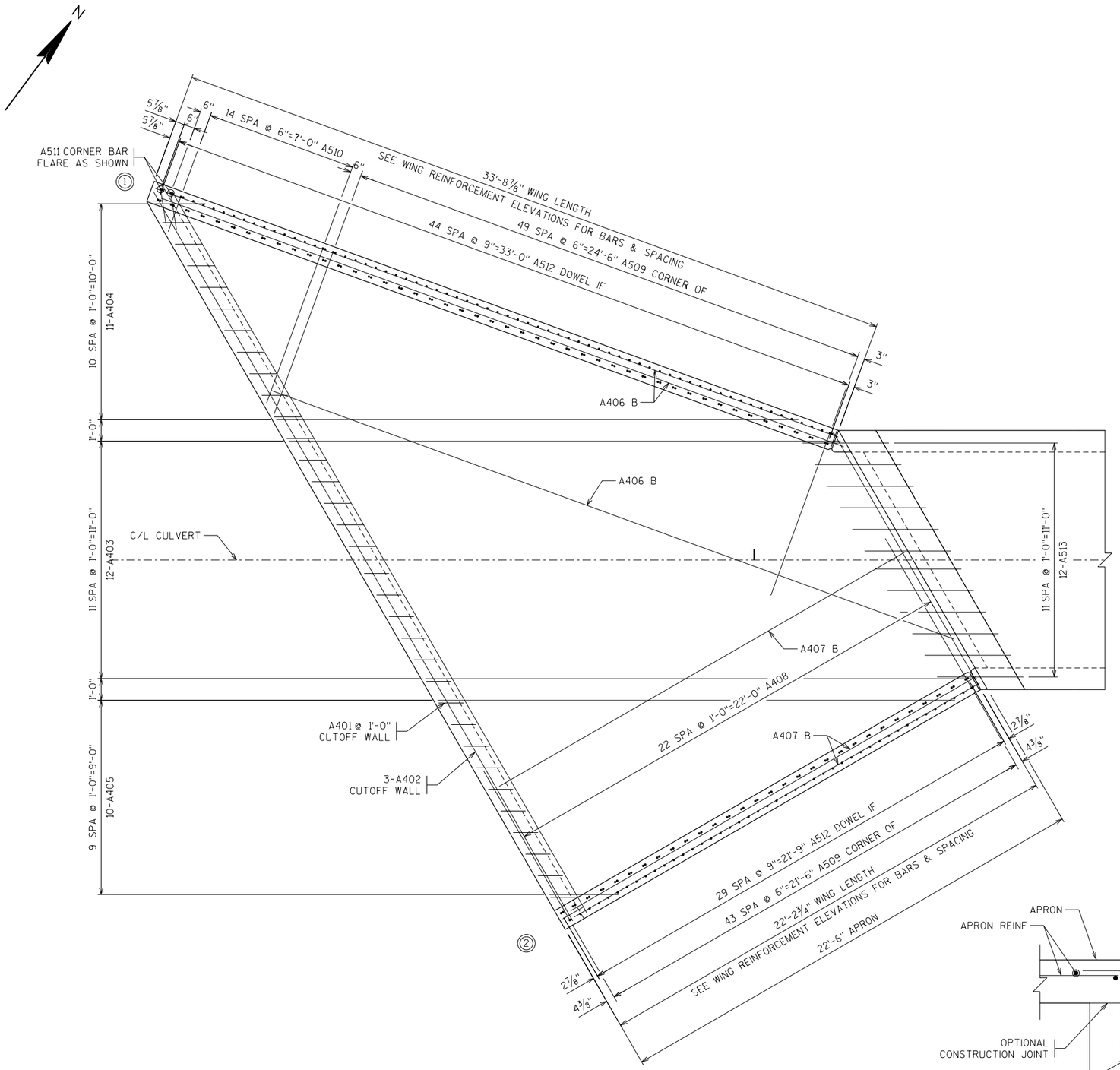

APRON PLAN DETAIL - REINFORCEMENT

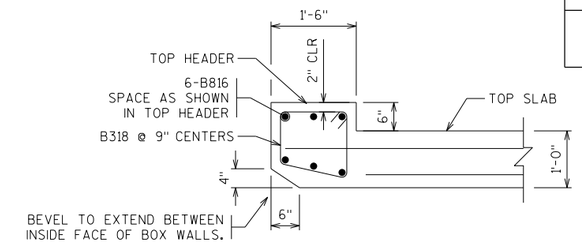

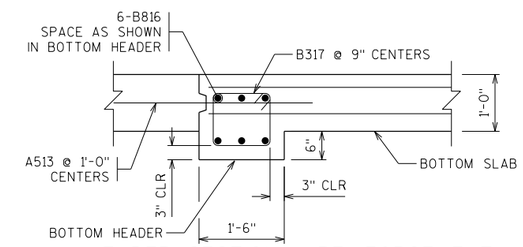

HEADER SECTION - REINFORCEMENT

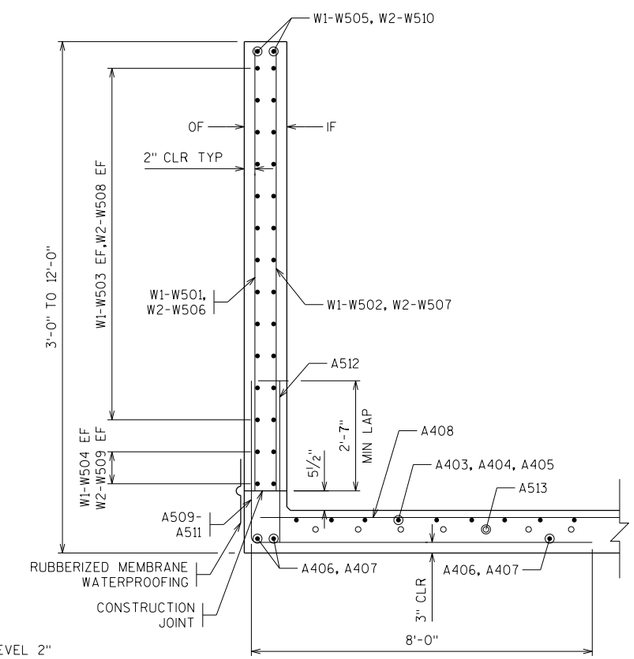

TYPICAL WINGWALL SECTION

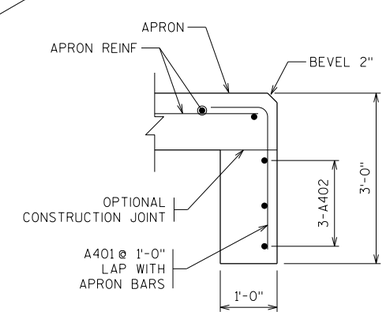

CUTOFF WALL

IF = INSIDE FACE
OF = OUTSIDE FACE

T = TOP
B = BOTTOM

EF = EACH FACE
FF = FRONT FACE
BF = BACK FACE

NO.	DATE	REVISION	BY

STATE OF WISCONSIN
DEPARTMENT OF TRANSPORTATION
STRUCTURES DESIGN SECTION
STRUCTURE C-62-314

DRAWN BY NCM/RAD | PLANS CK'D. CJB

DETAILS

SHEET 4 OF 6

FILE NAME : X:\UZW\WITSW\56925\5-final-dsgn\51-drawings\20-Struct\culvert\c62314d2.dgn
PLOT DATE: 1/31/2022
PLOT TIME: 9:11:10 AM

8

8

STATE PROJECT NUMBER
5730-00-71

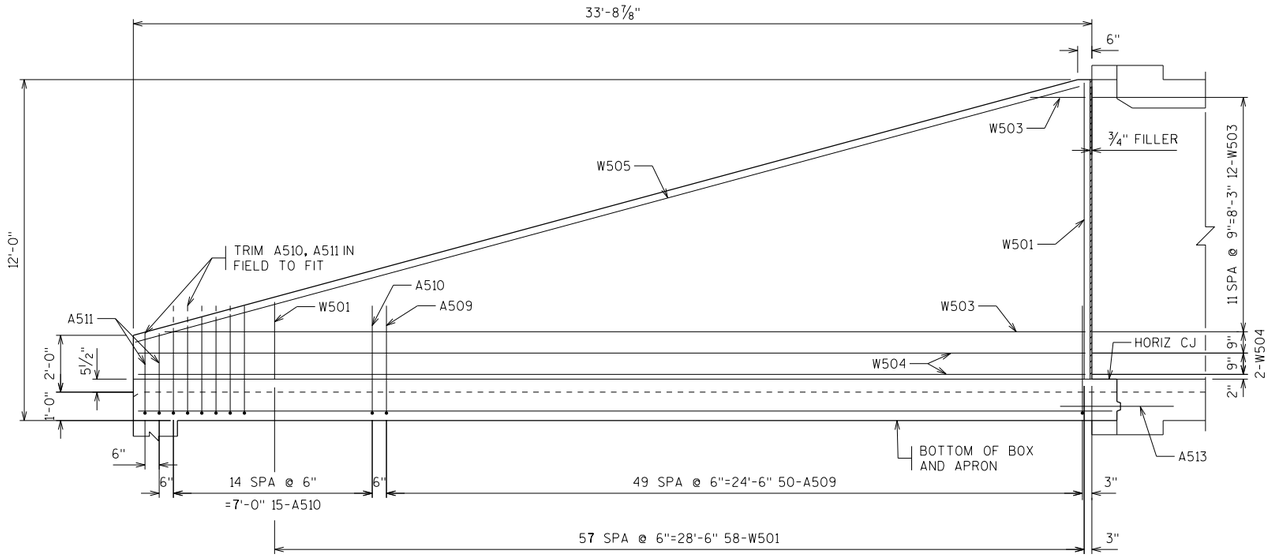

OUTSIDE FACE REINFORCEMENT - WING 1

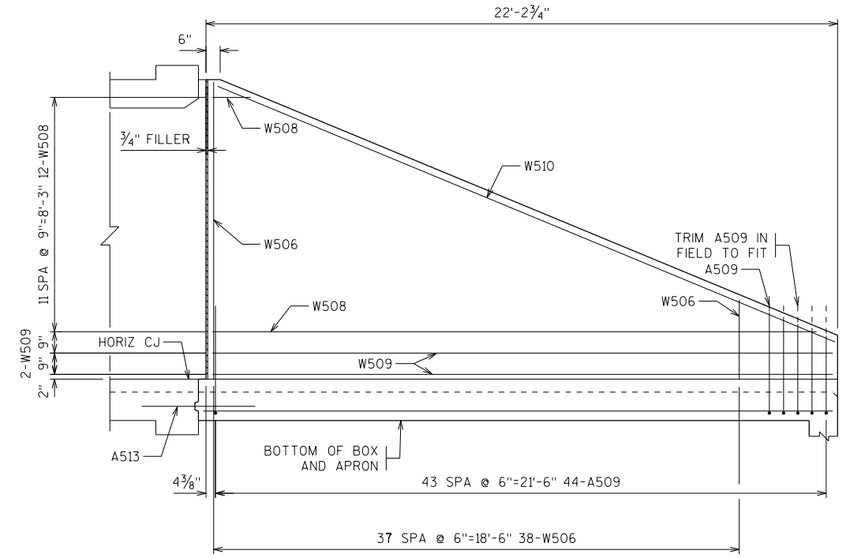

OUTSIDE FACE REINFORCEMENT - WING 2

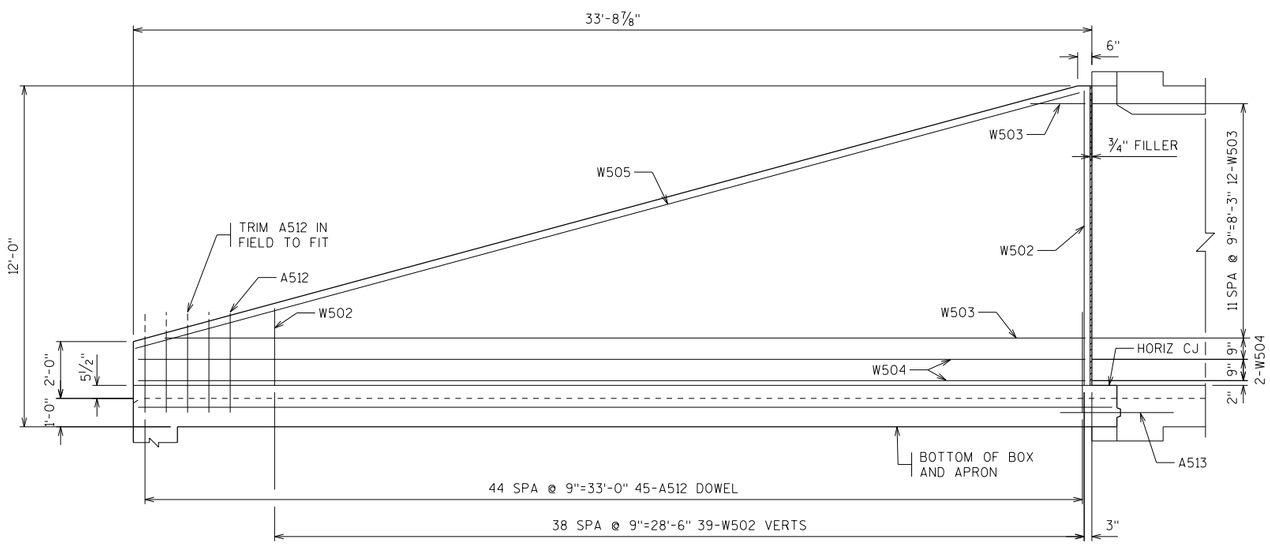

INSIDE FACE REINFORCEMENT - WING 1

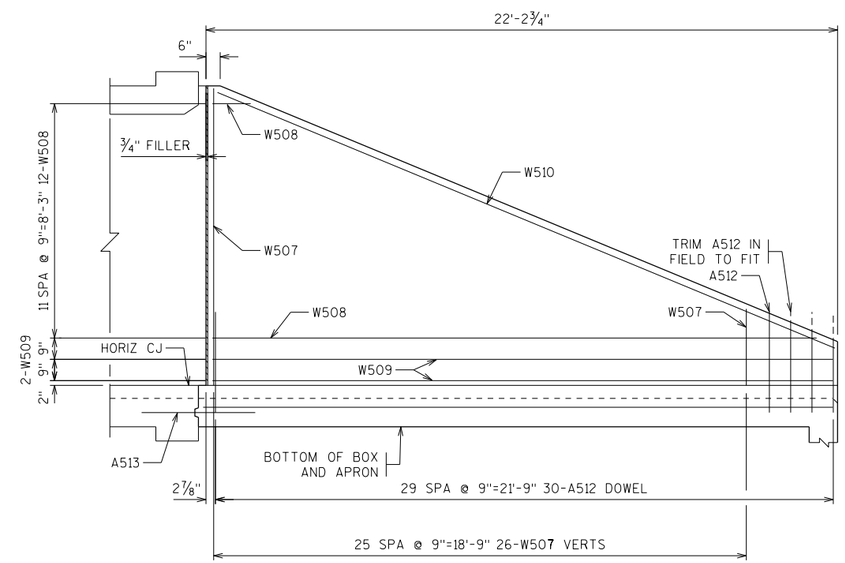

INSIDE FACE REINFORCEMENT - WING 2

IF = INSIDE FACE
OF = OUTSIDE FACE

T = TOP
B = BOTTOM

EF = EACH FACE
FF = FRONT FACE
BF = BACK FACE

NO.	DATE	REVISION	BY

STATE OF WISCONSIN
DEPARTMENT OF TRANSPORTATION
STRUCTURES DESIGN SECTION

STRUCTURE C-62-314

DRAWN BY NCM/RAD | PLANS CK'D. CJB

DETAILS

SHEET 5 OF 6

8

8

FILE NAME : X:\UZ\W\WITSW\156925\5-final-dsgn\51-drawings\20-Struct\culvert\c62314d3.dgn
PLOT DATE: 1/31/2022
PLOT TIME: 9:11:10 AM

B601

B602

B603

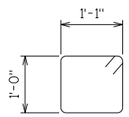

B317

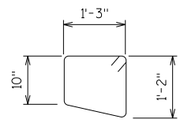

B318

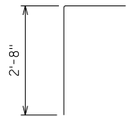

A401

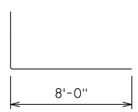

A509

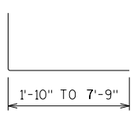

A510

A511

BILL OF BARS

BAR MARK	COAT	NO. REQ'D.	LENGTH (FT-IN)	BAR SERIES	BENT	LOCATION
B601		124	11 - 1		X	CORNERS OF
B602		16	9 - 6	X	X	CORNERS OF
B603		4	8 - 2		X	CORNERS OF
B404		50	9 - 6			TRANS T&B SLAB OF
B405		28	6 - 3	X		TRANS T&B SLAB OF
B506		46	11 - 6			TRANS T&B SLAB IF
B507		48	5 - 9	X		TRANS T&B SLAB IF
B408		72	2 - 4			WALL DOWELS IF
B409		72	10 - 3			WALL VERTS IF
B410		25	17 - 7			LONGITUDINAL TOP SLAB IF & OF
B411		4	17 - 7			LONGITUDINAL OF
B412		22	17 - 7			LONGITUDINAL IF
B413		10	17 - 7			LONGITUDINAL BOT SLAB IF
B414		4	17 - 7			LONGITUDINAL BOT SLAB OF
B515		46	4 - 0			HORZ. DOWEL TO EXISTING
B816		12	13 - 5			HEADER LONGITUDINAL
B317		16	4 - 9		X	HEADER BOTTOM
B318		16	5 - 1		X	HEADER TOP
APRON						
A401		39	3 - 7		X	APRON CUTOFF VERT
A402		3	38 - 7			APRON CUTOFF LONGITUDINAL
A403		12	25 - 7			APRON LONGITUDINAL
A404		11	13 - 3	X		APRON LONGITUDINAL
A405		10	13 - 7	X		APRON LONGITUDINAL
A406		3	33 - 6			APRON
A407		3	22 - 2			APRON
A408		23	26 - 3	X		APRON TRANSVERSE
A509	X	94	11 - 8		X	WING DOWEL CORNER OF
A510	X	15	8 - 6	X	X	WING DOWEL CORNER OF
A511	X	2	4 - 7		X	WING DOWEL CORNER OF
A512	X	75	3 - 10			WING DOWEL IF
A513		12	4 - 0			HORIZ DOWEL
WING						
W501	X	58	6 - 5	X		WING 1 VERT OF
W502	X	39	6 - 5	X		WING 1 VERT IF
W503	X	24	17 - 3	X		WING 1 HORIZ EF
W504	X	4	33 - 4			WING 1 HORIZ EF
W505	X	2	34 - 6			WING 1 HORIZ EF TOP
W506	X	38	6 - 7	X		WING 2 VERT OF
W507	X	26	6 - 6	X		WING 2 VERT IF
W508	X	24	11 - 4	X		WING 2 HORIZ EF
W509	X	4	21 - 10			WING 2 HORIZ EF
W510	X	2	23 - 7			WING 2 HORIZ EF TOP

BAR SERIES TABLE

BAR MARK	BENT	NO. REQD.	LENGTH (FT-IN)
BOX			
B602	X	4 SERIES OF 4	8-2 TO 10-9
B405		4 SERIES OF 7	3-8 TO 8-10
B507		4 SERIES OF 12	1-0 TO 10-6
APRON			
A404		1 SERIES OF 11	2-4 TO 24-2
A405		1 SERIES OF 10	3-3 TO 23-11
A408		1 SERIES OF 23	13-6 TO 39-0
A510	X	1 SERIES OF 15	5-6 TO 11-5
WING			
W501		1 SERIES OF 58	2-8 TO 10-4
W502		1 SERIES OF 39	2-8 TO 10-4
W503		2 SERIES OF 12	2-0 TO 32-5
W506		1 SERIES OF 38	2-9 TO 10-4
W507		1 SERIES OF 26	2-8 TO 10-4
W508		2 SERIES OF 12	1-4 TO 21-3

NOTE: THE FIRST DIGIT OF THE BAR MARK SIGNIFIES THE ENGLISH BAR DIAMETER SIZE.

DIMENSIONS IN BENDING DETAILS ARE OUT TO OUT.

LENGTH SHOWN FOR BAR SERIES BARS IS AN AVERAGE LENGTH AND ARE USED FOR BAR WEIGHT CALCULATIONS ONLY. SEE BAR SERIES TABLE FOR ACTUAL LENGTHS.

IF = INSIDE FACE
OF = OUTSIDE FACE

T = TOP
B = BOTTOM

EF = EACH FACE
FF = FRONT FACE
BF = BACK FACE

NO.	DATE	REVISION	BY

STATE OF WISCONSIN
DEPARTMENT OF TRANSPORTATION
STRUCTURES DESIGN SECTION

STRUCTURE C-62-314

DRAWN BY NCM/RAD | PLANS CK'D. CJB

BILL OF REINFORCEMENT

SHEET 6 OF 6

8

8

FILE NAME : X:\UZ\W\WITSW\56925\5-final-dsgn\5i-drawings\20-Struct\culvert\c62314d4.dgn
PLOT DATE: 1/31/2022 PLOT TIME: 9:11:11 AM

STATION	AREA (SF)		INCREMENTAL VOL (CY)			CUMULATIVE VOL (CY)			
	CUT	FILL	CUT NOTE 1	FILL NOTE 2	EXPLANDED FILL FACTOR 1.30 NOTE 3	CUT 1.00 NOTE 1	FILL NOTE 2	EXPANDED FILL 1.30 NOTE 3	MASS ORDINATE NOTE 4
49+27	0	20	0	0	0	0	0	0	0
50+00	0	18	0	52	68	0	52	68	-68
50+60	0	15	0	37	48	0	89	116	-116
51+20	0	24	0	43	56	0	132	172	-172
51+70	0	19	0	39	50	0	171	222	-222
52+20	0	6	0	23	30	0	194	252	-252
53+10	0	48	0	90	117	0	284	369	-369
53+60	0	46	0	87	113	0	371	482	-482
54+60	0	0	0	86	112	0	457	594	-594
	COLUMN SUBTOTALS =		0	457	594				

Notes:	
1 - CUT	CUT INCLUDES SALVAGED/UNUSABLE PAVEMENT MATERIAL
2 - FILL	DOES NOT INCLUDE UNUSABLE PAVEMENT EXC VOLUME
3 - EXPANDED FILL FACTOR	EXPANDED FILL FACTOR = 1.30 ; EXPANDED FILL = (UNEXPANDED FILL * 1.30)
4 - MASS ORDINATE	MASS ORDINATE = (CUT - EXPANDED FILL)

9

9

PROJECT NO: 5730-00-71	HWY: STH 56	COUNTY: VERNON	EARTHWORK SUMMARY	SHEET NO:	E

FILE NAME : _____ PLOT DATE : _____ PLOT BY : _____ PLOT NAME : _____ ORG DATE : _____ ORIGINATOR : DIST _ PLOT SCALE : 1:1

48+77

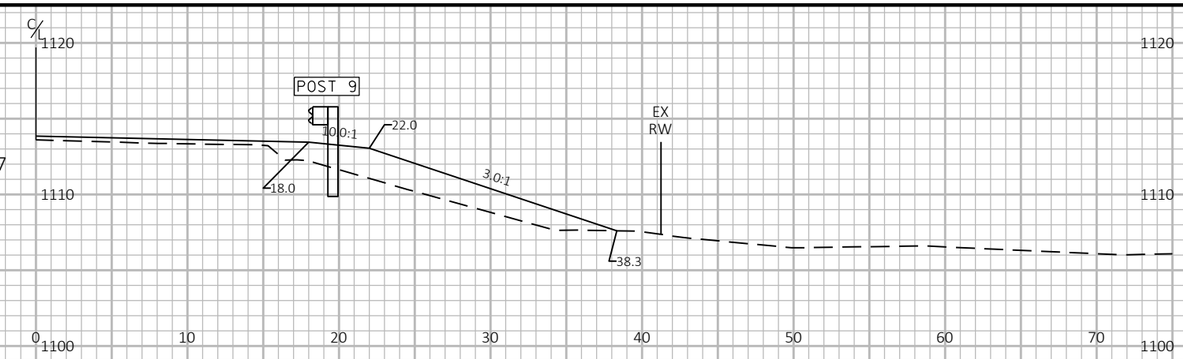

49+02

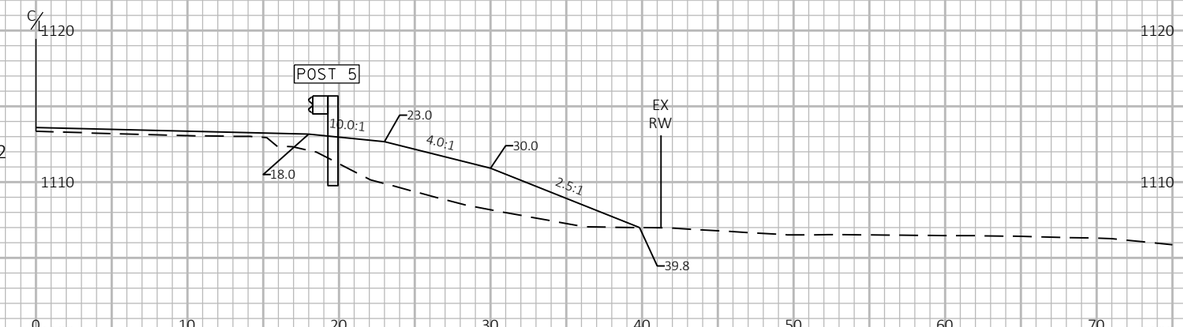

49+27

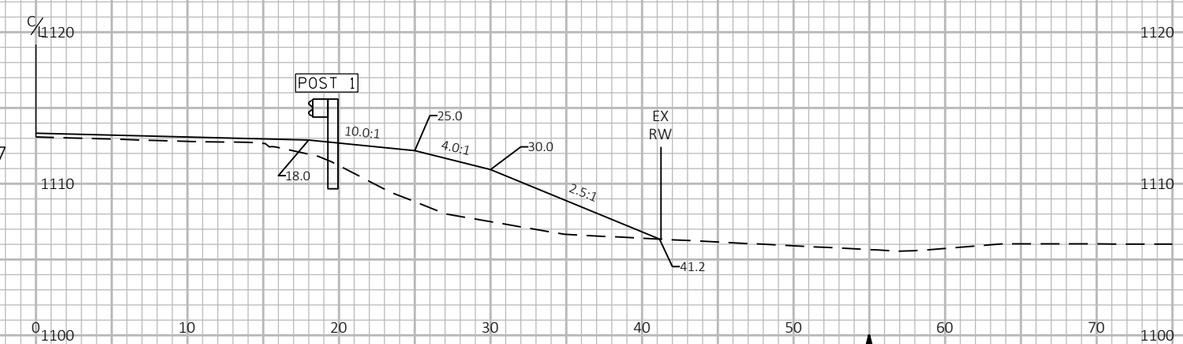

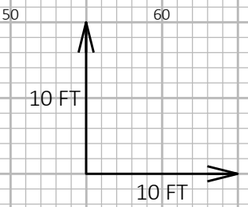

9

9

PROJECT NO: 5730-00-71	HWY: STH 56	COUNTY: VERNON	CROSS SECTIONS: EAT GRADING	SHEET 144	E

FILE NAME : \\LAXRTOPFLPPI01\N3PUBLIC\PDS\C3D\57300001\SHEETSPLAN\CROSS SECTIONS\GUARDRAIL\48+77 - 49+27 RT.DWG
LAYOUT NAME - 01

PLOT DATE : 10/18/2021 6:47 AM PLOT BY : MIKSHOWSKY, CORY J PLOT NAME : **PLOT SCALE :** 1 IN:10 FT HORZ. / 1 IN:10 FT VERT.

WISDOT/CADDS SHEET 49

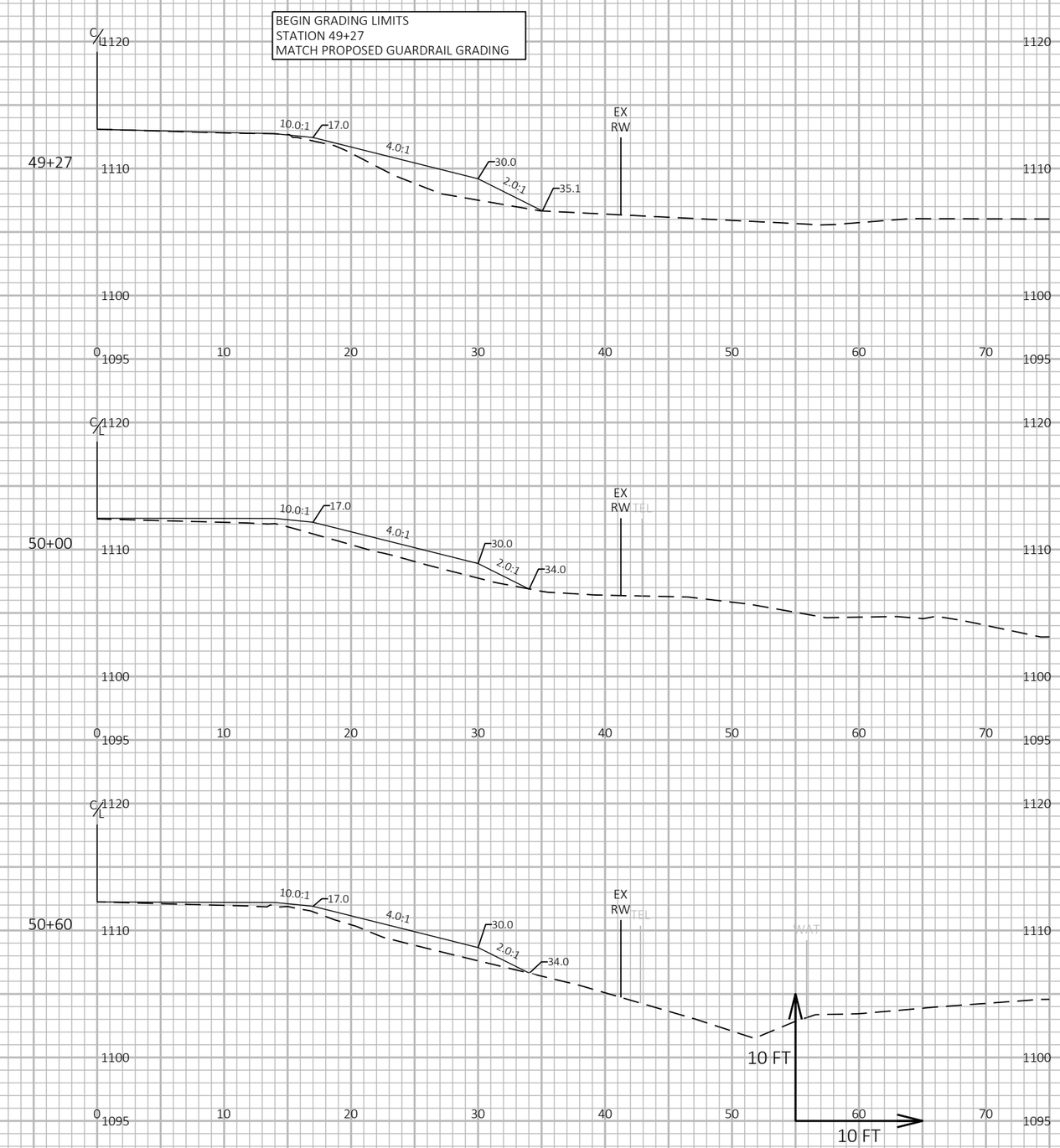

9

9

PROJECT NO: 5730-00-71	HWY: STH 56	COUNTY: VERNON	CROSS SECTIONS: MAINLINE	SHEET 145	E

FILE NAME : \\LAXRTOPFLPPI01\N3PUBLIC\PDS\C3D\57300001\SHEETSPLAN\CROSS SECTIONS\090201_XS.DWG
LAYOUT NAME - 01

PLOT DATE : 10/18/2021 6:22 AM PLOT BY : MIKSHOWSKY, CORY J PLOT NAME : **PLOT SCALE :** 1 IN:10 FT HORZ. / 1 IN:10 FT VERT.

WISDOT/CADDS SHEET 49

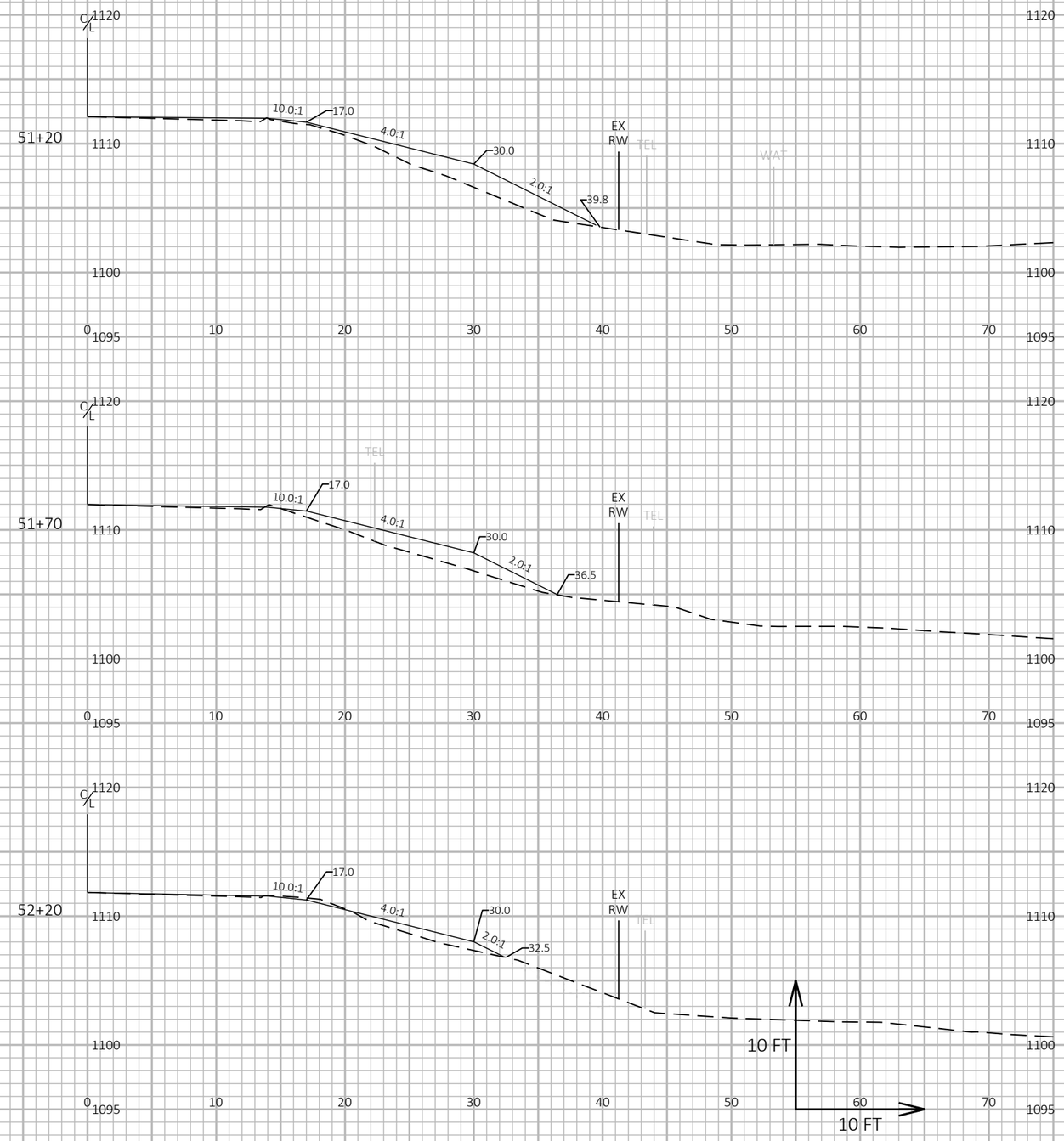

9

9

PROJECT NO: 5730-00-71	HWY: STH 56	COUNTY: VERNON	CROSS SECTIONS: MAINLINE	SHEET 146	E

FILE NAME : \\LAXRTOPFLPPI01\N3PUBLIC\PDS\C3D\57300001\SHEETSPLAN\CROSS SECTIONS\090201_XS.DWG
LAYOUT NAME - 02

PLOT DATE : 10/18/2021 6:22 AM PLOT BY : MIKSHOWSKY, CORY J PLOT NAME : **PLOT SCALE :** 1 IN:10 FT HORZ. / 1 IN:10 FT VERT.

WISDOT/CADDS SHEET 49

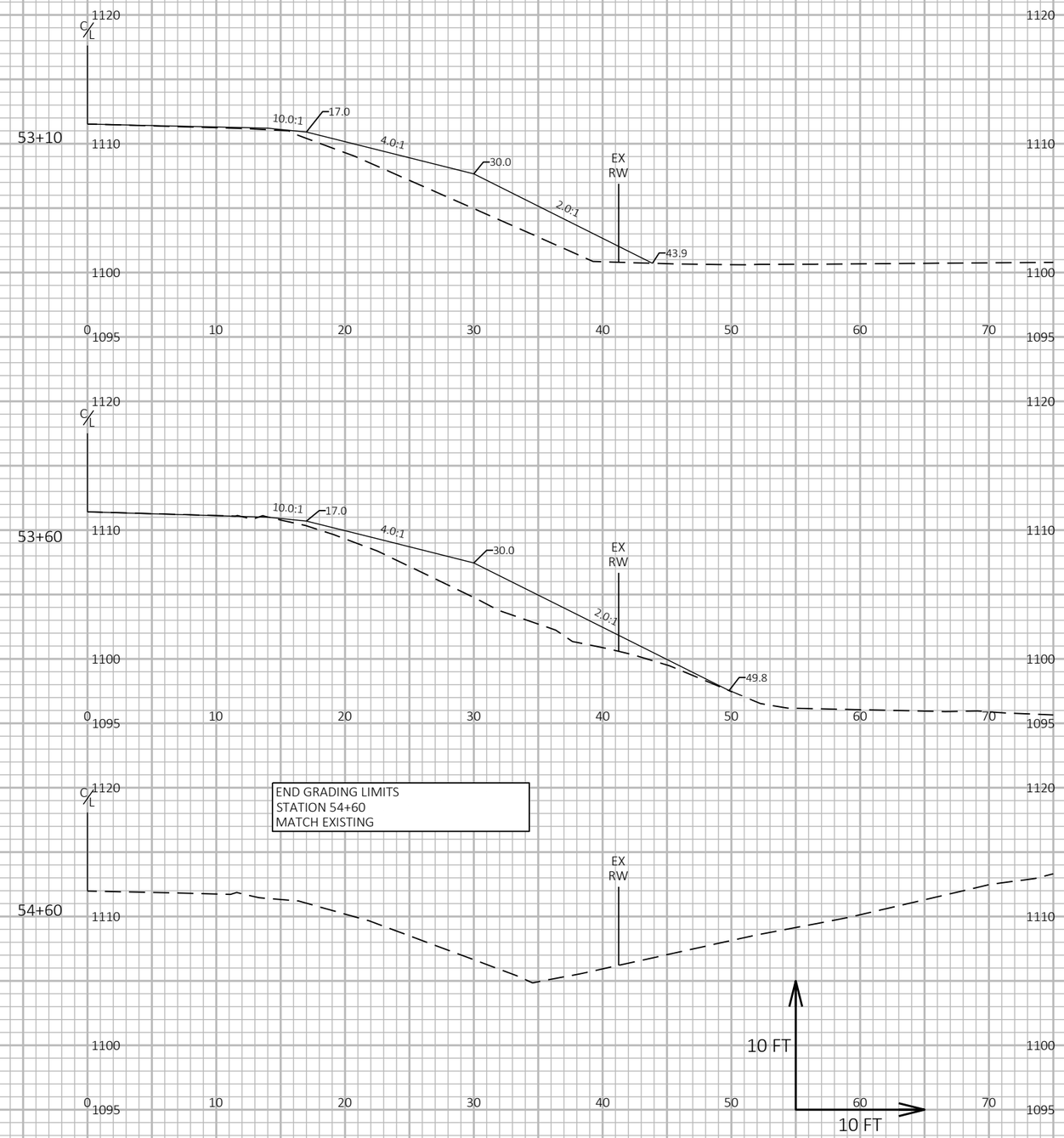

9

9

PROJECT NO: 5730-00-71	HWY: STH 56	COUNTY: VERNON	CROSS SECTIONS: MAINLINE	SHEET 147	E

FILE NAME : \\LAXRTOPFLPPI01\N3PUBLIC\PDS\C3D\57300001\SHEETSPLAN\CROSS SECTIONS\090201_XS.DWG
LAYOUT NAME - 03
PLOT DATE : 10/18/2021 6:22 AM
PLOT BY : MIKSHOWSKY, CORY J
PLOT NAME :
PLOT SCALE : 1 IN:10 FT HORZ. / 1 IN:10 FT VERT.
WISDOT/CADDS SHEET 49

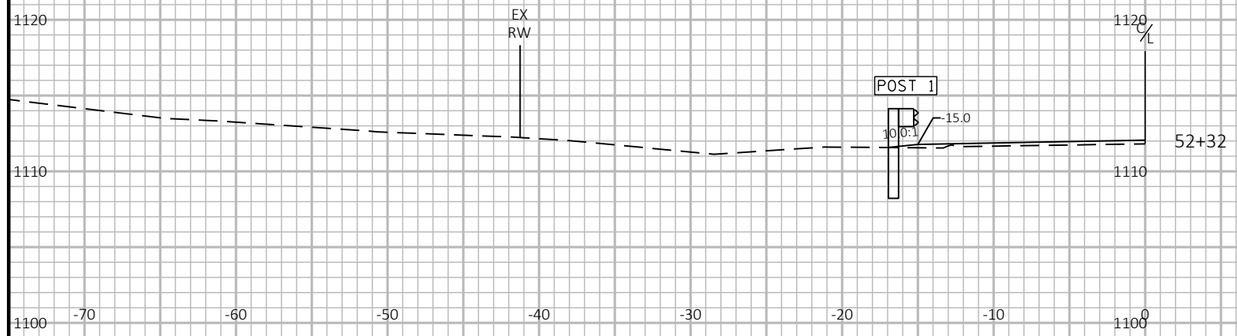

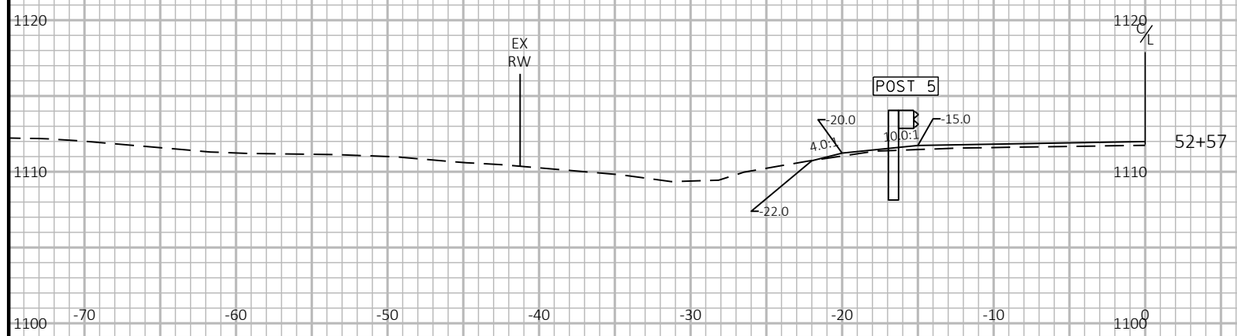

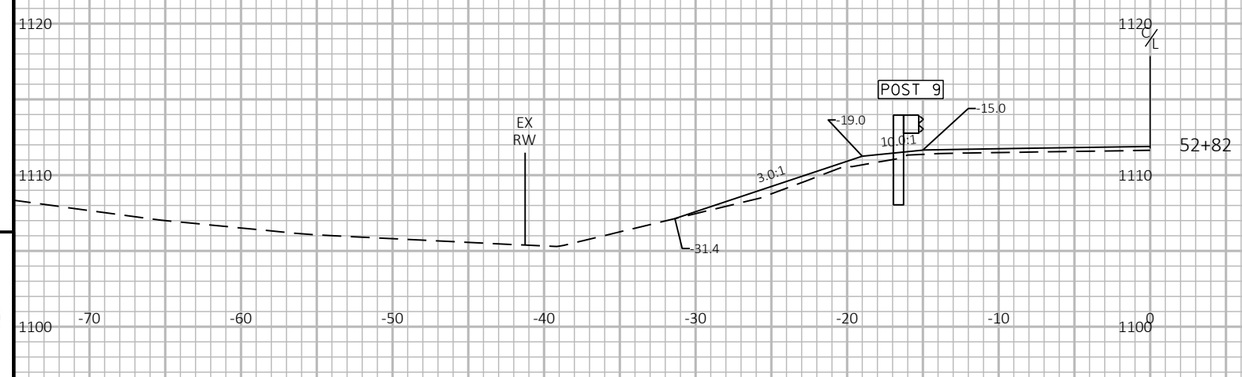

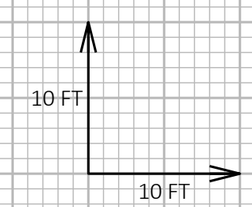

9

9

PROJECT NO: 5730-00-71	HWY: STH 56	COUNTY: VERNON	CROSS SECTIONS: EAT GRADING	SHEET 148	E

FILE NAME : \\LAXRTOPFLPPI01\N3PUBLIC\PDS\C3D\57300001\SHEETSPLAN\GUARDRAIL\52+32 - 57+97 LT.DWG
LAYOUT NAME - 01
PLOT DATE : 11/9/2020 1:27 PM
PLOT BY : MIKSHOWSKY, CORY J
PLOT NAME :
PLOT SCALE : 1 IN:10 FT HORZ. / 1 IN:10 FT VERT.
WISDOT/CADDS SHEET 49

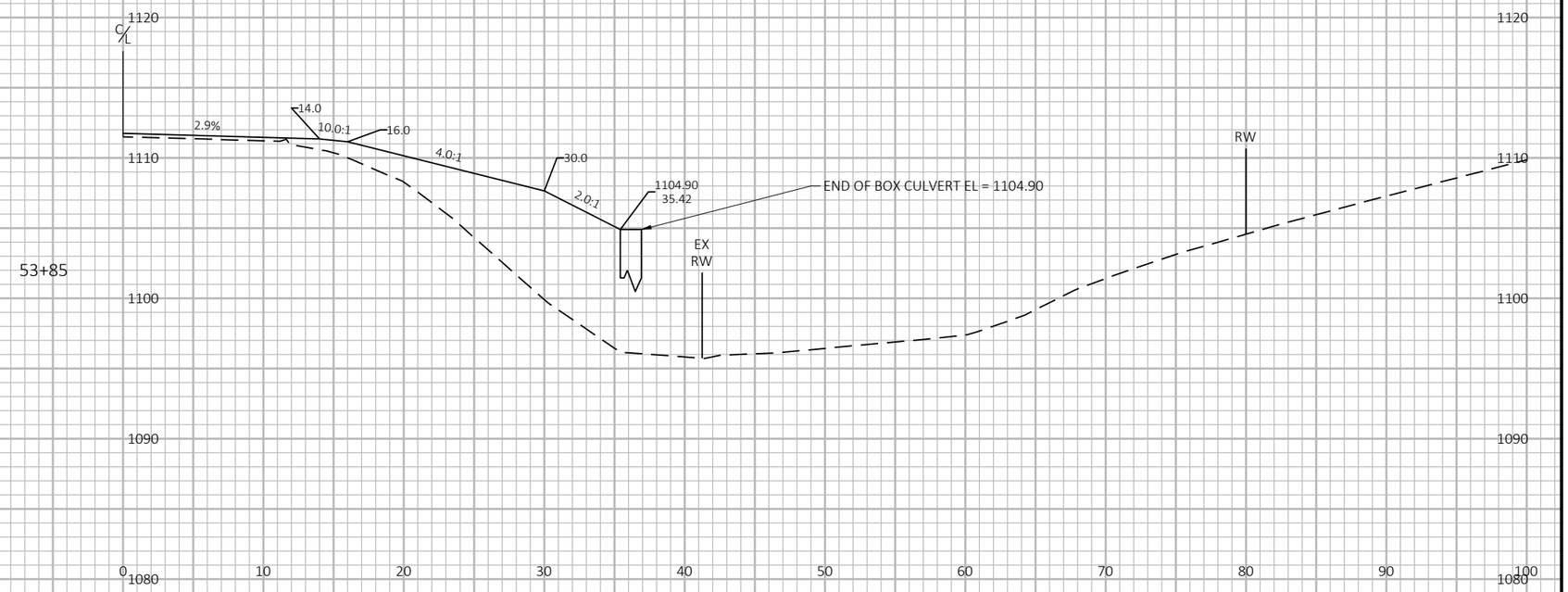

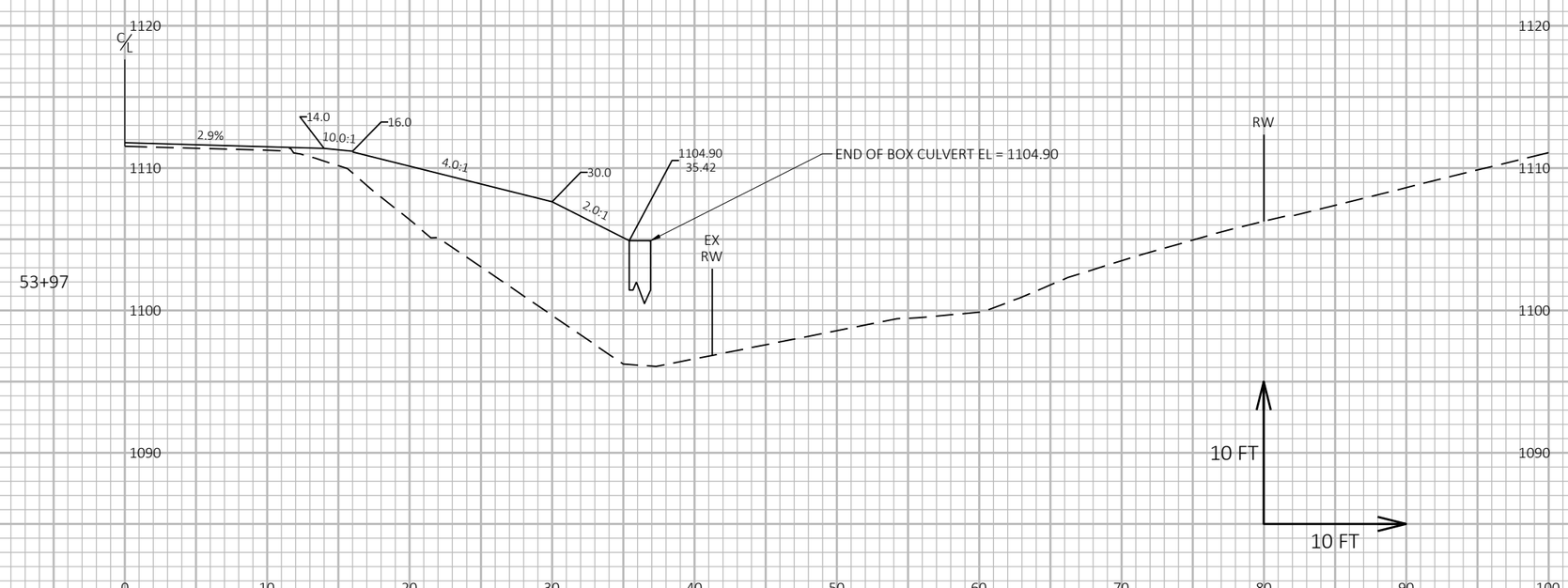

9

9

PROJECT NO: 5730-00-71	HWY: STH 56	COUNTY: VERNON	CROSS SECTIONS: C-62-314	SHEET 149	E

FILE NAME : \\LAXRTOPFLPPI01\N3PUBLIC\PDS\C3D\57300001\DESIGN\C62314_XS.DWG
LAYOUT NAME - 01

PLOT DATE : 9/24/2021 12:47 AM PLOT BY : MIKSHOWSKY, CORY J PLOT NAME : **PLOT SCALE :** 1 IN:10 FT HORZ. / 1 IN:10 FT VERT.

WISDOT/CADDS SHEET 49

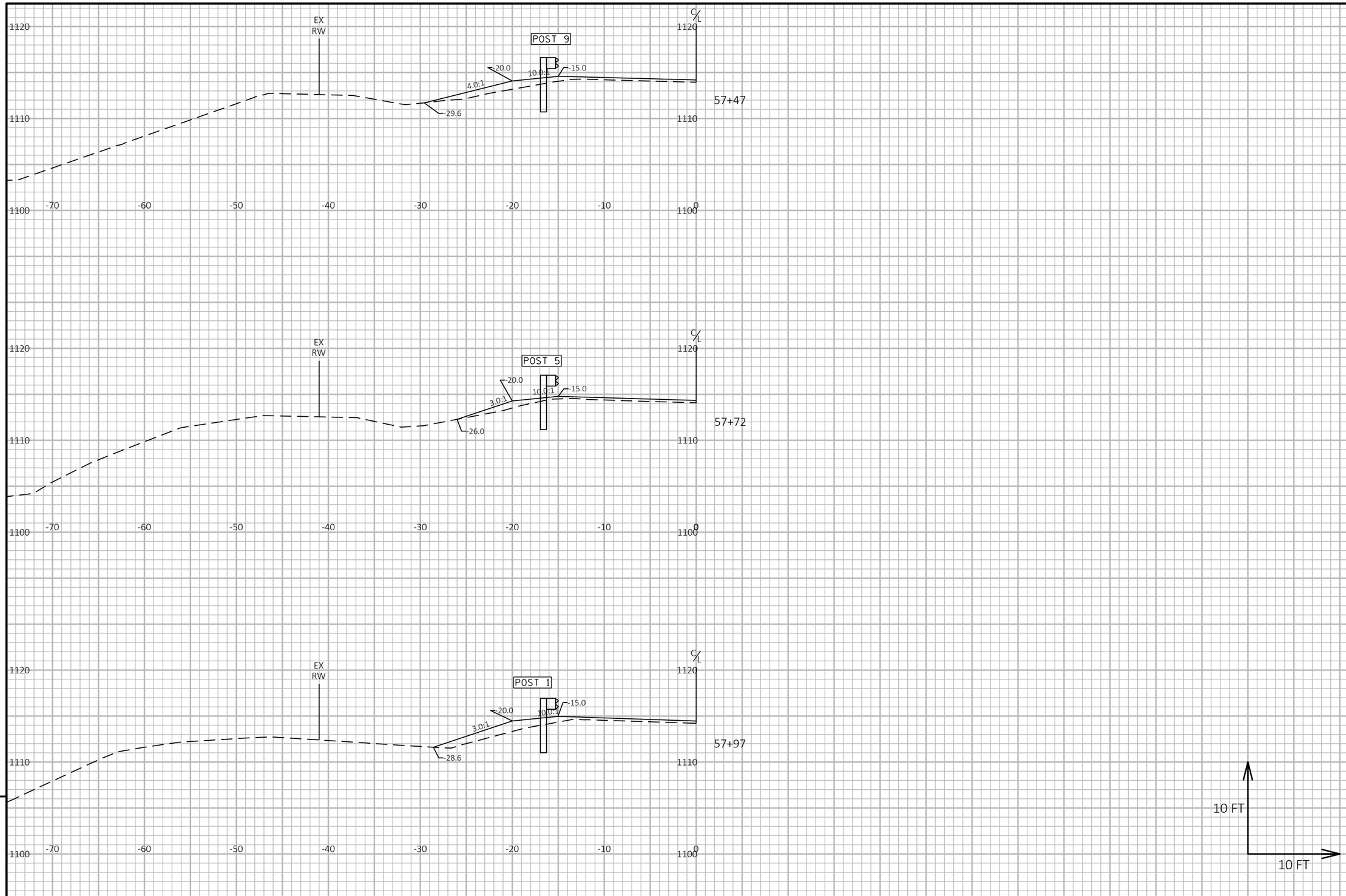

9

9

PROJECT NO: 5730-00-71	HWY: STH 56	COUNTY: VERNON	CROSS SECTIONS: EAT GRADING	SHEET 150	E

FILE NAME : \\LAXRTOPFLPPI01\N3PUBLIC\PDS\C3D\57300001\SHEETSPLAN\GUARDRAIL\52+32 - 57+97 LT.DWG
LAYOUT NAME - 02

PLOT DATE : 11/9/2020 1:27 PM PLOT BY : MIKSHOWSKY, CORY J PLOT NAME : **PLOT SCALE :** 1 IN:10 FT HORZ. / 1 IN:10 FT VERT.

WISDOT/CADDS SHEET 49

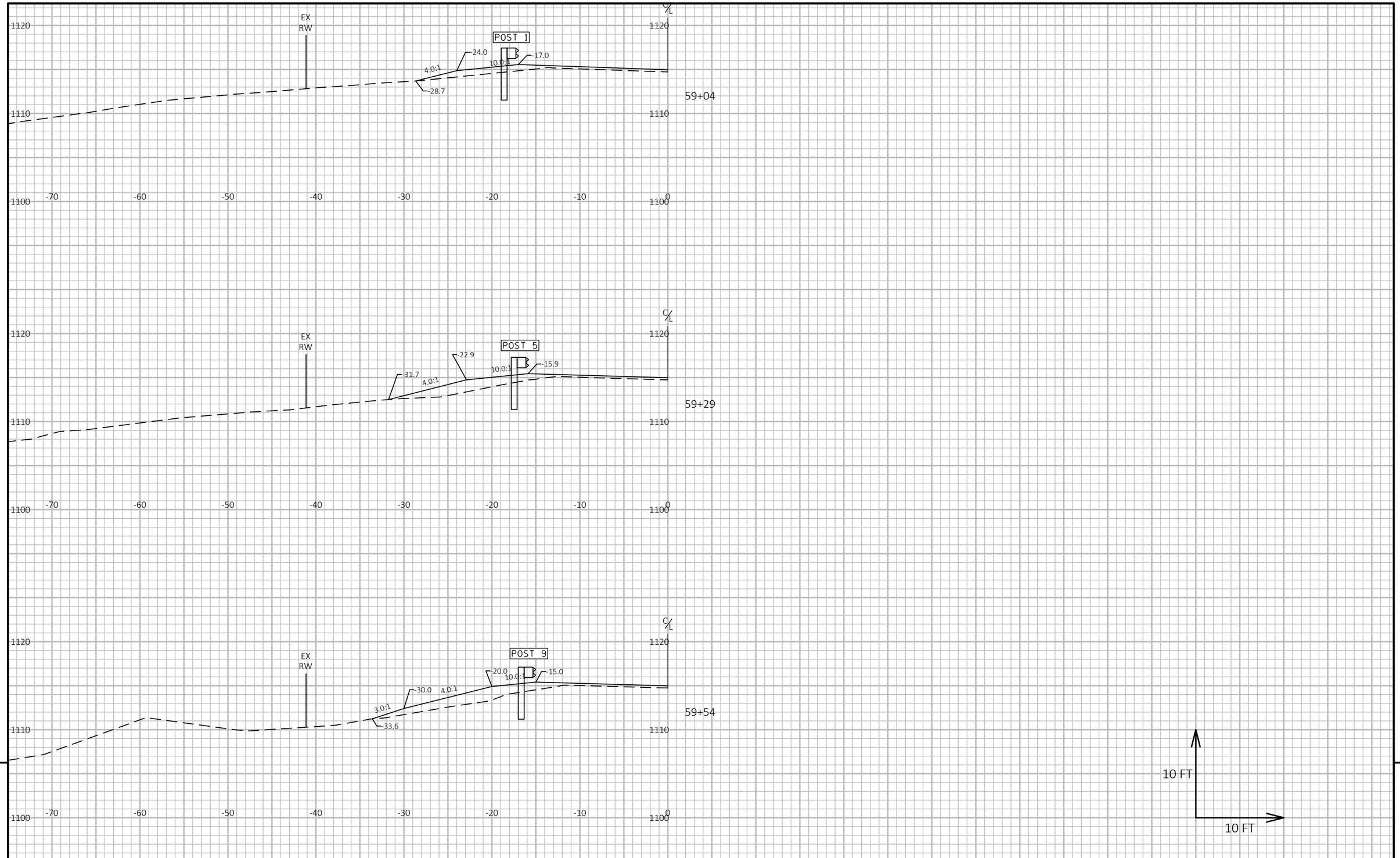

9

9

PROJECT NO: 5730-00-71	HWY: STH 56	COUNTY: VERNON	CROSS SECTIONS: EAT GRADING	SHEET 151	E

FILE NAME : \\LAXRTOPFLPPI01\N3PUBLIC\PDS\C3D\57300001\SHEETSPLAN\GUARDRAIL\59+04 - 66+93 LT.DWG
LAYOUT NAME - 01
PLOT DATE : 11/10/2020 6:02 AM
PLOT BY : MIKSHOWSKY, CORY J
PLOT NAME :
PLOT SCALE : 1 IN:10 FT HORZ. / 1 IN:10 FT VERT.
WISDOT/CADDS SHEET 49

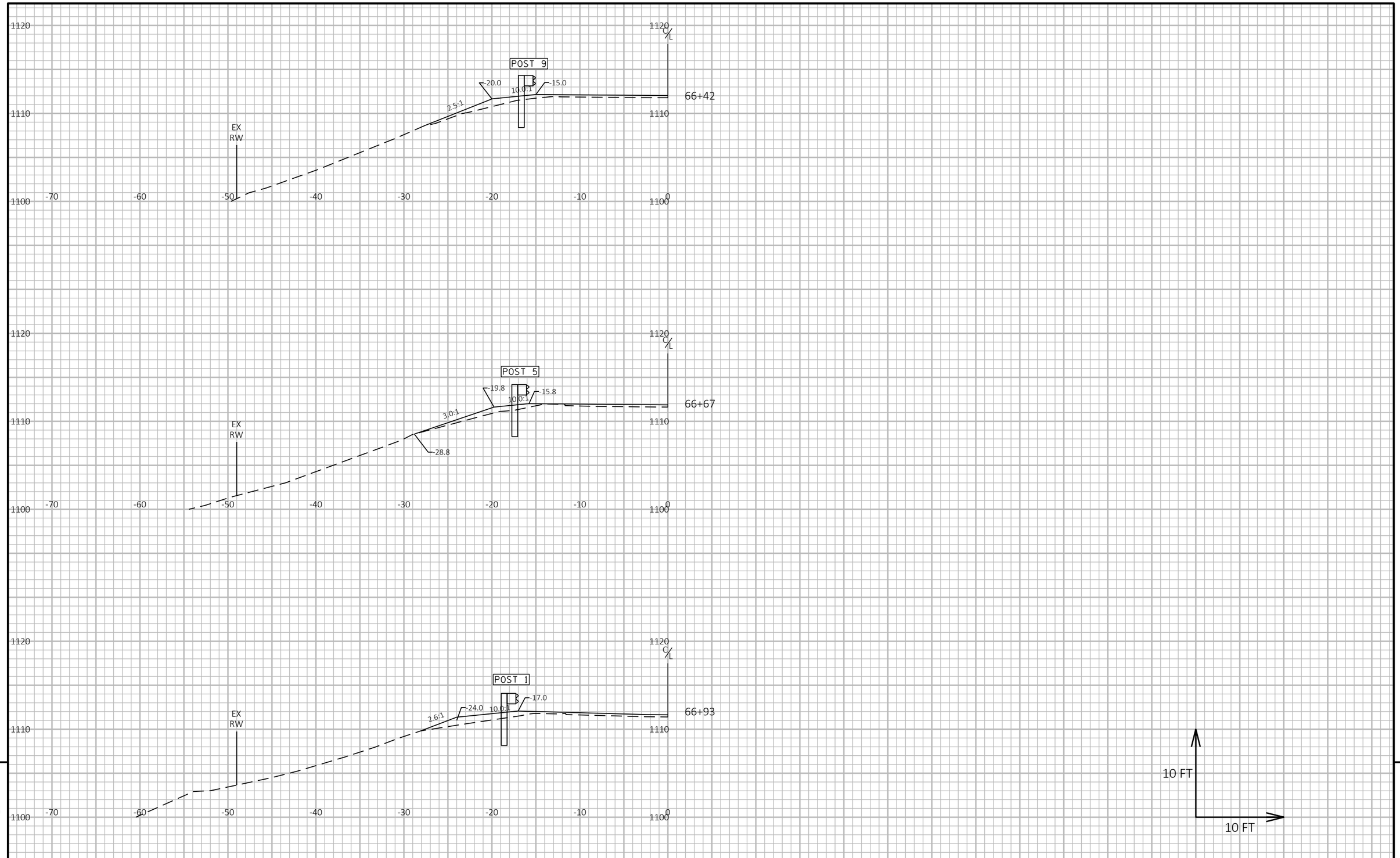

9

9

PROJECT NO: 5730-00-71	HWY: STH 56	COUNTY: VERNON	CROSS SECTIONS: EAT GRADING	SHEET 152	E

FILE NAME : \\LAXRTOPFLPPI01\N3PUBLIC\PDS\C3D\57300001\SHEETSPLAN\GUARDRAIL\59+04 - 66+93 LT.DWG
LAYOUT NAME - 02

PLOT DATE : 11/10/2020 6:02 AM PLOT BY : MIKSHOWSKY, CORY J PLOT NAME : **PLOT SCALE :** 1 IN:10 FT HORZ. / 1 IN:10 FT VERT.

WISDOT/CADDS SHEET 49

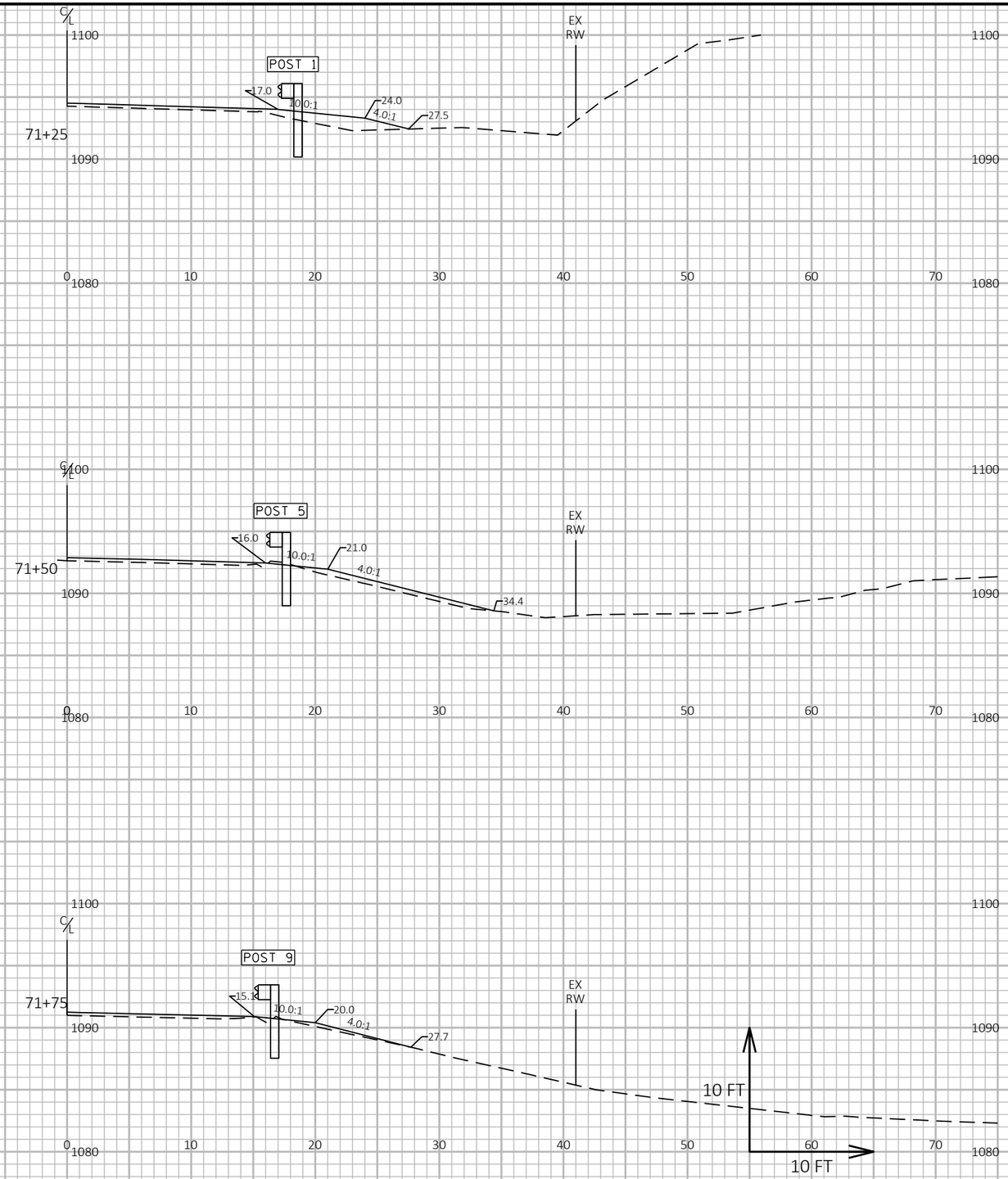

9

9

PROJECT NO: 5730-00-71	HWY: STH 56	COUNTY: VERNON	CROSS SECTIONS: EAT GRADING	SHEET 153	E

FILE NAME : \\LAXRTOPFLPPI01\N3PUBLIC\PDS\C3D\57300001\SHEETSPLAN\GUARDRAIL\71+25 - 74+74 RT.DWG
LAYOUT NAME - 01
PLOT DATE : 11/10/2020 6:32 AM
PLOT BY : MIKSHOWSKY, CORY J
PLOT NAME :
PLOT SCALE : 1 IN:10 FT HORZ. / 1 IN:10 FT VERT.
WISDOT/CADDS SHEET 49

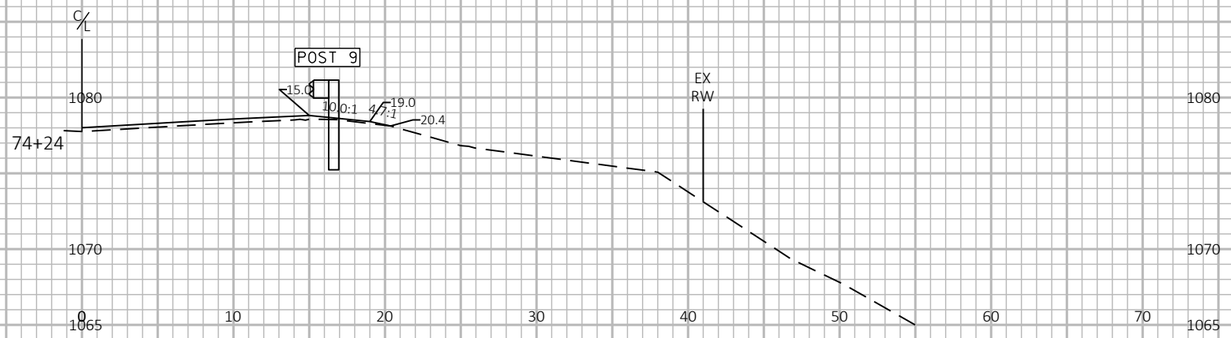

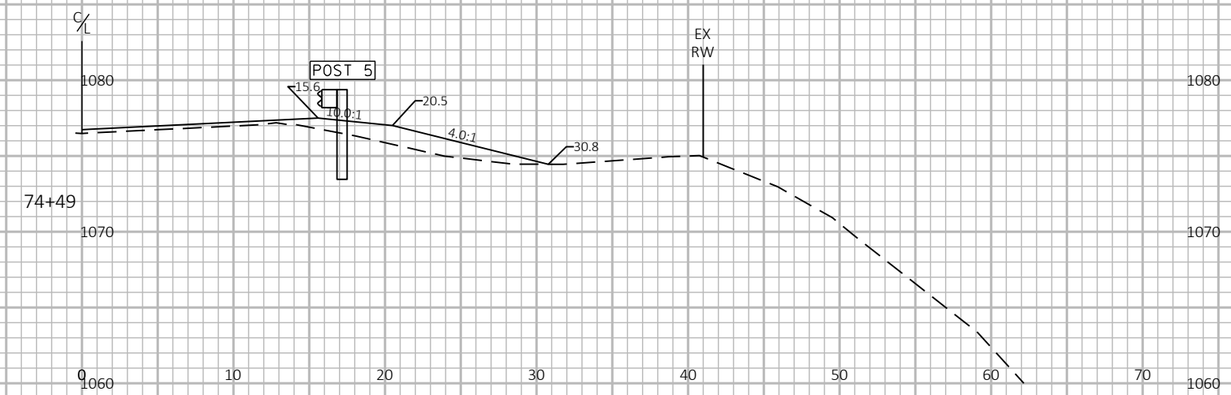

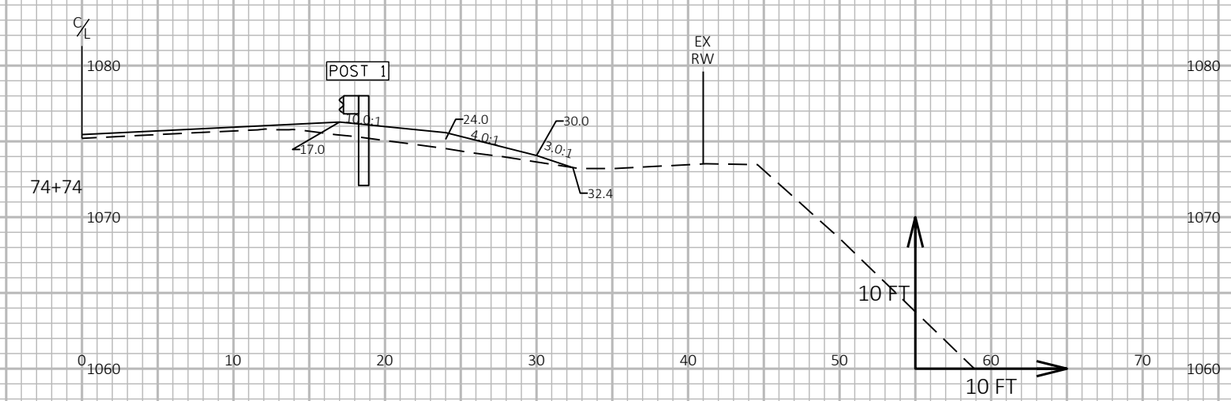

9

9

PROJECT NO: 5730-00-71	HWY: STH 56	COUNTY: VERNON	CROSS SECTIONS: EAT GRADING	SHEET 154	E

FILE NAME : \\LAXRTOPFLPPI01\N3PUBLIC\PDS\C3D\57300001\SHEETSPLAN\GUARDRAIL\71+25 - 74+74 RT.DWG
LAYOUT NAME - 02
PLOT DATE : 11/10/2020 6:32 AM
PLOT BY : MIKSHOWSKY, CORY J
PLOT NAME :
PLOT SCALE : 1 IN:10 FT HORZ. / 1 IN:10 FT VERT.
WISDOT/CADDS SHEET 49

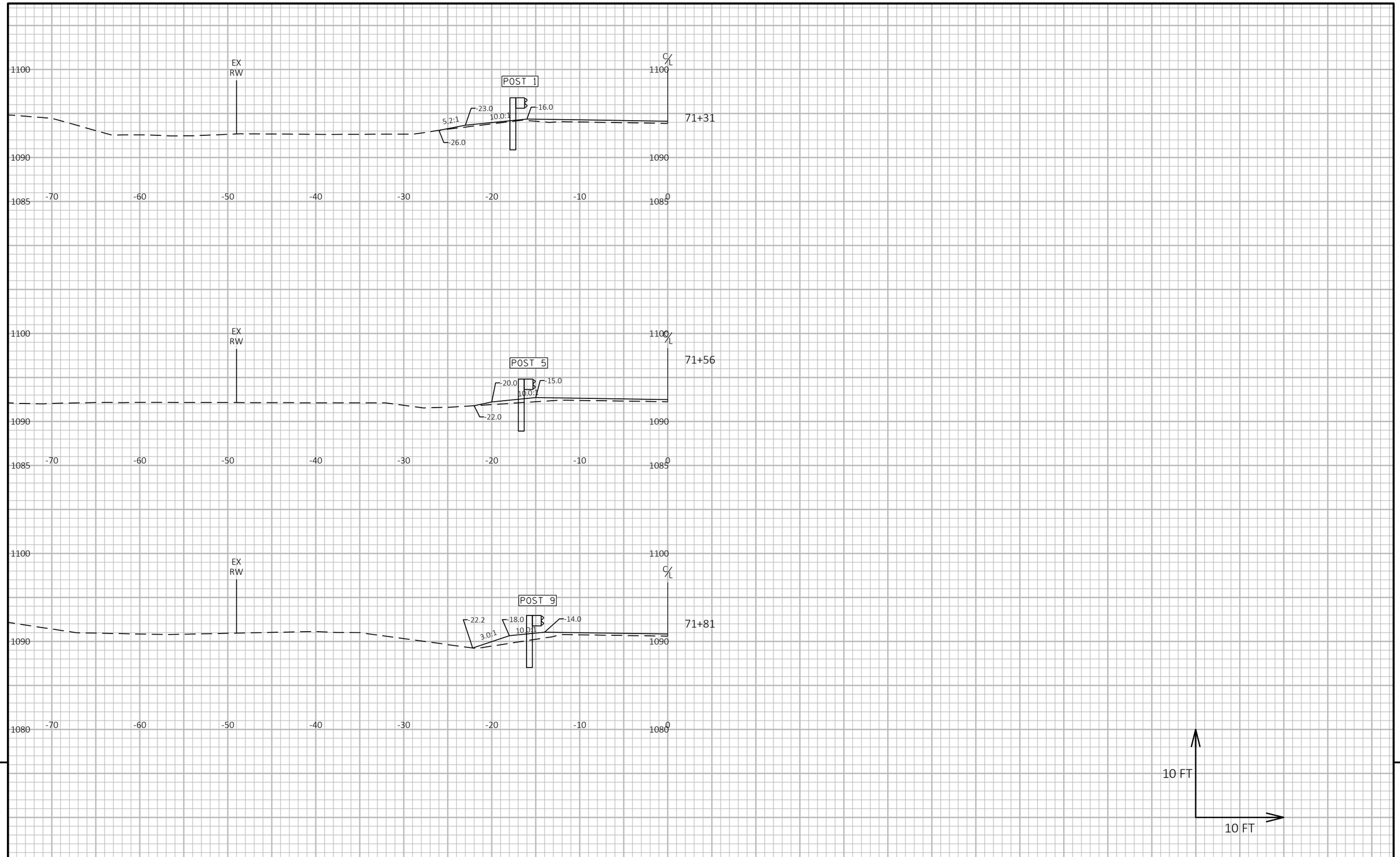

9

9

PROJECT NO: 5730-00-71	HWY: STH 56	COUNTY: VERNON	CROSS SECTIONS: EAT GRADING	SHEET 155	E

FILE NAME : \\LAXRTOPFLPPI01\N3PUBLIC\PDS\C3D\57300001\SHEETSPLAN\GUARDRAIL\71+31 - 73+29 LT.DWG
LAYOUT NAME - 01

PLOT DATE : 11/10/2020 6:39 AM PLOT BY : MIKSHOWSKY, CORY J PLOT NAME : **PLOT SCALE :** 1 IN:10 FT HORZ. / 1 IN:10 FT VERT.

WISDOT/CADDS SHEET 49

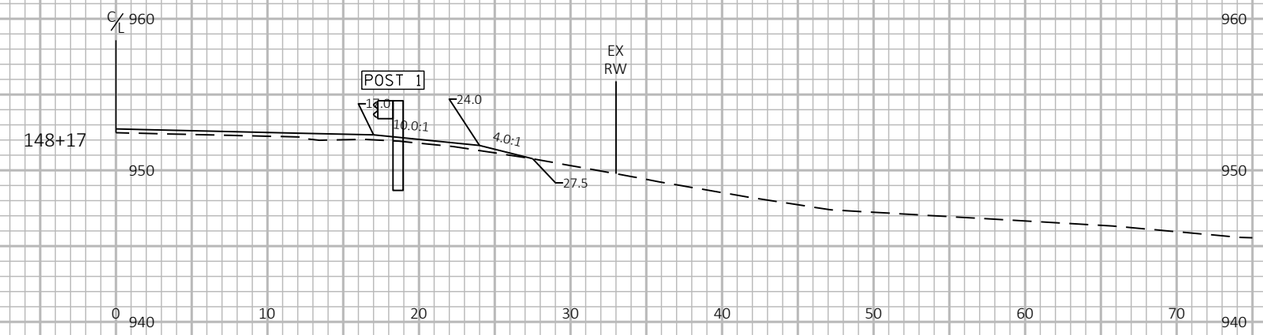

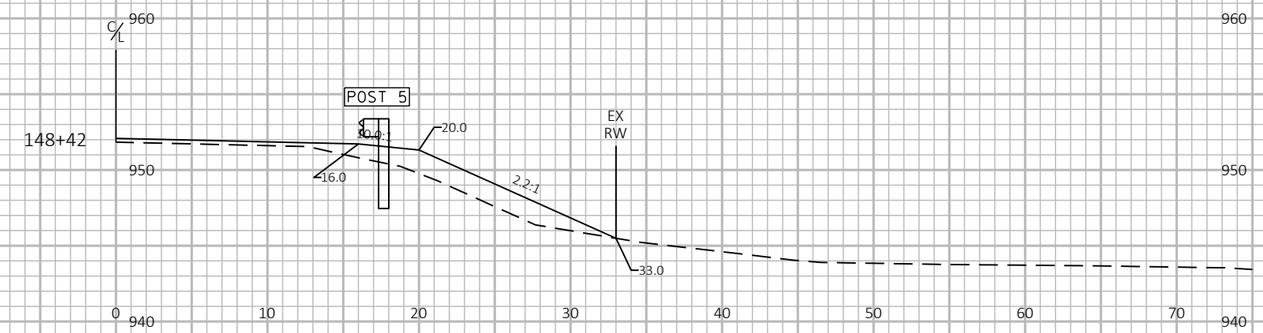

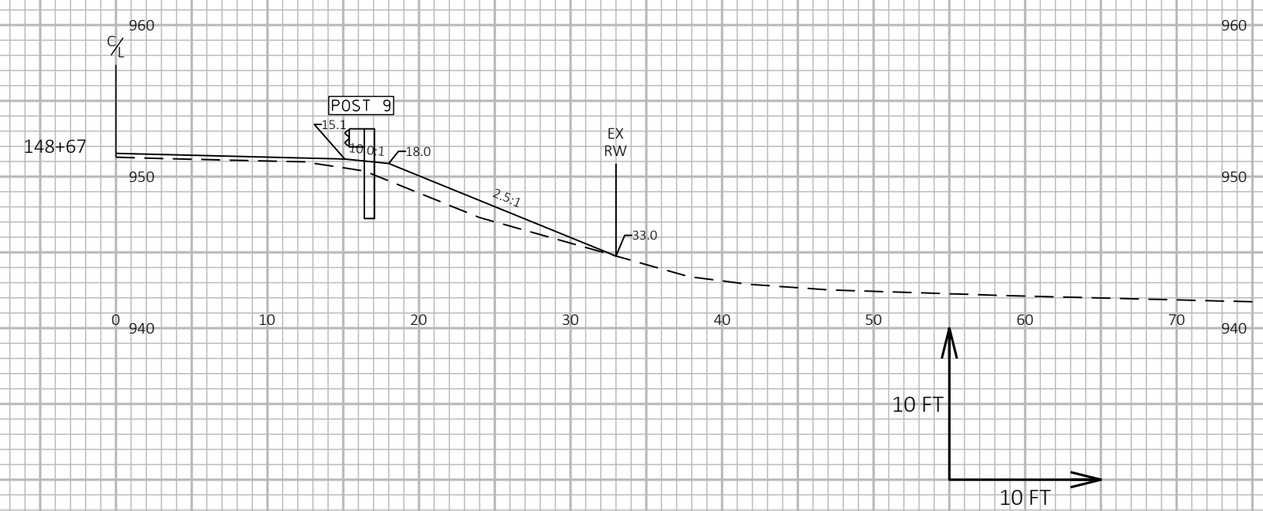

9

9

PROJECT NO: 5730-00-71	HWY: STH 56	COUNTY: VERNON	CROSS SECTIONS: EAT GRADING	SHEET 156	E

FILE NAME : \\LAXRTOPFLPPI01\N3PUBLIC\PDS\C3D\57300001\SHEETSPLAN\GUARDRAIL\148+17 - 154+51 RT.DWG
LAYOUT NAME - 01
PLOT DATE : 11/10/2020 6:54 AM
PLOT BY : MIKSHOWSKY, CORY J
PLOT NAME :
PLOT SCALE : 1 IN:10 FT HORZ. / 1 IN:10 FT VERT.

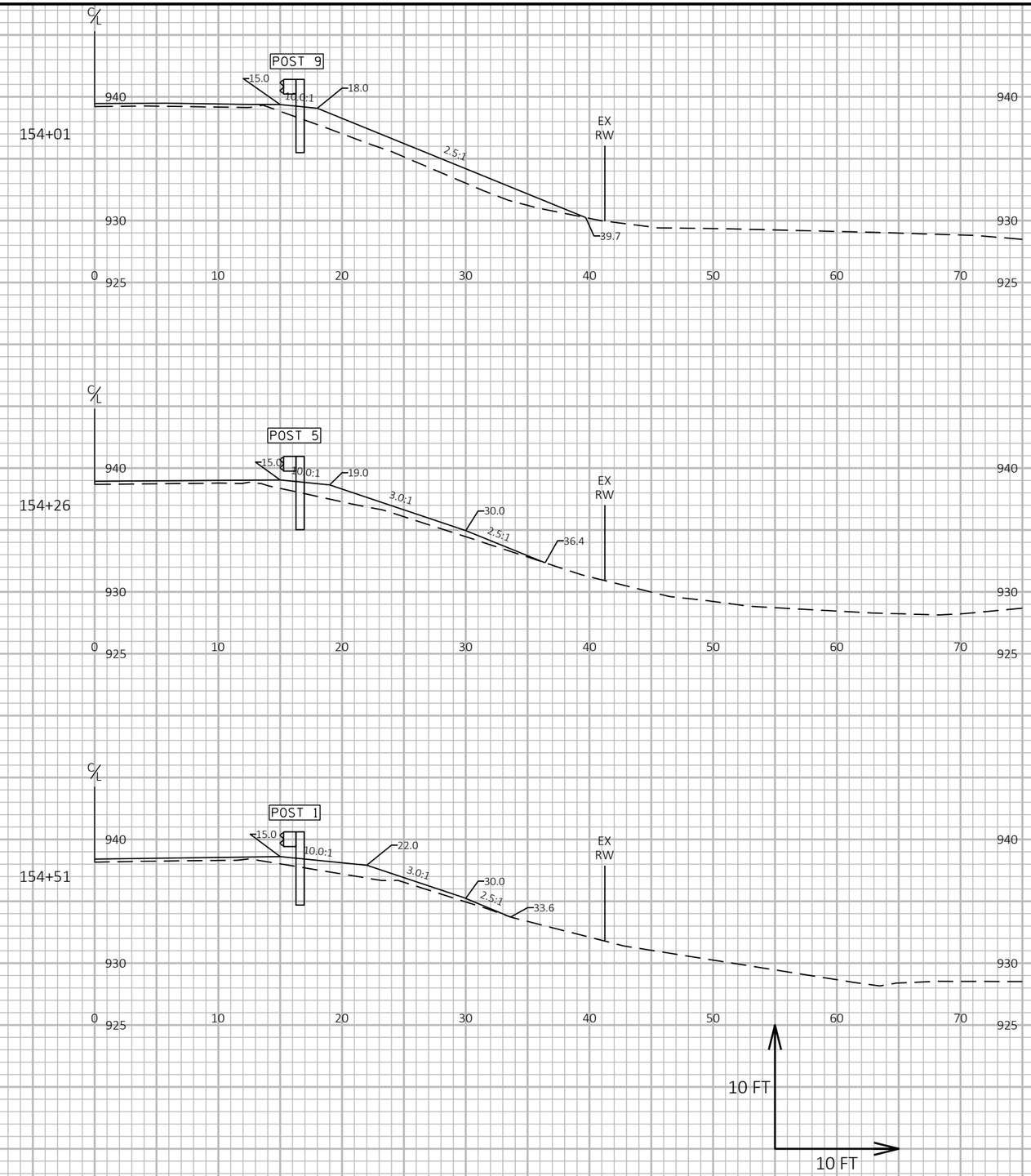

9

9

PROJECT NO: 5730-00-71	HWY: STH 56	COUNTY: VERNON	CROSS SECTIONS: EAT GRADING	SHEET 157	E

FILE NAME : \\LAXRTOPFLPPI01\N3PUBLIC\PDS\C3D\57300001\SHEETSPLAN\GUARDRAIL\148+17 - 154+51 RT.DWG
LAYOUT NAME - 02
PLOT DATE : 11/10/2020 6:54 AM
PLOT BY : MIKSHOWSKY, CORY J
PLOT NAME :
PLOT SCALE : 1 IN:10 FT HORZ. / 1 IN:10 FT VERT.
WISDOT/CADDS SHEET 49

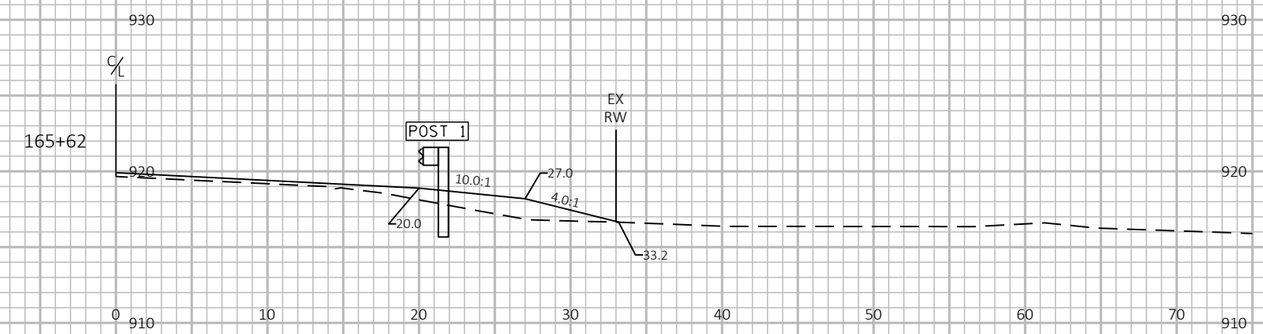

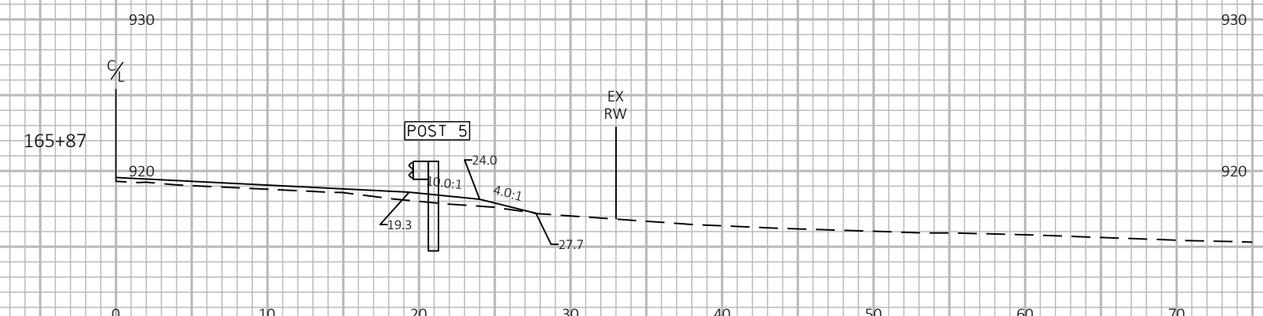

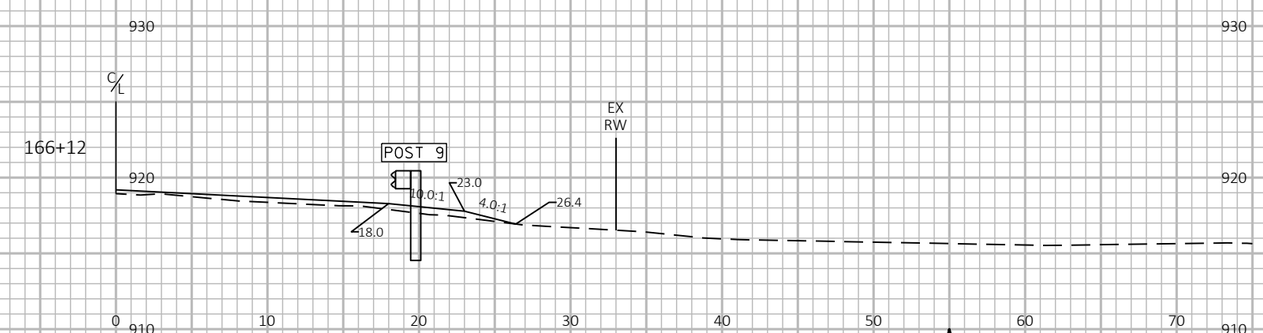

9

9

PROJECT NO: 5730-00-71	HWY: STH 56	COUNTY: VERNON	CROSS SECTIONS: EAT GRADING	SHEET 158	E

FILE NAME : \\LAXRTOPFLPPI01\N3PUBLIC\PDS\C3D\57300001\SHEETSPLAN\GUARDRAIL\165+62 - 167+93 RT.DWG
LAYOUT NAME - 01
PLOT DATE : 11/10/2020 7:47 AM
PLOT BY : MIKSHOWSKY, CORY J
PLOT NAME :
PLOT SCALE : 1 IN:10 FT HORZ. / 1 IN:10 FT VERT.
WISDOT/CADDS SHEET 49

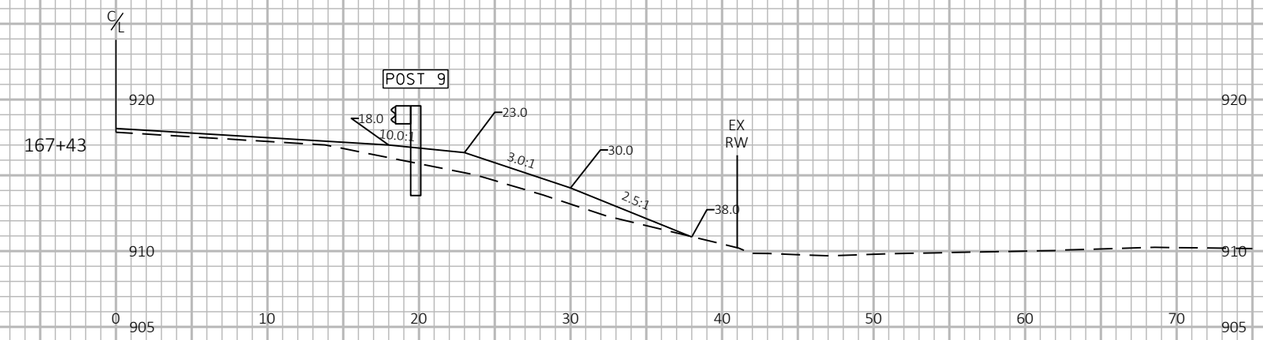

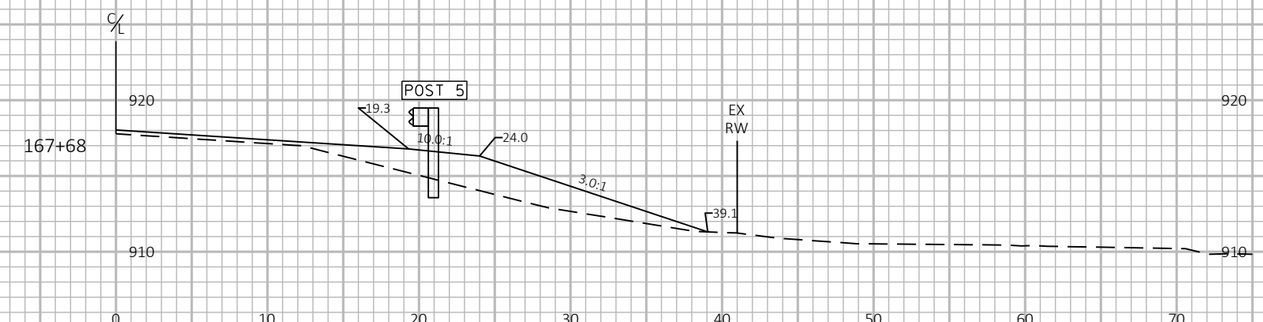

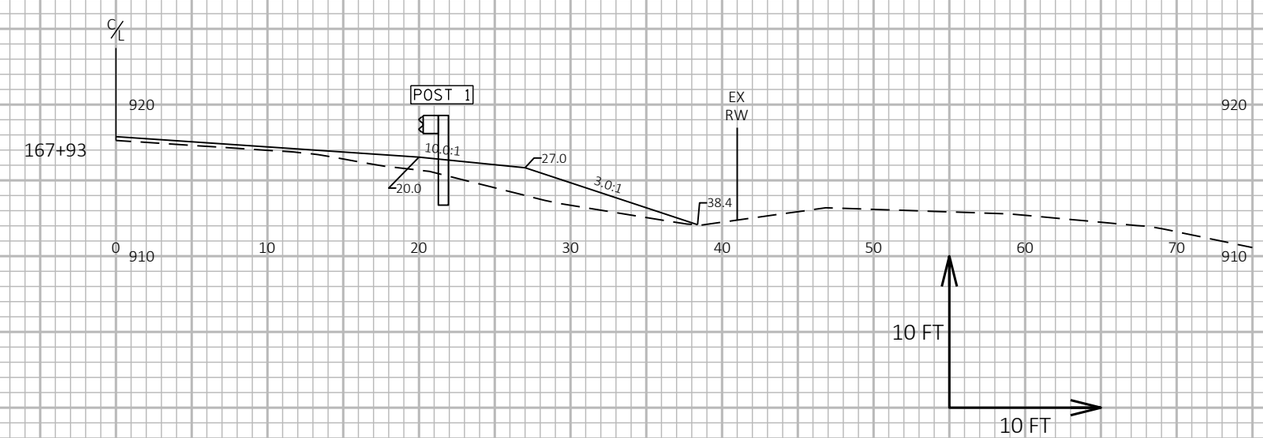

9

9

PROJECT NO: 5730-00-71	HWY: STH 56	COUNTY: VERNON	CROSS SECTIONS: EAT GRADING	SHEET 159	E

FILE NAME : \\LAXRTOPFLPPI01\N3PUBLIC\PDS\C3D\57300001\SHEETSPLAN\GUARDRAIL\165+62 - 167+93 RT.DWG
LAYOUT NAME - 02
PLOT DATE : 11/10/2020 7:47 AM
PLOT BY : MIKSHOWSKY, CORY J
PLOT NAME :
PLOT SCALE : 1 IN:10 FT HORZ. / 1 IN:10 FT VERT.
WISDOT/CADDS SHEET 49

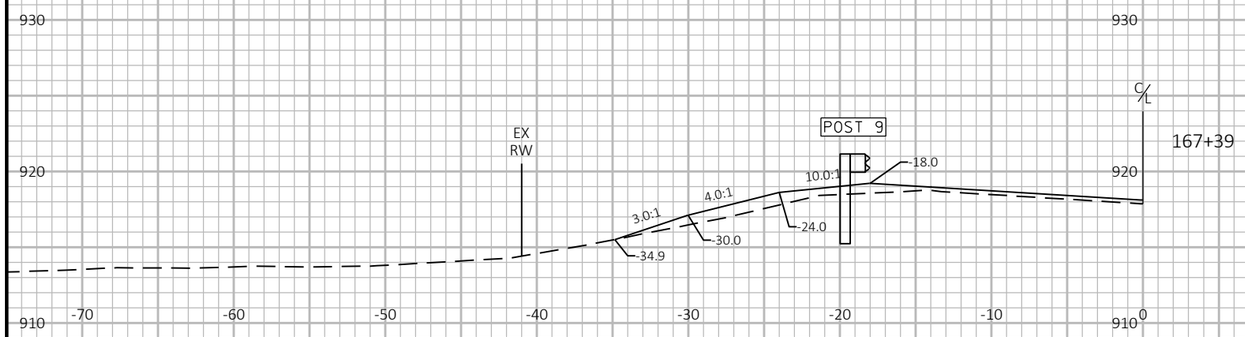

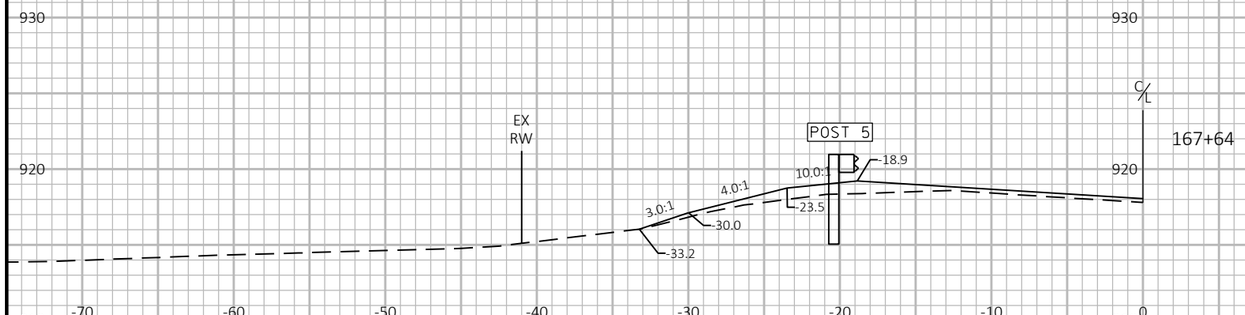

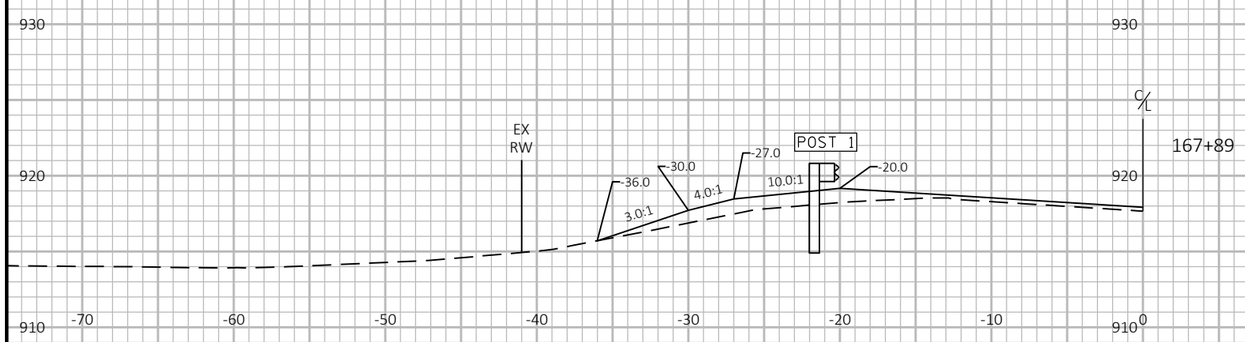

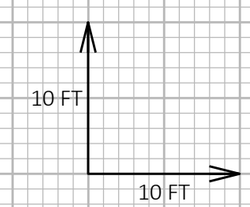

9

9

PROJECT NO: 5730-00-71	HWY: STH 56	COUNTY: VERNON	CROSS SECTIONS: EAT GRADING	SHEET 160	E

FILE NAME : \\LAXRTOPFLPPI01\N3PUBLIC\PDS\C3D\57300001\SHEETSPLAN\GUARDRAIL\165+83 - 167+89 LT.DWG
LAYOUT NAME - 01
PLOT DATE : 11/10/2020 7:50 AM
PLOT BY : MIKSHOWSKY, CORY J
PLOT NAME :
PLOT SCALE : 1 IN:10 FT HORZ. / 1 IN:10 FT VERT.
WISDOT/CADDS SHEET 49

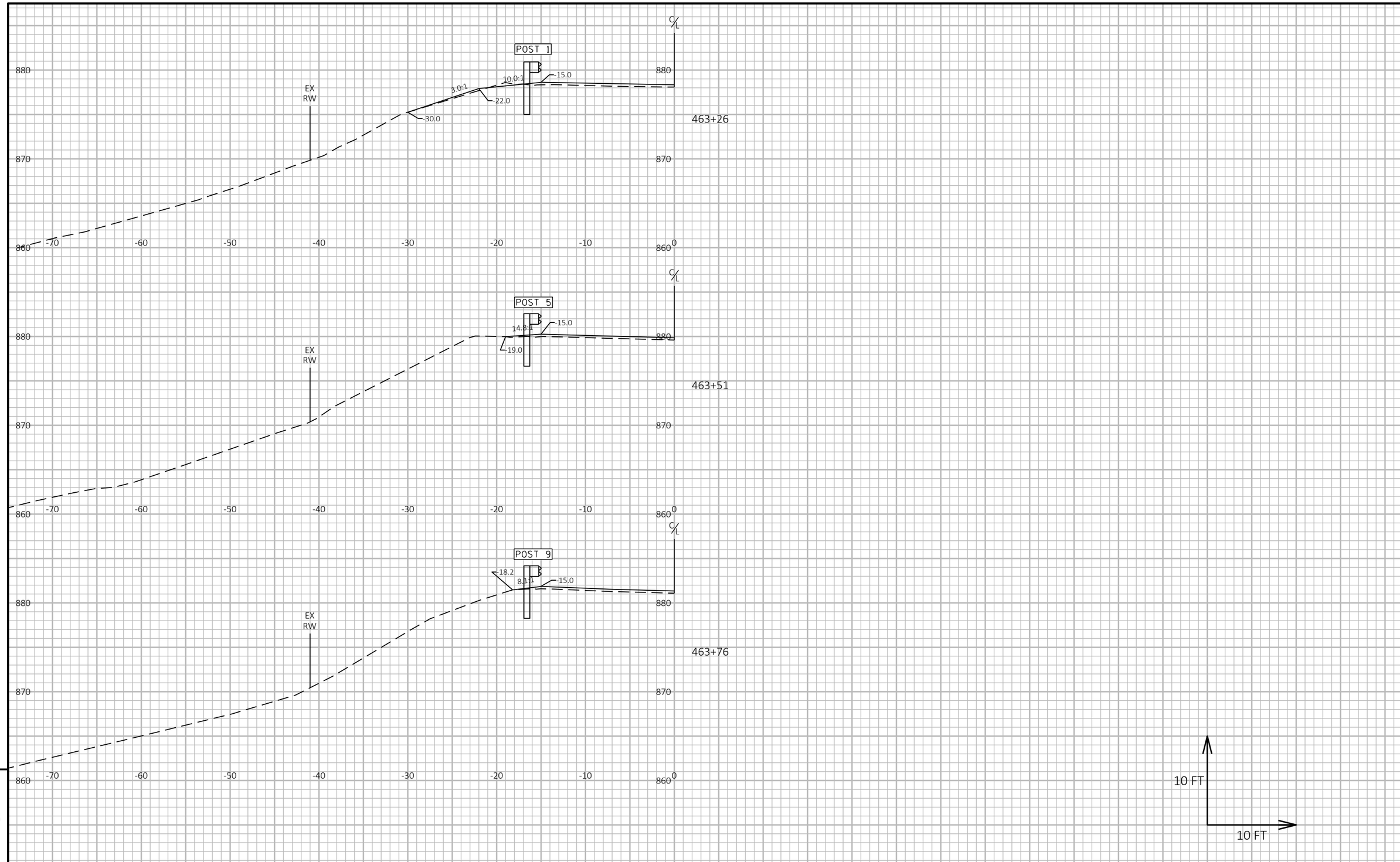

9

9

PROJECT NO: 5730-00-71	HWY: STH 56	COUNTY: VERNON	CROSS SECTIONS: EAT GRADING	SHEET 161	E

FILE NAME : \\LAXRTOPFLPPI01\N3PUBLIC\PDS\C3D\57300001\SHEETSPLAN\GUARDRAIL\463+26 - 507+12 LT.DWG
LAYOUT NAME - 01

PLOT DATE : 11/10/2020 7:54 AM PLOT BY : MIKSHOWSKY, CORY J PLOT NAME : PLOT SCALE : 1 IN:10 FT HORZ. / 1 IN:10 FT VERT.

WISDOT/CADDS SHEET 49

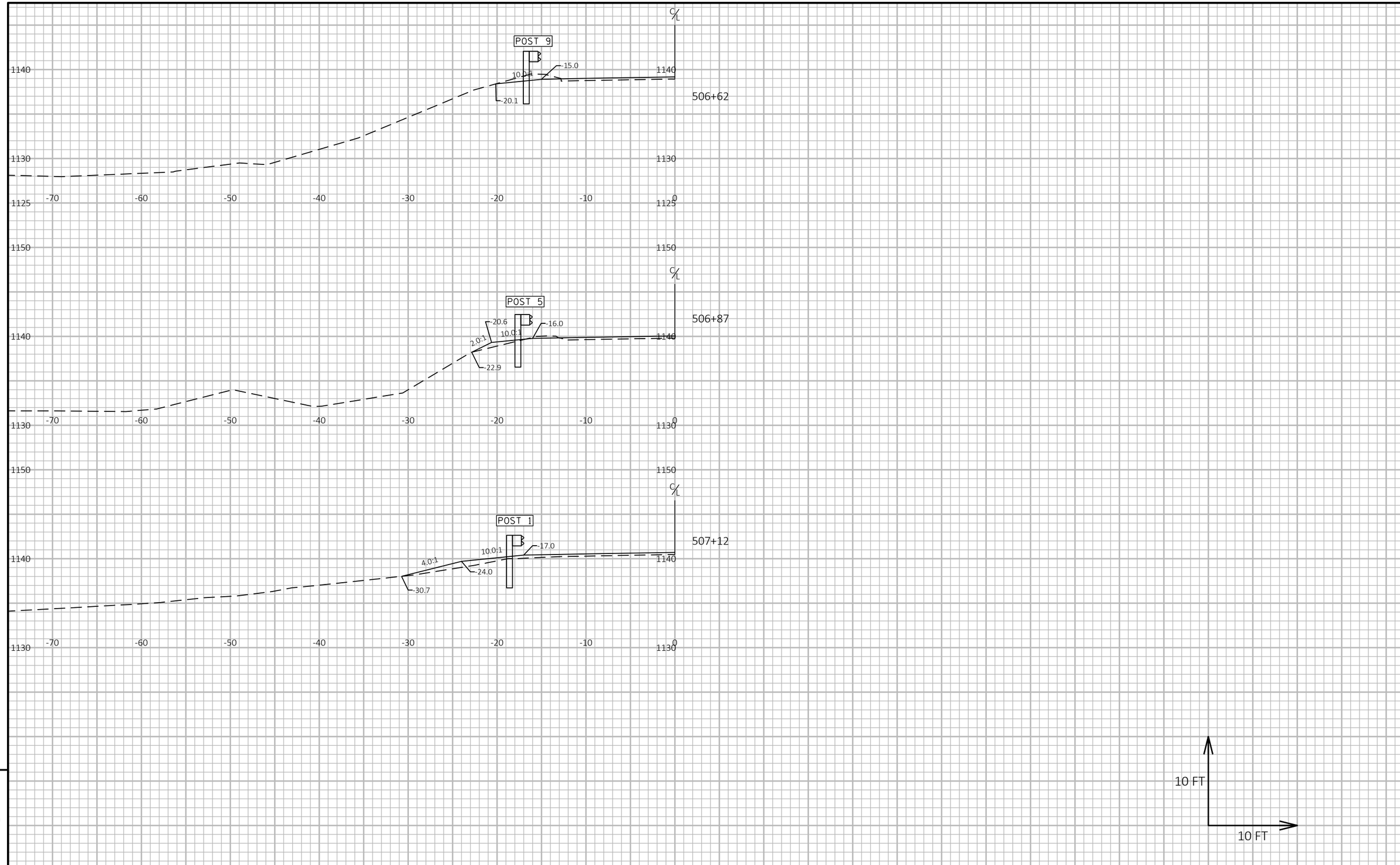

9

9

PROJECT NO: 5730-00-71	HWY: STH 56	COUNTY: VERNON	CROSS SECTIONS: EAT GRADING	SHEET 162	E

FILE NAME : \\LAXRTOPFLPPI01\N3PUBLIC\PDS\C3D\57300001\SHEETSPLAN\GUARDRAIL\463+26 - 507+12 LT.DWG
LAYOUT NAME - 02
PLOT DATE : 11/10/2020 7:54 AM
PLOT BY : MIKSHOWSKY, CORY J
PLOT NAME :
PLOT SCALE : 1 IN:10 FT HORZ. / 1 IN:10 FT VERT.
WISDOT/CADDS SHEET 49

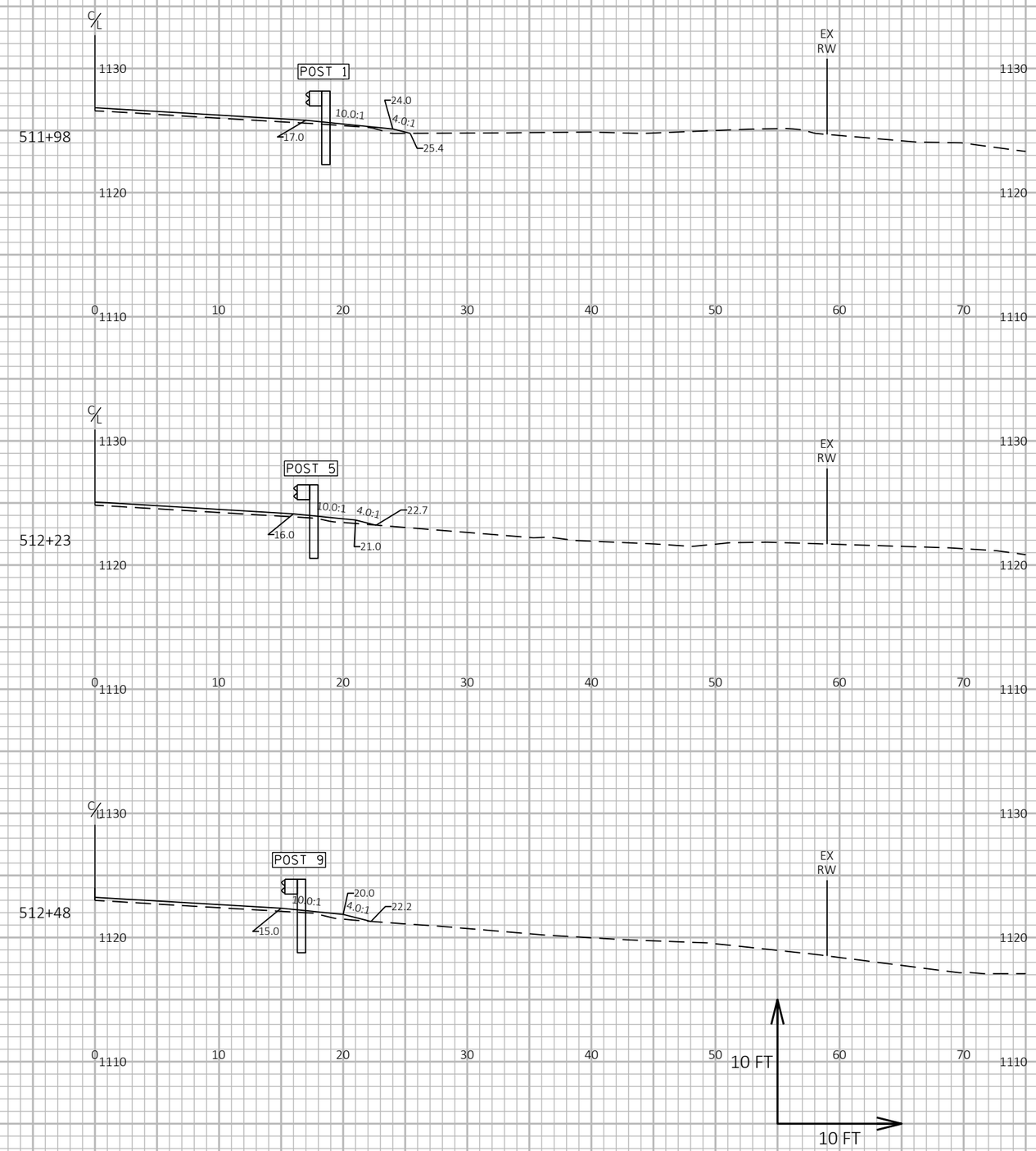

9

9

PROJECT NO: 5730-00-71	HWY: STH 56	COUNTY: VERNON	CROSS SECTIONS: EAT GRADING	SHEET 163	E

FILE NAME : \\LAXRTOPFLPPI01\N3PUBLIC\PDS\C3D\57300001\SHEETSPLAN\GUARDRAIL\511+98 - 548+05 RT.DWG
LAYOUT NAME - 01
PLOT DATE : 11/10/2020 7:58 AM
PLOT BY : MIKSHOWSKY, CORY J
PLOT NAME :
PLOT SCALE : 1 IN:10 FT HORZ. / 1 IN:10 FT VERT.
WISDOT/CADDS SHEET 49

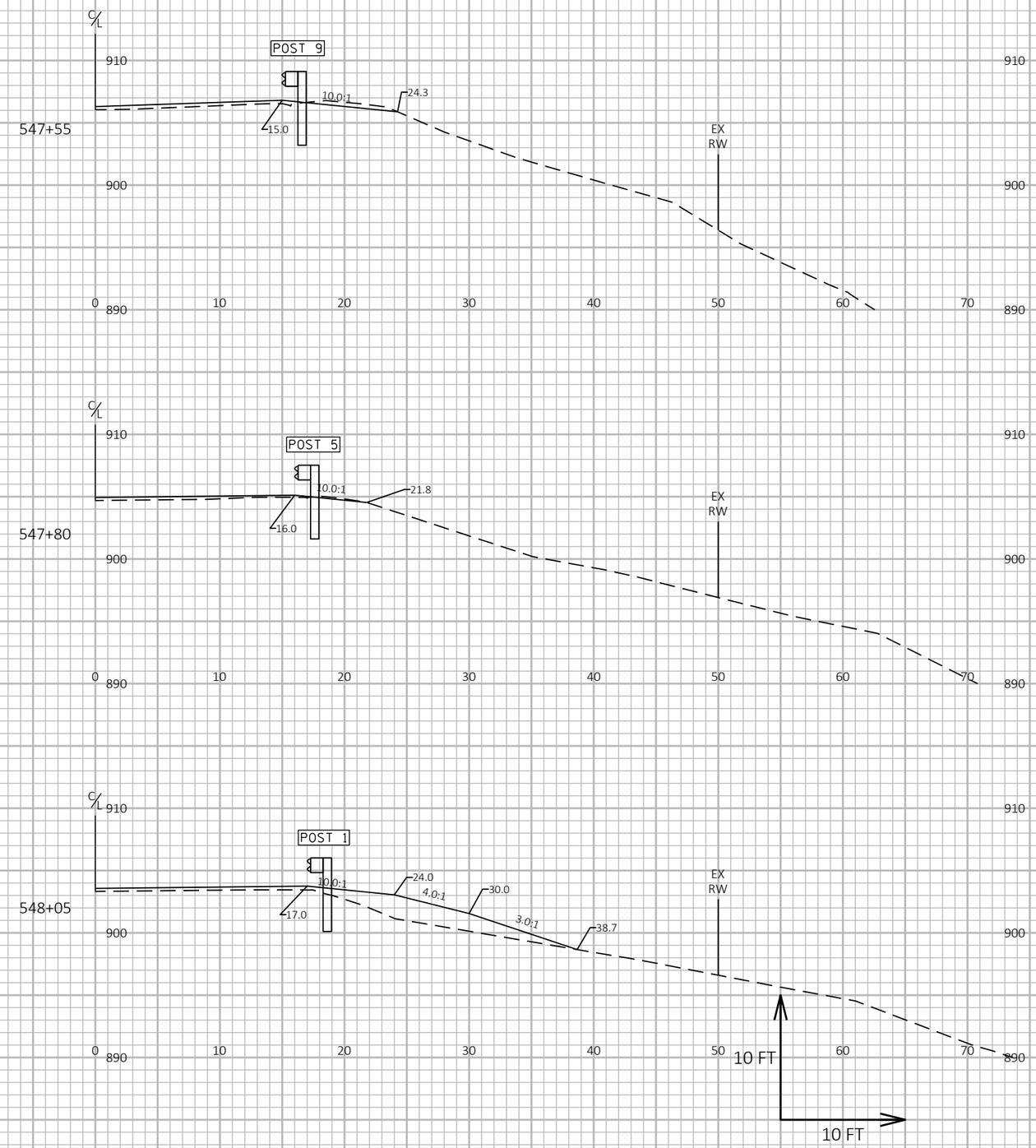

9

9

PROJECT NO: 5730-00-71	HWY: STH 56	COUNTY: VERNON	CROSS SECTIONS: EAT GRADING	SHEET 164	E

FILE NAME : \\LAXRTOPFLPPI01\N3PUBLIC\PDS\C3D\57300001\SHEETSPLAN\GUARDRAIL\511+98 - 548+05 RT.DWG
LAYOUT NAME - 02
PLOT DATE : 11/10/2020 7:58 AM
PLOT BY : MIKSHOWSKY, CORY J
PLOT NAME :
PLOT SCALE : 1 IN:10 FT HORZ. / 1 IN:10 FT VERT.
WISDOT/CADDS SHEET 49

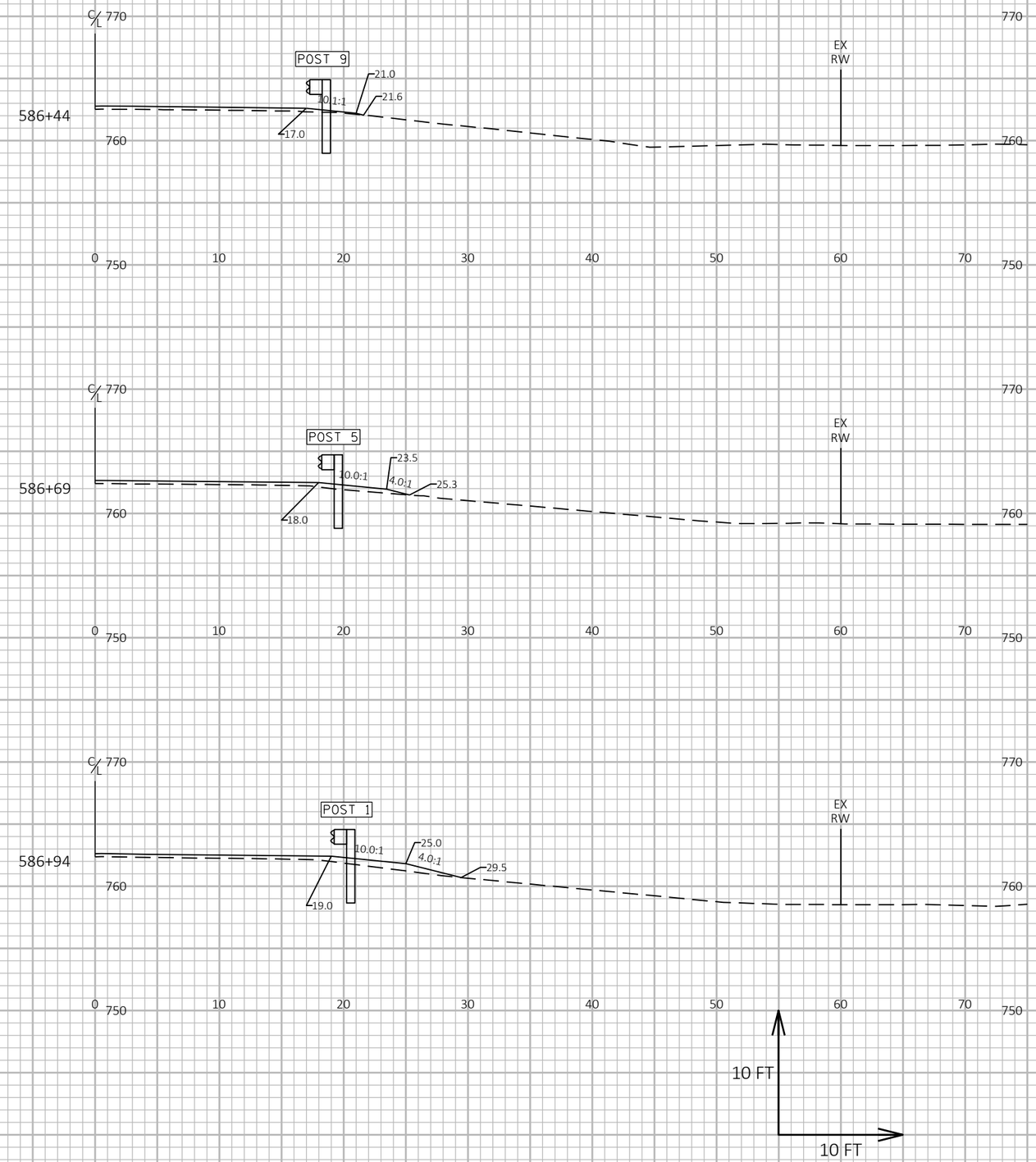

9

9

PROJECT NO: 5730-00-71	HWY: STH 56	COUNTY: VERNON	CROSS SECTIONS: EAT GRADING	SHEET 165	E

FILE NAME : \\LAXRTOPFLPPI01\N3PUBLIC\PDS\C3D\57300001\SHEETSPLAN\GUARDRAIL\584+89 - 586+94 RT.DWG
LAYOUT NAME - 01

PLOT DATE : 11/10/2020 8:01 AM PLOT BY : MIKSHOWSKY, CORY J PLOT NAME : **PLOT SCALE :** 1 IN:10 FT HORZ. / 1 IN:10 FT VERT.

WISDOT/CADDS SHEET 49

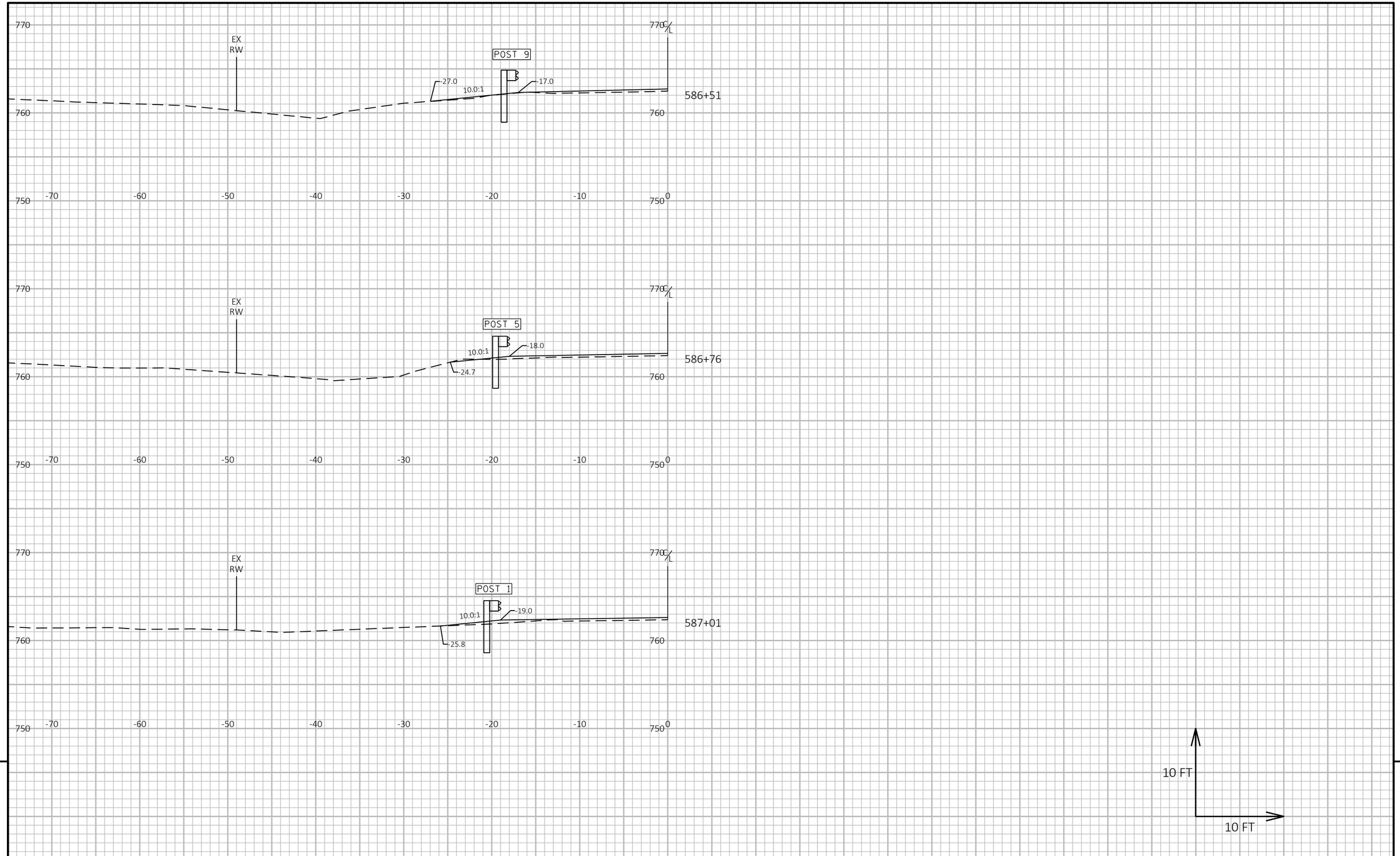

9

9

PROJECT NO: 5730-00-71	HWY: STH 56	COUNTY: VERNON	CROSS SECTIONS: EAT GRADING	SHEET 166	E

FILE NAME : \\LAXRTOPFLPPI01\N3PUBLIC\PDS\C3D\57300001\SHEETSPLAN\GUARDRAIL\584+98 - 587+01 LT.DWG
LAYOUT NAME - 01

PLOT DATE : 11/10/2020 8:05 AM PLOT BY : MIKSHOWSKY, CORY J PLOT NAME : **PLOT SCALE :** 1 IN:10 FT HORZ. / 1 IN:10 FT VERT.

WISDOT/CADDS SHEET 49

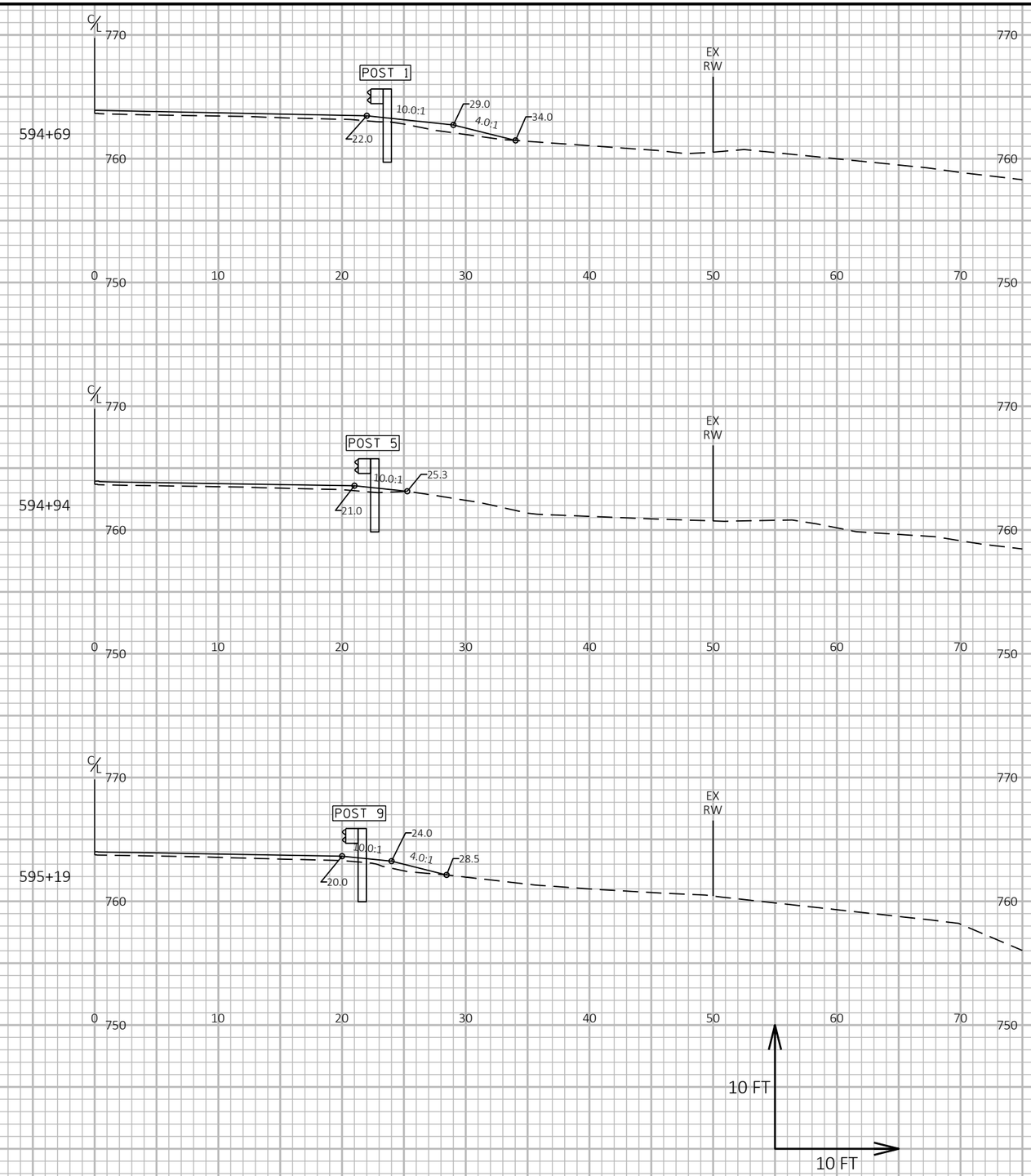

9

9

PROJECT NO: 5730-00-71	HWY: STH 56	COUNTY: VERNON	CROSS SECTIONS: EAT GRADING	SHEET 167	E

FILE NAME : \\LAXRTOPFLPPI01\N3PUBLIC\PDS\C3D\57300001\SHEETSPLAN\GUARDRAIL\594+69 - 597+10 RT.DWG
LAYOUT NAME - 01

PLOT DATE : 11/10/2020 8:09 AM PLOT BY : MIKSHOWSKY, CORY J PLOT NAME : **PLOT SCALE :** 1 IN:10 FT HORZ. / 1 IN:10 FT VERT.

WISDOT/CADDS SHEET 49

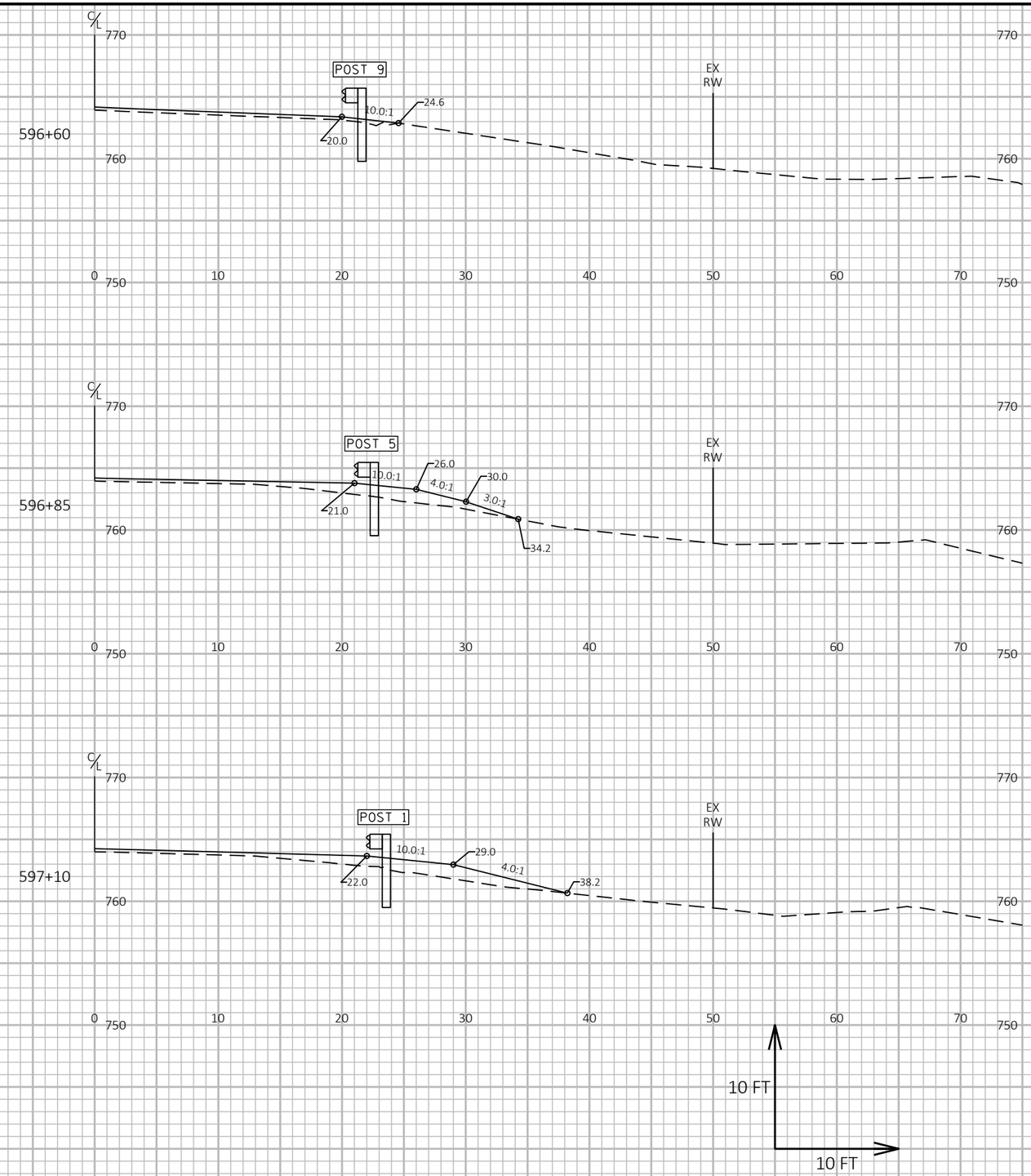

9

9

PROJECT NO: 5730-00-71	HWY: STH 56	COUNTY: VERNON	CROSS SECTIONS: EAT GRADING	SHEET 168	E

FILE NAME : \\LAXRTOPFLPPI01\N3PUBLIC\PDS\C3D\57300001\SHEETSPLAN\GUARDRAIL\594+69 - 597+10 RT.DWG
LAYOUT NAME - 02

PLOT DATE : 11/10/2020 8:09 AM PLOT BY : MIKSHOWSKY, CORY J PLOT NAME : **PLOT SCALE :** 1 IN:10 FT HORZ. / 1 IN:10 FT VERT.

WISDOT/CADDS SHEET 49

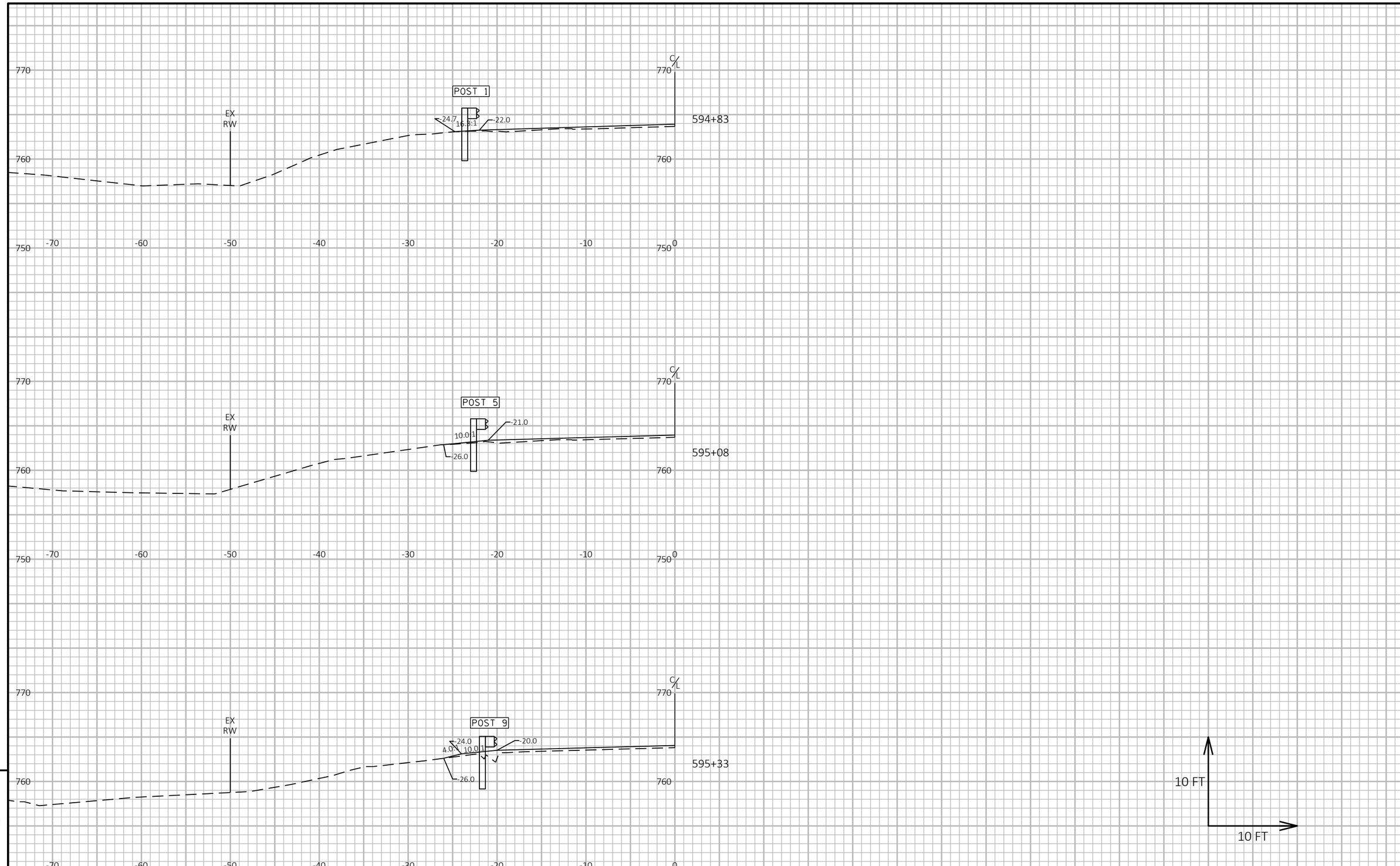

9

9

PROJECT NO: 5730-00-71	HWY: STH 56	COUNTY: VERNON	CROSS SECTIONS: EAT GRADING	SHEET 169	E

FILE NAME : \\LAXRTOPFLPPI01\N3PUBLIC\PDS\C3D\57300001\SHEETSPLAN\GUARDRAIL\594+83 - 597+24 LT.DWG
LAYOUT NAME - 01

PLOT DATE : 11/9/2020 1:16 PM PLOT BY : MIKSHOWSKY, CORY J PLOT NAME : **PLOT SCALE :** 1 IN:10 FT HORZ. / 1 IN:10 FT VERT.

WISDOT/CADDS SHEET 49

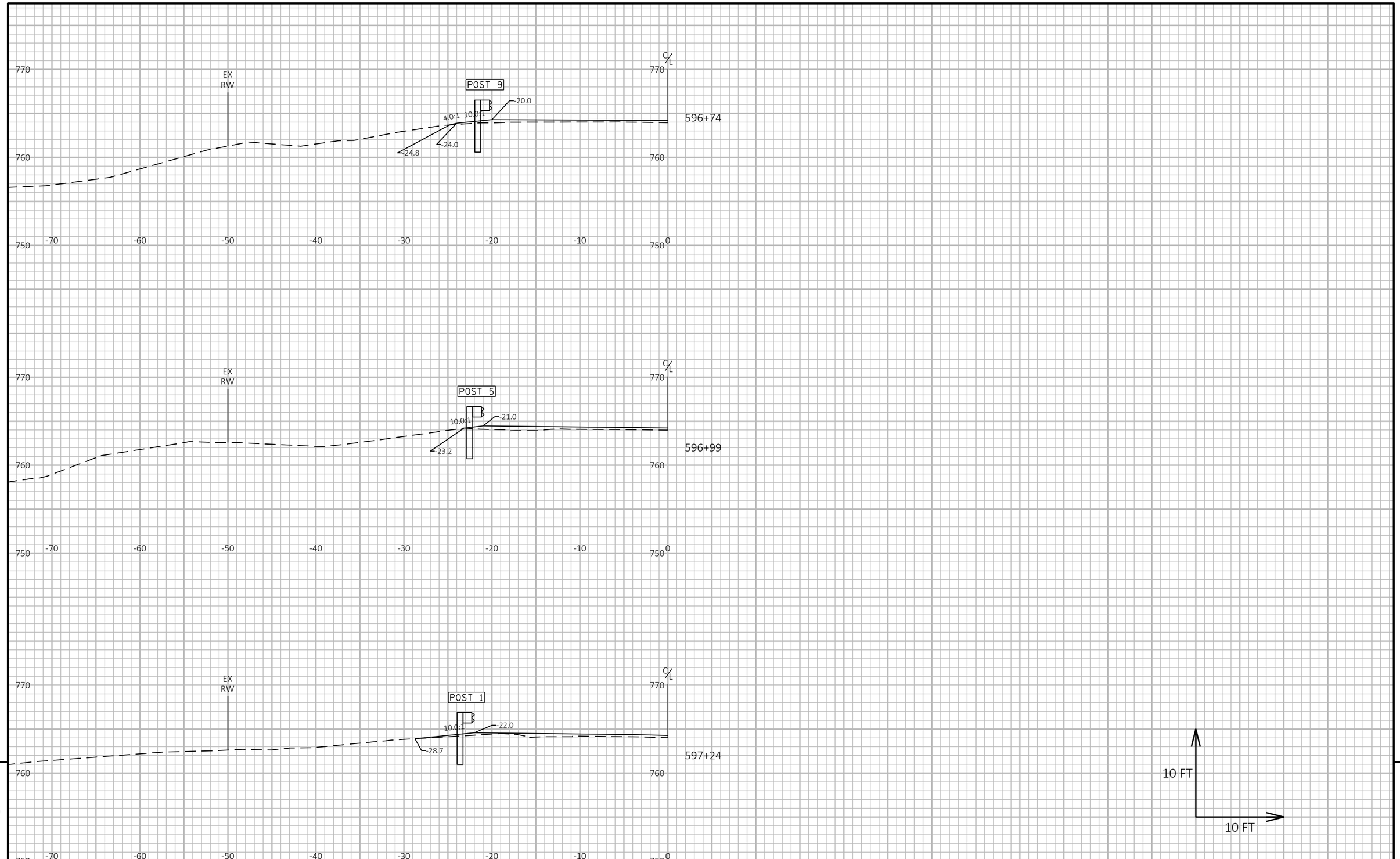

9

9

PROJECT NO: 5730-00-71	HWY: STH 56	COUNTY: VERNON	CROSS SECTIONS: EAT GRADING	SHEET 170	E

FILE NAME : \\LAXRTOPFLPPI01\N3PUBLIC\PDS\C3D\57300001\SHEETSPLAN\GUARDRAIL\594+83 - 597+24 LT.DWG
LAYOUT NAME - 02

PLOT DATE : 11/9/2020 1:16 PM PLOT BY : MIKSHOWSKY, CORY J PLOT NAME : **PLOT SCALE :** 1 IN:10 FT HORZ. / 1 IN:10 FT VERT.

WISDOT/CADDS SHEET 49

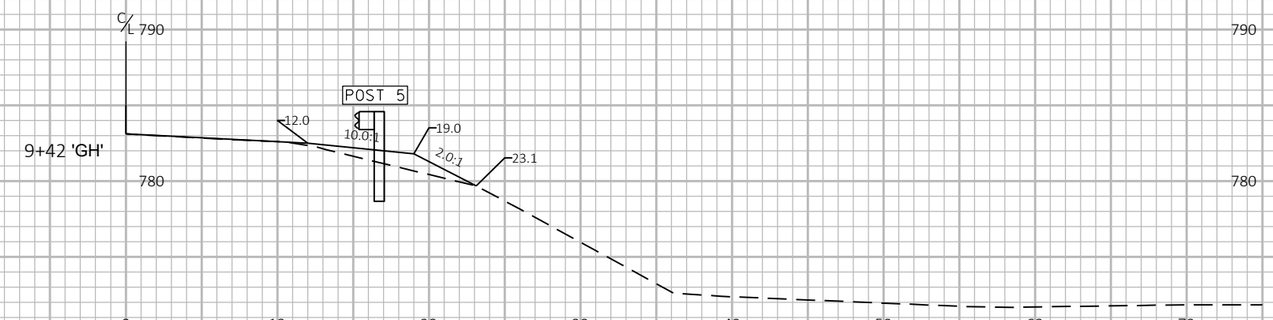

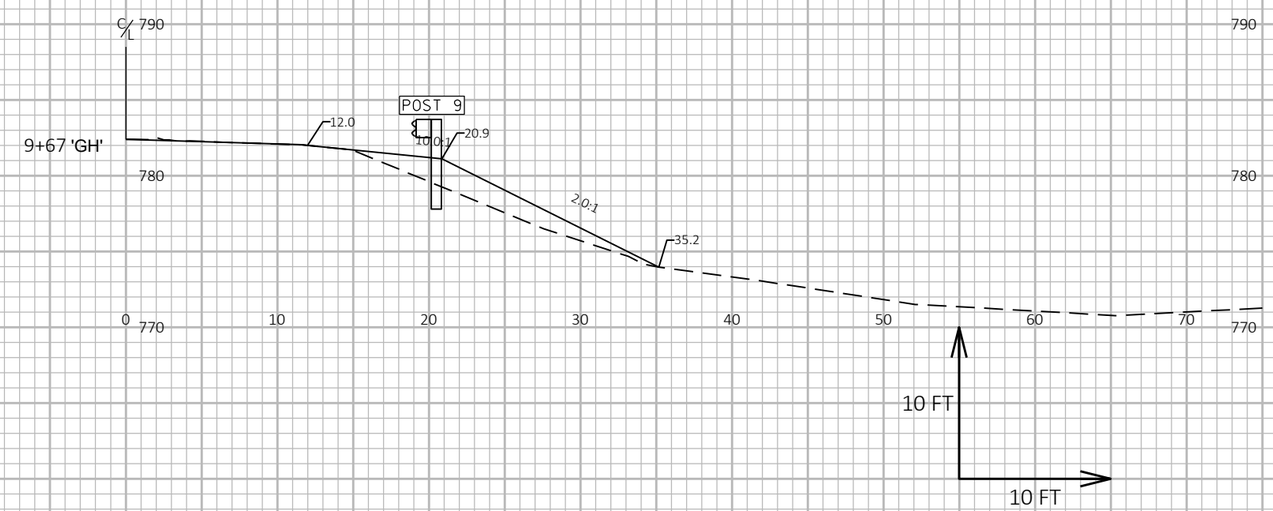

9

9

PROJECT NO: 5730-00-71	HWY: STH 56	COUNTY: VERNON	CROSS SECTIONS: EAT GRADING - GORE HOLLOW RD	SHEET 171	E

FILE NAME : \\LAXRTOPFLPPI01\N3PUBLIC\PDS\C3D\57300001\SHEETSPLAN\GUARDRAIL\9+17 - 9+67 'GH'.DWG
LAYOUT NAME - 01

PLOT DATE : 11/9/2020 8:02 AM PLOT BY : MIKSHOWSKY, CORY J PLOT NAME : **PLOT SCALE :** 1 IN:10 FT HORZ. / 1 IN:10 FT VERT.

WISDOT/CADDS SHEET 49

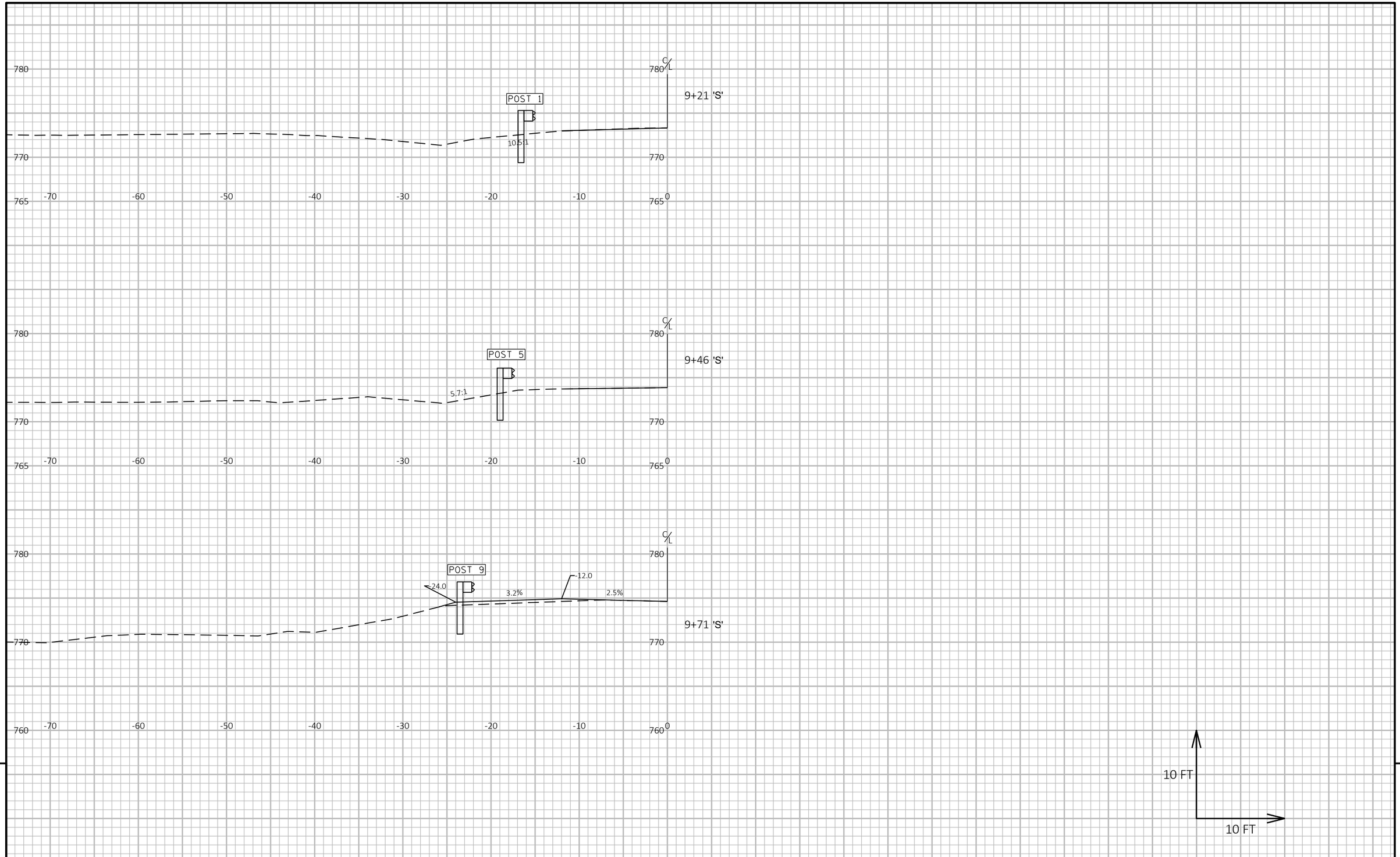

9

9

PROJECT NO: 5730-00-71	HWY: STH 56	COUNTY: VERNON	CROSS SECTIONS: EAT GRADING - CTH 'S'	SHEET 172	E

FILE NAME : \\LAXRTOPFLPPI01\N3PUBLIC\PDS\C3D\57300001\SHEETSPLAN\GUARDRAIL\9+21 - 9+71 'SS'.DWG
LAYOUT NAME - 01

PLOT DATE : 11/9/2020 8:17 AM PLOT BY : MIKSHOWSKY, CORY J PLOT NAME : **PLOT SCALE :** 1 IN:10 FT HORZ. / 1 IN:10 FT VERT.

WISDOT/CADDS SHEET 49

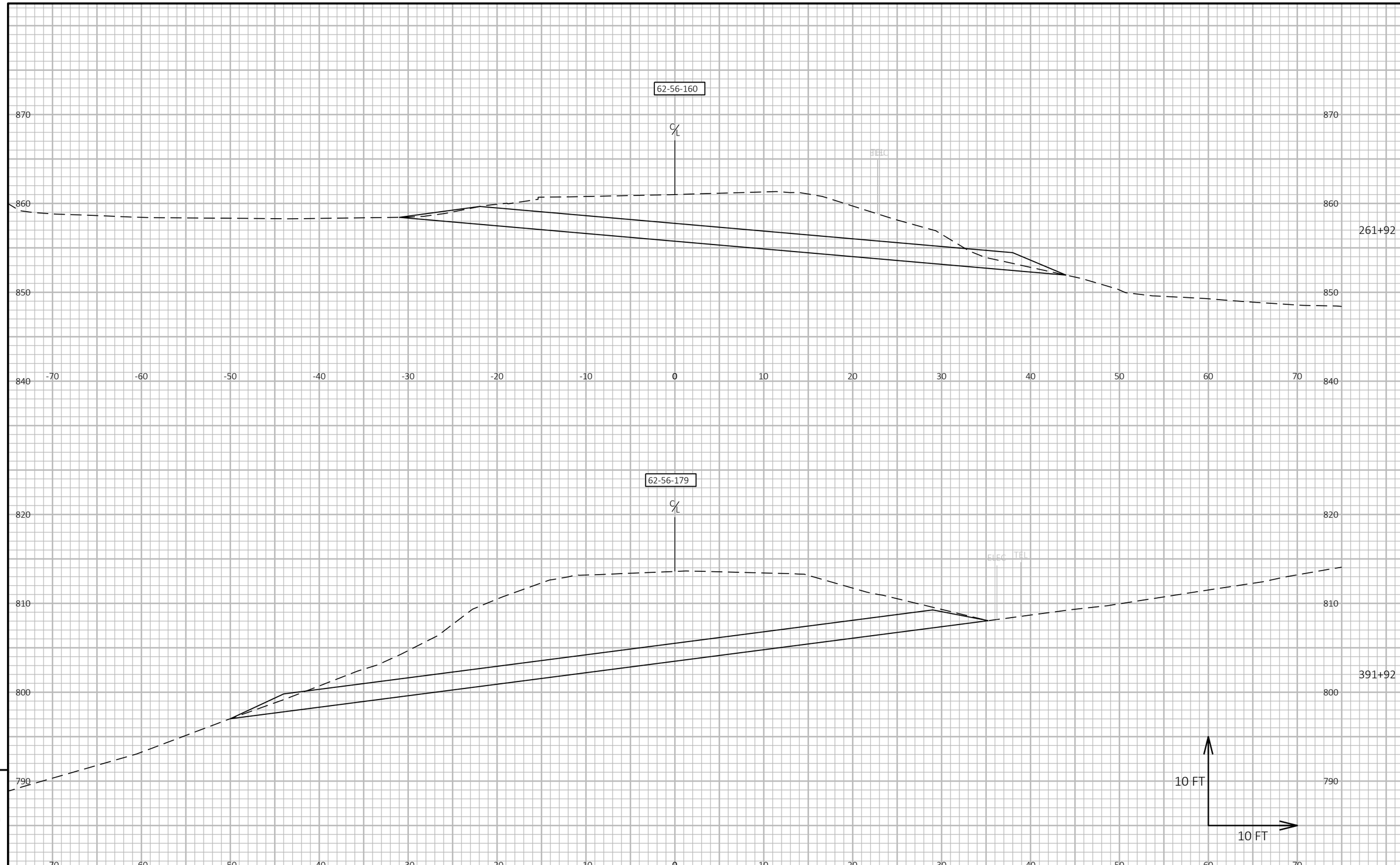

9

9

PROJECT NO: 5730-00-71	HWY: STH 56	COUNTY: VERNON	CROSS SECTIONS: CULVERT PIPE REPLACEMENTS	SHEET 173	E

FILE NAME : \\LAXRTOPFLPPI01\N3PUBLIC\PDS\C3D\57300001\SHEETSPLAN\CROSS SECTIONS\CULVERTPIPES.DWG
LAYOUT NAME - 01
PLOT DATE : 10/19/2021 9:42 AM
PLOT BY : MIKSHOWSKY, CORY J
PLOT NAME :
PLOT SCALE : 1 IN:10 FT HORZ. / 1 IN:10 FT VERT.
WISDOT/CADDS SHEET 49

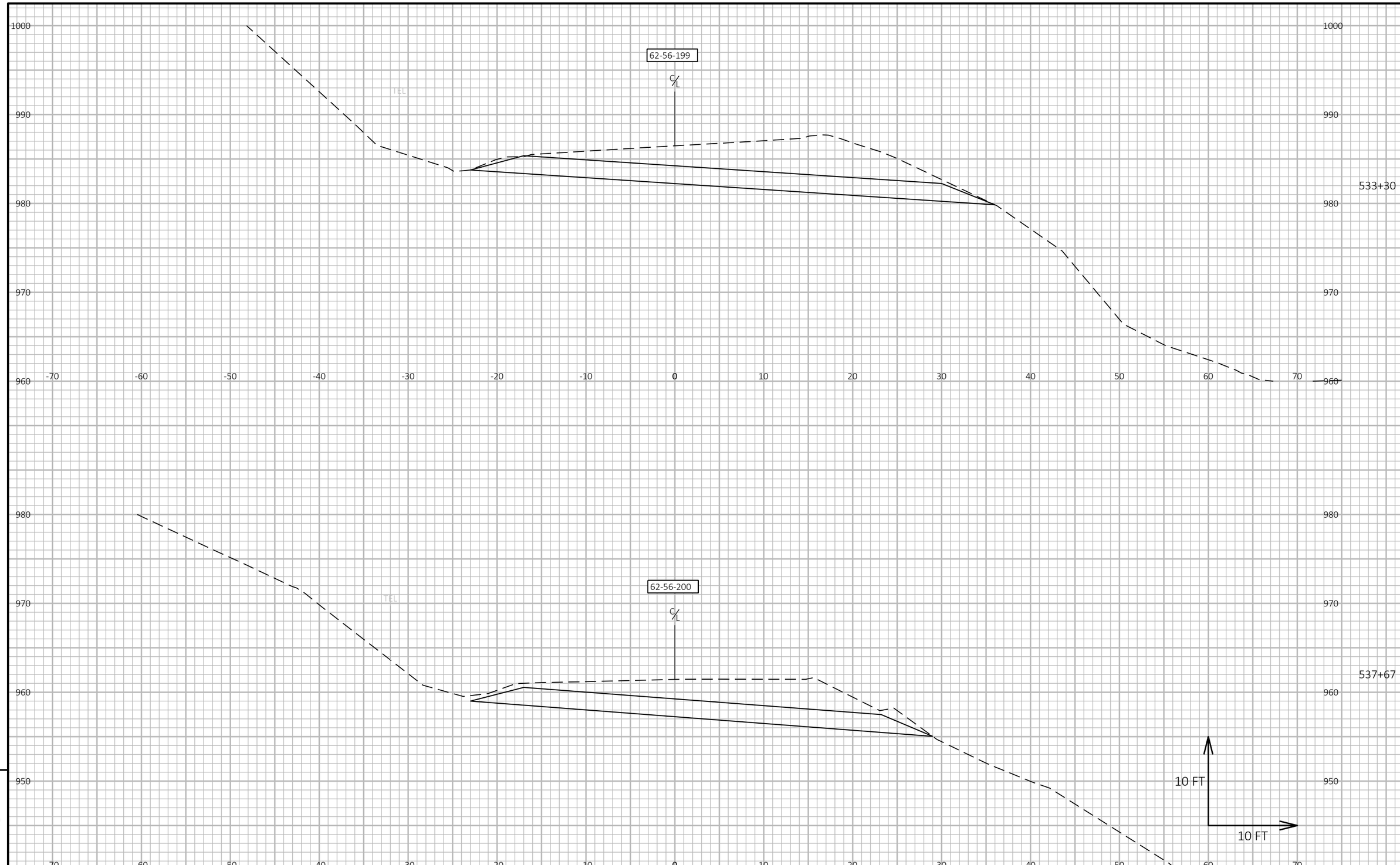

9

9

PROJECT NO: 5730-00-71	HWY: STH 56	COUNTY: VERNON	CROSS SECTIONS: CULVERT PIPE REPLACEMENTS	SHEET 174	E

FILE NAME : \\LAXRTOPFLPPI01\N3PUBLIC\PDS\C3D\57300001\SHEETSPLAN\CROSS SECTIONS\CULVERTPIPES.DWG
LAYOUT NAME - 02

PLOT DATE : 10/19/2021 9:42 AM PLOT BY : MIKSHOWSKY, CORY J PLOT NAME : **PLOT SCALE :** 1 IN:10 FT HORZ. / 1 IN:10 FT VERT.

WISDOT/CADDS SHEET 49

Notes

Wisconsin Department of Transportation

Dedicated people creating transportation solutions through innovation and exceptional service.

http://www.dot.wisconsin.gov

LAX

Apr 12, 2022

PROJECT ID: 5730-00-80

WITH: 5730-00-71

COUNTY: VERNON

ORDER OF SHEETS

Section No.	1	Title
Section No.	2	Typical Sections and Details
Section No.	3	Estimate of Quantities
Section No.	3	Miscellaneous Quantities
Section No.	4	Right of Way Plat
Section No.	5	Plan and Profile
Section No.	6	Standard Detail Drawings
~~Section No.~~	~~7~~	~~Sign Plates~~
Section No.	8	Structure Plans
Section No.	9	Computer Earthwork Data
Section No.	9	Cross Sections

TOTAL SHEETS = 76

STATE OF WISCONSIN
DEPARTMENT OF TRANSPORTATION

PLAN OF PROPOSED IMPROVEMENT

VIROQUA - RICHLAND CENTER

BISHOP BRANCH BRIDGE, B-62-258

STH 56
VERNON COUNTY

STATE PROJECT	FEDERAL PROJECT	
	PROJECT	CONTRACT
5730-00-80	WISC 2022290	1

STATE PROJECT NUMBER

5730-00-80

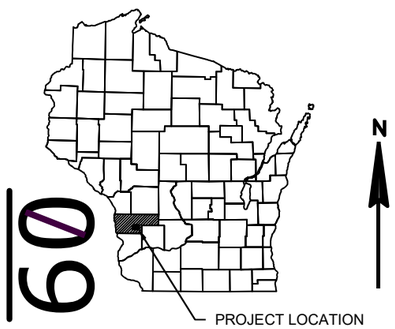

DESIGN DESIGNATION

A.A.D.T.	(2022)	=	2400
A.A.D.T.	(2042)	=	2600
D.H.V.		=	11.1
D.D.		=	60/40
T.		=	11.0%
DESIGN SPEED		=	60 MPH
ESALS		=	600,000

CONVENTIONAL SYMBOLS

PLAN

CORPORATE LIMITS
PROPERTY LINE
LOT LINE
LIMITED HIGHWAY EASEMENT
EXISTING RIGHT OF WAY
PROPOSED OR NEW R/W LINE
SLOPE INTERCEPT
REFERENCE LINE (300'EB')
EXISTING CULVERT
PROPOSED CULVERT (Box or Pipe)
COMBUSTIBLE FLUIDS (CAUTION)
MARSH AREA
WOODED OR SHRUB AREA

PROFILE

GRADE LINE
ORIGINAL GROUND
MARSH OR ROCK PROFILE (To be noted as such) (ROCK)
SPECIAL DITCH (LABEL)
GRADE ELEVATION (95.36)
CULVERT (Profile View)

UTILITIES

ELECTRIC (E)
FIBER OPTIC (FO)
GAS (G)
SANITARY SEWER (SAN)
STORM SEWER (SS)
TELEPHONE (T)
WATER (W)
UTILITY PEDESTAL
POWER POLE
TELEPHONE POLE

BEGIN PROJECT
STA 151+30.00
Y=140,079.229
X=733,446.975

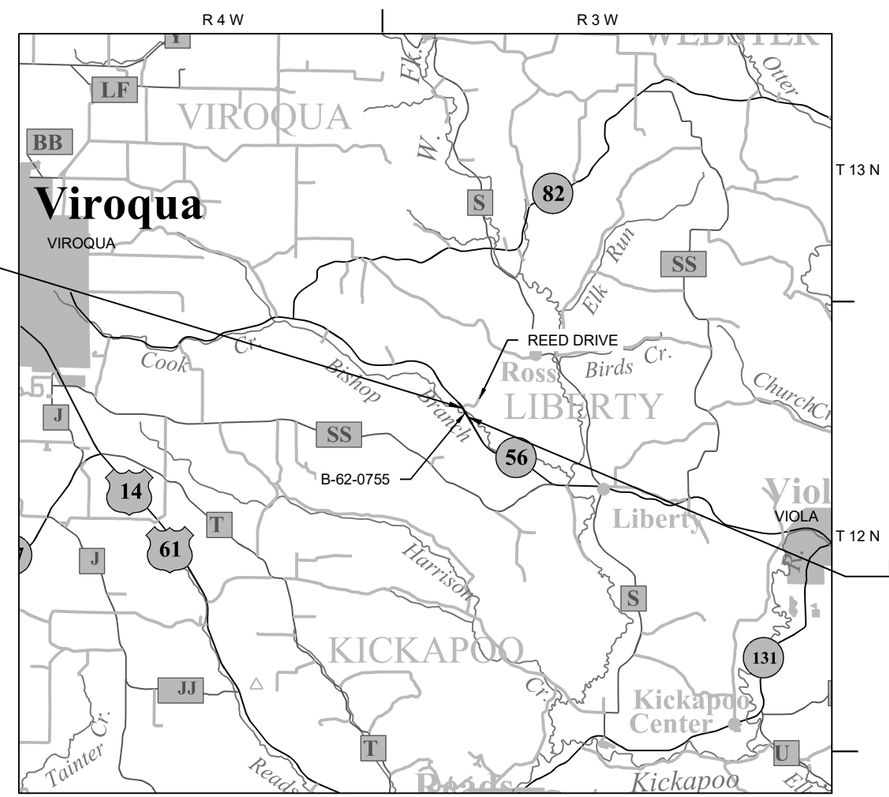

END PROJECT
STA 158+55.00
Y=139,457.282
X=733,819.493

LAYOUT

SCALE 0 — 2.0 MI

TOTAL NET LENGTH OF CENTERLINE = 0.137 MILES

HORIZONTAL POSITIONS SHOWN ON THIS PLAN ARE WISCONSIN COORDINATE REFERENCE SYSTEM (WISCRS), VERNON COUNTY, NAD83 (2011), IN U.S. SURVEY FEET. POSITIONS SHOWN ARE GRID COORDINATES, GRID BEARINGS, AND GRID DISTANCES. GRID DISTANCES ARE THE SAME AS GROUND DISTANCES. ELEVATIONS ARE REFERENCED TO NAVD 88 (2012). GPS DERIVED ELEVATIONS ARE BASED ON GEOID 12A.

ORIGINAL PLANS PREPARED BY

SEH

WISCONSIN
JEREMY J TOMESH
E-398986
LA CROSSE
WI
PROFESSIONAL ENGINEER

10/20/2021 (Date) (Signature)

STATE OF WISCONSIN
DEPARTMENT OF TRANSPORTATION

PREPARED BY

Surveyor	SEH
Designer	SEH
Project Manager	JAY ADAMS
Regional Examiner	SW REGION
Regional Supervisor	REINY YAHNKE

APPROVED FOR THE DEPARTMENT

DATE: 10/26/21 (Signature)

E

2

GENERAL NOTES

ELEVATIONS SHOWN ON THE PLAN ARE REFERENCED TO THE APPROXIMATE USGS DATUM.

WHEN THE QUANTITY OF BASE AGGREGATE OR ASPHALTIC SURFACE IS MEASURED FOR PAYMENT BY THE TON OR CUBIC YARD, THE DEPTH OR THICKNESS OF THE LAYER SHOWN ON THE PLANS IS APPROXIMATE AND THE ACTUAL THICKNESS WILL DEPEND ON THE DISTRIBUTION OF THE MATERIAL AS DIRECTED BY THE ENGINEER.

THE LOCATION OF EXISTING AND PROPOSED UTILITY INSTALLATIONS AS SHOWN ON THE PLANS IS APPROXIMATE. THERE MAY BE OTHER UTILITY INSTALLATIONS WITHIN THE PROJECT AREA THAT ARE NOT SHOWN.

NO TREES OR SHRUBS ARE TO BE REMOVED WITHOUT THE APPROVAL OF THE ENGINEER.

THE EXACT LOCATION OF THE EROSION CONTROL DEVICES SHALL BE DETERMINED IN THE FIELD.

UNLESS OTHERWISE SHOWN,DISTURBED AREAS WITHIN THE RIGHT-OF-WAY, EXCEPT THE AREAS WITHIN THE FINISHED SHOULDER POINTS, ARE TO BE 4-INCH SALVAGED TOPSOILED, FERTILIZED, AND SEEDED AND EROSION MATTED.

THE LOCATION OF ALL DRIVEWAYS WILL BE DETERMINED BY THE ENGINEER.

A VERTICAL SAWCUT SHALL BE MADE THROUGH EXISTING PAVEMENTS AT REMOVAL LIMITS.

THE 4.5" ASPHALTIC SURFACE SHALL CONSIST OF A 2" UPPER LAYER AND A 2.5" LOWER LAYER.

THE CONTRACTOR'S PAVING OPERATIONS SHALL BE CONSISTENT WITH THE PLAN TYPICAL SECTIONS AND CONSTRUCTED TO PREVENT HMA LONGITUDINAL JOINTS FROM BEING LOCATED WITHIN A DRIVING, TURNING, PASSING, OR PARKING LANE.

SILT FENCE IS TO BE PLACED AS SHOWN ON THE PLANS OR AS DIRECTED BY THE ENGINEER, AND IN PLACE PRIOR TO BRIDGE REMOVAL.

BEARINGS SHOWN ON THE PLAN ARE REFERENCED TO THE EXISTING ROADWAY CENTERLINE AND ARE ASSUMED.

WETLANDS ARE PRESENT OUTSIDE OF THE EXISTING TOE OF SLOPES. AREAS OUTSIDE OF THE SLOPE INTERCEPTS SHALL NOT BE DISTURBED.

FINAL PLACEMENT OF THE INLETS MUST MAINTAIN THE MINIMUM POST SEPARATION DISTANCES IN THE STANDARD DETAIL.

A CONVERSION FACTOR OF 2.1 TONS/CY IS USED TO ESTIMATE QUANTITIES FOR BASE AGGREGATE DENSE 3/4-INCH.

A CONVERSION FACTOR OF 2.0 TONS/CY IS USED TO ESTIMATE QUANTITIES FOR BASE AGGREGATE DENSE 1 1/4-INCH.

A CONVERSION FACTOR OF 1.8 TONS/CY IS USED TO ESTIMATE QUANTITIES FOR SELECT CRUSHED MATERIAL.

A CONVERSION FACTOR OF 112 LBS/IN/SY IS USED TO ESTIMATE QUANTITIES FOR ASPHALTIC SURFACE.

STANDARD ABBREVIATIONS

ABUT	ABUTMENT
AC	ACRE
AGG	AGGREGATE
AECPRC	APRON ENDWALL FOR CULVERT PIPE REINFORCED CONCRETE
AECPCS	APRON ENDWALL FOR CULVERT PIPE CORRUGATED STEEL
ASPH	ASPHALTIC
AVG	AVERAGE
ADT	AVERAGE DAILY TRAFFIC
BF	BACK FACE
BM	BENCH MARK
BR	BRIDGE
CE	COMMERCIAL ENTRANCE
CL OR C/L OR ℄	CENTER LINE
Δ	CENTRAL ANGLE OR DELTA
CONC	CONCRETE
CPRC	CULVERT PIPE REINFORCED CONCRETE
CPCS	CULVERT PIPE CORRUGATED STEEL
CR	CREEK
CY	CUBIC YARD
C & G	CURB AND GUTTER
D	DEGREE OF CURVE
DHV	DESIGN HOUR VOLUME
DISCH	DISCHARGE
DG	DITCH GRADE
DWY	DRIVEWAY
X	EAST GRID COORDINATE
EAT	STEEL PLATE BEAM GUARD ENERGY ABSORBING TERMINAL
EOR	END POINT OF RADIUS
EL	ELEVATION
ENT	ENTRANCE
ESALS	EQUIVALENT SINGLE AXLE LOADS
EXC	EXCAVATION
EBS	EXCAVATION BELOW SUBGRADE
EXIST	EXISTING
FC	FACE OF CURB
FF	FACE TO FACE
FERT	FERTILIZE
FE	FIELD ENTRANCE
FL	FLOW LINE
FO	FIBER OPTIC
CWT	HUNDREDWEIGHT
HYD	HYDRANT
ID	INSIDE DIAMETER
INV	INVERT
IP	IRON PIPE OR PIN
LHF	LEFT-HAND FORWARD
L	LENGTH OF CURVE
LF	LINEAR FOOT
LC	LONG CHORD OF CURVE
LS	LUMP SUM
MH	MANHOLE
MOR	MID POINT OF RADIUS
MCE	MARKERS CULVERT END
NC	NORMAL CROWN
NO	NUMBER
OBLIT	OBLITERATE
PAVT	PAVEMENT
PE	PRIVATE ENTRANCE
PVRC	POINT OF VERTICAL REVERSE CURVE
QOR	QUARTER POINT OF RADIUS
R	RADIUS
REQ'D	REQUIRED
RES	RESIDENCE OR RESIDENTIAL
RHF	RIGHT-HAND FORWARD
R/W	RIGHT-OF-WAY
R	RIVER
RDWY	ROADWAY
R/L OR ~	REFERENCE LINE
SALV	SALVAGED
SAN	SANITARY SEWER
SF	SQUARE FEET
SY	SQUARE YARD
SDD	STANDARD DETAIL DRAWINGS
STA	STATION
SS	STORM SEWER
SSPRC	STORM SEWER PIPE REINFORCED CONCRETE
SE	SUPERELEVATION RATE
TC	TOP OF CURB
T OR TN	TOWN
T	TRUCKS (PERCENT OF)
TYP	TYPICAL
VAR	VARIABLE
VC	VERTICAL CURVE
Y	NORTH GRID COORDINATE
YD	YARD

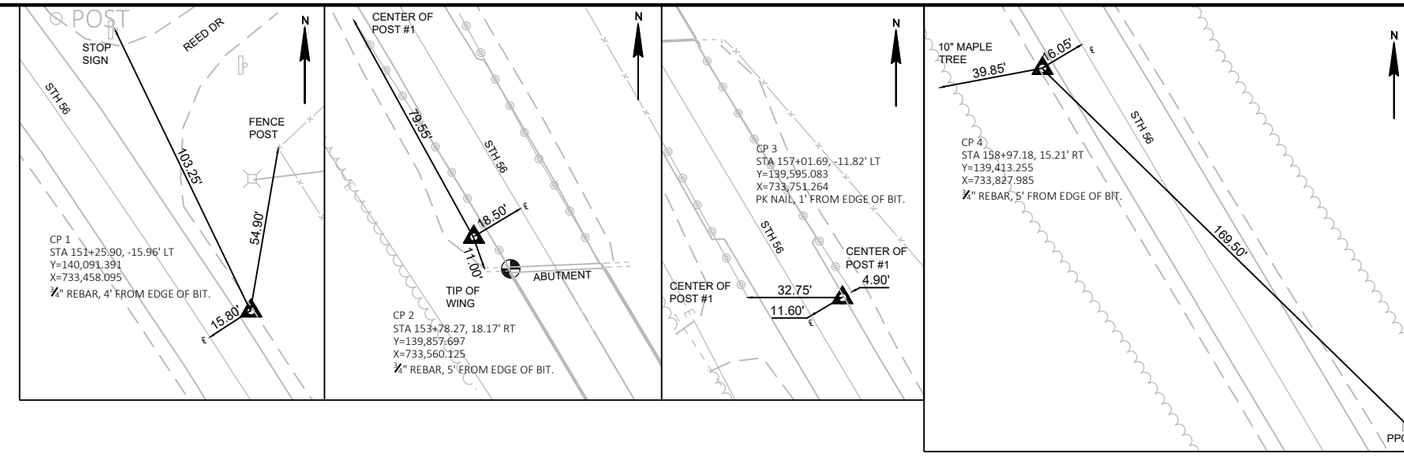

CONTROL TIES

RUNOFF COEFFICIENT TABLE

	HYDROLOGIC SOIL GROUP											
	A			B			C			D		
	SLOPE RANGE (PERCENT)			SLOPE RANGE (PERCENT)			SLOPE RANGE (PERCENT)			SLOPE RANGE (PERCENT)		
LAND USE:	0-2	2-6	6 & OVER	0-2	2-6	6 & OVER	0-2	2-6	6 & OVER	0-2	2-6	6 & OVER
ROW CROPS	.08 .22	.16 .30	.22 .38	.12 .26	.20 .34	.27 .44	.15 .30	.24 .37	.33 .50	.19 .34	.28 .41	.38 .56
MEDIAN STRIP-TURF	.19 .24	.20 .26	.24 .30	.19 .25	.22 .28	.26 .33	.20 .26	.23 .30	.30 .37	.20 .27	.25 .32	.30 .40
SIDE SLOPE-TURF			.25 .32			.27 .34			.28 .36			.30 .38
PAVEMENT:												
ASPHALT	.70 - .95											
CONCRETE	.80 - .95											
BRICK	.70 - .80											
DRIVES, WALKS	.75 - .85											
ROOFS	.75 - .95											
GRAVEL ROADS, SHOULDERS	.40 - .60											

TOTAL PROJECT AREA = 1.6 ACRES
TOTAL AREA EXPECTED TO BE DISTURBED BY CONSTRUCTION ACTIVITIES = 1.7 ACRES

56					
SUPERELEVATION TRANSITION EVENT POINTS		RATE			
LOCATION	STATION	LEFT OF CROWNLINE		RIGHT OF CROWNLINE	
		LEFT SHOULDER	LEFT LANE	RIGHT LANE	RIGHT SHOULDER
Curve 1					
EndNormalShoulder	145+06.42	-4.00%	-2.00%	-2.00%	-4.00%
EndNormalCrown	145+06.42	-4.00%	-2.00%	-2.00%	-4.00%
LevelCrown	145+59.61	-4.00%	.00%	-2.00%	-4.00%
ReverseCrown	146+12.80	-4.00%	2.00%	-2.00%	-4.00%
LowShoulderMatch	146+66.00	-4.00%	4.00%	-4.00%	-4.00%
BeginFullSuper	146+84.61	-4.00%	4.70%	-4.70%	-4.70%
EndFullSuper	151+94.01	-4.00%	4.70%	-4.70%	-4.70%
LowShoulderMatch	152+12.63	-4.00%	4.00%	-4.00%	-4.00%
ReverseCrown	152+65.82	-4.00%	2.00%	-2.00%	-4.00%
LevelCrown	153+19.01	-4.00%	.00%	-2.00%	-4.00%
BeginNormalCrown	153+72.20	-4.00%	-2.00%	-2.00%	-4.00%
BeginNormalShoulder	153+72.20	-4.00%	-2.00%	-2.00%	-4.00%

DESIGN CONTACTS
SEH
ATTENTION: JEREMY TOMESH
329 JAY STREET, SUITE 301
LA CROSSE, WI 54601
PHONE: (608) 498-4947
EMAIL: JTOMESH@SEHINC.COM

WISDOT SW REGION
ATTENTION: JAY ADAMS
3550 MORMON COULEE RD
LA CROSSE, WI 54601
PHONE: (608) 785-9027
EMAIL: JAY.ADAMS@DOT.WI.GOV

WDNR LIASON
DNR SERVICE CENTER
ATTENTION: KAREN KALVELAGE
3550 MORMON COULEE RD
LA CROSSE, WI 54601
PHONE: (608) 785-9115
EMAIL: KAREN.KALVELAGE@WISCONSIN.GOV

UTILITY CONTACTS

FRONTIER COMMUNICATIONS OF WI LLC - COMMUNICATION LINE
CHRIS POLLACK
421 4TH STREET
WAUSAU, WI 54403
PHONE: (715) 847-1240
EMAIL: CHRISTOPHER.POLLACK@FTR.COM

VERNON ELECTRIC COOPERATIVE - ELECTRICITY
COLE CARY
110 SAUGSTAD ROAD
WESTBY, WI 54667-1199
PHONE: (608) 634-7472
EMAIL: CCARY@VERNONELECTRIC.ORG

DIGGERS HOTLINE
Dial 811 or (800)242-8511
www.DiggersHotline.com

2

NOTES:
1. BASE BELOW CONCRETE PAVEMENT APPROACH SLABS SHALL CONSIST 6" OF BASE AGGREGATE DENSE 1 1/4-INCH OVER 16" SELECT CRUSHED MATERIAL.
2. BASE BELOW CONCRETE PAVEMENT 8-INCH SHALL CONSIST 10" OF BASE AGGREGATE DENSE 1 1/4-INCH OVER 16" SELECT CRUSHED MATERIAL.

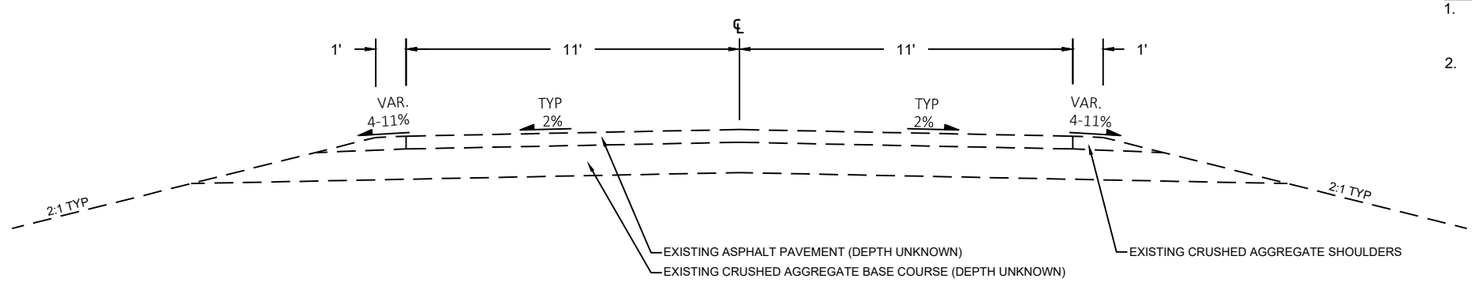

EXISTING TYPICAL SECTION
STA 151+30 - STA 154+00
STA 155+97 - STA 158+55

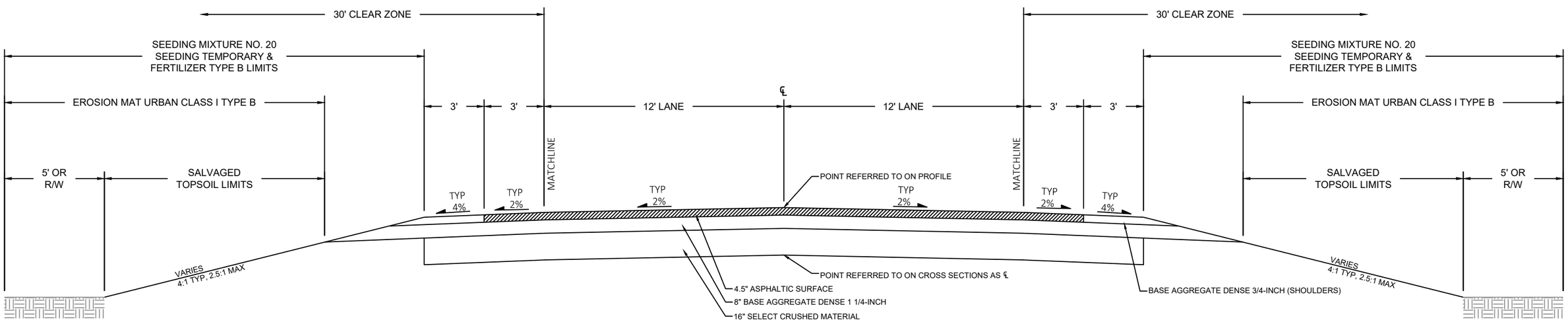

FINISHED TYPICAL SECTION
STA 151+30.00 - STA 153+93.12
STA 156+03.88 - STA 158+55.00

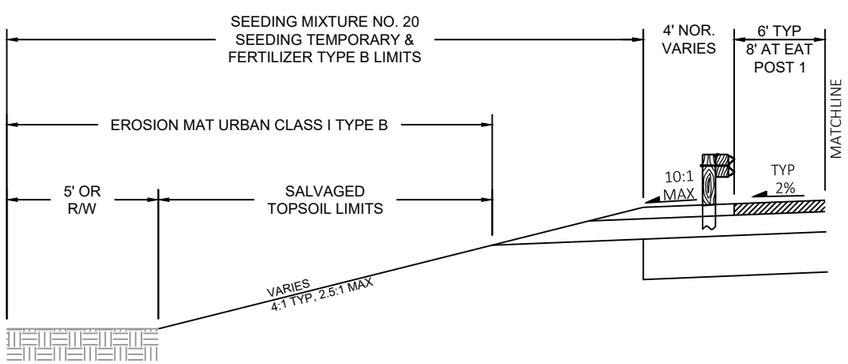

FINISHED TYPICAL PARTIAL SECTION WITH GUARDRAIL
STA 152+82.25 - STA 153+84.78
STA 156+29.01 - STA 157+31.54

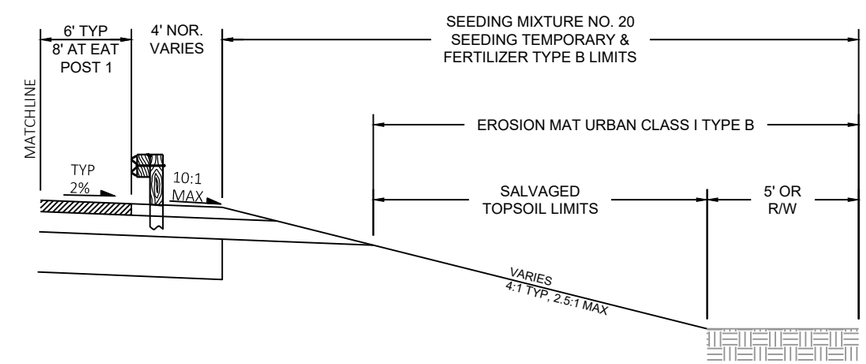

FINISHED TYPICAL PARTIAL SECTION WITH GUARDRAIL
STA 152+65.46 - STA 153+67.99
STA 156+12.22 - STA 157+14.75

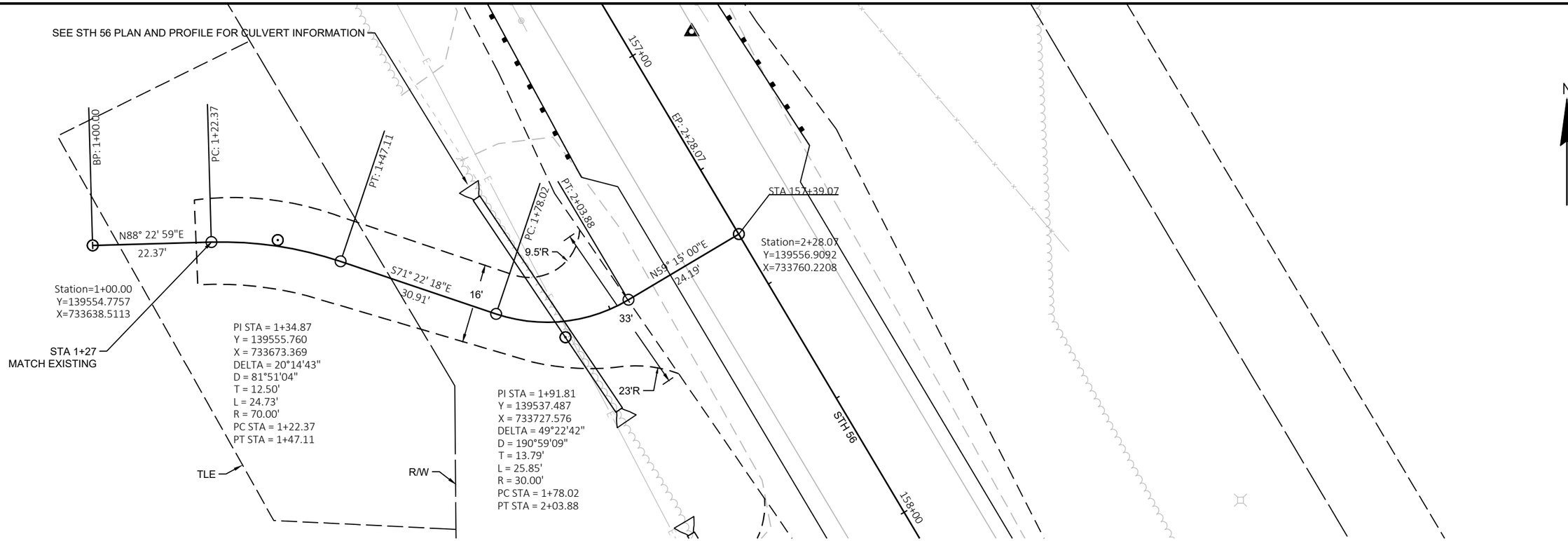

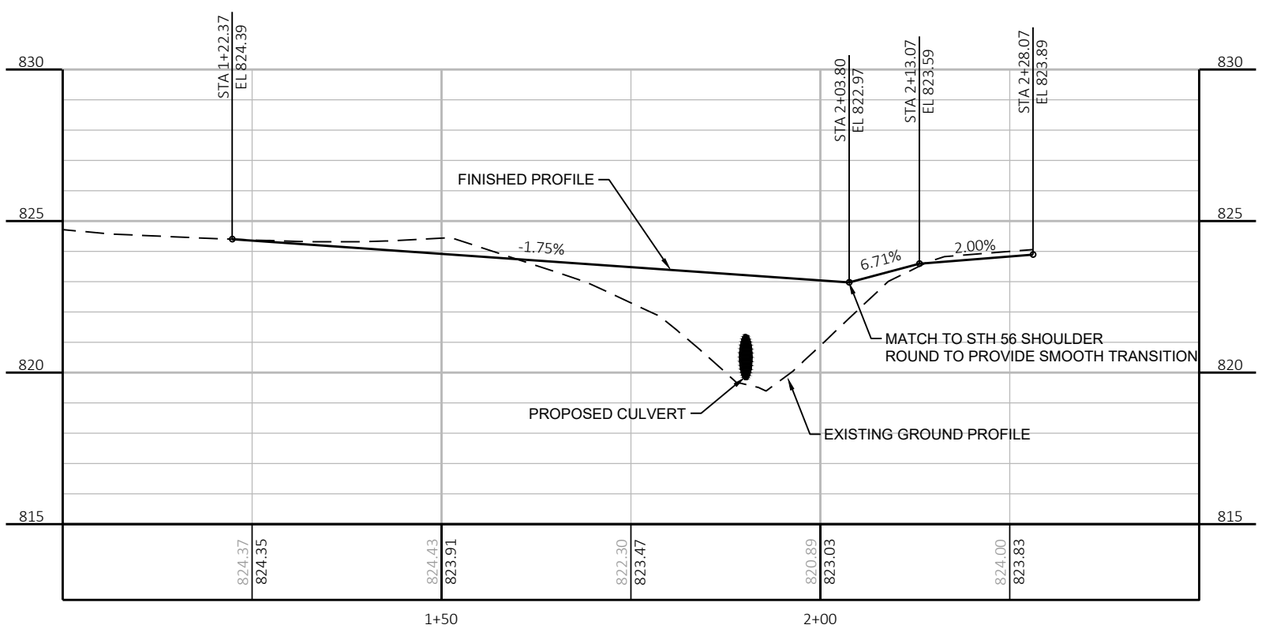

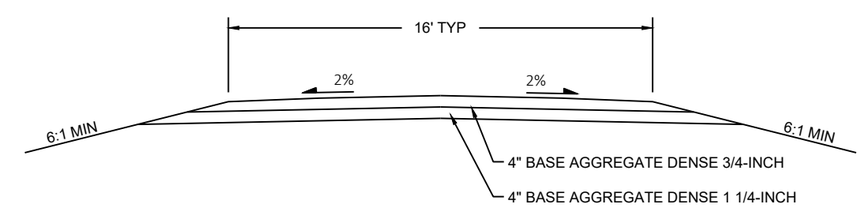

TYPICAL SECTION - FIELD ENTRANCE

PROJECT NO: 5730-00-80	HWY: STH 56	COUNTY: VERNON	CONSTRUCTION DETAILS - FIELD ENTRANCE	SHEET 4	E

NOTES
SEE SDD 15C08-A LONGITUDINAL MARKING (MAINLINE)
SEE SDD 13A11 FOR CENTERLINE RUMBLE STRIPS

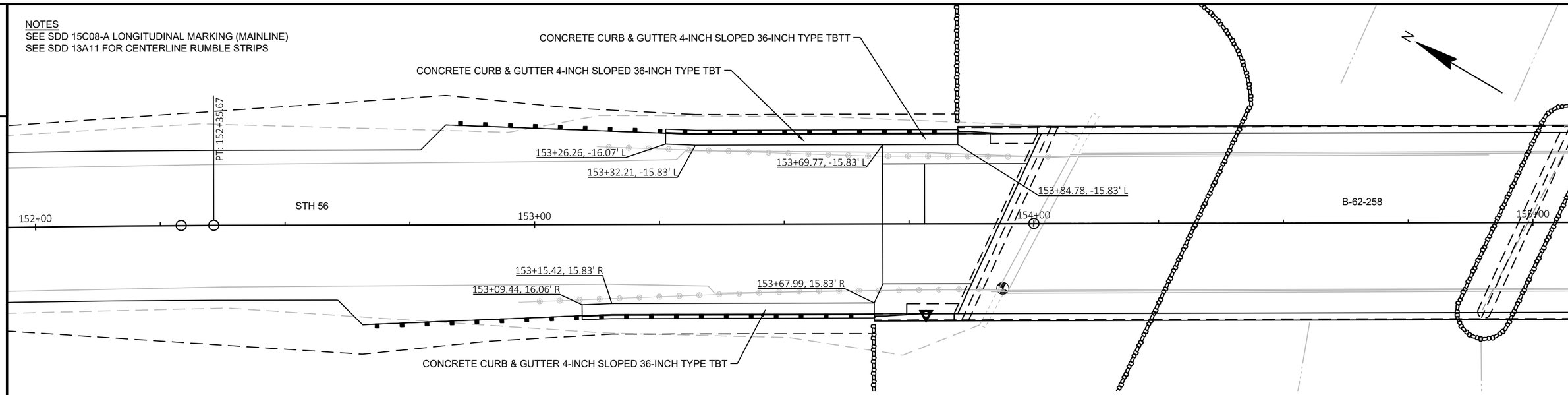

CONCRETE CURB & GUTTER LAYOUT

NOTES
SEE TYPICAL SECTIONS AND CROSS SECTION FOR SHOULDER DIMENSIONS AND SLOPES.

DO NOT COVER RELIEF TRENCH WITH TOPSOIL OR ANY OTHER MATERIAL THAT WOULD PREVENT SUGRADE DRAINAGE.

RELIEF TRENCHES NOT SHOWN ON CROSS SECTIONS, ONLY TYPICAL SELECT CRUSHED MATERIAL IS SHOWN..

PROVIDE RELIEF TRENCH AT THE FOLLOWING LOCATIONS:
- BEGINNING OF PROJECT AT MATCH POINT, RIGHT SIDE (LOW SIDE OF SUPERELEVATION)
- AT ENDS OF BOTH SOUTH WING TIPS

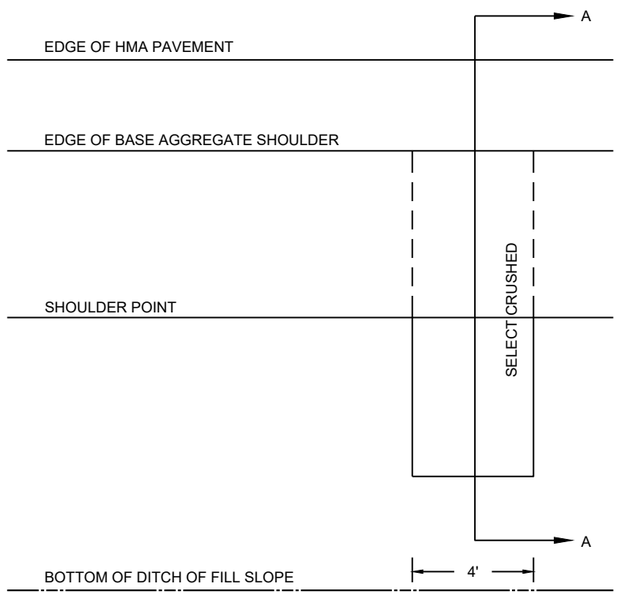

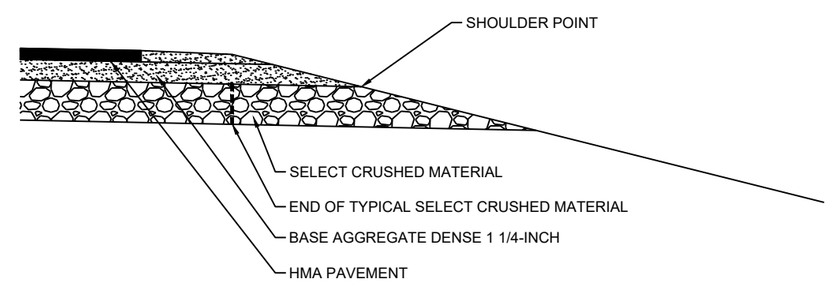

SECTION A-A

RELIEF TRENCH DETAIL

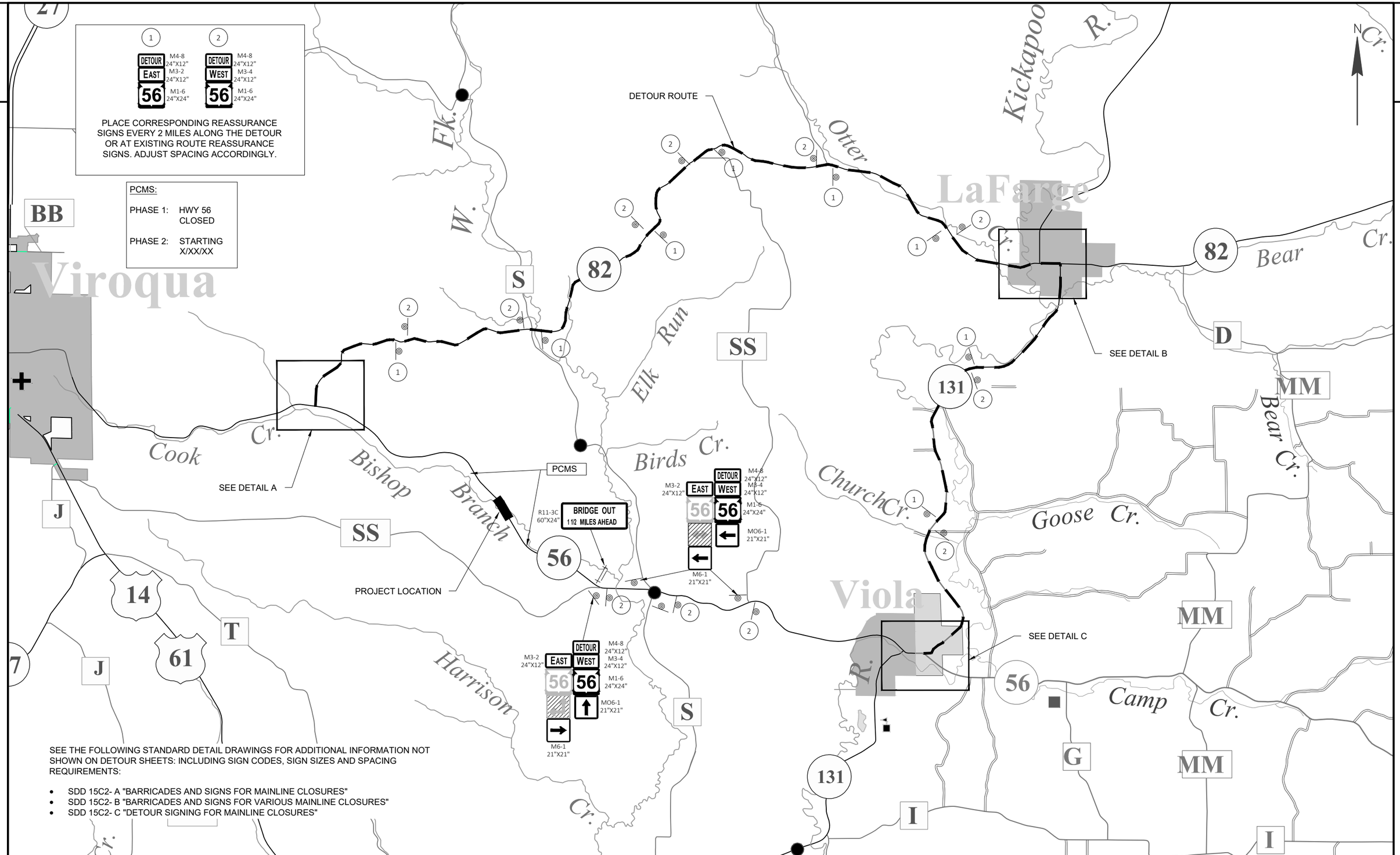

PROJECT NO: 5730-00-80	HWY: STH 56	COUNTY: VERNON	DETOUR	SHEET 6	E

FILE NAME : \\SEHLX\PROJECTS\UZ\W\WITSW\146610\CIVIL 3D\57300000\SHEETSPLAN\027001-DT.DWG
LAYOUT NAME - 01
PLOT DATE : 10/25/2021 5:58 PM
PLOT BY : TOREY LEONARD
PLOT NAME :
PLOT SCALE : Custom
WISDOT/CADDS SHEET 42

2

DETAIL A

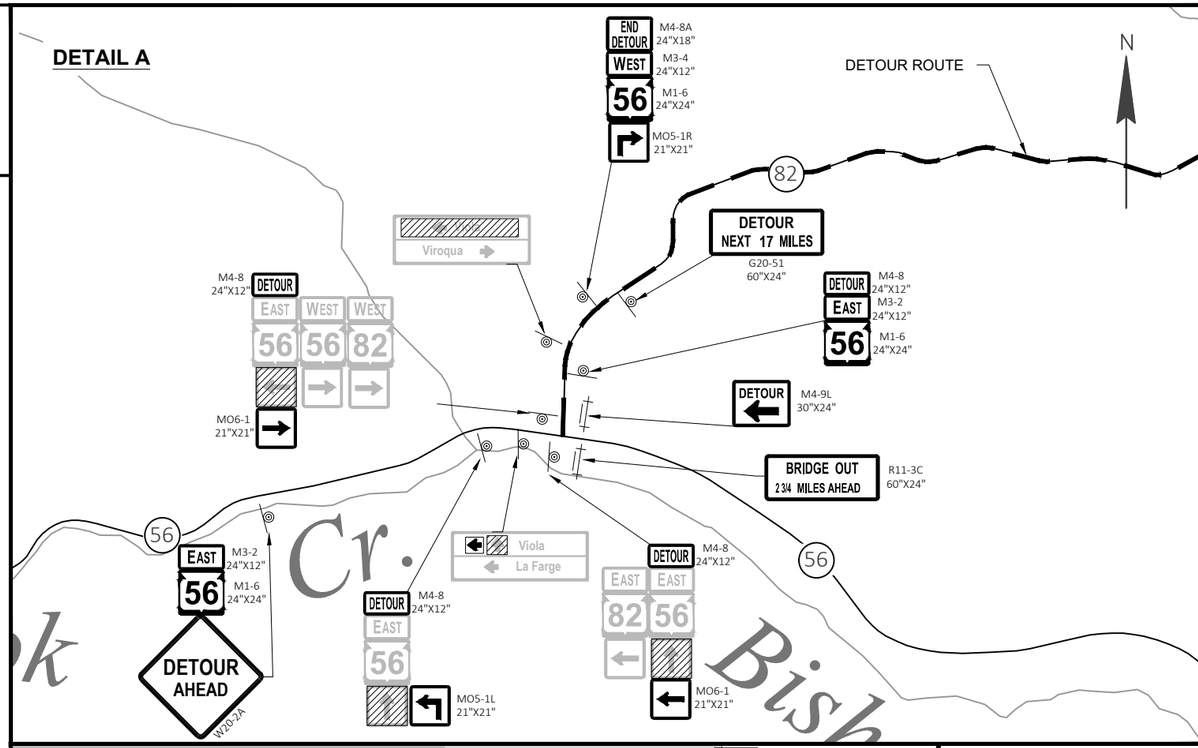

DETAIL B

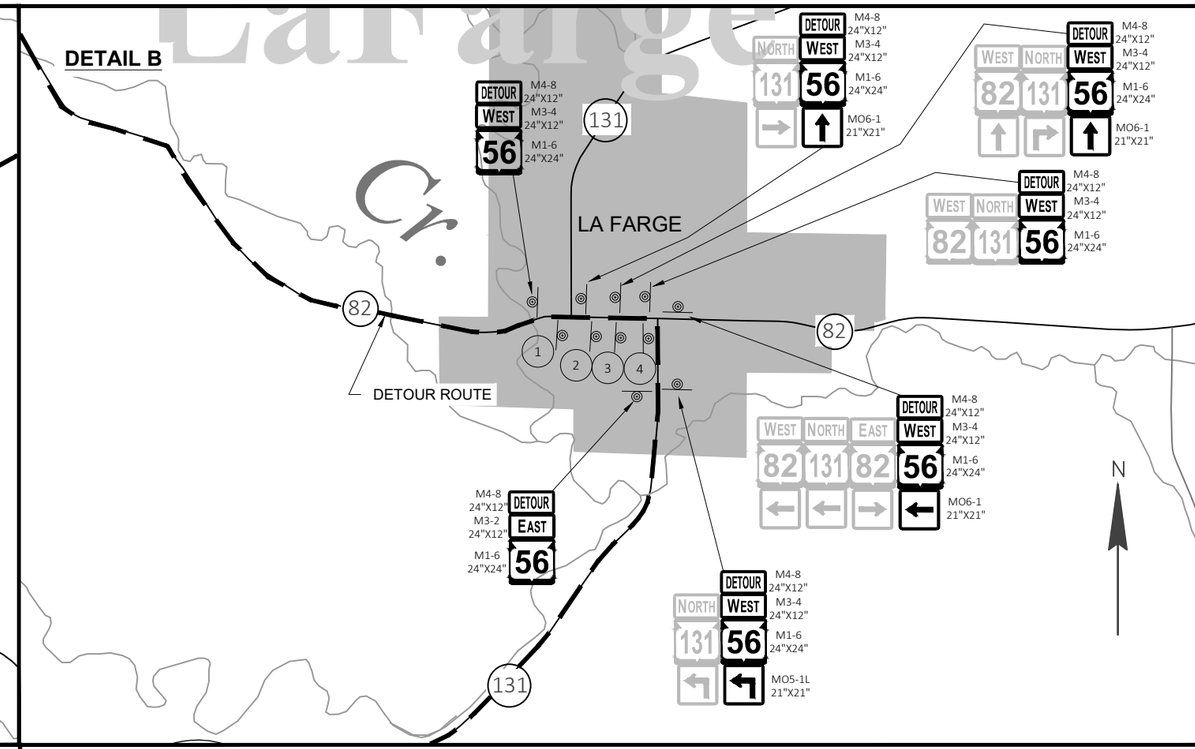

DETAIL C

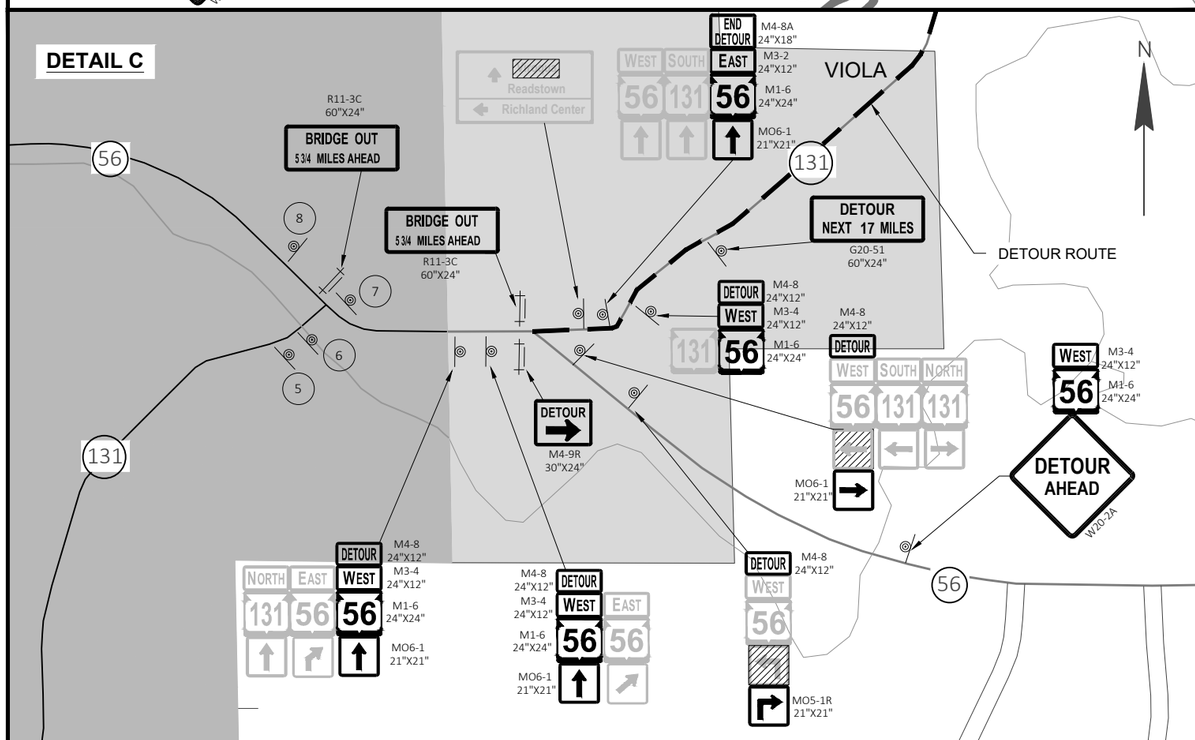

LEGEND - DETAIL B

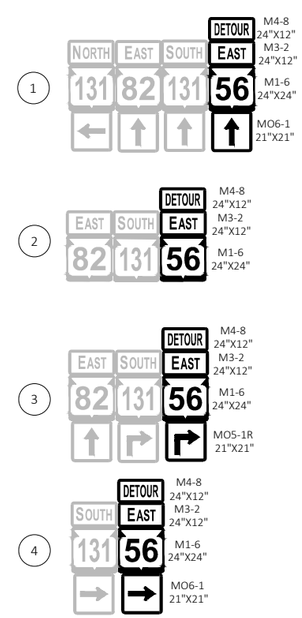

LEGEND - DETAIL C

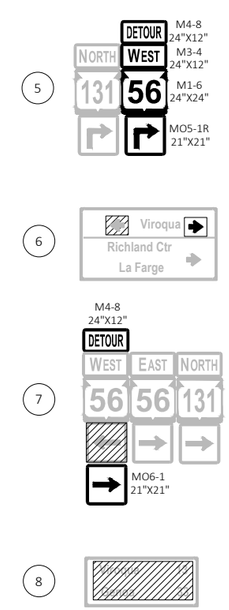

PROJECT NO: 5730-00-80	HWY: STH 56	COUNTY: VERNON	DETOUR	SHEET 7	E

FILE NAME : \\SEHLX\PROJECTS\UZ\W\WITSW\146610\CIVIL 3D\57300000\SHEETSPLAN\027001-DT.DWG
LAYOUT NAME - 02
PLOT DATE : 10/26/2021 10:03 AM PLOT BY : TOREY LEONARD PLOT NAME : PLOT SCALE : Custom

WISDOT/CADDS SHEET 42

5730-00-80

Line	Item	Item Description	Unit	Total	Qty
0002	201.0105	Clearing	STA	7.000	7.000
0004	201.0205	Grubbing	STA	7.000	7.000
0006	203.0100	Removing Small Pipe Culverts	EACH	2.000	2.000
0010	203.0260	Removing Structure Over Waterway Minimal Debris (structure) 01. B-62-0755	EACH	1.000	1.000
0016	204.0165	Removing Guardrail	LF	380.000	380.000
0018	205.0100	Excavation Common	CY	1,910.000	1,910.000
0020	206.1000	Excavation for Structures Bridges (structure) 01. B-62-0258	LS	1.000	1.000
0024	206.5000	Cofferdams (structure) 01. B-26-0258	LS	1.000	1.000
0026	208.0100	Borrow	CY	2,124.000	2,124.000
0030	210.1500	Backfill Structure Type A	TON	528.000	528.000
0038	213.0100	Finishing Roadway (project) 02. 5730-00-80	EACH	1.000	1.000
0040	305.0110	Base Aggregate Dense 3/4-Inch	TON	248.000	248.000
0042	305.0120	Base Aggregate Dense 1 1/4-Inch	TON	1,332.000	1,332.000
0046	312.0110	Select Crushed Material	TON	1,935.000	1,935.000
0052	415.0080	Concrete Pavement 8-Inch	SY	62.000	62.000
0054	415.0410	Concrete Pavement Approach Slab	SY	126.000	126.000
0056	455.0605	Tack Coat	GAL	86.000	86.000
0070	465.0105	Asphaltic Surface	TON	429.000	429.000
0074	465.0475	Asphalt Centerline Rumble Strips 2-Lane Rural	LF	417.000	417.000
0076	502.0100	Concrete Masonry Bridges	CY	546.000	546.000
0078	502.3200	Protective Surface Treatment	SY	858.000	858.000
0080	502.3210	Pigmented Surface Sealer	SY	240.000	240.000
0084	503.0146	Prestressed Girder Type I 45W-Inch	LF	1,044.000	1,044.000
0088	505.0400	Bar Steel Reinforcement HS Structures	LB	12,520.000	12,520.000
0090	505.0600	Bar Steel Reinforcement HS Coated Structures	LB	78,740.000	78,740.000
0092	506.2605	Bearing Pads Elastomeric Non-Laminated	EACH	20.000	20.000
0094	506.4000	Steel Diaphragms (structure) 01. B-62-258	EACH	16.000	16.000
0098	516.0500	Rubberized Membrane Waterproofing	SY	20.000	20.000
0108	521.1012	Apron Endwalls for Culvert Pipe Steel 12-Inch	EACH	2.000	2.000
0114	521.1518	Apron Endwalls for Culvert Pipe Sloped Side Drains Steel 18-Inch 6 to 1	EACH	4.000	4.000
0116	521.3118	Culvert Pipe Corrugated Steel 18-Inch	LF	88.000	88.000
0130	550.0020	Pre-Boring Rock or Consolidated Materials	LF	140.000	140.000
0132	550.1120	Piling Steel HP 12-Inch X 53 Lb	LF	650.000	650.000
0134	550.1140	Piling Steel HP 14-Inch X 73 Lb	LF	490.000	490.000
0138	601.0588	Concrete Curb & Gutter 4-Inch Sloped 36-Inch Type TBT	LF	103.000	103.000
0140	601.0590	Concrete Curb & Gutter 4-Inch Sloped 36-Inch Type TBTT	LF	15.000	15.000
0142	606.0200	Riprap Medium	CY	6.000	6.000
0144	606.0300	Riprap Heavy	CY	1,174.000	1,174.000
0146	611.0654	Inlet Covers Type V	EACH	2.000	2.000
0148	611.3220	Inlets 2x2-FT	EACH	2.000	2.000
0150	612.0212	Pipe Underdrain Unperforated 12-Inch	LF	84.000	84.000
0152	612.0406	Pipe Underdrain Wrapped 6-Inch	LF	160.000	160.000
0156	614.0150	Anchor Assemblies for Steel Plate Beam Guard	EACH	4.000	4.000
0164	614.2300	MGS Guardrail 3	LF	50.000	50.000
0170	614.2500	MGS Thrie Beam Transition	LF	157.600	157.600
0172	614.2610	MGS Guardrail Terminal EAT	EACH	4.000	4.000
0178	618.0100	Maintenance And Repair of Haul Roads (project) 02. 5730-00-80	EACH	1.000	1.000
0180	619.1000	Mobilization	EACH	0.550	0.550
0182	624.0100	Water	MGAL	102.000	102.000

5730-00-80

Line	Item	Item Description	Unit	Total	Qty
0184	625.0500	Salvaged Topsoil	SY	5,456.000	5,456.000
0188	628.1504	Silt Fence	LF	1,772.000	1,772.000
0190	628.1520	Silt Fence Maintenance	LF	1,772.000	1,772.000
0192	628.1905	Mobilizations Erosion Control	EACH	3.000	3.000
0194	628.1910	Mobilizations Emergency Erosion Control	EACH	4.000	4.000
0198	628.2008	Erosion Mat Urban Class I Type B	SY	5,456.000	5,456.000
0200	628.7010	Inlet Protection Type B	EACH	2.000	2.000
0206	629.0210	Fertilizer Type B	CWT	3.800	3.800
0208	630.0120	Seeding Mixture No. 20	LB	149.000	149.000
0210	630.0200	Seeding Temporary	LB	153.000	153.000
0212	630.0500	Seed Water	MGAL	127.000	127.000
0216	633.5200	Markers Culvert End	EACH	2.000	2.000
0222	638.2602	Removing Signs Type II	EACH	4.000	4.000
0224	638.3000	Removing Small Sign Supports	EACH	4.000	4.000
0226	642.5001	Field Office Type B	EACH	1.000	1.000
0230	643.0420	Traffic Control Barricades Type III	DAY	1,782.000	1,782.000
0232	643.0705	Traffic Control Warning Lights Type A	DAY	3,564.000	3,564.000
0234	643.0900	Traffic Control Signs	DAY	15,345.000	15,345.000
0236	643.0920	Traffic Control Covering Signs Type II	EACH	14.000	14.000
0238	643.1050	Traffic Control Signs PCMS	DAY	14.000	14.000
0240	643.5000	Traffic Control	EACH	0.450	0.450
0244	645.0111	Geotextile Type DF Schedule A	SY	82.000	82.000
0246	645.0120	Geotextile Type HR	SY	1,945.000	1,945.000
0248	646.1020	Marking Line Epoxy 4-Inch	LF	1,874.000	1,874.000
0250	646.1040	Marking Line Grooved Wet Ref Epoxy 4-Inch	LF	1,026.000	1,026.000
0260	650.4000	Construction Staking Storm Sewer	EACH	4.000	4.000
0262	650.4500	Construction Staking Subgrade	LF	516.000	516.000
0264	650.5000	Construction Staking Base	LF	516.000	516.000
0266	650.5500	Construction Staking Curb Gutter and Curb & Gutter	LF	118.000	118.000
0270	650.6500	Construction Staking Structure Layout (structure) 02. B-62-0258	LS	1.000	1.000
0276	650.9910	Construction Staking Supplemental Control (project) 02. 5730-00-80	LS	1.000	1.000
0278	650.9920	Construction Staking Slope Stakes	LF	1,032.000	1,032.000
0280	690.0150	Sawing Asphalt	LF	42.000	42.000
0282	715.0502	Incentive Strength Concrete Structures	DOL	3,276.000	3,276.000
0284	715.0720	Incentive Compressive Strength Concrete Pavement	DOL	500.000	500.000
0288	999.2000.S	Installing and Maintaining Bird Deterrent System (station) 01. 155+20	EACH	1.000	1.000
0294	SPV.0060	Special 01. Verify Landmark Reference Monuments	EACH	1.000	1.000
0300	SPV.0090	Special 01. Removing Existing Steel Piling	LF	120.000	120.000

3

NOTE:
ALL ITEMS AND QUANTITIES ON THIS SHEET ARE FOR ENGINEERS ESTIMATE CATEGORY 0010

STATION	-	STATION	201.0105 CLEARING STA	201.0205 GRUBBING STA	COMMENT
152+35	-	154+35	2	2	RIGHT
155+60	-	158+60	3	3	RIGHT
157+00	-	159+00	2	2	LEFT
PROJECT TOTAL			7	7	

STATION	LOCATION	203.0100 REMOVING SMALL PIPE CULVERTS EACH
156+92	RT	1
158+04	RT	1
PROJECT TOTAL		2

STATION	LOCATION	204.0165 REMOVING GUARDRAIL LF
152+96	RT	95
153+12	LT	95
155+91	RT	95
156+07	LT	95
PROJECT TOTAL		380

STATION	-	STATION	205.0100 EXCAVATION COMMON CY(1)	FILL CY (2)	EXPANDED FILL CY (2)(3)	208.0100 BORROW CY
151+30	-	153+93	858	2266	2946	2088
156+04	-	158+95	1052	837	1088	36
PROJECT TOTAL			1910			2124

(1) - EXISTING ASPHALTIC PAVEMENT IS INCLUDED IN COMMON EXCAVATION TOTALS.
(2) - NOT A BID ITEM - FOR INFORMATIONAL PURPOSES ONLY.
(3) - FILL EXPANSION 30%

STATION	-	STATION	305.0110 BASE AGGREGATE DENSE 3/4-INCH TON	305.0120 BASE AGGREGATE DENSE 1 1/4-INCH TON	*312.0110 SELECT CRUSHED MATERAL TON	624.0100 WATER MGAL
151+30	-	153+93	92	647	959	51
156+03	-	158+55	94	617	958	51
DRIVEWAYS			62	68	-	-
PROJECT TOTAL			248	1332	1917	102

STATION	-	STATION	415.0080 CONCRETE PAVEMENT 8-INCH SY	415.0410 CONCRETE PAVEMENT APPROACH SLAB SY
153+69	-	153+99	30	63
155+98	-	156+28	32	63
PROJECT TOTAL			62	126

STATION	-	STATION	455.0605 TACK COAT GAL	465.0105 ASPHALTIC SURFACE TON
151+30	-	153+70	44	218
156+27	-	158+55	42	211
PROJECT TOTAL			86	429

3

NOTE:
ALL ITEMS AND QUANTITIES ON THIS SHEET ARE FOR ENGINEERS ESTIMATE CATEGORY 0010

3

LOCATION	521.1012 APRON ENDWALLS FOR CULVERT PIPE STEEL 12-INCH EACH	606.0200 RIPRAP MEDIUM CY	611.0654 INLET COVERS TYPE V EACH	611.3220 INLETS 2x2-FT EACH	612.0212 PIPE UNDERDRAIN UNPERFORATED 12-INCH LF	633.5200 MARKERS CULVERT END EACH	645.0120 GEOTEXTILE TYPE HR (1) SY
NW WING	1	3	1	1	44	1	6
NE WING	1	3	1	1	40	1	6
PROJECT TOTAL	2	6	2	2	84	2	12

(1) SEE STRUCTURE PLAN FOR ADDITIONAL QUANTITY

STATION	LOCATION	521.3118 CULVERT PIPE CORRUGATED STEEL 18-INCH LF	521.1518 APRON ENDWALLS FOR CULVERT PIPE SLOPED SIDE DRAINS STEEL 18-INCH 6 TO 1 EACH
157+08	RT	48	2
157+83	RT	40	2
PROJECT TOTAL		88	4

STATION	-	STATION		601.0588 CONCRETE CURB & GUTTER 4-INCH SLOPED 36-INCH TYPE TBT LF	601.0590 CONCRETE CURB & GUTTER 4-INCH SLOPED 36-INCH TYPE TBTT LF
153+09	-	153+68	RT	59	-
153+26	-	153+69	LT	44	-
153+69	-	153+85	LT	-	15
PROJECT TOTAL				103	15

STATION	-	STATION	LOCATION	614.2300 MGS GUARDRAIL 3 LF	614.2500 MGS THRIE BEAM TRANSITION LF	614.2610 MGS GUARDRAIL TERMINAL EAT EACH
152+65.46	-	153+70.49	RT	12.5	39.4	1
152+82.25	-	153+87.28	LT	12.5	39.4	1
156+09.72	-	157+14.75	RT	12.5	39.4	1
156+26.51	-	157+31.54	LT	12.5	39.4	1
PROJECT TOTAL				50	157.6	4

STATION	-	STATION	LOCATION	625.0500 SALVAGED TOPSOIL SY	628.2008 EROSION MAT URBAN CLASS I TYPE B SY	628.7010 INLET PROTECTION TYPE B EACH	629.0210 FERTILIZER TYPE B CWT	630.0120 SEEDING MIXTURE NO. 20 LB	630.0200 SEEDING TEMPORARY LB	630.0500 SEED WATER MGAL
151+25	-	153+66	RT	969	969	-	0.70	26	26	22
151+26	-	153+89	LT	1197	1197	-	0.80	32	32	27
153+25			RT	-	-	1	-	-	-	-
153+42			LT	-	-	1	-	-	-	-
UNDISTRIBUTED			-	542	542	-	0.40	15	15	13
			SUBTOTAL	2708	2708	2	1.90	74	74	62
154+93	-	155+62	RT	275	275	-	0.20	8	10	7
155+15	-	155+94	LT	275	275	-	0.20	8	8	7
156+13	-	158+59	RT	424	424	-	0.30	11	12	10
156+30	-	159+02	LT	1224	1224	-	0.80	33	33	28
UNDISTRIBUTED			-	550	550	-	0.40	15	16	13
			SUBTOTAL	2748	2748	0	1.90	75	79	65
			PROJECT TOTAL	5456	5456	2	3.80	149	153	127

3

3

STATION	-	STATION	LOCATION	628.1504 SILT FENCE LF	628.1520 SILT FENCE MAINTENANCE LF
151+06	-	154+34	RT	369	369
151+14	-	154+34	LT	386	386
154+89	-	156+92	RT	251	251
154+97	-	158+89	LT	411	411
UNDISTRIBUTED				355	355
PROJECT TOTAL				1772	1772

DESCRIPTION	628.1905 MOBILIZATIONS EROSION CONTROL EACH	628.1910 MOBILIZATIONS EMERGENCY EROSION CONTROL EACH
PROJECT 5730-00-80	3	4
PROJECT TOTAL	3	4

LOCATION	638.2602 REMOVING SIGNS TYPE II EACH	638.3000 REMOVING SMALL SIGN SUPPORTS EACH	COMMENTS
SW BRIDGE CORNER	1	1	OBJECT MARKER
SE BRIDGE CORNER	1	1	OBJECT MARKER
NW BRIDGE CORNER	1	1	OBJECT MARKER
NE BRIDGE CORNER	1	1	OBJECT MARKER
PROJECT TOTAL	4	4	

NOTE:
ALL ITEMS AND QUANTITIES ON THIS SHEET ARE FOR ENGINEERS ESTIMATE CATEGORY 0010

3

STATION	-	STATION	LOCATION	465.0475 ASPHALT CENTERLINE RUMBLE STRIPS 2-LANE RURAL LF	646.1020 MARKING LINE EPOXY 4-INCH YELLOW SOLID LF	646.1020 MARKING LINE EPOXY 4-INCH WHITE SOLID LF	646.1040 MARKING LINE GROOVED WET REF EPOXY 4-INCH WHITE SOLID LF	REMARKS
151+30	-	153+44	CL	214	-	-	-	
156+52	-	158+55	CL	203	-	-	-	
151+30	-	158+55	CL	-	1450	-	-	
151+30	-	153+92	EDGELINES	-	-	-	524	
153+92	-	156+04	EDGELINES	-	-	424	-	BRIDGE DECK
156+04	-	158+55	EDGELINES	-	-	-	502	
			PROJECT TOTAL	417	1874		1026	

STATION	-	STATION	650.4000 CONSTRUCTION STAKING STORM SEWER EACH	650.4500 CONSTRUCTION STAKING SUBGRADE LF	650.5000 CONSTRUCITON STAKING BASE LF	650.5000 CONSTRUCTION STAKING CURB GUTTER AND CURB & GUTTER LF	650.9920 CONSTRUCITON STAKING SLOPE STAKES LF	650.9910 CONSTRUCTION STAKING SUPPLEMENTAL CONTROL (5730-00-80) EACH	SPV. 0060.01 VERIFY LANDMARK REFERENCE MONUMENTS EACH
151+30	-	153+94	-	264	264	118	528	-	-
156+03	-	158+55	-	252	252	-	504	-	-
153+25, RT			1	-	-	-	-	-	-
153+42, LT			1	-	-	-	-	-	-
157+08, RT	-	157+56, RT	1	-	-	-	-	-	-
157+83, RT	-	158+23, RT	1	-	-	-	-	-	-
Project			-	-	-	-	-	1	1
PROJECT TOTAL			4	516	516	118	1032	1	1

DESCRIPTION	DAYS	643.0900 TRAFFIC CONTROL SIGNS QTY	643.0900 TRAFFIC CONTROL SIGNS DAY	643.0920 TRAFFIC CONTROL COVERING SIGNS TYPE II (1) EACH	643.1050 TRAFFIC CONTROL SIGNS PCMS (2) QTY	643.1050 TRAFFIC CONTROL SIGNS PCMS (2) DAY	643.0420 TRAFFIC CONTROL BARRICADES TYPE III QTY	643.0420 TRAFFIC CONTROL BARRICADES TYPE III DAY	643.0705 TRAFFIC CONTROL WARNING LIGHTS TYPE A QTY	643.0705 TRAFFIC CONTROL WARNING LIGHTS TYPE A DAY
PROJECT 5730-00-80	99	155	15345	14	2	14	18	1782	36	3564
PROJECT TOTAL			15345	14		14		1782		3564

(1) - EACH LOCATION HAS ONE COVER/UNCOVER CYCLE

(2) - EACH TRAFFIC CONTROL PCMS SHALL BE IN PLACE FOR 7 DAYS PRIOR TO ROAD CLOSURE

STATION	690.0150 SAWING ASPHALT LF	COMMENT
151+30	21	BEGIN PROJECT
158+55	21	END PROJECT
PROJECT TOTAL	42	

STATE OF WISCONSIN
DEPARTMENT OF TRANSPORTATION
TRANSPORTATION PROJECT PLAT TITLE SHEET
PROJ NO. 5730-00-20
VIROQUA - RICHLAND CENTER
BISHOPS BRANCH BRIDGE B-62-755
STH 56
VERNON COUNTY

CONVENTIONAL SYMBOLS

SECTION LINE
QUARTER LINE
SIXTEENTH LINE
NEW REFERENCE LINE
NEW R/W LINE
EXISTING R/W OR HE LINE
PROPERTY LINE
LOT, TIE & OTHER MINOR LINES
SLOPE INTERCEPT
CORPORATE LIMITS
UNDERGROUND FACILITY (COMMUNICATIONS, ELECTRIC, ETC) — W (TYPE)
NEW R/W (FEE OR HE) (HATCHING VARIES BY OWNER)
TEMPORARY LIMITED EASEMENT AREA
EASEMENT AREA (PERMANENT LIMITED OR RESTRICTED DEVELOPMENT)
TRANSMISSION STRUCTURES
BUILDING — TO BE REMOVED
BRIDGE

SECTION CORNER SYMBOL (23 24 16 15)
SECTION CORNER MONUMENT
GEODETIC SURVEY MONUMENT
SIXTEENTH CORNER MONUMENT
SIGN
OFF-PREMISE SIGN (#1-25)

R/W MONUMENT (TO BE SET)
NON-MONUMENTED R/W POINT
FOUND IRON PIN (1-INCH UNLESS NOTED) IP

	COMPENSABLE	NON-COMPENSABLE
ELECTRIC POLE		
TELEPHONE POLE		
PEDESTAL (LABEL TYPE) (TV, TEL, ELEC, ETC.)		

ACCESS RESTRICTED BY ACQUISITION
NO ACCESS (BY STATUTORY AUTHORITY)
ACCESS RESTRICTED (BY PREVIOUS PROJECT OR CONTROL)
NO ACCESS (NEW HIGHWAY)

PARCEL NUMBER (25)
UTILITY NUMBER (40)
PARALLEL OFFSETS

CONVENTIONAL ABBREVIATIONS

ACCESS RIGHTS	AR	POINT OF INTERSECTION	PI
ACRES	AC	PROPERTY LINE	PL
AHEAD	AH	RECORDED AS	(100')
ALUMINUM	ALUM	REEL / IMAGE	R/I
AND OTHERS	ET AL	REFERENCE LINE	R/L
BACK	BK	REMAINING	REM
BLOCK	BLK	RESTRICTIVE DEVELOPMENT EASEMENT	RDE
CENTERLINE	C/L	RIGHT	RT
CERTIFIED SURVEY MAP	CSM	RIGHT OF WAY	R/W
CONCRETE	CONC	SECTION	SEC
COUNTY	CO	SEPTIC VENT	SEPV
COUNTY TRUNK HIGHWAY	CTH	SQUARE FEET	SF
DISTANCE	DIST	STATE TRUNK HIGHWAY	STH
CORNER	COR	STATION	STA
DOCUMENT NUMBER	DOC	TELEPHONE PEDESTAL	TP
EASEMENT	EASE	TEMPORARY LIMITED EASEMENT	TLE
EXISTING	EX	TRANSPORTATION PROJECT PLAT	TPP
GAS VALVE	GV	UNITED STATES HIGHWAY	USH
GRID NORTH	GN	VOLUME	V
HIGHWAY EASEMENT	HE		
IDENTIFICATION	ID		
LAND CONTRACT	LC		
LEFT	LT		
MONUMENT	MON		
NATIONAL GEODETIC SURVEY	NGS		
NUMBER	NO		
OUTLOT	OL		
PAGE	P		
POINT OF TANGENCY	PT		
PERMANENT LIMITED EASEMENT	PLE		
POINT OF BEGINNING	POB		
POINT OF CURVATURE	PC		
POINT OF COMPOUND CURVE	PCC		

CURVE DATA

LONG CHORD	LCH
LONG CHORD BEARING	LCB
RADIUS	R
DEGREE OF CURVE	D
CENTRAL ANGLE	Δ/DELTA
LENGTH OF CURVE	L
TANGENT	T
DIRECTION AHEAD	DA
DIRECTION BACK	DB

CONVENTIONAL UTILITY SYMBOLS

W	WATER
G	GAS
T	TELEPHONE
OH	OVERHEAD TRANSMISSION LINES
E	ELECTRIC
TV	CABLE TELEVISION
FO	FIBER OPTIC
SAN	SANITARY SEWER
SS	STORM SEWER

BEGIN RELOCATION ORDER

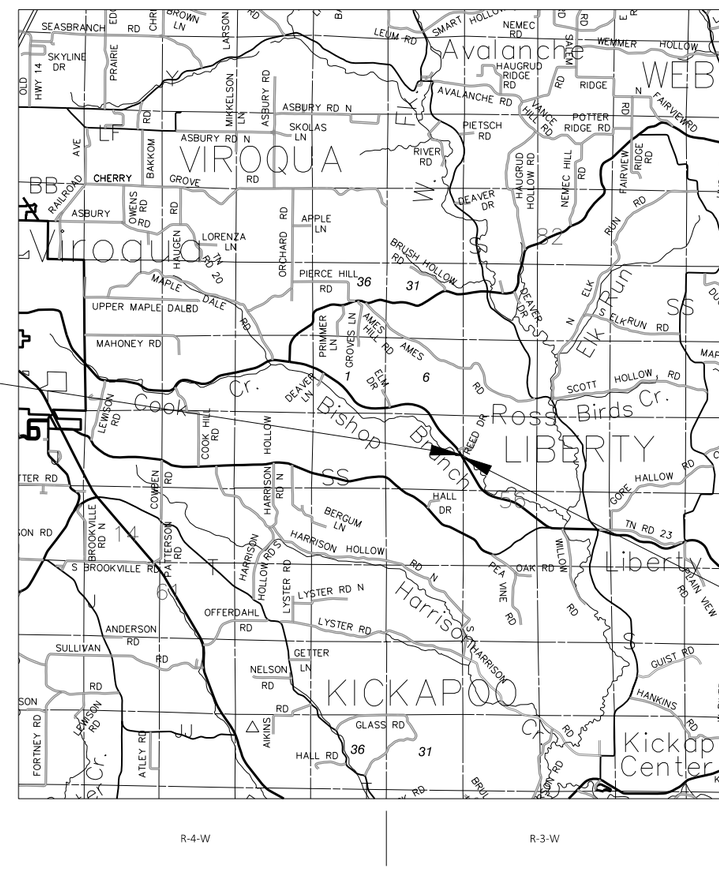

END RELOCATION ORDER

GN

LAYOUT
SCALE 0 1 MI.

THE NOTES,CONVENTIONAL SIGNS, AND ABBREVIATIONS ARE ASSOCIATED WITH EACH TRANSPORTATION PROJECT PLAT FOR PROJECT 1730-00-20

NOTES:

POSITIONS SHOWN ON THIS PLAT ARE WISCONSIN COORDINATE REFERENCE SYSTEM COORDINATES (WISCRS), VERNON COUNTY, NAD83 2011 IN US SURVEY FEET. VALUES SHOWN ARE GRID COORDINATES, GRID BEARINGS, AND GRID DISTANCES. GRID DISTANCES MAY BE USED AS GROUND DISTANCES.
NGS CONTROL POINTS: DH5164

ALL NEW RIGHT-OF-WAY MONUMENTS WILL BE TYPE 2 (TYPICALLY ¾" X 24" IRON REBARS), UNLESS OTHERWISE NOTED, AND WILL BE PLACED PRIOR TO THE COMPLETION OF THE PROJECT.

ALL RIGHT-OF-WAY LINES DEPICTED IN THE NON-ACQUISITION AREAS ARE INTENDED TO RE-ESTABLISH EXISTING RIGHT-OF-WAY LINES AS DETERMINED FROM PREVIOUS PROJECTS, OTHER RECORDED DOCUMENTS, OR FROM CENTERLINE OF EXISTING PAVEMENTS.

RIGHT-OF-WAY BOUNDARIES ARE DEFINED WITH COURSES OF THE PERIMETER OF THE HIGHWAY LANDS REFERENCED TO THE U.S. PUBLIC LAND SURVEY SYSTEM OR OTHER "SURVEYS" OF PUBLIC RECORD.

DIMENSIONING FOR THE NEW RIGHT-OF-WAY IS MEASURED ALONG AND PERPENDICULAR TO THE NEW REFERENCE LINES.

A TEMPORARY LIMITED EASEMENT (TLE) IS A RIGHT FOR CONSTRUCTION PURPOSES, AS DEFINED HEREIN, INCLUDING THE RIGHT TO OPERATE NECESSARY EQUIPMENT THEREON, THE RIGHT OF INGRESS AND EGRESS, AS LONG AS REQUIRED FOR SUCH PUBLIC PURPOSE, INCLUDING THE RIGHT TO PRESERVE, PROTECT, REMOVE, OR PLANT THEREON ANY VEGETATION THAT THE HIGHWAY AUTHORITIES MAY DEEM DESIRABLE. ALL (TLEs) ON THIS PLAT EXPIRE AT THE COMPLETION OF THE CONSTRUCTION PROJECT FOR WHICH THIS INSTRUMENT IS GIVEN.

PROPERTY LINES SHOWN ON THIS PLAT ARE DRAWN FROM DATA DERIVED FROM MAPS AND DOCUMENTS OF PUBLIC RECORD AND/OR EXISTING OCCUPATIONAL LINES. THIS PLAT MAY NOT BE A TRUE REPRESENTATION OF EXISTING PROPERTY LINES, EXCLUDING RIGHT-OF-WAY, AND SHOULD NOT BE USED AS A SUBSTITUTE FOR AN ACCURATE FIELD SURVEY.

FOR THE LATEST ACCESS/DRIVEWAY INFORMATION, CONTACT THE PLANNING UNIT OF THE WISCONSIN DEPARTMENT OF TRANSPORTATION OFFICE IN LA CROSSE.

PARCEL IDENTIFICATION NUMBERS MAY NOT POINT TO ALL AREAS OF ACQUISITION, AS NOTED ON THE SCHEDULE OF LANDS & INTERESTS REQUIRED.

FOR EXISTING HIGHWAY RIGHT-OF-WAY AND ACCESS CONTROL POINTS OF REFERENCE SEE INDIVIDUAL TPP DETAIL PAGES.

PROJECT NUMBER 5730-00-20 - 4. 01
SHEET 2 OF 2

FILE NAME : M:\UZ\W\WITSW\150628\STH 56\TPP.DWG
LAYOUT NAME: 01
PLOT DATE : 8/1/2019 1:04 PM PLOT BY : NICK ENGH PLOT NAME : _____ APPRAISAL PLAT DATE : 07/09/2019

TRANSPORTATION PROJECT PLAT NO: 5730-00-20 4.01

PART OF THE SE 1/4 OF THE NE 1/4 AND THE NE 1/4 OF THE SE 1/4 , OF SECTION 7, ALSO PART OF THE NW 1/4 OF THE SW 1/4 OF SECTION 8, ALL IN TOWNSHIP 12 NORTH, RANGE 3 WEST, TOWN OF LIBERTY, VERNON COUNTY, WISCONSIN

RELOCATION ORDER STH 56, VERNON COUNTY, VIROQUA - RICHLAND CENTER, BISHOPS BRANCH BRIDGE B-62-755

TO PROPERLY ESTABLISH, LAY OUT, WIDEN, ENLARGE, EXTEND, CONSTRUCT, RECONSTRUCT, IMPROVE, OR MAINTAIN A PORTION OF THE HIGHWAY DESIGNATED ABOVE, THE STATE OF WISCONSIN DEPARTMENT OF TRANSPORTATION DEEMS IT NECESSARY TO RELOCATE OR CHANGE SAID HIGHWAY AND ACQUIRE CERTAIN LANDS AND INTERESTS OR RIGHTS IN LANDS FOR THE ABOVE PROJECT.

TO EFFECT THIS CHANGE, PURSUANT TO AUTHORITY GRANTED UNDER SECTION 84.02 (3), 84.09, AND 84.30, WISCONSIN STATUTES, THE DEPARTMENT OF TRANSPORTATION HEREBY ORDERS THAT:
1. THAT PORTION OF SAID HIGHWAY AS SHOWN ON THIS PLAT IS LAID OUT AND ESTABLISHED TO THE LINES AND WIDTHS AS SO SHOWN FOR THE ABOVE PROJECT.
2. THE LANDS OR INTERESTS OR RIGHTS IN LANDS AS SHOWN ON THIS PLAT ARE REQUIRED BY THE DEPARTMENT FOR THE ABOVE PROJECT AND SHALL BE ACQUIRED IN THE NAME OF THE STATE OF WISCONSIN, PURSUANT TO THE PROVISIONS OF SECTION 84.09 (1) OR (2), WISCONSIN STATUTES.

Dawn M Nemec REG. OF DEEDS
VERNON COUNTY, WI
509244
08/15/2019 02:20 PM
RECORDING FEE: 30.00
TRANSFER FEE:
PAGE COUNT: 2
TAX EXEMPT #

RESERVED FOR REGISTER OF DEEDS
PROJECT NUMBER: 5730-00-20 4.01
SHEET 1 OF 2

4

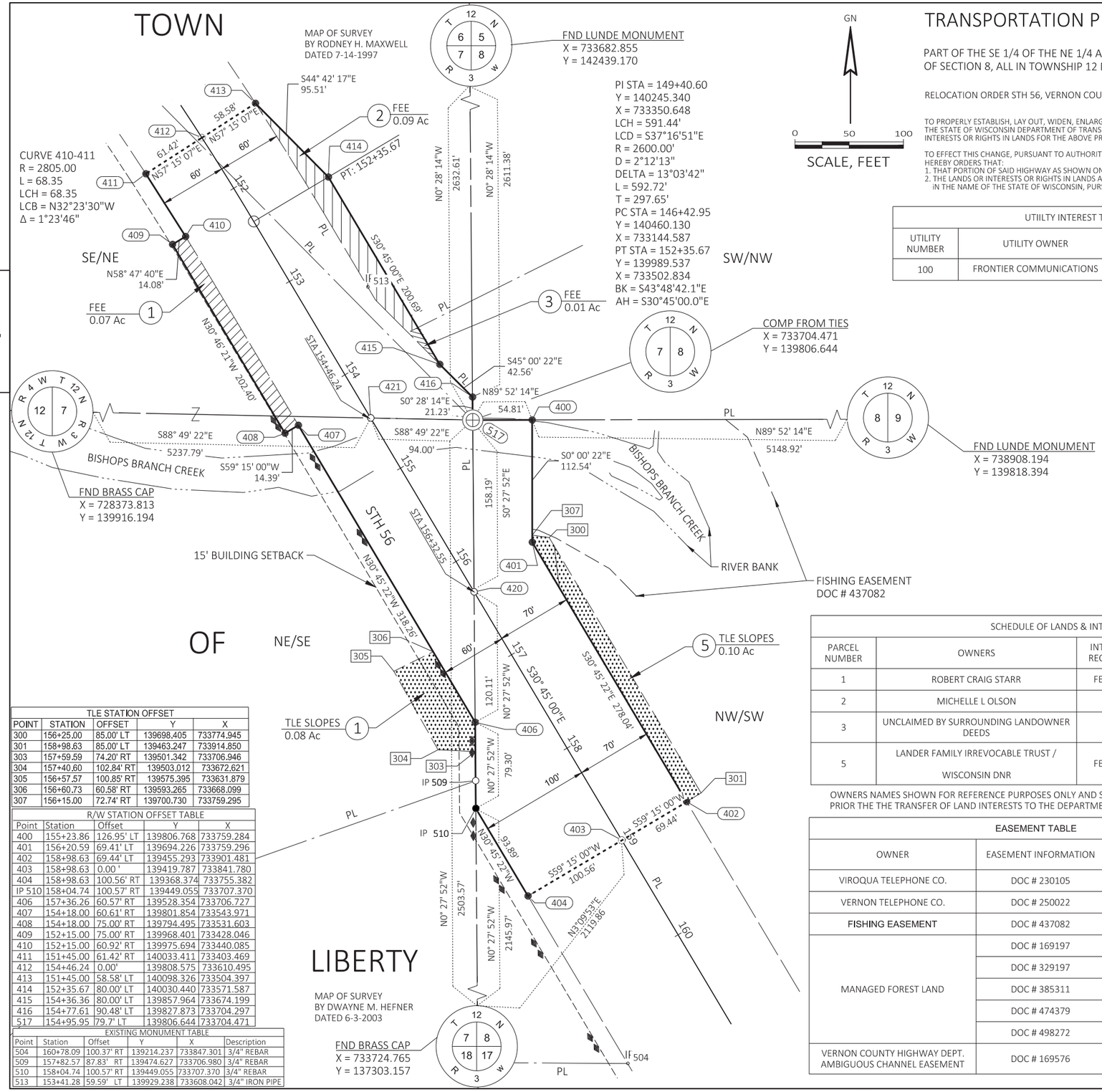

UTIILTY INTEREST TABLE		
UTILITY NUMBER	UTILITY OWNER	INTEREST REQUIRED
100	FRONTIER COMMUNICATIONS	RELEASE OF RIGHTS

NOTES:

POSITIONS SHOWN ON THIS PLAT ARE WISCONSIN COORDINATE REFERENCE SYSTEM COORDINATES (WISCRS), VERNON COUNTY, NAD83 2011 IN US SURVEY FEET. VALUES SHOWN ARE GRID COORDINATES, GRID BEARINGS, AND GRID DISTANCES. GRID DISTANCES MAY BE USED AS GROUND DISTANCES.
NGS CONTROL POINTS: DH5164

ALL NEW RIGHT-OF-WAY MONUMENTS WILL BE TYPE 2 (TYPICALLY 3/4"X24" IRON REBARS) UNLESS OTHERWISE NOTED, AND WILL BE PLACED PRIOR TO THE COMPLETION OF THE PROJECT.

RIGHT-OF-WAY BOUNDARIES ARE DEFINED WITH COURSES OF THE PERIMETER OF THE HIGHWAY LANDS REFERENCED TO THE U.S. PUBLIC LAND SURVEY SYSTEM OR OTHER "SURVEYS" OF PUBLIC RECORD.

DIMENSIONING FOR THE NEW RIGHT-OF-WAY IS MEASURED ALONG AND PERPENDICULAR TO THE NEW REFERENCE LINES.

A TEMPORARY LIMITED EASEMENT (TLE) IS A RIGHT FOR CONSTRUCTION PURPOSES, AS DEFINED HEREIN, INCLUDING THE RIGHT TO OPERATE NECESSARY EQUIPMENT THEREON, THE RIGHT OF INGRESS AND EGRESS, AS LONG AS REQUIRED FOR SUCH PUBLIC PURPOSE, INCLUDING THE RIGHT TO PRESERVE, PROTECT, REMOVE, OR PLANT THEREON ANY VEGETATION THAT THE HIGHWAY AUTHORITIES MAY DEEM DESIRABLE. ALL (TLES) ON THIS PLAT EXPIRE AT THE COMPLETION OF THE CONSTRUCTION PROJECT FOR WHICH THIS INSTRUMENT IS GIVEN.

EXISTING HIGHWAY RIGHT-OF-WAY SHOWN HEREIN IS BASED ON THE FOLLOWING POINTS OF REFERENCE:DIVISION JOB 5690

PROPERTY LINES SHOWN ON THIS PLAT ARE DRAWN FROM DATA DERIVED FROM MAPS AND DOCUMENTS OF PUBLIC RECORD AND/OR EXISTING OCCUPATIONAL LINES. THIS PLAT MAY NOT BE A TRUE REPRESENTATION OF EXISTING PROPERTY LINES, EXCLUDING RIGHT-OF-WAY, AND SHOULD NOT BE USED AS A SUBSTITUTE FOR AN ACCURATE FIELD SURVEY.

FOR THE LATEST ACCESS/DRIVEWAY INFORMATION, CONTACT THE PLANNING UNIT OF THE WISCONSIN DEPARTMENT OF TRANSPORTATION OFFICE IN LA CROSSE.

FOR ADDITIONAL INFORMATION REFER TO THE TITLE SHEET, RECORDED IN THE OFFICE OF THE REGISTER OF DEEDS, IN VERNON COUNTY, AS SHEET 2 OF 2 OF THIS DOCUMENT.

SCHEDULE OF LANDS & INTEREST TABLE						
PARCEL NUMBER	OWNERS	INTERSET REQUIRED	R/W NEW AC.	R/W EXISTING	R/W TOTAL	TLE AC.
1	ROBERT CRAIG STARR	FEE/TLE	0.07	1.16	1.23	0.08
2	MICHELLE L OLSON	FEE	0.09	---	0.09	---
3	UNCLAIMED BY SURROUNDING LANDOWNER DEEDS	FEE	0.01	0.24	0.25	---
5	LANDER FAMILY IRREVOCABLE TRUST / WISCONSIN DNR	FEE/TLE	---	1.02	1.02	0.10

OWNERS NAMES SHOWN FOR REFERENCE PURPOSES ONLY AND SUBJECT TO CHANGE PRIOR THE THE TRANSFER OF LAND INTERESTS TO THE DEPARTMENT

SHEET LOCATION

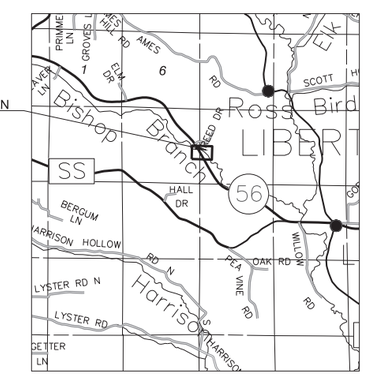

TLE STATION OFFSET				
POINT	STATION	OFFSET	Y	X
300	156+25.00	85.00' LT	139698.405	733774.945
301	158+98.63	85.00' LT	139463.247	733914.850
303	157+59.59	74.20' RT	139501.342	733706.946
304	157+40.60	102.84' RT	139503.012	733672.621
305	156+57.57	100.85' RT	139575.395	733631.879
306	156+60.73	60.58' RT	139593.265	733668.099
307	156+15.00	72.74' RT	139700.730	733759.295

R/W STATION OFFSET TABLE				
Point	Station	Offset	Y	X
400	155+23.86	126.95' LT	139806.768	733759.284
401	156+20.59	69.41' LT	139694.226	733759.296
402	158+98.63	69.44' LT	139455.293	733901.481
403	158+98.63	0.00 '	139419.787	733841.780
404	158+98.63	100.56' RT	139368.374	733755.382
IP 510	158+04.74	100.57' RT	139449.055	733707.370
406	157+36.26	60.57' RT	139528.354	733706.727
407	154+18.00	60.61' RT	139801.854	733543.971
408	154+18.00	75.00' RT	139794.495	733531.603
409	152+15.00	75.00' RT	139968.401	733428.046
410	152+15.00	60.92' RT	139975.694	733440.085
411	151+45.00	61.42' RT	140033.411	733403.469
412	154+46.24	0.00'	139808.575	733610.495
413	151+45.00	58.58' LT	140098.326	733504.397
414	152+35.67	80.00' LT	140030.440	733571.587
415	154+36.36	80.00' LT	139857.964	733674.199
416	154+77.61	90.48' LT	139827.873	733704.297
517	154+95.95	79.7' LT	139806.644	733704.471

EXISTING MONUMENT TABLE					
Point	Station	Offset	Y	X	Description
504	160+78.09	100.37' RT	139214.237	733847.301	3/4" REBAR
509	157+82.57	87.83' RT	139474.627	733706.980	3/4" REBAR
510	158+04.74	100.57' RT	139449.055	733707.370	3/4" REBAR
513	153+41.28	59.59' LT	139929.238	733608.042	3/4" IRON PIPE

EASEMENT TABLE			
OWNER	EASEMENT INFORMATION	PARCEL	UTILITY NUMBER
VIROQUA TELEPHONE CO.	DOC # 230105	1	100
VERNON TELEPHONE CO.	DOC # 250022	1	100
FISHING EASEMENT	DOC # 437082	5	
MANAGED FOREST LAND	DOC # 169197	1	
	DOC # 329197	1	
	DOC # 385311	1	
	DOC # 474379	1	
	DOC # 498272	1	
VERNON COUNTY HIGHWAY DEPT. AMBIGUOUS CHANNEL EASEMENT	DOC # 169576	1	

SEH
10 N BRIDGE ST
CHIPPEWA FALLS WI 54729

I,JASON L. CANCE PROFESSIONAL LAND SURVEYOR, HEREBY CERTIFY THAT IN FULL COMPLIANCE WITH THE PROVISIONS OF SECTION 84.095 OF THE WISCONSIN STATUTES AND UNDER THE DIRECTION OF DEPARTMENT OF TRANSORTATION SW REGION I HAVE SURVEYED AND MAPPED THIS TRANSPORTATION PROJECT PLAT AND SUCH PLAT CORRECTLY REPRESENTS ALL EXTERIOR BOUNDARIES OF THE SURVEYED LAND.

WISCONSIN JASON L. CANCE S-2688 CHIPPEWA FALLS WI LAND SURVEYOR

SIGNATURE: DATE: 08/01/2019
PRINT NAME: JASON L. CANCE
REGISTRATION NUMBER: S-2688

THIS PLAT AND RELOCATION ORDER ARE APPROVED FOR THE DEPARTMENT OF TRANSORTATION SW REGION

SIGNATURE: Cory Schlagel DATE: 08/01/2019
PRINT NAME: CORY SCHLAGEL

FILE NAME : M:\UZ\W\WITSW\150628\STH 56\TPP.DWG
APPRAISAL PLAT DATE : 07/09/2019
PLOT DATE : 8/1/2019 12:12 PM PLOT BY : NICK ENGH PLOT NAME : PLOT SCALE : 1 IN:100 FT

BENCHMARK DATA			
NO.	DESCRIPTION	STATION	OFFSET
BM 1	SET 3/8" SPIKE IN PP, 185' N OF REED DR	148+59.21	35.31' LT
BM 2	FOUND BRASS CAP AT SW COR OF BRIDGE	153+93.73	12.97' LT
BM 3	SET 3/8" SPIKE IN PP, SE OF BRIDGE	157+66.92	26.41' LT

NOTE: BM 1 NOT SHOWN ON THIS SHEET.

CULVERT INFORMATION GIVEN IS TO END OF PIPE
SEE CROSS SECTIONS FOR ADDITIONAL DROP INLET INFORMATION

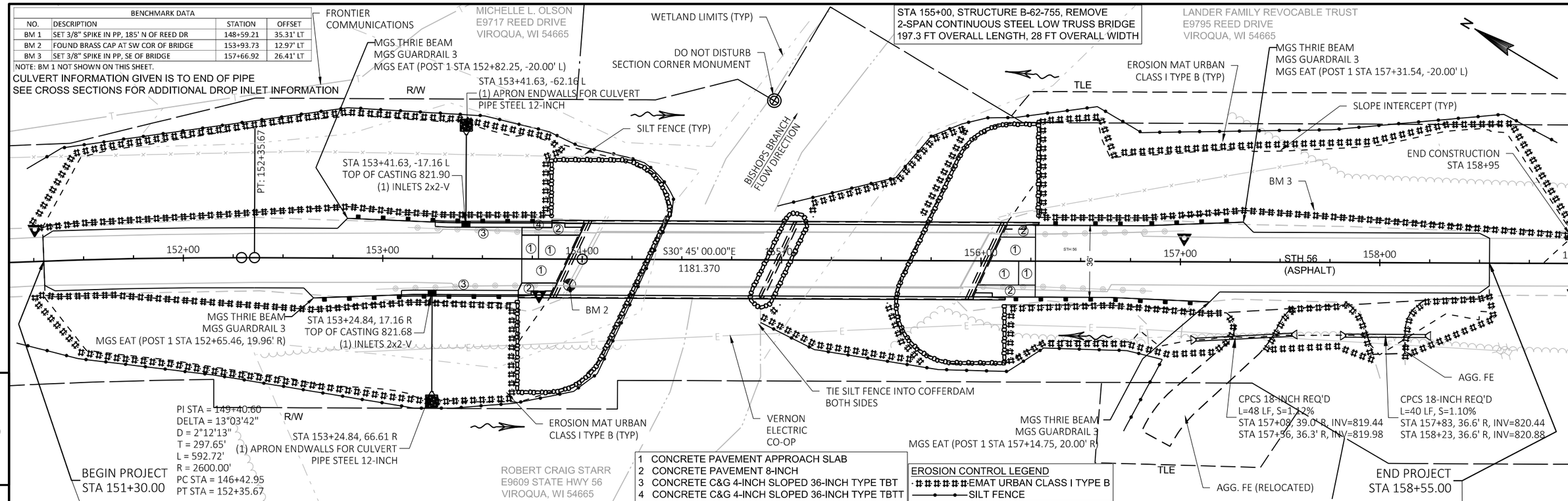

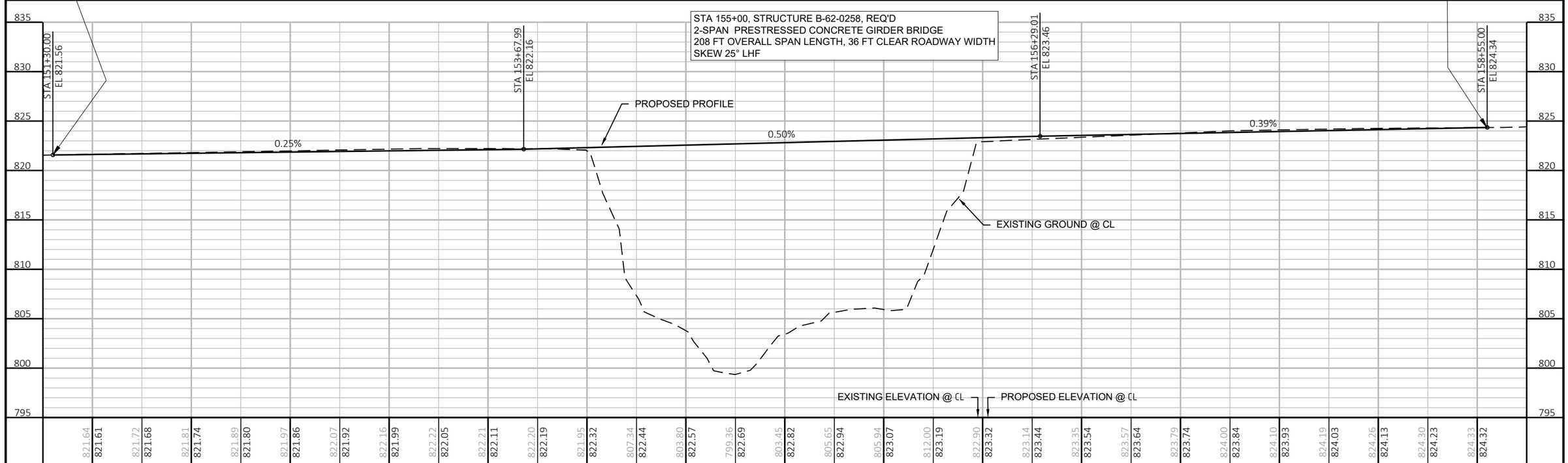

PROJECT NO: 5730-00-80	HWY: STH 56	COUNTY: VERNON	PLAN AND PROFILE: STH 56	SHEET 15	E

FILE NAME : \\SEHLX\PROJECTS\UZ\W\WITSW\146610\CIVIL 3D\57300000\SHEETSPLAN\050101-PP.DWG
LAYOUT NAME - 01
PLOT DATE : 1/29/2022 1:55 PM PLOT BY : TOREY LEONARD PLOT NAME : PLOT SCALE : 1 IN:50 FT

WISDOT/CADDS SHEET 44

Standard Detail Drawing List

08A05-19C	INLET COVERS TYPE F, HM, HM-S, S, T, V, HM-GJ, & HM-GJ-S
08C07-02	INLETS 2X2-FT, 2X2.5-FT, 2X3-FT AND 2.5X3-FT
08D01-22A	CONCRETE CURB & GUTTER
08D01-22B	CONCRETE CURB, TIES AND CURB AND GUTTER APPLICATIONS
08D03-08A	CONCRETE SURFACE DRAINS DROP INLET TYPE AT STRUCTURES
08D03-08B	CONCRETE SURFACE DRAINS DROP INLET TYPE AT STRUCTURES
08D21-01	DRIVEWAYS WITHOUT CURB & GUTTER
08E09-06	SILT FENCE
08E10-02	INLET PROTECTION TYPE A, B, C AND D
08F01-11	APRON ENDWALLS FOR CULVERT PIPE
08F07-05	STEEL APRON ENDWALLS FOR CULVERT PIPE AND PIPE ARCH SLOPED SIDE DRAINS
12A03-10	NAME PLATE (STRUCTURES)
13A03-06	CONCRETE PAVEMENT SHOULDERS
13A11-03A	2-LANE RURAL CENTER LINE RUMBLE STRIP, MILLING
13A11-03B	2-LANE RURAL CENTER LINE RUMBLE STRIP, MILLING
13B02-09A	CONCRETE PAVEMENT APPROACH SLAB
13C19-03	HMA LONGITUDINAL JOINTS
14B29-01	SAFETY EDGE
14B42-07A	MIDWEST GUARDRAIL SYSTEM (MGS) GUARDRAIL
14B42-07B	MIDWEST GUARDRAIL SYSTEM (MGS) GUARDRAIL
14B42-07C	MIDWEST GUARDRAIL SYSTEM (MGS) GUARDRAIL
14B42-07D	MIDWEST GUARDRAIL SYSTEM (MGS) GUARDRAIL
14B44-04A	MIDWEST GUARDRAIL SYSTEM ENERGY ABSORBING TERMINAL (MGS)
14B44-04B	MIDWEST GUARDRAIL SYSTEM ENERGY ABSORBING TERMINAL (MGS)
14B44-04C	MIDWEST GUARDRAIL SYSTEM ENERGY ABSORBING TERMINAL (MGS)
14B45-05A	MIDWEST GUARDRAIL SYSTEM THRIE BEAM TRANSITION (MGS)
14B45-05B	MIDWEST GUARDRAIL SYSTEM THRIE BEAM TRANSITION (MGS)
14B45-05C	MIDWEST GUARDRAIL SYSTEM THRIE BEAM TRANSITION (MGS)
14B45-05D	MIDWEST GUARDRAIL SYSTEM THRIE BEAM TRANSITION (MGS)
15A03-02A	FLEXIBLE MARKER POST FOR CULVERT END
15A03-02B	FLEXIBLE MARKER POST FOR CULVERT END
15C02-08A	BARRICADES AND SIGNS FOR MAINLINE CLOSURES
15C02-08B	BARRICADES AND SIGNS FOR VARIOUS CLOSURES
15C02-08C	DETOUR SIGNING FOR MAINLINE CLOSURES
15C08-20A	LONGITUDINAL MARKING (MAINLINE)
15C11-09B	CHANNELIZING DEVICES DRUMS, CONES, BARRICADES AND VERTICAL PANELS
16A01-07	LANDMARK REFERENCE MONUMENTS AND COVERS

6

6

GENERAL NOTES

DETAILS OF CONSTRUCTION, MATERIALS AND WORKMANSHIP NOT SHOWN ON THIS DRAWING SHALL CONFORM TO THE PERTINENT REQUIREMENTS OF THE STANDARD SPECIFICATIONS AND THE APPLICABLE SPECIAL PROVISIONS.

DETAIL DRAWINGS FOR PROPOSED ALTERNATE DESIGNS FOR INLET COVERS SHALL BE SUBMITTED TO THE ENGINEER FOR APPROVAL PROVIDING THAT SUCH ALTERNATE DESIGNS MAKE PROVISION FOR EQUIVALENT CAPACITY AND STRENGTH.

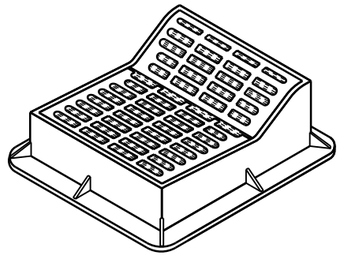

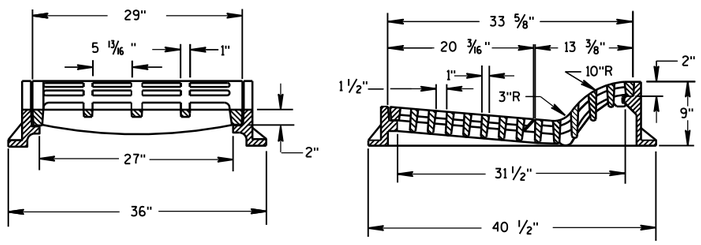

TYPE "F"

USE WITH TYPES A & D CONCRETE CURB & GUTTER, 36 INCH.

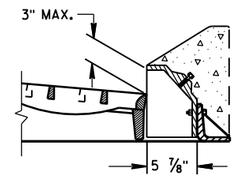

ALTERNATIVE CURB BOX FOR TYPE "HM" COVER

USE WITH TYPES G & J CONCRETE CURB & GUTTER, 30 INCH
NOTED AS TYPE HM-GJ ON DRAINAGE TABLE

NOTE:
SPECIAL GRATE FOR THE
TYPE "H" COVER MAY ALSO BE
USED FOR THE TYPE "HM-GJ" COVER
NOTED AS TYPE HM-GJ-S ON DRAINAGE TABLE

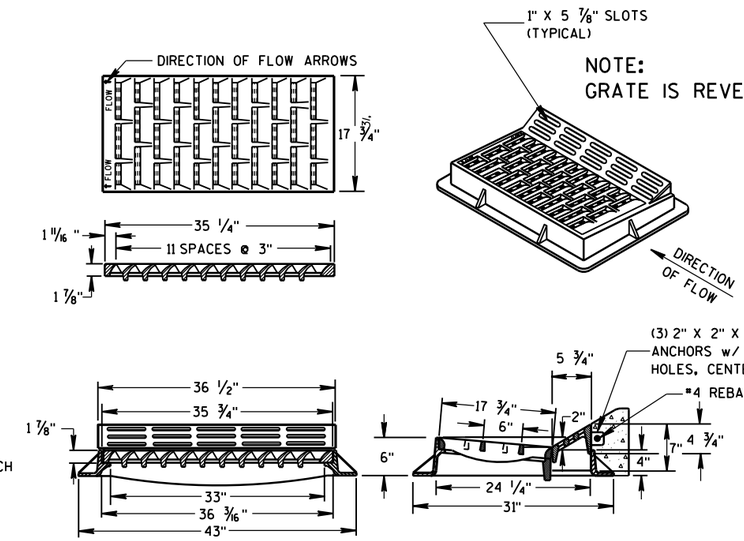

NOTE:
GRATE IS REVERSIBLE.

TYPE "HM"

USE WITH TYPES A & D CONCRETE CURB & GUTTER, 36 INCH.

NOTE:
SPECIAL GRATE FOR THE
TYPE "H" COVER MAY ALSO BE
USED FOR THE TYPE "HM" COVER
NOTED AS TYPE HM-S ON DRAINAGE TABLE

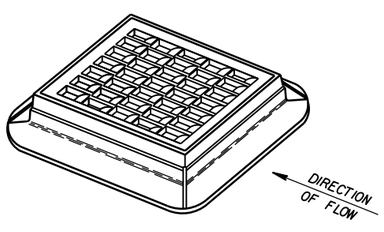

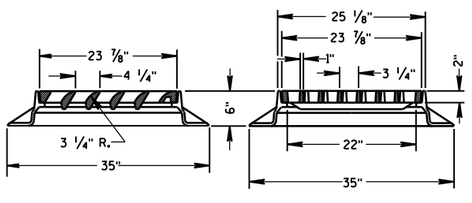

TYPE "S"

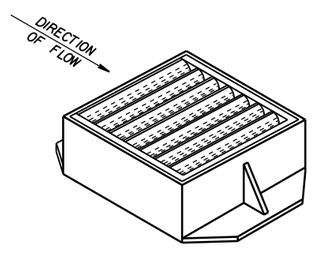

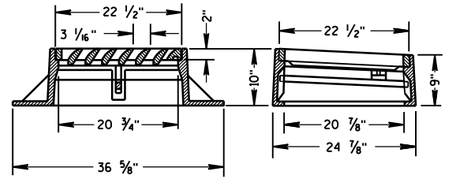

TYPE "V"

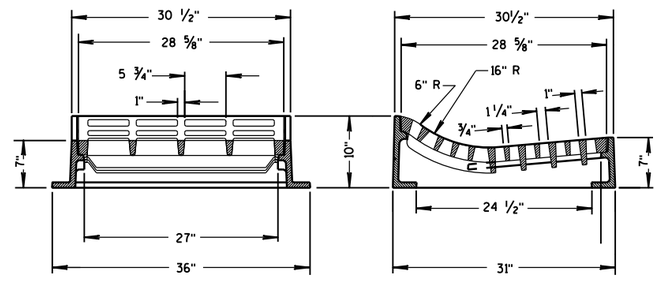

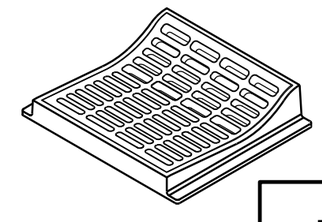

TYPE "T"

USE WITH TYPES R & T CONCRETE CURB & GUTTER, 36 INCH.

INLET COVERS
TYPE F, HM, HM-S, S, T, V, HM-GJ, & HM-GJ-S

STATE OF WISCONSIN
DEPARTMENT OF TRANSPORTATION

APPROVED
11/27/2013 — DATE
/S/ Jerry H. Zogg — ROADWAY STANDARDS DEVELOPMENT ENGINEER
FHWA

6
S.D.D. 8 A 5-19c

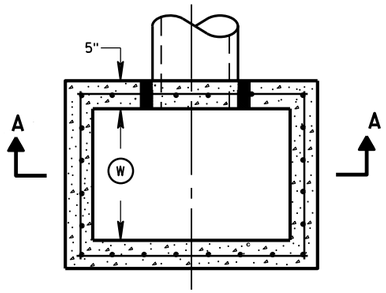

PLAN VIEW

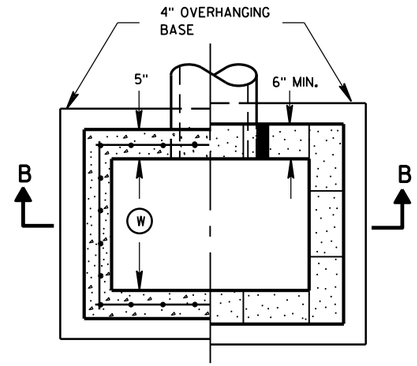

PLAN VIEW

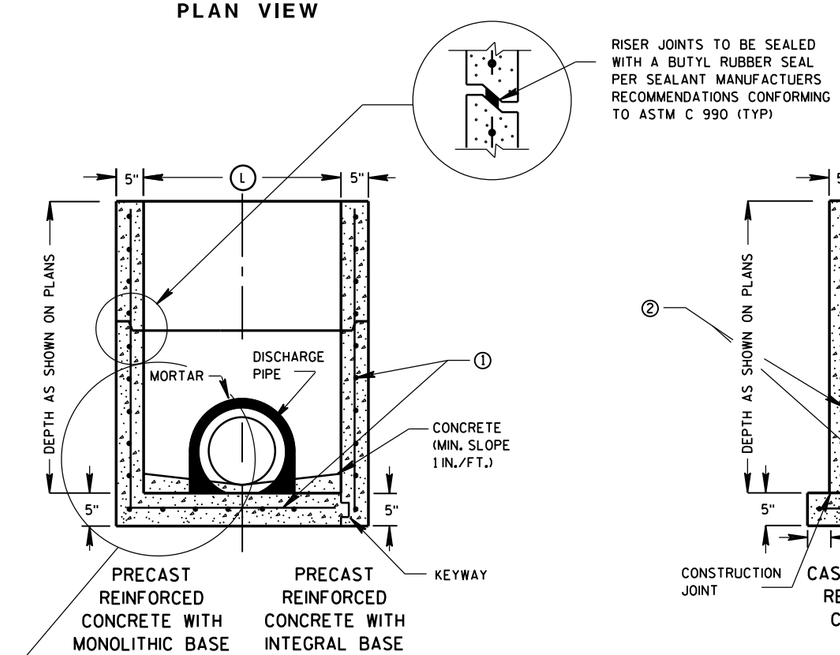

SECTION A-A

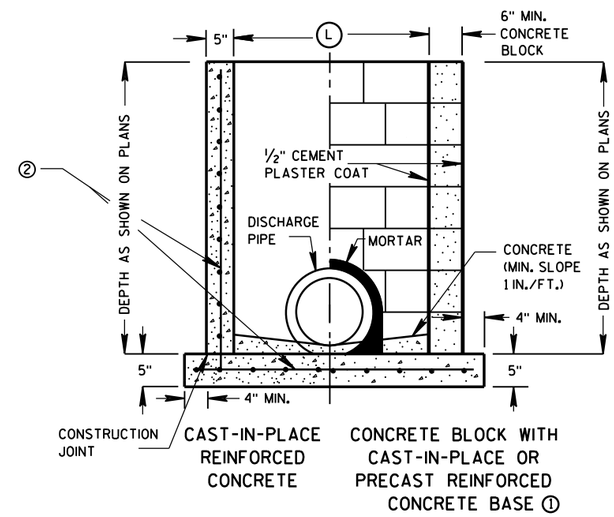

SECTION B-B

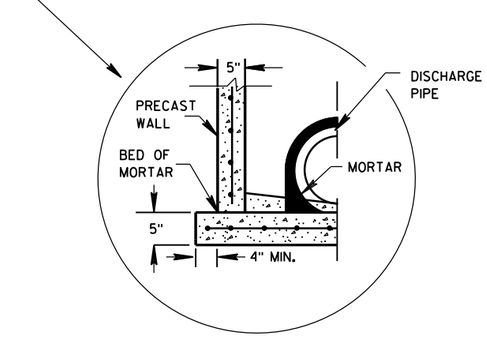

SEPARATE PRECAST REINFORCED CONCRETE BASE OPTION

GENERAL NOTES

DETAILS OF CONSTRUCTION, MATERIALS AND WORKMANSHIP NOT SHOWN ON THIS DRAWING SHALL CONFORM TO THE PERTINENT REQUIREMENTS OF THE STANDARD SPECIFICATIONS AND THE APPLICABLE SPECIAL PROVISIONS.

UNLESS OTHERWISE AUTHORIZED IN WRITING BY THE ENGINEER, THE CONTRACTOR SHALL NOT ORDER AND DELIVER PRECAST INLET UNITS REQUIRED FOR THE PROJECT UNTIL A LIST OF SIZES IS FURNISHED BY THE ENGINEER.

DETAILED DRAWINGS FOR PROPOSED ALTERNATE DESIGNS FOR UNDERGROUND DRAINAGE STRUCTURES SHALL BE SUBMITTED TO THE ENGINEER FOR APPROVAL PROVIDING THAT SUCH ALTERNATE DESIGNS MAKE PROVISION FOR EQUIVALENT CAPACITY AND STRENGTH.

ALL PRECAST INLET UNITS SHALL CONFORM TO THE PERTINENT REQUIREMENTS OF ASTM C 913.

ALL DRAINAGE STRUCTURES ARE DESIGNATED ON THE PLANS AS "MANHOLES 3X3-L", "CATCH BASINS 4-B", "INLETS 2X3-H", ETC. THE FIRST NUMBERS DESIGNATES THE SIZE OF THE STRUCTURE, AND THE FOLLOWING LETTER DESIGNATES THE TYPE OF COVER TO BE USED TO COMPRISE THE COMPLETE UNIT.

BASES SHALL BE PLACED ON A BED OF MATERIAL AT LEAST 6 INCHES IN DEPTH, WHICH MEETS THE REQUIREMENTS OF FOUNDATION BACKFILL. THIS BEDDING SHALL BE COMPACTED AND PROVIDE UNIFORM SUPPORT FOR THE ENTIRE AREA OF THE BASE.

ALL BAR STEEL REINFORCEMENT SHALL BE EMBEDDED 2 INCHES CLEAR UNLESS OTHERWISE SHOWN OR NOTED.

PRECAST REINFORCED RISERS SHALL HAVE A TONGUE AND GROOVE JOINT WITH TONGUE UP OR DOWN.

4" OVERHANGING BASES ARE REQUIRED FOR CAST-IN-PLACE REINFORCED CONCRETE AND CONCRETE BLOCK INSTALLATIONS.
4" OVERHANG IS REQUIRED WHEN SEPARATE PRECAST BASE IS PROVIDED.
OVERHANG IS NOT REQUIRED ON PRECAST STRUCTURES WITH AN INTEGRAL OR MONOLITHIC BASE.

MAXIMUM INSIDE PIPE DIAMETER DETERMINED BY 3 INCH CLEARANCE ON EACH SIDE OF THE OUTSIDE WALL OF THE PIPE. SEE DETAIL "A". ASSUMES PIPE ENTERS PERPENDICULAR TO THE STRUCTURE.

① FOR PRECAST INLETS PROVIDE REINFORCING STEEL IN ACCORDANCE TO ASTM C 913.

② CONTRACTOR TO PROVIDE DRAWING(S) STAMPED BY A PROFESSIONAL ENGINEER FOR STEEL REINFORCING DESIGN FOR CAST-IN-PLACE STRUCTURES.

INLET COVER MATRIX

INLET SIZE		INLET COVER TYPE	ALL A'S	ALL B'S	BW	F	ALL H'S	S	T	V	WM
	WIDTH Ⓦ (FT)	LENGTH Ⓛ (FT)									
2X2-FT	2	2	X	X				X		X	
2X2.5-FT	2	2.5			X			X	X	X	X
2X3-FT	2	3					X				
2.5X3-FT	2.5	3				X					

PIPE MATRIX

INLET SIZE	MAXIMUM INSIDE PIPE DIAMETER	
	WIDTH (IN)	LENGTH (IN)
2X2-FT	12	12
2X2.5-FT	12	18
2X3-FT	12	24
2.5X3-FT	18	24

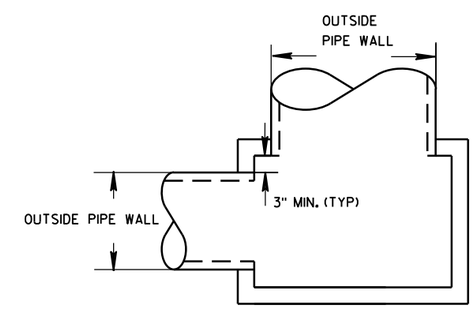

DETAIL "A"

INLETS 2X2-FT, 2X2.5-FT, 2X3-FT AND 2.5X3-FT

INLETS 2X2-FT, 2X2.5-FT, 2X3-FT AND 2.5X3-FT

STATE OF WISCONSIN
DEPARTMENT OF TRANSPORTATION

APPROVED
Sept., 2016 — DATE
/S/ Rodney Taylor
ROADWAY STANDARDS D IT
UNIT SUPERVIS
FHWA

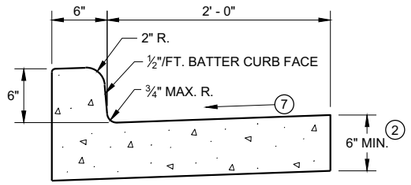

TYPES A[1] & D

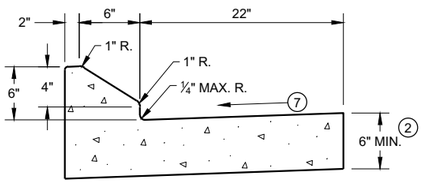

6" SLOPED CURB TYPES G[1] & J

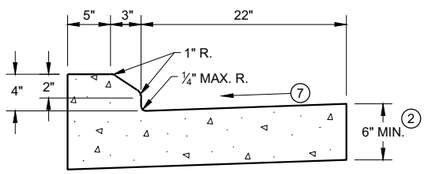

4" SLOPED CURB TYPES G[1] & J

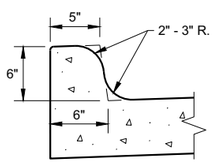

TYPES K[1] & L
(OPTIONAL CURB SHAPE)

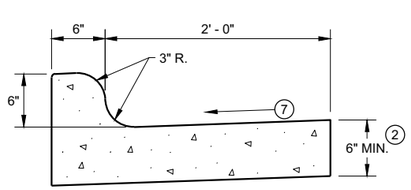

TYPES K[1] & L

CONCRETE CURB AND GUTTER 30"

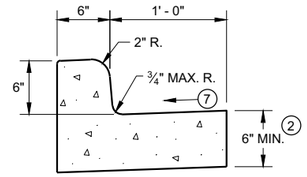

TYPES A[1] & D

CONCRETE CURB AND GUTTER 18"

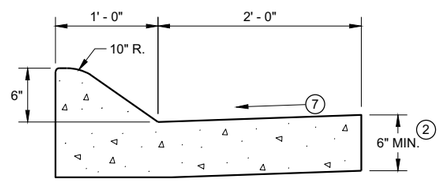

6" SLOPED CURB TYPES A[1] & D

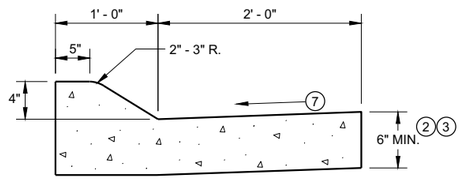

4" SLOPED CURB TYPES A[1] & D

CONCRETE CURB AND GUTTER 36"

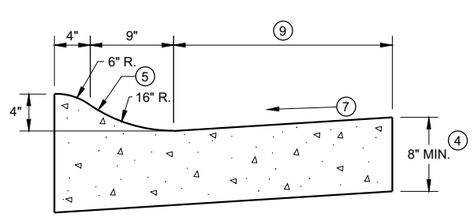

4" SLOPED CURB TYPES R[1] & T

TBT & TBTT	X
30"	22"
36"	28"

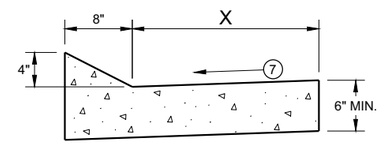

TYPES TBT & TBTT[1]

CONCRETE CURB AND GUTTER

PAVEMENT THICKNESS AND MAXIMUM CONCRETE PANEL WIDTH TABLE

PAVEMENT THICKNESS	MAXIMUM PANEL WIDTH
LESS THAN 10"	12'
10" & ABOVE	15'

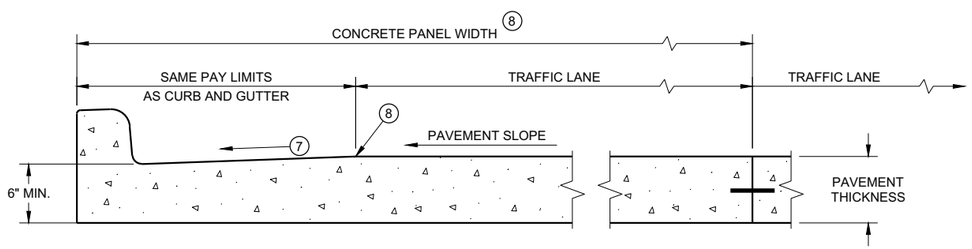

PARTIAL SECTION OF PAVEMENT *
WITH INTEGRAL CURB AND GUTTER

* BIKE LANE IS NOT SHOWN

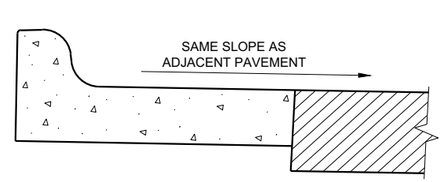

REVERSE SLOPE GUTTER[6]
(TYPICAL FOR ALL CURB & GUTTER TYPES)

GENERAL NOTES

DETAILS OF CONSTRUCTION AND WORKMANSHIP NOT SHOWN ON THIS DRAWING SHALL CONFORM TO THE PERTINENT REQUIREMENTS OF THE CONTRACT.

PAVEMENT TIES AND TIE BARS SHALL BE EPOXY COATED IN CONFORMANCE WITH SUBSECTION 505.2.6.2 OF THE STANDARD SPECIFICATIONS.

INTEGRAL CURB AND GUTTER SHALL CONFORM TO THE DETAILS SHOWN FOR CONCRETE CURB AND GUTTER INCLUDING THE TRANSVERSE GUTTER SLOPE.

UNLESS OTHERWISE SHOWN ON THE TYPICAL CROSS SECTIONS, THE BASE AGGREGATE AND COMMON EXCAVATION LIMITS ARE 2' - 0" BEHIND THE BACK OF CURBS.

1. TIE BARS ARE REQUIRED FOR CURB AND GUTTERS TYPES A, G, K, R, AND TBTT.
2. THE BOTTOM OF CURB AND GUTTER MAY BE CONSTRUCTED EITHER LEVEL OR PARALLEL TO THE SLOPE OF THE SUBGRADE OR BASE AGGREGATE PROVIDED A 6" MINIMUM GUTTER THICKNESS IS MAINTAINED.
3. USE 8" MINIMUM GUTTER THICKNESS WHEN USED WITH AN ADJACENT CONCRETE TRUCK APRON PLACED BEHIND BACK OF CURB.
4. THE BOTTOM OF CURB AND GUTTER MAY BE CONSTRUCTED EITHER LEVEL OR PARALLEL TO THE SLOPE OF THE SUBGRADE OR BASE AGGREGATE PROVIDED A 8" MINIMUM GUTTER THICKNESS IS MAINTAINED.
5. UNLESS OTHERWISE NOTED, FOR STAKING PURPOSES THE FACE OF CURB IS 6" FROM THE BACK OF CURB.
6. WHEN REVERSE SLOPE GUTTER IS REQUIRED, THE LOCATION(S) WILL BE SHOWN ELSEWHERE IN THE PLAN.
7. USE 4% GUTTER CROSS SLOPE UNLESS OTHERWISE NOTED IN THE PLANS.
8. INCLUDE LONGITUDINAL JOINT AND TIE BARS ALONG LANE EDGE WHEN CONCRETE PANEL WIDTH EXCEEDS THE MAXIMUM WIDTH PER TABLE BELOW. LONGITUDINAL JOINT(S) ARE NOT ALLOWED WITHIN TRAFFIC LANES AND BIKE LANES. LONGITUDINAL JOINT MAY BE SAWED.
9. CONCRETE CURB AND GUTTER 4-INCH SLOPED 30-INCH TYPE "R" AND "T" = 17 INCHES
   CONCRETE CURB AND GUTTER 4-INCH SLOPED 36-INCH TYPE "R" AND "T" = 23 INCHES

CONCRETE CURB AND GUTTER

STATE OF WISCONSIN
DEPARTMENT OF TRANSPORTATION

GENERAL NOTES

DETAILS OF CONSTRUCTION AND WORKMANSHIP NOT SHOWN ON THIS DRAWING SHALL CONFORM TO THE PERTINENT REQUIREMENTS OF THE CONTRACT.

PAVEMENT TIES AND TIE BARS SHALL BE EPOXY COATED IN CONFORMANCE WITH SUBSECTION 505.2.6.2 OF THE STANDARD SPECIFICATIONS.

UNLESS OTHERWISE SHOWN ON THE TYPICAL CROSS SECTIONS, THE BASE AGGREGATE AND COMMON EXCAVATION LIMITS ARE 2' - 0" BEHIND THE BACK OF CURBS.

(1) TIE BARS ARE REQUIRED FOR CURB AND GUTTERS TYPES A, G, K, R, AND TBTT.

(2) THE BOTTOM OF CURB AND GUTTER MAY BE CONSTRUCTED EITHER LEVEL OR PARALLEL TO THE SLOPE OF THE SUBGRADE OR BASE AGGREGATE PROVIDED A 6" MINIMUM GUTTER THICKNESS IS MAINTAINED.

(9) REFER TO SDD 08D18 AND 08D19 FOR ADDITIONAL DRIVEWAY ENTRANCE CURB DETAILS.

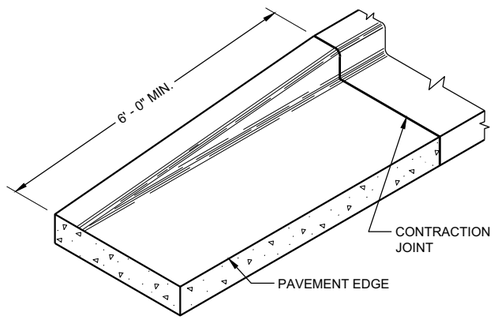

END SECTIONCURB AND GUTTER

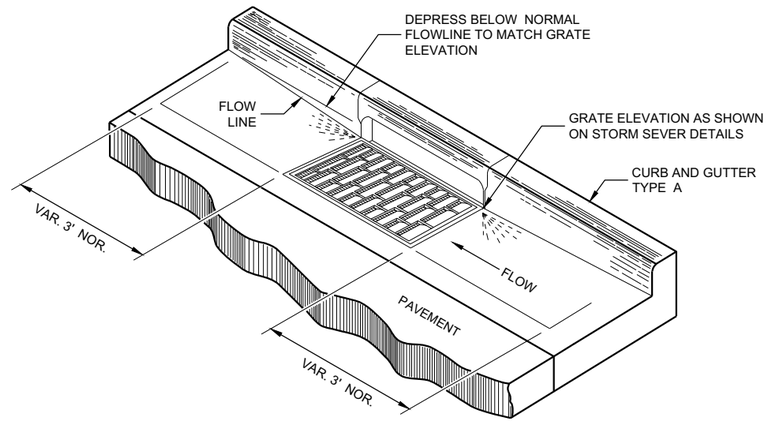

DETAIL OF CURB AND GUTTER AT INLETS
(TYPICAL H INLET COVER SHOWN)

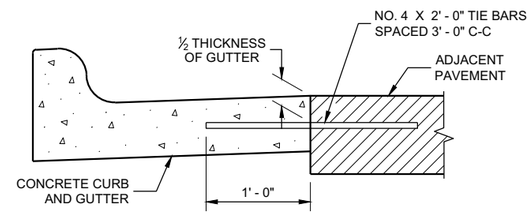

TYPICAL TIE BAR LOCATION (1)

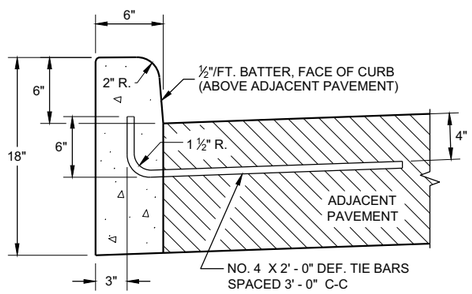

TYPES A (1) & D

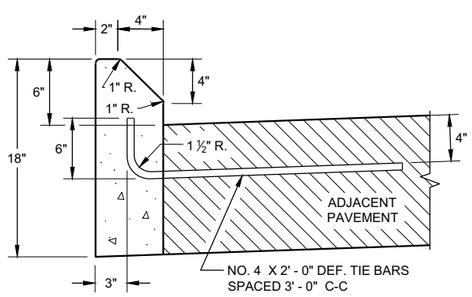

TYPES G (1) & J

CONCRETE CURB

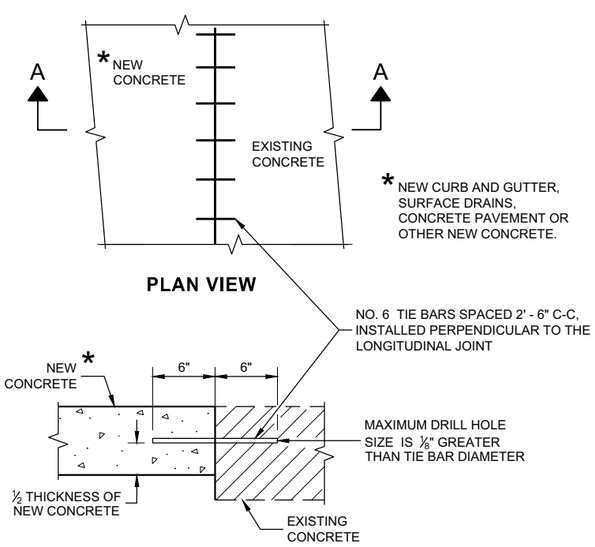

PLAN VIEW

SECTION A - A

TIE BARS DRILLED INTO EXISTING PAVEMENT

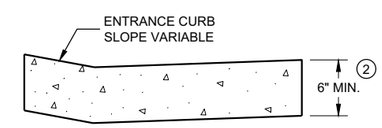

DRIVEWAY ENTRANCE CURB (9)
(WHEN DIRECTED BY THE ENGINEER)

CONCRETE CURB, TIES AND CURB AND GUTTER APPLICATIONS

STATE OF WISCONSIN
DEPARTMENT OF TRANSPORTATION

APPROVED
February 2021 — DATE
/S/ Rodnery Taylor — ROADWAY STANDARDS DEVE ENGINEER
FHWA

6

SDD 08D01 - 22b

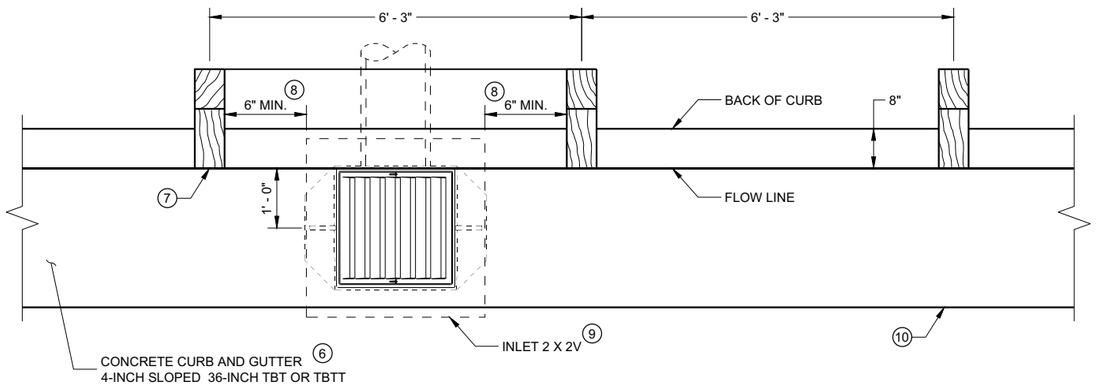

INLET PLAN VIEW

(NOTE: RAIL NOT SHOWN FOR CLARITY)

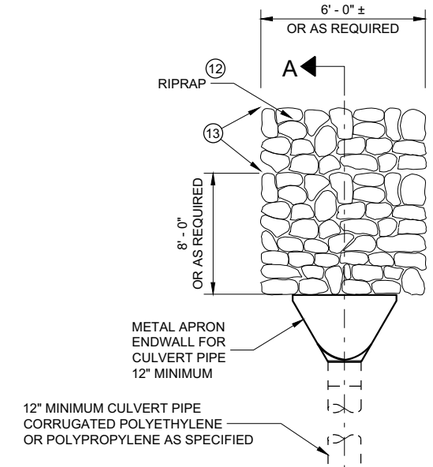

GENERAL NOTES

DETAILS OF CONSTRUCTION, MATERIALS AND WORKMANSHIP NOT SHOWN ON THIS DRAWING SHALL CONFORM TO THE PERTINENT REQUIREMENTS OF THE STANDARD SPECIFICATIONS AND THE APPLICABLE SPECIAL PROVISIONS.

ALL STEEL REINFORCEMENT SHALL BE EMBEDDED 2 INCHES CLEAR UNLESS OTHERWISE SHOWN OR NOTED.

1. USE A JOINT SEALANT CONFORMING TO STANDARD SPECIFICATION 415.2.6.
2. NO. 4 X 2' - 0" TIE BARS SPACED AT 12" C-C TO BE PLACED BY BRIDGE CONTRACTOR OR DRILLED TIE BARS PLACED AS DIRECTED BY THE ENGINEER.
3. PAVED CONCRETE SHOULDER (SDD 13A03) OR CONCRETE DRAINAGE SLAB.
4. CONCRETE PAVEMENT APPROACH SLAB (SHOWN) OR STRUCTURE APPROACH SLAB AND CONCRETE PAVEMENT APPROACH SLAB. SEE SDD 13B02.
5. PAVED CONCRETE SHOULDER (SDD 13A03) OR ASPHALT SHOULDER.
6. CONCRETE CURB AND GUTTER 4-INCH SLOPED 36-INCH TYPE TBT OR TBTT. USE TYPE TBTT CURB WITH NO. 4 X 2' -0" TIE BARS SPACED AT 3' - 0" C-C ONLY WHEN ADJACENT TO CONCRETE PAVEMENTS.
7. PLACE DRAINAGE STRUCTURE BEFORE MSG THRIE BEAM TRANSITION POST 1 (SEE SDD 14B45)
8. CENTER DRAINAGE STRUCTURE BETWEEN POSTS. 6-INCH MINIMUM SEPARATION FROM OUTSIDE WALL OF DRAINAGE STRUCTURE TO POSTS.
9. SEE SDD 08A05 AND 08C07 FOR DETAILS. SEE ROADWAY PLANS FOR LOCATION.
10. START CURB AND GUTTER TRANSITION OR END SECTION.
11. DEPRESS FLOW LINE (SEE DETAIL)
12. MEDIUM RIPRAP UNLESS OTHERWISE SPECIFIED.
13. LIMITS OF ADDITIONAL RIPRAP WHEN SPECIAL DITCH IS REQUIRED.

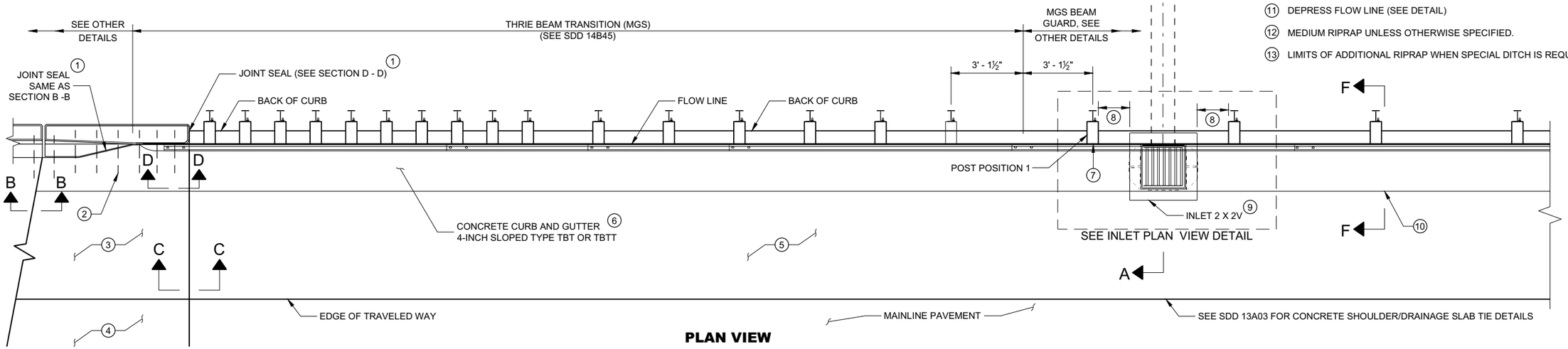

PLAN VIEW

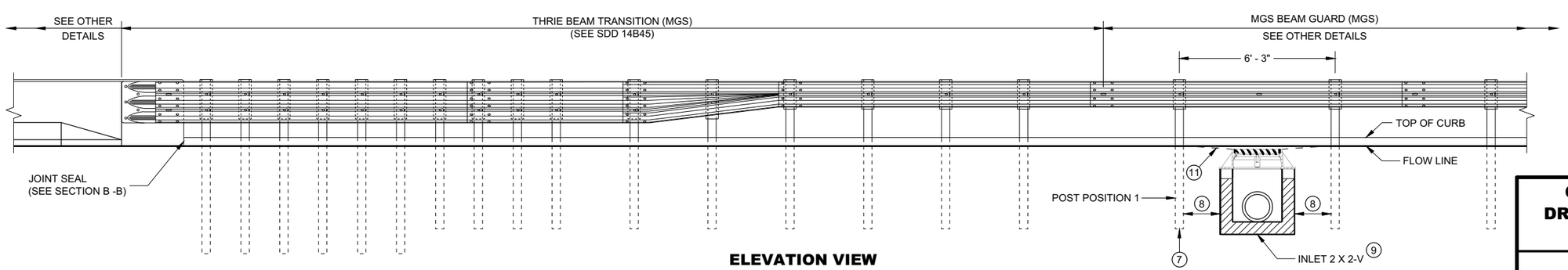

ELEVATION VIEW

CONCRETE SURFACE DRAINS DROP INLET TYPE AT STRUCTURES

STATE OF WISCONSIN
DEPARTMENT OF TRANSPORTATION

SDD 08D03 - 08a

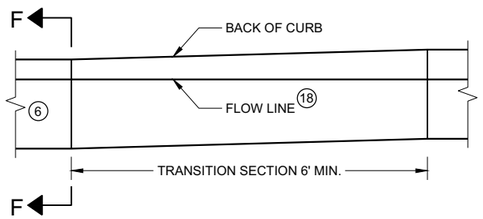

CURB AND GUTTER TRANSITION SECTION CONCRETE CURB AND GUTTER 4-INCH SLOPED 36 INCH TYPE TBT OR TBTT

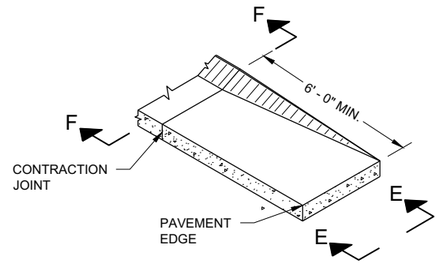

CURB AND GUTTER END SECTION CONCRETE CURB AND GUTTER 4-INCH SLOPED 36 INCH TYPE TBT OR TBTT

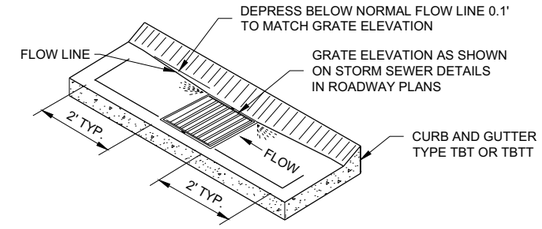

CURB AND GUTTER FLOW LINE DEPRESSION AT INLETS CONCRETE CURB AND GUTTER 4-INCH SLOPED 36 INCH TYPE TBT OR TBTT

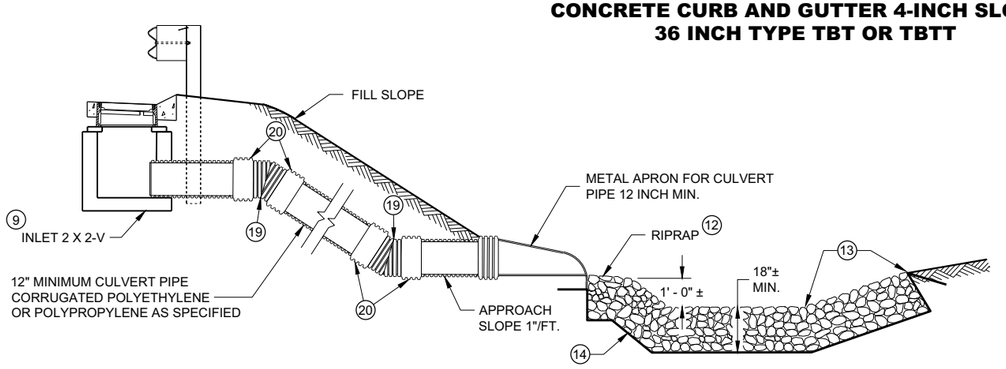

SECTION A - A

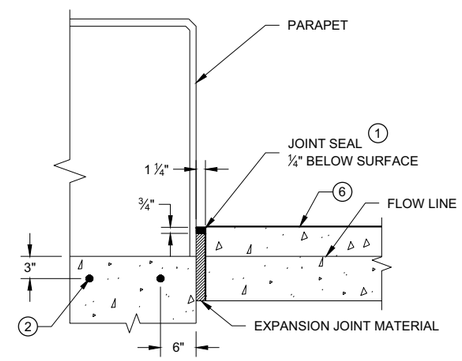

SECTION D - D

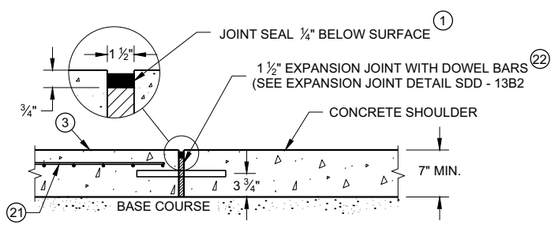

SECTION C - C

JOINT DETAIL FOR BRIDGE APPROACH WITH CONCRETE SHOULDERS

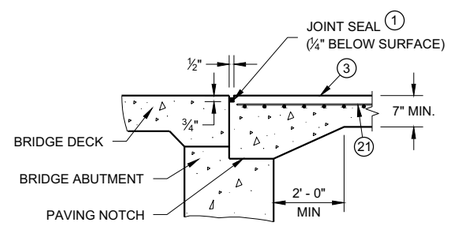

SECTION B-B 4

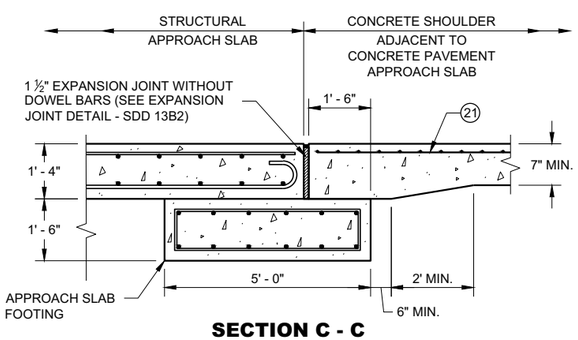

SECTION C - C

JOINT DETAIL FOR BRIDGE WITH STRUCTURAL APPROACH SLAB AND CONCRETE APPROACH SLAB

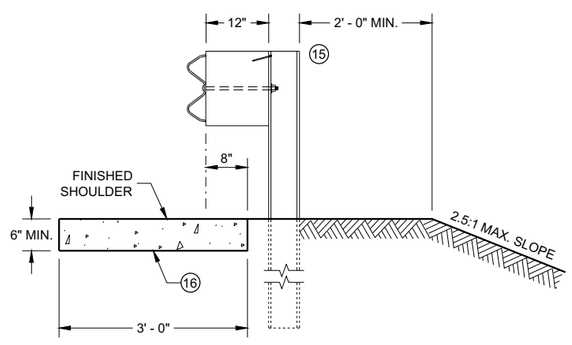

SECTION E - E

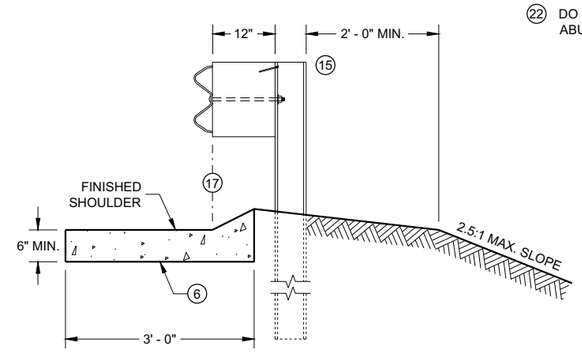

SECTION F - F

GENERAL NOTES

DETAILS OF CONSTRUCTION, MATERIALS AND WORKMANSHIP NOT SHOWN ON THIS DRAWING SHALL CONFORM TO THE PERTINENT REQUIREMENTS OF THE STANDARD SPECIFICATIONS AND THE APPLICABLE SPECIAL PROVISIONS.

ALL STEEL REINFORCEMENT SHALL BE EMBEDDED 2 INCHES CLEAR UNLESS OTHERWISE SHOWN OR NOTED.

1. USE A JOINT SEALANT CONFORMING TO STANDARD SPECIFICATION 415.2.6.
2. NO. 4 X 2' - 0" TIE BARS SPACED AT 12" C-C TO BE PLACED BY BRIDGE CONTRACTOR OR DRILLED TIE BARS PLACED AS DIRECTED BY THE ENGINEER.
3. PAVED CONCRETE SHOULDER (SDD 13A03) OR CONCRETE DRAINAGE SLAB.
4. CONCRETE PAVEMENT APPROACH SLAB (SHOWN) OR STRUCTURE APPROACH SLAB AND CONCRETE PAVEMENT APPROACH SLAB. SEE SDD 13B02 AND STRUCTURE PLANS.
5. PAVED CONCRETE SHOULDER (SDD 13A03) OR ASPHALT SHOULDER.
6. CONCRETE CURB AND GUTTER 4-INCH SLOPED 36-INCH TYPE TBT OR TBTT. USE TYPE TBTT CURB WITH NO. 4 X 2' -0" TIE BARS SPACED AT 3' - 0" C-C ONLY WHEN ADJACENT TO CONCRETE PAVEMENTS.
7. PLACE DRAINAGE STRUCTURE BEFORE MSG THRIE BEAM TRANSITION POST 1 (SEE SDD 14B45)
8. CENTER DRAINAGE STRUCTURE BETWEEN POSTS. 6-INCH MINIMUM SEPARATION FROM OUTSIDE WALL OF DRAINAGE STRUCTURE TO POSTS.
9. SEE SDD 08A05 AND 08C07 FOR DETAILS. SEE ROADWAY PLANS FOR LOCATION.
10. START CURB AND GUTTER TRANSITION OR END SECTION.
11. DEPRESS FLOW LINE (SEE DETAIL)
12. MEDIUM RIPRAP UNLESS OTHERWISE SPECIFIED.
13. LIMITS OF ADDITIONAL RIPRAP WHEN SPECIAL DITCH IS REQUIRED.
14. GEOTEXTILE FABRIC TYPE HR.
15. MSG THRIE BEAM TRANSITION POST 1. SEE SDD 14B45 FOR ADDITIONAL CONSTRUCTION DETAILS AND ACCEPTABLE MATERIALS.
16. MAINTAIN WIDTH, THICKNESS AND CROSS SLOPE OF ADJACENT TYPE TBT OR TBTT CURB. SEE NOTE 6 FOR TIE BAR SPACING.
17. ALIGN FACE OF POST BLOCK WITH FLOW LINE.
18. MAINTAIN FLOW LINE AT EDGE OF PAVEMENT/FACE OF BEAM GUARD AS APPLICABLE.
19. MANUFACTURER SUPPLIED BEND.
20. MANUFACTURER SUPPLIED EXTERNAL MECHANICAL COUPLING OR A MANUFACTURER RECOMMENDED COUPLING WITH A MASTIC IMPREGNATED GEOTEXTILE WRAP AND MECHANICAL FASTENING BANDS.
21. MINIMUM REINFORCEMENT SHALL BE 6" X 6" - W4.0 X W4.0 OR NO. 3 BARS LONGITUDINAL AND TRANSVERSE SPACING 12" C - C.
22. DO NOT CONSTRUCT AN EXPANSION JOINT OR INSTALL DOWEL BARS WHEN ABUTTING HMA PAVEMENTS.

CONCRETE SURFACE DRAINS DROP INLET TYPE AT STRUCTURES

STATE OF WISCONSIN
DEPARTMENT OF TRANSPORTATION

APPROVED
February 2020 — DATE
/S/ Rodney Taylor — ROADWAY STANDARDS DEVE ENGINEER
FHWA

6

SDD 08D03 - 08b

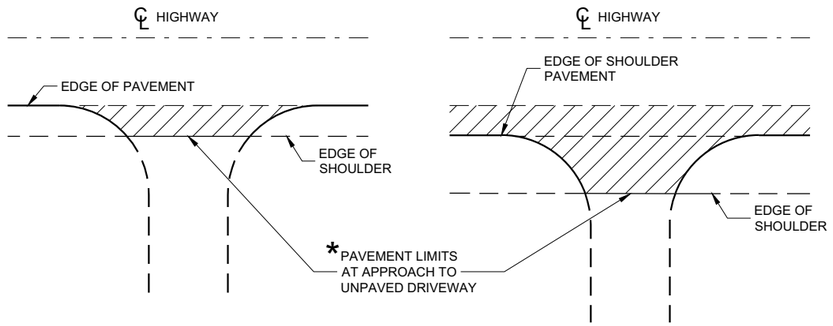

* WHERE DRIVEWAY IS PAVED, APPROACH PAVEMENT SHOULD BE EXTENDED TO MATCH DRIVEWAY PAVEMENT.

PLAN VIEW
(UNPAVED SHOULDER ON HIGHWAY)

PLAN VIEW
(PAVED SHOULDER ON HIGHWAY)

RURAL DRIVEWAY INTERSECTION DETAIL
(NO CURB AND GUTTER OR SIDEWALK)

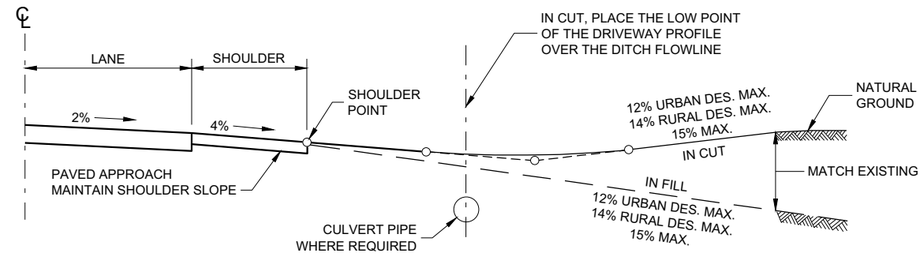

TYPICAL DRIVEWAY PROFILES

6

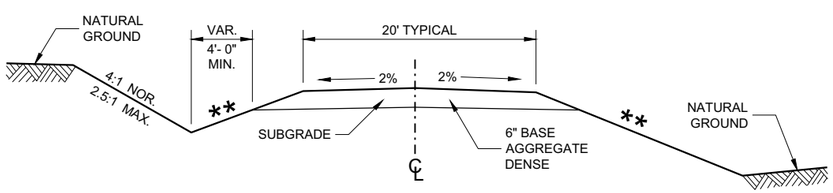

IN CUT **IN FILL**

TYPICAL CROSS SECTION FOR PRIVATE DRIVE OR FIELD ENTRANCE AGGREGATE SURFACE

** SLOPE CAN VARY WITH SPEED. SEE 11-45-30.6.2

POSTED SPEED MPH	MAX. SLOPE
<35	4:1
≥ 35 TO < 60	6:1
≥60	10:1

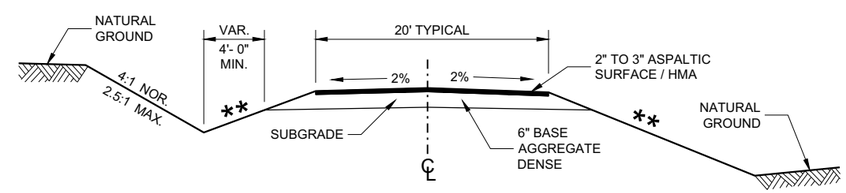

IN CUT **IN FILL**

TYPICAL CROSS SECTION FOR PRIVATE DRIVE OR FIELD ENTRANCE ASPHALTIC SURFACE

DRIVEWAYS WITHOUT CURB AND GUTTER

STATE OF WISCONSIN
DEPARTMENT OF TRANSPORTATION

APPROVED
December 2017 — DATE
/S/ Rodney Taylor — ROADWAY STANDARDS DEVE UNIT SUPERVISOR
FHWA

SDD 08D21 - 01

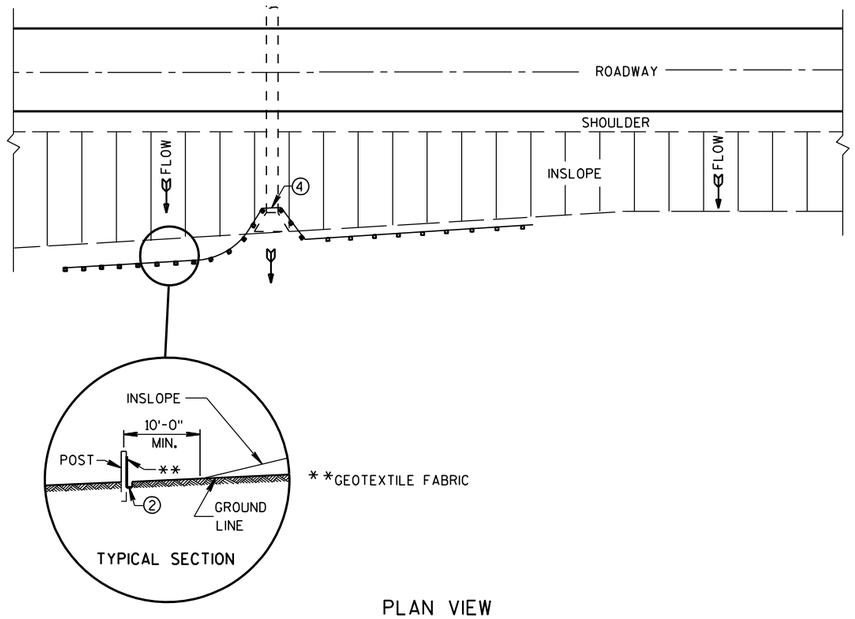

PLAN VIEW

TYPICAL APPLICATION OF SILT FENCE

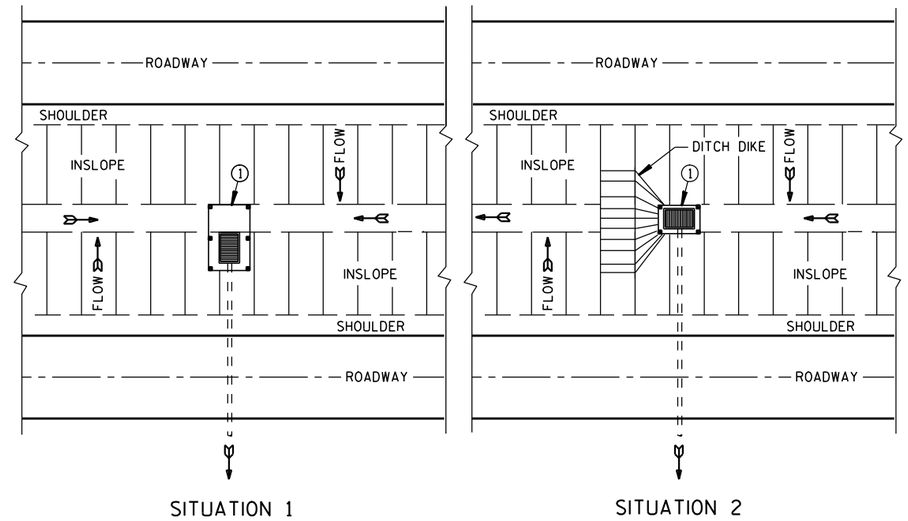

PLAN VIEW

SILT FENCE AT MEDIAN SURFACE DRAINS

GENERAL NOTES

DETAILS OF CONSTRUCTION NOT SHOWN ON THIS DRAWING SHALL CONFORM TO THE PERTINENT REQUIREMENTS OF THE STANDARD SPECIFICATIONS AND APPLICABLE SPECIAL PROVISIONS.

① HORIZONTAL BRACE REQUIRED WITH 2" X 4" WOODEN FRAME OR EQUIVALENT AT TOP OF POSTS.

② FOR MANUAL INSTALLATIONS THE TRENCH SHALL BE A MINIMUM OF 4" WIDE & 6" DEEP TO BURY AND ANCHOR THE GEOTEXTILE FABRIC. FOLD MATERIAL TO FIT TRENCH AND BACKFILL & COMPACT TRENCH WITH EXCAVATED SOIL.

③ WOOD POSTS SHALL BE A MINIMUM SIZE OF 1⅛" X 1⅛" OF OAK OR HICKORY.

④ SILT FENCE TO EXTEND ACROSS THE TOP OF THE PIPE.

⑤ CONSTRUCT SILT FENCE FROM A CONTINUOUS ROLL IF POSSIBLE BY CUTTING LENGTHS TO AVOID JOINTS. IF A JOINT IS NECESSARY USE ONE OF THE FOLLOWING TWO METHODS; A) OVERLAP THE END POSTS AND TWIST, OR ROTATE, AT LEAST 180 DEGREES. B) HOOK THE END OF EACH SILT FENCE LENGTH.

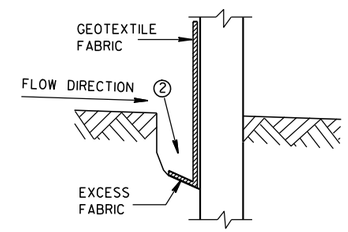

TRENCH DETAIL

NOTE: ADDITIONAL POST DEPTH OR TIE BACKS MAY BE REQUIRED IN UNSTABLE SOILS

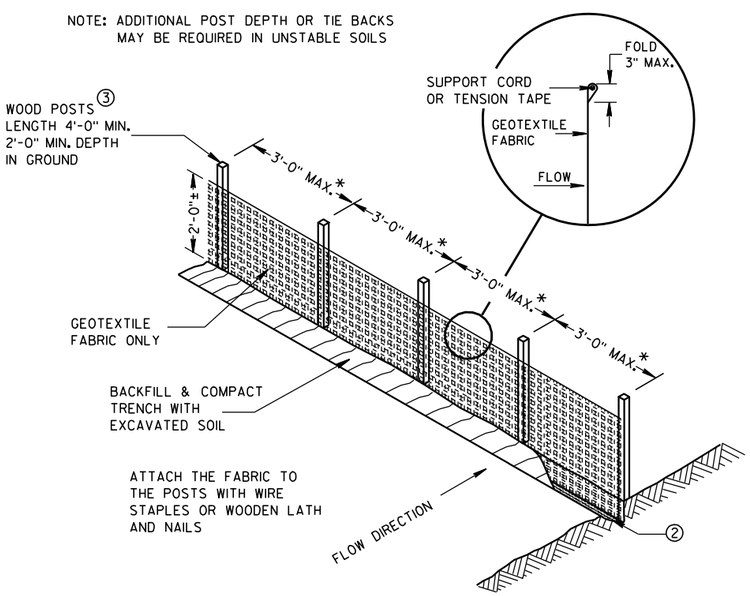

*NOTE: 8'-0" POST SPACING ALLOWED IF A WOVEN GEOTEXTILE FABRIC IS USED.

SILT FENCE

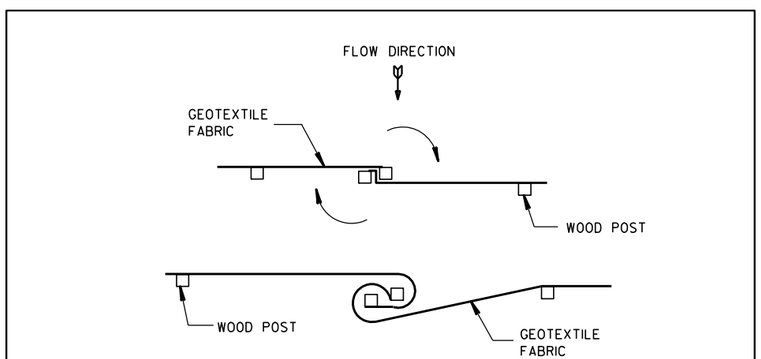

TWIST METHOD

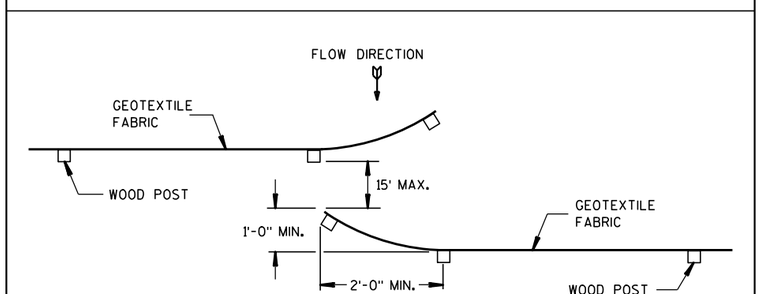

HOOK METHOD

JOINING TWO LENGTHS OF SILT FENCE ⑤

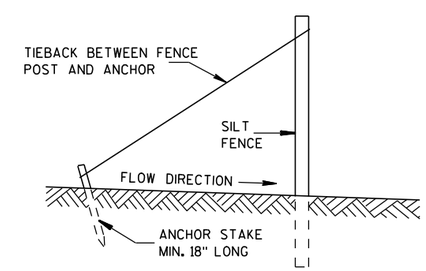

SILT FENCE TIE BACK

(WHEN REQUIRED BY THE ENGINEER)

SILT FENCE
STATE OF WISCONSIN DEPARTMENT OF TRANSPORTATION
APPROVED 4-29-05 DATE — /S/ Beth Cann-- CHIEF ROADWAY DEVELOP ENGINEER FHWA

6

6

S.D.D. 8 E 9-6

S.D.D. 8 E 9-6

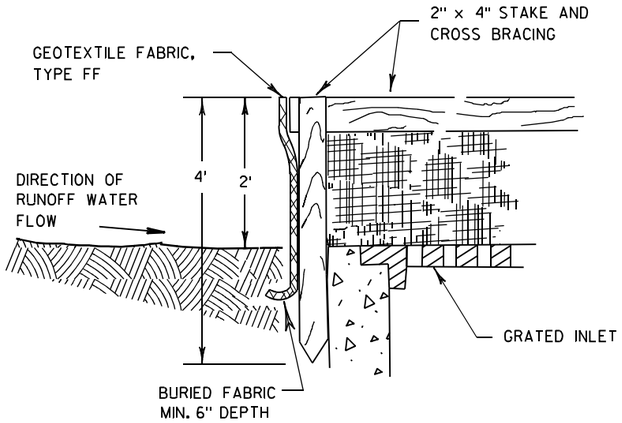

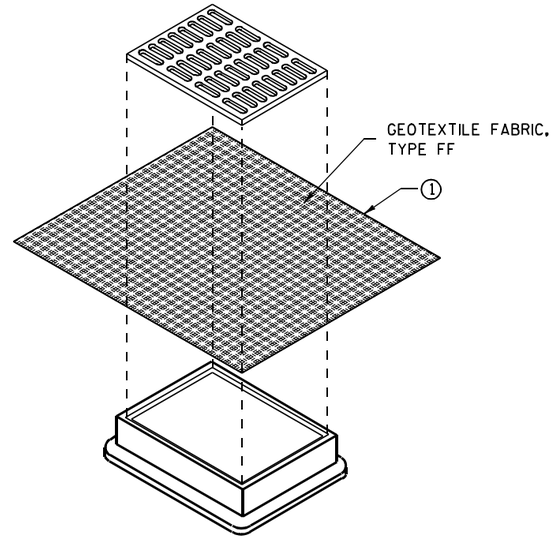

INLET PROTECTION, TYPE B
(WITHOUT CURB BOX)

(CAN BE INSTALLED IN ANY INLET WITHOUT A CURB BOX)

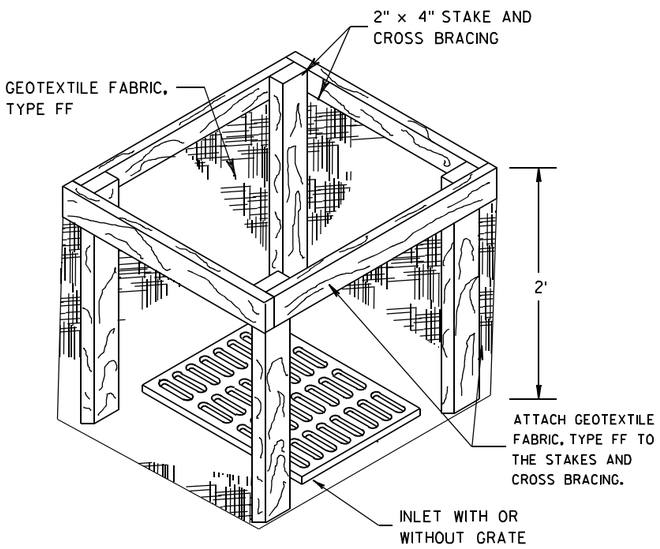

INLET PROTECTION, TYPE A

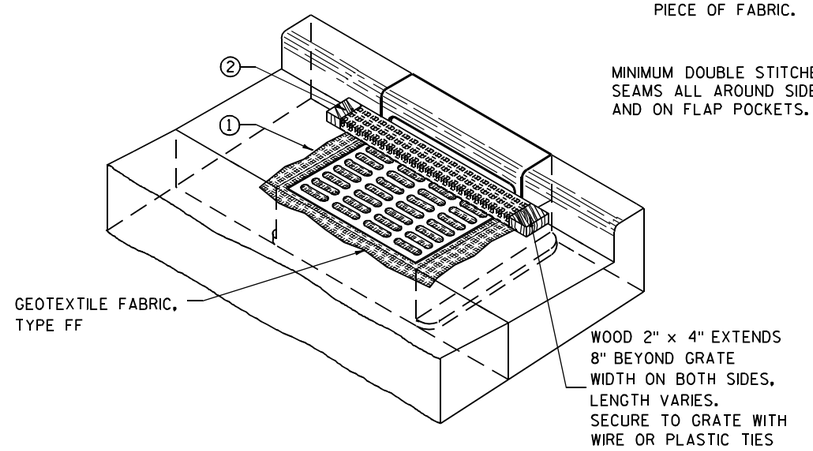

INLET PROTECTION, TYPE C (WITH CURB BOX)

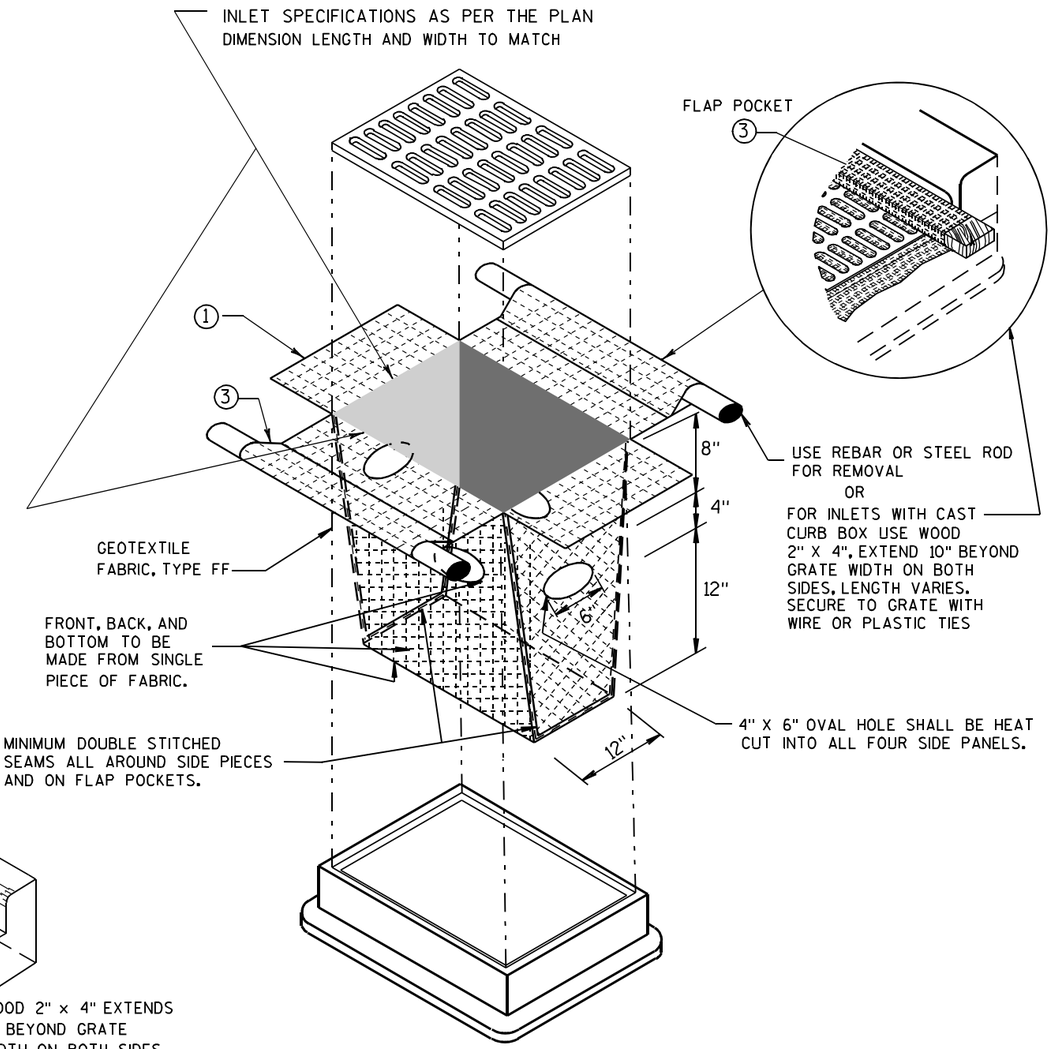

INLET PROTECTION, TYPE D

(CAN BE INSTALLED IN ANY INLET TYPE WITH
OR WITHOUT A CURB BOX AS PER NOTE 2)

GENERAL NOTES

INLET PROTECTION DEVICES SHALL BE MAINTAINED OR REPLACED AT THE DIRECTION OF THE ENGINEER.

MANUFACTURED ALTERNATIVES APPROVED AND LISTED ON THE DEPARTMENT'S EROSION CONTROL PRODUCT ACCEPTABILITY LIST MAY BE SUBSTITUTED.

WHEN REMOVING OR MAINTAINING INLET PROTECTION, CARE SHALL BE TAKEN SO THAT THE SEDIMENT TRAPPED ON THE GEOTEXTILE FABRIC DOES NOT FALL INTO THE INLET. ANY MATERIAL FALLING INTO THE INLET SHALL BE REMOVED IMMEDIATELY.

1 FINISHED SIZE, INCLUDING FLAP POCKETS WHERE REQUIRED, SHALL EXTEND A MINIMUM OF 10" AROUND THE PERIMETER TO FACILITATE MAINTENANCE OR REMOVAL.

2 FOR INLET PROTECTION, TYPE C (WITH CURB BOX), AN ADDITIONAL 18" OF FABRIC IS WRAPPED AROUND THE WOOD AND SECURED WITH STAPLES. THE WOOD SHALL NOT BLOCK THE ENTIRE HEIGHT OF THE CURB BOX OPENING.

3 FLAP POCKETS SHALL BE LARGE ENOUGH TO ACCEPT WOOD 2X4.

INSTALLATION NOTES

TYPE B & C

TRIM EXCESS FABRIC IN THE FLOW LINE TO WITHIN 3" OF THE GRATE.

THE CONTRACTOR SHALL DEMONSTRATE A METHOD OF MAINTENANCE, USING A SEWN FLAP, HAND HOLDS OR OTHER METHOD TO PREVENT ACCUMULATED SEDIMENT FROM ENTERING THE INLET.

TYPE D

DO NOT INSTALL INLET PROTECTION TYPE D IN INLETS SHALLOWER THAN 30", MEASURED FROM THE BOTTOM OF THE INLET TO THE TOP OF THE GRATE.

TRIM EXCESS FABRIC IN THE FLOW LINE TO WITHIN 3" OF THE GRATE.

THE INSTALLED BAG SHALL HAVE A MINIMUM SIDE CLEARANCE, BETWEEN THE INLET WALLS AND THE BAG, MEASURED AT THE BOTTOM OF THE OVERFLOW HOLES, OF 3". WHERE NECESSARY THE CONTRACTOR SHALL CINCH THE BAG, USING PLASTIC ZIP TIES, TO ACHIEVE THE 3" CLEARANCE. THE TIES SHALL BE PLACED AT A MAXIMUM OF 4" FROM THE BOTTOM OF THE BAG.

INLET PROTECTION
TYPE A, B, C, AND D

STATE OF WISCONSIN
DEPARTMENT OF TRANSPORTATION

APPROVED
10/16/02 — DATE
/S/ Beth Cannestra — CHIEF ROADWAY DEVELOPMENT ENGINEER
FHWA

6

S.D.D. 8 E 10-2

METAL APRON ENDWALLS

PIPE DIA. (IN.)	MIN. THICK. (Inches) STEEL	MIN. THICK. (Inches) ALUM.	DIMENSIONS (Inches) A (±1")	B (MAX.)	H (±1")	L (±1 1/2")	L1 ①	L2 ①	W (±2")	APPROX. SLOPE	BODY
12	.064	.060	6	6	6	21	12	17 1/2	24	2 1/2 to 1	1 Pc.
15	.064	.060	7	8	6	26	14	21 3/4	30	2 1/2 to 1	1 Pc.
18	.064	.060	8	10	6	31	15	28 1/4	36	2 1/2 to 1	1 Pc.
21	.064	.060	9	12	6	36	18	29 5/8	42	2 1/2 to 1	1 Pc.
24	.064	.075	10	13	6	41	18	37 1/4	48	2 1/2 to 1	1 Pc.
30	.079	.075	12	16	8	51	18	52 1/4	60	2 1/2 to 1	1 Pc.
36	.079	.105	14	19	9	60	24	59 3/4	72	2 1/2 to 1	2 Pc.
42	.109	.105	16	22	11	69	24	75 5/8	84	2 1/2 to 1	2 Pc.
48	.109	.105	18	27	12	78	24	81	90	2 1/4 to 1	3 Pc.
54	.109	.105	18	30	12	84	30	85 1/2	102	2 1/4 to 1	3 Pc.
60	.109×	.105×	18	33	12	87	—	—	114	2 to 1	3 Pc.
66	.109×	.105×	18	36	12	87	—	—	120	2 to 1	3 Pc.
72	.109×	.105×	18	39	12	87	—	—	126	2 to 1	3 Pc.
78	.109×	.105×	18	42	12	87	—	—	132	1 1/2 to 1	3 Pc.
84	.109×	.105×	18	45	12	87	—	—	138	1 1/2 to 1	3 Pc.
90	.109×	.105×	18	37	12	87	—	—	144	1 1/2 to 1	3 Pc.
96	.109×	.105×	18	35	12	87	—	—	150	1 1/2 to 1	3 Pc.

× EXCEPT CENTER PANEL
SEE GENERAL NOTES

REINFORCED CONCRETE APRON ENDWALLS

PIPE DIA. (IN.)	DIMENSIONS (Inches) T	A	B	C	D	E	G	APPROX. SLOPE
12	2	4	24	48 7/8	72 7/8	24	2	3 to 1
15	2 1/4	6	27	46	73	30	2 1/4	3 to 1
18	2 1/2	9	27	46	73	36	2 1/2	3 to 1
21	2 3/4	9	36	37 1/2	73 1/2	42	2 3/4	3 to 1
24	3	9 1/2	43 1/2	30	73 1/2	48	3	3 to 1
27	3 1/4	10 1/2	49 1/2	24	73 1/2	54	3 1/4	3 to 1
30	3 1/2	12	54	19 3/4	73 1/2	60	3 1/2	3 to 1
36	4	15	63	34 3/4	97 3/4	72	4	3 to 1
42	4 1/2	21	63	35	98	78	4 1/2	3 to 1
48	5	24	72	26	98	84	5	3 to 1
54	5 1/2	27	65	*33 1/4-**35	*98 1/4-**100	90	5 1/2	2 2/5 to 1
60	6	*30-**35	60	39	99	96	5	2 to 1
66	6 1/2	*24-**30	*72-**78	*21-**27	99	102	5 1/2	2 to 1
72	7	*24-**36	78	21	99	108	6	2 to 1
78	7 1/2	*24-**36	78	21	99	114	6 1/2	2 to 1
84	8	36	90 1/2	21	111 1/2	120	6 1/2	1 1/2 to 1
90	8 1/2	41	87 1/2	24	111 1/2	132	6 1/2	1 1/2 to 1

*MINIMUM
**MAXIMUM

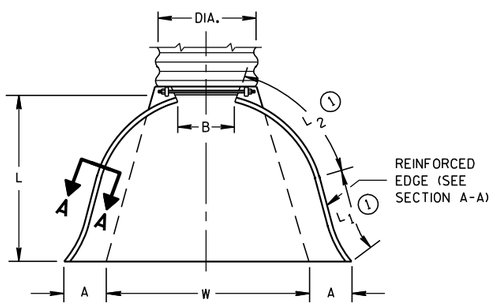

PLAN VIEW

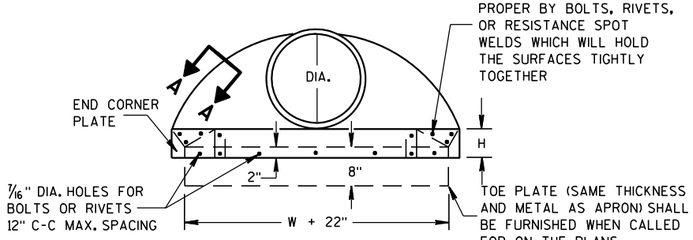

END VIEW

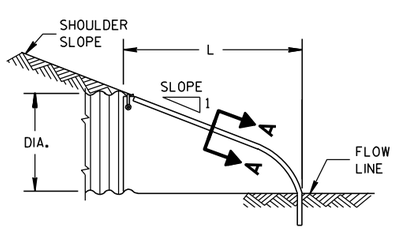

SIDE ELEVATION

METAL ENDWALLS

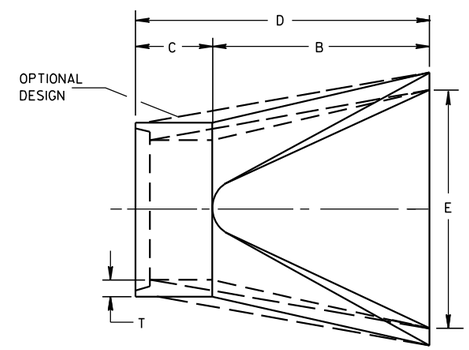

PLAN

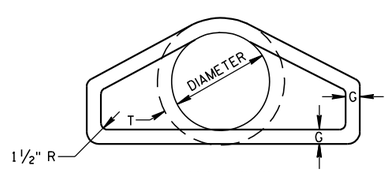

END VIEW

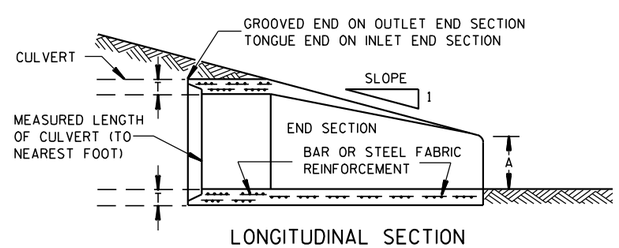

LONGITUDINAL SECTION

CONCRETE ENDWALLS

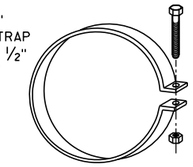

ALTERNATE FOR TYPE 1 CONNECTION

END SECTION CONNECTOR STRAP

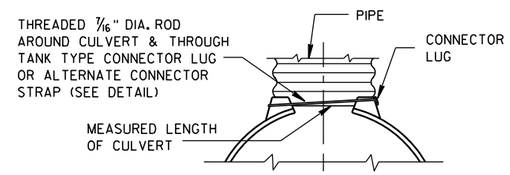

TYPE 1
FOR 12" THRU 24" CORR. PIPE

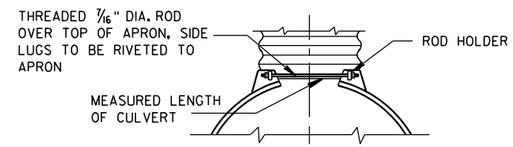

TYPE 2
FOR 30" THRU 96" CORR. PIPE

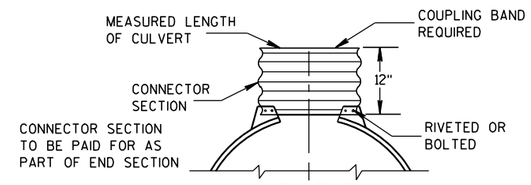

TYPE 3
FOR 42" THRU 96" CORR. PIPE

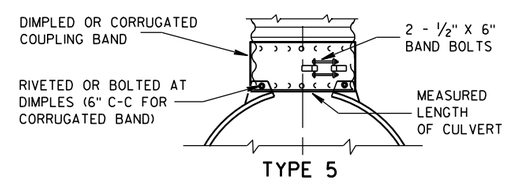

TYPE 5
ALTERNATE FOR:
ALL SIZES CORRUGATED CIRCULAR PIPE

NOTE: DIMPLED BAND FITS OVER OUTSIDE OF ENDWALL, AND CORRUGATED BAND FITS INSIDE ENDWALL. DIMPLED BAND MAY BE USED WITH HELICALLY CORRUGATED PIPE.

FOR CIRCUMFERENTIALLY CORRUGATED PIPE USE ENDWALL CONNECTION DETAILS 1, 2, 3 OR 5 AS APPLICABLE.

FOR HELICALLY CORRUGATED PIPE USE ENDWALL CONNECTION DETAILS 1, 2 OR 5.

FOR HELICALLY CORRUGATED PIPES WITH TWO CIRCUMFERENTIAL CORRUGATIONS AT EACH END USE ENDWALL CONNECTION DETAILS 1, 2 OR 3.

CONNECTION DETAILS

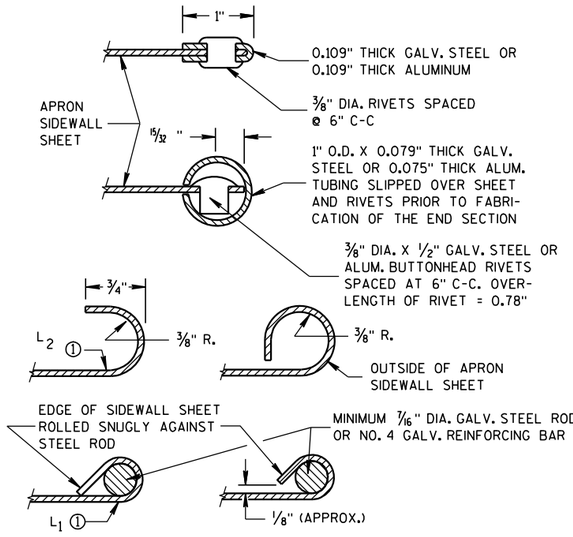

SECTION A-A

GENERAL NOTES

DETAILS OF CONSTRUCTION, MATERIALS AND WORKMANSHIP NOT SHOWN ON THIS DRAWING SHALL CONFORM TO THE PERTINENT REQUIREMENTS OF THE STANDARD SPECIFICATIONS AND THE APPLICABLE SPECIAL PROVISIONS.

CONCRETE CULVERT ENDWALLS MAY NOT BE USED WITH GALVANIZED STEEL OR ALUMINUM CULVERT PIPE OR VISE VERSA. GALVANIZED STEEL OR ALUMINUM ENDWALLS SHALL NORMALLY BE INSTALLED ON CULVERT PIPE OF THE SAME METAL.

ALL THREE PIECE STEEL APRON ENDWALLS FOR 60" DIAMETER PIPE AND LARGER SHALL HAVE 0.109" SIDES AND 0.138" CENTER PANELS. ALL THREE PIECE ALUMINUM APRON ENDWALLS FOR 60" DIAMETER PIPE AND LARGER SHALL HAVE 0.105" SIDES AND 0.134" CENTER PANELS. THE WIDTH OF CENTER PANELS SHALL BE GREATER THAN 20 PERCENT OF THE PIPE PERIMETER.

LAP SEAMS SHALL BE TIGHTLY JOINED BY GALVANIZED RIVETS OR BOLTS FOR STEEL UNITS AND ALUMINUM RIVETS AND BOLTS FOR ALUMINUM UNITS. FOR THE 60" THROUGH 96" DIAMETER APRON ENDWALL SIZES, THE REINFORCED EDGES AND CENTER PANEL SEAMS SHALL BE FURTHER REINFORCED WITH GALVANIZED STEEL OR ALUMINUM STIFFENER ANGLES. THE ANGLES SHALL BE ATTACHED BY GALVANIZED NUTS AND BOLTS FOR STEEL UNITS AND ALUMINUM NUTS AND BOLTS FOR ALUMINUM UNITS.

WHERE TWO OR MORE PIPES WITH APRON ENDWALLS ARE LAID ADJACENT TO EACH OTHER, THEY SHALL BE SEPARATED BY A DISTANCE SUFFICIENT TO PROVIDE A MINIMUM CLEARANCE OF 6 INCHES BETWEEN APRON ENDWALLS.

① FOR PIPE SIZES UP TO 60" DIAMETER, A 180° ROLLED EDGE MAY BE USED INSTEAD OF STEEL ROD REINFORCEMENT. SEE SECTION A-A.

APRON ENDWALLS FOR CULVERT PIPE

STATE OF WISCONSIN
DEPARTMENT OF TRANSPORTATION

APPROVED
11/30/94 — DATE
/S/ Rory L. Rhinesmith — CHIEF ROADWAY DEVELOPMENT ENGINEER
FHWA

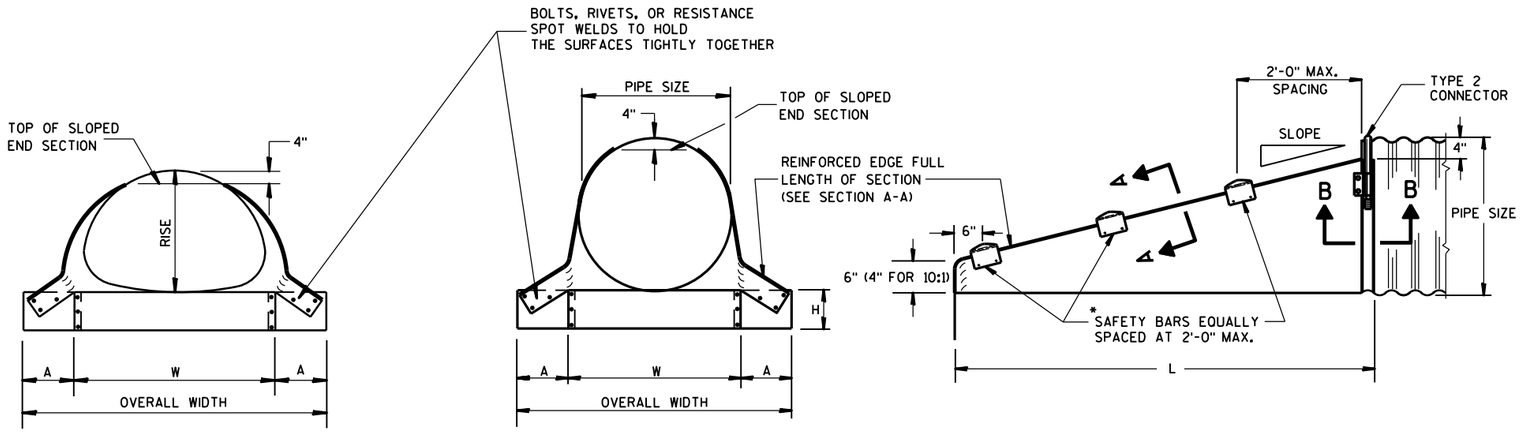

FRONT VIEW

FRONT VIEW

SIDE VIEW

GENERAL NOTES

DETAILS OF CONSTRUCTION, MATERIALS AND WORKMANSHIP NOT SHOWN ON THIS DRAWING SHALL CONFORM TO THE PERTINENT REQUIREMENTS OF THE STANDARD SPECIFICATIONS AND THE APPLICABLE SPECIAL PROVISIONS.

SLOPED END SECTIONS SHALL CONFORM TO THE REQUIREMENTS OF THE STANDARD SPECIFICATIONS, SECTION 521 FOR STEEL APRON ENDWALLS.

SAFETY BARS SHALL BE FABRICATED FROM GALVANIZED STEEL PIPE MEETING THE REQUIREMENTS OF ASTM A-53, GRADE B, SCHEDULE 40 OR APPROVED EQUAL.

STEEL APRON ENDWALLS FOR CULVERT PIPE SLOPED SIDE DRAINS

PIPE DIA. (IN.)	MIN. THICK. (Inches)	DIMENSIONS (Inches)				L DIMENSIONS					
		A	H	W	OVERALL WIDTH	SLOPE	LENGTH INCHES	SLOPE	LENGTH INCHES	SLOPE	LENGTH INCHES
15	.064	8	6	21	37	4:1	20	6:1	30	10:1	70
18	.064	8	6	24	40	4:1	32	6:1	48	10:1	100
21	.064	8	6	27	43	4:1	44	6:1	66	10:1	130
24	.064	8	6	30	46	4:1	56	6:1	84	10:1	160
30	.109	12	9	36	60	4:1	80	6:1	120	10:1	220
36	.109	12	9	42	66	4:1	104	6:1	156	10:1	280
42	.109	16	12	48	80	4:1	128	6:1	192	——	——
48	.109	16	12	54	86	4:1	152	6:1	228	——	——
54	.109	16	12	60	92	4:1	176	6:1	264	——	——
60	.109	16	12	66	98	4:1	200	6:1	300	——	——

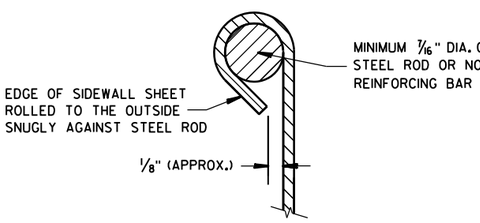

SECTION A-A

*NOTE:
THREE SAFETY BARS ARE SHOWN. ACTUAL NUMBER OF BARS REQUIRED AT A 2'-0" C-C MAX. SPACING WILL VARY DEPENDING ON THE LENGTH OF THE END SECTION.

3" GALVANIZED PIPE. FLATTEN ENDS, THEN BEND OUTSIDE 4" TO MATCH END SECTION SIDES.

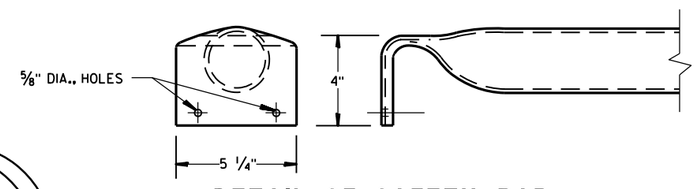

DETAIL OF SAFETY BAR

STEEL APRON ENDWALLS FOR PIPE ARCH SLOPED SIDE DRAINS

EQUIV. DIA. (Inches)	(Inches)		MIN. THICK. (Inches) ①	DIMENSIONS (Inches)				L DIMENSIONS					
	SPAN	RISE		A	H	W	OVERALL WIDTH	SLOPE	LENGTH INCHES	SLOPE	LENGTH INCHES	SLOPE	LENGTH INCHES
15	17	13	.064 *	7	6	30	44	4:1	19	6:1	30	10:1 ②	70
18	21	15	.064 *	8	6	27	43	4:1	20	6:1	30	10:1	70
21	24	18	.064 *	8	6	30	46	4:1	32	6:1	48	10:1	100
24	28	20	.064 *	8	6	34	50	4:1	40	6:1	60	10:1	120
30	35	24	.079 *	12	9	41	65	4:1	56	6:1	84	10:1	160
36	42	29	.109 *	12	9	48	72	4:1	76	6:1	114	10:1	210
42	49	33	.109	16	12	55	87	4:1	92	6:1	138	——	——
48	57	38	.109	16	12	63	95	4:1	112	6:1	168	——	——
54	64	43	.109	16	12	70	102	4:1	132	6:1	198	——	——

① * MINIMUM THICKNESS OF ALL 10:1 SLOPED SIDE DRAINS IS 0.109".
② ACTUAL SLOPE GREATER THAN 10:1.

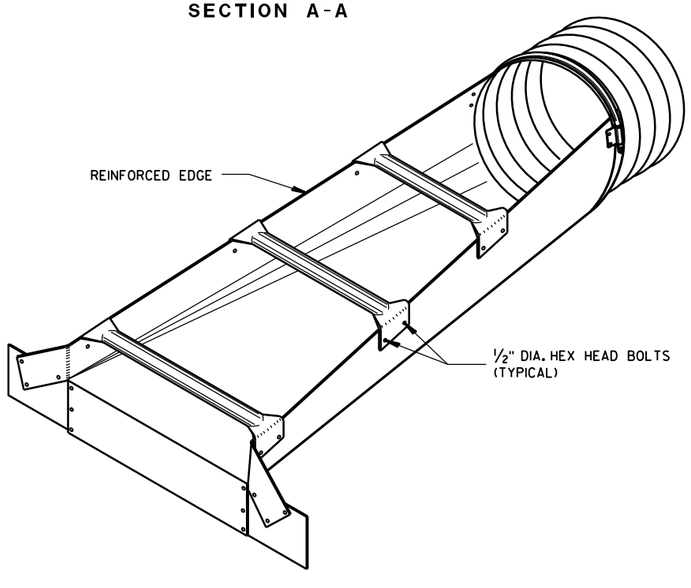

ISOMETRIC VIEW

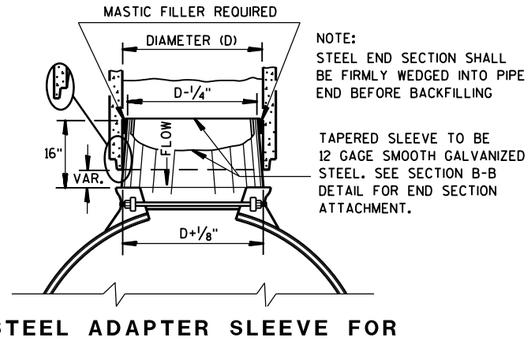

NOTE:
STEEL END SECTION SHALL BE FIRMLY WEDGED INTO PIPE END BEFORE BACKFILLING

TAPERED SLEEVE TO BE 12 GAGE SMOOTH GALVANIZED STEEL. SEE SECTION B-B DETAIL FOR END SECTION ATTACHMENT.

STEEL ADAPTER SLEEVE FOR CONCRETE PIPE

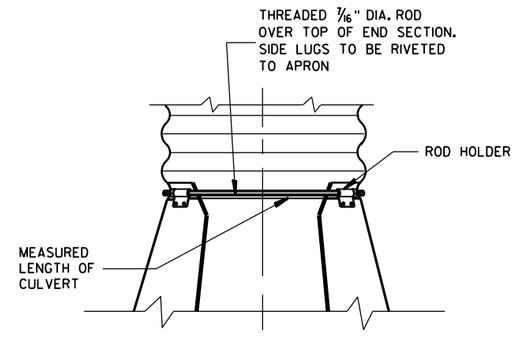

TYPE 2 CONNECTION DETAIL

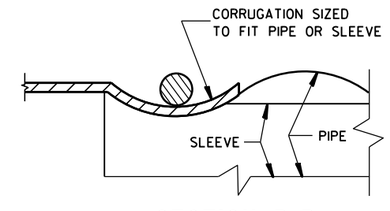

SECTION B-B

STEEL APRON ENDWALLS FOR CULVERT PIPE AND PIPE ARCH SLOPED SIDE DRAINS

STATE OF WISCONSIN
DEPARTMENT OF TRANSPORTATION

APPROVED
9/14/2012 — DATE
/S/ Jerry H. Zogg — ROADWAY STANDARDS DEVELOPMENT ENGINEER
FHWA

6

6

S.D.D. 8 F 7-5

S.D.D. 8 F 7-5

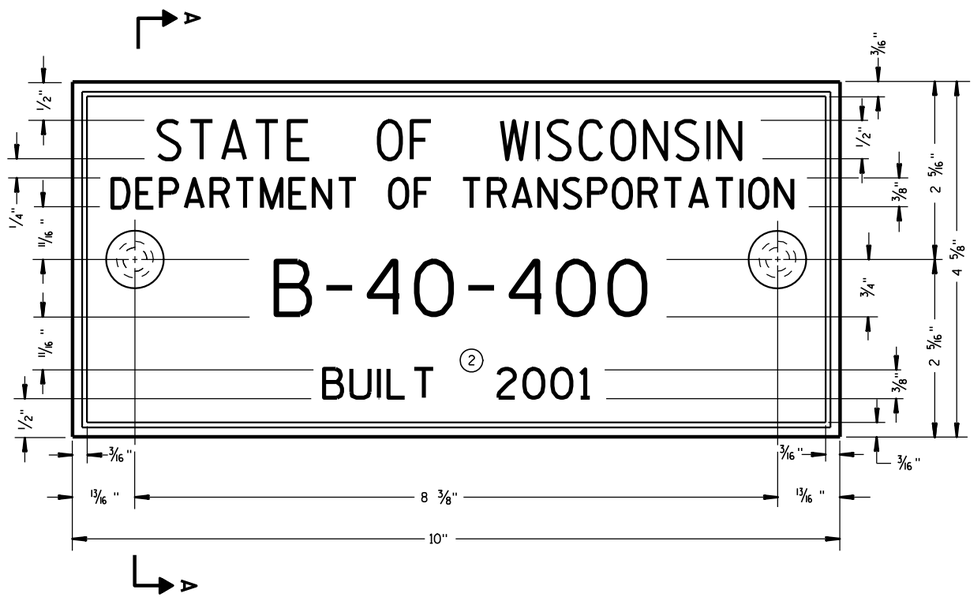

TYPICAL NAME PLATE

(BRIDGES, CULVERTS, AND RETAINING WALLS)

GENERAL NOTES

NAME PLATES TO BE INSTALLED ON BRIDGES, CULVERTS, AND RETAINING WALLS SHALL CONFORM TO THE REQUIREMENTS OF SECTION 502.3.11 OF THE STANDARD SPECIFICATIONS.

THE BRIDGE NUMBER AND YEAR BUILT SHOWN ON THIS DRAWING ARE EXAMPLES ONLY. SEE CONSTRUCTION PLANS FOR INDIVIDUAL NUMBERING AND YEAR BUILT.

① EPOXY RESIN SHALL BE FROM AN APPROVED MANUFACTURER AND USED IN ACCORDANCE WITH MANUFACTURER'S RECOMMENDATIONS.

② REHABILITATION OF AN EXISTING STRUCTURE SHOULD USE THE DATE OF ORIGINAL STRUCTURE CONSTRUCTION.

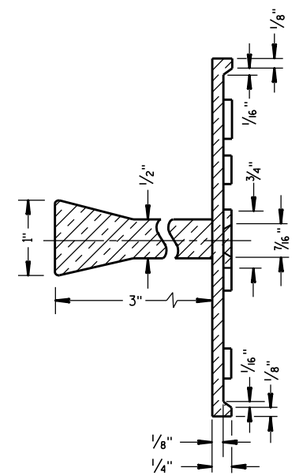

SECTION A-A

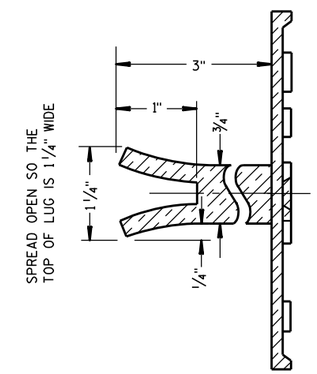

ALTERNATE LUG

FOR MULTI-UNIT STRUCTURES
LINE 3 ABOVE SHALL READ

B = BRIDGE
C = CULVERT
R = RETAINING WALL

COUNTY NO.

BRIDGE NO.

UNIT NO. FOR MULTIPLE
UNIT BRIDGE

B-40-400-1A

NUMBERING DESIGNATION
MULTI-UNIT STRUCTURES

① ADHERE ANCHOR LUG TO PRECAST RETAINING WALL WITH EPOXY RESIN.

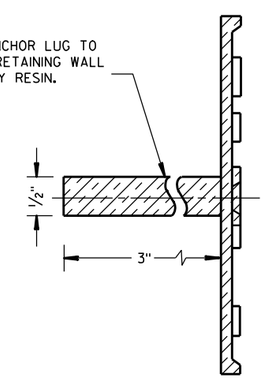

ALTERNATE LUG

(FOR ATTACHMENT TO PRECAST STRUCTURES)

NAME PLATE (STRUCTURES)		
STATE OF WISCONSIN DEPARTMENT OF TRANSPORTATION		
APPROVED		
3/26/10 DATE	/S/ Scot Beck-- CHIEF STRUCTURAL DEVELOP	ENGINEER
FHWA		

6

6

S.D.D. 12 A 3-10

S.D.D. 12 A 3-10

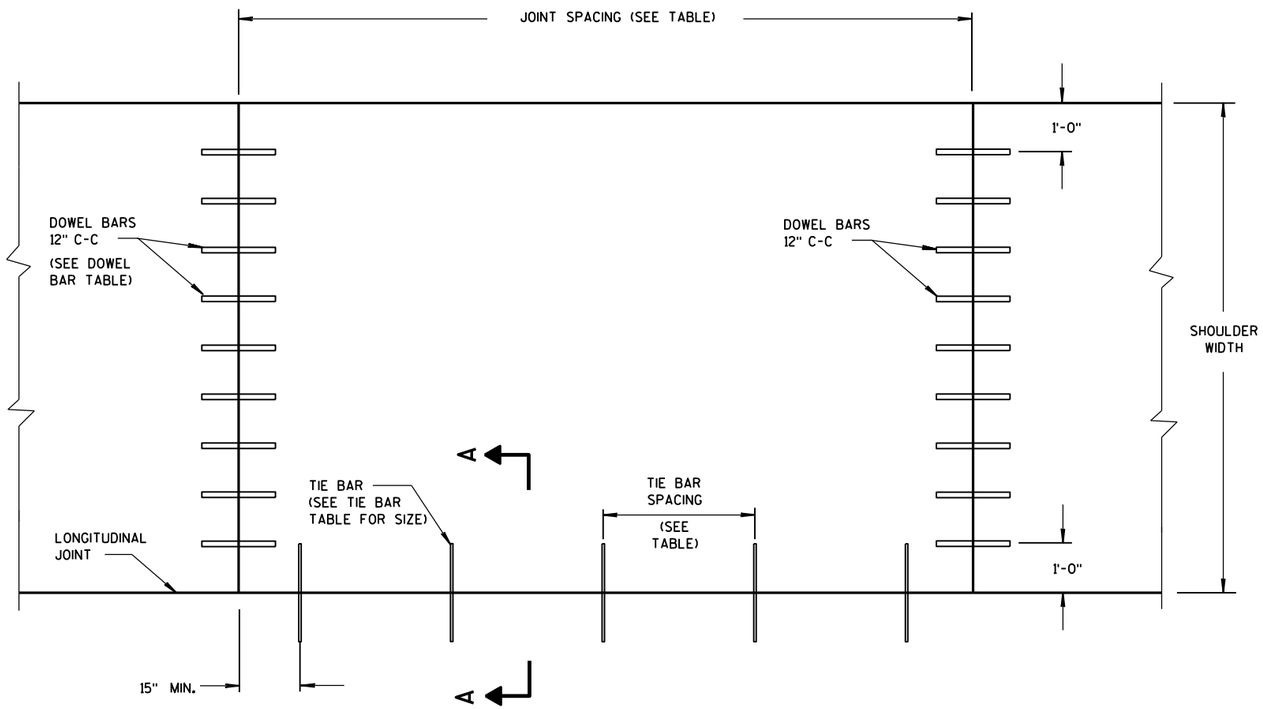

PLAN VIEW

CONCRETE PAVEMENT SHOULDER

GENERAL NOTES

DETAILS OF CONSTRUCTION, MATERIALS AND WORKMANSHIP NOT SHOWN ON THIS DRAWING SHALL CONFORM TO THE PERTINENT REQUIREMENTS OF THE STANDARD SPECIFICATIONS AND THE APPLICABLE SPECIAL PROVISIONS.

TRANSVERSE JOINT DETAILS ARE SHOWN ELSEWHERE IN THE PLAN.

FINISH THE SHOULDER PAVEMENT CONFORMING TO SUBSECTION 415.3.8 OF THE STANDARD SPECIFICATIONS.

TIE BARS SHALL CONFORM TO SUBSECTION 505.2.4 OF THE STANDARD SPECIFICATIONS.

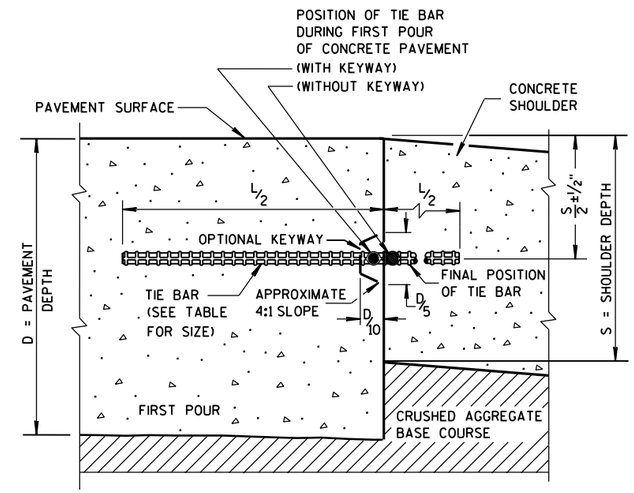

SECTION A-A

LONGITUDINAL CONSTRUCTION JOINT

TIE BAR TABLE

PAVEMENT DEPTH (D)	TIE BAR SIZE	TIE BAR LENGTH (L)	MAX. TIE BAR SPACING
< 10 ½"	NO. 4	30"	36"
≥ 10 ½"	NO. 5	36"	36"
	NO. 4*	30"	24"**

* SUBSTITUTE BENT BARS AT LONGITUDINAL JOINTS WHEN EQUIPMENT LIMITATIONS DURING CONSTRUCTION WARRANT (e.g. AUXILIARY LANES OR TURN LANES)

** CONFORM TO 15" MINUMUM SPACING FROM TRANSVERSE JOINTS; SPACING BETWEEN TIE BARS WILL BE 30" AT TRANSVERSE JOINTS.

PAVEMENT DEPTH, DOWEL BAR SIZE AND JOINT SPACING TABLE

PAVEMENT DEPTH (D)	DOWEL BAR DIAMETER***	CONTRACTION JOINT SPACING
5 ½", 6", 6 ½"	NONE	12'
7", 7 ½"	1"	14'
8", 8 ½"	1¼"	15'
9", 9 ½"	1¼"	15'
10" & ABOVE	1½"	15'

*** FOR DOWELED CONCRETE SHOULDERS WITH TRAPEZOIDAL CROSS SECTIONS, CHOSE THE APPROPRIATE DOWEL BAR DIAMETER BASED ON THE SMALLER PAVEMENT DEPTH (LIKELY THE OUTSIDE EDGE OF THE SHOULDER). IF USING BASKETS, USE BASKETS FOR THE AVERAGE THICKNESS OF THE CROSS SECTION.

CONCRETE PAVEMENT SHOULDERS

STATE OF WISCONSIN
DEPARTMENT OF TRANSPORTATION

APPROVED
June, 2015 — /S/ Peter Kemp, P.E.
DATE — PAVEMENT SUPER
FHWA

6

S.D.D. 13 A 3-6

GENERAL NOTES

DETAILS OF CONSTRUCTION NO SHOWN ON THIS DRAWING SHALL CONFORM TO THE PERTINENT REQUIREMENTS OF THE STANDARD SPECIFICATIONS AND APPLICABLE SPECIAL PROVISIONS.

DO NOT MILL CENTERLINE GROOVES THROUGH ANY INTERSECTION, MARKED CROSSWALK, NON-MOTORIZED PATH CROSSING, OR SNOWMOBILE CROSSING.

INSTALL PAVEMENT MARKING AFTER THE GROOVES ARE INSTALLED.

SEE SIGNING PLAN FOR SIGN REQUIREMENTS THAT MAY BE NEEDED.

(1) CENTERLINE GROOVES MAY BE OMITTED IN AREAS WITH HIGH CONCENTRATIONS OF DRIVEWAYS. WHEN DIRECTED BY THE ENGINEER.

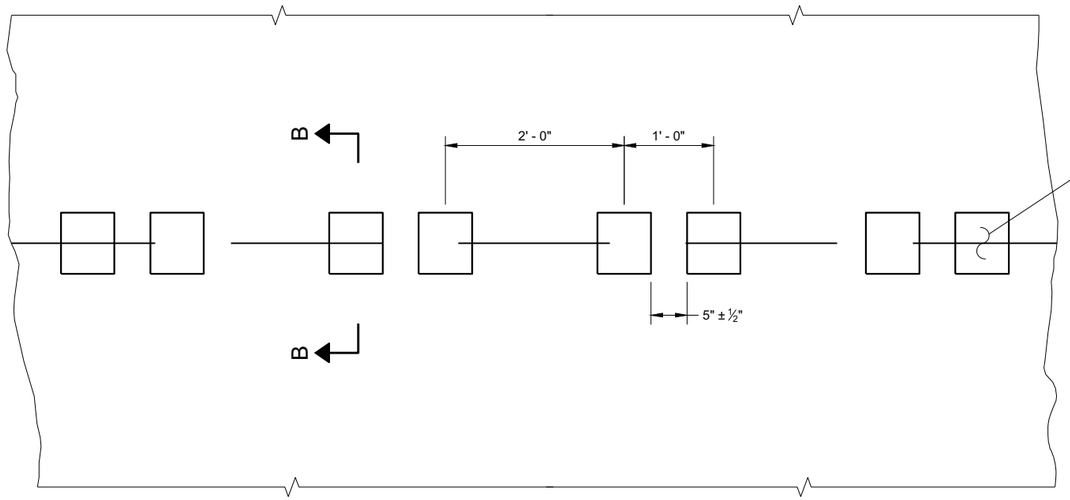

PLAN VIEW
SHOULDER WITH GROOVES

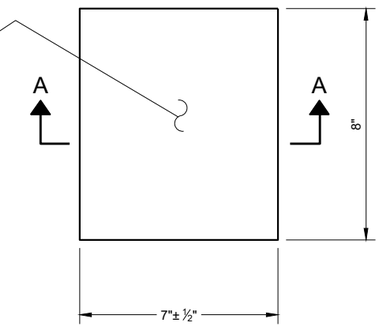

PLAN VIEW
(SINGLE GROOVE)

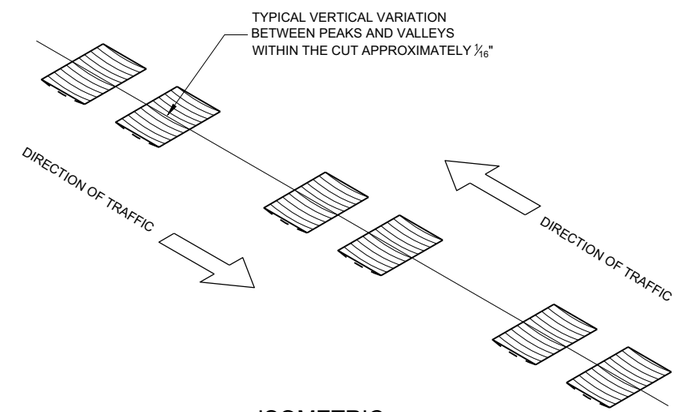

ISOMETRIC

PLACEMENT DETAIL FOR TYPE 1 MILLED RUMBLE STRIP

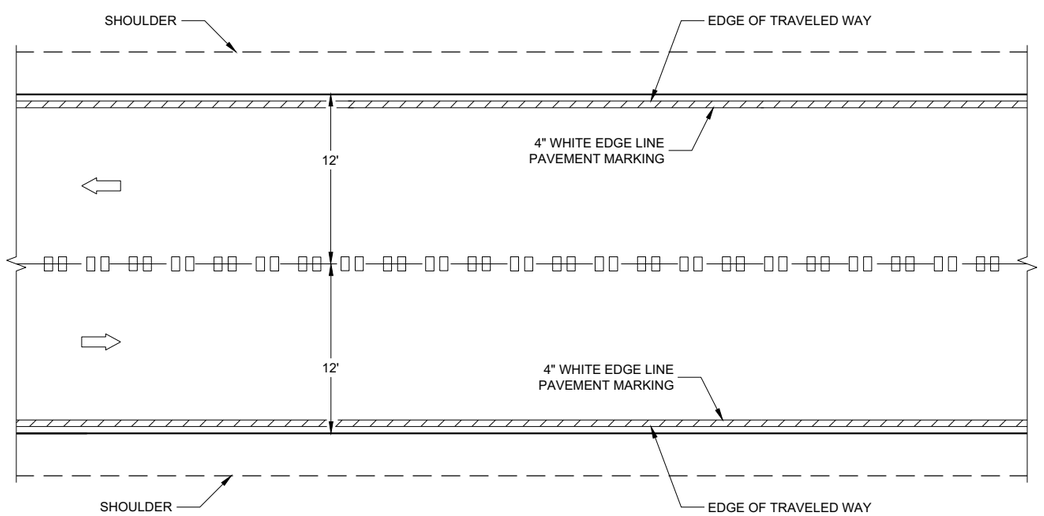

CENTERLINE GROOVES ON TWO-WAY ROADWAYS

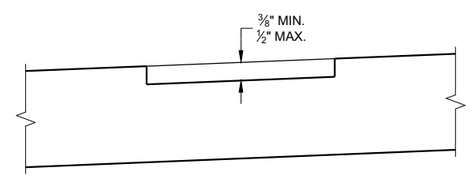

SECTION B - B
SUPERELEVATED ROADWAY

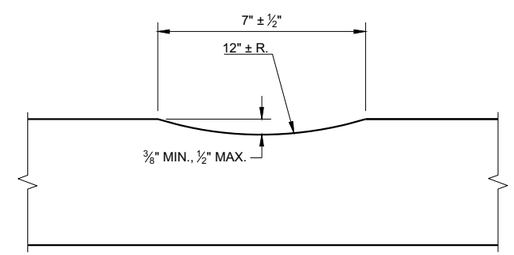

SECTION A - A

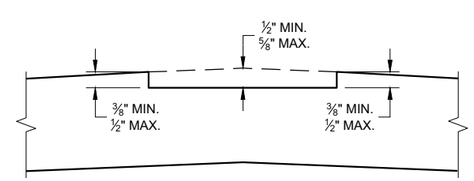

SECTION B - B
CROWNED ROADWAY

2-LANE RURAL
CENTER LINE RUMBLE STRIP, MILLING

STATE OF WISCONSIN
DEPARTMENT OF TRANSPORTAT

6

6

SDD 13A11 - 03a

SDD 13A11 - 03a

GENERAL NOTES

1. CENTERLINE GROOVES MAY BE OMITTED IN AREAS WITH HIGH CONCENTRATIONS OF DRIVEWAYS. WHEN DIRECTED BY THE ENGINEER.

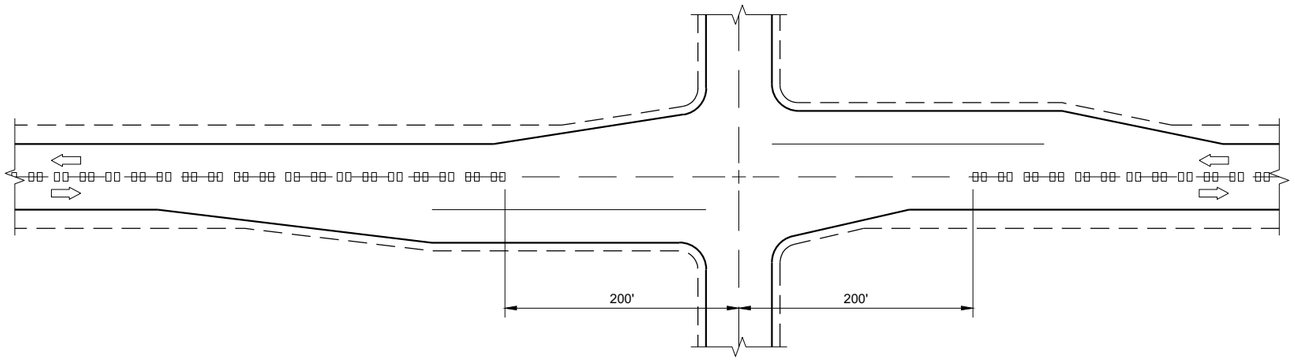

CENTERLINE GROOVES AT INTERSECTIONS

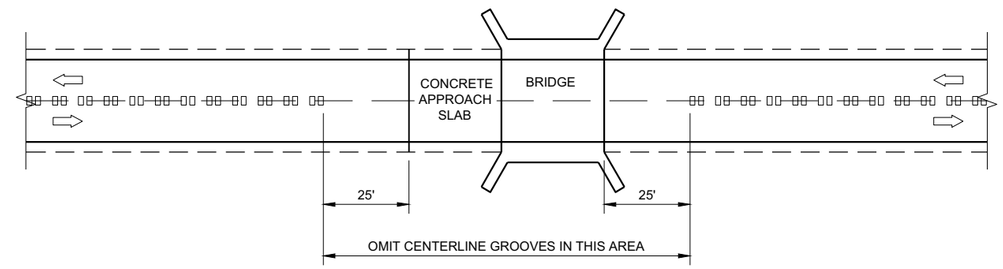

CENTERLINE GROOVES AT BRIDGES

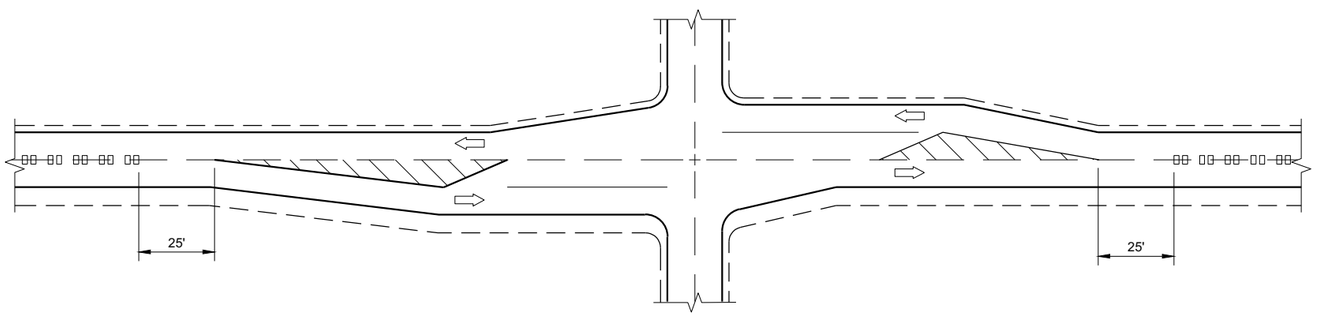

CENTERLINE GROOVES AT INTERSECTIONS (WITH LEFT TURN LANES)

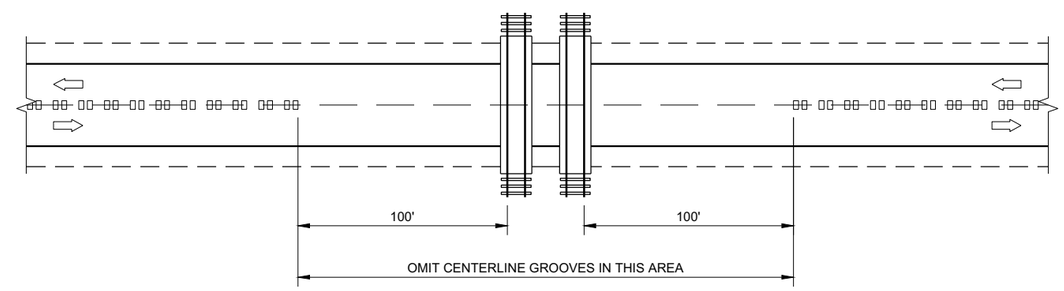

CENTERLINE GROOVES AT RAILROADS

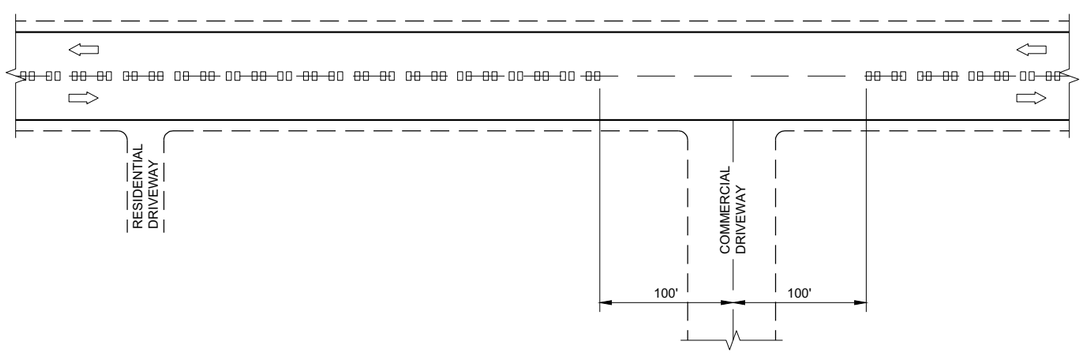

CENTERLINE GROOVES AT DRIVEWAYS (1)

6

6

SDD 13A11 - 03b

SDD 13A11 - 03b

2-LANE RURAL CENTERLINE RUMBLE STRIP, MILLING

STATE OF WISCONSIN
DEPARTMENT OF TRANSPORTATION

APPROVED

7/2018 — DATE

/S/ Rodney Taylor — ROADWAY STANDARDS DEVE ENGINEER

FHWA

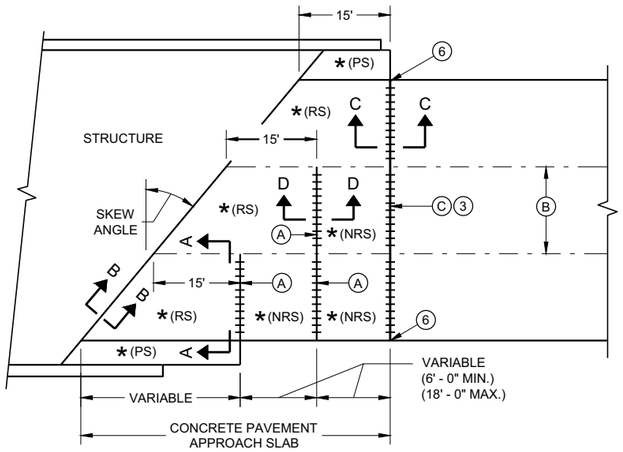

SKEWED APPROACH
(PAVEMENT MORE THAN TWO LANES)

* (RS) = REINFORCED CONCRETE SLAB

* (PS) = PAVED CONCRETE SHOULDER OR CONCRETE DRAINAGE SLAB

* (NRS) - NON - REINFORCED CONCRETE SLAB

*** STANDARD DOWEL BAR DIAMETER (SEE SDD 13C11 AND SDD 13C13)

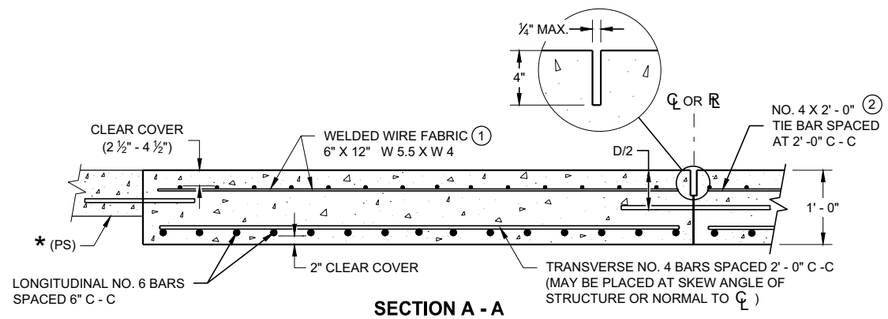

SECTION A - A
REINFORCEMENT POSITIONING DETAIL

GENERAL NOTES

THE CONTRACTOR MAY SPLICE NO. 6 BARS IN THE APPROACH SLAB FOR SKEWED STRUCTURES ONLY. STAGGER SPLICES WITH A MAXIMUM OF ONE SPLICE PER BAR. THE LENGTH OF LAP IS 20 INCHES.

TACK WELD DOWEL BARS TO THE BASKETS ON ALTERNATE ENDS.

1. THE CONTRACTOR MAY USE NO. 4 BARS SPACED AT 2' - 0 " C - C IN BOTH THE LONGITUDINAL AND TRANSVERSE DIRECTIONS FOR TOP REINFORCEMENT AS AN ALTERNATIVE TO THE WELDED WIRE FABRIC.
2. THE CONTRACTOR MAY OMIT THE BARS BETWEEN REINFORCED SLABS WHERE SLAB REINFORCEMENT BARS EXTEND ACROSS THE CENTERLINE OR REFERENCE LINE.
3. DO NOT CONSTRUCT AN EXPANSION JOINT OR INSTALL DOWEL BARS WHEN ABUTTING AN HMA PAVEMENT.
4. USE A JOINT SEALANT CONFORMING TO STANDARD SPECIFICATION 415.2.6.
5. PLACE EXPANSION CAP ON THE END OF THE DOWEL THAT IS NOT TACK WELDED TO THE BASKET. DO NOT FORCE DOWEL BAR PAST THE DOWEL STOP.
6. EXTEND EXPANSION JOINT THROUGH ANY ADJACENT TIED CONCRETE.

A. STANDARD CONTRACTION JOINT NORMAL TO ℄ OR ℞.

B. STANDARD LONGITUDINAL JOINT WITH TIE BARS.

C. 1 ½" EXPANSION JOINT WITH DOWEL BARS NORMAL TO ℄ OR ℞ .

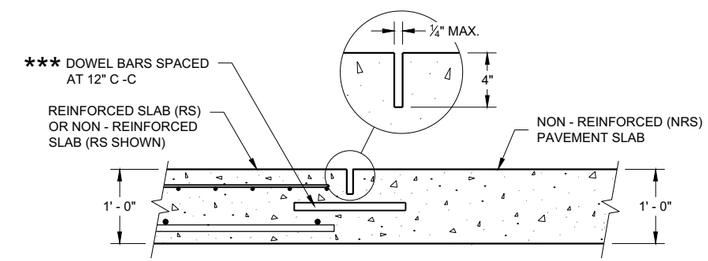

SECTION D - D
CONTRACTION JOINT

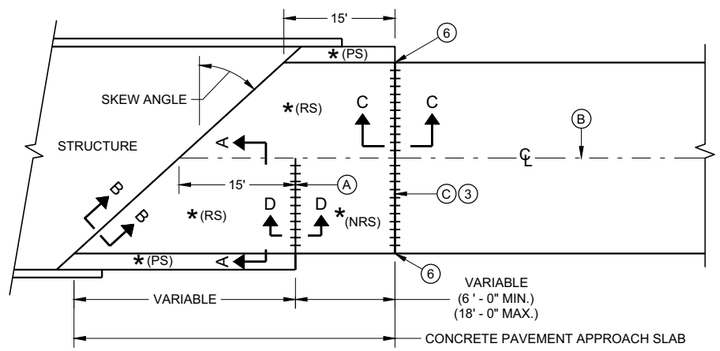

SKEWS > 20°
(PAVEMENT WIDTH ≤ 30')

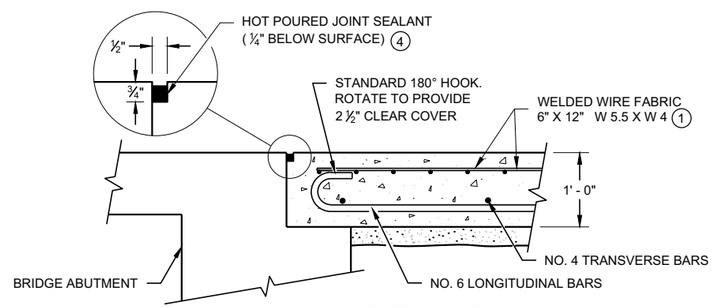

SECTION B - B
BEND DETAIL
BOTTOM REINFORCEMENT

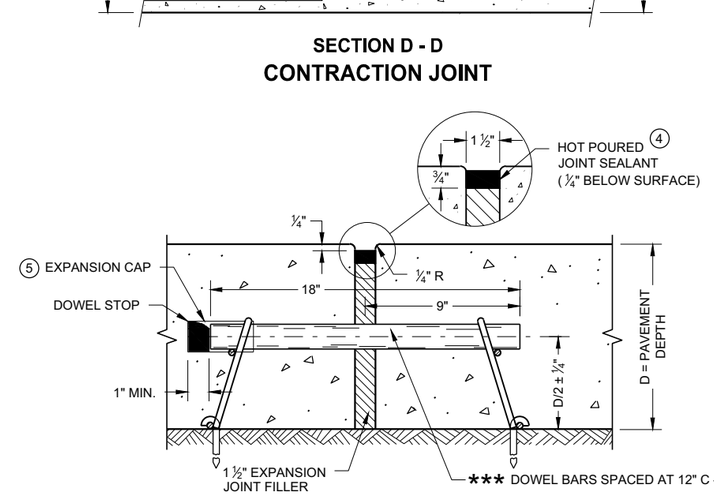

EXPANSION JOINT DETAIL

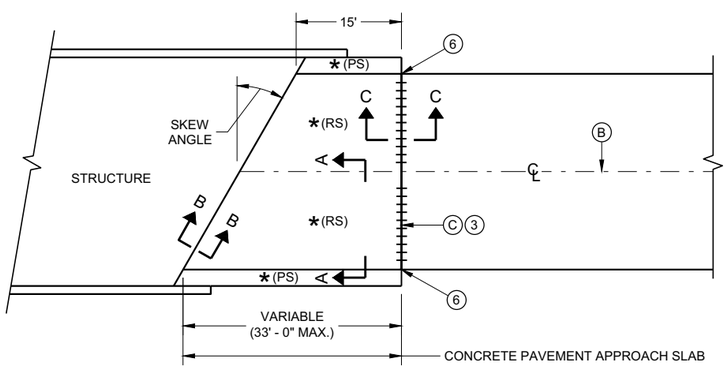

SKEWS ≤ 20°
(PAVEMENT WIDTH ≤ 30')

APPROACH SLAB AND ADJACENT PAVEMENT

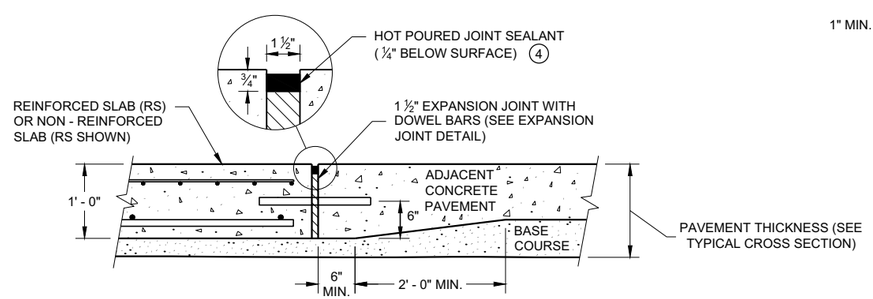

SECTION C - C
TRANSITION DETAIL
APPROACH SLAB TO ADJACENT PAVEMENT

CONCRETE PAVEMENT APPROACH SLAB

STATE OF WISCONSIN
DEPARTMENT OF TRANSPORTATION

APPROVED
November 2018 /S/ Peter Kemp, P.E.
DATE PAVEMENT SUPERVISOR
FHWA

6

SDD 13B02 - 09a

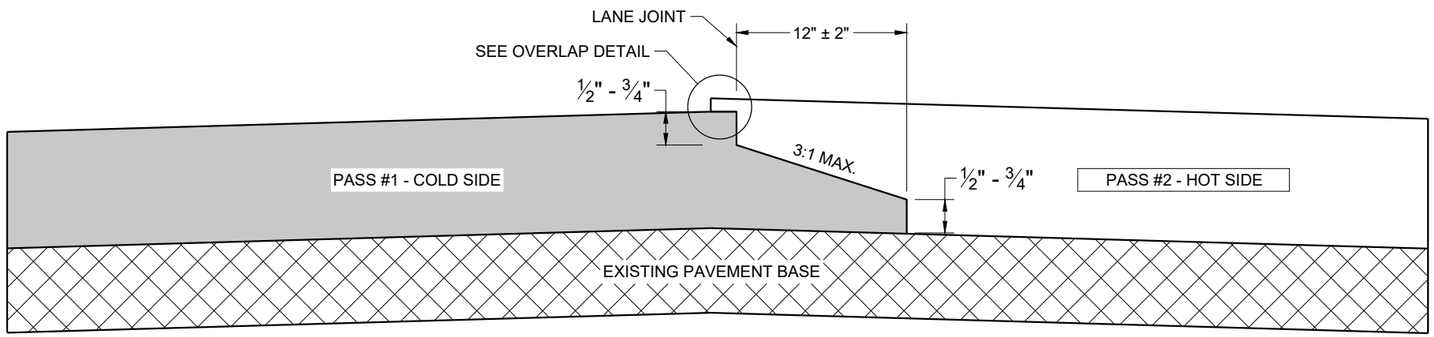

TYPICAL PAVEMENT CROSS SECTION
NOTCHED WEDGE JOINT

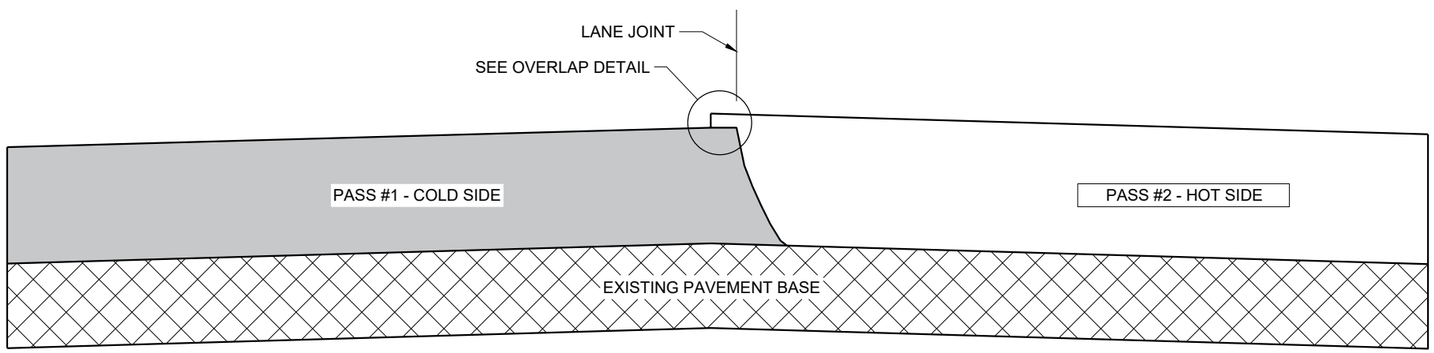

TYPICAL PAVEMENT CROSS SECTION
VERTICAL JOINT

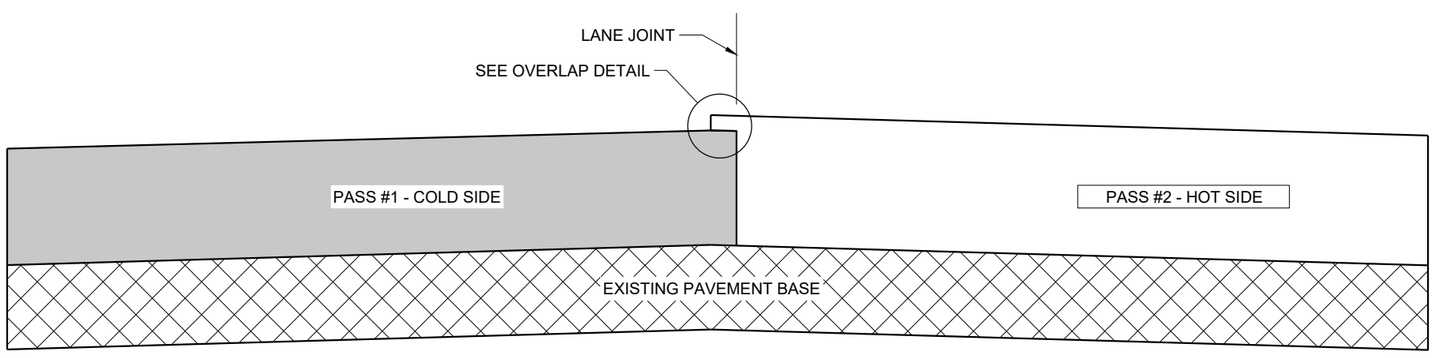

TYPICAL PAVEMENT CROSS SECTION
VERTICAL JOINT (MILLED)

GENERAL NOTES

IN ADDITION TO THE DETAILS PROVIDED IN THIS DRAWING, CONFORM TO STANDARD SPECIFICATION 450.3.2.8 FOR WHEN A NOTCHED WEDGE JOINT IS REQUIRED AND FOR GENERAL JOINT CONSTRUCTION REQUIREMENTS.

FOR ALL LONGITUDINAL JOINTS, ENSURE THE PAVER SCREED OVERLAPS THE PREVIOUSLY PLACED PAVEMENT BY 1" ± 0.5" AND THE HOT SIDE OF THE JOINT REMAINS HIGHER THAN THE COLD SIDE BY APPROXIMATELY 0.1" AFTER FINAL COMPACTION. (IT WILL BE FLUSH WHEN PAVING IN ECHELON.)

ONLY REMOVE THE LONGITUDINAL NOTCHED WEDGE JOINT FOR SMA PAVEMENT OR AS DIRECTED BY THE ENGINEER TO ADDRESS SPECIFIC LENGTHS OF JOINT DAMAGED BY TRAFFIC.

WHEN MILLING BACK OR REMOVING ANY LONGITUDINAL JOINT, LIMIT THE MATERIAL REMOVED TO 2" FROM THE TOP NOTCH OR FROM THE VERTICAL JOINT EDGE ON THE COLD SIDE OF THE JOINT.

USE LONGITUDINAL MILLED JOINT AS PLANS SHOW OR THE AS THE ENGINEER DIRECTS.

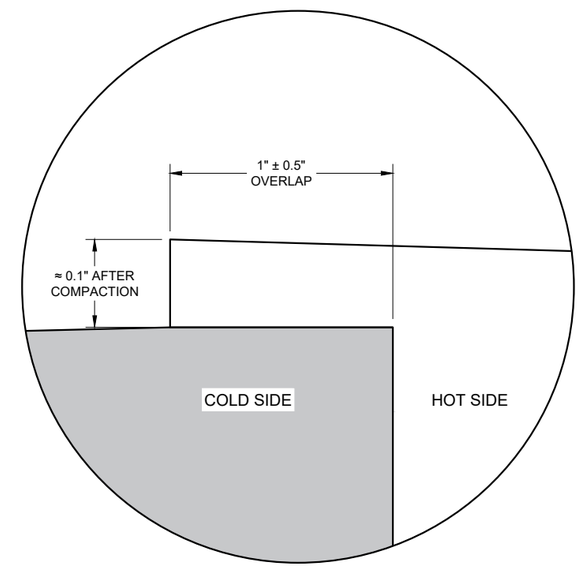

OVERLAP DETAIL (TYPICAL)

6

6

SDD 13C19 - 03

SDD 13C19 - 03

HMA LONGITUDINAL JOINTS

STATE OF WISCONSIN
DEPARTMENT OF TRANSPORTATION

APPROVED
November 2020 /S/ Steven Hefel
DATE HMA PAVEMENT ENGIN
FHWA

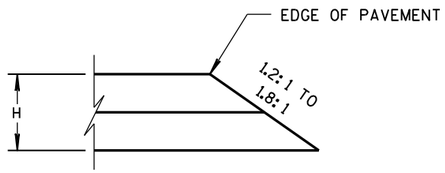

CONSTRUCTED WITH FINAL TWO LAYERS

FOR H 5" OR LESS

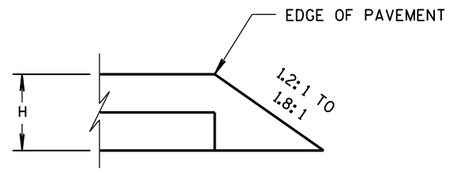

CONSTRUCTED WITH FINAL LAYER

FOR H 5" OR LESS

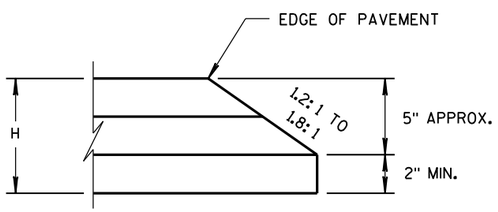

CONSTRUCTED WITH FINAL TWO LAYERS

FOR H GREATER THAN 5"

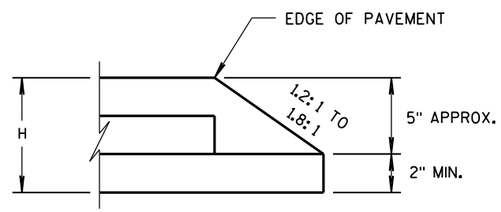

CONSTRUCTED WITH FINAL LAYER

FOR H GREATER THAN 5"

HMA PAVEMENT AND HMA OVERLAYS

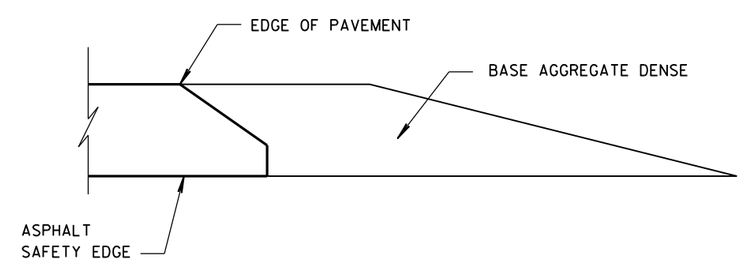

FINISHED SHOULDER AGGREGATE PLACEMENT

6

6

S.D.D. 14 B 29-1

S.D.D. 14 B 29-1

SAFETY EDGE SM

STATE OF WISCONSIN
DEPARTMENT OF TRANSPORTATION

APPROVED

11/30/2012
DATE

/S/ Jerry H. Zogg
ROADWAY STANDARDS DEVELOPMENT ENGINEER

FHWA

1. WOOD OR STEEL POSTS (w6X9 OR w6X8.5) MAY BE USED. DO NOT INTERMIX WOOD AND STEEL POSTS. INSTALL STEEL POSTS WITH HOLES ON APPROACHING TRAFFIC SIDE.
2. USE WOOD OR APPROVED PLASTIC BLOCKOUTS. WOOD BLOCKOUTS MAY BE CONSTRUCTED OUT OF TWO OR MORE WOOD BLOCKOUTS. SEE ALTERNATE WOOD BLOCKOUT DETAIL. DIMENSIONS OF APPROVED PLASTIC BLOCKOUTS MAY VARY.
3. IF ROCK IS ENCOUNTERED DURING EXCAVATION, PROVIDE A HOLE 12 INCHES IN DIAMETER EXTENDING 20 INCHES DEEP INTO THE ROCK. PLACE APPROXIMATELY 2 1/2" INCHES OF GRANULAR MATERIAL IN THE BOTTOM OF THE HOLE. CUT THE POSTS THE TO LENGTH AMD INSTALL. BACKFILL WITH EXCAVATED MATERIAL AND COMPACT. BACKFILL IS TO BE FREE OF LARGE ROCKS.
4. WHEN THE DISTANCE FROM BACK OF POST TO SHOULDER HINGE POINT IS LESS THAN 2 FEET INSTALL LONGER POST AT HALF POST SPACING (K).
5. FOR NEW MGS INSTALLATION TOP OF W-BEAM RAIL TOLERANCE IS ±1". FOR EXISTING MGS INSTALLATION TOP OF W-BEAM IS BETWEEN 27 ¾" TO 32".
6. WHEN USING STEEL POST AND WOOD BLOCKOUTS INSTALL FOUR 16D GALVANIZED NAILS. INSTALL NAILS AT THE BACK CORNERS OF THE BLOCK AND BEND THE NAILS OVER THE FLANGE OF THE STEEL POST.
7. TOTAL POST LENGTH FOR TYPE K IS 7' - 0". TOTAL POST LENGTH FOR OTHER MGS TYPES IS 6' - 0".

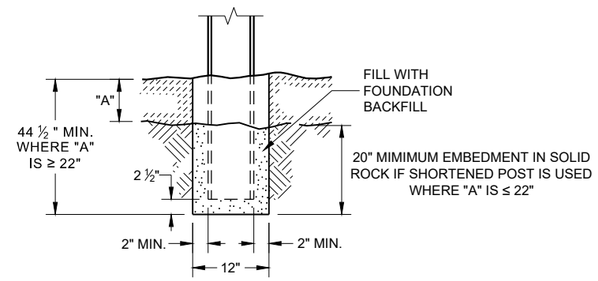

END VIEW
SETTING STEEL OR WOOD POST IN ROCK (3)

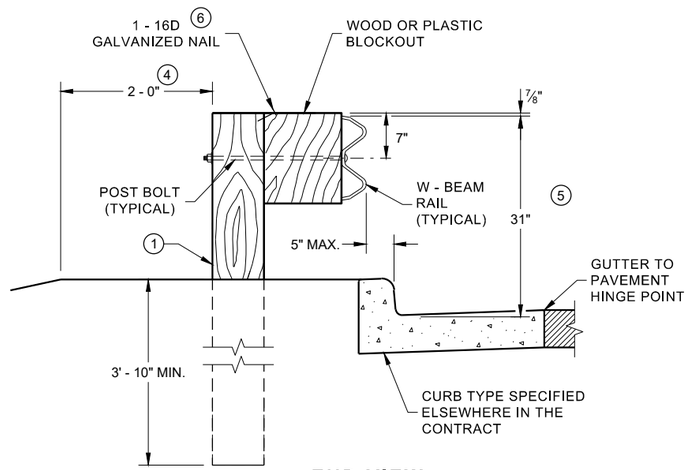

END VIEW
LOCATED ALONG A CURBED ROADWAY

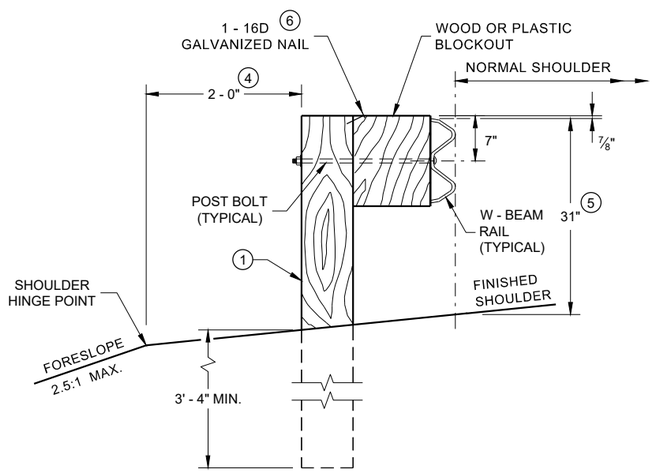

END VIEW
LOCATED ALONG A ROADWAY SHOULDER STANDARD INSTALLATION

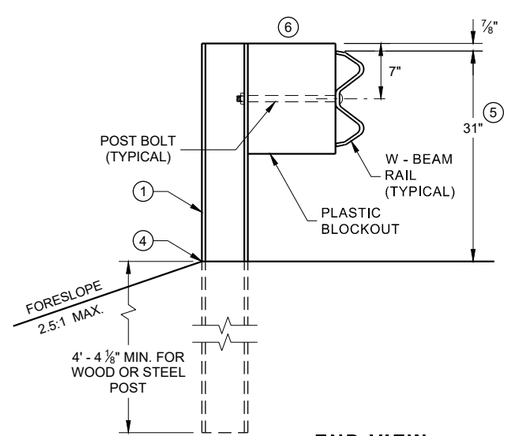

END VIEW
MGS LONGER POST AT HALFPOST SPACING W BEAM (K)

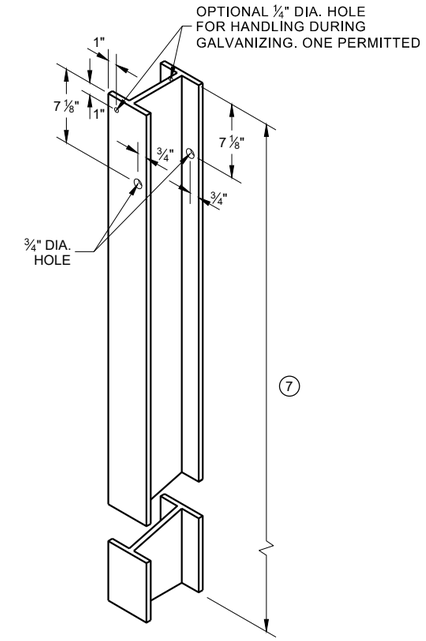

STEEL POST & HOLE PUNCHING DETAIL (W 6 X 9) (1)

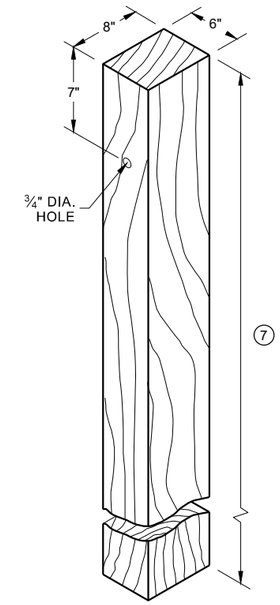

WOOD POST (6" X 8") NOMINAL (1)

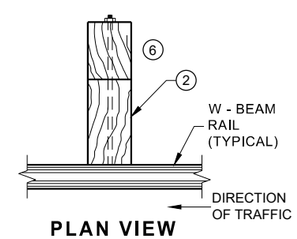

PLAN VIEW WOOD POST, BLOCKOUT & BEAM

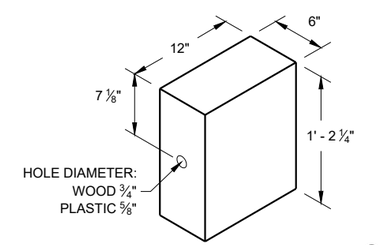

WOOD OR PLASTIC BLOCKOUT (2)

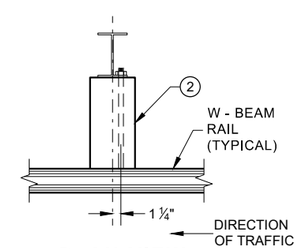

PLAN VIEW STEEL POST, PLASTIC BLOCKOUT & BEAM

MIDWEST GUARDRAIL SYSTEM (MGS) GUARDRAIL

STATE OF WISCONSIN
DEPARTMENT OF TRANSPORTA

6

SDD 14B42 - 07a

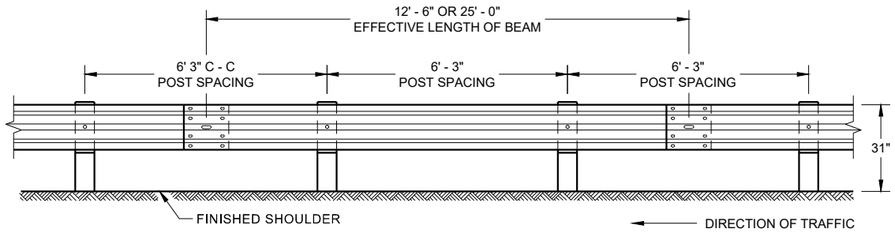

FRONT VIEW
POST SPACING STANDARD INSTALLATION

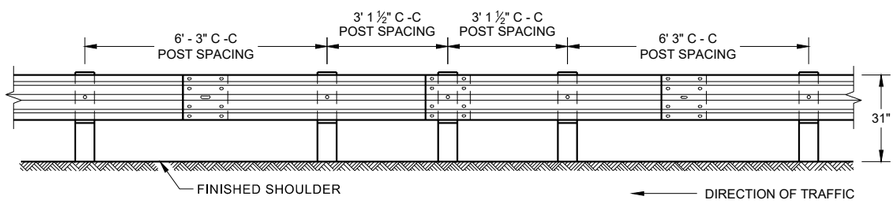

FRONT VIEW
HALF POST SPACING (HS) AND HALF POST SPACING WITH LONGER POSTS (K)

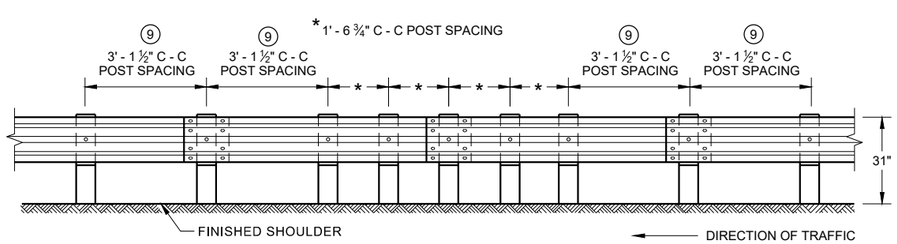

FRONT VIEW
QUARTER POST SPACING (QS)

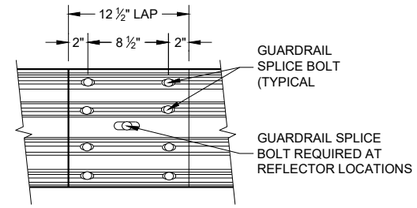

FRONT VIEW
MID-SPAN BEAM SPLICE

GENERAL NOTES

8 DO NOT INSTALL REFLECTORS ON THE FIRST 50 FEET OF THE APPROACH END OF THE ENERGY ABSORBING TERMINAL.

9 25 FEET OF HALF POST SPACING IS REQUIRED ON APPROACH AND DEPARTURE ENDS OF QUARTER POST SPACING.

POST BOLTS ARE A ⅝" DIAMETER ASTM A307 GUARDRAIL BOLT. A POST BOLT REQUIRES ⅝" DIAMETER A563A DOUBLE RECESSED (DR) HEAVY HEX NUT AND ⅝" DIAMETER F844 FLAT WASHER. POST BOLTS MAY BE LONGER IF MULTIPLE BLOCKOUTS ARE BEING USED.

GUARD RAIL SPLICE BOLTS ARE A ⅝" DIAMETER ASTM A307 GUARDRAIL HEAD BOLT. A GUARDRAIL SPLICE BOLT REQUIRES ⅝" DIAMETER A563A DOUBLE RECESSED (DR) HEAVY HEX NUT.

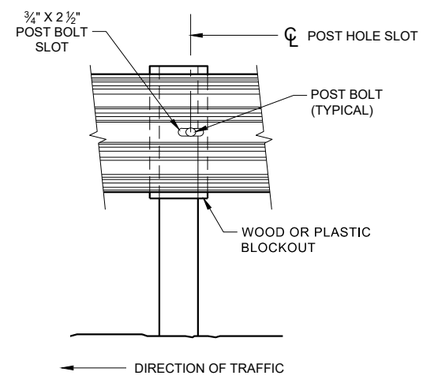

FRONT VIEW AT STEEL POST

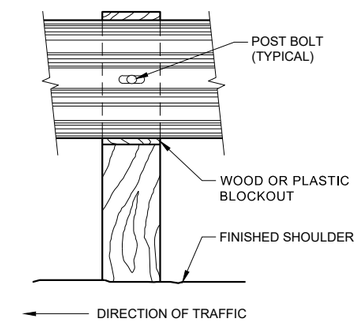

FRONT VIEW AT WOOD POST

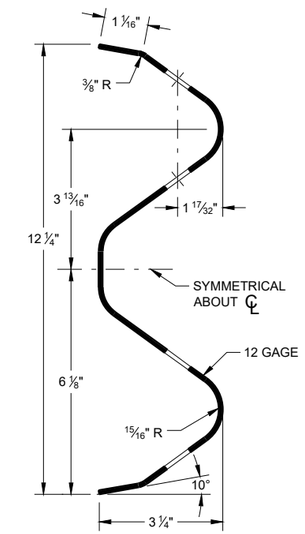

SECTION THRU W-BEAM RAIL

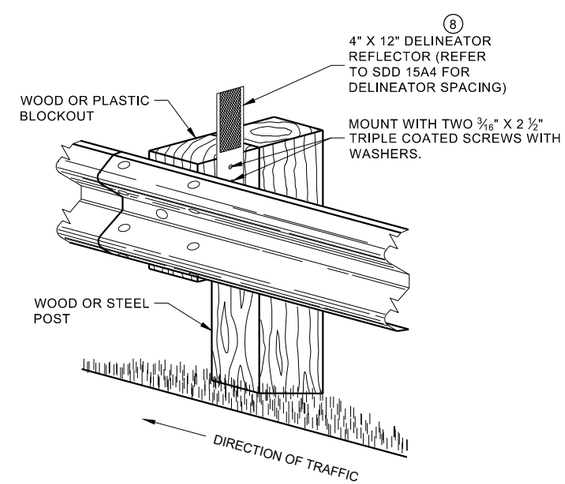

ONE SIDED REFLECTOR DETAIL AND TYPICAL INSTALLATION

MIDWEST GUARDRAIL SYSTEM (MGS) GUARDRAIL

STATE OF WISCONSIN
DEPARTMENT OF TRANSPORTATION

6

6

SDD 14B42 - 07b

SDD 14B42 - 07b

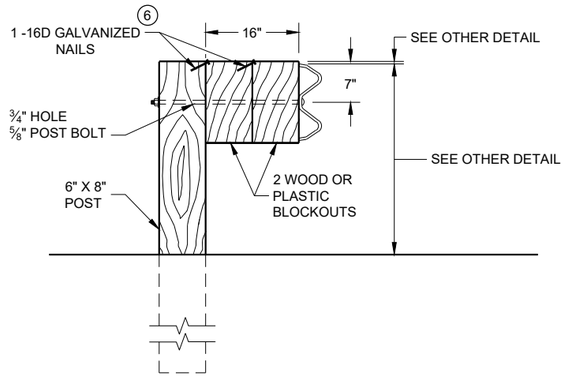

DETAIL FOR 16" BLOCKOUT DEPTH

IT IS ACCEPTABLE TO USE BLOCKOUTS UP TO 16" DEEP TO INCREASE THE POST OFFSET TO AVOID UNDERGROUND OBSTACLES. THERE IS NO LIMIT TO THE NUMBER OF POSTS THAT CAN HAVE ADDITIONAL BLOCKOUTS UP TO 16" DEEP.

NOTE:

1. ALL FILLETS SHALL HAVE A MINIMUM RADIUS OF 3/16".
2. IF THE BOLT EXTENDS MORE THAN ¼" FROM THE NUT THE BOLT SHOULD BE TRIMMED BACK.

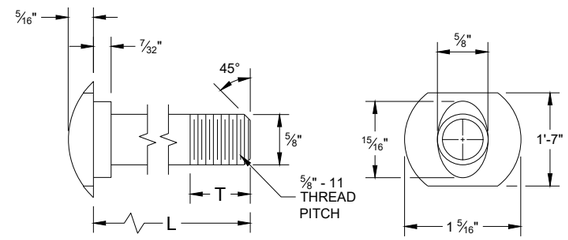

POST BOLT TABLE

L	T (MIN.)
1 ¼"	1 ⅛"
2"	1 ¾"
10"	4"
14"	4 1/16"
18"	4"
21"	4 1/16"
25"	4"

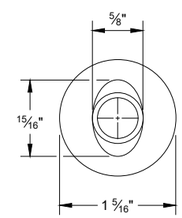

ALTERNATE BOLT HEAD

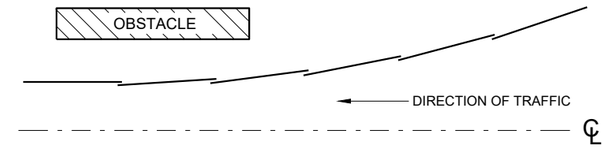

PLAN VIEW
BEAM LAPPING DETAIL

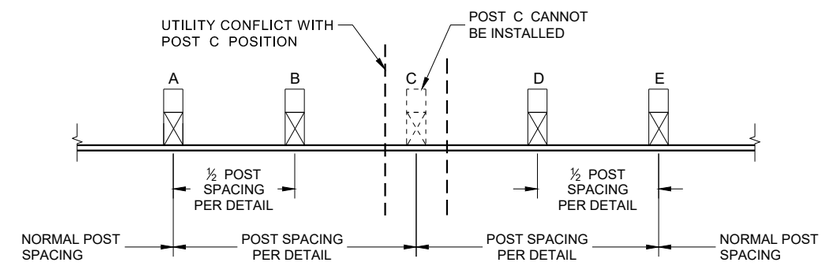

POST DRIVING FOR CONTINUOUS UNDERGROUND OBSTRUCTION

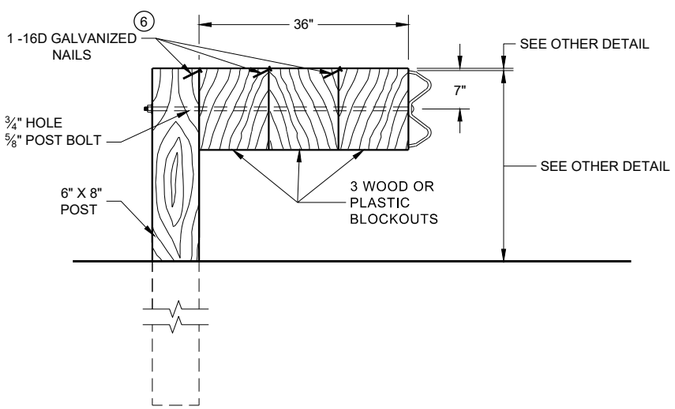

DETAIL FOR 36" BLOCKOUT DEPTH

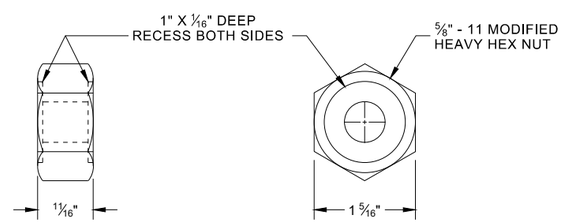

POST BOLT, SPLICE BOLT AND RECESS NUT

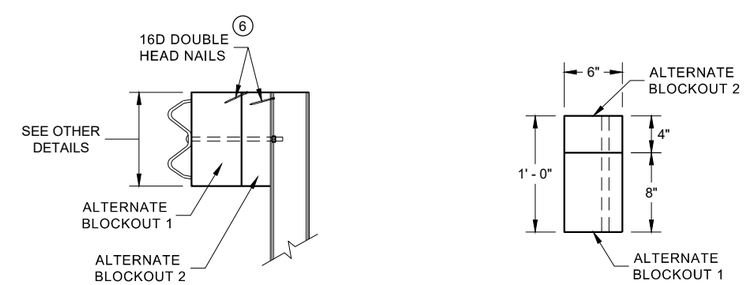

SIDE VIEW

PLAN VIEW

ALTERNATE WOOD BLOCKOUT DETAIL

NOTES: UNDER SPECIAL CIRCUMSTANCES, SUCH AS AVOIDING OBSTACLES THAT ARE NOT RELOCATED, IT IS ACCEPTABLE TO INSTALL ADDITIONAL BLOCKOUTS TO OBTAIN UP TO 36" DEPTH FOR ONE OR TWO POSTS IN A SECTION OF GUARDRAIL.

DO NOT USE 16" OR 36" BLOCKOUTS IF IT CAUSES THE POST TO BE DRIVEN BEYOND SHOULDER HINGE POINT OR CAUSES A FIXED OBJECT TO BE WITHIN THE DEFLECTION DISTANCE OF THE BARRIER.

(6) WHEN USING STEEL POST AD WOOD BLOCKOUTS, INSTALL FOUR 16D GALVANIZED NAILS. INSTALL NAILS AT THE BACK CORNERS OF THE BLOCK AND BEND THE NAILS OVER THE FLANGE OF THE STEEL POST.

MIDWEST GUARDRAIL SYSTEM (MGS) GUARDRAIL

STATE OF WISCONSIN
DEPARTMENT OF TRANSPORTA

6

SDD 14B42 - 07c

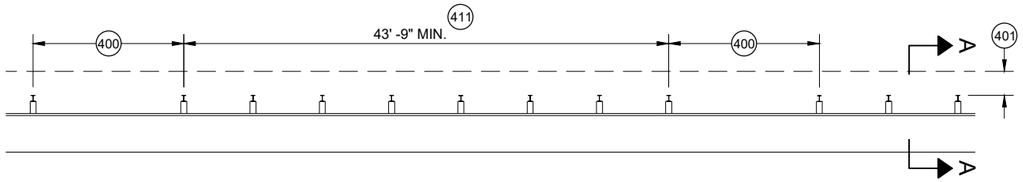

MISSING POST IN MGS GUARDRAIL

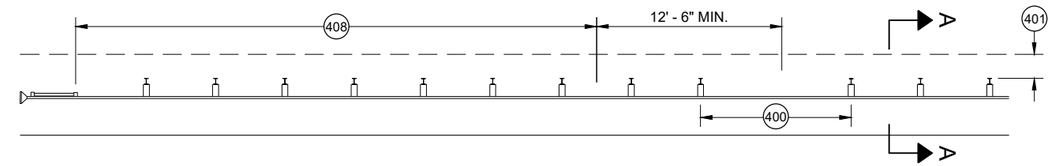

MISSING POST IN MGS GUARDRAIL NEAR EAT

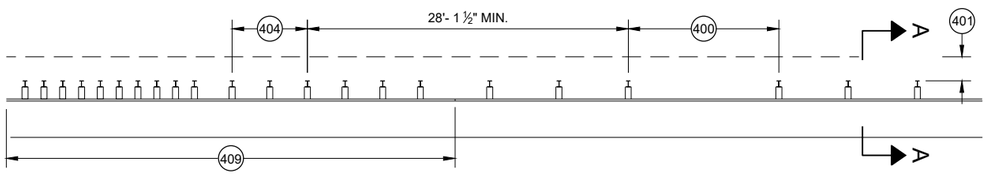

MISSING POST IN MGS GUARDRAIL NEAR AN APPROACH TRANSITION

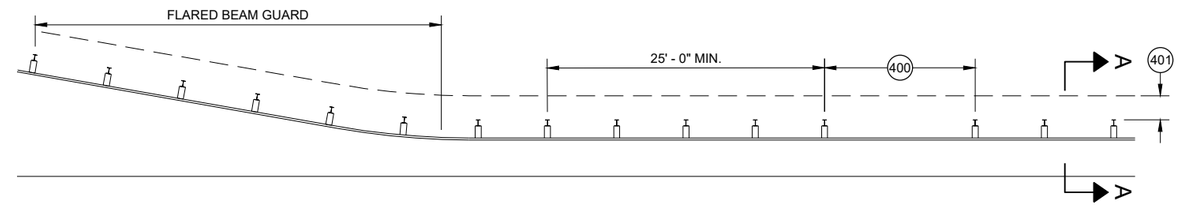

MISSING POST IN MGS GUARDRAIL NEAR FLARED BEAM GUARD

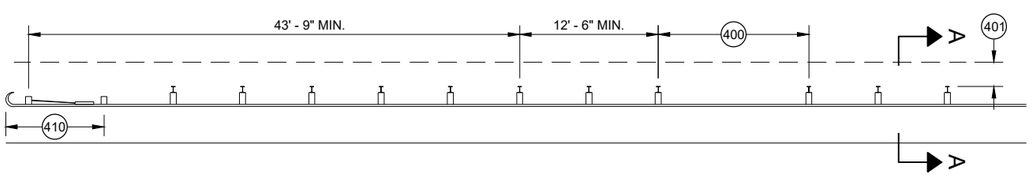

MISSING POST IN MGS GUARDRAIL NEAR A TYPE 2 END TERMINAL

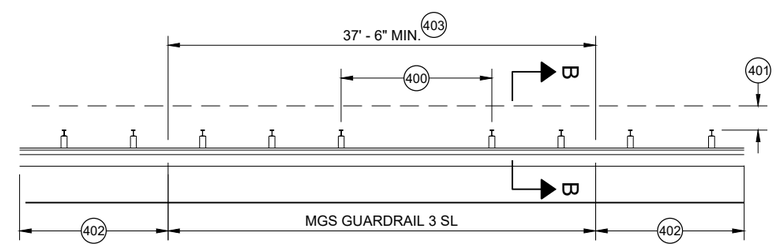

MISSING POST IN SHORT SPAN MGS GUARDRAIL NEAR CURB (SL) 407

400 MAX SPAN 12' - 6"
401 2' MIN.
402 MGS GUARDRAIL 3
403 NESTING BEAM GUARD
404 ASYMMETRIC TRANSITION
405 SOIL WELL DRAINED AND COMPACTED
406 SEE OTHER DRAWINGS IN THIS SDD
407 SEE OTHER DRAWINGS FOR MIN. SPACING BETWEEN SPANS
408 SEE SDD 14B44
409 SEE SDD 14B45
410 SEE SDD 14B47
411 MINIMUM DISTANCE BETWEEN MISSING POST SPANS.

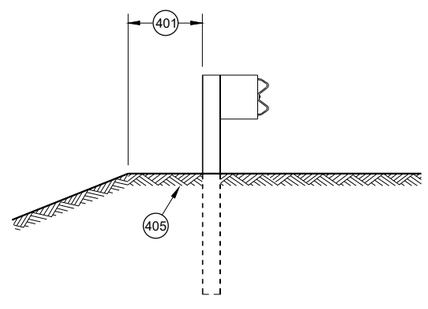

SECTION A - A 406

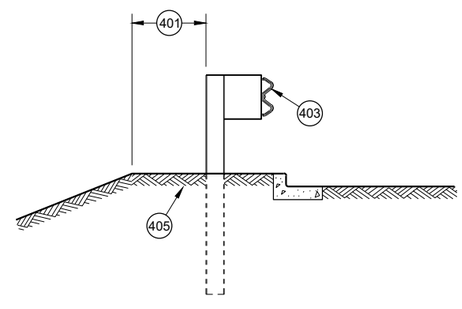

SECTION B - B 406

MIDWEST GUARDRAIL SYSTEM (MGS) GUARDRAIL

STATE OF WISCONSIN
DEPARTMENT OF TRANSPORTATION

APPROVED
May 2021 — DATE
/S/ Rodney Taylor — ROADWAY STANDARDS DEVE UNIT SUPERVISOR
FHWA

6

SDD 14B42 - 07d

GENERAL NOTES

(A) THE SLOPE IN THE AREA BOUNDED BY THE GRADELINE, THE HINGE POINT LINE (HPL) AND THE CLEAR ZONE LIMITS (CZL) SHALL BE 4:1 OR FLATTER.

(B) AFTER FINAL ASSEMBLY, RECHECK CABLE TO BE SURE IT IS TAUT AND HAS NOT RELAXED

(C) DIFFERENT MANUFACTURERS REQUIRE DIFFERENT PERFORATED W - BEAM RAIL END PANELS. SEE MANUFACTURER'S INFORMATION.

(D) ATTACH ALUMINUM SHEET TO E.A.T. HEAD USING 4 STAINLESS STEEL SELF - TAPPING SCREWS. ONE SCREW PER CORNER.

(E) HARDWARE MAY VARY BETWEEN MANUFACTURER. SEE MANUFACTURER'S DRAWING FOR INFORMATION.

DIMENSIONS MAY VARY, MANUFACTURER'S INFORMATION.

SEE SDD 14B42 FOR MORE INFORMATION.

* DO NOT ATTACH BLOCKOUTS TO POST 1 AND 2.

DO NOT INSTALL REFLECTORS ON THE FIRST 50 FEET OF THE APPROACH END OF THE ENERGY ABSORBING TERMINAL.

SEE MANUFACTURER'S DRAWING FOR SPLICE LOCATION, HARDWARE DIMENSIONS AND INSTALLATION INSTRUCTIONS.

THE CENTER OF THE UPPER 3 ½" DIAMETER HOLE ON POST NUMBER 3 THROUGH POST 9 IS TO BE FLUSH WITH THE GROUND LINE UP TO A MAXIMUM OF 2" ABOVE GROUND LINE. WOOD BLOCKS ON POSTS NUMBERED 3 THROUGH 9 MAY BE ADJUSTED UP TO 3" ABOVE THE TOP OF POST.

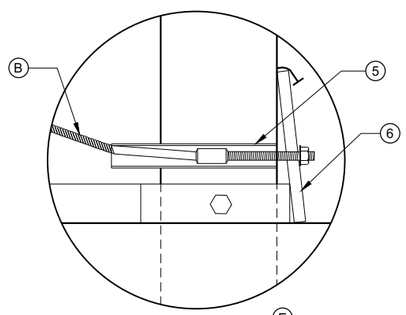

DETAIL "A" (E)

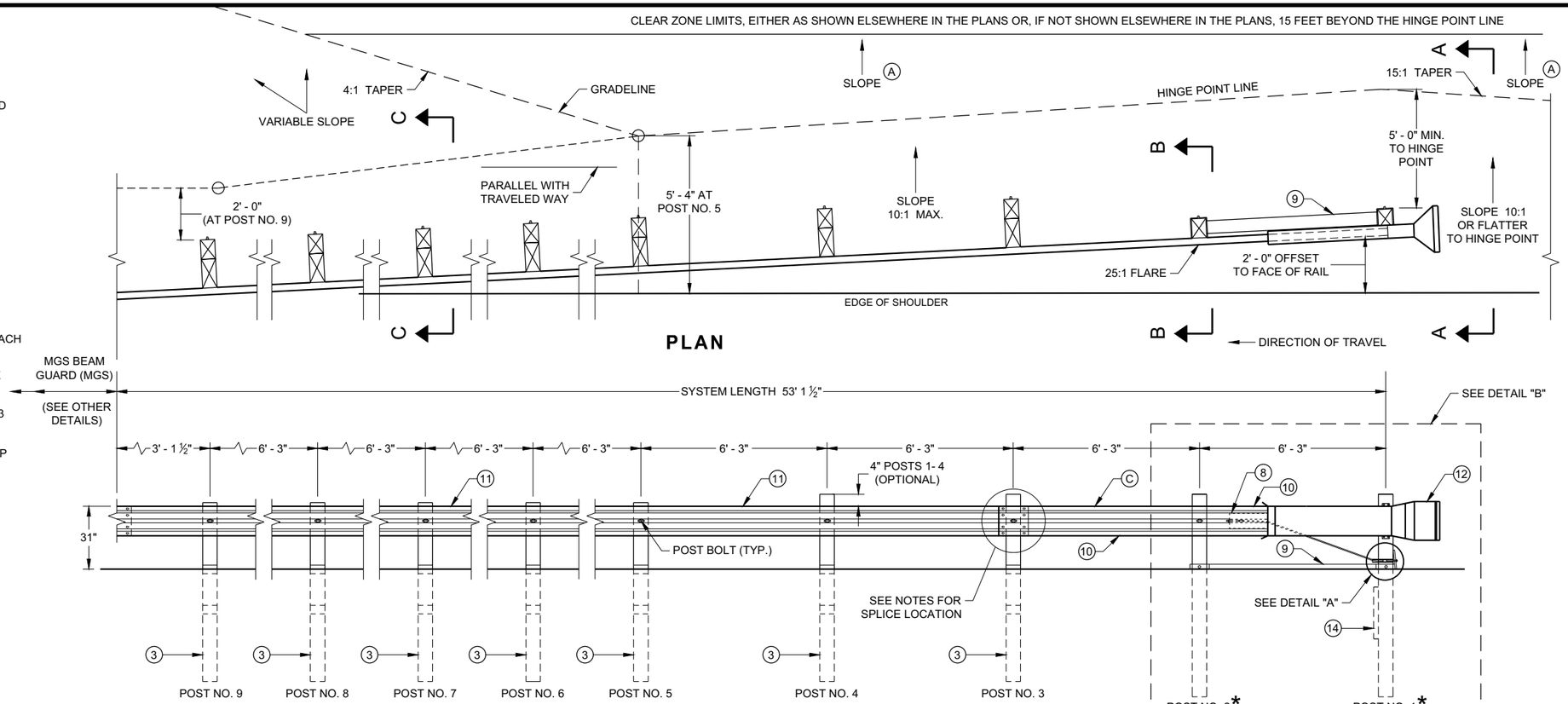

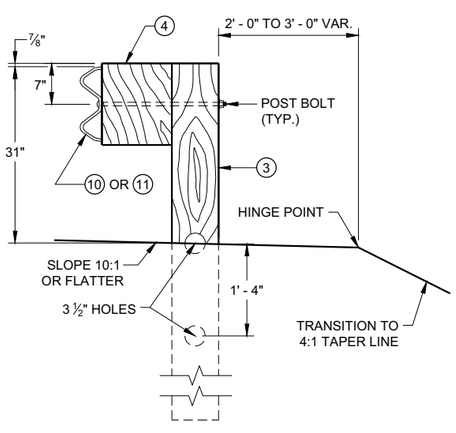

SECTION C - C
TYPICAL AT POST NOS. 3 - 9

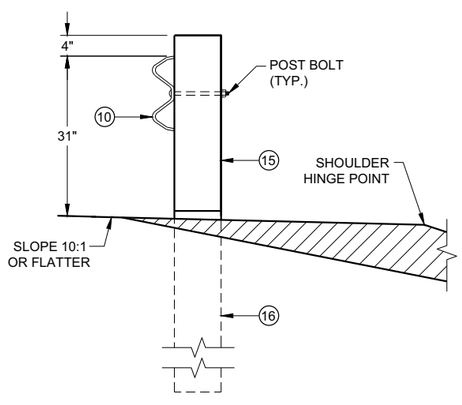

SECTION B - B
TYPICAL AT POST NO. 2*

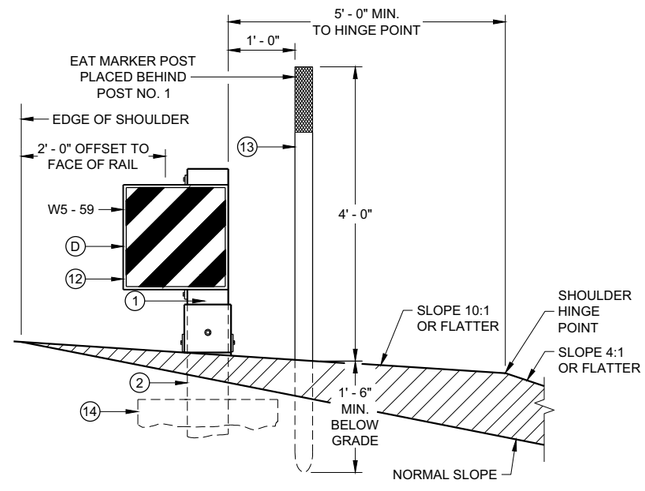

SECTION A - A
TYPICAL AT POST NO. 1*

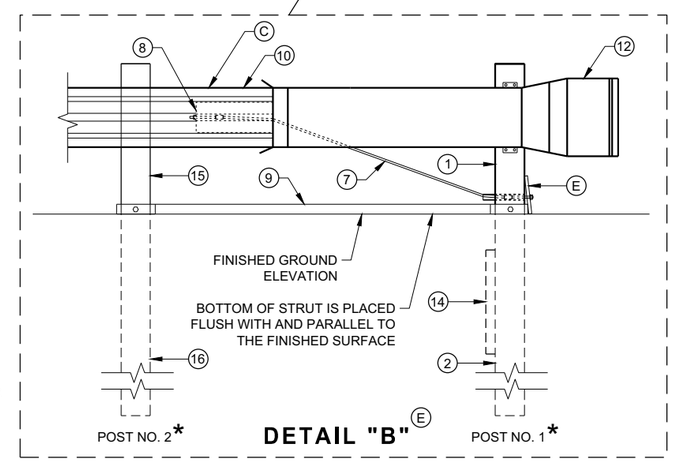

DETAIL "B" (E)

MIDWEST GUARDRAIL SYSTEM ENERGY ABSORBING TERMINAL (MGS)

STATE OF WISCONSIN
DEPARTMENT OF TRANSPORTATION

6

6

SDD 14B44 - 04a

SDD 14B44 - 04a

BILL OF MATERIALS

PART NO.	DESCRIPTION MATERIALS PROVIDED BY MGS EAT MANUFACTURER. SEE MANUGACTURER'S DETAILS FOR MORE INFORMATION.
1	UPPER POST NO. 1 6" X 6" TUBE
2	LOWER POST NO. 1
3	WOOD CRT
4	WOOD BLOCKOUT
5	PIPE SLEEVE
6	BEARING PLATE
7	BCT CABLE ASSEMBLY
8	ANCHOR CABLE BOX
9	GROUND STRUT
10	PERFORATED W-BEAM RAIL END PANEL, 12'-6" LONG.
11	STANDARD W-BEAM RAIL. MULTIPLE SECTIONS REQUIRED. SECTIONS VARY IN LENGTH.
12	IMPACT HEAD
13	EAT MARKER POST - YELLOW (SEE APPROVED PRODUCTS LIST)
14	SOIL PLATE
15	UPPER POST NO. 2
16	LOWER POST NO. 2

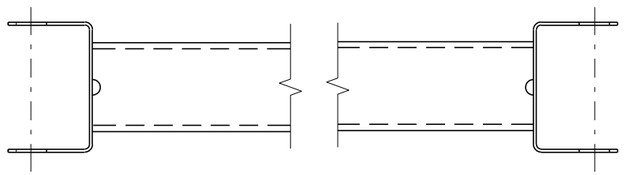

GENERIC GROUND STRUT 9 E

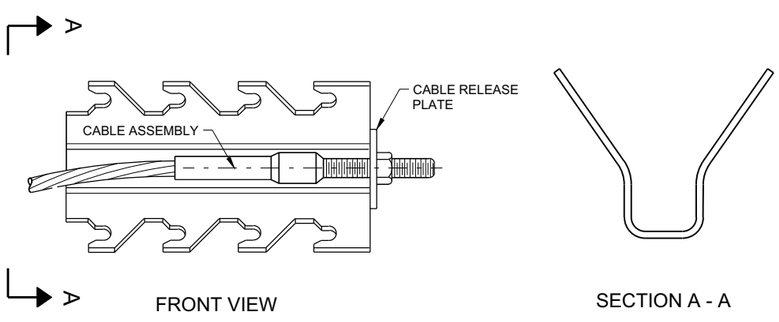

GENERIC ANCHOR CABLE BOX 9 E

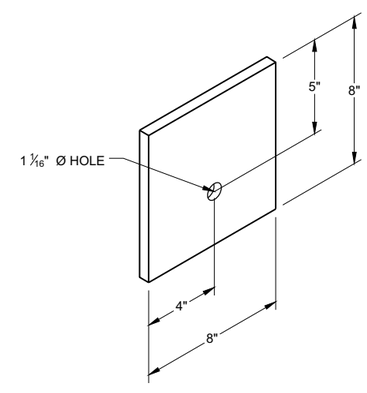

BEARING PLATE 6 E

MIDWEST GUARDRAIL SYSTEM ENERGY ABSORBING TERMINAL (MGS)

STATE OF WISCONSIN
DEPARTMENT OF TRANSPORTAT

6

SDD 14B44 - 04b

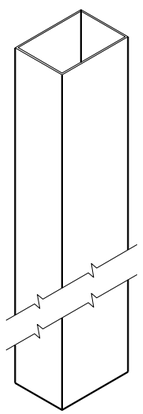

UPPER POST NO. 1 (1) (E)

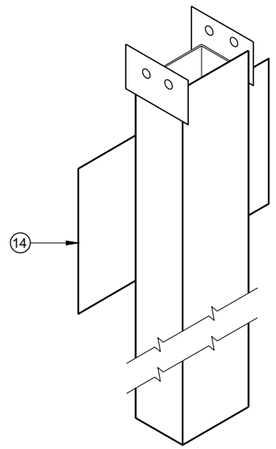

LOWER POST NO. 1 (2) (E)

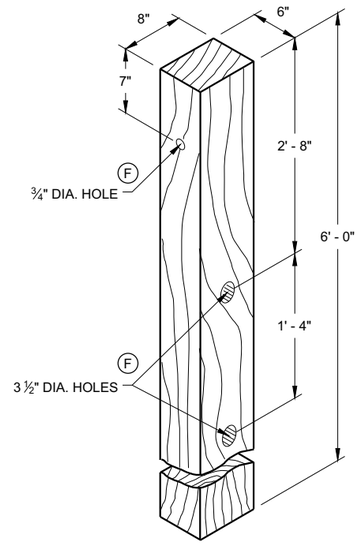

WOOD CRT POST (3) (E)

POSTS NUMBER 3-9

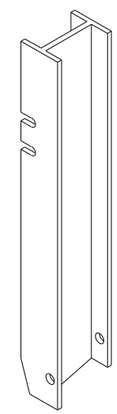

UPPER POST NO. 2 (15) (E)

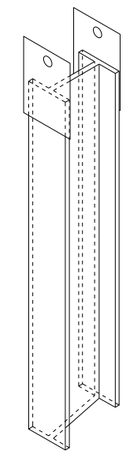

LOWER POST NO. 2 (16) (E)

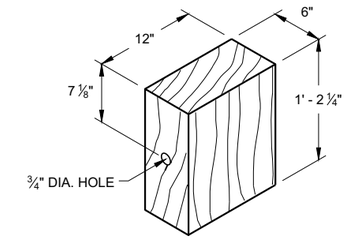

WOOD BLOCKOUT (4)

REQ'D. AT ALL POSTS EXCEPT POST NO'S 1 & 2

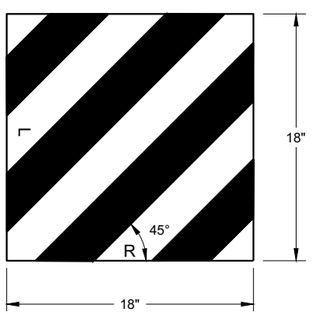

W5 - 59

REFLECTIVE SHEETING DETAIL (E)

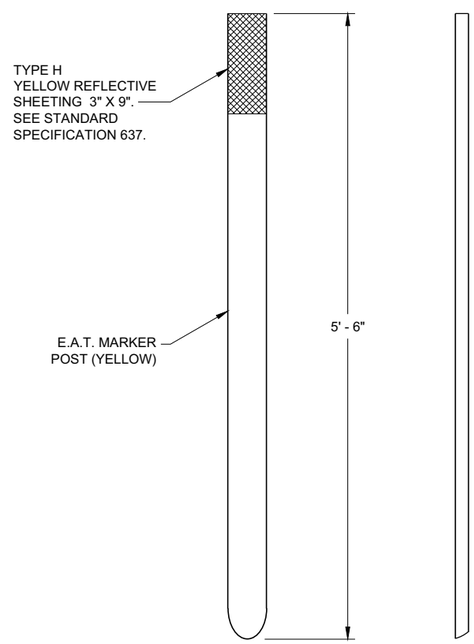

FRONT VIEW SIDE VIEW

E.A.T. MARKER POST (13)

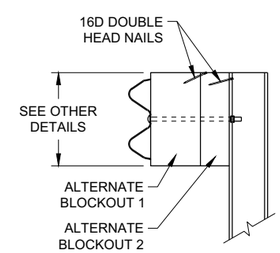

SIDE VIEW

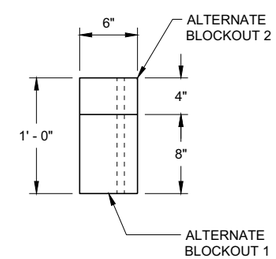

TOP VIEW

ALTERNATE WOOD BLOCKOUT DETAIL

MIDWEST GUARDRAIL SYSTEM ENERGY ABSORBING TERMINAL (MGS)

STATE OF WISCONSIN
DEPARTMENT OF TRANSPORTATION

APPROVED
7/2018 — DATE
/S/ Rodney Taylor — ROADWAY STANDARDS DEVE UNIT SUPERVISOR
FHWA

6

6

SDD 14B44 - 04c

SDD 14B44 - 04c

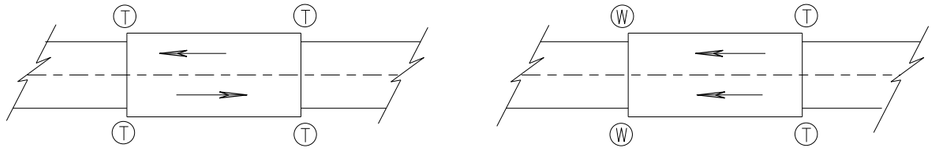

TWO WAY TRAFFIC **ONE WAY TRAFFIC**

(T) THRIE BEAM CONNECTION

(W) W-BEAM CONNECTION WHEN REQUIRED

TYPICAL LOCATIONS OF THRIE BEAM AND W-BEAM CONNECTIONS TO BRIDGE

GENERAL NOTES

IF ROCK IS ENCOUNTERED, REMOVE ROCK TO FULL DEPTH OF POST PLUS 2½", AND 12" DIAMETER AROUND POST. SEE 14B42 FOR MORE DETAILS.

TRANSITION USES STEEL POSTS ONLY.

SEE STANDARD DETAIL DRAWING 14 B 42 FOR MORE INFORMATION.

POST 2 THROUGH 17 USES STEEL POST ONLY

(1) BRIDGE RAILING TYPE "W" DOES NOT REQUIRE A TERMINAL CONNECTOR.

(2) OPTIONAL CURB AND GUTTER OR DRAINAGE FEATURE SEE PLAN FOR INFORMATION.

(13) STEEL OR WOOD POST IS ACCEPTABLE AT POST 1. SEE SDD14B42

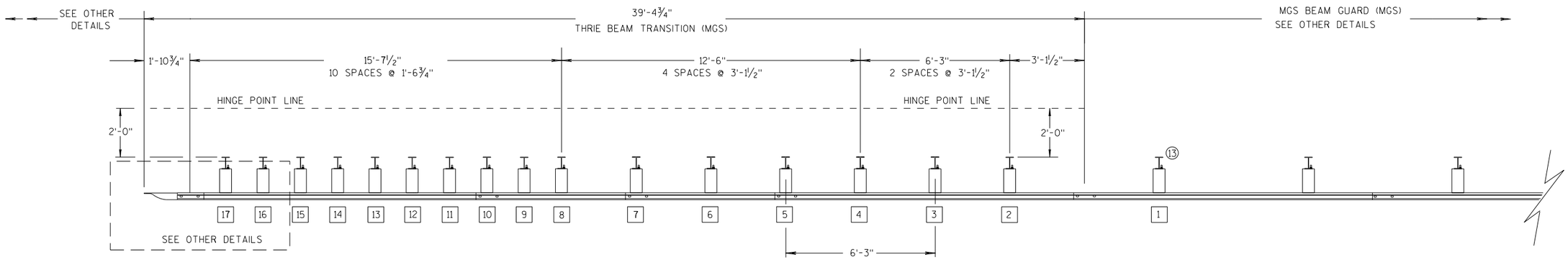

PLAN VIEW

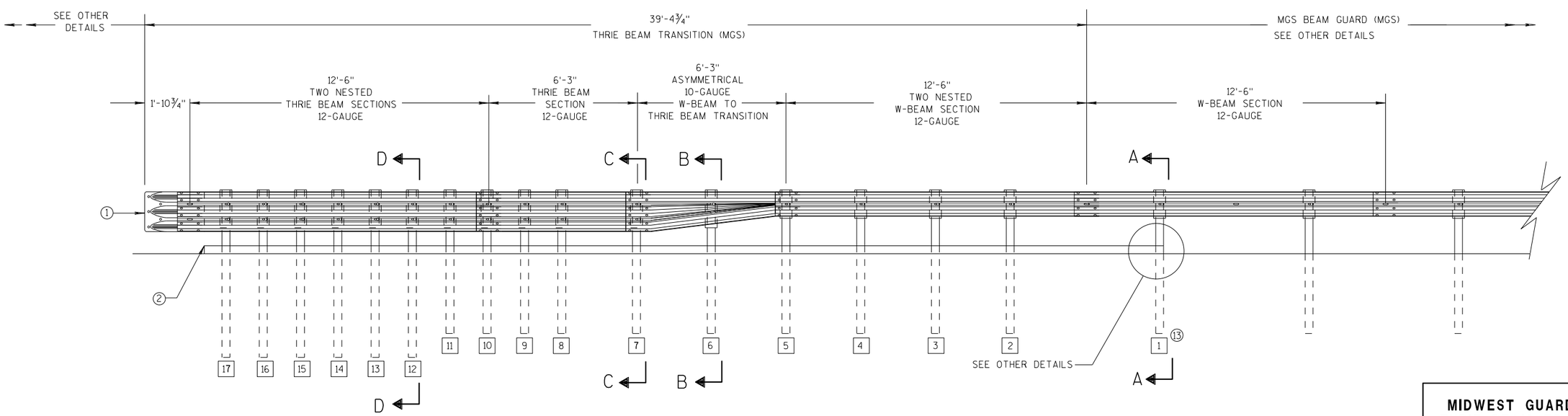

ELEVATION VIEW

MIDWEST GUARDRAIL SYSTEM THRIE BEAM TRANSITION

MIDWEST GUARDRAIL SYSTEM THRIE BEAM TRANSITION (MGS)

STATE OF WISCONSIN
DEPARTMENT OF TRANSPOR

6

S.D.D. 14 B 45-5a

GENERAL NOTES

(2) OPTIONAL CURB AND GUTTER OR DRAINAGE FEATURE SEE PLAN FOR INFORMATION.

(3) WHEN USING STEEL POSTS AND WOOD BLOCKOUTS INSTALL FOUR 10D GALVANIZED NAILS. INSTALL NAILS AT THE BACK CORNERS OF THE BLOCK AND BEND THE NAILS OVER THE FLANGE OF THE STEEL POST.

(4) TOLERANCE FOR TOP OF W-BEAM RAIL IS ± 1".

(13) STEEL OR WOOD POST IS ACCEPTABLE AT POST 1. SEE SDD 14B42

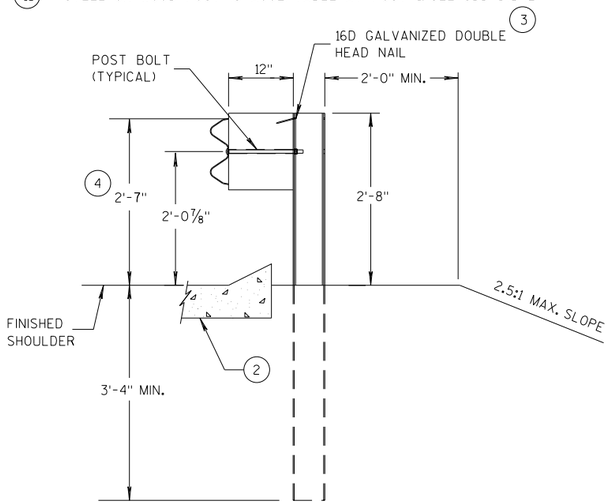

SECTION A-A (13)

POSTS 1-5

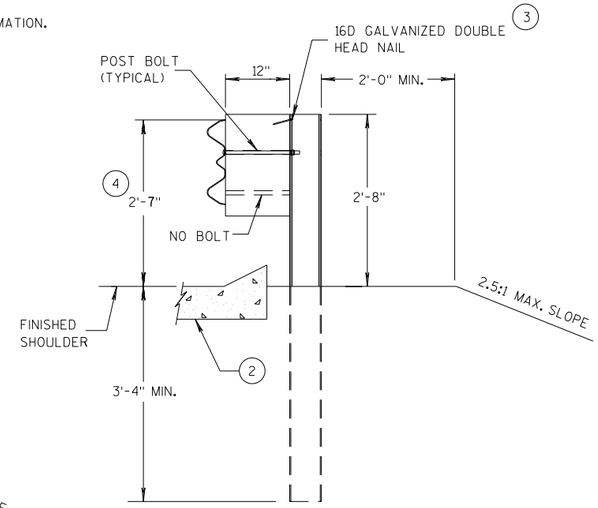

SECTION B-B

POST 6

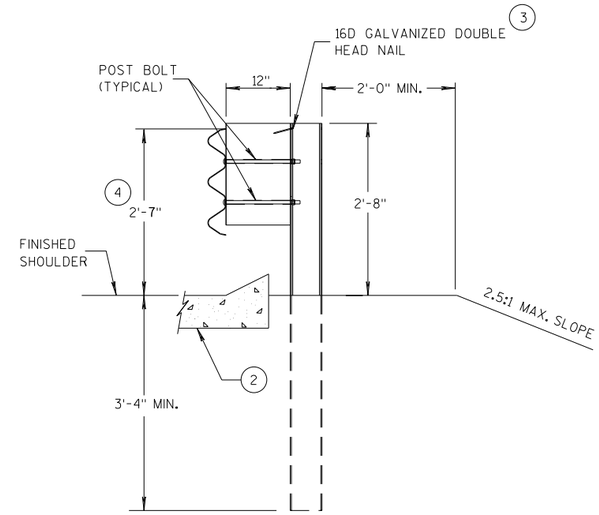

SECTION C-C

POSTS 7-11

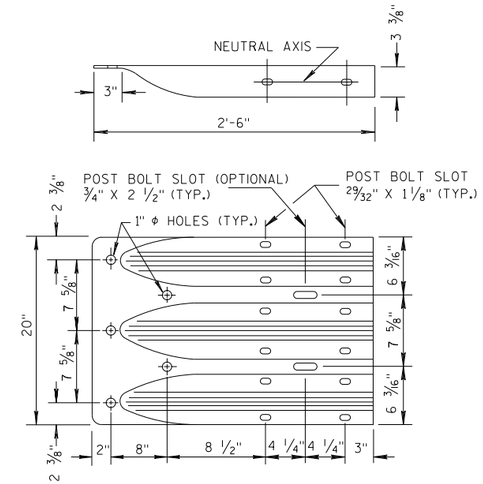

THRIE BEAM TERMINAL CONNECTOR

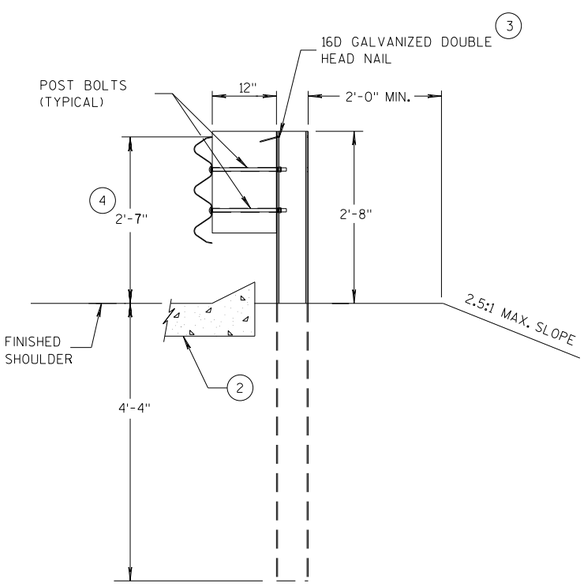

SECTION D-D

POSTS 12-17

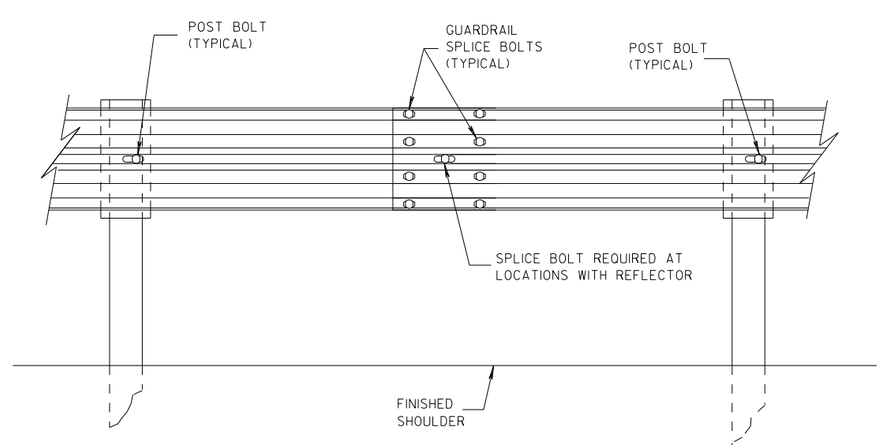

SPLICE DETAIL

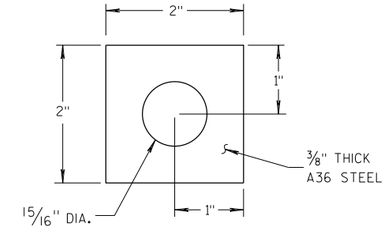

PLATE WASHER DETAIL

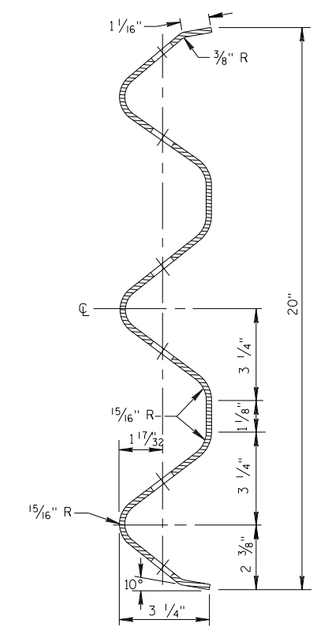

SECTION THRU THRIE BEAM RAIL ELEMENT

MIDWEST GUARDRAIL SYSTEM
THRIE BEAM TRANSITION (MGS)

STATE OF WISCONSIN
DEPARTMENT OF TRANSPORT

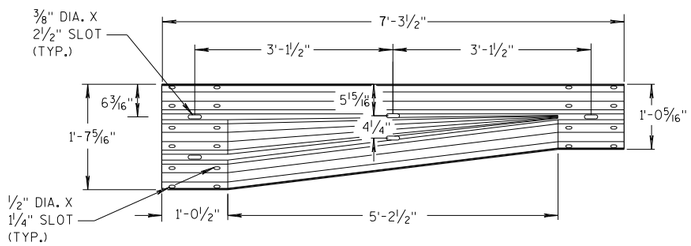

W-BEAM TO THRIE BEAM TRANSITION SECTION

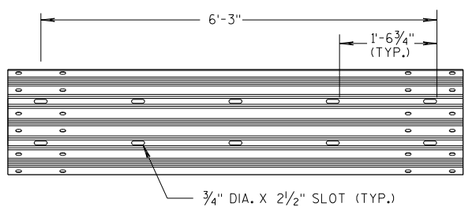

6'-3" THRIE BEAM SECTION

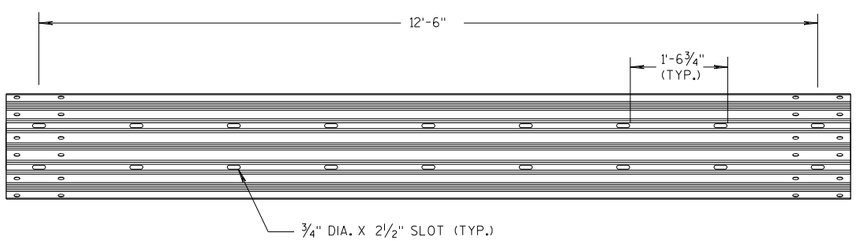

12'-6" THRIE BEAM SECTION

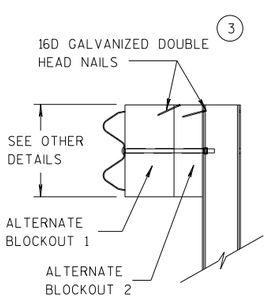

SIDE VIEW

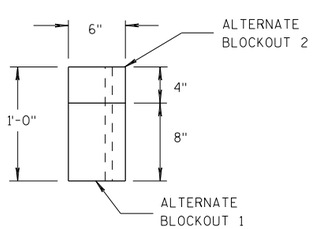

TOP VIEW

ALTERNATE WOOD BLOCKOUT DETAIL

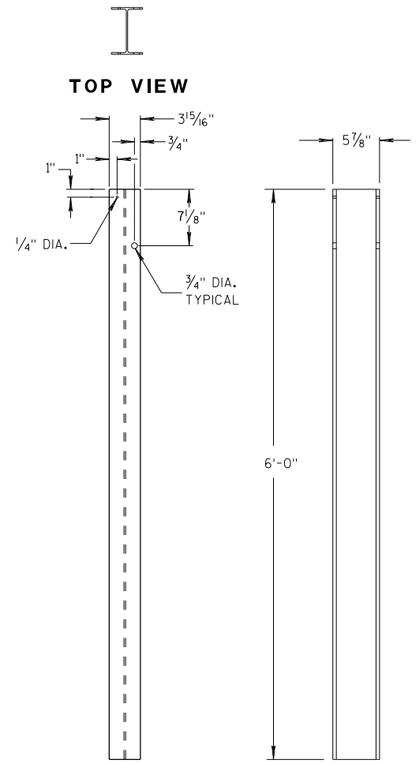

STEEL POSTS 1-5 (13)

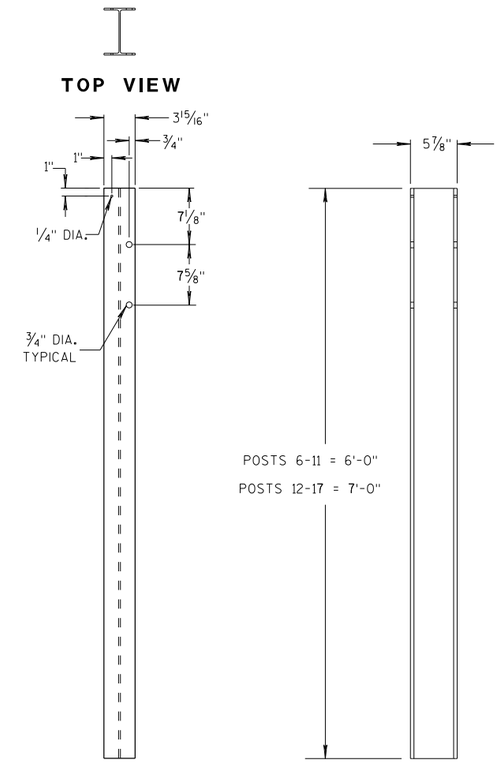

STEEL POSTS 6-17

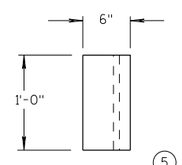

TOP VIEW (5)

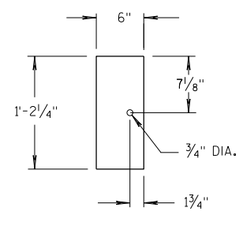

FRONT VIEW

BLOCKOUT POSTS 1-5

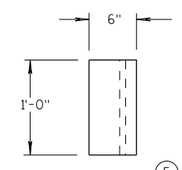

TOP VIEW (5)

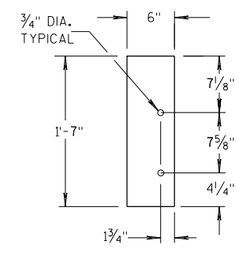

FRONT VIEW

BLOCKOUT POSTS 6-17

GENERAL NOTES

STEEL POSTS ARE W6X9 OR W6X8.5.

BOLT HOLES FOR POST ARE ON FRONT AND OF SIDE OF POST.

(3) WHEN USING STEEL POSTS AND WOOD BLOCKOUTS INSTALL FOUR 16D GALVANIZED NAILS. INSTALL NAILS AT THE BACK CORNERS OF THE BLOCK AND BEND THE NAILS OVER THE FLANGE OF THE STEEL POST.

(5) WOOD BLOCKS MAY BE CONSTRUCTED OUT OF 2 WOOD BLOCKS. SEE ALTERNATE WOOD BLOCK DETAIL.

(13) STEEL OR WOOD POST IS ACCEPTABLE AT POST 1. SEE SDD 14B42.

MIDWEST GUARDRAIL SYSTEM THRIE BEAM TRANSITION (MGS)

STATE OF WISCONSIN
DEPARTMENT OF TRANSPOR

6

S.D.D. 14 B 45-5c

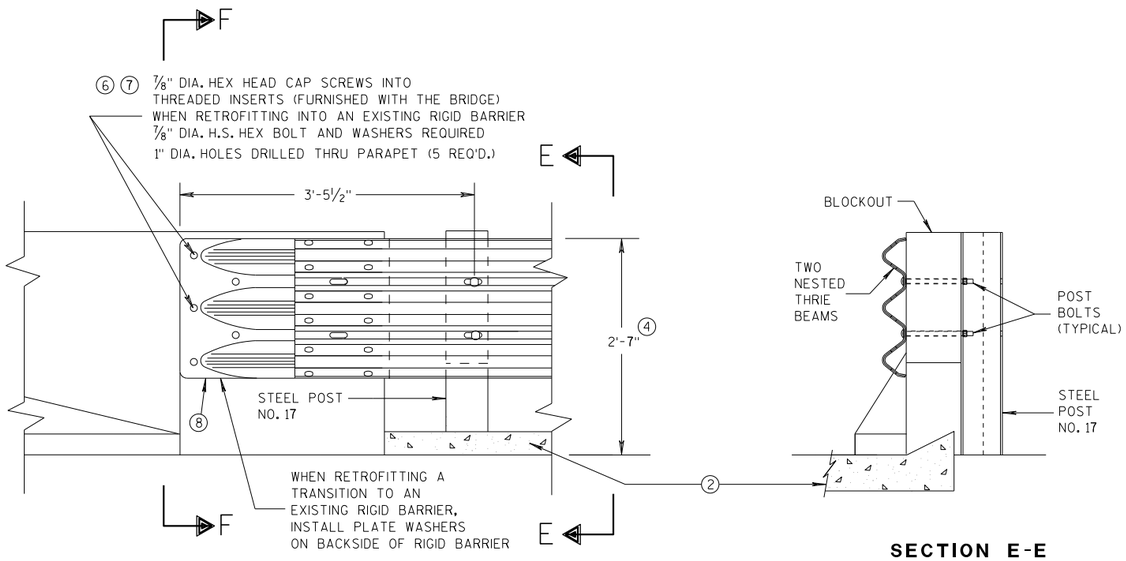

FRONT VIEW

SECTION E-E

THRIE BEAM CONNECTION TO BRIDGE PARAPET WITH SQUARE ENDS

GENERAL NOTES

THESE ARE TYPICAL CONNECTION DETAILS. ADJUST THE POSTION OF CONNECTIONS TO EXISTING BRIDGES TO FIT THE ACTUAL BRIDGE AND SITE DIMENSIONS.

② OPTIONAL CURB AND GUTTER OR DRAINAGE FEATURE SEE PLAN FOR INFORMATION.

④ TOLERANCE FOR TOP OF BEAM IS ± 1".

⑥ DRILLING BOLT HOLES THROUGH THE PARAPET, BOLTS, NUTS, WASHERS AND REPAIRING DAMAGED CONCRETE ARE INCIDENTAL TO THE CONTRACT.

⑦ BOLTS MAY BE A325 BOLTS OR A449 BOLTS. BOLT LENGTH AND THREADING LENGTH ARE TO ALLOW FOR A TIGHT CONNECTION BETWEEN RIGID BARRIER AND THRIE BEAM CONNECTION PLATE. CONTRACTOR IS TO FIELD VERIFY BOLT LENGTH AND THREAD LENGTH. ONE ROUND WASHER REQUIRED BETWEEN BOLT HEAD AND THRIE BEAM CONNECTOR PLATE. BOLTS THAT EXTEND THROUGH THE PARAPET AND OUT THE BACK FACE REQUIRE A HARDENED ROUND STEEL WASHER THAT IS 2" O.D. X 5/32" THICK AND ONE PLATE WASHER. REPAIR ANY DAMAGED CONCRETE FROM BOLT INSTALLATION.

⑧ THE RECESS FOR A W-BEAM CONNECTION, WHICH EXISTS ON SOME PARAPETS OF THIS TYPE, SHALL BE FILLED WITH A TREATED TIMBER BLOCKOUT. BLOCKOUT SIZE IS 1'-6" X 2'-0" X 3 1/2".

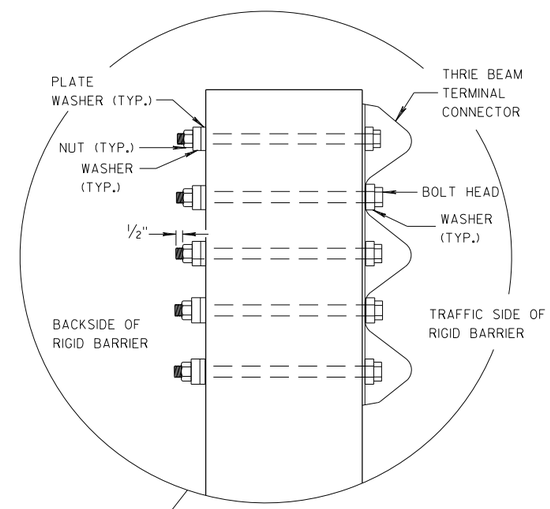

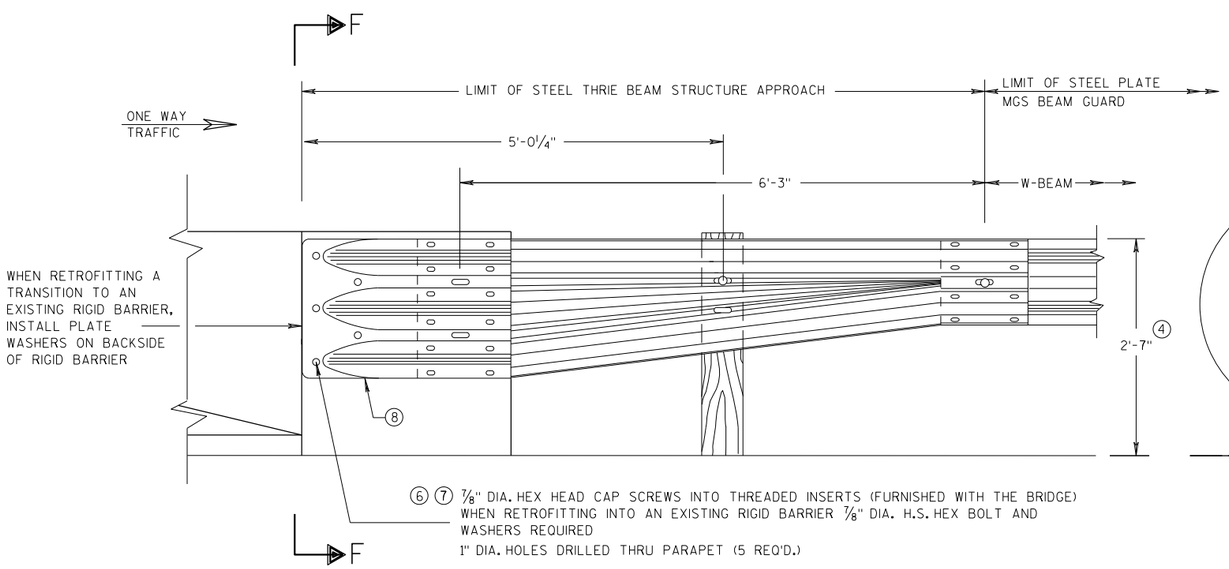

FRONT VIEW

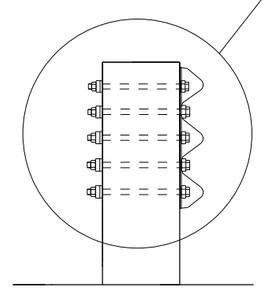

SECTION F-F

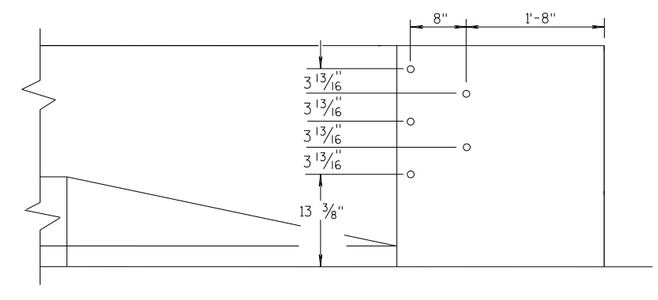

DRILL HOLE LOCATION

W BEAM TRANSITION AND CONNECTION TO BRIDGE PARAPETS WITH SQUARE ENDS

(USE ONLY ON THE TRAFFIC EXIT END OF ONE WAY BRIDGES)

MIDWEST GUARDRAIL SYSTEM THRIE BEAM TRANSITION (MGS)

STATE OF WISCONSIN
DEPARTMENT OF TRANSPORTATION

APPROVED
07/2018 — DATE
/S/ Rodney Taylor — ROADWAY STANDARDS D[illegible] UNIT SUPERVI[illegible]
FHWA

GENERAL NOTES

DETAILS OF CONSTRUCTION, MATERIALS AND WORKMANSHIP NOT SHOWN ON THIS DRAWING SHALL CONFORM TO THE PERTINENT REQUIREMENTS OF THE STANDARD SPECIFICATIONS AND THE APPLICABLE SPECIAL PROVISIONS.

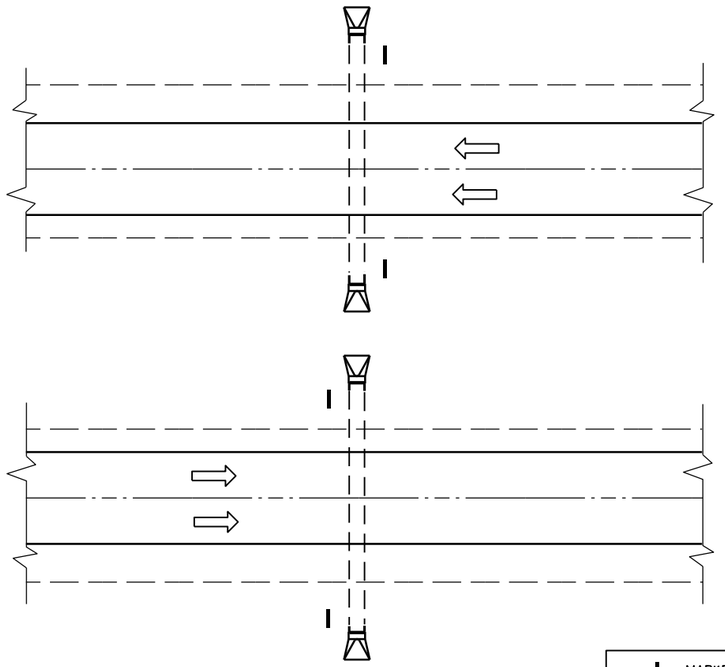

PLAN VIEW

DIVIDED HIGHWAY

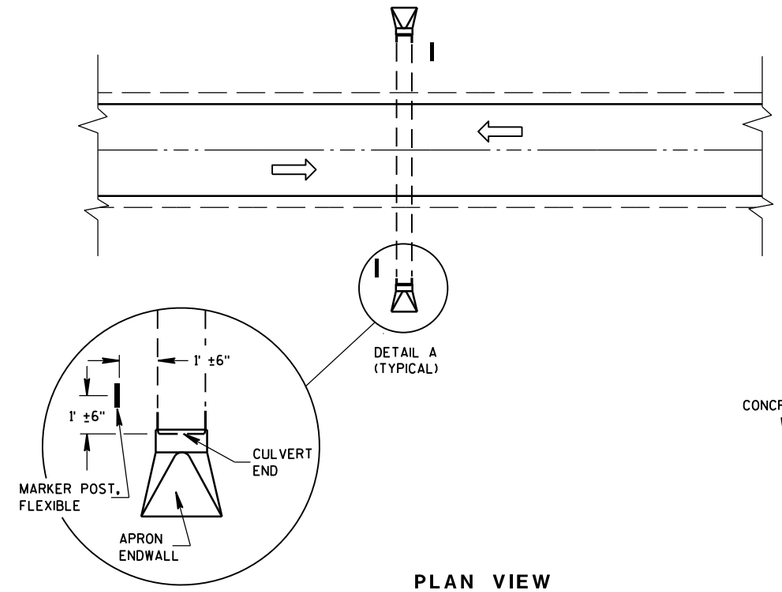

DETAIL A
(TYPICAL)

PLAN VIEW

UNDIVIDED HIGHWAY

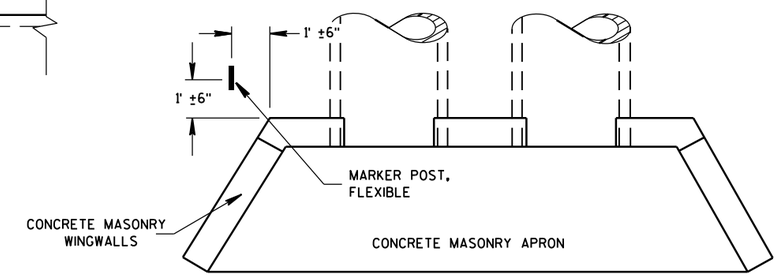

PLAN VIEW

CONCRETE MASONRY ENDWALLS FOR CULVERT PIPE AND PIPE ARCH

MARKER POST, FLEXIBLE

DIRECTION OF TRAFFIC FLOW

FLEXIBLE MARKER POST LOCATION

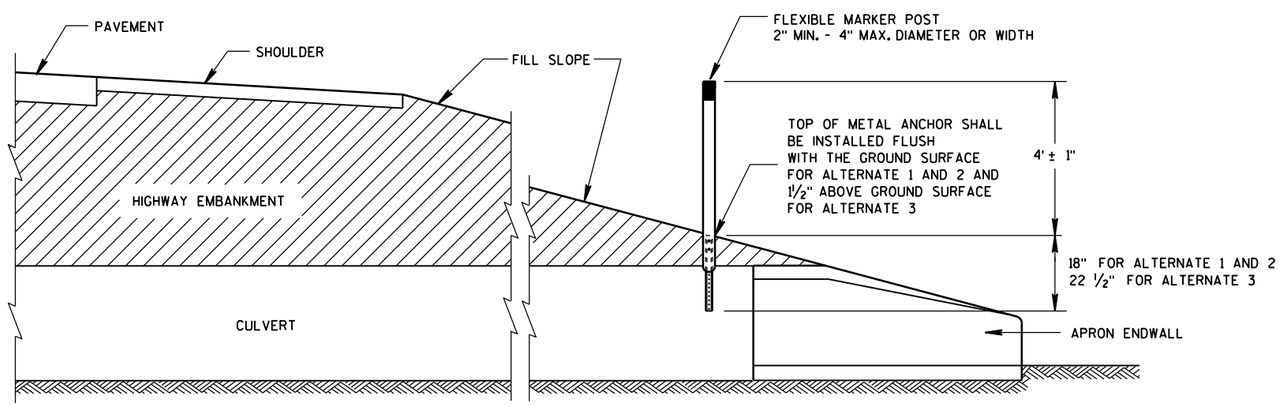

CROSS SECTION

FLEXIBLE MARKER POST

FLEXIBLE MARKER POST FOR CULVERT END

STATE OF WISCONSIN
DEPARTMENT OF TRANSPOR

6

6

S.D.D. 15 A 3-2a

S.D.D. 15 A 3-2a

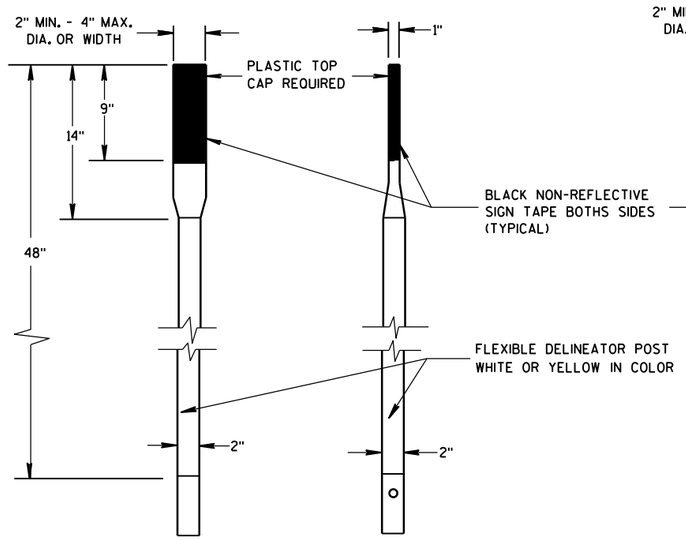

FRONT VIEW SIDE VIEW

ALTERNATE 1

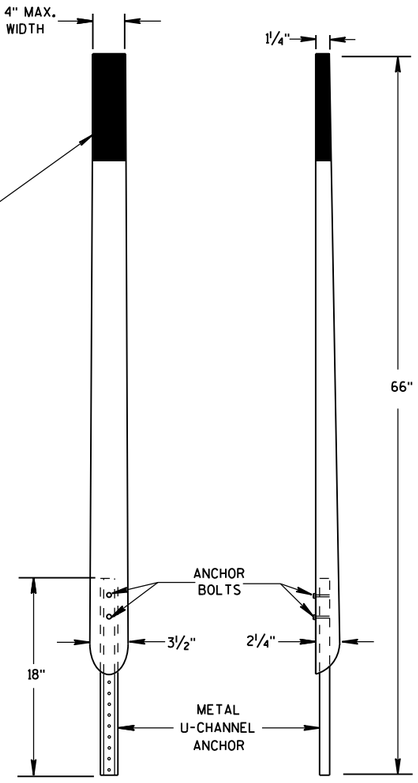

FRONT VIEW SIDE VIEW

ALTERNATE 2

FLEXIBLE MARKER POSTS

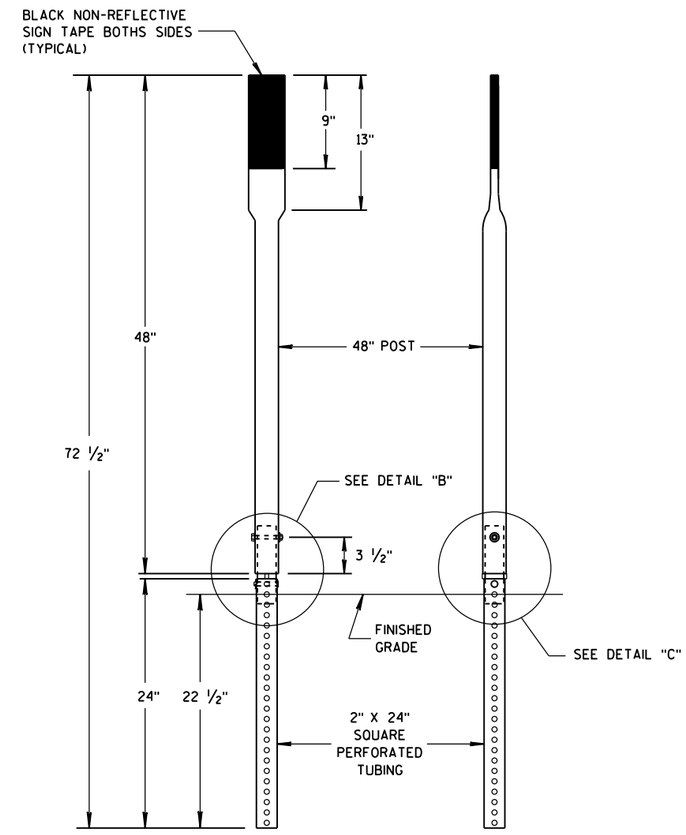

FRONT VIEW SIDE VIEW

ALTERNATE 3

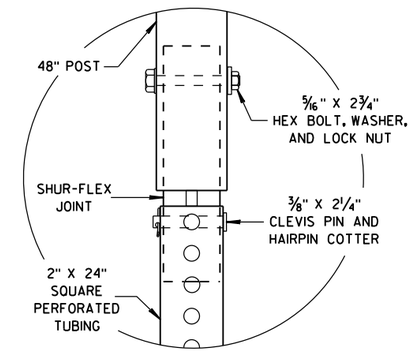

DETAIL B

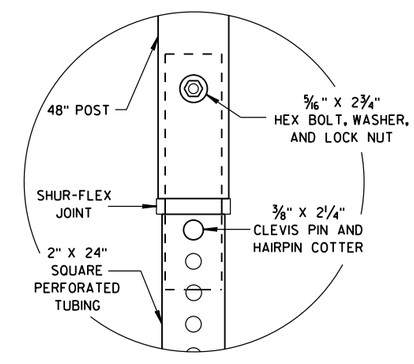

DETAIL C

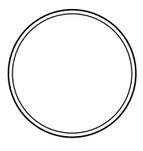

SECTION A-A

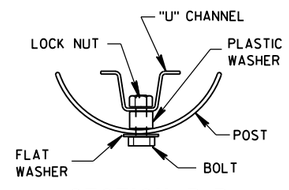

SECTION B-B

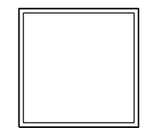

SECTION C-C

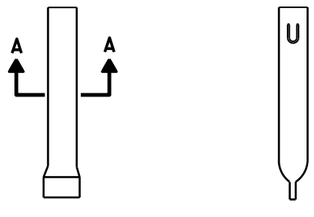

FRONT VIEW SIDE VIEW

ALTERNATE 1

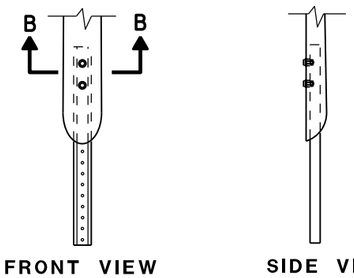

FRONT VIEW SIDE VIEW

ALTERNATE 2

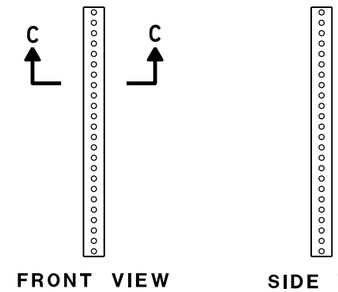

FRONT VIEW SIDE VIEW

ALTERNATE 3

FLEXIBLE MARKER POST ANCHORS

FLEXIBLE MARKER POST
FOR CULVERT END

STATE OF WISCONSIN
DEPARTMENT OF TRANSPORTATION

APPROVED
10/1/2012 /S/ Travis Feltes
DATE STATE TRAFFIC ENGINEER
FHWA

6

6

S.D.D. 15 A 3-2b

S.D.D. 15 A 3-2b

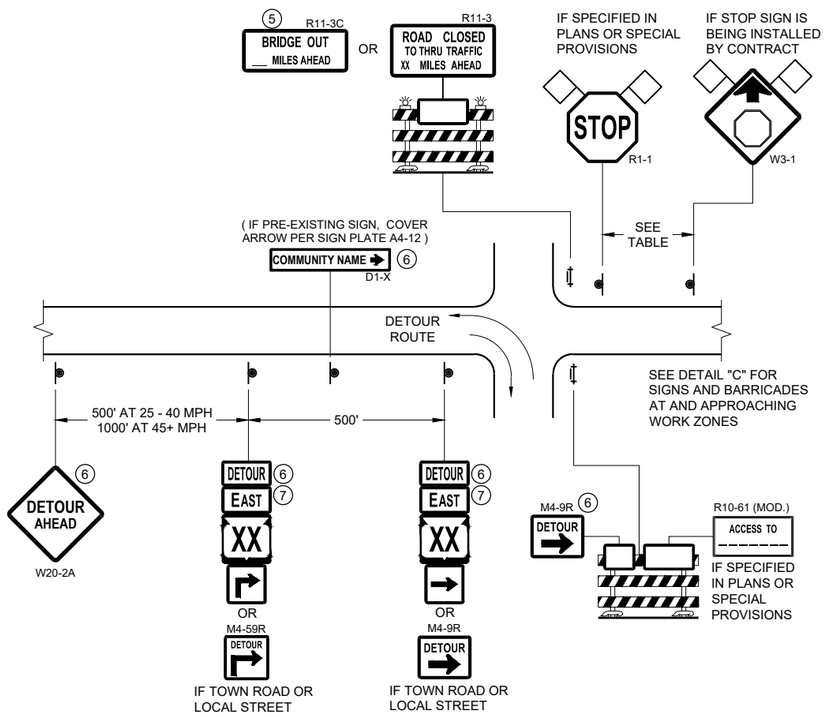

DETAIL A
MAINLINE CLOSURE WITH POSTED DETOUR

WORK ZONE GREATER THAN OR EQUAL TO ½ MILE FROM DETOUR ROUTE (1000 FEET IF URBAN)

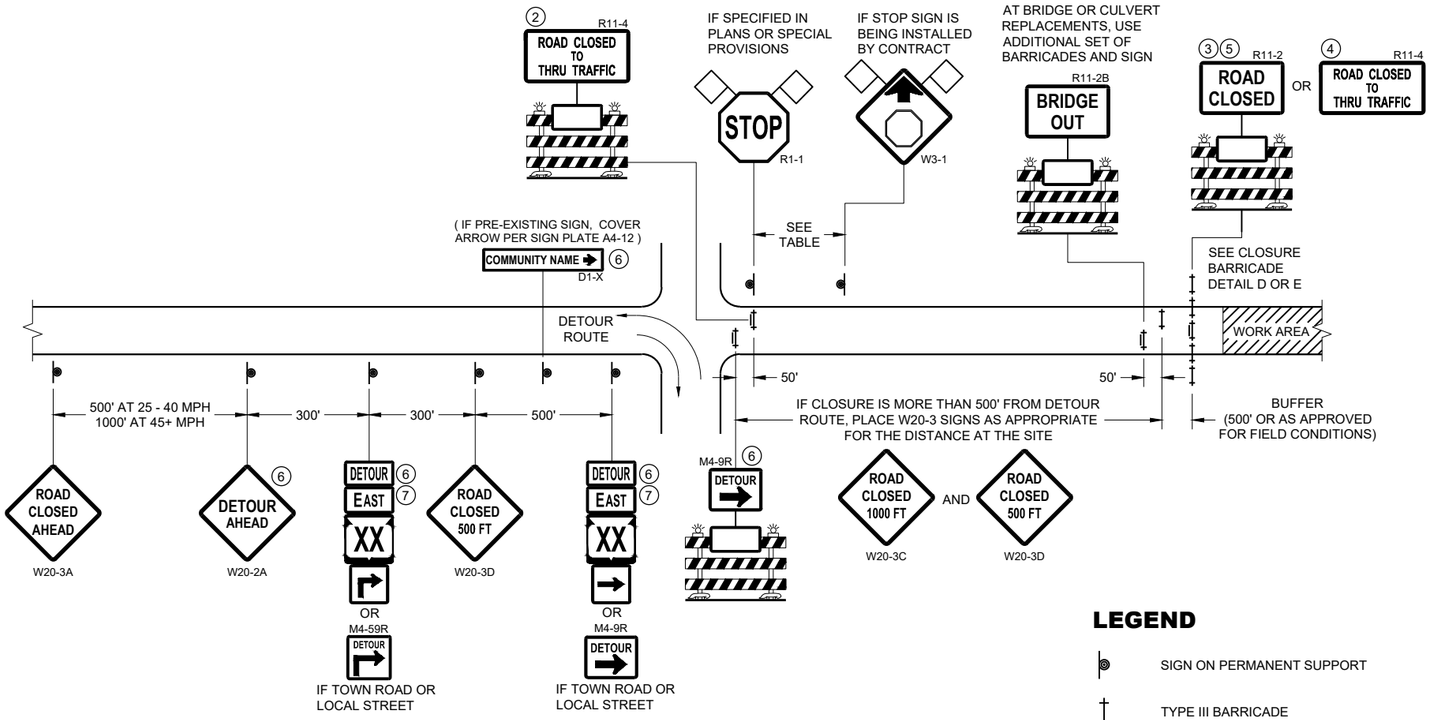

DETAIL B
MAINLINE CLOSURE WITH POSTED DETOUR

WORK ZONE LESS THAN ½ MILE FROM DETOUR ROUTE (1000 FEET IF URBAN)

LEGEND

- SIGN ON PERMANENT SUPPORT
- TYPE III BARRICADE
- TYPE III BARRICADE WITH ATTACHED SIGN
- TYPE "A" WARNING LIGHT (FLASHING)
- WORK AREA
- FLAGS, 16" X 16" MIN. (ORANGE)
- DETOUR — M4 - 8
- EAST — M3 - X
- XX (M1 - 4) OR XX (M1 - 6) OR COUNTY X (M1 - 5A)
- M05 - 1 OR M06 - 1

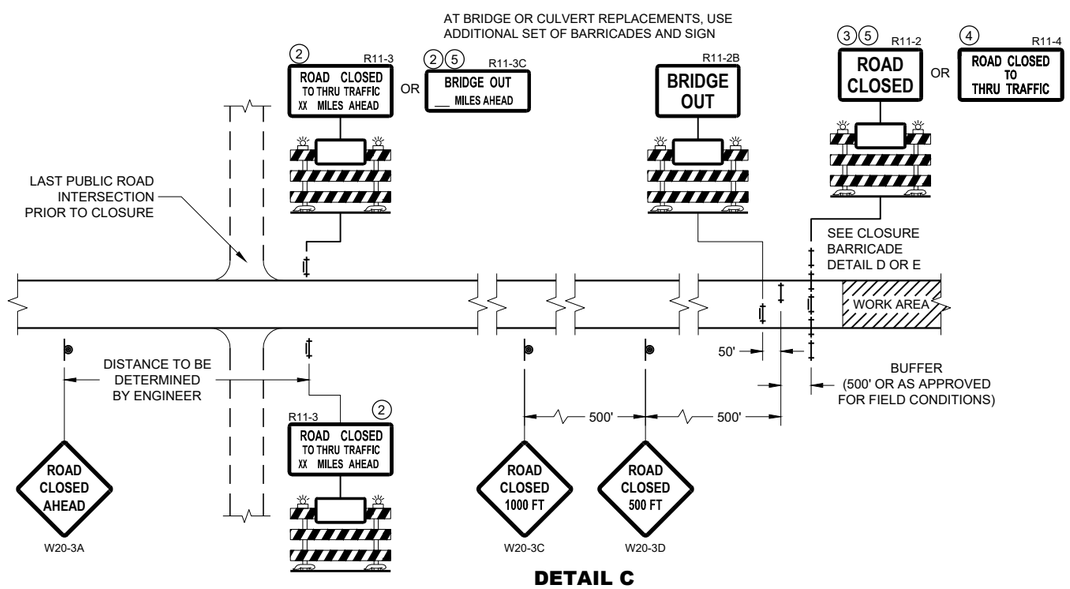

DETAIL C
MAINLINE CLOSURE, NO POSTED DETOUR

SPEED LIMIT (MPH)	"STOP AHEAD" ADVANCE WARNING DISTANCE (FT)
25	200
30	200
35	350
40	350
45	500
50	550
55	750

SEE SDD 15C2-SHEET "b" FOR GENERAL NOTES AND FOOTNOTES 1 THROUGH 7

BARRICADES AND SIGNS FOR MAINLINE CLOSURES

STATE OF WISCONSIN
DEPARTMENT OF TRANSPORTATION

APPROVED
February 2020 /S/ Andrew Heidtke
DATE WORK ZONE ENGINEER
FHWA

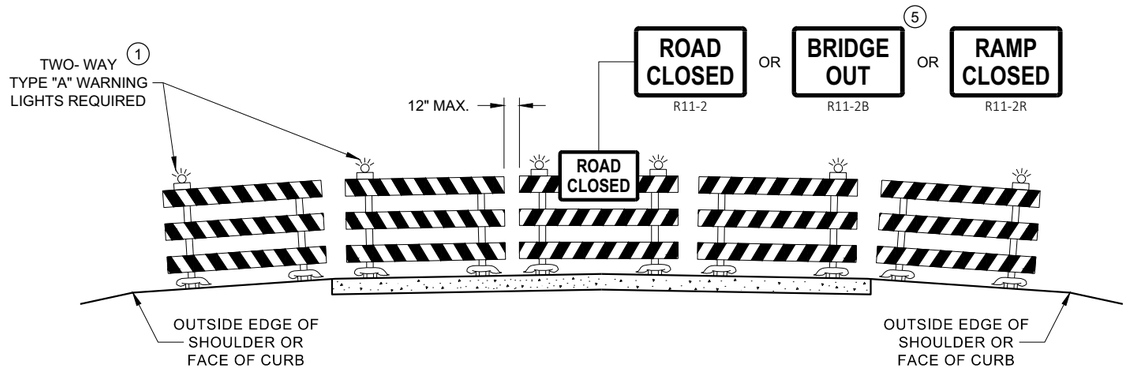

DETAIL D
ROAD CLOSURE BARRICADE DETAIL
APPROACH VIEW

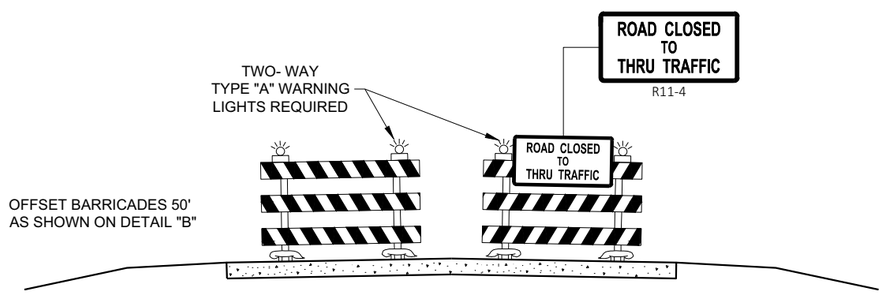

DETAIL E
LANE CLOSURE BARRICADE DETAIL
APPROACH VIEW

SEE SDD 15C2 - SHEET "a" FOR LEGEND

GENERAL NOTES

THE EXACT NUMBER, LOCATION, AND SPACING OF ALL SIGNS AND BARRICADES SHALL BE ADJUSTED TO FIT FIELD CONDITIONS AS APPROVED BY THE ENGINEER.

ANY SIGNS TEMPORARY OR EXISTING, WHICH CONFLICT WITH TRAFFIC CONTROL "IN USE", SHALL BE REMOVED OR COVERED AS NEEDED AND AS APPROVED BY THE ENGINEER.

THE SPACING BETWEEN TRAFFIC CONTROL SIGNS SHOULD BE ADJUSTED TO NOT CONFLICT WITH AND SHOULD PROVIDE A DESIRABLE MINIMUM OF 200 FEET CLEARANCE TO EXISTING SIGNS THAT WILL REMAIN IN PLACE.

BARRICADES THAT MUST BE MOVED FOR A WORK OPERATION SHALL BE IMMEDIATELY RE-ESTABLISHED UPON COMPLETION OF THE OPERATION, OR FOR CONTINUING OPERATIONS, AT THE END OF EACH WORKING DAY.

SIGNS THAT WILL BE IN PLACE LESS THAN 7 CONTINUOUS DAYS AND NIGHTS MAY BE MOUNTED ON PORTABLE SUPPORTS.

ALL TYPE III BARRICADES SHALL HAVE RAILS REFLECTORIZED ON BOTH FACES. STRIPES SHALL BE PROPERLY SLOPED DOWN TOWARD THE TRAFFIC SIDE OR AS SHOWN IN THE ROAD CLOSURE BARRICADE DETAIL "D" FOR FULL ROAD CLOSURES.

TYPE "A" LOW - INTENSITY FLASHING WARNING LIGHTS SHALL BE VISIBLE ON BOTH SIDES OF THE BARRICADE.

THE R11 - 2, R11 - 3, M4 - 9, R11 - 4, AND R10 - 61 SIGNS PLACED ON THE BARRICADES SHALL COVER NO MORE THAN THE TOP RAIL. THE SIGNS SHALL NOT COVER ANY PORTION OF THE MIDDLE RAIL OR BOTTOM RAILS.

"WO" AND "MO" SIGNS ARE THE SAME AS "W" AND "M" SIGNS EXCEPT THE BACKGROUND IS ORANGE.

ALL SIGNS SHALL BE 48" X 48" UNLESS OTHERWISE NOTED BELOW:
- R11 - 2 SHALL BE 48" X 30"
- R11 - 3 SHALL, R11 - 4 AND R10 - 61 SHALL BE 60 " X 30"
- M4 - 9 SHALL BE 30" X 24"
- M3 - X SHALL BE 24" X 12" (36" X 18" IF NEEDED TO MATCH EXISTING SIGNS)
- M4 - 8 SHALL BE 24" X 12" (36" X 18" IF NEEDED TO MATCH EXISTING SIGNS)
- M1 - 4, M1 - 5A AND M1 - 6 SHALL BE 24" X 24" (36" X 36" IF NEEDED TO MATCH EXISTING SIGNS)
- MO5 - 1 AND MO6 - 1 SHALL BE 21" X 21" (30" X 30" IF NEEDED TO MATCH EXISTING SIGNS)
- D1 - X SHALL BE AS SHOWN ON SPECIFIC PROJECT SIGNING DETAIL SHEETS.
- R1 - 1 SHALL BE 36" X 36"

1. TWO WARNING LIGHTS SHALL BE PROVIDED ON THE CENTER BARRICADE AND A MINIMUM OF ONE WARNING LIGHT SHALL BE PROVIDED ON EACH OF THE OTHER BARRICADES WITHIN THE ROADWAY LIMITS. SPACING OF THE WARNING LIGHTS SHALL BE UNIFORM TO THE EDGE OF ROADWAY AS SHOWN (APPROX. 8 FOOT LIGHT SPACING.
2. THESE SIGNS AND BARRICADES ARE NOT REQUIRED IF ROAD CLOSURE BEGINS AT AN INTERSECTION.
3. FOR ROAD CLOSURE WITHOUT LOCAL ACCESS TO PROJECT, SEE ROAD CLOSURE BARRICADE DETAIL "D".
4. FOR ROAD CLOSURE WITH LOCAL ACCESS TO PROJECT, SEE ROAD CLOSURE BARRICADE DETAIL "E".
5. FOR BRIDGE OR CULVERT REPLACEMENTS, SUBSTITUTE "BRIDGE OUT" INSTEAD OF "ROAD CLOSED" ON R11 - 2 AND R11 - 3 SIGNS.
6. INSTALL DETOUR AND COMMUNITY GUIDE SIGNS AND ARROWS ONLY IF SPECIFIED IN THE CONTRACT. IF THERE ARE EXISTING ROUTE MARKER ASSEMBLIES THAT WILL REMAIN IN PLACE, ADJUST THE LOCATION OF THE DETOUR ROUTE SIGNS TO CORRESPOND WITH THE EXISTING ASSEMBLIES. MODIFY EXISTING SIGNS WHERE POSSIBLE. SEE SPECIFIC PROJECT DETOUR SIGNING DETAIL SHEETS. IF DETOUR SIGNS ARE BEING INSTALLED BY OTHERS, PLACE THE CONTRACTED TRAFFIC CONTROL SIGNS TO ALLOW FOR PLACEMENT OF ALL WARNING, DETOUR AND GUIDE SIGNS AS SHOWN.
7. "EAST" CARDINAL DIRECTION MARKERS AND RIGHT TURN ARROWS ARE SHOWN. USE OTHER CARDINAL DIRECTIONS AND ARROWS AS APPROPRIATE.

BARRICADES AND SIGNS FOR VARIOUS CLOSURES

STATE OF WISCONSIN
DEPARTMENT OF TRANSPORTATION

APPROVED
February 2020 — DATE
/S/ Andrew Heidtke — WORK ZONE ENGINEE
FHWA

6

SDD 15C02 - 08b

THIS DRAWING PROVIDES GENERAL GUIDANCE ON TYPICAL DETOUR SIGN LAYOUT AND SPACING. SEE PROJECT DETOUR SIGNING SHEETS FOR SPECIFIC DETAILS FOR EACH PROJECT.

LEGEND

- SIGN ON PERMANENT SUPPORT
- WORK AREA
- DETOUR M4 - 8
- EAST M3 - X
- XX M1 - 4 OR XX M1 - 6 OR COUNTY X M1 - 5A
- M05 - 1 OR M06 - 1 OR M06 - 1

GENERAL NOTES

THE EXACT NUMBER, LOCATION AND SPACING OF ALL SIGNS SHALL BE ADJUSTED TO FIT FIELD CONDITIONS AS APPROVED BY THE ENGINEER.

IF THERE ARE EXISTING ROUTE MARKER ASSEMBLIES THAT WILL REMAIN IN PLACE, ADJUST THE LOCATION OF THE DETOUR ROUTE SIGNS TO CORRESPOND WITH THE EXISTING ASSEMBLIES. SEE SPECIFIC PROJECT DETOUR SIGNING DETAIL SHEETS. MODIFY EXISTING SIGNS WHERE POSSIBLE.

THE SPACING BETWEEN TRAFFIC CONTROL AND DETOUR SIGNS SHOULD BE ADJUSTED TO NOT CONFLICT WITH AND TO PROVIDE A DESIRABLE MINIMUM OF 200 FEET CLEARANCE TO EXISTING SIGNS THAT WILL REMAIN IN PLACE.

ANY SIGNS TEMPORARY OR EXISTING, WHICH CONFLICT WITH TRAFFIC CONTROL "IN USE" SHALL BE REMOVED OR COVERED AS NEEDED AND AS APPROVED BY THE ENGINEER.

SIGNS THAT WILL BE IN PLACE LESS THAN 7 CONTINUOUS DAYS AND NIGHTS MAY BE MOUNTED ON PORTABLE SUPPORTS.

"MO" SIGNS ARE THE SAME AS "M" SIGNS EXCEPT THE BACKGROUND IS ORANGE.

SIGN SIZES SHALL BE AS FOLLOWS:

M3-X SHALL BE 24" X 12" (36" X 18" IF NEEDED TO MATCH EXISTING SIGNS)
M4-8 SHALL BE 24" X 12" (36" X 18" IF NEEDED TO MATCH EXISTING SIGNS)
M1-4, M1-5A AND M1-6 SHALL BE 24" X 24" (36" X 36" IF NEEDED TO MATCH EXISTING SIGNS)
M05-1 AND M06-1 SHALL BE 21" X 21" (30" X 30" IF NEEDED TO MATCH EXISTING SIGNS)
M4-9 AND M4-59 SHALL BE 30" X 24"
M4-8a SHALL BE 24" X 18"
G20-51 SHALL BE 60" X 24"
W20-2A SHALL BE 48" X 48"
D1-X SHALL BE AS SHOWN ON SPECIFIC PROJECT SIGNING DETAIL SHEETS.

* OPTIONAL SIGNS. SEE SPECIFIC PROJECT DETOUR SIGNING DETAIL SHEETS.

** FOR A TOWN ROAD OR LOCAL STREET DETOURED ONTO A STATE TRUNK HIGHWAY, PLACE A ROAD NAME PLAQUE ABOVE THE M4-9 SIGN AS SPECIFIED IN THE CONTRACT.

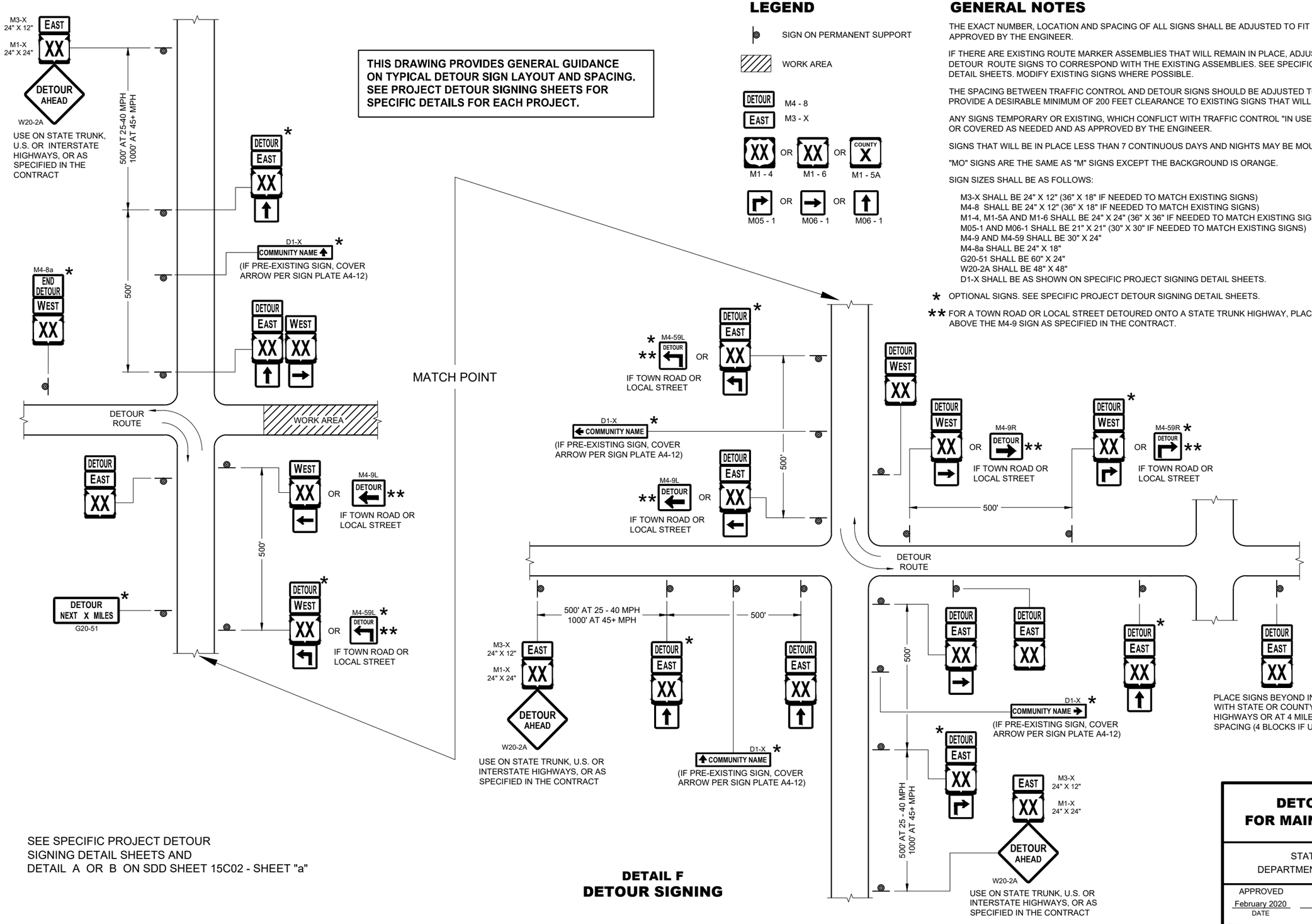

SEE SPECIFIC PROJECT DETOUR SIGNING DETAIL SHEETS AND DETAIL A OR B ON SDD SHEET 15C02 - SHEET "a"

DETAIL F
DETOUR SIGNING

DETOUR SIGNING FOR MAINLINE CLOSURES

STATE OF WISCONSIN
DEPARTMENT OF TRANSPORTATION

APPROVED
February 2020 /S/ Andrew Heidtke
DATE WORK ZONE ENGINEER
FHWA

6

SDD 15C02 - 08c

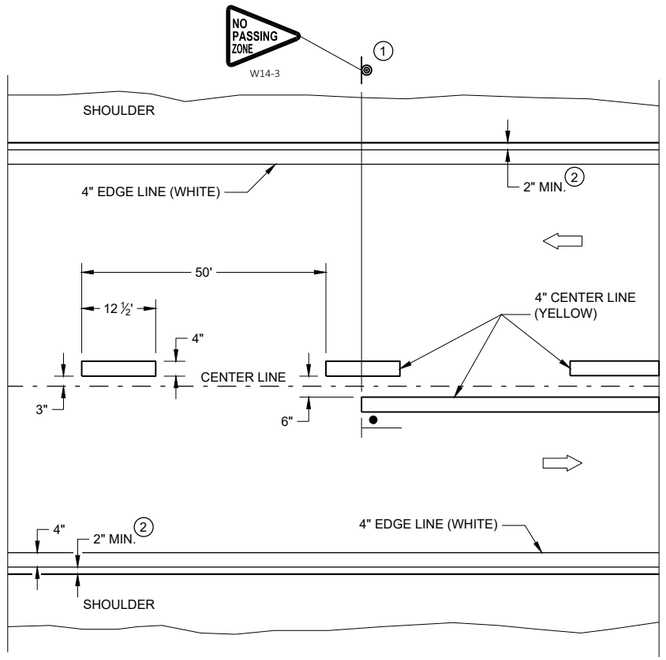

TWO WAY TRAFFIC

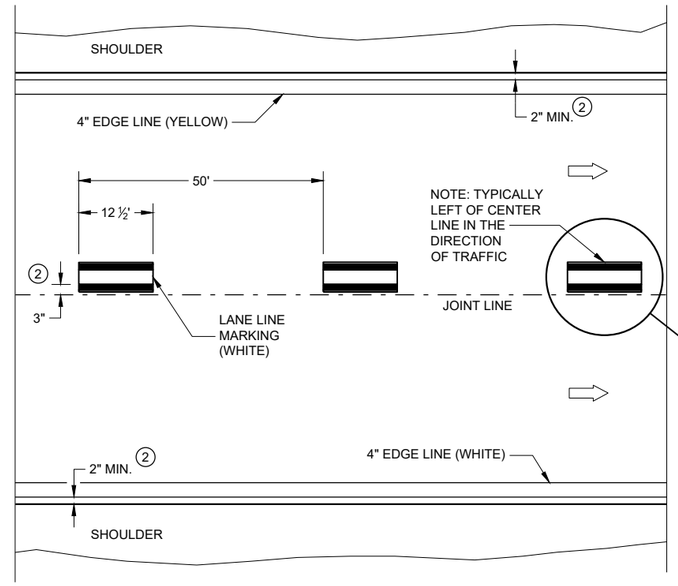

ONE WAY TRAFFIC

PERMANENT PAVEMENT MARKING

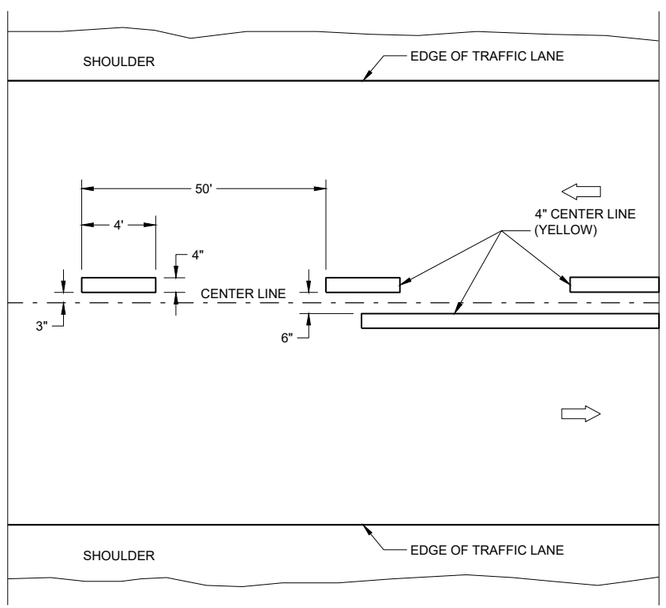

TWO WAY TRAFFIC

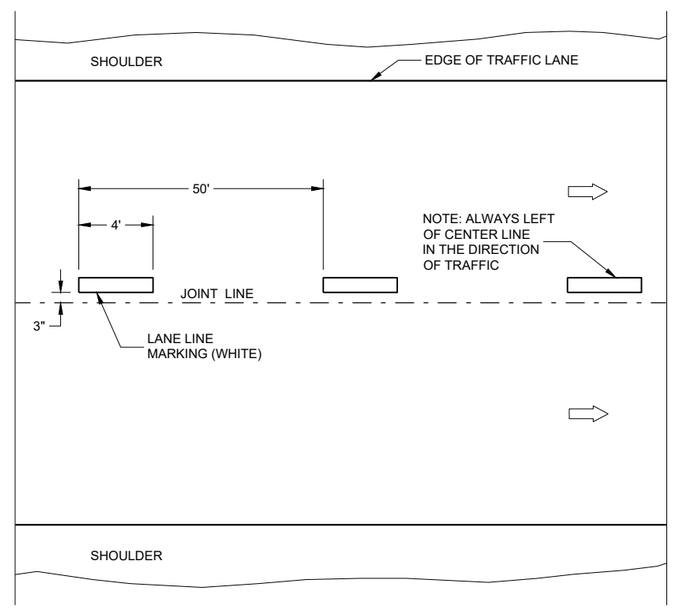

ONE WAY TRAFFIC

TEMPORARY PAVEMENT MARKING

GENERAL NOTES

DETAILS OF CONSTRUCTION NOT SHOWN ON THIS DRAWING SHALL CONFORM TO STANDARD SPECIFICATIONS AND SPECIAL PROVISIONS.

1. LOCATE THE NO PASSING ZONE W14-3 SIGN WITHIN 50 FEET OF THE "T" MARKING
2. MEASURE FROM EDGE OF MARKING TO JOINT LINE. THIS DOES NOT INCLUDE SPACE NEEDED FOR GROOVING OPERATIONS.

LEGEND

"T" MARKING

SIGN ON PERMANENT SUPPORT

DIRECTION OF TRAFFIC

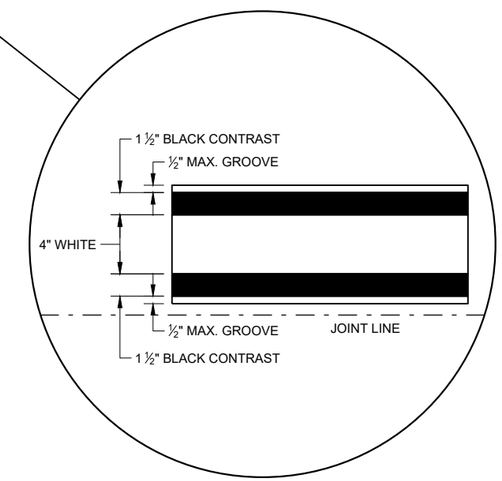

LONGITUDINAL MARKING (MAINLINE)

STATE OF WISCONSIN
DEPARTMENT OF TRANSPORTATION

APPROVED
February 2020 — DATE
/S/ Matthew Rauch — STATEWIDE SIGNING AND M ENGINEER
FHWA

6

SDD 15C08 - 20a

GENERAL NOTES

1. REFLECTIVE SHEETING SHALL FOLLOW THE REQUIREMENTS IN THE APPROVED PRODUCTS LISTING FOR SIGN SHEETING.
2. LOCATION OF WARNING LIGHTS WHEN SHOWN ON THE PLAN.

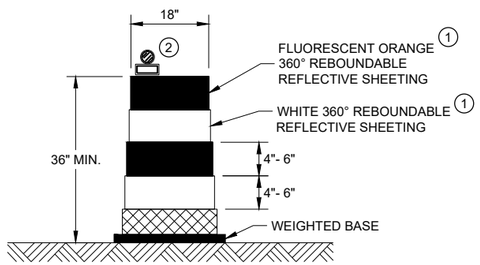

DRUM

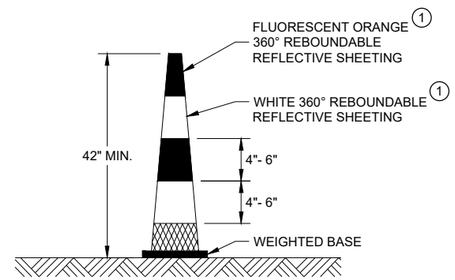

42" CONE

DO NOT USE IN TAPERS
½ SPACING OF DRUMS

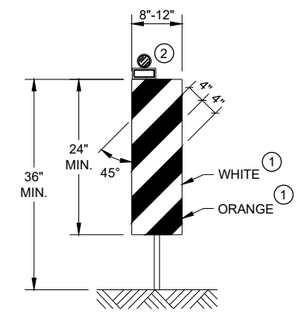

VERTICAL PANEL

THE STRIPES SHALL SLOPE DOWNWARD TO
THE TRAFFIC SIDE FOR CHANNELIZATION.

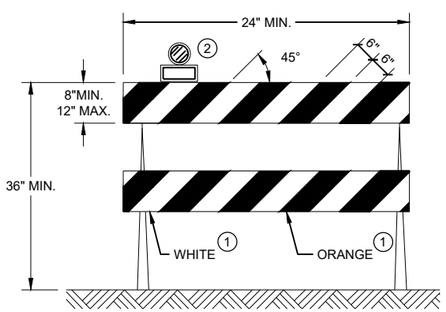

TYPE II BARRICADE

FOR RAILS LESS THAN 36" LONG, 4" WIDE STRIPES
MAY BE USED. ALL STRIPES SHALL SLOPE DOWNWARD
TO THE TRAFFIC SIDE FOR CHANNELIZATION.

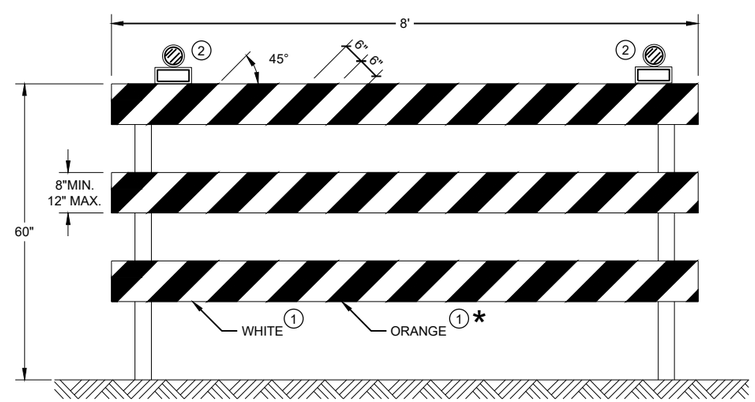

TYPE III BARRICADE

IF SIGN MOUNTED, DO NOT COVER MORE THAN 50% OF THE TOP
TWO RAILS OR 33% OF THE TOTAL AREA OF THE THREE RAILS.

* IF USED FOR A PERMANENT APPLICATION USE RED SHEETING.

CHANNELIZING DEVICES DRUMS, CONES, BARRICADES AND VERTICAL PANELS

STATE OF WISCONSIN
DEPARTMENT OF TRANSPORTATION

APPROVED
May 2021 — DATE
/S/ Andrew Heidtke — WORK ZONE ENGINEE
FHWA

6

SDD 15C11 - 09b

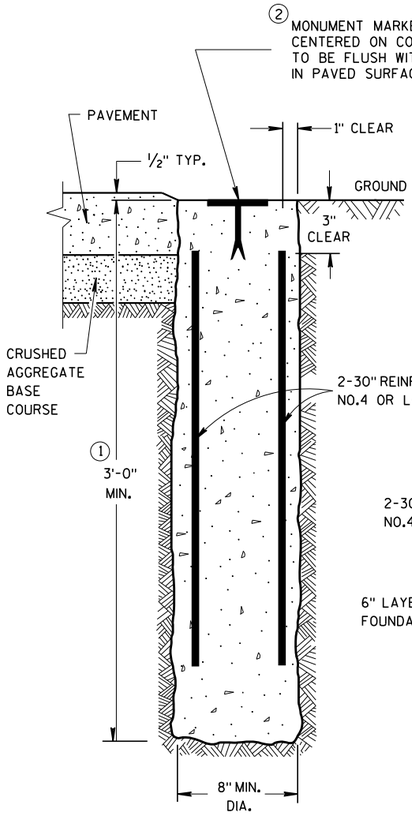

CAST-IN-PLACE

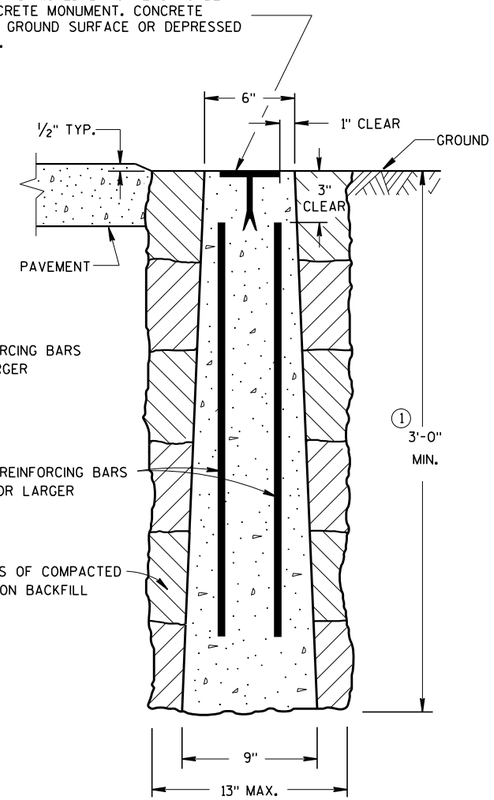

PRECAST

CONCRETE MONUMENTS

TYPE A

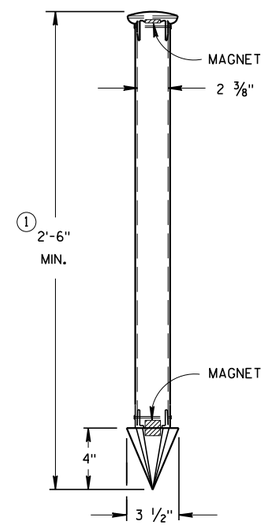

TYPE C

DRIVE-IN MONUMENT

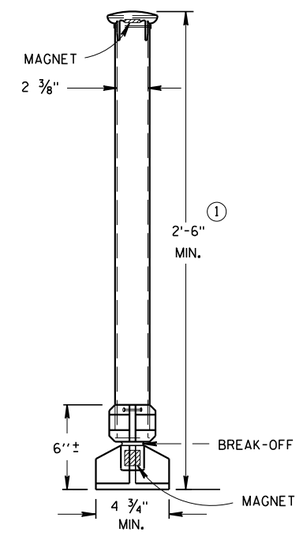

TYPE D
NON-DRIVEN
BREAK-OFF MONUMENT

ALUMINUM MONUMENTS

(INCLUDES MARKER)

GENERAL NOTES

DETAILS OF CONSTRUCTION, MATERIALS AND WORKMANSHIP NOT SHOWN ON THIS DRAWING SHALL CONFORM TO THE PERTINENT REQUIREMENTS OF THE STANDARD SPECIFICATIONS AND THE APPLICABLE SPECIAL PROVISIONS.

DETAILED DRAWINGS OF PROPOSED ALTERNATE DESIGNS FOR METAL MONUMENTS OR MONUMENT COVERS SHALL BE SUBMITTED TO THE ENGINEER FOR APPROVAL.

PERMANENT MAGNETS SHALL BE INSERTED NEAR THE TOP AND BOTTOM OF ALL ALUMINUM MONUMENTS SO THE MONUMENT CAN EASILY BE DETECTED BY A METAL DETECTOR.

THE CAST IRON MONUMENT COVER SHALL BE A "NON-ROCKING" TYPE. ADJUSTMENT OF THE COVER TO GRADE MAY BE ACCOMPLISHED BY THE USE OF MORTAR AND BRICK, OR BY EITHER PRECAST OR CAST-IN-PLACE REINFORCED CONCRETE GRADE RINGS.

MONUMENTS SHALL BE LOCATED AND PLACED AT THE DIRECTION OF THE ENGINEER.

ALUMINUM MONUMENTS AND MONUMENT COVERS SHALL BE MADE FROM AN ALUMINUM AND MAGNESIUM ALLOY AS DETERMINED BY THE MANUFACTURER.

THE MONUMENT COVERS DETAILED ON THIS DRAWING ARE NOT EQUAL ALTERNATES. MONUMENT COVERS SHALL BE CAST IRON UNLESS ALUMINUM IS SPECIFIED ELSEWHERE IN THE CONTRACT.

MONUMENT SHALL BE CAST-IN-PLACE CONCRETE UNLESS PRECAST CONCRETE OR ALUMINUM MONUMENTS ARE SPECIFIED IN THE CONTRACT OR PERMITTED BY THE ENGINEER

① MINIMUM LENGTH SHALL BE 4'-0" FOR MONUMENTS INSTALLED IN PAVED AREAS.

② AN OFFICIAL COUNTY MONUMENT MARKER SUPPLIED BY A COUNTY MAY BE REQUIRED FOR SOME SECTION CORNERS AND WITNESS MONUMENTS INSTEAD OF THIS WIS DOT MARKER.

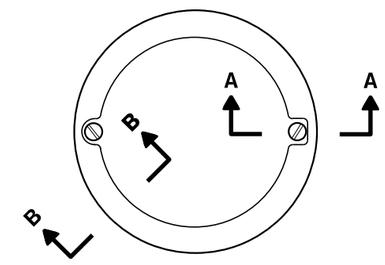

TOP VIEW

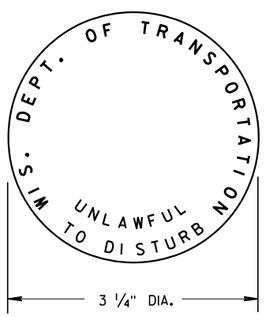

② **WIS DOT MONUMENT MARKER LOGO**

FOR TYPES "A", "C", & "D"

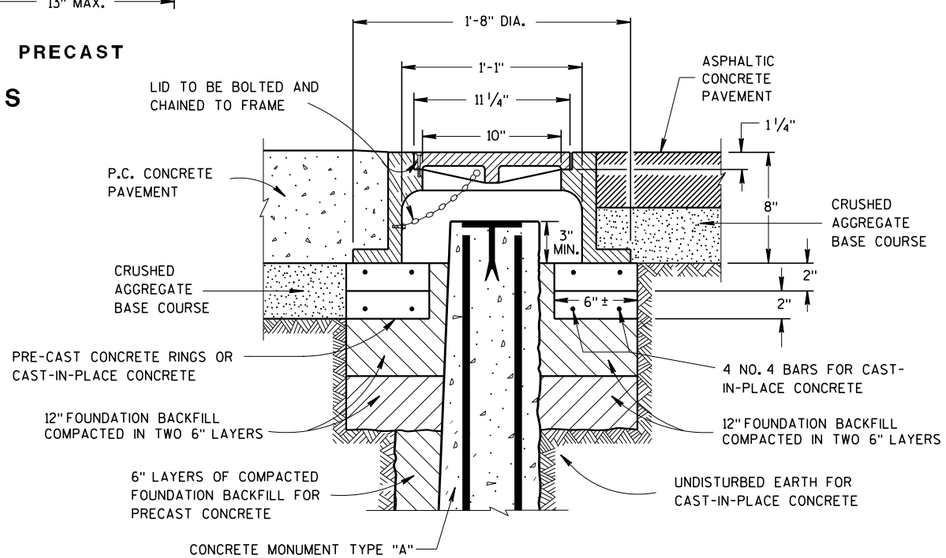

CAST IRON MONUMENT COVER

(APPROXIMATE WEIGHT 95 LBS)

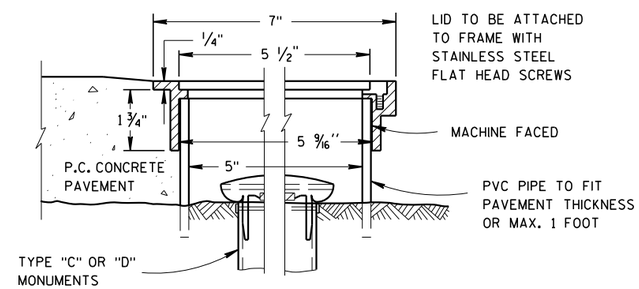

SECTION B-B SECTION A-A

ALUMINUM MONUMENT COVER

(APPROXIMATE WEIGHT 2 LBS)
(FOR CONCRETE PAVEMENT ONLY)

LANDMARK REFERENCE MONUMENTS AND COVERS

STATE OF WISCONSIN
DEPARTMENT OF TRANSPORTATION

APPROVED
March 2018 /S/ Raymond A. Kumanayl
DATE CHIEF SURVEYING AND M ENGINEER
FHWA

6

6

S.D.D. 16 A 1-7

S.D.D. 16 A 1-7

STATE PROJECT NUMBER
5730-00-80

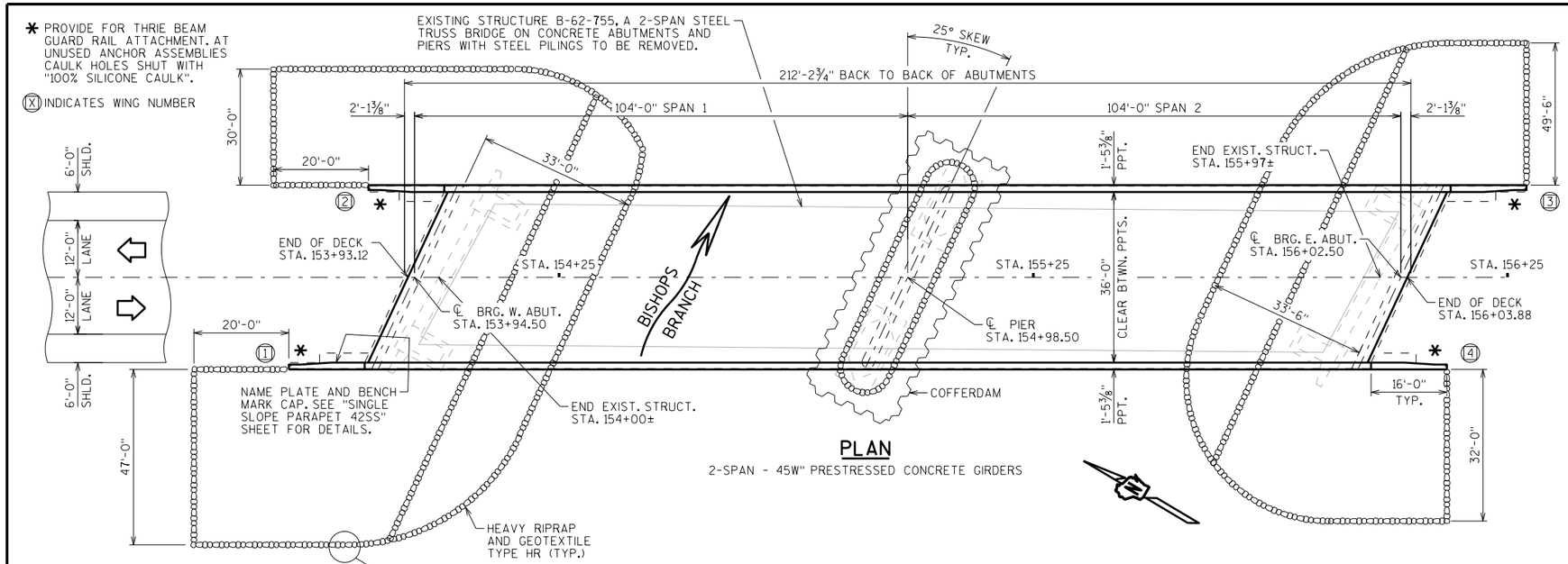

PLAN

2-SPAN - 45W" PRESTRESSED CONCRETE GIRDERS

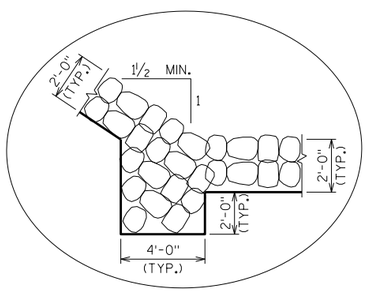

DETAIL A

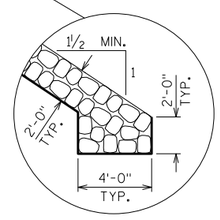

RIPRAP TOE DETAIL

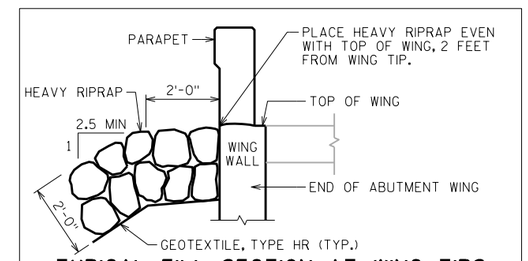

TYPICAL FILL SECTION AT WING TIPS

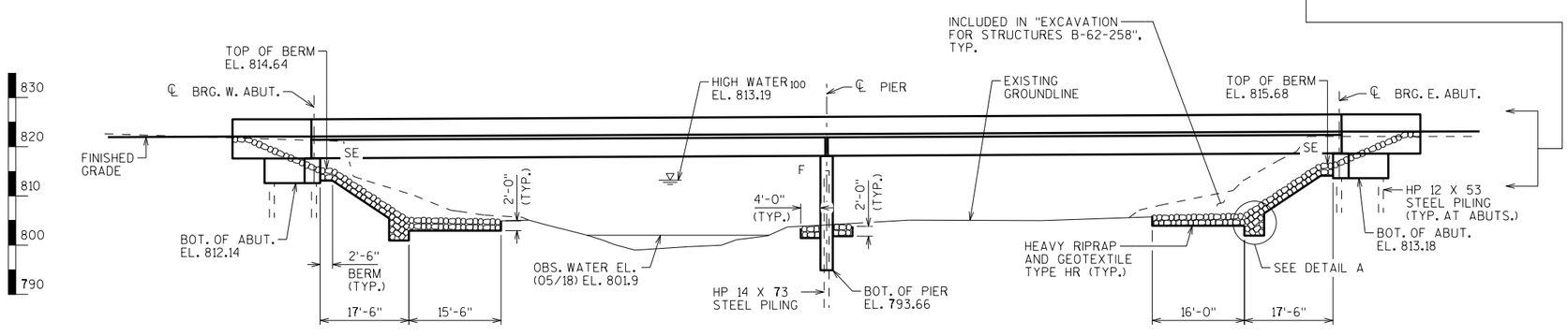

ELEVATION

NORMAL TO BISHOPS BRANCH

DESIGN DATA

LIVE LOAD:

DESIGN LOADING: HL-93
INVENTORY RATING FACTOR: RF = 1.03
OPERATING RATING FACTOR: RF = 1.33
WISCONSIN STANDARD PERMIT VEHICLE (WIS.-SPV): 250 (KIPS)

STRUCTURE IS DESIGNED FOR A FUTURE WEARING SURFACE OF 20 POUNDS PER SQUARE FOOT.

MATERIAL PROPERTIES:

CONCRETE MASONRY:
SUPERSTRUCTURE — f'c = 4,000 P.S.I.
ALL OTHER — f'c = 3,500 P.S.I.

BAR STEEL REINFORCEMENT:
GRADE 60 — fy = 60,000 P.S.I.

45W" PRESTRESSED GIRDERS:
CONCRETE MASONRY — f'c = 8,000 P.S.I.
STRANDS: 0.6" DIA. WITH ULTIMATE TENSILE STRENGTH OF 270,000 P.S.I.

FOUNDATION DATA

ABUTMENTS TO BE SUPPORTED ON HP 12 X 53 STEEL PILING DRIVEN TO A REQUIRED DRIVING RESISTANCE OF 220 TONS ** PER PILE AS DETERMINED BY THE MODIFIED GATES DYNAMIC FORMULA.
ESTIMATED 30'LONG AT W. ABUT AND 35'LONG AT E. ABUT.

PIER TO BE SUPPORTED ON HP 14 X 73 PILING DRIVEN TO A REQUIRED DRIVING RESISTANCE OF 250 TONS ** PER PILE AS DETERMINED BY THE MODIFIED GATES DYNAMIC FORMULA.
ESTIMATED 35'LONG. PREBORE PILES 10'-0" MIN. INTO SOUND ROCK.

** THE FACTORED AXIAL RESISTANCE OF PILES IN COMPRESSION USED FOR DESIGN IS THE REQUIRED DRIVING RESISTANCE MULTIPLIED BY A RESISTANCE FACTOR OF 0.5 USING MODIFIED GATES TO DETERMINE DRIVEN PILE CAPACITY.

HYDRAULIC DATA

100 YEAR FREQUENCY

Q_{100} = 9,610 C.F.S.
$VEL._{100}$ = 10.3 F.P.S.
$HW._{100}$ = EL. 813.19
WATERWAY AREA = 936 SQ. FT.
DRAINAGE AREA = 18.1 SQ. MI.
ROADWAY OVERTOPPING = N/A
SCOUR CRITICAL CODE = 5

2 YEAR FREQUENCY

Q_2 = 1,000 C.F.S.
$VEL._2$ = 6.5 F.P.S.
$HW._2$ = EL. 805.5

TRAFFIC VOLUME

STH 56

ADT = 2,100 (2043)
R.D.S. = 60 M.P.H.

LIST OF DRAWINGS

1. GENERAL PLAN
2. CROSS SECTION & QUANTITIES
3. SUBSURFACE EXPLORATION
4. WEST ABUTMENT
5. WEST ABUTMENT DETAILS
6. EAST ABUTMENT
7. EAST ABUTMENT DETAILS
8. PIER
9. 45W" PRESTRESSED GIRDER DETAILS 1
10. 45W" PRESTRESSED GIRDER DETAILS 2
11. STEEL DIAPHRAGMS
12. SUPERSTRUCTURE PLAN
13. SUPERSTRUCTURE DETAILS 1
14. SUPERSTRUCTURE DETAILS 2
15. SINGLE SLOPE PARAPET 42SS

STRUCTURE DESIGN CONTACTS:

MICAH BROOKS (608) 266-5080
LAURA SHADEWALD (608) 267-9592

NO.	DATE	REVISION	BY

BUREAU OF STRUCTURES
ACCEPTED — LLS — 2/28/22
CHIEF STRUCTURES DESIGN ENGINEER — DATE

STRUCTURE B-62-258

STH 56 OVER BISHOPS BRANCH

COUNTY VERNON | TOWN LIBERTY

DESIGN SPEC. AASHTO LRFD BRIDGE DESIGN SPECIFICATIONS

DESIGNED BY MWB | DESIGNED CK'D. JLR | DRAWN BY MJH | PLANS CK'D. MWB

GENERAL PLAN

SHEET 1 OF 15

54

8

8

SCALE = 14.00

I.D. 5730-00-00A DATE: FEB. 2022

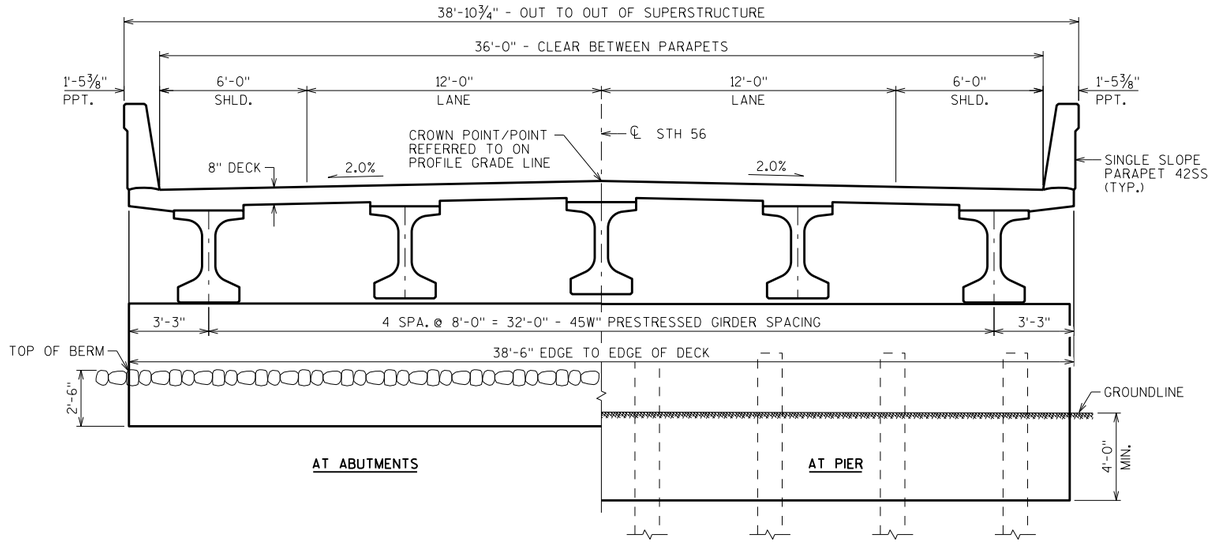

CROSS SECTION THRU ROADWAY

LOOKING EAST

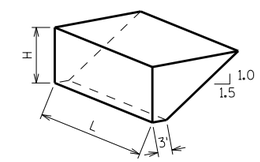

ABUTMENT BACKFILL DIAGRAM FOR WINGS PARALLEL TO ROADWAY

L = OUT TO OUT OF ABUTMENT, INCLUDING WINGS (FT)
H = AVERAGE ABUTMENT FILL HEIGHT (FT)
EF = EXPANSION FACTOR (1.20 FOR CY BID ITEMS AND 1.00 FOR TON BID ITEMS)

$V_{CF} = (L)(3.0')(H) + (L)(0.5)(1.5H)(H)$
$V_{CY} = V_{CF}(EF)/27$
$V_{TON} = V_{CY}(2.0)$

GENERAL NOTES

DRAWINGS SHALL NOT BE SCALED.

BAR STEEL REINFORCEMENT SHALL BE EMBEDDED 2" CLEAR UNLESS OTHERWISE SHOWN OR NOTED.

THE FIRST OR FIRST TWO DIGITS OF THE BAR MARK SIGNIFIES THE BAR SIZE.

BEVEL EXPOSED EDGES OF CONCRETE ¾" UNLESS OTHERWISE NOTED.

THE UPPER LIMITS OF "EXCAVATION FOR STRUCTURES BRIDGES B-62-258" SHALL BE THE EXISTING GROUNDLINE.

AT THE BACK FACE OF ABUTMENT ALL VOLUME WHICH CANNOT BE PLACED BEFORE ABUTMENT CONSTRUCTION AND IS NOT OCCUPIED BY THE NEW STRUCTURE SHALL BE BACKFILLED WITH STRUCTURE BACKFILL TYPE A.

EXCAVATION BELOW THE ABUTMENT AND ABUTMENT BEDDING MATERIALS REQUIRES ENGINEER APPROVAL. GEOTEXTILE SHALL BE SET AT THE BOTTOM OF EXCAVATION AND EXTEND 2'-0" ABOVE BOTTOM OF ABUTMENT.

THE QUANTITY FOR BACKFILL STRUCTURE IS CALCULATED BASED ON THE DETAIL SHOWN IN THE PLANS.

ELASTOMERIC BEARING PADS NEED NOT BE INDIVIDUALLY MOLDED PROVIDED THE CUT EDGES ARE SMOOTH AND TRUE.

PROTECTIVE SURFACE TREATMENT TO BE APPLIED TO THE ENTIRE EXPOSED TOP OF DECK SURFACES AND TO THE VERTICAL AND HORIZONTAL SURFACES OF THE PAVING NOTCHES AT ABUTMENT DIAPHRAGMS.

PIGMENTED SURFACE SEALER TO BE APPLIED TO THE FRONT FACE AND THE TOP OF THE PARAPETS, INCLUDING PARAPETS ON WING WALLS.

THE SLOPE OF THE FILL IN FRONT OF THE ABUTMENTS SHALL BE COVERED WITH HEAVY RIPRAP AND GEOTEXTILE TYPE "HR" TO THE EXTENT SHOWN ON SHEET 1 AND THE ABUTMENT DETAILS.

THE HAUNCH CONCRETE QUANTITY IS BASED ON THE AVERAGE HAUNCH SHOWN ON THE "45W PRESTRESSED GIRDER DETAILS 2" SHEET.

THE EXISTING STREAM BED SHALL BE USED AS THE UPPER LIMITS OF EXCAVATION AT THE PIERS.

AT PIER, CONCRETE POURED UNDER WATER WILL BE ALLOWED AND SHALL BE DONE IN ACCORDANCE WITH SECTION 502.3.5.3 OF THE STANDARD SPECIFICATIONS.

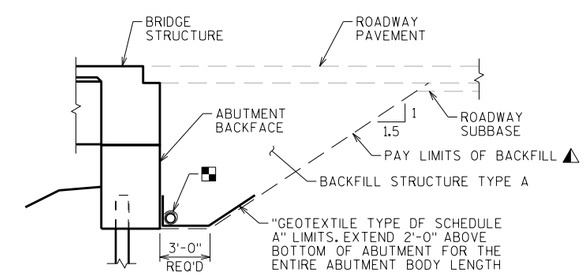

TYPICAL SECTION THRU ABUTMENT

◭ BACKFILL PAY LIMITS. BACKFILL BEYOND BACKFILL PAY LIMITS SHALL BE INCIDENTAL TO EXCAVATION FOR STRUCTURES. LIMITS OF EXCAVATION SHALL BE DETERMINED BY THE CONTRACTOR.

▩ PIPE UNDERDRAIN WRAPPED (6 INCH). SLOPE 0.5% MIN. TO SUITABLE DRAINAGE. ATTACH RODENT SHIELD AT ENDS OF PIPE UNDERDRAIN.

TOTAL ESTIMATED QUANTITIES

BID ITEM NUMBER	BID ITEMS	UNIT	SUPER.	WEST ABUT.	PIER	EAST ABUT.	TOTALS
203.0260	REMOVING STRUCTURE OVER WATERWAY WITH MINIMAL DEBRIS B-62-755	EACH	—	—	—	—	1
206.1000	EXCAVATION FOR STRUCTURES BRIDGES B-62-258	LS	—	—	—	—	1
206.5000	COFFERDAMS B-62-258	LS	—	—	—	—	1
210.1500	BACKFILL STRUCTURE TYPE A	TON	—	264	—	264	528
312.0110	SELECT CRUSHED MATERIAL	TON	—	—	18	—	18
502.0100	CONCRETE MASONRY BRIDGES	CY	340	45	116	45	546
502.3200	PROTECTIVE SURFACE TREATMENT	SY	858	—	—	—	858
502.3210	PIGMENTED SURFACE SEALER	SY	240	—	—	—	240
503.0146	PRESTRESSED GIRDER TYPE I 45W-INCH	LF	1,044	—	—	—	1,044
505.0400	BAR STEEL REINFORCEMENT HS STRUCTURES	LB	—	3,540	5,440	3,540	12,520
505.0600	BAR STEEL REINFORCEMENT HS COATED STRUCTURES	LB	74,760	1,970	40	1,970	78,740
506.2605	BEARING PADS ELASTOMERIC NON-LAMINATED	EACH	—	5	10	5	20
506.4000	STEEL DIAPHRAGMS B-62-258	EACH	16	—	—	—	16
516.0500	RUBBERIZED MEMBRANE WATERPROOFING	SY	—	10	—	10	20
550.0020	PRE-BORING ROCK OR CONSOLIDATED MATERIALS	LF	—	—	140	—	140
550.1120	PILING STEEL HP 12-INCH X 53 LB	LF	—	300	—	350	650
550.1140	PILING STEEL HP 14-INCH X 73 LB	LF	—	—	490	—	490
606.0300	RIPRAP HEAVY	CY	—	623	39	512	1,174
612.0406	PIPE UNDERDRAIN WRAPPED 6-INCH	LF	—	80	—	80	160
614.0150	ANCHOR ASSEMBLIES FOR STEEL PLATE BEAM GUARD	EACH	4	—	—	—	4
645.0111	GEOTEXTILE TYPE DF SCHEDULE A	SY	—	41	—	41	82
645.0120	GEOTEXTILE TYPE HR	SY	—	1,011	83	839	1,933
SPV.0090	REMOVING EXISTING STEEL PILING	LF	—	—	120	—	120
	NON-BID ITEMS						
	FILLER	SIZE	—	—	—	—	½"

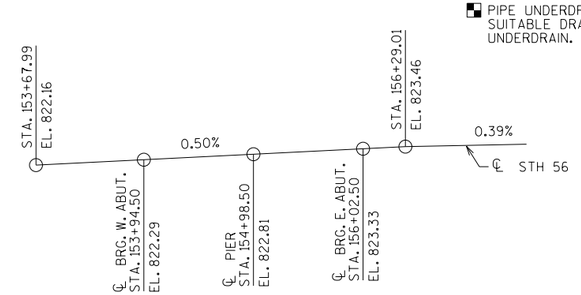

PROFILE GRADE LINE - STH 56

NO.	DATE	REVISION	BY

STATE OF WISCONSIN
DEPARTMENT OF TRANSPORTATION
STRUCTURES DESIGN SECTION

STRUCTURE B-62-258

DRAWN BY MJH | PLANS CK'D. MWB

CROSS SECTION & QUANTITIES

SHEET 2

8

8

SCALE = 3.00

BORING #	DATE COMPLETED	NORTHING (Y)	EASTING (X)
1	8/08/2019	139812	733568
2	8/08/2019	139822	733637
3	10/16/2019	139771	733660
4	10/16/2019	139683	733760
5	10/16/2019	139803	733643
BORINGS COMPLETED BY: WISDOT			
REPORT COMPLETED BY: WISDOT			
ALL COORDINATES REFERENCED TO WCCS NAD 83(91) VERNON COUNTY			
COORDINATES COLLECTED USING NON-SURVEY GRADE EQUIPMENT			

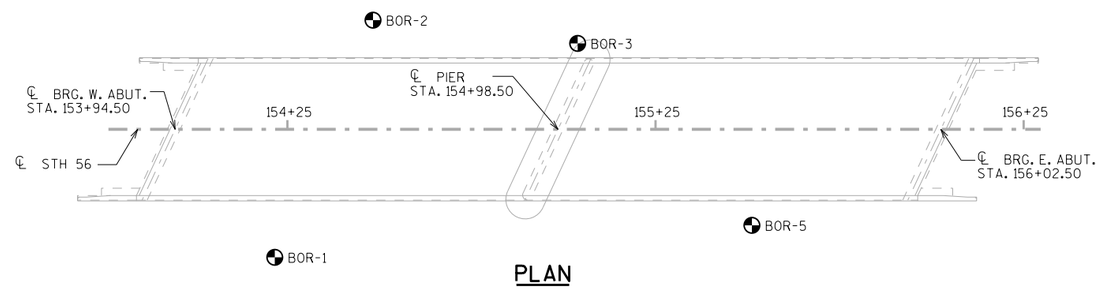

PLAN

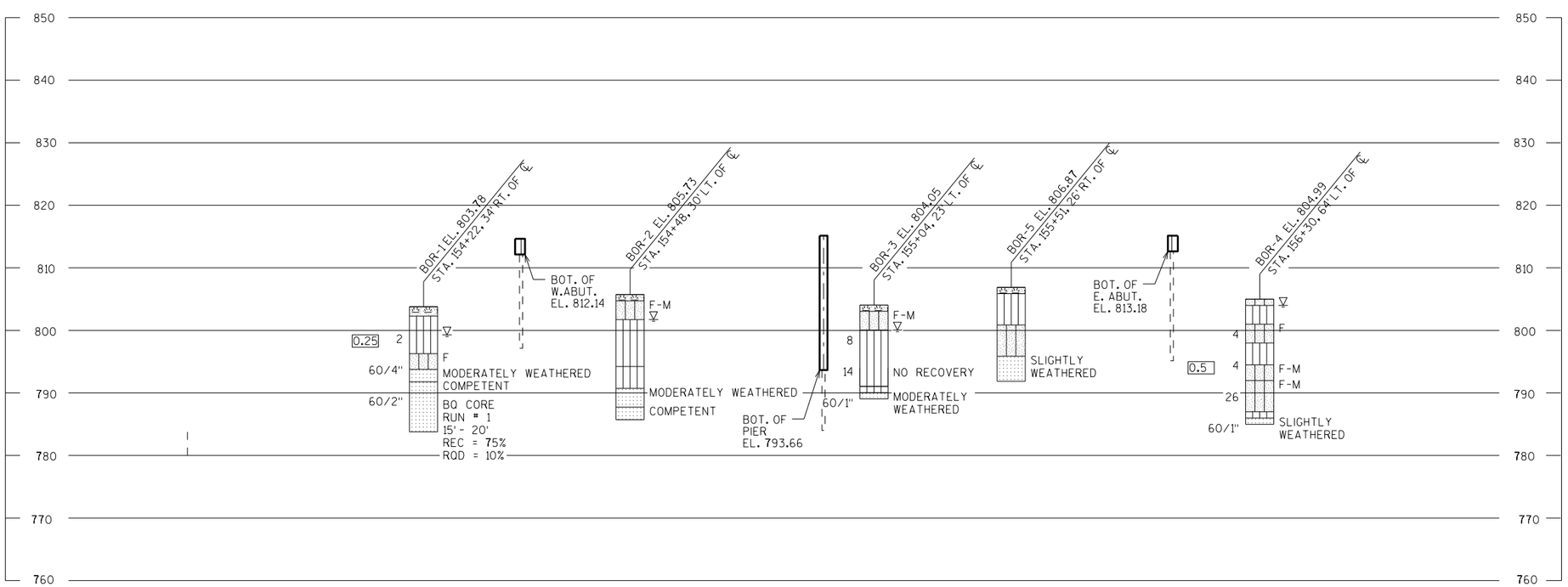

STATE PROJECT NUMBER

5730-00-80

MATERIAL SYMBOLS

ASPHALT, TOPSOIL, PEAT, CONCRETE, FILL, GRAVEL, SAND, CLAY, SILT, BOULDERS OR COBBLES, LIMESTONE, BEDROCK (UNKNOWN), SHALE, SANDSTONE, IGNEOUS/META

LEGEND OF BORING

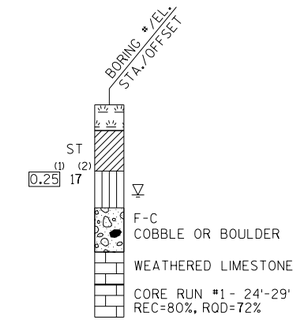

(1) UNCONFINED STRENGTH, AS DETERMINED BY A POCKET PENETROMETER (TSF)

(2) UNLESS OTHERWISE, SPECIFIED THE SPT 'N' VALUE IS BASED ON AASHTO T-206, STANDARD PENETRATION TEST. THE SPT 'N' VALUE PRESENTED HAS NOT BEEN CORRECTED FOR OVERBURDEN PRESSURE OR HAMMER EFFICIENCY.

GROUND WATER ELEVATION

- AT TIME OF DRILLING
- END OF DRILLING
- AFTER DRILLING

ABBREVIATIONS

F-FINE M-MEDIUM C-COARSE ST-SHELBY TUBE

SUBSURFACE EXPLORATION FOR FOUNDATION DESIGN AND BIDDERS INFORMATION

BORINGS WERE COMPLETED AT POINTS APPROXIMATELY AS INDICATED ON THIS DRAWING TO OBTAIN INFORMATION CONCERNING THE CHARACTER OF SUBSURFACE MATERIALS FOUND AT THE SITE. BECAUSE THE INVESTIGATED DEPTHS ARE LIMITED AND THE AREA OF THE BORINGS IS VERY SMALL IN RELATION TO THE ENTIRE SITE, THE WISCONSIN DEPARTMENT OF TRANSPORTATION DOES NOT WARRANT SIMILAR SUBSURFACE CONDITIONS BELOW, BETWEEN, OR BEYOND THESE BORINGS. VARIATIONS IN SOIL CONDITIONS SHOULD BE EXPECTED AND FLUCTUATIONS IN GROUNDWATER LEVELS MAY OCCUR.

8

NO.	DATE	REVISION	BY

STATE OF WISCONSIN
DEPARTMENT OF TRANSPORTATION
STRUCTURES DESIGN SECTION

STRUCTURE B-68-258

DRAWN BY TLP/MJH PLANS CK'D. MWB

SUBSURFACE EXPLORATION

SHEET 3

56

SCALE =

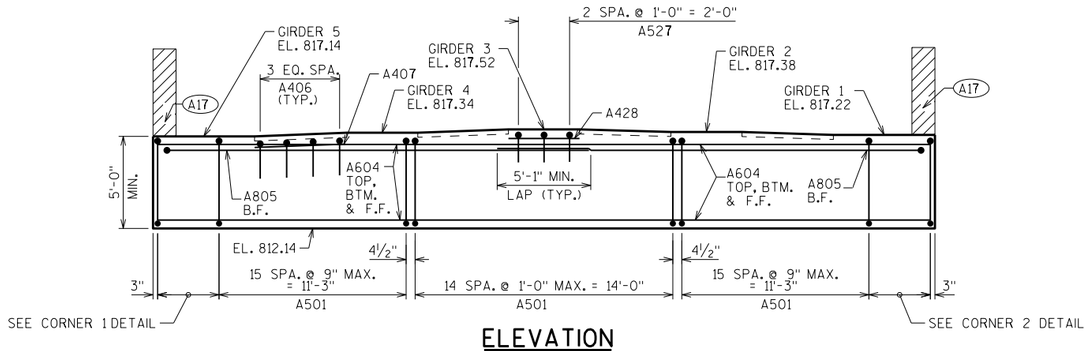

ELEVATION
(LOOKING WEST)

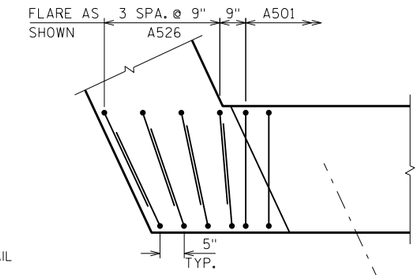

CORNER 1 DETAIL

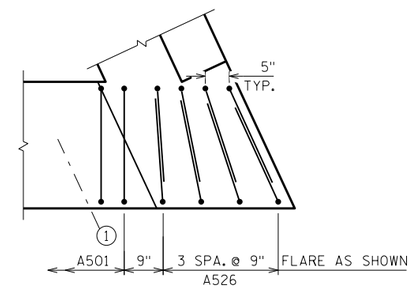

CORNER 2 DETAIL

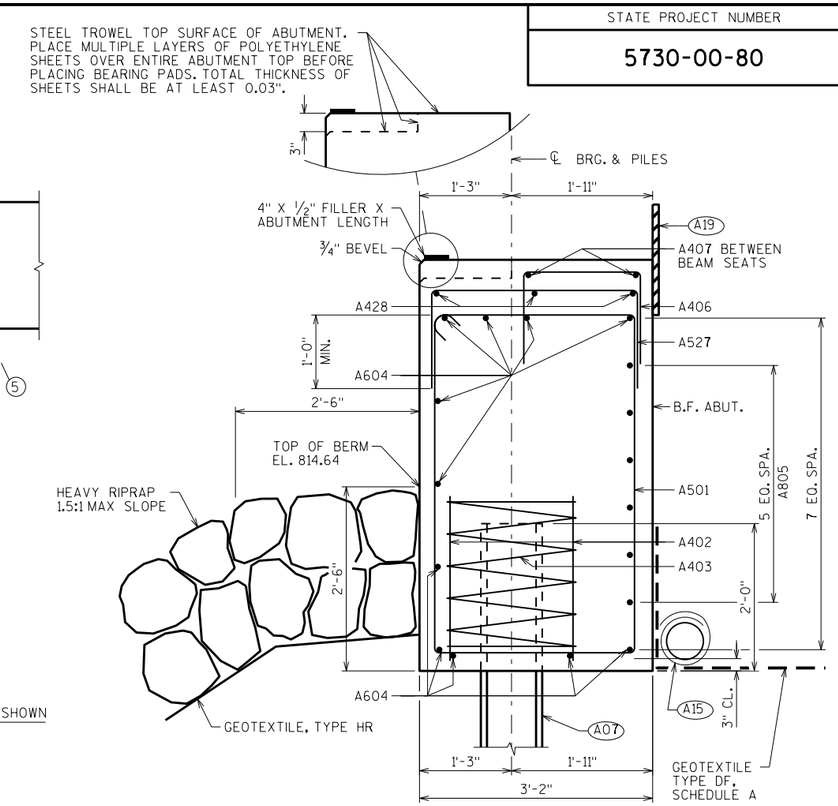

SECTION THRU BODY

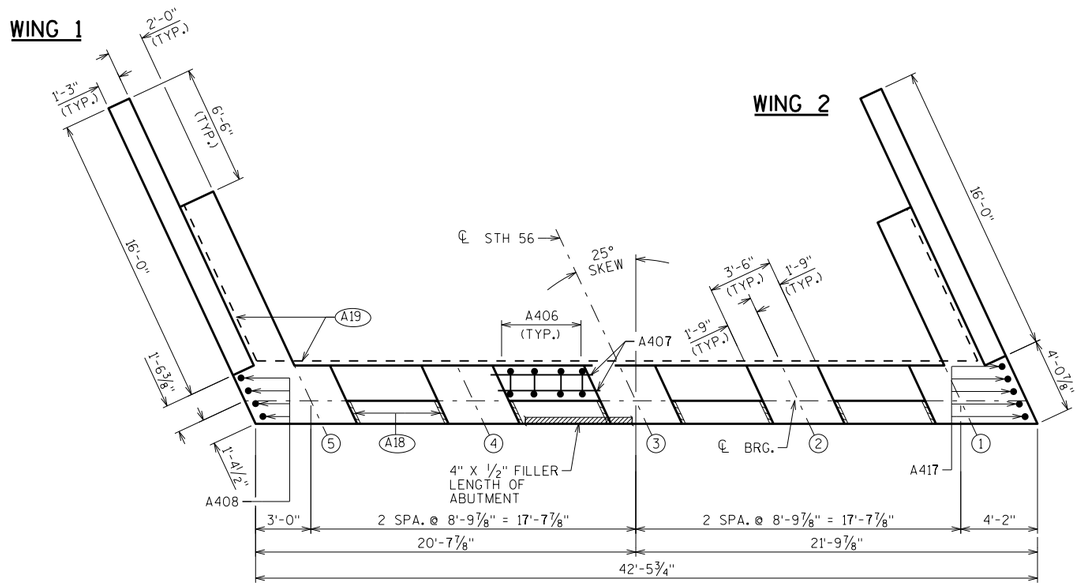

PLAN

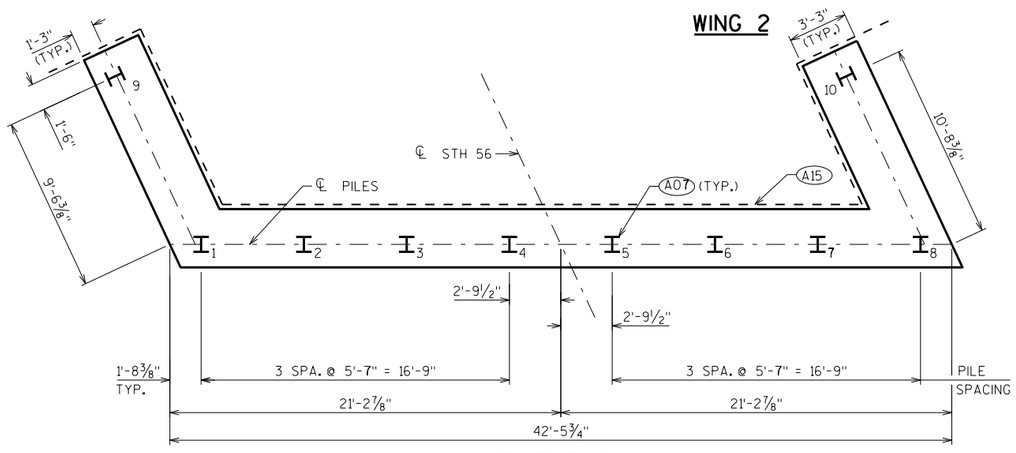

PILE PLAN

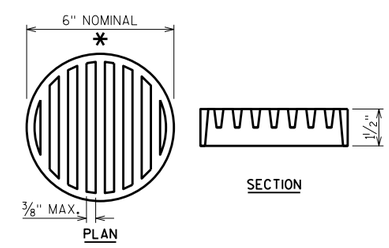

RODENT SHIELD DETAIL

* DIMENSIONS ARE APPROXIMATE. THE GRATE IS SIZED TO FIT INTO A PIPE COUPLING. ORIENT SO SLOTS ARE VERTICAL.

THE RODENT SHIELD, PIPE COUPLING AND SCREWS SHALL BE CONSIDERED INCIDENTAL TO THE BID ITEM "PIPE UNDERDRAIN WRAPPED 6-INCH".

THE RODENT SHIELD SHALL BE A PVC GRATE SIMILAR TO THIS DETAIL. THE GRATE IS COMMERCIALLY AVAILABLE AS A FLOOR STRAINER. A PIPE COUPLING IS REQUIRED FOR THE ATTACHMENT OF THIS SHIELD TO THE EXPOSED END OF THE PIPE UNDERDRAIN. THE SHIELD SHALL BE FASTENED TO THE PIPE COUPLING WITH TWO OR MORE NO. 10 X 1-INCH STAINLESS STEEL SHEET METAL SCREWS.

A07 SUPPORT ABUTMENT ON HP 12 x 53 STEEL PILING, ESTIMATED 30'-0" LONG WITH A REQUIRED DRIVING RESISTANCE OF 220 TONS PER PILE.

A15 PIPE UNDERDRAIN WRAPPED (6-INCH). SLOPE 0.5% MIN. TO SUITABLE DRAINAGE. RODENT SHIELD REQUIRED.

A17 1/2" FILLER (INCLUDED IN WING LENGTH): SEAL ALL EXPOSED HORIZ. & VERT. SURFACES OF 1/2" FILLER WITH NON-STAINING GRAY NON-BITUMINOUS JOINT SEALER. (1" DEEP AND HOLD 1/8" BELOW SURFACE OF CONCRETE). EXTEND SEALER 3" BELOW GUTTER LINE AT INSIDE FACE.

A18 3/4" CORK FILLER UP VERT. BEAM SEAT FACES THAT RUN PARALLEL WITH GIRDER.

A19 18" (RMW) RUBBERIZED MEMBRANE WATERPROOFING SEAL ALL HORIZ. & VERT. JOINTS AT BACKFACE.

NO.	DATE	REVISION	BY

STATE OF WISCONSIN
DEPARTMENT OF TRANSPORTATION
STRUCTURES DESIGN SECTION

STRUCTURE B-62-258

DRAWN BY MJH | PLANS CK'D. MWB

WEST ABUTMENT

SHEET 4

SCALE = 4.00

8

STATE PROJECT NUMBER
5730-00-80

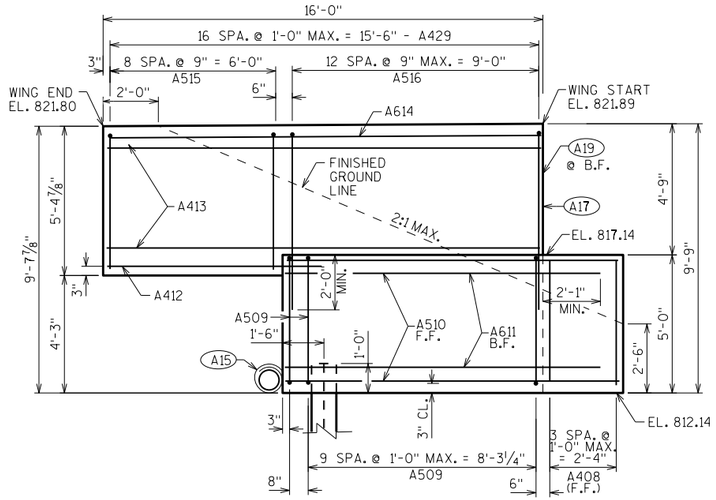

WING 1

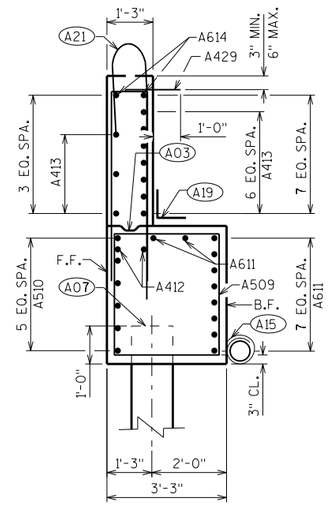

WING 1 SECTION

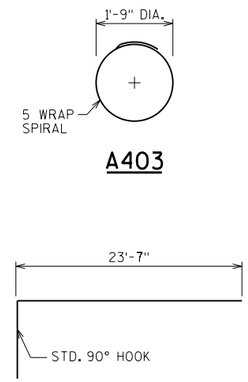

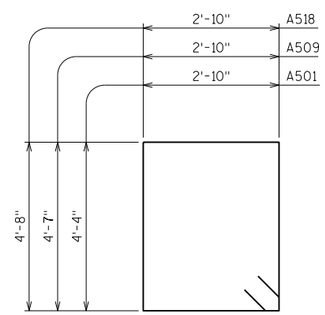

A501, A509, A518

BILL OF BARS

BAR MARK	COAT	NO. REQ'D.	LENGTH	BENT	BAR SERIES	LOCATION
A501		47	15'-0"	X		BODY-STIRRUPS
A402		16	2'-3"			BODY PILES - 2 PER PILE
A403		8	28'-0"	X		BODY PILES - 1 PER PILE
A604		11	41'-11"			BODY - HORIZ. - TOP, BOT, & F.F.
A805		12	24'-8"	X		BODY - HORIZ. - B.F.
A406		16	3'-10"	X		BODY - VERT. - TOP - BTWN. BEAM SEATS
A407		8	7'-0"			BODY - HORIZ. - TOP - BTWN. BEAM SEATS
A408		4	4'-6"			WING 1 - VERT. - END OF ABUTMENTS - F.F.
A509		11	15'-6"	X		WING 1 - STIRRUP - LOWER WING
A510		6	11'-11"			WING 1 - HORIZ. - F.F. - LOWER WING
A611		10	11'-3"			WING 1 - HORIZ. - B.F. - LOWER WING
A412		2	7'-7"			WING 1 - HORIZ.
A413	X	10	15'-6"			WING 1 - HORIZ. - UPPER WING
A614	X	2	15'-6"			WING 1 - HORIZ. - UPPER WING - TOP
A515	X	9	10'-8"	X		WING 1 - VERT. - UPPER WING
A516	X	13	14'-7"	X		WING 1 - VERT. - UPPER WING
A417		5	4'-7"			WING 2 - VERT. - END OF ABUTMENTS - F.F.
A518		11	15'-8"	X		WING 2 - STIRRUP - LOWER WING
A519		6	13'-1"			WING 2 - HORIZ. - F.F. - LOWER WING
A620		10	11'-3"			WING 2 - HORIZ. - B.F. - LOWER WING
A421		2	7'-7"			WING 2 - HORIZ.
A422	X	10	15'-6"			WING 2 - HORIZ. - UPPER WING
A623	X	2	15'-6"			WING 2 - HORIZ. - UPPER WING - TOP
A524	X	9	10'-6"	X		WING 2 - VERT. - UPPER WING
A525	X	13	14'-5"	X		WING 2 - VERT. - UPPER WING
A526		16	8'-3"	X		BODY - VERT. - U BAR
A527		3	5'-7"	X		BODY - VERT. TOP - SUPPLEMENTAL
A428		4	3'-6"			BODY - HORIZ. TOP - SUPPLEMENTAL
A429	X	34	2'-0"			SURFACE DRAIN ANCHORS

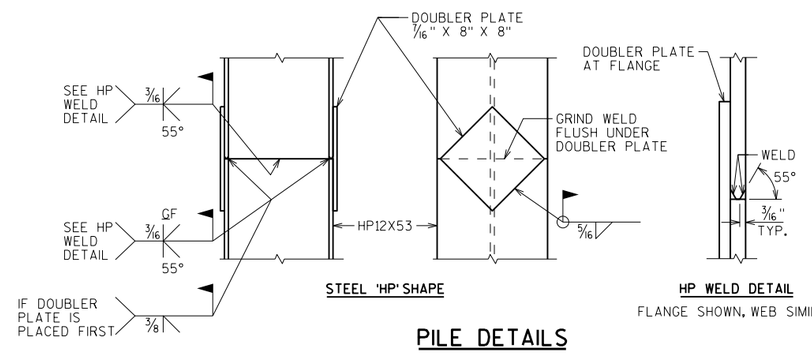

PILE DETAILS

(A03) OPTIONAL CONST. JOINT: KEYWAY FORMED BY BEVELED 2 × 6. (18" RMW @ B.F. & 3/4" "V" GROOVE @ F.F. IF JOINT IS USED).

(A07) SUPPORT ABUTMENT ON HP 12 × 53 STEEL PILING, ESTIMATED 30'-0" LONG WITH A REQUIRED DRIVING RESISTANCE OF 220 TONS PER PILE.

(A15) PIPE UNDERDRAIN WRAPPED (6-INCH). SLOPE 0.5% MIN. TO SUITABLE DRAINAGE. RODENT SHIELD REQUIRED.

(A17) 1/2" FILLER (INCLUDED IN WING LENGTH): SEAL ALL EXPOSED HORIZ. & VERT. SURFACES OF 1/2" FILLER WITH NON-STAINING GRAY NON-BITUMINOUS JOINT SEALER. (1" DEEP AND HOLD 1/8" BELOW SURFACE OF CONCRETE). EXTEND SEALER 3" BELOW GUTTER LINE AT INSIDE FACE.

(A19) 18" (RMW) RUBBERIZED MEMBRANE WATERPROOFING SEAL ALL HORIZ. & VERT. JOINTS AT BACKFACE.

(A21) FOR PPT. BARS AND DIMENSIONS SEE "SINGLE SLOPE PARAPET 42SS" SHEET

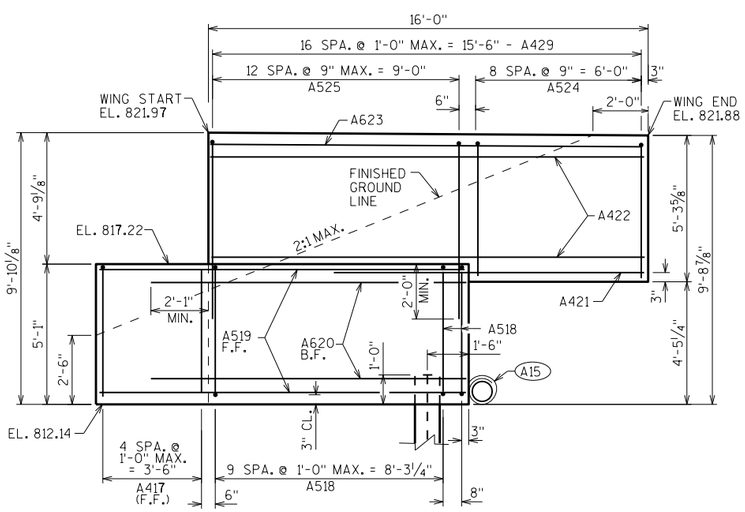

WING 2

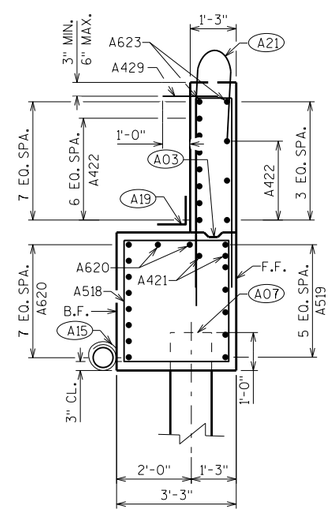

WING 2 SECTION

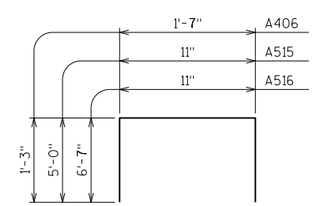

A406, A515, A516

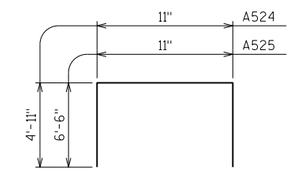

A524, A525

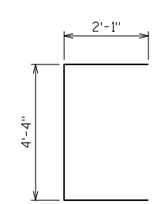

A526

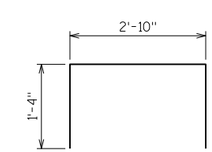

A527

NO.	DATE	REVISION	BY

STATE OF WISCONSIN
DEPARTMENT OF TRANSPORTATION
STRUCTURES DESIGN SECTION

STRUCTURE B-62-258

DRAWN BY MJH | PLANS CK'D. MWB

WEST ABUTMENT DETAILS

SHEET 5

SCALE = 2.67

8

8

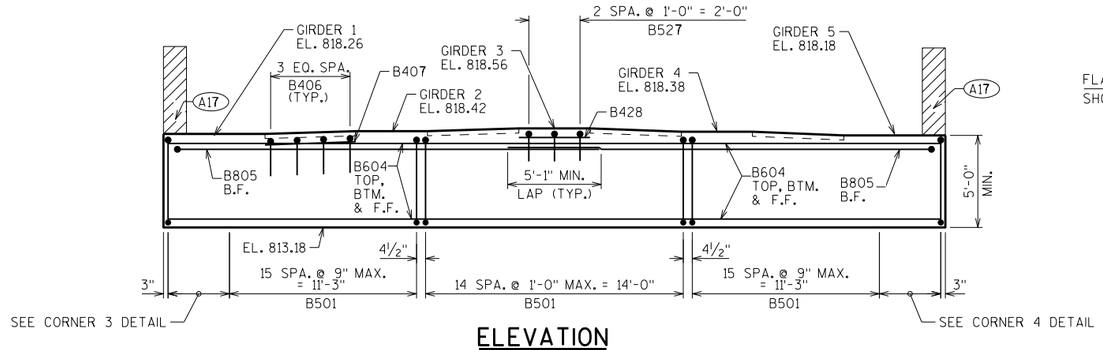

ELEVATION
(LOOKING EAST)

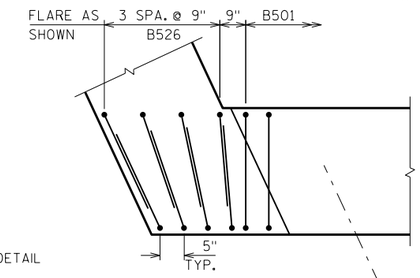

CORNER 3 DETAIL

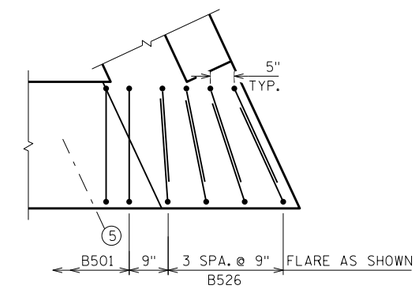

CORNER 4 DETAIL

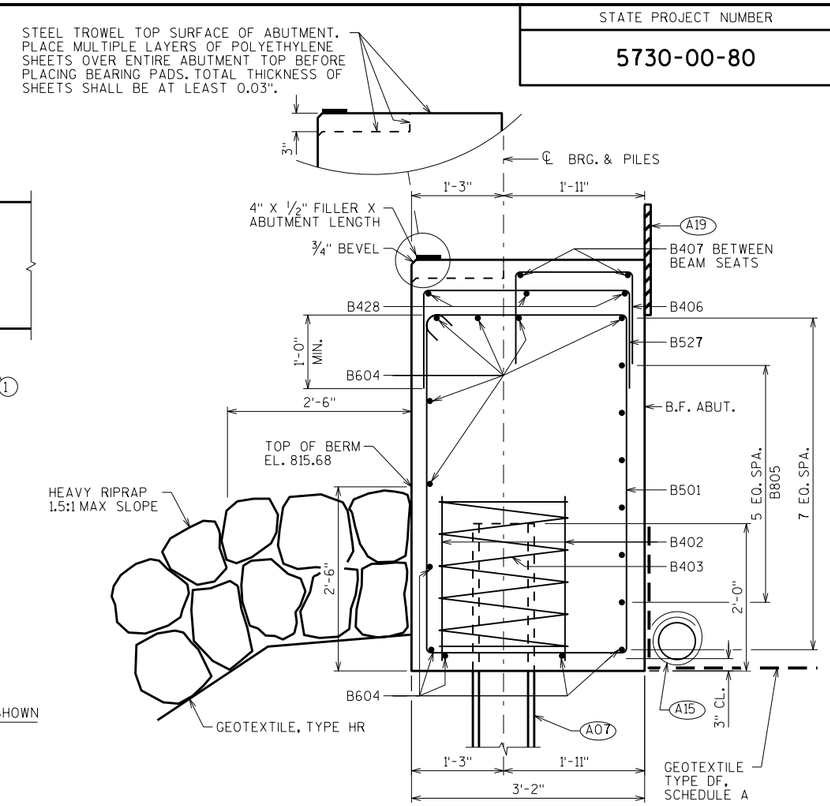

SECTION THRU BODY

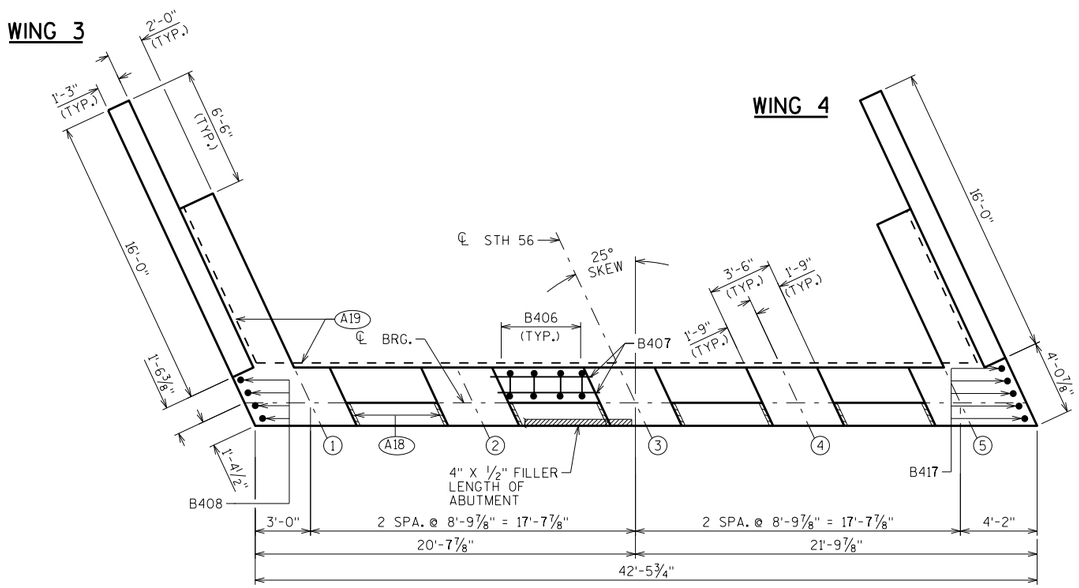

PLAN

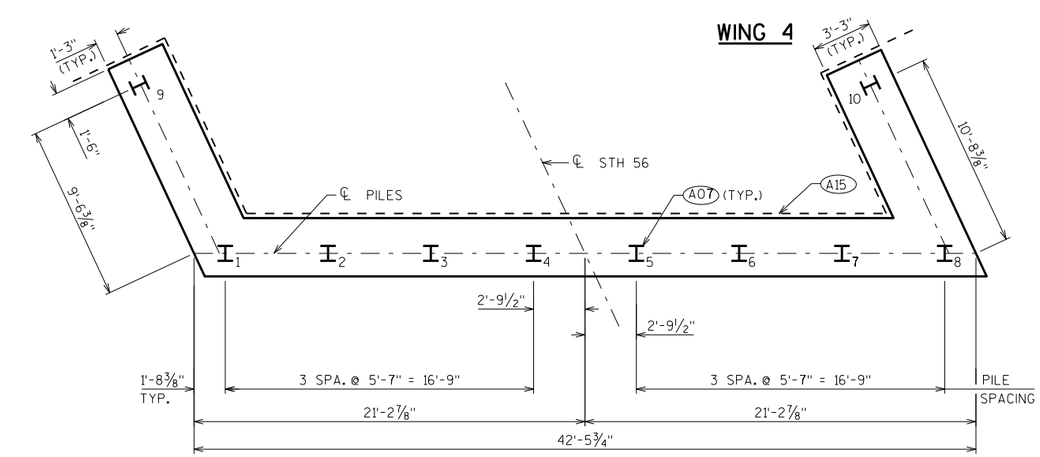

PILE PLAN

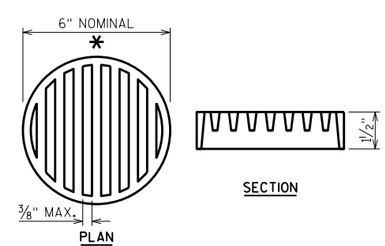

RODENT SHIELD DETAIL

* DIMENSIONS ARE APPROXIMATE. THE GRATE IS SIZED TO FIT INTO A PIPE COUPLING. ORIENT SO SLOTS ARE VERTICAL.

THE RODENT SHIELD, PIPE COUPLING AND SCREWS SHALL BE CONSIDERED INCIDENTAL TO THE BID ITEM "PIPE UNDERDRAIN WRAPPED 6-INCH".

THE RODENT SHIELD SHALL BE A PVC GRATE SIMILAR TO THIS DETAIL. THE GRATE IS COMMERCIALLY AVAILABLE AS A FLOOR STRAINER. A PIPE COUPLING IS REQUIRED FOR THE ATTACHMENT OF THIS SHIELD TO THE EXPOSED END OF THE PIPE UNDERDRAIN. THE SHIELD SHALL BE FASTENED TO THE PIPE COUPLING WITH TWO OR MORE NO. 10 X 1-INCH STAINLESS STEEL SHEET METAL SCREWS.

A07 SUPPORT ABUTMENT ON HP 12 x 53 STEEL PILING. ESTIMATED 35'-0" LONG WITH A REQUIRED DRIVING RESISTANCE OF 220 TONS PER PILE.

A15 PIPE UNDERDRAIN WRAPPED (6-INCH). SLOPE 0.5% MIN. TO SUITABLE DRAINAGE. RODENT SHIELD REQUIRED.

A17 1/2" FILLER (INCLUDED IN WING LENGTH): SEAL ALL EXPOSED HORIZ. & VERT. SURFACES OF 1/2" FILLER WITH NON-STAINING GRAY NON-BITUMINOUS JOINT SEALER. (1" DEEP AND HOLD 1/8" BELOW SURFACE OF CONCRETE). EXTEND SEALER 3" BELOW GUTTER LINE AT INSIDE FACE.

A18 3/4" CORK FILLER UP VERT. BEAM SEAT FACES THAT RUN PARALLEL WITH GIRDER.

A19 18" (RMW) RUBBERIZED MEMBRANE WATERPROOFING SEAL ALL HORIZ. & VERT. JOINTS AT BACKFACE.

NO.	DATE	REVISION	BY

STATE OF WISCONSIN
DEPARTMENT OF TRANSPORTATION
STRUCTURES DESIGN SECTION

STRUCTURE B-62-258

DRAWN BY MJH | PLANS CK'D. MWB

EAST ABUTMENT

SHEET 6

8

SCALE = 4.00

STATE PROJECT NUMBER
5730-00-80

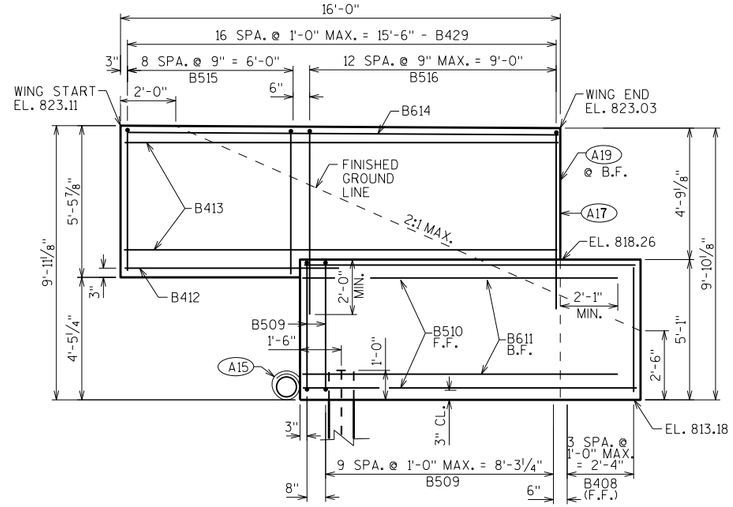

WING 3

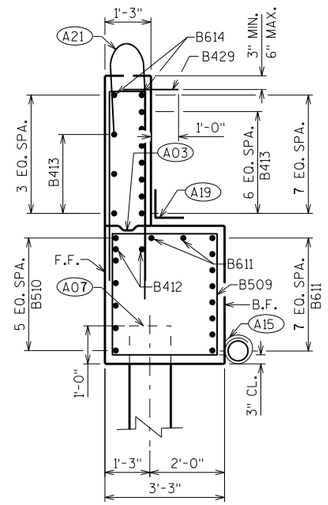

WING 3 SECTION

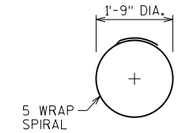

B403

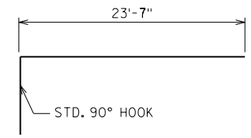

B805

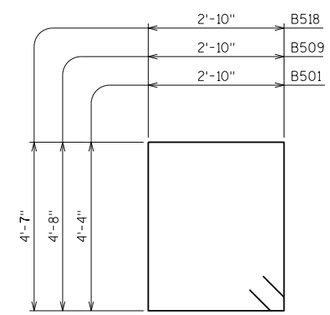

B501, B509, B518

BILL OF BARS

BAR MARK	COAT	NO. REQ'D.	LENGTH	BENT	BAR SERIES	LOCATION
B501		47	15'-0"	X		BODY-STIRRUPS
B402		16	2'-3"			BODY PILES - 2 PER PILE
B403		8	28'-0"	X		BODY PILES - 1 PER PILE
B604		11	41'-11"			BODY - HORIZ. - TOP, BOT, & F.F.
B805		12	24'-8"	X		BODY - HORIZ. - B.F.
B406		16	3'-10"	X		BODY - VERT. - TOP - BTWN. BEAM SEATS
B407		8	7'-0"			BODY - HORIZ. - TOP - BTWN. BEAM SEATS
B408		4	4'-7"			WING 3 - VERT. - END OF ABUTMENTS - F.F.
B509		11	15'-8"	X		WING 3 - STIRRUP - LOWER WING
B510		6	11'-11"			WING 3 - HORIZ. - F.F. - LOWER WING
B611		10	11'-3"			WING 3 - HORIZ. - B.F. - LOWER WING
B412		2	7'-7"			WING 3 - HORIZ.
B413	X	10	15'-6"			WING 3 - HORIZ. - UPPER WING
B614	X	2	15'-6"			WING 3 - HORIZ. - UPPER WING - TOP
B515	X	9	10'-8"	X		WING 3 - VERT. - UPPER WING
B516	X	13	14'-7"	X		WING 3 - VERT. - UPPER WING
B417		5	4'-6"			WING 4 - VERT. - END OF ABUTMENTS - F.F.
B518		11	15'-6"	X		WING 4 - STIRRUP - LOWER WING
B519		6	13'-1"			WING 4 - HORIZ. - F.F. - LOWER WING
B620		10	11'-3"			WING 4 - HORIZ. - B.F. - LOWER WING
B421		2	7'-7"			WING 4 - HORIZ.
B422	X	10	15'-6"			WING 4 - HORIZ. - UPPER WING
B623	X	2	15'-6"			WING 4 - HORIZ. - UPPER WING - TOP
B524	X	9	10'-6"	X		WING 4 - VERT. - UPPER WING
B525	X	13	14'-5"	X		WING 4 - VERT. - UPPER WING
B526		16	8'-3"	X		BODY - VERT. - U BAR
B527		3	5'-7"	X		BODY - VERT. TOP - SUPPLEMENTAL
B428		4	3'-6"			BODY - HORIZ. TOP - SUPPLEMENTAL
B429	X	34	2'-0"			SURFACE DRAIN ANCHORS

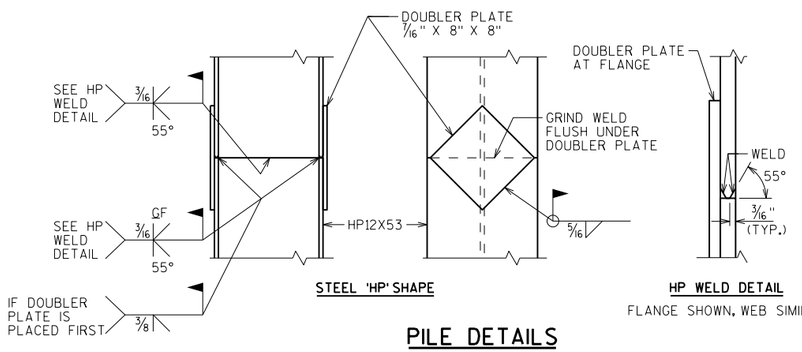

STEEL 'HP' SHAPE

HP WELD DETAIL

FLANGE SHOWN, WEB SIMILAR

PILE DETAILS

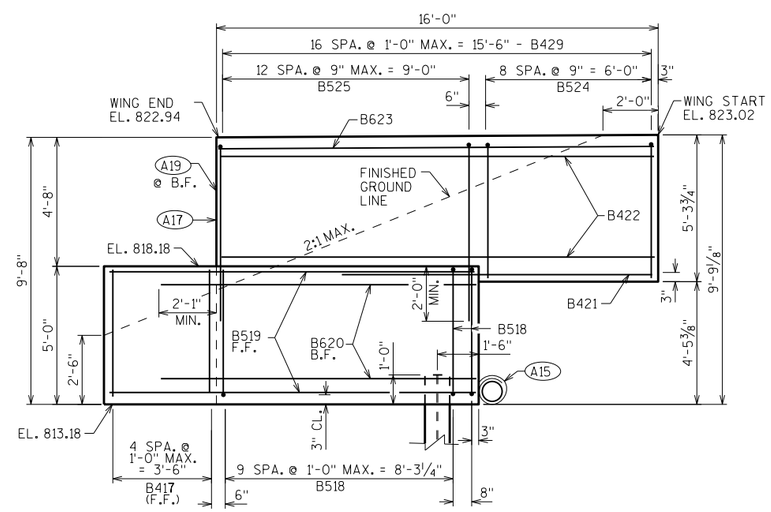

WING 4

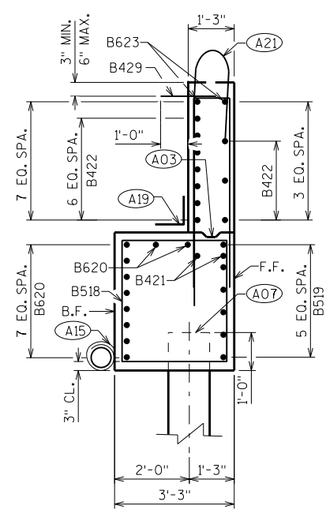

WING 4 SECTION

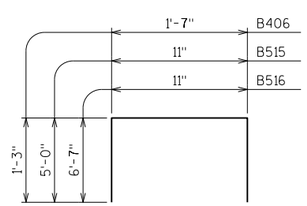

B406, B515, B516

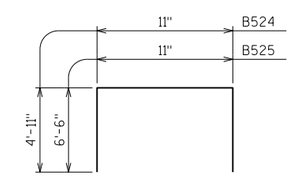

B524, B525

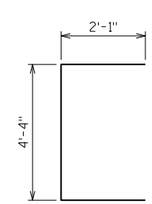

B526

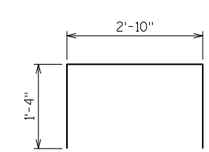

B527

(A03) OPTIONAL CONST. JOINT: KEYWAY FORMED BY BEVELED 2 x 6. (18" RMW @ B.F. & 3/4" "V" GROOVE @ F.F. IF JOINT IS USED).

(A07) SUPPORT ABUTMENT ON HP 12 x 53 STEEL PILING, ESTIMATED 35'-0" LONG WITH A REQUIRED DRIVING RESISTANCE OF 220 TONS PER PILE.

(A15) PIPE UNDERDRAIN WRAPPED (6-INCH). SLOPE 0.5% MIN. TO SUITABLE DRAINAGE. RODENT SHIELD REQUIRED.

(A17) 1/2" FILLER (INCLUDED IN WING LENGTH): SEAL ALL EXPOSED HORIZ. & VERT. SURFACES OF 1/2" FILLER WITH NON-STAINING GRAY NON-BITUMINOUS JOINT SEALER. (1" DEEP AND HOLD 1/8" BELOW SURFACE OF CONCRETE). EXTEND SEALER 3" BELOW GUTTER LINE AT INSIDE FACE.

(A19) 18" (RMW) RUBBERIZED MEMBRANE WATERPROOFING SEAL ALL HORIZ. & VERT. JOINTS AT BACKFACE.

(A21) FOR PPT. BARS AND DIMENSIONS SEE "SINGLE SLOPE PARAPET 42SS" SHEET

NO.	DATE	REVISION	BY

STATE OF WISCONSIN
DEPARTMENT OF TRANSPORTATION
STRUCTURES DESIGN SECTION

STRUCTURE B-62-258

DRAWN BY MJH | PLANS CK'D. MWB

EAST ABUTMENT DETAILS

SHEET 7

8

8

SCALE = 2.67

STATE PROJECT NUMBER
5730-00-80

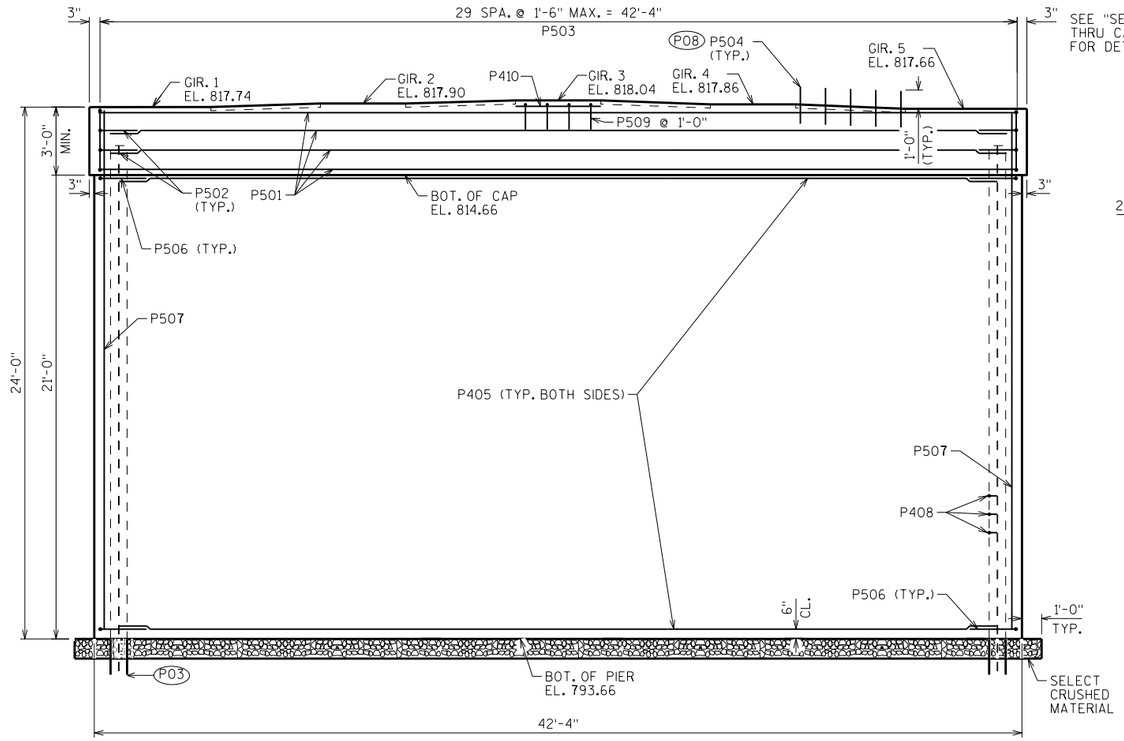

ELEVATION
(LOOKING EAST)

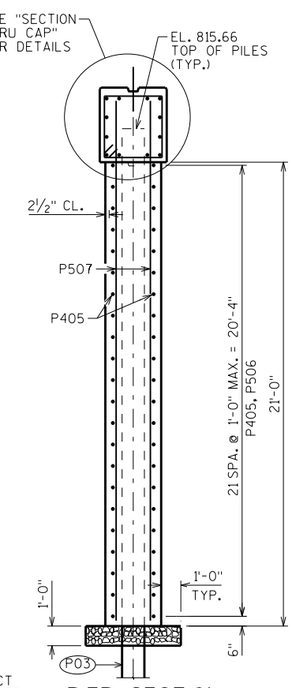

PIER SECTION

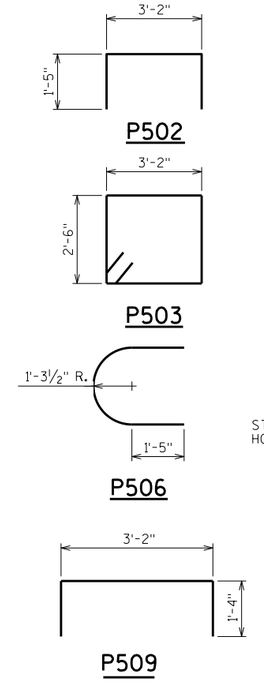

BILL OF BARS

NOTE: THE FIRST OR FIRST TWO DIGITS OF THE BAR MARK SIGNIFIES THE BAR SIZE.

BAR MARK	COAT	NO. REQ'D	LENGTH	BENT	BAR SERIES	LOCATION
P501		12	42'-6"			CAP-HORIZ.
P502		4	5'-9"	X		CAP-HORIZ.-ENDS
P503		30	12'-0"	X		CAP-VERT.-STIRRUP
(P08) P504	X	20	2'-0"			CAP-VERT. DOWELS-BTWN. BEAM SEATS
P405		44	39'-4"			PIER-HORIZ.
P506		44	6'-10"	X		PIER-HORIZ.-ENDS
P507		94	23'-3"			PIER-VERT.
P408		308	3'-6"	X		PIER-TIE BARS
P509		4	5'-7"	X		CAP-ADDITIONAL REIN. VERT.
P410		4	3'-6"			CAP-ADDITIONAL REIN. HORIZ.

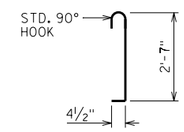

P408

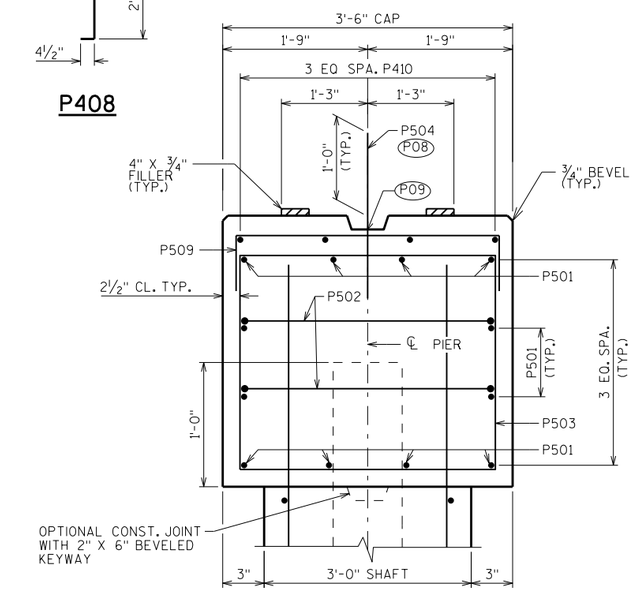

SECTION THRU CAP

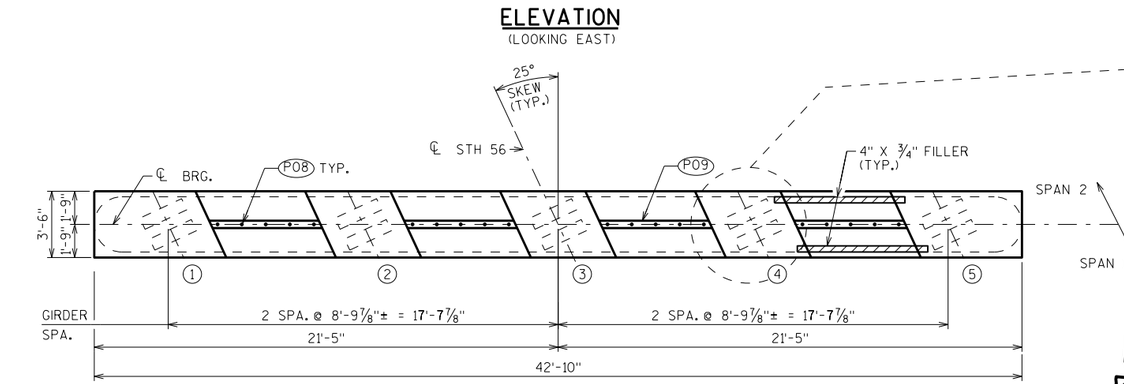

PLAN

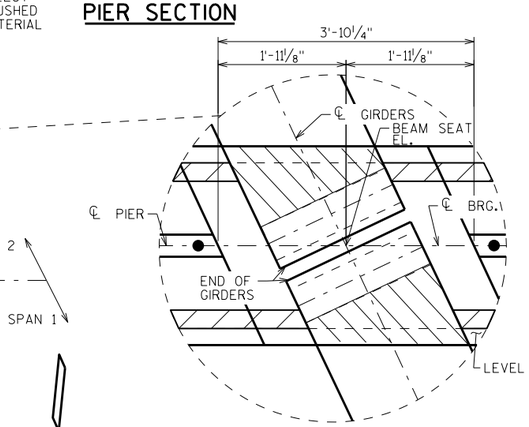

TYPICAL BEAM SEAT DETAIL

(P04) SUPPORT PIER ON HP 14 X 73 STEEL PILING. ESTIMATED 35'-0" LONG WITH A REQUIRED DRIVING RESISTANCE OF 250 TONS PER PILE. PREBORE PILES 10'-0" MIN. INTO SOUND ROCK.

(P08) P504 BARS @ 1'-0" CTRS. BETWEEN BEAM SEATS. MAY BE PLACED AFTER CONCRETE IS POURED BUT BEFORE INITIAL SET HAS TAKEN PLACE. (EMBED 1'-0" INTO CONC.)

(P09) KEYED CONST. JOINT-FORMED BY BEVELED 2 X 6 BETWEEN BEAM SEATS.

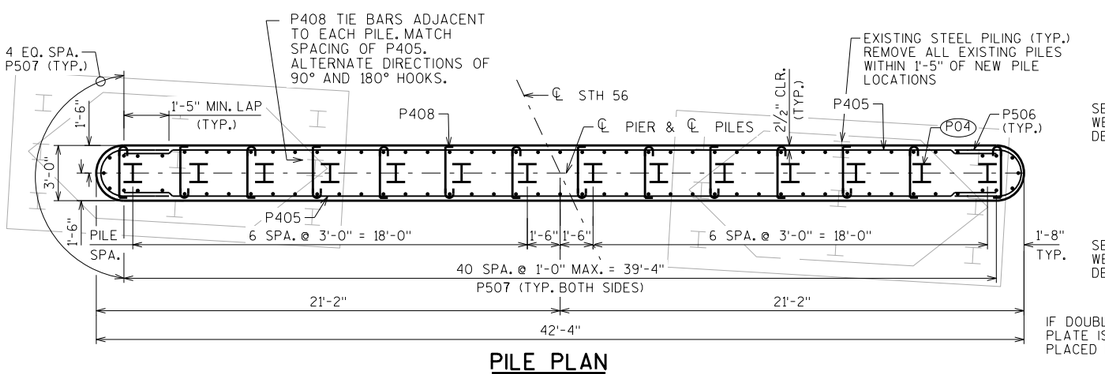

PILE PLAN

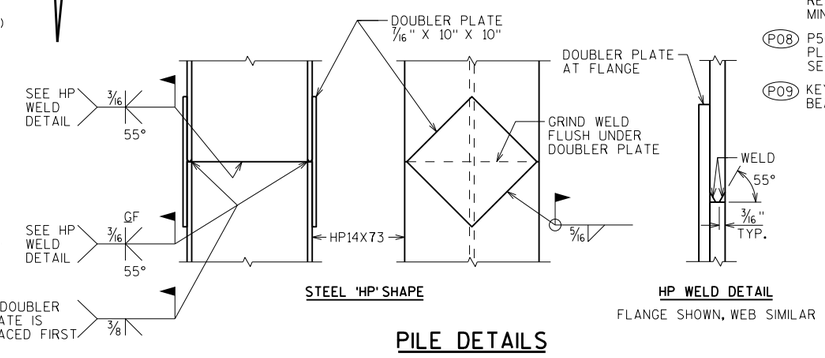

STEEL 'HP' SHAPE

HP WELD DETAIL
FLANGE SHOWN, WEB SIMILAR

PILE DETAILS

NO.	DATE	REVISION	BY

STATE OF WISCONSIN
DEPARTMENT OF TRANSPORTATION
STRUCTURES DESIGN SECTION

STRUCTURE B-62-258

DRAWN BY MJH | PLANS CK'D. MWB

PIER

SHEET 8

61

8

8

SCALE = 3.75

STATE PROJECT NUMBER

5730-00-80

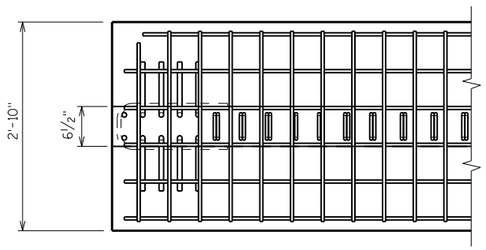

TOP FLANGE

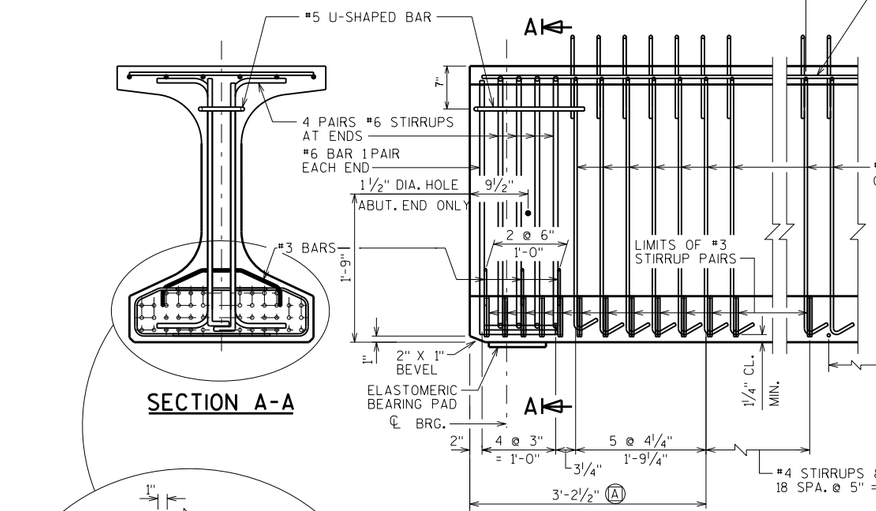

SECTION A-A

SIDE VIEW & TYPICAL SECTION IN SPAN

Ⓐ DETAIL TYP. AT EACH END

Ⓑ 6 #4 BARS, FULL LENGTH, MIN. LAP = 1'-11"

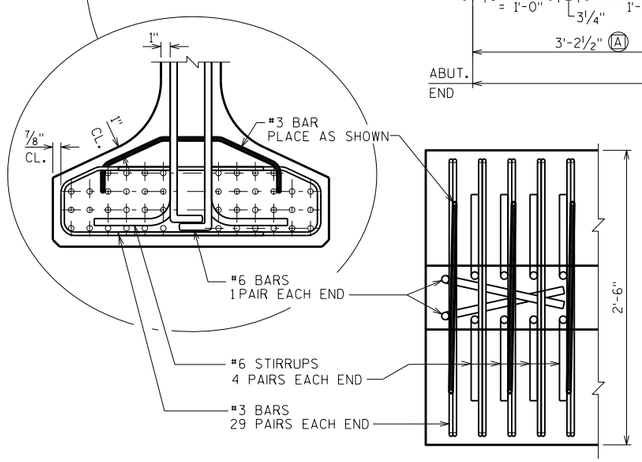

BOTTOM FLANGE

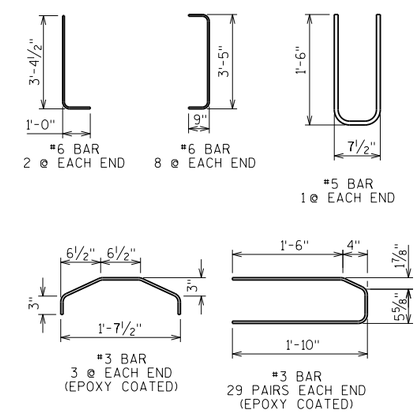

NOTES

TOP OF GIRDER TO BE ROUGH FLOATED AND BROOMED TRANSVERSELY, EXCEPT THE OUTSIDE 8" OF GIRDER, WHICH SHALL RECEIVE A SMOOTH FINISH. AN APPROVED CONCRETE SEALER SHALL BE APPLIED TO ALL SMOOTH SURFACES INCLUDING THE OUTSIDE 8" OF THE TOP FLANGE.

DO NOT APPLY CONCRETE SEALER OR EPOXY TO SURFACES RECEIVING APPLICATION OF CONCRETE STAINING.

THE GIRDERS SHALL BE PROVIDED WITH A SUITABLE LIFTING DEVICE FOR HANDLING AND ERECTING THE GIRDERS. SEE SECT. 503.3.3 OF STANDARD SPECIFICATIONS FOR GUIDANCE.

STRANDS SHALL BE FLUSH WITH END OF GIRDER. FOR GIRDER ENDS EMBEDDED COMPLETELY IN CONCRETE, END OF STRANDS SHALL BE COATED WITH NON-BITUMINOUS JOINT SEALER. FOR GIRDER ENDS THAT ARE FINALLY EXPOSED, COAT THE GIRDER ENDS, EXPOSED STRAND ENDS AND ALL NON-BONDING SURFACES WITHIN 2 FEET OF THE GIRDER ENDS WITH A NON-PIGMENTED EPOXY CONFORMING TO AASHTO M-235 TYPE III, CLASS B OR C. THE EPOXY SHALL BE APPLIED AT LEAST 3 DAYS AFTER MOIST CURING HAS CEASED AND PRIOR TO THE APPLICATION OF THE SEALER.

ALL GIRDERS SHALL BE CAST FULL LENGTH AS SHOWN.

SPACING SHOWN FOR #4 STIRRUPS IS FOR GRADE 60 REINFORCEMENT.

AN ALTERNATE EQUIVALENT OF WELDED WIRE FABRIC (WWF) ASTM A1064 MAY BE SUBSTITUTED FOR THE STIRRUP REINFORCEMENT SHOWN, UPON APPROVAL OF THE STRUCTURES DEVELOPMENT SECTION.

PRESTRESSING STRANDS SHALL BE (0.6" DIA.)-7 WIRE LOW-RELAXATION STRANDS WITH AN ULTIMATE STRENGTH OF 270,000 PSI.

FOR DIAPHRAGM INSERT & CONNECTION DETAILS SEE "STEEL DIAPHRAGMS" SHEET.

✳ MINIMUM CYLINDER STRENGTH OF CONCRETE @ TIME OF TRANSFER OF PRESTRESS FORCE.

GIRDER DATA

SPAN	GIRDER	GIRDER LENGTH "L" (FEET)	DEAD LOAD DEFL. (IN.)									CONC. STRGTH. f'c (P.S.I.)	"P" (IN.)			DIA. OF STRAND (IN.)	DRAPED PATTERN					
			1/10	2/10	3/10	4/10	5/10	6/10	7/10	8/10	9/10		1ST 1/3 OF GIRDER	MID 1/3 OF GIRDER	END 1/3 OF GIRDER		TOTAL NO. OF STRANDS	f'ci (P.S.I.) ✳	(IN.) "A"	"B" MIN.	"B" MAX.	"C"
1	1 & 5	104.375	0.6	1.2	1.7	1.9	2.0	1.9	1.6	1.2	0.6	8000	7	7	7	0.6	34	6800	40	13.75	16.75	5
1	2 TO 4	104.375	0.7	1.3	1.8	2.1	2.2	2.1	1.8	1.3	0.7	8000	7	7	7	0.6	34	6800	40	13.75	16.75	5
2	1 & 5	104.375	0.6	1.2	1.6	1.9	2.0	1.9	1.7	1.2	0.6	8000	7	7	7	0.6	34	6800	40	13.75	16.75	5
2	2 TO 4	104.375	0.7	1.3	1.8	2.1	2.2	2.1	1.8	1.3	0.7	8000	7	7	7	0.6	34	6800	40	13.75	16.75	5

NO.	DATE	REVISION	BY

STATE OF WISCONSIN
DEPARTMENT OF TRANSPORTATION
STRUCTURES DESIGN SECTION

STRUCTURE B-62-258

DRAWN BY MJH PLANS CK'D. MWB

45W" PRESTRESSED GIRDER DETAILS 1

SHEET 9

SCALE = 1.00

8

8

STATE PROJECT NUMBER

5730-00-80

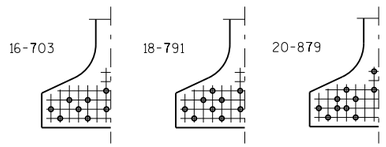

STANDARD ARRANGEMENTS TO RAISE CENTER OF GRAVITY TO AVOID DRAPING OF STRANDS

0.6" DIA. STRANDS

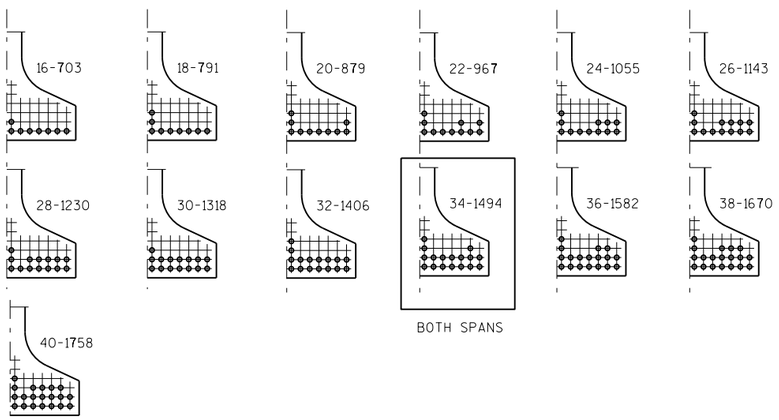

ARRANGEMENT AT ℄ SPAN - FOR GIRDERS WITH DRAPED STRANDS

0.6" DIA. STRANDS

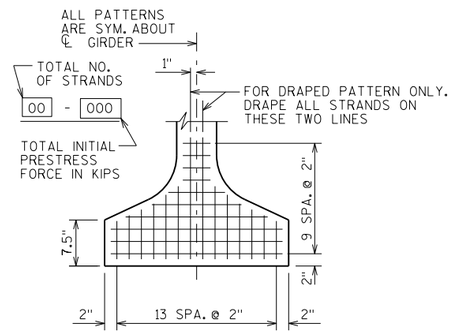

TYP. STRAND PATTERN

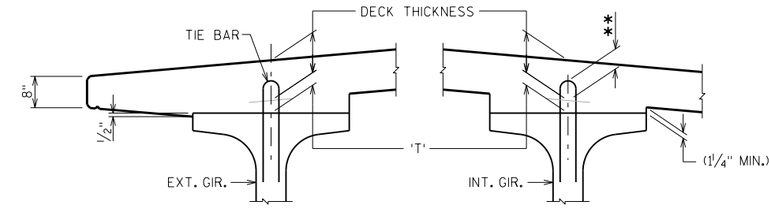

DECK HAUNCH DETAIL

IF 1¼" MINIMUM HAUNCH HEIGHT AT EDGE OF GIRDER CANNOT BE MAINTAINED, THE GRADE LINE MAY BE REVISED BY THE ENGINEER AT THE OPTION OF THE CONTRACTOR, THE PLAN DECK THICKNESS SHALL BE HELD. NOTIFY THE STRUCTURES SECTION IF THE GRADE LINE IS RAISED FROM THE PLAN PROFILE BY MORE THAN ½" OR,

** IF 3" MINIMUM DECK EMBEDMENT OF TIE BAR CANNOT BE OBTAINED.

TO DETERMINE 'T', ELEV. OF TOP OF GIR'S. AT ℄ OF SUBSTRUCTURE UNITS & AT 1/10 POINTS OF EACH SPAN SHALL BE TAKEN. THEN FOLLOW THIS PROCESS:

TOP OF DECK ELEV. AT FINAL GRADE
- TOP OF GIRDER ELEVATION
+ DEAD LOAD DEFLECTION
- DECK THICKNESS
= HAUNCH HEIGHT 'T'

NOTE: AN AVERAGE HAUNCH ('T') OF 2⅞" WAS USED IN THE QUANTITY "CONCRETE MASONRY BRIDGES".

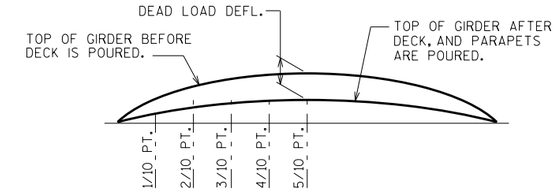

DEAD LOAD DEFLECTION DIAGRAM

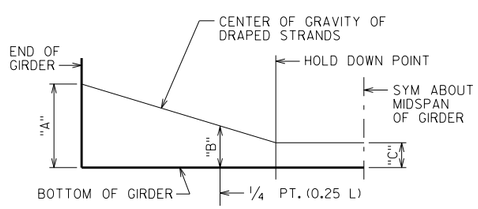

DRAPED STRAND PROFILE

*THE THEORETICAL INITIAL CAMBER VALUE AT THE TIME OF STRAND RELEASE AT MIDSPAN MULTIPLIED BY A FACTOR OF 1.4 TO ACCOUNT FOR CAMBER GROWTH FROM THE TIME OF STRAND RELEASE TO JOBSITE PLACEMENT.

SPAN	CAMBER (IN.) *
1	3.61
2	3.61

THESE VALUES ARE NOT TO BE USED IN DETERMINING 'T', USE ACTUAL GIRDER SHOTS.

THESE VALUES ARE FOR INFORMATIONAL PURPOSES ONLY.

NO.	DATE	REVISION	BY

STATE OF WISCONSIN
DEPARTMENT OF TRANSPORTATION
STRUCTURES DESIGN SECTION

STRUCTURE B-62-258

DRAWN BY MJH | PLANS CK'D. MWB

45W" PRESTRESSED GIRDER DETAILS 2

SHEET 10

63

SCALE = 1.00

8

8

STATE PROJECT NUMBER

5730-00-80

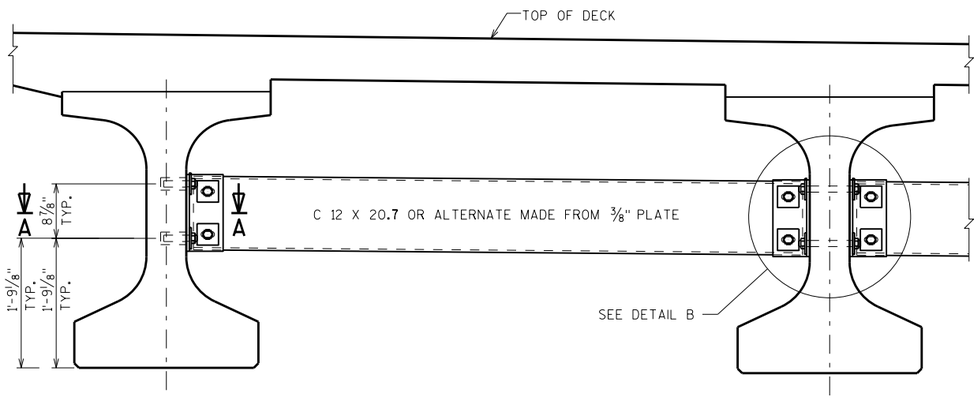

EXTERIOR GIRDER

INTERIOR GIRDER

PART TRANSVERSE SECTION AT DIAPHRAGM

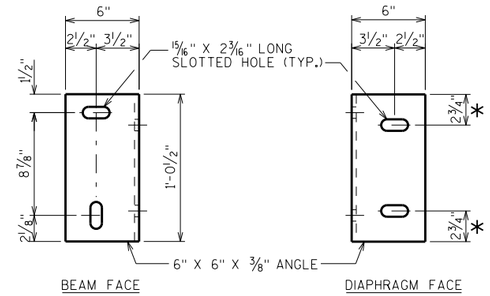

BEAM FACE

DIAPHRAGM FACE

DIAPHRAGM SUPPORT

* 2 1/2" FOR ALTERNATE PLATE DIAPHRAGM

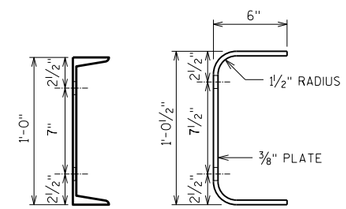

C12X20.7

ALTERNATE DIAPHRAGM

SECTION THRU DIAPHRAGM

NOTES

ALL DIAPHRAGM MATERIAL NOT EMBEDDED IN THE CONCRETE GIRDER SHALL BE PAID FOR AT THE UNIT PRICE BID FOR "STEEL DIAPHRAGMS B-62-258", EACH.

EACH DIAPHRAGM BETWEEN GIRDERS SHALL CONSTITUTE ONE UNIT.

ALL DIAPHRAGM STRUCTURAL STEEL SHALL BE ASTM A709 GRADE 36.

ALL DIAPHRAGM MATERIAL INCLUDING BOLTS, NUTS AND WASHERS SHALL BE GALVANIZED AFTER FABRICATION.

STEEL DIAPHRAGM TO CONCRETE WEB CONNECTION SHALL BE SNUG-TIGHT PLUS 1/4 TURN, UNLESS NOTED OTHERWISE. HIGH STRENGTH BOLTS FOR WEB CONNECTION SHALL MEET THE REQUIREMENTS FOR ASTM A325 OR ASTM A449.

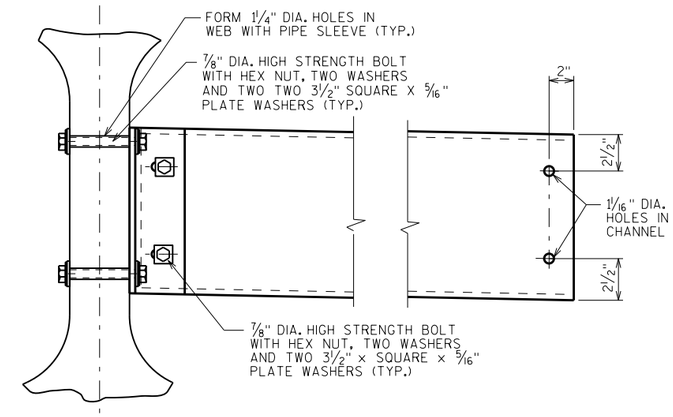

DETAIL B

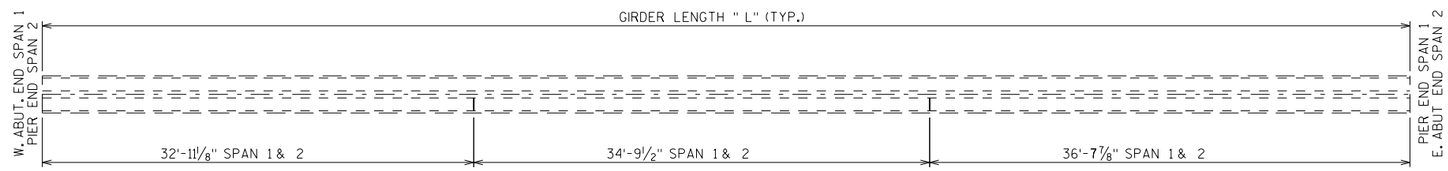

GIRDER 1

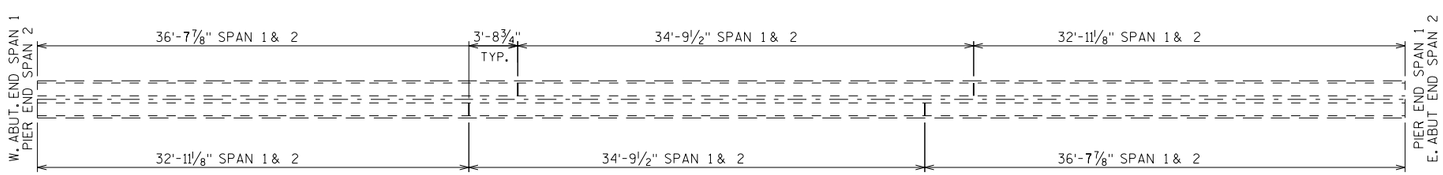

GIRDER 2 TO 4

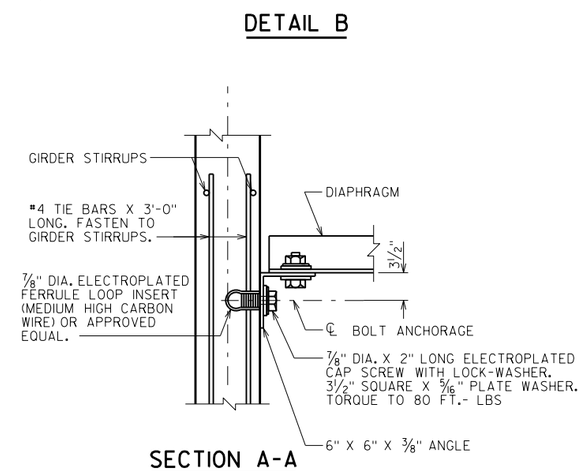

SECTION A-A

(FOR EXTERIOR ATTACHMENT)

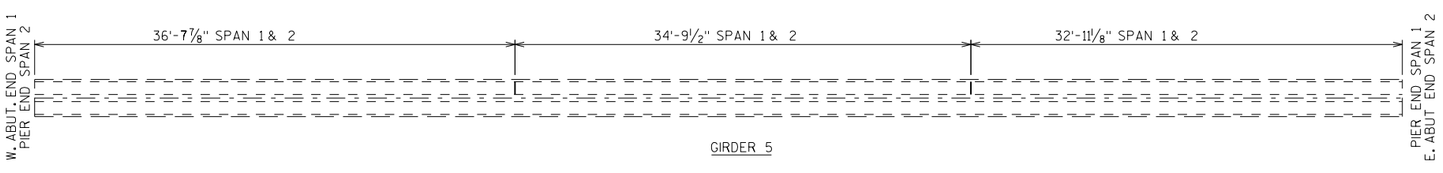

GIRDER 5

DIAPHRAGM SPACING

8

8

NO.	DATE	REVISION	BY

STATE OF WISCONSIN
DEPARTMENT OF TRANSPORTATION
STRUCTURES DESIGN SECTION

STRUCTURE B-62-258

DRAWN BY MJH PLANS CK'D. MWB

STEEL DIAPHRAGMS

SHEET 11

64

SCALE = 1.00

STATE PROJECT NUMBER

5730-00-80

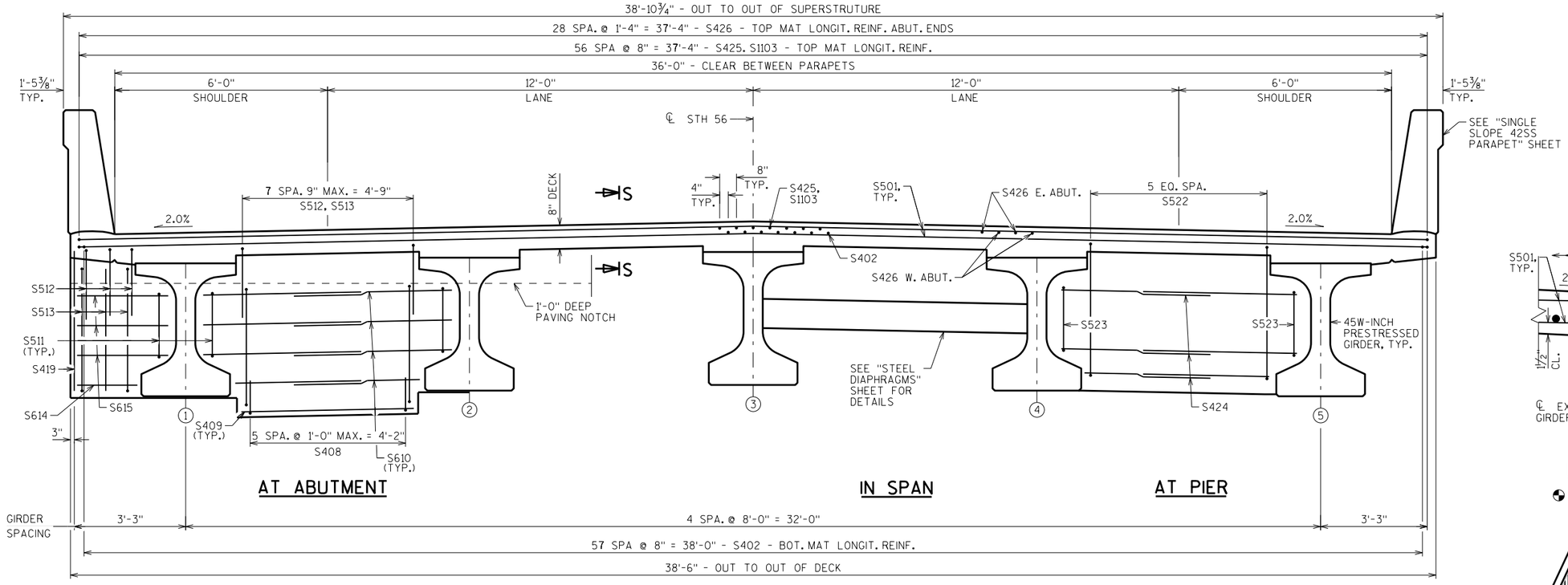

CROSS SECTION THRU SUPERSTRUCTURE

LOOKING EAST

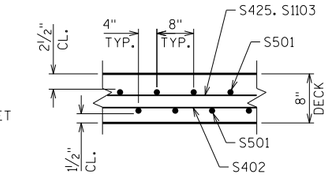

SECTION S-S

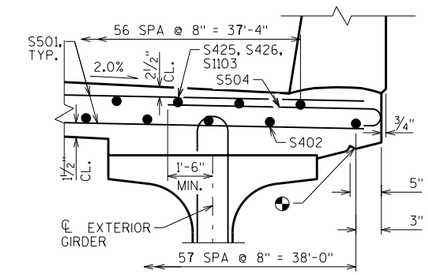

EDGE OF DECK DETAIL

¾" V-GROOVE. EXTEND V-GROOVE TO 6" FROM F.F. OF ABUT. DIAPHRAGM

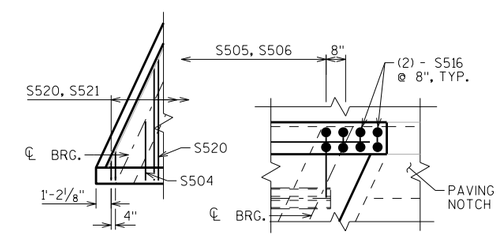

DETAIL E

DETAIL D

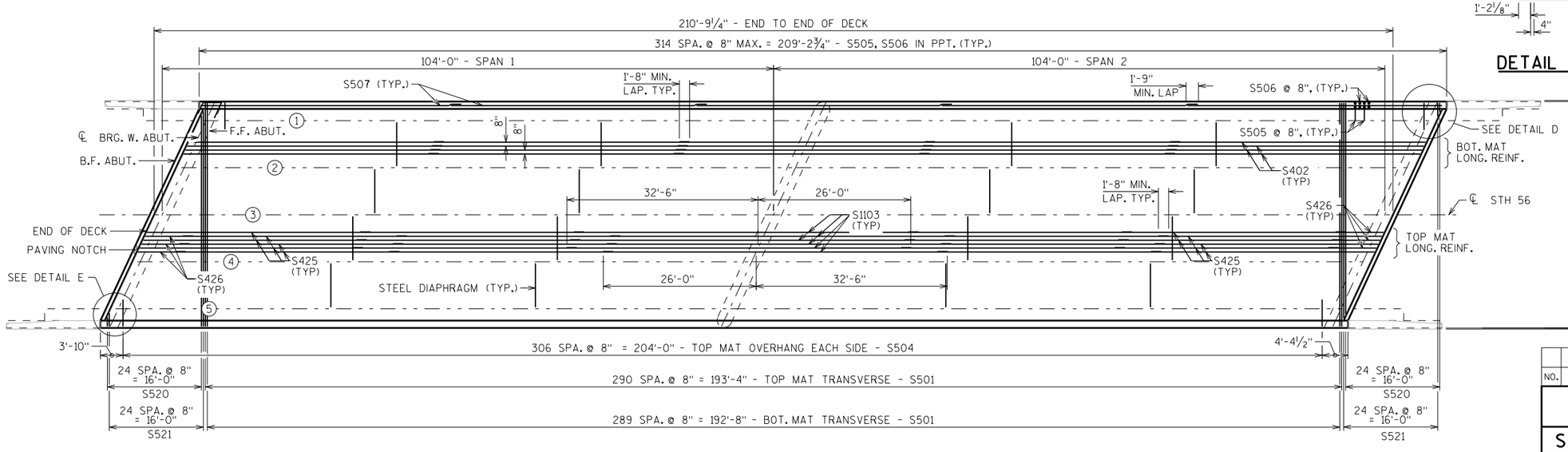

PLAN

8

8

NO.	DATE	REVISION	BY

STATE OF WISCONSIN
DEPARTMENT OF TRANSPORTATION
STRUCTURES DESIGN SECTION

STRUCTURE B-62-258

DRAWN BY MJH | PLANS CK'D. MWB

SUPERSTRUCTURE PLAN

SHEET 12

65

SCALE = 10.00

STATE PROJECT NUMBER

5730-00-80

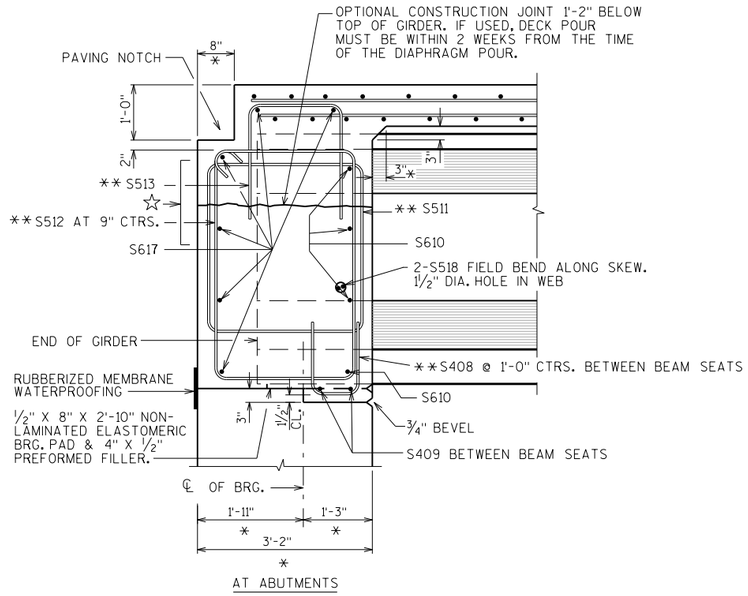

AT ABUTMENTS

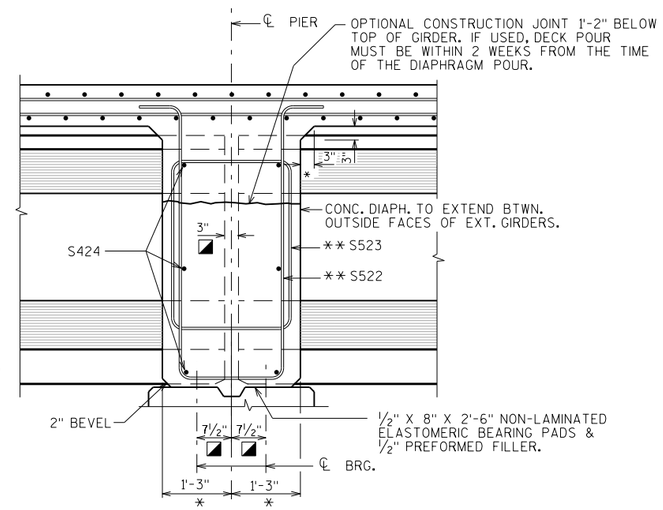

AT PIER

PART LONGIT. SECTION

* DIMENSION IS TAKEN NORMAL TO ℄ SUBSTRUCTURE UNITS.

** BARS PLACED PARALLEL TO GIRDERS SPACING PERPENDICULAR TO ℄ GIRDERS

☆ RUBBERIZED MEMBRANE WATERPROOFING. PLACE IF OPTIONAL CONST. JOINT IS USED (COST INCLUDED WITH BID ITEM "CONCRETE MASONRY BRIDGES")

◪ DIMENSION IS TAKEN PARALLEL TO ℄ OF GIRDER

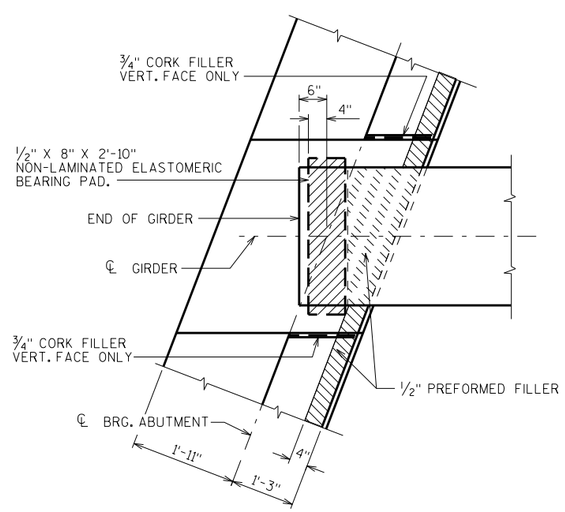

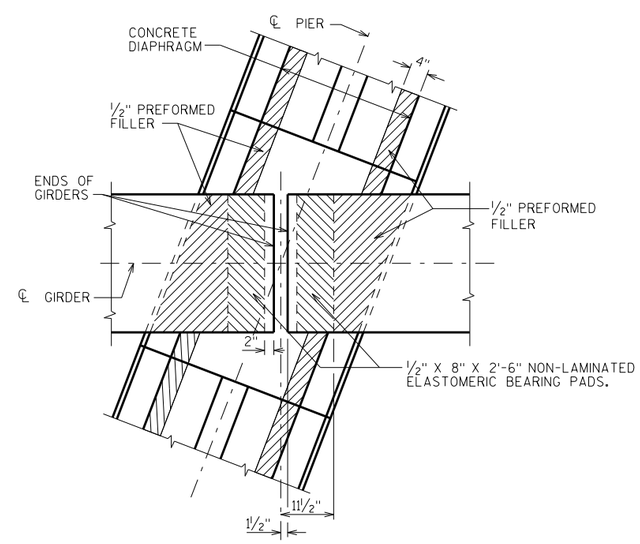

BEARING PAD DETAIL

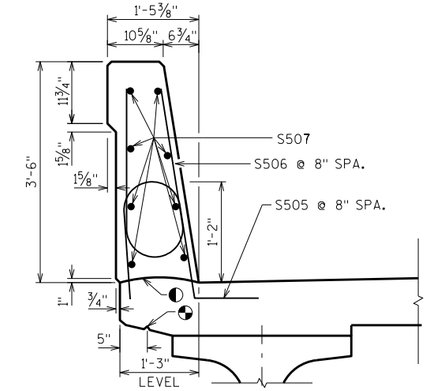

SECTION THRU PARAPET

◐ CONSTR. JT. - STRIKE OFF AS SHOWN

◕ ¾" V-GROOVE. EXTEND V-GROOVE TO 6" FROM F.F. OF ABUT. DIAPHRAGM

V-GROOVES ARE REQUIRED.

NO.	DATE	REVISION	BY

STATE OF WISCONSIN
DEPARTMENT OF TRANSPORTATION
STRUCTURES DESIGN SECTION

STRUCTURE B-62-258

DRAWN BY MJH | PLANS CK'D. MWB

SUPERSTRUCTURE DETAILS 1

SHEET 13

66

8

8

SCALE = 1.50

STATE PROJECT NUMBER
5730-00-80

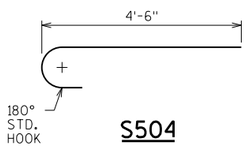

S504

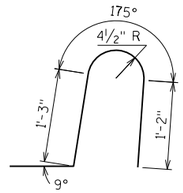

S505

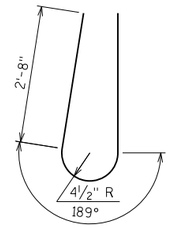

S506

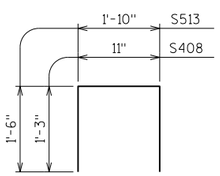

S408,S513

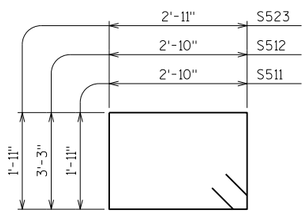

S511, S512, S523

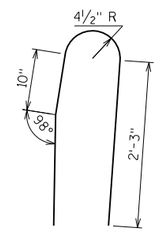

S516

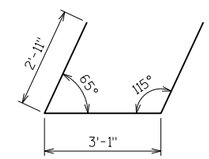

S615

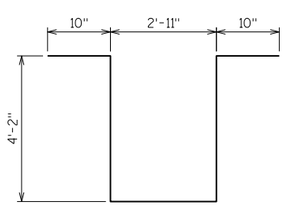

S522

BILL OF BARS

NOTE: THE FIRST OR FIRST TWO DIGITS OF THE BAR MARK SIGNIFIES THE BAR SIZE

BAR MARK	COAT	NO. REQ'D	LENGTH	BENT	BAR SERIES	LOCATION
S501	X	581	38'-0"			DECK - TRANSVERSE - TOP & BOTTOM
S402	X	290	43'-5"			DECK - LONGITUDINAL - BOTTOM
S1103	X	57	58'-6"			DECK - LONGITUDINAL - TOP
S504	X	614	5'-1"	X		DECK - OVERHANG
S505	X	630	4'-5"	X		DECK & PPT. - VERT.
S506	X	638	6'-8"	X		PPT. - VERT.
S507	X	64	54'-7"			PPT - HORIZ.
S408	X	48	3'-4"	X		ABUT. DIAPH - VERT. - BTW. BEAM SEATS
S409	X	16	4'-5"			ABUT. DIAPH - HORIZ. - BTW. BEAM SEATS
S610	X	32	5'-0"			ABUT. DIAPH - HORIZ. - F.F. - ABUT. BTWNS. GIRDERS
S511	X	20	10'-2"	X		ABUT. DIAPH - VERT. UNDER FLANGES
S512	X	76	12'-10"	X		ABUT. DIAPH - VERT. BTWNS. GIRDERS
S513	X	76	4'-7"	X		ABUT. DIAPH. - DECK - VERT.
S614	X	4	2'-2"			ABUT. DIAPH. HORIZ.-ENDS-BOT.
S615	X	12	7'-9"	X		ABUT. DIAPH. ENDS - HORIZ.
S516	X	8	5'-10"	X		DECK & PPT. - VERT. - AT PAVING NOTCH
S617	X	6	42'-6"			ABUT. DIAPH - HORIZ. - B.F. - ABUT.
S518	X	20	6'-0"			ABUT. DIAPH - HORIZ. - THRU GIRS.
S419	X	8	3'-6"			ABUT. DIAPH - VERT. CORNERS
S520	X	50	18'-8"		⚠	DECK - TRANS. - TOP
S521	X	50	19'-5"		⚠	DECK - TRANS. - BOT.
S522	X	24	12'-5"	X		PIER DIAPH. - VERT. - BTWN. GIRDERS
S523	X	8	10'-4"	X		PIER DIAPH. - VERT. - UNDER FLANGES
S424	X	48	4'-8"			PIER DIAPH. - HORIZ.
S425	X	228	38'-0"			DECK - LONGITUDINAL - TOP
S426	X	58	8'-2"			DECK - LONGITUDINAL - TOP MAT - ABUT. ENDS

⚠ LENGTH SHOWN FOR BAR IS AN AVERAGE LENGTH AND SHOULD ONLY BE USED FOR BAR WEIGHT CALCULATIONS. SEE BAR SERIES TABLE FOR ACTUAL LENGTHS.

BAR SERIES TABLE

BAR MARK	NO. REQ'D	LENGTH
S520	2 SERIES OF 25	1'-6" TO 35'-10"
S521	2 SERIES OF 25	2'-3" TO 36'-7"

8

TOP OF DECK

TOD'S	℄ BRG W ABUT	1/10	2/10	3/10	4/10	5/10	6/10	7/10	8/10	9/10	℄ PIER	1/10	2/10	3/10	4/10	5/10	6/10	7/10	8/10	9/10	℄ BRG E ABUT
L EOD	821.97	822.03	822.08	822.13	822.18	822.23	822.29	822.34	822.39	822.44	822.49	822.55	822.60	822.65	822.70	822.75	822.81	822.86	822.91	822.96	823.01
GIR 1	822.01	822.06	822.11	822.16	822.22	822.27	822.32	822.37	822.42	822.48	822.53	822.58	822.63	822.68	822.74	822.79	822.84	822.89	822.94	823.00	823.05
GIR 2	822.15	822.20	822.25	822.30	822.36	822.41	822.46	822.51	822.56	822.62	822.67	822.72	822.77	822.82	822.88	822.93	822.98	823.03	823.08	823.14	823.19
GIR 3 / CROWN	822.29	822.34	822.39	822.45	822.50	822.55	822.60	822.65	822.71	822.76	822.81	822.86	822.91	822.97	823.02	823.07	823.12	823.17	823.23	823.28	823.33
GIR 4	822.11	822.16	822.22	822.27	822.32	822.37	822.42	822.48	822.53	822.58	822.63	822.68	822.74	822.79	822.84	822.89	822.94	823.00	823.05	823.10	823.15
GIR 5	821.93	821.98	822.04	822.09	822.14	822.19	822.24	822.30	822.35	822.40	822.45	822.50	822.56	822.61	822.66	822.71	822.76	822.82	822.87	822.92	822.97
R EOD	821.89	821.94	821.99	822.04	822.09	822.15	822.2	822.25	822.30	822.35	822.41	822.46	822.51	822.56	822.61	822.67	822.72	822.77	822.82	822.87	822.93

8

NO.	DATE	REVISION	BY

STATE OF WISCONSIN
DEPARTMENT OF TRANSPORTATION
STRUCTURES DESIGN SECTION

STRUCTURE B-62-258

DRAWN BY MJH PLANS CK'D. MWB

SUPERSTRUCTURE DETAILS 2

SHEET 14

67

SCALE = 1.50

STATE PROJECT NUMBER
5730-00-80

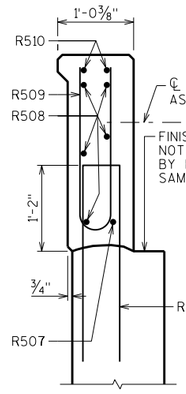

SECTION A-A

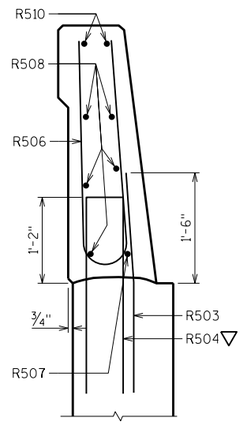

SECTION B-B

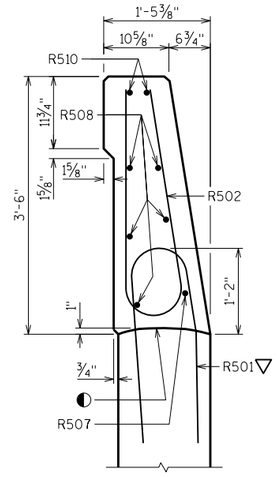

SECTION C-C

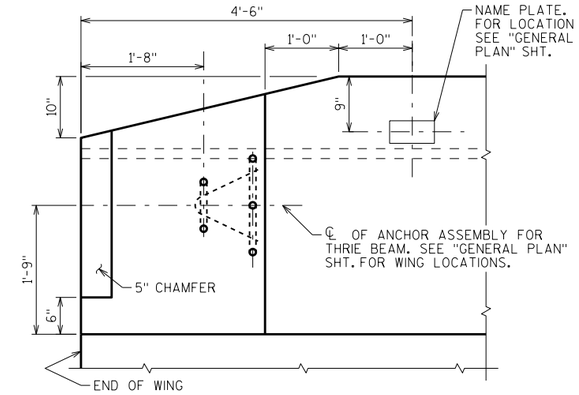

PARAPET END TREATMENT DETAIL

LOOKING AT INSIDE FACE OF PARAPET

BILL OF BARS

FOR ABUTMENT PARAPETS

BAR MARK	COAT	WEST ABUT.	EAST ABUT.	LENGTH	BENT	BAR SERIES	LOCATION
R501	X	22	22	5'-10	X		PARAPET VERT.
R502	X	22	22	6'-8"	X		PARAPET VERT.
R503	X	22	22	3'-0"	X		PARAPET VERT.
R504	X	34	34	5'-7"	X		PARAPET VERT.
R505	X	10	10	6'-5"	X		PARAPET VERT.
R506	X	12	12	6'-6"	X		PARAPET VERT.
R507	X	2	2	15'-6"	X		PARAPET HORIZ.
R508	X	10	10	15'-8"			PARAPET HORIZ.
R509	X	12	12	5'-5"	X	◭	PARAPET VERT.
R510	X	4	4	15'-8"	X		PARAPET HORIZ.

◭ LENGTH SHOWN FOR BAR IS AN AVERAGE LENGTH AND SHOULD ONLY BE USED FOR BAR WEIGHT CALCULATIONS. SEE BAR SERIES TABLE FOR ACTUAL LENGTHS.

BAR SERIES TABLE

BAR MARK	NO. REQ'D	LENGTH
R509	4 SERIES OF 6	4'-9" TO 6'-1"

BUNDLE AND TAG EACH SERIES SEPARATELY.

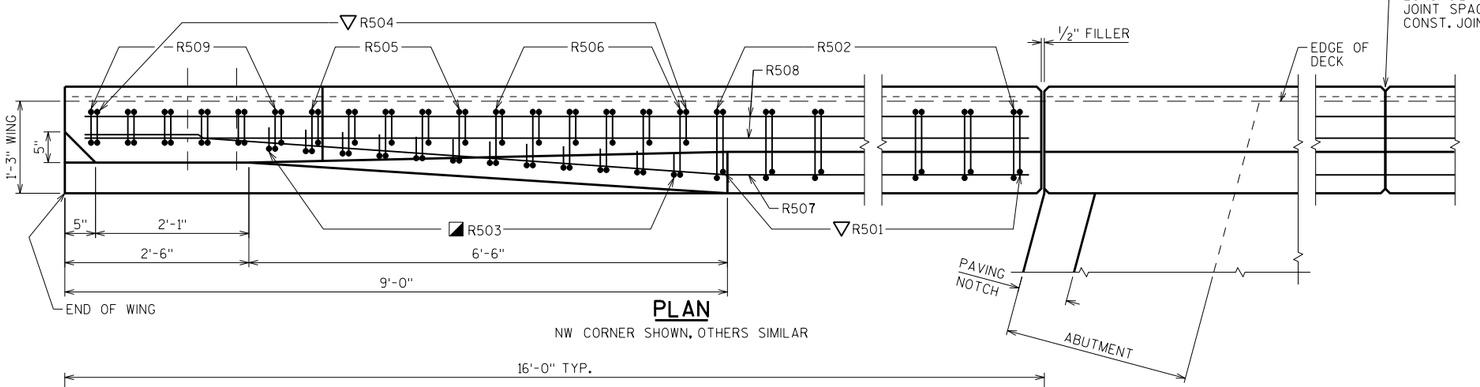

PLAN

NW CORNER SHOWN, OTHERS SIMILAR

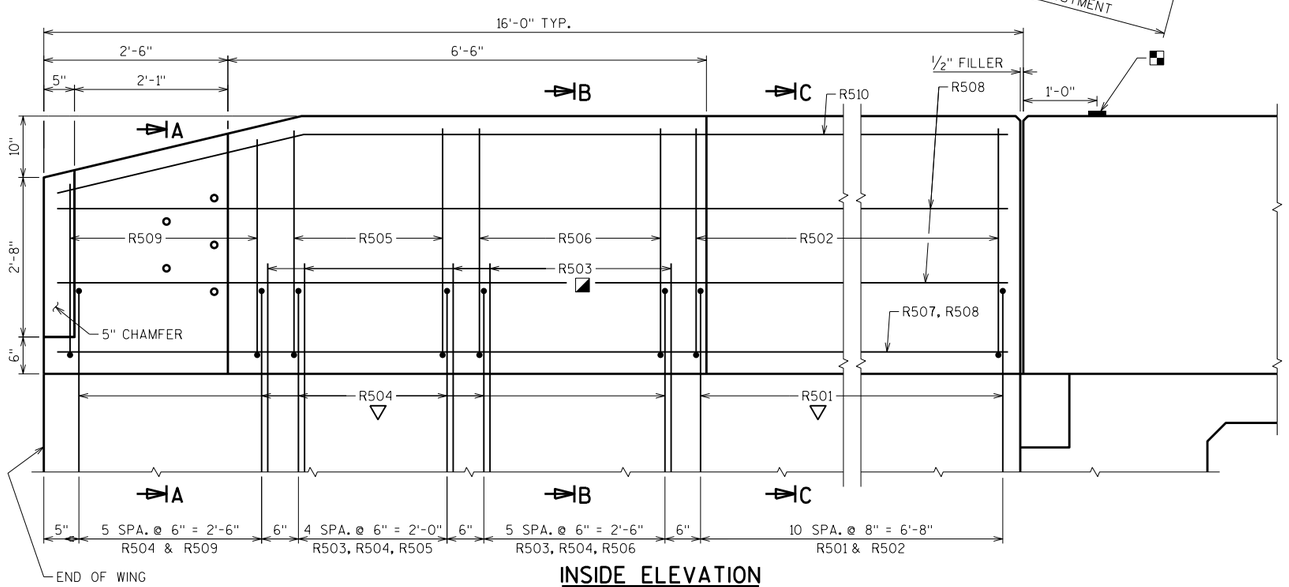

INSIDE ELEVATION

NW CORNER SHOWN, OTHERS SIMILAR

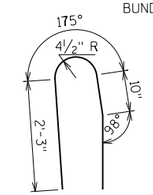

R501

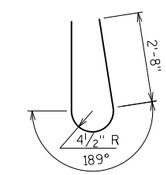

R502

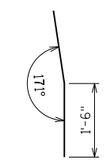

R503

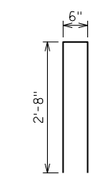

R504

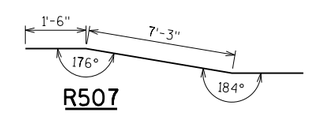

R507

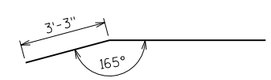

R510

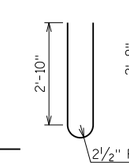

R505

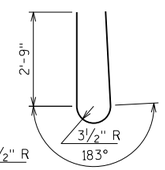

R506

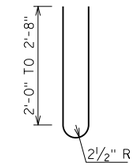

R509

BENCH MARK CAP

◐ CONST. JOINT - STRIKE OFF AS SHOWN

◪ R503 BARS MAY BE PLACED AFTER CONCRETE IS POURED BUT BEFORE INITIAL SET HAS TAKEN PLACE. USE CARE TO PLACE R503 BARS CORRECTLY ALONG TRANSITION OF PARAPET.

▽ R501 AND R504 BARS TO BE TIED TO WING STEEL BEFORE WING IS POURED.

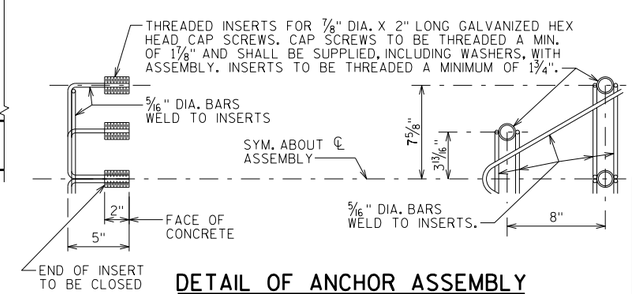

DETAIL OF ANCHOR ASSEMBLY

NOTE: HEX HEAD CAP SCREWS & WASHERS TO BE GALVANIZED IN ACCORDANCE WITH AASHTO M232 CLASS C.

ASSEMBLY SHALL BE BID ITEM "ANCHOR ASSEMBLIES FOR STEEL PLATE BEAM GUARD", EACH.

NO.	DATE	REVISION	BY

STATE OF WISCONSIN
DEPARTMENT OF TRANSPORTATION
STRUCTURES DESIGN SECTION

STRUCTURE B-62-258

DRAWN BY MJH | PLANS CK'D. MWB

SINGLE SLOPE PARAPET 42SS

SHEET 15

68

8

8

SCALE = 1.00

EARTHWORK

STATION	REAL STATION	DISTANCE	AREA (SF)		INCREMENTAL VOL (CY) (UNADJUSTED)		CUMULATIVE VOL (CY)		
			CUT	FILL	CUT	FILL	CUT	EXPANDED FILL	MASS ORDINATE
							1.00	1.30	
					NOTE 1	NOTE 3	NOTE 1		NOTE 8
151+30	15130.00	0.00	70.98	0.00	0	0	0	0	0
151+50	15150.00	20.00	79.36	82.09	56	30	56	39	17
152+00	15200.00	50.00	86.02	196.76	153	258	209	374	-165
152+50	15250.00	50.00	90.01	304.01	163	464	372	978	-606
152+65.46	15265.46	15.46	94.52	344.19	53	186	425	1,219	-794
152+82.249	15282.25	16.79	100.93	379.54	61	225	486	1,512	-1,026
152+82.25	15282.25	0.00	100.93	379.54	0	0	486	1,512	-1,026
152+90.46	15290.46	8.21	103.06	370.40	31	114	517	1,660	-1,143
153+00	15300.00	9.54	105.63	352.87	37	128	554	1,827	-1,273
153+07.25	15307.25	7.25	108.40	325.98	29	91	583	1,945	-1,362
153+15.46	15315.46	8.21	109.21	316.68	33	98	616	2,072	-1,456
153+24.842	15324.84	9.38	103.48	329.24	37	112	653	2,218	-1,565
153+32.25	15332.25	7.41	98.75	329.62	28	90	681	2,335	-1,654
153+41.63	15341.63	9.38	97.90	332.76	34	115	715	2,484	-1,769
153+84.779	15384.78	43.15	81.08	111.16	143	355	858	2,946	-2,088
Structure B-62-258									
156+12.221	15612.22	0.00	74.15	29.90	0	0	858	2,946	-2,088
156+50	15650.00	37.78	92.89	119.30	117	104	975	3,081	-2,106
156+64.75	15664.75	14.75	96.91	81.20	52	55	1,027	3,153	-2,126
156+81.54	15681.54	16.79	110.25	78.78	64	50	1,091	3,218	-2,127
156+89.75	15689.75	8.21	124.39	82.67	36	25	1,127	3,250	-2,123
157+00	15700.00	10.25	145.26	88.26	51	32	1,178	3,292	-2,114
157+06.54	15706.54	6.54	145.24	114.05	35	25	1,213	3,324	-2,111
157+14.75	15714.75	8.21	147.14	126.00	44	36	1,257	3,371	-2,114
157+31.54	15731.54	16.79	140.13	134.75	89	81	1,346	3,476	-2,130
157+50	15750.00	18.46	102.61	97.26	83	79	1,429	3,579	-2,150
158+00	15800.00	50.00	126.76	61.25	212	147	1,641	3,770	-2,129
158+55	15855.00	55.00	79.30	79.92	210	144	1,851	3,957	-2,106
158+94.978	15894.98	39.98	1.02	0.00	59	59	1,910	4,034	-2,124

EXISTING ASPHALTIC PAVEMENT IS INCLUDED IN COMMON EXCAVATION TOTALS

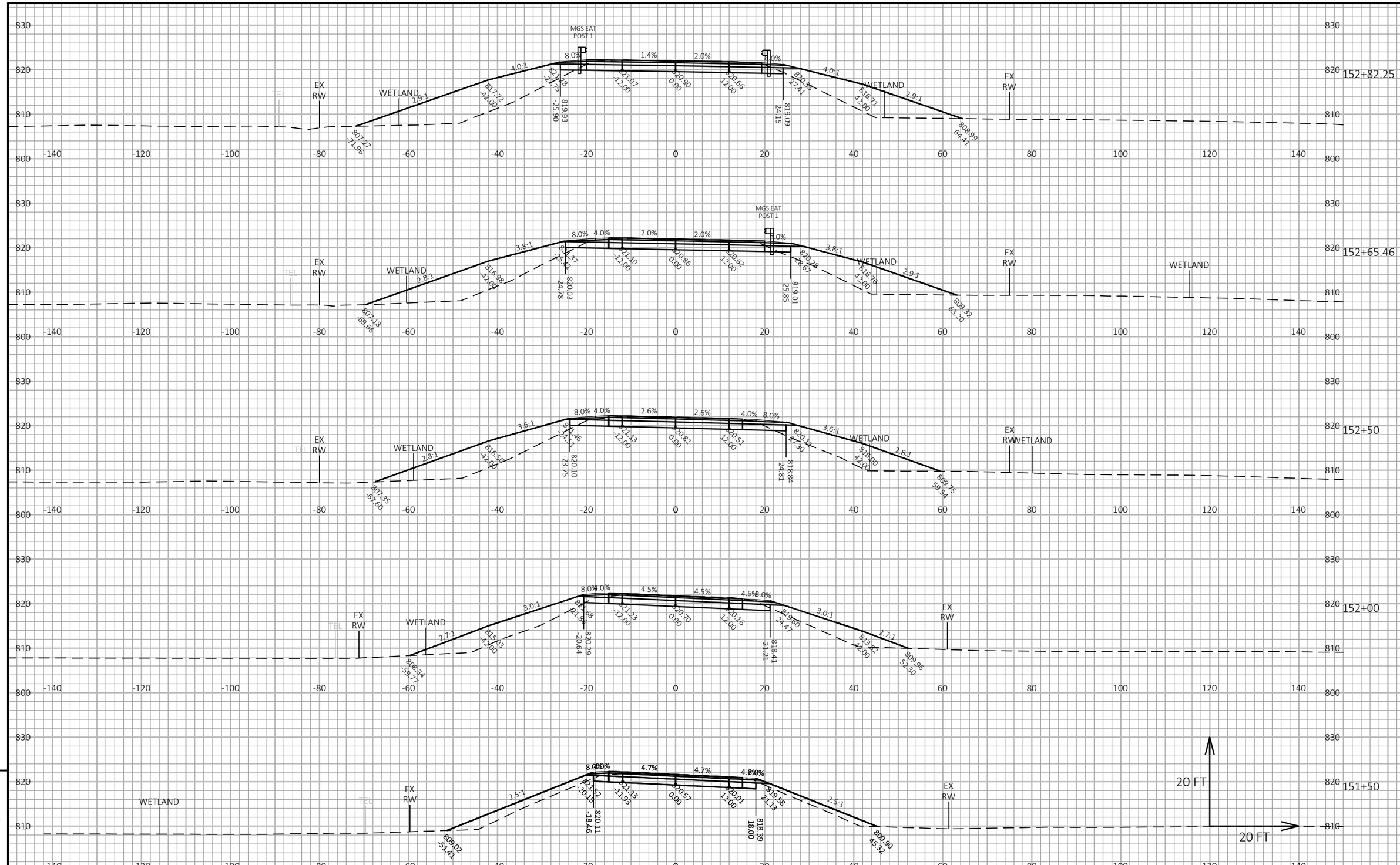

9

9

PROJECT NO: 5730-00-80	HWY: STH 56	COUNTY: VERNON	CROSS SECTIONS: STH 56	SHEET 70	E

FILE NAME : P:\UZ\W\WITSW\146610\CIVIL 3D\57300000\SHEETSPLAN\090201_XS.DWG
LAYOUT NAME - 01
PLOT DATE : 9/27/2021 12:38 PM
PLOT BY : TOREY LEONARD
PLOT NAME :
PLOT SCALE : 1 IN:20 FT HORZ. / 1 IN:20 FT VERT.

WISDOT/CADDS SHEET 49

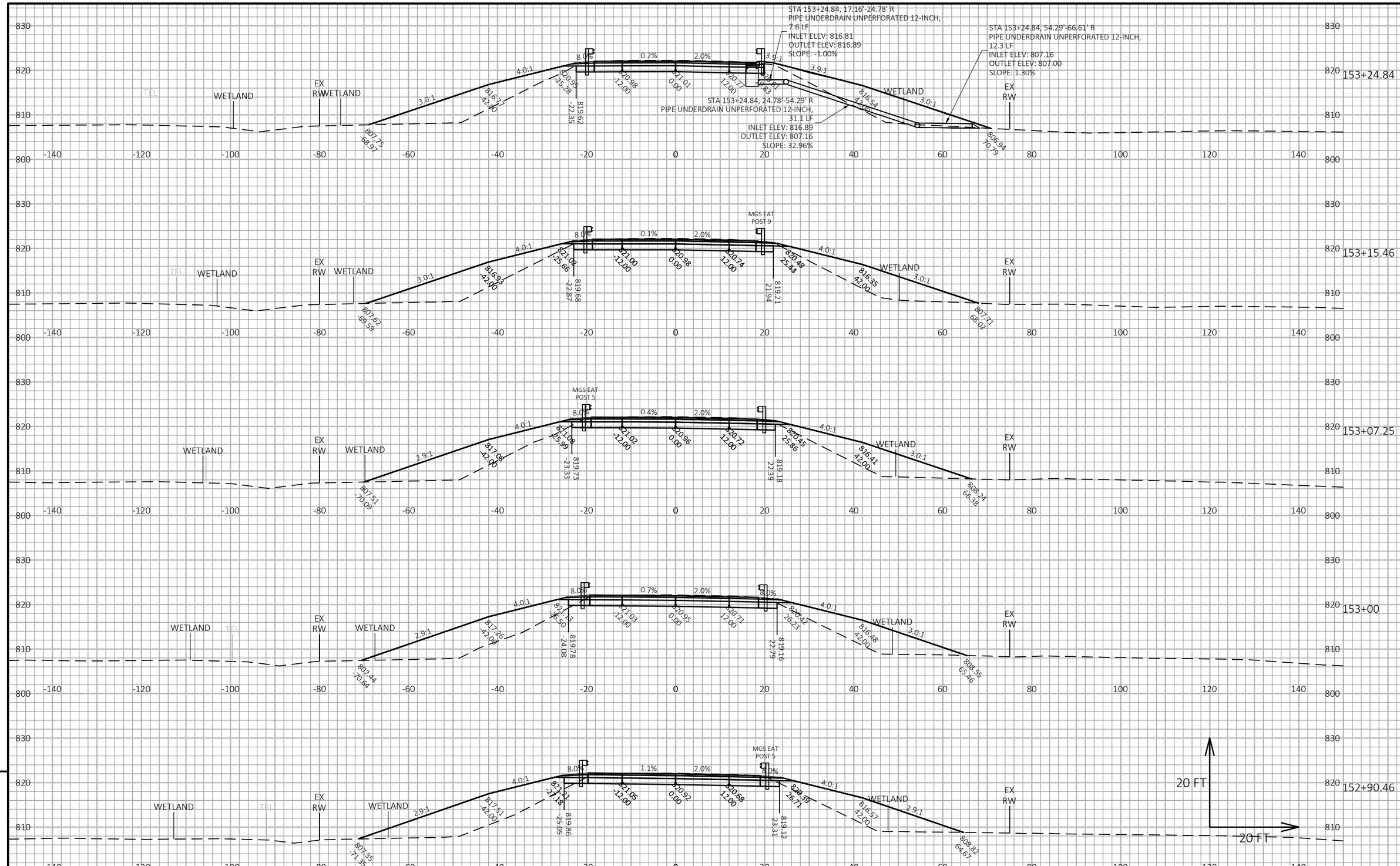

PROJECT NO: 5730-00-80	HWY: STH 56	COUNTY: VERNON	CROSS SECTIONS: STH 56	SHEET 71	E

FILE NAME : P:\UZ\W\WITSW\146610\CIVIL 3D\57300000\SHEETSPLAN\090201_XS.DWG
LAYOUT NAME - 02
PLOT DATE : 9/27/2021 12:38 PM
PLOT BY : TOREY LEONARD
PLOT NAME :
PLOT SCALE : 1 IN:20 FT HORZ. / 1 IN:20 FT VERT.
WISDOT/CADDS SHEET 49

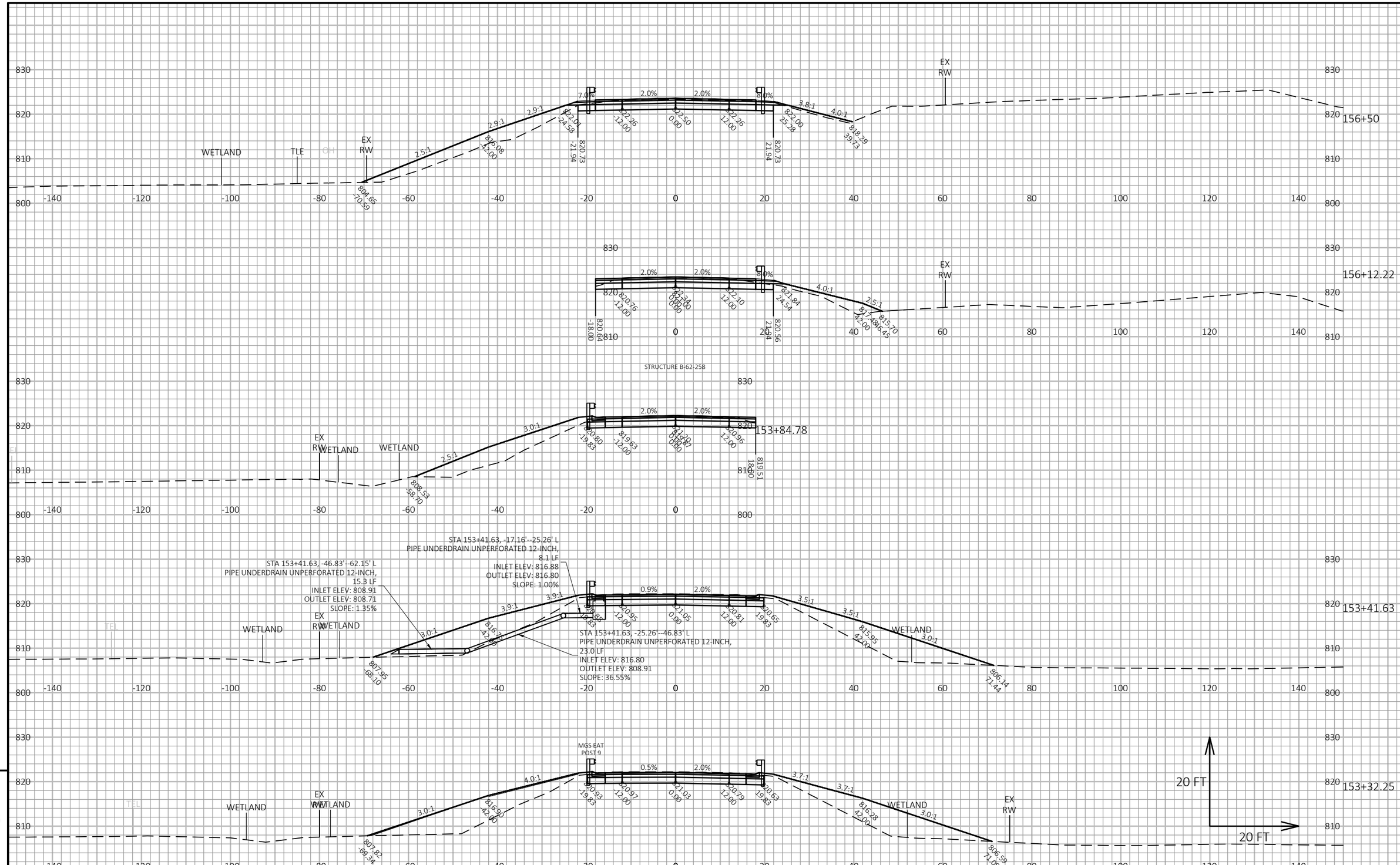

9

PROJECT NO: 5730-00-80	HWY: STH 56	COUNTY: VERNON	CROSS SECTIONS: STH 56	SHEET 72	E

FILE NAME : P:\UZ\W\WITSW\146610\CIVIL 3D\57300000\SHEETSPLAN\090201_XS.DWG
LAYOUT NAME - 03
PLOT DATE : 9/27/2021 12:38 PM
PLOT BY : TOREY LEONARD
PLOT NAME :
PLOT SCALE : 1 IN:20 FT HORZ. / 1 IN:20 FT VERT.
WISDOT/CADDS SHEET 49

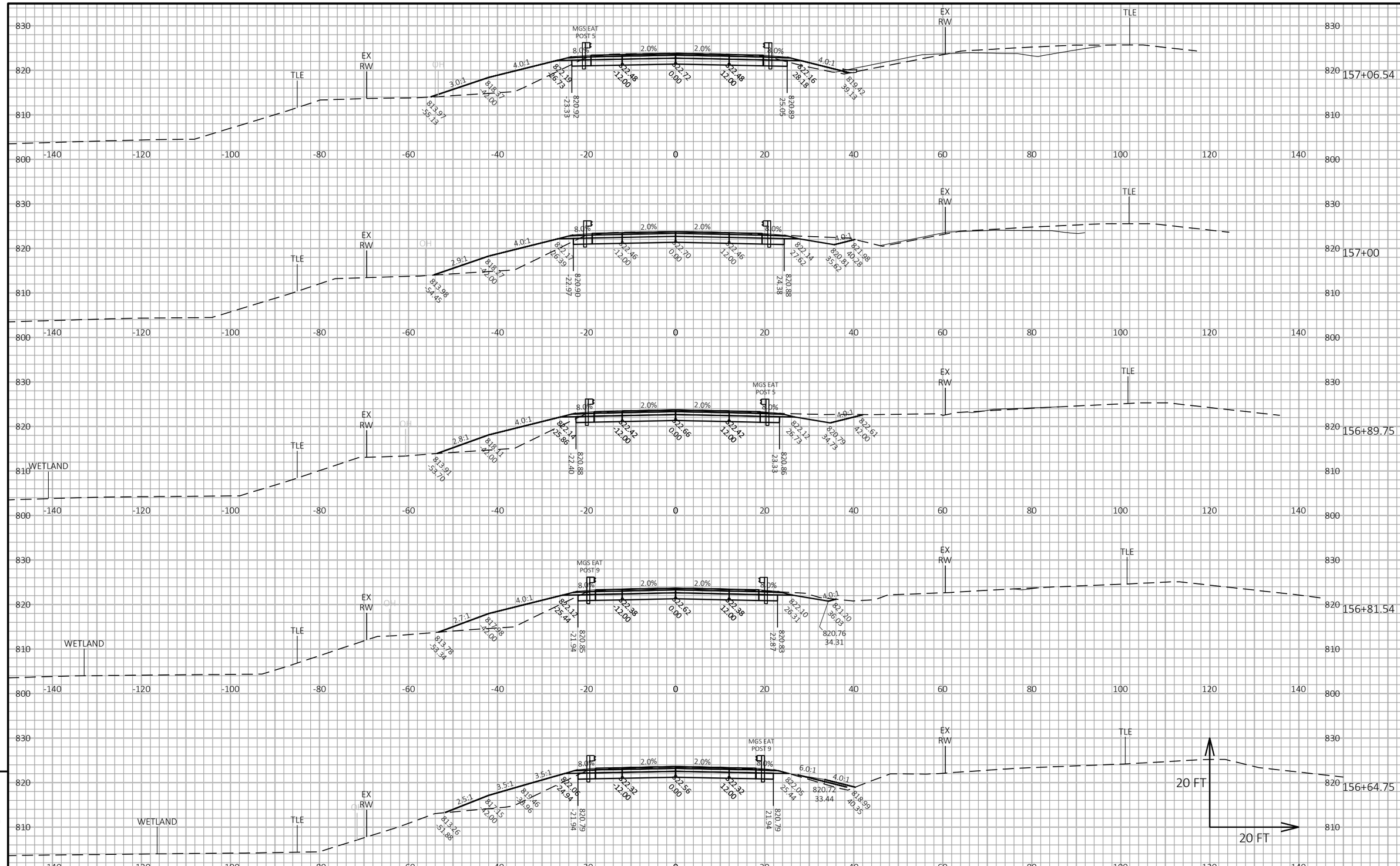

PROJECT NO: 5730-00-80	HWY: STH 56	COUNTY: VERNON	CROSS SECTIONS: STH 56	SHEET 73	E

FILE NAME : P:\UZ\W\WITSW\146610\CIVIL 3D\57300000\SHEETSPLAN\090201_XS.DWG
LAYOUT NAME - 04
PLOT DATE : 9/27/2021 12:38 PM
PLOT BY : TOREY LEONARD
PLOT NAME :
PLOT SCALE : 1 IN:20 FT HORZ. / 1 IN:20 FT VERT.
WISDOT/CADDS SHEET 49

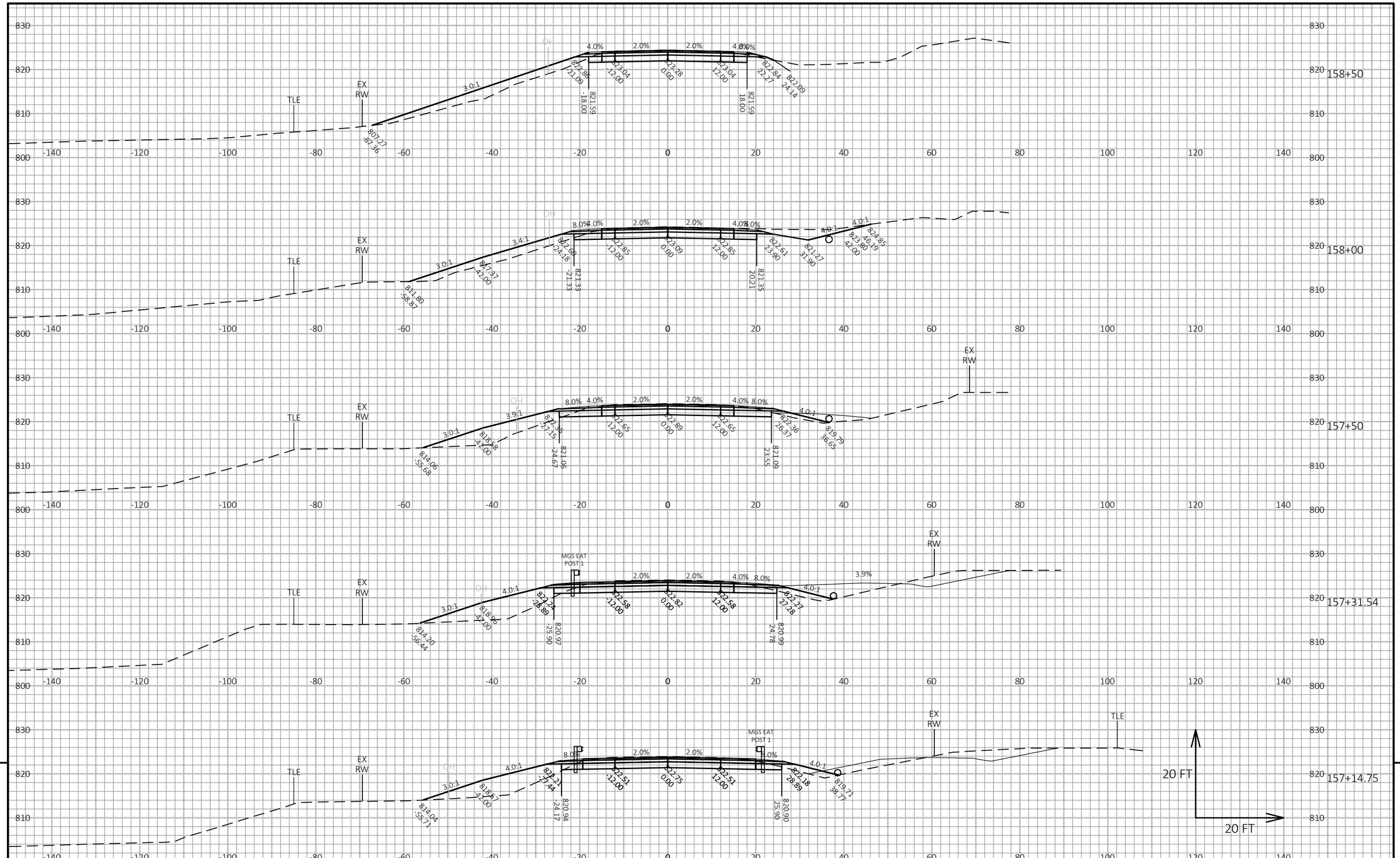

PROJECT NO: 5730-00-80	HWY: STH 56	COUNTY: VERNON	CROSS SECTIONS: STH 56	SHEET 74	E

FILE NAME : P:\UZ\W\WITSW\146610\CIVIL 3D\57300000\SHEETSPLAN\090201_XS.DWG
LAYOUT NAME - 05
PLOT DATE : 9/27/2021 12:38 PM
PLOT BY : TOREY LEONARD
PLOT NAME :
PLOT SCALE : 1 IN:20 FT HORZ. / 1 IN:20 FT VERT.
WISDOT/CADDS SHEET 49

Notes

Wisconsin Department of Transportation

Dedicated people creating transportation solutions through innovation and exceptional service.

http://www.dot.wisconsin.gov