WIS MARCH 2022

PROJECT ID: 1166-08-79

WITH:

COUNTY: WAUSHARA

ORDER OF SHEETS

Section No.	1	Title
Section No.	2	Typical Sections and Details
Section No.	3	Estimate of Quantities
Section No.	3	Miscellaneous Quantities
~~Section No.~~	~~4~~	~~Right of Way Plat~~
Section No.	5	Plan and Profile
Section No.	6	Standard Detail Drawings
Section No.	7	Sign Plates
~~Section No.~~	~~8~~	~~Structure Plans~~
~~Section No.~~	~~9~~	~~Computer Earthwork Data~~
~~Section No.~~	~~9~~	~~Cross Sections~~

TOTAL SHEETS = 164

29

N

DESIGN DESIGNATION

A.A.D.T.	(2016)	=	6,400 (SB)
A.A.D.T.	(2045)	=	8,100 (SB)
D.H.V.	10.5%	=	850
D.D.		=	58/42
T.		=	17.4%
DESIGN SPEED		=	70 mph
ESALS		=	7,000,000

CONVENTIONAL SYMBOLS

PLAN

CORPORATE LIMITS
PROPERTY LINE
LOT LINE
LIMITED HIGHWAY EASEMENT
EXISTING RIGHT OF WAY
PROPOSED OR NEW R/W LINE
SLOPE INTERCEPT
REFERENCE LINE
EXISTING CULVERT
PROPOSED CULVERT (Box or Pipe)
COMBUSTIBLE FLUIDS — CAUTION
MARSH AREA
WOODED OR SHRUB AREA

PROFILE

GRADE LINE
ORIGINAL GROUND
MARSH OR ROCK PROFILE (To be noted as such) — ROCK
SPECIAL DITCH — LABEL
GRADE ELEVATION — 95.36
CULVERT (Profile View)

UTILITIES

ELECTRIC — E
FIBER OPTIC — FO
GAS — G
SANITARY SEWER — SAN
STORM SEWER — SS
TELEPHONE — T
WATER — W
UTILITY PEDESTAL
POWER POLE
TELEPHONE POLE

STATE OF WISCONSIN
DEPARTMENT OF TRANSPORTATION

PLAN OF PROPOSED IMPROVEMENT

PACKWAUKEE - COLOMA

MARQUETTE CL TO COTTONVILLE AVE, SB

IH 39
WAUSHARA COUNTY

STATE PROJECT NUMBER
1166-08-79

STATE PROJECT	FEDERAL PROJECT	
	PROJECT	CONTRACT
1166-08-79	WISC 2022254	1

END PROJECT
STA 409+22

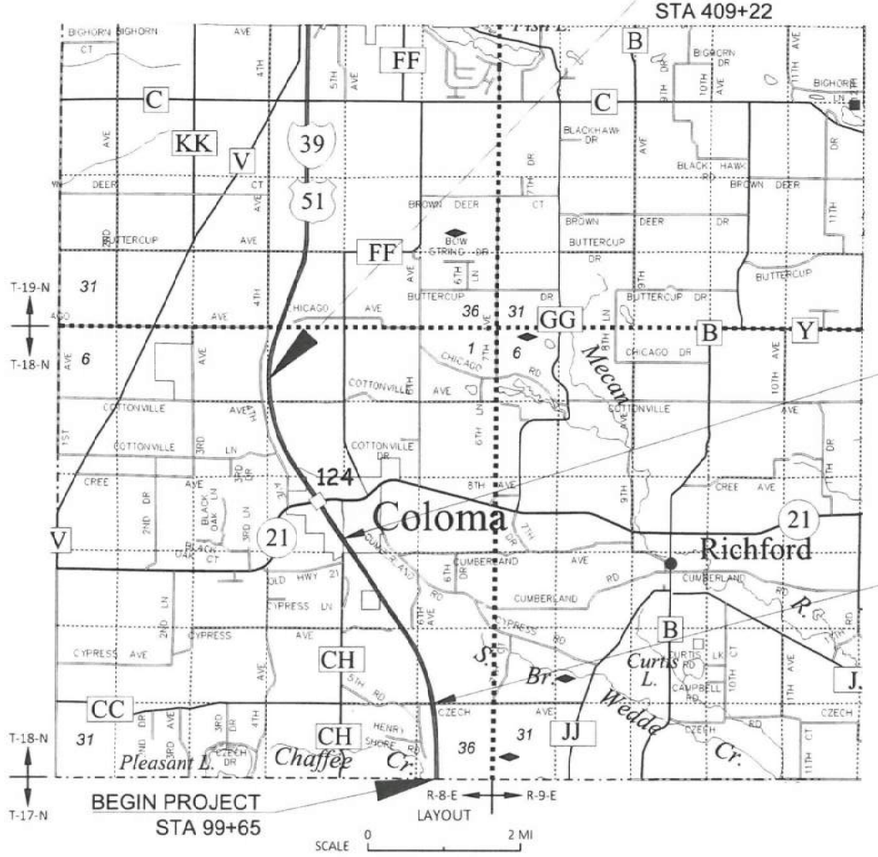

NET EXCEPTION TO RL LENGTH
STA 282+64 - STA 284+67
STRUCTURE B-69-007

NET EXCEPTION TO RL LENGTH
STA 151+97 - STA 153+08
STRUCTURE B-69-018

TOTAL NET LENGTH OF CENTERLINE = 5.86 MILES

HORIZONTAL POSITIONS SHOWN ON THIS PLAN ARE WISCONSIN COUNTY COORDINATES, WAUSHARA COUNTY, NAD83 (1991), IN U.S. SURVEY FEET. VALUES ARE GRID COORDINATES, GRID BEARINGS, AND GRID DISTANCES. GRID DISTANCES MAY BE USED AS GROUND DISTANCES.

Foth
Foth Infrastructure & Environment, LLC
5317 West Terrace Drive, Suite 400
Madison, WI 53718
Phone: (608)242-5900

ORIGINAL PLANS PREPARED BY
FOTH INFRASTRUCTURE & EVNVIRONMENT, LLC

WISCONSIN
CHRIS A. SAXBY
E-32744
MADISON, WI
PROFESSIONAL ENGINEER

DATE: 9/23/21 (Professional Engineer Signature)

STATE OF WISCONSIN
DEPARTMENT OF TRANSPORTATION

PREPARED BY

Surveyor	Foth
Designer	Foth
Project Manager	JEFFREY STEWART
Regional Examiner	NC REGION
Regional Supervisor	MIKE KRETSCHMER

APPROVED FOR THE DEPARTMENT

DATE: 9/23/21 (Signature)

E

GENERAL NOTES

WHEN THE QUANTITY OF THE ITEMS OF BASE AGGREGATE, SUBBASE OR HMA PAVEMENT IS MEASURED FOR PAYMENT BY THE TON OR CUBIC YARD, THE DEPTH OR THICKNESS OF THE LAYERS SHOWN ON THE PLAN IS APPROXIMATE AND THE ACTUAL THICKNESS WILL DEPEND ON THE DISTRIBUTION OF THE MATERIAL AS DIRECTED BY THE ENGINEER.

CONTRACTOR WILL BE RESPONSIBLE FOR RESHAPING AND SEEDING ANY PREVIOUSLY GRASSED AREAS WHICH ARE DISTURBED BY HIS OPERATION OUTSIDE OF THE NORMAL CONSTRUCTION LIMITS.

PURSUANT TO CHAPTER 59 OF THE WISCONSIN STATUTES, THE CONTRACTOR SHALL CAREFULLY MAKE A SEARCH FOR EVIDENCE OF A LANDMARK IN ALL AREAS WHERE SUCH A LANDMARK MAY EXIST.

WORK WITH UTMOST CARE AND PROTECT ALL SURVEY MARKERS.REMOVAL OF ANY SURVEY MARKER IS TO BE WITH THE APPROVAL OF THE ENGINEER.

THE LOCATIONS OF EXISTING AND PROPOSED UTILITY INSTALLATIONS AS SHOWN ON THE PLANS ARE APPROXIMATE. THERE MAY BE OTHER UTILITY INSTALLATIONS WITHIN THE PROJECT AREA THAT ARE NOT SHOWN.

Doug Vosberg
ATC Management, Inc. - Electricity-transmission
2489 Rinden Road
Cottage Grove, WI 53527
(608) 877-7650
dvosberg@atcllc.com

Corey Clinch
Alliant Energy - Electricity
880 N Wisconsin Street
Berlin, WI 54923
(920) 361-5668
(920) 290-6356 mobile
coreyclinch@alliantenergy.com

Larry Koch
We Energies - Gas/Petroleum
1921 8th St. South
Wisconsin Rapids, WI 54494
(715) 421-7249
(715) 421-9293 mobile
larry.koch@we-energies.com

Duane Moore
Adams-Columbia Electric Cooperative - Electricity
401 E Lake St
Friendship, WI 53934
(800) 831-8629 ext 424
dmoore@acecwi.com

Jason Noska
Union Telephone Company - Communication Line
100 W North St
P.O. Box 96
Plainfield, WI 54966-0096
(608) 335-6301
(715) 570-3728 mobile
jnoska@uniontel.net

DNR CONTACTS
CASEY L. JONES
ENVIRONMENTAL ANALYSIS & REVIEW SPECIALIST
WISCONSIN DEPARTMENT OF NATURAL RESOURCES
473 GRIFFITH AVENUE
WISCONSIN RAPIDS, WI 54494
715-213-6571
Casey.jones@wisconsin.gov

DIGGERS HOTLINE
Dial 811 or (800)242-8511
www.DiggersHotline.com

Runoff Coefficient Table

	Hydrologic Soil Group											
	A			B			C			D		
	Slope Range (Percent)											
Land Use	0 - 2	2 - 6	6 & Over	0 - 2	2 - 6	6 & Over	0 - 2	2 - 6	6 & Over	0 - 2	2 - 6	6 & Over
Row Crops	0.08 0.22	0.16 0.30	0.22 0.38	0.12 0.26	0.20 0.34	0.27 0.44	0.15 0.30	0.24 0.37	0.33 0.50	0.19 0.34	0.28 0.41	0.38 0.56
Median Strip-Turf	0.19 0.24	0.20 0.26	0.24 0.30	0.19 0.25	0.22 0.28	0.26 0.33	0.20 0.26	0.23 0.30	0.30 0.37	0.20 0.27	0.25 0.32	0.30 0.40
Side Slope Turf			0.25 0.32			0.27 0.34			0.28 0.36			0.30 0.38
Pavement												
Asphalt	0.70 - 0.95											
Concrete	0.80 - 0.95											
Brick	0.70 - 0.80											
Drives, Sidewalks	0.75 - 0.85											
Roofs	0.75 - 0.95											
Gravel Roads, Shoulders	0.40 - 0.60											

Total Project Area = 61 Acres
Total Area Expected To Be Disturbed By Construction Activities = 0.75 Acres

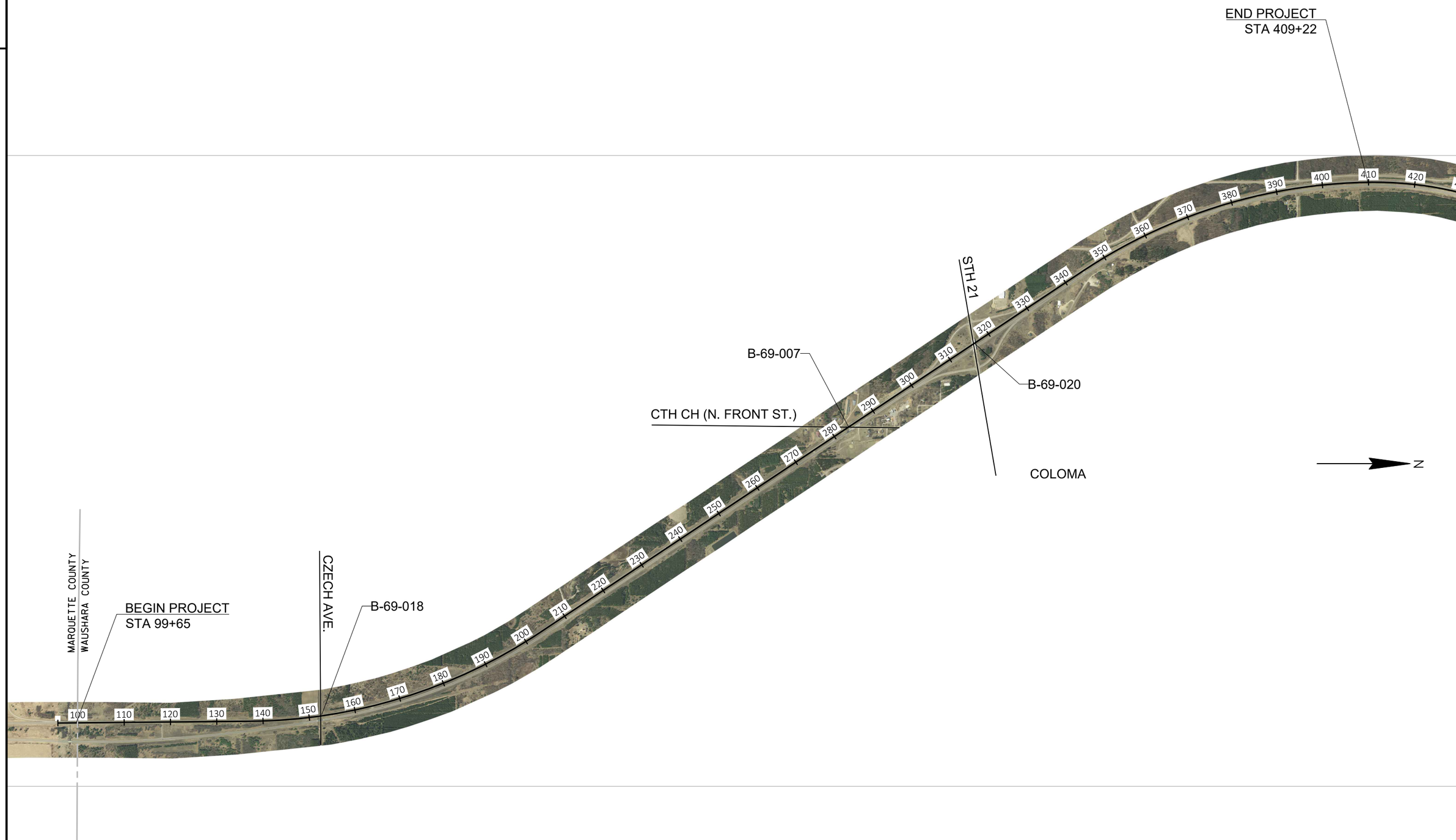

PROJECT NO: 1166-08-79	HWY: IH 39	COUNTY: WAUSHARA	PROJECT OVERVIEW	SHEET 3	E

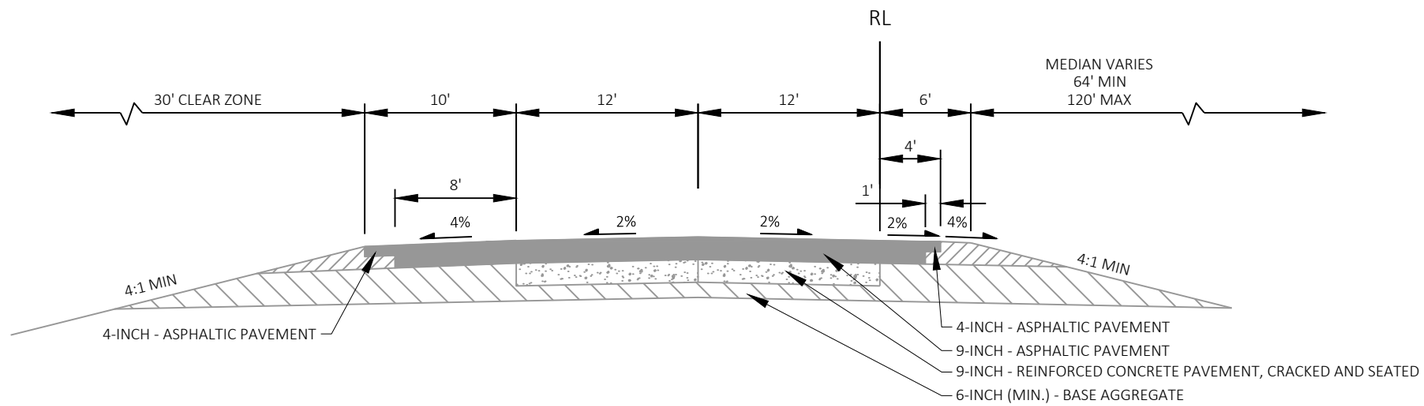

EXISTING TYPICAL SECTION
STA 99+65 TO 150+67
STA 154+34 TO 282+05
STA 286+30 TO 409+22

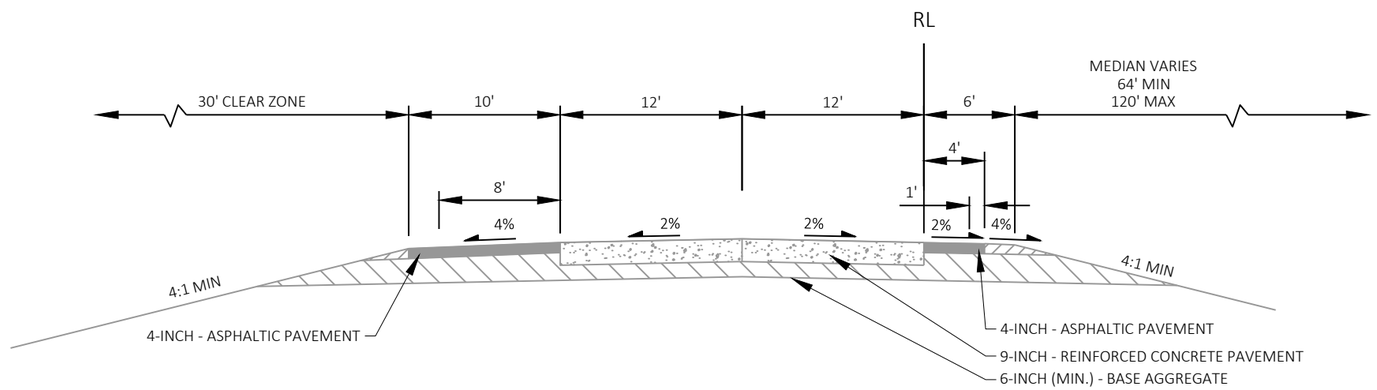

EXISTING TYPICAL SECTION
STA 150+67 TO 151+82
STA 153+25 TO 154+34
STA 281+54 TO 282+05
STA 284+94 TO 286+30

NOTES:
1. STA 150+67 - STA 151+42 AND STA 153+79 - STA 154+34 HAVE EXISTING ASPHALT OVERLAY ON TOP OF CONCRETE PAVEMENT.
2. REMOVAL OF EXISTING ASPHALT INCIDENTAL TO EXCAVATION COMMON.
3. LIMITS OF CONCRETE REMOVAL TO BE DEFINED BY SAWING CONCRETE.

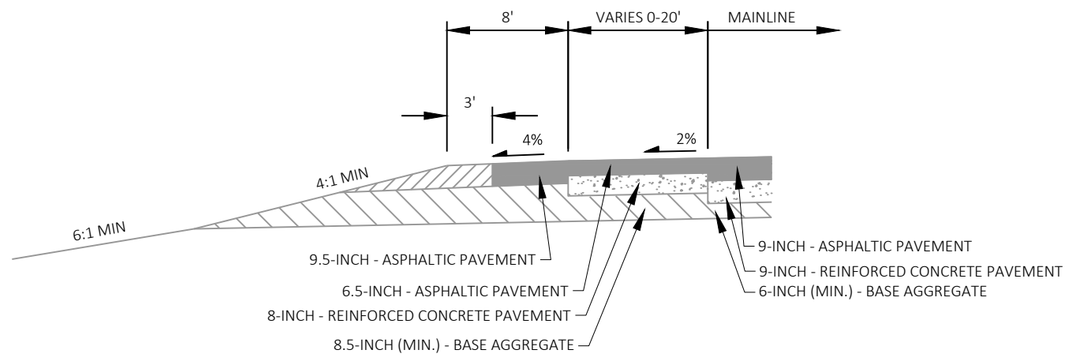

EXISTING STH 21 RAMP TAPER SECTION
STA 291+00 TO 303+00
STA 329+00 TO 335+40

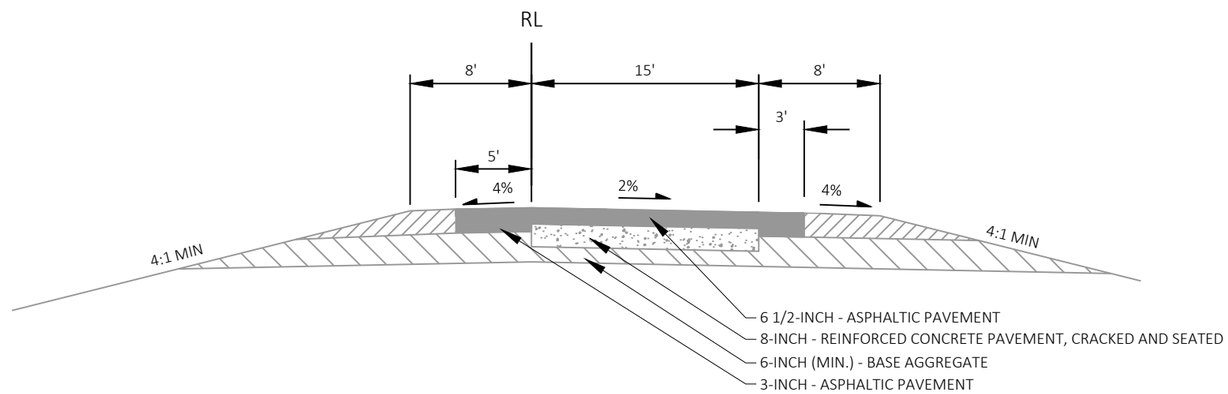

EXISTING TYPICAL SECTION
STH 21 RAMPS

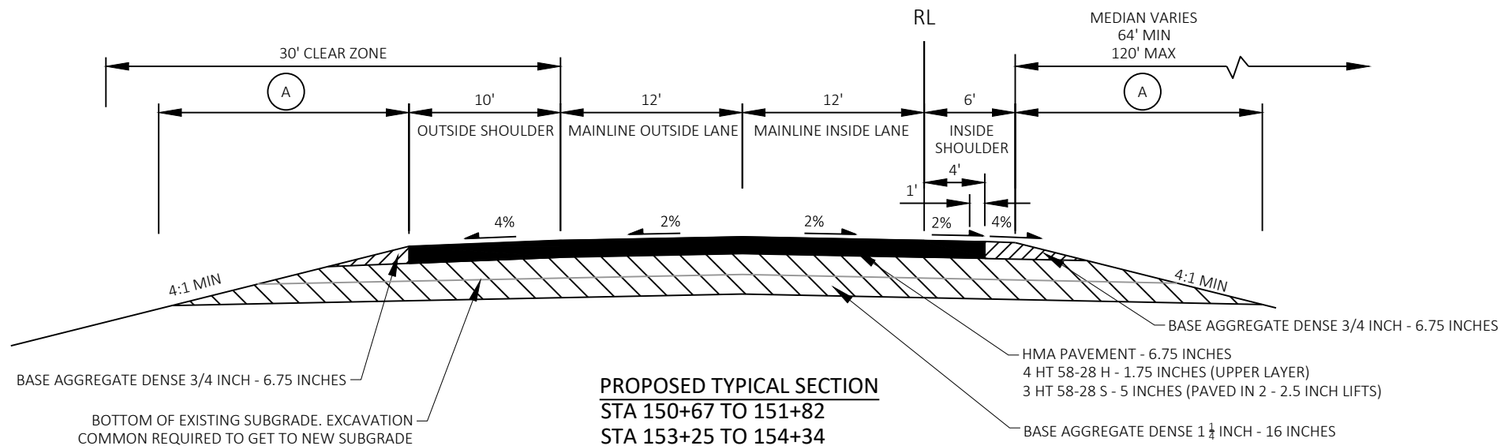

PROPOSED TYPICAL SECTION
STA 150+67 TO 151+82
STA 153+25 TO 154+34
STA 281+54 TO 282+05
STA 284+94 TO 286+30

NOTE:
DURING STAGES 2 & 3 PAVE SURFACE LAYER AT CZECH AVENUE AND CTH CH STRUCTURES WITH HMA PAVEMENT 3 HT 58-28 S MIX TO FILL IN PAVEMENT DIP BETWEEN NEW CONCRETE APPROACH SLABS AND EXISTING ASPHALT. MILL OFF SURFACE LAYER DURING MAINLINE MILLING OPERATIONS AND INSTALL WEDGE JOINTS DURING STAGE 4 FOR STAGE 5 TRAFFIC.

(A) FERTILIZER TYPE B, SEEDING MIXTURE NO. 30, SEED WATER.

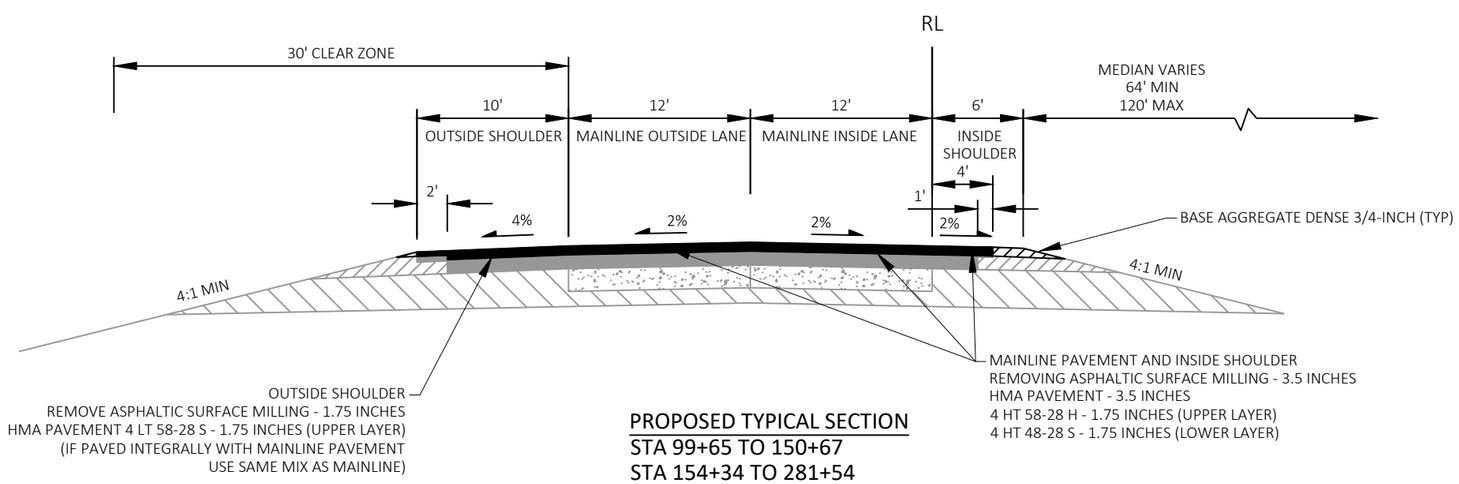

PROPOSED TYPICAL SECTION
STA 99+65 TO 150+67
STA 154+34 TO 281+54
STA 286+30 TO 409+22

2

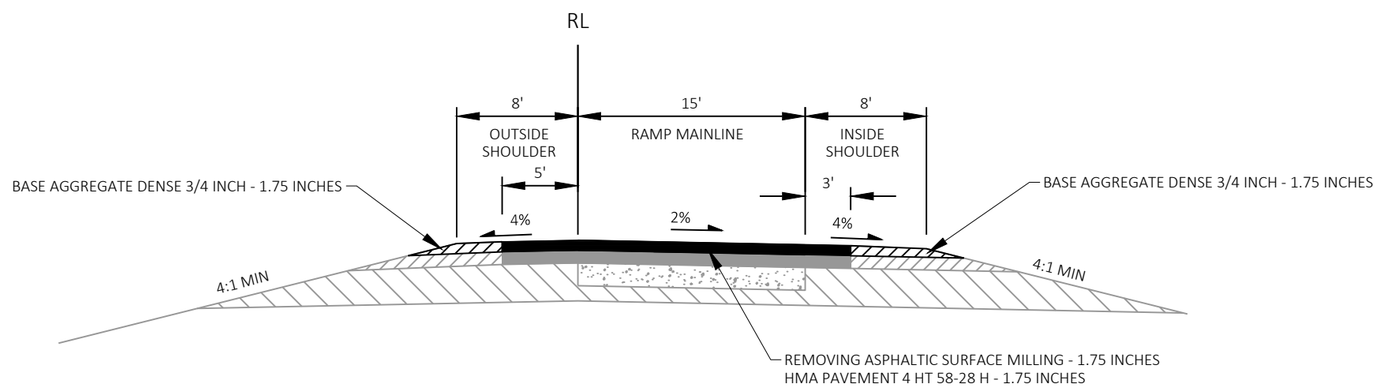

* END MILLING AT EXISTING CONCRETE/ASPHALT JOINT

PROPOSED TYPICAL SECTION
STH 21 RAMPS

PROJECT NO: 1166-08-79	HWY: IH 39	COUNTY: WAUSHARA	TYPICAL SECTIONS	SHEET 7	E

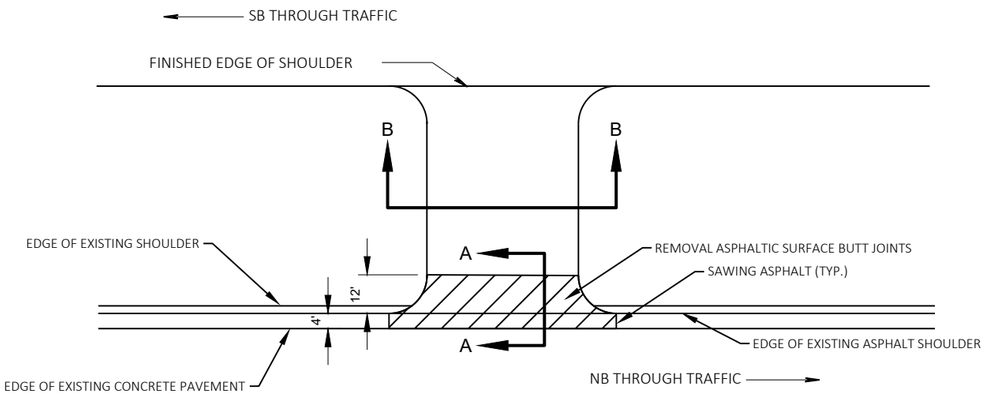

NOTE: SEE S.D.D. "TRAFFIC CONTROL, SHOULDER CLOSURE ON DIVIDED ROADWAY, SPEEDS GREATER THAN 40 MPH" FOR TRAFFIC CONTROL WHILE MILLING BUTT JOINT AND PAVING.

PLAN VIEW

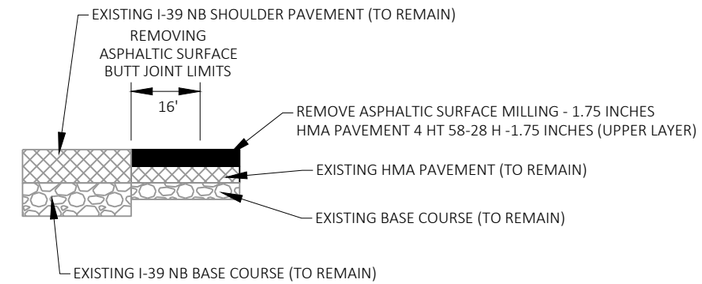

SECTION A-A

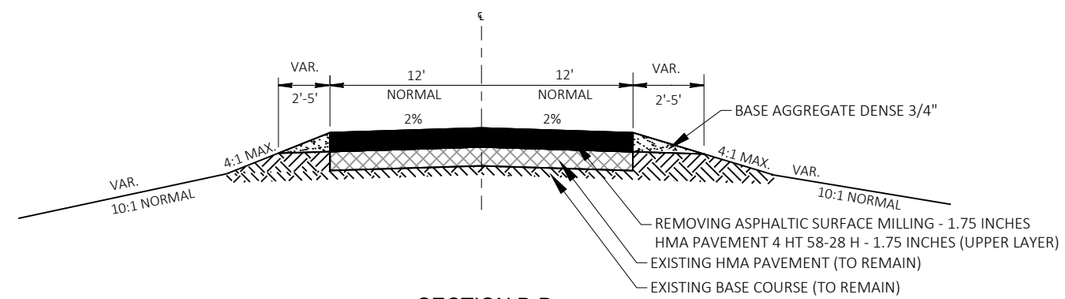

SECTION B-B

HMA MILL & OVERLAY AT MAINTENANCE CROSSOVERS DETAIL

STA 118+18
STA 163+85
STA 274+48
STA 344+47

2

GENERAL NOTES

DETAILS OF CONSTRUCTION, MATERIALS AND WORKMANSHIP NOT SHOWN ON THIS DRAWING SHALL CONFORM TO THE PERTINENT REQUIREMENTS OF THE STANDARD SPECIFICATIONS AND THE APPLICABLE SPECIAL PROVISIONS.

ALL STEEL REINFORCEMENT SHALL BE EMBEDDED 2 INCHES CLEAR UNLESS OTHERWISE SHOWN OR NOTED.

1. USE A JOINT SEALANT CONFORMING TO STANDARD SPECIFICATION 415.2.6.
2. NO. 4 X 2' - 0" TIE BARS SPACED AT 12" C-C TO BE PLACED BY BRIDGE CONTRACTOR OR DRILLED TIE BARS PLACED AS DIRECTED BY THE ENGINEER.
3. CONCRETE PAVEMENT APPROACH SLAB.
4. CONCRETE SURFACE DRAIN HES.
5. CENTER FLUME BETWEEN POSTS. 6-INCH MINIMUM SEPARATION FROM OUTSIDE EDGE OF FLUME TO POSTS.
6. MINIMUM REINFORCEMENT SHALL BE 4" X 4" - W3.0 X W3.0 OR NO. 3 BARS LONGITUDINAL AND TRANSVERSE SPACING 12" C -C.
7. SEE ROADWAY PLANS FOR FLUME LOCATION.
8. START CURB AND GUTTER TRANSITION OR END SECTION.
9. DEPRESS FLOW LINE (SEE DETAIL)

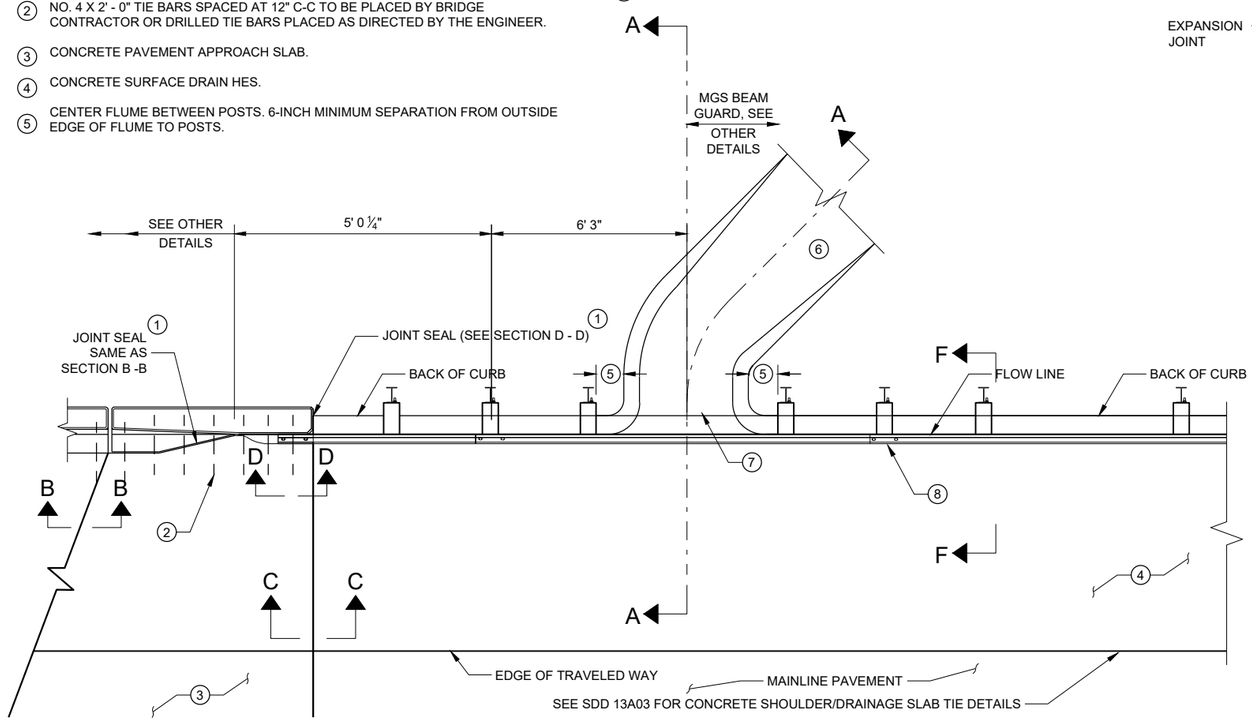

PLAN VIEW

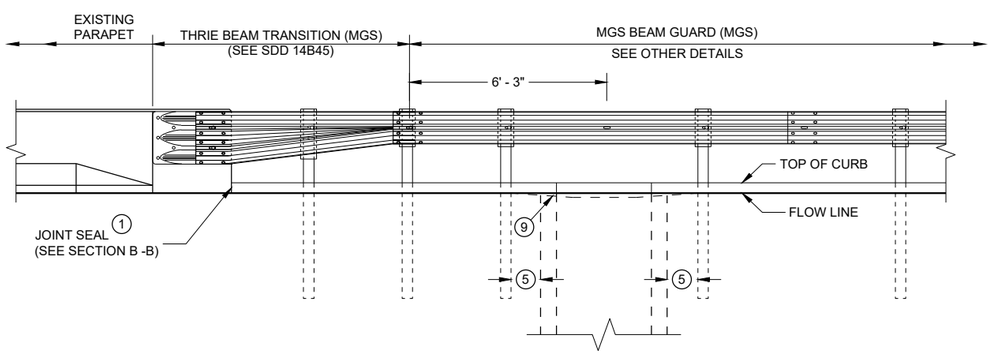

ELEVATION VIEW

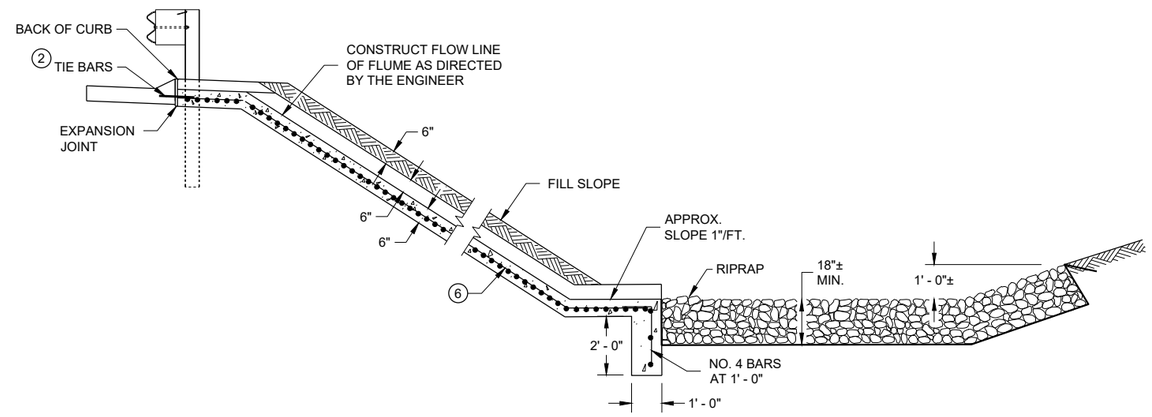

SECTION A - A

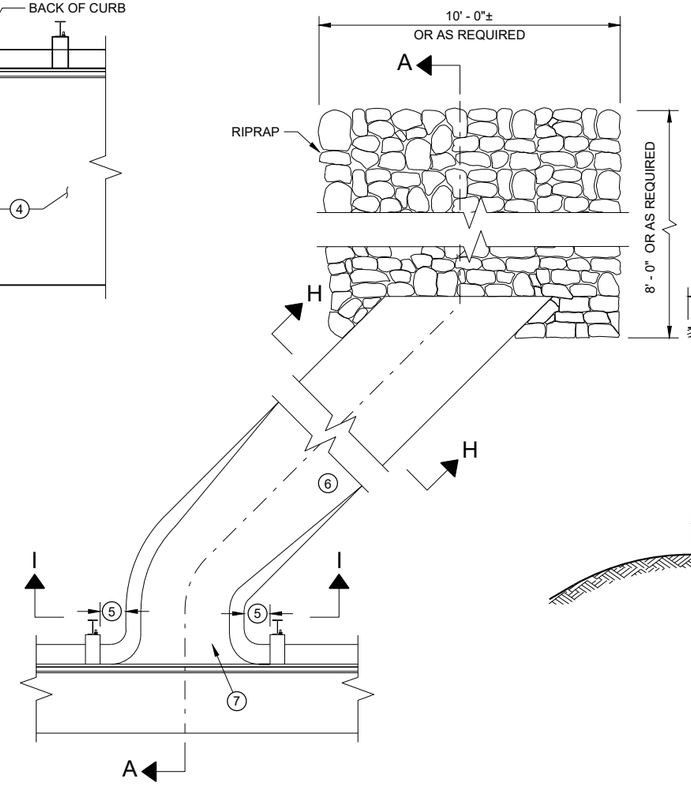

PLAN VIEW SKEWED FLUME

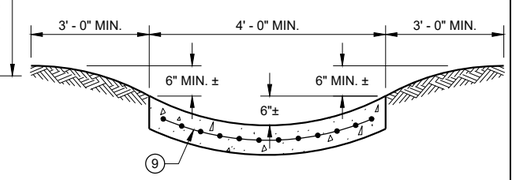

SECTION G - G

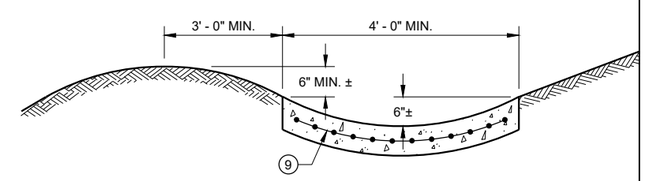

SECTION H - H

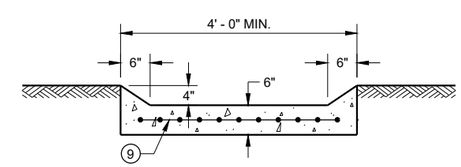

SECTION I - I

CONCRETE SURFACE DRAIN HES (FLUME)
CTH CH STRUCTURE SE CORNER (B-69-007)

2

PROJECT NO: 1166-08-79	HWY: IH 39	COUNTY: WAUSHARA	CONSTRUCTION DETAILS	SHEET 9	E

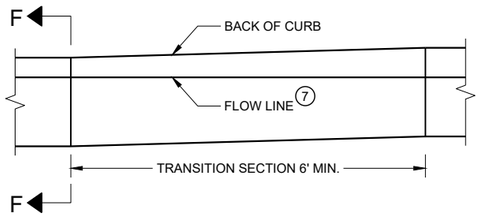

CURB AND GUTTER TRANSITION SECTION CONCRETE CURB AND GUTTER 4-INCH SLOPED 36 INCH TYPE TBT OR TBTT

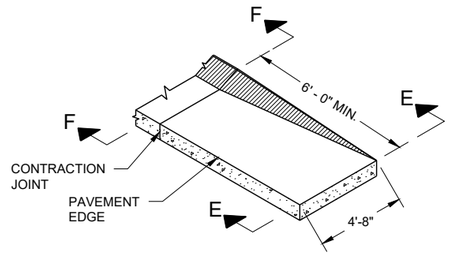

CURB AND GUTTER END SECTION CONCRETE CURB AND GUTTER 4-INCH SLOPED 36 INCH TYPE TBT OR TBTT

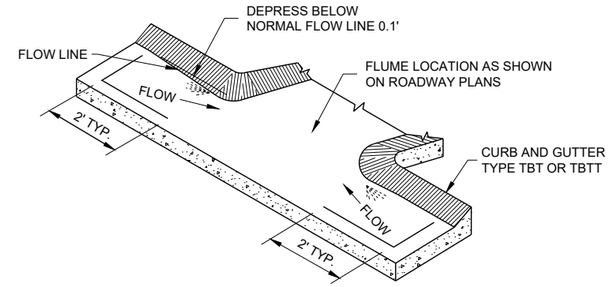

CURB AND GUTTER FLOW LINE DEPRESSION AT FLUMES CONCRETE CURB AND GUTTER 4-INCH SLOPED 36 INCH TYPE TBT OR TBTT

GENERAL NOTES

1. MEDIUM RIPRAP.
2. GEOTEXTILE FABRIC TYPE HR.
3. MINIMUM REINFORCEMENT SHALL BE 6" X 6" - W4.0 X W4.0 OR NO. 3 BARS LONGITUDINAL AND TRANSVERSE SPACING 12" C - C.
4. MSG THRIE BEAM TRANSITION POST 1. SEE SDD 14B45 FOR ADDITIONAL CONSTRUCTION DETAILS AND ACCEPTABLE MATERIALS.
5. MAINTAIN WIDTH, THICKNESS AND CROSS SLOPE OF ADJACENT CONCRETE. SEE NOTE 6 FOR TIE BAR SPACING.
6. ALIGN FACE OF POST BLOCK WITH FLOW LINE.
7. MAINTAIN FLOW LINE AT EDGE OF PAVEMENT/FACE OF BEAM GUARD AS APPLICABLE.
8. DO NOT CONSTRUCT AN EXPANSION JOINT OR INSTALL DOWEL BARS WHEN ABUTTING HMA PAVEMENTS.

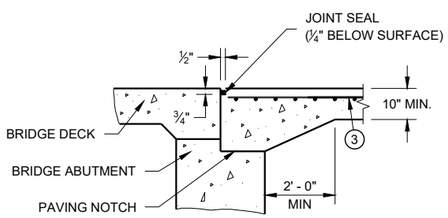

SECTION B-B

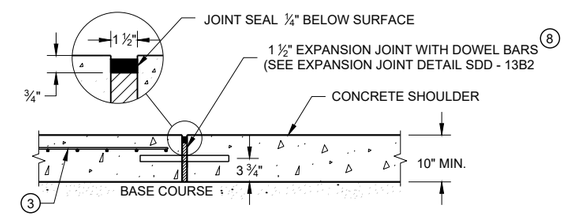

SECTION C - C

JOINT DETAIL FOR BRIDGE APPROACH WITH CONCRETE SHOULDERS

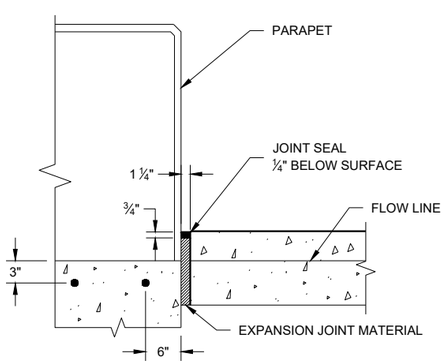

SECTION D - D

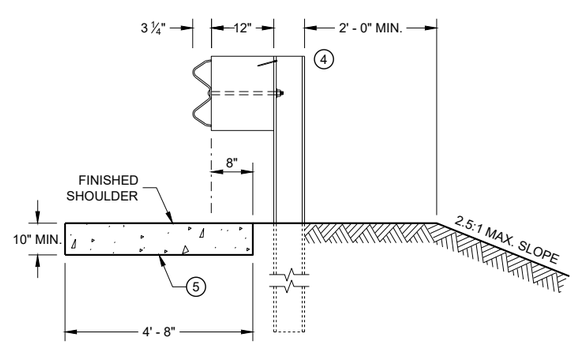

SECTION E - E

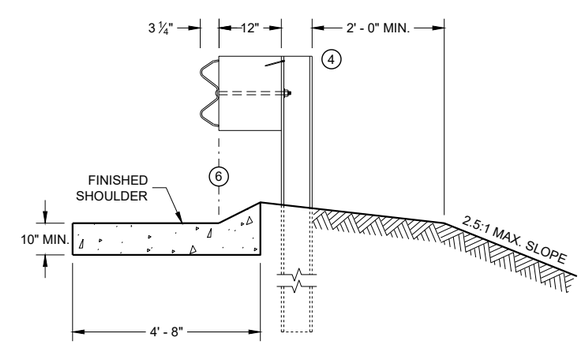

SECTION F - F

2

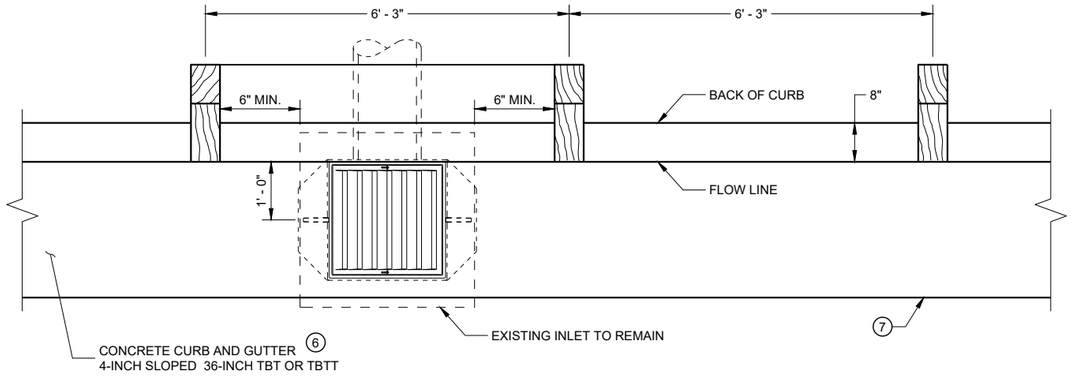

INLET PLAN VIEW

(NOTE: RAIL NOT SHOWN FOR CLARITY)

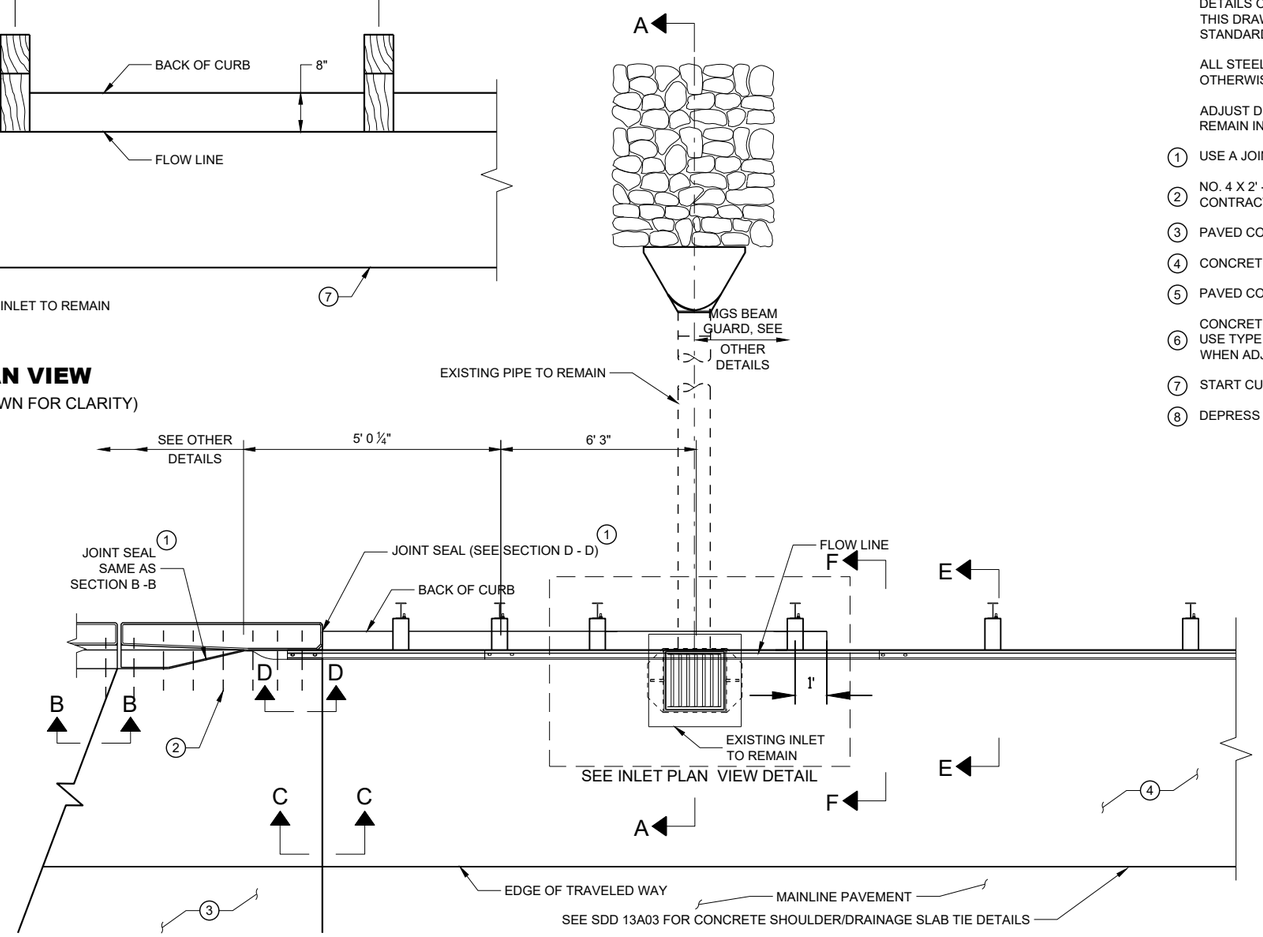

PLAN VIEW

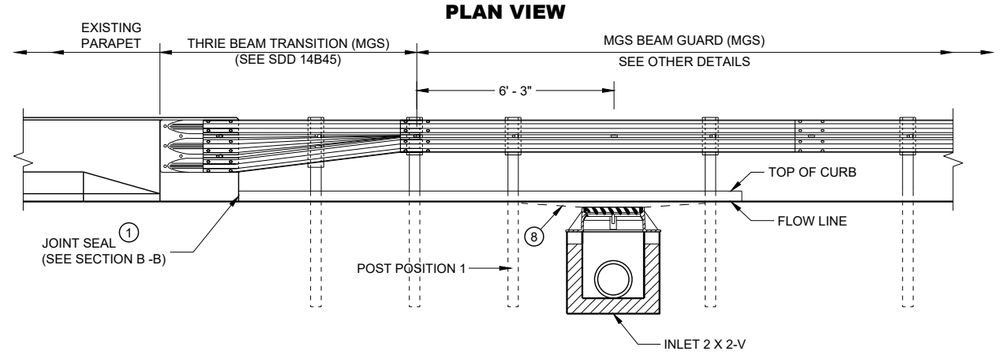

ELEVATION VIEW

GENERAL NOTES

DETAILS OF CONSTRUCTION, MATERIALS AND WORKMANSHIP NOT SHOWN ON THIS DRAWING SHALL CONFORM TO THE PERTINENT REQUIREMENTS OF THE STANDARD SPECIFICATIONS AND THE APPLICABLE SPECIAL PROVISIONS.

ALL STEEL REINFORCEMENT SHALL BE EMBEDDED 2 INCHES CLEAR UNLESS OTHERWISE SHOWN OR NOTED.

ADJUST DIMENSIONS TO FIT FIELD CONDITIONS. EXISTING INLET AND PIPE TO REMAIN IN PLACE.

1. USE A JOINT SEALANT CONFORMING TO STANDARD SPECIFICATION 415.2.6.
2. NO. 4 X 2' - 0" TIE BARS SPACED AT 12" C-C TO BE PLACED BY BRIDGE CONTRACTOR OR DRILLED TIE BARS PLACED AS DIRECTED BY THE ENGINEER.
3. PAVED CONCRETE SHOULDER (SDD 13A03).
4. CONCRETE PAVEMENT APPROACH SLAB.
5. PAVED CONCRETE SHOULDER (SDD 13A03) OR ASPHALT SHOULDER.
6. CONCRETE CURB AND GUTTER 4-INCH SLOPED 36-INCH TYPE TBT OR TBTT. USE TYPE TBTT CURB WITH NO. 4 X 2' -0" TIE BARS SPACED AT 3' - 0" C-C ONLY WHEN ADJACENT TO CONCRETE PAVEMENTS.
7. START CURB AND GUTTER TRANSITION OR END SECTION.
8. DEPRESS FLOW LINE (SEE DETAIL)

2

CONCRETE SURFACE DRAIN HES (PROP INLET)
CZECH AVENUE STRUCTURE SW CORNER (B-69-018)
CTH CH STRUCTURE SW CORNER (B-69-007)

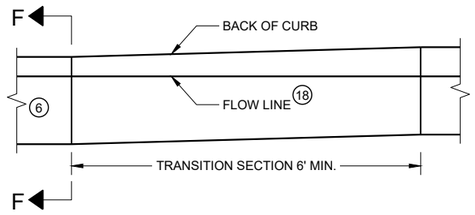

CURB AND GUTTER TRANSITION SECTION CONCRETE CURB AND GUTTER 4-INCH SLOPED 36 INCH TYPE TBT OR TBTT

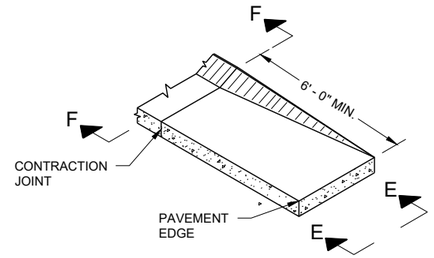

CURB AND GUTTER END SECTION CONCRETE CURB AND GUTTER 4-INCH SLOPED 36 INCH TYPE TBT OR TBTT

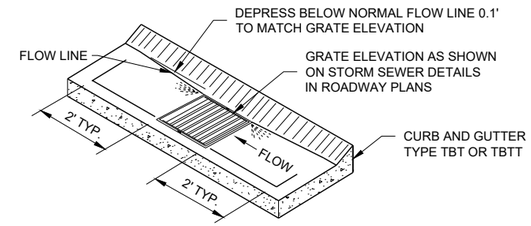

CURB AND GUTTER FLOW LINE DEPRESSION AT INLETS CONCRETE CURB AND GUTTER 4-INCH SLOPED 36 INCH TYPE TBT OR TBTT

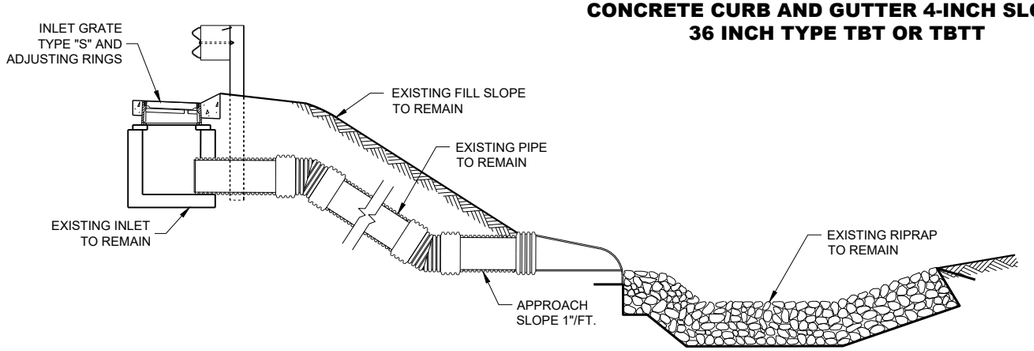

SECTION A - A

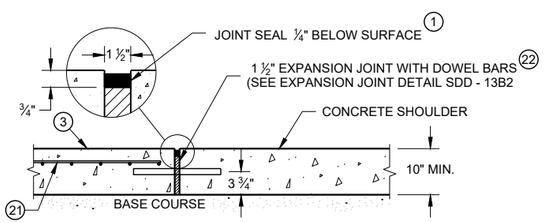

SECTION C - C

JOINT DETAIL FOR BRIDGE APPROACH WITH CONCRETE SHOULDERS

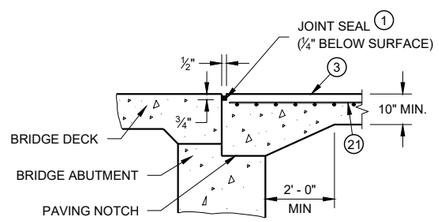

SECTION B-B 4

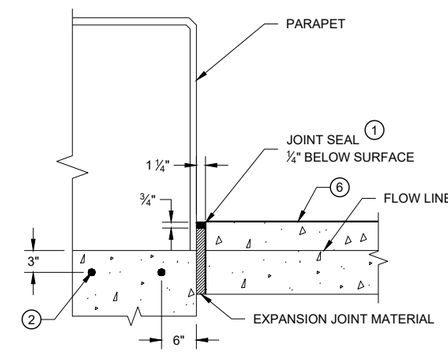

SECTION D - D

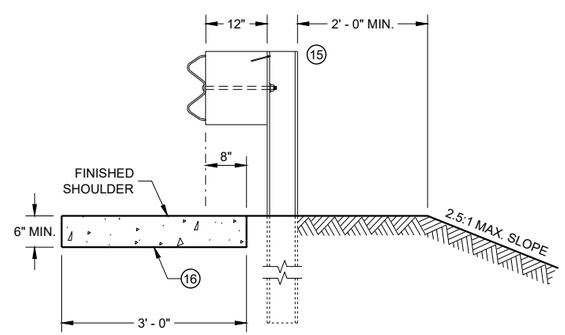

SECTION E - E

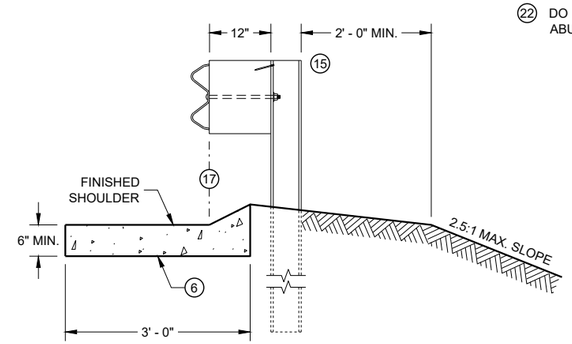

SECTION F - F

GENERAL NOTES

DETAILS OF CONSTRUCTION, MATERIALS AND WORKMANSHIP NOT SHOWN ON THIS DRAWING SHALL CONFORM TO THE PERTINENT REQUIREMENTS OF THE STANDARD SPECIFICATIONS AND THE APPLICABLE SPECIAL PROVISIONS.

ALL STEEL REINFORCEMENT SHALL BE EMBEDDED 2 INCHES CLEAR UNLESS OTHERWISE SHOWN OR NOTED.

1. USE A JOINT SEALANT CONFORMING TO STANDARD SPECIFICATION 415.2.6.
2. NO. 4 X 2' - 0" TIE BARS SPACED AT 12" C-C TO BE PLACED BY BRIDGE CONTRACTOR OR DRILLED TIE BARS PLACED AS DIRECTED BY THE ENGINEER.
3. PAVED CONCRETE SHOULDER (SDD 13A03) OR CONCRETE DRAINAGE SLAB.
4. CONCRETE PAVEMENT APPROACH SLAB (SHOWN) OR STRUCTURE APPROACH SLAB AND CONCRETE PAVEMENT APPROACH SLAB. SEE SDD 13B02 AND STRUCTURE PLANS.
5. PAVED CONCRETE SHOULDER (SDD 13A03) OR ASPHALT SHOULDER.
6. CONCRETE CURB AND GUTTER 4-INCH SLOPED 36-INCH TYPE TBT OR TBTT. USE TYPE TBTT CURB WITH NO. 4 X 2' -0" TIE BARS SPACED AT 3' - 0" C-C ONLY WHEN ADJACENT TO CONCRETE PAVEMENTS.
7. PLACE DRAINAGE STRUCTURE BEFORE MSG THRIE BEAM TRANSITION POST 1 (SEE SDD 14B45)
8. CENTER DRAINAGE STRUCTURE BETWEEN POSTS. 6-INCH MINIMUM SEPARATION FROM OUTSIDE WALL OF DRAINAGE STRUCTURE TO POSTS.
9. SEE SDD 08A05 AND 08C07 FOR DETAILS. SEE ROADWAY PLANS FOR LOCATION.
10. START CURB AND GUTTER TRANSITION OR END SECTION.
11. DEPRESS FLOW LINE (SEE DETAIL)
12. MEDIUM RIPRAP UNLESS OTHERWISE SPECIFIED.
13. LIMITS OF ADDITIONAL RIPRAP WHEN SPECIAL DITCH IS REQUIRED.
14. GEOTEXTILE FABRIC TYPE HR.
15. MSG THRIE BEAM TRANSITION POST 1. SEE SDD 14B45 FOR ADDITIONAL CONSTRUCTION DETAILS AND ACCEPTABLE MATERIALS.
16. MAINTAIN WIDTH, THICKNESS AND CROSS SLOPE OF ADJACENT TYPE TBT OR TBTT CURB. SEE NOTE 6 FOR TIE BAR SPACING.
17. ALIGN FACE OF POST BLOCK WITH FLOW LINE.
18. MAINTAIN FLOW LINE AT EDGE OF PAVEMENT/FACE OF BEAM GUARD AS APPLICABLE.
19. MANUFACTURER SUPPLIED BEND.
20. MANUFACTURER SUPPLIED EXTERNAL MECHANICAL COUPLING OR A MANUFACTURER RECOMMENDED COUPLING WITH A MASTIC IMPREGNATED GEOTEXTILE WRAP AND MECHANICAL FASTENING BANDS.
21. MINIMUM REINFORCEMENT SHALL BE 6" X 6" - W4.0 X W4.0 OR NO. 3 BARS LONGITUDINAL AND TRANSVERSE SPACING 12" C - C.
22. DO NOT CONSTRUCT AN EXPANSION JOINT OR INSTALL DOWEL BARS WHEN ABUTTING HMA PAVEMENTS.

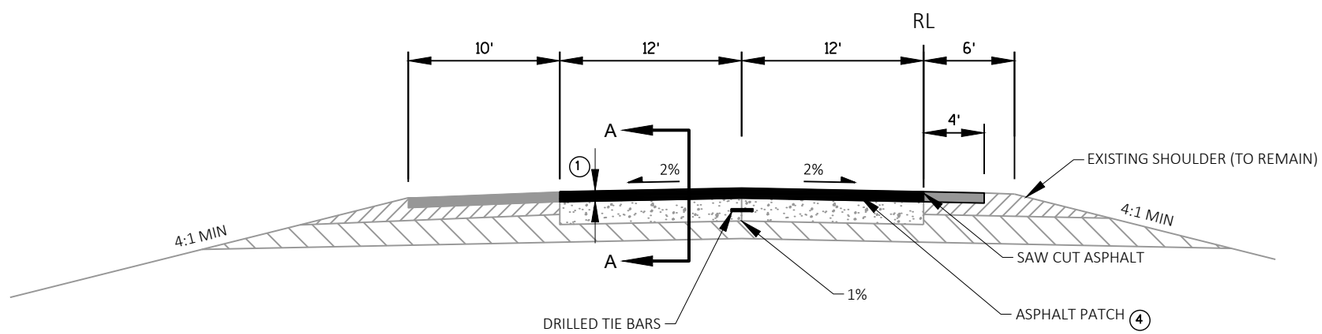

1. EXISTING ASPHALT PAVEMENT 9"
2. IF SPACE BETWEEN CONSECTUIVE PATCHES IS 6' OR LESS, REMOVE CONCRETE BETWEEN PATCHES
3. 6' LONG BASE PATCHING SPECIAL UNLESS NOTED OTHERWISE
4. ASPHALTIC PATCH
   UPPER LAYER: 3.5" HT 58-28 S
   MIDDLE LAYER: 2.75" 3 HT 58-28 S
   LOWER LAYER: 2.75" 3 HT 58-28 S
   UPPER LAYER EXCEEDS MAXIMUM UPPER LAYER THICKNESS BUT WILL BE MILLED OFF WITH MILLING OPERATION
5. DRILLED TIE BARS PLACED DURING STAGE 3 OR BENT BAR PLACED DURING STAGE 2 AND BENT INTO PLACE DURING STAGE 3.

BASE PATCHING SPECIAL
SEE MISCELLANEOUS QUANTITIES FOR LOCATIONS
STATION IS CENTER OF JOINT UNLESS NOTED OTHERWISE

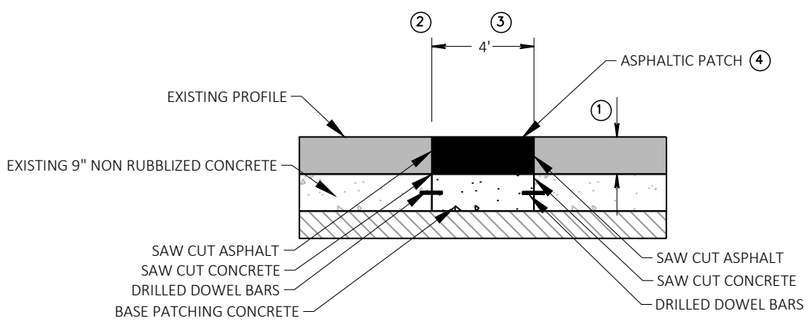

SECTION A-A

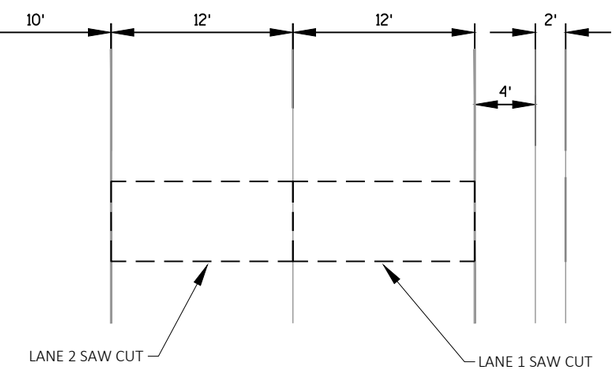

SAW CUTS
PATCHING OCCURS FIRST IN LANE 1
LANE 1 CAN BE THE DRIVING OR PASSING LANE

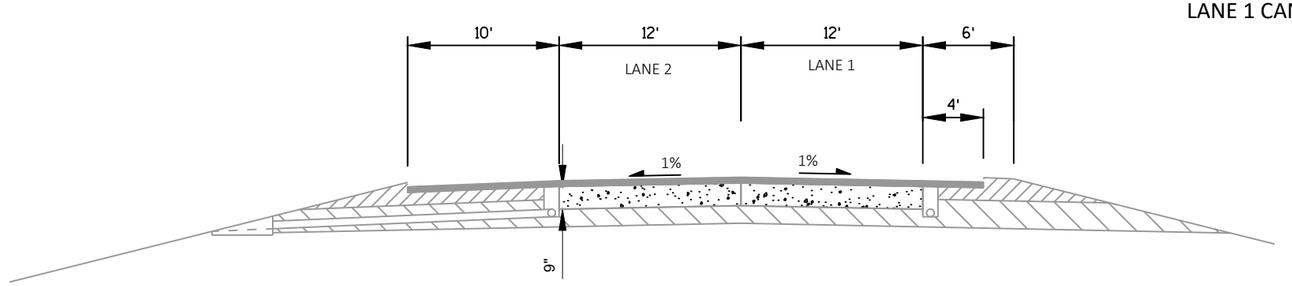

BASE PATCHING SPECIAL
AFTER REMOVING ASPHALTIC SURFACE MILLING

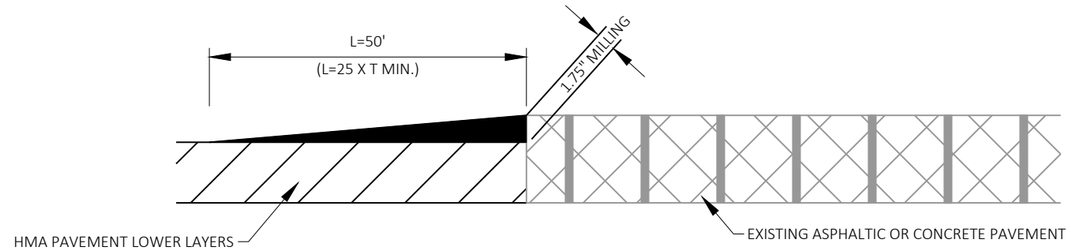

TEMPORARY WEDGE JOINT DETAIL
STA 99+65
STA 151+82(STAGE 4)
STA 153+26(STAGE 4)
STA 282+05(STAGE 4)
STA 284+94(STAGE 4)
STA 409+22

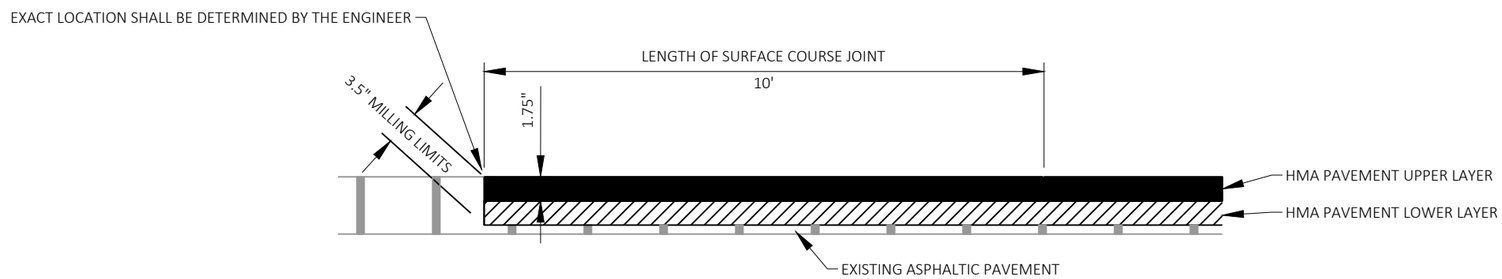

MAINLINE BUTT JOINT
STA 99+65
STA 409+22
STH 21 EXIT RAMP
STH 21 ENTRANCE RAMP

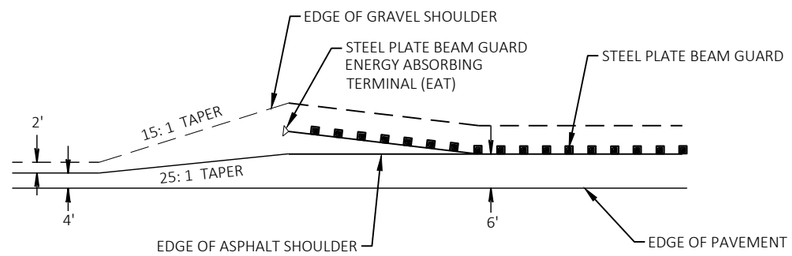

NOTE: SEE STANDARD DETAIL DRAWINGS FOR MORE DETAIL.

DETAIL FOR INSIDE SHOULDER AT BEAM GUARD

2

STA 145+77 - STA 151+96
REMOVE GUARDRAIL
MGS GUARDRAIL 3
MGS GUARDRAIL TERMINAL TYPE 2
MGS THRIE BEAM TRANSITION
STAGE 5
(SEE S.D.D. "MIDWEST GUARDRAIL SYSTEM THRIE BEAM TRANSITION (MGS)" SHEET 5d FOR DOWNSTREAM CONNECTION DETAIL)

STA 150+67 - STA 151+96
REMOVE AND REINSTALL
EXISTING GUARDRAIL
STAGE 3

STA 151+88
REMOVE SURFACE DRAIN
CONCRETE SURFACE DRAINS HES
(SEE DETAIL)

STA 153+08 - STA 153+26
CONCRETE PAVEMENT APPROACH SLAB
HES

STA 153+18 - STA 154+34
REMOVE AND REINSTALL
EXISTING GUARDRAIL
STAGE 3

STA 153+18 - STA 155+58
REMOVE GUARDRAIL
MGS GUARDRAIL 3
MGS THRIE BEAM TRANSITION
MGS GUARDAIL TERMINAL EAT
STAGE 5

N

B-69-018
NET EXCEPTION TO RL LENGTH
STA 151+96.94 - STA 153+07.89

SAWING ASPHALT

4.00'

IH39 SB

150+00

151+00

152+00

15.00'

153+00

154+00

155+00

CZECH AVE

STA 150+67 - STA 152+00
REMOVE CONCRETE PAVEMENT

STA 151+82 - STA 152+00
CONCRETE PAVEMENT APPROACH SLAB
HES

SILT FENCE (TYP)

STA 153+08 - STA 153+76
REMOVE CONCRETE PAVEMENT

STA 153+14 - STA 154+34
REMOVE AND REINSTALL
EXISTING GUARDRAIL
STAGE 2

STA 153+14 - STA 156+27
REMOVE GUARDRAIL
MGS GUARDRAIL 3
MGS GUARDAIL TERMINAL EAT
MGS THRIE BEAM TRANSITION
STAGE 6

LEGEND

- ASPHALT SHOULDER
- CONCRETE PAVEMENT 10-INCH
- REMOVING CONCRETE PAVEMENT (INCLUDES EXISTING CONCRETE APPROACH SLAB)
- CONCRETE APPROACH SLAB HES
- CONCRETE SURFACE DRAIN HES
- SAWING CONCRETE

NOTES:

1. SEE TRAFFIC CONTROL STAGING PLANS FOR SEQUENCE OF REMOVALS
2. SAW EXISTING CONCRETE 2' OFF CENTERLINE DURING STAGE 2 FOR REMOVAL.
3. PORTIONS OF CONCRETE REMOVAL ARE COVERED WITH ASPHALT.

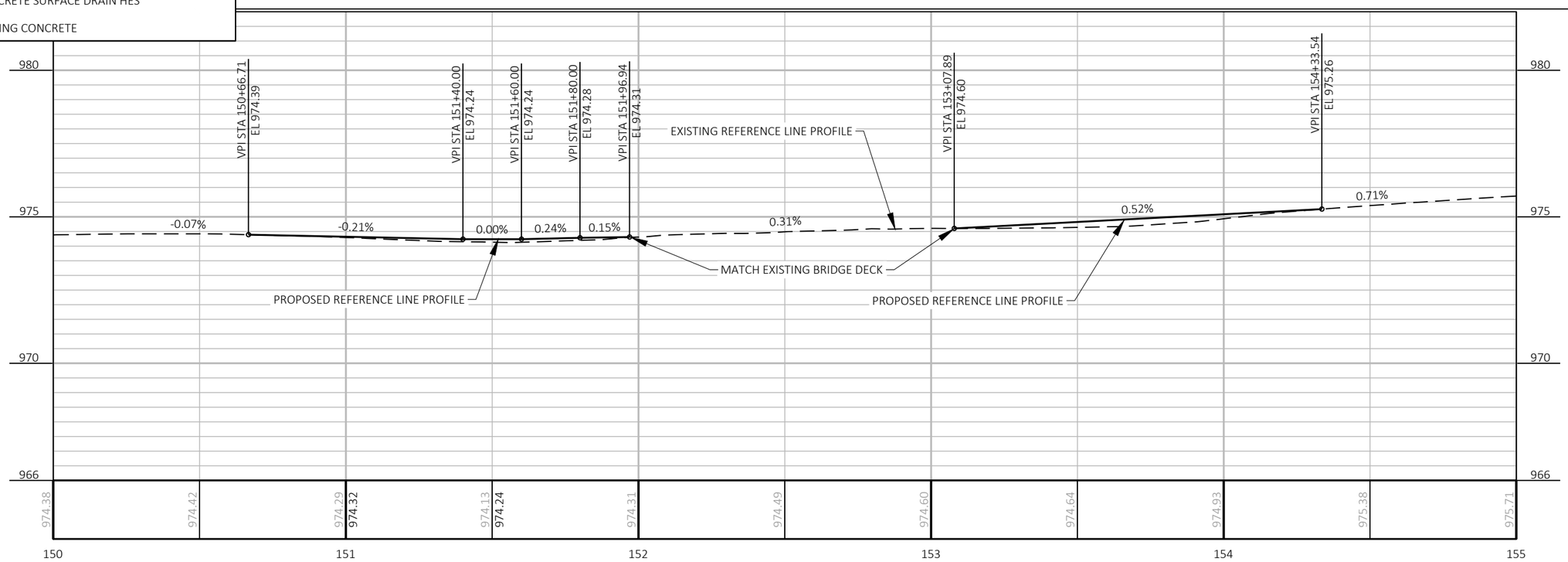

PROJECT NO: 1166-08-79	HWY: IH 39	COUNTY: WAUSHARA	PLAN DETAILS - CZECH AVENUE	SHEET 16	E

2

STA 281+85
REMOVE SURFACE DRAIN
CONCRETE SURFACE DRAINS HES (SEE DETAIL)

STA 279+04 - STA 281+99
REMOVE GUARDRAIL
MGS GUARDRAIL 3
MGS GUARDRAIL TERMINAL TYPE 2
MGS THRIE BEAM TRANSITION
STAGE 5
(SEE S.D.D. "MIDWEST GUARDRAIL SYSTEM THRIE BEAM TRANSITION (MGS)" SHEET 5f FOR DOWNSTREAM CONNECTION DETAIL)

STA 281+54 - STA 281+99
REMOVE AND REINSTALL
EXISTING GUARDRAIL
STAGE 3

CTH CH

B-69-007
NET EXCEPTION TO RL LENGTH
STA 282+63.70 - STA 284+67.39

SILT FENCE (TYP)

STA 284+26 - STA 286+30
REMOVE AND REINSTALL
EXISTING GUARDRAIL
STAGE 3

STA 284+26 - STA 294+19
REMOVE GUARDRAIL
MGS GUARDRAIL 3
MGS GUARDRAIL TERMINAL EAT
MGS THRIE BEAM TRANSITION
STAGE 5

N

27.00'

SAWING ASPHALT

4.00'

IH39 SB

281+00

282+00

283+00

284+00

285+00

286+00

24.36'

SAWING ASPHALT

4.00'

STA 282+08 - STA 282+66
MGS GUARDRAIL 3
MGS GUARDRAIL TERMINAL TYPE 2
MGS THRIE BEAM TRANSITION
STAGE 5
(SEE S.D.D. "MIDWEST GUARDRAIL SYSTEM THRIE BEAM TRANSITION (MGS)" SHEET 5d FOR DOWNSTREAM CONNECTION DETAIL)

STA 282+59
REMOVE SURFACE DRAIN
CONCRETE SURFACE DRAINS HES (SEE DETAIL)

STA 281+54 - STA 282+68
REMOVE CONCRETE PAVEMENT

STA 284+33 - STA 286+30
REMOVE CONCRETE PAVEMENT

STA 284+99 - STA 288+90
REMOVE GUARDRAIL
MGS GUARDRAIL 3
MGS GUARDRAIL TERMINAL EAT
MGS THRIE BEAM TRANSITION
STAGE 6

STA 284+33 - STA 284+94
CONCRETE PAVEMENT APPROACH SLAB
HES

MEDIUM RIPRAP (TYP)

STA 285+01 - STA 286+30
REMOVE AND REINSTALL
EXISTING GUARDRAIL
STAGE 2

STA 282+05 - STA 282+68
CONCRETE PAVEMENT APPROACH SLAB
HES

2

NOTES:

1. SEE TRAFFIC CONTROL STAGING PLANS FOR SEQUENCE OF REMOVALS
2. SAW EXISTING CONCRETE 2' OFF CENTERLINE DURING STAGE 2 FOR REMOVAL.
3. PORTIONS OF CONCRETE REMOVAL ARE COVERED WITH ASPHALT.

LEGEND

- ASPHALT SHOULDER
- CONCRETE PAVEMENT 10-INCH
- REMOVING CONCRETE PAVEMENT (INCLUDES EXISTING CONCRETE APPROACH SLAB)
- CONCRETE APPROACH SLAB HES
- CONCRETE SURFACE DRAIN HES
- SAWING CONCRETE

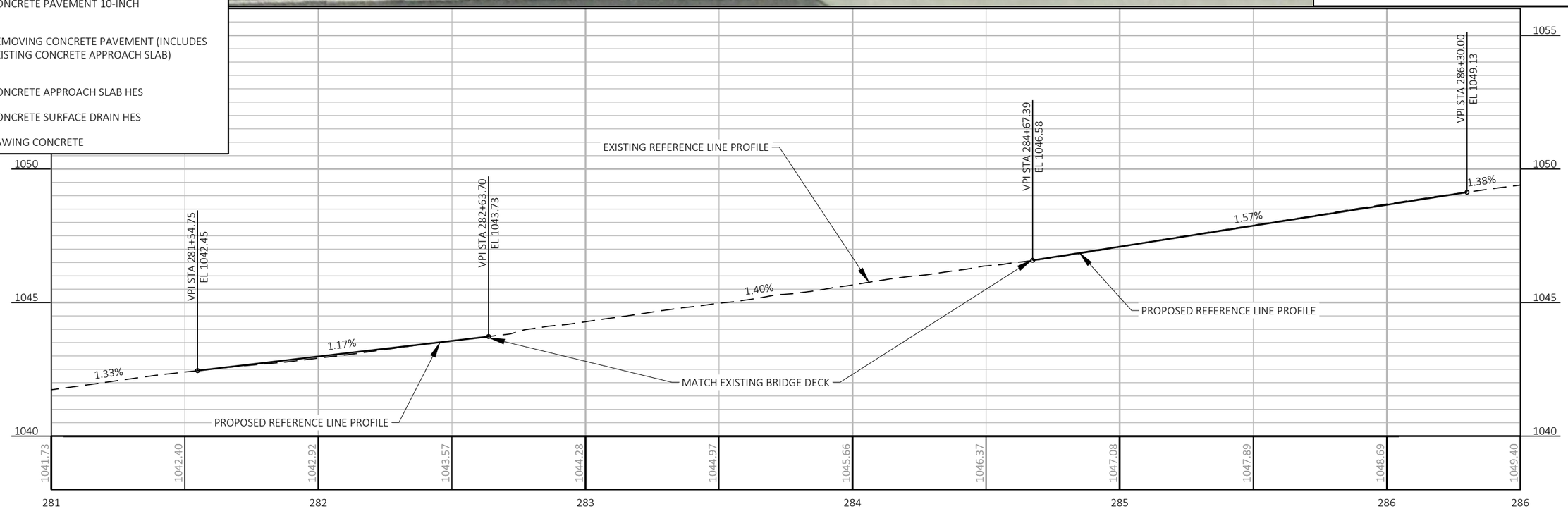

PROJECT NO: 1166-08-79	HWY: IH 39	COUNTY: WAUSHARA	PLAN DETAILS - CTH CH	SHEET 17	E

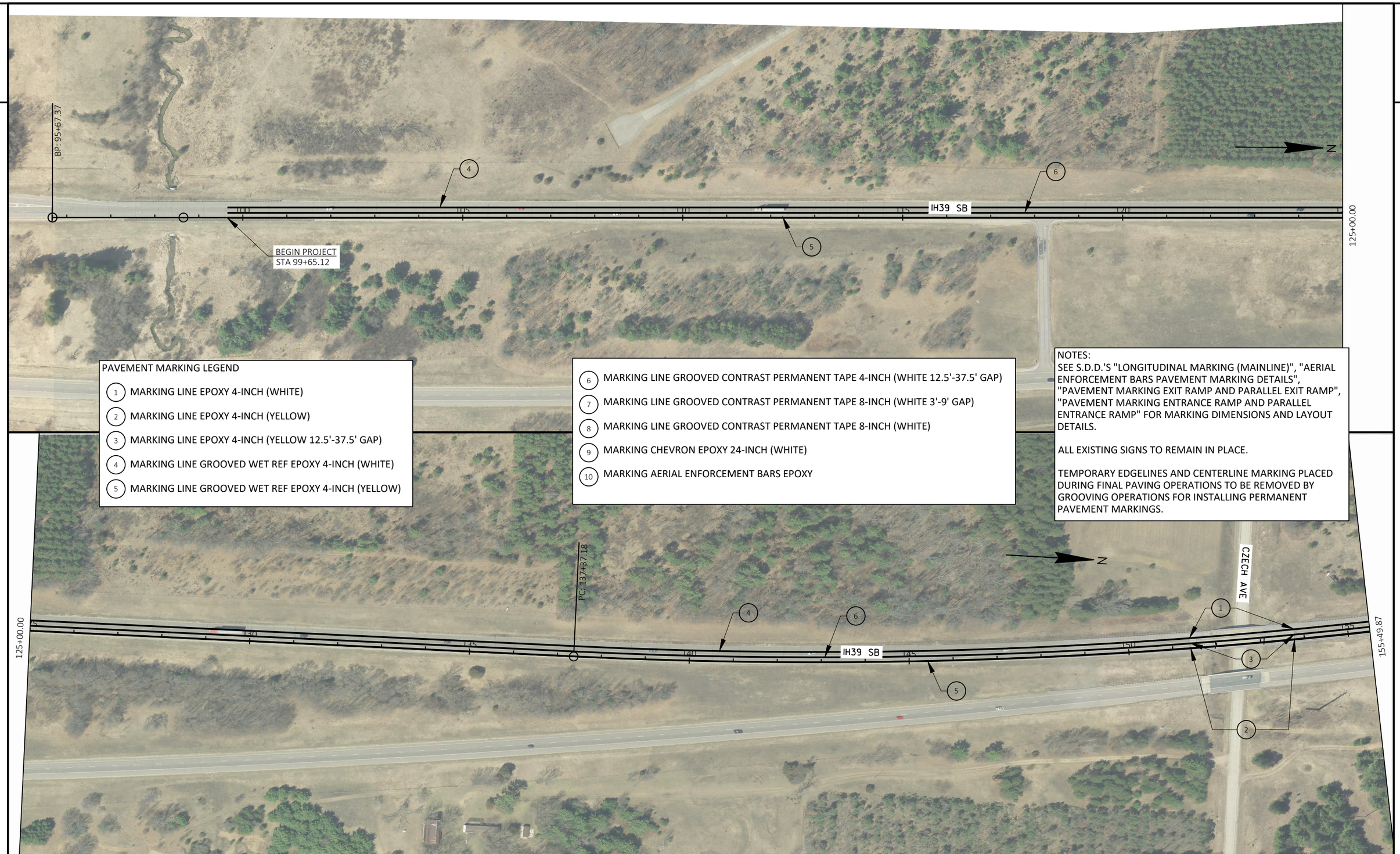

PAVEMENT MARKING LEGEND

1. MARKING LINE EPOXY 4-INCH (WHITE)
2. MARKING LINE EPOXY 4-INCH (YELLOW)
3. MARKING LINE EPOXY 4-INCH (YELLOW 12.5'-37.5' GAP)
4. MARKING LINE GROOVED WET REF EPOXY 4-INCH (WHITE)
5. MARKING LINE GROOVED WET REF EPOXY 4-INCH (YELLOW)
6. MARKING LINE GROOVED CONTRAST PERMANENT TAPE 4-INCH (WHITE 12.5'-37.5' GAP)
7. MARKING LINE GROOVED CONTRAST PERMANENT TAPE 8-INCH (WHITE 3'-9' GAP)
8. MARKING LINE GROOVED CONTRAST PERMANENT TAPE 8-INCH (WHITE)
9. MARKING CHEVRON EPOXY 24-INCH (WHITE)
10. MARKING AERIAL ENFORCEMENT BARS EPOXY

NOTES:

SEE S.D.D.'S "LONGITUDINAL MARKING (MAINLINE)", "AERIAL ENFORCEMENT BARS PAVEMENT MARKING DETAILS", "PAVEMENT MARKING EXIT RAMP AND PARALLEL EXIT RAMP", "PAVEMENT MARKING ENTRANCE RAMP AND PARALLEL ENTRANCE RAMP" FOR MARKING DIMENSIONS AND LAYOUT DETAILS.

ALL EXISTING SIGNS TO REMAIN IN PLACE.

TEMPORARY EDGELINES AND CENTERLINE MARKING PLACED DURING FINAL PAVING OPERATIONS TO BE REMOVED BY GROOVING OPERATIONS FOR INSTALLING PERMANENT PAVEMENT MARKINGS.

PROJECT NO: 1166-08-79	HWY: IH 39	COUNTY: WAUSHARA	PAVEMENT MARKING	SHEET 18	E

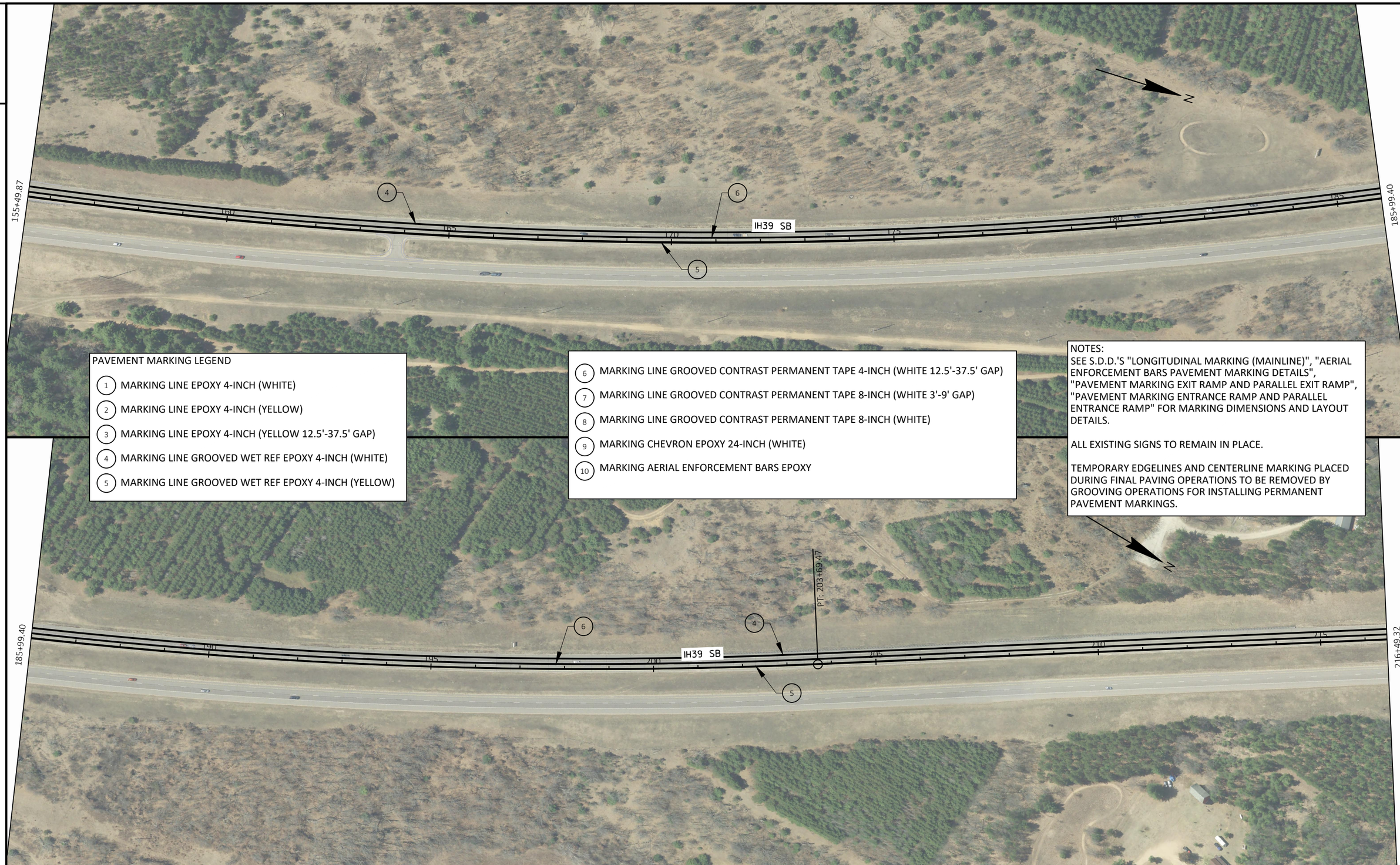

PAVEMENT MARKING LEGEND

1. MARKING LINE EPOXY 4-INCH (WHITE)
2. MARKING LINE EPOXY 4-INCH (YELLOW)
3. MARKING LINE EPOXY 4-INCH (YELLOW 12.5'-37.5' GAP)
4. MARKING LINE GROOVED WET REF EPOXY 4-INCH (WHITE)
5. MARKING LINE GROOVED WET REF EPOXY 4-INCH (YELLOW)
6. MARKING LINE GROOVED CONTRAST PERMANENT TAPE 4-INCH (WHITE 12.5'-37.5' GAP)
7. MARKING LINE GROOVED CONTRAST PERMANENT TAPE 8-INCH (WHITE 3'-9' GAP)
8. MARKING LINE GROOVED CONTRAST PERMANENT TAPE 8-INCH (WHITE)
9. MARKING CHEVRON EPOXY 24-INCH (WHITE)
10. MARKING AERIAL ENFORCEMENT BARS EPOXY

NOTES:
SEE S.D.D.'S "LONGITUDINAL MARKING (MAINLINE)", "AERIAL ENFORCEMENT BARS PAVEMENT MARKING DETAILS", "PAVEMENT MARKING EXIT RAMP AND PARALLEL EXIT RAMP", "PAVEMENT MARKING ENTRANCE RAMP AND PARALLEL ENTRANCE RAMP" FOR MARKING DIMENSIONS AND LAYOUT DETAILS.

ALL EXISTING SIGNS TO REMAIN IN PLACE.

TEMPORARY EDGELINES AND CENTERLINE MARKING PLACED DURING FINAL PAVING OPERATIONS TO BE REMOVED BY GROOVING OPERATIONS FOR INSTALLING PERMANENT PAVEMENT MARKINGS.

2

PAVEMENT MARKING LEGEND

1. MARKING LINE EPOXY 4-INCH (WHITE)
2. MARKING LINE EPOXY 4-INCH (YELLOW)
3. MARKING LINE EPOXY 4-INCH (YELLOW 12.5'-37.5' GAP)
4. MARKING LINE GROOVED WET REF EPOXY 4-INCH (WHITE)
5. MARKING LINE GROOVED WET REF EPOXY 4-INCH (YELLOW)
6. MARKING LINE GROOVED CONTRAST PERMANENT TAPE 4-INCH (WHITE 12.5'-37.5' GAP)
7. MARKING LINE GROOVED CONTRAST PERMANENT TAPE 8-INCH (WHITE 3'-9' GAP)
8. MARKING LINE GROOVED CONTRAST PERMANENT TAPE 8-INCH (WHITE)
9. MARKING CHEVRON EPOXY 24-INCH (WHITE)
10. MARKING AERIAL ENFORCEMENT BARS EPOXY

NOTES:
SEE S.D.D.'S "LONGITUDINAL MARKING (MAINLINE)", "AERIAL ENFORCEMENT BARS PAVEMENT MARKING DETAILS", "PAVEMENT MARKING EXIT RAMP AND PARALLEL EXIT RAMP", "PAVEMENT MARKING ENTRANCE RAMP AND PARALLEL ENTRANCE RAMP" FOR MARKING DIMENSIONS AND LAYOUT DETAILS.

ALL EXISTING SIGNS TO REMAIN IN PLACE.

TEMPORARY EDGELINES AND CENTERLINE MARKING PLACED DURING FINAL PAVING OPERATIONS TO BE REMOVED BY GROOVING OPERATIONS FOR INSTALLING PERMANENT PAVEMENT MARKINGS.

PROJECT NO: 1166-08-79	HWY: IH 39	COUNTY: WAUSHARA	PAVEMENT MARKING	SHEET 20	E

FILE NAME : Q:\WISDOT\I-39\1166-08-09 MARQUETTE COUNTY LINE TO COTTONVILLE AVE (SOUTH)\CAD\11660879\SHEETSOTHER\SHEETSPLAN\024501-PM.DWG
LAYOUT NAME - 3
PLOT DATE : 1/13/2022 1:23 PM PLOT BY : HEIN, MIKE PLOT NAME : PLOT SCALE : 1 IN:200 FT

WISDOT/CADDS SHEET 44

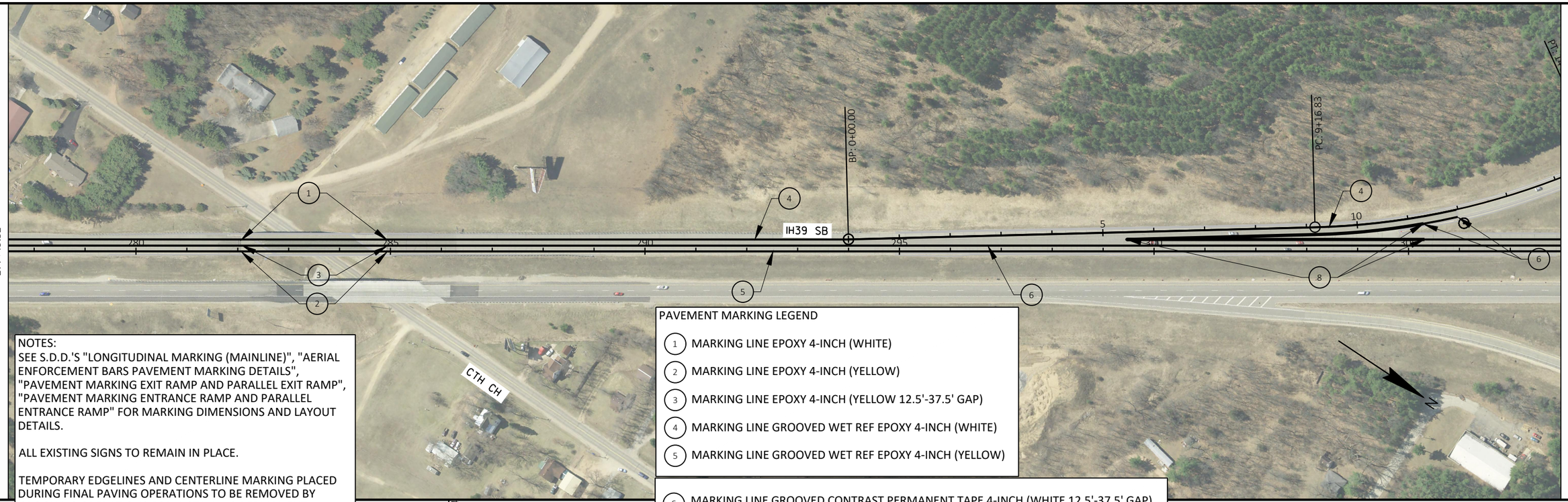

NOTES:
SEE S.D.D.'S "LONGITUDINAL MARKING (MAINLINE)", "AERIAL ENFORCEMENT BARS PAVEMENT MARKING DETAILS", "PAVEMENT MARKING EXIT RAMP AND PARALLEL EXIT RAMP", "PAVEMENT MARKING ENTRANCE RAMP AND PARALLEL ENTRANCE RAMP" FOR MARKING DIMENSIONS AND LAYOUT DETAILS.

ALL EXISTING SIGNS TO REMAIN IN PLACE.

TEMPORARY EDGELINES AND CENTERLINE MARKING PLACED DURING FINAL PAVING OPERATIONS TO BE REMOVED BY GROOVING OPERATIONS FOR INSTALLING PERMANENT PAVEMENT MARKINGS.

PAVEMENT MARKING LEGEND

1. MARKING LINE EPOXY 4-INCH (WHITE)
2. MARKING LINE EPOXY 4-INCH (YELLOW)
3. MARKING LINE EPOXY 4-INCH (YELLOW 12.5'-37.5' GAP)
4. MARKING LINE GROOVED WET REF EPOXY 4-INCH (WHITE)
5. MARKING LINE GROOVED WET REF EPOXY 4-INCH (YELLOW)
6. MARKING LINE GROOVED CONTRAST PERMANENT TAPE 4-INCH (WHITE 12.5'-37.5' GAP)
7. MARKING LINE GROOVED CONTRAST PERMANENT TAPE 8-INCH (WHITE 3'-9' GAP)
8. MARKING LINE GROOVED CONTRAST PERMANENT TAPE 8-INCH (WHITE)
9. MARKING CHEVRON EPOXY 24-INCH (WHITE)
10. MARKING AERIAL ENFORCEMENT BARS EPOXY

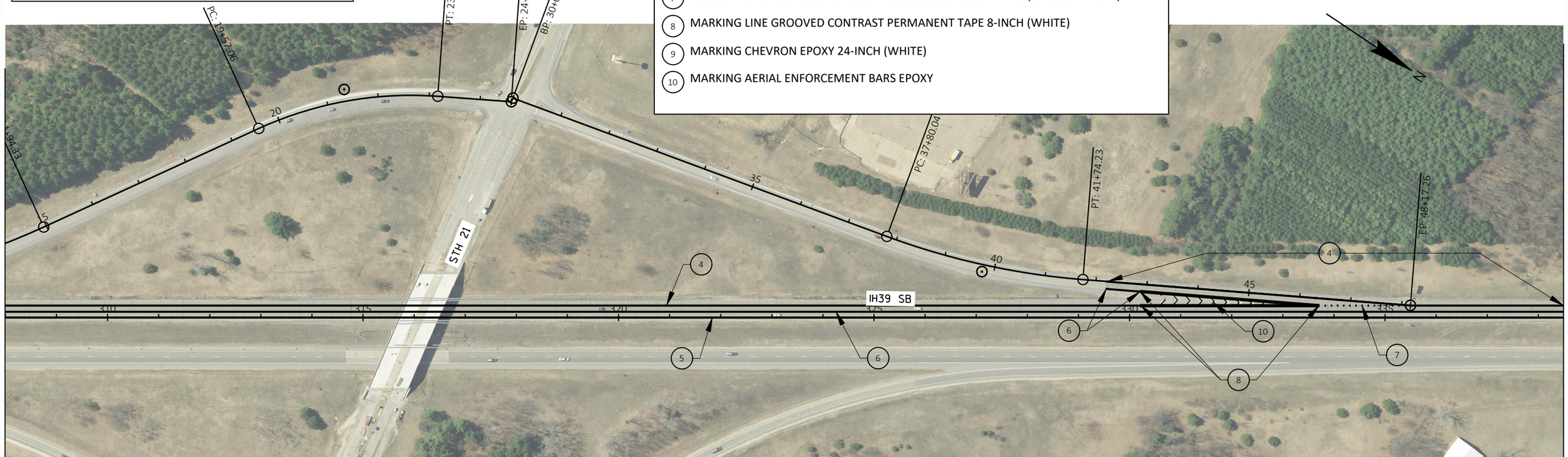

2

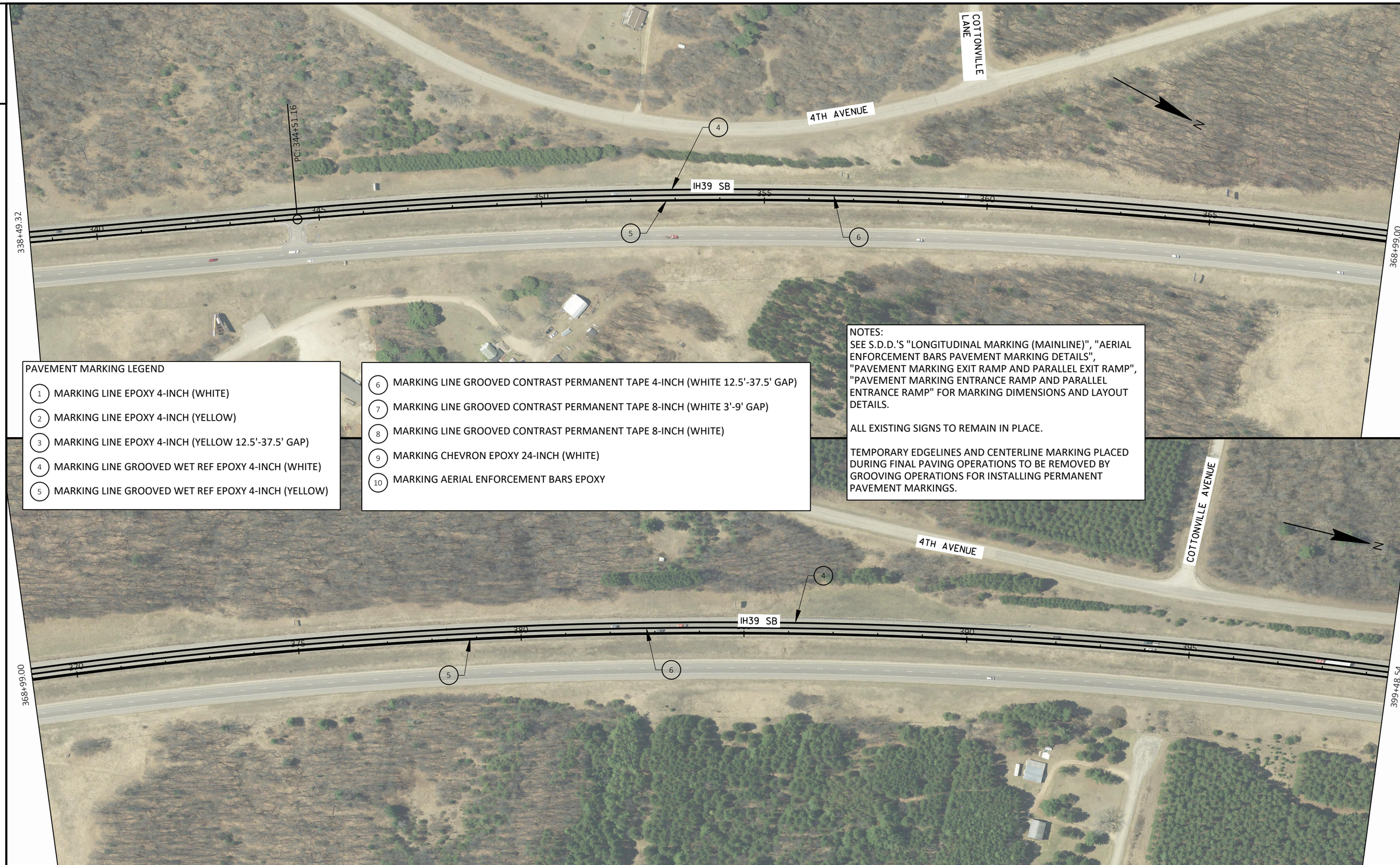

PAVEMENT MARKING LEGEND

1. MARKING LINE EPOXY 4-INCH (WHITE)
2. MARKING LINE EPOXY 4-INCH (YELLOW)
3. MARKING LINE EPOXY 4-INCH (YELLOW 12.5'-37.5' GAP)
4. MARKING LINE GROOVED WET REF EPOXY 4-INCH (WHITE)
5. MARKING LINE GROOVED WET REF EPOXY 4-INCH (YELLOW)
6. MARKING LINE GROOVED CONTRAST PERMANENT TAPE 4-INCH (WHITE 12.5'-37.5' GAP)
7. MARKING LINE GROOVED CONTRAST PERMANENT TAPE 8-INCH (WHITE 3'-9' GAP)
8. MARKING LINE GROOVED CONTRAST PERMANENT TAPE 8-INCH (WHITE)
9. MARKING CHEVRON EPOXY 24-INCH (WHITE)
10. MARKING AERIAL ENFORCEMENT BARS EPOXY

NOTES:
SEE S.D.D.'S "LONGITUDINAL MARKING (MAINLINE)", "AERIAL ENFORCEMENT BARS PAVEMENT MARKING DETAILS", "PAVEMENT MARKING EXIT RAMP AND PARALLEL EXIT RAMP", "PAVEMENT MARKING ENTRANCE RAMP AND PARALLEL ENTRANCE RAMP" FOR MARKING DIMENSIONS AND LAYOUT DETAILS.

ALL EXISTING SIGNS TO REMAIN IN PLACE.

TEMPORARY EDGELINES AND CENTERLINE MARKING PLACED DURING FINAL PAVING OPERATIONS TO BE REMOVED BY GROOVING OPERATIONS FOR INSTALLING PERMANENT PAVEMENT MARKINGS.

PROJECT NO: 1166-08-79	HWY: IH 39	COUNTY: WAUSHARA	PAVEMENT MARKING	SHEET 22	E

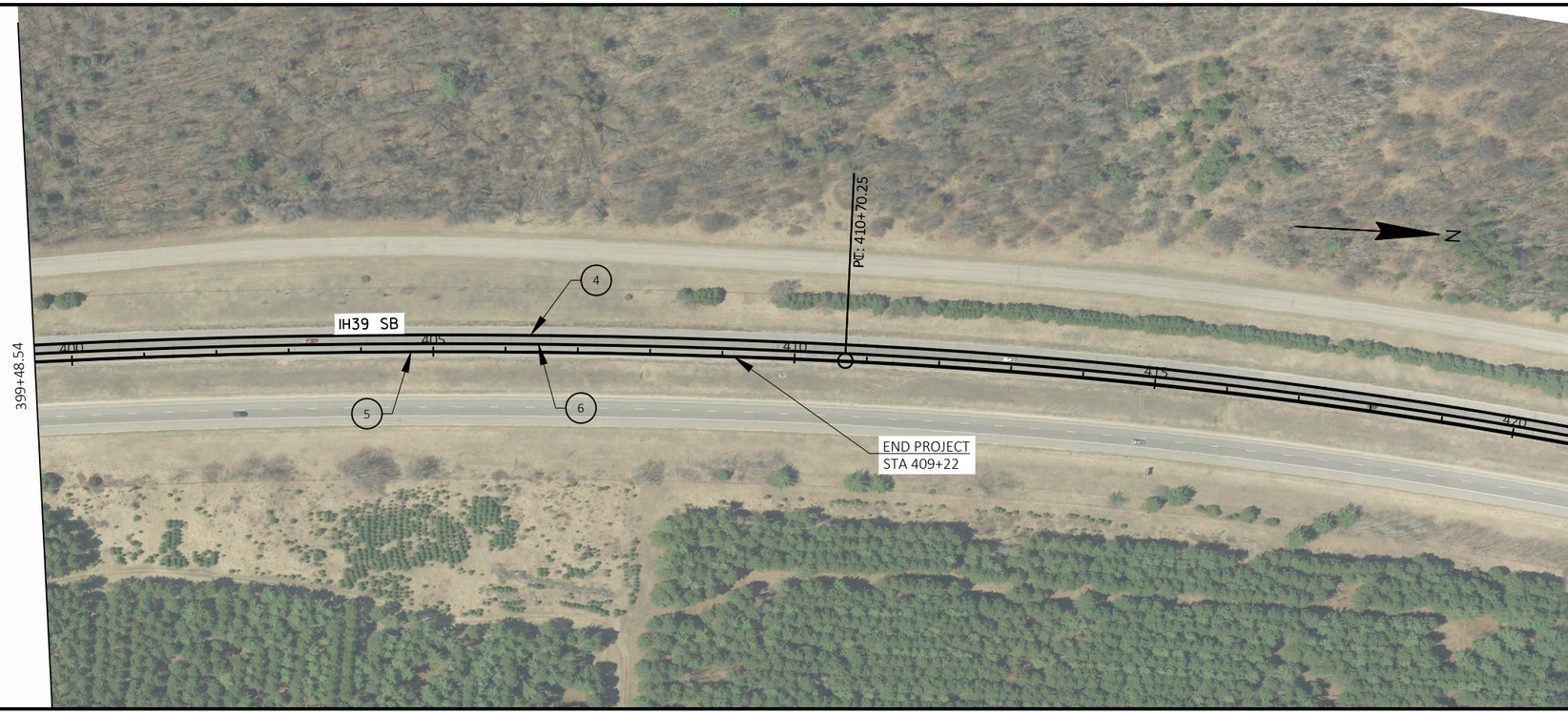

PAVEMENT MARKING LEGEND

1. MARKING LINE EPOXY 4-INCH (WHITE)
2. MARKING LINE EPOXY 4-INCH (YELLOW)
3. MARKING LINE EPOXY 4-INCH (YELLOW 12.5'-37.5' GAP)
4. MARKING LINE GROOVED WET REF EPOXY 4-INCH (WHITE)
5. MARKING LINE GROOVED WET REF EPOXY 4-INCH (YELLOW)
6. MARKING LINE GROOVED CONTRAST PERMANENT TAPE 4-INCH (WHITE 12.5'-37.5' GAP)
7. MARKING LINE GROOVED CONTRAST PERMANENT TAPE 8-INCH (WHITE 3'-9' GAP)
8. MARKING LINE GROOVED CONTRAST PERMANENT TAPE 8-INCH (WHITE)
9. MARKING CHEVRON EPOXY 24-INCH (WHITE)
10. MARKING AERIAL ENFORCEMENT BARS EPOXY

NOTES:
SEE S.D.D.'S "LONGITUDINAL MARKING (MAINLINE)", "AERIAL ENFORCEMENT BARS PAVEMENT MARKING DETAILS", "PAVEMENT MARKING EXIT RAMP AND PARALLEL EXIT RAMP", "PAVEMENT MARKING ENTRANCE RAMP AND PARALLEL ENTRANCE RAMP" FOR MARKING DIMENSIONS AND LAYOUT DETAILS.

ALL EXISTING SIGNS TO REMAIN IN PLACE.

TEMPORARY EDGELINES AND CENTERLINE MARKING PLACED DURING FINAL PAVING OPERATIONS TO BE REMOVED BY GROOVING OPERATIONS FOR INSTALLING PERMANENT PAVEMENT MARKINGS.

2

PCMS MESSAGE SUMMARY		7 DAYS PRIOR TO CONSTRUCTION	
SITE	LOCATION	PHASE 1	PHASE 2
PCMS1	STA 409+22 LT	LANE CLOSURES BEGIN	XXX DAY XX XX XX

N

M3-3 24"X12" M3-3 24"X12"
SOUTH SOUTH
M1-1 24"X24" 39 51 M1-4 24"X24"
J4-2 48"X36"
MAX. 12' WIDTH
W12-52 48"X48"
12 MILES AHEAD
WO57-52 36"X24"

EXIT 136
73
Plainfield
Wis Rapids
1 MILE

M3-3 24"X12" M3-3 24"X12"
SOUTH SOUTH
M1-1 24"X24" 39 51 M1-4 24"X24"
J4-2 48"X36"
MAX. 12' WIDTH
W12-52 48"X48"
11 MILES AHEAD
WO57-52 36"X24"

M3-3 24"X12" M3-3 24"X12"
SOUTH SOUTH
M1-1 24"X24" 39 51 M1-4 24"X24"
J4-2 48"X36"
MAX. 12' WIDTH
W12-52 48"X48"
15 MILES AHEAD
WO57-52 36"X24"

M3-3 24"X12" M3-3 24"X12"
SOUTH SOUTH
M1-1 24"X24" 39 51 M1-4 24"X24"
J4-2 48"X36"
MAX. 12' WIDTH
W12-52 48"X48"
14 MILES AHEAD
WO57-52 36"X24"

PCMS1
MB

NOTES:

THE EXACT NUMBER, LOCATION, AND SPACING OF ALL SIGNS AND DEVICES SHALL BE ADJUSTED TO FIT FIELD CONDITIONS AS APPROVED BY THE ENGINEER.

THE SPACING BETWEEN SIGNS SHOULD BE ADJUSTED TO NOT CONFLICT WITH AND TO PROVIDE A MINIMUM OF 200 FEET (500 FEET DESIRABLE) DISTANCE TO EXISTING SIGNS.

TRAFFIC CONTROL SIGNS IN USE FOR 3 DAYS OR LESS MAY BE MOUNTED ON PORTABLE SUPPORTS. THE 3 DAY MINIMUM MAY BE EXTENDED TO 7 DAYS MAXIMUM WITH APPROVAL OF THE ENGINEER. TRAFFIC CONTROL SIGNS IN PLACE LONGER THAN 3 DAYS TO BE MOUNTED ON PERMANENT SUPPORTS.

ALL SIGNS ARE 48"x48" UNLESS OTHERWISE NOTED. "W" AND "WO" SIGNS HAVE AN ORANGE BACKGROUND.

ANY SIGNS, TEMPORARY OR EXISTING, WHICH CONFLICT WITH TRAFFIC CONTROL "IN USE" SHALL BE REMOVED OR COVERED AS NEEDED AND AS APPROVED BY THE ENGINEER.

SEE S.D.D. "TRAFFIC CONTROL, LANE CLOSURE, SPEED REDUCTIONS" FOR LANE CLOSURE DETAILS.

SEE STAGING DETAILS FOR ADDITIONAL DETAIL AND S.D.D.'S.

MAX. WIDTH 12' SIGNS (W12-52)(W57-52) REQUIRED DURING STAGES 2 & 3 ONLY.

PLACE MESSAGE BOARDS ON IH 39 MAINLINE 7 DAYS PRIOR TO MAINLINE LANE CLOSURE AND RAMP CLOSURE.

PLACE MESSAGE BOARDS ON STH 21 7 DAYS PRIOR TO RAMP CLOSURE. LOCATE MESSAGE BOARD APPROXIMATELY 500 FEET PRIOR TO RAMP TERMINAL.

PLACE A TAPER OF FIVE (5) REFLECTORIZED DRUMS AHEAD OF PCMS IF NOT SHIELDED BY BARRIER.

COVER EXISTING 70 MPH SIGNS AND DISPLAY 55 MPH SIGNS WHEN LANE CLOSURES ARE IN EFFECT.

ADJUSTMENTS IN BUFFER SPACE NEED TO BE INCORPORATED WHEN THE LANE CLOSURE OCCURS NEAR AN INTERCHANGE EXIT OR ENTRANCE RAMP. THE LANE CLOSURE MUST TAKE PLACE FAR ENOUGH IN ADVANCE OF AN EXIT OR ENTRANCE RAMP TO STILL ALLOW FOR ADEQUATE BUFFER SPACE.

LEGEND:

PROJECT LOCATION

MB — TRAFFIC CONTROL SIGNS PCMS WITH CELLULAR COMMUNICATIONS

SIGN ON PERMANENT SUPPORT

PROJECT NO: 1166-08-79	HWY: IH 39	COUNTY: WAUSHARA	TRAFFIC CONTROL	SHEET 24	E

2

NOTES:
THE EXACT NUMBER, LOCATION, AND SPACING OF ALL SIGNS AND DEVICES SHALL BE ADJUSTED TO FIT FIELD CONDITIONS AS APPROVED BY ENGINEER.

THE SPACING BETWEEN SIGNS SHOULD BE ADJUSTED TO NOT CONFLICT WITH AND TO PROVIDE A MINIMUM OF 200 FEET (500 FEET DESIRABLE) DISTANCE TO EXISTING SIGNS.

ALL SIGNS ARE 48" X 48" UNLESS OTHERWISE NOTED. "W" SIGNS HAVE AN ORANGE BACKGROUND.

ANY SIGNS, TEMPORARY OR EXISTING, WHICH CONFLICT WITH TRAFFIC CONTROL "IN USE" SHALL BE REMOVED OR COVERED AS NEEDED AND AS APPROVED BY THE ENGINEER.

ANY EXISTING PAVEMENT MARKINGS THAT CONFLICT WITH TRAFFIC CONTROL "IN USE" SHALL BE REMOVED AS NEEDED AND AS APPROVED BY THE ENGINEER.

COVER EXISTING 70 MPH SIGNS AND DISPLAY 55 MPH SIGNS WHEN LANE CLOSURES ARE IN EFFECT.

ADJUSTMENTS IN BUFFER SPACE NEED TO BE INCORPORATED WHEN THE LANE CLOSURE OCCURS NEAR AN INTERCHANGE EXIT OR ENTRANCE RAMP. THE LANE CLOSURE MUST TAKE PLACE FAR ENOUGH IN ADVANCE OF AN EXIT OR ENTRANCE RAMP TO STILL ALLOW FOR ADEQUATE BUFFER SPACE.

ALL TRAFFIC CONTROL DEVICES TO BE IN PLACE AND APPROVED BY THE ENGINEER BEFORE SWITCHING TRAFFIC.

USE FLAGGERS AS NECESSARY WHEN WORKING AROUND RAMPS.

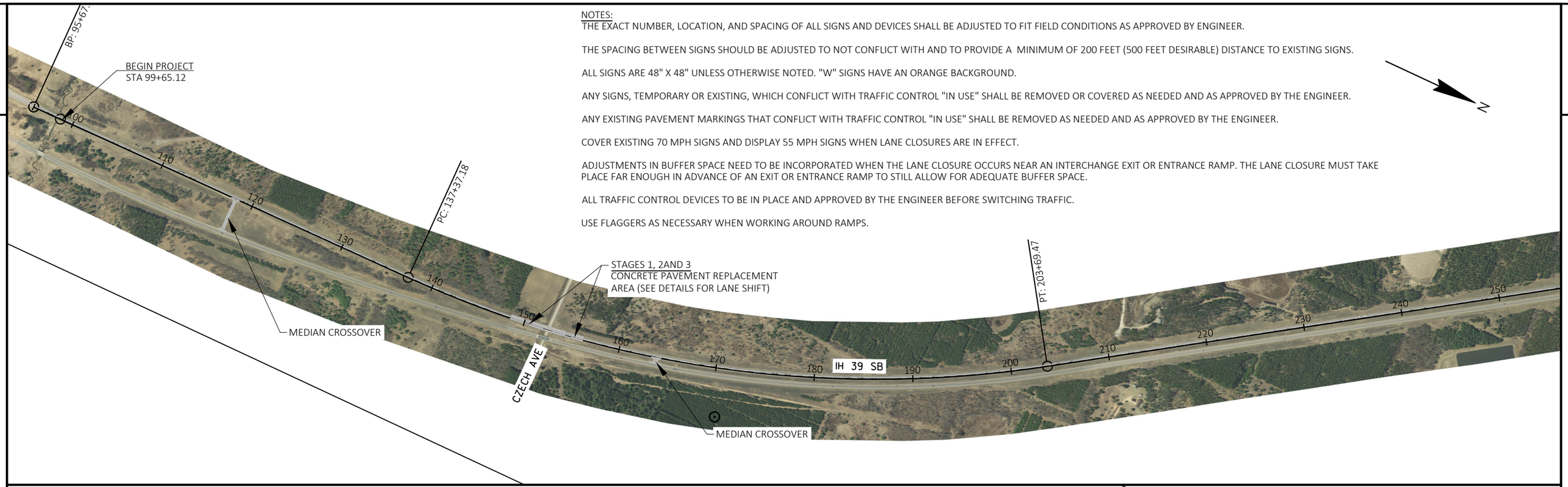

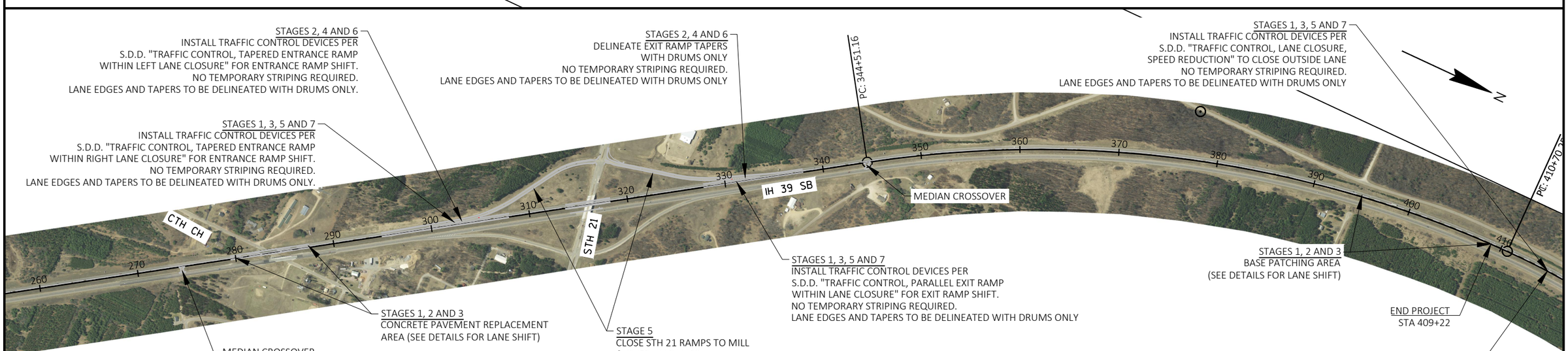

NOTES:
LAST TRAFFIC CONTROL DRUM OF TRANSITION AREA/BUFFER SPACE LOCATION ON S.D.D. "TRAFFIC CONTROL LANE CLOSURE" TO BE PLACED AT STA 419+50.

2

PROJECT NO: 1166-08-79	HWY: IH 39	COUNTY: WAUSHARA	TRAFFIC CONTROL STAGING OVERVIEW	SHEET 25	E

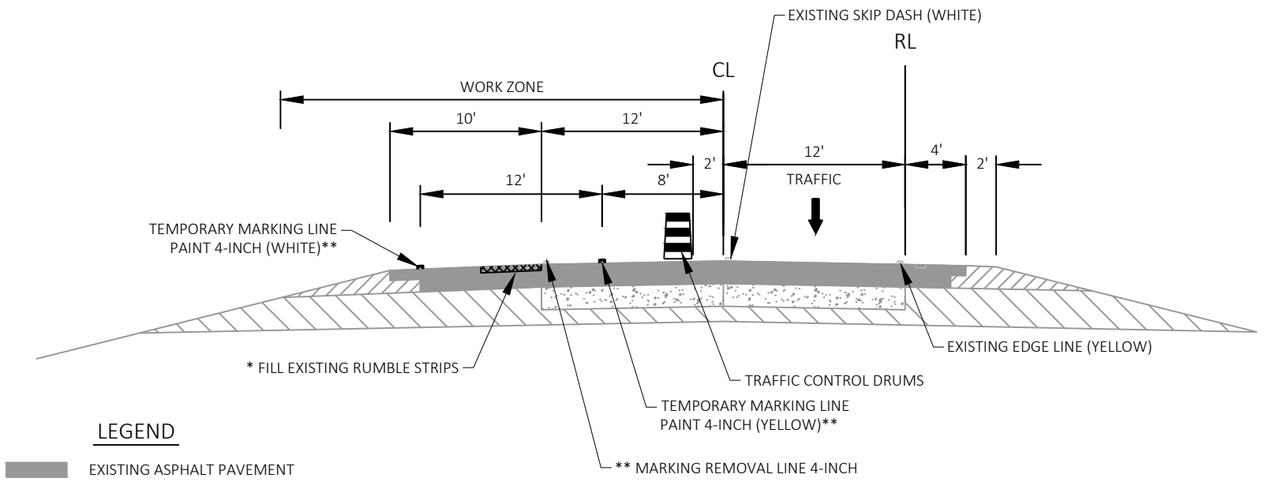

STAGE 1

LEGEND

- EXISTING ASPHALT PAVEMENT
- EXISTING CONCRETE PAVEMENT
- EXISTING SHOULDER BASE COURSE
- EXISTING BASE COURSE
- PROPOSED ASPHALT PAVEMENT

CONTROLLING CONSTRUCTION ACTIVITIES

STAGE 1

1. CLOSE OUTSIDE LANE AND SHOULDER.
2. INSTALL EXIT RAMP AND ENTRANCE RAMP TRAFFIC CONTROL TO ACCOMMODATE OUTSIDE LANE CLOSURE.
3. REMOVE EXISTING CENTERLINE PAVEMENT MARKING THROUGH MAINLINE LANE CLOSURE TAPER.
4. FILL EXISTING RUMBLE STRIP ON OUTSIDE SHOULDERS IN AREAS OF CONCRETE PAVEMENT REMOVAL.
5. REMOVE EXISTING EDGE LINE ADJACENT TO FILLED RUMBLE STRIP AREAS.
6. REMOVE EXIT RAMP GORE STRIPING.
7. INSTALL TEMPORARY EDGE LINE MARKINGS THROUGH LANE SHIFT AREAS FOR BASE PATCHING AND CONCRETE REMOVAL.

* STA 146+47 - STA 150+67
STA 163+34 - STA 167+54
STA 277+34 - STA 282+54
STA 305+00 - STA 309+20
STA 393+50 - STA 420+00

** STA 146+47 - STA 167+54
STA 277+34 - STA 309+20
STA 393+50 - STA 420+00

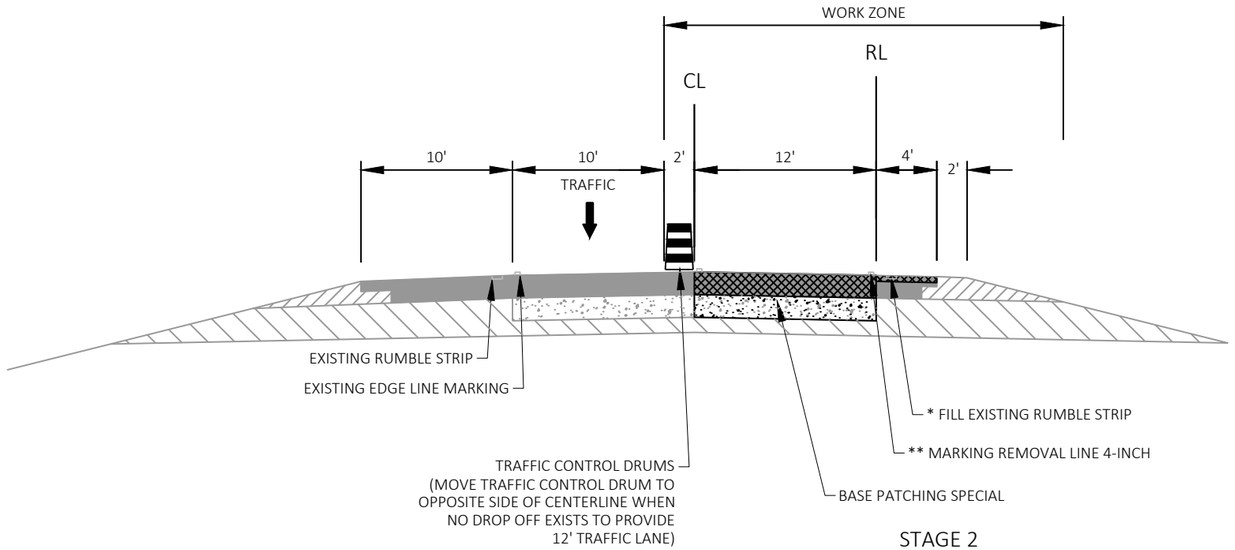

STAGE 2
MAINLINE

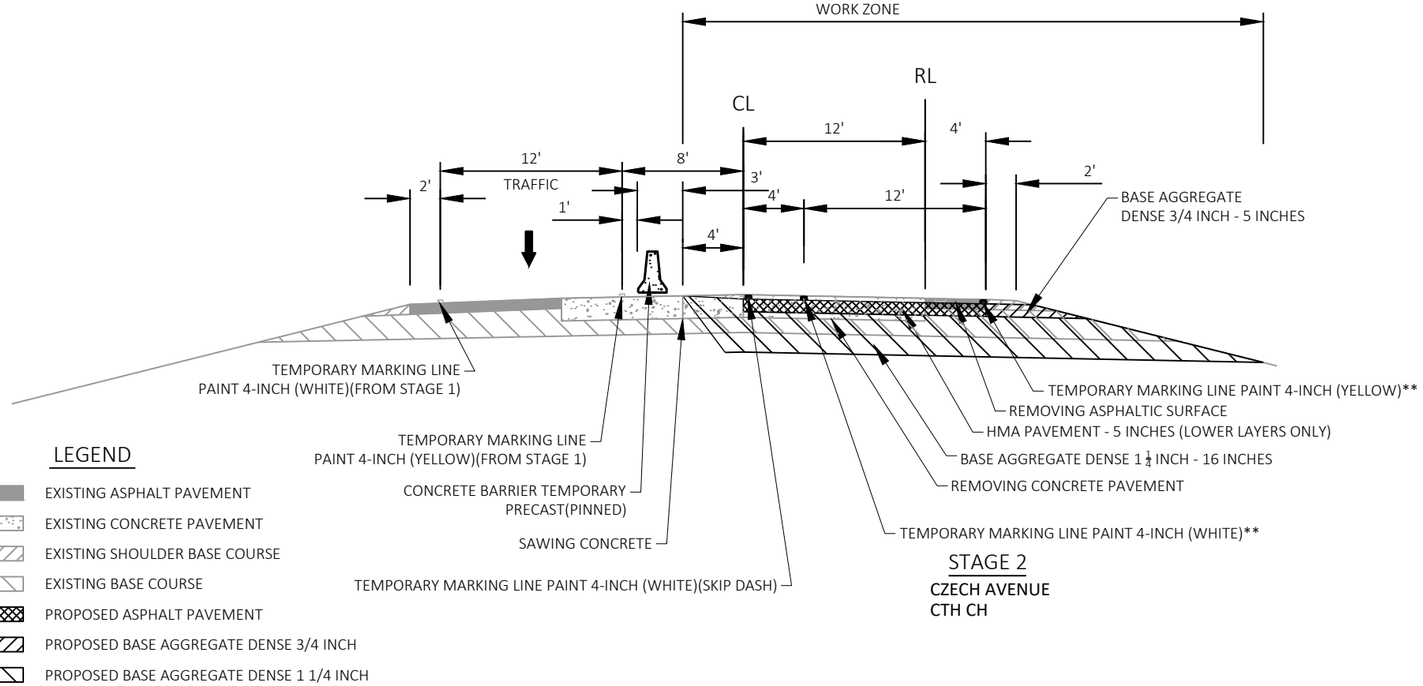

STAGE 2
CZECH AVENUE
CTH CH

LEGEND

- EXISTING ASPHALT PAVEMENT
- EXISTING CONCRETE PAVEMENT
- EXISTING SHOULDER BASE COURSE
- EXISTING BASE COURSE
- PROPOSED ASPHALT PAVEMENT
- PROPOSED BASE AGGREGATE DENSE 3/4 INCH
- PROPOSED BASE AGGREGATE DENSE 1 1/4 INCH

CONTROLLING CONSTRUCTION ACTIVITIES

STAGE 2
1. CLOSE INSIDE LANE AND SHOULDER.
2. INSTALL EXIT RAMP AND ENTRANCE RAMP TRAFFIC CONTROL TO ACCOMMODATE INSIDE LANE CLOSURE.
3. INSTALL AND PIN CONCRETE BARRIER TEMPORARY PRECAST IN AREAS OF CONCRETE REMOVAL.
4. INSTALL TEMPORARY EDGE LINE MARKINGS THROUGH LANE SHIFT AREAS FOR BASE PATCHING AND CONCRETE REMOVAL.
5. FILL EXISTING RUMBLE STRIP ON INSIDE SHOULDERS IN AREAS OF CONCRETE PAVEMENT REMOVAL.
6. REMOVE EXISTING EDGE LINE ADJACENT TO FILLED RUMBLE STRIP AREAS.
7. REMOVE AND REPLACE EXISTING BEAM GUARD IN LIMITS OF CONCRETE PAVEMENT REMOVAL.
8. REMOVE SECTIONS OF EXISTING CONCRETE PAVEMENT AT CTH CH AND CZECH AVENUE.
9. PLACE NEW BASE AGGREGATE DENSE AND PAVE LOWER LAYERS OF ASPHALT IN AREAS OF CONCRETE REMOVAL.
10. PAVE UPPER LAYER IN AREAS OF CONCRETE PAVEMENT REMOVAL AT CZECH AVENUE AND CTH CH WITH LOWER LAYER ASPHALT MIX. THIS LAYER TO BE MILLED OFF PRIOR TO PAVING FINAL SURFACE IN LATER STAGES.
11. PERFORM BASE PATCHING ON CONCRETE JOINTS.
12. MARK TEMPORARY CENTERLINE ON ASPHALT IN AREAS OF CONCRETE REMOVAL.

* STA 147+57 - STA 150+67
STA 154+34 - STA 166+44
STA 278+44 - STA 281+54
STA 286+30 - STA 308+10

** STA 147+57 - STA 150+67
STA 154+34 - STA 166+44
STA 278+44 - STA 282+05
STA 286+30 - STA 308+10
STA 393+50 - STA 420+00

NOTE: DO NOT PIN CONCRETE BARRIER TEMPORARY PRECAST TO BRIDGE DECKS. DO NOT STORE EQUIPMENT OR MATERIALS WITHIN 6 FEET OF UNPINNED CONCRETE BARRIER TEMPORARY PRECAST.

PROJECT NO: 1166-08-79	HWY: IH 39	COUNTY: WAUSHARA	TRAFFIC CONTROL - STAGE 2 DETAILS	SHEET 28	E

FILE NAME : Q:\WISDOT\I-39\1166-08-09 MARQUETTE COUNTY LINE TO COTTONVILLE AVE (SOUTH)\CAD\11660879\SHEETSOTHER\SHEETSPLAN\026003_2S.DWG
LAYOUT NAME - 01
PLOT DATE : 1/13/2022 12:23 PM
PLOT BY : HEIN, MIKE
PLOT NAME :
PLOT SCALE : 1 IN:100 FT
WISDOT/CADDS SHEET 44

2

2

WO1-6
48" X 24"
TYPE III BARRICADE

CTH CH

IH39 SB

100' TYP

110'

278

280

220' TAPER

50'

282

284

286

288

290

292

200'

200'

25' @ 8:1 TAPER

8:1 TAPER

100' TYP

1570'

STA: 281+54

STA: 286+30

WO5-52L
18"X54"

WO1-4L

N

LEGEND:

- TRAFFIC CONTROL DRUM
- TRAFFIC CONTROL DRUM WITH TYPE C STEADY BURN LIGHT
- DIRECTION OF TRAFFIC
- CONCRETE BARRIER TEMPORARY PRECAST
- TRAFFIC CONTROL BARRICADE TYPE III W/ SIGN
- FILL EXISTING RUMBLE STRIP
- WORK AREA

SEE S.D.D. "TRAFFIC CONTROL, TAPERED ENTRANCE RAMP WITHIN LEFT LANE CLOSURE" FOR ADDITIONAL DETAIL. NO TEMPORARY STRIPING REQUIRED. LANE EDGES AND TAPERS DELINEATED WITH DRUMS ONLY.

SEE S.D.D. "TRAFFIC CONTROL, PARTIAL LANE SHIFT MULTILANE DIVIDED 50 MPH AND GREATER" FOR STRIPING LAYOUT THROUGH LANE SHIFT.

25' TYP

298

300

302

304

306

308

310

312

IH39 SB

1570'

100'

110'

220' TAPER

STA: 306+00

100'

1000'

PLACE 1000'
PRIOR TO TAPER

WO1-4R

N

R11-2L
48" X 30"
LANE
CLOSED
TYPE III BARRICADE

WO1-6
48" X 24"
TYPE III BARRICADE

PROJECT NO: 1166-08-79	HWY: IH 39	COUNTY: WAUSHARA	TRAFFIC CONTROL - STAGE 2 DETAILS	SHEET 29	E

FILE NAME : Q:\WISDOT\I-39\1166-08-09 MARQUETTE COUNTY LINE TO COTTONVILLE AVE (SOUTH)\CAD\11660879\SHEETSOTHER\SHEETSPLAN\026003_2S.DWG
LAYOUT NAME - 02

PLOT DATE : 1/13/2022 12:24 PM PLOT BY : HEIN, MIKE PLOT NAME : PLOT SCALE : ##########

WISDOT/CADDS SHEET 44

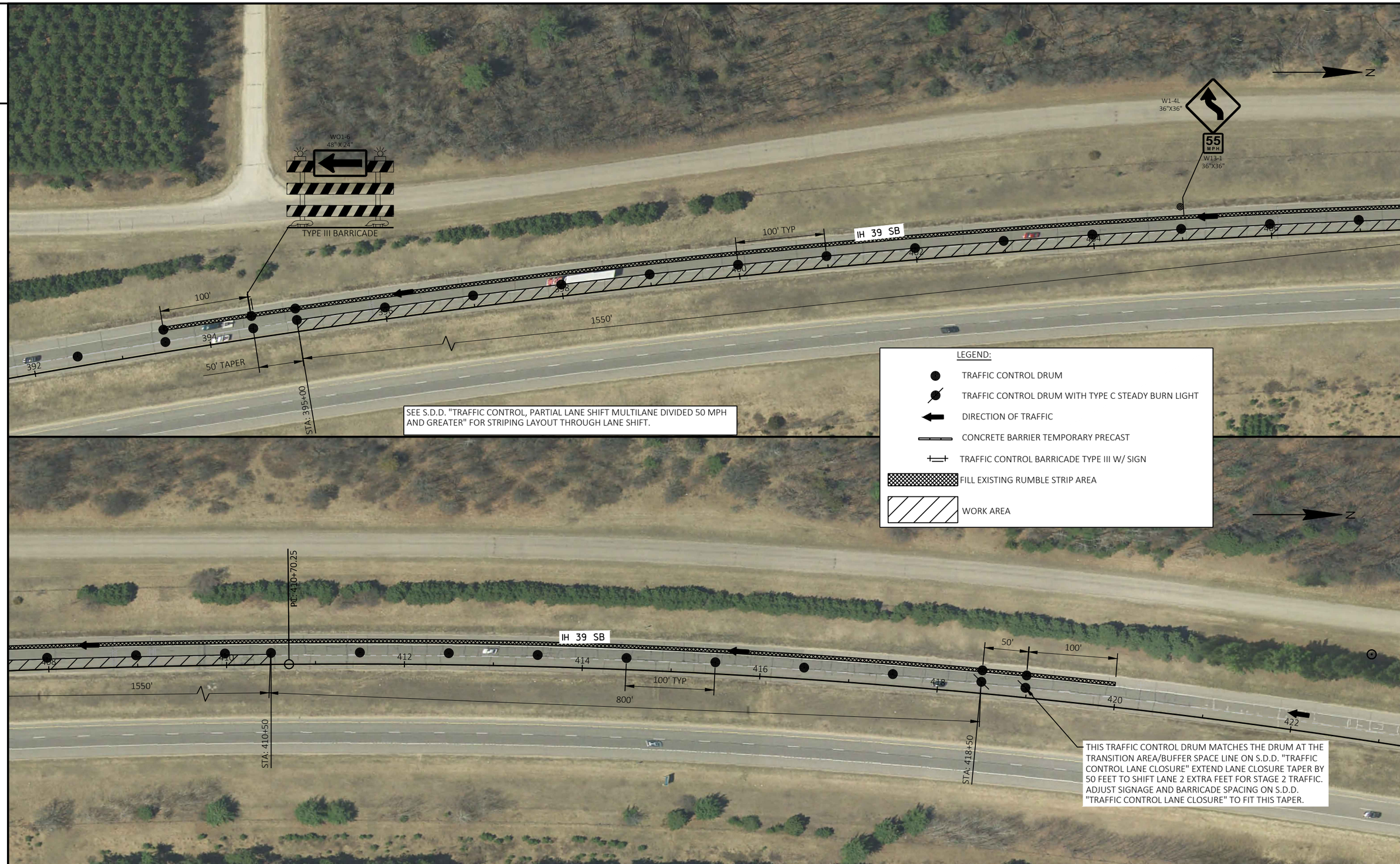
N
W01-6
48" X 24"
TYPE III BARRICADE
W1-4L
36"X36"
55
MPH
W13-1
36"X36"
100' TYP
IH 39 SB
100'
1550'
50' TAPER
392
394
396
398
400
402
404
406
STA: 395+00
SEE S.D.D. "TRAFFIC CONTROL, PARTIAL LANE SHIFT MULTILANE DIVIDED 50 MPH AND GREATER" FOR STRIPING LAYOUT THROUGH LANE SHIFT.
LEGEND:
TRAFFIC CONTROL DRUM
TRAFFIC CONTROL DRUM WITH TYPE C STEADY BURN LIGHT
DIRECTION OF TRAFFIC
CONCRETE BARRIER TEMPORARY PRECAST
TRAFFIC CONTROL BARRICADE TYPE III W/ SIGN
FILL EXISTING RUMBLE STRIP AREA
WORK AREA
N
PC: 410+70.25
IH 39 SB
408
410
412
414
416
418
420
422
1550'
100' TYP
800'
50'
100'
STA: 410+50
STA: 418+50
THIS TRAFFIC CONTROL DRUM MATCHES THE DRUM AT THE TRANSITION AREA/BUFFER SPACE LINE ON S.D.D. "TRAFFIC CONTROL LANE CLOSURE" EXTEND LANE CLOSURE TAPER BY 50 FEET TO SHIFT LANE 2 EXTRA FEET FOR STAGE 2 TRAFFIC. ADJUST SIGNAGE AND BARRICADE SPACING ON S.D.D. "TRAFFIC CONTROL LANE CLOSURE" TO FIT THIS TAPER.

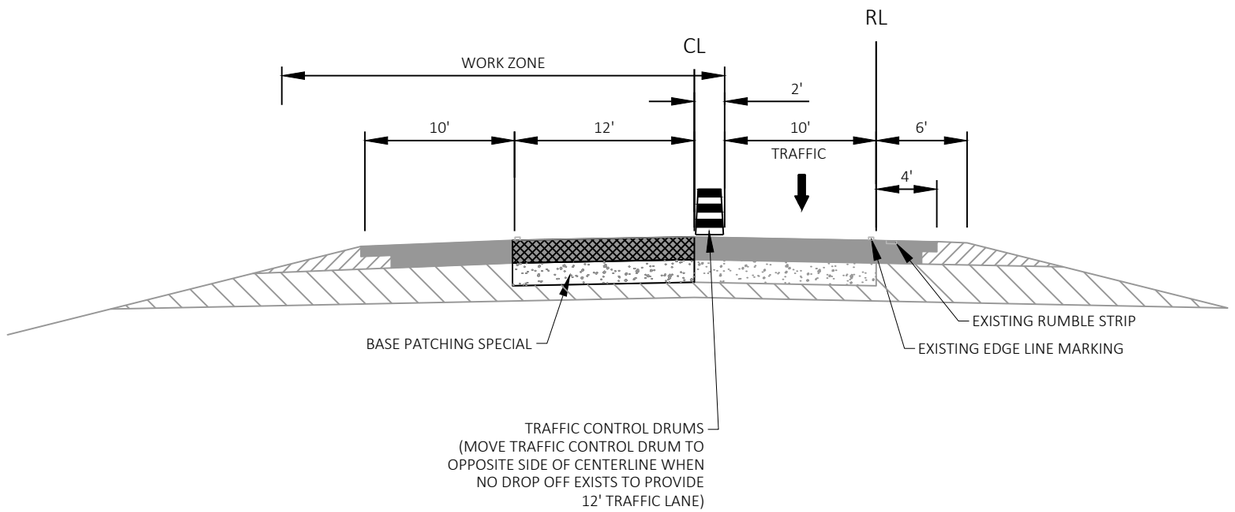

STAGE 3
MAINLINE

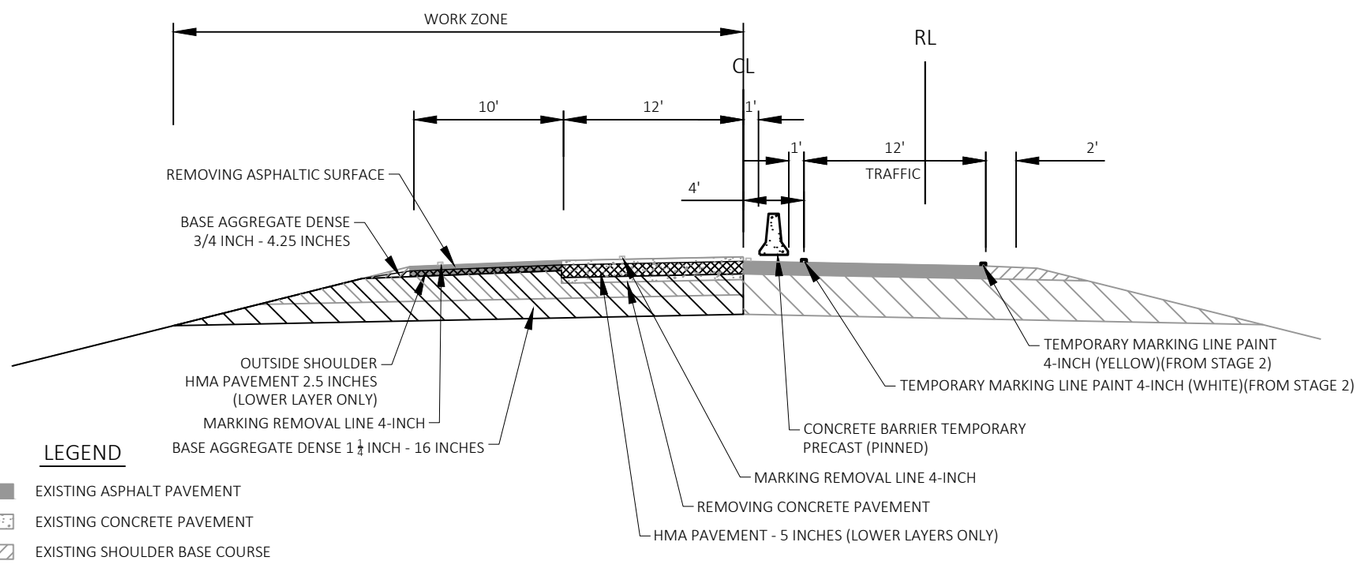

LEGEND

- EXISTING ASPHALT PAVEMENT
- EXISTING CONCRETE PAVEMENT
- EXISTING SHOULDER BASE COURSE
- EXISTING BASE COURSE
- PROPOSED ASPHALT PAVEMENT
- PROPOSED BASE AGGREGATE DENSE 3/4 INCH
- PROPOSED BASE AGGREGATE DENSE 1 1/4 INCH

STAGE 3
CZECH AVENUE
CTH CH

CONTROLLING CONSTRUCTION ACTIVITIES

STAGE 3
1. CLOSE OUTSIDE LANE AND SHOULDER.
2. REMOVE TEMPORARY PAVEMENT MARKINGS WITHIN AREAS OF CONCRETE BARRIER TEMPORARY PRECAST.
3. INSTALL EXIT RAMP AND ENTRANCE RAMP TRAFFIC CONTROL TO ACCOMMODATE OUTSIDE LANE CLOSURE.
4. INSTALL AND PIN CONCRETE BARRIER TEMPORARY PRECAST IN AREAS OF CONCRETE REMOVAL.
5. REMOVE AND REPLACE EXISTING BEAM GUARD IN LIMITS OF CONCRETE PAVEMENT REMOVAL.
6. REMOVE SECTIONS OF EXISTING CONCRETE PAVEMENT AT CTH CH AND CZECH AVENUE.
7. PLACE NEW BASE AGGREGATE DENSE AND PAVE LOWER LAYERS OF ASPHALT IN AREAS OF CONCRETE REMOVAL.
8. PAVE UPPER LAYER IN AREAS OF CONCRETE PAVEMENT REMOVAL AT CZECH AVENUE AND CTH CH WITH LOWER LAYER ASPHALT MIX. THIS LAYER TO BE MILLED OFF PRIOR TO PAVING FINAL SURFACE IN LATER STAGES.
9. PERFORM BASE PATCHING ON CONCRETE JOINTS.
10. REMOVE TEMPORARY MARKING EDGE LINES THROUGH LANE SHIFT AREAS FOR BASE PATCHING AND CONCRETE REMOVAL PRIOR TO OPENING BOTH LANES OF TRAFFIC.

NOTE: DO NOT PIN CONCRETE BARRIER TEMPORARY PRECAST TO BRIDGE DECKS. DO NOT STORE EQUIPMENT OR MATERIALS WITHIN 6 FEET OF UNPINNED CONCRETE BARRIER TEMPORARY PRECAST.

2

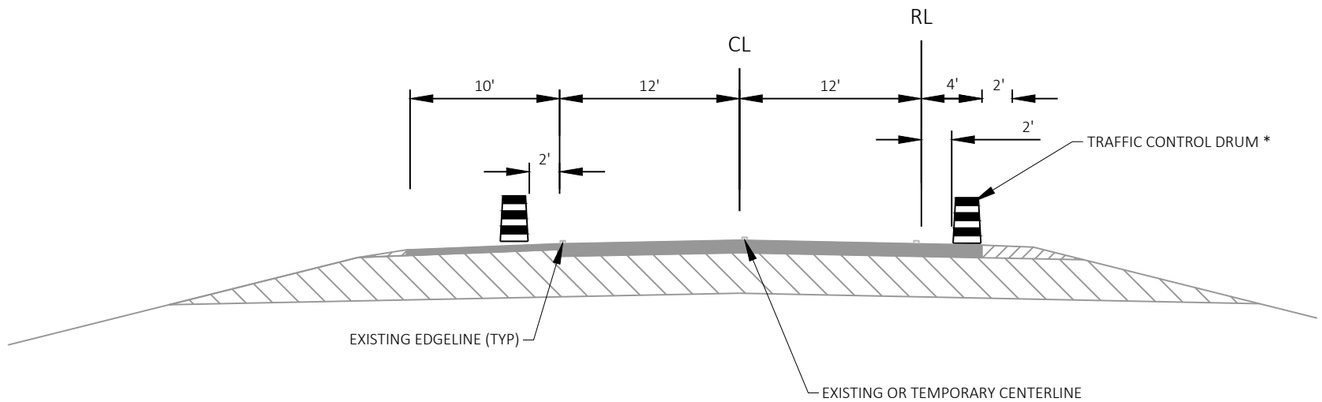

TYPICAL SECTION FOR OPENING BOTH LANES OF TRAFFIC
ON WEEKENDS, HOLIDAYS AND BETWEEN STAGES

* PLACE TRAFFIC CONTROL DRUMS AT 100' SPACING IN AREAS WHERE EXISTING EDGELINES HAVE BEEN REMOVED. UTILIZE DRUMS FROM CENTERLINE DELINEATION WHEN APPLICABLE.

2

PROJECT NO: 1166-08-79	HWY: IH 39	COUNTY: WAUSHARA	TRAFFIC CONTROL - STAGE 3 DETAILS	SHEET 33	E

FILE NAME : Q:\WISDOT\I-39\1166-08-09 MARQUETTE COUNTY LINE TO COTTONVILLE AVE (SOUTH)\CAD\11660879\SHEETSOTHER\SHEETSPLAN\026003_3S.DWG
LAYOUT NAME - 01
PLOT DATE : 1/13/2022 12:25 PM
PLOT BY : HEIN, MIKE
PLOT NAME :
PLOT SCALE : ##########
WISDOT/CADDS SHEET 44

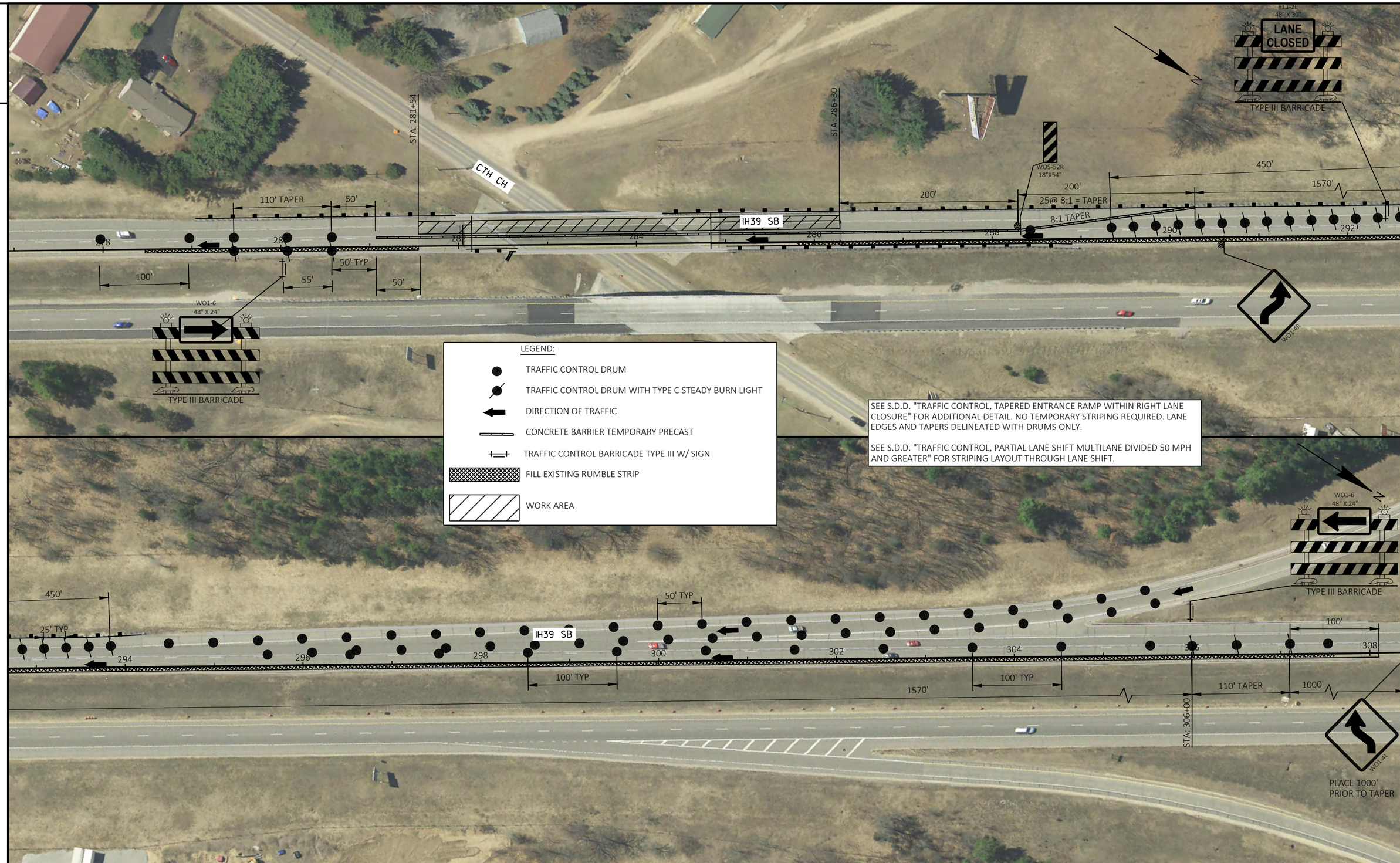

PROJECT NO: 1166-08-79	HWY: IH 39	COUNTY: WAUSHARA	TRAFFIC CONTROL - STAGE 3 DETAILS	SHEET 34	E

FILE NAME : Q:\WISDOT\I-39\1166-08-09 MARQUETTE COUNTY LINE TO COTTONVILLE AVE (SOUTH)\CAD\11660879\SHEETSOTHER\SHEETSPLAN\026003_3S.DWG
LAYOUT NAME - 02
PLOT DATE : 1/13/2022 12:25 PM PLOT BY : HEIN, MIKE PLOT NAME : PLOT SCALE : ###########

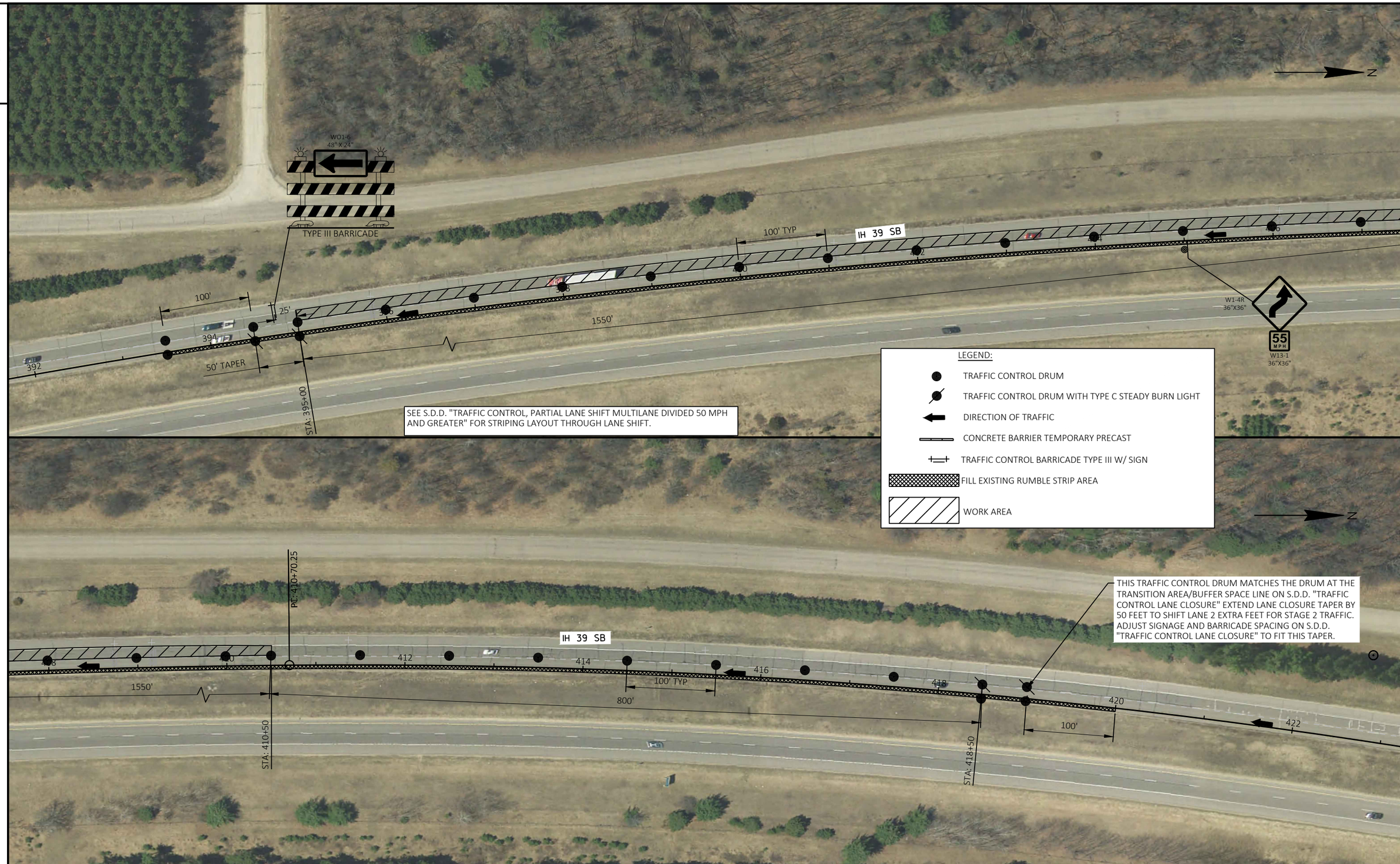

PROJECT NO: 1166-08-79	HWY: IH 39	COUNTY: WAUSHARA	TRAFFIC CONTROL - STAGE 3 DETAILS	SHEET 35	E

FILE NAME : Q:\WISDOT\I-39\1166-08-09 MARQUETTE COUNTY LINE TO COTTONVILLE AVE (SOUTH)\CAD\11660879\SHEETSOTHER\SHEETSPLAN\026003_3S.DWG
LAYOUT NAME - 03
PLOT DATE : 1/13/2022 12:25 PM PLOT BY : HEIN, MIKE PLOT NAME : PLOT SCALE : ##########
WISDOT/CADDS SHEET 44

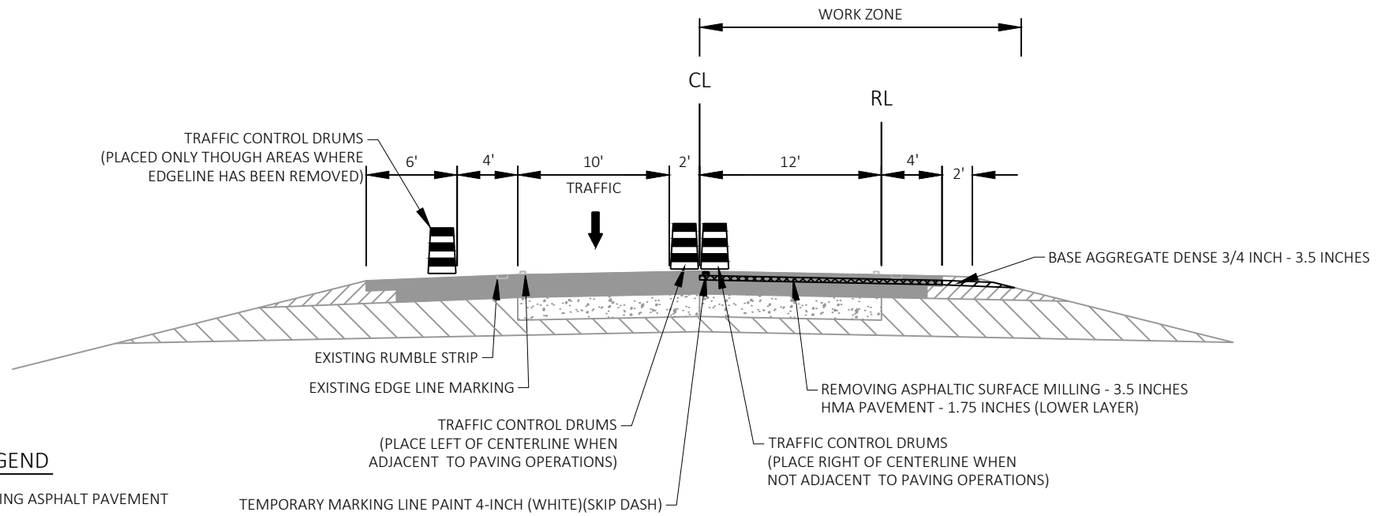

LEGEND

- EXISTING ASPHALT PAVEMENT
- EXISTING CONCRETE PAVEMENT
- EXISTING SHOULDER BASE COURSE
- EXISTING BASE COURSE
- PROPOSED ASPHALT PAVEMENT
- PROPOSED BASE AGGREGATE DENSE 3/4 INCH

STAGE 4

CONTROLLING CONSTRUCTION ACTIVITIES

STAGE 4

1. CLOSE INSIDE LANE AND SHOULDER.
2. INSTALL EXIT RAMP AND ENTRANCE RAMP TRAFFIC CONTROL TO ACCOMMODATE INSIDE LANE CLOSURE.
3. MILL INSIDE LANE AND SHOULDER
4. PAVE LOWER LAYER ON INSIDE LANE AND SHOULDER.
5. RESTORE SHOULDER.
6. MARK TEMPORARY CENTERLINE.
7. PAVE WEDGE JOINTS WHERE NEEDED.

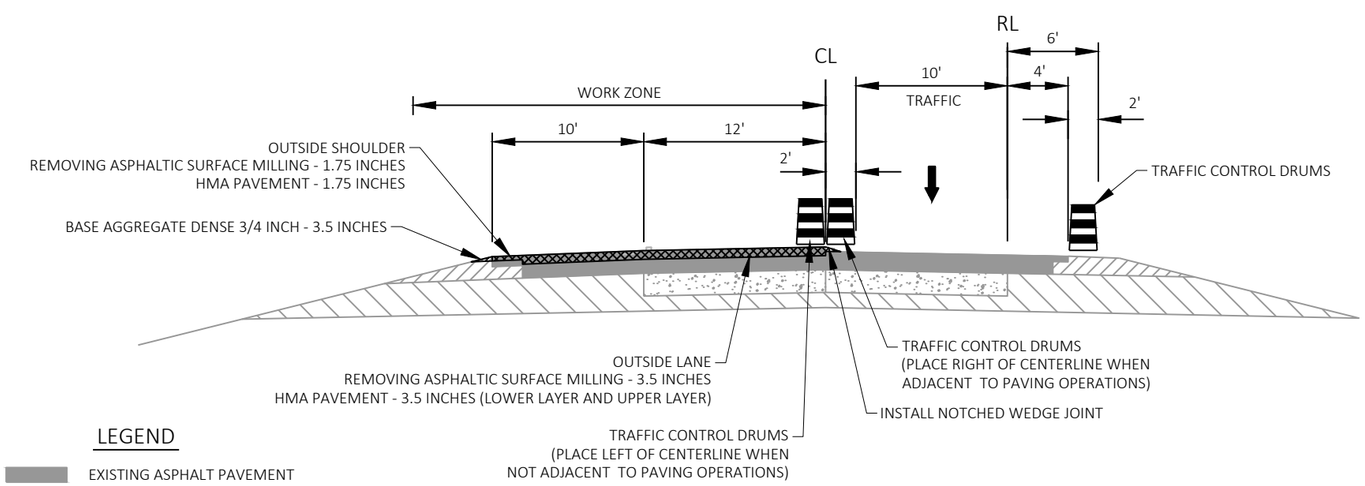

LEGEND

- EXISTING ASPHALT PAVEMENT
- EXISTING CONCRETE PAVEMENT
- EXISTING SHOULDER BASE COURSE
- EXISTING BASE COURSE
- PROPOSED ASPHALT PAVEMENT
- PROPOSED BASE AGGREGATE DENSE 3/4 INCH

STAGE 5

CONTROLLING CONSTRUCTION ACTIVITIES

STAGE 5

1. CLOSE OUTSIDE LANE AND SHOULDER.
2. INSTALL EXIT RAMP AND ENTRANCE RAMP TRAFFIC CONTROL TO ACCOMMODATE OUTSIDE LANE CLOSURE.
3. MILL OUTSIDE LANE AND OUTSIDE SHOULDER.
4. PAVE LOWER LAYER OUTSIDE LANE.
5. PAVE UPPER LAYER ON OUTSIDE LANE AND OUTSIDE SHOULDER.
6. MILL AND PAVE EXIT AND ENTRANCE RAMPS.
7. REMOVE EXISTING BEAM GUARD AND INSTALL MGS GUARDRAIL.

2

NOTES:
1) THE EXACT NUMBER, SPACING AND LOCATION OF TRAFFIC CONTROL SIGNS AND DEVICES SHALL BE ADJUSTED TO FIT FIELD CONDITIONS AS APPROVED BY THE ENGINEER.
2) ANY SIGNS TEMPORARY OR EXISTING, WHICH CONFLICT WITH THE TRAFFIC CONTROL "IN USE" SHALL BE REMOVED OR COVERED AS NEEDED AND APPROVED BY THE ENGINEER.
3) ALL SIGNS ARE 48" X 48" UNLESS OTHERWISE NOTED.

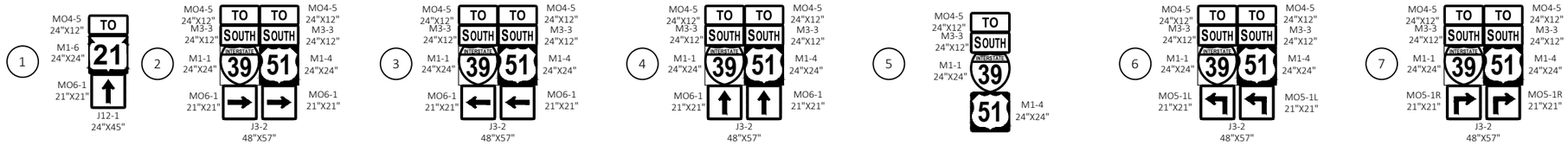

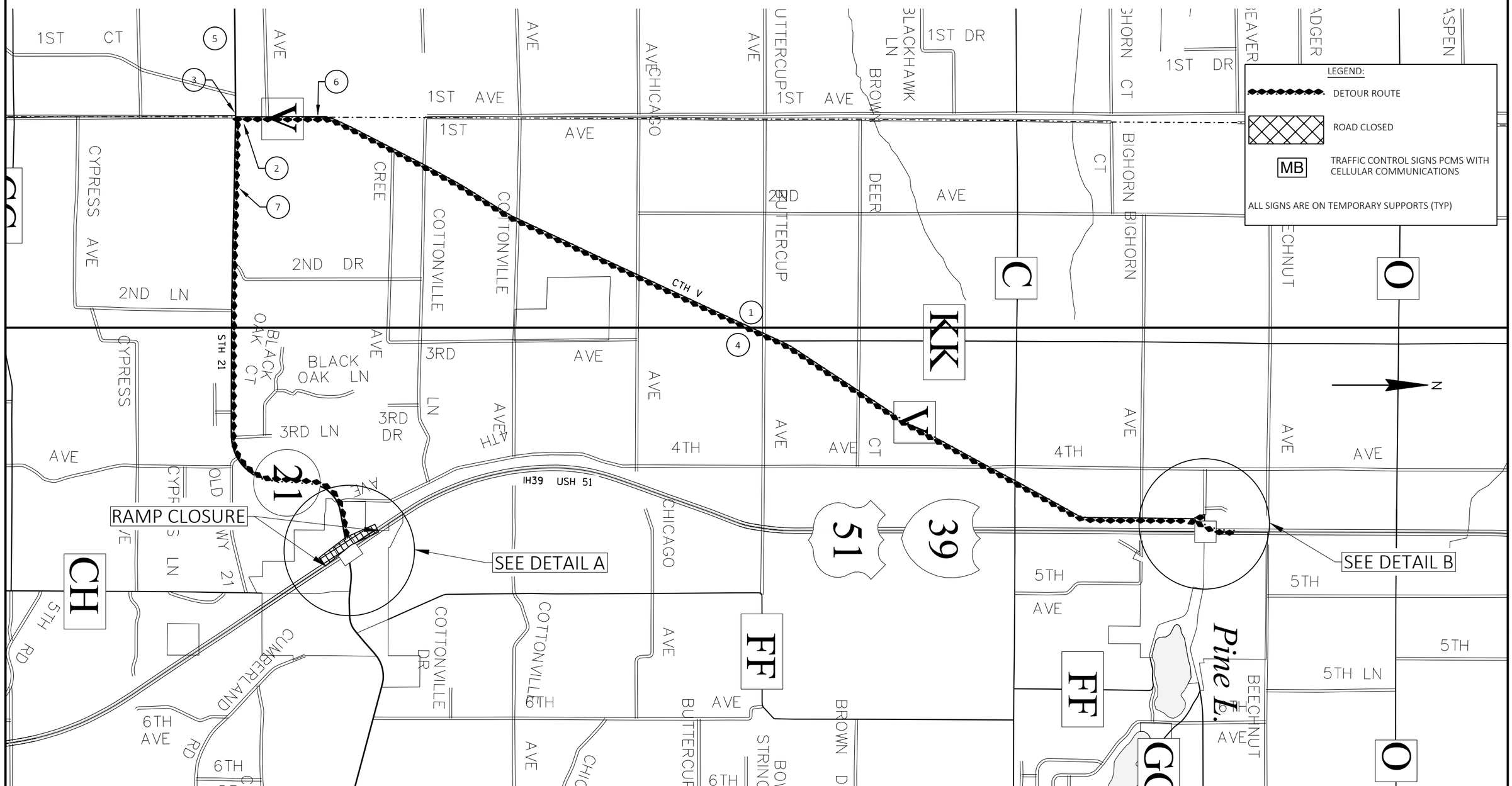

2

PROJECT NO: 1166-08-79	HWY: IH 39	COUNTY: WAUSHARA	DETOUR	SHEET 37	E

FILE NAME : Q:\WISDOT\I-39\1166-08-09 MARQUETTE COUNTY LINE TO COTTONVILLE AVE (SOUTH)\CAD\11660879\SHEETSOTHER\SHEETSPLAN\027001-DT.DWG
LAYOUT NAME - 1
PLOT DATE : 1/13/2022 12:26 PM PLOT BY : HEIN, MIKE PLOT NAME : PLOT SCALE : 1 IN:4000 FT

PCMS MESSAGE SUMMARY		7 DAYS PRIOR TO RAMP CLOSURE	
SITE	LOCATION	PHASE 1	PHASE 2
PCMS2	200' ON TO SB ENTRANCE RAMP	SB RAMP TO CLOSE	XXX DAY XX XX XX
PCMS3	STA 335+50 LT	SB RAMP TO CLOSE	XXX DAY XX XX XX

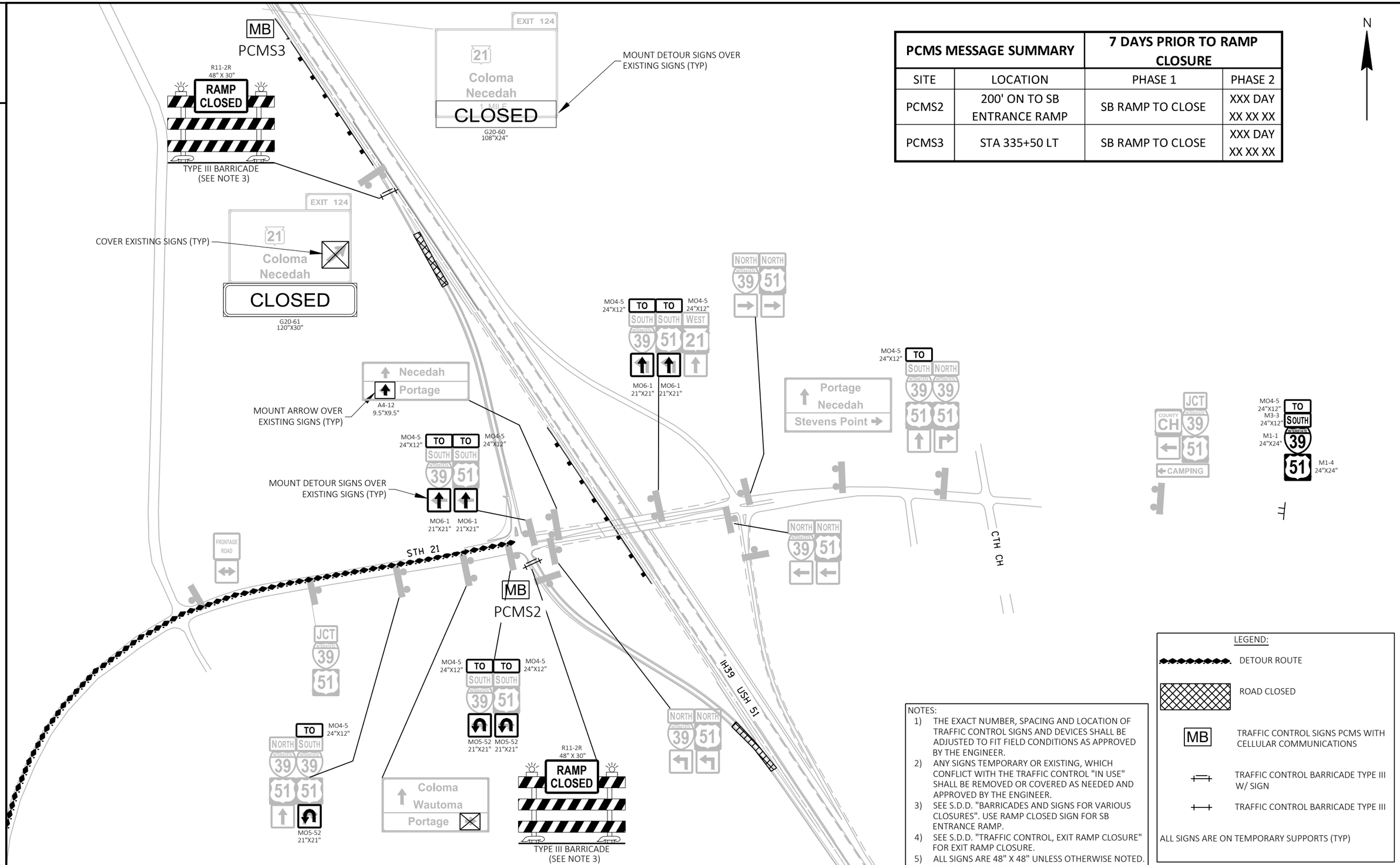

NOTES:
1) THE EXACT NUMBER, SPACING AND LOCATION OF TRAFFIC CONTROL SIGNS AND DEVICES SHALL BE ADJUSTED TO FIT FIELD CONDITIONS AS APPROVED BY THE ENGINEER.
2) ANY SIGNS TEMPORARY OR EXISTING, WHICH CONFLICT WITH THE TRAFFIC CONTROL "IN USE" SHALL BE REMOVED OR COVERED AS NEEDED AND APPROVED BY THE ENGINEER.
3) SEE S.D.D. "BARRICADES AND SIGNS FOR VARIOUS CLOSURES". USE RAMP CLOSED SIGN FOR SB ENTRANCE RAMP.
4) SEE S.D.D. "TRAFFIC CONTROL, EXIT RAMP CLOSURE" FOR EXIT RAMP CLOSURE.
5) ALL SIGNS ARE 48" X 48" UNLESS OTHERWISE NOTED.

LEGEND:
- DETOUR ROUTE
- ROAD CLOSED
- MB — TRAFFIC CONTROL SIGNS PCMS WITH CELLULAR COMMUNICATIONS
- TRAFFIC CONTROL BARRICADE TYPE III W/ SIGN
- TRAFFIC CONTROL BARRICADE TYPE III

ALL SIGNS ARE ON TEMPORARY SUPPORTS (TYP)

PROJECT NO: 1166-08-79	HWY: IH 39	COUNTY: WAUSHARA	STH 21 ENTRANCE RAMP DETOUR - DETAIL A	SHEET 38	E

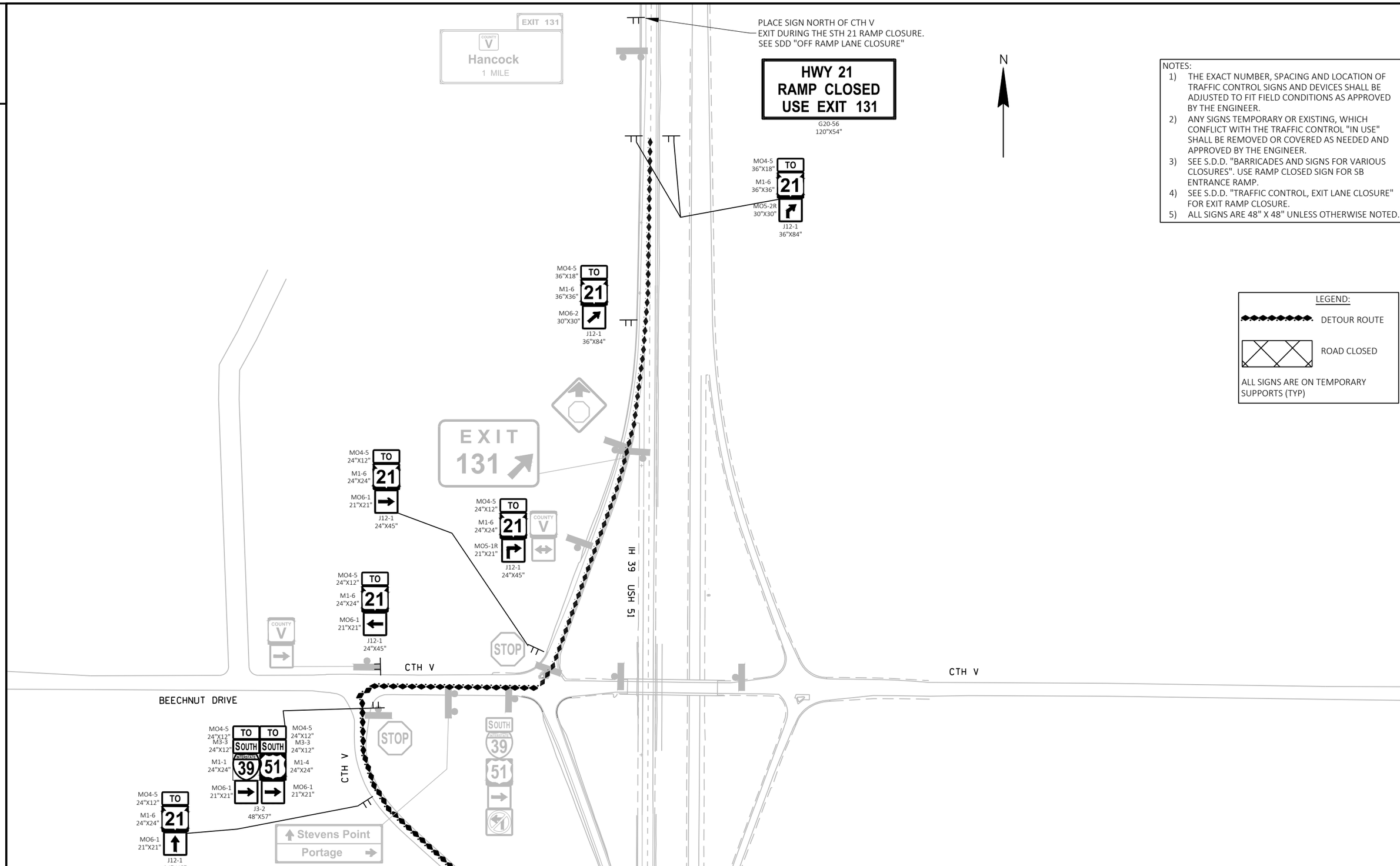

NOTES:

1) THE EXACT NUMBER, SPACING AND LOCATION OF TRAFFIC CONTROL SIGNS AND DEVICES SHALL BE ADJUSTED TO FIT FIELD CONDITIONS AS APPROVED BY THE ENGINEER.
2) ANY SIGNS TEMPORARY OR EXISTING, WHICH CONFLICT WITH THE TRAFFIC CONTROL "IN USE" SHALL BE REMOVED OR COVERED AS NEEDED AND APPROVED BY THE ENGINEER.
3) SEE S.D.D. "BARRICADES AND SIGNS FOR VARIOUS CLOSURES". USE RAMP CLOSED SIGN FOR SB ENTRANCE RAMP.
4) SEE S.D.D. "TRAFFIC CONTROL, EXIT LANE CLOSURE" FOR EXIT RAMP CLOSURE.
5) ALL SIGNS ARE 48" X 48" UNLESS OTHERWISE NOTED.

LEGEND:

DETOUR ROUTE

ROAD CLOSED

ALL SIGNS ARE ON TEMPORARY SUPPORTS (TYP)

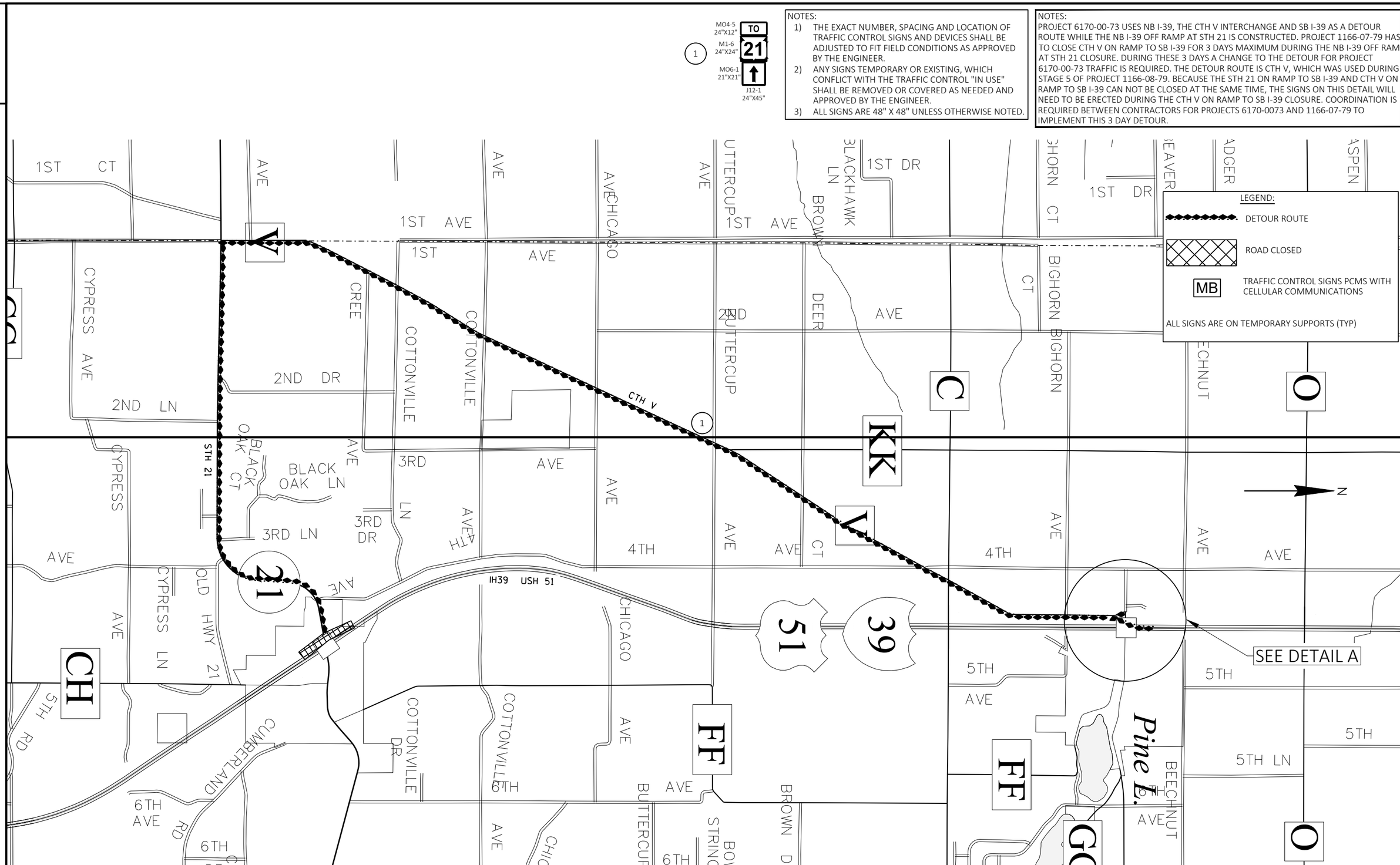

NOTES:

1) THE EXACT NUMBER, SPACING AND LOCATION OF TRAFFIC CONTROL SIGNS AND DEVICES SHALL BE ADJUSTED TO FIT FIELD CONDITIONS AS APPROVED BY THE ENGINEER.
2) ANY SIGNS TEMPORARY OR EXISTING, WHICH CONFLICT WITH THE TRAFFIC CONTROL "IN USE" SHALL BE REMOVED OR COVERED AS NEEDED AND APPROVED BY THE ENGINEER.
3) ALL SIGNS ARE 48" X 48" UNLESS OTHERWISE NOTED.

NOTES:

PROJECT 6170-00-73 USES NB I-39, THE CTH V INTERCHANGE AND SB I-39 AS A DETOUR ROUTE WHILE THE NB I-39 OFF RAMP AT STH 21 IS CONSTRUCTED. PROJECT 1166-07-79 HAS TO CLOSE CTH V ON RAMP TO SB I-39 FOR 3 DAYS MAXIMUM DURING THE NB I-39 OFF RAMP AT STH 21 CLOSURE. DURING THESE 3 DAYS A CHANGE TO THE DETOUR FOR PROJECT 6170-00-73 TRAFFIC IS REQUIRED. THE DETOUR ROUTE IS CTH V, WHICH WAS USED DURING STAGE 5 OF PROJECT 1166-08-79. BECAUSE THE STH 21 ON RAMP TO SB I-39 AND CTH V ON RAMP TO SB I-39 CAN NOT BE CLOSED AT THE SAME TIME, THE SIGNS ON THIS DETAIL WILL NEED TO BE ERECTED DURING THE CTH V ON RAMP TO SB I-39 CLOSURE. COORDINATION IS REQUIRED BETWEEN CONTRACTORS FOR PROJECTS 6170-0073 AND 1166-07-79 TO IMPLEMENT THIS 3 DAY DETOUR.

PROJECT NO: 1166-08-79	HWY: IH 39	COUNTY: WAUSHARA	DETOUR FOR PROJECT 6170-00-73	SHEET 40	E

2

NOTES:
1) THE EXACT NUMBER, SPACING AND LOCATION OF TRAFFIC CONTROL SIGNS AND DEVICES SHALL BE ADJUSTED TO FIT FIELD CONDITIONS AS APPROVED BY THE ENGINEER.
2) ANY SIGNS TEMPORARY OR EXISTING, WHICH CONFLICT WITH THE TRAFFIC CONTROL "IN USE" SHALL BE REMOVED OR COVERED AS NEEDED AND APPROVED BY THE ENGINEER.
3) SEE S.D.D. "BARRICADES AND SIGNS FOR VARIOUS CLOSURES". USE RAMP CLOSED SIGN FOR SB ENTRANCE RAMP.
4) SEE S.D.D. "TRAFFIC CONTROL, EXIT LANE CLOSURE" FOR EXIT RAMP CLOSURE.
5) ALL SIGNS ARE 48" X 48" UNLESS OTHERWISE NOTED.

NOTES:
PROJECT 6170-00-73 USES NB I-39, THE CTH V INTERCHANGE AND SB I-39 AS A DETOUR ROUTE WHILE THE NB I-39 OFF RAMP AT STH 21 IS CONSTRUCTED. PROJECT 1166-07-79 HAS TO CLOSE CTH V ON RAMP TO SB I-39 FOR 3 DAYS MAXIMUM DURING THE NB I-39 OFF RAMP AT STH 21 CLOSURE. DURING THESE 3 DAYS A CHANGE TO THE DETOUR FOR PROJECT 6170-00-73 TRAFFIC IS REQUIRED. THE DETOUR ROUTE IS CTH V, WHICH WAS USED DURING STAGE 5 OF PROJECT 1166-08-79. BECAUSE THE STH 21 ON RAMP TO SB I-39 AND CTH V ON RAMP TO SB I-39 CAN NOT BE CLOSED AT THE SAME TIME, THE SIGNS ON THIS DETAIL WILL NEED TO BE ERECTED DURING THE CTH V ON RAMP TO SB I-39 CLOSURE. COORDINATION IS REQUIRED BETWEEN CONTRACTORS FOR PROJECTS 6170-0073 AND 1166-07-79 TO IMPLEMENT THIS 3 DAY DETOUR.

N

LEGEND:
DETOUR ROUTE
ROAD CLOSED
ALL SIGNS ARE ON TEMPORARY SUPPORTS (TYP)

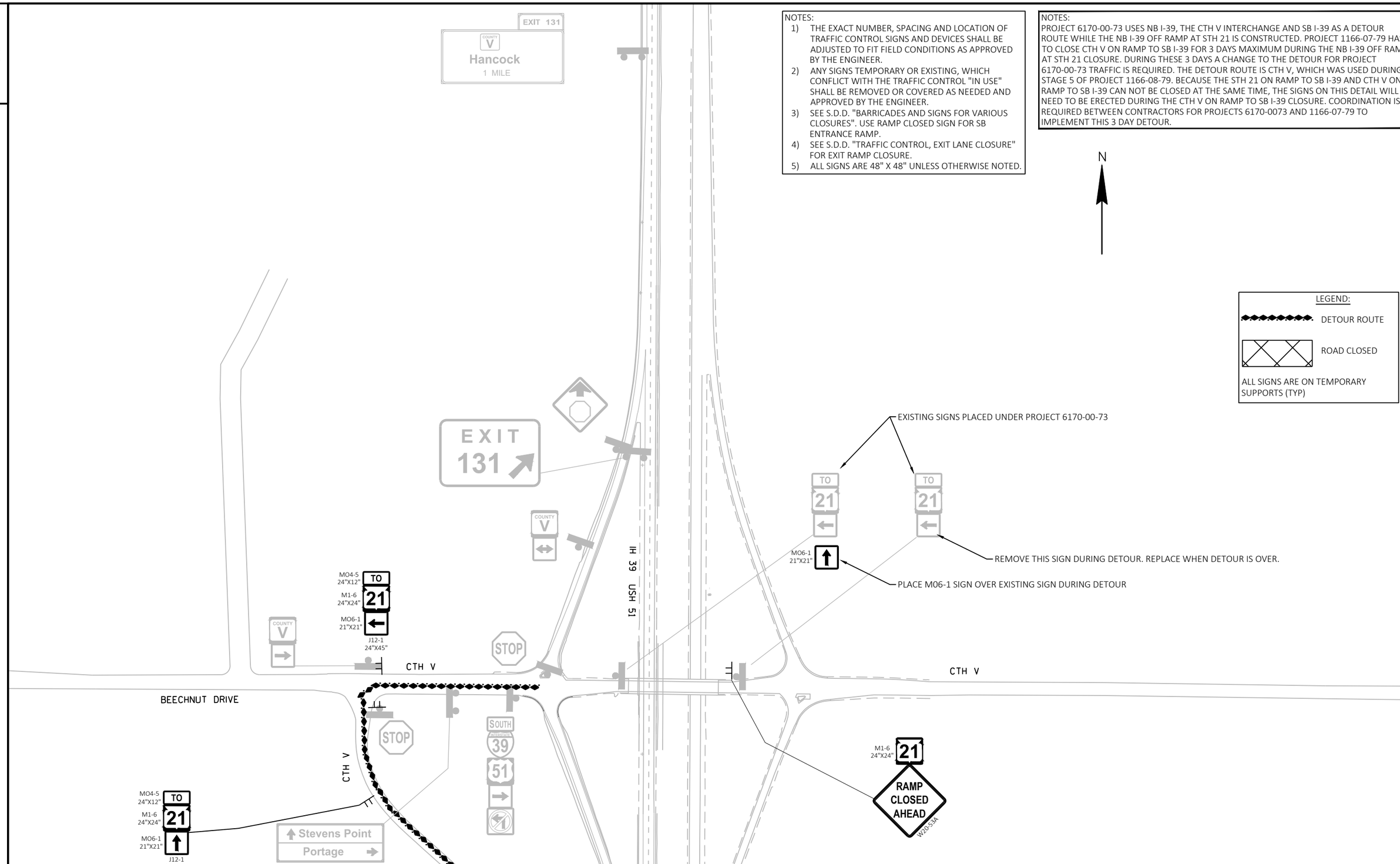

PROJECT NO: 1166-08-79	HWY: IH 39	COUNTY: WAUSHARA	DETOUR FOR PROJECT 6170-00-73 - DETAIL A	SHEET 41	E

FILE NAME : Q:\WISDOT\I-39\1166-08-09 MARQUETTE COUNTY LINE TO COTTONVILLE AVE (SOUTH)\CAD\11660879\SHEETSOTHER\SHEETSPLAN\027002-DT.DWG
LAYOUT NAME - 3
PLOT DATE : 1/13/2022 12:28 PM PLOT BY : HEIN, MIKE PLOT NAME : PLOT SCALE : 1 IN:200 FT
WISDOT/CADDS SHEET 42

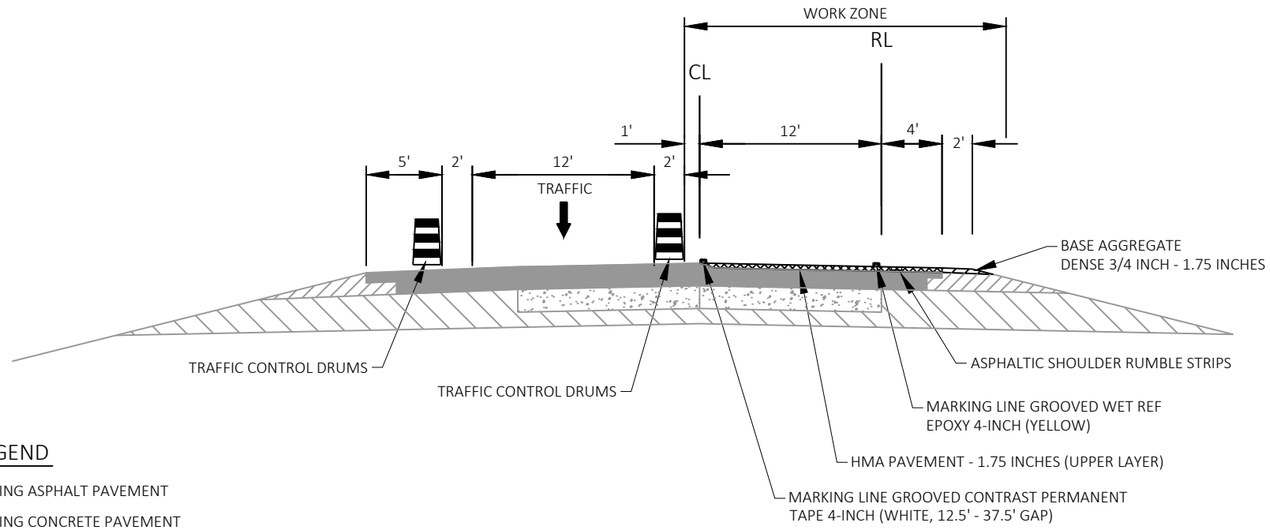

LEGEND

- EXISTING ASPHALT PAVEMENT
- EXISTING CONCRETE PAVEMENT
- EXISTING SHOULDER BASE COURSE
- EXISTING BASE COURSE
- PROPOSED ASPHALT PAVEMENT
- PROPOSED BASE AGGREGATE DENSE 3/4 INCH

STAGE 6

CONTROLLING CONSTRUCTION ACTIVITIES

STAGE 6
1. CLOSE INSIDE LANE AND SHOULDER.
2. INSTALL EXIT RAMP AND ENTRANCE RAMP TRAFFIC CONTROL TO ACCOMMODATE INSIDE LANE CLOSURE.
3. MILL AND PAVE MAINTENANCE CROSSOVERS.
4. PAVE SURFACE LAYER ON INSIDE LANE AND SHOULDER.
5. REMOVE EXISTING STEEL PLATE BEAM GUARD AND INSTALL MGS GUARDRAIL
6. INSTALL RUMBLE STRIP ON INSIDE SHOULDER
7. INSTALL PERMANENT PAVEMENT MARKING (YELLOW EDGE LINE AND CENTERLINE).

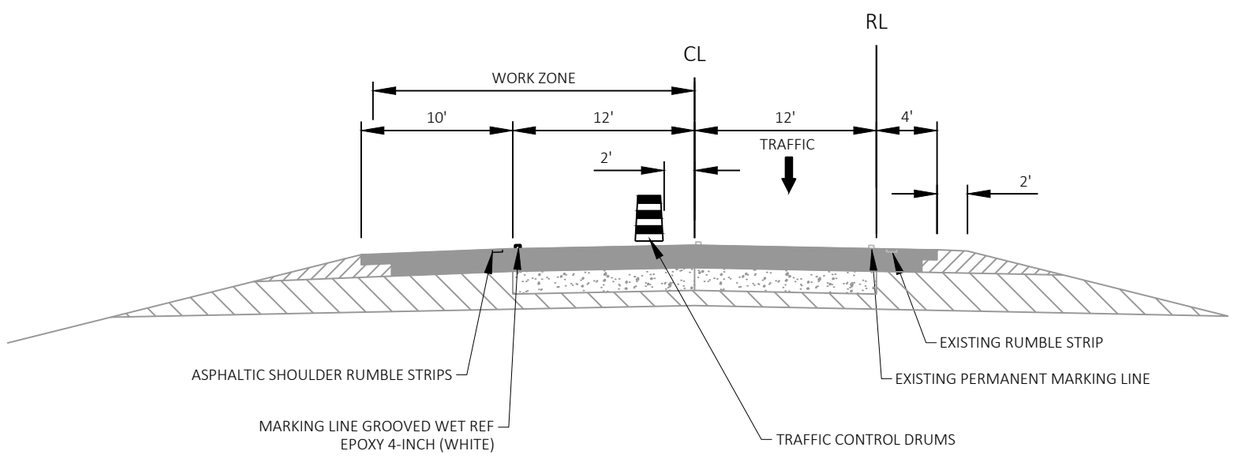

LEGEND

- EXISTING ASPHALT PAVEMENT
- EXISTING CONCRETE PAVEMENT
- EXISTING SHOULDER BASE COURSE
- EXISTING BASE COURSE

STAGE 7

CONTROLLING CONSTRUCTION ACTIVITIES

STAGE 7
1. CLOSE OUTSIDE LANE AND SHOULDER.
2. INSTALL EXIT RAMP AND ENTRANCE RAMP TRAFFIC CONTROL TO ACCOMMODATE OUTSIDE LANE CLOSURE.
3. INSTALL RUMBLE STRIP ON OUTSIDE SHOULDER
4. INSTALL PERMANENT PAVEMENT MARKINGS (EDGE LINE ON OUTSIDE SHOULDER, RAMPS & GORES).

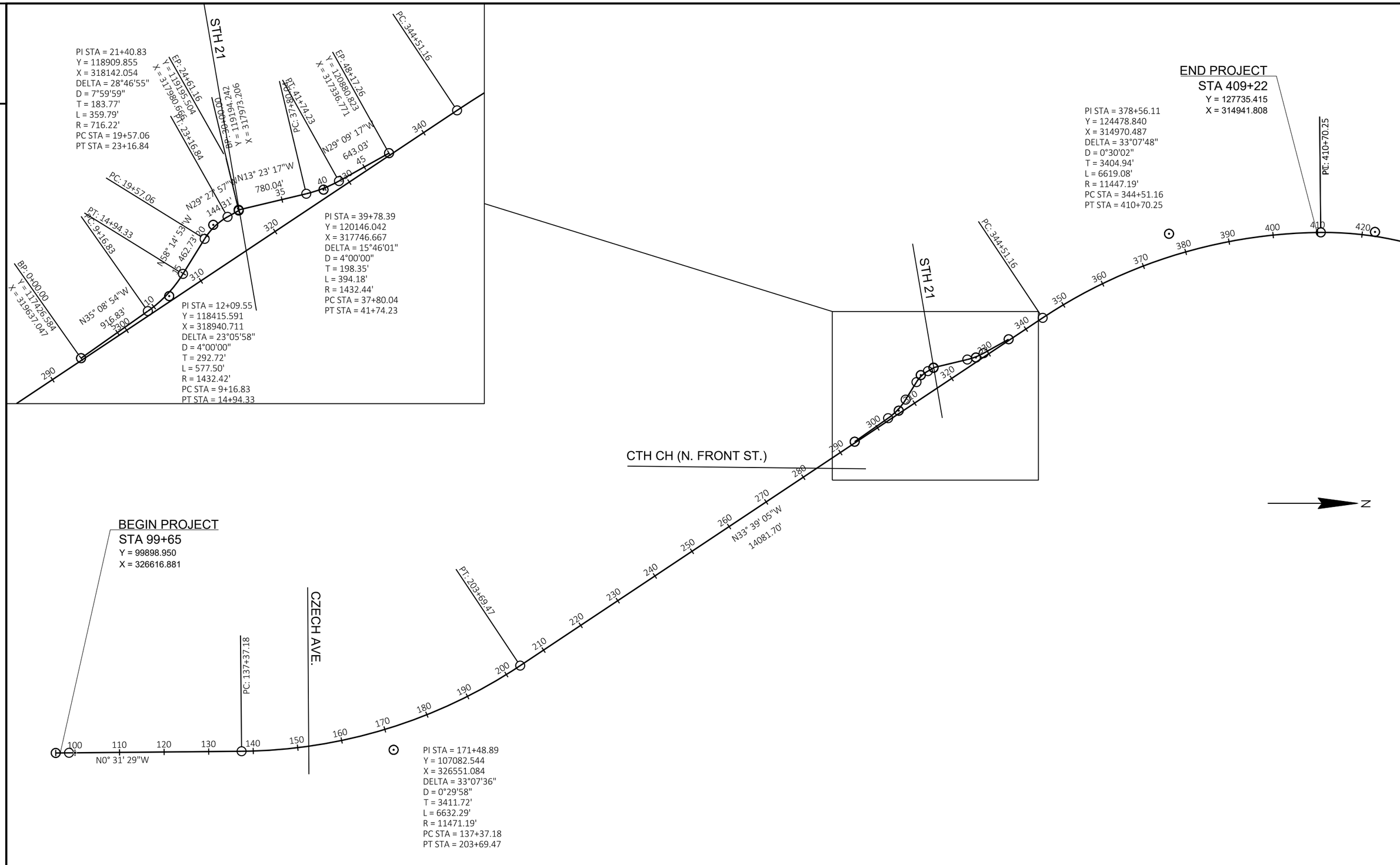
PI STA = 21+40.83
Y = 118909.855
X = 318142.054
DELTA = 28°46'55"
D = 7°59'59"
T = 183.77'
L = 359.79'
R = 716.22'
PC STA = 19+57.06
PT STA = 23+16.84
STH 21
EP: 24+61.16
Y = 119195.504
X = 317980.669
PT: 23+16.84
BP: 30+00.00
Y = 119194.242
X = 317973.206
PC: 37+80.04
PI: 41+74.23
EP: 48+17.26
Y = 120880.823
X = 317736.771
PC: 344+51.16
PC: 19+57.06
N29° 27' 57"W
N13° 23' 17"W
780.04'
N29° 09' 17"W
643.03'
PT: 14+94.33
PC: 9+16.83
N58° 14' 53"W
462.73'
BP: 0+00.00
Y = 117426.584
X = 319637.047
N35° 08' 54"W
916.83'
PI STA = 12+09.55
Y = 118415.591
X = 318940.711
DELTA = 23°05'58"
D = 4°00'00"
T = 292.72'
L = 577.50'
R = 1432.42'
PC STA = 9+16.83
PT STA = 14+94.33
PI STA = 39+78.39
Y = 120146.042
X = 317746.667
DELTA = 15°46'01"
D = 4°00'00"
T = 198.35'
L = 394.18'
R = 1432.44'
PC STA = 37+80.04
PT STA = 41+74.23
END PROJECT
STA 409+22
Y = 127735.415
X = 314941.808
PI STA = 378+56.11
Y = 124478.840
X = 314970.487
DELTA = 33°07'48"
D = 0°30'02"
T = 3404.94'
L = 6619.08'
R = 11447.19'
PC STA = 344+51.16
PT STA = 410+70.25
PT: 410+70.25
PC: 344+51.16
STH 21
CTH CH (N. FRONT ST.)
N33° 39' 05"W
14081.70'
N
BEGIN PROJECT
STA 99+65
Y = 99898.950
X = 326616.881
CZECH AVE.
PC: 137+37.18
PT: 203+69.47
N0° 31' 29"W
PI STA = 171+48.89
Y = 107082.544
X = 326551.084
DELTA = 33°07'36"
D = 0°29'58"
T = 3411.72'
L = 6632.29'
R = 11471.19'
PC STA = 137+37.18
PT STA = 203+69.47

1166-08-79

Line	Item	Item Description	Unit	Total	Qty
0002	204.0100	Removing Concrete Pavement	SY	1,365.000	1,365.000
0004	204.0115	Removing Asphaltic Surface Butt Joints	SY	980.000	980.000
0006	204.0120	Removing Asphaltic Surface Milling	SY	133,973.000	133,973.000
0008	204.0165	Removing Guardrail	LF	7,814.000	7,814.000
0010	204.0180	Removing Delineators and Markers	EACH	6.000	6.000
0012	204.0190	Removing Surface Drains	EACH	3.000	3.000
0014	205.0100	Excavation Common	CY	1,140.000	1,140.000
0016	213.0100	Finishing Roadway (project) 01. 1166-08-79	EACH	1.000	1.000
0018	305.0110	Base Aggregate Dense 3/4-Inch	TON	1,220.000	1,220.000
0020	305.0120	Base Aggregate Dense 1 1/4-Inch	TON	2,010.000	2,010.000
0022	305.0500	Shaping Shoulders	STA	303.000	303.000
0024	415.1100	Concrete Pavement HES 10-Inch	SY	173.000	173.000
0026	415.1410	Concrete Pavement Approach Slab HES	SY	401.000	401.000
0028	416.0610	Drilled Tie Bars	EACH	41.000	41.000
0030	416.0620	Drilled Dowel Bars	EACH	160.000	160.000
0032	416.1015	Concrete Surface Drains HES	CY	3.000	3.000
0034	455.0605	Tack Coat	GAL	16,099.000	16,099.000
0036	460.2000	Incentive Density HMA Pavement	DOL	14,700.000	14,700.000
0038	460.5224	HMA Pavement 4 LT 58-28 S	TON	3,320.000	3,320.000
0040	460.7223	HMA Pavement 3 HT 58-28 S	TON	655.000	655.000
0042	460.7224	HMA Pavement 4 HT 58-28 S	TON	9,227.000	9,227.000
0044	460.7424	HMA Pavement 4 HT 58-28 H	TON	9,809.000	9,809.000
0046	465.0400	Asphaltic Shoulder Rumble Strips	LF	59,480.000	59,480.000
0048	603.8000	Concrete Barrier Temporary Precast Delivered	LF	3,486.000	3,486.000
0050	603.8125	Concrete Barrier Temporary Precast Installed	LF	3,486.000	3,486.000
0052	603.8500	Anchoring Concrete Barrier Temporary Precast	LF	1,686.000	1,686.000
0054	606.0200	Riprap Medium	CY	1.000	1.000
0056	611.0651	Inlet Covers Type S	EACH	2.000	2.000
0058	614.0397	Guardrail Mow Strip Emulsified Asphalt	SY	3,092.000	3,092.000
0060	614.2300	MGS Guardrail 3	LF	7,125.000	7,125.000
0062	614.2500	MGS Thrie Beam Transition	LF	242.000	242.000
0064	614.2610	MGS Guardrail Terminal EAT	EACH	11.000	11.000
0066	614.2620	MGS Guardrail Terminal Type 2	EACH	10.000	10.000
0068	618.0100	Maintenance And Repair of Haul Roads (project) 01. 1166-08-79	EACH	1.000	1.000
0070	619.1000	Mobilization	EACH	1.000	1.000
0072	624.0100	Water	MGAL	48.000	48.000
0074	628.1504	Silt Fence	LF	1,231.000	1,231.000
0076	628.1520	Silt Fence Maintenance	LF	1,231.000	1,231.000
0078	628.1905	Mobilizations Erosion Control	EACH	2.000	2.000
0080	628.1910	Mobilizations Emergency Erosion Control	EACH	2.000	2.000
0082	629.0210	Fertilizer Type B	CWT	44.000	44.000
0084	630.0130	Seeding Mixture No. 30	LB	12.000	12.000
0086	630.0500	Seed Water	MGAL	16.000	16.000
0088	633.0100	Delineator Posts Steel	EACH	60.000	60.000
0090	633.0500	Delineator Reflectors	EACH	60.000	60.000
0092	642.5201	Field Office Type C	EACH	1.000	1.000
0094	643.0300	Traffic Control Drums	DAY	71,480.000	71,480.000
0096	643.0420	Traffic Control Barricades Type III	DAY	3,501.000	3,501.000
0098	643.0715	Traffic Control Warning Lights Type C	DAY	6,214.000	6,214.000

1166-08-79

Line	Item	Item Description	Unit	Total	Qty
0100	643.0800	Traffic Control Arrow Boards	DAY	234.000	234.000
0102	643.0900	Traffic Control Signs	DAY	7,741.000	7,741.000
0104	643.0910	Traffic Control Covering Signs Type I	EACH	2.000	2.000
0106	643.0920	Traffic Control Covering Signs Type II	EACH	2.000	2.000
0108	643.1051	Traffic Control Signs PCMS with Cellular Communications	DAY	14.000	14.000
0110	643.5000	Traffic Control	EACH	1.000	1.000
0112	645.0120	Geotextile Type HR	SY	3.000	3.000
0114	646.1020	Marking Line Epoxy 4-Inch	LF	61,914.000	61,914.000
0116	646.1555	Marking Line Grooved Contrast Permanent Tape 4-Inch	LF	7,739.000	7,739.000
0118	646.3050	Marking Line Grooved Permanent Tape 8-Inch	LF	2,821.000	2,821.000
0120	646.3555	Marking Line Grooved Contrast Permanent Tape 8-Inch	LF	600.000	600.000
0122	646.5420	Marking Aerial Enforcement Bar Epoxy	EACH	5.000	5.000
0124	646.7220	Marking Chevron Epoxy 24-Inch	LF	203.000	203.000
0126	646.9000	Marking Removal Line 4-Inch	LF	36,198.000	36,198.000
0128	646.9100	Marking Removal Line 8-Inch	LF	1,000.000	1,000.000
0130	646.9200	Marking Removal Line Wide	LF	10.000	10.000
0132	649.0105	Temporary Marking Line Paint 4-Inch	LF	37,077.000	37,077.000
0134	650.4500	Construction Staking Subgrade	LF	410.000	410.000
0136	650.5000	Construction Staking Base	LF	410.000	410.000
0138	650.8000	Construction Staking Resurfacing Reference	LF	30,957.000	30,957.000
0140	650.9910	Construction Staking Supplemental Control (project) 01. 1166-08-79	LS	1.000	1.000
0142	690.0150	Sawing Asphalt	LF	152.000	152.000
0144	690.0250	Sawing Concrete	LF	570.000	570.000
0146	740.0440	Incentive IRI Ride	DOL	23,440.000	23,440.000
0148	ASP.1T0A	On-the-Job Training Apprentice at $5.00/HR	HRS	2,000.000	2,000.000
0150	ASP.1T0G	On-the-Job Training Graduate at $5.00/HR	HRS	1,260.000	1,260.000
0152	SPV.0090	Special 01. Fill Existing Asphalt Rumble Strip	LF	8,340.000	8,340.000
0154	SPV.0090	Special 02. HES Concrete Curb & Gutter 4-Inch Sloped 36-Inch Type TBTT	LF	38.000	38.000
0156	SPV.0090	Special 03. Remove & Reinstall Guardrail	LF	743.000	743.000
0158	SPV.0180	Special 01. Base Patching	SY	53.000	53.000
0160	SPV.0180	Special 02. Asphalt Wedge Joint	SY	320.000	320.000

3

BASE AGGREGATE DENSE

CATEGORY	STATION	TO	STATION	LOCATION	305.0110 BASE AGGREGATE DENSE 3/4-INCH TON	305.0120 BASE AGGREGATE DENSE 1 1/4-INCH TON	624.0100 WATER MGAL
STAGE 2							
0010	150+67	-	151+82	MAINLINE	14	259	4
0010	153+26	-	154+34	MAINLINE	13	243	4
0010	281+54	-	282+05	MAINLINE	6	115	2
0010	284+94	-	286+30	MAINLINE	16	306	5
				STAGE 2 SUBTOTAL	49	924	15
STAGE 3							
0010	150+67	-	151+82	MAINLINE	5	305	5
0010	153+26	-	154+34	MAINLINE	5	286	4
0010	281+54	-	282+05	MAINLINE	2	135	2
0010	284+94	-	286+30	MAINLINE	6	360	5
				STAGE 3 SUBTOTAL	18	1,086	17
STAGE 5							
0010	99+65	-	150+67	MAINLINE	64	---	1
0010	154+34	-	282+05	MAINLINE	161	---	2
0010	284+94	-	294+92	MAINLINE	13	---	0
0010	294+92	-	304+50	MAINLINE	13	---	0
0010	304+86	-	330+66	MAINLINE	33	---	0
0010	330+67	-	335+71	MAINLINE	6	---	0
0010	335+71		409+22	MAINLINE	93	---	1
				STAGE 5 SUBTOTAL	382	0	6
STAGE 6							
0010	99+65	-	150+67	MAINLINE	126	---	2
0010	154+34	-	282+05	MAINLINE	316	---	5
0010	284+94	-	294+92	MAINLINE	25	---	0
0010	294+92	-	304+50	MAINLINE	25	---	0
0010	304+86	-	330+66	MAINLINE	65	---	1
0010	330+67	-	335+71	MAINLINE	13	---	0
0010	335+71		409+22	MAINLINE	182	---	3
0010	118+18				13	---	0
0010	163+85				2	---	0
0010	274+48				2	---	0
0010	344+47				2	---	0
				STAGE 6 SUBTOTAL	770	0	12
				TOTAL 0010	1,220	2,010	48

SHAPING SHOULDERS

CATEGORY	STATION	TO	STATION	LOCATION	305.0500 SHAPING SHOULDERS STA
STAGE 4					
0010	99+65	-	150+67	INSIDE SHOULDER	51
0010	154+34	-	282+05	INSIDE SHOULDER	128
0010	284+94	-	294+92	INSIDE SHOULDER	10
0010	294+92	-	304+50	INSIDE SHOULDER	10
0010	304+86	-	330+66	INSIDE SHOULDER	26
0010	330+67	-	335+71	INSIDE SHOULDER	5
0010	335+71	-	409+22	INSIDE SHOULDER	74
				TOTAL 0010	303

3

CONCRETE PAVEMENT HES 10-INCH

CATEGORY	STATION	TO	STATION	LOCATION	415.1100 CONCRETE PAVEMENT HES 10-INCH SY
STAGE 2					
0010	151+82	-	151+97	MAINLINE	10
0010	153+08	-	153+26	MAINLINE	20
0010	282+05		282+68	MAINLINE	9
0010	284+67		284+94	MAINLINE	65
				STAGE 2 SUBTOTAL	104
STAGE 3		-			
0010	151+82	-	152+00	MAINLINE	15
0010	153+11	-	153+26	MAINLINE	12
0010	282+05		282+32	MAINLINE	34
0010	284+33		284+95	MAINLINE	7
				STAGE 3 SUBTOTAL	69
				TOTAL 0010	173

CONCRETE PAVEMENT APPROACH SLAB HES

CATEGORY	STATION	TO	STATION	LOCATION	415.1410 CONCRETE PAVEMENT APPROACH SLAB HES SY	REMARKS
STAGE 2						
0010	151+82	-	152+00	MAINLINE	31	LESS THAN 20 DEGREES
0010	153+08	-	153+26	MAINLINE	31	LESS THAN 20 DEGREES
0010	282+05	-	282+68	MAINLINE	50	GREATER THAN 20 DEGREES
0010	284+33	-	284+94	MAINLINE	50	GREATER THAN 20 DEGREES
				STAGE 2 SUBTOTAL	163	
STAGE 3						
0010	151+82	-	152+00	MAINLINE	43	LESS THAN 20 DEGREES
0010	153+08	-	153+26	MAINLINE	43	LESS THAN 20 DEGREES
0010	282+05	-	282+68	MAINLINE	76	GREATER THAN 20 DEGREES
0010	284+33	-	284+94	MAINLINE	76	GREATER THAN 20 DEGREES
				STAGE 3 SUBTOTAL	238	
				TOTAL 0010	401	

3

3

DRILLED TIE BARS

CATEGORY	STATION	LOCATION	416.0610 DRILLED TIE BARS EACH	REMARKS
STAGE 2				
0010	282+59	CTH CH	10	SURFACE DRAIN FLUME
		STAGE 2 SUBTOTAL	10	
STAGE 3				
0010	151+88	CZECH AVE	16	SURFACE DRAIN WINGWALL
0010	282+00	CTH CH	10	SURFACE DRAIN WINGWALL
0010	395+85	BASE PATCHING	1	SEE BASE PATCHING SPECIAL DETAIL
0010	401+08	BASE PATCHING	1	SEE BASE PATCHING SPECIAL DETAIL
0010	406+08	BASE PATCHING	1	SEE BASE PATCHING SPECIAL DETAIL
0010	408+74	BASE PATCHING	1	SEE BASE PATCHING SPECIAL DETAIL
0010	409+16	BASE PATCHING	1	SEE BASE PATCHING SPECIAL DETAIL
		STAGE 3 SUBTOTAL	31	
		TOTAL 0010	41	

DRILLED DOWEL BARS

CATEGORY	STATION	LOCATION	416.0620 DRILLED DOWEL BARS EACH	REMARKS
STAGE 2				
0010	395+85	MAINLINE	16	SEE BASE PATCHING SPECIAL DETAIL
0010	401+08	MAINLINE	16	SEE BASE PATCHING SPECIAL DETAIL
0010	406+08	MAINLINE	16	SEE BASE PATCHING SPECIAL DETAIL
0010	408+74	MAINLINE	16	SEE BASE PATCHING SPECIAL DETAIL
0010	409+16	MAINLINE	16	SEE BASE PATCHING SPECIAL DETAIL
		STAGE 2 SUBTOTAL	80	
STAGE 3				
0010	395+85	MAINLINE	16	SEE BASE PATCHING SPECIAL DETAIL
0010	401+08	MAINLINE	16	SEE BASE PATCHING SPECIAL DETAIL
0010	406+08	MAINLINE	16	SEE BASE PATCHING SPECIAL DETAIL
0010	408+74	MAINLINE	16	SEE BASE PATCHING SPECIAL DETAIL
0010	409+16	MAINLINE	16	SEE BASE PATCHING SPECIAL DETAIL
		STAGE 3 SUBTOTAL	80	
		TOTAL 0010	160	

3

CONCRETE SURFACE DRAINS HES

CATEGORY	STATION	LOCATION	416.1015 CONCRETE SURFACE DRAINS HES CY	REMARKS
STAGE 2				
0010	281+85	CTH CH	2	OUTSIDE
		STAGE 2 SUBTOTAL	2	
STAGE 3				
0010	282+59	CTH CH	1	INSIDE FLUME
		STAGE 3 SUBTOTAL	1	
		TOTAL 0010	3	

HMA PAVEMENT

CATEGORY	STATION	TO	STATION	LOCATION	455.0605 TACK COAT GAL	460.5224 HMA PAVEMENT 4 LT 58-28 S TON	460.7223 HMA PAVEMENT 3 HT 58-28 S TON	460.7224 HMA PAVEMENT 4 HT 58-28 S TON	460.7424 HMA PAVEMENT 4 HT 58-28 H TON	REMARKS
STAGE 2										
0010	150+67	-	151+82	MAINLINE	14	---	77	---	---	
0010	153+25	-	154+34	MAINLINE	14	---	73	---	---	
0010	281+54	-	282+05	MAINLINE	6	---	34	---	---	
0010	284+94	-	286+30	MAINLINE	17	---	91	---	---	
				STAGE 2 SUBTOTAL	51	0	276	0	0	
STAGE 3										
0010	150+67	-	151+82	MAINLINE	20	---	106	---	---	
0010	153+26	-	154+34	MAINLINE	32	---	100	---	---	
0010	281+54	-	282+05	MAINLINE	15	---	47	---	---	
0010	284+94	-	286+30	MAINLINE	23	---	126	---	---	
				STAGE 3 SUBTOTAL	90	0	379	0	0	
STAGE 4										
0010	99+65	-	150+67	MAINLINE	635	---	---	889	---	
0010	154+34	-	282+05	MAINLINE	1589	---	---	2225	---	
0010	284+94	-	294+92	MAINLINE	124	---	---	174	---	
0010	294+92	-	304+50	MAINLINE	119	---	---	167	---	
0010	304+86	-	330+66	MAINLINE	321	---	---	449	---	
0010	330+67	-	335+71	MAINLINE	63	---	---	88	---	
0010	335+71		409+22	MAINLINE	915	---	---	1281	---	
				STAGE 4 SUBTOTAL	3766	0	0	5273	0	
STAGE 5										
0010	99+65	-	150+67	MAINLINE	476	---	---	667	---	LOWER LAYER
0010	154+34	-	282+05	MAINLINE	1192	---	---	1669	---	LOWER LAYER
0010	284+94	-	294+92	MAINLINE	93	---	---	130	---	LOWER LAYER
0010	294+92	-	304+50	MAINLINE	89	---	---	125	---	LOWER LAYER
0010	304+86	-	330+66	MAINLINE	241	---	---	337	---	LOWER LAYER
0010	330+67	-	335+71	MAINLINE	47	---	---	66	---	LOWER LAYER
0010	335+71		409+22	MAINLINE	686	---	---	961	---	LOWER LAYER
0010	99+65	-	151+82	MAINLINE	893	568	---	---	682	UPPER LAYER
0010	153+25	-	282+05	MAINLINE	2204	1402	---	---	1683	UPPER LAYER
0010	284+94	-	294+92	MAINLINE	171	109	---	---	130	UPPER LAYER
0010	294+92	-	304+50	MAINLINE	164	104	---	---	125	UPPER LAYER
0010	304+86	-	330+66	MAINLINE	441	281	---	---	337	UPPER LAYER
0010	330+67	-	335+71	MAINLINE	86	55	---	---	66	UPPER LAYER
0010	335+71		409+22	MAINLINE	1258	800	---	---	961	UPPER LAYER
0010	0+00		11+97	ON RAMP	155	---	---	---	217	
0010	42+20		48+17	OFF RAMP	85	---	---	---	118	
				STAGE 5 SUBTOTAL	8281	3320	0	3954	4319	
STAGE 6										
0010	99+65	-	151+82	MAINLINE	649	---	---	---	909	
0010	153+26	-	282+05	MAINLINE	1603	---	---	---	2,244	
0010	284+94	-	294+92	MAINLINE	124	---	---	---	174	
0010	294+92	-	304+50	MAINLINE	119	---	---	---	167	
0010	304+86	-	330+66	MAINLINE	321	---	---	---	449	
0010	330+67	-	335+71	MAINLINE	63	---	---	---	88	
0010	335+71		409+22	MAINLINE	915	---	---	---	1,281	
0010	118+18				72	---	---	---	101	MAINTENANCE CROSSOVER
0010	163+85				19	---	---	---	26	MAINTENANCE CROSSOVER
0010	274+48				18	---	---	---	25	MAINTENANCE CROSSOVER
0010	344+47				19	---	---	---	26	MAINTENANCE CROSSOVER
				STAGE 6 SUBTOTAL	3,921	0	0	0	5,490	
		-								
				TOTAL 0010	16,110	3,320	655	9,227	9,809	

3

ASPHALTIC SHOULDER RUMBLE STRIPS

CATEGORY	STATION	TO	STATION	LOCATION	465.0400 ASPHALTIC SHOULDER RUMBLE STRIPS LF
STAGE 6					
0010	99+65	-	409+22	OUTSIDE SHOULDER	28,890
STAGE 7					
0010	99+65	-	409+22	INSIDE SHOULDER	30,590
				TOTAL 0010	59,480

INLET COVERS TYPE S

CATEGORY	STATION	TO	STATION	LOCATION	611.0651 INLET COVERS TYPE S EACH
0010		-	151+88	CZECH AVE	1
0010		-	281+85	CH	1
				TOTAL 0010	2

MGS GUARDRAIL

CATEGORY	STATION	TO	STATION	LOCATION	614.0397 GUARDRAIL MOW STRIP EMULSIFIED ASPHALT SY	614.2300 MGS GUARDRAIL 3 LF	614.2500 MGS THRIE BEAM TRANSITION LF	614.2610 MGS GUARDRAIL TERMINAL EAT EACH	614.2620 MGS GUARDRAIL TERMINAL TYPE 2 EACH
STAGE 2									
0010	282+33		282+66	RIGHT	13	25	8	---	1
				STAGE 2 SUBTOTAL	13	25	8	0	1
STAGE 5									
0010	97+15	-	100+79	LEFT	142	313	---	1	1
0010	145+77	-	151+96	LEFT	244	588	39	---	1
0010	153+18	-	155+58	LEFT	94	150	39	1	---
0010	201+44	-	214+40	LEFT	507	1250	---	1	1
0010	252+58	-	259+28	LEFT	264	625	---	1	1
0010	279+04	-	281+99	LEFT	117	263	39		1
0010	284+26	-	294+19	LEFT	391	913	39	1	
0010	313+25	-	321+70	LEFT	332	800	---	1	1
0010	335+82	-	343+77	LEFT	312	750	---	1	1
0010	385+38	-	391+31	LEFT	235	550	---	1	1
				STAGE 5 SUBTOTAL	2637	6200	156	8	8
STAGE 6									
0010	97+30	-	101+54	RIGHT	166	375	---	1	1
0010	153+14	-	156+27	RIGHT	123	225	39	1	---
0010	284+99	-	288+90	RIGHT	152	300	39	1	---
				STAGE 6 SUBTOTAL	442	900	78	3	1
				TOTAL 0010	3092	7,125	242	11	10

3

3

FINISHING ITEMS

CATEGORY	STATION	TO	STATION	LOCATION	629.0210 FERTILIZER TYPE B CWT	630.0130 SEEDING MIXTURE NO. 30 LB	630.0500 SEED WATER MGAL
STAGE 6							
0010	150+67	-	151+82	MAINLINE	6	2	2
0010	153+26	-	154+34	MAINLINE	6	2	2
0010	281+54	-	282+05	MAINLINE	3	1	1
0010	284+94	-	286+30	MAINLINE	7	2	3
				STAGE 2 SUBTOTAL	22	6	8
STAGE 7							
0010	150+67	-	151+82	MAINLINE	6	2	2
0010	153+26	-	154+34	MAINLINE	6	2	2
0010	281+54	-	282+05	MAINLINE	3	1	1
0010	284+94	-	286+30	MAINLINE	7	2	3
				STAGE 3 SUBTOTAL	22	6	8
				TOTAL 0010	44	12	16

3

3

SILT FENCE AND MOBILIZATIONS EROSION CONTROL

CATEGORY	STATION	TO	STATION	LOCATION	628.1504 SILT FENCE LF	628.1520 SILT FENCE MAINTENANCE LF	628.1905 MOBILIZATIONS EROSION CONTROL EACH	628.1910 MOBILIZATIONS EMERGENCY EROSION CONTROL EACH
STAGE 2								
0010	150+42	-	151+97	MAINLINE	155	155	1	1
0010	153+08	-	154+59	MAINLINE	151	151	---	---
0010	281+29	-	282+76	MAINLINE	147	147	---	---
0010	284+94	-	286+55	MAINLINE	161	161	---	---
				STAGE 2 SUBTOTAL	614	614	1	1
STAGE 3								
0010	150+42	-	152+00	MAINLINE	158	158	1	1
0010	153+11	-	154+59	MAINLINE	148	148	---	---
0010	281+29	-	282+05	MAINLINE	76	76	---	---
0010	284+20	-	286+55	MAINLINE	235	235	---	---
				STAGE 3 SUBTOTAL	617	617	1	1
				TOTAL 0010	1,231	1,231	2	2

DELINEATOR POSTS AND REFLECTORS

CATEGORY	STATION	TO	STATION	LOCATION	633.0100 DELINEATOR POSTS STEEL EACH	633.0500 DELINEATOR REFLECTORS EACH
0010		UNDISTRIBUTED			60	60
				TOTAL 0010	60	60

3

TRAFFIC CONTROL

CATEGORY	STATION	TO	STATION	LOCATION	DAYS	603.8000 CONCRETE BARRIER TEMPORARY PRECAST DELIVERED LF	603.8125 CONCRETE BARRIER TEMPORARY PRECAST INSTALLED LF	603.8500 ANCHORING CONCRETE BARRIER TEMPORARY PRECAST LF	643.0300 TRAFFIC CONTROL DRUMS DAY	643.0420 TRAFFIC CONTROL BARRICADES TYPE III DAY	643.0715 TRAFFIC CONTROL WARNING LIGHTS TYPE C DAY	643.0800 TRAFFIC CONTROL ARROW BOARDS DAY	643.0900 TRAFFIC CONTROL SIGNS DAY	643.1051 TRAFFIC CONTROL SIGNS PCMS WITH CELLULAR COMMUNICATIONS DAY	REMARKS
STAGE 1															
0010	409+85	-	430+65	MAINLINE	5	---	---	---	33	2	16	2	12	---	BEGINNING RIGHT CLOSE
0010	99+65	-	409+85	MAINLINE		---	---	---	311	24	---	---	24	---	STANDARD RIGHT CLOSE
				STAGE 1 SUBTOTAL		0	0	0	344	26	16	2	36	0	
				STAGE 1 DAY SUBTOTAL		---	---	---	1,720	130	80	10	180	0	
STAGE 2															
0010	409+85	-	430+65	MAINLINE	17	---	---	---	33	2	16	2	12	---	BEGINNING LEFT CLOSE
0010	99+65	-	409+85	MAINLINE		---	---	---	315	29	22	---	30	---	STANDARD LEFT CLOSE
0010	289+34	-	305+97	21 ON RAMP		---	---	---	27	---	24	---	4	---	ON RAMP LEFT CLOSE
0010	150+17		158+34	MAINLINE		817	817	367	---	---	---	---	---	---	CZECH AVE
0010	281+04		290+30	MAINLINE		926	926	476	---	---	---	---	---	---	CTH CH
				STAGE 2 SUBTOTAL		1,743	1,743	843	375	31	62	2	46	0	
				STAGE 2 DAY SUBTOTAL		---	---	---	6,375	527	1,054	34	782	0	
STAGE 3															
0010	409+85	-	430+65	MAINLINE	30	---	---	---	33	2	16	2	12	---	BEGINNING RIGHT CLOSE
0010	99+65	-	409+85	MAINLINE		---	---	---	314	29	16	---	35	---	STANDARD RIGHT CLOSE
0010	333+71	-	340+99	21 OFF RAMP		---	---	---	24	---	7	---	4	---	OFF RAMP RIGHT CLOSE
0010	289+34	-	305+97	21 ON RAMP		---	---	---	80	---	25	---	4	---	ON RAMP RIGHT CLOSE
0010	150+17		158+34	MAINLINE		817	817	367	---	---	---	---	---	---	CZECH AVE
0010	281+04		290+30	MAINLINE		926	926	476	---	---	---	---		---	CTH CH
				STAGE 3 SUBTOTAL		1,743	1,743	843	451	31	64	2	55	0	
				STAGE 3 DAY SUBTOTAL		---	---	---	13,530	930	1,920	60	1,650	0	
STAGE 4															
0010	409+85	-	430+65	MAINLINE	15	---	---	---	33	2	16	2	12	---	BEGINNING LEFT CLOSE
0010	99+65	-	409+85	MAINLINE		---	---	---	622	24	---	---	24	---	STANDARD LEFT CLOSE
0010	289+34	-	305+97	21 ON RAMP		---	---	---	27	---	24	---	4	---	ON RAMP LEFT CLOSE
				STAGE 4 SUBTOTAL		0	0	0	682	26	40	2	40	0	
				STAGE 4 DAY SUBTOTAL		---	---	---	10,230	390	600	30	600	0	
STAGE 5															
0010	409+85	-	430+65	MAINLINE	28	---	---	---	33	2	16	2	12	1	BEGINNING RIGHT CLOSE
0010	99+65	-	409+85	MAINLINE		---	---	---	622	24	---	---	24	---	STANDARD RIGHT CLOSE
0010	333+71	-	340+99	21 OFF RAMP		---	---	---	24	---	7	---	4	---	OFF RAMP RIGHT CLOSE
0010	289+34	-	305+97	21 ON RAMP		---	---	---	80	---	25	---	4	---	ON RAMP RIGHT CLOSE
0010	333+71	-	340+99	21 OFF RAMP	3	---	---	---	19	3	4	---	46	1	FULL OFF RAMP CLOSURE
0010	289+34	-	305+97	21 ON RAMP		---	---	---	---	5	6	---	41	---	FULL ON RAMP CLOSURE
				STAGE 5 SUBTOTAL		0	0	0	778	34	58	2	131	2	
				STAGE 5 DAY SUBTOTAL		---	---	---	21,784	952	1,624	56	3,668	31	
STAGE 6															
0010	409+85	-	430+65	MAINLINE	15	---	---	---	33	2	16	2	12	---	BEGINNING LEFT CLOSE
0010	99+65	-	409+85	MAINLINE		---	---	---	622	24	---	---	24	---	STANDARD LEFT CLOSE
0010	289+34	-	305+97	21 ON RAMP		---	---	---	27	---	24	---	4	---	ON RAMP LEFT CLOSE
				STAGE 6 SUBTOTAL		0	0	0	682	26	40	2	40	0	
				STAGE 6 DAY SUBTOTAL		---	---	---	10,230	390	600	30	600	0	
STAGE 7															
0010	409+85	-	430+65	MAINLINE	7	---	---	---	33	2	16	2	12	---	BEGINNING RIGHT CLOSE
0010	99+65	-	409+85	MAINLINE		---	---	---	622	24	---	---	24	---	STANDARD RIGHT CLOSE
0010	333+71	-	340+99	21 OFF RAMP		---	---	---	24	---	7	---	4	---	OFF RAMP RIGHT CLOSE
0010	289+34	-	305+97	21 ON RAMP		---	---	---	80	---	25	---	4	---	ON RAMP RIGHT CLOSE
				STAGE 7 SUBTOTAL		0	0	0	759	26	48	2	44	0	
				STAGE 7 DAY SUBTOTAL		---	---	---	5,313	182	336	14	308	0	
				TOTAL 0010		3,486	3,486	1,686	69,182	3,501	6,214	234	7,788	31	

3

3

TRAFFIC CONTROL COVERING SIGNS

CATEGORY	STATION	TO	STATION	LOCATION	643.0910 TRAFFIC CONTROL COVERING SIGNS TYPE I EACH	CYCLES	SIGNS	643.0920 TRAFFIC CONTROL COVERING SIGNS TYPE II EACH	CYCLES	SIGNS
STAGE 5										
0010	333+71	-	340+99	21 OFF RAMP	2	1	2	2	1	2
		-		STAGE 5 SUBTOTAL	2			2		
				TOTAL 0010	2			2		

RIPRAP

CATEGORY	STATION	TO	STATION	LOCATION	606.0200 RIPRAP MEDIUM CY	645.0120 GEOTEXTILE TYPE HR SY	REMARKS
0010	282+50	-		CTH CH	1	3	FLUME
				TOTAL 0010	1	3	

PAVEMENT MARKINGS

CATEGORY	STATION	TO	STATION	LOCATION	646.1020 MARKING LINE EPOXY 4-INCH LF	646.1555 MARKING LINE GROOVED CONTRAST PERMANENT TAPE 4-INCH LF	646.3050 MARKING LINE GROOVED PERMANENT TAPE 8-INCH LF	646.3555 MARKING LINE GROOVED CONTRAST PERMANENT TAPE 8-INCH LF	646.5420 MARKING AERIAL ENFORCEMENT BAR EPOXY EACH	646.7220 MARKING CHEVRON EPOXY 24-INCH LF	646.9000 MARKING REMOVAL LINE 4-INCH LF	646.9100 MARKING REMOVAL LINE 8-INCH LF	646.9200 MARKING REMOVAL LINE WIDE LF	649.0105 TEMPORARY MARKING LINE PAINT 4-INCH LF	REMARKS
STAGE 1															
0010	146+47	-	167+54	MAINLINE	---	---	---	---	---	---	2107	1000	10	---	
0010	277+34	-	309+20	MAINLINE	---	---	---	---	---	---	3186	---	---	---	
0010	393+50	-	420+00	MAINLINE	---	---	---	---	---	---	2650	---	---	---	
0010	146+47	-	167+54	MAINLINE	---	---	---	---	---	---	---	---	---	2107	YELLOW
0010	277+34	-	309+20	MAINLINE	---	---	---	---	---	---	---	---	---	3186	YELLOW
0010	393+50	-	420+00	MAINLINE	---	---	---	---	---	---	---	---	---	2650	YELLOW
0010	146+47	-	167+54	MAINLINE	---	---	---	---	---	---	---	---	---	2107	WHITE
0010	277+34	-	309+20	MAINLINE	---	---	---	---	---	---	---	---	---	3186	WHITE
0010	393+50	-	420+00	MAINLINE	---	---	---	---	---	---	---	---	---	2650	WHITE
				STAGE 1 SUBTOTAL	0	0	0	0	0	0	7943	1000	10	15886	CONTINUED ON NEXT PAGE

3

CATEGORY	STATION	TO	STATION	LOCATION	646.1020 MARKING LINE EPOXY 4-INCH LF	646.1555 MARKING LINE GROOVED CONTRAST PERMANENT LF	646.3050 MARKING LINE GROOVED PERMANENT TAPE 8-INCH LF	646.3555 MARKING LINE GROOVED CONTRAST PERMANENT LF	646.5420 MARKING AERIAL ENFORCEMENT BAR EPOXY EACH	646.7220 MARKING CHEVRON EPOXY 24-INCH LF	646.9000 MARKING REMOVAL LINE 4-INCH LF	646.9100 MARKING REMOVAL LINE 8-INCH LF	646.9200 MARKING REMOVAL LINE WIDE LF	649.0105 TEMPORARY MARKING LINE PAINT 4-INCH LF	REMARKS
STAGE 2															
0010	147+57	-	150+67	MAINLINE	---	---	---	---	---	---	310	---	---	---	
0010	154+34	-	166+44	MAINLINE	---	---	---	---	---	---	1210	---	---	---	
0010	278+44	-	282+05	MAINLINE	---	---	---	---	---	---	361	---	---	---	
0010	286+30	-	308+10	MAINLINE	---	---	---	---	---	---	2180	---	---	---	
0010	393+50	-	420+00	MAINLINE	---	---	---	---	---	---	2650	---	---	---	
0010	147+57	-	150+67	MAINLINE	---	---	---	---	---	---	---	---	---	310	YELLOW
0010	154+34	-	166+44	MAINLINE	---	---	---	---	---	---	---	---	---	1210	YELLOW
0010	278+44	-	282+05	MAINLINE	---	---	---	---	---	---	---	---	---	361	YELLOW
0010	286+30	-	308+10	MAINLINE	---	---	---	---	---	---	---	---	---	2180	YELLOW
0010	393+50	-	420+00	MAINLINE	---	---	---	---	---	---	---	---	---	2650	YELLOW
0010	147+57	-	150+67	MAINLINE	---	---	---	---	---	---	---	---	---	310	WHITE
0010	154+34	-	166+44	MAINLINE	---	---	---	---	---	---	---	---	---	1210	WHITE
0010	278+44	-	282+05	MAINLINE	---	---	---	---	---	---	---	---	---	361	WHITE
0010	286+30	-	308+10	MAINLINE	---	---	---	---	---	---	---	---	---	2180	WHITE
0010	393+50	-	420+00	MAINLINE	---	---	---	---	---	---	---	---	---	2650	WHITE
0010	150+67	-	151+82	MAINLINE	---	---	---	---	---	---	---	---	---	29	WHITE SKIP DASH
0010	153+08	-	154+34	MAINLINE	---	---	---	---	---	---	---	---	---	32	WHITE SKIP DASH
0010	281+54	-	282+68	MAINLINE	---	---	---	---	---	---	---	---	---	29	WHITE SKIP DASH
0010	284+33	-	286+30	MAINLINE	---	---	---	---	---	---	---	---	---	49	WHITE SKIP DASH
				STAGE 2 SUBTOTAL	0	0	0	0	0	0	6711	0	0	13560	
STAGE 3															
0010	147+57	-	150+67	MAINLINE	---	---	---	---	---	---	310	---	---	---	REMOVE YELLOW TEMP EPOXY
0010	154+34	-	166+44	MAINLINE	---	---	---	---	---	---	1210	---	---	---	REMOVE YELLOW TEMP EPOXY
0010	278+44	-	282+05	MAINLINE	---	---	---	---	---	---	361	---	---	---	REMOVE YELLOW TEMP EPOXY
0010	286+30	-	308+10	MAINLINE	---	---	---	---	---	---	2180	---	---	---	REMOVE YELLOW TEMP EPOXY
0010	147+57	-	150+67	MAINLINE	---	---	---	---	---	---	310	---	---	---	REMOVE WHITE TEMP EPOXY
0010	154+34	-	166+44	MAINLINE	---	---	---	---	---	---	1210	---	---	---	REMOVE WHITE TEMP EPOXY
0010	278+44	-	282+05	MAINLINE	---	---	---	---	---	---	361	---	---	---	REMOVE WHITE TEMP EPOXY
0010	286+30	-	308+10	MAINLINE	---	---	---	---	---	---	2180	---	---	---	REMOVE WHITE TEMP EPOXY
0010	147+57	-	150+67	MAINLINE	---	---	---	---	---	---	310	---	---	---	REMOVE YELLOW TEMP EPOXY
0010	154+34	-	166+44	MAINLINE	---	---	---	---	---	---	1210	---	---	---	REMOVE YELLOW TEMP EPOXY
0010	278+44	-	282+05	MAINLINE	---	---	---	---	---	---	361	---	---	---	REMOVE YELLOW TEMP EPOXY
0010	286+30	-	308+10	MAINLINE	---	---	---	---	---	---	2180	---	---	---	REMOVE YELLOW TEMP EPOXY
0010	393+50	-	420+00	MAINLINE	---	---	---	---	---	---	2650	---	---	---	REMOVE YELLOW TEMP EPOXY
0010	147+57	-	150+67	MAINLINE	---	---	---	---	---	---	310	---	---	---	REMOVE WHITE TEMP EPOXY
0010	154+34	-	166+44	MAINLINE	---	---	---	---	---	---	1210	---	---	---	REMOVE WHITE TEMP EPOXY
0010	278+44	-	282+05	MAINLINE	---	---	---	---	---	---	361	---	---	---	REMOVE WHITE TEMP EPOXY
0010	286+30	-	308+10	MAINLINE	---	---	---	---	---	---	2180	---	---	---	REMOVE WHITE TEMP EPOXY
0010	393+50	-	420+00	MAINLINE	---	---	---	---	---	---	2650	---	---	---	REMOVE WHITE TEMP EPOXY
				STAGE 3 SUBTOTAL	0	0	0	0	0	0	21544	0	0	0	
STAGE 4															
0010	99+65	-	151+82	MAINLINE	---	---	---	---	---	---	---	---	---	1304	WHITE SKIP DASH
0010	153+26	-	282+05	MAINLINE	---	---	---	---	---	---	---	---	---	3220	WHITE SKIP DASH
0010	284+94	-	409+22	MAINLINE	---	---	---	---	---	---	---	---	---	3107	WHITE SKIP DASH
				STAGE 4 SUBTOTAL	0	0	0	0	0	0	0	0	0	7,631	
STAGE 6															
0010	99+65	-	409+22	MAINLINE	30,957	---	---	---	---	---	---	---	---	---	INSIDE SHOULDER (WHITE)
0010	99+65	-	409+22	MAINLINE	---	7,739	---	---	---	---	---	---	---	---	WHITE SKIP DASH
				STAGE 6 SUBTOTAL	30,957	7,739	0	0	0	0	0	0	0	0	
STAGE 7															
0010	99+65	-	409+22	MAINLINE	30,957	---	---	600	5	---	---	---	---	---	OUTSIDE SHOULDER (YELLOW)
0010	0+00	-	11+97	ON RAMP	---	---	1816	---	---	---	---	---	---	---	
0010	42+20	-	48+17	OFF RAMP	---	---	1005	---	---	203	---	---	---	---	
				STAGE 7 SUBTOTAL	30,957	0	2,821	600	5	203	0	0	0	0	
				TOTAL 0010	61,914	7,739	2,821	600	5	203	36,198	1,000	10	37,077	

3

STAKING

CATEGORY	STATION	TO	STATION	LOCATION	650.4500 CONSTRUCTION STAKING SUBGRADE LF	650.5000 CONSTRUCTION STAKING BASE LF	650.8000 CONSTRUCTION STAKING RESURFACING REFERENCE LF	650.9910.01 CONSTRUCTION STAKING SUPPLEMENTAL CONTROL (1166-08-79) LS
STAGE 2		-						
0010	99+65	-	409+22	MAINLINE	---	---	30,957	1
0010	150+67	-	151+82	MAINLINE	115	115	---	---
0010	153+26	-	154+34	MAINLINE	108	108	---	---
0010	281+54	-	282+05	MAINLINE	51	51	---	---
0010	284+94	-	286+30	MAINLINE	136	136	---	---
				TOTAL 0010	410	410	30,957	1

SAWING ASPHALT AND CONCRETE

CATEGORY	STATION	TO	STATION	LOCATION	690.0150 SAWING ASPHALT LF	690.0250 SAWING CONCRETE LF
STAGE 2						
0010	150+67	-			16	---
0010	150+67	-	152+00		---	133
0010	153+08	-	154+34		---	126
0010	154+34	-			16	---
0010	281+54	-			16	---
0010	281+54	-	282+68		---	114
0010	284+33	-	286+30		---	197
0010	286+30	-			16	---
				STAGE 2 SUBTOTAL	64	570
STAGE 3						
0010	150+67	-			22	---
0010	154+34	-			22	---
0010	281+54	-			22	---
0010	286+30	-			22	---
				STAGE 3 SUBTOTAL	88	0
				TOTAL 0010	152	570

3

FILL EXISTING RUMBLE STRIPS

CATEGORY	STATION	TO	STATION	LOCATION	SPV.0090.01 FILL EXISTING RUMBLE STRIPS LF
STAGE 1					
0010	146+47	-	150+67	OUTSIDE SHOULDER	420
0010	163+34	-	167+54	OUTSIDE SHOULDER	420
0010	278+34	-	282+54	OUTSIDE SHOULDER	420
0010	305+00	-	309+20	OUTSIDE SHOULDER	420
0010	393+50	-	420+00	OUTSIDE SHOULDER	2,650
				STAGE 1 SUBTOTAL	4,330
STAGE 2					
0010	147+57	-	150+67	INSIDE SHOULDER	310
0010	154+34	-	166+44	INSIDE SHOULDER	1,210
0010	278+44	-	281+54	INSIDE SHOULDER	310
0010	286+30	-	308+10	INSIDE SHOULDER	2,180
				STAGE 2 SUBTOTAL	4,010
				TOTAL 0010	8,340

HES CONCRETE CURB & GUTTER 4-INCH SLOPED 36-INCH TYPE TBTT

CATEGORY	STATION	TO	STATION	LOCATION	SPV.0090.02 HES CONCRETE CURB & GUTTER 4-INCH SLOPED 36-INCH TYPE TBTT LF
STAGE 2					
0010	151+78	-	151+93	RIGHT	15
		-		STAGE 2 SUBTOTAL	15
STAGE 3		-			
0010	281+81	-	281+97	LEFT	16
0010	282+57	-	282+64	LEFT	7
				STAGE 3 SUBTOTAL	23
				TOTAL 0010	38

3

REMOVE AND REINSTALL GUARDRAIL

CATEGORY	STATION	TO	STATION	LOCATION	SPV.0090.03 REMOVE & REINSTALL GUARDRAIL LF
STAGE 2					
0010	153+14	-	154+34	RIGHT	120
0010	285+01	-	286+30	RIGHT	129
				STAGE 2 SUBTOTAL	249
STAGE 3					
0010	150+67	-	151+96	LEFT	129
0010	153+18	-	154+34	LEFT	116
0010	281+54	-	281+99	LEFT	45
0010	284+26	-	286+30	LEFT	204
				STAGE 3 SUBTOTAL	494
				TOTAL 0010	743

BASE PATCHING

CATEGORY	STATION	LOCATION	SPV.0180.01 BASE PATCHING SY
STAGE 2			
0010	395+85	MAINLINE	5
0010	401+08	MAINLINE	5
0010	406+08	MAINLINE	5
0010	408+74	MAINLINE	5
0010	409+16	MAINLINE	5
		STAGE 2 SUBTOTAL	27
STAGE 3			
0010	395+85	MAINLINE	5
0010	401+08	MAINLINE	5
0010	406+08	MAINLINE	5
0010	408+74	MAINLINE	5
0010	409+16	MAINLINE	5
		STAGE 3 SUBTOTAL	27
		TOTAL 0010	53

3

SPECIAL WEDGE JOINT

CATEGORY	STATION	TO	STATION	LOCATION	SPV.0180.02 ASPHALT WEDGE JOINT SY
STAGE 4					
0010	99+65				53
0010	151+82				53
0010	153+26				53
0010	282+05				53
0010	284+94				53
0010	409+22				53
				TOTAL 0010	320

3

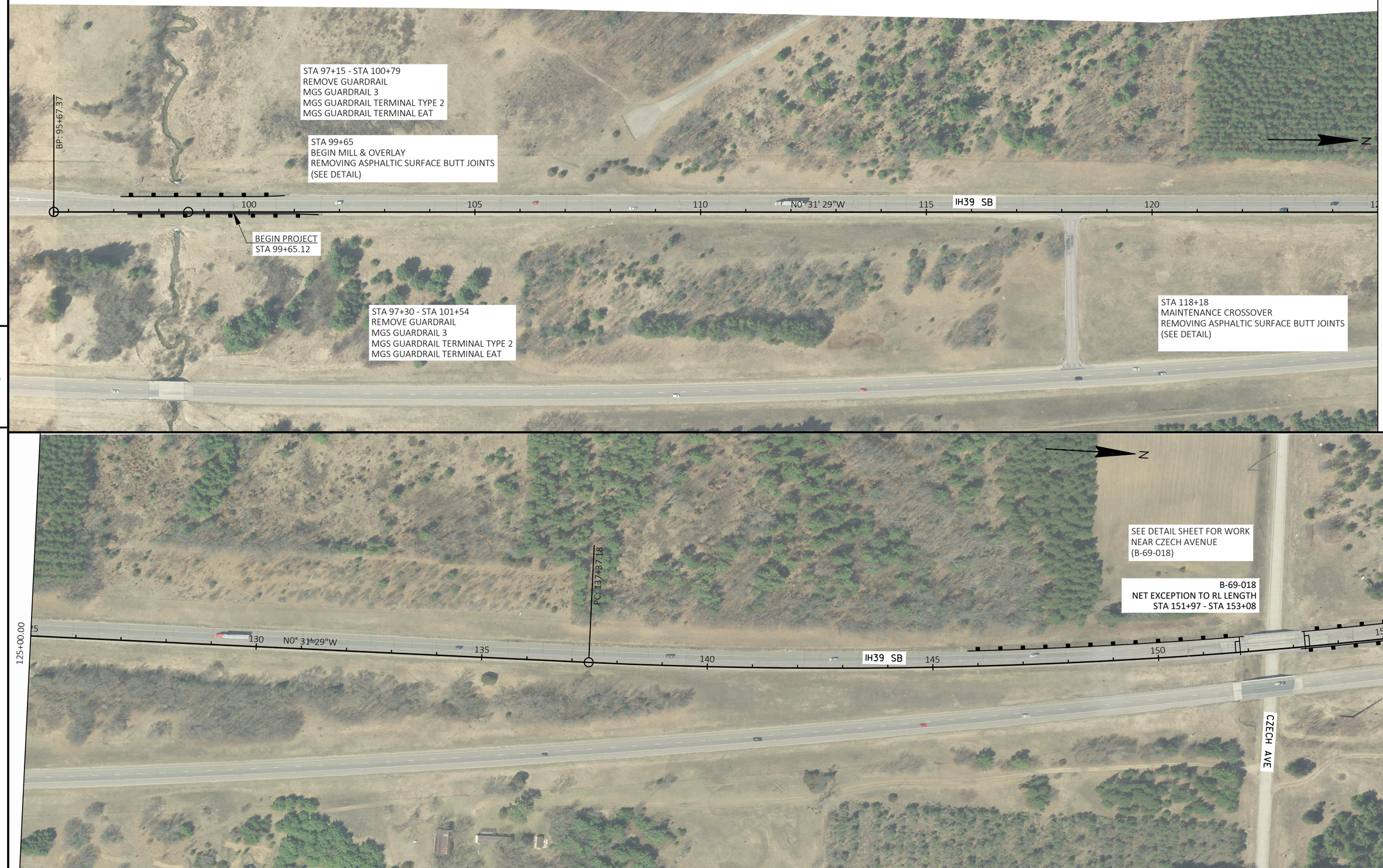

5

5

PROJECT NO: 1166-08-79	HWY: IH 39	COUNTY: WAUSHARA	PLAN SHEETS	SHEET 61	E

FILE NAME : Q:\WISDOT\I-39\1166-08-09 MARQUETTE COUNTY LINE TO COTTONVILLE AVE (SOUTH)\CAD\11660879\SHEETSOTHER\SHEETSPLAN\050201-PN.DWG
LAYOUT NAME - 1
PLOT DATE : 1/13/2022 12:30 PM PLOT BY : HEIN, MIKE PLOT NAME : PLOT SCALE : 1 IN:200 FT

WISDOT/CADDS SHEET 44

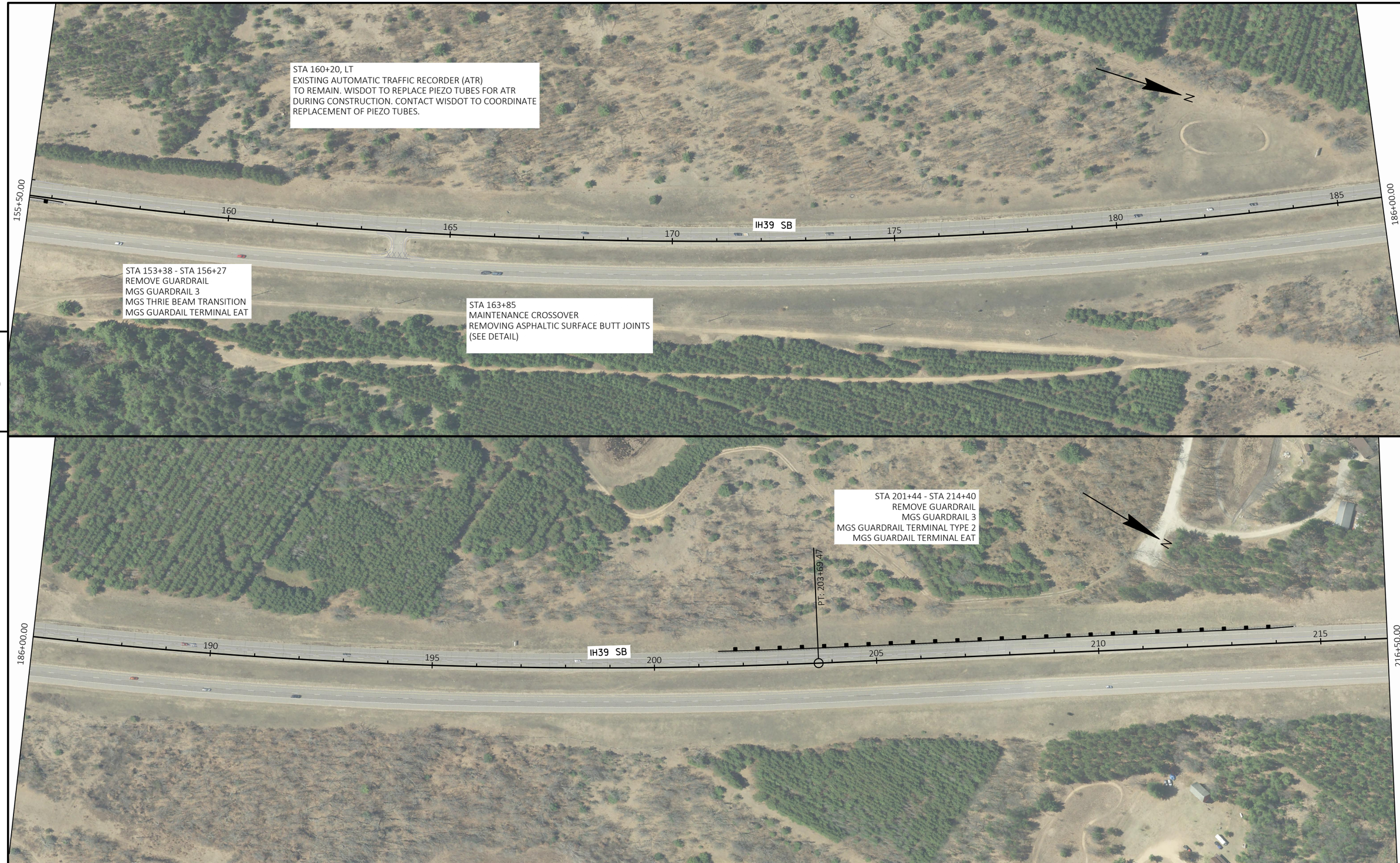

PROJECT NO: 1166-08-79	HWY: IH 39	COUNTY: WAUSHARA	PLAN SHEETS	SHEET 62	E

FILE NAME : Q:\WISDOT\I-39\1166-08-09 MARQUETTE COUNTY LINE TO COTTONVILLE AVE (SOUTH)\CAD\11660879\SHEETSOTHER\SHEETSPLAN\050201-PN.DWG
LAYOUT NAME - 2
PLOT DATE : 1/13/2022 12:31 PM PLOT BY : HEIN, MIKE PLOT NAME : PLOT SCALE : 1 IN:200 FT

WISDOT/CADDS SHEET 44

5

5

PROJECT NO: 1166-08-79	HWY: IH 39	COUNTY: WAUSHARA	PLAN SHEETS	SHEET 63	E

FILE NAME : Q:\WISDOT\I-39\1166-08-09 MARQUETTE COUNTY LINE TO COTTONVILLE AVE (SOUTH)\CAD\11660879\SHEETSOTHER\SHEETSPLAN\050201-PN.DWG
LAYOUT NAME - 3
PLOT DATE : 1/13/2022 12:31 PM PLOT BY : HEIN, MIKE PLOT NAME : PLOT SCALE : 1 IN:200 FT

WISDOT/CADDS SHEET 44

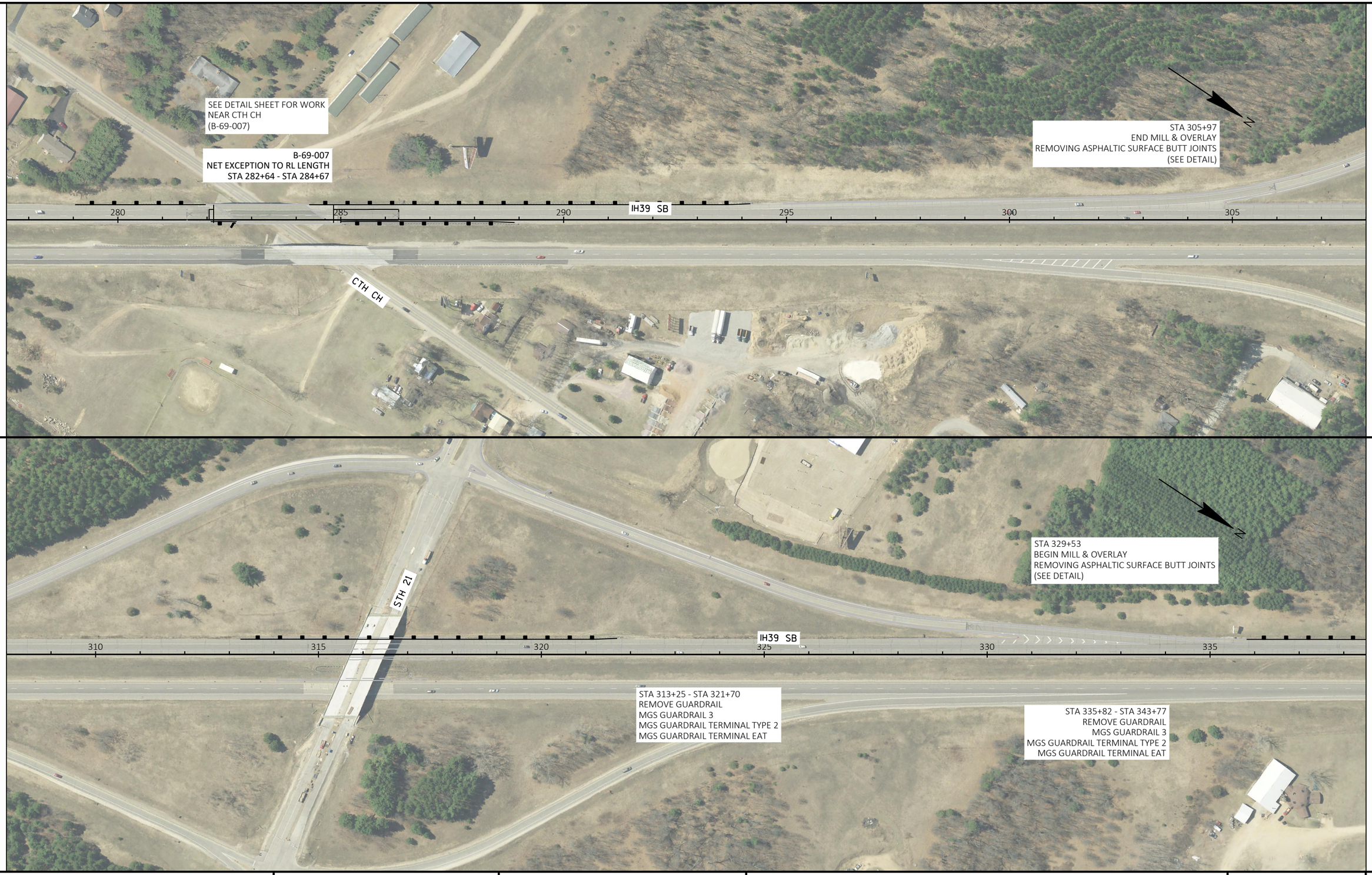

PROJECT NO: 1166-08-79	HWY: IH 39	COUNTY: WAUSHARA	PLAN SHEETS	SHEET 64	E

FILE NAME : Q:\WISDOT\I-39\1166-08-09 MARQUETTE COUNTY LINE TO COTTONVILLE AVE (SOUTH)\CAD\11660879\SHEETSOTHER\SHEETSPLAN\050201-PN.DWG
LAYOUT NAME - 4
PLOT DATE : 1/13/2022 12:31 PM PLOT BY : HEIN, MIKE PLOT NAME : PLOT SCALE : 1 IN:200 FT

WISDOT/CADDS SHEET 44

5

5

PROJECT NO: 1166-08-79	HWY: IH 39	COUNTY: WAUSHARA	PLAN SHEETS	SHEET 65	E

FILE NAME : Q:\WISDOT\I-39\1166-08-09 MARQUETTE COUNTY LINE TO COTTONVILLE AVE (SOUTH)\CAD\11660879\SHEETSOTHER\SHEETSPLAN\050201-PN.DWG
LAYOUT NAME - 5
PLOT DATE : 1/13/2022 12:31 PM PLOT BY : HEIN, MIKE PLOT NAME : PLOT SCALE : 1 IN:200 FT

WISDOT/CADDS SHEET 44

5

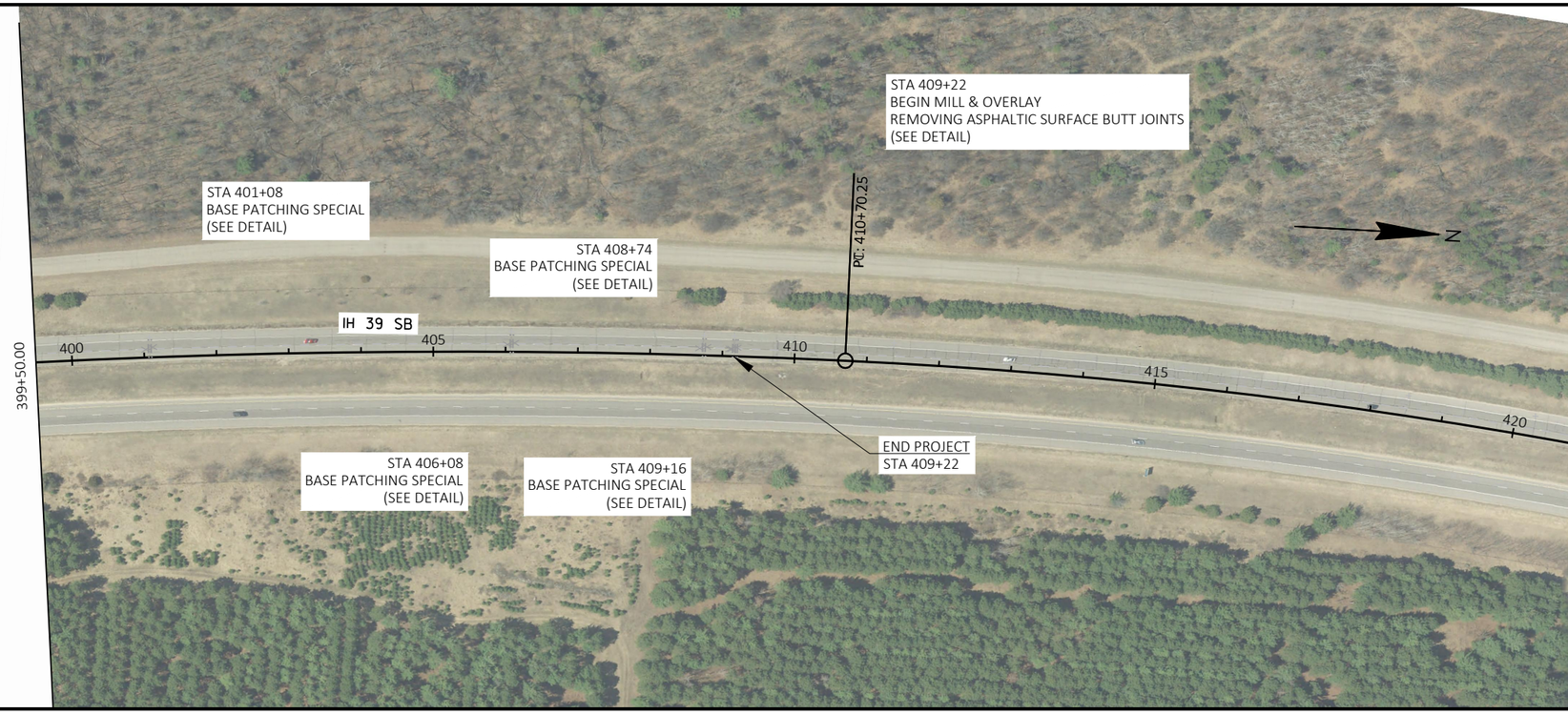

5

PROJECT NO: 1166-08-79	HWY: IH 39	COUNTY: WAUSHARA	PLAN SHEETS	SHEET 66	E

5

5

PROJECT NO: 1166-08-79	HWY: IH 39	COUNTY: WAUSHARA	PLAN SHEETS	SHEET 67	E

5

5

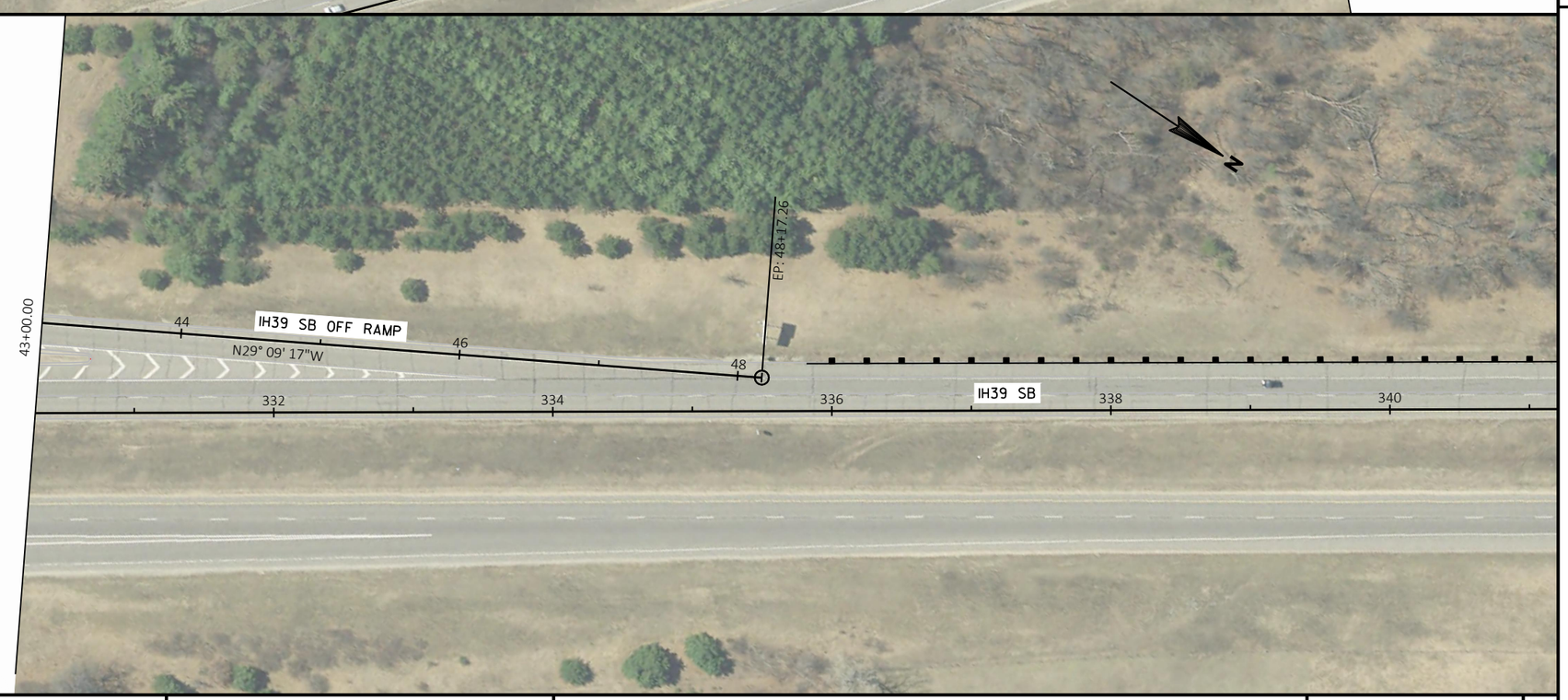

PROJECT NO: 1166-08-79	HWY: IH 39	COUNTY: WAUSHARA	PLAN SHEETS	SHEET 68	E

FILE NAME : Q:\WISDOT\I-39\1166-08-09 MARQUETTE COUNTY LINE TO COTTONVILLE AVE (SOUTH)\CAD\11660879\SHEETSOTHER\SHEETSPLAN\050203-PN.DWG
LAYOUT NAME - 01
PLOT DATE : 1/13/2022 12:33 PM PLOT BY : HEIN, MIKE PLOT NAME : PLOT SCALE : 1 IN:100 FT

WISDOT/CADDS SHEET 44

Standard Detail Drawing List

08A05-19C	INLET COVERS TYPE F, HM, HM-S, S, T, V, HM-GJ, & HM-GJ-S
08D01-22A	CONCRETE CURB & GUTTER
08D01-22B	CONCRETE CURB, TIES AND CURB AND GUTTER APPLICATIONS
08E09-06	SILT FENCE
13A03-06	CONCRETE PAVEMENT SHOULDERS
13A05-05A	SHOULDER RUMBLE STRIP, MILLING
13A05-05B	SHOULDER RUMBLE STRIP, MILLING
13B02-09A	CONCRETE PAVEMENT APPROACH SLAB
13C19-03	HMA LONGITUDINAL JOINTS
14B07-15A	CONCRETE BARRIER TEMPORARY PRECAST, 12'-6"
14B07-15B	CONCRETE BARRIER TEMPORARY PRECAST, 12'-6"
14B07-15C	CONCRETE BARRIER TEMPORARY PRECAST, 12'-6"
14B07-15D	CONCRETE BARRIER TEMPORARY PRECAST, 12'-6"
14B07-15E	CONCRETE BARRIER TEMPORARY PRECAST, 12'-6"
14B07-15F	CONCRETE BARRIER TEMPORARY PRECAST, 12'-6"
14B07-15G	CONCRETE BARRIER TEMPORARY PRECAST, 12'-6"
14B07-15H	CONCRETE BARRIER TEMPORARY PRECAST, 12'-6"
14B07-15I	CONCRETE BARRIER TEMPORARY PRECAST, 12'-6"
14B08-02A	CRASH CUSHION/SAND BARREL ARRAY AND OTHER TEMPORARY BARRIER LAYOUT DETAILS
14B08-02B	CRASH CUSHION/SAND BARREL ARRAY AND OTHER TEMPORARY BARRIER LAYOUT DETAILS
14B08-02C	CRASH CUSHION/SAND BARREL ARRAY AND OTHER TEMPORARY BARRIER LAYOUT DETAILS
14B08-02D	CRASH CUSHION/SAND BARREL ARRAY AND OTHER TEMPORARY BARRIER LAYOUT DETAILS
14B08-02E	CRASH CUSHION/SAND BARREL ARRAY AND OTHER TEMPORARY BARRIER LAYOUT DETAILS
14B28-04A	GUARDRAIL MOW STRIP
14B28-04B	GUARDRAIL MOW STRIP
14B42-07A	MIDWEST GUARDRAIL SYSTEM (MGS) GUARDRAIL
14B42-07B	MIDWEST GUARDRAIL SYSTEM (MGS) GUARDRAIL
14B42-07C	MIDWEST GUARDRAIL SYSTEM (MGS) GUARDRAIL
14B42-07D	MIDWEST GUARDRAIL SYSTEM (MGS) GUARDRAIL
14B44-04A	MIDWEST GUARDRAIL SYSTEM ENERGY ABSORBING TERMINAL (MGS)
14B44-04B	MIDWEST GUARDRAIL SYSTEM ENERGY ABSORBING TERMINAL (MGS)
14B44-04C	MIDWEST GUARDRAIL SYSTEM ENERGY ABSORBING TERMINAL (MGS)
14B45-05A	MIDWEST GUARDRAIL SYSTEM THRIE BEAM TRANSITION (MGS)
14B45-05B	MIDWEST GUARDRAIL SYSTEM THRIE BEAM TRANSITION (MGS)
14B45-05C	MIDWEST GUARDRAIL SYSTEM THRIE BEAM TRANSITION (MGS)
14B45-05D	MIDWEST GUARDRAIL SYSTEM THRIE BEAM TRANSITION (MGS)
14B45-05F	MIDWEST GUARDRAIL SYSTEM THRIE BEAM TRANSITION (MGS)
14B47-03A	MIDWEST GUARDRAIL SYSTEM (MGS) TYPE 2 TERMINAL
14B47-03B	MIDWEST GUARDRAIL SYSTEM (MGS) TYPE 2 TERMINAL
14B47-03C	MIDWEST GUARDRAIL SYSTEM (MGS) TYPE 2 TERMINAL
14B47-03D	MIDWEST GUARDRAIL SYSTEM (MGS) TYPE 2 TERMINAL
14B47-03E	MIDWEST GUARDRAIL SYSTEM (MGS) TYPE 2 TERMINAL
14B47-03F	MIDWEST GUARDRAIL SYSTEM (MGS) TYPE 2 TERMINAL
14B47-03G	MIDWEST GUARDRAIL SYSTEM (MGS) TYPE 2 TERMINAL
15A04-06C	DELINEATOR BRACKET WITH REFLECTIVE SHEETING
15C02-08A	BARRICADES AND SIGNS FOR MAINLINE CLOSURES
15C02-08B	BARRICADES AND SIGNS FOR VARIOUS CLOSURES
15C02-08C	DETOUR SIGNING FOR MAINLINE CLOSURES
15C02-08D	ON RAMP LANE CLOSURE
15C02-08E	OFF RAMP LANE CLOSURE
15C02-08F	ADVANCED WIDTH RESTRICTION SIGNING
15C08-20A	LONGITUDINAL MARKING (MAINLINE)
15C11-09B	CHANNELIZING DEVICES DRUMS, CONES, BARRICADES AND VERTICAL PANELS
15C14-04	AERIAL ENFORCEMENT BARS PAVEMENT MARKING DETAILS
15C31-04A	PAVEMENT MARKING EXIT RAMP AND PARALLEL EXIT RAMP
15C31-04C	PAVEMENT MARKING ENTRANCE RAMP AND PARALLEL ENTRANCE RAMP
15D12-09A	TRAFFIC CONTROL, LANE CLOSURE
15D12-09B	TRAFFIC CONTROL, LANE CLOSURE, SPEED REDUCTION
15D15-05A	TRAFFIC CONTROL, PARALLEL ENTRANCE RAMP WITHIN LANE CLOSURE
15D15-05C	TRAFFIC CONTROL, TAPERED ENTRANCE RAMP WITHIN LANE CLOSURE
15D15-05D	TRAFFIC CONTROL, TAPERED ENTRANCE RAMP WITHIN LANE CLOSURE
15D15-05E	TRAFFIC CONTROL, PARALLEL EXIT RAMP WITHIN LANE CLOSURE
15D16-04	TRAFFIC CONTROL, EXIT RAMP CLOSURE
15D27-03	TRAFFIC CONTROL, SHOULDER CLOSURE ON DIVIDED ROADWAY, SPEEDS GREATER THAN 40 MPH
15D39-02	TRAFFIC CONTROL, DROP-OFF SIGNING
15D40-02D	TRAFFIC CONTROL, PARTIAL LANE SHIFT MULTILANE DIVIDED 50 MPH AND GREATER
15D44-02	TRAFFIC CONTROL, SIGNING ON ROADWAYS WITH MILLED SURFACES

6

GENERAL NOTES

DETAILS OF CONSTRUCTION, MATERIALS AND WORKMANSHIP NOT SHOWN ON THIS DRAWING SHALL CONFORM TO THE PERTINENT REQUIREMENTS OF THE STANDARD SPECIFICATIONS AND THE APPLICABLE SPECIAL PROVISIONS.

DETAIL DRAWINGS FOR PROPOSED ALTERNATE DESIGNS FOR INLET COVERS SHALL BE SUBMITTED TO THE ENGINEER FOR APPROVAL PROVIDING THAT SUCH ALTERNATE DESIGNS MAKE PROVISION FOR EQUIVALENT CAPACITY AND STRENGTH.

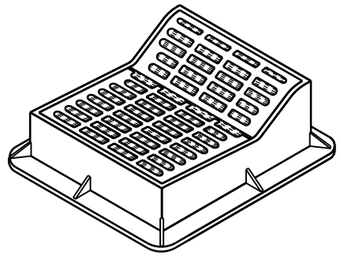

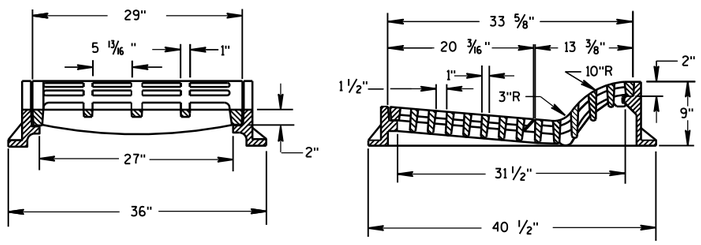

TYPE "F"

USE WITH TYPES A & D CONCRETE CURB & GUTTER, 36 INCH.

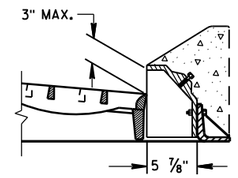

ALTERNATIVE CURB BOX FOR TYPE "HM" COVER

USE WITH TYPES G & J CONCRETE CURB & GUTTER, 30 INCH
NOTED AS TYPE HM-GJ ON DRAINAGE TABLE

NOTE:
SPECIAL GRATE FOR THE
TYPE "H" COVER MAY ALSO BE
USED FOR THE TYPE "HM-GJ" COVER
NOTED AS TYPE HM-GJ-S ON DRAINAGE TABLE

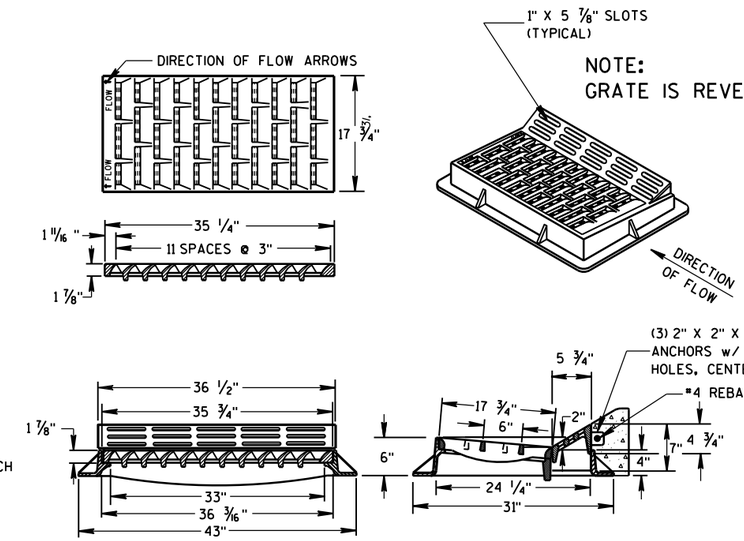

NOTE:
GRATE IS REVERSIBLE.

TYPE "HM"

USE WITH TYPES A & D CONCRETE CURB & GUTTER, 36 INCH.

NOTE:
SPECIAL GRATE FOR THE
TYPE "H" COVER MAY ALSO BE
USED FOR THE TYPE "HM" COVER
NOTED AS TYPE HM-S ON DRAINAGE TABLE

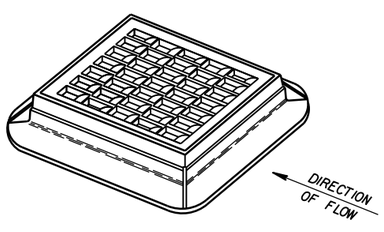

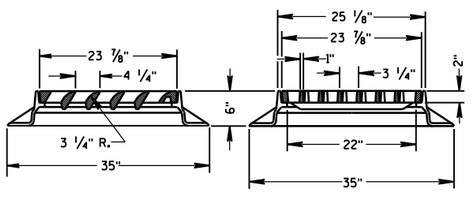

TYPE "S"

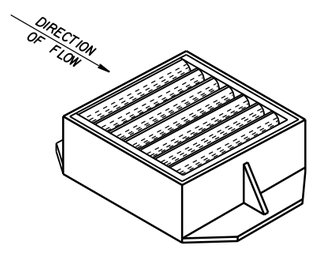

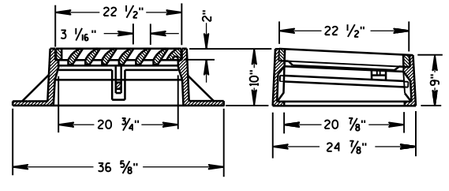

TYPE "V"

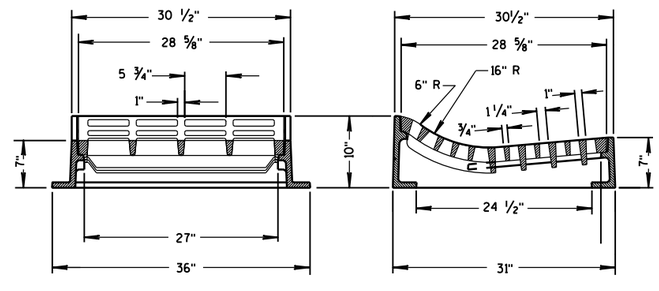

TYPE "T"

USE WITH TYPES R & T CONCRETE CURB & GUTTER, 36 INCH.

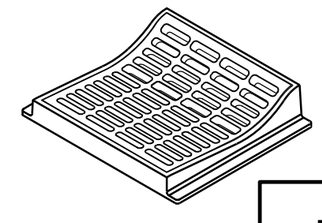

INLET COVERS
TYPE F, HM, HM-S, S, T, V, HM-GJ, & HM-GJ-S

STATE OF WISCONSIN
DEPARTMENT OF TRANSPORTATION

APPROVED
11/27/2013 — DATE
/S/ Jerry H. Zogg — ROADWAY STANDARDS DEVELOPMENT ENGINEER
FHWA

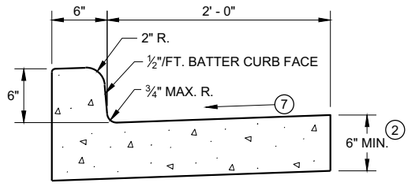

TYPES A[1] & D

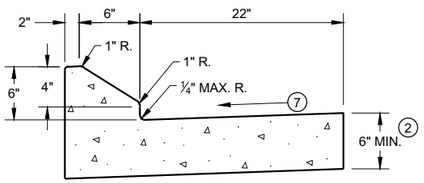

6" SLOPED CURB TYPES G[1] & J

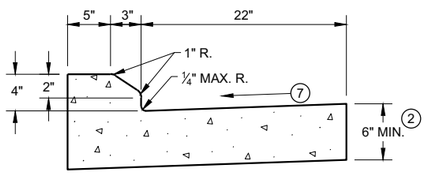

4" SLOPED CURB TYPES G[1] & J

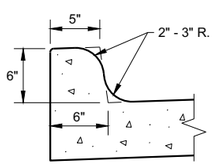

TYPES K[1] & L
(OPTIONAL CURB SHAPE)

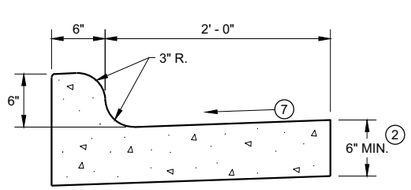

TYPES K[1] & L

CONCRETE CURB AND GUTTER 30"

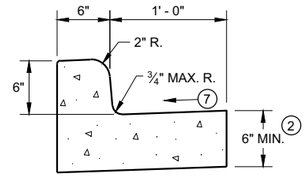

TYPES A[1] & D

CONCRETE CURB AND GUTTER 18"

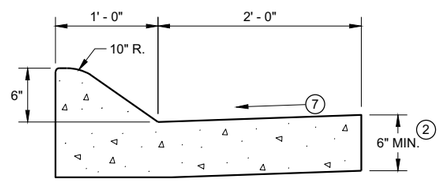

6" SLOPED CURB TYPES A[1] & D

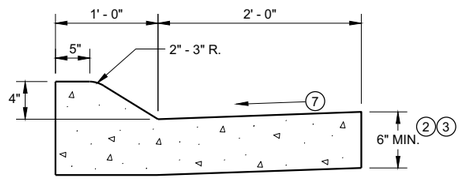

4" SLOPED CURB TYPES A[1] & D

CONCRETE CURB AND GUTTER 36"

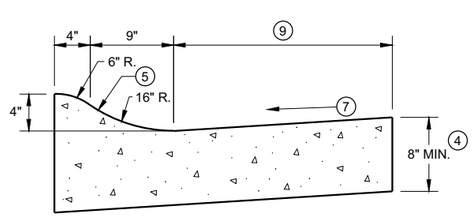

4" SLOPED CURB TYPES R[1] & T

TBT & TBTT	X
30"	22"
36"	28"

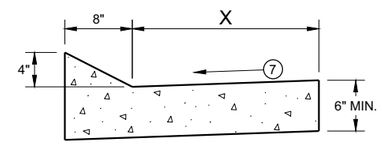

TYPES TBT & TBTT[1]

CONCRETE CURB AND GUTTER

PAVEMENT THICKNESS AND MAXIMUM CONCRETE PANEL WIDTH TABLE

PAVEMENT THICKNESS	MAXIMUM PANEL WIDTH
LESS THAN 10"	12'
10" & ABOVE	15'

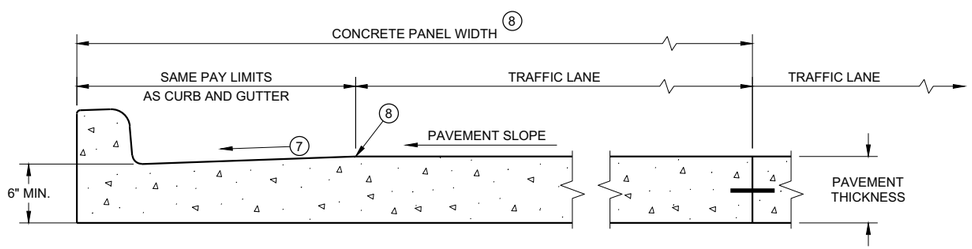

PARTIAL SECTION OF PAVEMENT *
WITH INTEGRAL CURB AND GUTTER

* BIKE LANE IS NOT SHOWN

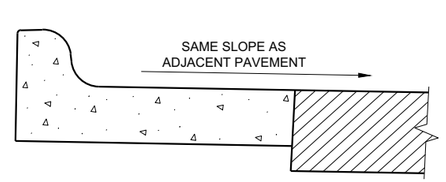

REVERSE SLOPE GUTTER[6]
(TYPICAL FOR ALL CURB & GUTTER TYPES)

GENERAL NOTES

DETAILS OF CONSTRUCTION AND WORKMANSHIP NOT SHOWN ON THIS DRAWING SHALL CONFORM TO THE PERTINENT REQUIREMENTS OF THE CONTRACT.

PAVEMENT TIES AND TIE BARS SHALL BE EPOXY COATED IN CONFORMANCE WITH SUBSECTION 505.2.6.2 OF THE STANDARD SPECIFICATIONS.

INTEGRAL CURB AND GUTTER SHALL CONFORM TO THE DETAILS SHOWN FOR CONCRETE CURB AND GUTTER INCLUDING THE TRANSVERSE GUTTER SLOPE.

UNLESS OTHERWISE SHOWN ON THE TYPICAL CROSS SECTIONS, THE BASE AGGREGATE AND COMMON EXCAVATION LIMITS ARE 2' - 0" BEHIND THE BACK OF CURBS.

1. TIE BARS ARE REQUIRED FOR CURB AND GUTTERS TYPES A, G, K, R, AND TBTT.
2. THE BOTTOM OF CURB AND GUTTER MAY BE CONSTRUCTED EITHER LEVEL OR PARALLEL TO THE SLOPE OF THE SUBGRADE OR BASE AGGREGATE PROVIDED A 6" MINIMUM GUTTER THICKNESS IS MAINTAINED.
3. USE 8" MINIMUM GUTTER THICKNESS WHEN USED WITH AN ADJACENT CONCRETE TRUCK APRON PLACED BEHIND BACK OF CURB.
4. THE BOTTOM OF CURB AND GUTTER MAY BE CONSTRUCTED EITHER LEVEL OR PARALLEL TO THE SLOPE OF THE SUBGRADE OR BASE AGGREGATE PROVIDED A 8" MINIMUM GUTTER THICKNESS IS MAINTAINED.
5. UNLESS OTHERWISE NOTED, FOR STAKING PURPOSES THE FACE OF CURB IS 6" FROM THE BACK OF CURB.
6. WHEN REVERSE SLOPE GUTTER IS REQUIRED, THE LOCATION(S) WILL BE SHOWN ELSEWHERE IN THE PLAN.
7. USE 4% GUTTER CROSS SLOPE UNLESS OTHERWISE NOTED IN THE PLANS.
8. INCLUDE LONGITUDINAL JOINT AND TIE BARS ALONG LANE EDGE WHEN CONCRETE PANEL WIDTH EXCEEDS THE MAXIMUM WIDTH PER TABLE BELOW. LONGITUDINAL JOINT(S) ARE NOT ALLOWED WITHIN TRAFFIC LANES AND BIKE LANES. LONGITUDINAL JOINT MAY BE SAWED.
9. CONCRETE CURB AND GUTTER 4-INCH SLOPED 30-INCH TYPE "R" AND "T" = 17 INCHES
   CONCRETE CURB AND GUTTER 4-INCH SLOPED 36-INCH TYPE "R" AND "T" = 23 INCHES

CONCRETE CURB AND GUTTER

STATE OF WISCONSIN
DEPARTMENT OF TRANSPORTATION

GENERAL NOTES

DETAILS OF CONSTRUCTION AND WORKMANSHIP NOT SHOWN ON THIS DRAWING SHALL CONFORM TO THE PERTINENT REQUIREMENTS OF THE CONTRACT.

PAVEMENT TIES AND TIE BARS SHALL BE EPOXY COATED IN CONFORMANCE WITH SUBSECTION 505.2.6.2 OF THE STANDARD SPECIFICATIONS.

UNLESS OTHERWISE SHOWN ON THE TYPICAL CROSS SECTIONS, THE BASE AGGREGATE AND COMMON EXCAVATION LIMITS ARE 2' - 0" BEHIND THE BACK OF CURBS.

(1) TIE BARS ARE REQUIRED FOR CURB AND GUTTERS TYPES A, G, K, R, AND TBTT.

(2) THE BOTTOM OF CURB AND GUTTER MAY BE CONSTRUCTED EITHER LEVEL OR PARALLEL TO THE SLOPE OF THE SUBGRADE OR BASE AGGREGATE PROVIDED A 6" MINIMUM GUTTER THICKNESS IS MAINTAINED.

(9) REFER TO SDD 08D18 AND 08D19 FOR ADDITIONAL DRIVEWAY ENTRANCE CURB DETAILS.

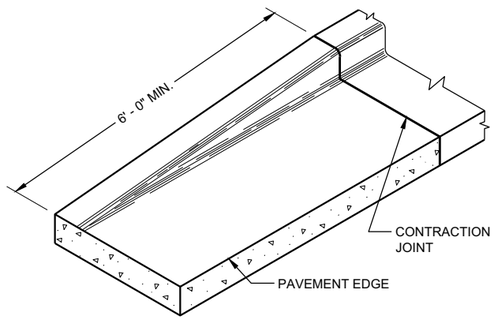

END SECTIONCURB AND GUTTER

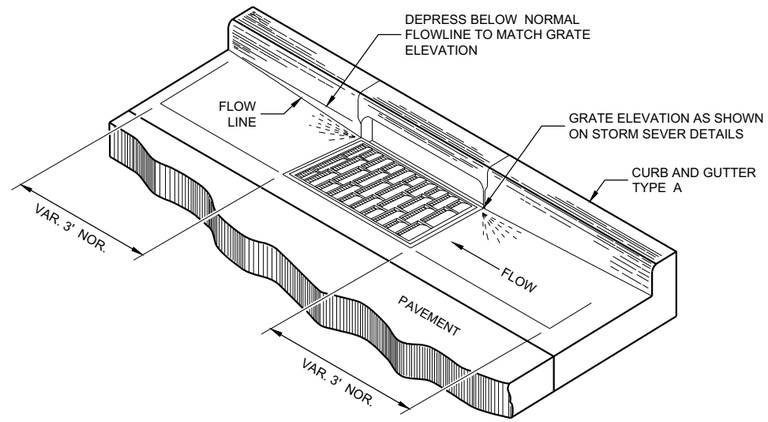

DETAIL OF CURB AND GUTTER AT INLETS
(TYPICAL H INLET COVER SHOWN)

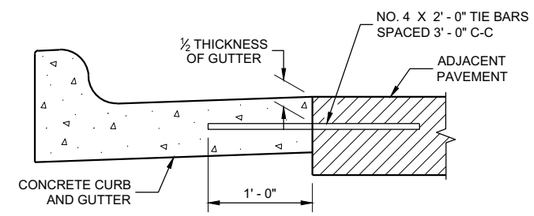

TYPICAL TIE BAR LOCATION (1)

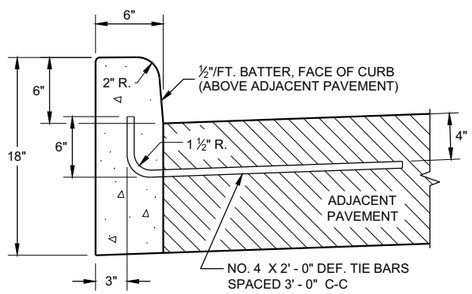

TYPES A (1) & D

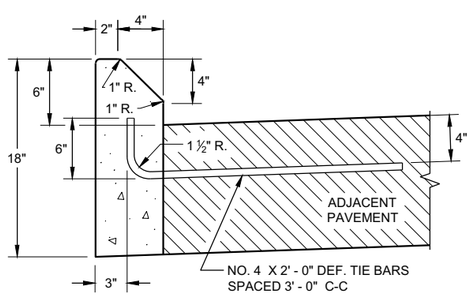

TYPES G (1) & J

CONCRETE CURB

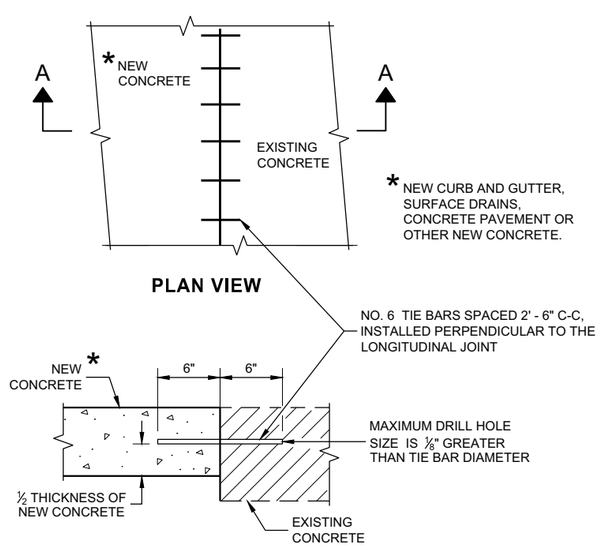

PLAN VIEW

SECTION A - A

TIE BARS DRILLED INTO EXISTING PAVEMENT

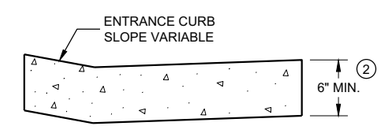

DRIVEWAY ENTRANCE CURB (9)
(WHEN DIRECTED BY THE ENGINEER)

CONCRETE CURB, TIES AND CURB AND GUTTER APPLICATIONS

STATE OF WISCONSIN
DEPARTMENT OF TRANSPORTATION

APPROVED
February 2021 — DATE
/S/ Rodnery Taylor — ROADWAY STANDARDS DEVE ENGINEER
FHWA

6
SDD 08D01 - 22b

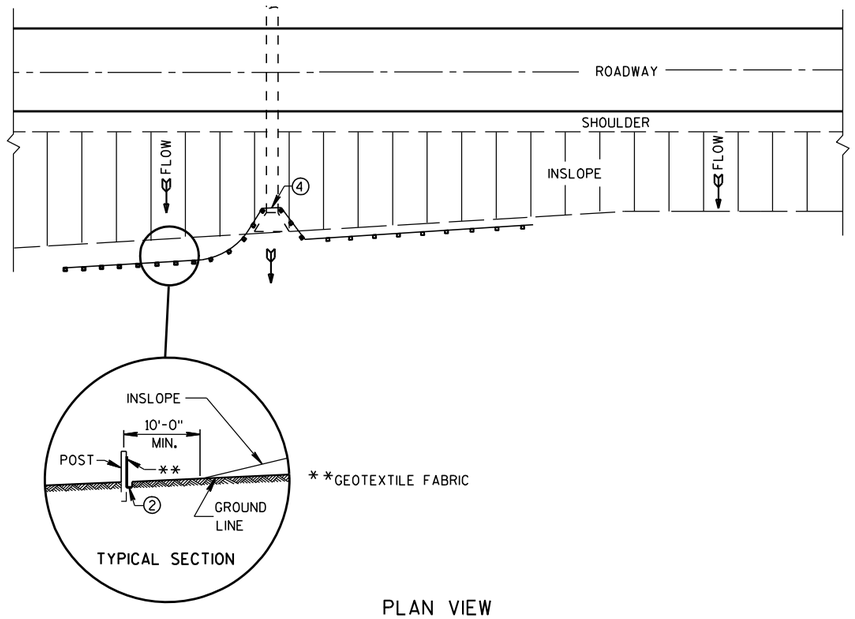

PLAN VIEW

TYPICAL APPLICATION OF SILT FENCE

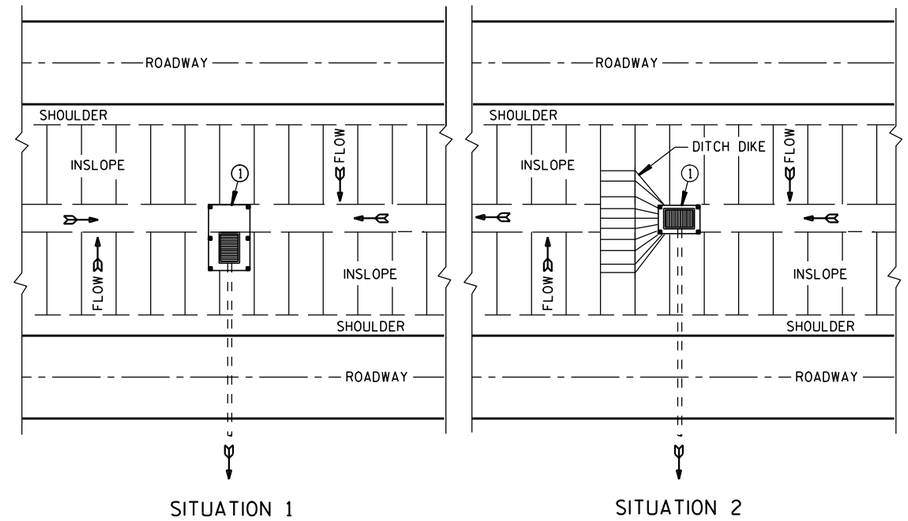

SITUATION 1

SITUATION 2

PLAN VIEW

SILT FENCE AT MEDIAN SURFACE DRAINS

GENERAL NOTES

DETAILS OF CONSTRUCTION NOT SHOWN ON THIS DRAWING SHALL CONFORM TO THE PERTINENT REQUIREMENTS OF THE STANDARD SPECIFICATIONS AND APPLICABLE SPECIAL PROVISIONS.

① HORIZONTAL BRACE REQUIRED WITH 2" X 4" WOODEN FRAME OR EQUIVALENT AT TOP OF POSTS.

② FOR MANUAL INSTALLATIONS THE TRENCH SHALL BE A MINIMUM OF 4" WIDE & 6" DEEP TO BURY AND ANCHOR THE GEOTEXTILE FABRIC. FOLD MATERIAL TO FIT TRENCH AND BACKFILL & COMPACT TRENCH WITH EXCAVATED SOIL.

③ WOOD POSTS SHALL BE A MINIMUM SIZE OF 1⅛" X 1⅛" OF OAK OR HICKORY.

④ SILT FENCE TO EXTEND ACROSS THE TOP OF THE PIPE.

⑤ CONSTRUCT SILT FENCE FROM A CONTINUOUS ROLL IF POSSIBLE BY CUTTING LENGTHS TO AVOID JOINTS. IF A JOINT IS NECESSARY USE ONE OF THE FOLLOWING TWO METHODS; A) OVERLAP THE END POSTS AND TWIST, OR ROTATE, AT LEAST 180 DEGREES, B) HOOK THE END OF EACH SILT FENCE LENGTH.

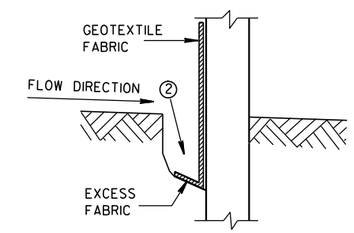

TRENCH DETAIL

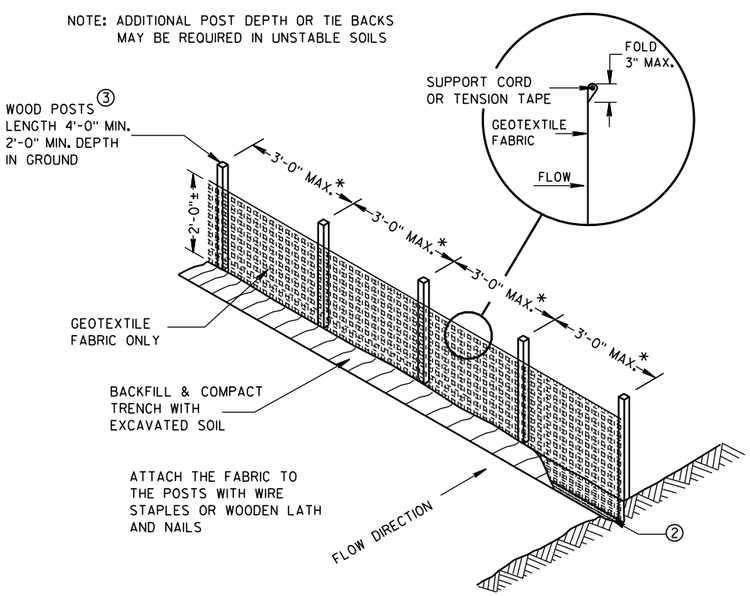

*NOTE: 8'-0" POST SPACING ALLOWED IF A WOVEN GEOTEXTILE FABRIC IS USED.

SILT FENCE

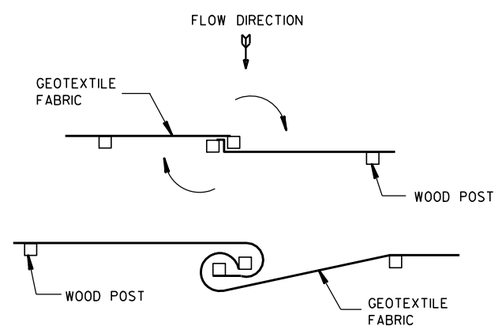

TWIST METHOD

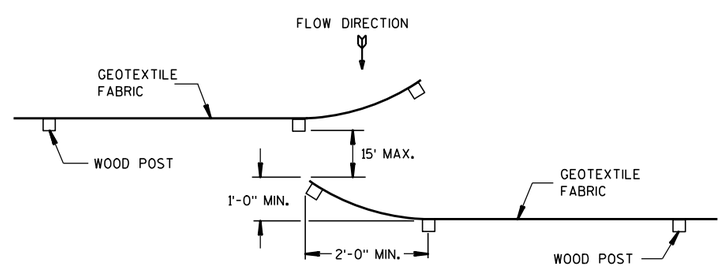

HOOK METHOD

JOINING TWO LENGTHS OF SILT FENCE ⑤

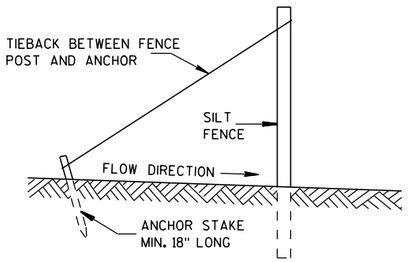

SILT FENCE TIE BACK

(WHEN REQUIRED BY THE ENGINEER)

SILT FENCE

STATE OF WISCONSIN
DEPARTMENT OF TRANSPORTATION

APPROVED
4-29-05 /S/ Beth Cann...
DATE CHIEF ROADWAY DEVELOP... ...INEER
FHWA

6

6

S.D.D. 8 E 9-6

S.D.D. 8 E 9-6

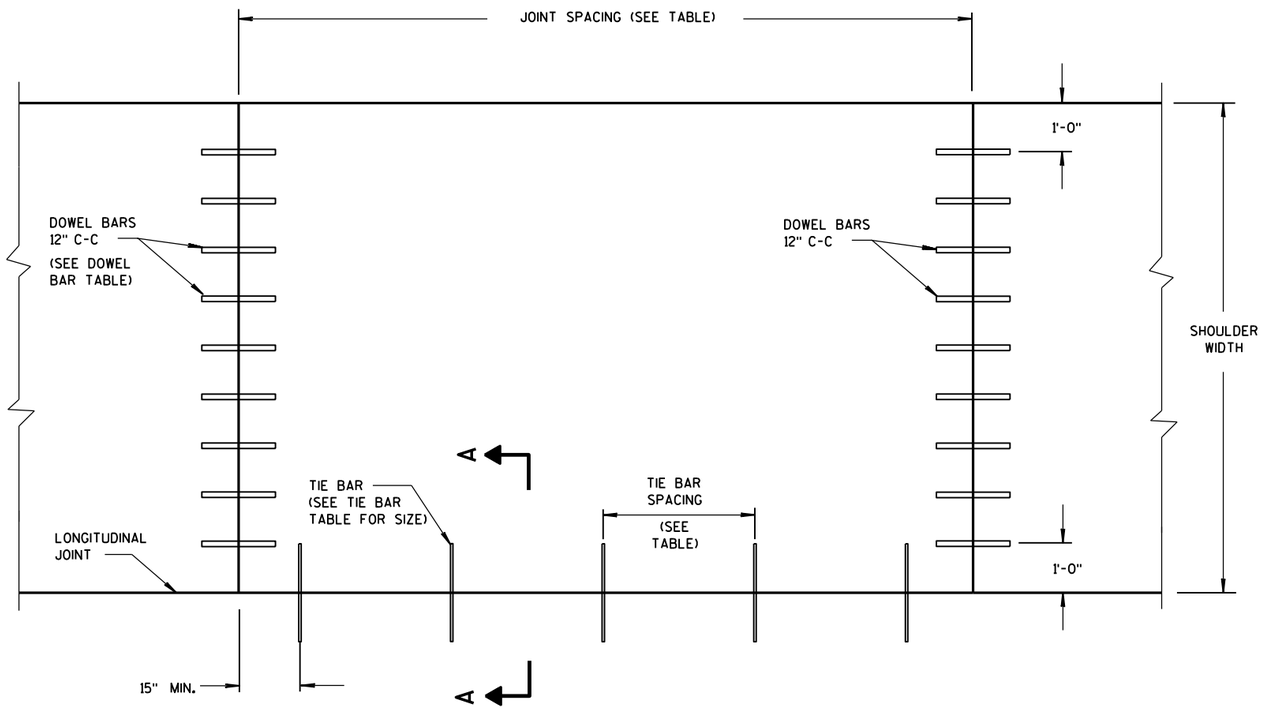

PLAN VIEW

CONCRETE PAVEMENT SHOULDER

GENERAL NOTES

DETAILS OF CONSTRUCTION, MATERIALS AND WORKMANSHIP NOT SHOWN ON THIS DRAWING SHALL CONFORM TO THE PERTINENT REQUIREMENTS OF THE STANDARD SPECIFICATIONS AND THE APPLICABLE SPECIAL PROVISIONS.

TRANSVERSE JOINT DETAILS ARE SHOWN ELSEWHERE IN THE PLAN.

FINISH THE SHOULDER PAVEMENT CONFORMING TO SUBSECTION 415.3.8 OF THE STANDARD SPECIFICATIONS.

TIE BARS SHALL CONFORM TO SUBSECTION 505.2.4 OF THE STANDARD SPECIFICATIONS.

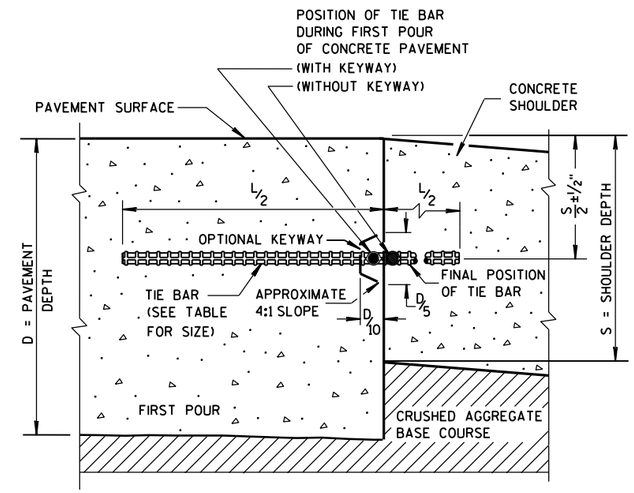

SECTION A-A

LONGITUDINAL CONSTRUCTION JOINT

TIE BAR TABLE

PAVEMENT DEPTH (D)	TIE BAR SIZE	TIE BAR LENGTH (L)	MAX. TIE BAR SPACING
< 10 ½"	NO. 4	30"	36"
≥ 10 ½"	NO. 5	36"	36"
	NO. 4*	30"	24"**

* SUBSTITUTE BENT BARS AT LONGITUDINAL JOINTS WHEN EQUIPMENT LIMITATIONS DURING CONSTRUCTION WARRANT (e.g. AUXILIARY LANES OR TURN LANES)

** CONFORM TO 15" MINUMUM SPACING FROM TRANSVERSE JOINTS; SPACING BETWEEN TIE BARS WILL BE 30" AT TRANSVERSE JOINTS.

PAVEMENT DEPTH, DOWEL BAR SIZE AND JOINT SPACING TABLE

PAVEMENT DEPTH (D)	DOWEL BAR DIAMETER***	CONTRACTION JOINT SPACING
5 ½", 6", 6 ½"	NONE	12'
7", 7 ½"	1"	14'
8", 8 ½"	1¼"	15'
9", 9 ½"	1¼"	15'
10" & ABOVE	1½"	15'

*** FOR DOWELED CONCRETE SHOULDERS WITH TRAPEZOIDAL CROSS SECTIONS, CHOSE THE APPROPRIATE DOWEL BAR DIAMETER BASED ON THE SMALLER PAVEMENT DEPTH (LIKELY THE OUTSIDE EDGE OF THE SHOULDER). IF USING BASKETS, USE BASKETS FOR THE AVERAGE THICKNESS OF THE CROSS SECTION.

CONCRETE PAVEMENT SHOULDERS

STATE OF WISCONSIN
DEPARTMENT OF TRANSPORTATION

APPROVED
June, 2015 — /S/ Peter Kemp, P.E.
DATE — PAVEMENT SUPER
FHWA

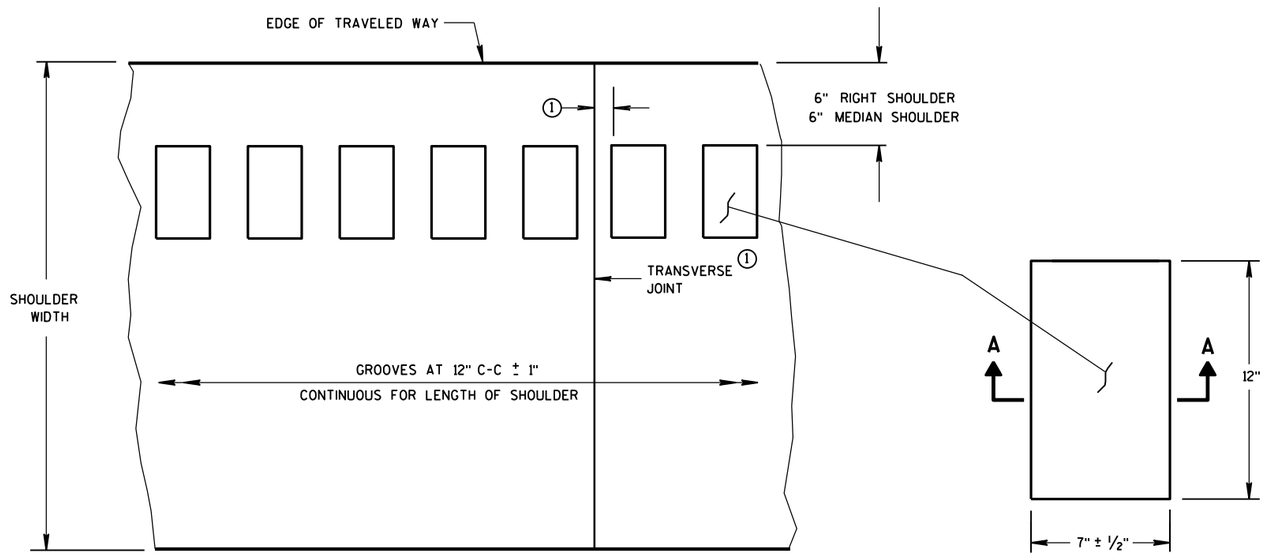

PLAN VIEW
SHOULDER WITH GROOVES

PLAN VIEW
(SINGLE GROOVE)

PLACEMENT DETAIL FOR MILLED RUMBLE STRIP

GENERAL NOTES

DETAILS OF CONSTRUCTION SHOWN ON THIS DRAWING SHALL CONFORM TO THE PERTINENT REQUIREMENTS OF THE STANDARD SPECIFICATIONS AND APPLICABLE SPECIAL PROVISIONS.

RUMBLE STRIPS ON EXPRESSWAYS

DO NOT INSTALL RUMBLE STRIPS ACROSS SIDE ROAD INTERSECTIONS, COMMERCIAL DRIVEWAYS, PRIVATE DRIVEWAYS OR ADJACENT TO RIGHT TURN LANES, LEFT TURN LANES, TURN LANE TAPERS, BRIDGE DECKS, BRIDGE APPROACHES, OR 100 FEET IN ADVANCE OF RAILROAD CROSSING. THE ATTACHED STANDARD DETAIL DRAWING SHOWS THE LOCATION OF THE RUMBLE STRIPS AT INTERCHANGE AREAS.

(1) CONCRETE PAVEMENT - RUMBLE STRIPS SHALL BE A MINIMUM OF 6" AWAY FROM TRANSVERSE JOINTS.

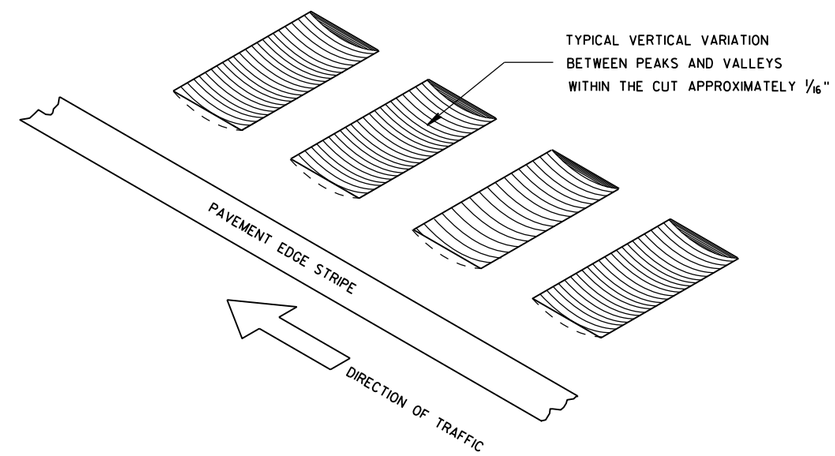

ISOMETRIC

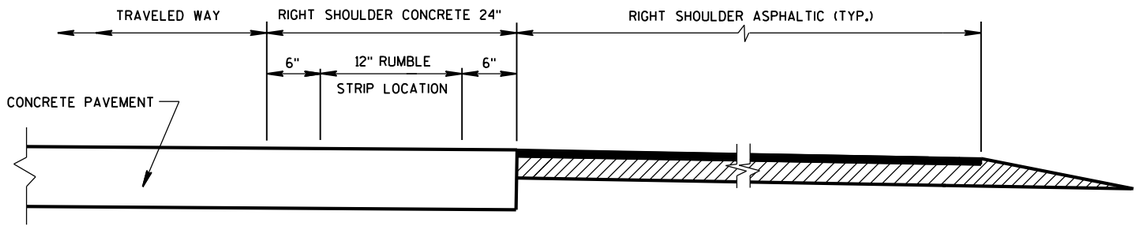

SECTION VIEW
CONCRETE PAVEMENT EXTENDS INTO RIGHT SHOULDER)

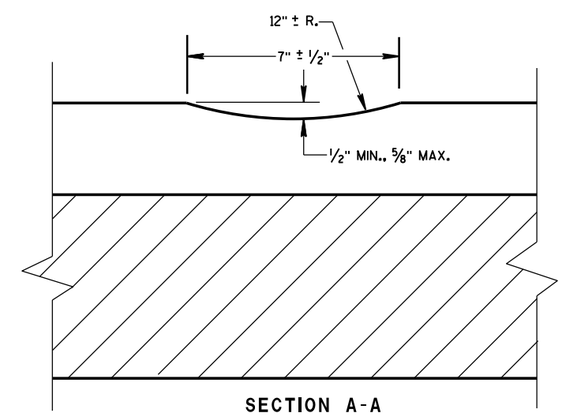

SECTION A-A

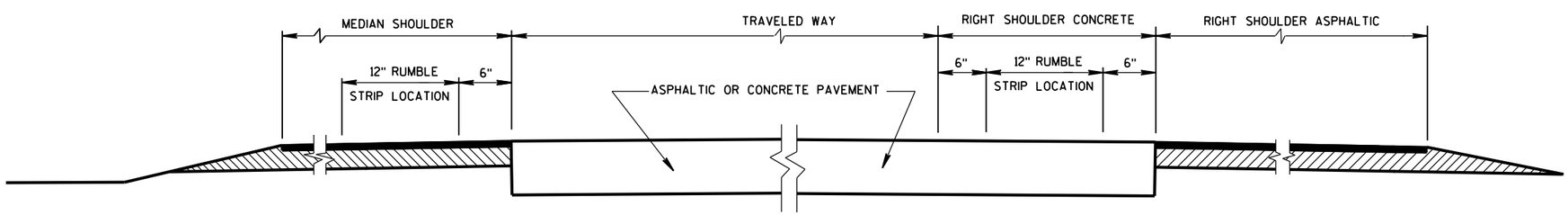

SECTION VIEW

TYPICAL LOCATIONS OF SHOULDER RUMBLE STRIPS
IN RURAL DIVIDED HIGHWAYS

(ONE ROADWAY IS SHOWN)

SHOULDER RUMBLE STRIP, MILLING

STATE OF WISCONSIN
DEPARTMENT OF TRANSPOR

6

S.D.D. 13 A 5-5a

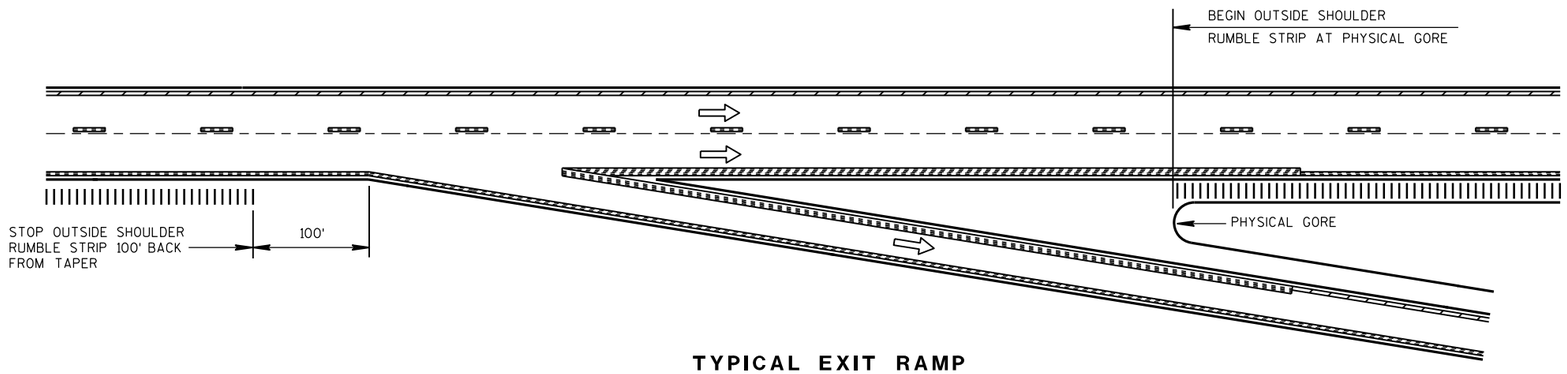

TYPICAL EXIT RAMP

NOTES:

NO RUMBLE STRIP ON EXIT, DIRECTIONAL, OR ENTRANCE RAMPS, EXCEPT NEAR THE ENTRANCE TAPER END AND ALONG THE PARALLEL RAMP AREA AS SHOWN.

PAVEMENT MARKING DETAILS AND SPECIFICATIONS ARE PROVIDED ELSEWHERE IN THE CONTRACT.

NOTE:
ARROW SYMBOL (⇨)
SHOWS DIRECTION OF TRAVEL

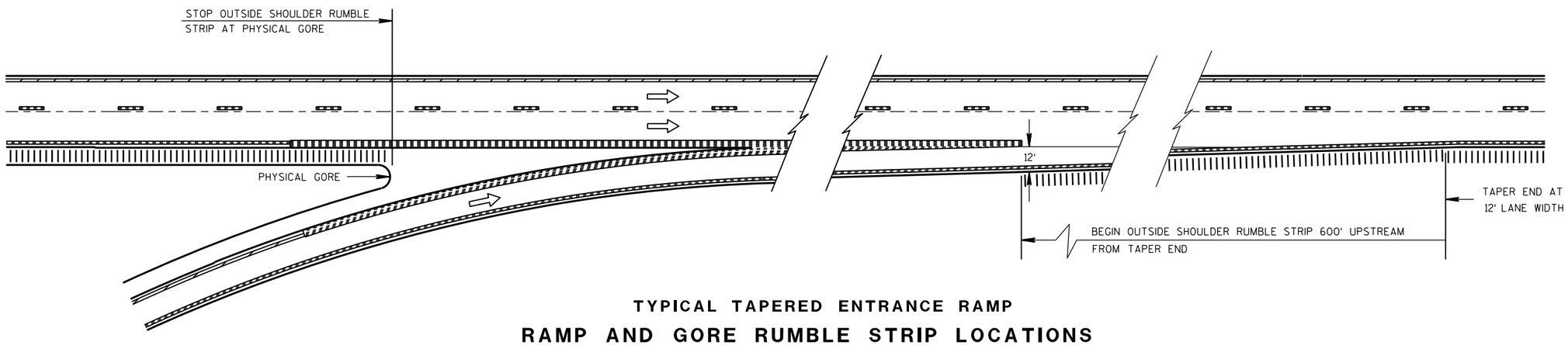

TYPICAL TAPERED ENTRANCE RAMP

RAMP AND GORE RUMBLE STRIP LOCATIONS

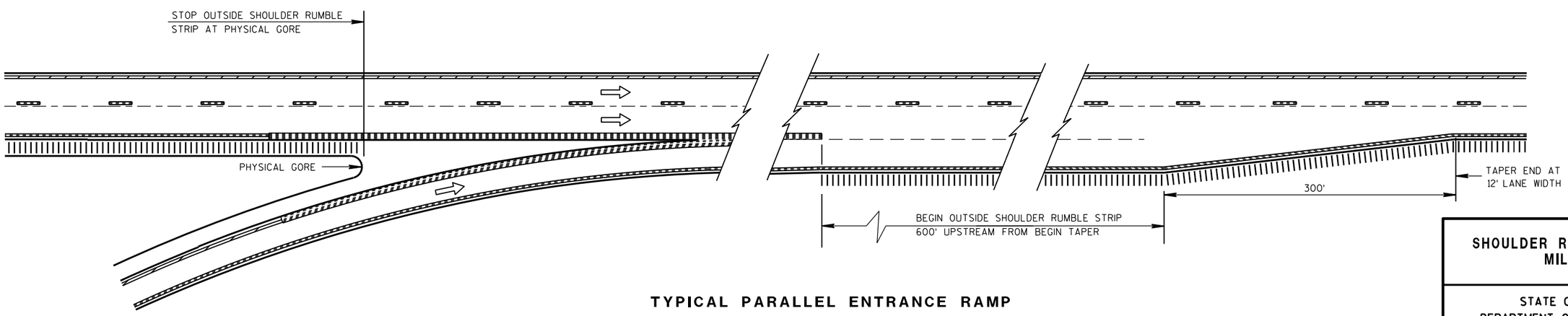

TYPICAL PARALLEL ENTRANCE RAMP

RAMP AND GORE RUMBLE STRIP LOCATIONS

SHOULDER RUMBLE STRIP, MILLING

STATE OF WISCONSIN
DEPARTMENT OF TRANSPORTATION

APPROVED
12/17/2012 — DATE
/S/ Jerry H. Zogg — ROADWAY STANDARDS DEVELOPMENT ENGINEER
FHWA

6

S.D.D. 13 A 5-5b

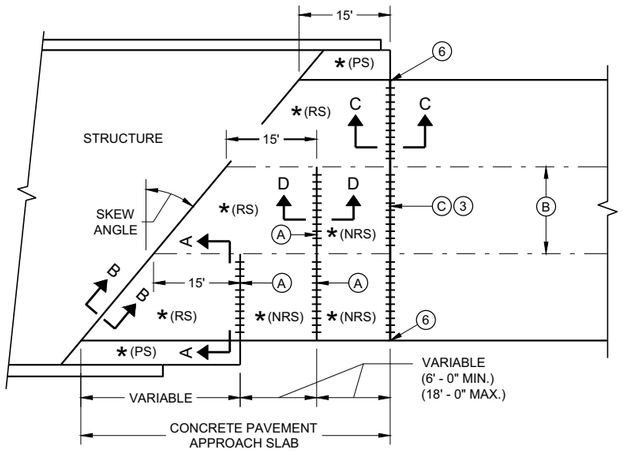

SKEWED APPROACH
(PAVEMENT MORE THAN TWO LANES)

* (RS) = REINFORCED CONCRETE SLAB

* (PS) = PAVED CONCRETE SHOULDER OR CONCRETE DRAINAGE SLAB

* (NRS) - NON - REINFORCED CONCRETE SLAB

*** STANDARD DOWEL BAR DIAMETER (SEE SDD 13C11 AND SDD 13C13)

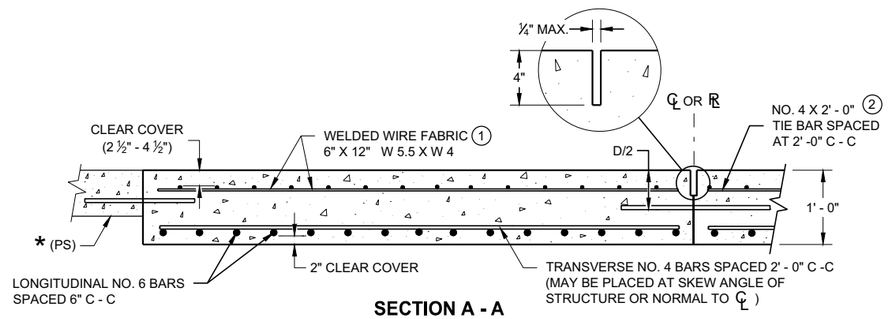

SECTION A - A
REINFORCEMENT POSITIONING DETAIL

GENERAL NOTES

THE CONTRACTOR MAY SPLICE NO. 6 BARS IN THE APPROACH SLAB FOR SKEWED STRUCTURES ONLY. STAGGER SPLICES WITH A MAXIMUM OF ONE SPLICE PER BAR. THE LENGTH OF LAP IS 20 INCHES.

TACK WELD DOWEL BARS TO THE BASKETS ON ALTERNATE ENDS.

1. THE CONTRACTOR MAY USE NO. 4 BARS SPACED AT 2' - 0 " C - C IN BOTH THE LONGITUDINAL AND TRANSVERSE DIRECTIONS FOR TOP REINFORCEMENT AS AN ALTERNATIVE TO THE WELDED WIRE FABRIC.
2. THE CONTRACTOR MAY OMIT THE BARS BETWEEN REINFORCED SLABS WHERE SLAB REINFORCEMENT BARS EXTEND ACROSS THE CENTERLINE OR REFERENCE LINE.
3. DO NOT CONSTRUCT AN EXPANSION JOINT OR INSTALL DOWEL BARS WHEN ABUTTING AN HMA PAVEMENT.
4. USE A JOINT SEALANT CONFORMING TO STANDARD SPECIFICATION 415.2.6.
5. PLACE EXPANSION CAP ON THE END OF THE DOWEL THAT IS NOT TACK WELDED TO THE BASKET. DO NOT FORCE DOWEL BAR PAST THE DOWEL STOP.
6. EXTEND EXPANSION JOINT THROUGH ANY ADJACENT TIED CONCRETE.

A. STANDARD CONTRACTION JOINT NORMAL TO ℄ OR ℞.

B. STANDARD LONGITUDINAL JOINT WITH TIE BARS.

C. 1 ½" EXPANSION JOINT WITH DOWEL BARS NORMAL TO ℄ OR ℞ .

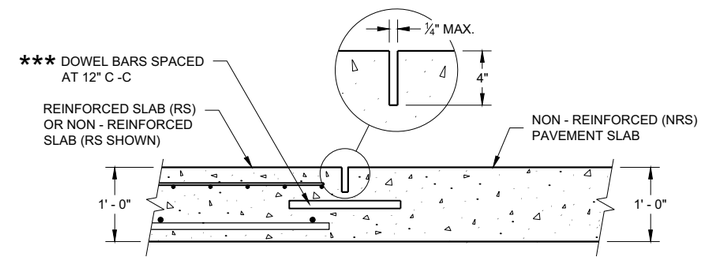

SECTION D - D
CONTRACTION JOINT

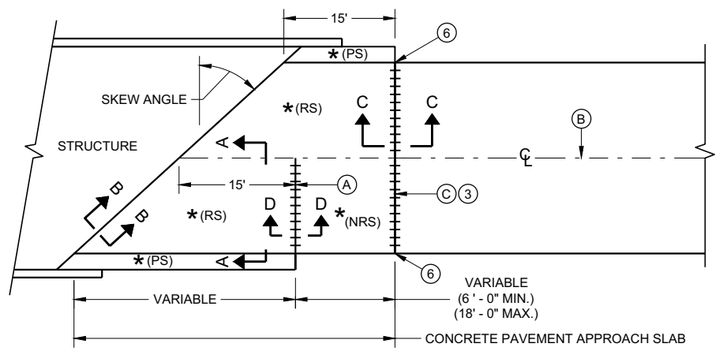

SKEWS > 20°
(PAVEMENT WIDTH ≤ 30')

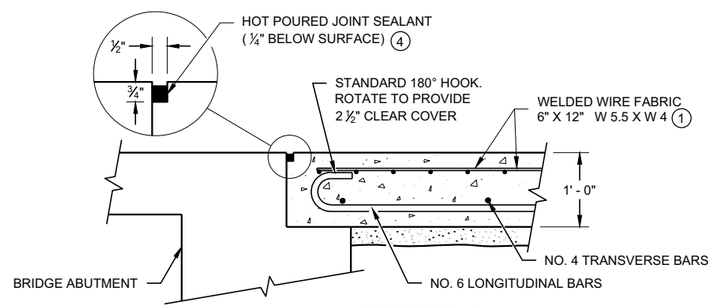

SECTION B - B
BEND DETAIL
BOTTOM REINFORCEMENT

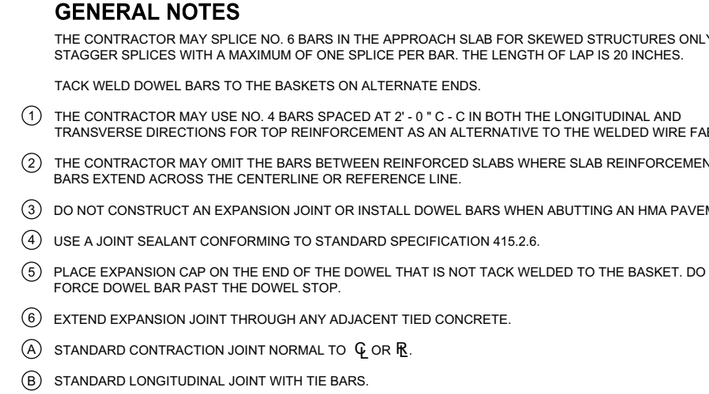

EXPANSION JOINT DETAIL

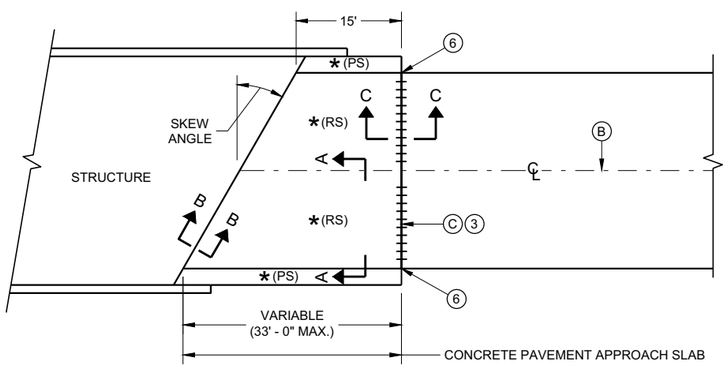

SKEWS ≤ 20°
(PAVEMENT WIDTH ≤ 30')

APPROACH SLAB AND ADJACENT PAVEMENT

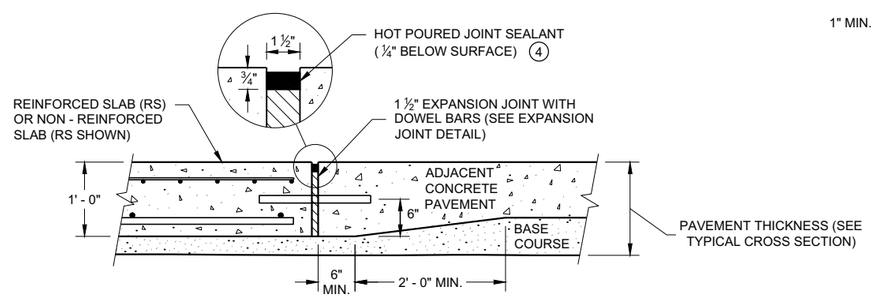

SECTION C - C
TRANSITION DETAIL
APPROACH SLAB TO ADJACENT PAVEMENT

CONCRETE PAVEMENT APPROACH SLAB

STATE OF WISCONSIN
DEPARTMENT OF TRANSPORTATION

APPROVED
November 2018 /S/ Peter Kemp, P.E.
DATE PAVEMENT SUPERVIS
FHWA

6

6

SDD 13B02 - 09a

SDD 13B02 - 09a

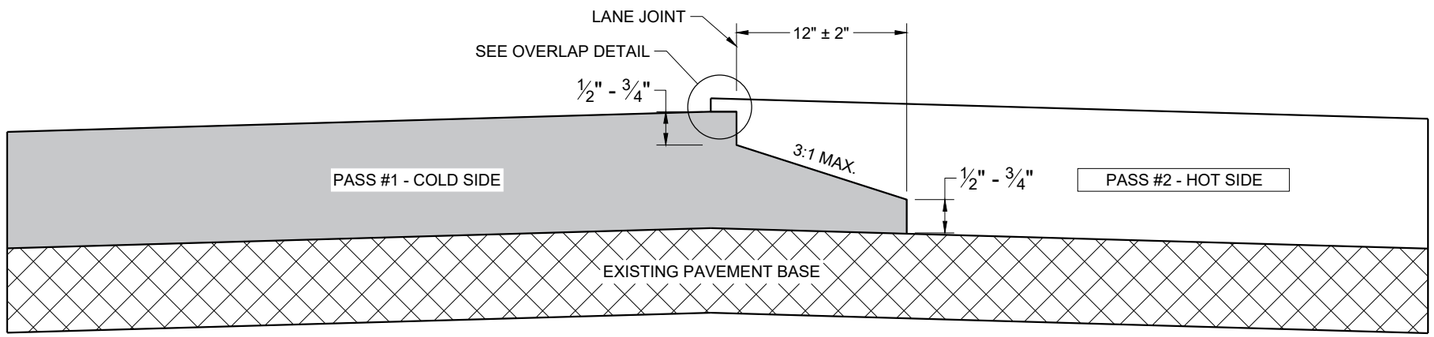

TYPICAL PAVEMENT CROSS SECTION
NOTCHED WEDGE JOINT

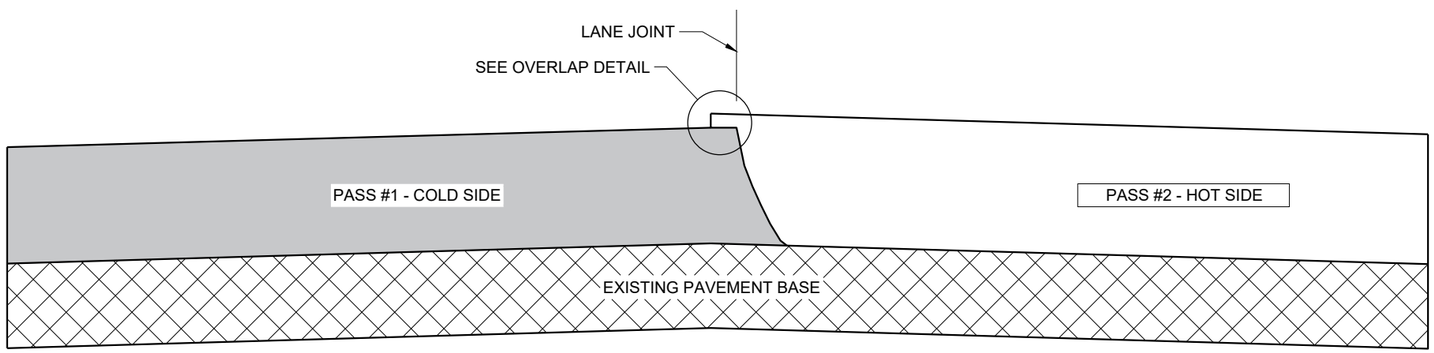

TYPICAL PAVEMENT CROSS SECTION
VERTICAL JOINT

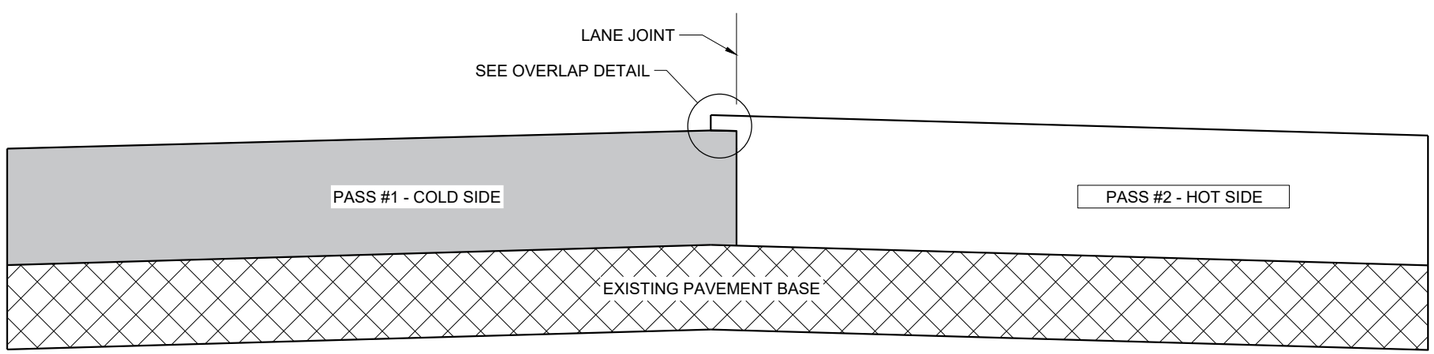

TYPICAL PAVEMENT CROSS SECTION
VERTICAL JOINT (MILLED)

GENERAL NOTES

IN ADDITION TO THE DETAILS PROVIDED IN THIS DRAWING, CONFORM TO STANDARD SPECIFICATION 450.3.2.8 FOR WHEN A NOTCHED WEDGE JOINT IS REQUIRED AND FOR GENERAL JOINT CONSTRUCTION REQUIREMENTS.

FOR ALL LONGITUDINAL JOINTS, ENSURE THE PAVER SCREED OVERLAPS THE PREVIOUSLY PLACED PAVEMENT BY 1" ± 0.5" AND THE HOT SIDE OF THE JOINT REMAINS HIGHER THAN THE COLD SIDE BY APPROXIMATELY 0.1" AFTER FINAL COMPACTION. (IT WILL BE FLUSH WHEN PAVING IN ECHELON.)

ONLY REMOVE THE LONGITUDINAL NOTCHED WEDGE JOINT FOR SMA PAVEMENT OR AS DIRECTED BY THE ENGINEER TO ADDRESS SPECIFIC LENGTHS OF JOINT DAMAGED BY TRAFFIC.

WHEN MILLING BACK OR REMOVING ANY LONGITUDINAL JOINT, LIMIT THE MATERIAL REMOVED TO 2" FROM THE TOP NOTCH OR FROM THE VERTICAL JOINT EDGE ON THE COLD SIDE OF THE JOINT.

USE LONGITUDINAL MILLED JOINT AS PLANS SHOW OR THE AS THE ENGINEER DIRECTS.

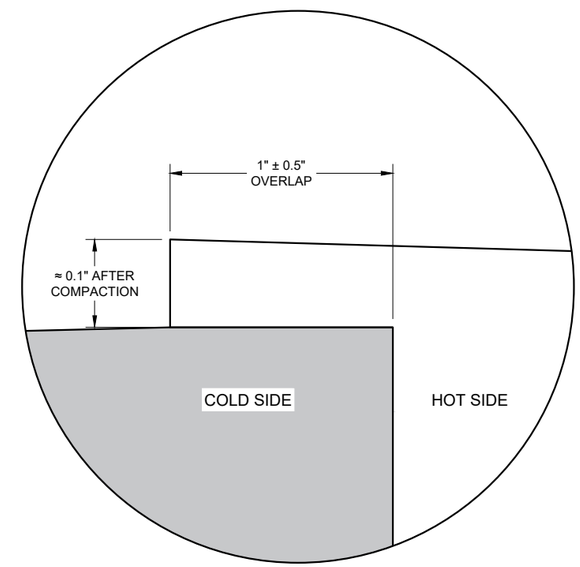

OVERLAP DETAIL (TYPICAL)

6

6

SDD 13C19 - 03

SDD 13C19 - 03

HMA LONGITUDINAL JOINTS

STATE OF WISCONSIN
DEPARTMENT OF TRANSPORTATION

APPROVED
November 2020 /S/ Steven Hefel
DATE HMA PAVEMENT ENGIN

FHWA

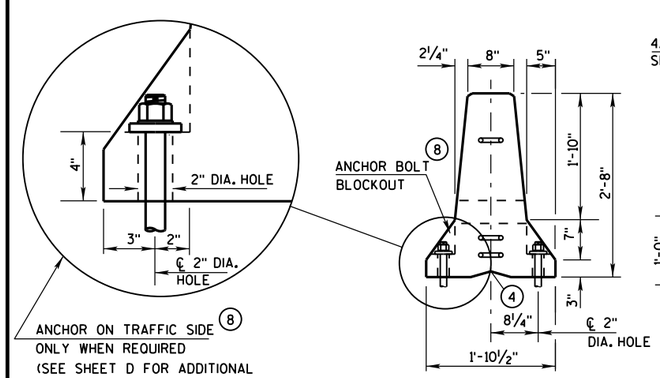

END VIEW

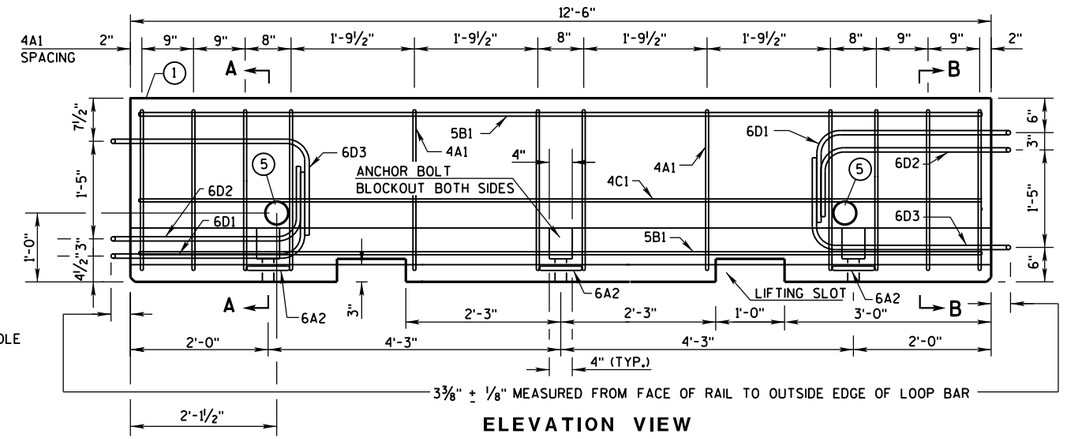

ELEVATION VIEW

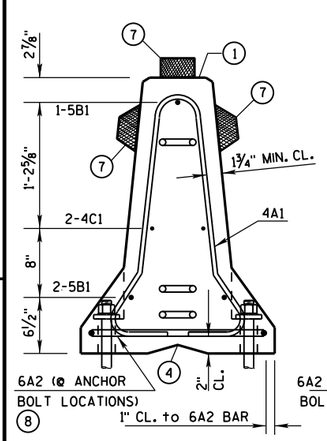

SECTION A-A
(STIRRUP PLACEMENT)

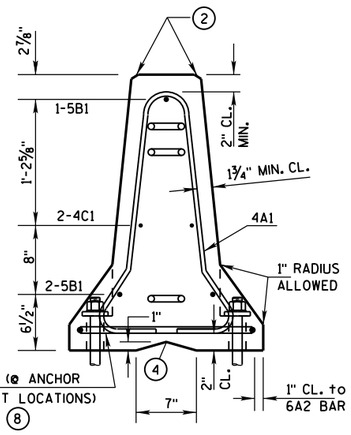

SECTION B-B
(STIRRUP PLACEMENT)

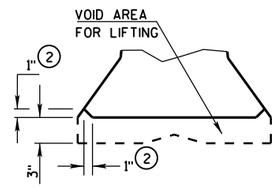

DETAIL "B"
LIFTING SLOT DETAIL

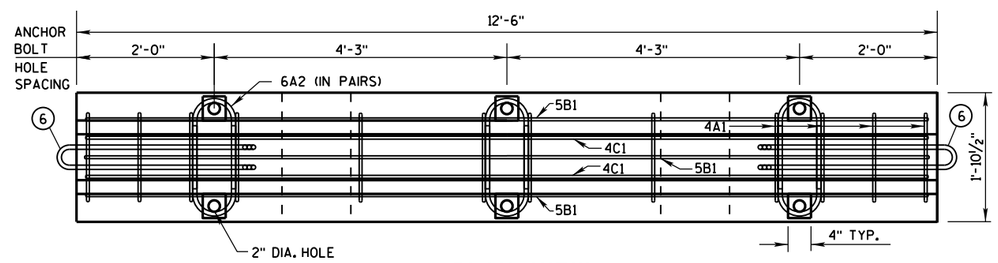

PLAN VIEW

DETAILS OF BARRIER SECTION

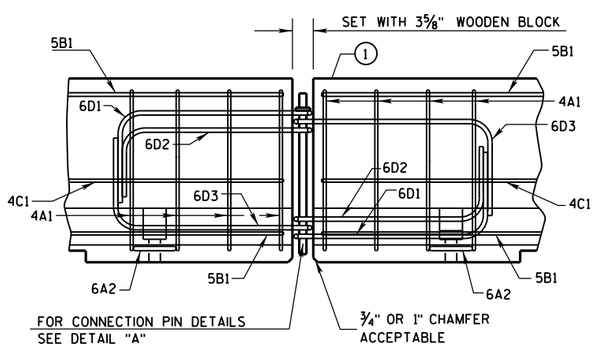

DETAILS OF BARRIER CONNECTION

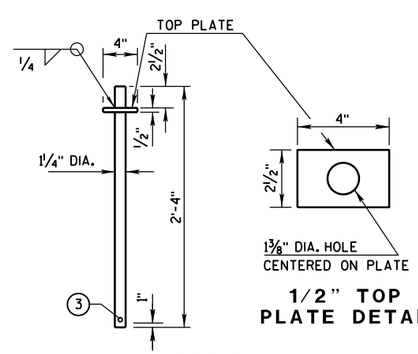

1/2" TOP PLATE DETAIL

DETAIL "A"
CONNECTION PIN
(A36 STEEL (10.9 LB EACH))

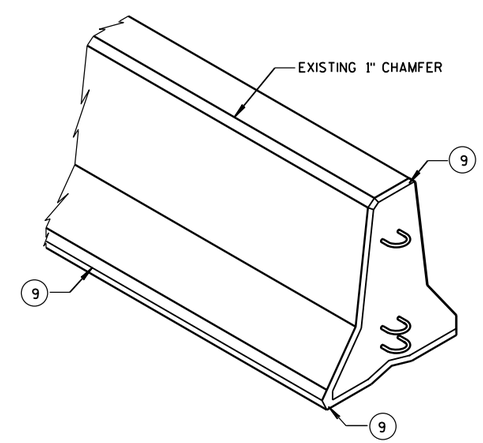

GENERAL NOTES

THESE GENERAL NOTES APPLY TO SHEETS 14B7-15(a) THRU 14B7-15(i).

DO NOT INTERMIX CONCRETE BARRIER TEMPORARY PRCAST, 12'-6" (CBTP12.5) WITH OTHER TEMPORARY CONCRETE BARRIERS.

USE ASTM A-615, GRADE 60, DEFORMED STEEL BARS FOR BARS 4A1, 6A2, 5B1 AND 4C1 IN THE BARRIER SECTION AND FOR 4V1, 4V2, 4V3, 4V4, 4V5, 4V6, 4F1, 4F2 AND 5F3 IN THE BARRIER TAPER SECTION.

LOOP BARS 6D1, 6D2 AND 6D3 SHALL BE ¾" SMOOTH STEEL BARS WITH A MINIMUM YIELD STRENGTH OF 60 KSI, A TENSILE STRENGTH OF NOT LESS THAN 1.25 TIMES THE YIELD STRENGTH BUT A MINIMUM OF 80 KSI, A MINIMUM 14% ELONGATION IN 8 INCHES AND PASSING A 180 DEGREE BEND TEST USING A 3-½" PIN BEND DIAMETER FOR BEND TESTS. THE LOOPS SHALL BE INSTALLED WITHIN ⅛" OF THE PLAN DIMENSION.

CONSTRUCT LIFTING SLOTS AS SPECIFIED ON THE PLANS TO FACILITATE THE DRAINAGE OF WATER AFTER INSTALLATION.

PLACE BARRIER ON A PAVED SURFACE. REMOVE ALL LOOSE DIRT AND SAND FROM THE ROADWAY SURFACE PRIOR TO PLACEMENT OF THE BARRIER.

INSTALL MECHANICAL OR ADHESIVE ANCHORS PER MANUFACTURER'S RECOMMENDATIONS. PROVIDE MANUFACTURER'S INFORMATION TO PROJECT ENGINEER.

1. MARK ONE END OF EACH BARRIER PERMANENTLY BY FORMING INTO THE BARRIER THE FOLLOWING INFORMATION:
   a. TYPE: WI CBTP
   b. MANUFACTURER
   c. DATE MANUFACTURED (MONTH AND YEAR)
2. 1" CHAMFER TO PREVENT SPALLING.
3. A ⅜" HOLE IN THE CONNECTION PIN, AT THE LOCATION SHOWN, IS ACCEPTABLE, BUT NOT REQUIRED..
4. "V" NOTCH IS OPTIONAL.
5. THE 4" DIAMETER, 11 GAUGE STEEL, ROUND MECHANICAL TUBING SLEEVE FOR LIFTING (OPTIONAL).
6. NEVER USE LOOP BARS (6D1, 6D2 OR 6D3) TO LIFT, MOVE OR REPOSITION THE BARRIER.
7. USE DELINEATORS CONFORMING TO SECTION 633 OF THE STANDARD SPECIFICATIONS. CONTRACTOR MAY USE ALTERNATE SHAPES AND HOUSING. INSTALL DELINEATORS ACCORDING TO MANUFACTURES INSTRUCTION. INSTALL YELLOW REFLECTORS WHEN BARRIER IS LOCATED TO THE LEFT OF TRAFFIC AND WHITE REFLECTORS WHEN BARRIER IS LOCATED TO THE RIGHT OF TRAFFIC. SPACE DELINEATORS A MAXIMUM OF 25 FEET APART. PROVIDE TOP MOUNTED DELINEATORS IN ADDITION TO THE SIDE MOUNTED DELINEATORS ON ALL BARRIER INSTALLATIONS LOCATED ON A CURVED ALIGNMENT LONGER THAN 200 FEET AND ON BARRIERS USED TO SEPARATE OPPOSING TRAFFIC.
8. SEE SHEET D FOR HOW TO ANCHOR BARRIER. SEE SHEET E FOR WHEN TO ANCHOR BARRIER.
9. 1" CHAMFER OPTIONAL.

f'c = 4,000 psi

CONCRETE BARRIER
TEMPORARY PRECAST, 12'-6"

STATE OF WISCONSIN
DEPARTMENT OF TRANSPOR

S.D.D. 14 B 7-15a

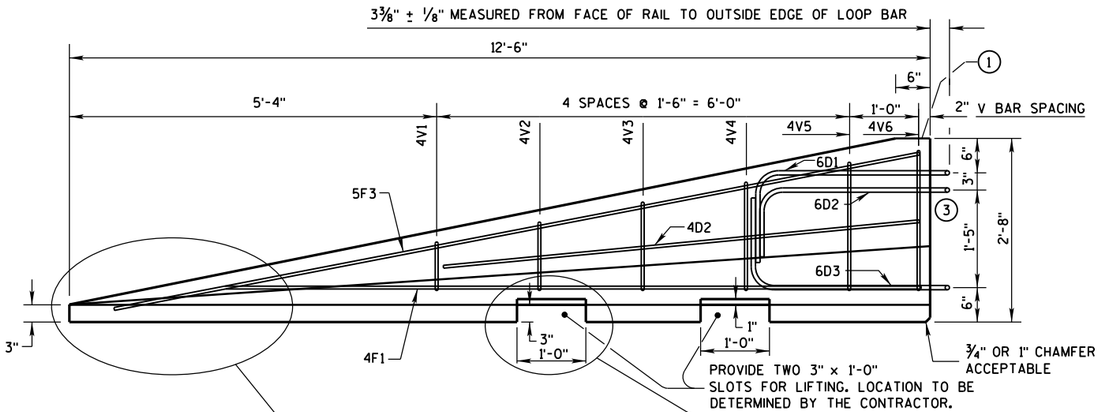

SIDE ELEVATION

(FOR CONNECTION TO LEFT END OF BARRIER)

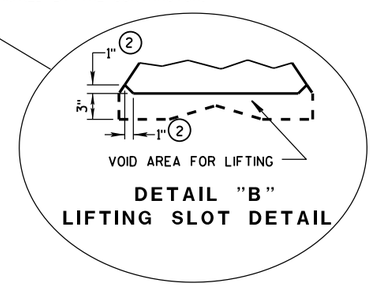

DETAIL "B"
LIFTING SLOT DETAIL

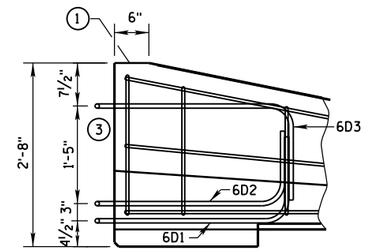

SIDE ELEVATION

LOOP BAR ASSEMBLY INVERTED
FOR OPPOSITE END.
(FOR CONNECTION TO RIGHT END OF BARRIER)

GENERAL NOTES

1. MARK ONE END OF EACH BARRIER PERMANENTLY BY FORMING INTO THE BARRIER THE FOLLOWING INFORMATION:
   a. TYPE WICBTP
   b. MANUFACTURER
   c. DATE MANUFACTURED (MONTH AND YEAR)
2. 1" CHAMFER TO PREVENT SPALLING.
3. NEVER USE LOOP BARS (6D1, 6D2 OR 6D3) TO LIFT, MOVE OR REPOSITION THE BARRIER.

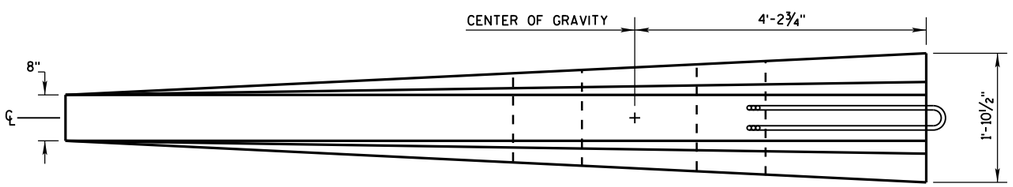

PLAN VIEW

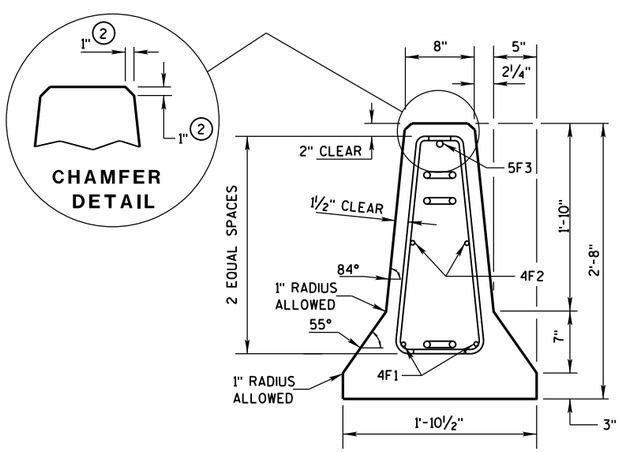

END SECTION

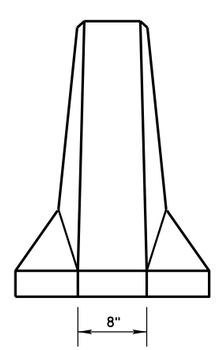

FRONT ELEVATION

DETAILS OF BARRIER TAPER SECTION

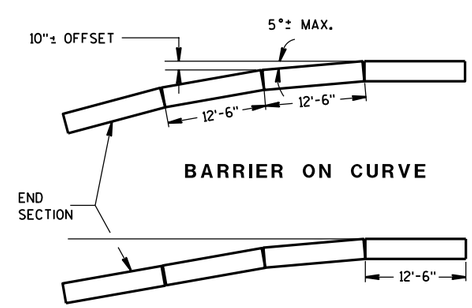

BARRIER ON CURVE

FLARE AT BARRIER END

POSTED SPEED, (MPH)	FLARE RATE
40 OR LESS	6:1
45 OR GREATER	8:1

CONCRETE BARRIER
TEMPORARY PRECAST, 12'-6"

STATE OF WISCONSIN
DEPARTMENT OF TRANSPORTATION

6

S.D.D. 14 B 7-15b

GENERAL NOTES

(1) NEVER USE LOOP BARS (6D1, 6D2 OR 6D3) TO LIFT, MOVE OR REPOSITION THE BARRIER.

BARRIER TAPER SECTION BILL OF MATERIALS

(PER 12'-6" BARRIER TAPER SECTION)

BAR	BAR SIZE	NO. OF BARS	LENGTH FT.
4V1	4	2	1'-11"
4V2	4	2	2'-2"
4V3	4	2	2'-6"
4V4	4	2	2'-9"
4V5	4	2	3'-2"
4V6	4	2	3'-4"
4F1	4	2	12'-0"
4F2	4	2	7'-6"
5F3	5	1	11'-9"
LOOP ASSEMBLY			
6D1	6	1	8'-5"
6D2	6	1	7'-7"
6D3	6	1	8'-6"

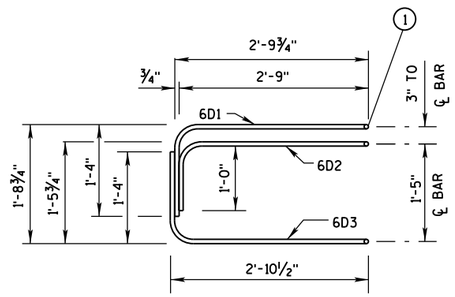

ELEVATION
LOOP BAR ASSEMBLY

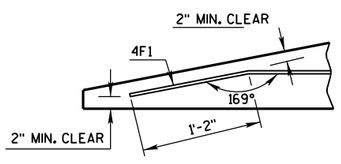

DETAIL "C"
BENT BAR DETAIL

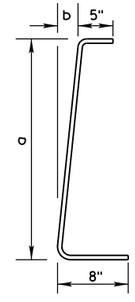

BAR	a	b
V1	10"	1"
V2	1'-1"	1¼"
V3	1'-5"	1⅝"
V4	1'-8"	1⅞"
V5	2'-0½"	2⅜"
V6	2'-3"	2¾"

4V BARS
2 AT EACH SIZE REQUIRED
FOR STIRRUP ASSEMBLY

TAPER BARRIER SECTION

BARRIER SECTION BILL OF MATERIALS

(PER 12'-6" BARRIER SECTION)

BAR	BAR SIZE	NO. OF BARS	LENGTH FT.
4A1	4	12	6'-0"
6A2	6	6	2'-11"
5B1	5	3	12'-2"
4C1	4	2	12'-2"
LOOP ASSEMBLY			
6D1	6	2	8'-5"
6D2	6	2	7'-7"
6D3	6	2	8'-6"

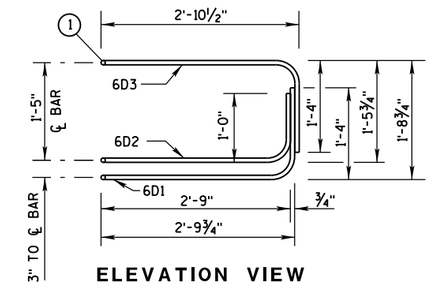

ELEVATION VIEW

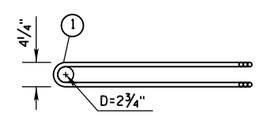

PLAN VIEW
LOOP BAR ASSEMBLY
(MARKED END SHOWN, INVERT FOR OTHER END)

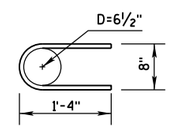

6A2

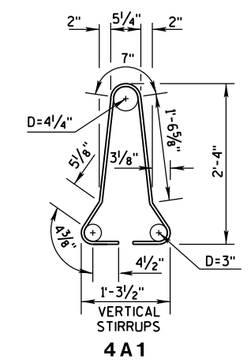

4A1

BARRIER SECTION

CONCRETE BARRIER
TEMPORARY PRECAST, 12'-6"

STATE OF WISCONSIN
DEPARTMENT OF TRANSPOR

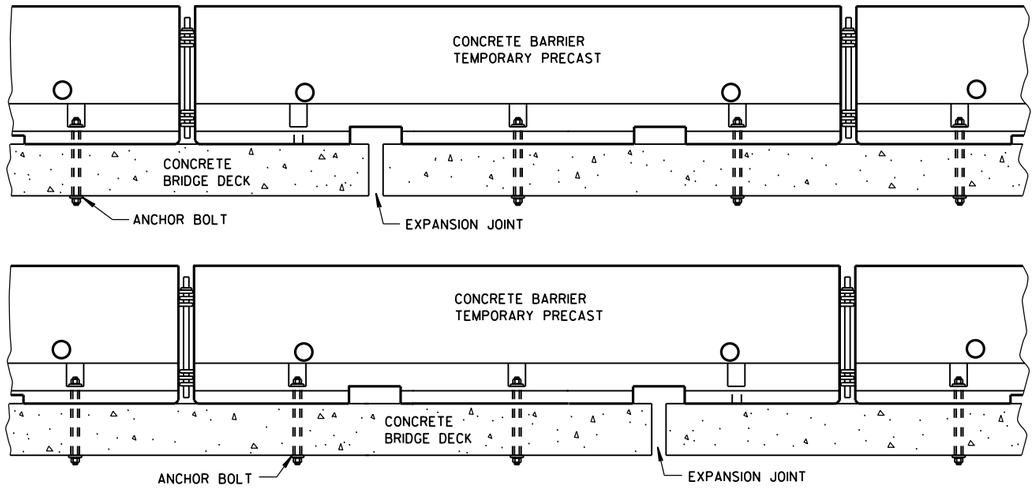

TREATMENT AT BRIDGE DECK EXPANSION JOINTS

(NO SINGLE CONCRETE BARRIER SECTION SHALL BE ANCHORED TO BOTH THE BRIDGE DECK AND THE APPROACH SLAB. ALL ANCHOR BOLT LOCATIONS SHALL BE ANCHORED TO THE DECK IN ACCORDANCE WITH THE DETAIL. NO MORE THAN ONE ANCHOR BOLT SHALL BE ELIMINATED FROM A BARRIER SECTION WHEN SPANNING AN EXPANSION JOINT.)

GENERAL NOTES

SEE SHEET E FOR WHEN TO ANCHOR. OTHER PARTS OF THE PLAN MAY SHOW ADDITIONAL LOCATIONS REQUIRING ANCHORING.

REMOVE ALL ANCHORS WHEN NO LONGER NEEDED. FILL CONCRETE PAVEMENTS, DECKS AND APPROACH SLABS WITH NON-SHRINK COMMERICAL GROUT FROM THE APPROVED PRODUCT LIST. FILL ASPHALT PAVEMENTS WITH ASTM D6690 TYPE II RUBBERIZED CRACK FILLER.

1. 1⅛" DIAMENTER A307 THREADED ROD, ½" X 3" X 3" SQUARE PLATE WASHER WITH ASTM A36 STEEL. ASTM A563A HEAVY HEX NUT.
2. ADHESIVE ANCHORS WITH A MINIMUM BOND STRENGTH OF 1,800 PSI AND 5¼" EMBEDMENT. SEE 603.2 AND 603.3.1.2 OF THE WISCONSIN STANDARD SPECIFICATIONS FOR MORE INFORMATION ON ADHESIVE ANCHORS.
3. ASPHALT SURFACE SHOWN. CONTRACTOR MAY DRILL THROUGH CONCRETE PAVEMENT AND THAN DRIVE ASPHALT ANCHOR PIN.

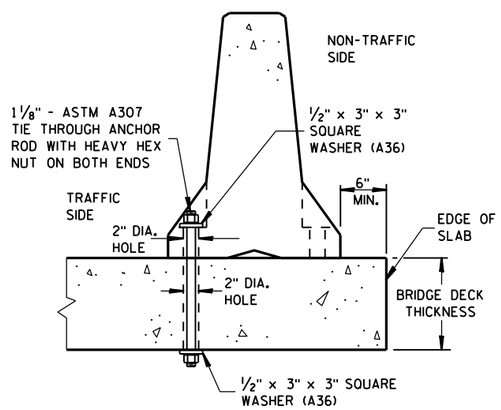

THROUGH BOLTED ANCHOR INSTALLATION ON BRIDGE DECK

(DO NOTUSE ON CONCRETE BRIDGE DECK WITH ASPHALT OVERLAY)

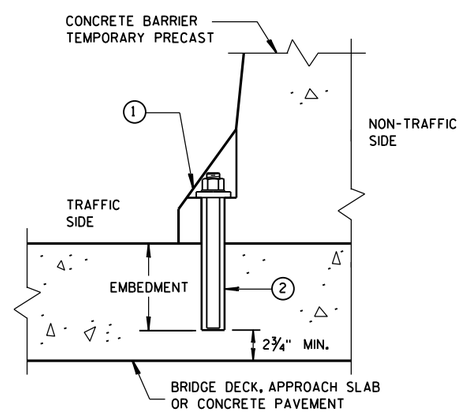

REMOVABLE ADHESIVE ANCHOR INSTALLATION ON CONCRETE BRIDGE DECK, CONCRETE APPROACH SLAB, OR CONCRETE PAVEMENT

(DO NOT USE ON CONCRETE WITH AN ASPHALTIC OVERLAY)

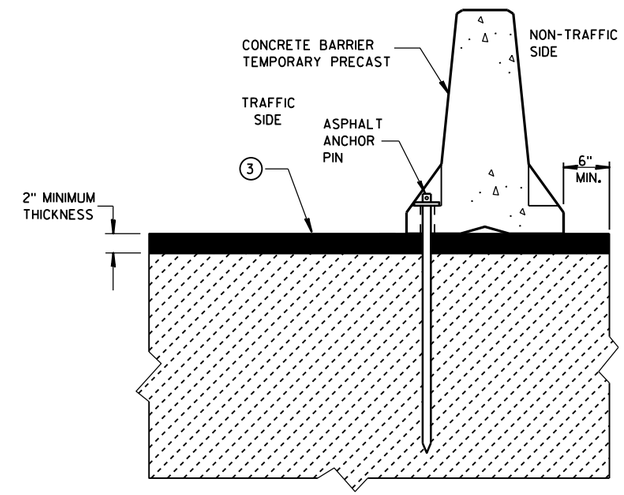

STAKE DOWN INSTALLATION FOR ASPHALTIC SURFACE

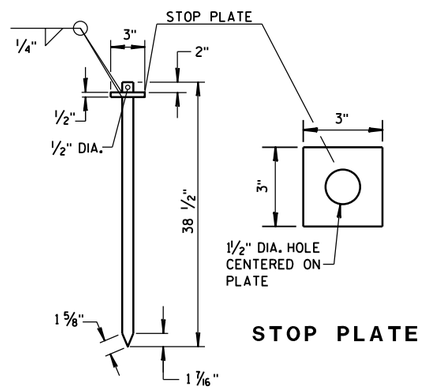

STOP PLATE

ASPHALT ANCHOR PIN

(ASTM A36 STEEL)

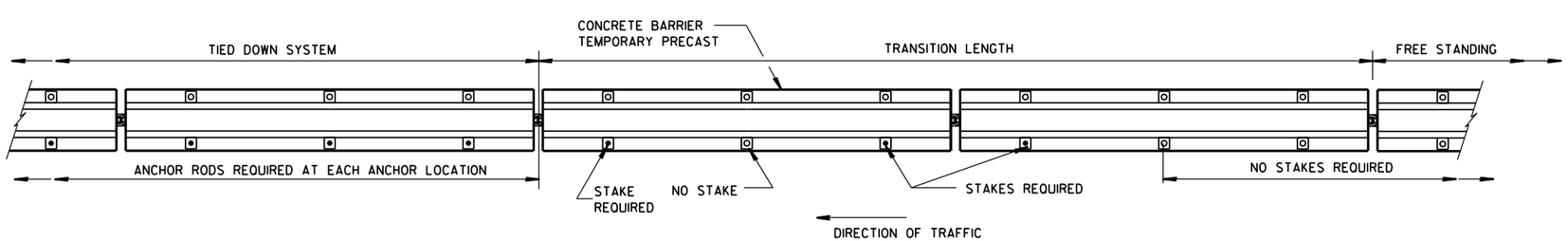

PLAN VIEW

FREE STANDING TRANSITION TO TIED-DOWN SYSTEM

(PLACE TRANSITION IN A TANGENT SECTION OF BARRIER PARALLEL TO THE ROADWAY. IF TRANSITION OCCURS ON STRUCTURAL SLAB, ANCHOR AS SHOWN.)

CONCRETE BARRIER
TEMPORARY PRECAST, 12'-6"

STATE OF WISCONSIN
DEPARTMENT OF TRANSPOI

6

S.D.D. 14 B 7-15d

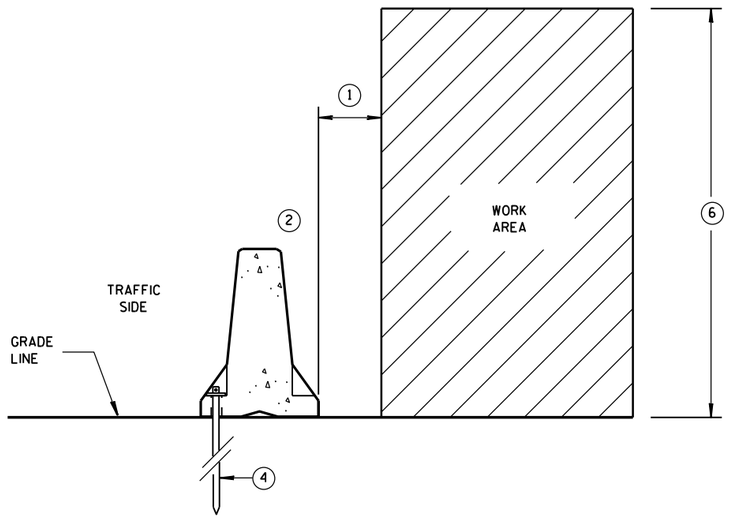

ANCHORED BARRIER SPACE REQUIREMENTS FOR HAZARDS EXTENDED ABOVE THE GRADE LINE

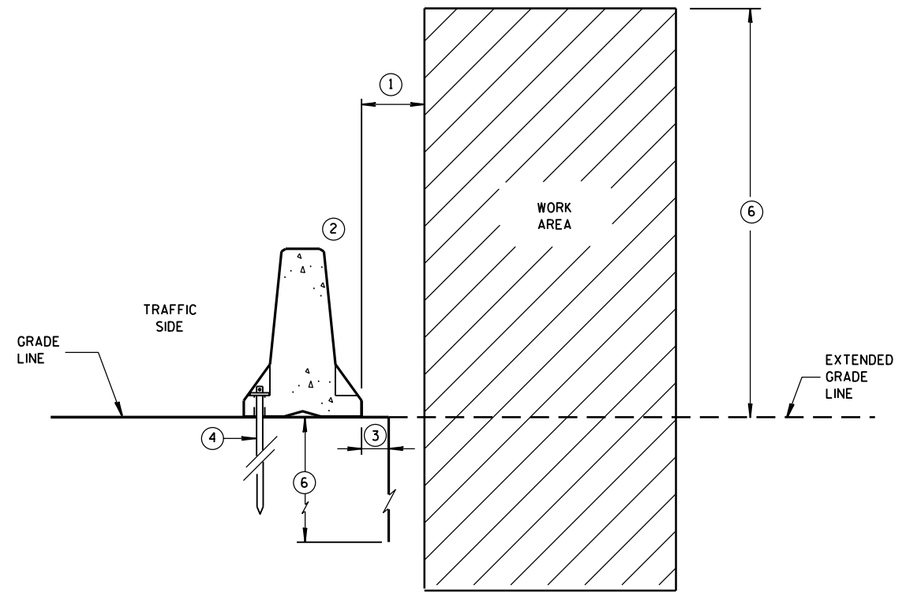

ANCHORED BARRIER SPACE REQUIREMENTS ON VERTICAL DROP OFFS

GENERAL NOTES

1. WHEN OBJECTS EXTEND ABOVE THE GRADE, A MINIMUM OF 1 FOOT IS REQUIRED FROM BACK OF BARRIER TO OBJECT. SEE OTHER DETAILS FOR FOR THE MINIMUM OFFSET FROM BACK OF BARRIER TO SLOPES OR VERTICAL DROPS.
2. OBJECTS ARE NOT TO BE PLACED ON, MOUNTED TO, OR LEANED AGAINST THE BARRIER WITHOUT PERMISSION OF THE PROJECT ENGINEER.
3. SEE OTHER DETAIL ON SHEET "D" FOR SPACE REQUIREMENTS.
4. SEE BOLT THROUGH DECK, REMOVABLE ADHESIVE ANCHOR, OR A STAKE DOWN FOR ASPHALTIC SURFACE TREATMENT DETAILS. ASPHALTIC ANCHOR SHOWN.
5. DEPTH OF 3 FEET OR MORE.
6. Y = 6'-6".

POSTED SPEED MPH	X
45 OR GREATER	4'
40 OR LESS	2'

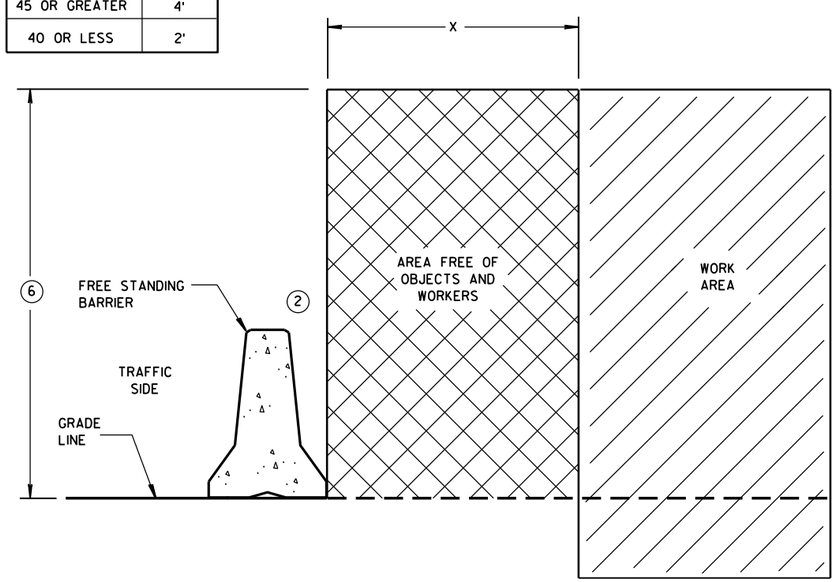

FREE STANDING BARRIER SPACE REQUIREMENTS

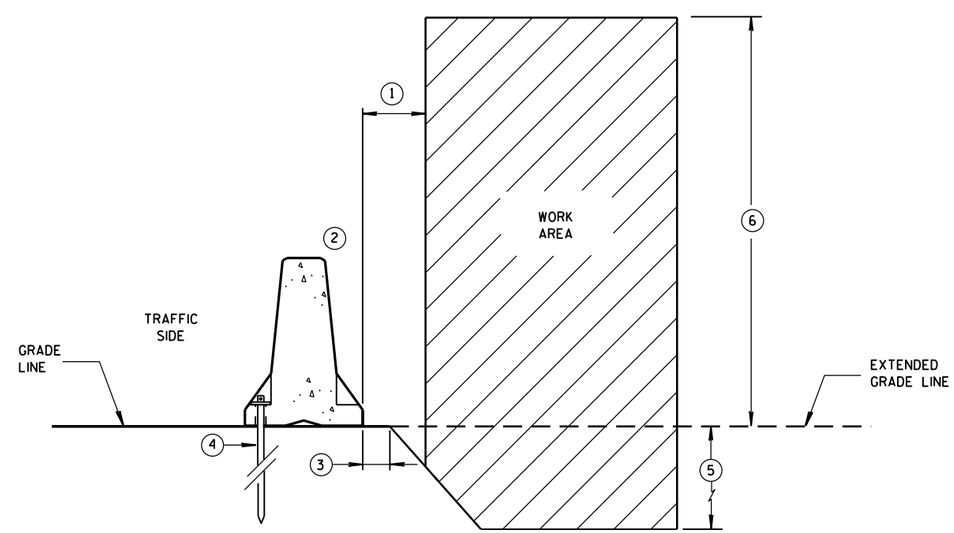

ANCHORED BARRIER SPACE REQUIREMENTS ON SLOPES

CONCRETE BARRIER
TEMPORARY PRECAST, 12'-6"

STATE OF WISCONSIN
DEPARTMENT OF TRANSPORTATION

6

S.D.D. 14 B 7-15e

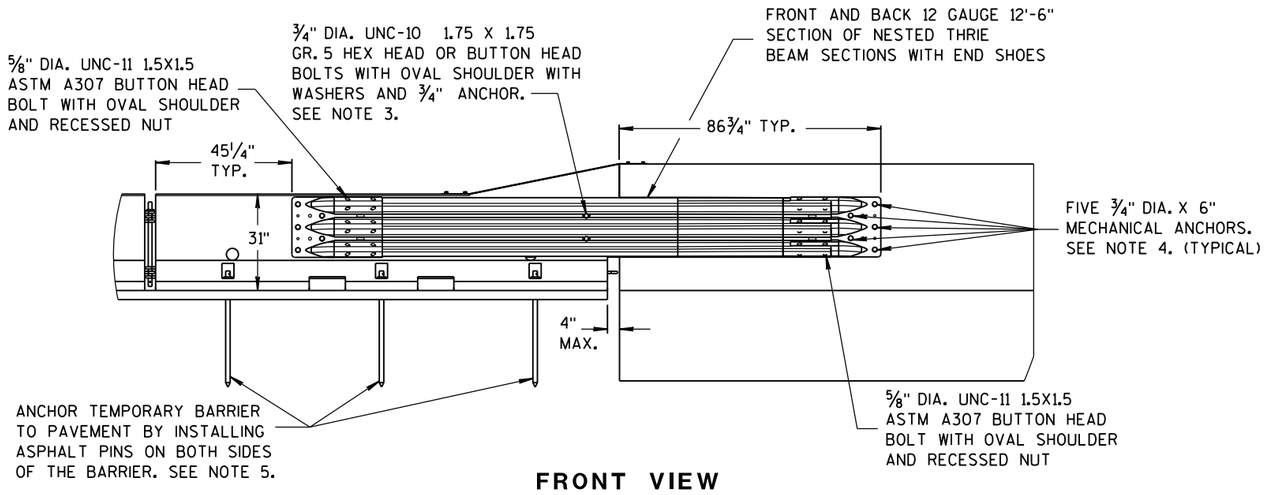

FRONT VIEW

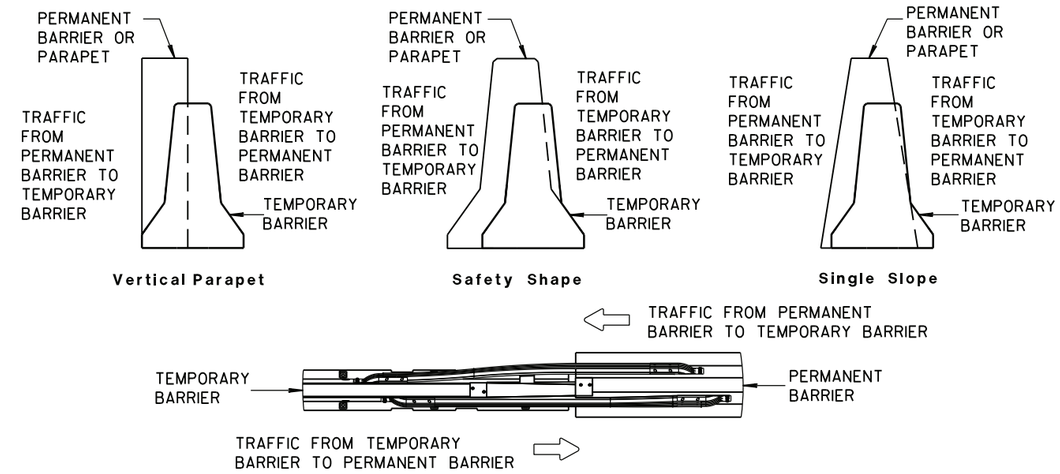

TEMPORARY BARRIER PLACEMENT FOR TRANSITION TO TIED DOWN SYSTEM

NOTES

NESTED THRIE BEAM IS REQUIRED ON BOTH SIDES OF THE TEMPORARY BARRIER FOR ALL INSTALLATIONS REGARDLESS OF TRAFFIC.

1. CAP END PLATE PLACED FLUSH WITH UPSTREAM END OF PERMANENT BARRIER OR PARAPET.
2. THRIE BEAM PIECES ARE OFFSET 15 1/4" TO PREVENT INTERFERENCE FROM THE ANCHORS ON OPPOSING SIDES.
3. MINIMUM MECHANICAL OR ADHESIVE ANCHOR STRENGTH REQUIREMENTS: ULTIMATE TENSILE LOAD 9.48 KIPS AND ULTIMATE SHEAR LOAD 10.48 KIPS.
4. MINIMUM MECHANICAL OR ADHESIVE ANCHOR STRENGTH REQUIREMENTS: ULTIMATE TENSILE LOAD 17.9 KIPS AND ULTIMATE SHEAR LOAD 21.96 KIPS.
5. MAY BE USED ON CONCRETE OR ASPHALT PAVEMENTS. ASPHALT OPTION SHOWN. FOR CONCRETE OPTION SEE OTHER DETAILS.
6. MINIMUM MECHANICAL OR ADHESIVE ANCHOR STRENGTH REQUIREMENTS: ULTIMATE TENSILE LOAD 12.14 KIPS AND ULTIMATE SHEAR LOAD 17.5 KIPS.

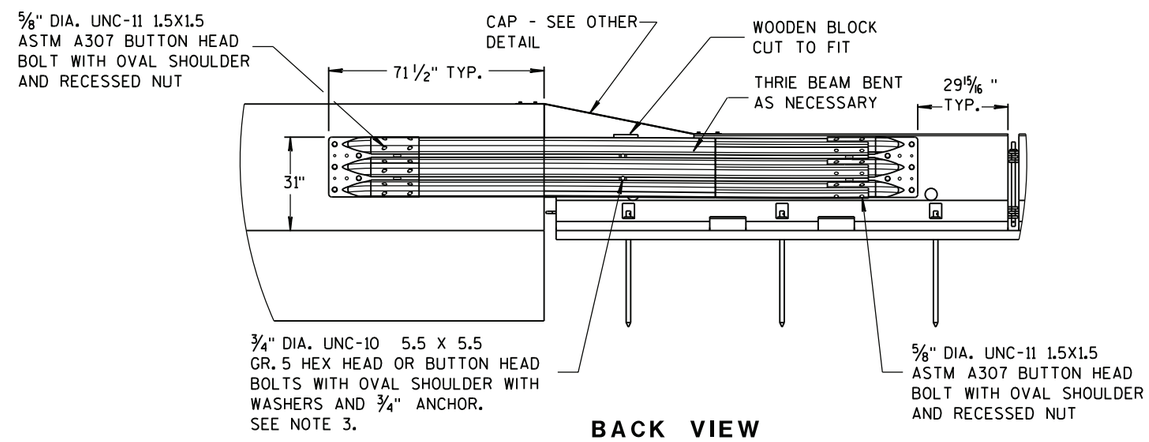

BACK VIEW

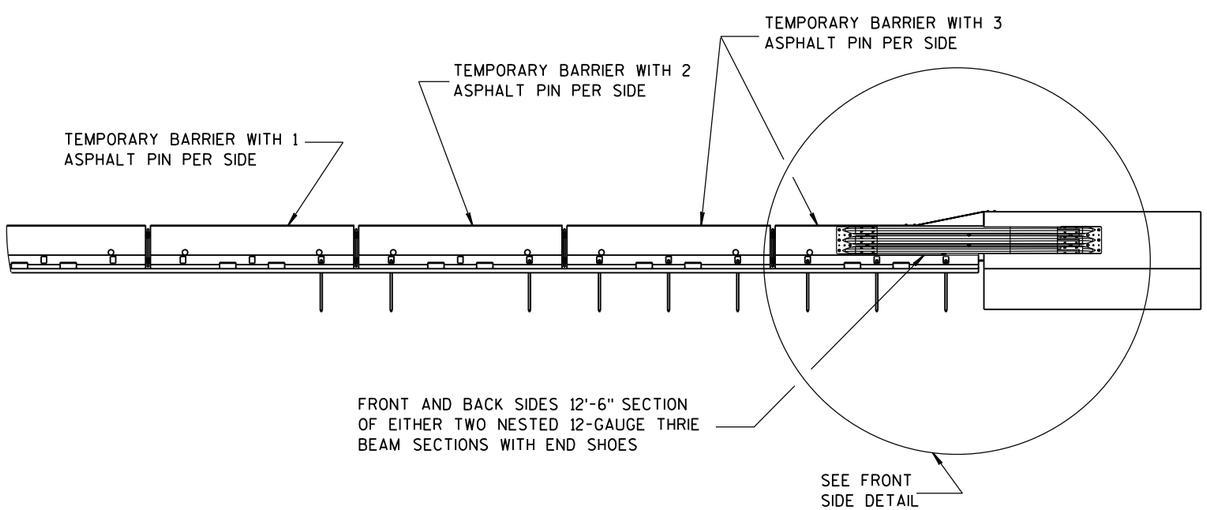

FRONT VIEW

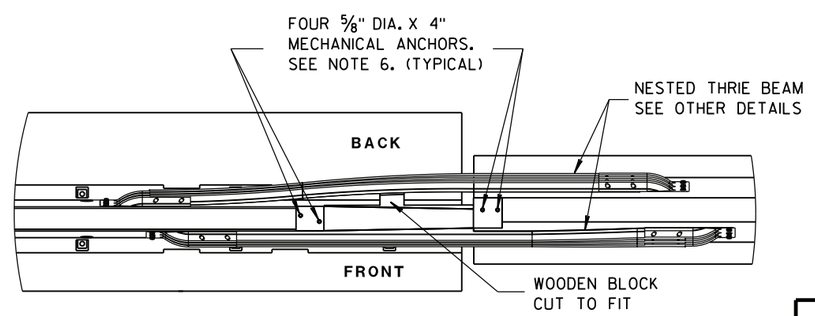

PLAN VIEW

TRANSITION TO TIED DOWN SYSTEM

CONCRETE BARRIER
TEMPORARY PRECAST, 12'-6"

STATE OF WISCONSIN
DEPARTMENT OF TRANSPO

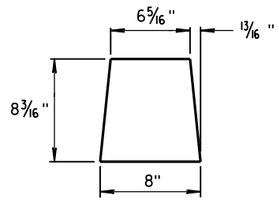

GUSSET 1

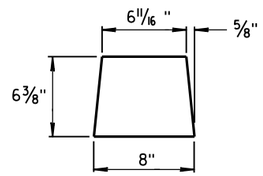

GUSSET 2

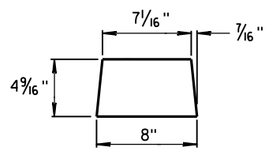

GUSSET 3

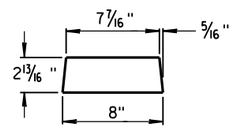

GUSSET 4

GUSSETS

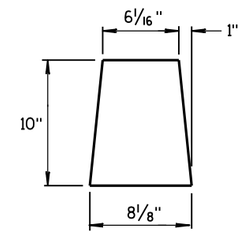

END PLATE

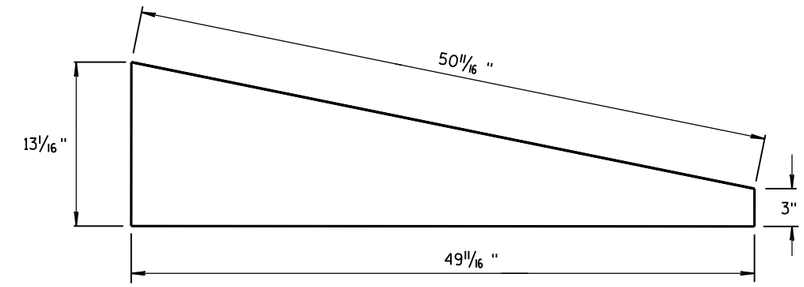

SIDE PLATE

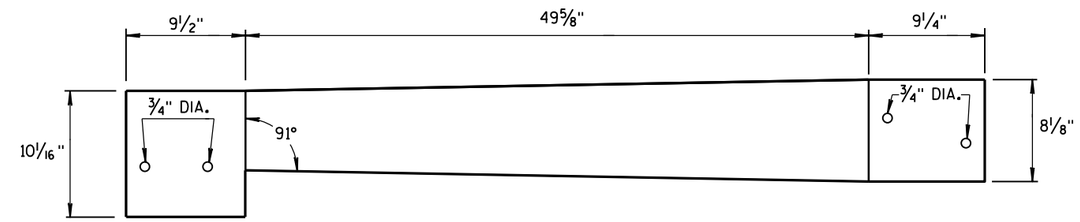

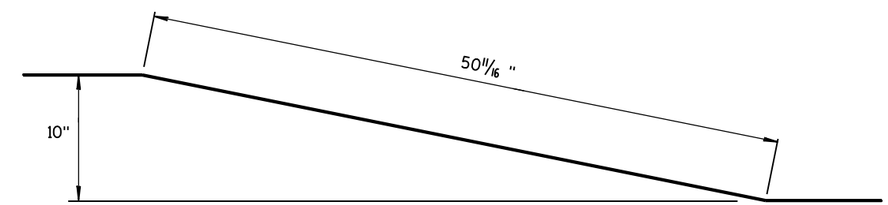

TOP PLATE

SIDE, TOP AND END PLATES FOR CAP FROM TEMPORARY CONCRETE BARRIER TO 42" PERMANENT CONCRETE BARRIER

SIDE PLATES, TOP PLATE, END PLATE AND GUSSETS ARE 12 GAUGE ASTM A36 GALVANIZED STEEL.

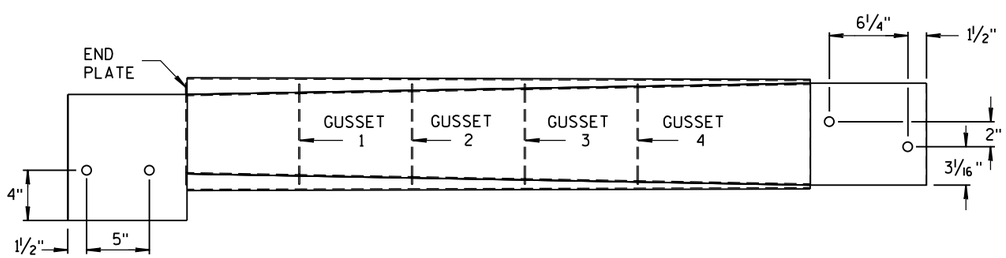

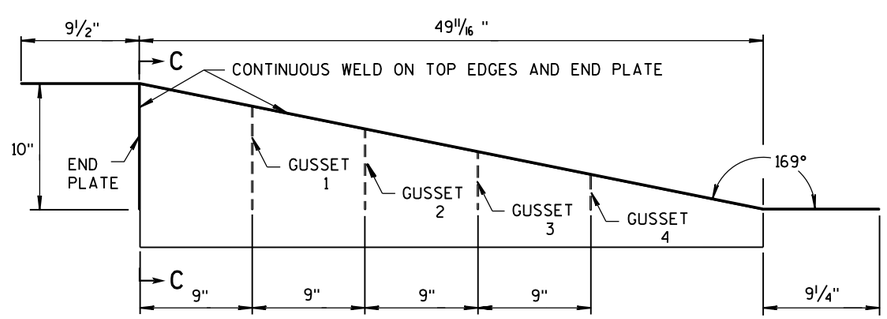

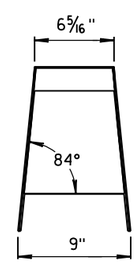

SECTION C-C

NOTES

1. FOUR GUSSETS AND END PLATE ARE STITCH WELDED ON THREE SIDES.
2. TWO TRIANGULAR SIDE PLATES ARE STITCH WELDED TO TOP PLATE, END PLATE, AND GUSSETS.

CAP DETAILS FOR TEMPORARY CONCRETE BARRIER TO 42" PERMANENT CONCRETE BARRIER

CONCRETE BARRIER
TEMPORARY PRECAST, 12'-6"

STATE OF WISCONSIN
DEPARTMENT OF TRANSPOR

6

S.D.D. 14 B 7-15g

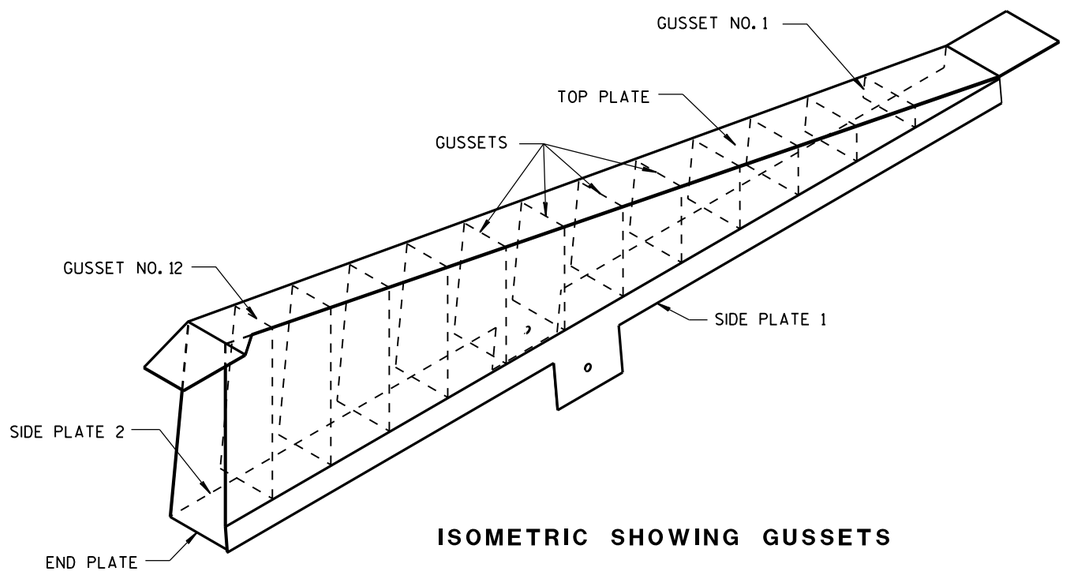

ISOMETRIC SHOWING GUSSETS

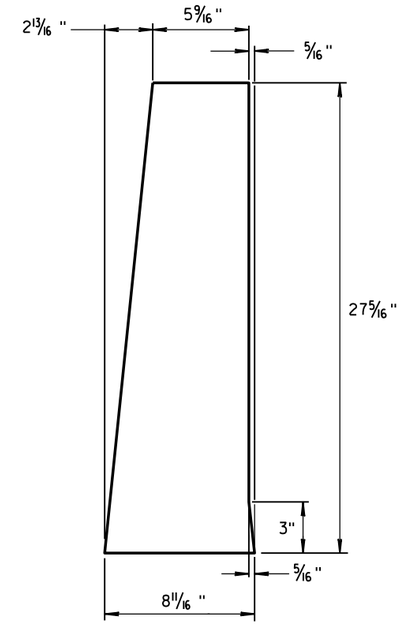

END PLATE

1/8" STEEL PLATE

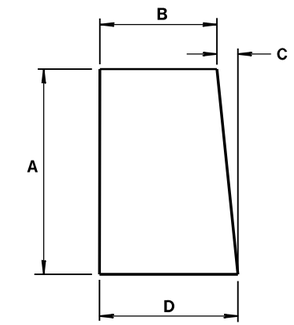

GUSSETS 1 - 12

ALL GUSSETS 1/8" STEEL PLATE

GUSSET DIMENSIONS				
GUSSET NO.	A	B	C	D
1	2 7/8"	7 3/4"	1/4"	8
2	4 11/16 "	7 9/16 "	1/2"	8
3	6 1/2"	7 3/8"	11/16 "	8 1/16 "
4	8 5/16 "	7 3/16 "	7/8"	8 1/16 "
5	10 1/8"	7"	1 1/16 "	8 1/16 "
6	11 15/16 "	6 13/16 "	1 1/4"	8 1/16 "
7	13 3/4"	6 5/8"	1 7/16 "	8 1/16 "
8	15 9/16 "	6 7/16 "	1 9/16 "	8 1/16 "
9	17 3/8"	6 1/4"	1 13/16 "	8 1/16 "
10	19 3/16 "	6 1/16 "	1 15/16 "	8 1/16 "
11	21"	5 7/8"	2 3/16 "	8 1/16 "
12	22 13/16 "	5 11/16 "	2 5/16 "	8 1/16 "

SIDE PLATES, TOP PLATE, END PLATE AND GUSSETS ARE 12 GAUGE ASTM A36 STEEL AND GALVANIZED.

GUSSETS AND END PLATE ARE STITCH WELDED ON 3 SIDES. TWO TRIANGULAR SIDE PLATES ARE STITCH WELDED TO TOP PLATE, END PLATE AND GUSSETS.

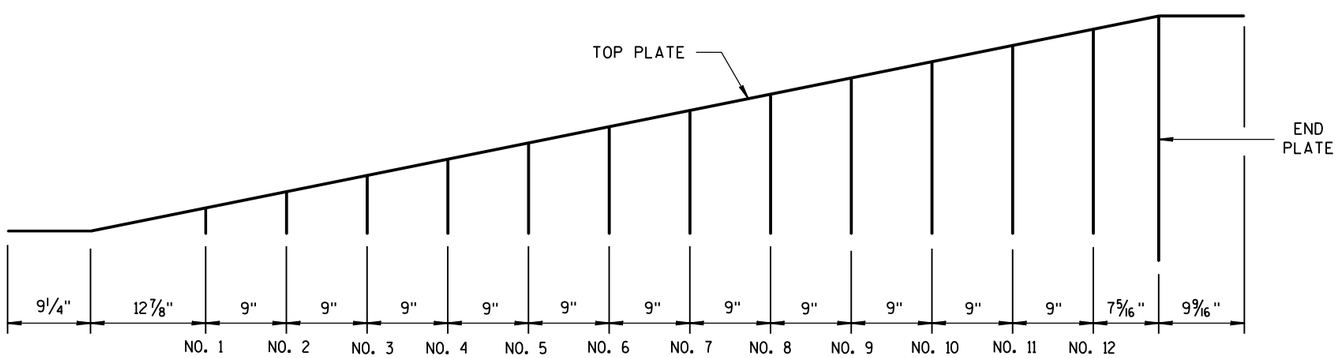

GUSSET LOCATION

CAP DETAILS FOR TEMPORARY CONCRETE BARRIER TO 56" PERMANENT CONCRETE BARRIER

CONCRETE BARRIER
TEMPORARY PRECAST, 12'-6"

STATE OF WISCONSIN
DEPARTMENT OF TRANSPOR

6

S.D.D. 14 B 7-15h

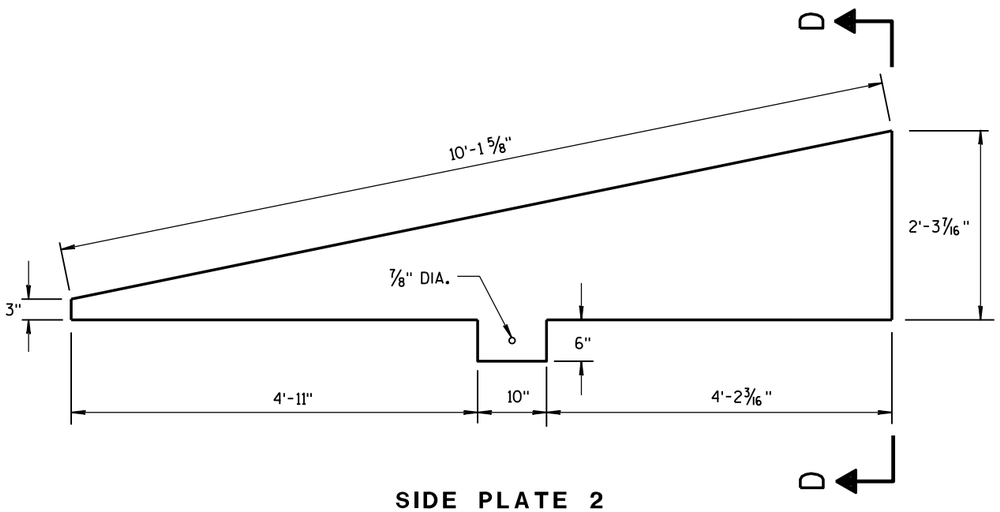

SIDE PLATE 2

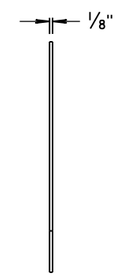

END VIEW

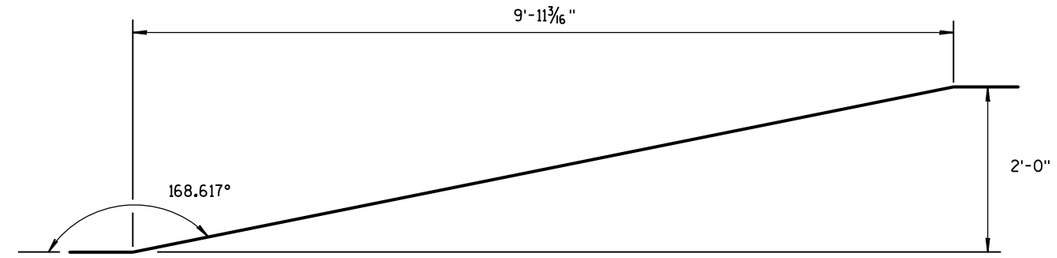

SIDE VIEW

TOP PLATE

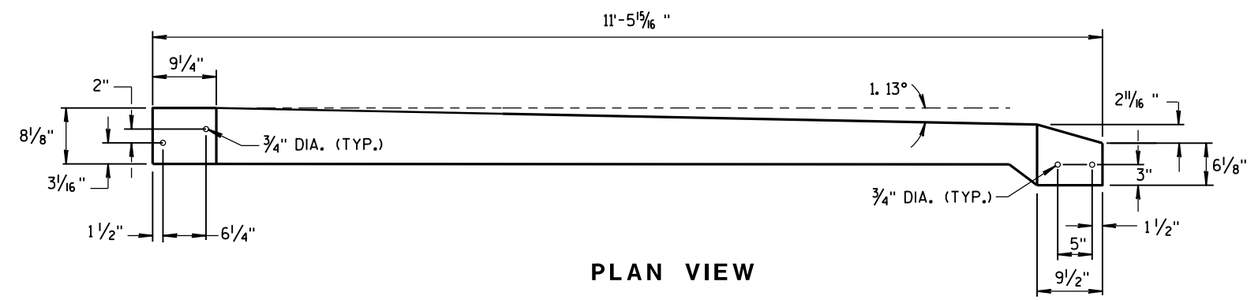

PLAN VIEW

TOP PLATE

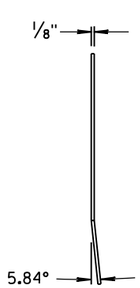

END VIEW

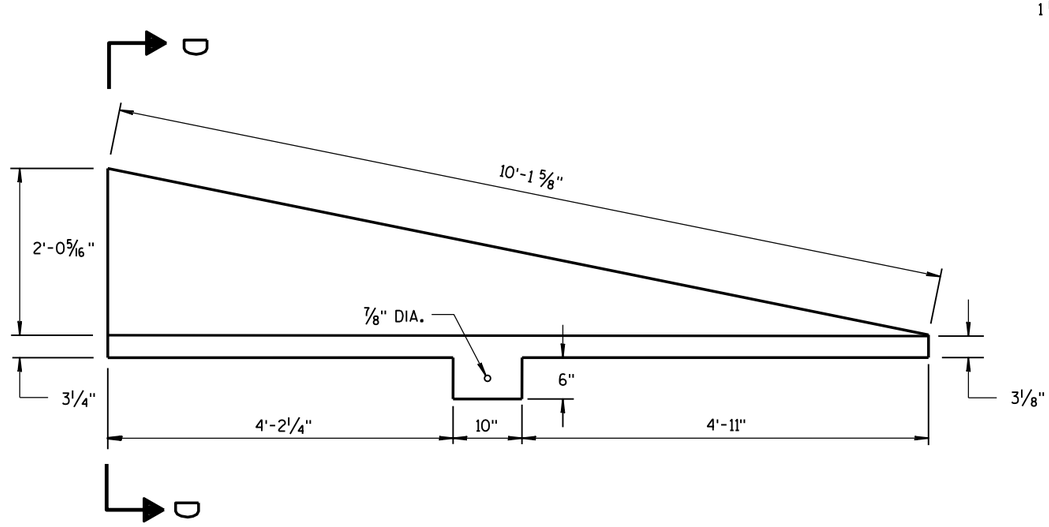

SIDE PLATE 1

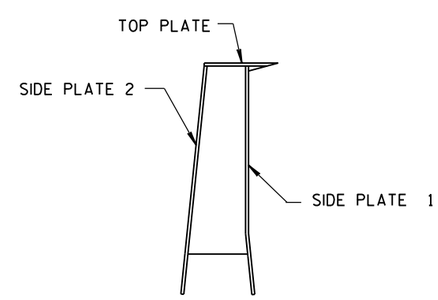

SECTION D-D

CAP DETAILS FOR TEMPORARY CONCRETE BARRIER TO 56" PERMANENT CONCRETE BARRIER

CONCRETE BARRIER
TEMPORARY PRECAST, 12'-6"

STATE OF WISCONSIN
DEPARTMENT OF TRANSPORTATION

APPROVED
June 2017 /S/ Rodney Taylor
DATE ROADWAY STANDARD UNIT SUPERV ENT
FHWA

6

6

S.D.D. 14 B 7-15i

S.D.D. 14 B 7-15i

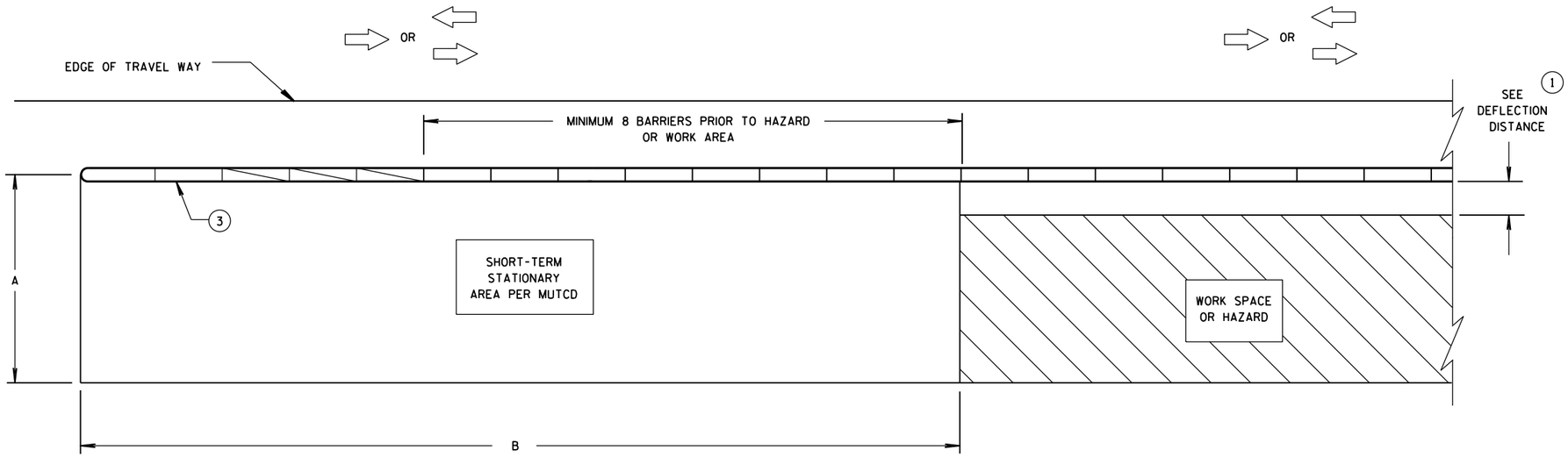

CRASH CUSHION/SAND BARREL ARRAY AND TEMPORARY BARRIER INSTALLATION FOR TRAFFIC ON ONE SIDE OF BARRIER

DIMENSION A TABLE (2)

FACILITY	POSTED SPEED MPH	DIMENSION A MIN. FT	DIMENSION A MAX. FT
FREEWAY/EXPRESSWAY	ALL	15	20
NON-FREEWAY/EXPRESSWAY	GREATER THAN OR EQUAL TO 45	10	15
NON-FREEWAY/EXPRESSWAY	LESS THAN 45	8	10
AADT LESS THAN 1,500	ALL	8	10

DIMENSION B TABLE (2)

POSTED SPEEDS MPH	DIMENSION B FT
20	115
25	155
30	200
35	250
40	305
45	360
50	425
55	495
60	570
65	645

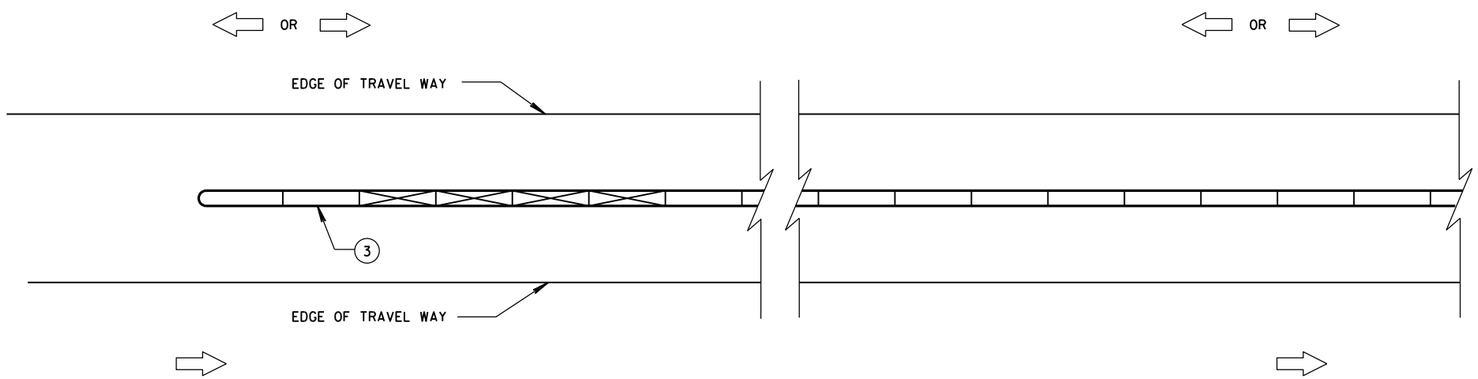

CRASH CUSHION/SAND BARREL ARRAY AND TEMPORARY BARRIER INSTALLATION FOR TRAFFIC ON BOTH SIDES OF BARRIER

LEGEND

- DIRECTION OF TRAVEL
- CRASH CUSHION OR SAND BARREL ARRAY
- SEE FREE STANDING TRANSITION TO TIED-DOWN SYSTEM DETAILS
- SEE BI-DIRECTIONAL TRANSITION TO TIED-DOWN SYSTEM DETAILS
- 3 PINS PLACED ON TRAFFIC SIDE OF BARRIER
- PERMANENT CONCRETE BARRIER OR CONCRETE PARAPET
- FREE STANDING TEMPORARY BARRIER

GENERAL NOTES

SEE STANDARD DETAIL DRAWING 14B7 FOR MORE INFORMATION.

DETAILS PROVIDE A GENERAL LAYOUT OF TEMPORARY CONCRETE BARRIER, CRASH CUSHIONS, SAND BARREL ARRAYS AND TIE DOWN TRANSITIONS. DETAILS PROVIDED MAY NOT FIT ALL POSSIBLE SITUATIONS OR SITE CONDITIONS. SEE OTHER SECTIONS OF THE CONTRACT OR PROJECT ENGINEER FOR MORE DETAILS.

ADDITIONAL TEMPORARY BARRIER MAY BE REQUIRED TO PROTECT TRAVELING PUBLIC FROM HAZARDS, CONTRACTOR'S OPERATIONS OR TO CONTROL TRAFFIC.

TEMPORARY BARRIER MAY BE REQUIRED TO BE ANCHORED TO PAVEMENT OR BRIDGE DECK.

FOR DETAILS ON CRASH CUSHION OR SAND BARREL ARRAYS SEE OTHER SECTIONS OF THE PLAN AND MANUFACTURE'S DETAILS.

SLOPES LEADING TO TEMPORARY BARRIER, CRASH CUSHION OR SAND BARREL ARRAY ARE 10:1 OR LESS.

(1) FOR DEFLECTION INFORMATION SEE STANDARD DETAIL DRAWING 14B7.

(2) VALUES PROVIDED MAY NOT FIT ALL POSSIBLE SITUATIONS OR SITE CONDITIONS. SEE OTHER SECTIONS OF THE CONTRACT OR PROJECT ENGINEER FOR MORE DETAILS.

(3) ANCHOR TEMPORARY BARRIER ACCORDING TO CRASH CUSHION OR SAND BARREL MANUFACTURER'S RECOMMENDATIONS. IF MANUFACTURER'S RECOMMENDATIONS ARE NOT PROVIDED, ANCHOR 3 PINS ON TRAFFIC SIDE.

CRASH CUSHION/SAND BARREL ARRAY AND OTHER TEMPORARY BARRIER LAYOUT DETAILS

STATE OF WISCONSIN
DEPARTMENT OF TRANSPOR

6

S.D.D. 14 B 8-2a

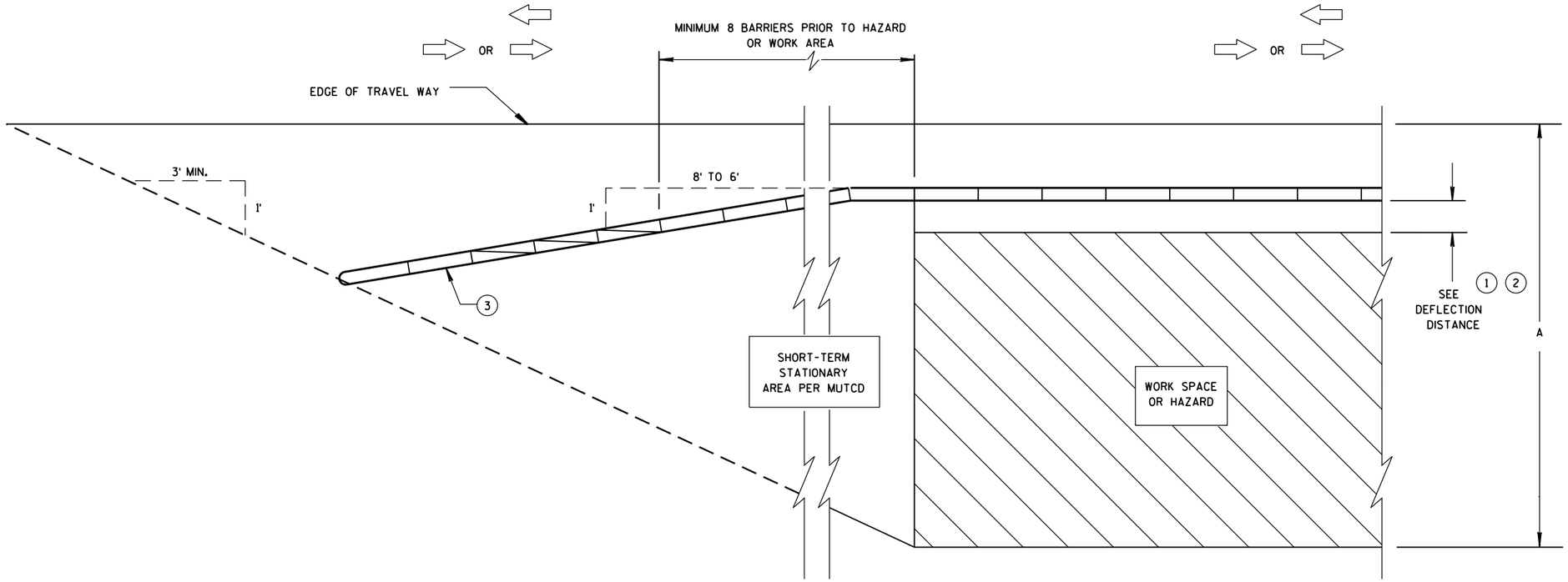

CRASH CUSHION/SAND BARREL ARRAY AND TEMPORARY BARRIER INSTALLATION FOR TRAFFIC ON ONE SIDE - FLARED INSTALLATION

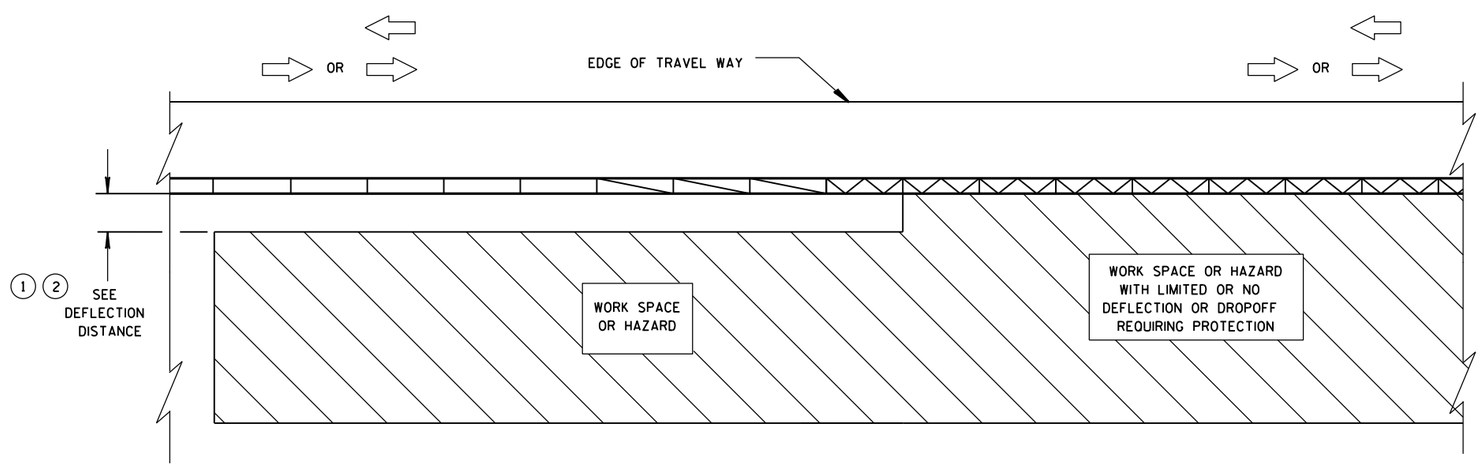

TRANSITION FROM FREE STANDING TEMPORARY BARRIER TO ANCHORED BARRIER

LEGEND

- DIRECTION OF TRAVEL
- CRASH CUSHION OR SAND BARREL ARRAY
- SEE FREE STANDING TRANSITION TO TIED-DOWN SYSTEM DETAILS
- SEE BI-DIRECTIONAL TRANSITION TO TIED-DOWN SYSTEM DETAILS
- 3 PINS PLACED ON TRAFFIC SIDE OF BARRIER
- PERMANENT CONCRETE BARRIER OR CONCRETE PARAPET
- FREE STANDING TEMPORARY BARRIER

CRASH CUSHION/SAND BARREL ARRAY AND OTHER TEMPORARY BARRIER LAYOUT DETAILS

STATE OF WISCONSIN
DEPARTMENT OF TRANSPO

6
S.D.D. 14 B 8-2b

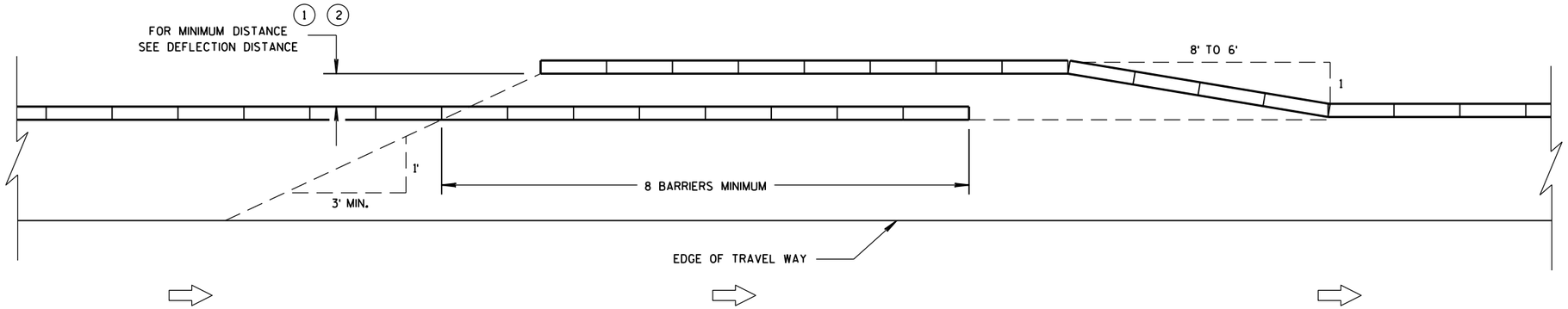

TEMPORARY BARRIER OVERLAP - ONE-WAY TRAFFIC

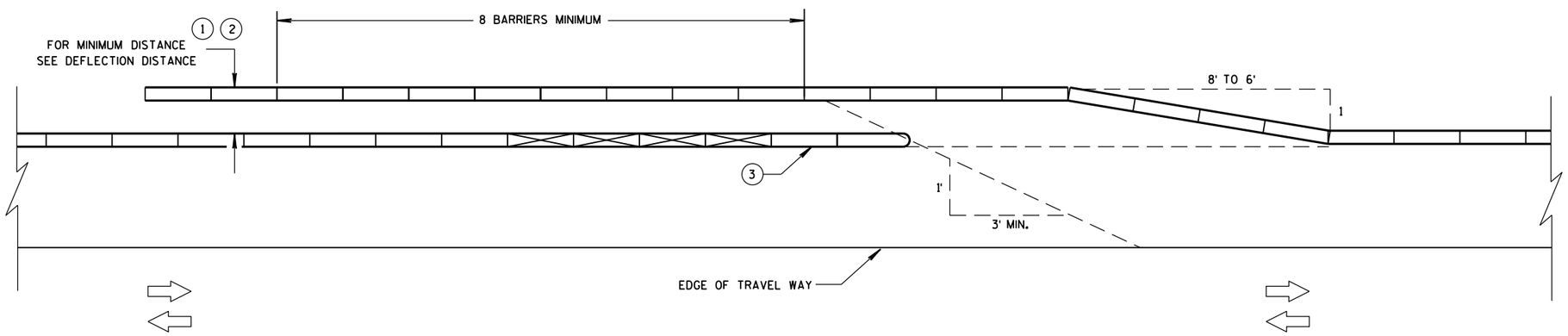

TEMPORARY BARRIER OVERLAP - TWO-WAY TRAFFIC

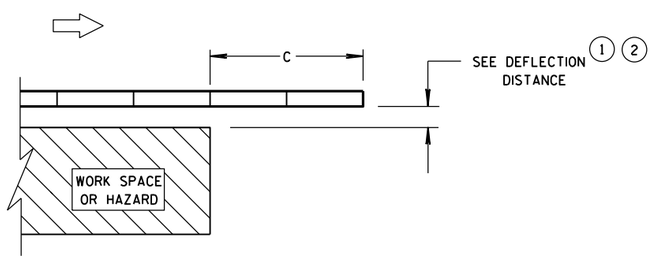

ENDING TEMPORARY BARRIER DOWNSTREAM - UNANCHORED

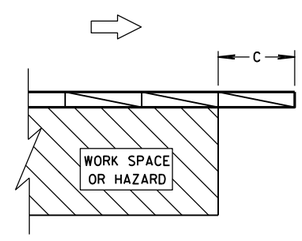

ENDING TEMPORARY BARRIER DOWNSTREAM - ANCHORED

LEGEND

- DIRECTION OF TRAVEL
- CRASH CUSHION OR SAND BARREL ARRAY
- SEE FREE STANDING TRANSITION TO TIED-DOWN SYSTEM DETAILS
- SEE BI-DIRECTIONAL TRANSITION TO TIED-DOWN SYSTEM DETAILS
- 3 PINS PLACED ON TRAFFIC SIDE OF BARRIER
- PERMANENT CONCRETE BARRIER OR CONCRETE PARAPET
- FREE STANDING TEMPORARY BARRIER

CRASH CUSHION/SAND BARREL ARRAY AND OTHER TEMPORARY BARRIER LAYOUT DETAILS

STATE OF WISCONSIN
DEPARTMENT OF TRANSPOR

6

6

S.D.D. 14 B 8-2c

S.D.D. 14 B 8-2c

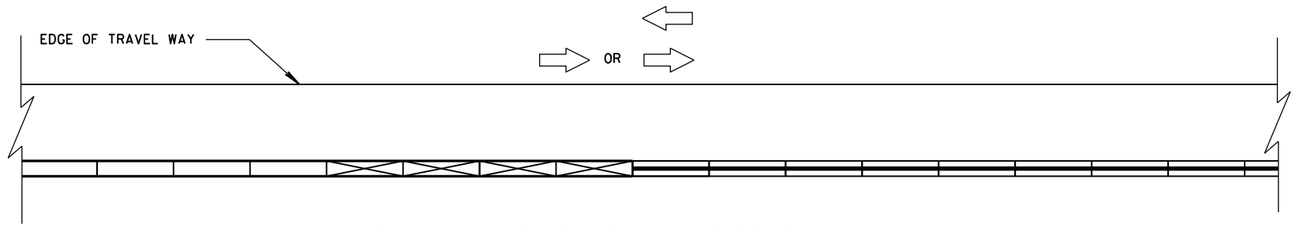

CONNECTING TEMPORARY BARRIER TO PERMANENT
CONCRETE BARRIER-TRAFFIC ON ONE SIDE

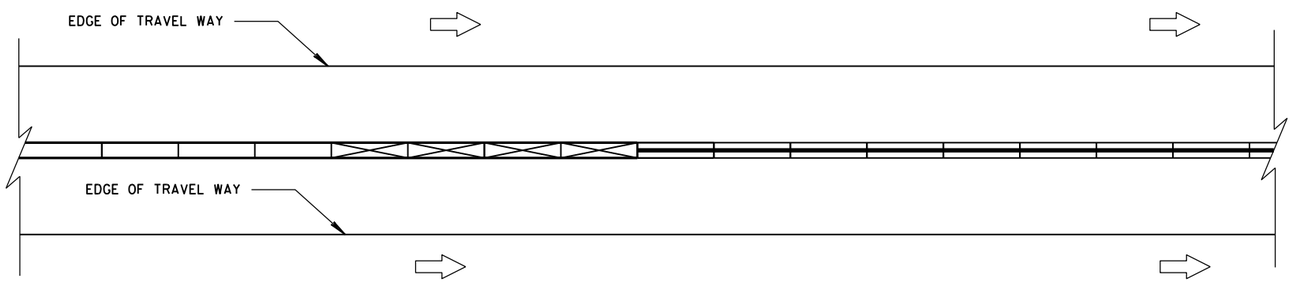

CONNECTING TEMPORARY BARRIER TO PERMANENT
CONCRETE BARRIER-TRAFFIC ON BOTH SIDES

LEGEND

DIRECTION OF TRAVEL

CRASH CUSHION OR
SAND BARREL ARRAY

SEE FREE STANDING TRANSITION
TO TIED-DOWN SYSTEM DETAILS

SEE BI-DIRECTIONAL TRANSITION
TO TIED-DOWN SYSTEM DETAILS

3 PINS PLACED ON
TRAFFIC SIDE OF BARRIER

PERMANENT CONCRETE BARRIER
OR CONCRETE PARAPET

FREE STANDING TEMPORARY
BARRIER

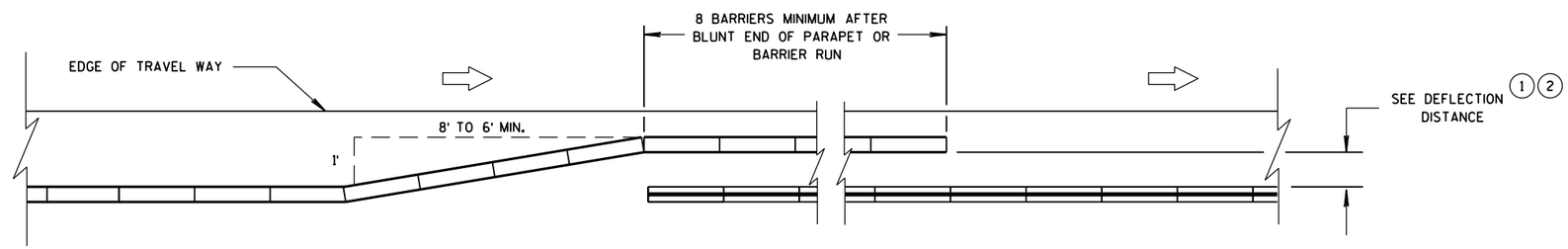

OVERLAPPING TEMPORARY BARRIER AND PERMANENT BARRIER -
ONE WAY TRAFFIC

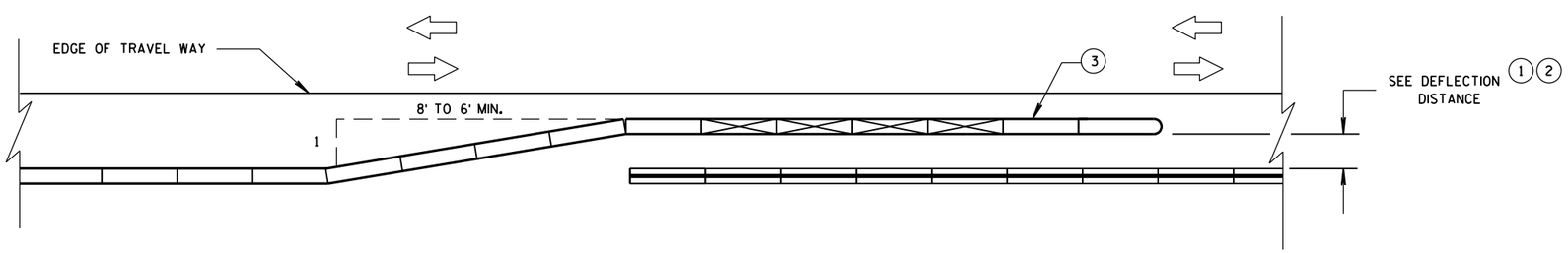

OVERLAPPING TEMPORARY BARRIER AND PERMANENT BARRIER -
TWO WAY TRAFFIC

CRASH CUSHION/SAND BARREL
ARRAY AND OTHER TEMPORARY
BARRIER LAYOUT DETAILS

STATE OF WISCONSIN
DEPARTMENT OF TRANSPOR

6

S.D.D. 14 B 8-2d

LEGEND

DIRECTION OF TRAVEL

CRASH CUSHION OR SAND BARREL ARRAY

SEE FREE STANDING TRANSITION TO TIED-DOWN SYSTEM DETAILS

SEE BI-DIRECTIONAL TRANSITION TO TIED-DOWN SYSTEM DETAILS

3 PINS PLACED ON TRAFFIC SIDE OF BARRIER

PERMANENT CONCRETE BARRIER OR CONCRETE PARAPET

FREE STANDING TEMPORARY BARRIER

DIMENSION C TABLE (2)

AVAILABLE DEFLECTION DISTANCE	MINIMUM LENGTH OF BARRIER BEYOND HAZARD FT
GREATER THAN 8'	12.5
LESS THAN OR EQUAL TO 8' BUT GREATER THAN 4'	50
LESS THAN OR EQUAL TO 4'	100

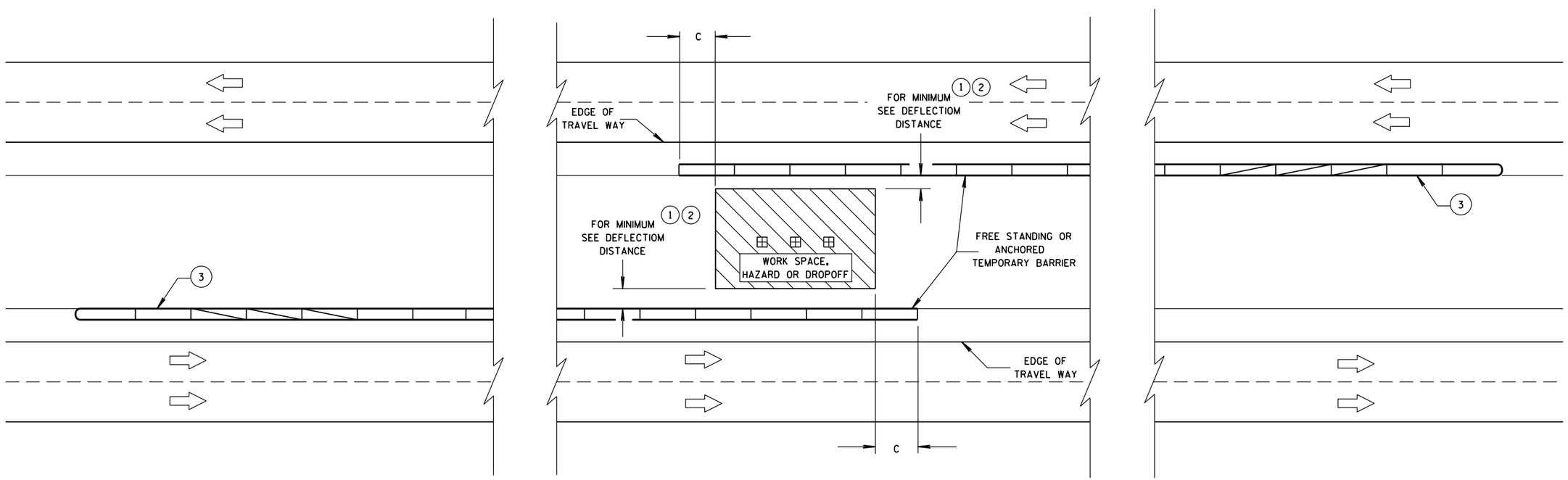

CRASH CUSHION/SAND BARREL ARRAY AND OTHER TEMPORARY BARRIER LAYOUT DETAILS

STATE OF WISCONSIN
DEPARTMENT OF TRANSPORTATION

APPROVED
June, 2015 — DATE
/S/ Jerry H. Zogg — ROADWAY STANDARDS DEVELOPMENT ENGINEER
FHWA

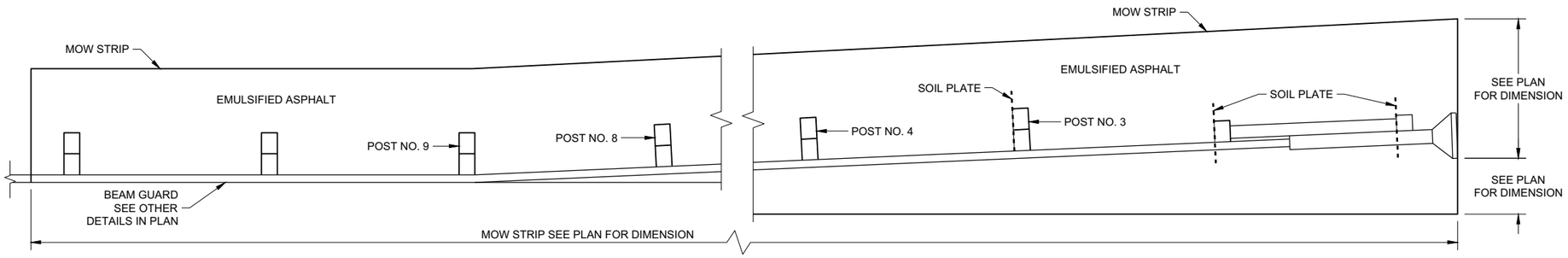

PLAN VIEW

MOW STRIP LAYOUT FOR ENERGY ABSORBING TERMINAL

GENERAL NOTES

ONLY USE STEEL POSTS IN CONCRETE AND ASPHALT MOW STRIPS.

1. CONTROLLED LOW-STRENGTH BACKFILL OR EMULSIFIED ASPHALT.
2. DEPTH OF MOW STRIP:
   ASPHALT - 4"
   CONCRETE - 4"
   EMULSIFIED ASPHALT - 1" OR LESS
3. FOR EMULSIFIED ASPHALT, MOW STRIP STRIP LEAVE OUTS NOT REQUIRED. (TYPICAL FOR ALL POSTS)

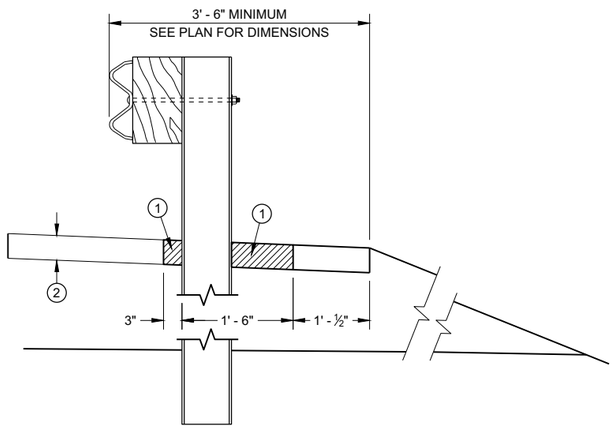

SECTION A - A

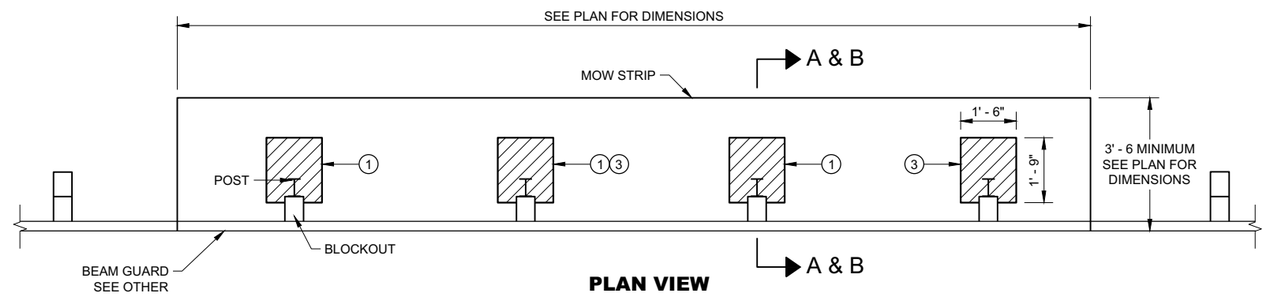

PLAN VIEW

MOW STRIP FOR TYPICAL BLOCKOUT LAYOUT

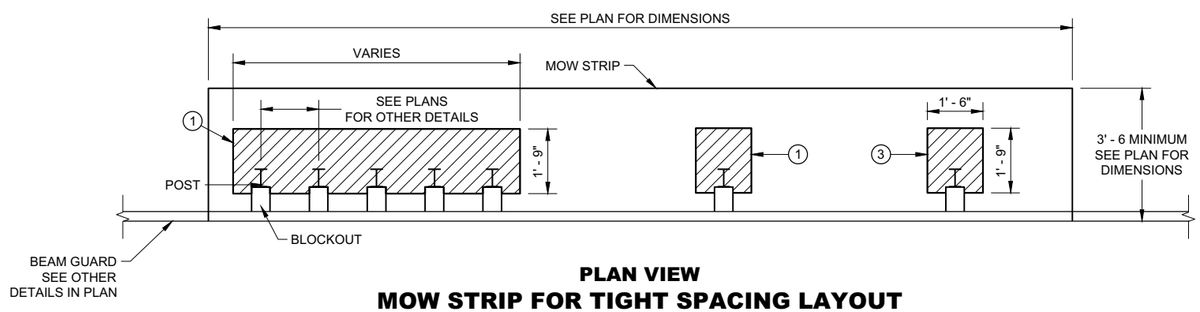

PLAN VIEW

MOW STRIP FOR TIGHT SPACING LAYOUT

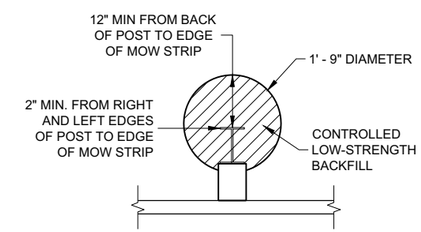

ALTERNATIVE HMA MOW STRIP DESIGN

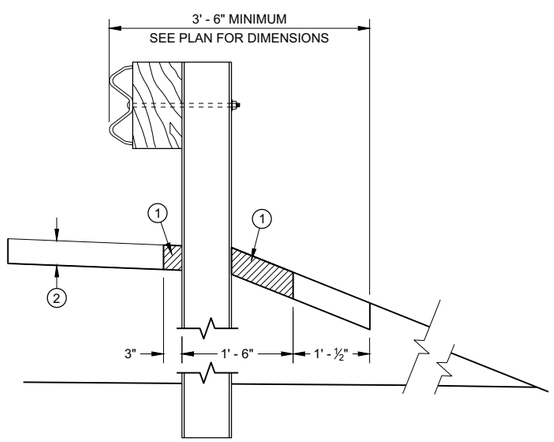

SECTION B - B

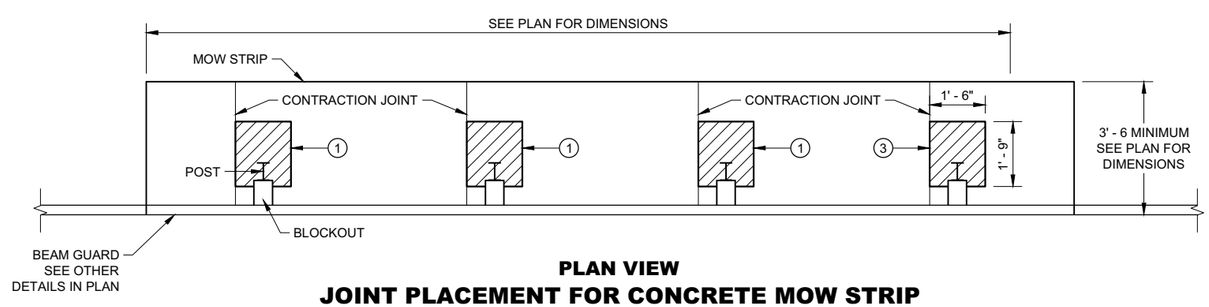

PLAN VIEW

JOINT PLACEMENT FOR CONCRETE MOW STRIP

GUARDRAIL MOW STRIP

STATE OF WISCONSIN
DEPARTMENT OF TRANSPORTATION

6

6

SDD 14B28 - 04a

SDD 14B28 - 04a

LEGEND

CONCRETE, ASPHALT, OR EMULSIFIED ASPHALT MOW STRIP (SEE OTHER DETAILS)

EMULSIFIED ASPHALT MOW STRIP (SEE OTHER DETAILS)

GENERAL NOTES

EXISTING THRIE BEAM BULLNOSES MAY HAVE WOOD POSTS. NEW THRIE BEAM BULLNOSE WILL HAVE STEEL POSTS.

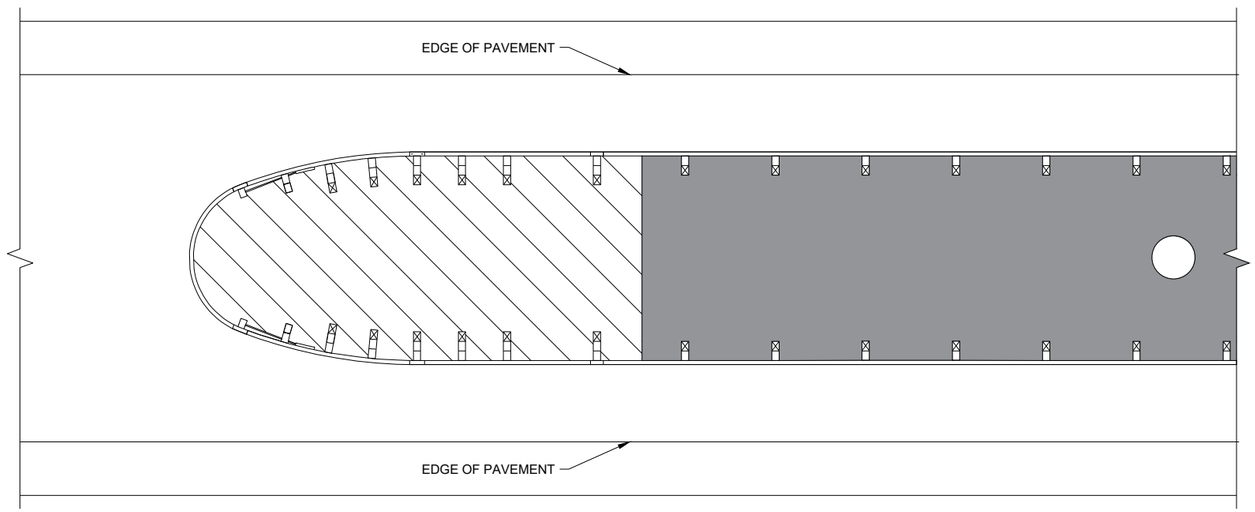

THRIE BEAM BULLNOSE

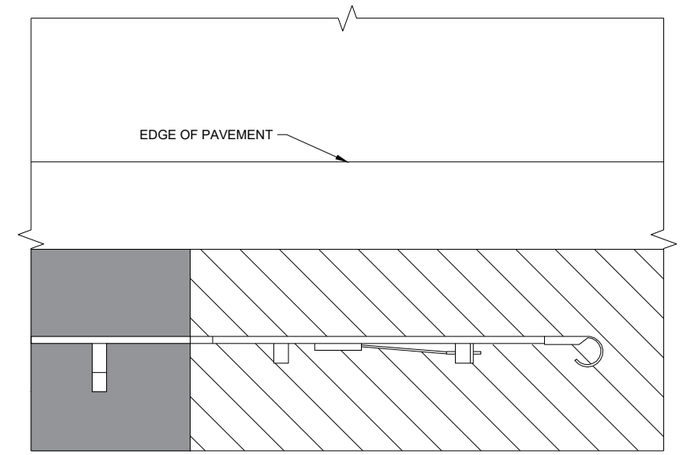

TYPE 2 TERMINAL

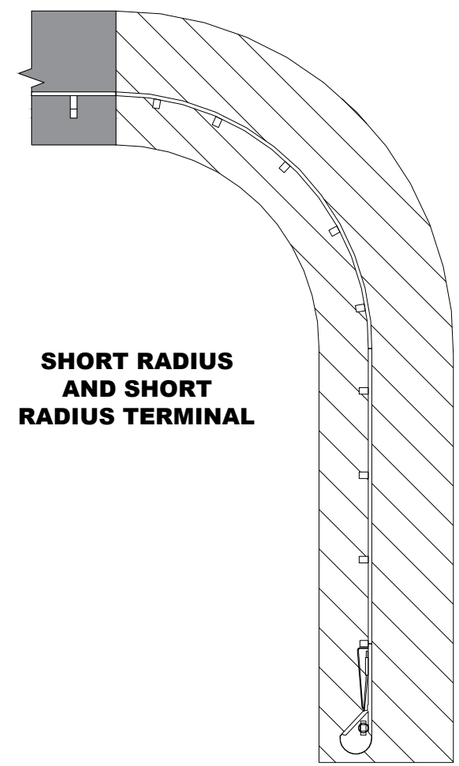

SHORT RADIUS AND SHORT RADIUS TERMINAL

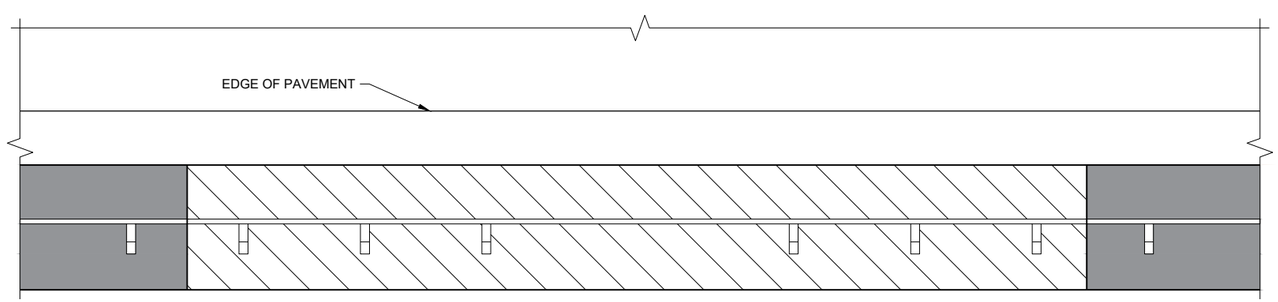

LONG - SPAN

6

6

SDD 14B28 - 04b

SDD 14B28 - 04b

GUARDRAIL MOW STRIP

STATE OF WISCONSIN
DEPARTMENT OF TRANSPORTATION

APPROVED
August 2020 — DATE
/S/ Rodney Taylor — ROADWAY STANDARDS DEVE ENGINEER
FHWA

1. WOOD OR STEEL POSTS (w6X9 OR w6X8.5) MAY BE USED. DO NOT INTERMIX WOOD AND STEEL POSTS. INSTALL STEEL POSTS WITH HOLES ON APPROACHING TRAFFIC SIDE.
2. USE WOOD OR APPROVED PLASTIC BLOCKOUTS. WOOD BLOCKOUTS MAY BE CONSTRUCTED OUT OF TWO OR MORE WOOD BLOCKOUTS. SEE ALTERNATE WOOD BLOCKOUT DETAIL. DIMENSIONS OF APPROVED PLASTIC BLOCKOUTS MAY VARY.
3. IF ROCK IS ENCOUNTERED DURING EXCAVATION, PROVIDE A HOLE 12 INCHES IN DIAMETER EXTENDING 20 INCHES DEEP INTO THE ROCK. PLACE APPROXIMATELY 2 1/2" INCHES OF GRANULAR MATERIAL IN THE BOTTOM OF THE HOLE. CUT THE POSTS THE TO LENGTH AMD INSTALL. BACKFILL WITH EXCAVATED MATERIAL AND COMPACT. BACKFILL IS TO BE FREE OF LARGE ROCKS.
4. WHEN THE DISTANCE FROM BACK OF POST TO SHOULDER HINGE POINT IS LESS THAN 2 FEET INSTALL LONGER POST AT HALF POST SPACING (K).
5. FOR NEW MGS INSTALLATION TOP OF W-BEAM RAIL TOLERANCE IS ±1". FOR EXISTING MGS INSTALLATION TOP OF W-BEAM IS BETWEEN 27 ¾" TO 32".
6. WHEN USING STEEL POST AND WOOD BLOCKOUTS INSTALL FOUR 16D GALVANIZED NAILS. INSTALL NAILS AT THE BACK CORNERS OF THE BLOCK AND BEND THE NAILS OVER THE FLANGE OF THE STEEL POST.
7. TOTAL POST LENGTH FOR TYPE K IS 7' - 0". TOTAL POST LENGTH FOR OTHER MGS TYPES IS 6' - 0".

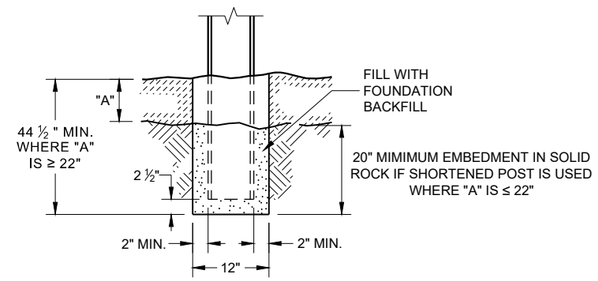

END VIEW
SETTING STEEL OR WOOD POST IN ROCK (3)

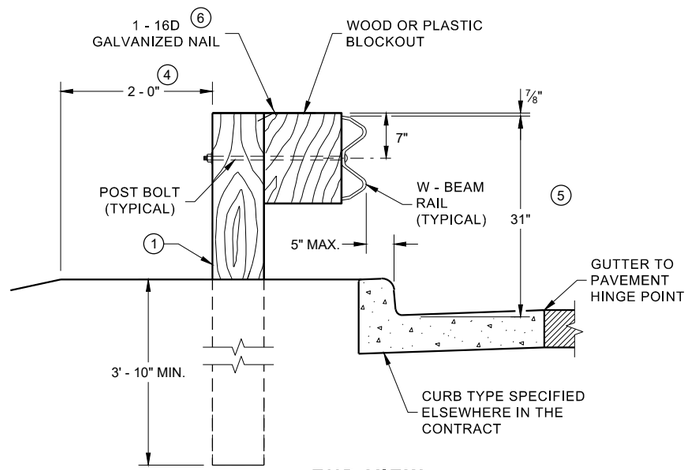

END VIEW
LOCATED ALONG A CURBED ROADWAY

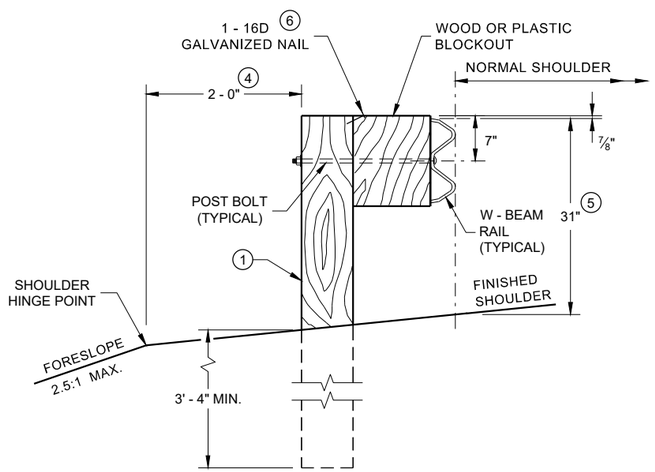

END VIEW
LOCATED ALONG A ROADWAY SHOULDER STANDARD INSTALLATION

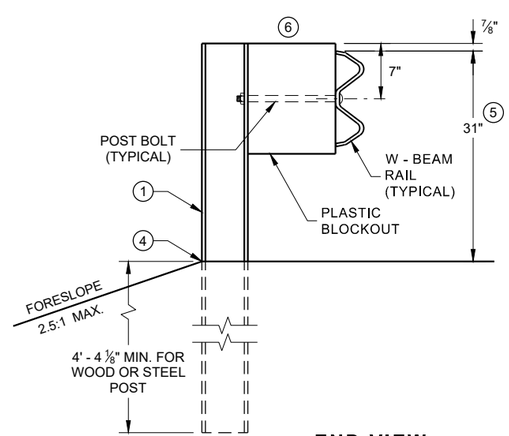

END VIEW
MGS LONGER POST AT HALFPOST SPACING W BEAM (K)

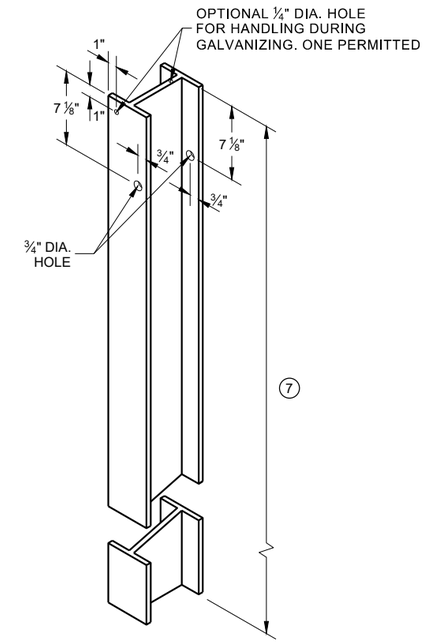

STEEL POST & HOLE PUNCHING DETAIL (W 6 X 9) (1)

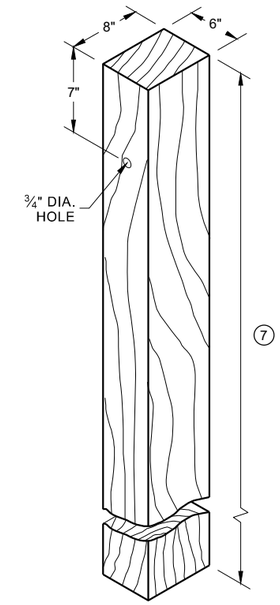

WOOD POST (6" X 8") NOMINAL (1)

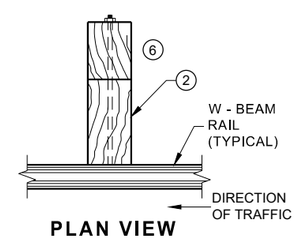

PLAN VIEW WOOD POST, BLOCKOUT & BEAM

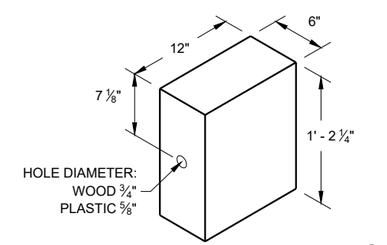

WOOD OR PLASTIC BLOCKOUT (2)

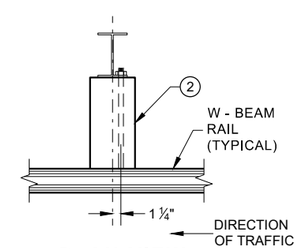

PLAN VIEW STEEL POST, PLASTIC BLOCKOUT & BEAM

MIDWEST GUARDRAIL SYSTEM (MGS) GUARDRAIL

STATE OF WISCONSIN
DEPARTMENT OF TRANSPORTA

6

SDD 14B42 - 07a

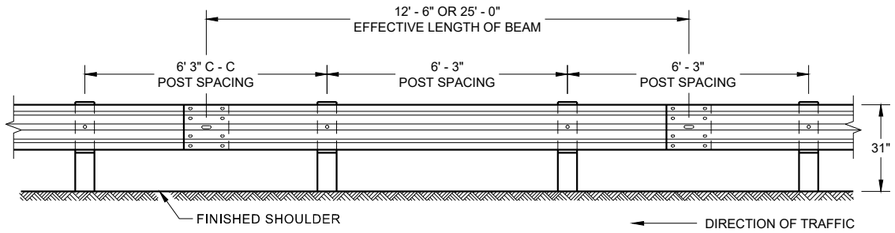

FRONT VIEW
POST SPACING STANDARD INSTALLATION

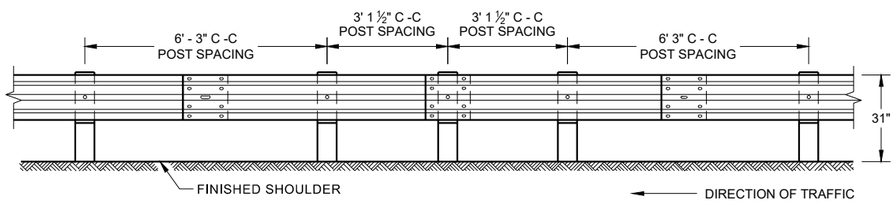

FRONT VIEW
HALF POST SPACING (HS) AND HALF POST SPACING WITH LONGER POSTS (K)

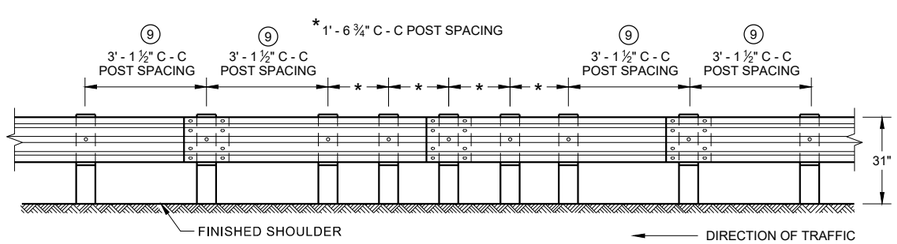

FRONT VIEW
QUARTER POST SPACING (QS)

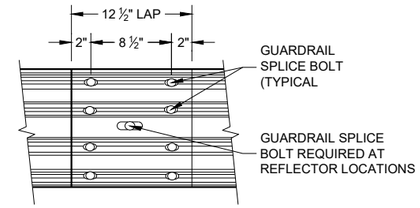

FRONT VIEW
MID-SPAN BEAM SPLICE

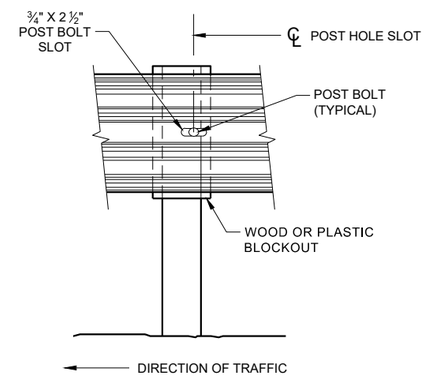

FRONT VIEW AT STEEL POST

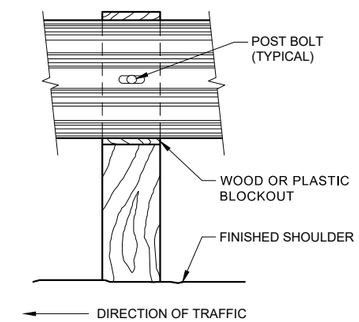

FRONT VIEW AT WOOD POST

GENERAL NOTES

8. DO NOT INSTALL REFLECTORS ON THE FIRST 50 FEET OF THE APPROACH END OF THE ENERGY ABSORBING TERMINAL.

9. 25 FEET OF HALF POST SPACING IS REQUIRED ON APPROACH AND DEPARTURE ENDS OF QUARTER POST SPACING.

POST BOLTS ARE A ⅝" DIAMETER ASTM A307 GUARDRAIL BOLT. A POST BOLT REQUIRES ⅝" DIAMETER A563A DOUBLE RECESSED (DR) HEAVY HEX NUT AND ⅝" DIAMETER F844 FLAT WASHER. POST BOLTS MAY BE LONGER IF MULTIPLE BLOCKOUTS ARE BEING USED.

GUARD RAIL SPLICE BOLTS ARE A ⅝" DIAMETER ASTM A307 GUARDRAIL HEAD BOLT. A GUARDRAIL SPLICE BOLT REQUIRES ⅝" DIAMETER A563A DOUBLE RECESSED (DR) HEAVY HEX NUT.

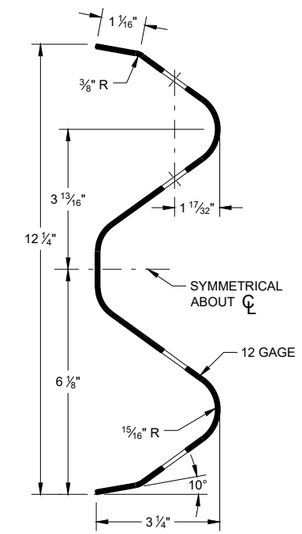

SECTION THRU W-BEAM RAIL

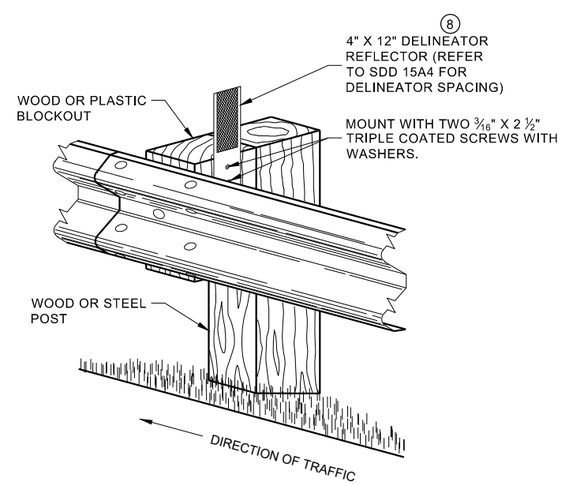

ONE SIDED REFLECTOR DETAIL AND TYPICAL INSTALLATION

MIDWEST GUARDRAIL SYSTEM (MGS) GUARDRAIL

STATE OF WISCONSIN
DEPARTMENT OF TRANSPORTATION

6

6

SDD 14B42 - 07b

SDD 14B42 - 07b

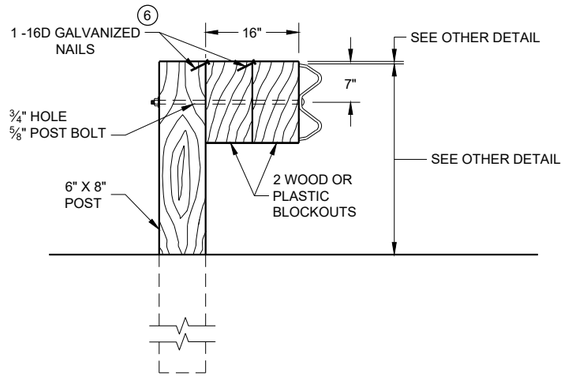

DETAIL FOR 16" BLOCKOUT DEPTH

IT IS ACCEPTABLE TO USE BLOCKOUTS UP TO 16" DEEP TO INCREASE THE POST OFFSET TO AVOID UNDERGROUND OBSTACLES. THERE IS NO LIMIT TO THE NUMBER OF POSTS THAT CAN HAVE ADDITIONAL BLOCKOUTS UP TO 16" DEEP.

NOTE:

1. ALL FILLETS SHALL HAVE A MINIMUM RADIUS OF 3/16".
2. IF THE BOLT EXTENDS MORE THAN ¼" FROM THE NUT THE BOLT SHOULD BE TRIMMED BACK.

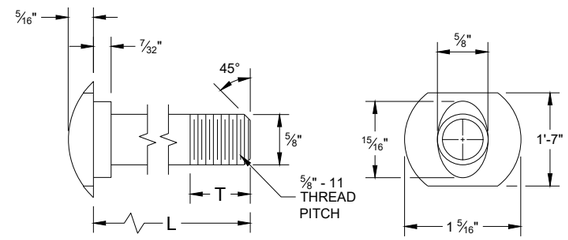

POST BOLT TABLE

L	T (MIN.)
1 ¼"	1 ⅛"
2"	1 ¾"
10"	4"
14"	4 1/16"
18"	4"
21"	4 1/16"
25"	4"

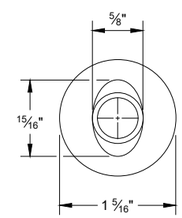

ALTERNATE BOLT HEAD

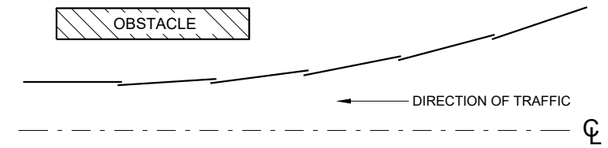

PLAN VIEW
BEAM LAPPING DETAIL

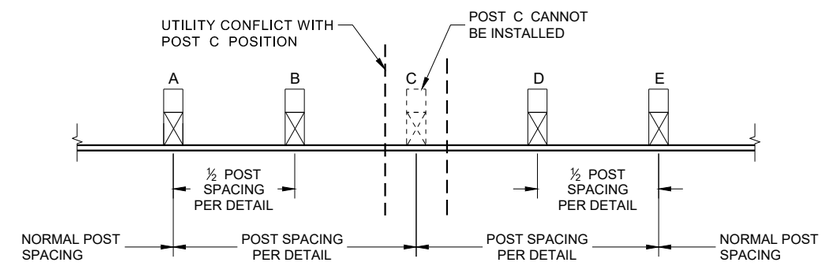

POST DRIVING FOR CONTINUOUS UNDERGROUND OBSTRUCTION

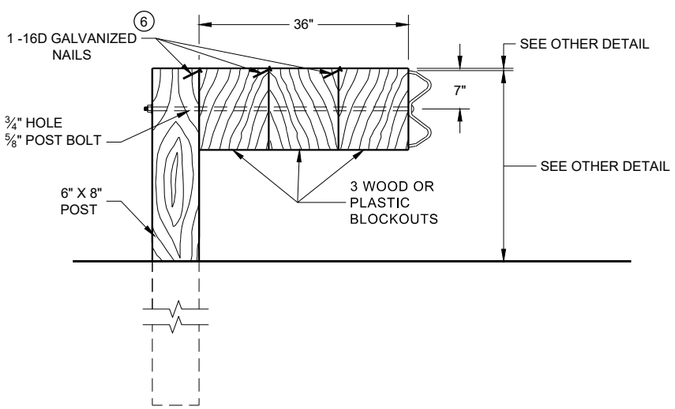

DETAIL FOR 36" BLOCKOUT DEPTH

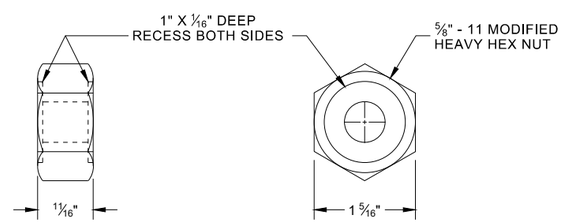

POST BOLT, SPLICE BOLT AND RECESS NUT

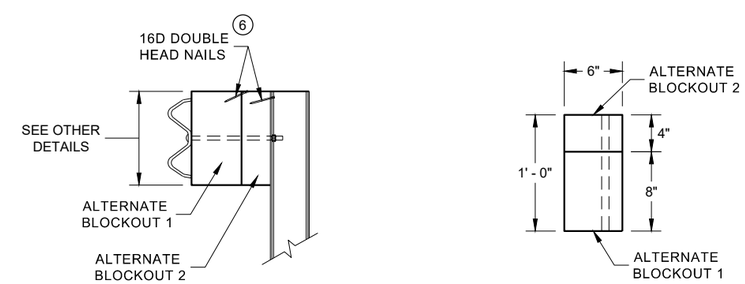

SIDE VIEW

PLAN VIEW

ALTERNATE WOOD BLOCKOUT DETAIL

NOTES: UNDER SPECIAL CIRCUMSTANCES, SUCH AS AVOIDING OBSTACLES THAT ARE NOT RELOCATED, IT IS ACCEPTABLE TO INSTALL ADDITIONAL BLOCKOUTS TO OBTAIN UP TO 36" DEPTH FOR ONE OR TWO POSTS IN A SECTION OF GUARDRAIL.

DO NOT USE 16" OR 36" BLOCKOUTS IF IT CAUSES THE POST TO BE DRIVEN BEYOND SHOULDER HINGE POINT OR CAUSES A FIXED OBJECT TO BE WITHIN THE DEFLECTION DISTANCE OF THE BARRIER.

(6) WHEN USING STEEL POST AD WOOD BLOCKOUTS, INSTALL FOUR 16D GALVANIZED NAILS. INSTALL NAILS AT THE BACK CORNERS OF THE BLOCK AND BEND THE NAILS OVER THE FLANGE OF THE STEEL POST.

MIDWEST GUARDRAIL SYSTEM (MGS) GUARDRAIL

STATE OF WISCONSIN
DEPARTMENT OF TRANSPORTA

6

SDD 14B42 - 07c

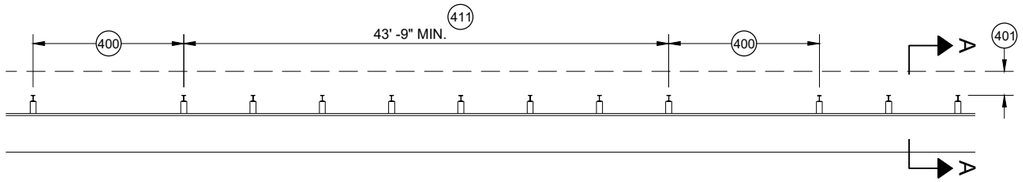

MISSING POST IN MGS GUARDRAIL

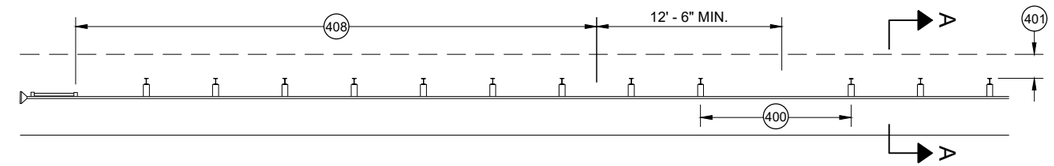

MISSING POST IN MGS GUARDRAIL NEAR EAT

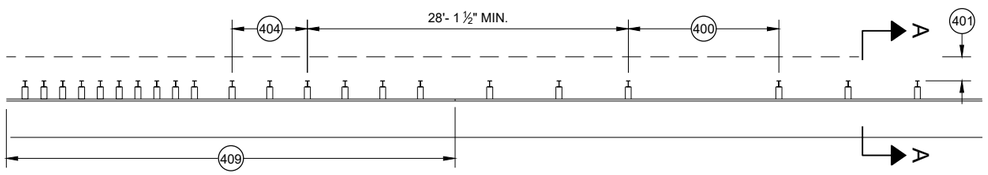

MISSING POST IN MGS GUARDRAIL NEAR AN APPROACH TRANSITION

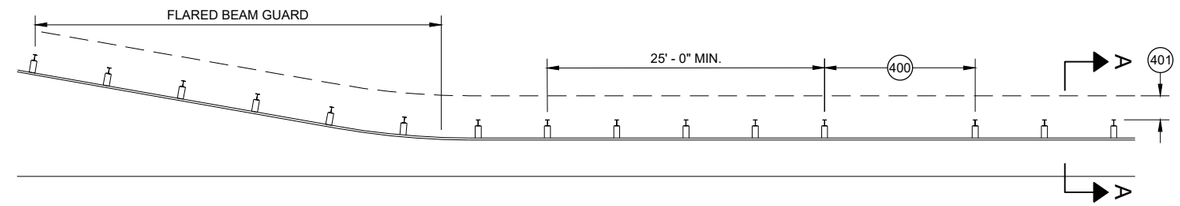

MISSING POST IN MGS GUARDRAIL NEAR FLARED BEAM GUARD

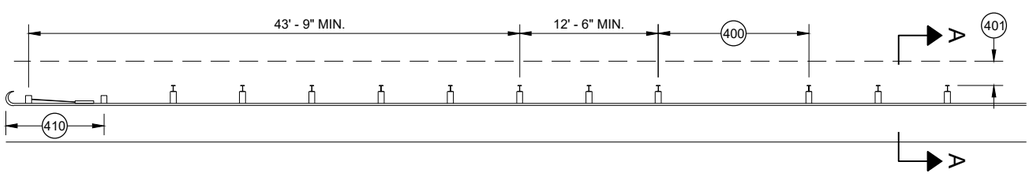

MISSING POST IN MGS GUARDRAIL NEAR A TYPE 2 END TERMINAL

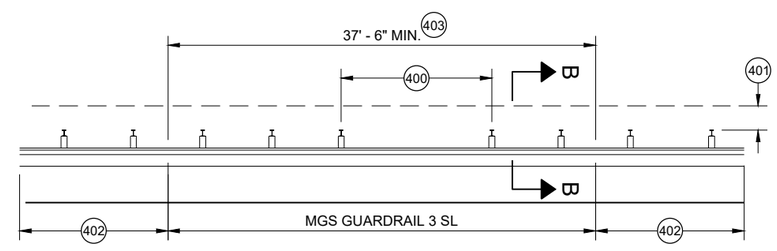

MISSING POST IN SHORT SPAN MGS GUARDRAIL NEAR CURB (SL) 407

400 MAX SPAN 12' - 6"
401 2' MIN.
402 MGS GUARDRAIL 3
403 NESTING BEAM GUARD
404 ASYMMETRIC TRANSITION
405 SOIL WELL DRAINED AND COMPACTED
406 SEE OTHER DRAWINGS IN THIS SDD
407 SEE OTHER DRAWINGS FOR MIN. SPACING BETWEEN SPANS
408 SEE SDD 14B44
409 SEE SDD 14B45
410 SEE SDD 14B47
411 MINIMUM DISTANCE BETWEEN MISSING POST SPANS.

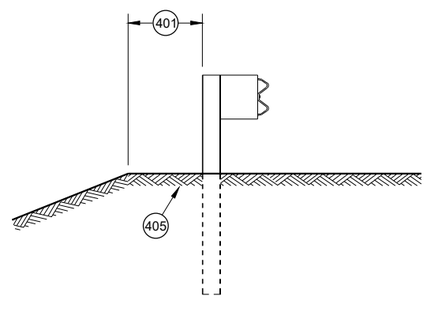

SECTION A - A 406

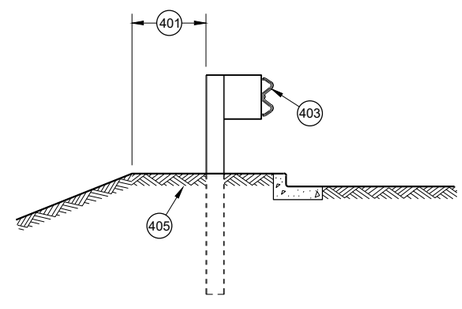

SECTION B - B 406

MIDWEST GUARDRAIL SYSTEM (MGS) GUARDRAIL

STATE OF WISCONSIN
DEPARTMENT OF TRANSPORTATION

APPROVED
May 2021 — DATE
/S/ Rodney Taylor — ROADWAY STANDARDS DEVE UNIT SUPERVISOR
FHWA

6

SDD 14B42 - 07d

GENERAL NOTES

(A) THE SLOPE IN THE AREA BOUNDED BY THE GRADELINE, THE HINGE POINT LINE (HPL) AND THE CLEAR ZONE LIMITS (CZL) SHALL BE 4:1 OR FLATTER.

(B) AFTER FINAL ASSEMBLY, RECHECK CABLE TO BE SURE IT IS TAUT AND HAS NOT RELAXED

(C) DIFFERENT MANUFACTURERS REQUIRE DIFFERENT PERFORATED W - BEAM RAIL END PANELS. SEE MANUFACTURER'S INFORMATION.

(D) ATTACH ALUMINUM SHEET TO E.A.T. HEAD USING 4 STAINLESS STEEL SELF - TAPPING SCREWS. ONE SCREW PER CORNER.

(E) HARDWARE MAY VARY BETWEEN MANUFACTURER. SEE MANUFACTURER'S DRAWING FOR INFORMATION.

DIMENSIONS MAY VARY, MANUFACTURER'S INFORMATION.

SEE SDD 14B42 FOR MORE INFORMATION.

* DO NOT ATTACH BLOCKOUTS TO POST 1 AND 2.

DO NOT INSTALL REFLECTORS ON THE FIRST 50 FEET OF THE APPROACH END OF THE ENERGY ABSORBING TERMINAL.

SEE MANUFACTURER'S DRAWING FOR SPLICE LOCATION, HARDWARE DIMENSIONS AND INSTALLATION INSTRUCTIONS.

THE CENTER OF THE UPPER 3 ½" DIAMETER HOLE ON POST NUMBER 3 THROUGH POST 9 IS TO BE FLUSH WITH THE GROUND LINE UP TO A MAXIMUM OF 2" ABOVE GROUND LINE. WOOD BLOCKS ON POSTS NUMBERED 3 THROUGH 9 MAY BE ADJUSTED UP TO 3" ABOVE THE TOP OF POST.

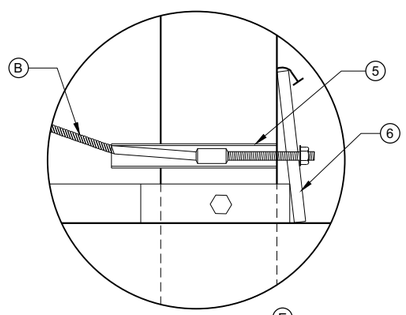

DETAIL "A" (E)

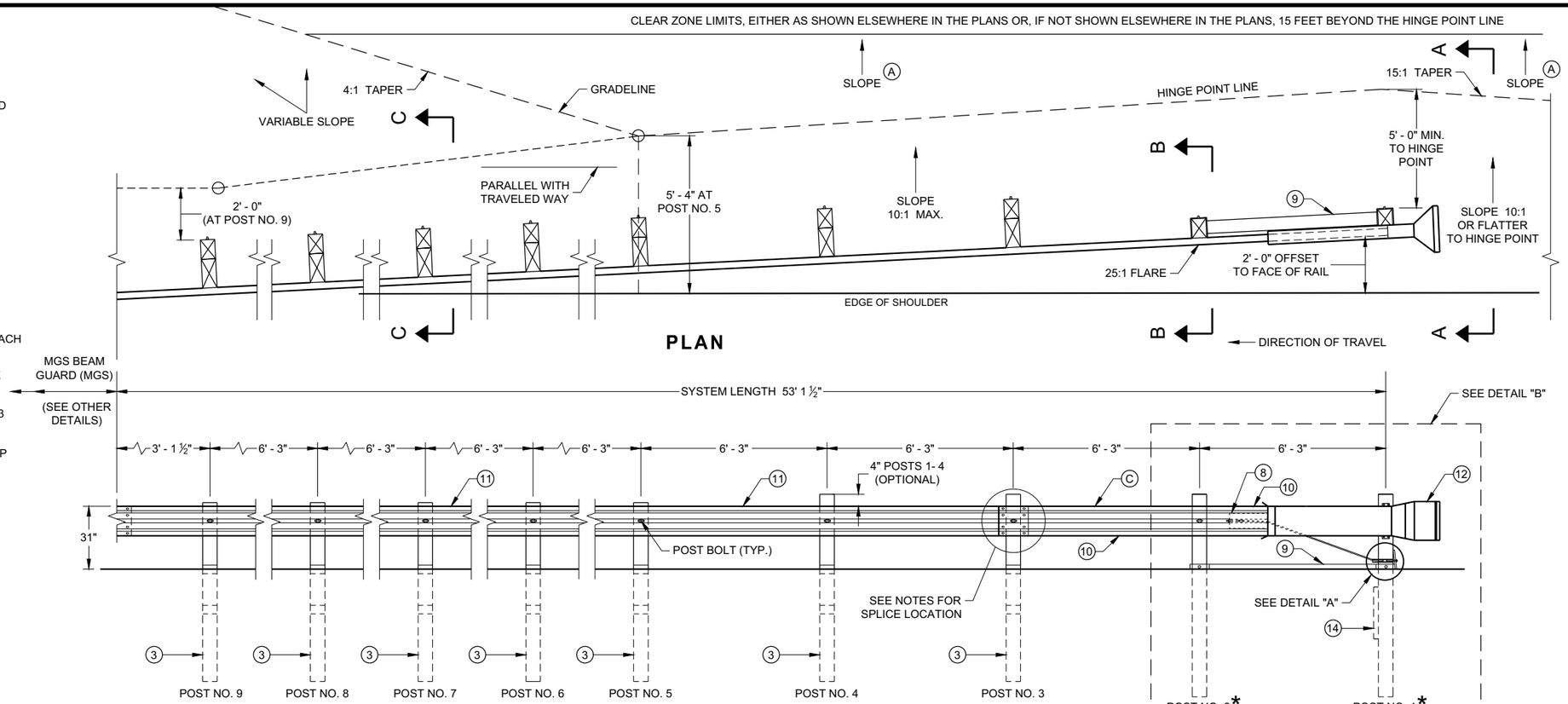

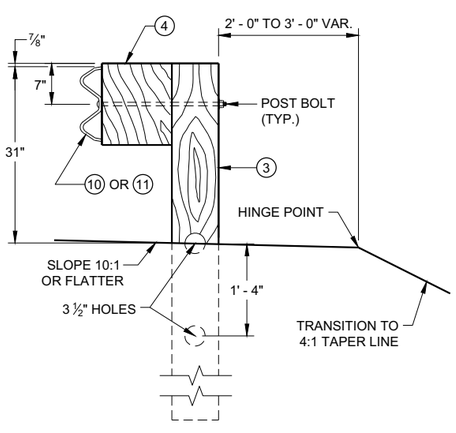

SECTION C - C
TYPICAL AT POST NOS. 3 - 9

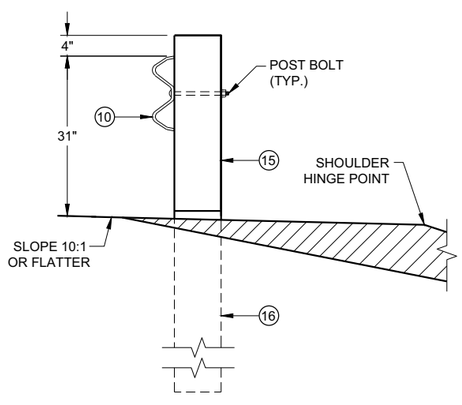

SECTION B - B
TYPICAL AT POST NO. 2*

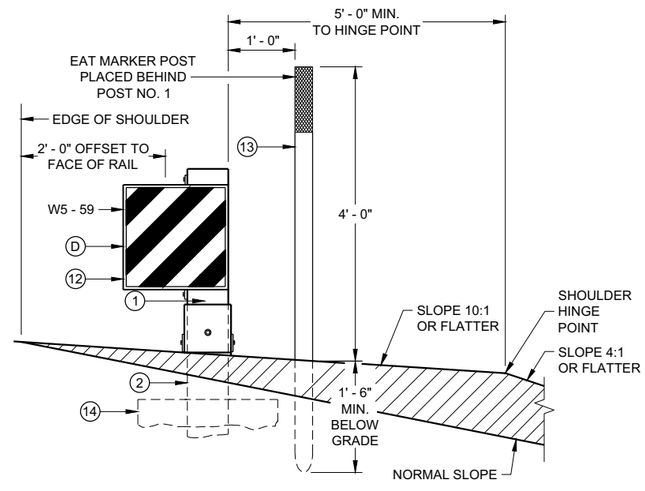

SECTION A - A
TYPICAL AT POST NO. 1*

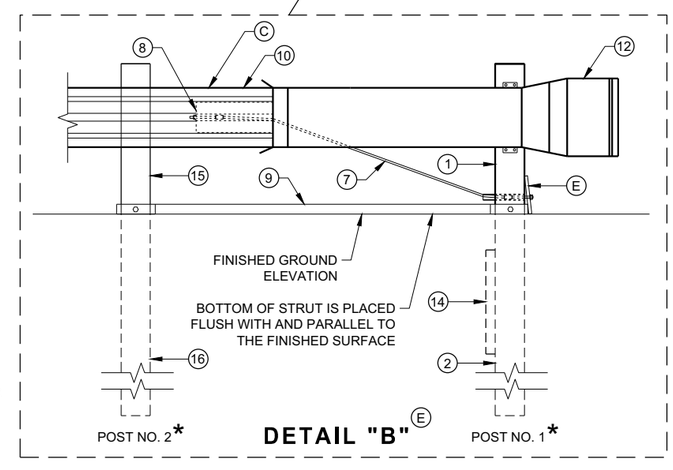

DETAIL "B" (E)

MIDWEST GUARDRAIL SYSTEM ENERGY ABSORBING TERMINAL (MGS)

STATE OF WISCONSIN
DEPARTMENT OF TRANSPORTATION

6

6

SDD 14B44 - 04a

SDD 14B44 - 04a

BILL OF MATERIALS

PART NO.	DESCRIPTION MATERIALS PROVIDED BY MGS EAT MANUFACTURER. SEE MANUGACTURER'S DETAILS FOR MORE INFORMATION.
1	UPPER POST NO. 1 6" X 6" TUBE
2	LOWER POST NO. 1
3	WOOD CRT
4	WOOD BLOCKOUT
5	PIPE SLEEVE
6	BEARING PLATE
7	BCT CABLE ASSEMBLY
8	ANCHOR CABLE BOX
9	GROUND STRUT
10	PERFORATED W-BEAM RAIL END PANEL, 12'-6" LONG.
11	STANDARD W-BEAM RAIL. MULTIPLE SECTIONS REQUIRED. SECTIONS VARY IN LENGTH.
12	IMPACT HEAD
13	EAT MARKER POST - YELLOW (SEE APPROVED PRODUCTS LIST)
14	SOIL PLATE
15	UPPER POST NO. 2
16	LOWER POST NO. 2

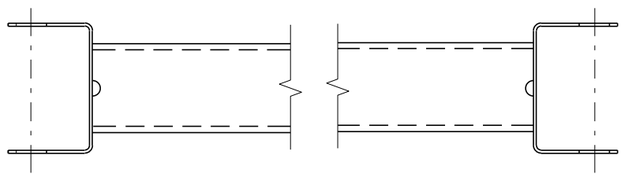

GENERIC GROUND STRUT 9 E

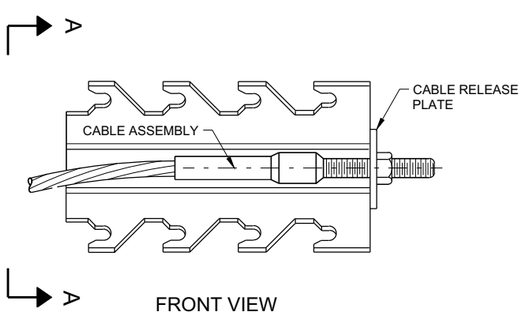

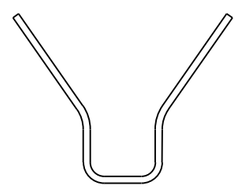

SECTION A - A

GENERIC ANCHOR CABLE BOX 9 E

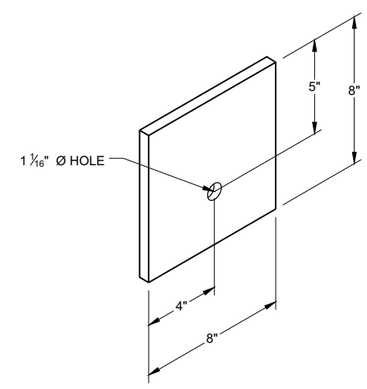

BEARING PLATE 6 E

6

6

SDD 14B44 - 04b

SDD 14B44 - 04b

MIDWEST GUARDRAIL SYSTEM ENERGY ABSORBING TERMINAL (MGS)

STATE OF WISCONSIN
DEPARTMENT OF TRANSPORTAT

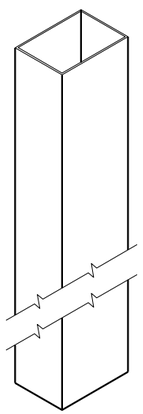

UPPER POST NO. 1 (1) (E)

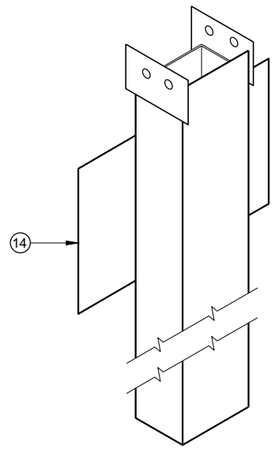

LOWER POST NO. 1 (2) (E)

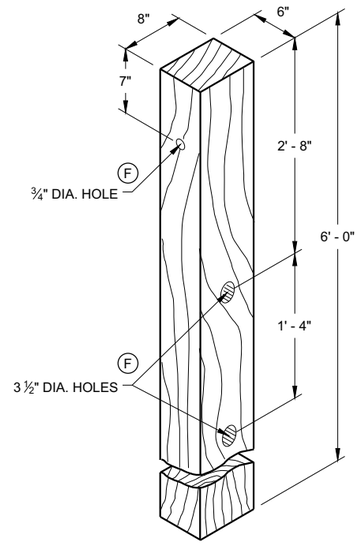

WOOD CRT POST (3) (E)

POSTS NUMBER 3-9

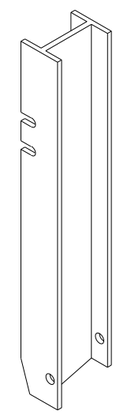

UPPER POST NO. 2 (15) (E)

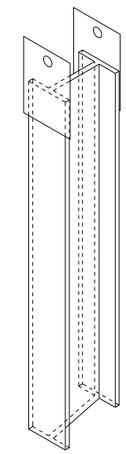

LOWER POST NO. 2 (16) (E)

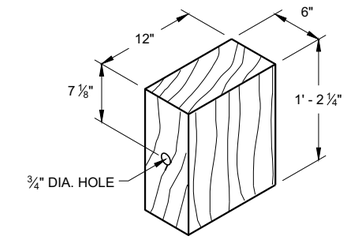

WOOD BLOCKOUT (4)

REQ'D. AT ALL POSTS EXCEPT POST NO'S 1 & 2

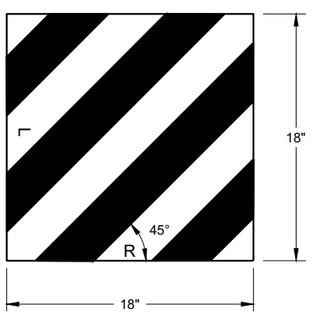

W5 - 59

REFLECTIVE SHEETING DETAIL (E)

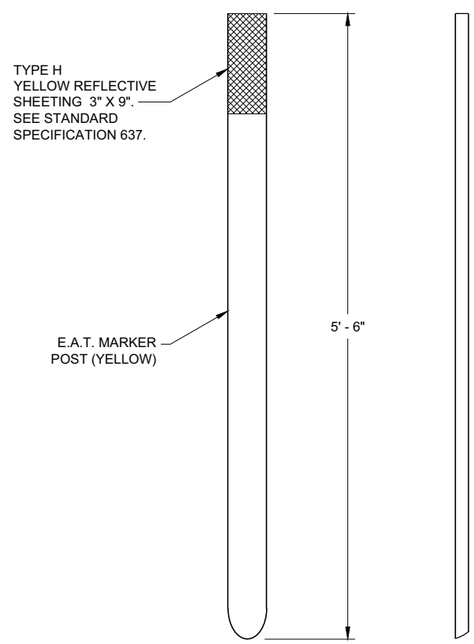

FRONT VIEW SIDE VIEW

E.A.T. MARKER POST (13)

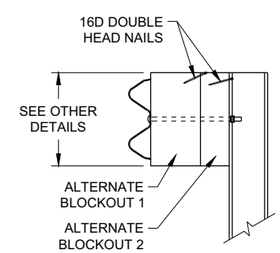

SIDE VIEW

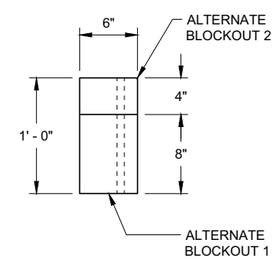

TOP VIEW

ALTERNATE WOOD BLOCKOUT DETAIL

MIDWEST GUARDRAIL SYSTEM ENERGY ABSORBING TERMINAL (MGS)

STATE OF WISCONSIN
DEPARTMENT OF TRANSPORTATION

APPROVED
7/2018 — DATE
/S/ Rodney Taylor — ROADWAY STANDARDS DEVE UNIT SUPERVISOR
FHWA

6

6

SDD 14B44 - 04c

SDD 14B44 - 04c

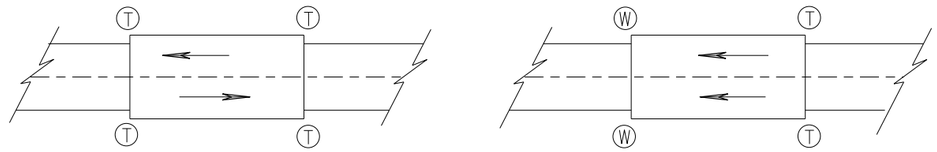

TWO WAY TRAFFIC **ONE WAY TRAFFIC**

(T) THRIE BEAM CONNECTION

(W) W-BEAM CONNECTION WHEN REQUIRED

TYPICAL LOCATIONS OF THRIE BEAM AND W-BEAM CONNECTIONS TO BRIDGE

GENERAL NOTES

IF ROCK IS ENCOUNTERED, REMOVE ROCK TO FULL DEPTH OF POST PLUS 2½", AND 12" DIAMETER AROUND POST. SEE 14B42 FOR MORE DETAILS.

TRANSITION USES STEEL POSTS ONLY.

SEE STANDARD DETAIL DRAWING 14 B 42 FOR MORE INFORMATION.

POST 2 THROUGH 17 USES STEEL POST ONLY

(1) BRIDGE RAILING TYPE "W" DOES NOT REQUIRE A TERMINAL CONNECTOR.

(2) OPTIONAL CURB AND GUTTER OR DRAINAGE FEATURE SEE PLAN FOR INFORMATION.

(13) STEEL OR WOOD POST IS ACCEPTABLE AT POST 1. SEE SDD14B42

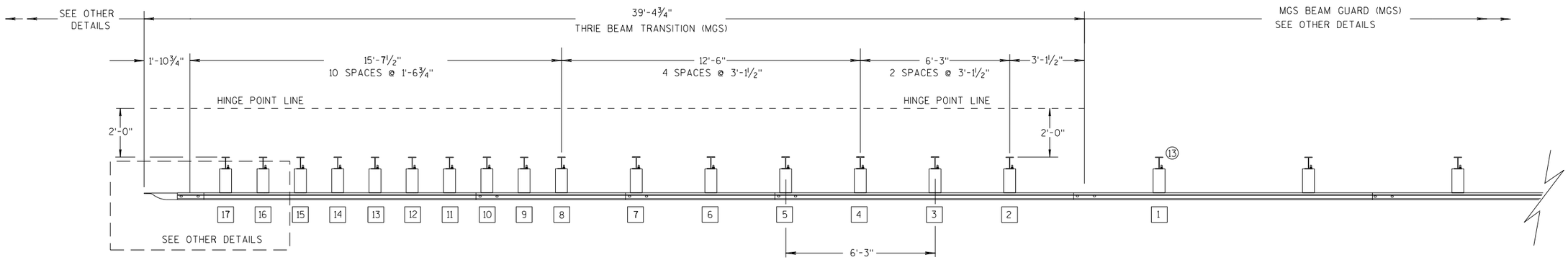

PLAN VIEW

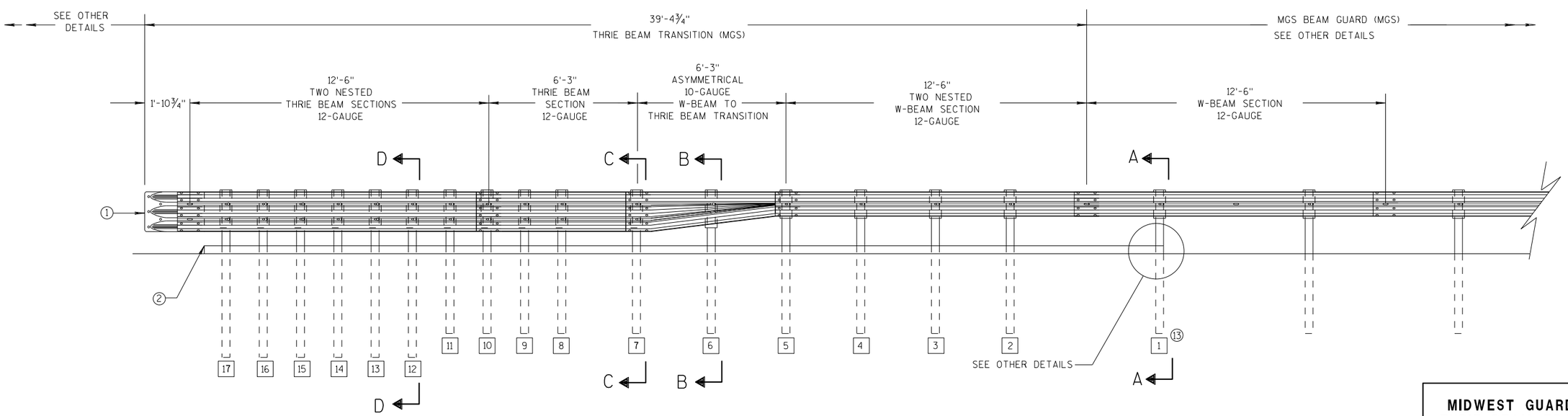

ELEVATION VIEW

MIDWEST GUARDRAIL SYSTEM THRIE BEAM TRANSITION

MIDWEST GUARDRAIL SYSTEM THRIE BEAM TRANSITION (MGS)

STATE OF WISCONSIN
DEPARTMENT OF TRANSPOR

6

S.D.D. 14 B 45-5a

GENERAL NOTES

(2) OPTIONAL CURB AND GUTTER OR DRAINAGE FEATURE SEE PLAN FOR INFORMATION.

(3) WHEN USING STEEL POSTS AND WOOD BLOCKOUTS INSTALL FOUR 10D GALVANIZED NAILS. INSTALL NAILS AT THE BACK CORNERS OF THE BLOCK AND BEND THE NAILS OVER THE FLANGE OF THE STEEL POST.

(4) TOLERANCE FOR TOP OF W-BEAM RAIL IS ± 1".

(13) STEEL OR WOOD POST IS ACCEPTABLE AT POST 1. SEE SDD 14B42

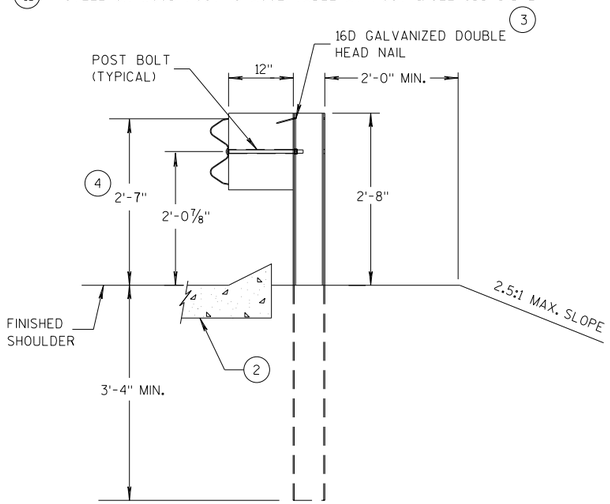

SECTION A-A (13)

POSTS 1-5

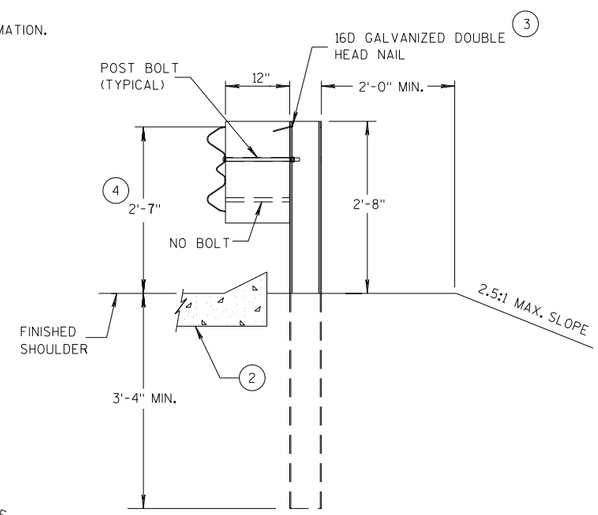

SECTION B-B

POST 6

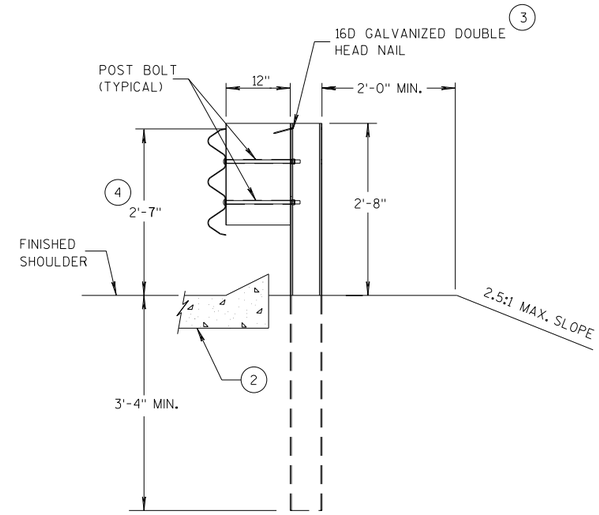

SECTION C-C

POSTS 7-11

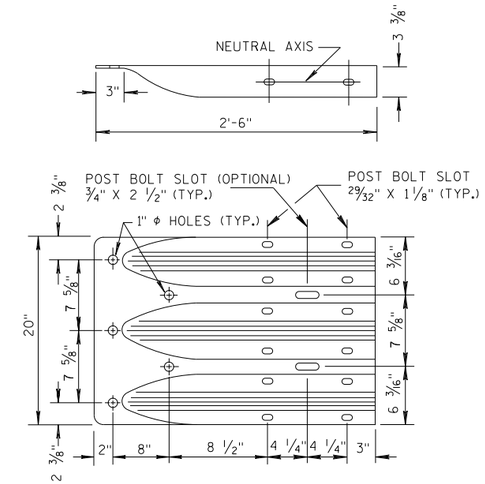

THRIE BEAM TERMINAL CONNECTOR

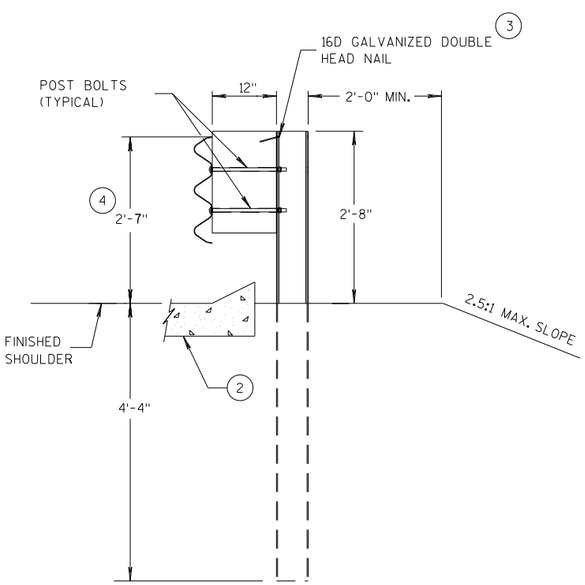

SECTION D-D

POSTS 12-17

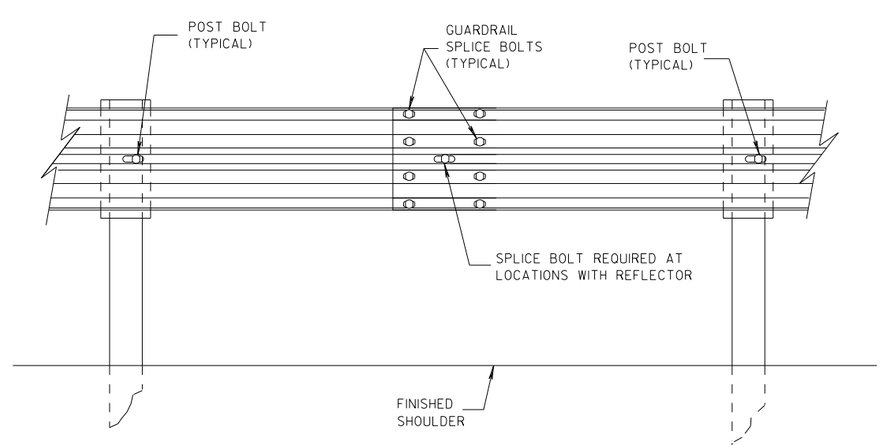

SPLICE DETAIL

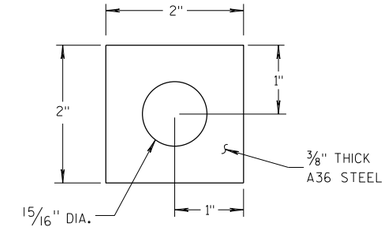

PLATE WASHER DETAIL

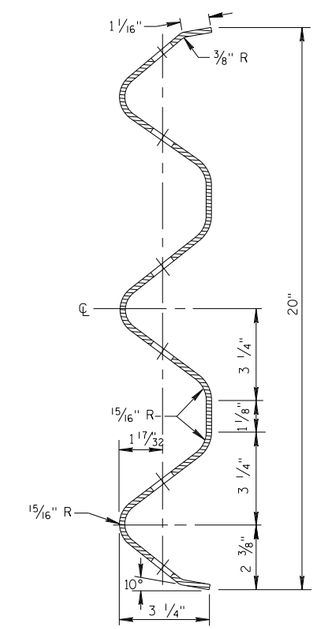

SECTION THRU THRIE BEAM RAIL ELEMENT

MIDWEST GUARDRAIL SYSTEM
THRIE BEAM TRANSITION (MGS)

STATE OF WISCONSIN
DEPARTMENT OF TRANSPOR

6

S.D.D. 14 B 45-5b

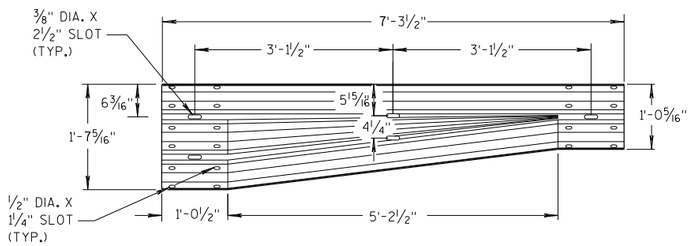

W-BEAM TO THRIE BEAM TRANSITION SECTION

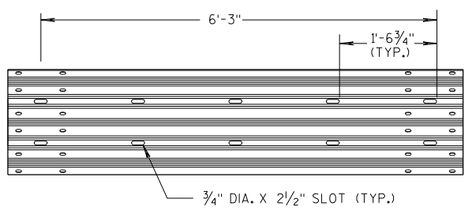

6'-3" THRIE BEAM SECTION

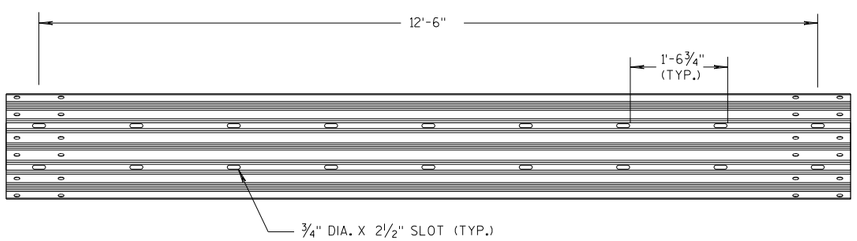

12'-6" THRIE BEAM SECTION

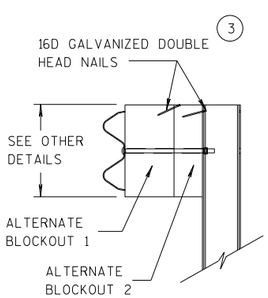

SIDE VIEW

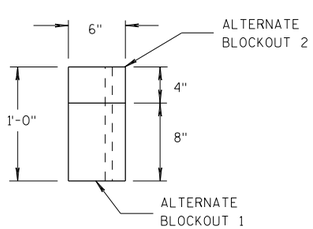

TOP VIEW

ALTERNATE WOOD BLOCKOUT DETAIL

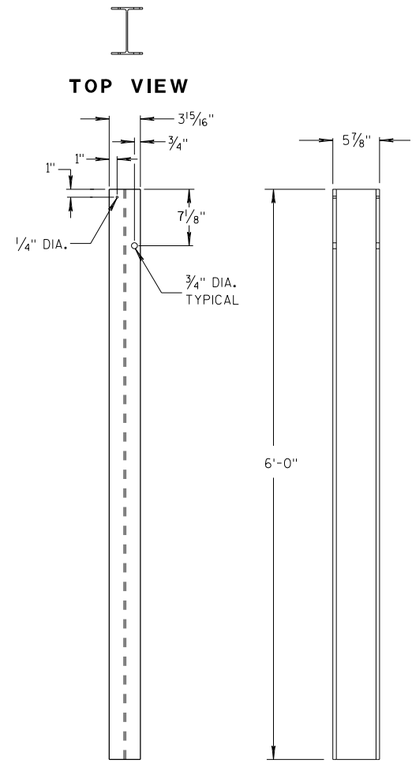

STEEL POSTS 1-5 (13)

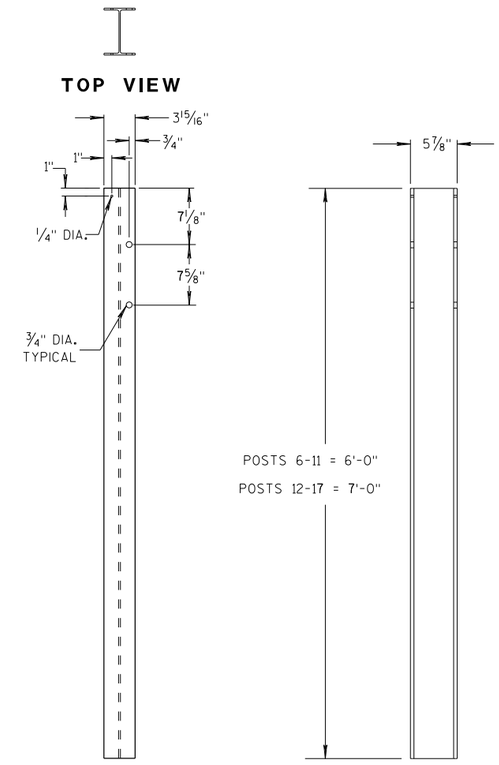

STEEL POSTS 6-17

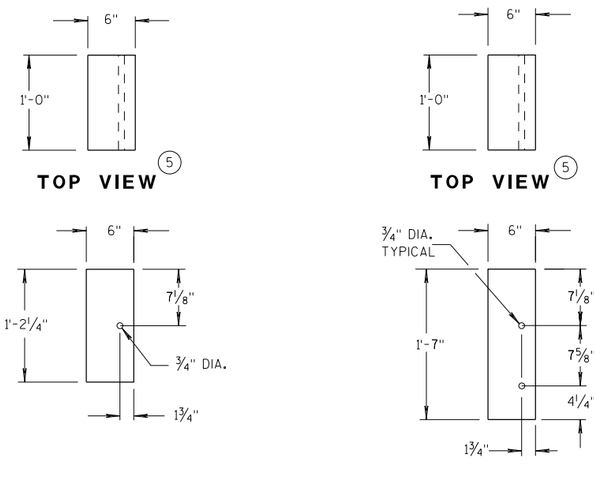

BLOCKOUT POSTS 1-5

BLOCKOUT POSTS 6-17

GENERAL NOTES

STEEL POSTS ARE W6X9 OR W6X8.5.

BOLT HOLES FOR POST ARE ON FRONT AND OF SIDE OF POST.

(3) WHEN USING STEEL POSTS AND WOOD BLOCKOUTS INSTALL FOUR 16D GALVANIZED NAILS. INSTALL NAILS AT THE BACK CORNERS OF THE BLOCK AND BEND THE NAILS OVER THE FLANGE OF THE STEEL POST.

(5) WOOD BLOCKS MAY BE CONSTRUCTED OUT OF 2 WOOD BLOCKS. SEE ALTERNATE WOOD BLOCK DETAIL.

(13) STEEL OR WOOD POST IS ACCEPTABLE AT POST 1. SEE SDD 14B42.

MIDWEST GUARDRAIL SYSTEM
THRIE BEAM TRANSITION (MGS)

STATE OF WISCONSIN
DEPARTMENT OF TRANSPOR

6

S.D.D. 14 B 45-5c

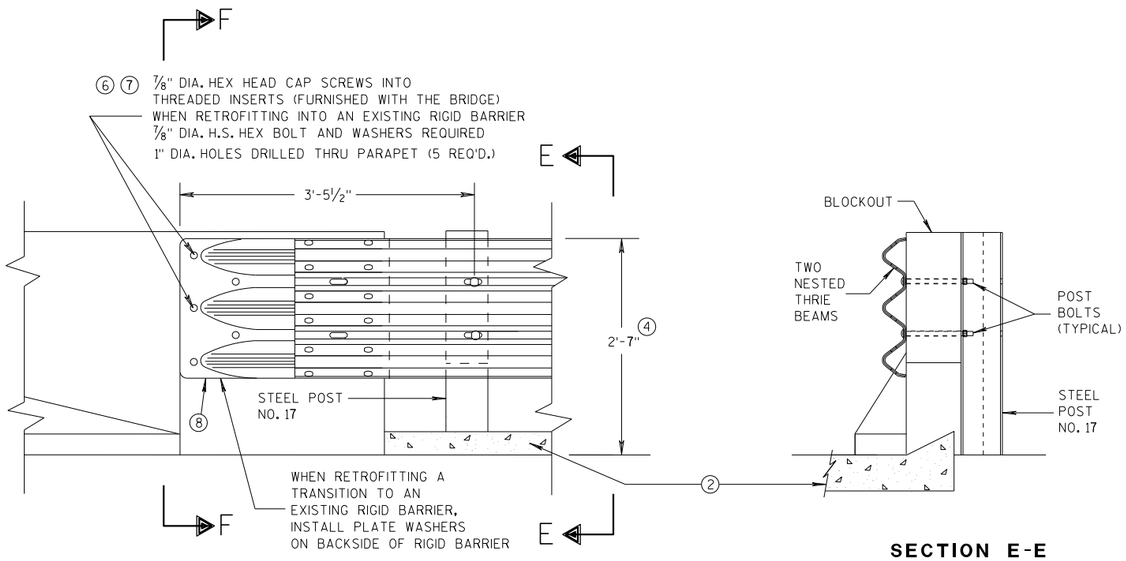

FRONT VIEW

SECTION E-E

THRIE BEAM CONNECTION TO BRIDGE PARAPET WITH SQUARE ENDS

GENERAL NOTES

THESE ARE TYPICAL CONNECTION DETAILS. ADJUST THE POSTION OF CONNECTIONS TO EXISTING BRIDGES TO FIT THE ACTUAL BRIDGE AND SITE DIMENSIONS.

② OPTIONAL CURB AND GUTTER OR DRAINAGE FEATURE SEE PLAN FOR INFORMATION.

④ TOLERANCE FOR TOP OF BEAM IS ± 1".

⑥ DRILLING BOLT HOLES THROUGH THE PARAPET, BOLTS, NUTS, WASHERS AND REPAIRING DAMAGED CONCRETE ARE INCIDENTAL TO THE CONTRACT.

⑦ BOLTS MAY BE A325 BOLTS OR A449 BOLTS. BOLT LENGTH AND THREADING LENGTH ARE TO ALLOW FOR A TIGHT CONNECTION BETWEEN RIGID BARRIER AND THRIE BEAM CONNECTION PLATE. CONTRACTOR IS TO FIELD VERIFY BOLT LENGTH AND THREAD LENGTH. ONE ROUND WASHER REQUIRED BETWEEN BOLT HEAD AND THRIE BEAM CONNECTOR PLATE. BOLTS THAT EXTEND THROUGH THE PARAPET AND OUT THE BACK FACE REQUIRE A HARDENED ROUND STEEL WASHER THAT IS 2" O.D. X 5/32" THICK AND ONE PLATE WASHER. REPAIR ANY DAMAGED CONCRETE FROM BOLT INSTALLATION.

⑧ THE RECESS FOR A W-BEAM CONNECTION, WHICH EXISTS ON SOME PARAPETS OF THIS TYPE, SHALL BE FILLED WITH A TREATED TIMBER BLOCKOUT. BLOCKOUT SIZE IS 1'-6" X 2'-0" X 3 1/2".

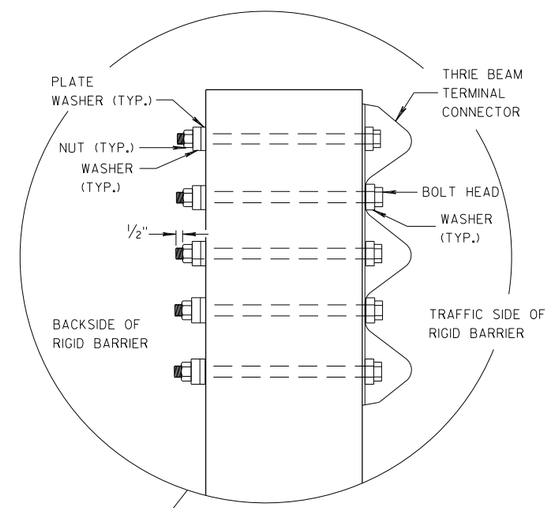

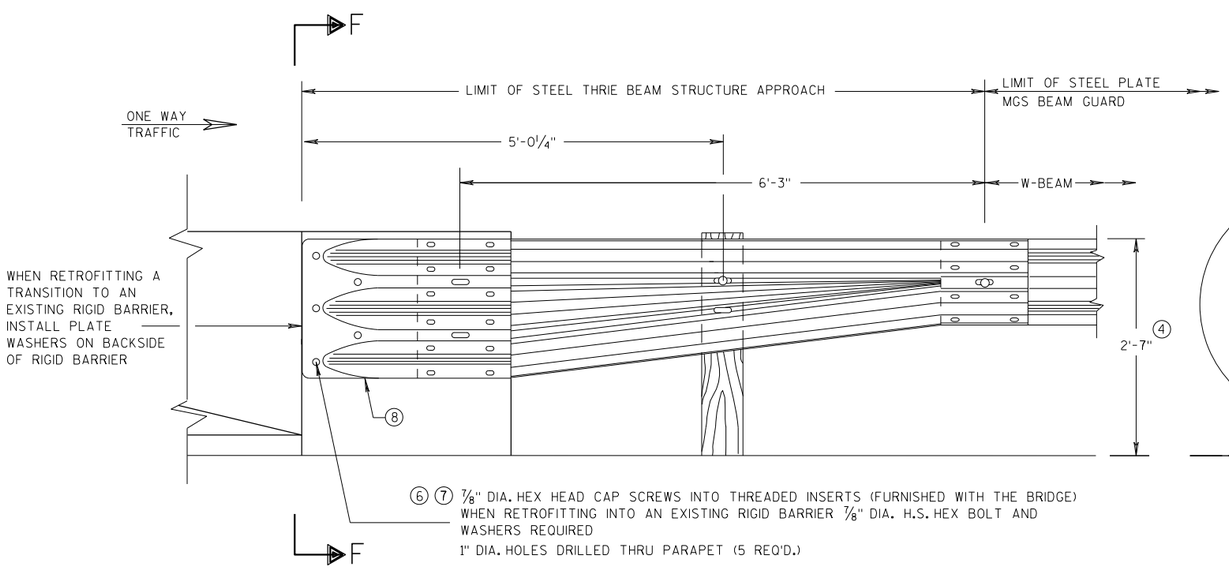

FRONT VIEW

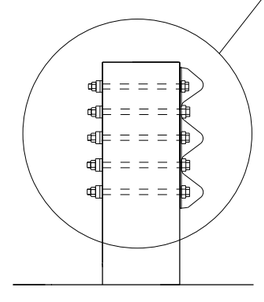

SECTION F-F

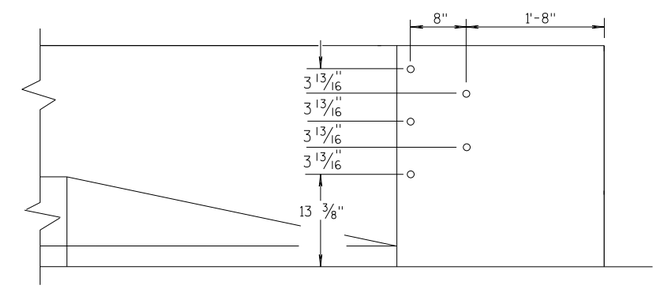

DRILL HOLE LOCATION

W BEAM TRANSITION AND CONNECTION TO BRIDGE PARAPETS WITH SQUARE ENDS

(USE ONLY ON THE TRAFFIC EXIT END OF ONE WAY BRIDGES)

MIDWEST GUARDRAIL SYSTEM THRIE BEAM TRANSITION (MGS)

STATE OF WISCONSIN
DEPARTMENT OF TRANSPORTATION

APPROVED
07/2018 — DATE
/S/ Rodney Taylor — ROADWAY STANDARDS D[illegible] UNIT SUPERVI[illegible]
FHWA

6

S.D.D. 14 B 45-5d

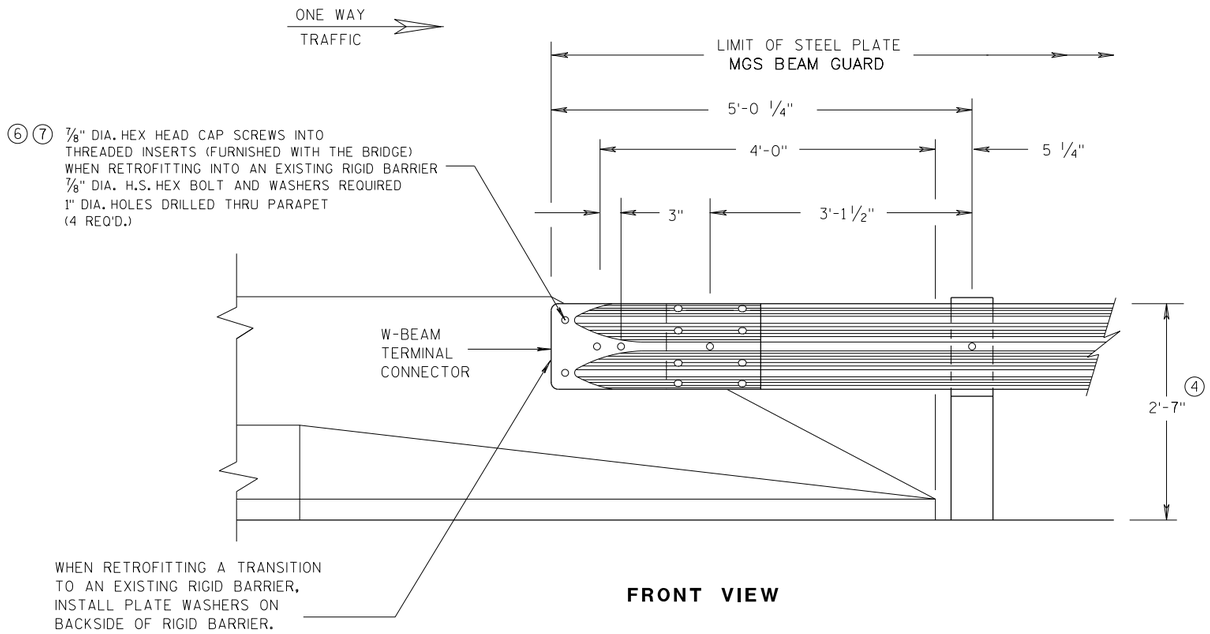

FRONT VIEW

W BEAM CONNECTION TO PARAPETS WITH SLOPED ENDS

(USE ONLY AT TRAFFIC EXIT END OF ONE WAY BRIDGE)

GENERAL NOTES

② OPTIONAL CURB AND GUTTER OR DRAINAGE FEATURE SEE PLAN FOR INFORMATION.

④ TOLERANCE FOR TOP OF BEAM IS ± 1".

⑥ DRILLING BOLT HOLES THROUGH THE PARAPET, BOLTS, NUTS, WASHERS AND REPAIRING DAMAGED CONCRETE ARE INCIDENTAL TO THE CONTRACT.

⑦ BOLTS MAY BE A325 BOLTS OR A449 BOLTS. BOLT LENGTH AND THREADING LENGTH ARE TO ALLOW FOR A TIGHT CONNECTION BETWEEN RIGID BARRIER AND THRIE BEAM CONNECTION PLATE. CONTRACTOR IS TO FIELD VERIFY BOLT LENGTH AND THREAD LENGTH. ONE ROUND WASHER REQUIRED BETWEEN BOLT HEAD AND THRIE BEAM CONNECTOR PLATE. BOLTS THAT EXTEND THROUGH THE PARAPET AND OUT THE BACK FACE REQUIRE A HARDENED ROUND STEEL WASHER THAT IS 2" O.D. X 5/32" THICK AND ONE PLATE WASHER. REPAIR ANY DAMAGED CONCRETE FROM BOLT INSTALLATION.

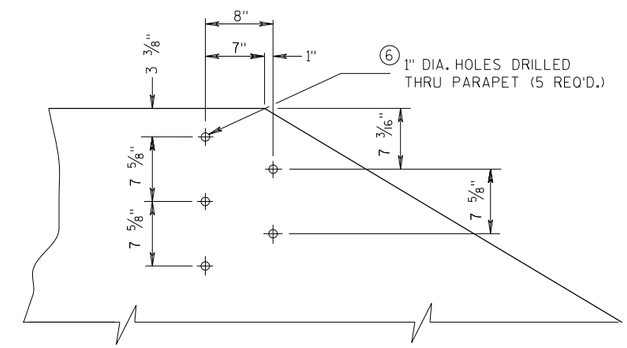

DRILL HOLE LOCATION AND PATTERN FOR THRIE BEAM CONNECTION

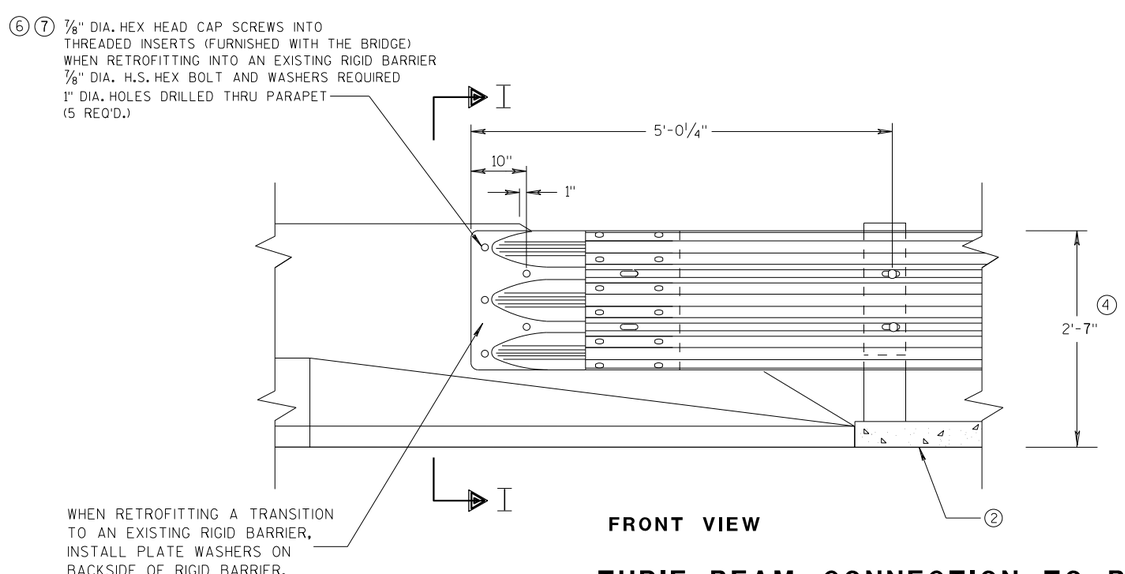

FRONT VIEW

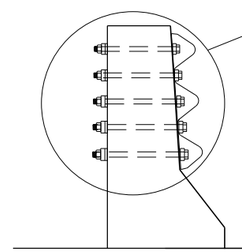

SECTION I-I

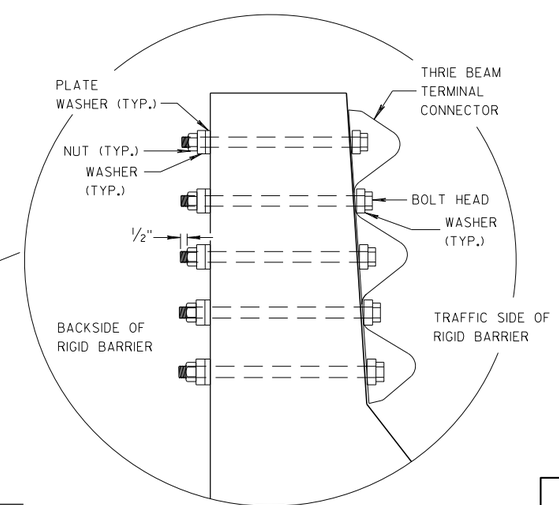

THRIE BEAM CONNECTION TO BRIDGE PARAPETS WITH SLOPED ENDS

MIDWEST GUARDRAIL SYSTEM THRIE BEAM TRANSITION (MGS)

STATE OF WISCONSIN
DEPARTMENT OF TRANSPORTATION

APPROVED
07/2018 — DATE
/S/ Rodney Taylor
ROADWAY STANDARDS DEVELOPMENT UNIT SUPERVISOR
FHWA

6

S.D.D. 14 B 45-5f

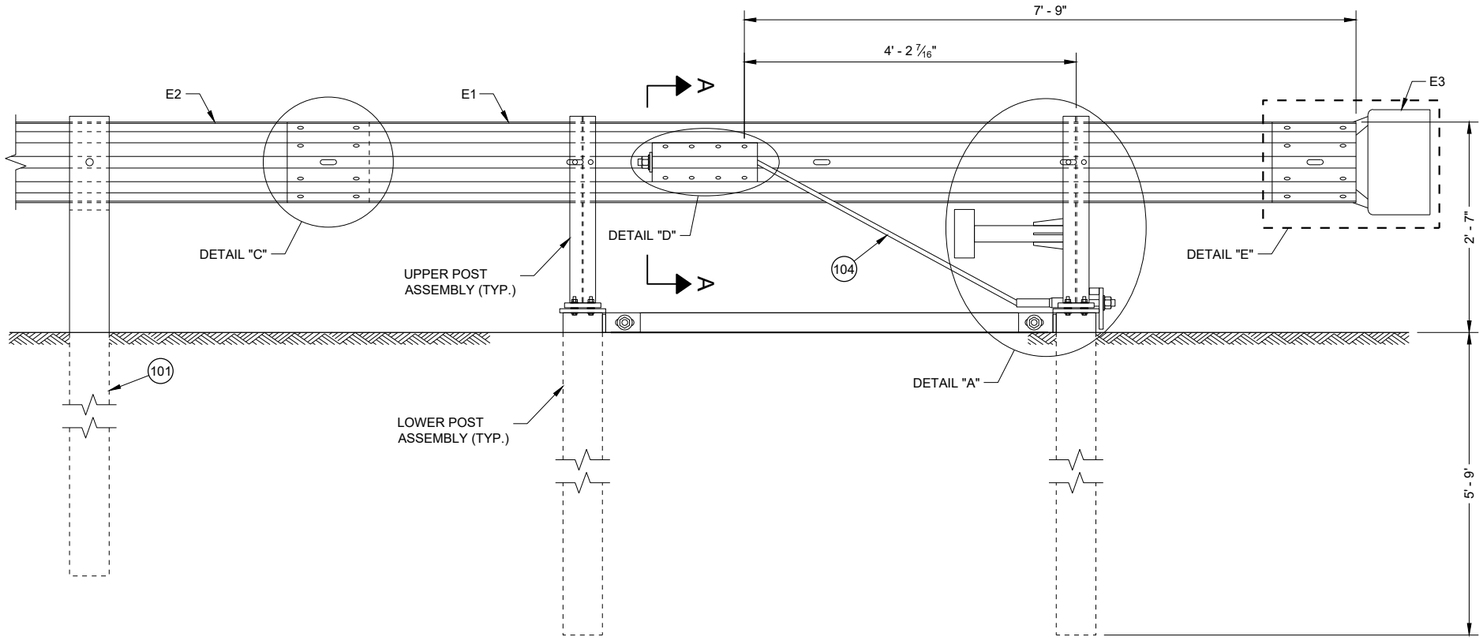

BACK VIEW
TYPE 2 TERMINAL

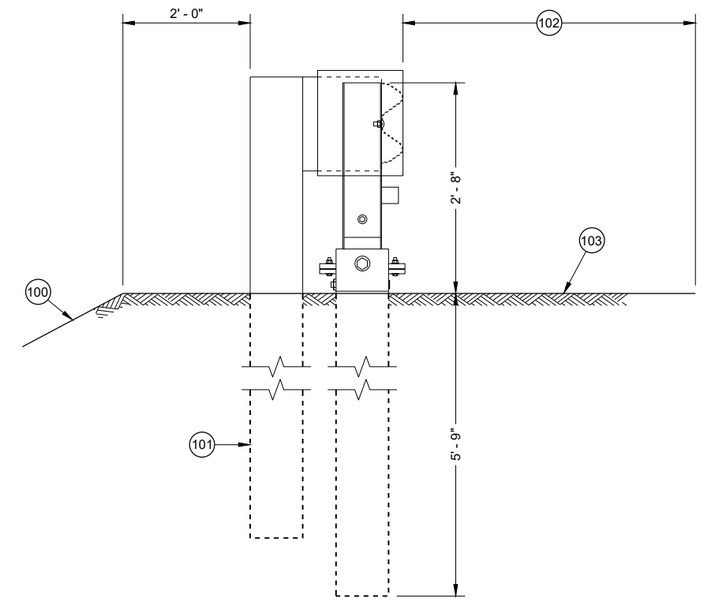

SIDE VIEW
TYPE 2 TERMINAL

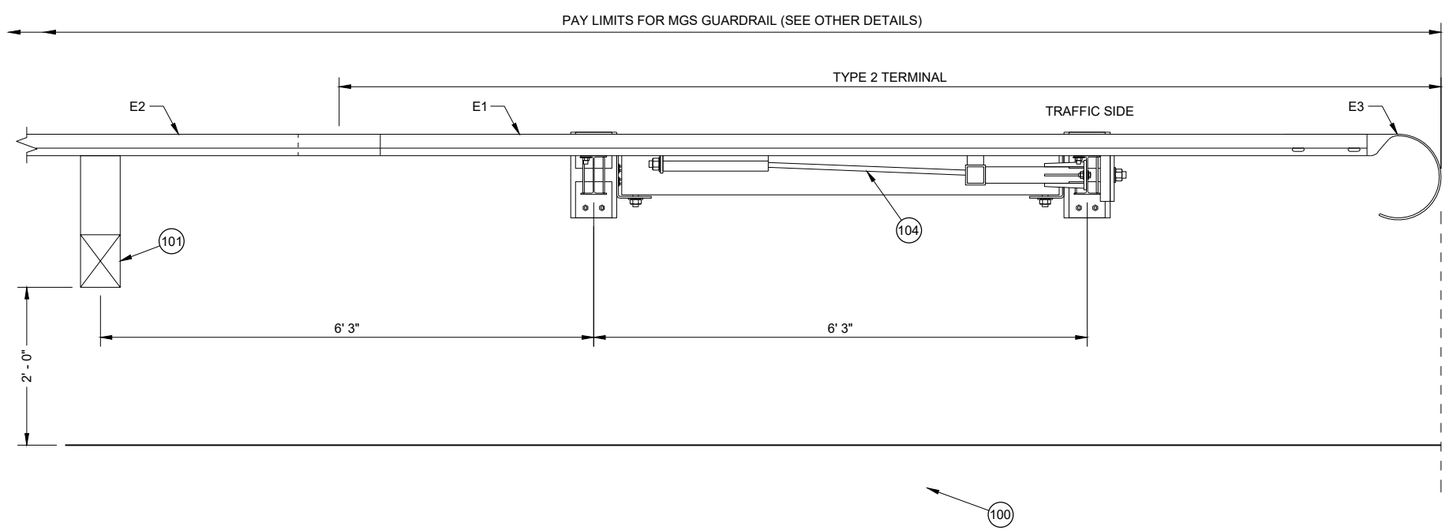

TOP VIEW
TYPE 2 TERMINAL

GENERAL NOTES

100 MAXIMUM SLOPE IS 2.5:1.

101 SEE SDD 14B42 FOR MORE INFORMATION.

102 SHOULDER

103 MAXIMUM SLOPE IS 10:1.

104 AFTER ASSEMBLY, CABLE IS TO BE TIGHTENED WITHOUT TWISTING THE CABLE.

MIDWEST GUARDRAIL SYSTEM (MGS) TYPE 2 TERMINAL

STATE OF WISCONSIN
DEPARTMENT OF TRANSPORTAT

6

SDD 14B47 - 03a

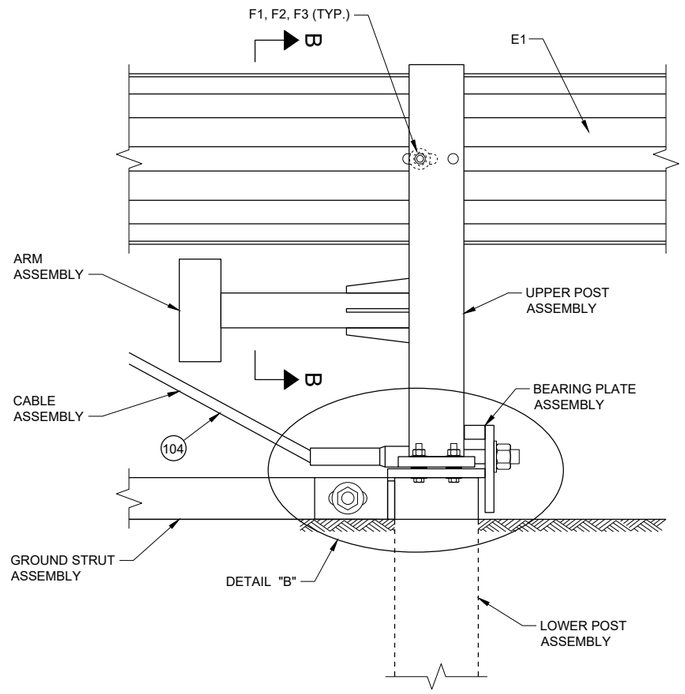

DETAIL "A"

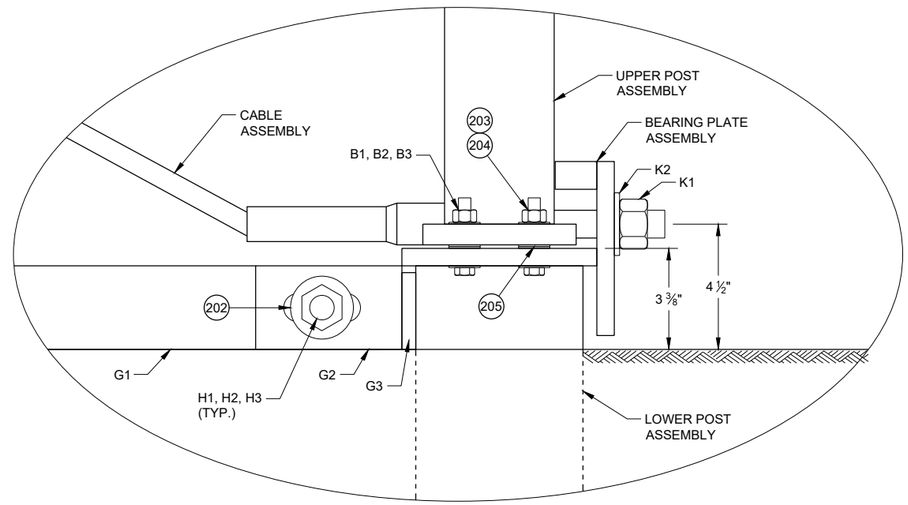

DETAIL "B"

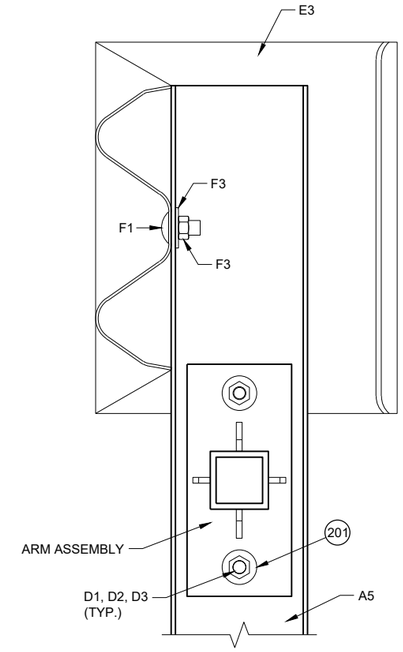

SECTION B - B

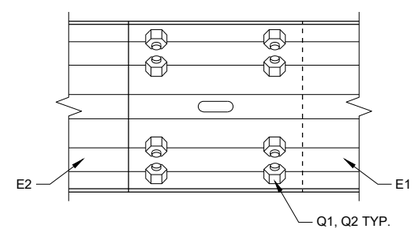

DETAIL "C"

GENERAL NOTES

200 INSTALL ONE WASHER UNDER BOLT HEAD AND RAIL AND ON WASHER BETWEEN NUT AND ANCHOR BRACKET ASSEMBLY.

201 INSTALL ONE WASHER UNDER BOLT HEAD AND UPPER POST ASSEMBLY AND ONE WASHER BETWEEN NUT AND ARM PLATE.

202 INSTALL ONE WASHER UNDER BOLT HEAD AND GROUND STRUT CONNECTOR AND ONE WASHER BETWEEN NUT AND GROUND STRUT CONNECTOR.

203 INSTALL ONE WASHER UNDER BOLT HEAD AND LOWER POST ASSEMBLY AND ONE WASHER BETWEEN NUT AND UPPER POST ASSEMBLY.

204 TORQUE VALUE IS BETWEEN 60 - 75 FT-LB.

205 TWO WASHERS BETWEEN UPPER AND LOWER POST ASSEMBLY.

206 INSTALL ONE WASHER BETWEEN NUT AND ANCHOR BRACKET ASSEMBLY.

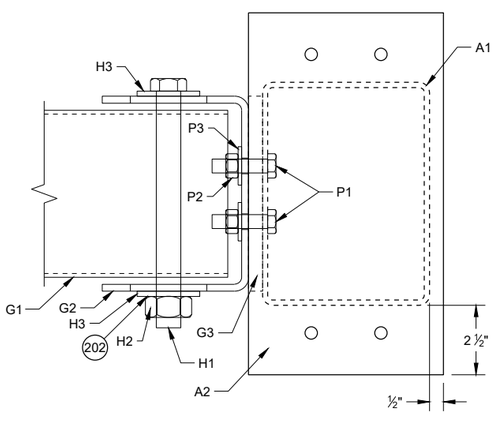

TOP VIEW

GROUND STRUT CONNECTION DETAIL

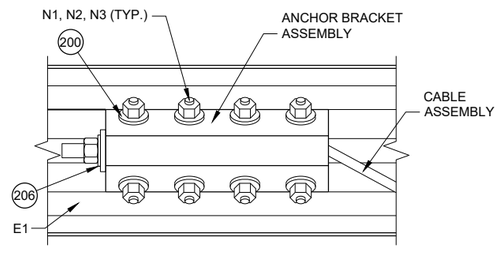

DETAIL "D"

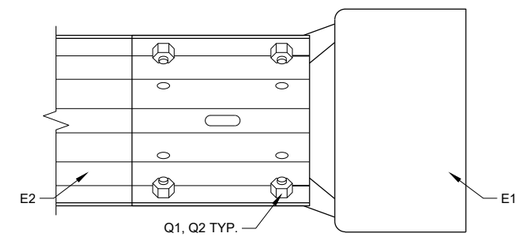

DETAIL "E"

MIDWEST GUARDRAIL SYSTEM (MGS) TYPE 2 TERMINAL

STATE OF WISCONSIN
DEPARTMENT OF TRANSPORTA

6

SDD 14B47 - 03b

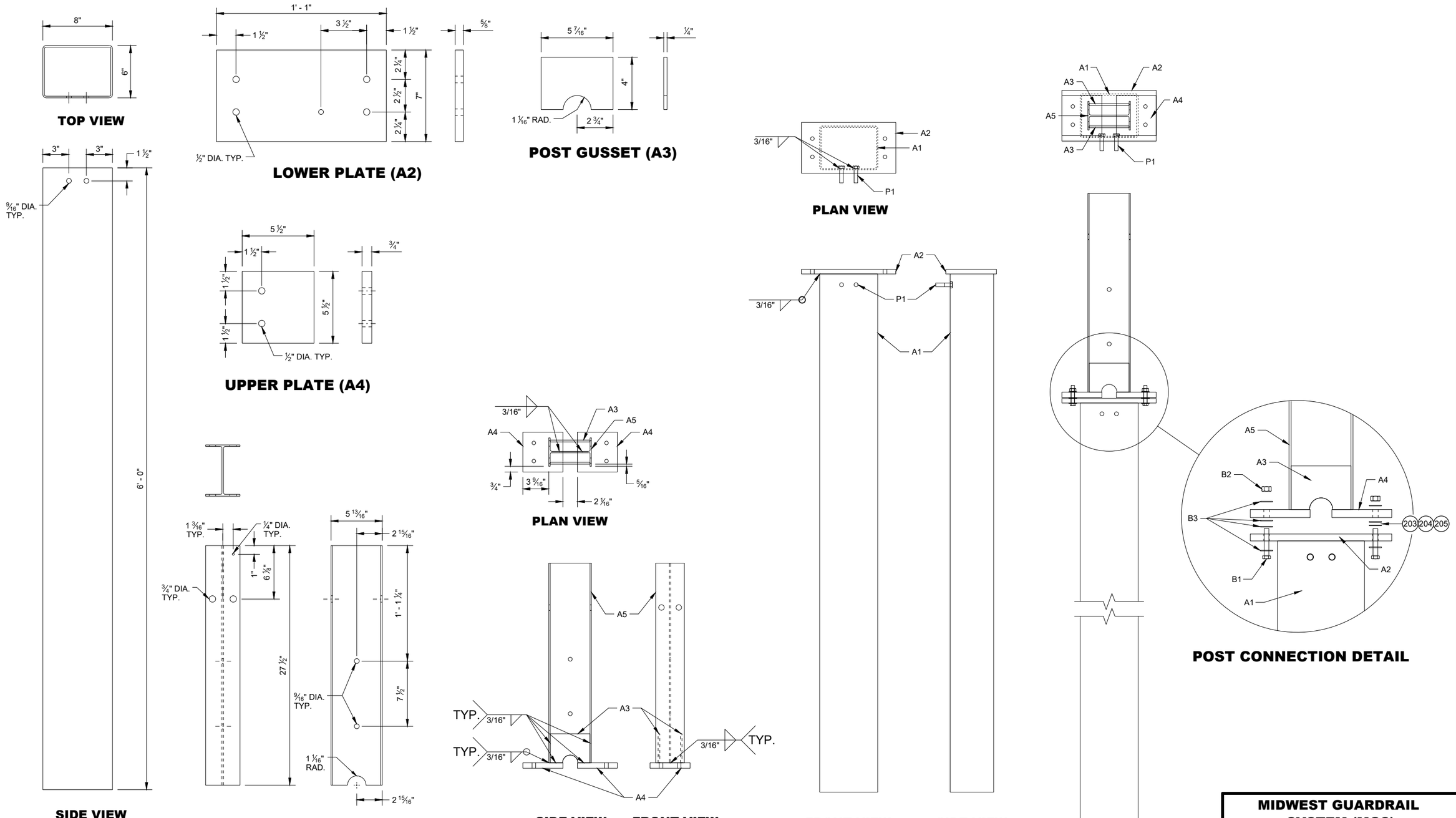

6

SDD 14B47 - 03c

MIDWEST GUARDRAIL SYSTEM (MGS) TYPE 2 TERMINAL

STATE OF WISCONSIN
DEPARTMENT OF TRANSPORTAT

6

SDD 14B47 - 03c

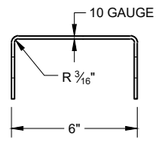

SIDE VIEW

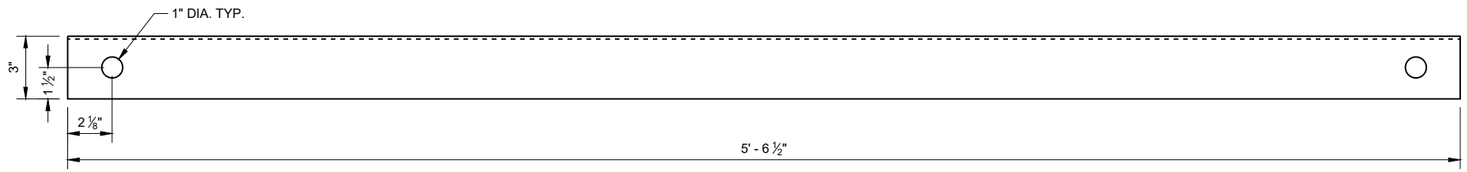

FRONT VIEW

GROUND STRUT CHANNEL (G1)

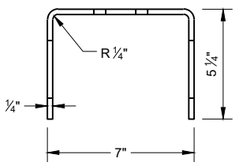

TOP VIEW

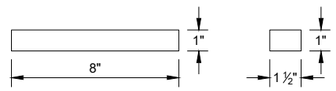

BEARING PLATE FLANGE (L2)

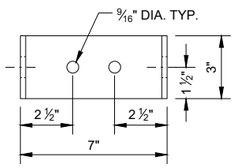

FRONT VIEW

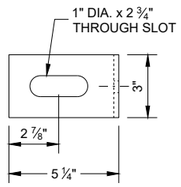

SIDE VIEW

GROUND STRUT CONNECTOR (G2)

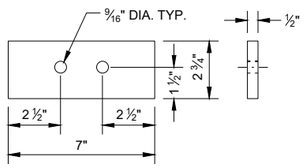

GROUND STRUT PLATE (G3)

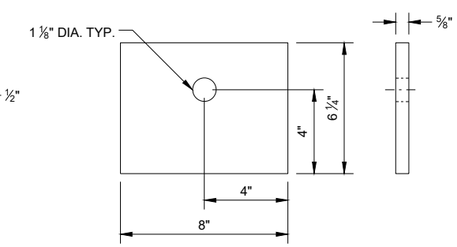

BEARING PLATE (L1)

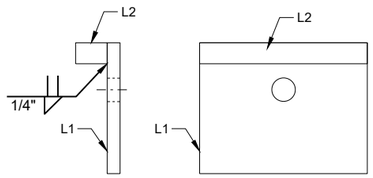

SIDE VIEW FRONT VIEW

BEARING PLATE ASSEMBLY

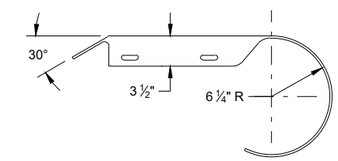

PLAN VIEW

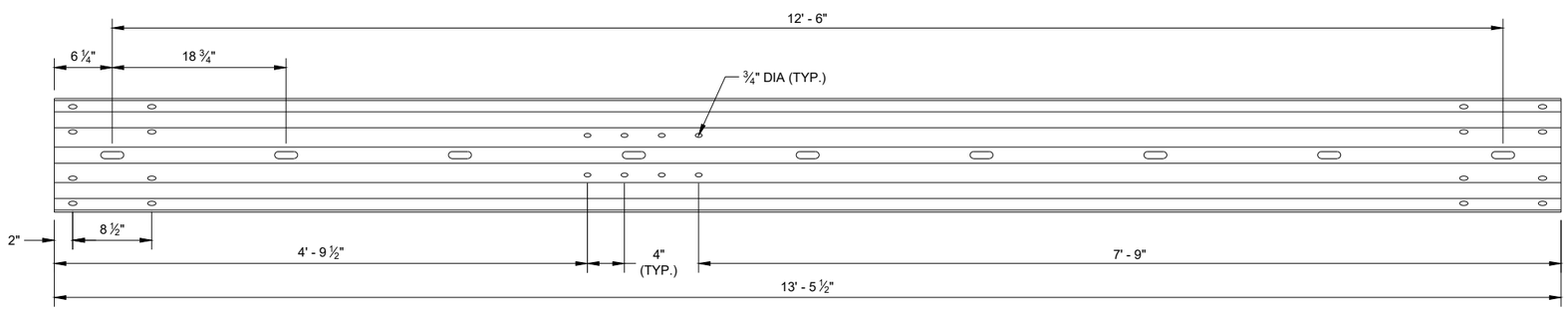

TYPE 2 GUARDRAIL (E1)

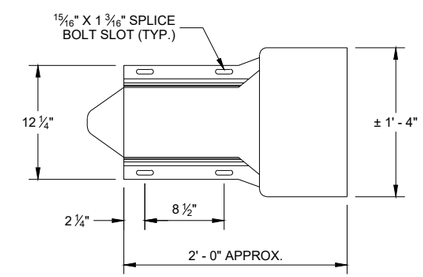

ELEVATION VIEW

ROUNDED BUFFER END (E3)

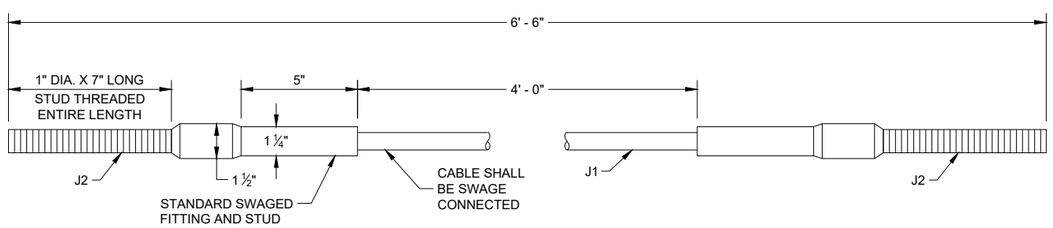

CABLE ASSEMBLY

MIDWEST GUARDRAIL SYSTEM (MGS) TYPE 2 TERMINAL

STATE OF WISCONSIN
DEPARTMENT OF TRANSPORTAT

6

SDD 14B47 - 03d

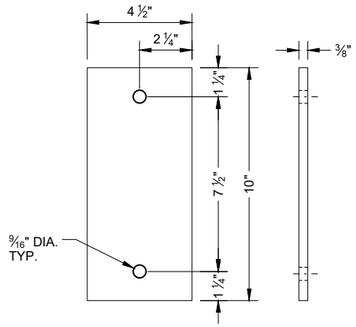

ARM PLATE (C1)

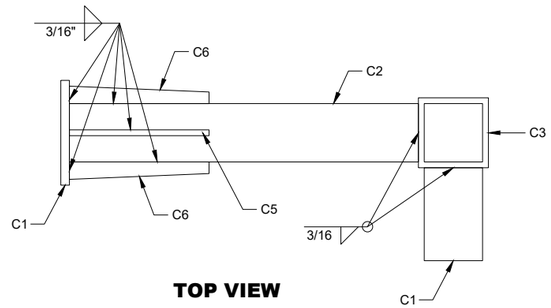

TOP VIEW
ARM ASSEMBLY

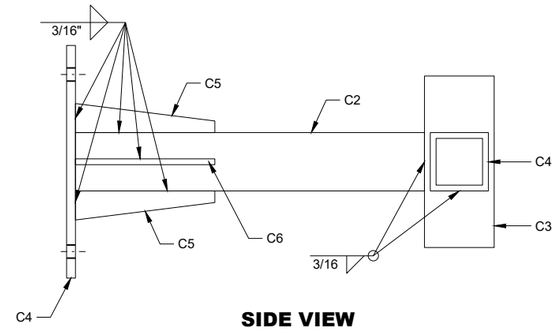

SIDE VIEW
ARM ASSEMBLY

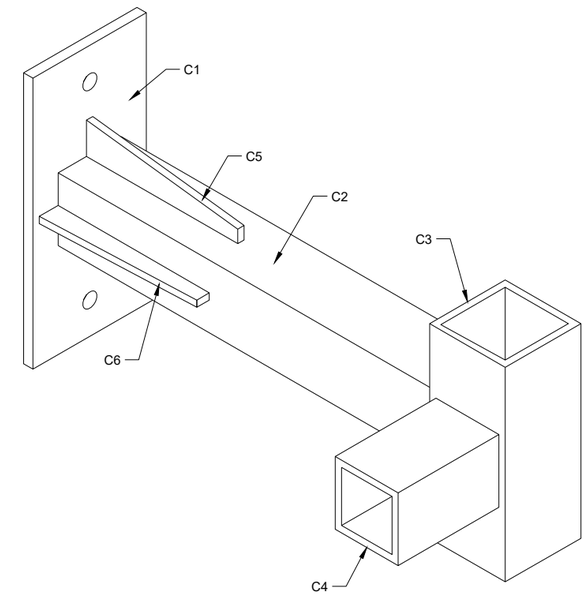

ISOMETRIC VIEW
ARM ASSEMBLY

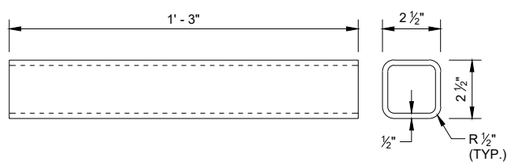

ARM TUBE 1 (C2)

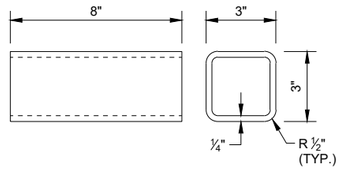

ARM TUBE 2 (C3)

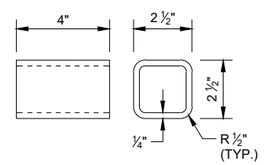

ARM TUBE 3 (C4)

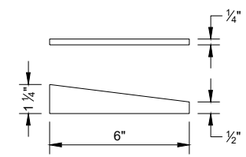

ARM GUSSET PLATE 1 (C5)

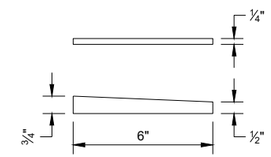

ARM GUSSET PLATE 2 (C6)

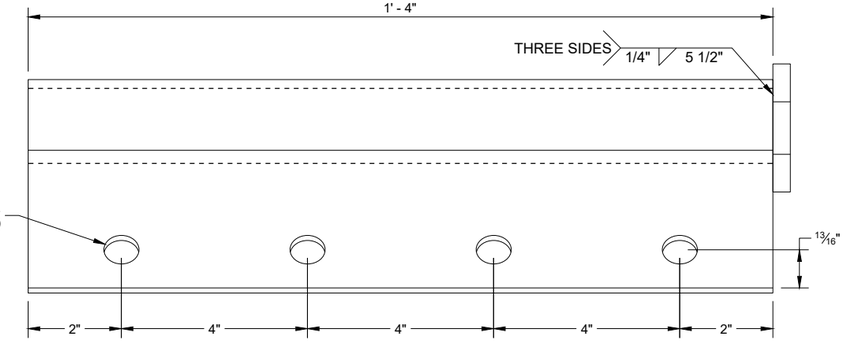

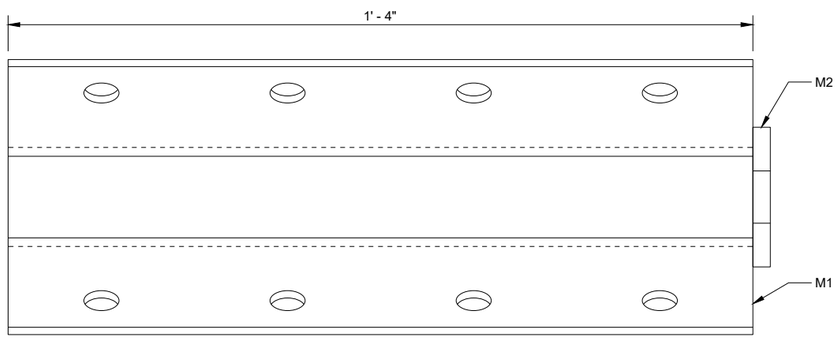

ANCHOR BRACKET (M1, M2)

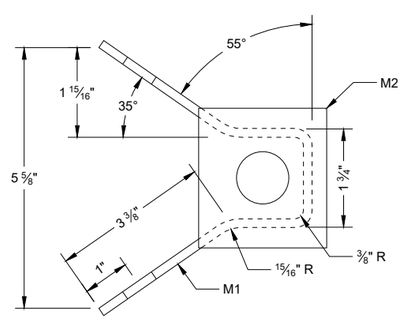

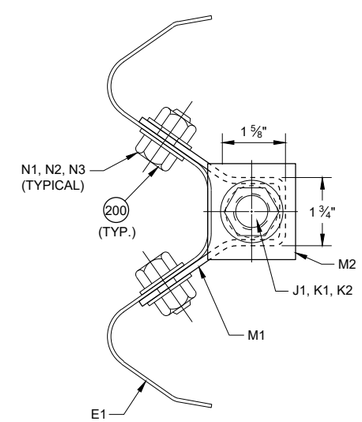

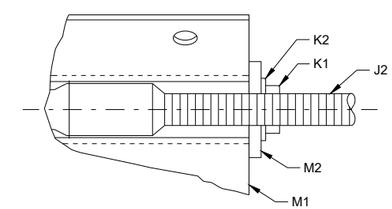

SECTION A - A

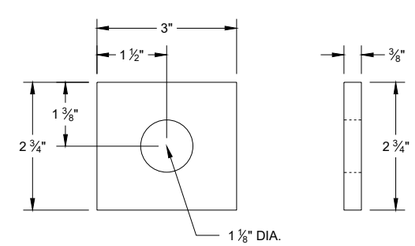

ANCHOR BRACKET BEARING PLATE (M2)

MIDWEST GUARDRAIL SYSTEM (MGS) TYPE 2 TERMINAL

STATE OF WISCONSIN
DEPARTMENT OF TRANSPORTA

6

SDD 14B47 - 03e

BILL OF MATERIALS - TYPE 2 TERMINAL (MGS)

PART	DESCRIPTION	MATERIALS SPECIFICATIONS	NOTES
A1	TYPE 2 FOUNDATION TUBE	AASHTO M111 / ASTM A123 ASTM A500 GRADE B OR ASTM A-501	TS 8" x 6" x 3/16"
A2	LOWER PLATE	AASHTO M111 / ASTM A123 ASTM A36 MIN. STRENGTH 36 KSI, OR ASTM A529 MAX. STRENGTH 50 KSI, OR ASTM A572 MAX STRENGTH 50 KSI, OR ASTM A709 MAX STRENGTH 50 KSI, OR ASTM A992 MAX STRENGTH 50 KSI	5/8" THICKNESS
A3	POST GUSSET	AASHTO M111 / ASTM A123 ASTM A36 MIN. STRENGTH 36 KSI, OR ASTM A529 MAX. STRENGTH 50 KSI, OR ASTM A572 MAX STRENGTH 50 KSI, OR ASTM A709 MAX STRENGTH 50 KSI, OR ASTM A992 MAX STRENGTH 50 KSI	1/4" THICKNESS
A4	UPPER PLATE	AASHTO M111 / ASTM A123 ASTM A36 MIN. STRENGTH 36 KSI, OR ASTM A529 MAX. STRENGTH 50 KSI, OR ASTM A572 MAX STRENGTH 50 KSI, OR ASTM A709 MAX STRENGTH 50 KSI, OR ASTM A992 MAX STRENGTH 50 KSI	3/4" THICKNESS
A5	TYPE 2 POST	AASHTO M111 / ASTM A123 ASTM A36 MIN. STRENGTH 36 KSI, OR ASTM A529 MAX. STRENGTH 50 KSI, OR ASTM A572 MAX STRENGTH 50 KSI, OR ASTM A709 MAX STRENGTH 50 KSI, OR ASTM A992 MAX STRENGTH 50 KSI	
B1	BREAKAWAY BOLT	HOT DIP AASHTO M232 CLASS / ASTM A153 CLASS C / ASTM F2329 C OR MECHANICAL GAL. TO AASHTO M298 CLASS 50 TYPE 1 / ASTM B695 CLASS 50 TYPE 1 UNC HEAVY HEX HEAD ASTM F3125 GRADE A325 TYPE 1 HEAVY HEX HEAD OR SAE J429 GRADE 5 HEAVY HEX HEAD / ASTM A449 TYPE 1 HEAVY HEX HEAD. BOLTS MAY BE FULLY THREADED . PROVIDE ENOUGH THREADING FOR PROPER TIGHTENING OF BOLT.	7/16" DIA.
B2	BREAKAWAY BOLT WASHER	HOT DIP AASHTO M232 CLASS / ASTM A153 CLASS C / ASTM F2329 C OR MECHANICAL GAL. TO AASHTO M298 CLASS 50 TYPE 1 / ASTM B695 CLASS 50 TYPE 1 F436 TYPE 1 (HARDEN WASHER ONLY)	7/16" DIA.
B3	BREAKAWAY BOLT NUT	HOT DIP AASHTO M232 CLASS / ASTM A153 CLASS C / ASTM F2329 C OR MECHANICAL GAL. TO AASHTO M298 CLASS 50 TYPE 1 / ASTM B695 CLASS 50 TYPE 1 UNC OVER TAP NUTS AS SPECIFIED IN AASHTO 291/ASTM A 563 HEAVY HEX HEAD ASTM A563DH OR SAE J995 GRADE 5	
C1	ARM ASSEMBLY PLATE	AASHTO M111 / ASTM A123 ASTM A36 MIN. STRENGTH 36 KSI, OR ASTM A529 MAX. STRENGTH 50 KSI, OR ASTM A572 MAX STRENGTH 50 KSI, OR ASTM A709 MAX STRENGTH 50 KSI, OR ASTM A992 MAX STRENGTH 50 KSI	3/8" THICKNESS
C2	ARM ASSEMBLY TUBE 1	AASHTO M111 / ASTM A123 ASTM A500 GRADE B OR ASTM A-501	TS 8" x 6" x 3/16"
C3	ARM ASSEMBLY TUBE 2	AASHTO M111 / ASTM A123 ASTM A500 GRADE B OR ASTM A-501	TS 3" x 3" x 1/4"
C4	ARM ASSEMBLY TUBE 3	AASHTO M111 / ASTM A123 ASTM A500 GRADE B OR ASTM A-501	TS 2 1/2" x 2 1/2" X 1/4"
C5	ARM ASSEMBLY GUSSET PLATE 1	AASHTO M111 / ASTM A123 ASTM A36 MIN. STRENGTH 36 KSI, OR ASTM A529 MAX. STRENGTH 50 KSI, OR ASTM A572 MAX STRENGTH 50 KSI, OR ASTM A709 MAX STRENGTH 50 KSI, OR ASTM A992 MAX STRENGTH 50 KSI	1/4" THICKNESS
C6	ARM ASSEMBLY GUSSET PLATE 2	AASHTO M111 / ASTM A123 ASTM A36 MIN. STRENGTH 36 KSI, OR ASTM A529 MAX. STRENGTH 50 KSI, OR ASTM A572 MAX STRENGTH 50 KSI, OR ASTM A709 MAX STRENGTH 50 KSI, OR ASTM A992 MAX STRENGTH 50 KSI	1/4" THICKNESS
D1	ARM ASSEMBLY BOLT	HOT DIP AASHTO M232 CLASS / ASTM A153 CLASS C / ASTM F2329 C OR MECHANICAL GAL. TO AASHTO M298 CLASS 50 TYPE 1 / ASTM B695 CLASS 50 TYPE 1 UNC HEAVY HEX HEAD ASTM A307 GRADE B OR SAE J429 GRADE 2 OR ASTM F1554 GRADE 36	1/2" DIA.
D2	ARM ASSEMBLY WASHER	HOT DIP AASHTO M232 CLASS / ASTM A153 CLASS C / ASTM F2329 C OR MECHANICAL GAL. TO AASHTO M298 CLASS 50 TYPE 1 / ASTM B695 CLASS 50 TYPE 1 F436 TYPE 1 (HARDEN WASHER ONLY)	1/2" DIA.
D3	ARM ASSEMBLY NUT	HOT DIP AASHTO M232 CLASS / ASTM A153 CLASS C / ASTM F2329 C OR MECHANICAL GAL. TO AASHTO M298 CLASS 50 TYPE 1 / ASTM B695 CLASS 50 TYPE 1 UNC OVER TAP NUTS AS SPECIFIED IN AASHTO 291 / ASTM A 563 HEAVY HEX HEAD ASTM A563DH OR SAE J995 GRADE 5	1/2" DIA.
E1	TYPE 2 GUARD RAIL	AASHTO M180 CLASS A TYPE 2 12 GAUGE APPROVED PRODUCER	
E2	BEAM GUARD RAIL	AASHTO M180 CLASS A TYPE 2 12 GAUGE APPROVED PRODUCER	
E3	BEAM GUARD ROUNDED BUFFER END	AASHTO M180 CLASS A TYPE 2 12 GAUGE APPROVED PRODUCER	
F1	POST BOLT	HOT DIP AASHTO M232 CLASS / ASTM A153 CLASS C / ASTM F2329 C OR MECHANICAL GAL. TO AASHTO M298 CLASS 50 TYPE 1 / ASTM B695 CLASS 50 TYPE 1 UNC UNC HEAVY HEX HEAD ASTM A307 GRADE B OR SAE J429 GRADE 2 OR ASTM F1554 GRADE 36	5/8" DIA.
F2	POST BOLT WASHER	HOT DIP AASHTO M232 CLASS / ASTM A153 CLASS C / ASTM F2329 C OR MECHANICAL GAL. TO AASHTO M298 CLASS 50 TYPE 1 / ASTM B695 CLASS 50 TYPE 1 F436 TYPE 1 (HARDEN WASHER ONLY)	5/8" DIA.
F3	POST BOLT NUT	HOT DIP AASHTO M232 CLASS / ASTM A153 CLASS C / ASTM F2329 C OR MECHANICAL GAL. TO AASHTO M298 CLASS 50 TYPE 1 / ASTM B695 CLASS 50 TYPE 1 UNC OVER TAP NUTS AS SPECIFIED IN AASHTO 291/ASTM A 563 AASHTO M180 RECESSED HEAVY HEX HEAD ASTM A563DH OR SAE J995 GRADE 5	
G1	GROUND STRUT CHANNEL	AASHTO M111 / ASTM A123 ASTM A36 MIN. STRENGTH 36 KSI, OR ASTM A529 MAX. STRENGTH 50 KSI, OR ASTM A572 MAX STRENGTH 50 KSI, OR ASTM A709 MAX STRENGTH 50 KSI, OR ASTM A992 MAX STRENGTH 50 KSI	1/2" x 11 3/4" x 10 GAUGE
G2	GROUND STRUT CONNECTOR	AASHTO M111 / ASTM A123 ASTM A36 MIN. STRENGTH 36 KSI, OR ASTM A529 MAX. STRENGTH 50 KSI, OR ASTM A572 MAX STRENGTH 50 KSI, OR ASTM A709 MAX STRENGTH 50 KSI, OR ASTM A992 MAX STRENGTH 50 KSI	1/4" THICKNESS
G3	GROUND STRUT PLATE	AASHTO M111 / ASTM A123 ASTM A36 MIN. STRENGTH 36 KSI, OR ASTM A529 MAX. STRENGTH 50 KSI, OR ASTM A572 MAX STRENGTH 50 KSI, OR ASTM A709 MAX STRENGTH 50 KSI, OR ASTM A992 MAX STRENGTH 50 KSI	1/2" THICKNESS

6

6

SDD 14B47 - 03f

SDD 14B47 - 03f

MIDWEST GUARDRAIL SYSTEM (MGS) TYPE 2 TERMINAL

STATE OF WISCONSIN
DEPARTMENT OF TRANSPORTAT

BILL OF MATERIALS - TYPE 2 TERMINAL (MGS)

PART	DESCRIPTION	MATERIALS SPECIFICATIONS	NOTES
H1	GROUND STRUT BOLT	HOT DIP AASHTO M232 CLASS / ASTM A153 CLASS C / ASTM F2329 C OR MECHANICAL GAL. TO AASHTO M298 CLASS 50 TYPE 1 / ASTM B695 CLASS 50 TYPE 1 UNC HEAVY HEX HEAD ASTM A307 GRADE B OR SAE J429 GRADE 2 OR ASTM F1554 GRADE 36	7/8" DIA.
H2	GROUND STRUT BOLT WASHER	HOT DIP AASHTO M232 CLASS / ASTM A153 CLASS C / ASTM F2329 C OR MECHANICAL GAL. TO AASHTO M298 CLASS 50 TYPE 1/ ASTM B695 CLASS 50 TYPE 1 F436 TYPE 1 (HARDEN WASHER ONLY)	7/8" DIA.
H3	GROUND STRUT BOLT NUT	HOT DIP AASHTO M232 CLASS / ASTM A153 CLASS C / ASTM F2329 C OR MECHANICAL GAL. TO AASHTO M298 CLASS 50 TYPE 1 / ASTM B695 CLASS 50 TYPE 1 UNC HEAVY HEX HEAD 5/8" ASTM A307 GRADE B OR SAE J429 GRADE 2 OR ASTM F1554 GRADE 36	
J1	BCT CABLE	AASHTO M30 / ASTM A741 6 x 19 INDEPENDENT WIRE CORE (IWRC) IMPROVED PLOW STEEL (IPS), 6 x 19 INDEPENDENT WIRE CORE (IWRC) IMPROVED PLOW STEEL (IPS) TYPE II OR IIC, CLASS C ZINC COATED MIN. BREAKING STRENGTH OF 42.7 KIPS	3/4" DIA.
J2	BCT CABLE	UNC 1" ASTM A576 GRADE 1035 SWAGE FITTINGS ARE TO BE FACTORY SWEDGED. MIN BREAKING STRENGTH OF 42.7 KIPS ASME B30.26 "FORGED, CAST, OR DIE STAMPED WITH THE FOLLOWING IN TO CONNECTION: NAME OF MANUFACTURE OR TRADEMARK OF CONNECTION'S MANUFACTURER, SIZE OR RATED LOAD, GRADE FOR ALLOY EYEBOLTS."	
K1	CABLE ASSEMBLY NUT	HOT DIP AASHTO M232 CLASS / ASTM A153 CLASS C / ASTM F2329 C OR MECHANICAL GAL. TO AASHTO M298 CLASS 50 TYPE 1 / ASTM B695 CLASS 50 TYPE 1 UNC OVER TAP NUTS AS SPECIFIED IN AASHTO 291 / ASTM A 563 HEAVY HEX HEAD ASTM A563DH OR SAE J995 GRADE 5	1" DIA.
K2	CABLE ASSEMBLY WASHER	HOT DIP AASHTO M232 CLASS / ASTM A153 CLASS C / ASTM F2329 C OR MECHANICAL GAL. TO AASHTO M298 CLASS 50 TYPE 1	1" DIA.
L1	BEARING PLATE	AASHTO M111 / ASTM A123 ASTM A36 MIN. STRENGTH 36 KSI, OR ASTM A529 MAX. STRENGTH 50 KSI, OR ASTM A572 MAX STRENGTH 50 KSI, OR ASTM A709 MAX STRENGTH 50 KSI, OR ASTM A992 MAX STRENGTH 50 KSI	5/8" THICKNESS
L2	BEARING PLATE FLANGE	AASHTO M111 / ASTM A123 ASTM A36 MIN. STRENGTH 36 KSI, OR ASTM A529 MAX. STRENGTH 50 KSI, OR ASTM A572 MAX STRENGTH 50 KSI, OR ASTM A709 MAX STRENGTH 50 KSI, OR ASTM A992 MAX STRENGTH 50 KSI	1" THICKNESS
M1	BEAM GUARD ANCHOR BRACKET	AASHTO M111 / ASTM A123 ASTM A36 MIN. STRENGTH 36 KSI, OR ASTM A529 MAX. STRENGTH 50 KSI, OR ASTM A572 MAX STRENGTH 50 KSI, OR ASTM A709 MAX STRENGTH 50 KSI, OR ASTM A992 MAX STRENGTH 50 KSI	
M2	BEAM GUARD ANCHOR END PLATE	AASHTO M111 / ASTM A123 ASTM A36 MIN. STRENGTH 36 KSI, OR ASTM A529 MAX. STRENGTH 50 KSI, OR ASTM A572 MAX STRENGTH 50 KSI, OR ASTM A709 MAX STRENGTH 50 KSI, OR ASTM A992 MAX STRENGTH 50 KSI	3/8" THICKNESS
N1	ANCHOR BRACKET BOLT	HOT DIP AASHTO M232 CLASS / ASTM A153 CLASS C / ASTM F2329 C OR MECHANICAL GAL. TO AASHTO M298 CLASS 50 TYPE 1 / ASTM B695 CLASS 50 TYPE 1 UNC AASHTO M180 HEAD ASTM A307 GRADE B OR SAE J429 GRADE 2 OR ASTM F1554 GRADE 36	5/8" DIA.
N2	ANCHOR BRACKET BOLT WASHER	HOT DIP AASHTO M232 CLASS / ASTM A153 CLASS C / ASTM F2329 C OR MECHANICAL GAL. TO AASHTO M298 CLASS 50 TYPE 1/ ASTM B695 CLASS 50 TYPE 1 F436 TYPE 1 (HARDEN WASHER ONLY)	5/8" DIA.
N3	ANCHOR BRACKET BOLT NUT	HOT DIP AASHTO M232 CLASS / ASTM A153 CLASS C / ASTM F2329 C OR MECHANICAL GAL. TO AASHTO M298 CLASS 50 TYPE 1 / ASTM B695 CLASS 50 TYPE 1 UNC OVER TAP NUTS AS SPECIFIED IN AASHTO 291 /ASTM A 563 HEAVY HEX HEAD ASTM A563DH OR SAE J995 GRADE 5	
P1	FOUNDATION TUBE BOLT	HOT DIP AASHTO M232 CLASS / ASTM A153 CLASS C / ASTM F2329 C OR MECHANICAL GAL. TO AASHTO M298 CLASS 50 TYPE 1 / ASTM B695 CLASS 50 TYPE 1 UNC OVER TAP NUTS AS SPECIFIED IN AASHTO 291 /ASTM A 563 HEAVY HEX HEAD ASTM A563DH OR SAE J995 GRADE 5	1/2" DIA.
P2	FOUNDATION TUBE WASHER	HOT DIP AASHTO M232 CLASS / ASTM A153 CLASS C / ASTM F2329 C OR MECHANICAL GAL. TO AASHTO M298 CLASS 50 TYPE 1/ ASTM B695 CLASS 50 TYPE 1 7/8" ASTM F844 TYPE 1 (HARDENED WASHER ONLY)	1/2" DIA.
P3	FOUNDATION TUBE NUT	HOT DIP AASHTO M232 CLASS / ASTM A153 CLASS C / ASTM F2329 C OR MECHANICAL GAL. TO AASHTO M298 CLASS 50 TYPE 1/ ASTM B695 CLASS 50 TYPE 1 UNC OVER TAP NUTS AS SPECIFIED IN AASHTO 291 / ASTM A 563 AASHTO M180 RECESSED HEAVY HEX HEAD ASTM A563DH OR SAE J995 GRADE 5	
Q1	SPLICE BOLT	HOT DIP AASHTO M232 CLASS / ASTM A153 CLASS C / ASTM F2329 C OR MECHANICAL GAL. TO AASHTO M298 CLASS 50 TYPE 1 / ASTM B695 CLASS 50 TYPE 1 UNC AASHTO M180 HEAD ASTM A307 GRADE B OR SAE J429 GRADE 2 OR ASTM F1554 GRADE 36	
Q2	SPLICE NUT	HOT DIP AASHTO M232 CLASS / ASTM A153 CLASS C / ASTM F2329 C OR MECHANICAL GAL. TO AASHTO M298 CLASS 50 TYPE 1 / ASTM B695 CLASS 50 TYPE 1 UNC OVER TAP NUTS AS SPECIFIED IN AASHTO 291 / ASTM A 563 AASHTO M180 RECESSED HEAVY HEX HEAD ASTM A563DH OR SAE J995 GRADE 5	5/8" DIA.

6

SDD 14B47 - 03g

MIDWEST GUARDRAIL SYSTEM (MGS) TYPE 2 TERMINAL

STATE OF WISCONSIN
DEPARTMENT OF TRANSPORTATION

APPROVED
August 2021 — DATE
/S/ Rodney Taylor — ROADWAY STANDARDS DEVE ENGINEER
FHWA

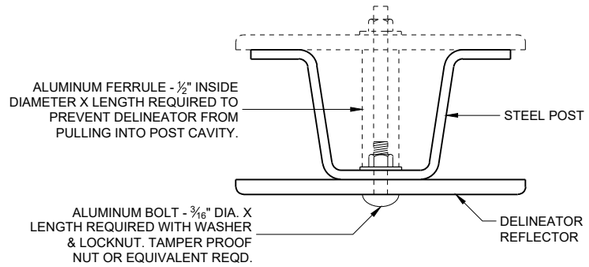

MOUNTING DETAIL FOR DELINEATOR REFLECTOR

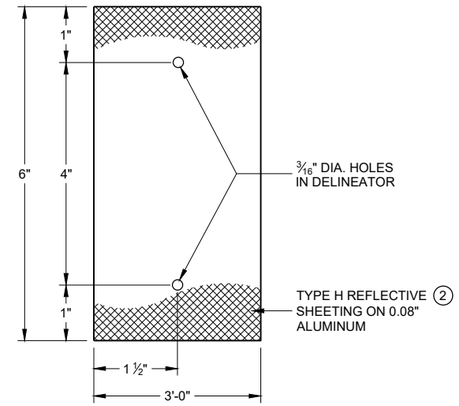

DETAIL "A" 3" X 6" DELINEATOR REFLECTOR

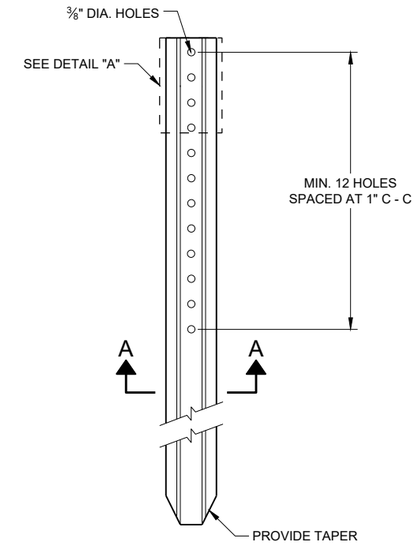

DELINEATOR POST

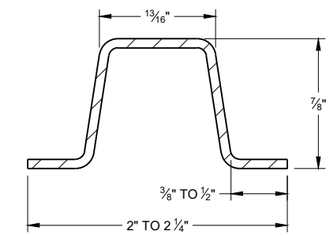

SECTION A - A

WEIGHT 1.12 LBS PER FT. \ 0.1 LB.

REFLECTOR SPACING TABLE

REFLECTOR SPACING	LOCATION
* 100' C-C	RAMPS
400' C-C	MAINLINE

* START AT BEGINNING OF RAMP TAPER AND END AT END OF RAMP TAPER

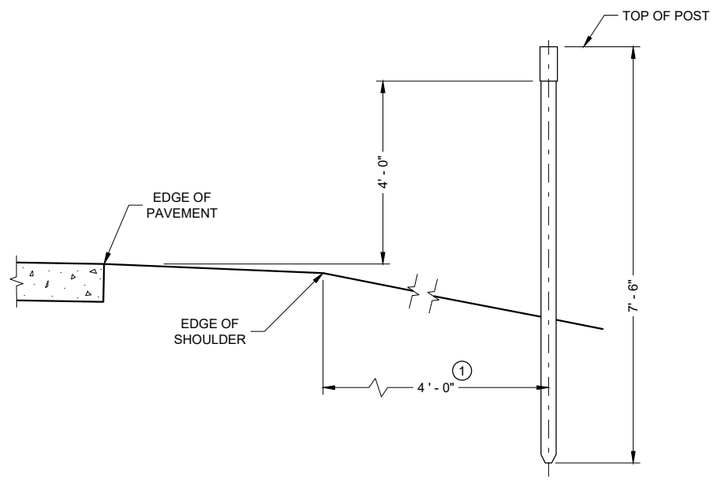

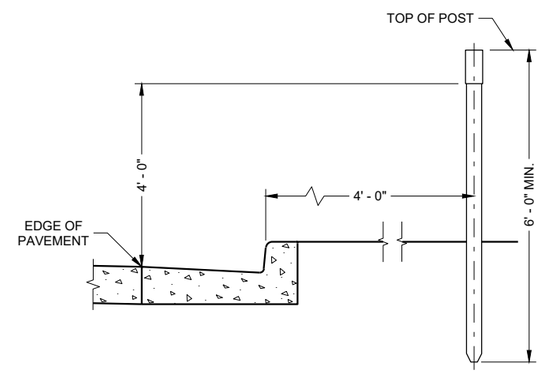

TYPICAL INSTALLATIONS OF DELINEATOR POSTS

GENERAL NOTES

DETAILS OF CONSTRUCTION NOT SHOWN ON THIS DRAWING SHALL CONFORM TO THE PERTINENT REQUIREMENTS OF TEH STANDARD SPECIFICATIONS AND THE APPLICABLE SPECIAL PROVISIONS.

1. DELINEATORS SHALL BE PLACED AT A CONSTANT DISTANCE FROM THE EDGE OF THE SHOULDER FOR THE LENGTH OF THE INSTALLATION.
2. FURNISH TYPE H SHEETING FROM THE APPROVED PRODUCTS LIST.

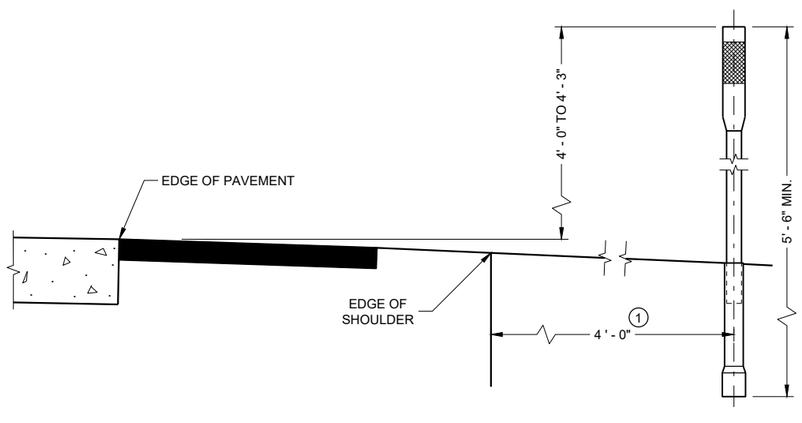

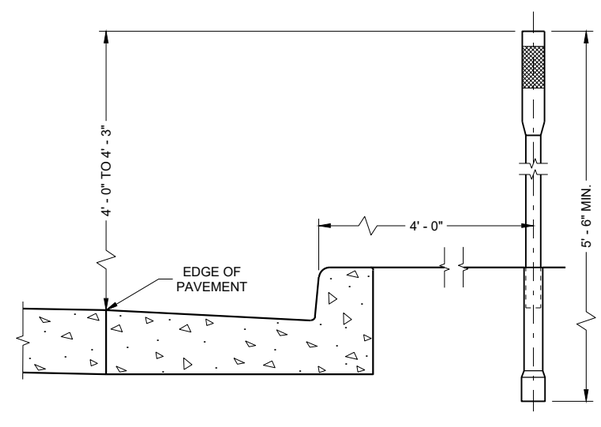

TYPICAL INSTALLATIONS OF FLEXIBLE DELINEATOR POSTS

DELINEATOR POST WITH REFLECTIVE SHEETING

STATE OF WISCONSIN
DEPARTMENT OF TRANSPORTATION

APPROVED
May 2021 — DATE
/S/ Matthew Rauch — STATE SIGNING AND MAF ENGINEER

FHWA

6

6

SDD 15A04 - 06c

SDD 15A04 - 06c

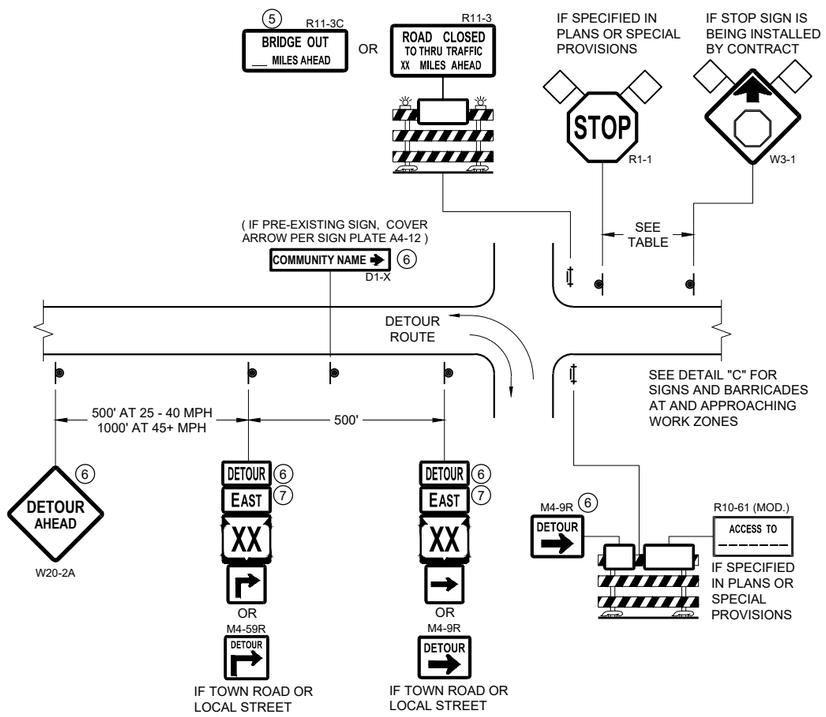

DETAIL A
MAINLINE CLOSURE WITH POSTED DETOUR
WORK ZONE GREATER THAN OR EQUAL TO ½ MILE FROM DETOUR ROUTE (1000 FEET IF URBAN)

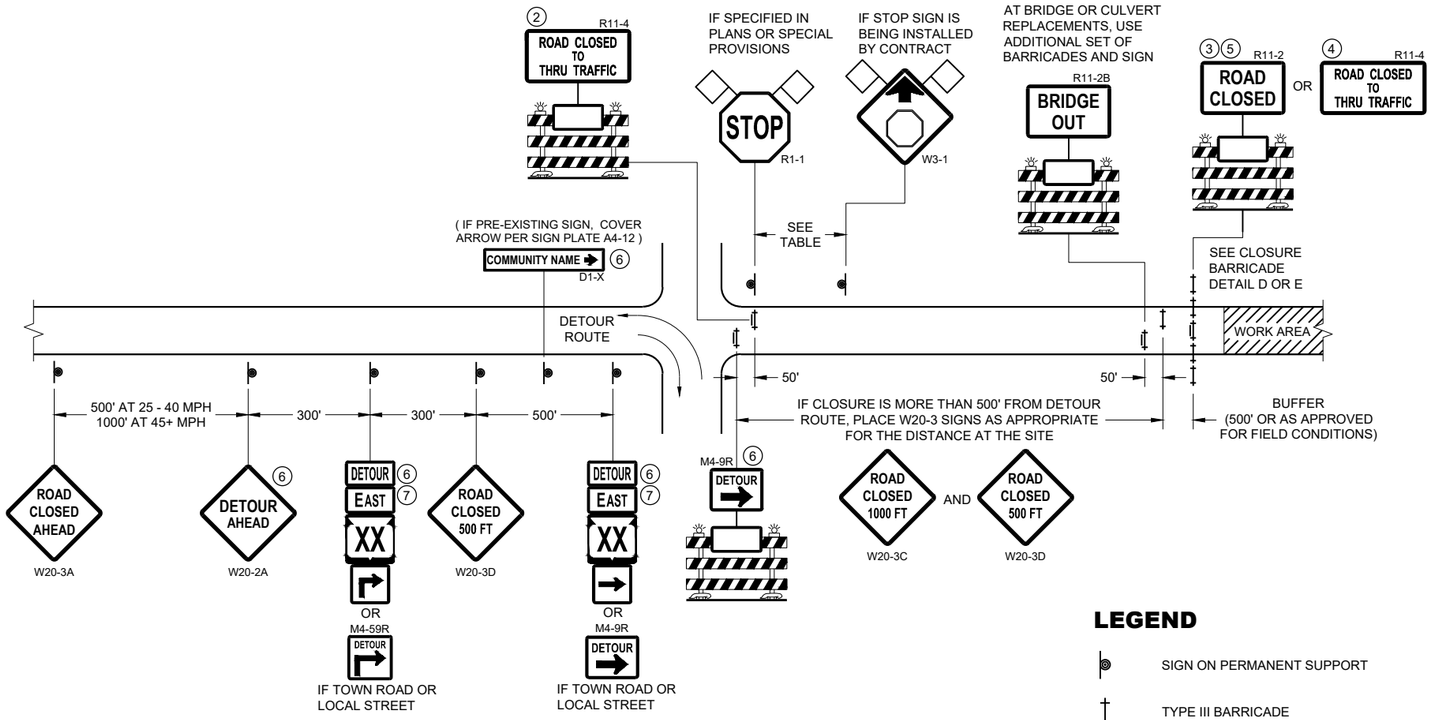

DETAIL B
MAINLINE CLOSURE WITH POSTED DETOUR
WORK ZONE LESS THAN ½ MILE FROM DETOUR ROUTE (1000 FEET IF URBAN)

LEGEND

- SIGN ON PERMANENT SUPPORT
- TYPE III BARRICADE
- TYPE III BARRICADE WITH ATTACHED SIGN
- TYPE "A" WARNING LIGHT (FLASHING)
- WORK AREA
- FLAGS, 16" X 16" MIN. (ORANGE)
- DETOUR — M4 - 8
- EAST — M3 - X
- XX (M1 - 4) OR XX (M1 - 6) OR COUNTY X (M1 - 5A)
- M05 - 1 OR M06 - 1

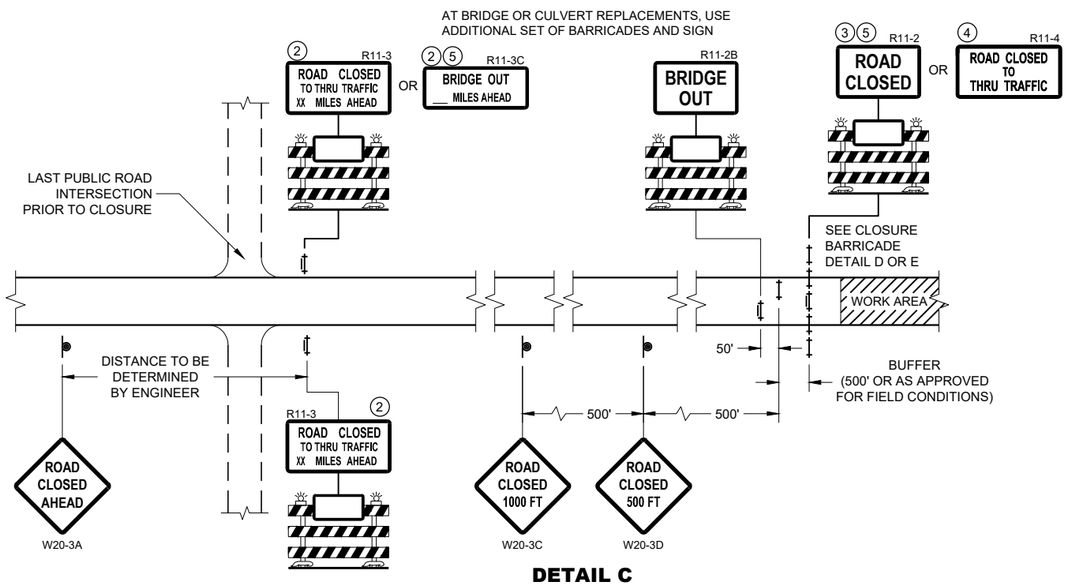

DETAIL C
MAINLINE CLOSURE, NO POSTED DETOUR

SPEED LIMIT (MPH)	"STOP AHEAD" ADVANCE WARNING DISTANCE (FT)
25	200
30	200
35	350
40	350
45	500
50	550
55	750

SEE SDD 15C2-SHEET "b" FOR GENERAL NOTES AND FOOTNOTES ① THROUGH ⑦

BARRICADES AND SIGNS FOR MAINLINE CLOSURES

STATE OF WISCONSIN
DEPARTMENT OF TRANSPORTATION

APPROVED
February 2020 — DATE
/S/ Andrew Heidtke — WORK ZONE ENGINEER
FHWA

6

SDD 15C02 - 08a

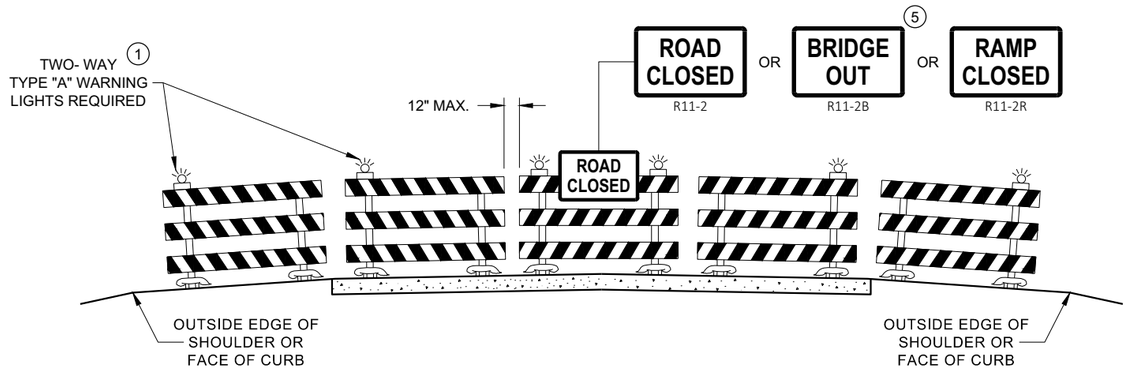

DETAIL D
ROAD CLOSURE BARRICADE DETAIL
APPROACH VIEW

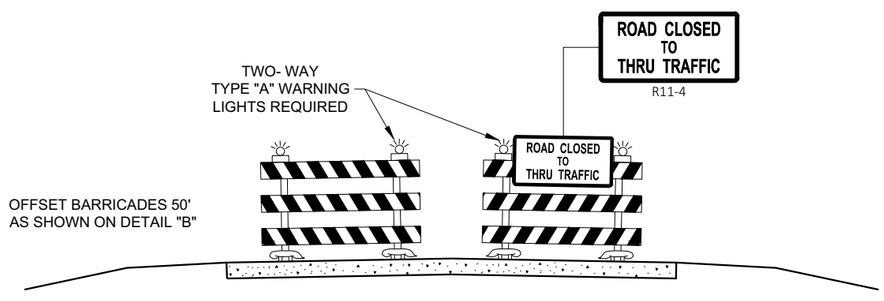

DETAIL E
LANE CLOSURE BARRICADE DETAIL
APPROACH VIEW

SEE SDD 15C2 - SHEET "a" FOR LEGEND

GENERAL NOTES

THE EXACT NUMBER, LOCATION, AND SPACING OF ALL SIGNS AND BARRICADES SHALL BE ADJUSTED TO FIT FIELD CONDITIONS AS APPROVED BY THE ENGINEER.

ANY SIGNS TEMPORARY OR EXISTING, WHICH CONFLICT WITH TRAFFIC CONTROL "IN USE", SHALL BE REMOVED OR COVERED AS NEEDED AND AS APPROVED BY THE ENGINEER.

THE SPACING BETWEEN TRAFFIC CONTROL SIGNS SHOULD BE ADJUSTED TO NOT CONFLICT WITH AND SHOULD PROVIDE A DESIRABLE MINIMUM OF 200 FEET CLEARANCE TO EXISTING SIGNS THAT WILL REMAIN IN PLACE.

BARRICADES THAT MUST BE MOVED FOR A WORK OPERATION SHALL BE IMMEDIATELY RE-ESTABLISHED UPON COMPLETION OF THE OPERATION, OR FOR CONTINUING OPERATIONS, AT THE END OF EACH WORKING DAY.

SIGNS THAT WILL BE IN PLACE LESS THAN 7 CONTINUOUS DAYS AND NIGHTS MAY BE MOUNTED ON PORTABLE SUPPORTS.

ALL TYPE III BARRICADES SHALL HAVE RAILS REFLECTORIZED ON BOTH FACES. STRIPES SHALL BE PROPERLY SLOPED DOWN TOWARD THE TRAFFIC SIDE OR AS SHOWN IN THE ROAD CLOSURE BARRICADE DETAIL "D" FOR FULL ROAD CLOSURES.

TYPE "A" LOW - INTENSITY FLASHING WARNING LIGHTS SHALL BE VISIBLE ON BOTH SIDES OF THE BARRICADE.

THE R11 - 2, R11 - 3, M4 - 9, R11 - 4, AND R10 - 61 SIGNS PLACED ON THE BARRICADES SHALL COVER NO MORE THAN THE TOP RAIL. THE SIGNS SHALL NOT COVER ANY PORTION OF THE MIDDLE RAIL OR BOTTOM RAILS.

"WO" AND "MO" SIGNS ARE THE SAME AS "W" AND "M" SIGNS EXCEPT THE BACKGROUND IS ORANGE.

ALL SIGNS SHALL BE 48" X 48" UNLESS OTHERWISE NOTED BELOW:
- R11 - 2 SHALL BE 48" X 30"
- R11 - 3 SHALL, R11 - 4 AND R10 - 61 SHALL BE 60 " X 30"
- M4 - 9 SHALL BE 30" X 24"
- M3 - X SHALL BE 24" X 12" (36" X 18" IF NEEDED TO MATCH EXISTING SIGNS)
- M4 - 8 SHALL BE 24" X 12" (36" X 18" IF NEEDED TO MATCH EXISTING SIGNS)
- M1 - 4, M1 - 5A AND M1 - 6 SHALL BE 24" X 24" (36" X 36" IF NEEDED TO MATCH EXISTING SIGNS)
- MO5 - 1 AND MO6 - 1 SHALL BE 21" X 21" (30" X 30" IF NEEDED TO MATCH EXISTING SIGNS)
- D1 - X SHALL BE AS SHOWN ON SPECIFIC PROJECT SIGNING DETAIL SHEETS.
- R1 - 1 SHALL BE 36" X 36"

1. TWO WARNING LIGHTS SHALL BE PROVIDED ON THE CENTER BARRICADE AND A MINIMUM OF ONE WARNING LIGHT SHALL BE PROVIDED ON EACH OF THE OTHER BARRICADES WITHIN THE ROADWAY LIMITS. SPACING OF THE WARNING LIGHTS SHALL BE UNIFORM TO THE EDGE OF ROADWAY AS SHOWN (APPROX. 8 FOOT LIGHT SPACING.
2. THESE SIGNS AND BARRICADES ARE NOT REQUIRED IF ROAD CLOSURE BEGINS AT AN INTERSECTION.
3. FOR ROAD CLOSURE WITHOUT LOCAL ACCESS TO PROJECT, SEE ROAD CLOSURE BARRICADE DETAIL "D".
4. FOR ROAD CLOSURE WITH LOCAL ACCESS TO PROJECT, SEE ROAD CLOSURE BARRICADE DETAIL "E".
5. FOR BRIDGE OR CULVERT REPLACEMENTS, SUBSTITUTE "BRIDGE OUT" INSTEAD OF "ROAD CLOSED" ON R11 - 2 AND R11 - 3 SIGNS.
6. INSTALL DETOUR AND COMMUNITY GUIDE SIGNS AND ARROWS ONLY IF SPECIFIED IN THE CONTRACT. IF THERE ARE EXISTING ROUTE MARKER ASSEMBLIES THAT WILL REMAIN IN PLACE, ADJUST THE LOCATION OF THE DETOUR ROUTE SIGNS TO CORRESPOND WITH THE EXISTING ASSEMBLIES. MODIFY EXISTING SIGNS WHERE POSSIBLE. SEE SPECIFIC PROJECT DETOUR SIGNING DETAIL SHEETS. IF DETOUR SIGNS ARE BEING INSTALLED BY OTHERS, PLACE THE CONTRACTED TRAFFIC CONTROL SIGNS TO ALLOW FOR PLACEMENT OF ALL WARNING, DETOUR AND GUIDE SIGNS AS SHOWN.
7. "EAST" CARDINAL DIRECTION MARKERS AND RIGHT TURN ARROWS ARE SHOWN. USE OTHER CARDINAL DIRECTIONS AND ARROWS AS APPROPRIATE.

BARRICADES AND SIGNS FOR VARIOUS CLOSURES

STATE OF WISCONSIN
DEPARTMENT OF TRANSPORTATION

APPROVED
February 2020 — DATE
/S/ Andrew Heidtke — WORK ZONE ENGINEE
FHWA

6

SDD 15C02 - 08b

THIS DRAWING PROVIDES GENERAL GUIDANCE ON TYPICAL DETOUR SIGN LAYOUT AND SPACING. SEE PROJECT DETOUR SIGNING SHEETS FOR SPECIFIC DETAILS FOR EACH PROJECT.

LEGEND

- SIGN ON PERMANENT SUPPORT
- WORK AREA
- DETOUR — M4 - 8
- EAST — M3 - X
- XX — M1 - 4 OR XX — M1 - 6 OR COUNTY X — M1 - 5A
- M05 - 1 OR M06 - 1 OR M06 - 1

GENERAL NOTES

THE EXACT NUMBER, LOCATION AND SPACING OF ALL SIGNS SHALL BE ADJUSTED TO FIT FIELD CONDITIONS AS APPROVED BY THE ENGINEER.

IF THERE ARE EXISTING ROUTE MARKER ASSEMBLIES THAT WILL REMAIN IN PLACE, ADJUST THE LOCATION OF THE DETOUR ROUTE SIGNS TO CORRESPOND WITH THE EXISTING ASSEMBLIES. SEE SPECIFIC PROJECT DETOUR SIGNING DETAIL SHEETS. MODIFY EXISTING SIGNS WHERE POSSIBLE.

THE SPACING BETWEEN TRAFFIC CONTROL AND DETOUR SIGNS SHOULD BE ADJUSTED TO NOT CONFLICT WITH AND TO PROVIDE A DESIRABLE MINIMUM OF 200 FEET CLEARANCE TO EXISTING SIGNS THAT WILL REMAIN IN PLACE.

ANY SIGNS TEMPORARY OR EXISTING, WHICH CONFLICT WITH TRAFFIC CONTROL "IN USE" SHALL BE REMOVED OR COVERED AS NEEDED AND AS APPROVED BY THE ENGINEER.

SIGNS THAT WILL BE IN PLACE LESS THAN 7 CONTINUOUS DAYS AND NIGHTS MAY BE MOUNTED ON PORTABLE SUPPORTS.

"MO" SIGNS ARE THE SAME AS "M" SIGNS EXCEPT THE BACKGROUND IS ORANGE.

SIGN SIZES SHALL BE AS FOLLOWS:

M3-X SHALL BE 24" X 12" (36" X 18" IF NEEDED TO MATCH EXISTING SIGNS)
M4-8 SHALL BE 24" X 12" (36" X 18" IF NEEDED TO MATCH EXISTING SIGNS)
M1-4, M1-5A AND M1-6 SHALL BE 24" X 24" (36" X 36" IF NEEDED TO MATCH EXISTING SIGNS)
M05-1 AND M06-1 SHALL BE 21" X 21" (30" X 30" IF NEEDED TO MATCH EXISTING SIGNS)
M4-9 AND M4-59 SHALL BE 30" X 24"
M4-8a SHALL BE 24" X 18"
G20-51 SHALL BE 60" X 24"
W20-2A SHALL BE 48" X 48"
D1-X SHALL BE AS SHOWN ON SPECIFIC PROJECT SIGNING DETAIL SHEETS.

* OPTIONAL SIGNS. SEE SPECIFIC PROJECT DETOUR SIGNING DETAIL SHEETS.

** FOR A TOWN ROAD OR LOCAL STREET DETOURED ONTO A STATE TRUNK HIGHWAY, PLACE A ROAD NAME PLAQUE ABOVE THE M4-9 SIGN AS SPECIFIED IN THE CONTRACT.

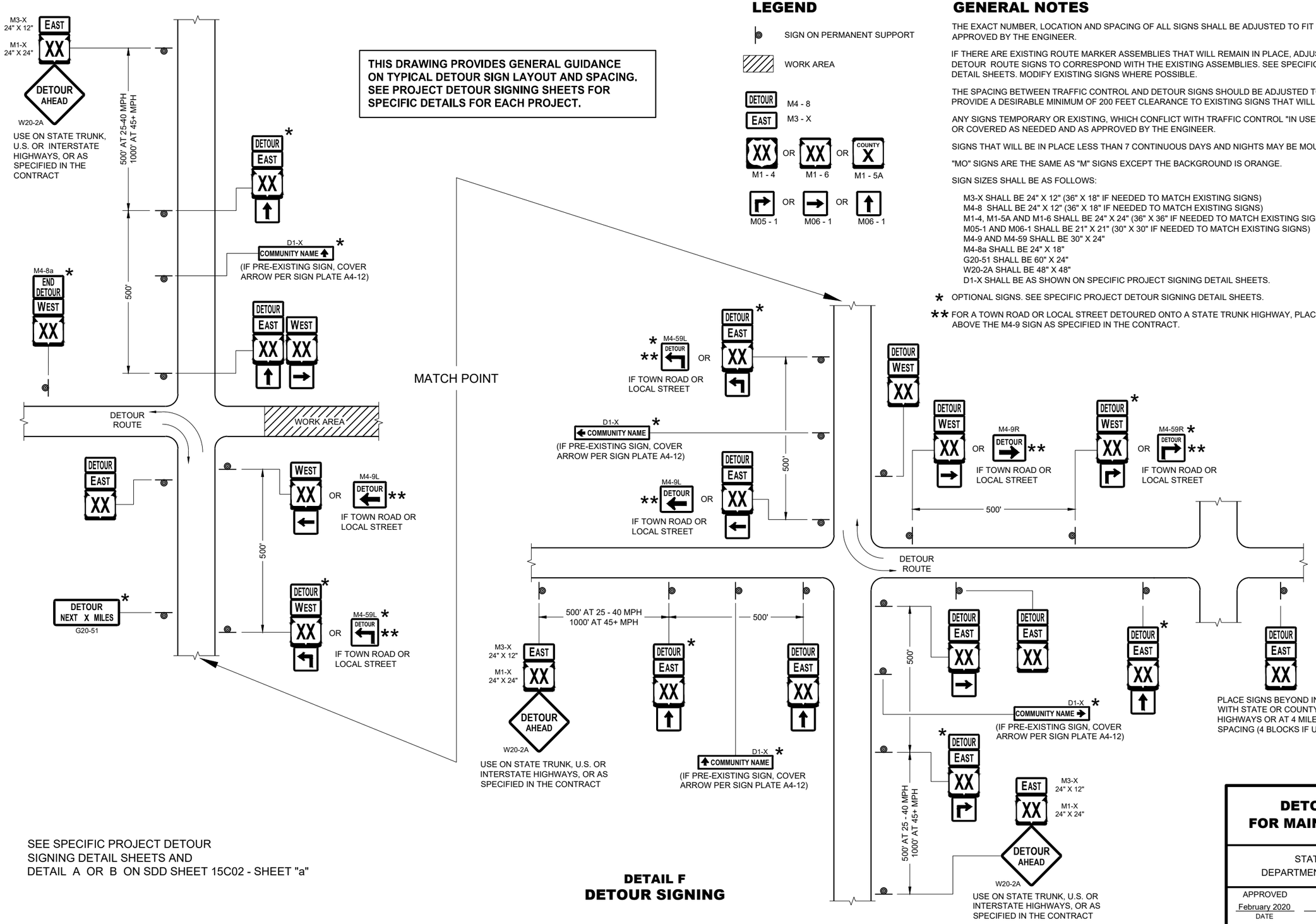

SEE SPECIFIC PROJECT DETOUR SIGNING DETAIL SHEETS AND DETAIL A OR B ON SDD SHEET 15C02 - SHEET "a"

DETAIL F
DETOUR SIGNING

DETOUR SIGNING FOR MAINLINE CLOSURES

STATE OF WISCONSIN
DEPARTMENT OF TRANSPORTATION

APPROVED
February 2020 — DATE
/S/ Andrew Heidtke — WORK ZONE ENGINEER
FHWA

6

SDD 15C02 - 08c

6

SDD 15C02 - 08c

THIS DRAWING PROVIDES GENERAL GUIDANCE ON TYPICAL TO SIGN LAYOUT AND SPACING. SEE PROJECT TO SIGNING SHEETS FOR SPECIFIC DETAILS FOR EACH PROJECT.

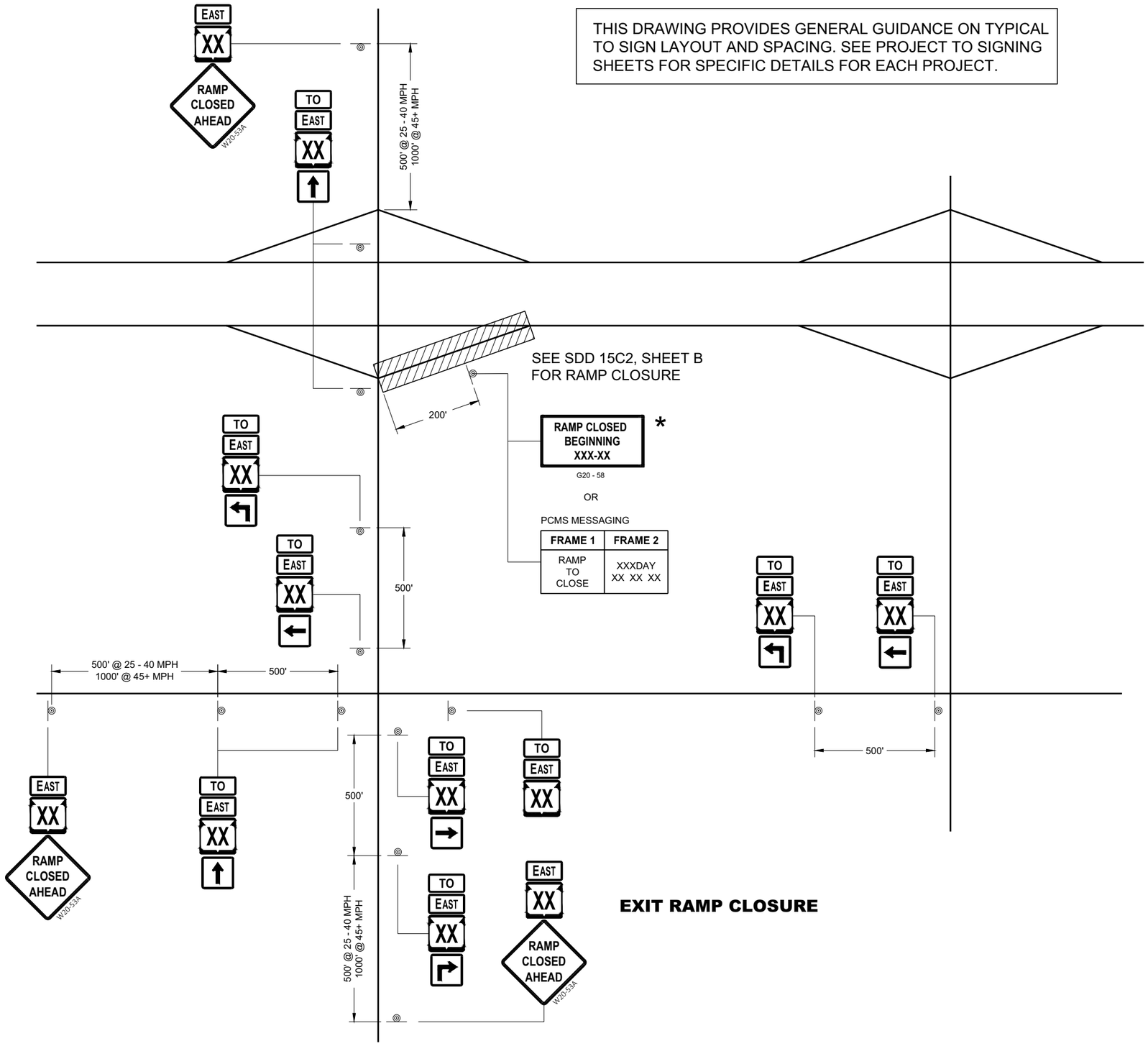

EXIT RAMP CLOSURE

LEGEND

SIGN ON PERMANENT SUPPORT

TO / EAST — MO4 - 5, M3 - X

XX M1 - 6 OR XX M1 - 4 OR INTERSTATE XX M1 - 1

M05 - 1 OR M06 - 1 OR M06 - 1

GENERAL NOTES

THE EXACT NUMBER, LOCATION AND SPACING OF ALL SIGNS SHALL BE ADJUSTED TO FIT FIELD CONDITIONS AS APPROVED BY THE ENGINEER.

IF THERE ARE ANY ROUTE MARKER ASSEMBLIES THAT WILL REMAIN IN PLACE, ADJUST THE LOCATION OF THE TO ROUTE SIGNS TO CORRESPOND WITH THE EXISTING ASSEMBLIES. SEE SPECIFIC PROJECT TO SIGNING DETAIL SHEETS. MODIFY EXISTING SIGNS WHERE POSSIBLE.

THE SPACING BETWEEN TRAFFIC CONTROL AND TO SIGNS SHOULD BE ADJUSTED TO NOT CONFLICT WITH AND TO PROVIDE A DESIRABLE MINIMUM OF 200 FEET CLEARANCE TO EXISTING SIGNS THAT WILL REMAIN IN PLACE.

ANY SIGNS TEMPORARY OR EXISTING, WHICH CONFLICT WITH TRAFFIC CONTROL " IN USE" SHALL BE REMOVED OR COVERED AS NEEDED AND AS APPROVED BY THE ENGINEER.

SIGNS THAT SHALL BE IN PLACE LESS THAN 7 CONTINUOUS DAYS AND NIGHTS MAY BE MOUNTED ON PORTABLE SUPPORTS.

"MO" SIGNS ARE THE SAME AS "M" SIGNS EXCEPT THE BACKGROUND IS ORANGE.

SIGN SIZES SHALL BE AS FOLLOW:
- M3 - X SHALL BE 24" X 12". (36" X 18" IF NEEDED TO MATCH EXISTING SIGNS).
- MO4 - 5 SHALL BE 24" X 12". (36" X 18" IF NEEDED TO MATCH EXISTING SIGNS).
- M1 - 1, M1 - 4, AND M1 - 6 SHALL BE 24" X 24" (36" X 36" IF NEEDED TO MATCH EXISTING SIGNS).
- MO5 - 1, MO5 - 2, AND MO6 - 1, SHALL BE 21" X 21". (30" X 30" IF NEEDED TO MATCH EXISTING SIGNS).
- W20 - 53A SHALL BE 48" X 48"

* PLACE "RAMP CLOSED BEGINNING" SIGN 7 CALENDAR DAYS PRIOR TO CLOSURE OR AS DIRECTED BY THE ENGINEER. SEE WISCONSIN STANDARD SIGN PLATES FOR LAYOUT.

ON RAMP LANE CLOSURE

STATE OF WISCONSIN
DEPARTMENT OF TRANSPORTATION

APPROVED
February 2020 — DATE
/S/ Andrew Heidtke — WORK ZONE ENGINEE
FHWA

THIS DRAWING PROVIDES GENERAL GUIDANCE ON TYPICAL "TO" MO-4 SIGN LAYOUT AND SPACING. SEE PROJECT TO SIGNING SHEETS FOR SPECIFIC DETAILS FOR EACH PROJECT.

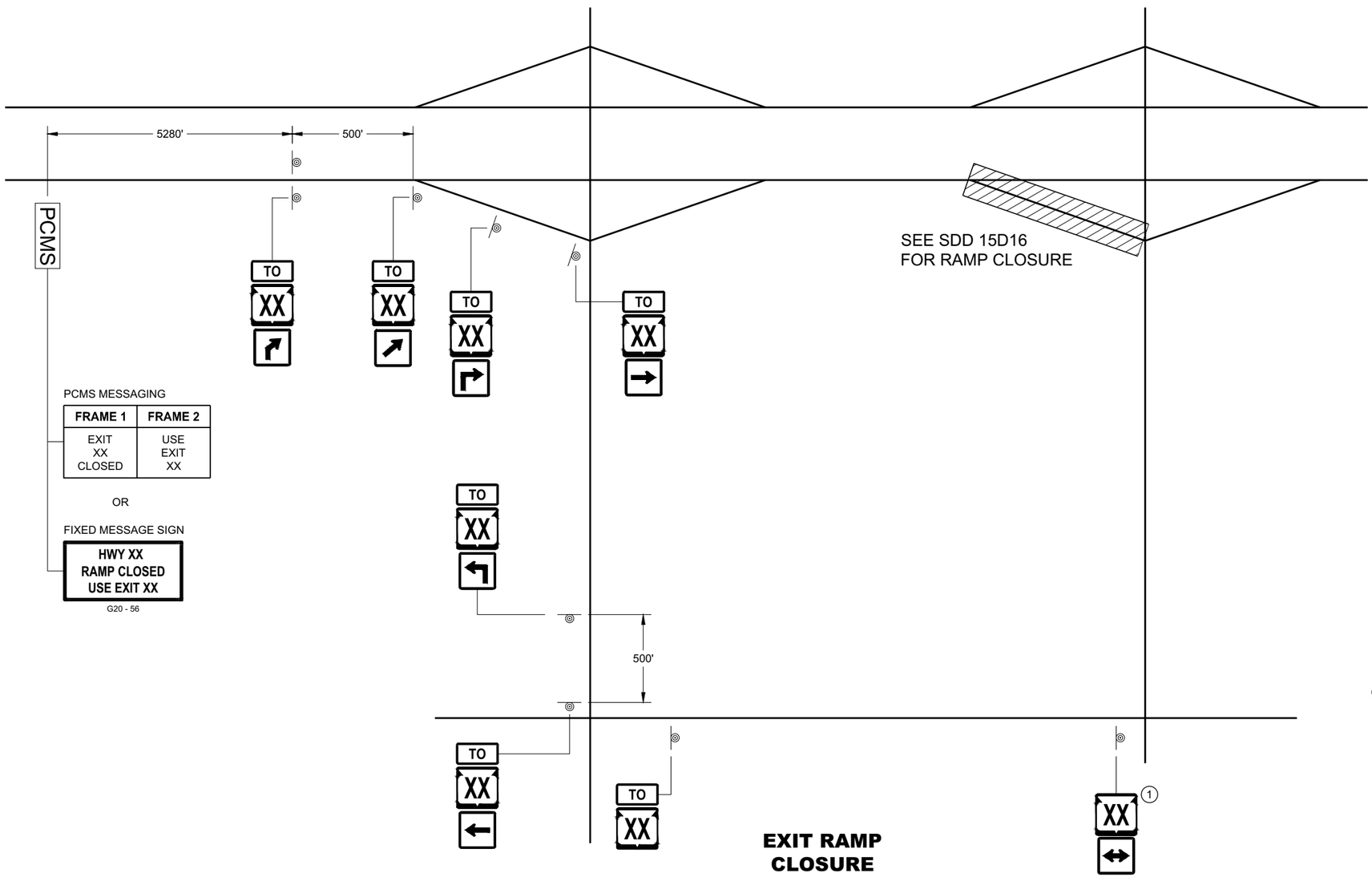

PCMS MESSAGING

FRAME 1	FRAME 2
EXIT XX CLOSED	USE EXIT XX

OR

FIXED MESSAGE SIGN

HWY XX
RAMP CLOSED
USE EXIT XX

G20 - 56

EXIT RAMP CLOSURE

LEGEND

SIGN ON PERMANENT SUPPORT

PCMS PORTABLE CHANGEABLE MESSAGE SIGN

TO MO4 - 5

M1 - 4 OR M1 - 6 OR M1 - 5A

M05 - 1 OR M05 - 2 OR M06 - 1 OR M06 - 2 OR M06 - 4

GENERAL NOTES

SEE SDD 15D16 "TRAFFIC CONTROL, EXIT RAMP CLOSURE" DETAIL FOR TRAFFIC CONTROL AT EXIT RAMP CLOSURE.

THE EXACT NUMBER, LOCATION AND SPACING OF ALL SIGNS SHALL BE ADJUSTED TO FIT FIELD CONDITIONS AS APPROVED BY THE ENGINEER.

IF THERE ARE ANY ROUTE MARKER ASSEMBLIES THAT WILL REMAIN IN PLACE, ADJUST THE LOCATION OF THE "TO" MO-4 ROUTE SIGNS TO CORRESPOND WITH THE EXISTING ASSEMBLIES. SEE SPECIFIC PROJECT TO SIGNING DETAIL SHEETS. MODIFY EXISTING SIGNS WHERE POSSIBLE.

THE SPACING BETWEEN TRAFFIC CONTROL AND "TO" MO-4 SIGNS SHOULD BE ADJUSTED TO NOT CONFLICT WITH AND TO PROVIDE A DESIRABLE MINIMUM OF 200 FEET CLEARANCE TO EXISTING SIGNS THAT WILL REMAIN IN PLACE.

ANY SIGNS TEMPORARY OR EXISTING, WHICH CONFLICT WITH TRAFFIC CONTROL " IN USE" SHALL BE REMOVED OR COVERED AS NEEDED AND AS APPROVED BY THE ENGINEER.

SIGNS THAT SHALL BE IN PLACE LESS THAN 7 CONTINUOUS DAYS AND NIGHTS MAY BE MOUNTED ON PORTABLE SUPPORTS.

"MO" SIGNS ARE THE SAME AS "M" SIGNS EXCEPT THE BACKGROUND IS ORANGE.

SIGN SIZES SHALL BE AS FOLLOW:
- MO4 - 5 SHALL BE 24" X 12". (36" X 18" IF NEEDED TO MATCH EXISTING SIGNS).
- M1 - 4, M1 - 5A, AND M1 - 6 SHALL BE 24" X 24" (36" X 36" IF NEEDED TO MATCH EXISTING SIGNS).
- MO5 - 1, MO5 - 2, AND MO6 - 1, SHALL BE 21" X 21". (30" X 30" IF NEEDED TO MATCH EXISTING SIGNS).

(1) ONLY ADD IF THERE ARE NO EXISTING ROUTE MARKERS FOR THE INTERSECTING ROADWAY.

OFF RAMP LANE CLOSURE

STATE OF WISCONSIN
DEPARTMENT OF TRANSPORTATION

APPROVED
February 2020 — DATE
/S/ Andrew Heidtke — WORK ZONE ENGINEE
FHWA

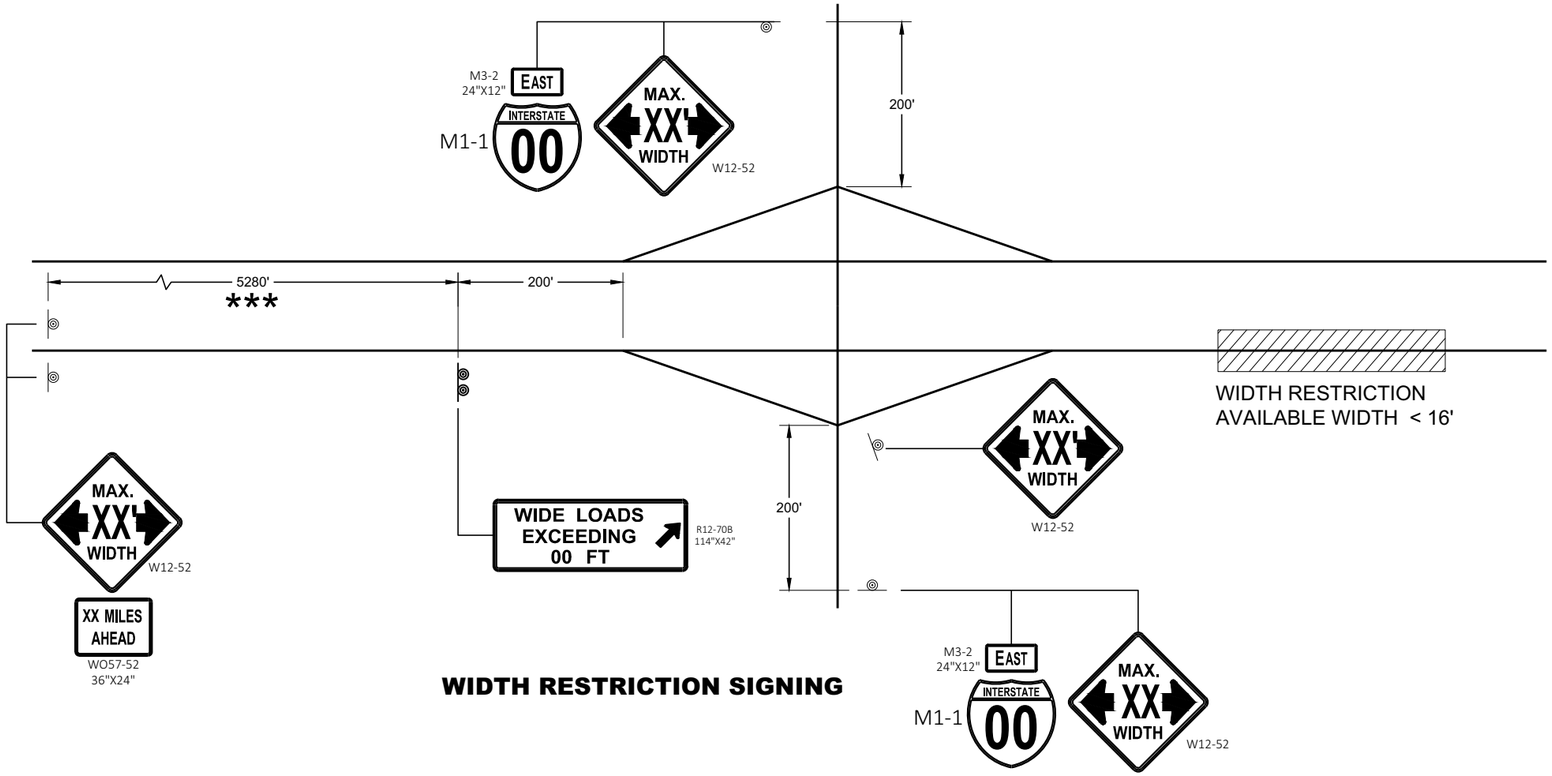

WIDTH RESTRICTION SIGNING

LEGEND

◎ SIGN ON PERMANENT SUPPORT

GENERAL NOTES

THE EXACT NUMBER, LOCATION AND SPACING OF ALL SIGNS SHALL BE ADJUSTED TO FIT FIELD CONDITIONS AS APPROVED BY THE ENGINEER.

THE SPACING BETWEEN SIGNS SHOULD BE ADJUSTED TO NOT CONFLICT WITH AND TO PROVIDE A DESIRABLE MINIMUM OF 200 FEET CLEARANCE TO EXISTING SIGNS THAT WILL REMAIN IN PLACE.

ANY SIGNS TEMPORARY OR EXISTING, WHICH CONFLICT WITH TRAFFIC CONTROL " IN USE" SHALL BE REMOVED OR COVERED AS NEEDED AND AS APPROVED BY THE ENGINEER.

ALL SIGNS ARE 48" X 48" UNLESS OTHERWISE NOTED.

"WO" SIGNS ARE THE SAME AS "W" SIGNS EXCEPT THE BACKGROUND IS ORANGE.

WIDTH ON SIGN TO BE APPROXIMATELY ONE FOOT LESS THAN AVAILABLE WIDTH.

* PLACE 500 FEET AFTER THE W20 - 1A AND 500 FEET BEFORE ADDITIONAL SIGNS FOR ROADWAYS WITH A PRE - CONSTRUCTION SPEED LIMIT OF 45 MPH OR MORE. FOR 35-40 MPH, USE 350 FOOT TYPICAL SPACING. FOR 25-30 MPH, USE 200 FOOT TYPICAL SPACING.

** SIGN SHALL BE VISIBLE FROM ROADWAY.

*** ADDITIONAL SIGNS NEEDED IF THERE IS AN ON RAMP BETWEEN SIGNS.

WIDTH ON SIGN TO BE APPROX. 1 - FOOT LESS THAN AVAILABLE WIDTH

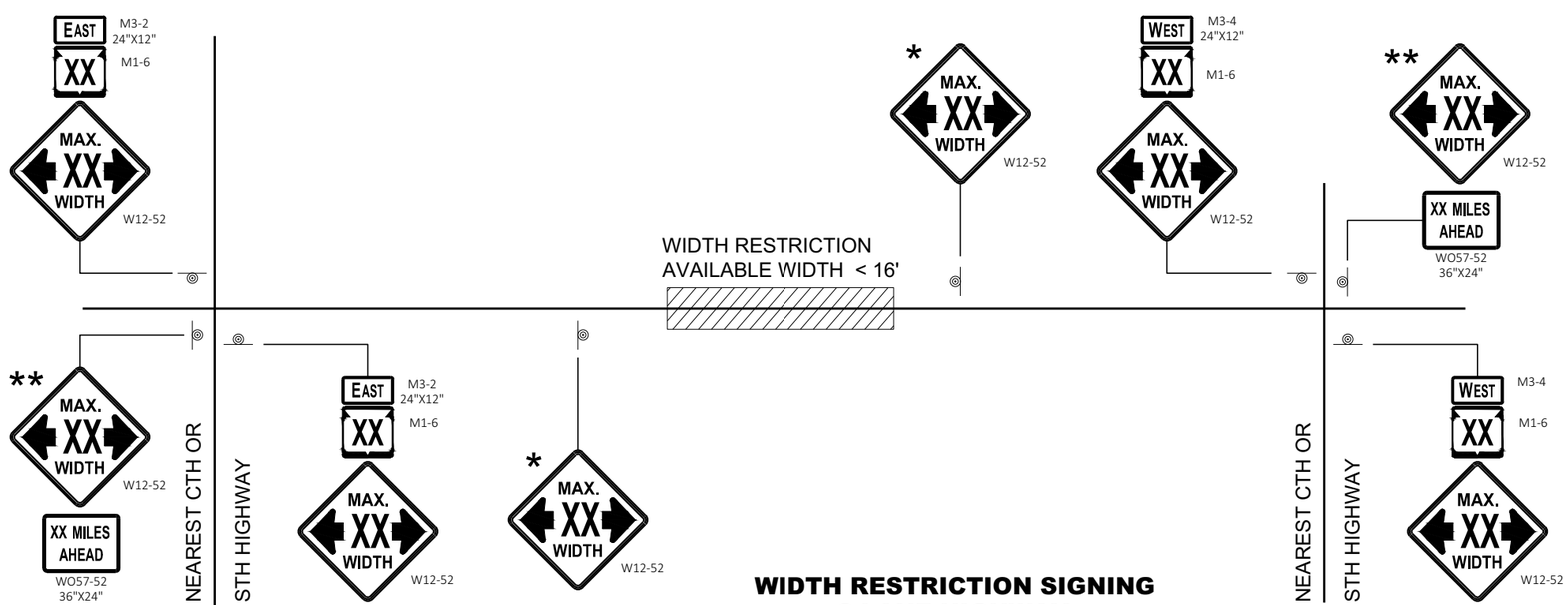

WIDTH RESTRICTION SIGNING
2 LANE HIGHWAY

ADVANCED WIDTH RESTRICTION SIGNING

STATE OF WISCONSIN
DEPARTMENT OF TRANSPORTATION

APPROVED
February 2020 — /S/ Andrew Heidtke
DATE — WORK ZONE ENGINEER

FHWA

6

SDD 15C02 - 08f

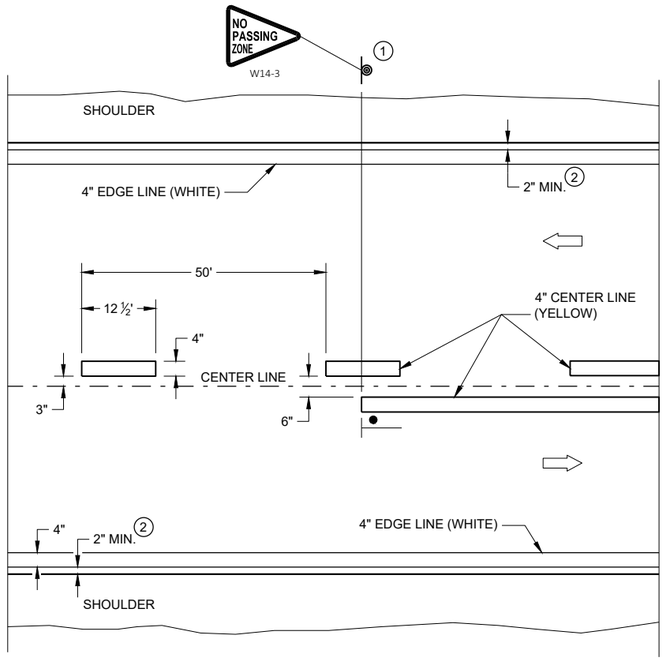

TWO WAY TRAFFIC

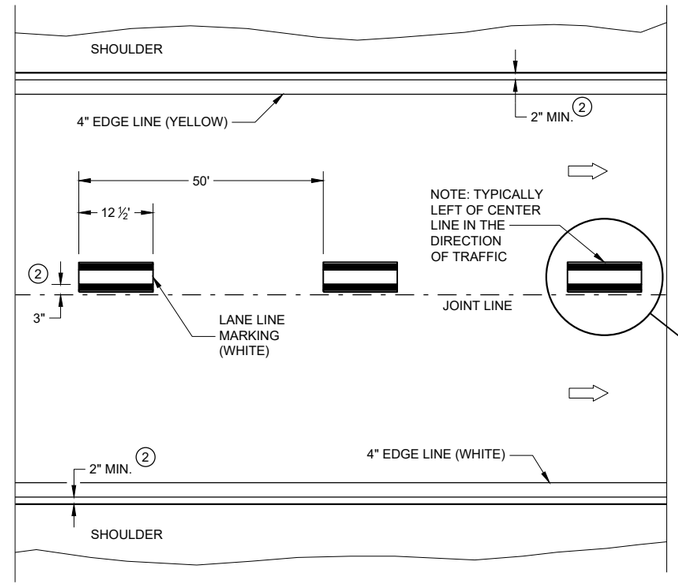

ONE WAY TRAFFIC

PERMANENT PAVEMENT MARKING

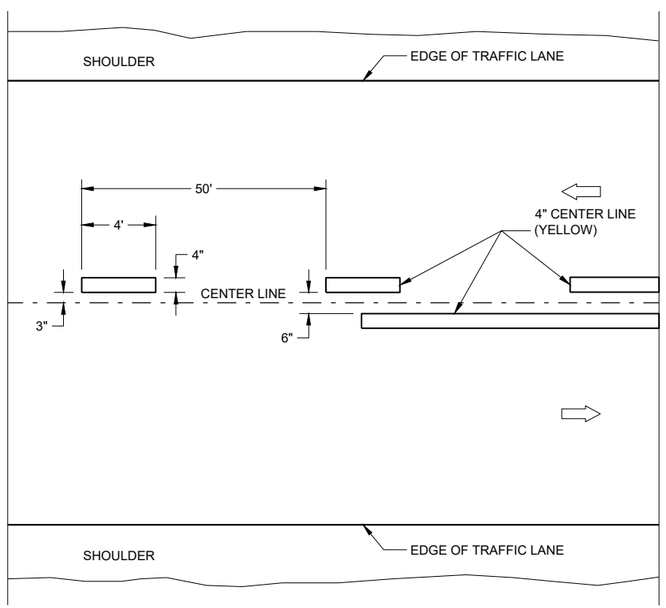

TWO WAY TRAFFIC

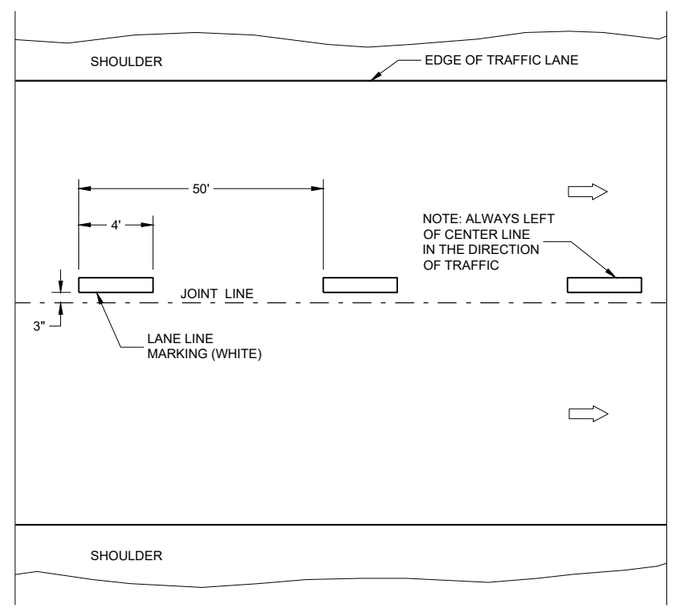

ONE WAY TRAFFIC

TEMPORARY PAVEMENT MARKING

GENERAL NOTES

DETAILS OF CONSTRUCTION NOT SHOWN ON THIS DRAWING SHALL CONFORM TO STANDARD SPECIFICATIONS AND SPECIAL PROVISIONS.

1. LOCATE THE NO PASSING ZONE W14-3 SIGN WITHIN 50 FEET OF THE "T" MARKING
2. MEASURE FROM EDGE OF MARKING TO JOINT LINE. THIS DOES NOT INCLUDE SPACE NEEDED FOR GROOVING OPERATIONS.

LEGEND

"T" MARKING

SIGN ON PERMANENT SUPPORT

DIRECTION OF TRAFFIC

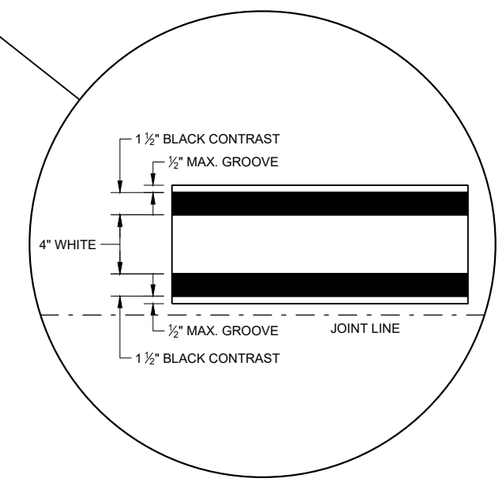

LONGITUDINAL MARKING (MAINLINE)

STATE OF WISCONSIN
DEPARTMENT OF TRANSPORTATION

APPROVED
February 2020 — DATE
/S/ Matthew Rauch — STATEWIDE SIGNING AND M ENGINEER
FHWA

6

SDD 15C08 - 20a

GENERAL NOTES

1. REFLECTIVE SHEETING SHALL FOLLOW THE REQUIREMENTS IN THE APPROVED PRODUCTS LISTING FOR SIGN SHEETING.
2. LOCATION OF WARNING LIGHTS WHEN SHOWN ON THE PLAN.

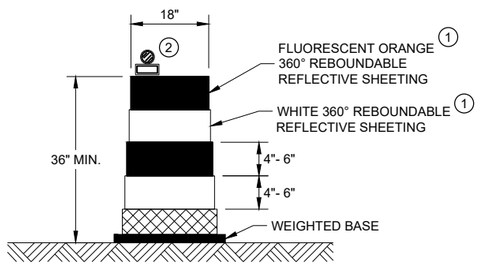

DRUM

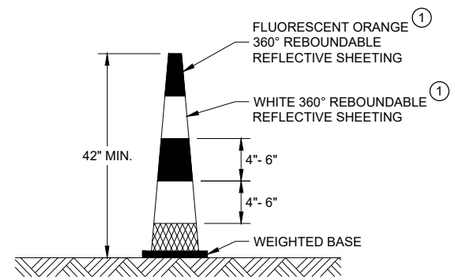

42" CONE

DO NOT USE IN TAPERS
½ SPACING OF DRUMS

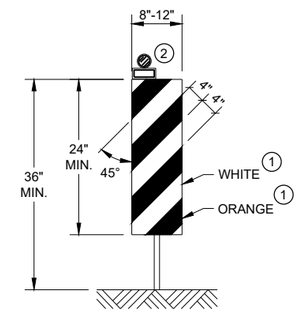

VERTICAL PANEL

THE STRIPES SHALL SLOPE DOWNWARD TO
THE TRAFFIC SIDE FOR CHANNELIZATION.

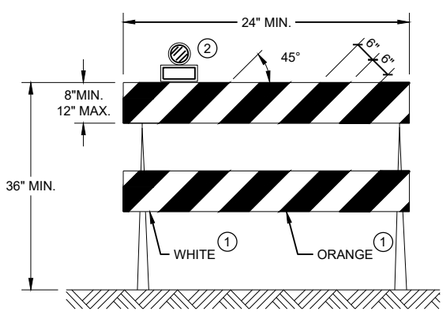

TYPE II BARRICADE

FOR RAILS LESS THAN 36" LONG, 4" WIDE STRIPES
MAY BE USED. ALL STRIPES SHALL SLOPE DOWNWARD
TO THE TRAFFIC SIDE FOR CHANNELIZATION.

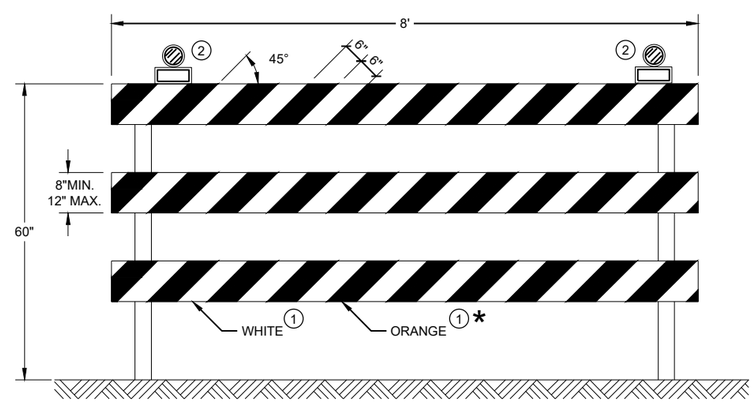

TYPE III BARRICADE

IF SIGN MOUNTED, DO NOT COVER MORE THAN 50% OF THE TOP
TWO RAILS OR 33% OF THE TOTAL AREA OF THE THREE RAILS.

* IF USED FOR A PERMANENT APPLICATION USE RED SHEETING.

CHANNELIZING DEVICES DRUMS, CONES, BARRICADES AND VERTICAL PANELS

STATE OF WISCONSIN
DEPARTMENT OF TRANSPORTATION

APPROVED
May 2021 — DATE
/S/ Andrew Heidtke — WORK ZONE ENGINEE
FHWA

6

SDD 15C11 - 09b

6

SDD 15C11 - 09b

GENERAL NOTES

(1) PLACE TWO TO FIVE AERIAL OR VASCAR BARS AT 660 FOOT SPACING.

A CAR CAN BE PROVIDED BY THE WISCONSIN STATE PATROL FOR TRAFFIC CONTROL.

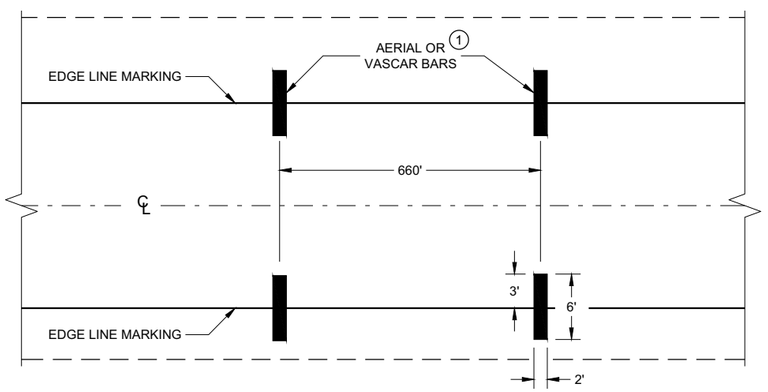

TYPICAL FOR TWO WAY OR ONE WAY TRAFFIC

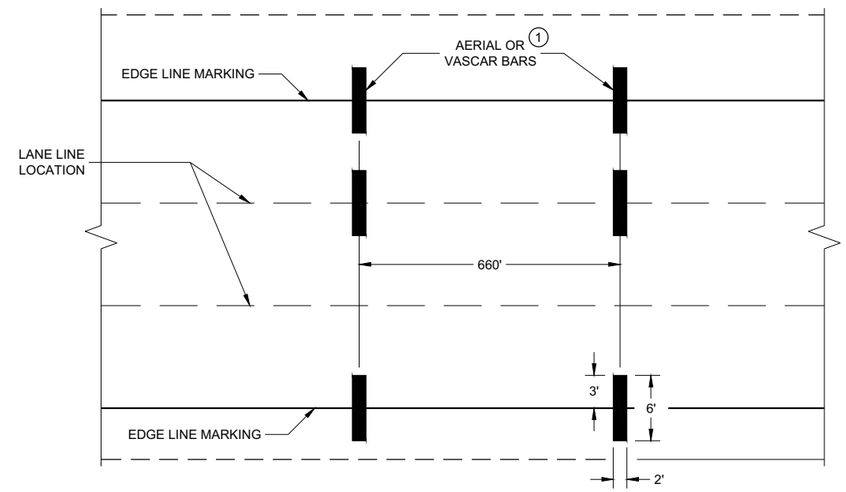

TYPICAL FOR MULTILANE TRAFFIC

SPEED ENFORCEMENT ZONE WITH AERIAL OR VASCAR BARS

6

SDD 15C14 - 04

AERIAL ENFORCEMENT BARS PAVEMENT MARKING DETAILS

STATE OF WISCONSIN
DEPARTMENT OF TRANSPORTATION

APPROVED
February 2021 — DATE
/S/ Matthew R. Rauch — STATE SIGNING AND MAR ENGINEER
FHWA

6

SDD 15C14 - 04

GENERAL NOTES

PLACE GROOVE 3 INCHES LEFT OF JOINT.

LEGEND

SIGN ON PERMANENT SUPPORT

DIRECTION OF TRAVEL

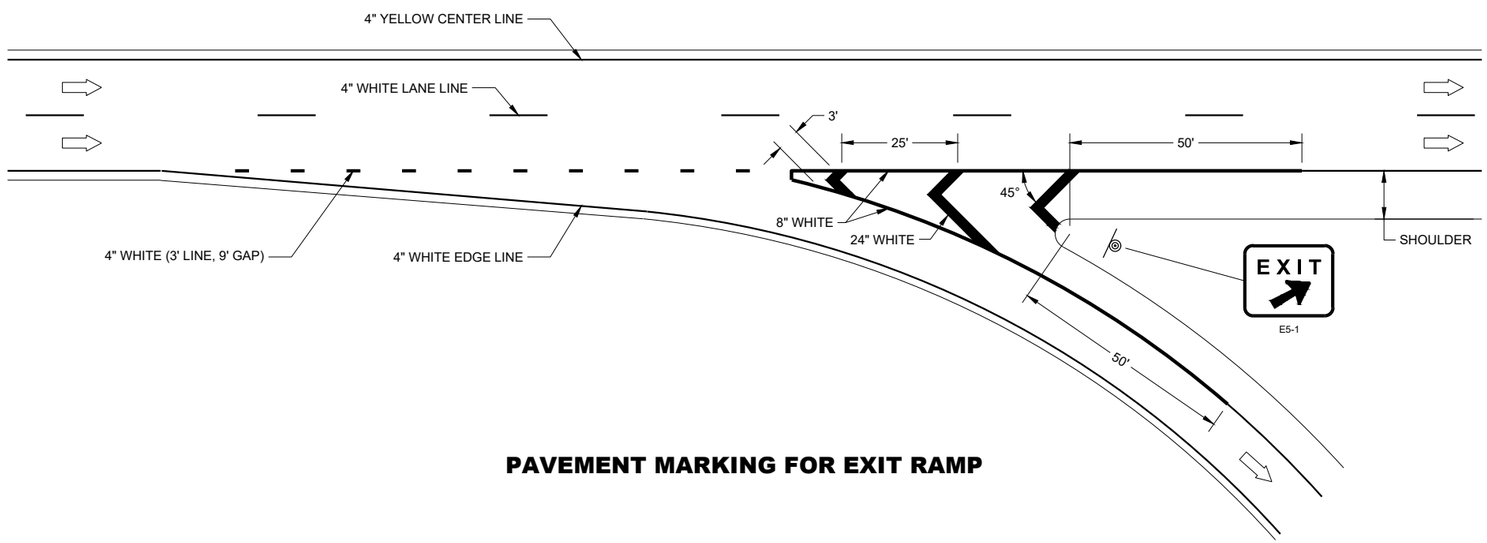

PAVEMENT MARKING FOR EXIT RAMP

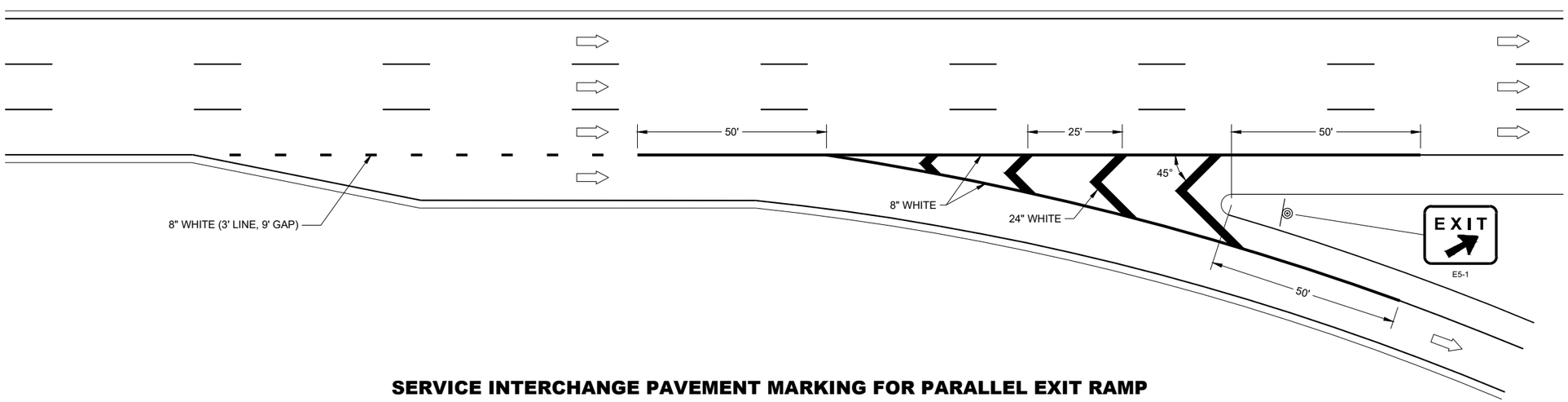

SERVICE INTERCHANGE PAVEMENT MARKING FOR PARALLEL EXIT RAMP

6

6

SDD 15C31 - 04a

SDD 15C31 - 04a

PAVEMENT MARKING, EXIT RAMP AND PARALLEL EXIT RAMP

STATE OF WISCONSIN
DEPARTMENT OF TRANSPORTAT

GENERAL NOTES

PLACE GROOVE 3 INCHES LEFT OF JOINT.

(1) ½ LENGTH OF FULL WIDTH ACCELERATION LANE.

LEGEND

DIRECTION OF TRAVEL

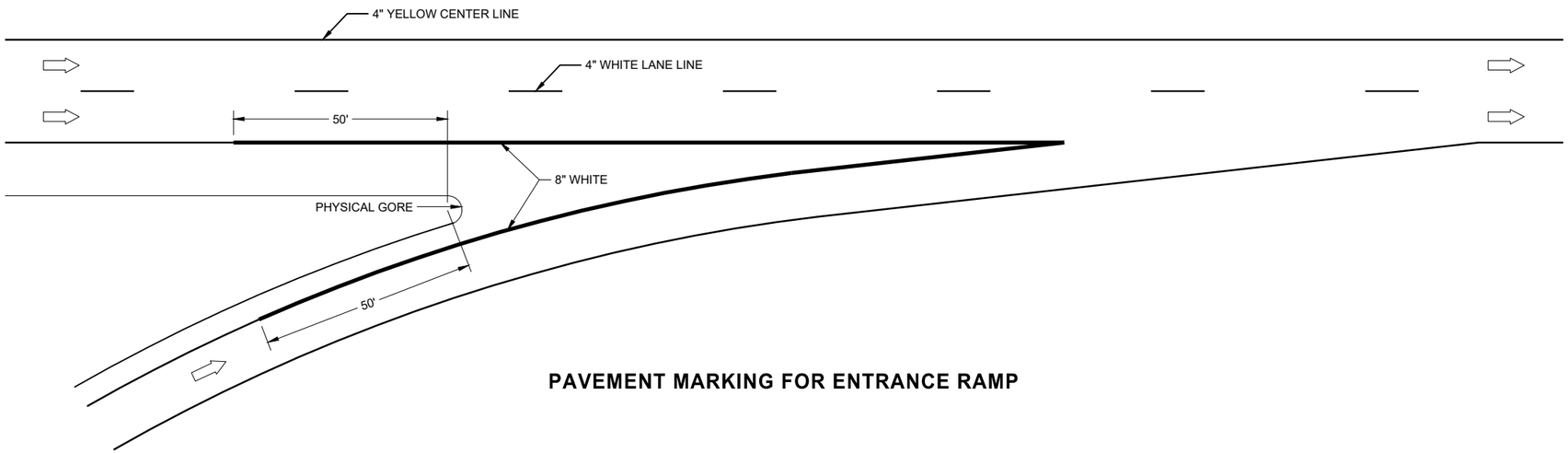

PAVEMENT MARKING FOR ENTRANCE RAMP

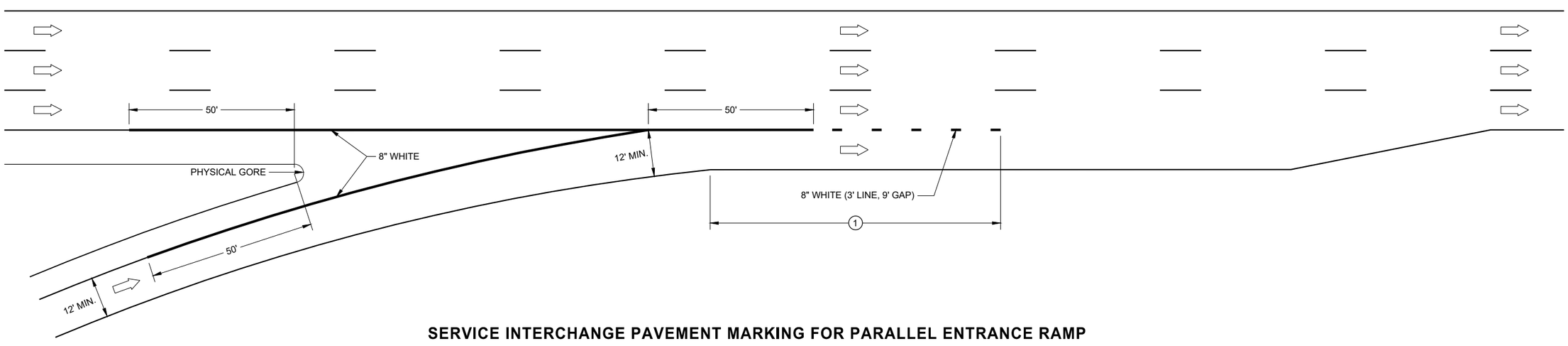

SERVICE INTERCHANGE PAVEMENT MARKING FOR PARALLEL ENTRANCE RAMP

6

6

SDD 14C31 - 04c

SDD 14C31 - 04c

PAVEMENT MARKING, ENTRANCE RAMP AND PARALLEL ENTRANCE RAMP

STATE OF WISCONSIN
DEPARTMENT OF TRANSPORTAT

GENERAL NOTES

THE EXACT NUMBER, LOCATION, AND SPACING OF ALL SIGNS AND DEVICES SHALL BE ADJUSTED TO FIT FIELD CONDITIONS AS APPROVED BY THE ENGINEER.

THE SPACING BETWEEN SIGNS SHOULD BE ADJUSTED TO NOT CONFLICT WITH AND TO PROVIDE A MINIMUM OF 200 FEET (500 FEET DESIRABLE) CLEARANCE TO EXISTING SIGNS.

THIS LANE CLOSURE IS TYPICAL FOR CLOSING RIGHT LANE - REVERSE FOR CLOSING LEFT LANE.

ALL SIGNS ARE 48" x 48" UNLESS OTHERWISE NOTED.

"WO" IS THE SAME AS "W" EXCEPT THE BACKGROUND IS ORANGE.

ANY SIGNS TEMPORARY OR EXISTING, WHICH CONFLICT WITH TRAFFIC CONTROL "IN USE" SHALL BE REMOVED OR COVERED AS NEEDED OR AS APPROVED BY THE ENGINEER.

FOR A LANE CLOSURE THAT IS IN PLACE LESS THAN 7 CONTINUOUS DAYS AND NIGHTS, THE ADVANCED WARNING SIGNS MAY BE MOUNTED ON PORTABLE SUPPORTS.

REMOVE PAVEMENT MARKINGS IF LANE CLOSURE IS TO BE IN PLACE 4 OR MORE CONTINUOUS DAYS AND NIGHTS.

IF THE HORIZONTAL ALIGNMENT IS SUCH THAT A CURVE MAY REQUIRE ADDITIONAL DELINEATION, THE DEVICE SPACING MAY BE DECREASED TO 50 FEET.

WARNING LIGHTS ARE NOT REQUIRED IF THE LANE CLOSURE IS A DAYTIME ONLY OPERATION.

ADJUSTMENTS IN BUFFER SPACE NEED TO BE INCORPORATED WHEN THE LANE CLOSURE OCCURS NEAR AN INTERCHANGE EXIT OR ENTRANCE RAMP OR INTERSECTION. THE LANE CLOSURE MUST TAKE PLACE FAR ENOUGH IN ADVANCE OF AN EXIT OR ENTRANCE RAMP TO STILL ALLOW FOR ADEQUATE BUFFER SPACE. THE MINIMUM LENGTH OF THE BUFFER SPACE BEFORE AN EXIT RAMP SHOULD BE ONE HALF THE LENGTH OF THE TRANSITION AREA. THE ENTRANCE RAMP SHOULD BE FOLLOWED BY THE ORIGINAL BUFFER SPACE LENGTH OF 800 FEET DESIRABLE PRIOR TO ANOTHER TRAFFIC CONTROL CHANGE SUCH AS A CROSSOVER MANEUVER.

CONSIDER ROADWAY GEOMETRICS WHEN LOCATING SIGNS AND ARROW BOARD SO THE DRIVER HAS A CLEAR VIEW OF THE ARROW BOARD AND LANE CLOSURE DRUMS.

LEGEND

- SIGN ON PERMANENT SUPPORT
- TRAFFIC CONTROL DRUM
- TRAFFIC CONTROL DRUM WITH TYPE "C" STEADY BURN LIGHT
- TYPE III BARRICADE WITH ATTACHED SIGN
- TYPE "A" WARNING LIGHT (FLASHING)
- REMOVING PAVEMENT MARKINGS
- DIRECTION OF TRAFFIC
- WORK AREA
- FLASHING ARROW BOARD

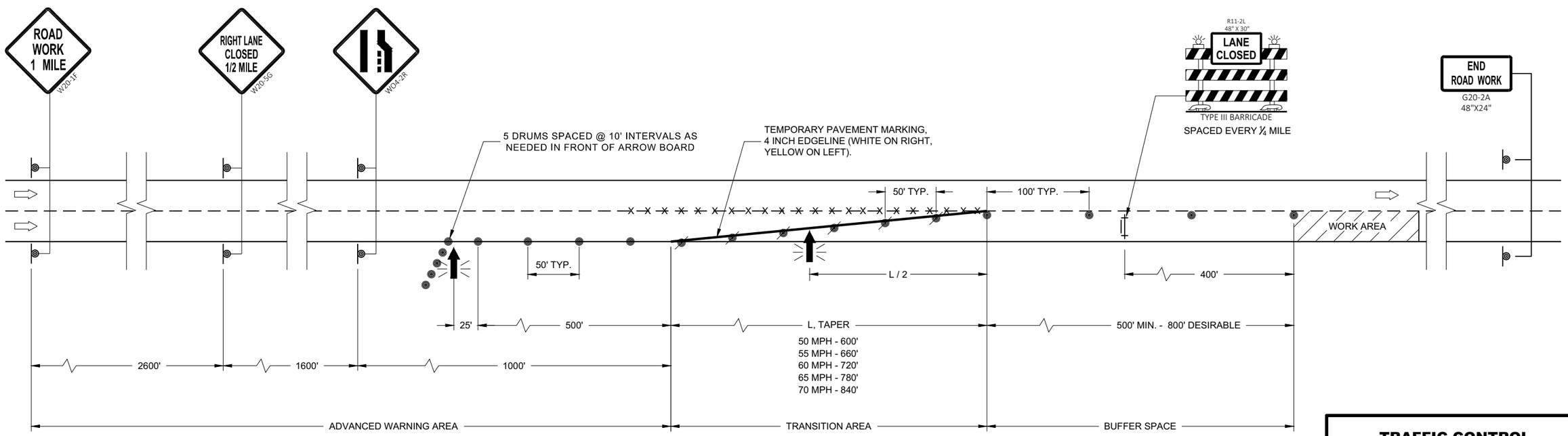

TRAFFIC CONTROL LANE CLOSURE

STATE OF WISCONSIN
DEPARTMENT OF TRANSPORTATION

APPROVED
August 2020 — DATE
/S/ Andrew Heidtke — WORK ZONE ENGINEE
FHWA

6

SDD 15D12 - 09a

6

SDD 15D12 - 09a

GENERAL NOTES

THE EXACT NUMBER, LOCATION, AND SPACING OF ALL SIGNS AND DEVICES SHALL BE ADJUSTED TO FIT FIELD CONDITIONS AS APPROVED BY THE ENGINEER.

THE SPACING BETWEEN SIGNS SHOULD BE ADJUSTED TO NOT CONFLICT WITH AND TO PROVIDE A MINIMUM OF 200 FEET (500 FEET DESIRABLE) CLEARANCE TO EXISTING SIGNS.

THIS LANE CLOSURE IS TYPICAL FOR CLOSING RIGHT LANE - REVERSE FOR CLOSING LEFT LANE.

ALL SIGNS ARE 48" x 48" UNLESS OTHERWISE NOTED.

"WO" SIGNS ARE THE SAME AS "W" SIGNS EXCEPT THE BACKGROUND IS ORANGE.

ANY SIGNS TEMPORARY OR EXISTING, WHICH CONFLICT WITH TRAFFIC CONTROL "IN USE" SHALL BE REMOVED OR COVERED AS NEEDED OR AS APPROVED BY THE ENGINEER.

CONSIDER ROADWAY GEOMETRICS WHEN LOCATING SIGNS AND ARROW BOARD SO THE DRIVER HAS A CLEAR VIEW OF THE ARROW BOARD AND LANE CLOSURE DRUMS.

FOR A LANE CLOSURE THAT IS IN PLACE LESS THAN 7 CONTINUOUS DAYS AND NIGHTS, THE ADVANCED WARNING SIGNS MAY BE MOUNTED ON PORTABLE SUPPORTS.

REMOVE PAVEMENT MARKINGS IF LANE CLOSURE IS TO BE IN PLACE 4 OR MORE CONTINUOUS DAYS AND NIGHTS.

WARNING LIGHTS ARE NOT REQUIRED IF THE LANE CLOSURE IS A DAYTIME ONLY OPERATION.

IF THE HORIZONTAL ALIGNMENT IS SUCH THAT A CURVE MAY REQUIRE ADDITIONAL DELINEATION, THE DEVICE SPACING MAY BE DECREASED TO 50 FEET.

ADJUSTMENTS IN BUFFER SPACE NEED TO BE INCORPORATED WHEN THE LANE CLOSURE OCCURS NEAR AN INTERCHANGE EXIT OR ENTRANCE RAMP OR INTERSECTION. THE LANE CLOSURE MUST TAKE PLACE FAR ENOUGH IN ADVANCE OF AN EXIT OR ENTRANCE RAMP TO STILL ALLOW FOR ADEQUATE BUFFER SPACE. THE MINIMUM LENGTH OF THE BUFFER SPACE BEFORE AN EXIT RAMP SHOULD BE ONE HALF THE LENGTH OF THE TRANSITION AREA. THE ENTRANCE RAMP SHOULD BE FOLLOWED BY THE ORIGINAL BUFFER SPACE LENGTH OF 800 FEET DESIRABLE PRIOR TO ANOTHER TRAFFIC CONTROL CHANGE SUCH AS A CROSSOVER MANEUVER.

* A SPEED LIMIT SIGN SHALL BE LOCATED 1500 FEET BEYOND THE END OF THE ACCELERATION LANE OF EACH ENTRANCE RAMP. PLACE A SPEED LIMIT SIGN A MINIMUM OF EVERY 3 MILES. INCLUDE A RESUME SPEED LIMIT SIGN 200 FEET MINIMUM (500 FEET DESIRABLE) BEYOND THE "END OF ROADWORK" SIGN.

LEGEND

- SIGN ON PERMANENT SUPPORT
- TRAFFIC CONTROL DRUM
- TRAFFIC CONTROL DRUM WITH TYPE "C" STEADY BURN LIGHT
- TYPE III BARRICADE WITH ATTACHED SIGN
- TYPE "A" WARNING LIGHT (FLASHING)
- REMOVING PAVEMENT MARKINGS
- DIRECTION OF TRAFFIC
- WORK AREA
- FLASHING ARROW BOARD

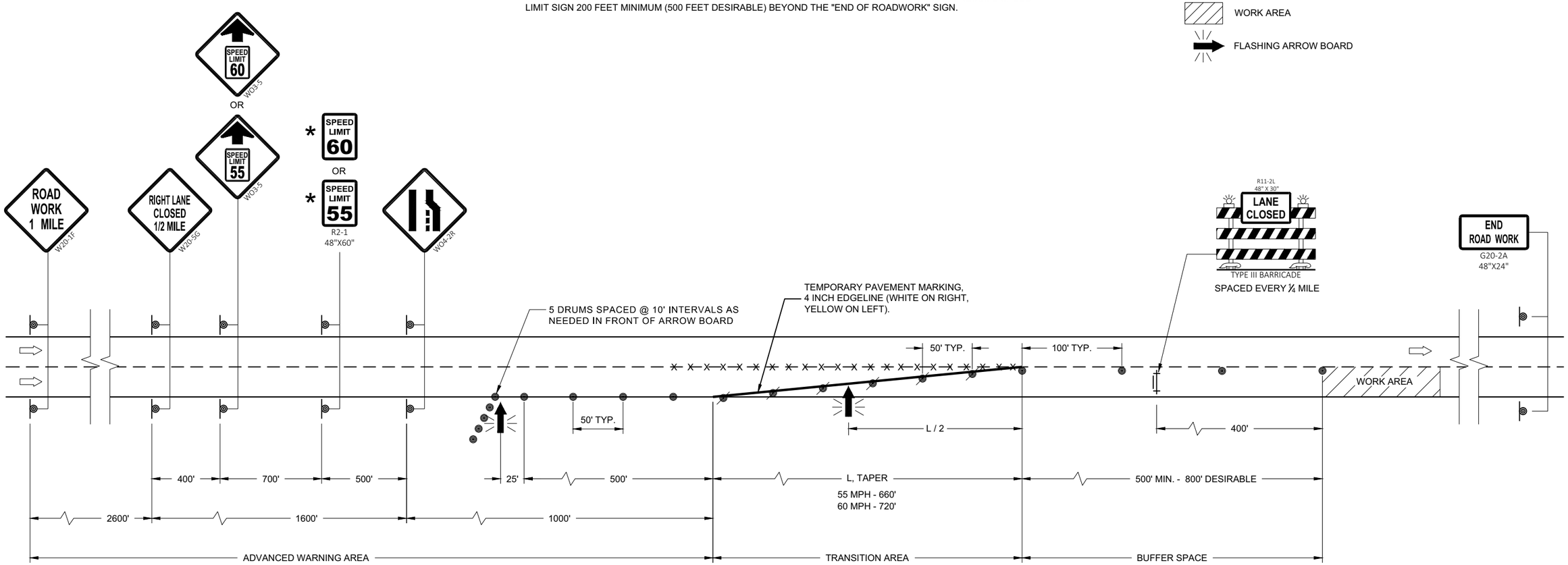

TRAFFIC CONTROL, LANE CLOSURE, SPEED REDUCTION

STATE OF WISCONSIN
DEPARTMENT OF TRANSPORTATION

APPROVED
August 2020 — DATE
/S/ Andrew Heidtke — WORK ZONE ENGINEER
FHWA

6

SDD 15D12 - 09b

LEGEND

- SIGN ON PERMANENT SUPPORT
- SIGN ON TEMPORARY SUPPORT
- TRAFFIC CONTROL DRUM
- TRAFFIC CONTROL DRUM WITH TYPE "C" STEADY BURN LIGHT
- REMOVING PAVEMENT MARKING (SEE GENERAL NOTES)
- TYPE III BARRICADE WITH ATTACHED SIGN
- DIRECTION OF TRAFFIC

GENERAL NOTES

THE INSTALLATIONS SHOWN ON THIS SHEET ARE TYPICAL EXAMPLES AND ARE NOT INTENDED TO REPRESENT ANY PARTICULAR RAMP. AT SPECIFIC FIELD LOCATIONS, SIMILAR INSTALLATIONS SHALL BE USED AND ADJUSTED TO THE GEOMETRICS OF THE RAMP AS COORDINATED WITH THE ENGINEER.

THE EXACT NUMBER, LOCATION, AND SPACING OF ALL SIGNS AND DEVICES SHALL BE ADJUSTED TO FIT FIELD CONDITIONS AS APPROVED BY THE ENGINEER.

THE SPACING BETWEEN TRAFFIC CONTROL SIGNS SHOULD BE ADJUSTED TO NOT CONFLICT WITH AND SHOULD PROVIDE A MINIMUM OF 200 FEET (500 FEET DESIRABLE) CLEARANCE TO EXISTING SIGNS THAT WILL REMAIN IN PLACE.

ALL SIGNS ARE 48" X 48" UNLESS OTHERWISE NOTED.

"WO" IS THE SAME AS "W" EXCEPT THE BACKGROUND IS ORANGE.

SEE SEPARATE LANE CLOSURE DETAIL FOR TYPICAL SPACING OF TYPE III BARRICADES AND R11-2L "LANE CLOSED" SIGNS.

SIGNS THAT WILL BE IN PLACE LESS THAN 7 CONSECUTIVE DAYS AND NIGHTS OR THAT WILL BE PLACED IN A CLOSED LANE, MAY BE MOUNTED ON PORTABLE SUPPORTS. USE SUPPORTS THAT PROVIDE A MINIMUM OF 5 FEET FROM THE BOTTOM OF THE SIGN TO THE PAVEMENT.

IF INDICATED IN MISCELLANEOUS QUANTITIES, SUBSTITUTE FLEXIBLE TUBULAR MARKERS FOR DRUMS IN THE GORE BETWEEN THE ENTRANCE RAMP AND MAINLINE TRAFFIC.

ANY SIGNS TEMPORARY OR EXISTING, WHICH CONFLICT WITH TRAFFIC CONTROL "IN USE" SHALL BE REMOVED OR COVERED AS NEEDED AND AS APPROVED BY THE ENGINEER.

REMOVE PAVEMENT MARKINGS AND PLACE TEMPORARY PAVEMENT MARKING, REMOVABLE TAPE IF LANE CLOSURE IS TO BE IN PLACE FOR 4 OR MORE CONTINUOUS DAYS AND NIGHTS.

WARNING LIGHTS ARE NOT REQUIRED IF THE LANE CLOSURE IS A DAYTIME ONLY OPERATION.

1. EXTEND THE LENGTH OF THE MERGE ARE IF THE ENTERING (DESIGN) SPEED IS LESS THAN 50MPH OR IF THE MAINLINE GRADE EXCEEDS ±2.2%.
2. END TEMPORARY MARKING AT ½ THE LENGTH OF FULL WIDTH OF THE ACCELERATION LANE.

TRAFFIC CONTROL, ENTRANCE RAMP WITHIN RIGHT LANE CLOSURE

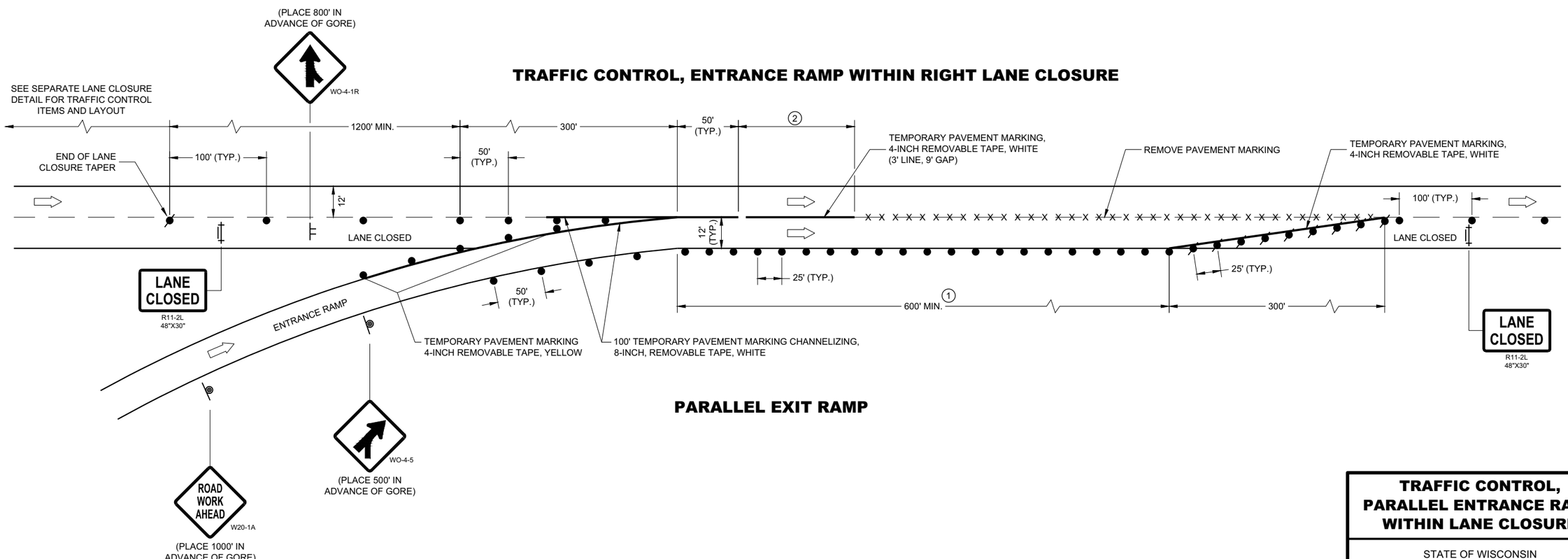

TRAFFIC CONTROL, PARALLEL ENTRANCE RAMP WITHIN LANE CLOSURE	
STATE OF WISCONSIN DEPARTMENT OF TRANSPORTATION	
APPROVED May 2019 DATE	/S/ Andrew Heidtke WORK ZONE ENGINEER
FHWA	

6

SDD 15D15 - 05a

LEGEND

SIGN ON PERMANENT SUPPORT

SIGN ON TEMPORARY SUPPORT

TRAFFIC CONTROL DRUM

TRAFFIC CONTROL DRUM WITH TYPE "C" STEADY BURN LIGHT

REMOVING PAVEMENT MARKING (SEE GENERAL NOTES)

TYPE III BARRICADE WITH ATTACHED SIGN

FLAGS, 16" X 16" MIN., ORANGE

DIRECTION OF TRAFFIC

GENERAL NOTES

THE INSTALLATIONS SHOWN ON THIS SHEET ARE TYPICAL EXAMPLES AND ARE NOT INTENDED TO REPRESENT ANY PARTICULAR RAMP. AT SPECIFIC FIELD LOCATIONS, SIMILAR INSTALLATIONS SHALL BE USED AND ADJUSTED TO THE GEOMETRICS OF THE RAMP AS COORDINATED WITH THE ENGINEER.

THE EXACT NUMBER, LOCATION, AND SPACING OF ALL SIGNS AND DEVICES SHALL BE ADJUSTED TO FIT FIELD CONDITIONS AS APPROVED BY THE ENGINEER.

THE SPACING BETWEEN TRAFFIC CONTROL SIGNS SHOULD BE ADJUSTED TO NOT CONFLICT WITH AND SHOULD PROVIDE A MINIMUM OF 200 FEET (500 FEET DESIRABLE) CLEARANCE TO EXISTING SIGNS THAT WILL REMAIN IN PLACE.

ALL SIGNS ARE 48" X 48" UNLESS OTHERWISE NOTED.

"WO" IS THE SAME AS "W" EXCEPT THE BACKGROUND IS ORANGE.

SEE SEPARATE LANE CLOSURE DETAIL FOR TYPICAL SPACING OF TYPE III BARRICADES AND R11-2L "LANE CLOSED" SIGNS.

YIELD SIGN AND WARNING SIGNS ON ENTRANCE RAMP ARE ALSO APPROPRIATE FOR CLOSURE OF THE MAINLINE LEFT LANE. OMIT THE YIELD SIGN IF MORE THAN ONE LANE REMAINS OPEN ON THE MAINLINE AND THE RAMP TAPER IS AT LEAST AS LONG AS THE NORMAL ENTRANCE RAMP TAPER AT THE SITE.

SIGNS THAT WILL BE IN PLACE LESS THAN 7 CONSECUTIVE DAYS AND NIGHTS OR THAT WILL BE PLACED IN A CLOSED LANE, MAY BE MOUNTED ON PORTABLE SUPPORTS. USE SUPPORTS THAT PROVIDE A MINIMUM OF 5 FEET FROM THE BOTTOM OF THE SIGN TO THE PAVEMENT.

IF INDICATED IN MISCELLANEOUS QUANTITIES, SUBSTITUTE FLEXIBLE TUBULAR MARKERS FOR DRUMS IN THE GORE BETWEEN THE ENTRANCE RAMP AND MAINLINE TRAFFIC.

ANY SIGNS TEMPORARY OR EXISTING, WHICH CONFLICT WITH TRAFFIC CONTROL "IN USE" SHALL BE REMOVED OR COVERED AS NEEDED AND AS APPROVED BY THE ENGINEER.

REMOVE PAVEMENT MARKINGS AND PLACE TEMPORARY PAVEMENT MARKING, REMOVABLE TAPE IF LANE CLOSURE IS TO BE IN PLACE FOR 4 OR MORE CONTINUOUS DAYS AND NIGHTS.

WARNING LIGHTS ARE NOT REQUIRED IF THE LANE CLOSURE IS A DAYTIME ONLY OPERATION.

(1) CONSULT WITH REGIONAL WORK ZONE ENGINEER IF NEED TO REDUCE LENGTH EXISTS.

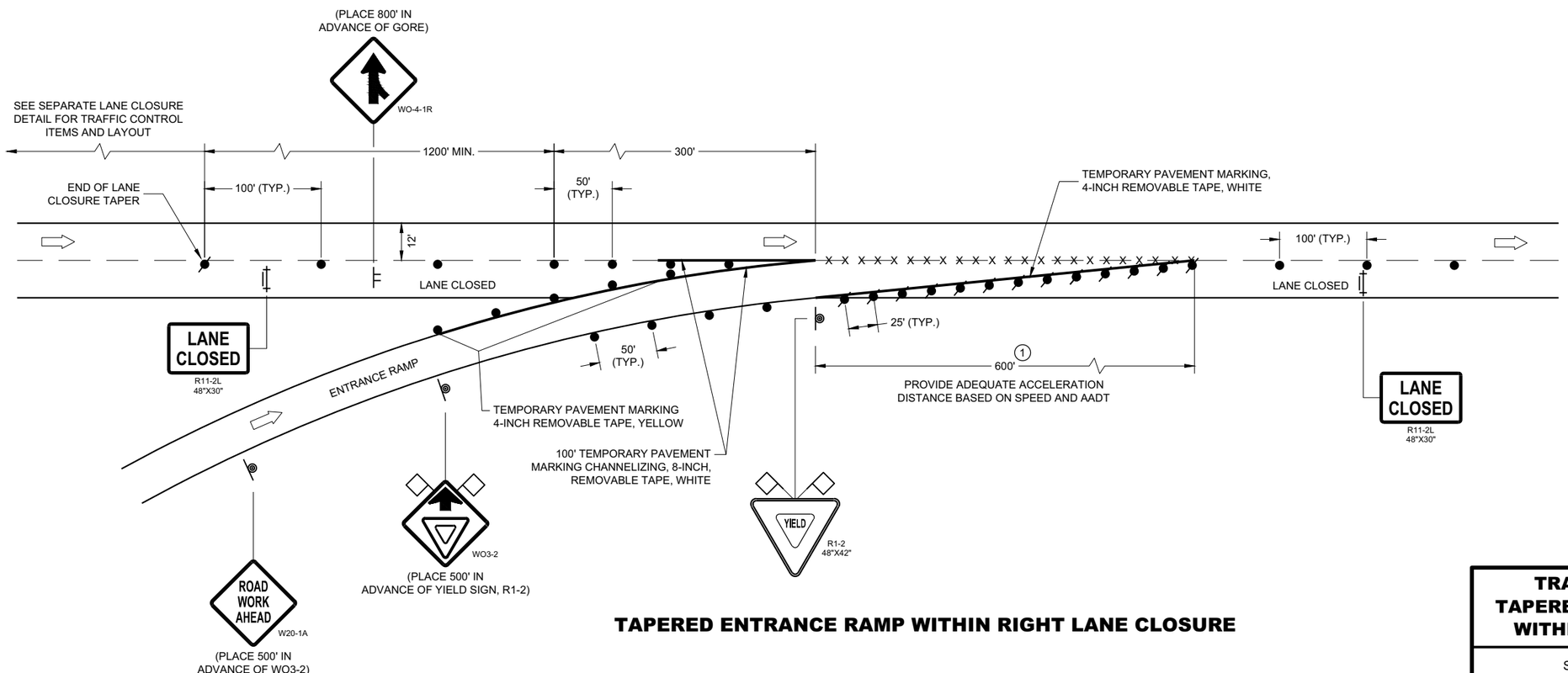

TAPERED ENTRANCE RAMP WITHIN RIGHT LANE CLOSURE

TRAFFIC CONTROL, TAPERED ENTRANCE RAMP WITHIN LANE CLOSURE

STATE OF WISCONSIN
DEPARTMENT OF TRANSPORTATION

APPROVED
May 2019 — DATE
/S/ Andrew Heidtke — WORK ZONE ENGINEER
FHWA

6

SDD 15D15 - 05c

LEGEND

SIGN ON PERMANENT SUPPORT

SIGN ON TEMPORARY SUPPORT

TRAFFIC CONTROL DRUM

TRAFFIC CONTROL DRUM WITH TYPE "C" STEADY BURN LIGHT

TYPE III BARRICADE WITH ATTACHED SIGN

FLAGS, 16" X 16" MIN., ORANGE

DIRECTION OF TRAFFIC

GENERAL NOTES

THE INSTALLATIONS SHOWN ON THIS SHEET ARE TYPICAL EXAMPLES AND ARE NOT INTENDED TO REPRESENT ANY PARTICULAR RAMP. AT SPECIFIC FIELD LOCATIONS, SIMILAR INSTALLATIONS SHALL BE USED AND ADJUSTED TO THE GEOMETRICS OF THE RAMP AS COORDINATED WITH THE ENGINEER.

THE EXACT NUMBER, LOCATION, AND SPACING OF ALL SIGNS AND DEVICES SHALL BE ADJUSTED TO FIT FIELD CONDITIONS AS APPROVED BY THE ENGINEER.

THE SPACING BETWEEN TRAFFIC CONTROL SIGNS SHOULD BE ADJUSTED TO NOT CONFLICT WITH AND SHOULD PROVIDE A MINIMUM OF 200 FEET (500 FEET DESIRABLE) CLEARANCE TO EXISTING SIGNS THAT WILL REMAIN IN PLACE.

ALL SIGNS ARE 48" X 48" UNLESS OTHERWISE NOTED.

"WO" IS THE SAME AS "W" EXCEPT THE BACKGROUND IS ORANGE.

SEE SEPARATE LANE CLOSURE DETAIL FOR TYPICAL SPACING OF TYPE III BARRICADES AND R11-2L "LANE CLOSED" SIGNS.

YIELD SIGN AND WARNING SIGNS ON ENTRANCE RAMP ARE ALSO APPROPRIATE FOR CLOSURE OF THE MAINLINE LEFT LANE. OMIT THE YIELD SIGN IF MORE THAN ONE LANE REMAINS OPEN ON THE MAINLINE AND THE RAMP TAPER IS AT LEAST AS LONG AS THE NORMAL ENTRANCE RAMP TAPER AT THE SITE.

SIGNS THAT WILL BE IN PLACE LESS THAN 7 CONSECUTIVE DAYS AND NIGHTS OR THAT WILL BE PLACED IN A CLOSED LANE, MAY BE MOUNTED ON PORTABLE SUPPORTS. USE SUPPORTS THAT PROVIDE A MINIMUM OF 5 FEET FROM THE BOTTOM OF THE SIGN TO THE PAVEMENT.

IF INDICATED IN MISCELLANEOUS QUANTITIES, SUBSTITUTE FLEXIBLE TUBULAR MARKERS FOR DRUMS IN THE GORE BETWEEN THE ENTRANCE RAMP AND MAINLINE TRAFFIC.

ANY SIGNS TEMPORARY OR EXISTING, WHICH CONFLICT WITH TRAFFIC CONTROL "IN USE" SHALL BE REMOVED OR COVERED AS NEEDED AND AS APPROVED BY THE ENGINEER.

REMOVE PAVEMENT MARKINGS AND PLACE TEMPORARY PAVEMENT MARKING, REMOVABLE TAPE IF LANE CLOSURE IS TO BE IN PLACE FOR 4 OR MORE CONTINUOUS DAYS AND NIGHTS.

WARNING LIGHTS ARE NOT REQUIRED IF THE LANE CLOSURE IS A DAYTIME ONLY OPERATION.

(1) PLACE YIELD SIGN TO PROVIDE ADEQUATE SIGHT DISTANCE AND ACCELERATION DISTANCE.

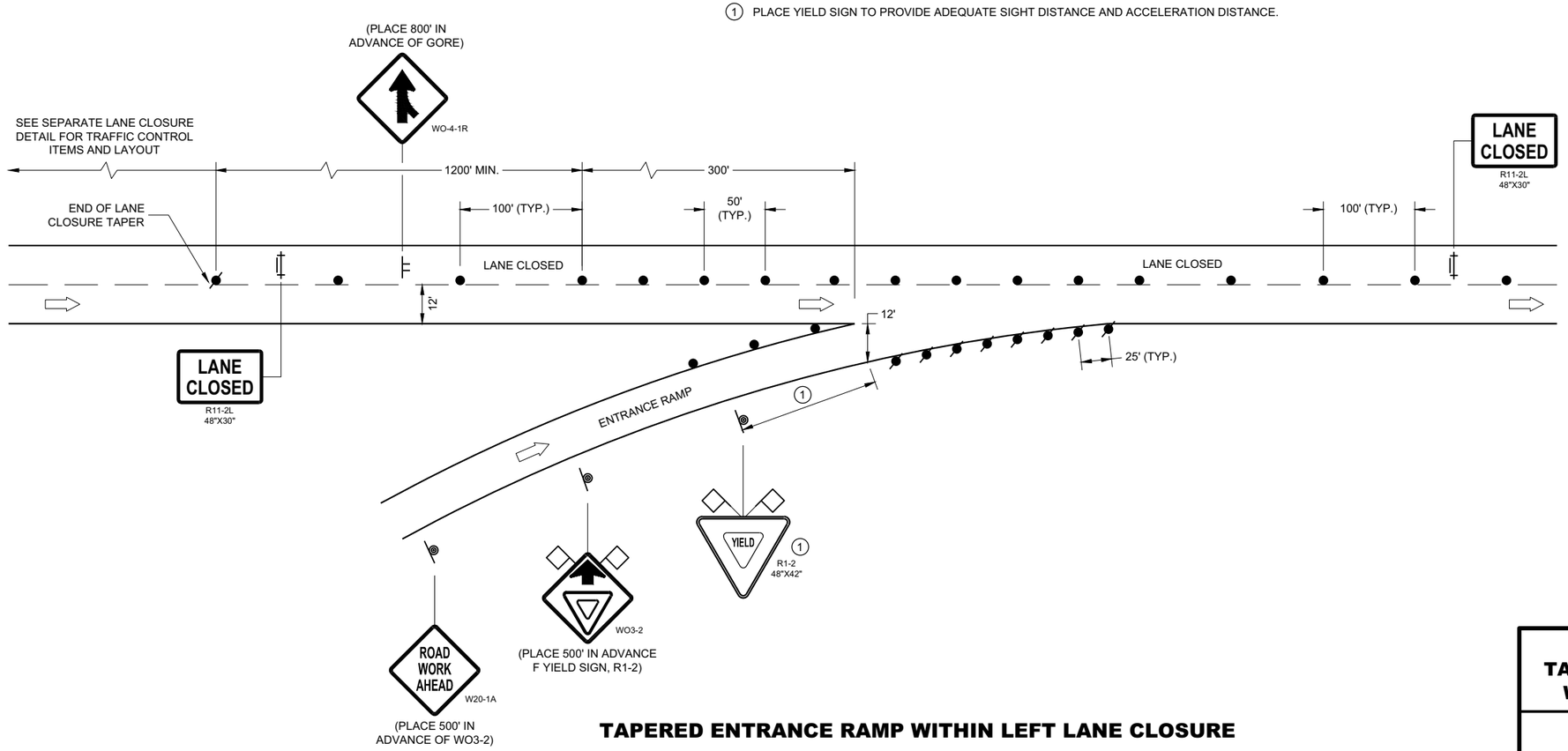

TAPERED ENTRANCE RAMP WITHIN LEFT LANE CLOSURE

TRAFFIC CONTROL, TAPERED ENTRANCE RAMP WITHIN LANE CLOSURE

STATE OF WISCONSIN
DEPARTMENT OF TRANSPORTATION

APPROVED
May 2019 — DATE
/S/ Andrew Heidtke — WORK ZONE ENGINEE
FHWA

6

SDD 15D15 - 05d

6

SDD 15D15 - 05d

LEGEND

SIGN ON PERMANENT SUPPORT

SIGN ON TEMPORARY SUPPORT

TRAFFIC CONTROL DRUM

TRAFFIC CONTROL DRUM WITH TYPE "C" STEADY BURN LIGHT

REMOVING PAVEMENT MARKING (SEE GENERAL NOTES)

TYPE III BARRICADE WITH ATTACHED SIGN

DIRECTION OF TRAFFIC

GENERAL NOTES

THE INSTALLATIONS SHOWN ON THIS SHEET ARE TYPICAL EXAMPLES AND ARE NOT INTENDED TO REPRESENT ANY PARTICULAR RAMP. AT SPECIFIC FIELD LOCATIONS, SIMILAR INSTALLATIONS SHALL BE USED AND ADJUSTED TO THE GEOMETRICS OF THE RAMP AS COORDINATED WITH THE ENGINEER.

THE EXACT NUMBER, LOCATION, AND SPACING OF ALL SIGNS AND DEVICES SHALL BE ADJUSTED TO FIT FIELD CONDITIONS AS APPROVED BY THE ENGINEER.

THE SPACING BETWEEN TRAFFIC CONTROL SIGNS SHOULD BE ADJUSTED TO NOT CONFLICT WITH AND SHOULD PROVIDE A MINIMUM OF 200 FEET (500 FEET DESIRABLE) CLEARANCE TO EXISTING SIGNS THAT WILL REMAIN IN PLACE.

ALL SIGNS ARE 48" X 48" UNLESS OTHERWISE NOTED.

"WO" IS THE SAME AS "W" EXCEPT THE BACKGROUND IS ORANGE.

SEE SEPARATE LANE CLOSURE DETAIL FOR TYPICAL SPACING OF TYPE III BARRICADES AND R11-2L "LANE CLOSED" SIGNS.

SIGNS THAT WILL BE IN PLACE LESS THAN 7 CONSECUTIVE DAYS AND NIGHTS OR THAT WILL BE PLACED IN A CLOSED LANE, MAY BE MOUNTED ON PORTABLE SUPPORTS.

IF INDICATED IN MISCELLANEOUS QUANTITIES, SUBSTITUTE FLEXIBLE TUBULAR MARKERS FOR DRUMS IN THE GORE BETWEEN THE EXIT RAMP AND MAINLINE TRAFFIC.

ANY SIGNS TEMPORARY OR EXISTING, WHICH CONFLICT WITH TRAFFIC CONTROL "IN USE" SHALL BE REMOVED OR COVERED AS NEEDED AND AS APPROVED BY THE ENGINEER.

REMOVE PAVEMENT MARKINGS AND PLACE TEMPORARY PAVEMENT MARKING, REMOVABLE TAPE IF LANE CLOSURE IS TO BE IN PLACE FOR 4 OR MORE CONTINUOUS DAYS AND NIGHTS.

WARNING LIGHTS ARE NOT REQUIRED IF THE LANE CLOSURE IS A DAYTIME ONLY OPERATION.

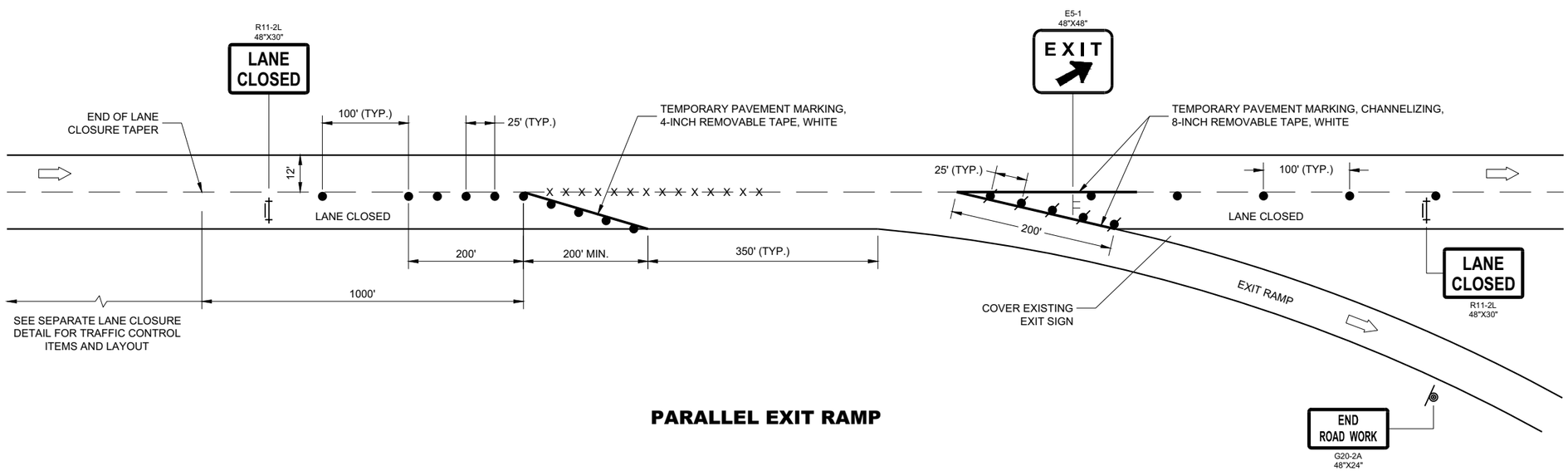

PARALLEL EXIT RAMP

6

6

SDD 15D15 - 05e

SDD 15D15 - 05e

TRAFFIC CONTROL, PARALLEL EXIT RAMP WITHIN LANE CLOSURE

STATE OF WISCONSIN
DEPARTMENT OF TRANSPORTATION

APPROVED
May 2019
DATE

/S/ Andrew Heidtke
WORK ZONE ENGINEE

FHWA

LEGEND

- TYPE III BARRICADE
- TYPE III BARRICADE WITH ATTACHED SIGN
- TRAFFIC CONTROL DRUM
- SIGN ON PERMANENT SUPPORT
- TYPE "A" WARNING LIGHT (FLASHING)
- DIRECTION OF TRAFFIC

GENERAL NOTES

THIS RAMP CLOSURE DETAIL IS TYPICAL FOR CLOSING A RIGHT SIDE EXIT RAMP. FOR A LEFT SIDE EXIT RAMP, REVERSE THE TRAFFIC CONTROL.

THE EXACT NUMBER, LOCATION, AND SPACING OF ALL SIGNS AND DEVICES SHALL BE ADJUSTED TO FIT FIELD CONDITIONS AS APPROVED BY THE ENGINEER.

THE SPACING BETWEEN TRAFFIC CONTROL SIGNS SHOULD BE ADJUSTED TO NOT CONFLICT WITH AND SHOULD PROVIDE A MINIMUM OF 200 FEET (500 FEET DESIRABLE) CLEARANCE TO EXISTING SIGNS THAT WILL REMAIN IN PLACE.

ALL SIGNS ARE 48" X 48" UNLESS OTHERWISE NOTED.

SIGNS THAT WILL BE IN PLACE LESS THAN 7 CONTINUOUS DAYS AND NIGHTS MAY BE MOUNTED ON PORTABLE SUPPORTS.

ANY SIGNS, TEMPORARY OR EXISTING, WHICH CONFLICT WITH TRAFFIC CONTROL "IN USE" SHALL BE REMOVED OR COVERED AS NEEDED AND AS APPROVED BY THE ENGINEER.

PLACE TEMPORARY PAVEMENT MARKING, REMOVABLE TAPE IF RAMP CLOSURE IS TO BE IN PLACE 4 OR MORE CONTINUOUS DAYS AND NIGHTS.

WORK AREAS WITH A DROP OFF ALONG THE EDGE OF AN OPEN TRAVEL LANE SHALL BE LEVELED WITH TEMPORARY FILL WHEN THE CONTRACTOR IS NOT WORKING ADJACENT TO THE TRAVEL LANE. DRUMS SHALL BE PLACED ENTIRELY OUTSIDE THE TRAVEL LANE, ALLOWING THE FULL UNOBSTRUCTED LANE WIDTH, WHEN WORK IS NOT IN PROGRESS.

WHERE MEDIAN BARRIER IS IN PLACE, SIGNS SHOWN ON LEFT SIDE OF ROADWAY MAY BE OMITTED FOR RIGHT SIDE RAMP CLOSURES OF LESS THAN 12 - HOUR DURATION.

* W20 - 1A AND G20 - 2A SIGNS ARE NOT REQUIRED IF THE RAMP CLOSURE IS WITHIN A LARGER WORK ZONE WHERE THESE SIGNS ARE ALREADY PRESENT.

** PLACE "RAMP CLOSED BEGINNING" SIGN OR PCMS 7 CALENDAR DAYS PRIOR TO CLOSURE OR AS DIRECTED BY THE ENGINEER. SEE WISCONSIN STANDARD SIGN PLATES FOR SIGN LAYOUT.

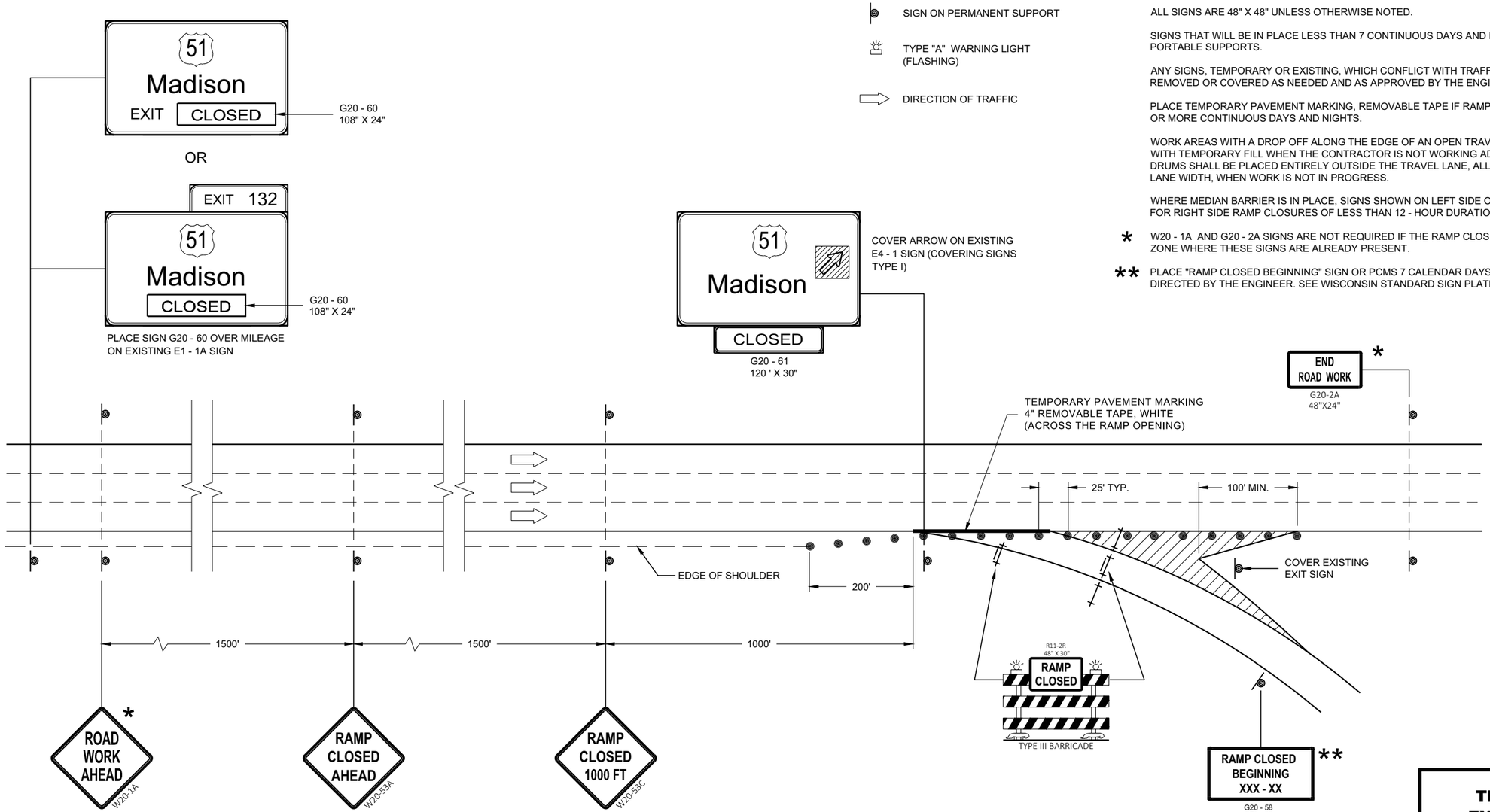

OR

PCMS MESSAGING

FRAME 1	FRAME 2
RAMP TO CLOSE	XXXDAY XX XX XX

TRAFFIC CONTROL, EXIT RAMP CLOSURE

STATE OF WISCONSIN
DEPARTMENT OF TRANSPORTATION

APPROVED
November 2018 — DATE
/S/ Andrew Heidtke — ROADWAY STANDARDS DEVE ENGINEER
FHWA

6

SDD 15D16 - 04

LEGEND

- TRAFFIC CONTROL DRUM
- SIGN ON PERMANENT SUPPORT
- DIRECTION OF TRAFFIC
- FLASHING ARROW BOARD
- WORK AREA

GENERAL NOTES

THIS DETAIL IS TYPICAL FOR CLOSING THE RIGHT SHOULDER. FOR CLOSING THE LEFT SHOULDER, REVERSE THE TRAFFIC CONTROL.

THIS DETAIL MAY BE USED FOR DIVIDED ROADWAYS WITH ANY NUMBER OF TRAVEL LANES.

THE EXACT NUMBER, LOCATION AND SPACING OF ALL SIGNS AND DEVICES SHALL BE ADJUSTED TO FIT FIELD CONDITIONS AS APPROVED BY THE ENGINEER.

ALL SIGNS ARE 48" X 48" UNLESS OTHERWISE NOTED.

SIGN LAYOUTS SHALL BE IN ACCORDANCE WITH THE FHWA'S MANUAL OF STANDARD HIGHWAY SIGNS OR THE WISCONSIN STANDARD SIGN PLATES.

SIGNS THAT WILL BE IN PLACE LESS THAN 7 CONTINUOUS DAYS AND NIGHTS MAY BE MOUNTED ON PORTABLE SUPPORTS.

ANY SIGNS TEMPORARY OR EXISTING, WHICH CONFLICT WITH TRAFFIC CONTROL "IN USE" SHALL BE REMOVED OR COVERED AS NEEDED AND AS APPROVED BY THE ENGINEER.

CHANNELIZING DEVICES PLACED ADJACENT TO THE WORK AREA SHALL BE PULLED BACK FROM THE TRAVEL LANE WHEN WORK IS NOT IN PROGRESS.

WHEN A RAMP INTERSECTS THE FACILITY ON WHICH THE WORK IS BEING PERFORMED, ADDITIONAL TRAFFIC CONTROLS SHALL BE PROVIDED AS SPECIFIED IN THE PLANS AND/OR THE SPECIAL PROVISIONS OR AS APPROVED BY THE ENGINEER.

*FOR SHORT DURATION SHOULDER WORK OF LESS THAN ONE HOUR, THE W21-5a SIGN MAY BE OMITTED.

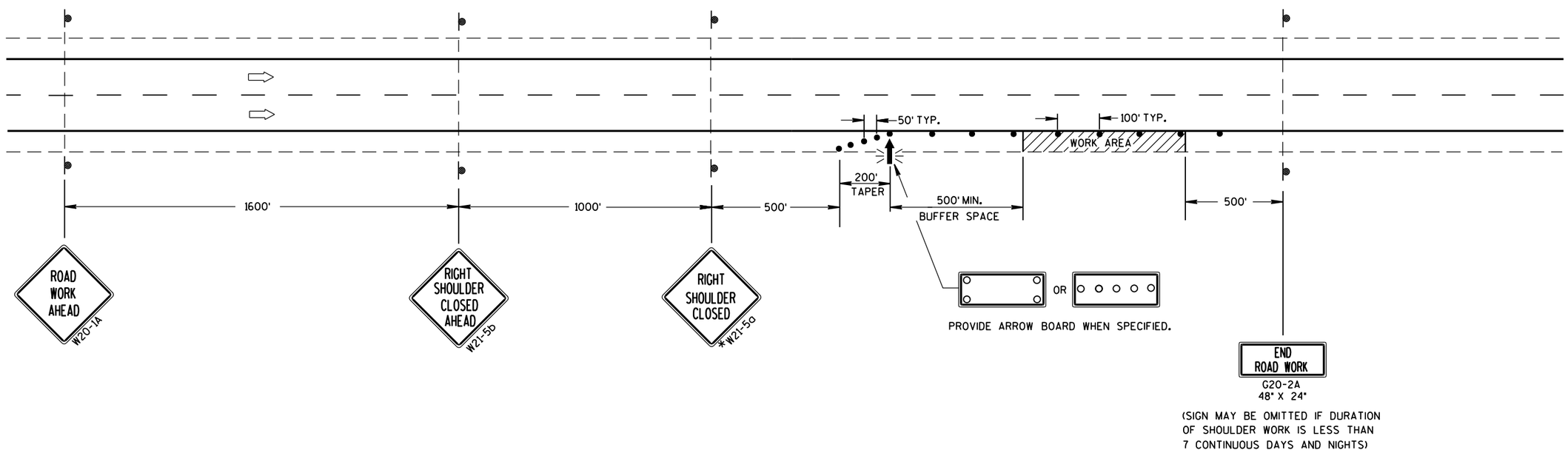

TRAFFIC CONTROL SHOULDER CLOSURE ON DIVIDED ROADWAY, SPEEDS GREATER THAN 40 MPH

STATE OF WISCONSIN
DEPARTMENT OF TRANSPORTATION

APPROVED

June 2016 — DATE

/S/ Peter Amakobe Atepe — STATEWIDE WORK ZONE TRAFFIC SAFETY ENGINEER

FHWA

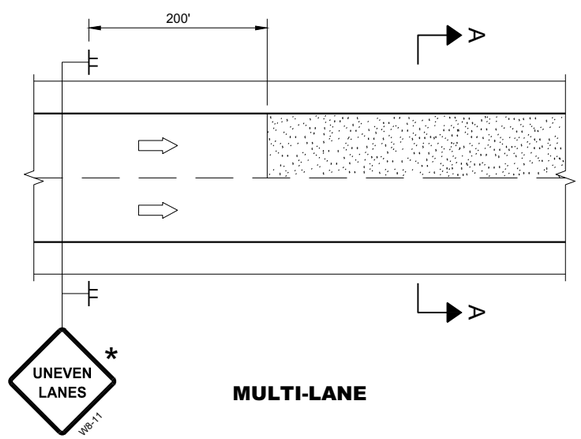

MULTI-LANE

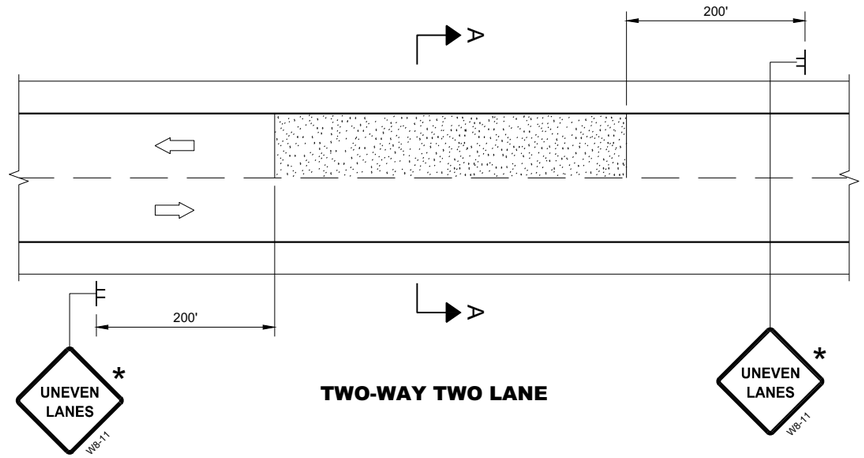

TWO-WAY TWO LANE

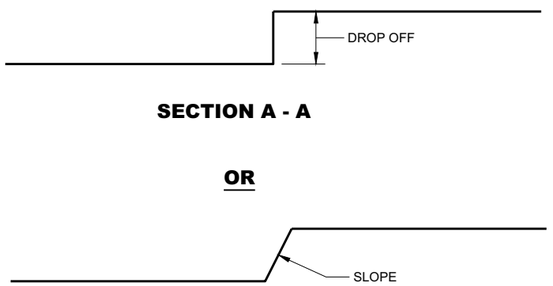

SECTION A - A

OR

SECTION A - A

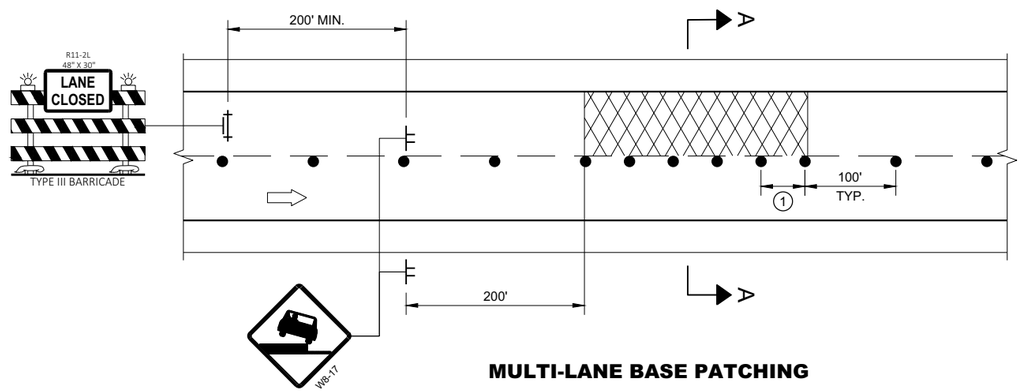

MULTI-LANE BASE PATCHING

ADJACENT LANE DROP-OFFS

GENERAL NOTES

FOR SPOT LOCATIONS USE ENGINEERING JUDGEMENT WHEN PLACING ADDITIONAL SIGNS.

ALL SIGNS ARE 48" X 48" UNLESS OTHERWISE NOTED.

"WO" SIGNS ARE THE SAME AS "W" SIGNS EXCEPT THE BACKGROUND IS ORANGE.

WARNING LIGHTS ARE NOT REQUIRED IF THE LANE CLOSURE IS A DAYTIME ONLY OPERATION.

* IF THE DROP-OFF IS CONTINUOUS ALONG THE PROJECT, PLACE ADDITIONAL SIGNS EVERY 1 MILE AND AFTER EVERY ENTRANCE RAMP.

(1) USE CLOSER SPACING WHEN DELINEATING DROP-OFF.

LEGEND

- SIGN ON TEMPORARY SUPPORT
- TRAFFIC CONTROL DRUM
- TYPE III BARRICADE WITH ATTACHED SIGN
- TYPE "A" WARNING LIGHT (FLASHING)
- DIRECTION OF TRAFFIC
- WORK AREA WITH DROP-OFF
- MILLED SURFACE

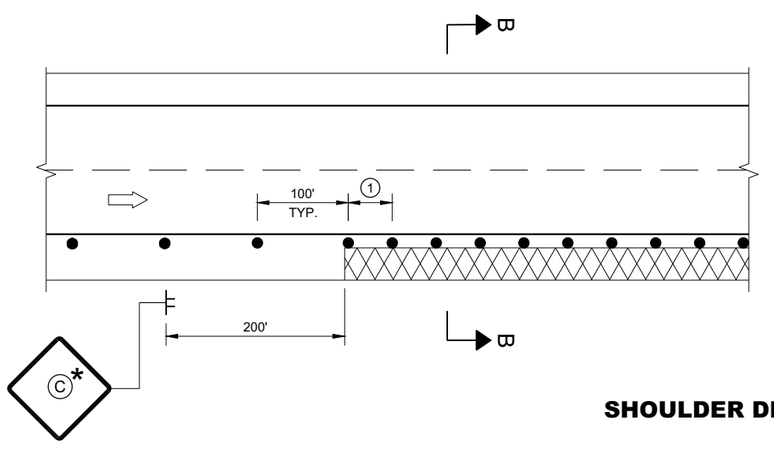

SHOULDER DROP-OFFS

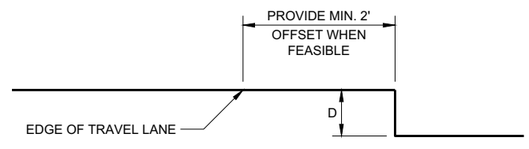

SECTION B - B

D	SIGN (C)
< 2" WITH A SLOPE STEEPER THAN 3:1	LOW SHOULDER WO8-9
2" < 6" WITH A SLOPE STEEPER THAN 3:1	SHOULDER DROP - OFF W8-9A PROVIDE A 3:1 OR FLATTER SLOPE OF MATERIAL ADJACENT TO THE PAVEMENT

TRAFFIC CONTROL, DROP-OFF SIGNING

STATE OF WISCONSIN
DEPARTMENT OF TRANSPORTATION

APPROVED
March 2018 — DATE
/S/ Andrew Heidtke — WORK ZONE ENGINEE
FHWA

6

SDD 15D39 - 02

LEGEND

- TYPE III BARRICADE WITH ATTACHED SIGN
- SIGN ON PERMANENT SUPPORT
- TRAFFIC CONTROL DRUM
- TRAFFIC CONTROL DRUM WITH TYPE "C" STEADY BURN LIGHT
- TYPE "A" WARNING LIGHT (FLASHING)
- DIRECTION OF TRAFFIC
- WORK AREA
- REMOVE PAVEMENT MARKING

GENERAL NOTES

THE EXACT NUMBER, LOCATION, AND SPACING OF ALL SIGNS AND DEVICES SHALL BE ADJUSTED TO FIT FIELD CONDITIONS AS APPROVED BY THE ENGINEER.

THE SPACING BETWEEN SIGNS SHOULD BE ADJUSTED TO NOT CONFLICT WITH AND TO PROVIDE A MINIMUM OF 200 FEET, (500 FEET DESIRABLE) DISTANCE TO EXISTING SIGNS.

THIS LANE CLOSURE IS TYPICAL FOR LANE SHIFT LEFT - REVERSE FOR SHIFTING RIGHT.

ALL SIGNS ARE 48"x48" UNLESS OTHERWISE NOTED.

"WO" IS THE SAME AS "W" EXCEPT THE BACKGROUND IS ORANGE.

ANY SIGNS TEMPORARY OR EXISTING, WHICH CONFLICT WITH TRAFFIC CONTROL "IN USE" SHALL BE REMOVED OR COVERED AS NEEDED AND AS APPROVED BY THE ENGINEER. NO WARNING LIGHTS SHALL BE WORKING ON ANY "COVERED" OR "DOWNED" SIGNS.

CONSIDER GEOMETRICS WHEN LOCATING SIGNS AND ARROW BOARDS SO THE DRIVER HAS A CLEAR VIEW OF THE ARROW BOARD AND LANE CLOSURE DRUMS FOR A MINIMUM 1500 FEET IN FRONT OF DRUMS.

FOR A LANE CLOSURE THAT IS IN PLACE LESS THAN 7 CONTINUOUS DAYS AND NIGHTS, THE ADVANCED WARNING SIGNS MAY BE MOUNTED ON PORTABLE SUPPORTS.

REMOVE PAVEMENT MARKINGS IF LANE CLOSURE IS TO BE IN PLACE FOR LONGER THAN 4 OR MORE DAYS AND NIGHTS.

WARNING LIGHTS ARE NOT REQUIRED IF THE LANE CLOSURE IS A DAYTIME ONLY OPERATION.

IF THE HORIZONTAL ALIGNMENT IS SUCH THAT A CURVE MAY REQUIRE ADDITIONAL DELINEATION, THE DEVICE SPACING MAY BE DECREASED TO 50 FEET.

ADJUSTMENTS IN BUFFER SPACE NEED TO BE INCORPORATED WHEN THE LANE SHIFT OCCURS NEAR AN INTERCHANGE EXIT OR ENTRANCE RAMP. THE LANE SHIFT MUST TAKE PLACE FAR ENOUGH IN ADVANCE OF AN EXIT OR ENTRANCE RAMP TO STILL ALLOW FOR ADEQUATE BUFFER SPACE. THE MINIMUM LENGTH OF THE BUFFER SPACE BEFORE AN EXIT RAMP SHOULD BE 1/2 THE LENGTH OF THE TRANSITION AREA. THE ENTRANCE RAMP SHOULD BE FOLLOWED BY THE ORIGINAL BUFFER SPACE LENGTH OF 800 FEET DESIRABLE PRIOR TO ANOTHER TRAFFIC CONTROL CHANGE SUCH AS A CROSSOVER MANEUVER.

(1) USE ONLY WHEN T<600', OMIT WO1-4R.

(2) IF NEEDED, USE ONLY IF DESIGN SPEED IS 10 MPH BELOW POSTED SPEED.

POSTED SPEED LIMIT PRIOR TO WORK STARTING (MPH)	SHIFTING TAPER L/2 W, LATERAL OFFSET (FT)								
	1	2	3	4	5	6	7	8	9
50	25	50	75	100	125	150	175	200	225
55	28	55	83	110	138	165	193	220	248
60	30	60	90	120	150	180	210	240	270
65	33	65	98	130	163	195	228	260	293
70	35	70	105	140	175	210	245	280	315

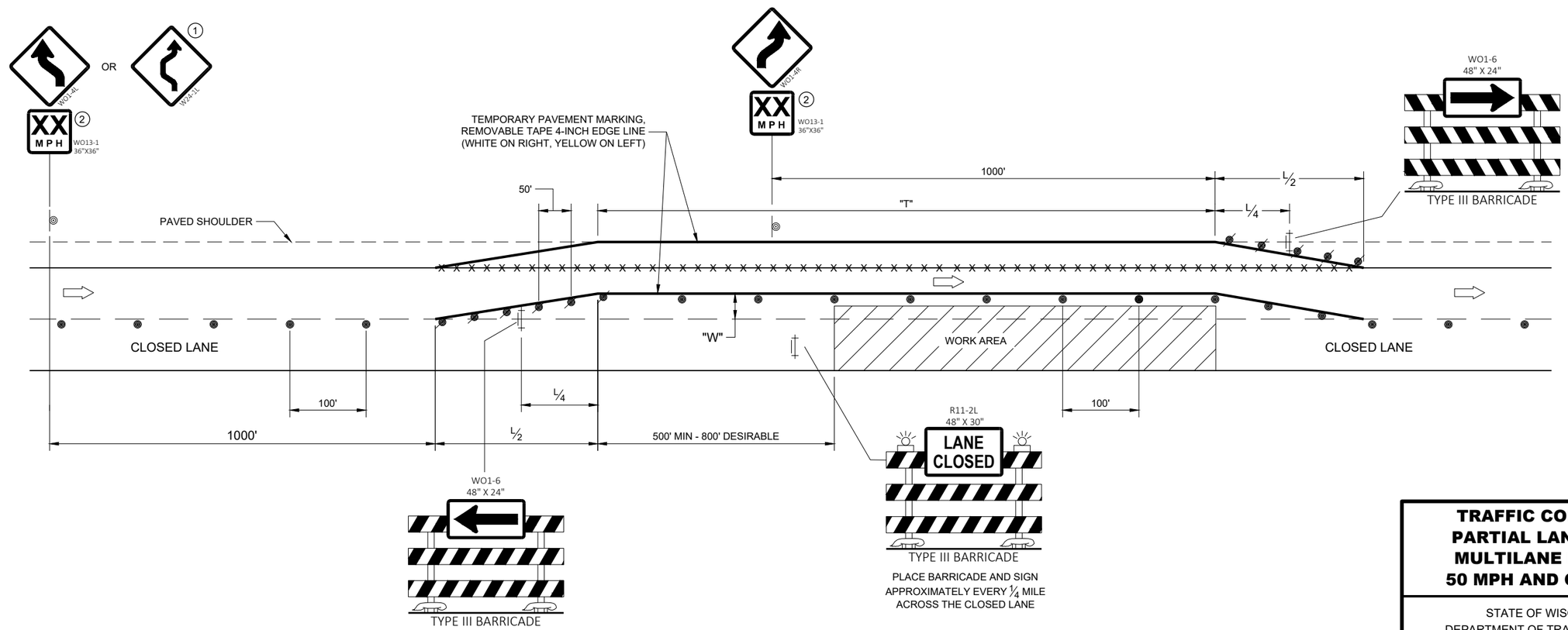

TRAFFIC CONTROL, PARTIAL LANE SHIFT MULTILANE DIVIDED 50 MPH AND GREATER

STATE OF WISCONSIN
DEPARTMENT OF TRANSPORTATION

APPROVED
February 2021 — DATE
/S/ Andrew Heidtke — ROADWAY STANDARDS DEVE ENGINEER
FHWA

6
SDD 15D40 - 02d

GENERAL NOTES

DRAWING NOT TO SCALE. ALL SIGNS AND POSTS ON THIS SHEET SHALL BE PAID FOR WITH 'TRAFFIC CONTROL SIGNS' BID ITEM. ALL SIDE ROADS WHICH ARE UNDER CONSTRUCTION OF CURB AND GUTTER AND/OR GRADING SHALL BE ADEQUATELY SIGNED.

ALL SIGNS AND DEVICES SHALL BE IN CONFORMANCE WITH THE WISCONSIN MANUAL OF UNIFORM TRAFFIC CONTROL DEVICES (WMUTCD). SIGN LAYOUTS SHALL BE IN ACCORDANCE WITH THE WISDOT STANDARD SIGN PLATES.

"WO" SIGNS ARE THE SAME AS "W" SIGNS EXCEPT THAT THE BACKGROUND IS ORANGE.

ALL SIGNS ARE 48" X 48" UNLESS OTHERWISE NOTED.

THE EXACT NUMBER, LOCATION AND SPACING OF ALL SIGNS AND DEVICES SHALL BE ADJUSTED TO FIT FIELD CONDITIONS AS DIRECTED BY THE ENGINEER.

ALL SIGNS INAPPROPRIATE TO THE STATUS OF THE CONTROL ZONE, INCLUDING PRE-EXISTING SIGNS IN THE VICINITY, SHALL BE COVERED OR REMOVED AS DIRECTED BY THE ENGINEER.

SEE 15C34 FOR ADDITIONAL TRAFFIC CONTROL SIGNING WHEN CENTERLINE PAVEMENT MAKINGS ARE MISSING. 'DO NOT PASS' SIGNS MUST BE INSTALLED ON THE SAME DAY AS MILLING OPERATIONS.

(1) PLACE SIGNS 350' IN ADVANCE OF MILLED SURFACES AND AT 1 MILE INTERVALS, OR AS DIRECTED BY THE ENGINEER.

(2) PLACE SIGN 200' MIN. FROM INTERSECTION AND 200' MIN. AFTER ADVANCE WARNING SIGN SHOWN IN SDD 15C04.

LEGEND

SIGN ON TEMPORARY SUPPORT

DIRECTION OF TRAFFIC

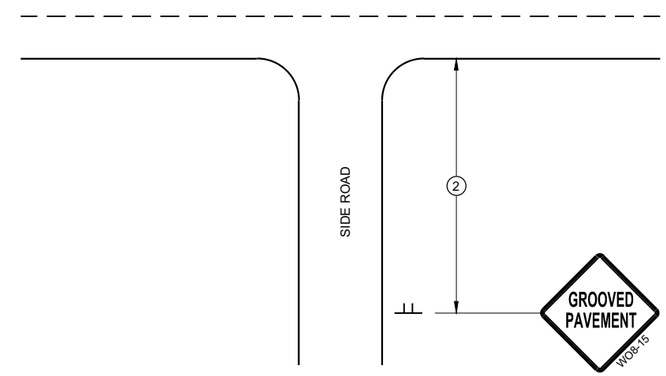

TYPICAL SIDE ROAD APPROACH SIGN DETAIL

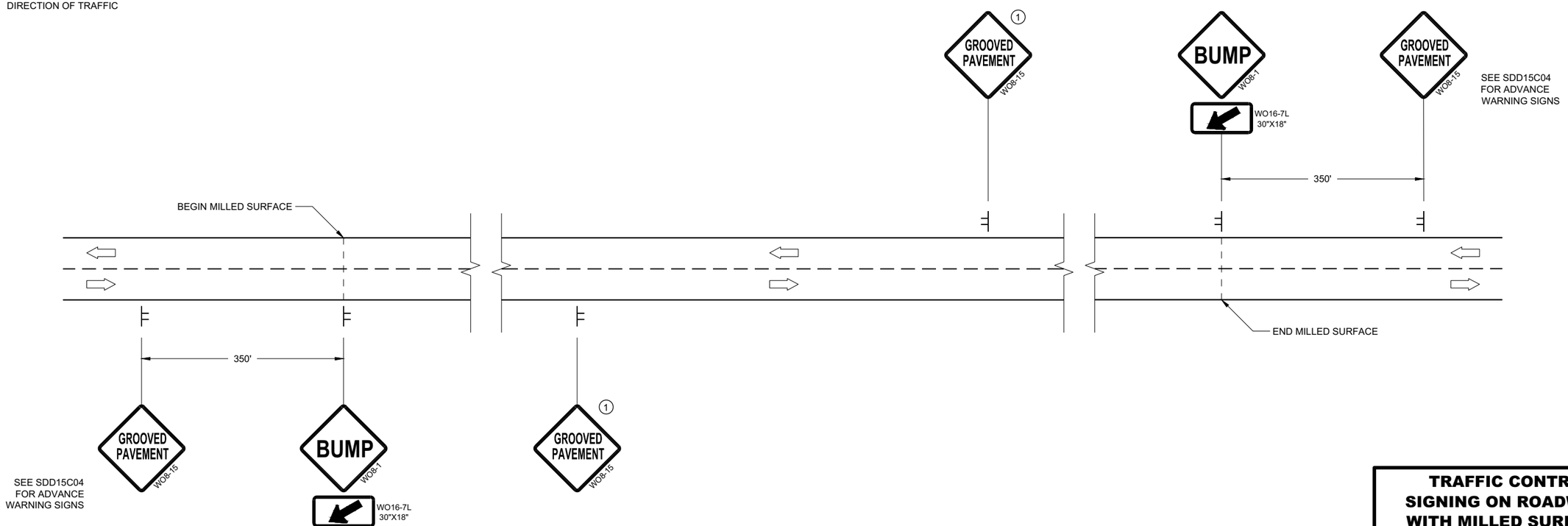

DETAIL FOR SIGNING ON MILLED SURFACES

TRAFFIC CONTROL, SIGNING ON ROADWAYS WITH MILLED SURFACES

STATE OF WISCONSIN
DEPARTMENT OF TRANSPORTATION

APPROVED
February 2020 — DATE
/S/ Andrew Heidtke — WORK ZONE ENGINEE
FHWA

6

SDD 15D44 - 02

6

SDD 15D44 - 02

URBAN AREA

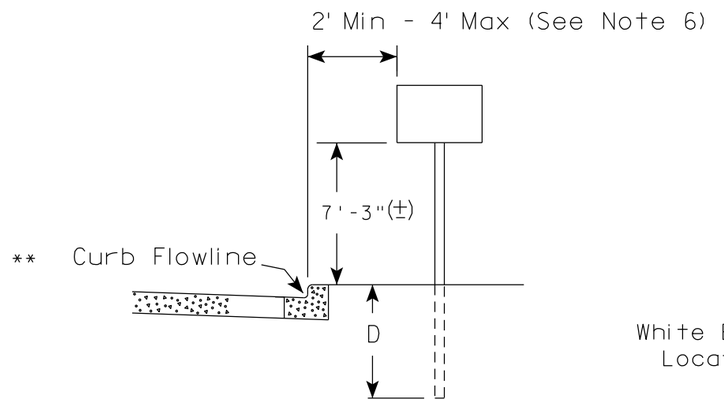

RURAL AREA (See Note 2)

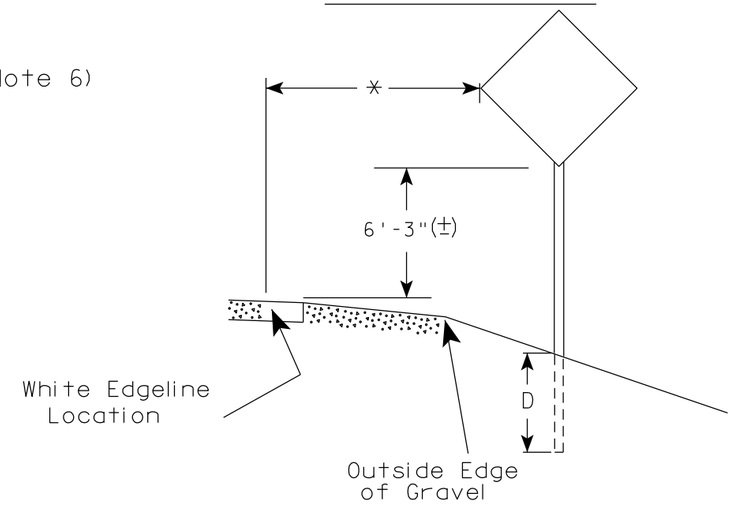

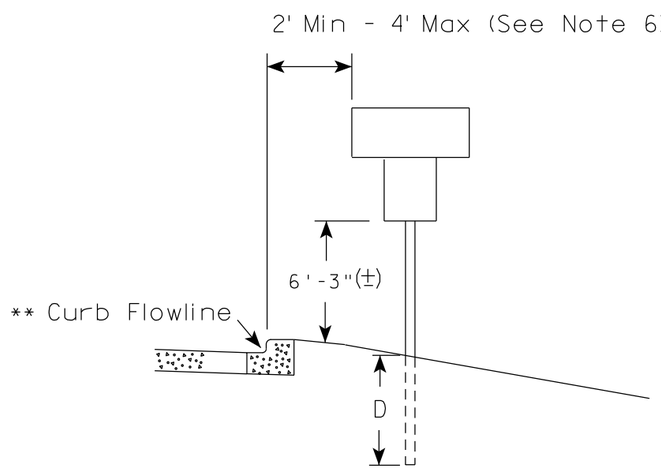

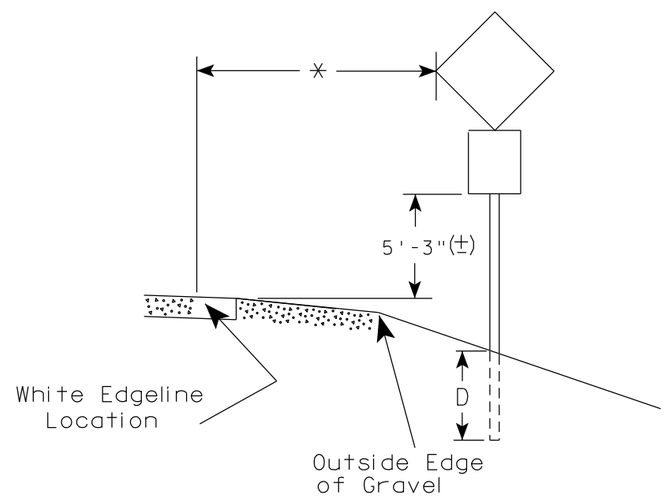

** The existence of curb and gutter does not in itself mandate the vertical clearance illustrated. That height is typically measured where there is sidewalk adjacent to the roadway or parking is permitted. In the absence of sidewalk vertical clearance is measured from the top of the curb. Offset of signs is measured from the flow line.

* 6 feet from edge of a paved shoulder or 12 feet from the edge of pavement (edge line location) or 2 feet from outside edge of gravel, whichever is greater unless directed by project engineer.

GENERAL NOTES

1. Signs wider than 4 feet or 20 sq.ft or larger, shall be mounted on multiple posts. Refer to plate A4-4.
2. If signs are mounted on or behind barrier wall, see A4-10 sign plate.
   The Double Arrow sign (W12-1D) shall be mounted at a height of 2'-3" (±). The Chevron sign (W1-8), Roundabout Chevron panel (R6-4B), Enhanced Reference Markers, Clearance Markers (W5-52), Mile Markers (D10 series), In Road Object Markers (W5-54) & End of Road Markers (W5-56) shall be mounted at a height of 4'-3" (±).
3. For expressways and freeways, mounting height is 7'- 3" (±) or 6'-3" (±) depending upon existence of a sub-sign.
4. Minimum mounting height for signs mounted on traffic signal poles is 5'- 3" (±).
5. Offset distance shall be consistent with existing signs or consistent throughout length of project.
6. The (±) tolerance for mounting height is 3 inches.
7. Folding signs shall be mounted at a height of 5'-3" (±) or as directd by the Engineer.

POST EMBEDMENT DEPTH

Area of Sign Installation (Sq.Ft.)	D (Min)
20 or Less	4'
Greater than 20	5'

TYPICAL INSTALLATION OF PERMANENT TYPE II SIGNS ON SINGLE POSTS

WISCONSIN DEPT OF TRANSPORTATION

APPROVED Matthew R Rauch for State Traffic Engineer

DATE 5/13/2020 PLATE NO. A4-3.22

7 7

PROJECT NO:	HWY:	COUNTY:		SHEET NO: 137	E

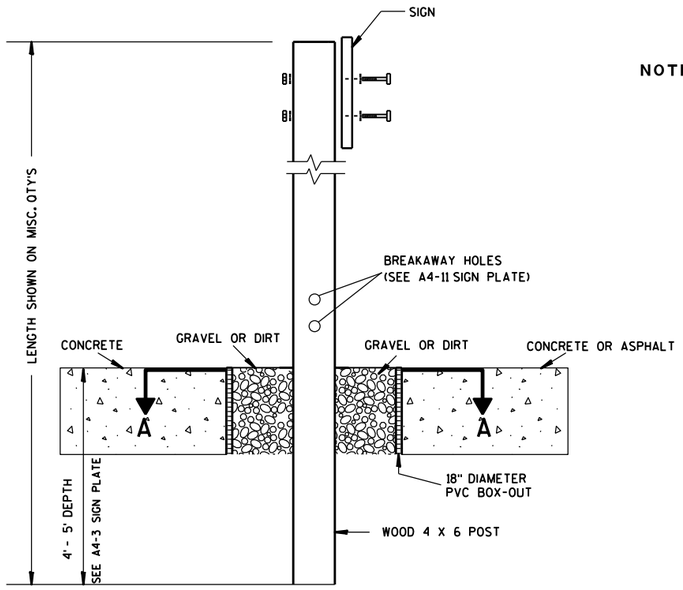

ELEVATION VIEW

DETAIL OF WOOD 4 X 6 SIGN POST IN BOX-OUT

NOTES:
1. ALL MATERIAL TO BE APPROVED BY ENGINEER PRIOR TO INSTALLATION
2. SEE SIGN PLATE A4-8 FOR SIGN HARDWARE REQUIREMENTS
3. 18 INCH X 18 INCH SQUARE BOX-OUTS MAY BE USED FOR INSTALLATIONS IN EXISTING CONCRETE OR ASPHALT LOCATIONS.

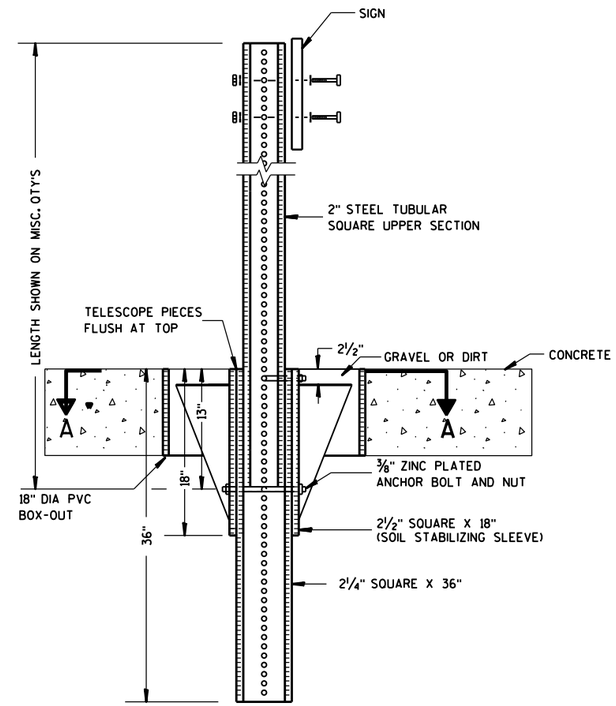

ELEVATION VIEW

DETAIL OF STEEL 2 X 2 SIGN POST IN BOX-OUT

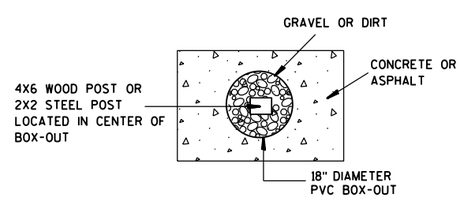

PLAN VIEW

FOR NEW CONCRETE/ASPHALT INSTALLATIONS

SIGN POST
BOX-OUTS
A4-3B

WISCONSIN DEPT OF TRANSPORTATION

APPROVED Matthew R Rauch
for State Traffic Engineer

DATE 1/27/14 PLATE NO. A4-3B.1

PROJECT NO:	HWY:	COUNTY:		SHEET NO:	E

URBAN AREA

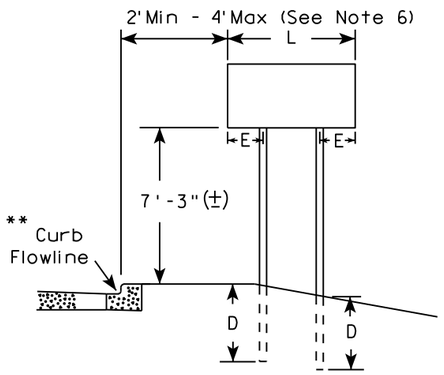

RURAL AREA (See Note 3)

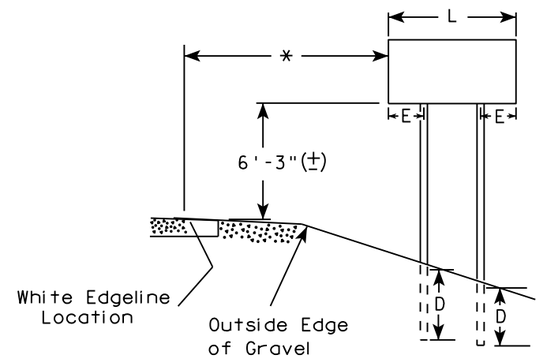

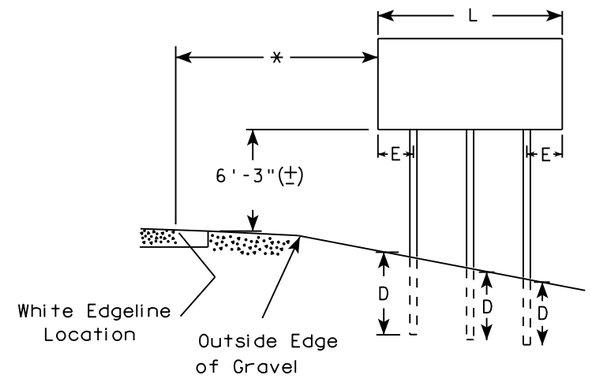

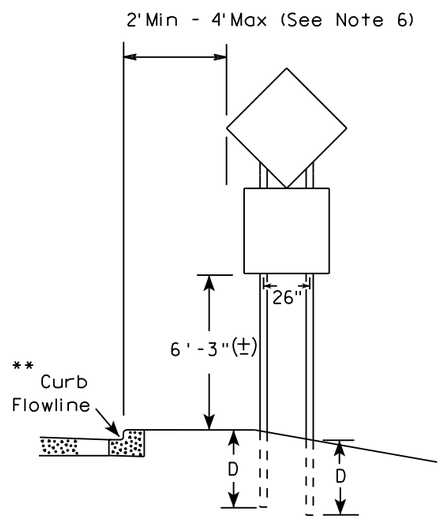

48" DIAMOND WARNING SIGN

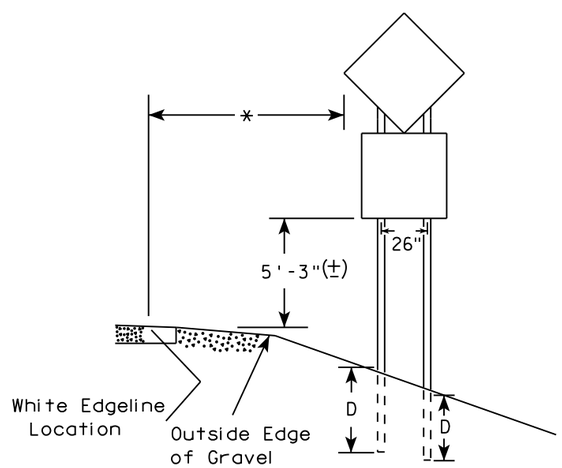

48" DIAMOND WARNING SIGN

SIGN SHAPE OTHER THAN DIAMOND (TWO POSTS REQUIRED)	
L	E
*** Greater than 48" Less than 60"	12"
60" to 108"	L/5

SIGN SHAPE OTHER THAN DIAMOND (THREE POSTS REQUIRED)	
L	E
Greater than 108" to 144"	12"

GENERAL NOTES

1. For 3 or 4 post installations, individual post spacing shall be greater than 3'-6".
2. See tables below for required number of posts.
3. For expressways and freeways, mounting height is 7'-3" (±) or 6'-3" (±) depending upon existence of sub-sign.
4. The (±) tolerance for mounting height is 3 inches.
5. J-Assemblies are considered to be one sign for mounting height.
6. Offset distance shall be consistent with existing signs or consistent throughout length of project.
7. Folding signs shall be mounted at a height of 5'-3" (±) or as directed by the engineer.
8. The Double Arrow sign (W12-1) shall be mounted at a height of 2'-3" (±). The Chevron sign (W1-8), Roundabout Chevron panel (R6-4B), Clearance Markers (W5-52), Mile Markers (D10 series), In Road Object Markers (W5-54) & End of Road Markers (W5-56) shall be mounted at a height of 4"-3" (±).

* 6 feet from edge of a paved shoulder or 12 feet from the edge of pavement (edge line location) or 2 feet from outside edge of gravel, whichever is greater unless directed by project engineer.

** The existence of curb and gutter does not in itself mandate the vertical clearance illustrated. That height is typically measured where there is sidewalk adjacent to the roadway or parking is permitted. In the absence of sidewalk vertical clearance is measured from the top of the curb. Offset of signs is measured from the flow line.

*** See A4-3 sign plate for signs 4' or less in width and less than 20 S.F. in area.

POST EMBEDMENT DEPTH

Area of Sign Installation (Sq. Ft.)	D (Min)
20 or Less	4'
Greater than 20	5'

TYPICAL INSTALLATION OF TYPE II SIGNS ON MULTIPLE POSTS

WISCONSIN DEPT OF TRANSPORTATION

APPROVED Matthew R Rauch
For State Traffic Engineer

DATE 8/21/17 PLATE NO. A4-4.15

7

7

PROJECT NO:	HWY:	COUNTY:		SHEET NO: 139	E

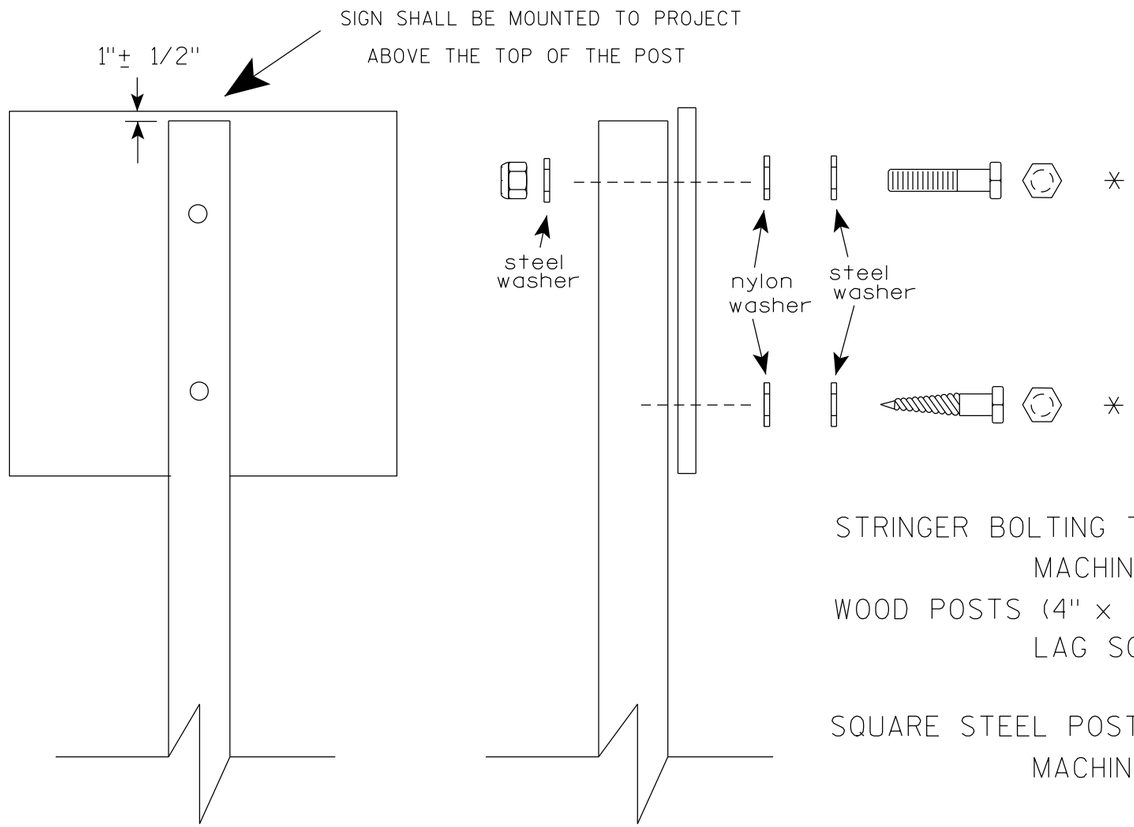

Nuts, bolts and lags used for mounting signs shall have hexagonal heads and shall be either :

a. Hot dip galvanized in accordance with ASTM Designation: A 153, Class D, or SC 3

b. Electro-galvanized in accordance with ASTM Designation : B 633, TYPE III, SC 3.

Threads on bolts and nuts shall be manufactured with sufficient allowance for the cadmium plate or galvanized coating to permit the nuts to run freely on the bolts.

STRINGER BOLTING TO ALUMINUM SIGNS (SEE SIGN PLATE A4-18)

MACHINE BOLTS - 5/16" X 1-3/4" Length w/ lock nuts

WOOD POSTS (4" x 6")

LAG SCREWS - 3/8" X 3" (NO STRINGERS ON BACK OF SIGN)

3/8" X 4" (STRINGERS ON BACK OF SIGN)

SQUARE STEEL POSTS (2" x 2")

MACHINE BOLTS - 3/8" X 3-1/4" Length w/ nuts (NO STRINGER ON BACK OF SIGN)

3/8" X 5" Length w/ nuts (STRINGERS ON BACK OF SIGN)

RIVETS - 9/32 " (6605-9-6) BULB-TITE, TRI-FOLD, ALUMINUM BODY/MANDREL

O.D. FLANGE .720-.765 INCH, GRIP RANGE .042-.375 INCH

WASHERS (ALL POSTS) -

1-1/4" O.D. X 3/8" I.D. X 1/16" STEEL

1-1/4" O.D. X 3/8" I.D. X .080 NYLON

* Two different fastening systems are shown for illustration purposes. On any individual sign, either one or the other system shall be used. Actual number of fasteners per sign varies with the sign area, but normally there are two. For a single post installation, all signs greater than 9 sq. ft. require the use of 3 fasteners.

ATTACHMENT OF SIGNS TO POSTS

WISCONSIN DEPT OF TRANSPORTATION

APPROVED Matthew R Rauch
for State Traffic Engineer

DATE 4/1/2020 PLATE NO. A4-8.9

TELESCOPIC TUBING ANCHORS
TWO PIECE SYSTEM

2 1/4" SQUARE
12 GAUGE
PERFORATED
GALVANIZED FINISH

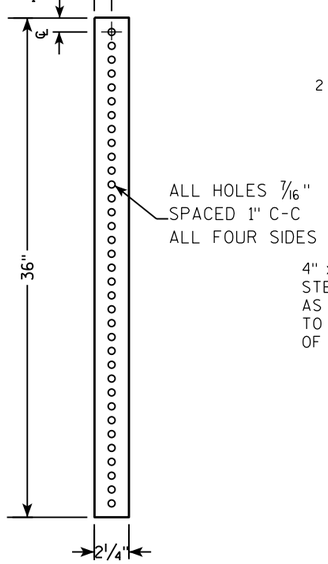

2 1/2" SQUARE
12 GAUGE
OMNI-DIRECTIONAL
PERFORATED
SOIL STABILIZING SLEEVE
GALVANIZED FINISH

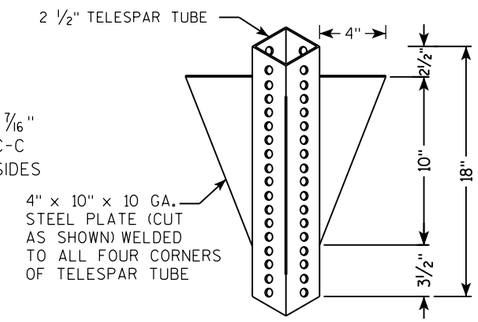

DETAIL OF TUBULAR STEEL SIGN POST
(IN POURED CONCRETE OR ASPHALT)

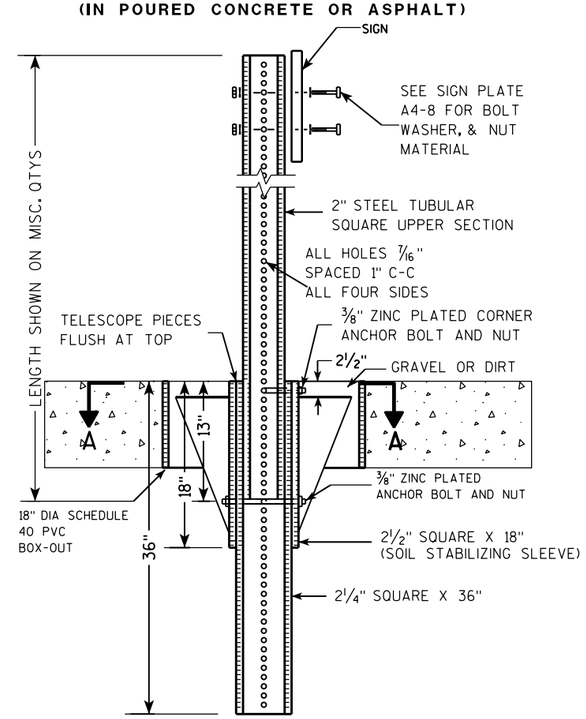

DETAIL OF TUBULAR STEEL SIGN POST
(IN LOCATIONS OTHER THAN POURED CONCRETE OR ASPHALT)

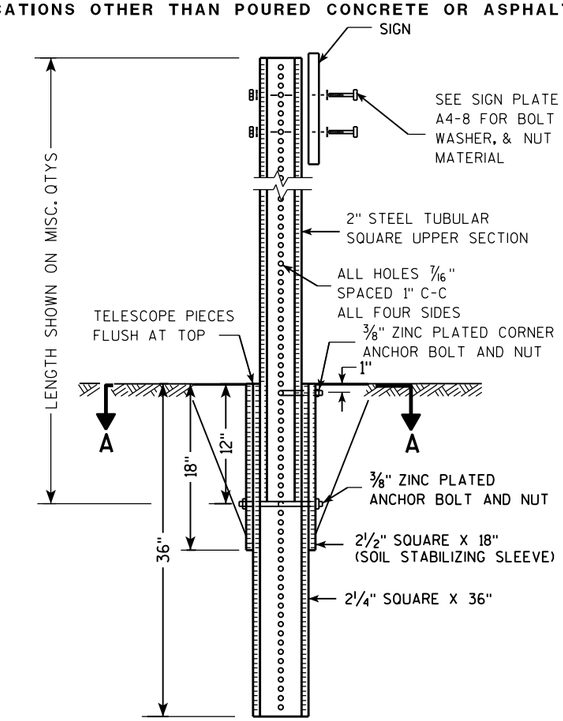

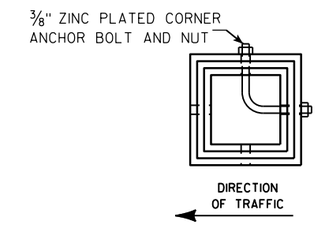

SECTION A-A

Area of Sign Installation (Sq. Ft.)	Number of Required Posts
9 or less	1
Greater than 9 less than or equal to 18	2
Greater than 18 less than or equal to 27	3

Signs wider than 3 feet or larger than 9 sq. ft shall be mounted on multiple posts (see above table).

TUBULAR STEEL
SIGN POST
A4-9

WISCONSIN DEPT OF TRANSPORTATION

APPROVED Matthew R Rauch
for State Traffic Engineer

DATE 2/05/15 PLATE A4-9.9

7 7

PROJECT NO:	HWY:	COUNTY:		SHEET NO:	E

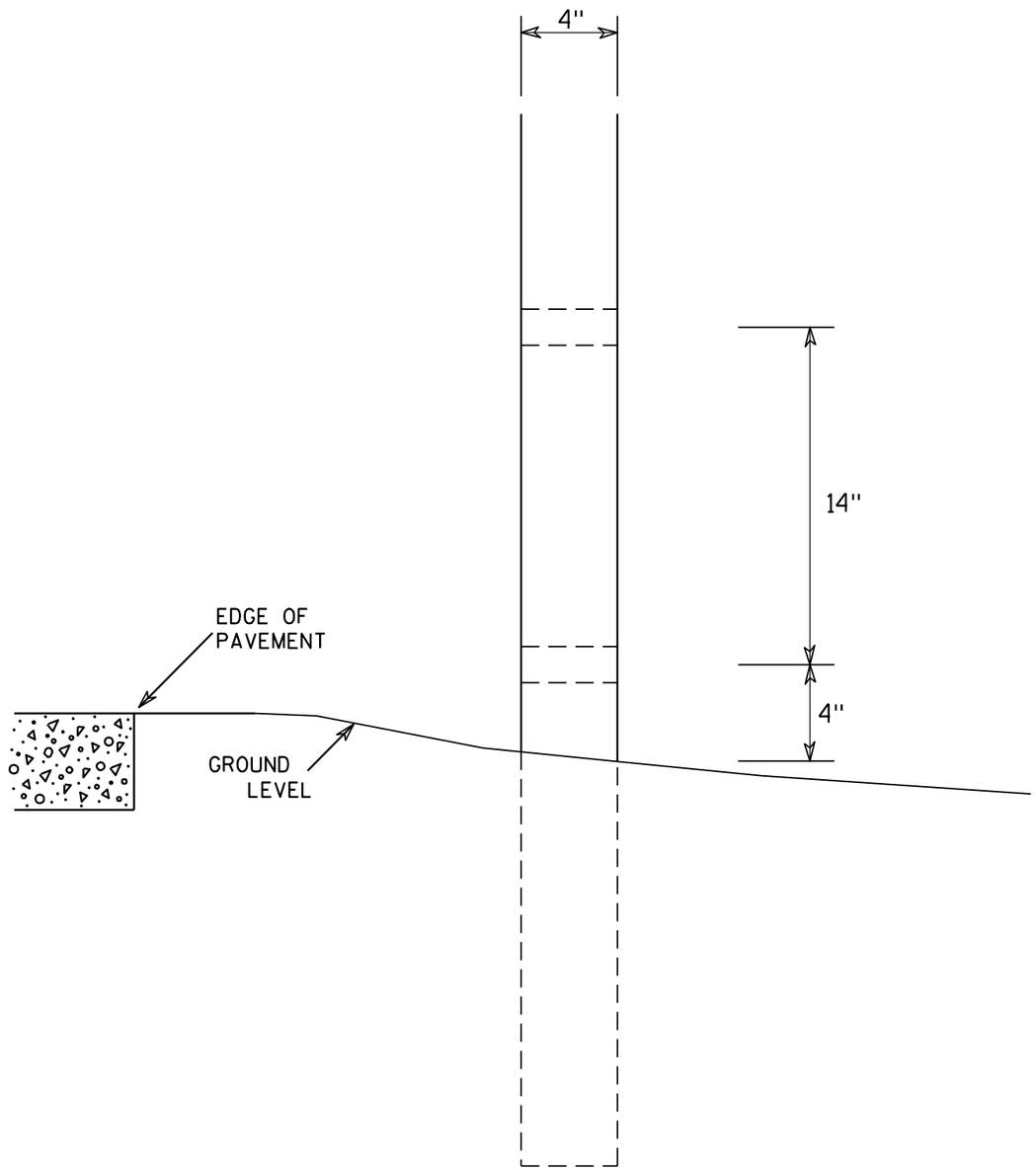

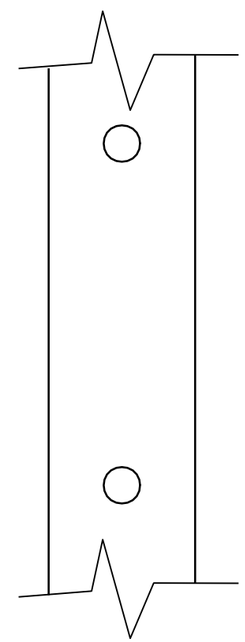

SIDE VIEW

GENERAL NOTES

1. All 4 x 6 Wood Posts shall be modified by having two 1½" diameter holes drilled perpendicular to the roadway centerline.

7

7

4 X 6 WOOD POST MODIFICATIONS

WISCONSIN DEPT OF TRANSPORTATION

APPROVED Chester J Spang for State Traffic Engineer

DATE 3/27/97 PLATE NO. A4-11.2

PROJECT NO:	HWY:	COUNTY:		SHEET NO: 142	E

SIGN LAYOUT WITH VARIOUS SIZED MESSAGES

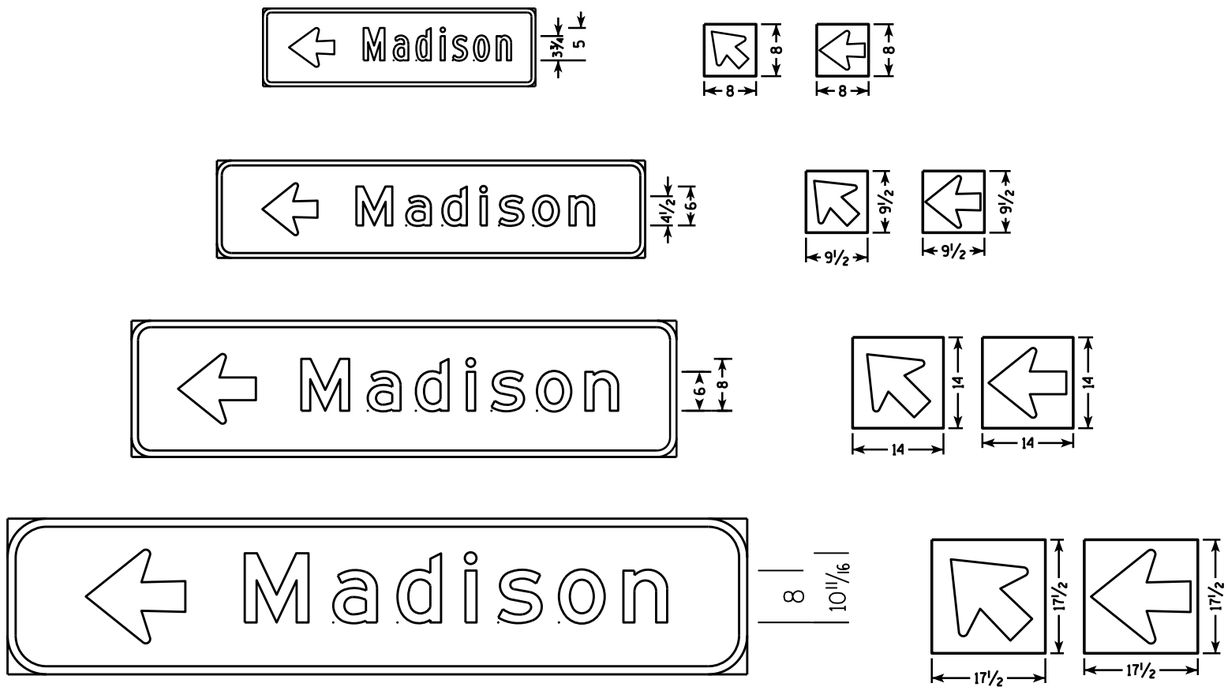

GENERAL NOTES

1. Materials shall conform to Standard Specification Section 637.
   Base - Sheet Aluminum 0.040" Thickness
   Sheeting - Orange Type F Reflective
   Arrow - Black Non-Reflective
2. Arrow signs shall be fastened to permanent sign by either aluminum rivets or aluminum self-tapping sheet metal screws. There shall be a minmum of 2 fasteners used per arrow sign.
3. There shall be a spacer consisting of a 0.08" nylon washer between the back of the arrow sign and the face of the permanent sign.
4. Arrows are per standard plate A1-2
5. Use separate arrow sign for each destination
6. Tilt arrow is always at 45 degrees
7. Arrow is centered on arrow sign

Lower Case Copy Size	Standard Width (Single Arrow)	2 Line Tilt Arrow Cover Width	3 Line Tilt Arrow Cover Width	Height
3¾" Series C	8	9 ½	14 ½	8
4½" Series D & E	9 ½	10	15	9 ½
6" Series D & E	14	16	20 ½	14
8" Series E	17 ½	20 ½	25	17 ½

BEFORE

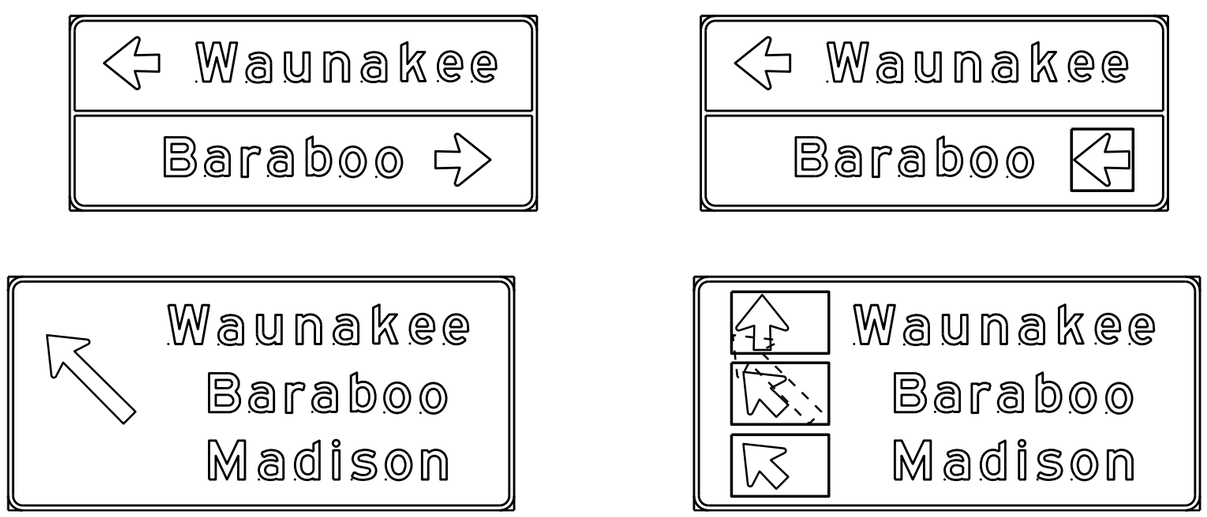

AFTER

DESTINATION DIRECTIONAL ARROW FOR DETOUR SIGNS

WISCONSIN DEPT OF TRANSPORTATION

APPROVED Matthew R Rauch
for State Traffic Engineer

DATE 10/08/14

A4-12.2

PROJECT NO:

SHEET NO: E

BANDING

SINGLE SIGN

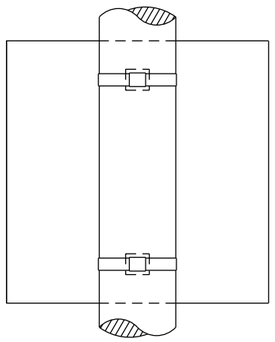

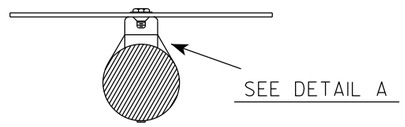

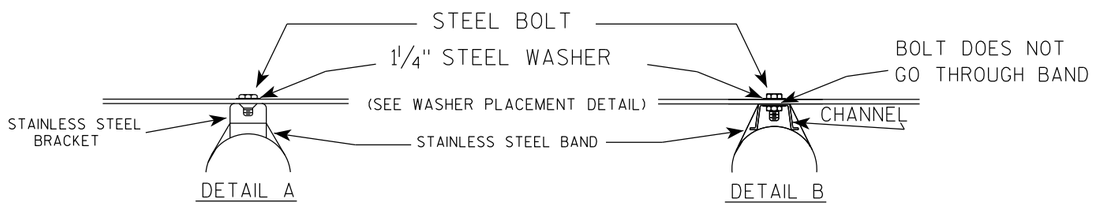

WASHER PLACEMENT

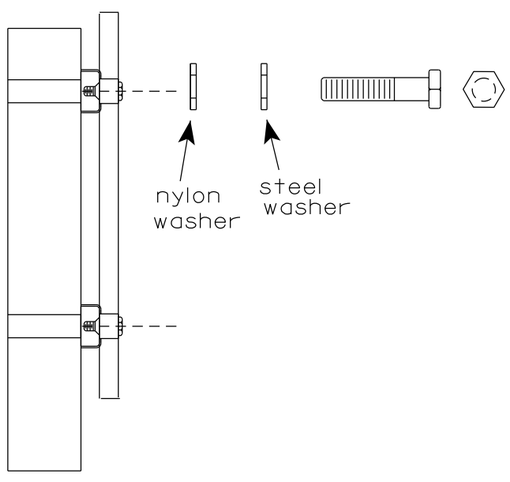

WASHERS (ALL POSTS) -
1-1/4" O.D. X 3/8" I.D. X 1/16" STEEL
1-1/4" O.D. X 3/8" I.D. X .080 NYLON
FOR ALL TYPE H SIGNS

GENERAL NOTES

1. Any sign over 3 feet in width shall use the V-Block banding method. See A5-10 standard plate.
2. Signs 3 feet or greater in height shall have three bracket bands installed. Signs less than 3 feet in height shall have two bracket bands installed.
3. Banding and assembly bracket shall be stainless steel. All bands shall be 3/4" in width and 0.025" thickness.
4. ALL SIGN MOUNTING BOLTS AND WASHERS SHALL BE EITHER:
   a. Hot dip or mechanically galvanized in accordance with ASTM Designation: A 153, Class D
   b. Electro-galvanized in accordance with ASTM designation: B 633, Type III, SC 3

"J" ASSEMBLY

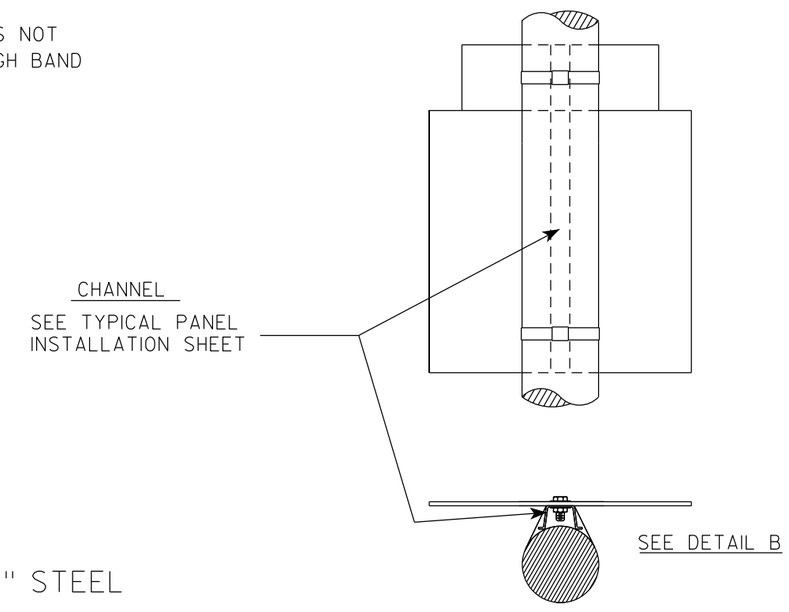

STANDARD SIGN
SIGN BANDING DETAILS

WISCONSIN DEPT OF TRANSPORTATION

APPROVED Matthew R Rauch
for State Traffic Engineer

DATE 6/10/19 PLATE NO. A5-9.4

PROJECT NO:	HWY:	COUNTY:		SHEET NO: 144	E

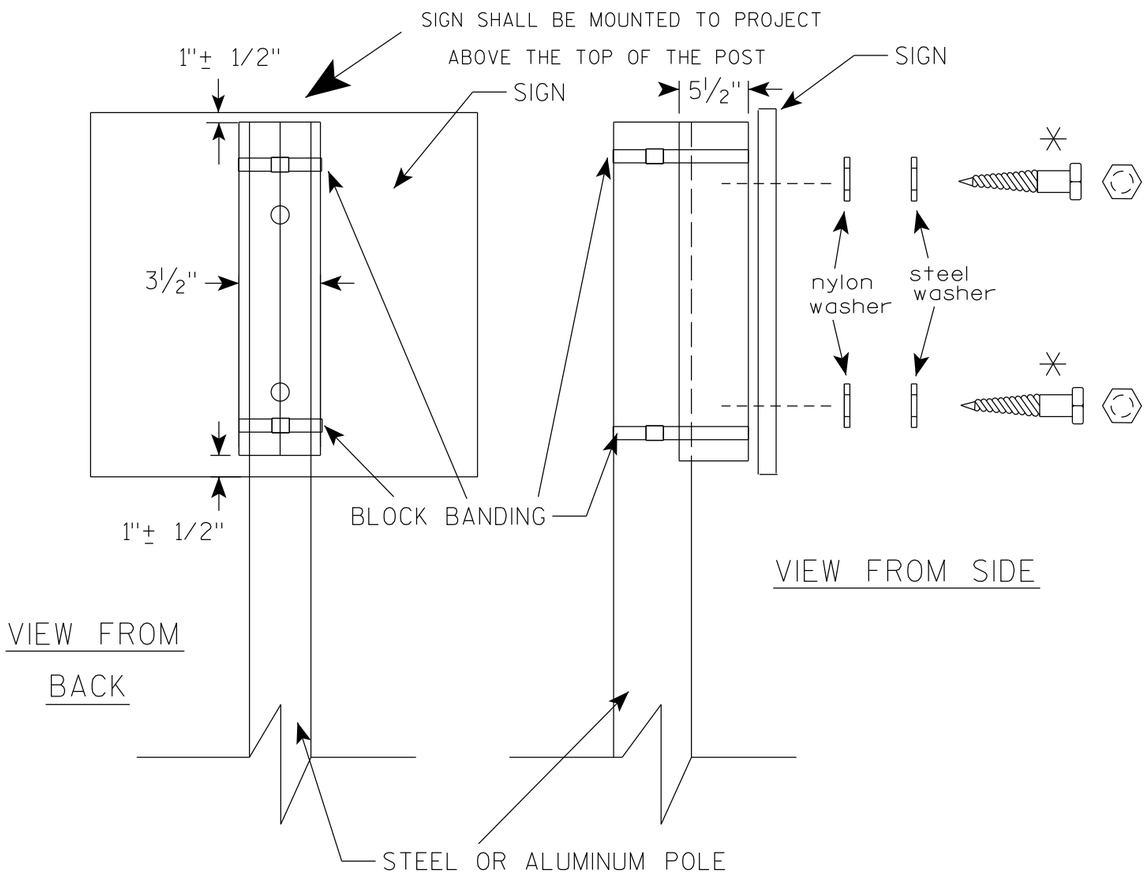

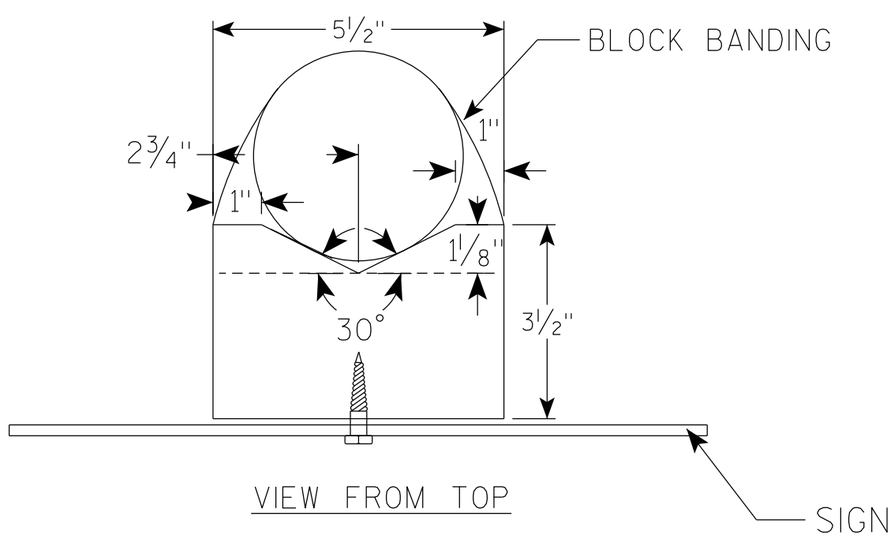

GENERAL NOTES

1. WOOD 4"X6" POST MATERIAL SHALL CONFORM TO 507.2.2 OF THE WisDOT STANDARD SPECIFICATIONS
2. BLOCK BANDING AND CLIPS SHALL BE STAINLESS STEEL, 3/4" WIDTH AND 0.025" THICKNESS
3. SIGNS 3' OR GREATER IN HEIGHT SHALL UTILIZE 3 BLOCK BANDS. SIGNS UNDER 3' IN HEIGHT SHALL UTILIZE 2 BLOCK BANDS
4. ACTUAL NUMBER OF FASTENERS PER SIGN VARIES WITH THE SIGN AREA, BUT NORNALLY THERE ARE TWO. FOR SIGNS GREATER THAN 9 S.F. 3 FASTENERS SHALL BE USED.
5. ALL SIGN MOUNTING BOLTS AND WASHERS SHALL BE EITHER:
   a. Hot dip or mechanically galvanized in accordance with ASTM Designation: A 153, Class D
   b. Electro-galvanized in accordance with ASTM Designation : B 633, TYPE III, SC 3
6. ALL BOLTS SHALL HAVE HEXAGONAL HEADS.
7. STEEL WASHERS SHALL BE 1 1/4" O.D. X 3/8" I.D. X 1/16"
8. NYLON WASHERS SHALL BE 1 1/4" O.D. X 3/8" I.D. X .080 FOR TYPE H OR TYPE F FACE SIGN

✳ LAG BOLTS SHALL BE 3/8" X 2 1/2"

BLOCK BANDING DETAIL
(V-BLOCK OPTION)

WISCONSIN DEPT OF TRANSPORTATION

APPROVED Matthew R Rauch
For State Traffic Engineer

DATE 6/10/19 PLATE NO. A5-10.2

PROJECT NO:				SHEET NO: 145	E

NOTES

1. Sign is Type II- Type F Reflective
2. Color:
   Background - Orange
   Message - Black
3. Message Series - D
4. Substitute appropriate Highway Number and Exit Number and optically center message

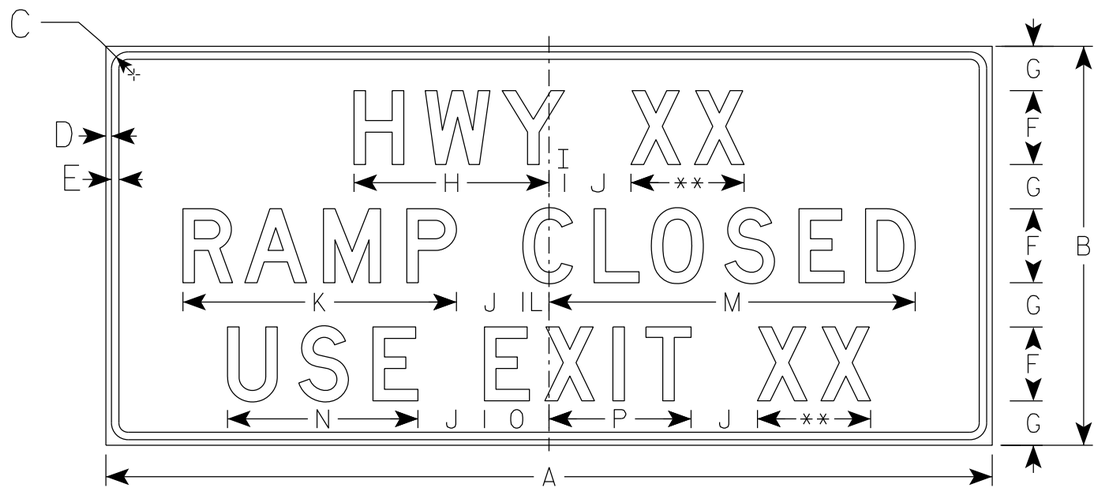

G20-56

** See Note 4

SIZE	A	B	C	D	E	F	G	H	I	J	K	L	M	N	O	P	Q	R	S	T	U	V	W	X	Y	Z	Area sq. ft.
1																											
2																											
3																											
4	120	54	3	3/4	1	10	6	26 3/8	2 1/8	9	37	3 1/2	49 5/8	25 3/4	8 3/4	19 1/4											45.0
5	120	54	3	3/4	1	10	6	26 3/8	2 1/8	9	37	3 1/2	49 5/8	25 3/4	8 3/4	19 1/4											45.0

STANDARD SIGN
G20-56

WISCONSIN DEPT OF TRANSPORTATION

APPROVED Matthew R Rauch
for State Traffic Engineer

DATE 6/19/18 PLATE NO. G20-56.1

PROJECT NO:	HWY:	COUNTY:		SHEET NO: 146	E

NOTES

1. Sign is Type II- Type F Reflective
2. Color:
   Background - Orange
   Message - Black
3. Message Series - E
4. Material shall be .040 aluminmum

G20-60

SIZE	A	B	C	D	E	F	G	H	I	J	K	L	M	N	O	P	Q	R	S	T	U	V	W	X	Y	Z	Area sq. ft.
1																											
2																											
3																											
4	108	24				12	6	14 7/8	78 1/4																		18.0
5																											

STANDARD SIGN
G20-60

WISCONSIN DEPT OF TRANSPORTATION

APPROVED Matthew R Rauch
for State Traffic Engineer

DATE 5/13/15 PLATE NO. G20-60.1

PROJECT NO: | HWY: | COUNTY: | SHEET NO: E

NOTES

1. Sign is Type II - Type F Reflective
2. Color:
   Background - Orange
   Message - Black
3. Message Series - E

G20-61

SIZE	A	B	C	D	E	F	G	H	I	J	K	L	M	N	O	P	Q	R	S	T	U	V	W	X	Y	Z	Area sq. ft.
1																											
2																											
3																											
4	120	30	6		2	12	9	21	78 1/4	20 3/4																	25.0
5																											

STANDARD SIGN
G20-61

WISCONSIN DEPT OF TRANSPORTATION

APPROVED Matthew R Rauch
for State Traffic Engineer

DATE 5/07/15 PLATE NO. G20-61.1

PROJECT NO: | HWY: | COUNTY: | SHEET NO: | E

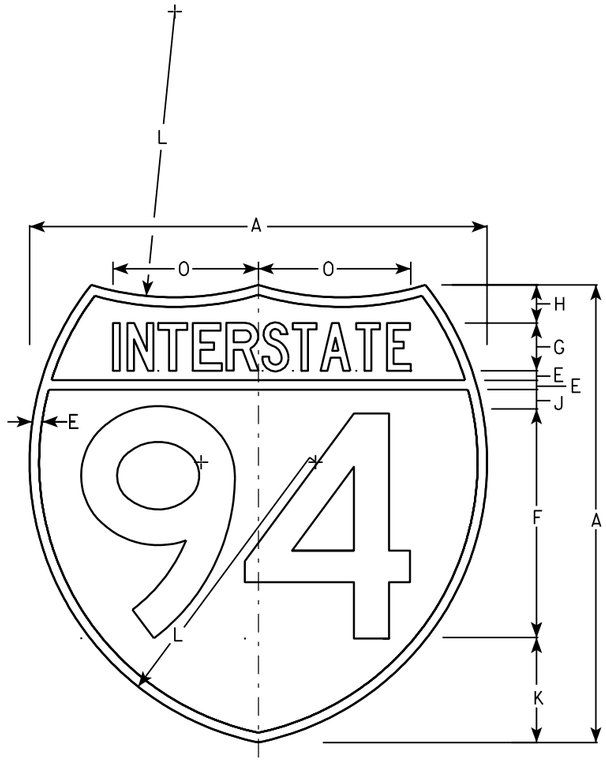

M1-1

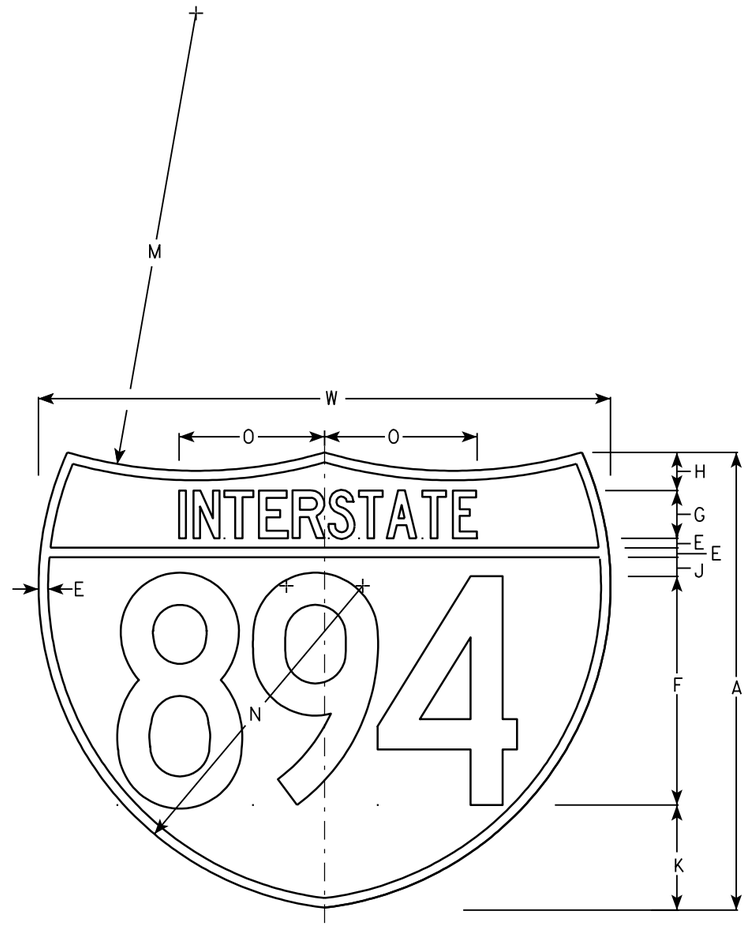

M1-1A

NOTES

1. Sign is Type II - See Note 6 - reference WIS DOT Standard Specification for HIGHWAY and STRUCTURE CONSTRUCTION latest edition.
2. Color:
   Background - Top Red - Bottom Blue (See Note 6)
   Message - White - See Note 6
3. Message Series - See note 5
4. Substitute appropriate numerals & ajust spacing as per plate A10-1.
5. M1-1 - Numerals - D
   Interstate - C
   M1-1A - All copy - C
6. Permanent Signs
   Message - Type H Reflective
   Detour or other temporary signs
   Background - Reflective
   Message - Reflective

Metric equivalent for these signs are:

SIZE	M1-1	SIZE	M1-1A
1			
2	600 mm X 600 mm	2	600 mm X 750 mm
3	900 mm X 900 mm	3	900 mm X 1125 mm
4	900 mm X 900 mm	4	900 mm X 1125 mm
5	900 mm X 900 mm	5	900 mm X 1125 mm

SIZE	A	B	C	D	E	F	G	H	I	J	K	L	M	N	O	P	Q	R	S	T	U	V	W	X	Y	M1-1 Area sq. ft.	M1-1A Area sq. ft.	M1-1 Area m2	M1-1A Area m2
1																													
2	24				½	12	2 ½	2		1	5 ½	15	24	17	7 ⅞								30			3.13	3.91	.36	.46
3	36				¾	18	3 ¾	3		1 ½	8 ¼	22 ½	36	25 ½	11 ¾								45			7.03	8.79	.81	1.05
4	36				¾	18	3 ¾	3		1 ½	8 ¼	22 ½	36	25 ½	11 ¾								45			7.03	8.79	.81	1.05
5	36				¾	18	3 ¾	3		1 ½	8 ¼	22 ½	36	25 ½	11 ¾								45			7.03	8.79	.81	1.05

INTERSTATE ROUTE MARKER
M1-1 FOR ASSEMBLIES

WISCONSIN DEPT OF TRANSPORTATION

APPROVED Matthew R Rauch
for State Traffic Engineer

DATE 08/23/05 PLATE NO. M1-1.8

PROJECT NO:	HWY:	COUNTY:		SHEET NO: 149	E

NOTES

1. Sign is Type II - Type H Reflective
2. Color:
   Background - White
   Message - Black
3. Message Series - D except 3 number signs Series C
4. Corners may be square or rounded when base material is plywood but borders shall be rounded as shown. When base material is metal, the corners and borders shall be rounded.

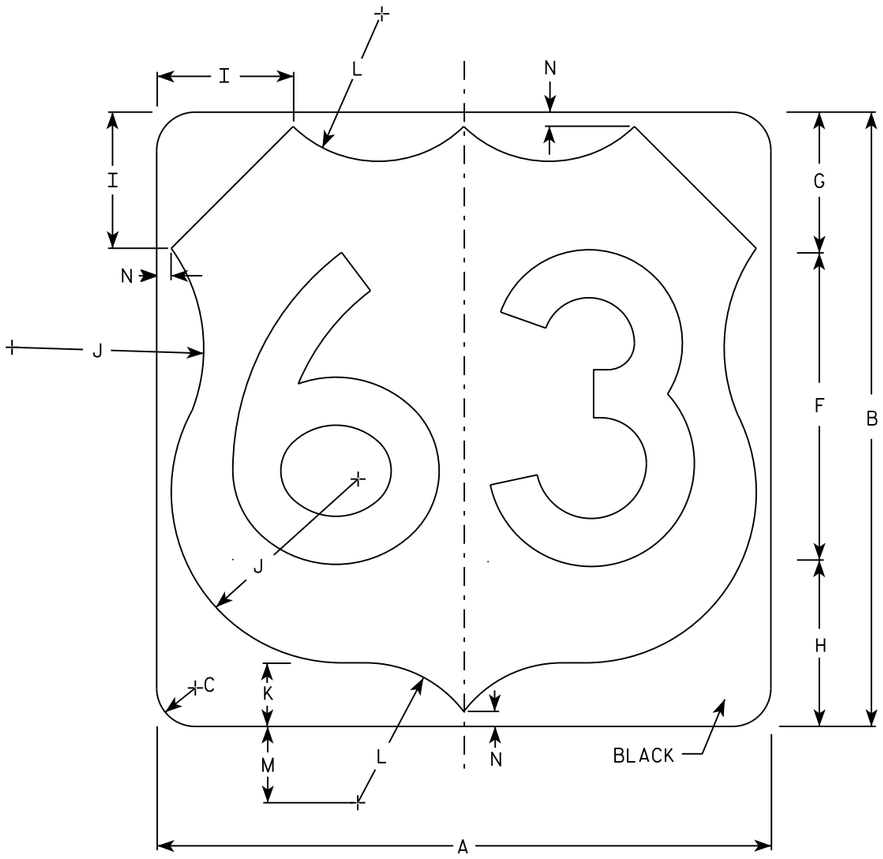

M1-4

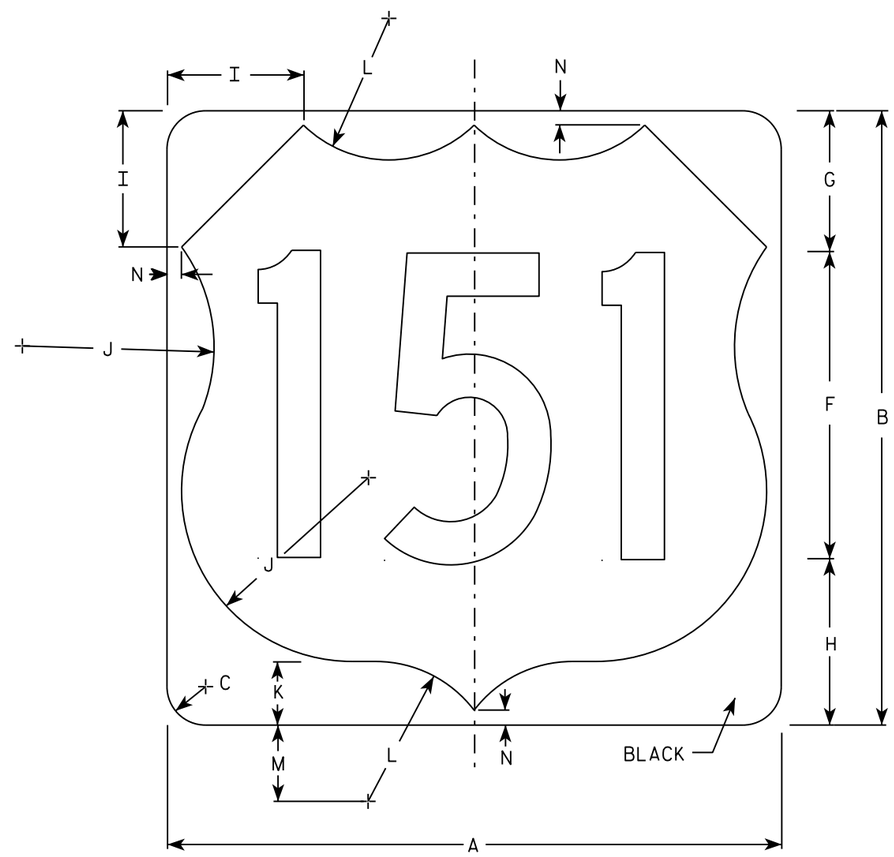

M1-4

SIZE	A	B	C	D	E	F	G	H	I	J	K	L	M	N	O	P	Q	R	S	T	U	V	W	X	Y	Z	Area sq. ft.
1																											
2	24	24	1 1/2			12	5 1/2	6 1/2	5	7 1/2	2 1/2	5 1/2	3	1/2													4.0
3	36	36	2 1/4			18	8 1/4	9 1/4	7 1/4	11 1/4	3 3/4	8 1/4	4 1/2	3/4													9.0
4	36	36	2 1/4			18	8 1/4	9 1/4	7 1/4	11 1/4	3 3/4	8 1/4	4 1/2	3/4													9.0
5	36	36	2 1/4			18	8 1/4	9 1/4	7 1/4	11 1/4	3 3/4	8 1/4	4 1/2	3/4													9.0

USH MARKER
M1-4 FOR ASSEMBLIES

WISCONSIN DEPT OF TRANSPORTATION

APPROVED Matthew R Rauch
for State Traffic Engineer

DATE 3/16/18 PLATE NO. M1-4.10

PROJECT NO: | HWY: | COUNTY: | SHEET NO: 150 | E

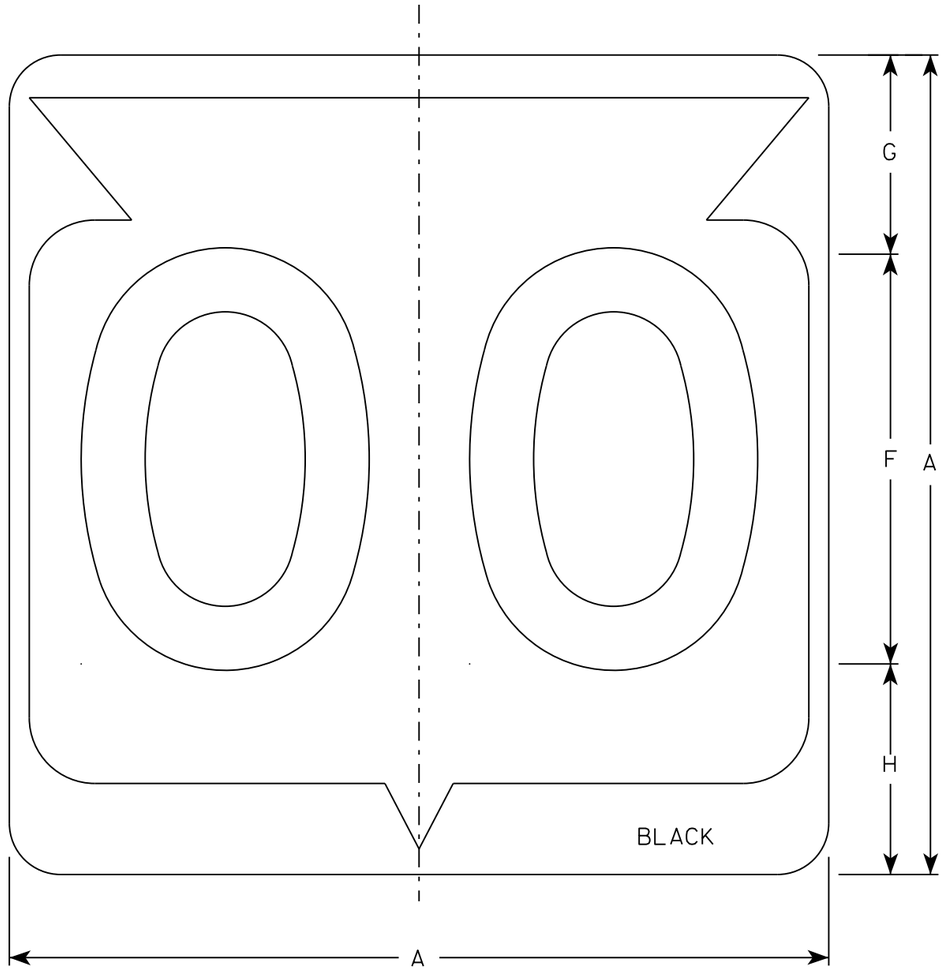

M1-6

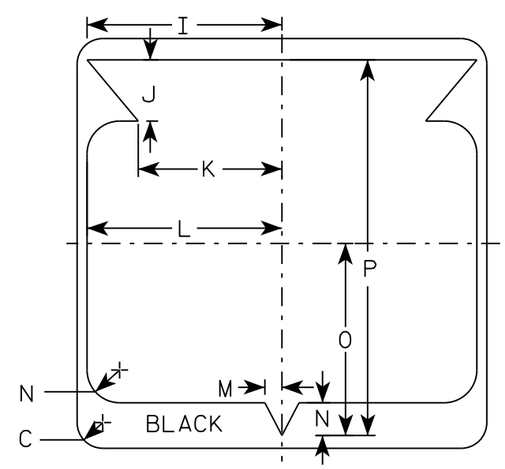

NOTES

1. Sign is Type II - Type H Reflective
2. Color:
   Background - White
   Message - Black
3. Message Series - D except 3 number signs Series C
4. Corners may be square or rounded when base material is plywood but borders shall be rounded as shown. When base material is metal, the corners and borders shall be rounded.

SIZE	A	B	C	D	E	F	G	H	I	J	K	L	M	N	O	P	Q	R	S	T	U	V	W	X	Y	Z	Area sq. ft.
1																											
2	24		1 1/2			12	5 1/2	6 1/2	10 1/4	2 1/2	8 7/8	11 1/2	1	1 7/8	11 1/4	21 7/8											4.0
3	36		2 1/4			18	8 3/4	9 1/4	15 3/8	5 3/8	12 5/8	17 1/8	1 1/2	2 7/8	16 7/8	33											9.0
4	36		2 1/4			18	8 3/4	9 1/4	15 3/8	5 3/8	12 5/8	17 1/8	1 1/2	2 7/8	16 7/8	33											9.0
5	36		2 1/4			18	8 3/4	9 1/4	15 3/8	5 3/8	12 5/8	17 1/8	1 1/2	2 7/8	16 7/8	33											9.0

STATE ROUTE MARKER
M1-6 FOR ASSEMBLIES

WISCONSIN DEPT OF TRANSPORTATION

APPROVED Matthew R Rauch
for State Traffic Engineer

DATE 3/16/18 PLATE NO. M1-6.10

PROJECT NO: | HWY: | COUNTY: | SHEET NO: 151 | E

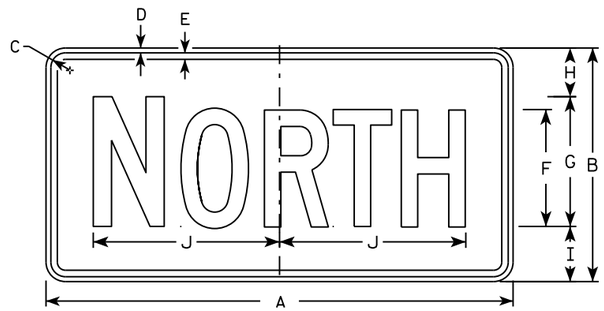

M3-1
MM3-1
MP3-1

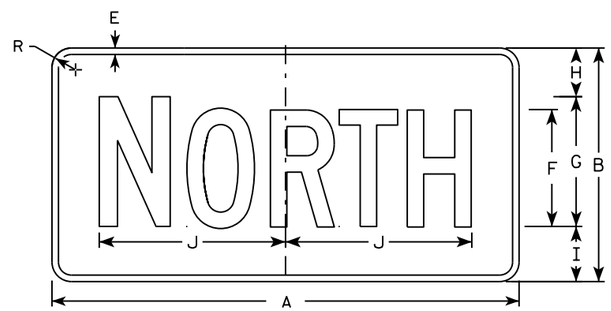

MB3-1
MK3-1
MN3-1

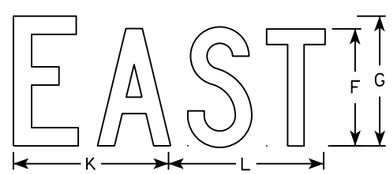

M3-2
MM3-2
MP3-2

MB3-2
MK3-2
MN3-2

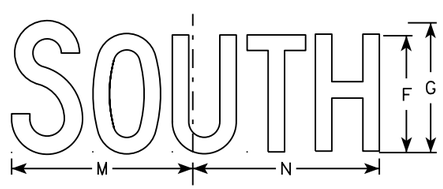

M3-3
MM3-3
MP3-3

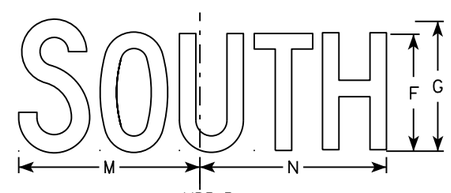

MB3-3
MK3-3
MN3-3

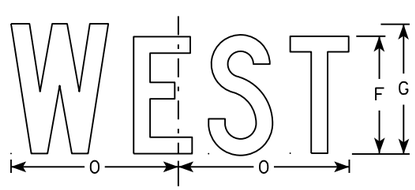

M3-4
MM3-4
MP3-4

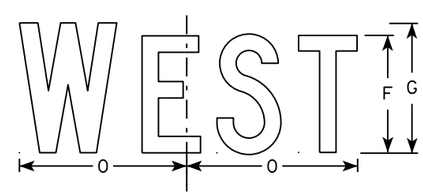

MB3-4
MK3-4
MN3-4

NOTES

1. All Signs Type II - Type H
2. Color:
   Background - See note 5
   Message - See note 5
3. Message Series - C
4. Corners may be square or rounded when base material is plywood but borders shall be rounded as shown. When base material is metal, the corners and borders shall be rounded.
5. M3-1 thru M3-4 Background - White
   Message - Black
   MB3-1 thru MB3-4 Background - Blue
   Message - White
   MK3-1 thru MK3-4 Background - Green
   Message - White
   MM3-1 thru MM3-4 Background - White
   Message - Green
   MN3-1 thru MN3-4 Background - Brown
   Message - White
   MP3-1 thru MP3-4 Background - White
   Message - Blue
6. Note the first letter of each direction is larger than the remainder of the message.

SIZE	A	B	C	D	E	F	G	H	I	J	K	L	M	N	O	P	Q	R	S	T	U	V	W	X	Y	Z	Area sq. ft.
1																											
2	24	12	1 1/8	3/8	3/8	6	7	2 1/4	2 3/4	10 1/4	7 7/8	8 3/8	10 1/4	9 3/4	8 3/4			1 1/2									2.00
3	36	18	1 1/8	3/8	1/2	9	10	3 3/4	4 1/4	14 3/8	12	12 1/8	14	14 1/8	13			1 1/2									4.5
4	36	18	1 1/8	3/8	1/2	9	10	3 3/4	4 1/4	14 3/8	12	12 1/8	14	14 1/8	13			1 1/2									4.5
5	36	18	1 1/8	3/8	1/2	9	10	3 3/4	4 1/4	14 3/8	12	12 1/8	14	14 1/8	13			1 1/2									4.5

STANDARD SIGNS
M3-1 thur M3-4
SERIES

WISCONSIN DEPT OF TRANSPORTATION

APPROVED Matthew R Rauch
for State Traffic Engineer

DATE 10/15/15 PLATE NO M3-1.14

PROJECT NO: | HWY: | COUNTY: | SHEET NO: | E

FILE NAME : C:\CAEfiles\Projects\tr_stdplate\M31.DGN PLOT DATE : 01-DEC-2015 17:54 PLOT BY : $$ plotuser $$ PLOT NAME : PLOT SCALE : 11.675051:1.000000

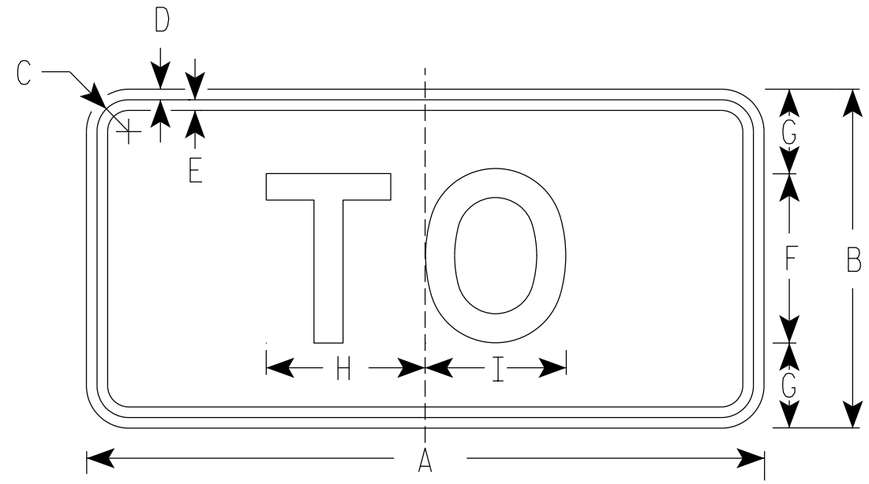

M4-5
MM4-5
MP4-5
MO4-5

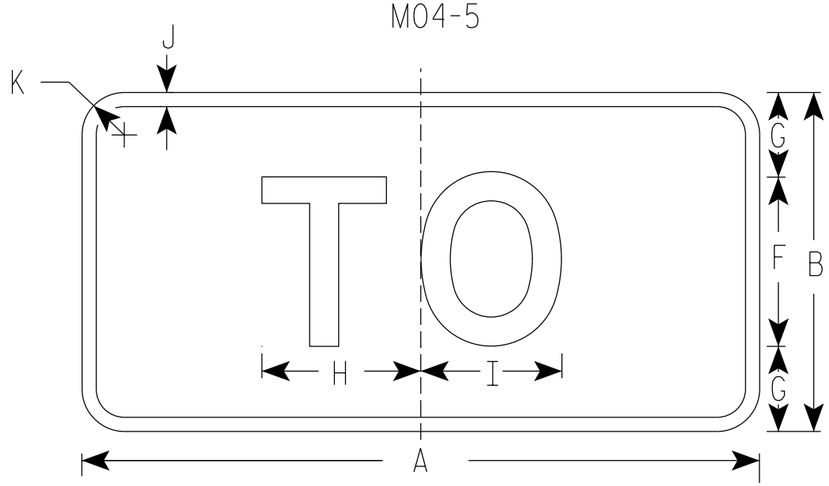

MB4-5
MK4-5
MN4-5

NOTES

1. Sign is Type II - Type H Reflective
2. Color:
   Background - See note 5
   Message - See note 5
3. Message Series - E
4. Corners may be square or rounded when base material is plywood but borders shall be rounded as shown. When base material is metal, the corners and borders shall be rounded.
5. M4-5 Background - White
   Message - Black

   MB4-5 Background - Blue
   Message - White

   MK4-5 Background - Green
   Message - White

   MM4-5 Background - White
   Message - Green

   MN4-5 Background - Brown
   Message - White

   MP4-5 Background - White
   Message - Blue

   MO4-5 Background - Orange Type F Reflective
   Message - Black

SIZE	A	B	C	D	E	F	G	H	I	J	K	L	M	N	O	P	Q	R	S	T	U	V	W	X	Y	Z	Area sq. ft.
1																											
2	24	12	1 1/8	3/8	3/8	6	3	5 3/8	5 1/4	1/2	1 1/2																2.00
3	36	18	1 3/8	3/8	1/2	9	4 1/2	8 1/4	8 3/8	1/2	1 1/2																4.5
4	36	18	1 3/8	3/8	1/2	9	4 1/2	8 1/4	8 3/8	1/2	1 1/2																4.5
5	36	18	1 3/8	3/8	1/2	9	4 1/2	8 1/4	8 3/8	1/2	1 1/2																4.5

STANDARD SIGN
M4-5

WISCONSIN DEPT OF TRANSPORTATION

APPROVED Matthew R Rauch
for State Traffic Engineer

DATE 03/7/19 PLATE NO. M4-5.9

PROJECT NO: | HWY: | COUNTY: | SHEET NO: 153 | E

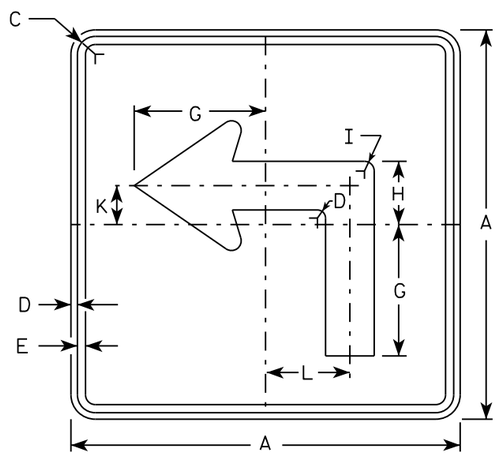

M5-1L
MM5-1L
MO5-1L
MP5-1L

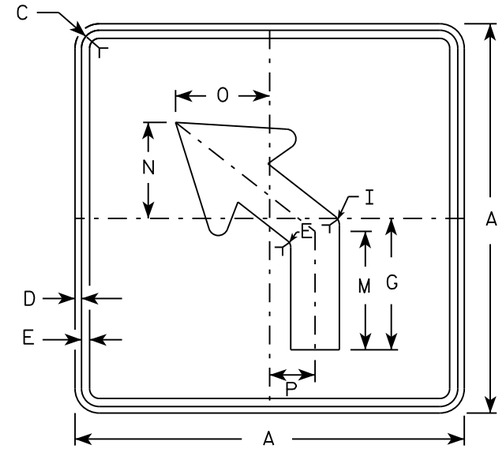

M5-2L
MM5-2L
MO5-2L
MP5-2L

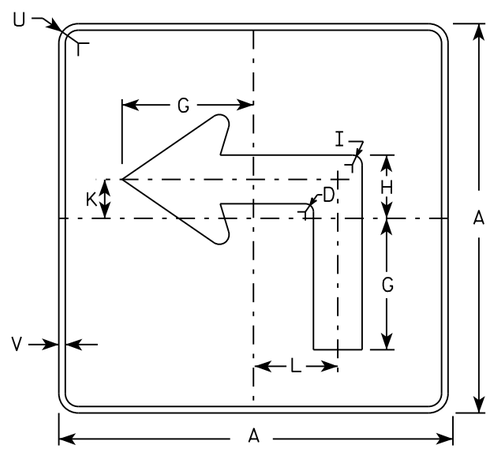

MB5-1L
MK5-1L
MN5-1L
MR5-1L

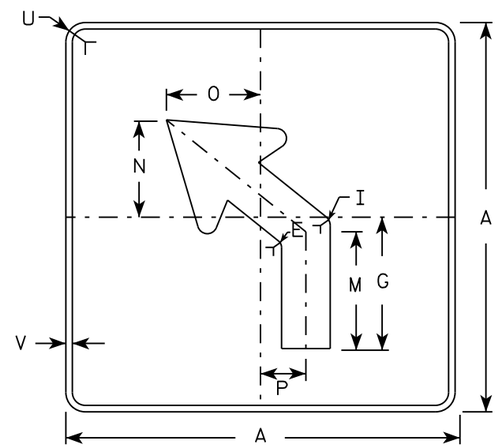

MB5-2L
MK5-2L
MN5-2L
MR5-2L

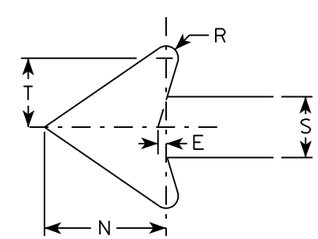

NOTES

1. Signs are Type II - Type H reflective except as shown
2. Color:
   Background - See note 4
   Message - See note 4
3. Corners may be square or rounded when base material is plywood but borders shall be rounded as shown. When base material is metal, the corners and borders shall be rounded.
4. M5-1 and M5-2 Background - White
   Message - Black
   MB5-1 and MB5-2 Background - Blue
   Message - White
   MK5-1 and MK5-2 Background - Green
   Message - White
   MM5-1 and MM5-2 Background - White
   Message - Green
   MN5-1 and MN5-2 Background - Brown
   Message - White
   MO5-1 and MO5-2 Background - Orange - Type F Reflective
   Message - Black
   MP5-1 and MP5-2 Background - White - Type H Reflective
   Message - Blue
   MR5-1 and MR5-2 Background - Brown
   Message - Yellow
5. M5-1R same as M5-1L except arrow points right.
6. M5-2R same as M5-2L except arrow tilts right.

SIZE	A	B	C	D	E	F	G	H	I	J	K	L	M	N	O	P	Q	R	S	T	U	V	W	X	Y	Z	Area sq. ft.
1																											
2	21		1 1/8	3/8	3/8		7	3 3/8	5/8		2 1/8	4 1/2	6 3/8	5 1/4	5	2 1/2		1/2	2 5/8	3	1 1/2	1/2					3.06
3	30		1 3/8	1/2	5/8		10 1/8	4 7/8	7/8		3	6 1/2	9 1/8	7 1/2	7 1/4	3 1/2		3/4	3 3/4	4 1/4	1 7/8	1/2					6.25
4	30		1 3/8	1/2	5/8		10 1/8	4 7/8	7/8		3	6 1/2	9 1/8	7 1/2	7 1/4	3 1/2		3/4	3 3/4	4 1/4	1 7/8	1/2					6.25
5	30		1 3/8	1/2	5/8		10 1/8	4 7/8	7/8		3	6 1/2	9 1/8	7 1/2	7 1/4	3 1/2		3/4	3 3/4	4 1/4	1 7/8	1/2					6.25

STANDARD SIGN
M5-1 & M5-2

WISCONSIN DEPT OF TRANSPORTATION

APPROVED Matthew R Rauch
for State Traffic Engineer

DATE 10/15/15 PLATE NO. M5-1.13

PROJECT NO: | HWY: | COUNTY: | SHEET NO: E

FILE NAME : C:\CAEfiles\Projects\tr stdplate\M51.DGN PLOT DATE : 01-DEC-2015 18:07 PLOT BY : $$ plotuser $$ PLOT NAME : PLOT SCALE : 11.675051:1.000000

NOTES

1. Signs are Type II - Type H except as Shown
2. Color:
   Background - See Note 4
   Message - See note 4
3. M5-52 Background - White
   Message - Black

   MB5-52 Background - Blue
   Message - White

   MK5-52 Background - Green
   Message - White

   MM5-52 Background - White
   Message - Green

   MN5-52 Background - Brown
   Message - White

   MO5-52 Background - Orange - Type F Reflective
   Message - Black

   MP5-52 Background - White
   Message - Blue

   MR5-52 Background - Brown
   Message - Yellow

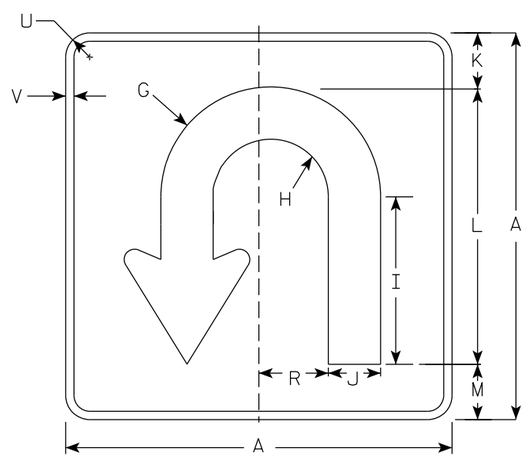

M5-52

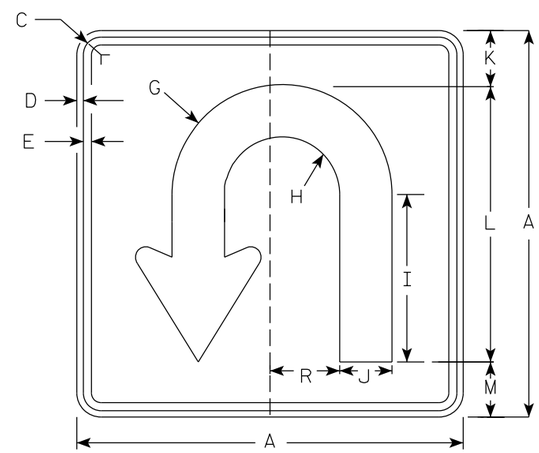

M5-52

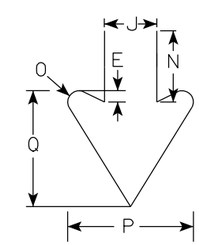

Arrow Detail

SIZE	A	B	C	D	E	F	G	H	I	J	K	L	M	N	O	P	Q	R	S	T	U	V	W	X	Y	Z	Area sq. ft.
1																											
2	21		1 1/8	3/8	3/8		6	3 1/8	9 1/8	2 7/8	3	15	3	3 7/8	5/8	6 7/8	6 3/4	3 3/4			1 1/2	1/2					3.06
3	30		1 3/8	1/2	5/8		8 1/2	4 1/2	13	4 1/8	4 3/8	21 3/8	4 1/4	5 1/2	7/8	9 3/4	8 1/8	5 1/4			2 1/2	5/8					6.25
4																											
5																											

STANDARD SIGN
M5-52
SERIES

WISCONSIN DEPT OF TRANSPORTATION

APPROVED Matthew R Rauch
For State Traffic Engineer

DATE 5/21/19 PLATE NO. M5-52.1

PROJECT NO: | HWY: | COUNTY: | SHEET NO: 155 | E

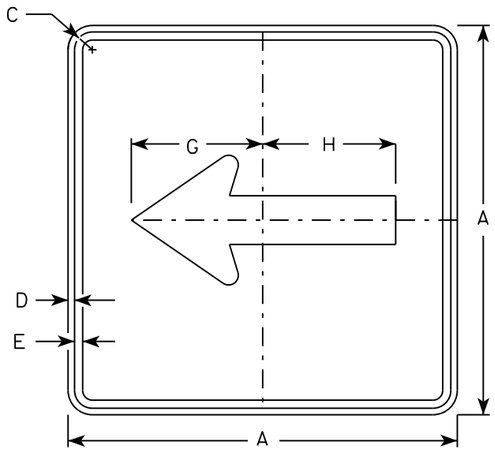

M6-1
MM6-1
MO6-1
MP6-1

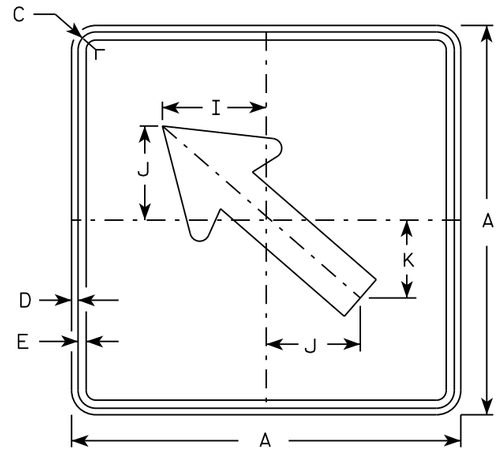

M6-2
MM6-2
MO6-2
MP6-2

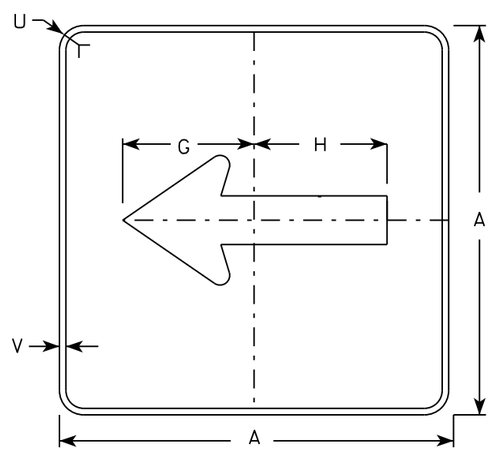

MB6-1
MK6-1
MN6-1
MR6-1

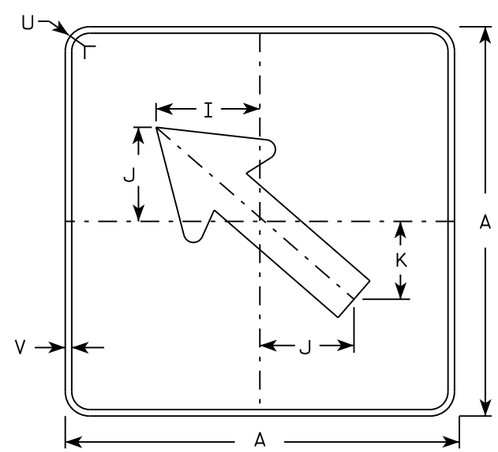

MB6-2
MK6-2
MN6-2
MR6-2

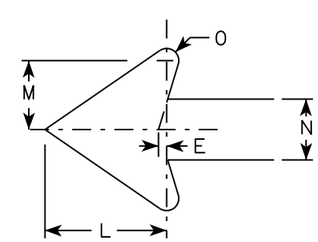

NOTES

1. Signs are Type II - Type H except as Shown
2. Color:
   Background - See note 4
   Message - See note 4
3. Corners may be square or rounded when base material is plywood but borders shall be rounded as shown. When base material is metal, the corners and borders shall be rounded.
4. M6-1 and M6-2 Background - White
   Message - Black
   MB6-1 and MB6-2 Background - Blue
   Message - White
   MK6-1 and MK6-2 Background - Green
   Message - White
   MM6-1 and MM6-2 Background - White
   Message - Green
   MN6-1 and MN6-2 Background - Brown
   Message - White
   MO6-1 and MO6-2 Background - Orange - Type F Reflective
   Message - Black
   MP6-1 and MP6-2 Background - White
   Message - Blue
   MR6-1 and MR6-2 Background - Brown
   Message - Yellow

SIZE	A	B	C	D	E	F	G	H	I	J	K	L	M	N	O	P	Q	R	S	T	U	V	W	X	Y	Z	Area sq. ft.
1																											
2	21		1 1/8	3/8	3/8		7 1/2	7 1/8	5 5/8	5	4 1/4	5 1/4	3	2 5/8	1/2						1 1/2	1/2					3.06
3	30		1 3/8	1/2	5/8		10 3/4	10 1/4	8	7 1/4	6	7 1/2	4 1/4	3 3/4	3/4						1 7/8	1/2					6.25
4	30		1 3/8	1/2	5/8		10 3/4	10 1/4	8	7 1/4	6	7 1/2	4 1/4	3 3/4	3/4						1 7/8	1/2					6.25
5	30		1 3/8	1/2	5/8		10 3/4	10 1/4	8	7 1/4	6	7 1/2	4 1/4	3 3/4	3/4						1 7/8	1/2					6.25

STANDARD SIGN
M6-1 & M6-2
SERIES

WISCONSIN DEPT OF TRANSPORTATION

APPROVED Matthew R Rauch
for State Traffic Engineer

DATE 10/15/15 PLATE 156 M6-1.15

PROJECT NO: | HWY: | COUNTY: | SHEET NO: | E

FILE NAME : C:\CAEfiles\Projects\tr stdplate\M61.DGN PLOT DATE : 01-DEC-2015 17:57 PLOT BY : $$ plotuser $$ PLOT NAME : PLOT SCALE : 11.675051:1.000000

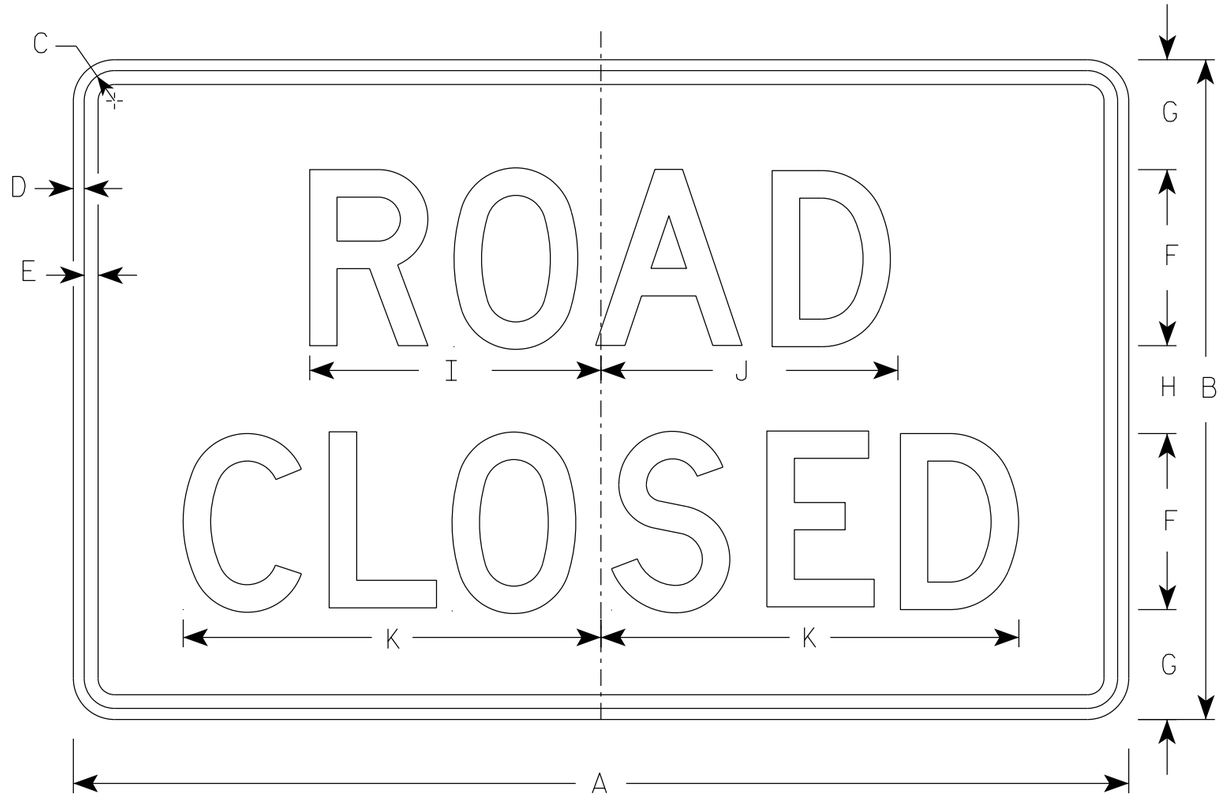

R11-2

NOTES

1. Sign is Type II - Type H Reflective
2. Color:
   Background - White
   Message - Black
3. Message Series - D
4. Corners may be square or rounded when base material is plywood but borders shall be rounded as shown. When base material is metal, the corners and borders shall be rounded.
5. Modify the message as required.

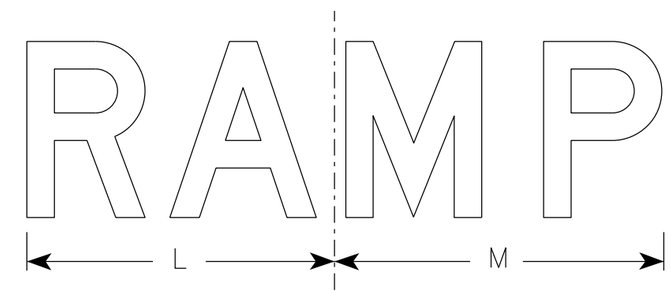

R11-2R

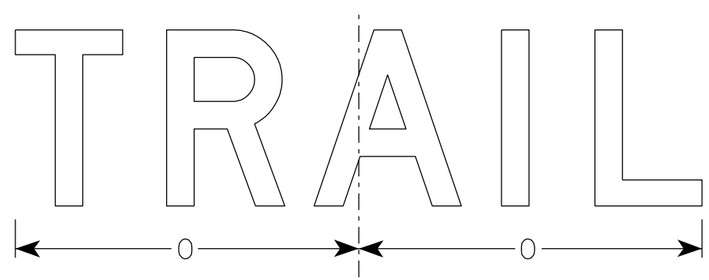

R11-2T

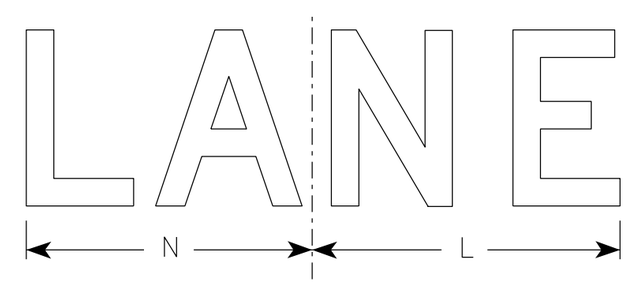

R11-2L

SIZE	A	B	C	D	E	F	G	H	I	J	K	L	M	N	O	P	Q	R	S	T	U	V	W	X	Y	Z	Area sq. ft.
1																											
2S	48	30	1 3/8	1/2	5/8	8	5	4	13 1/4	13 1/2	19	14	15	13	15 5/8												10.0
2M	48	30	1 3/8	1/2	5/8	8	5	4	13 1/4	13 1/2	19	14	15	13	15 5/8												10.0
3	48	30	1 3/8	1/2	5/8	8	5	4	13 1/4	13 1/2	19	14	15	13	15 5/8												10.0
4	48	30	1 3/8	1/2	5/8	8	5	4	13 1/4	13 1/2	19	14	15	13	15 5/8												10.0
5	48	30	1 3/8	1/2	5/8	8	5	4	13 1/4	13 1/2	19	14	15	13	15 5/8												10.0

STANDARD SIGN
R11-2

WISCONSIN DEPT OF TRANSPORTATION

APPROVED Matthew R Rauch
for State Traffic Engineer

DATE 3/29/2021 PLATE NO. R11-2.11

PROJECT NO: | HWY: | COUNTY: | SHEET NO: E

7

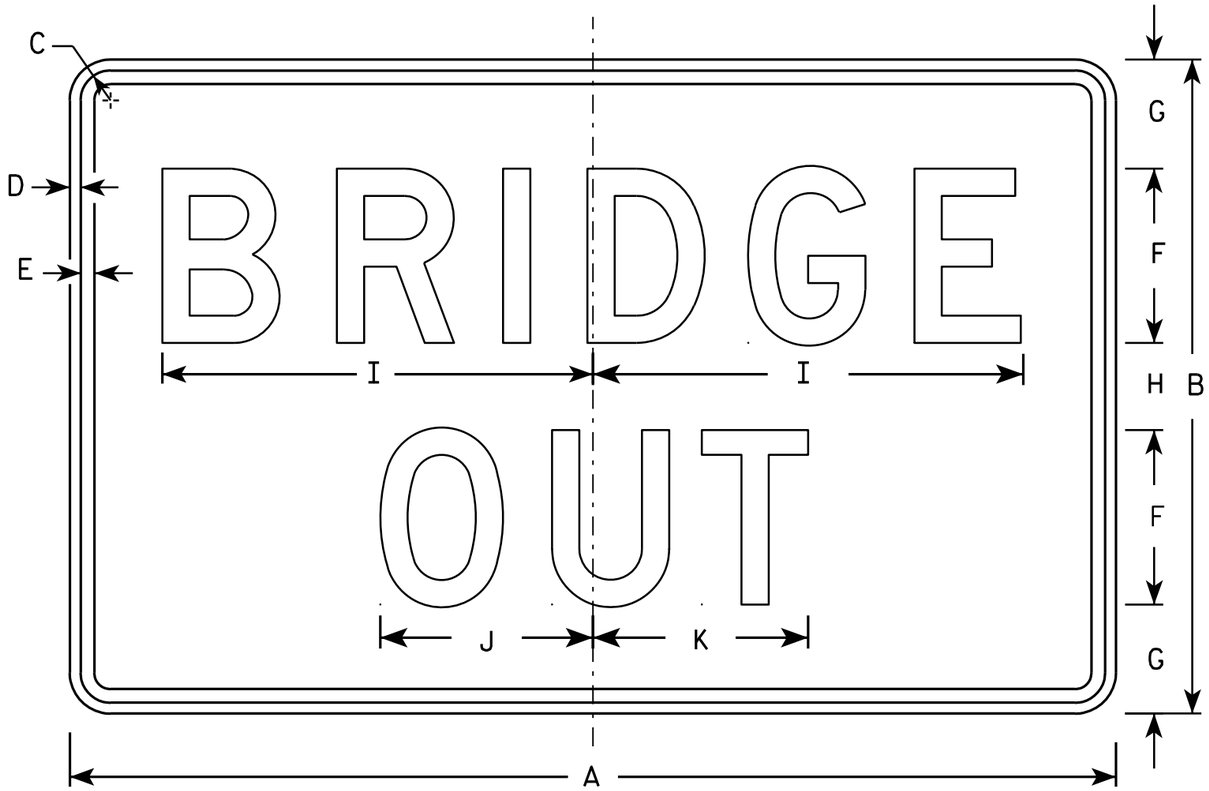

R11-2B

NOTES

1. Sign is Type II - Type H Reflective - reference WIS DOT Standard Specification for HIGHWAY and STRUCTURE CONSTRUCTION latest edition.
2. Color:
   Background - White
   Message - Black
3. Message Series - D
4. Corners may be square or rounded when base material is plywood but borders shall be rounded as shown. When base material is metal, the corners and borders shall be rounded.

SIZE	A	B	C	D	E	F	G	H	I	J	K	L	M	N	O	P	Q	R	S	T	U	V	W	X	Y	Z	Area sq. ft.
1																											
2S	48	30	1 3/8	1/2	5/8	8	5	4	19 3/4	9 3/4	9 7/8																10.0
2M	48	30	1 3/8	1/2	5/8	8	5	4	19 3/4	9 3/4	9 7/8																10.0
3	48	30	1 3/8	1/2	5/8	8	5	4	19 3/4	9 3/4	9 7/8																10.0
4	48	30	1 3/8	1/2	5/8	8	5	4	19 3/4	9 3/4	9 7/8																10.0
5	48	30	1 3/8	1/2	5/8	8	5	4	19 3/4	9 3/4	9 7/8																10.0

STANDARD SIGN
R11-2B

WISCONSIN DEPT OF TRANSPORTATION

APPROVED Matthew R Rauch
For State Traffic Engineer
DATE 4/1/11 PLATE NO. R11-2B.2

PROJECT NO:

SHEET NO: 158 E

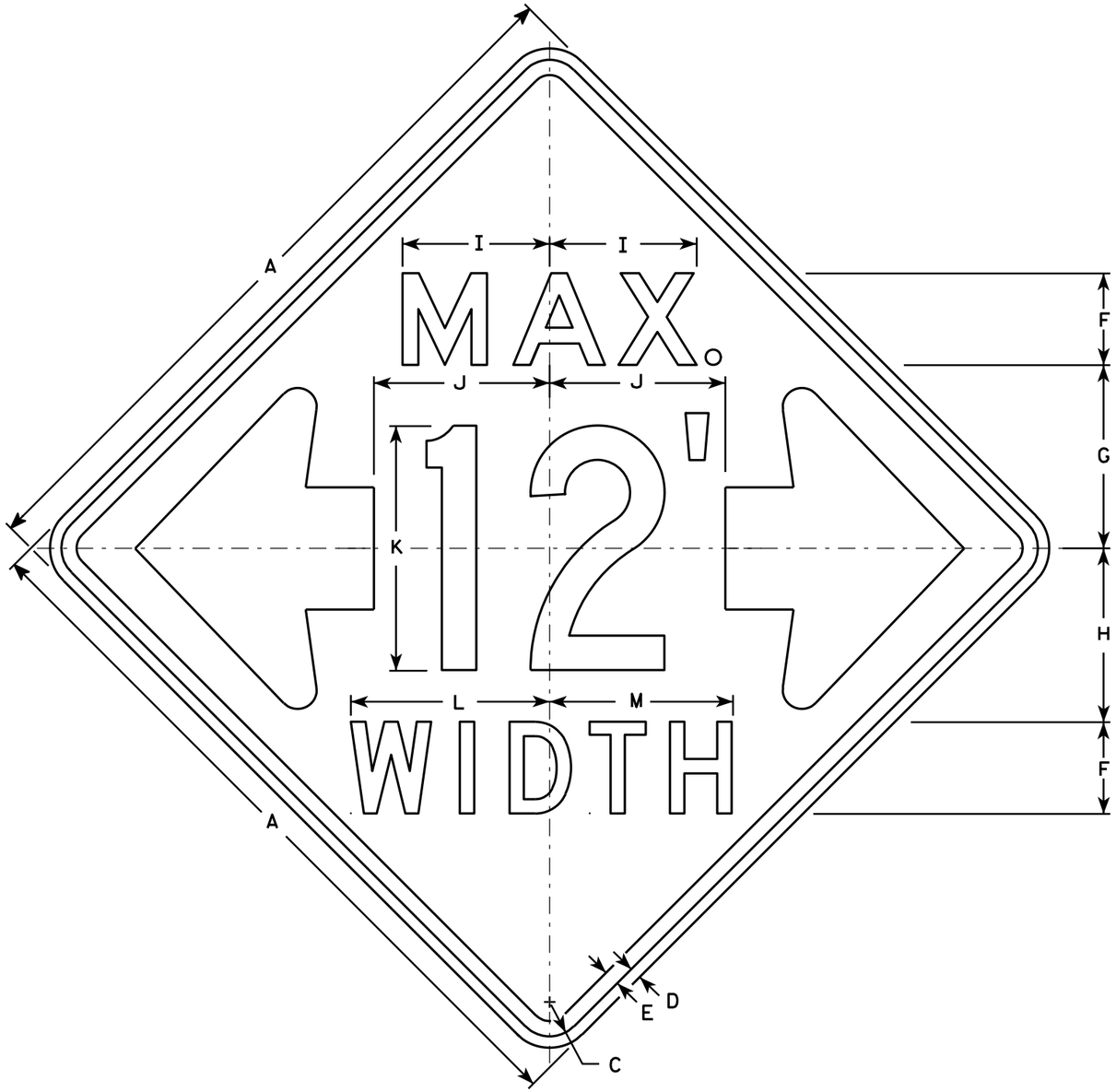

W12-52

NOTES

1. Sign is Type II - Type F Reflective - reference WIS DOT Standard Specification for HIGHWAY and STRUCTURE CONSTRUCTION latest edition.
2. Color:
   Background - Orange
   Message - Black
3. Message Series - See note 5
4. Corners may be square or rounded when base material is plywood but borders shall be rounded as shown. When base material is metal, the corners and borders shall be rounded.
5. The top line is series E, the numerals are series C, and the bottom line is series D.
6. Substitute appropriate numerals and adjust spacing as required.

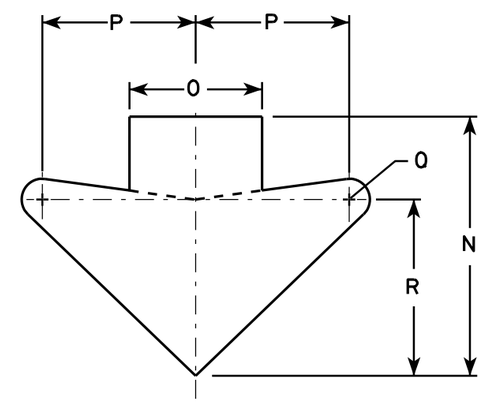

ARROW DETAIL

SIZE	A	B	C	D	E	F	G	H	I	J	K	L	M	N	O	P	Q	R	S	T	U	V	W	X	Y	Z	Area sq. ft.
1																											
2S	48		2 1/4	3/4	1	6	12	11 3/8	9 5/8	11 1/2	16	13	12	15 5/8	8	9 1/4	1 1/4	10 5/8									16.0
2M	48		2 1/4	3/4	1	6	12	11 3/8	9 5/8	11 1/2	16	13	12	15 5/8	8	9 1/4	1 1/4	10 5/8									16.0
3																											
4																											
5																											

STANDARD SIGN
W12-52

WISCONSIN DEPT OF TRANSPORTATION

APPROVED Matthew R Rauch
for State Traffic Engineer

DATE 3/16/11 PLATE NO. W12-52.7

PROJECT NO:	HWY:	COUNTY:		SHEET NO: 159	E

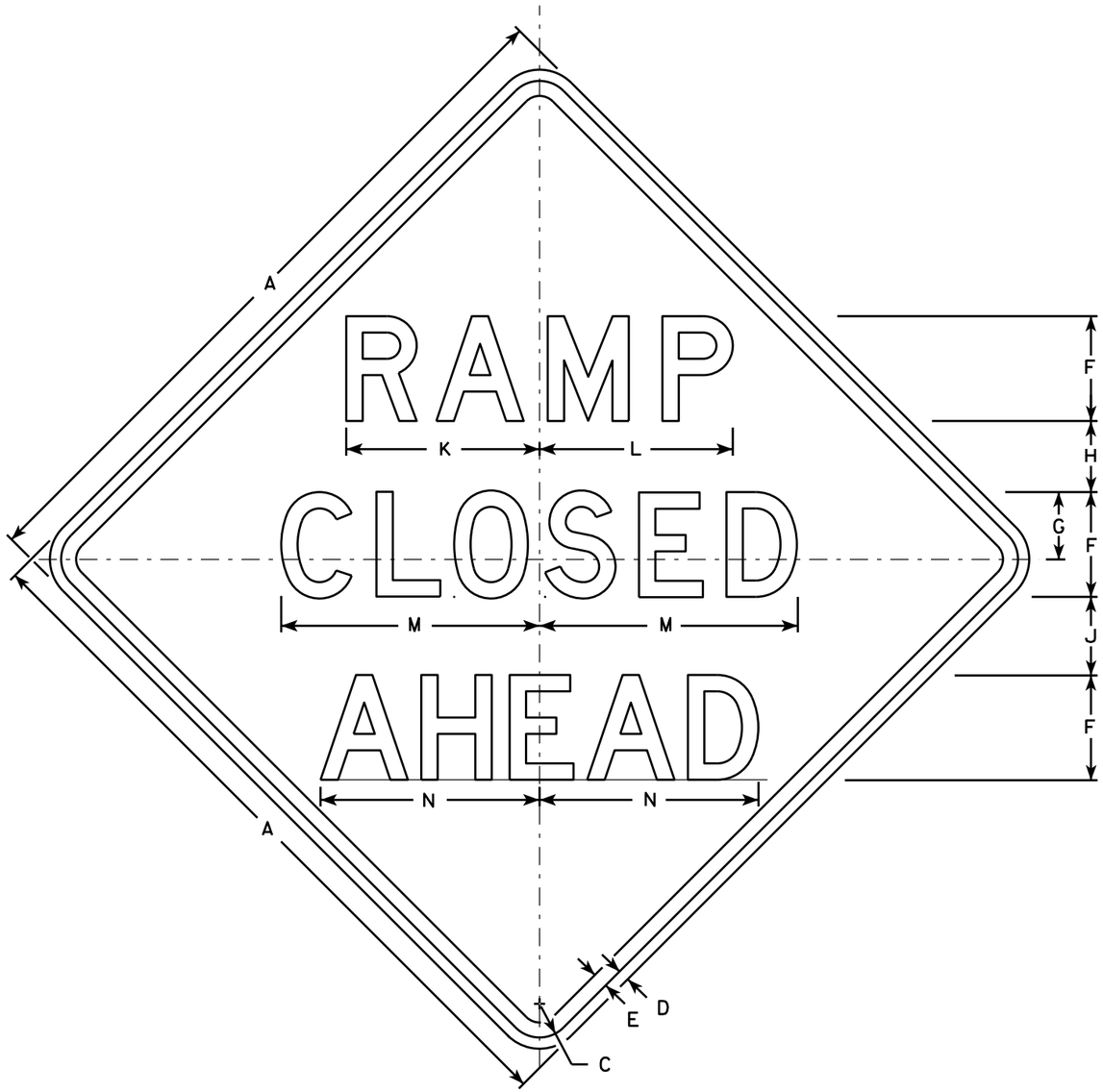

W20-53A

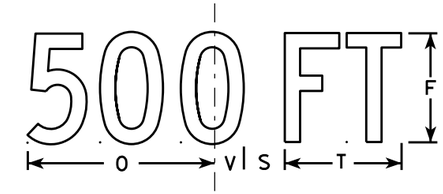

W20-53D

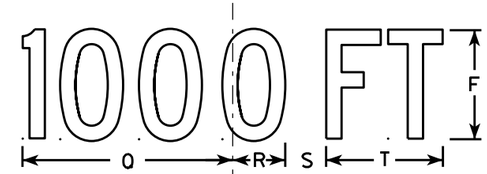

W20-53C

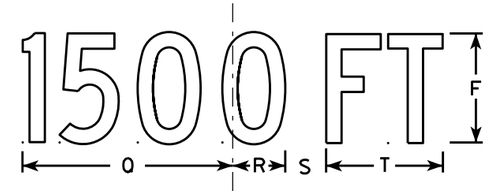

W20-53B

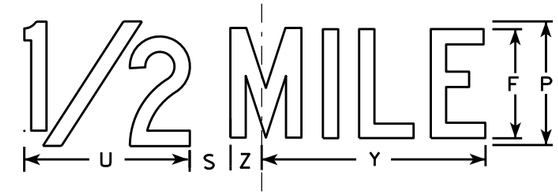

W20-53G

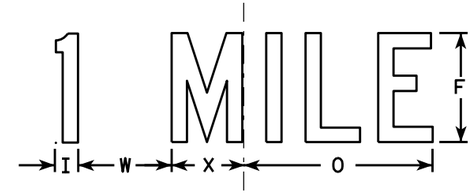

W20-53F

NOTES

1. Sign is Type II - Type F Reflective - reference WIS DOT Standard Specification for HIGHWAY and STRUCTURE CONSTRUCTION latest edition.
2. Color:
   Background - Orange
   Message - Black
3. Message Series - see note 5
4. Corners may be square or rounded when base material is plywood but borders shall be rounded as shown. When base material is metal, the corners and borders shall be rounded.
5. Lines 1 and 2 are Series D.
   Line 3 is Series D for AHEAD and Series C for all other distances.

SIZE	A	B	C	D	E	F	G	H	I	J	K	L	M	N	O	P	Q	R	S	T	U	V	W	X	Y	Z	Area sq. ft.
1	36		1 5/8	5/8	3/4	5	3 3/8	3 1/2	1 1/8	4	9 1/4	9 1/4	12 1/2	11	9	6	10 1/8	2 1/2	1 7/8	5 5/8	8	1 3/8	4 1/2	3 1/2	10 3/4	1 3/4	9.0
2S	48		2 1/4	3/4	1	7	4 1/2	4 3/4	1 1/2	5 1/4	12 7/8	12 7/8	17 1/4	14 5/8	12	8	13 1/2	3 3/8	2 5/8	7 1/2	10 5/8	1 7/8	6	4 5/8	14 3/8	2 3/8	16.0
2M	48		2 1/4	3/4	1	7	4 1/2	4 3/4	1 1/2	5 1/4	12 7/8	12 7/8	17 1/4	14 5/8	12	8	13 1/2	3 3/8	2 5/8	7 1/2	10 5/8	1 7/8	6	4 5/8	14 3/8	2 3/8	16.0
3	48		2 1/4	3/4	1	7	4 1/2	4 3/4	1 1/2	5 1/4	12 7/8	12 7/8	17 1/4	14 5/8	12	8	13 1/2	3 3/8	2 5/8	7 1/2	10 5/8	1 7/8	6	4 5/8	14 3/8	2 3/8	16.0
4	48		2 1/4	3/4	1	7	4 1/2	4 3/4	1 1/2	5 1/4	12 7/8	12 7/8	17 1/4	14 5/8	12	8	13 1/2	3 3/8	2 5/8	7 1/2	10 5/8	1 7/8	6	4 5/8	14 3/8	2 3/8	16.0
5	48		2 1/4	3/4	1	7	4 1/2	4 3/4	1 1/2	5 1/4	12 7/8	12 7/8	17 1/4	14 5/8	12	8	13 1/2	3 3/8	2 5/8	7 1/2	10 5/8	1 7/8	6	4 5/8	14 3/8	2 3/8	16.0

STANDARD SIGN
W20-53A,B,C,D,F,G

WISCONSIN DEPT OF TRANSPORTATION

APPROVED Matthew R Rauch
for State Traffic Engineer
DATE 5/27/15 PLATE NO. W20-53.1

PROJECT NO: | HWY: | COUNTY: | SHEET NO: | E

NOTES

1. Sign is Type II - Type F Reflective - reference WIS DOT Standard Specification for HIGHWAY and STRUCTURE CONSTRUCTION latest edition.
2. Color:
   Background - Orange
   Message - Black
3. Corners may be square or rounded when base material is plywood but borders shall be rounded as shown. When base material is metal, the corners and borders shall be rounded.

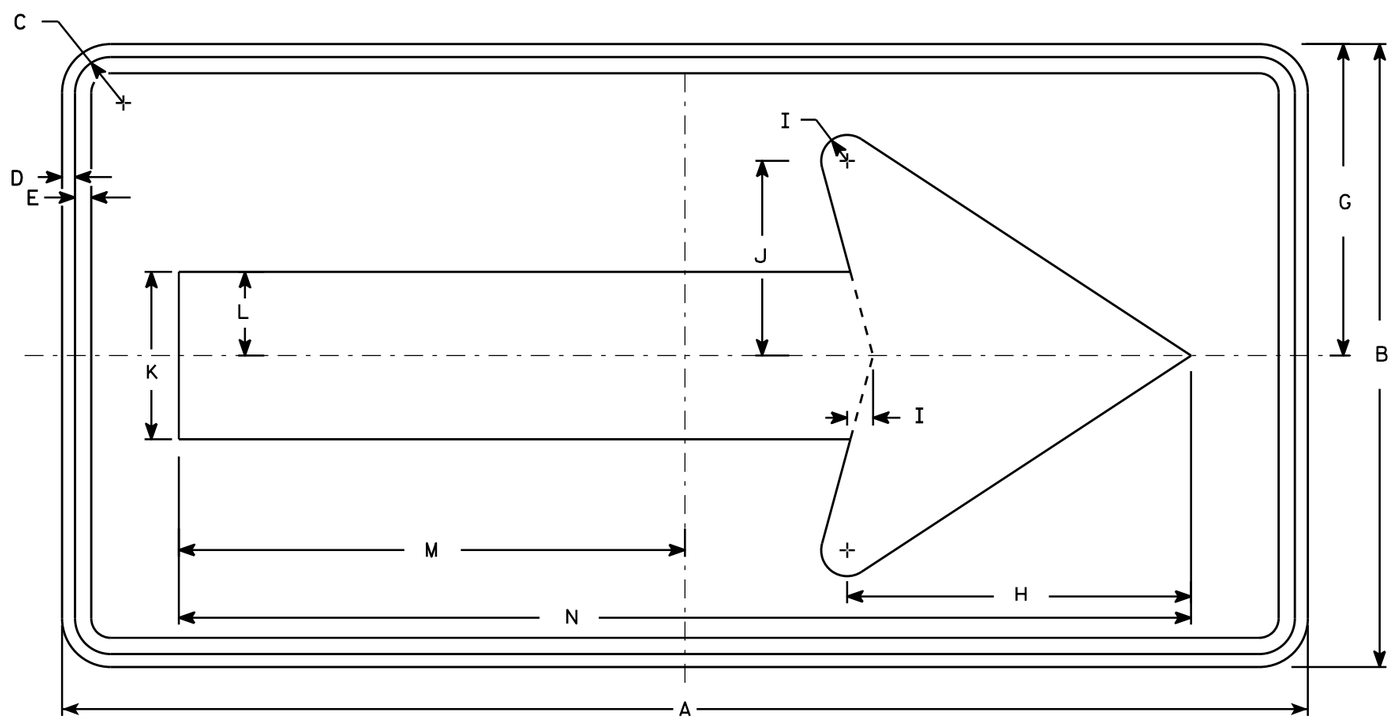

W01-6

SIZE	A	B	C	D	E	F	G	H	I	J	K	L	M	N	O	P	Q	R	S	T	U	V	W	X	Y	Z	Area sq. ft.
1																											
2S	48	24	1 3/8	1/2	5/8		12	13 1/4	1	7 1/2	6 1/2	3 1/4	19 1/2	39													8.0
2M	48	24	1 3/8	1/2	5/8		12	13 1/4	1	7 1/2	6 1/2	3 1/4	19 1/2	39													8.0
3	60	30	1 3/8	1/2	5/8		15	16 1/4	1 1/4	9 1/4	8	4	24 3/8	48 3/4													12.5
4	60	30	1 3/8	1/2	5/8		15	16 1/4	1 1/4	9 1/4	8	4	24 3/8	48 3/4													12.5
5	60	30	1 3/8	1/2	5/8		15	16 1/4	1 1/4	9 1/4	8	4	24 3/8	48 3/4													12.5

STANDARD SIGN
W01-6

WISCONSIN DEPT OF TRANSPORTATION

APPROVED Matthew R Rauch
for State Traffic Engineer

DATE 11/18/13 PLATE NO. W01-6.1

PROJECT NO: | HWY: | COUNTY: | SHEET NO: | E

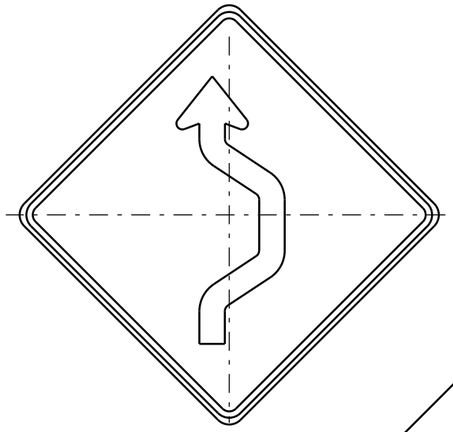

W024-1R

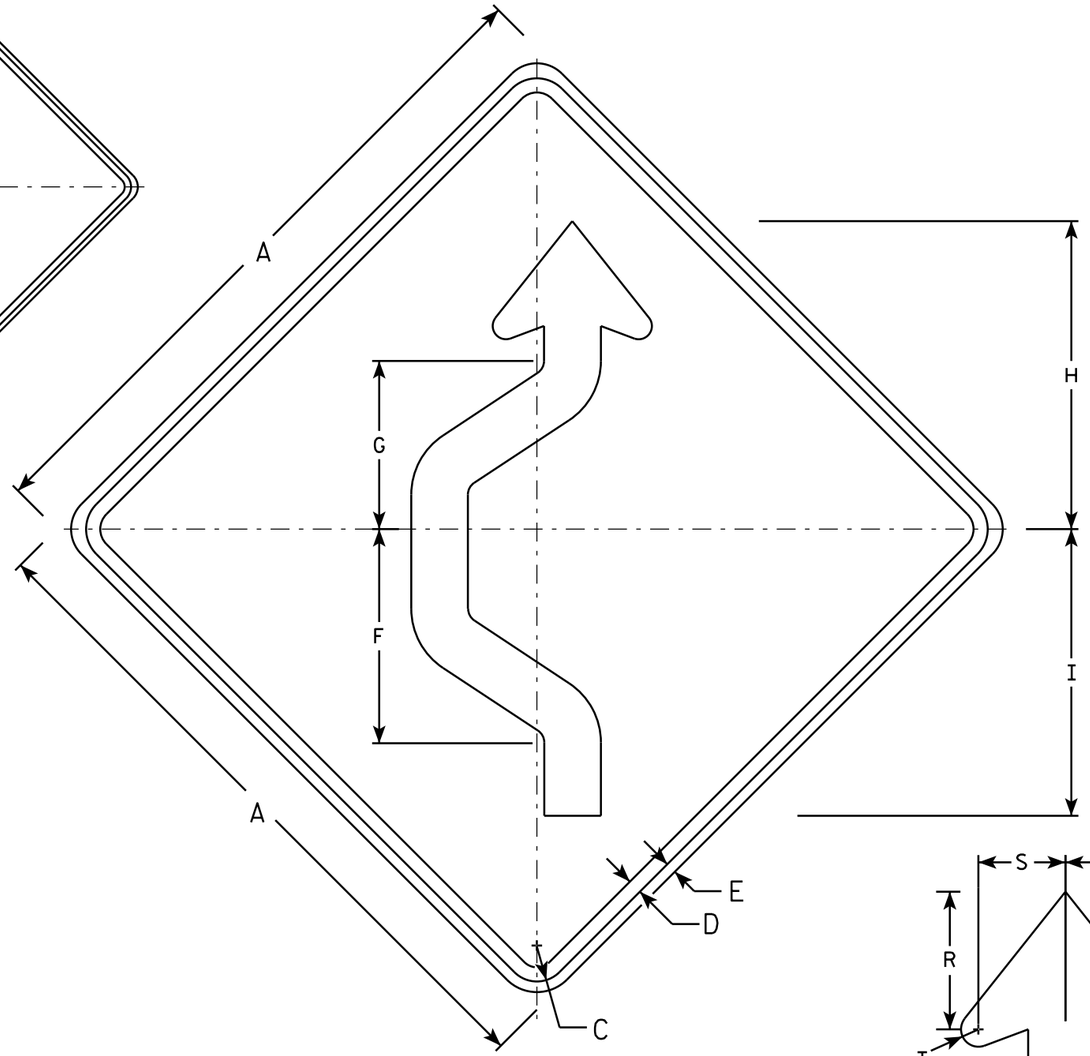

W024-1L

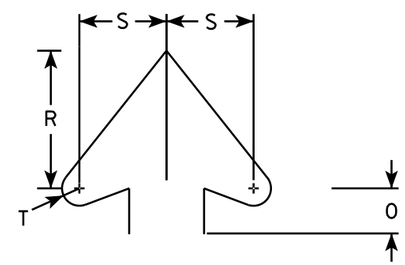

Arrowhead Detail

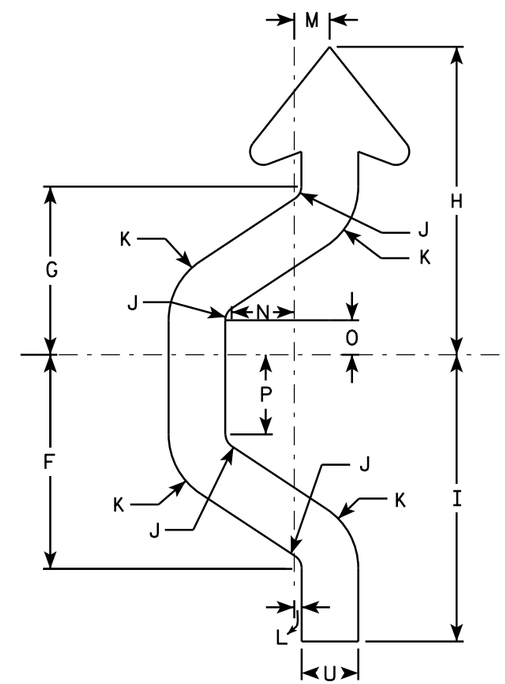

Arrow Detail

NOTES

1. Sign is Type II - Type F Reflective - reference WIS DOT Standard Specification for HIGHWAY and STRUCTURE CONSTRUCTION latest edition.
2. Color:
   Background - Orange
   Message - Black
3. Corners may be square or rounded when base material is plywood but borders shall be rounded as shown. When base material is metal, the corners and borders shall be rounded.
4. W024-1R is the same as W024-1L except reversed along the vertical centerline.

SIZE	A	B	C	D	E	F	G	H	I	J	K	L	M	N	O	P	Q	R	S	T	U	V	W	X	Y	Z	Area sq. ft.
1	36		1 3/8	5/8	1/2	11 3/8	8 7/8	16 3/8	15 1/4	3/4	3 3/4	3/8	2	3 3/8	1 7/8	4 1/4		5 1/2	3 1/2	5/8	3						9
2S	48		2 1/4	1	3/4	15 1/8	11 7/8	21 3/4	20 1/4	1	5	1/2	2 1/2	4 3/8	2 3/8	5 5/8		7 3/8	4 3/4	7/8	4						16
2M	48		2 1/4	1	3/4	15 1/8	11 7/8	21 3/4	20 1/4	1	5	1/2	2 1/2	4 3/8	2 3/8	5 5/8		7 3/8	4 3/4	7/8	4						16
3	48		2 1/4	1	3/4	15 1/8	11 7/8	21 3/4	20 1/4	1	5	1/2	2 1/2	4 3/8	2 3/8	5 5/8		7 3/8	4 3/4	7/8	4						16
4	48		2 1/4	1	3/4	15 1/8	11 7/8	21 3/4	20 1/4	1	5	1/2	2 1/2	4 3/8	2 3/8	5 5/8		7 3/8	4 3/4	7/8	4						16
5	48		2 1/4	1	3/4	15 1/8	11 7/8	21 3/4	20 1/4	1	5	1/2	2 1/2	4 3/8	2 3/8	5 5/8		7 3/8	4 3/4	7/8	4						16

STANDARD SIGN
W024-1 L & R

WISCONSIN DEPT OF TRANSPORTATION

APPROVED Matthew R Rauch
for State Traffic Engineer

DATE 9/25/2013 PLATE NO. W024-1.1

PROJECT NO: | HWY: | COUNTY: | SHEET NO: | E

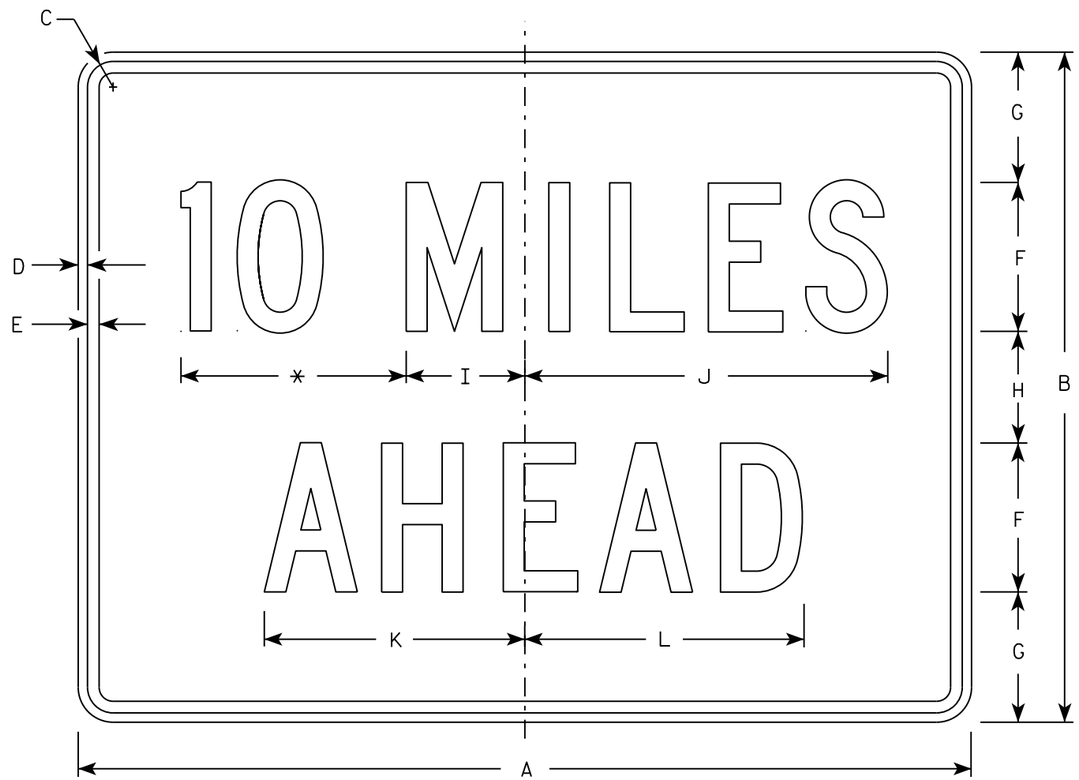

W057-52

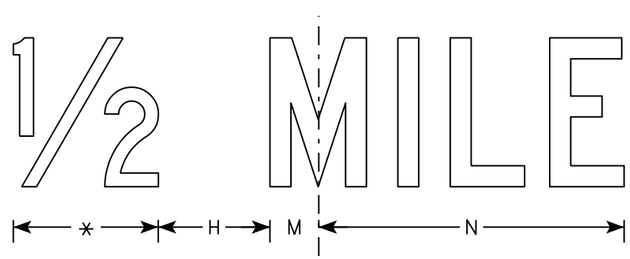

* See note 5

NOTES

1. Sign is Type II - Type F Reflective
2. Color:
   Background - Orange
   Message - Black
3. Message Series - C
4. Corners may be square or rounded when base material is plywood but borders shall be rounded as shown. When base material is metal, the corners and borders shall be rounded.
5. Substitute appropriate numerals to the nearest quarter mile and optically adjust spacing to achieve proper balance.

SIZE	A	B	C	D	E	F	G	H	I	J	K	L	M	N	O	P	Q	R	S	T	U	V	W	X	Y	Z	Area sq. ft.
1	36	24	1 1/8	3/8	1/2	6	4 1/2	3	4 3/4	14 5/8	10 5/8	11 3/8	2	12													6.0
2S	48	36	1 3/8	1/2	5/8	8	7	6	6 3/8	19 1/2	14	15	2 3/4	16 3/8													12.0
2M	48	36	1 3/8	1/2	5/8	8	7	6	6 3/8	19 1/2	14	15	2 3/4	16 3/8													12.0
3	48	36	1 3/8	1/2	5/8	8	7	6	6 3/8	19 1/2	14	15	2 3/4	16 3/8													12.0
4	48	36	1 3/8	1/2	5/8	8	7	6	6 3/8	19 1/2	14	15	2 3/4	16 3/8													12.0
5	48	36	1 3/8	1/2	5/8	8	7	6	6 3/8	19 1/2	14	15	2 3/4	16 3/8													12.0

STANDARD SIGN
W057-52

WISCONSIN DEPT OF TRANSPORTATION

APPROVED Matthew R Rauch
for State Traffic Engineer

DATE 3/21/17 PLATE NO. W057-52.2

PROJECT NO: | HWY: | COUNTY: | SHEET NO: 163 | E

Wisconsin Department of Transportation

Dedicated people creating transportation solutions through innovation and exceptional service.

http://www.dot.wisconsin.gov