WKE

Mar 08, 2022

PROJECT ID: 1032-10-75

WITH: N/A

COUNTY: KENOSHA

ORDER OF SHEETS

Section No.	1	Title
Section No.	2	Typical Sections and Details
Section No.	3	Estimate of Quantities
Section No.	3	Miscellaneous Quantities
~~Section No.~~	~~4~~	~~Right of Way Plat~~
Section No.	5	Plan and Profile
Section No.	6	Standard Detail Drawings
Section No.	7	Sign Plates
Section No.	8	Structure Plans
Section No.	9	Computer Earthwork Data
Section No.	9	Cross Sections

TOTAL SHEETS = 468

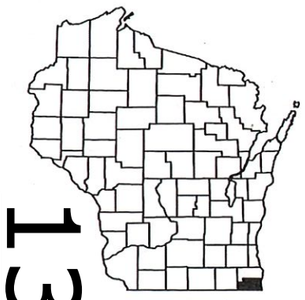

13

N

DESIGN DESIGNATION

A.A.D.T.	2015	=	1,500 (550 SOUTH 0.9 MILES)
A.A.D.T.	2043	=	2,100 (650 SOUTH 0.9 MILES)
D.H.V.		=	267
D.D.		=	60/40
T.		=	4.0%
DESIGN SPEED		=	VARIES
ESALS		=	210,000

CONVENTIONAL SYMBOLS

PLAN

- CORPORATE LIMITS
- PROPERTY LINE
- LOT LINE
- LIMITED HIGHWAY EASEMENT
- EXISTING RIGHT OF WAY
- PROPOSED OR NEW R/W LINE
- SLOPE INTERCEPT
- REFERENCE LINE (300'EB')
- EXISTING CULVERT
- PROPOSED CULVERT (Box or Pipe)
- COMBUSTIBLE FLUIDS (CAUTION)
- MARSH AREA
- WOODED OR SHRUB AREA

PROFILE

- GRADE LINE
- ORIGINAL GROUND
- MARSH OR ROCK PROFILE (To be noted as such) (ROCK)
- SPECIAL DITCH (LABEL)
- GRADE ELEVATION (95.36)
- CULVERT (Profile View)

UTILITIES

- ELECTRIC (E)
- FIBER OPTIC (FO)
- GAS (G)
- SANITARY SEWER (SAN)
- STORM SEWER (SS)
- TELEPHONE (T)
- WATER (W)
- UTILITY PEDESTAL
- POWER POLE
- TELEPHONE POLE

STATE OF WISCONSIN
DEPARTMENT OF TRANSPORTATION

PLAN OF PROPOSED IMPROVEMENT

NORTH SOUTH FREEWAY, CTH ML-STH 50

EAST FRONTAGE RD

OFF SYS

KENOSHA COUNTY

STATE PROJECT	FEDERAL PROJECT	
	PROJECT	CONTRACT
1032-10-75	WISC 2022236	1

STATE PROJECT NUMBER

1032-10-75

END PROJECT
STA 5283+67.36

EQUATION STA 3208+96.35 BK=
STA 5202+83.06 AHD

EQUATION STA 1999+88.58 BK=
STA 3121+57.83 AHD

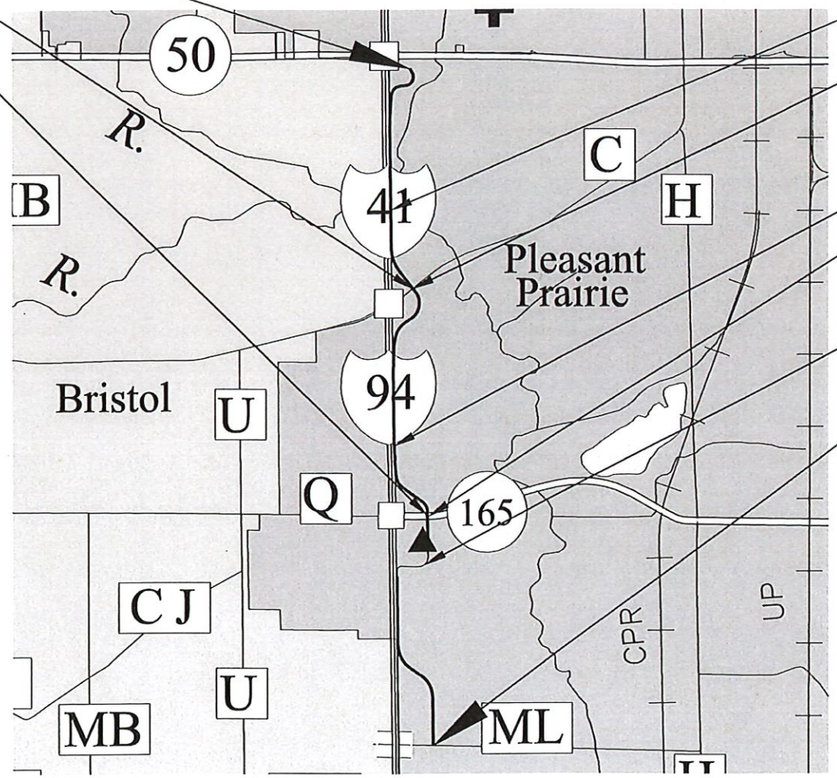

NET EXCEPTION TO CL LENGTH
STA 5236+11.20 - STA 5237+88.89

NET EXCEPTION TO CL LENGTH
STA 3207+57.09 - STA 5204+31.10

STRUCTURE C-30-0002

NET EXCEPTION TO CL LENGTH
STA 1999+01.08 - STA 3122+55.31

NET EXCEPTION TO CL LENGTH
STA 1969+72.81 - STA 1990+02.64

BEGIN PROJECT
STA 1907+45.56
Y=104050.230
X=595947.305

T-1-N

R-21-E R-22-E

LAYOUT

SCALE 0 1 MI

TOTAL NET LENGTH OF CENTERLINE = 4.429

COORDINATES ON THIS PLAN ARE REFERENCES TO THE WISCONSIN COUNTY COORDINATE SYSTEM (WCCS), KENOSHA COUNTY, NAD83 (1997)

ELEVATIONS SHOWN ON THIS PLAN ARE REFERENCED TO NAVD88 (1991)

emcs inc
1300 W. Canal Street, Suite 200
Milwaukee, WI 53233
414.347.1607 Fax 414.347.1347

WISCONSIN
BRIAN J. WILSON
E-34330-6
MILWAUKEE
WI
PROFESSIONAL ENGINEER

11/1/2021 (Date) Brian J. Wilson (Signature)

STATE OF WISCONSIN
DEPARTMENT OF TRANSPORTATION

PREPARED BY

Surveyor	WISDOT/EMCS, INC.
Designer	EMCS, INC.
Project Manager	EVAN LIMBERATOS
Regional Examiner	
Regional Supervisor	WAFA ELQAQ

APPROVED FOR THE DEPARTMENT

DATE: 11/1/21 (Signature)

E

FILE NAME : Y:\52XX\5252_DP20.NSFWYEFR.KNS\CADDS\10321015\SHEETSPLAN\010101-TI.DWG

PLOT DATE : 10/12/2021 9:44 AM PLOT BY : AARON SCHRAMM PLOT NAME :

UTILITY CONTACTS

AT&T LOCAL NETWORK - COMMUNICATION LINE
DALE DEFEVER
39869 LINN ST
CANTON, MI 48147
(586) 242-2671
DD2579@ATT.COM

ATC MANAGEMENT, INC. - ELECTRICITY-TRANSMISSION
CHRIS DAILEY
W234 N2000 RIDGEVIEW PARKWAY CT
PO BOX 47
WAUKESHA, WI 53187-0047
(262) 506-6884
CDAILEY@ATCLLC.COM

CITY OF KENOSHA - ROAD FACILITY
GREG HOLVERSON
625 52ND ST
ROOM 305
KENOSHA, WI 53140
(262) 653-4152
GHOLVERSON@KENOSHA.ORG

CITY OF KENOSHA - STREET LIGHTING
GREG HOLVERSON
625 52ND ST
ROOM 305
KENOSHA, WI 53140
(262) 653-4152
GHOLVERSON@KENOSHA.ORG

FRONTIER COMMUNICATIONS OF WI LLC - COMMUNICATION LINE
RUSS RYAN
118 DIVISION ST
PLYMOUTH, WI 53073
(920) 737-9662
RUSSELL.W.RYAN@FTR.COM

KENOSHA WATER UTILITY - SEWER
STEVE THUSIUS
4401 GREEN BAY ROAD
KENOSHA, WI 53144
(262) 653-4326
STHUSIUS@KENOSHA.ORG

KENOSHA WATER UTILITY - WATER
STEVE THUSIUS
4401 GREEN BAY ROAD
KENOSHA, WI 53144
(262) 653-4326
STHUSIUS@KENOSHA.ORG

LEVEL 3 COMMUNICATIONS - COMMUNICATION LINE
JASON BUSSE
3235 INTERTECH DR
SUITE 600
BROOKFIELD. WI 53045
(414) 224-6713
JASON.BUSSE@LUMEN.COM

MIDWEST FIBER NETWORKS LLC - COMMUNICATION LINE
CORY SCHMUKI
6070 NORTH FLINT RD
GLENDALE, WI 53209
(414) 459-3561
CSCHMUKI@MIDWESTFIBERNETWORKS.COM

SPECTRUM COMMUNICATION - COMMUNICATION LINE
GERALD SCHULTZ
1320 N DR MARTIN LUTHER KING JR DR
MILWAUKEE, WI 53212
(414) 908-4863
GERALD.SCHULTZ@CHARTER.COM

VILLAGE OF PLEASANT PRAIRIE - SEWER
JOHN STEINBRINK JR
8600 GREEN BAY ROAD
PLEASANT PRAIRIE, WI 53158
(262) 925-6768
JSTEINBRINK@PLEASANTPRAIRIEWI.GOV

VILLAGE OF PLEASANT PRAIRIE - WATER
JOHN STEINBRINK JR
8600 GREEN BAY ROAD
PLEASANT PRAIRIE, WI 53158
(262) 925-6768
JSTEINBRINK@PLEASANTPRAIRIEWI.GOV

WE ENERGIES - ELECTRIC
JAMES NELSON
7815 NORTHWESTERN AVE
RACINE, WI 53406
(262) 884-6734
JAMES.NELSON@WE-ENERGIES.COM
WE ENERGIES ELECTRIC DISPATCH
1 (800) 662-4797

WE ENERGIES - GAS/PETROLEUM
CHRIS DEGRAVE
7815 NORTHWESTERN AVE
RACINE, WI 53406
(262) 886-7018
CHRIS.DEGRAVE@WE-ENERGIES.COM
WE ENERGIES GAS DISPATCH
1 (800) 261-5325

WISCONSIN DEPARTMENT OF TRANSPORTATION - SIGNALS
JARRETT GATES
141 NW BARSTOW STREET
WAUKESHA, WI 53188
(262) 548-5894
JARRETT.GATES@DOT.WI.GOV

WISCONSIN DEPARTMENT OF TRANSPORTATION - STREET LIGHTING
ERIC PEREA
141 NW BARSTOW STREET
WAUKESHA, WI 53188
(414) 750-0935
ERIC.PEREA@DOT.WI.GOV

WISDOT ATR PULL BOXES - ELECTRIC
RUSSELL LEWIS
3623 PIERSTORFF ST
MADISON, WI 53704
(608) 516-5754
RUSSELL.LEWIS@DOT.WI.GOV

WISCONSIN DEPARTMENT OF TRANSPORTATION - COMMUNICATION LINE
JOHN MITTELSTADT
433 W ST PAUL AVE
STE 300
MILWAUKEE, WI 53203-3007
(608) 205-7859
JOHN.MITTELSTADT@DOT.WI.GOV

OTHER AGENCIES

WDNR LIASON
BENTON STELZEL
ENVIRONMENTAL ANALYSIS & REVIEW SPECIALIST
141 NW BARSTOW ST. ROOM 180
WAUKESHA, WI, 53187
PHONE (262) 623-0194
EMAIL: BENTON.STELZEL@WISCONSIN.GOV

WISDOT DESIGN
PROJECT MANAGER
WISDOT SE REGION
EVAN LIMBERATOS
141 NW BARSTOW ST,
WAUKESHA, WI, 53187
PHONE: (262) 548-8797
EMAIL: EVAN.LIMBERATOS@DOT.WI.GOV

CONSULTANT DESIGN
EMCS, INC.
BRIAN WILSON
1300 W CANAL ST, SUITE 200
MILWAUKEE, WI, 53233
PHONE: (414) 347-1607
EMAIL: BWILSON@EMCSINC.COM

OTHER CONTACTS

VILLAGE OF BRISTOL - SEWER
RANDALL KERKMAN
19801 83RD ST
BRISTOL, WI 53104
(262) 857-2368
ADMIN@VILLAGEOFBRISTOL.ORG

VILLAGE OF BRISTOL - WATER
RANDALL KERKMAN
19801 83RD STREET
BRISTOL, WI 53104
(262) 857-2368
ADMIN@VILLAGEOFBRISTOL.ORG

GENERAL NOTES

- EXISTING R/W LINES SHOWN ON PLANS ARE FROM KENOSHA COUNTY GIS AND ARE APPROXIMATE
- THE LOCATIONS OF EXISTING AND PROPOSED UTILITY INSTALLATIONS AS SHOWN ON THE PLANS ARE APPROXIMATE. THERE MAY BE OTHER UTILITY INSTALLATIONS WITHIN THE PROJECT AREA THAT ARE NOT SHOWN
- THE CONTRACTOR SHALL NOTIFY DIGGERS HOTLINE AND AFFECTED UTILITIES PRIOR TO THE START OF WORK. ANY LOCAL MUNICIPAL UTILITY WHICH IS NOT A MEMBER OF THE DIGGERS HOTLINE MUST BE CONTACTED SEPARATELY.
- PRIOR TO THE PLACEMENT OF STEEL PLATE BEAM GUARD OR MGS GUARDRAIL, THE SHOULDERS SHALL BE IN PLACE, SHAPED AND COMPACTED UNLESS SHOWN OTHERWISE.
- THE CONTRACTOR'S PAVING OPERATIONS SHALL BE CONSISTENT WITH THE PLAN TYPICAL SECTIONS AND CONSTRUCTED TO PREVENT HMA LONGITUDINAL JOINTS FROM BEING LOCATED WITHIN A DRIVING, TURNING, BIKE, OR PARKING LANE
- CONTRACTOR WILL BE RESPONSIBLE FOR RESHAPING AND SEEDING ANY PREVIOUSLY GRASSED AREAS WHICH ARE DISTURBED BY THEIR OPERATION OUTSIDE OF THE NORMAL CONSTRUCTION LIMITS.
- TOPSOIL SHALL BE PLACED 1 INCH BELOW THE TOP OF ADJACENT CONCRETE CURBS OR SIDEWALKS.
- THE QUANTITY OF THE ITEMS FOR EROSION PROTECTION INCLUDES AN UNDISTRIBUTED AMOUNT FOR PROTECTION, CONTROL AND ABATEMENT OF WATER POLLUTION RESULTING FROM SOIL EROSION. THE DISTRIBUTION AND LOCATION OF THESE MATERIALS ARE TO BE DETERMINED BY THE ENGINEER.
- DISTURBED AREAS WITHIN THE RIGHT OF WAY ARE TO BE TOPSOILED, FERTILIZED, AND SEEDED, AS DIRECTED BY THE ENGINEER.
- FERTILIZER SHALL NOT BE USED WITHIN 20' OF NAVIGABLE WATERWAYS OR WETLANDS.
- ASPHALTIC PAVEMENT SHALL BE CONSTRUCTED WITH THE FOLLOWING LAYERS AND GRADATIONS:

DIGGERS HOTLINE
Dial 811 or (800)242-8511
www.DiggersHotline.com

TO OBTAIN LOCATION OF PARTICIPANTS UNDERGROUND FACILITIES BEFORE YOU DIG IN WISCONSIN

WIS. STATUTE 182.0175 (1974) REQUIRES MIN. OF 3 WORK DAYS NOTICE BEFORE YOU EXCAVATE.

TOTAL LAYER PAVEMENT THICKNESS	LAYERS	HMA PAVEMENT ITEMS
4"	1 ¾"(UPPER) 2 ¼" (LOWER)	4 LT 58-28 S (UPPER) 3 LT 58-28 S (LOWER)
3 ½"	1 ¾"(UPPER) 1 ¾"(LOWER)	4 LT 58-28 S (UPPER) 4 LT 58-28 S (LOWER)

ORDER OF SECTION 2 SHEETS

GENERAL NOTES
PROJECT OVERVIEW
TYPICAL SECTIONS
CONSTRUCTION DETAILS
PLAN DETAILS
CURB RAMP DETAILS
EROSION CONTROL
STORM SEWER
PERMANENT SIGNING
LIGHTING REMOVAL
TRAFFIC SIGNAL REMOVAL
TRAFFIC SIGNAL TEMPORARY
TRAFFIC SIGNAL PLAN
SIGNAL INTERCONNECT PLAN
PAVEMENT MARKING
TRAFFIC CONTROL
DETOUR
ALIGNMENT DETAILS
CONTROL POINTS

STANDARD ABBREVIATIONS

A.D.T	AVERAGE DAILY TRAFFIC
A.A.D.T	ANNUAL AVERAGE DAILY TRAFFIC
D.H.V	DESIGN HOURLY VOLUME
ASPH	ASPHALT
BASE AGG	BASE AGGREGATE DENSE
CE	COMMERCIAL ENTRANCE
D	DEFLECTION
D.D	DIRECTIONAL DISTRIBUTION
EFR	EAST FRONTAGE ROAD
ESALS	EQUIVALENT SINGLE AXLE LOADS
EX	EXISTING
L	LENGTH
NC	NORMAL CROWN
PC	POINT OF CURVATURE
PE	PRIVATE ENTRANCE
PI	POINT OF INTERSECTION
PT	POINT OF TANGENCY
R	RADIUS
REQ'D	REQUIRED
R/W	RIGHT OF WAY
SI	SLOPE INTERCEPT
S.E.	SUPER ELEVATION
SSPRC	STORM SEWER PIPE REINFORCED CONCRETE
STA	STATION
T	TANGENT LENGTH
TYP.	TYPICAL
VCL	VERTICAL CURVE LENGTH
VPC	VERTICAL POINT OF CURVATURE
VPI	VERTICAL POINT OF INTERSECTION
VPT	VERTICAL POINT OF TANGENCY

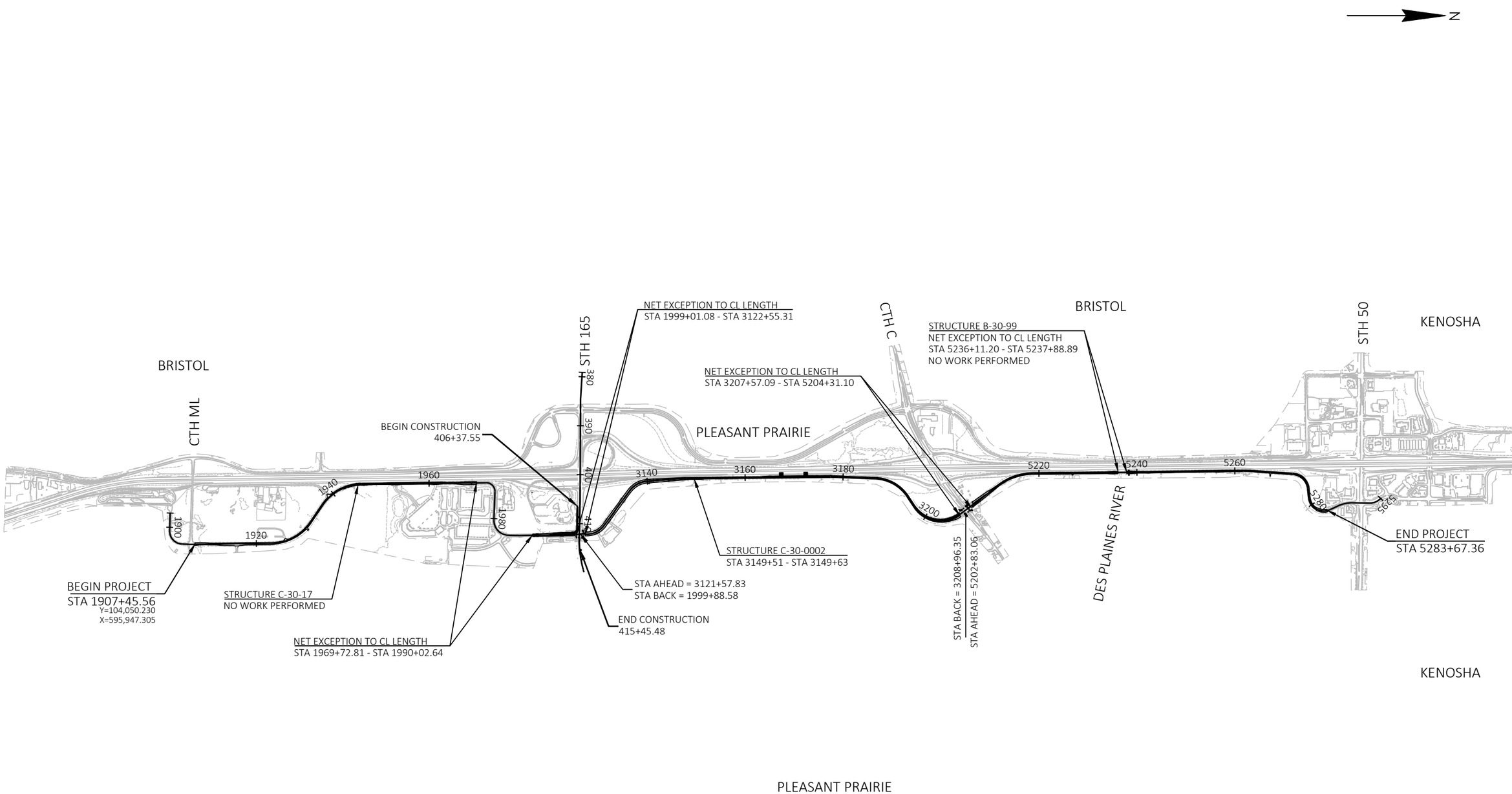

PROJECT NO: 1032-10-75	HWY: EAST FRONTAGE ROAD	COUNTY: KENOSHA	PROJECT OVERVIEW	SHEET 3	E

FILE NAME : Y:\52XX\5252_DP20.NSFWYEFR.KNS\CADDS\10321015\SHEETSPLAN\020201-PO.DWG
LAYOUT NAME - 020201-po
PLOT DATE : 10/22/2021 4:10 PM
PLOT BY : NICHOLAS BECKER
PLOT NAME :
PLOT SCALE : 1 IN:2000 FT
WISDOT/CADDS SHEET 42

*S.E. = 5.9% CURVE 1 & 2

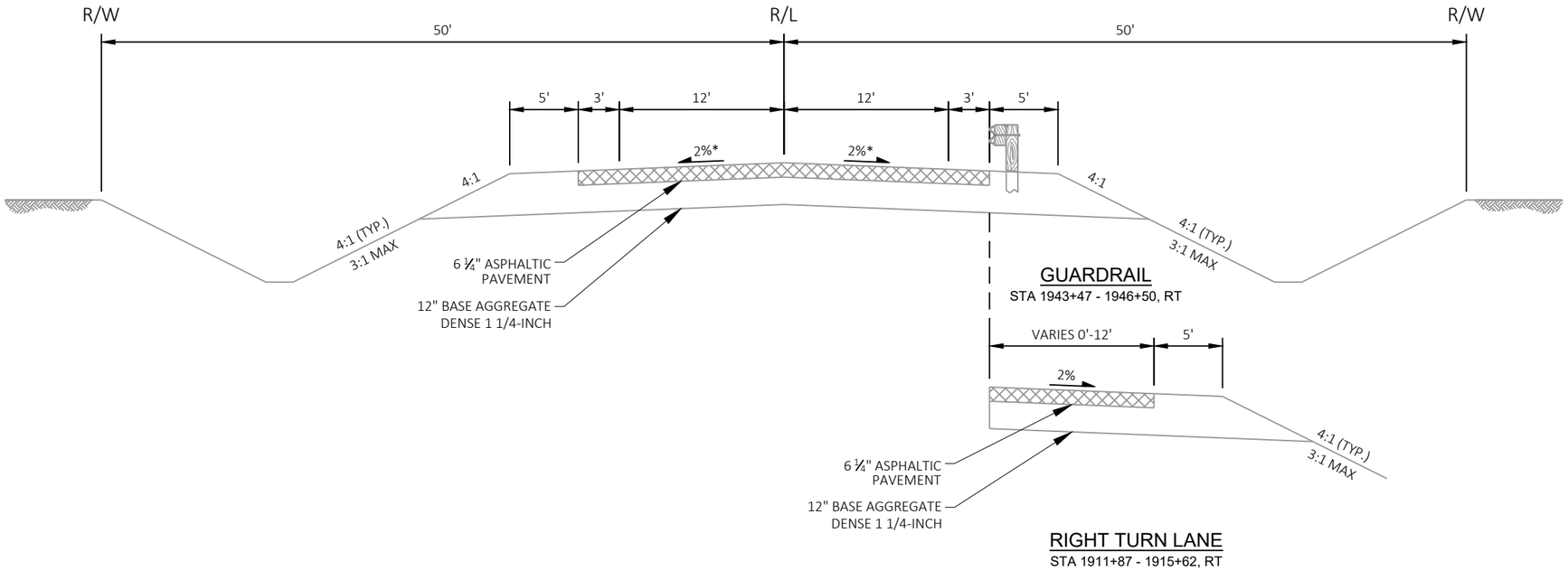

EXISTING TYPICAL SECTION - EAST FRONTAGE ROAD

STA 1907+45.56 - 1948+24

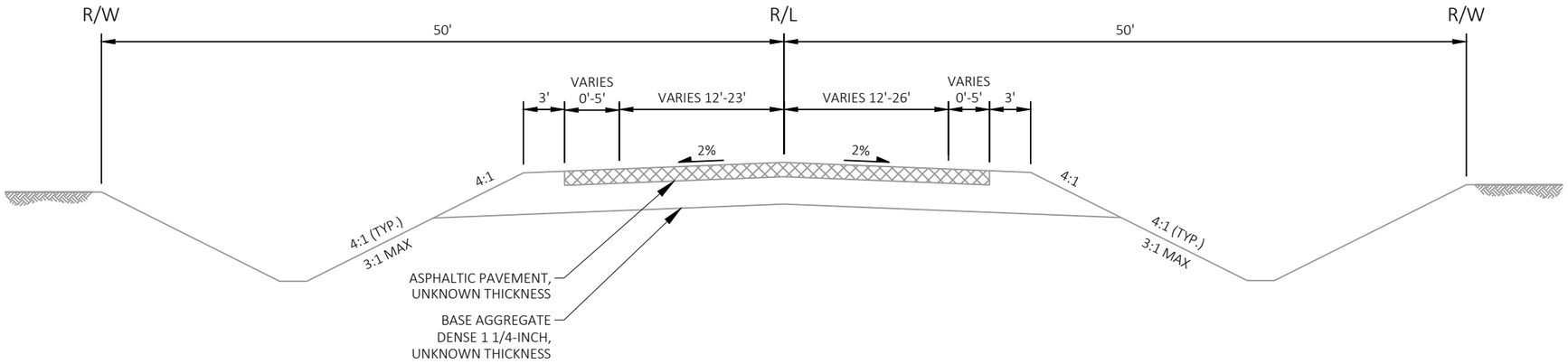

EXISTING TYPICAL SECTION - EAST FRONTAGE ROAD

STA 1948+24 - 1966+95

PROJECT NO: 1032-10-75	HWY: EAST FRONTAGE ROAD	COUNTY: KENOSHA	TYPICAL SECTIONS	SHEET 4	E

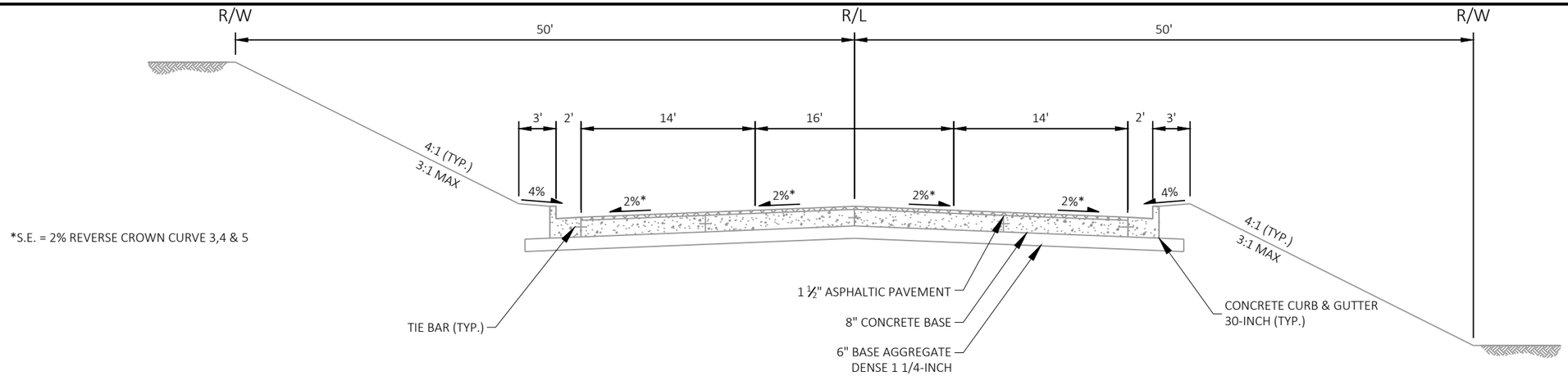

EXISTING TYPICAL SECTION - EAST FRONTAGE ROAD

STA 1966+95 - 1993+54

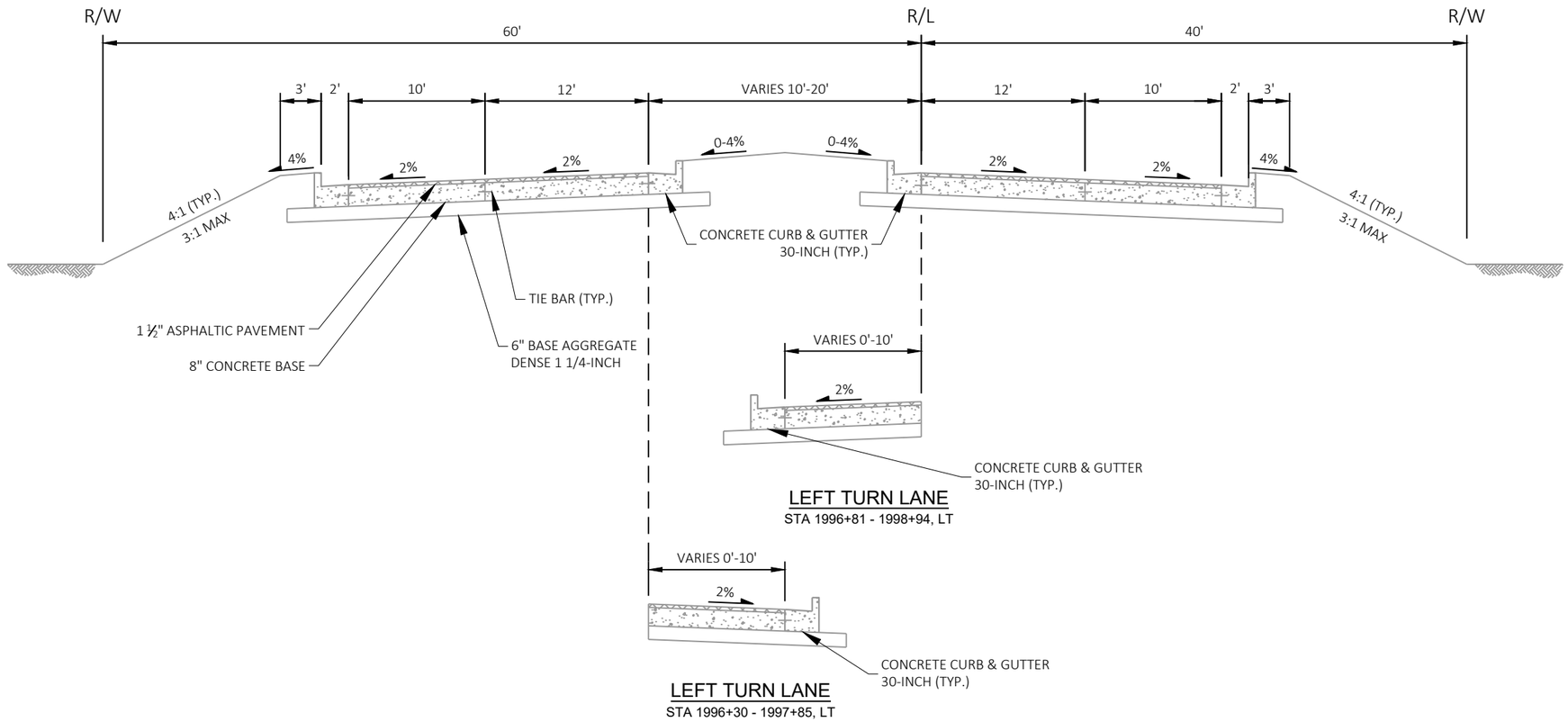

EXISTING TYPICAL SECTION - EAST FRONTAGE ROAD

STA 1993+54 - 1998+99.47

PROJECT NO: 1032-10-75	HWY: EAST FRONTAGE ROAD	COUNTY: KENOSHA	TYPICAL SECTIONS	SHEET 5	E

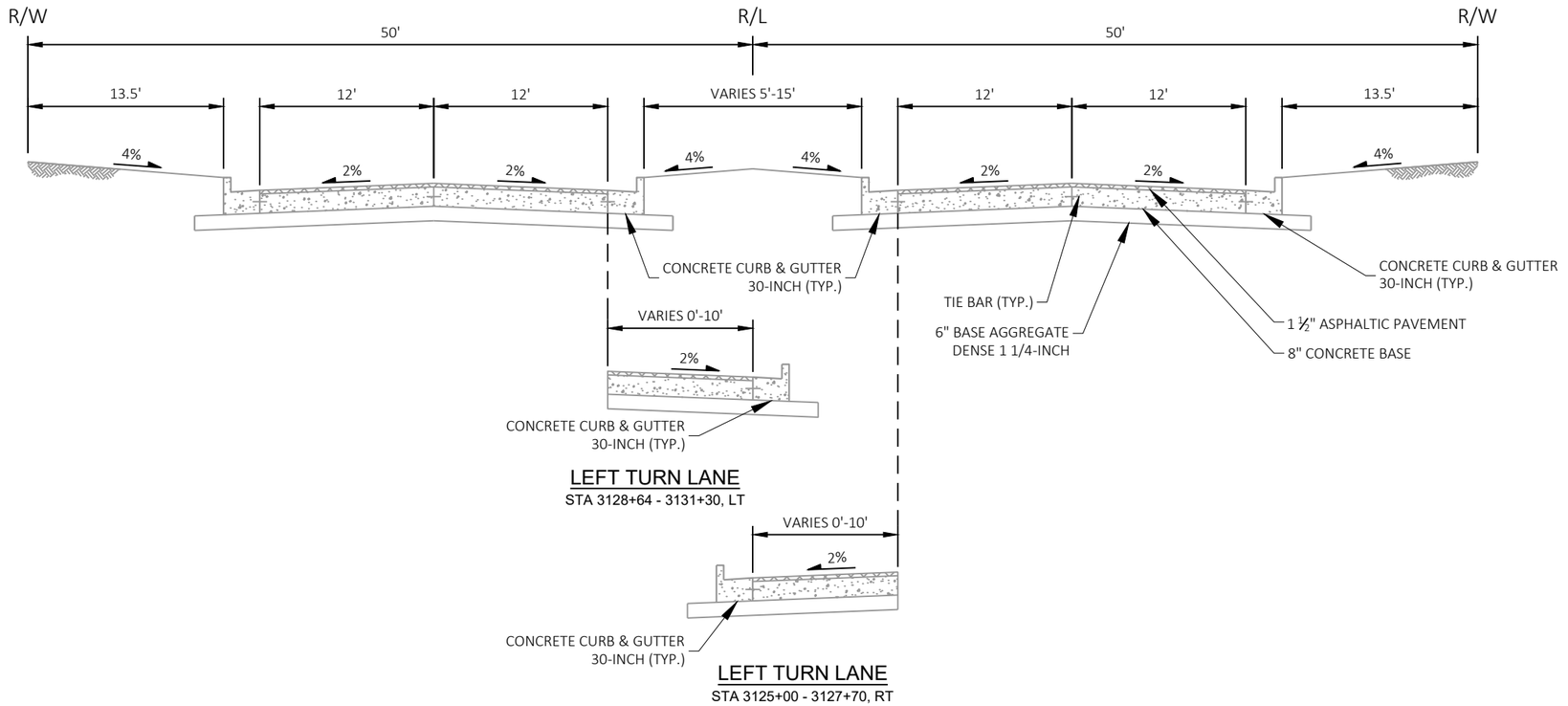

EXISTING TYPICAL SECTION - EAST FRONTAGE ROAD

STA 3122+55.97 - 3144+88

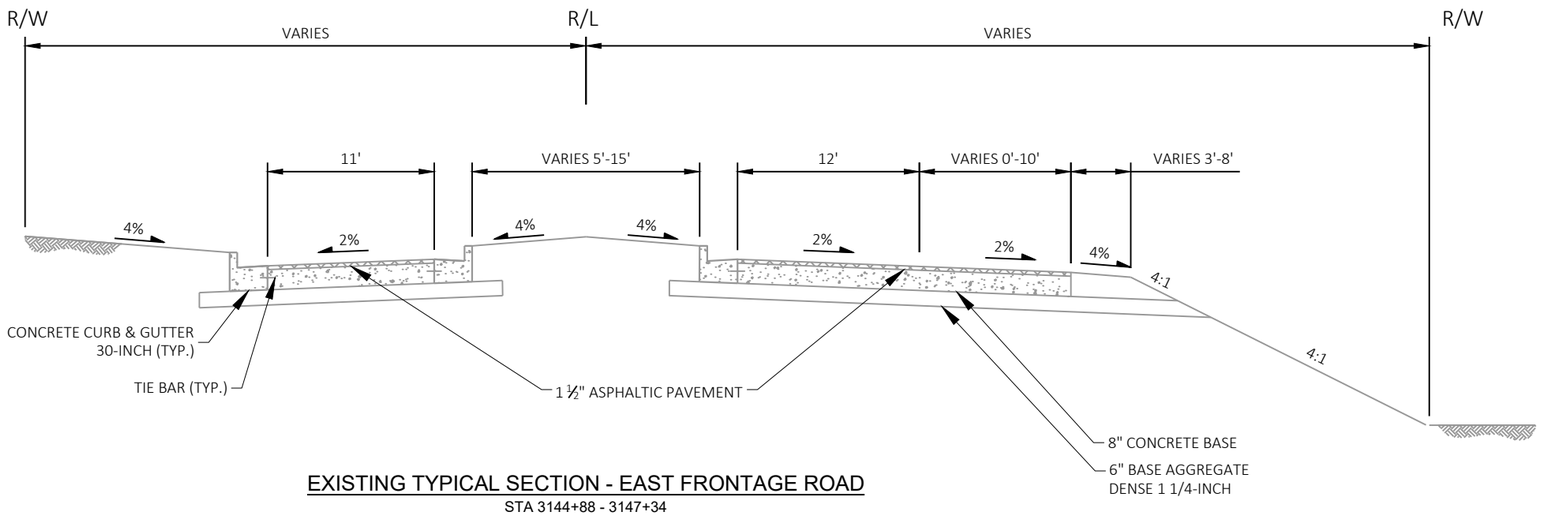

EXISTING TYPICAL SECTION - EAST FRONTAGE ROAD

STA 3144+88 - 3147+34

PROJECT NO: 1032-10-75	HWY: EAST FRONTAGE ROAD	COUNTY: KENOSHA	TYPICAL SECTIONS	SHEET 6	E

FILE NAME : Y:\52XX\5252_DP20.NSFWYEFR.KNS\CADDS\10321015\SHEETSPLAN\020301-TS.DWG
LAYOUT NAME - 020303-ts 1in-10ft
PLOT DATE : 10/22/2021 11:30 AM
PLOT BY : AARON SCHRAMM
PLOT NAME :
PLOT SCALE : 1 IN:10 FT
WISDOT/CADDS SHEET 42

2

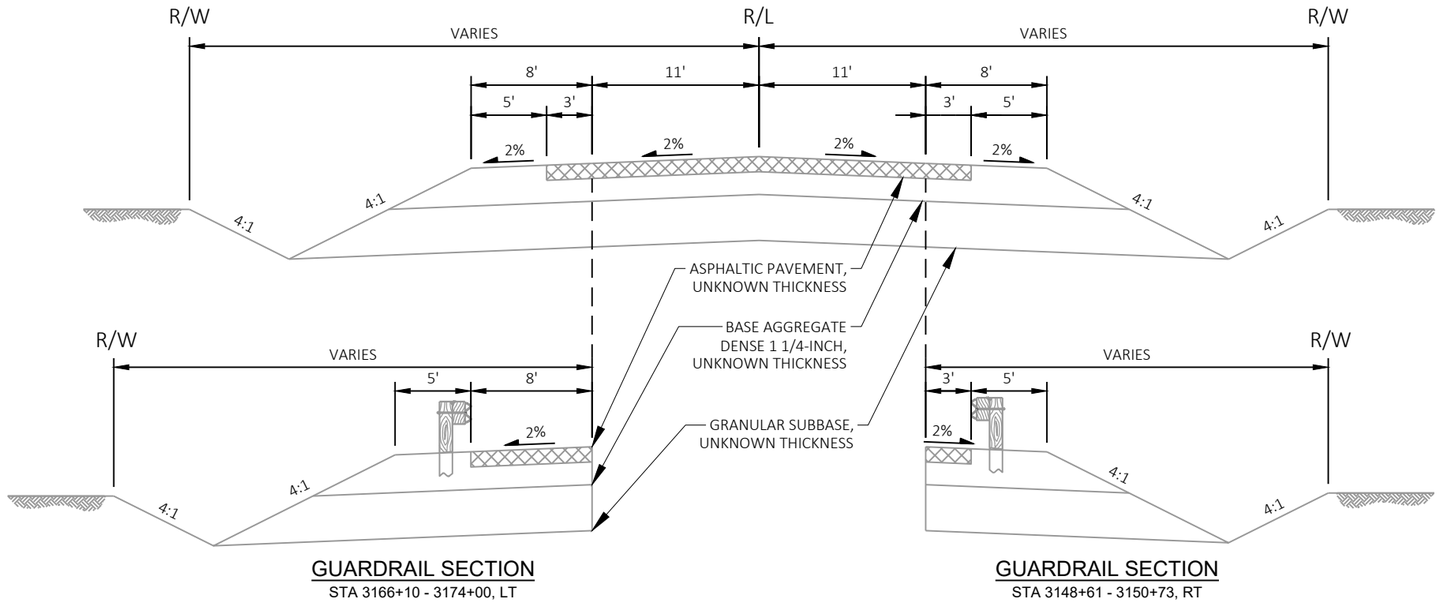

GUARDRAIL SECTION
STA 3166+10 - 3174+00, LT

GUARDRAIL SECTION
STA 3148+61 - 3150+73, RT

EXISTING TYPICAL SECTION - EAST FRONTAGE ROAD
STA 3147+34 - 3174+00

PROJECT NO: 1032-10-75	HWY: EAST FRONTAGE ROAD	COUNTY: KENOSHA	TYPICAL SECTIONS	SHEET 7	E

*S.E. = 4.08% CURVE 9
S.E. = 5.3% CURVE 10
S.E. = 4.5% CURVE 12

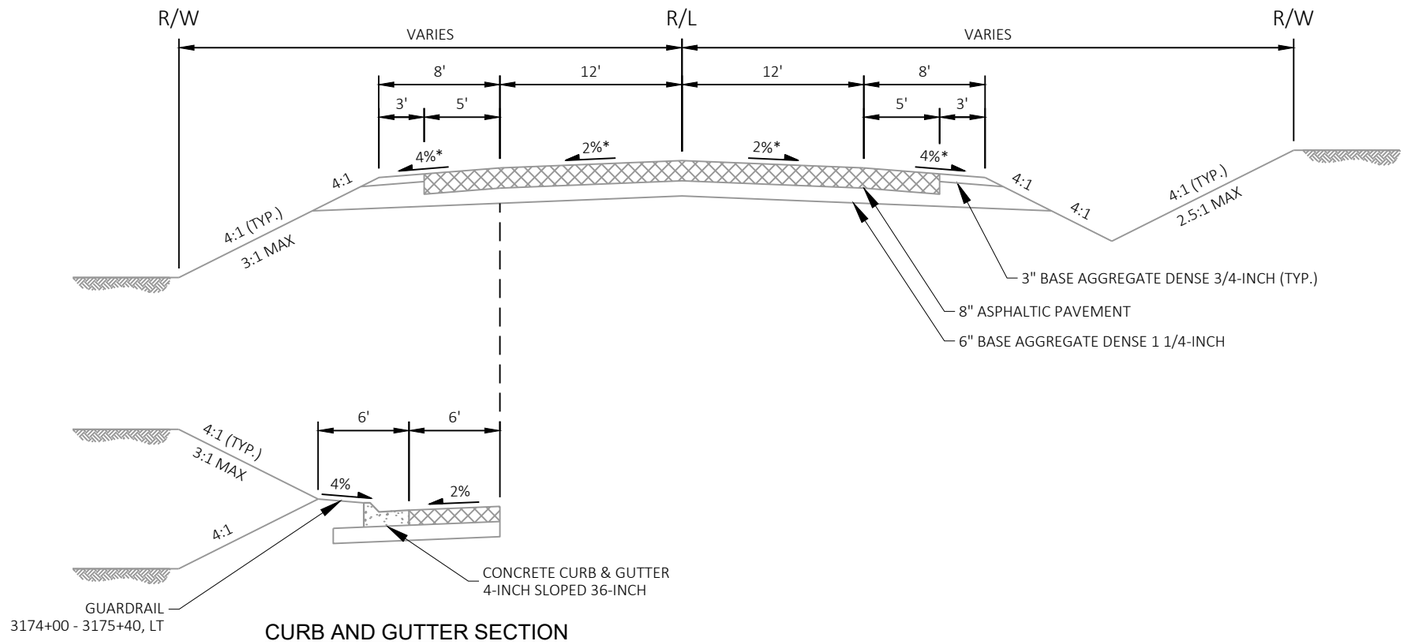

CURB AND GUTTER SECTION

STA 3174+00 - 3180+00, LT
STA 5214+00 - 5220+00, LT

EXISTING TYPICAL SECTION - EAST FRONTAGE ROAD

STA 3174+00 - 3197+20
STA 5210+63 -5220+00

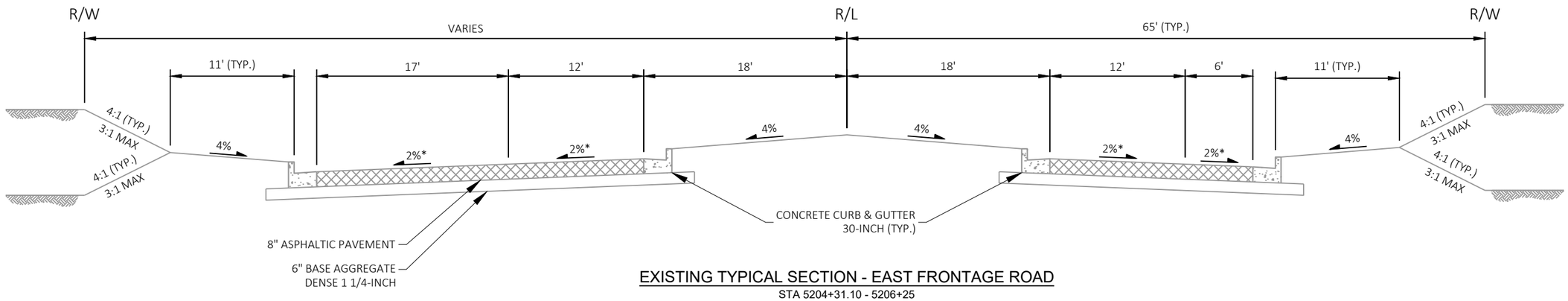

EXISTING TYPICAL SECTION - EAST FRONTAGE ROAD

STA 5204+31.10 - 5206+25

PROJECT NO: 1032-10-75	HWY: EAST FRONTAGE ROAD	COUNTY: KENOSHA	TYPICAL SECTIONS	SHEET 8	E

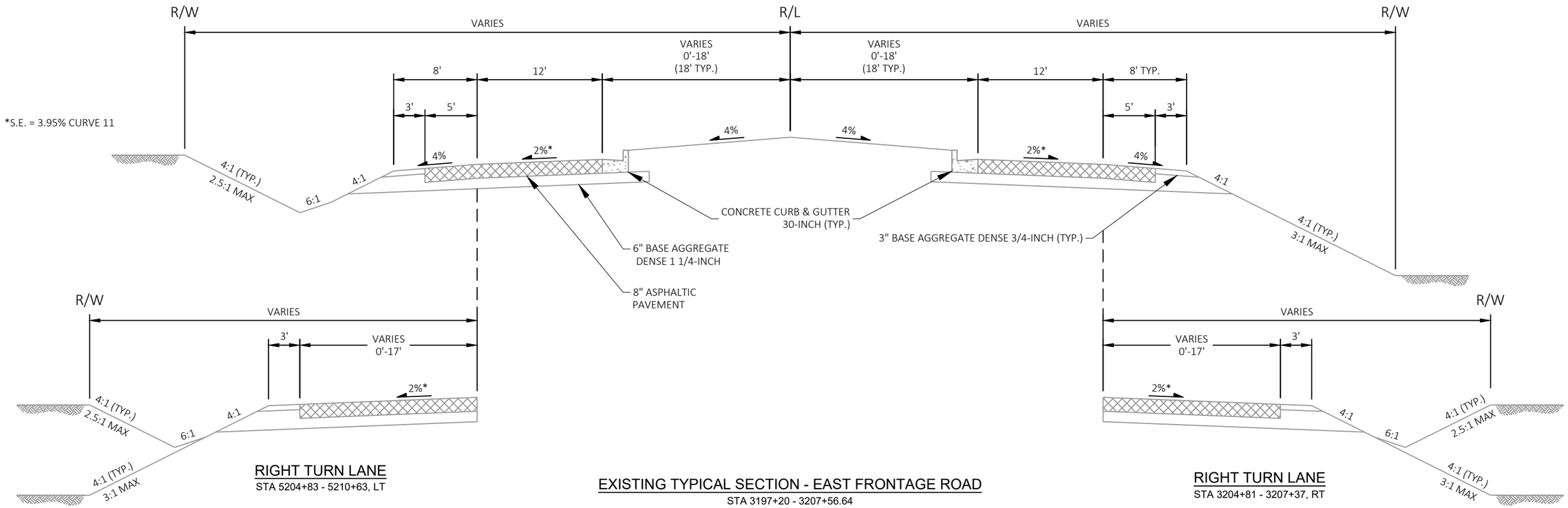

RIGHT TURN LANE
STA 5204+83 - 5210+63, LT

EXISTING TYPICAL SECTION - EAST FRONTAGE ROAD
STA 3197+20 - 3207+56.64
STA 5206+25 - 5210+63

RIGHT TURN LANE
STA 3204+81 - 3207+37, RT

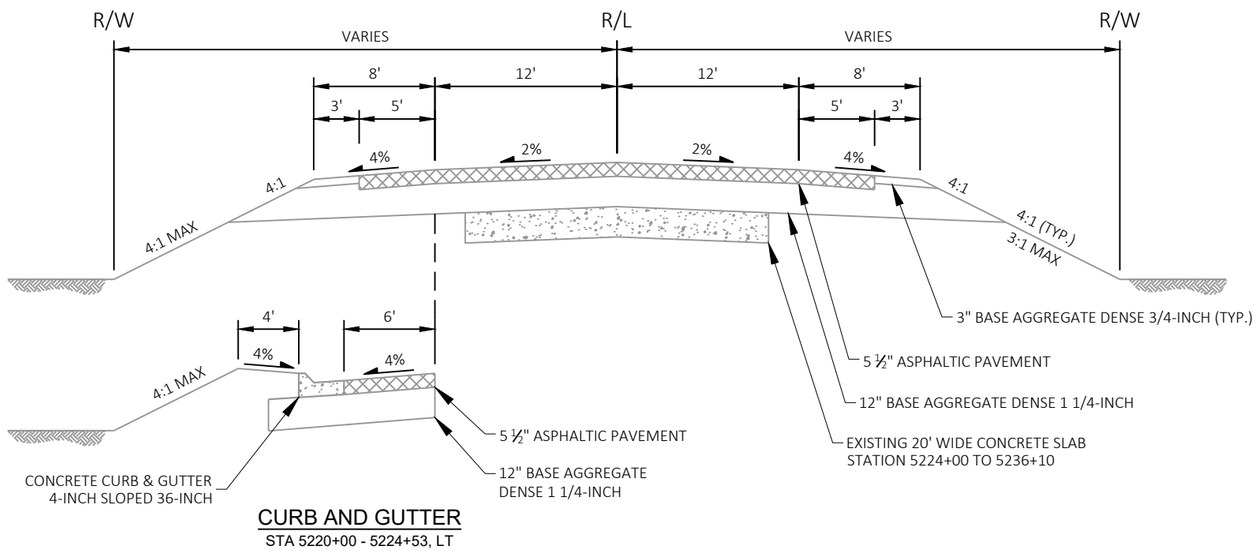

CURB AND GUTTER
STA 5220+00 - 5224+53, LT

EXISTING TYPICAL SECTION- EAST FRONTAGE ROAD
STA 5220+00 - 5236+16.78
STA 5237+88.89 - 5241+50

PROJECT NO: 1032-10-75	HWY: EAST FRONTAGE ROAD	COUNTY: KENOSHA	TYPICAL SECTIONS	SHEET 9	E

FILE NAME : Y:\52XX\5252_DP20.NSFWYEFR.KNS\CADDS\10321015\SHEETSPLAN\020301-TS.DWG
LAYOUT NAME - 020306-ts 1in-10ft
PLOT DATE : 10/22/2021 11:30 AM PLOT BY : AARON SCHRAMM PLOT NAME : PLOT SCALE : 1 IN:10 FT
WISDOT/CADDS SHEET 42

*S.E. = 2% NORMAL CROWN CURVE 13

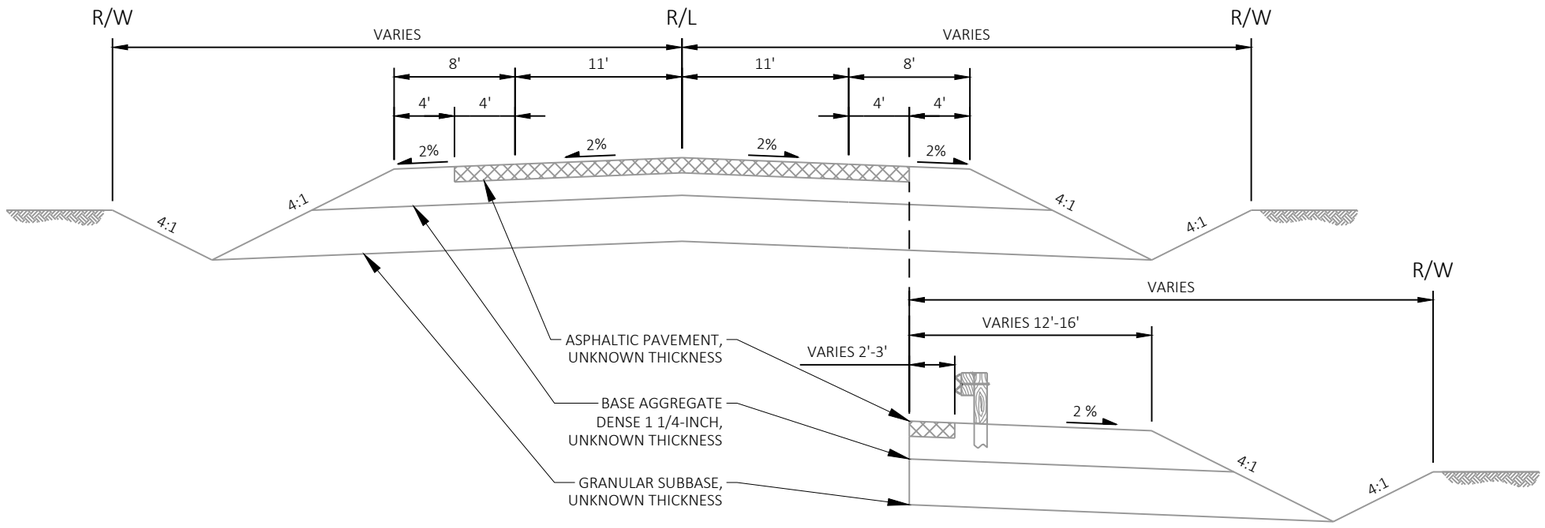

GUARDRAIL SECTION
STA 5242+78 - 5246+33, RT
STA 5257+08 - 5260+00, RT

EXISTING TYPICAL SECTION - EAST FRONTAGE ROAD
STA 5241+50 - 5263+78

*S.E. = 6.0% CURVE 14 & 15

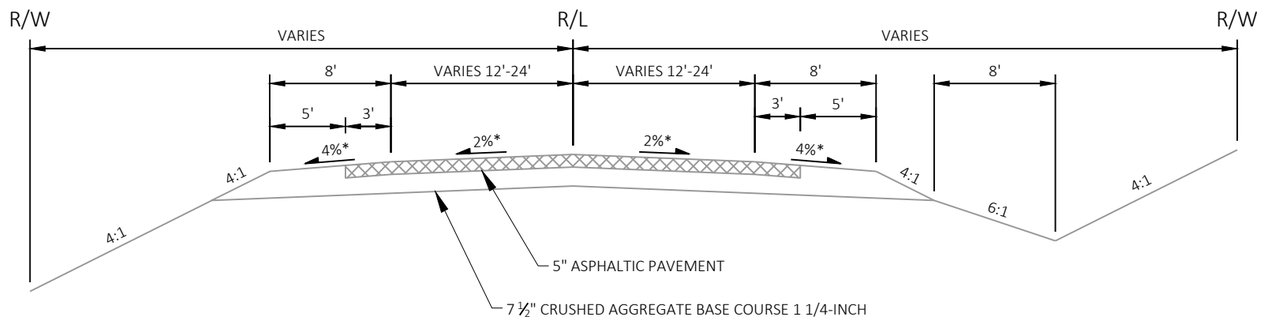

EXISTING TYPICAL SECTION - EAST FRONTAGE ROAD
STA 5263+78 - 5283+67.36

PROJECT NO: 1032-10-75	HWY: EAST FRONTAGE ROAD	COUNTY: KENOSHA	TYPICAL SECTIONS	SHEET 10	E

FILE NAME : Y:\52XX\5252_DP20.NSFWYEFR.KNS\CADDS\10321015\SHEETSPLAN\020301-TS.DWG
LAYOUT NAME - 020307-ts 1in-10ft
PLOT DATE : 10/22/2021 11:30 AM PLOT BY : AARON SCHRAMM PLOT NAME : PLOT SCALE : 1 IN:10 FT

2

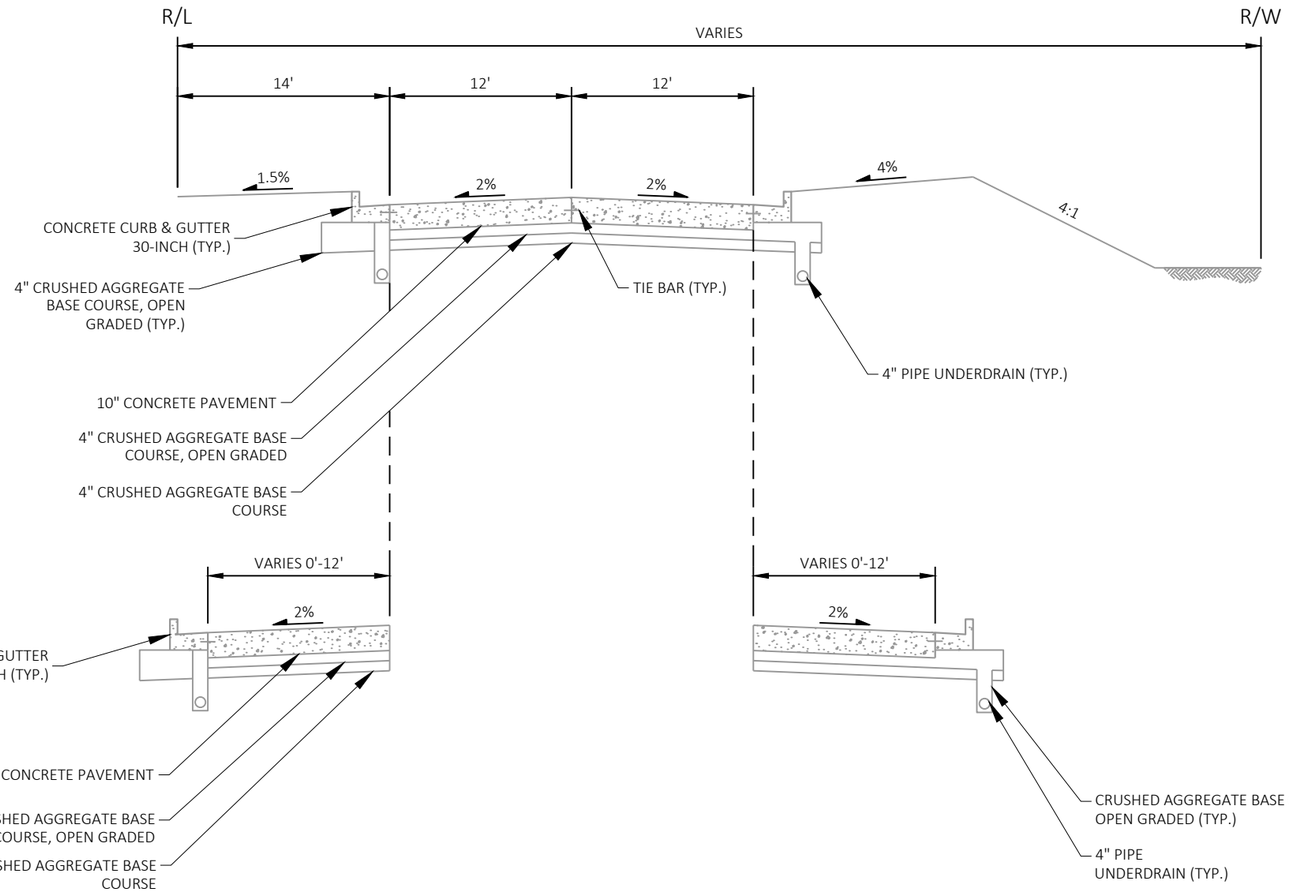

LEFT TURN LANE
STA 408+99 - 411+49, RT

RIGHT TURN LANE
STA 409+57 - 411+79+32, RT

EXISTING TYPICAL SECTION - STH 165
STA 406+37.55 - 411+79.32, RIGHT SIDE ONLY

PROJECT NO: 1032-10-75	HWY: EAST FRONTAGE ROAD	COUNTY: KENOSHA	TYPICAL SECTIONS	SHEET 11	E

FILE NAME : Y:\52XX\5252_DP20.NSFWYEFR.KNS\CADDS\10321015\SHEETSPLAN\020301-TS.DWG
LAYOUT NAME - 020308-ts 1in-10ft

PLOT DATE : 10/22/2021 11:30 AM PLOT BY : AARON SCHRAMM PLOT NAME : PLOT SCALE : 1 IN:10 FT

2

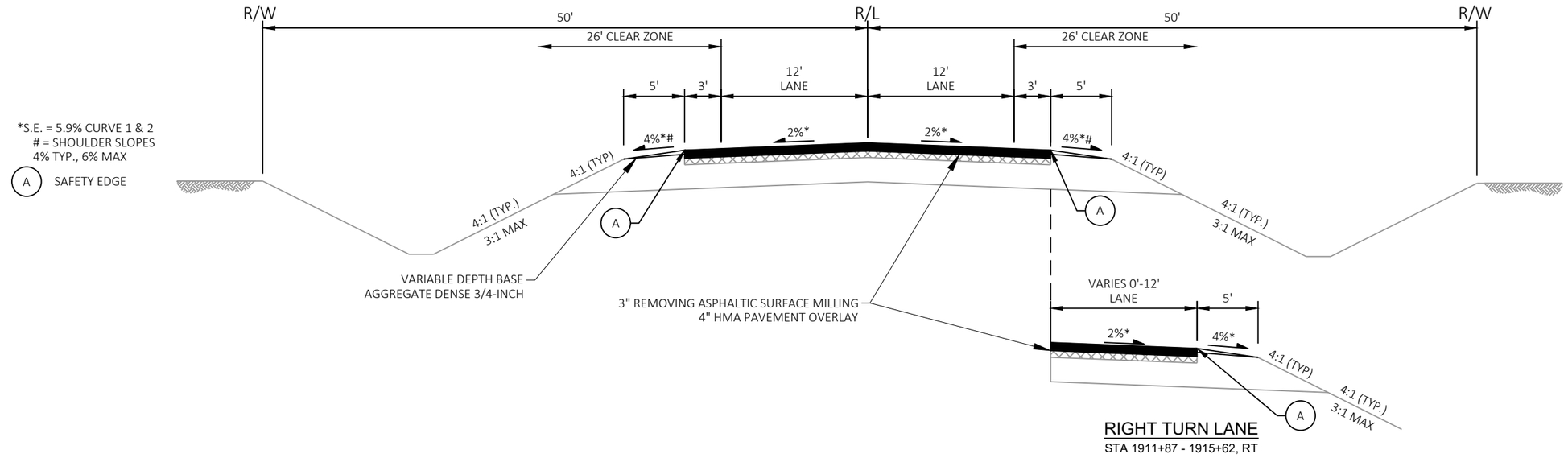

RIGHT TURN LANE
STA 1911+87 - 1915+62, RT

PROPOSED TYPICAL SECTION - EAST FRONTAGE ROAD

STA 1907+45.56 - 1943+00
STA 1946+07 - 1948+24

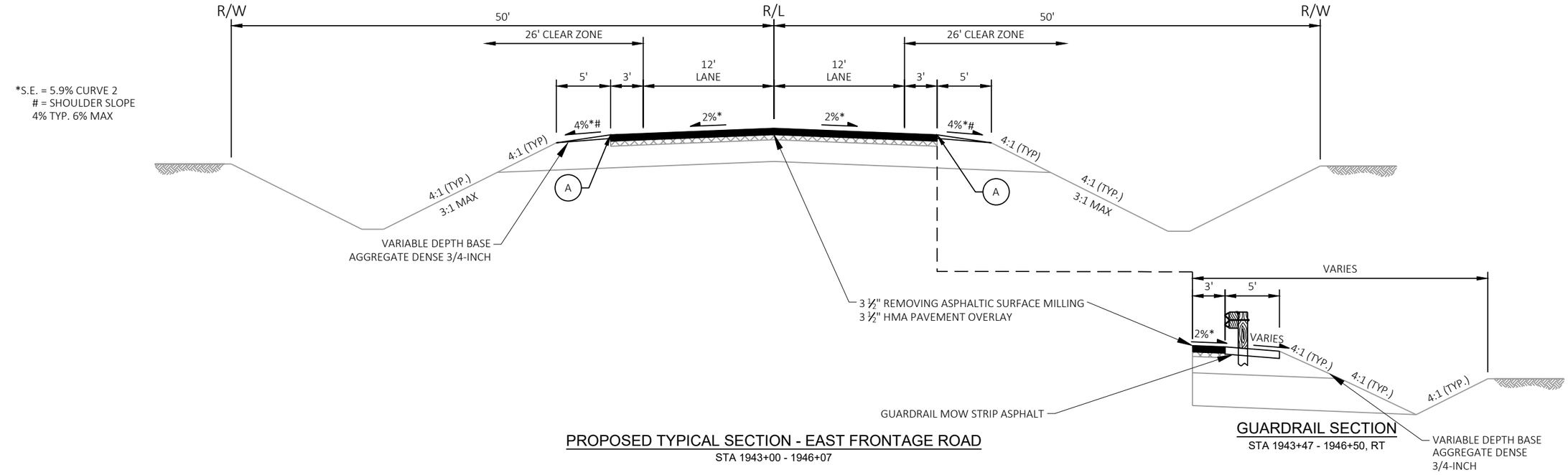

PROPOSED TYPICAL SECTION - EAST FRONTAGE ROAD

STA 1943+00 - 1946+07

GUARDRAIL SECTION

STA 1943+47 - 1946+50, RT

PROJECT NO: 1032-10-75	HWY: EAST FRONTAGE ROAD	COUNTY: KENOSHA	TYPICAL SECTIONS	SHEET 12	E

FILE NAME : Y:\52XX\5252_DP20.NSFWYEFR.KNS\CADDS\10321015\SHEETSPLAN\020301-TS.DWG
LAYOUT NAME - 020309-ts 1in-10ft
PLOT DATE : 10/22/2021 11:30 AM PLOT BY : AARON SCHRAMM PLOT NAME : PLOT SCALE : 1 IN:10 FT

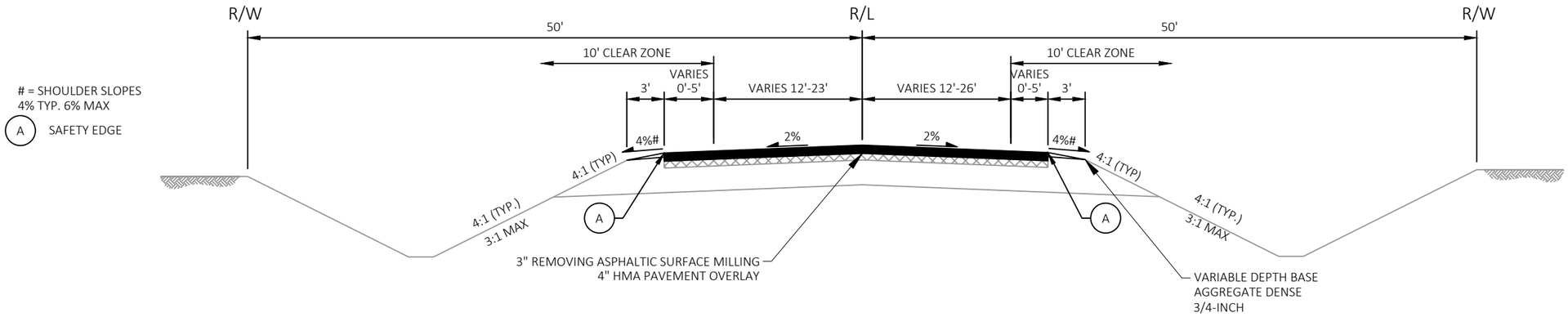

PROPOSED TYPICAL SECTION - EAST FRONTAGE ROAD

STA 1948+24 - 1966+95

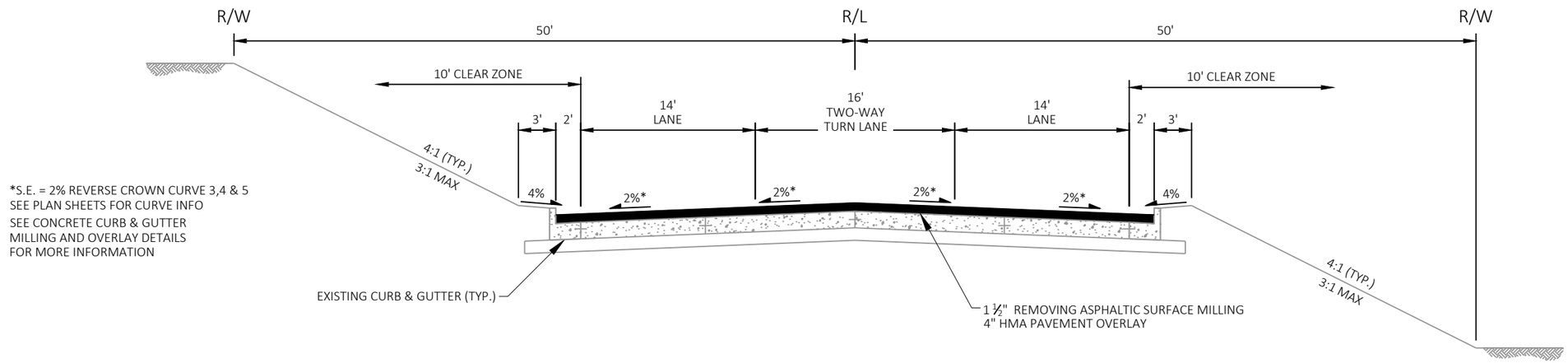

PROPOSED TYPICAL SECTION- EAST FRONTAGE ROAD

STA 1966+95 - 1969+73

STA 1990+03 - 1993+54

PROJECT NO: 1032-10-75	HWY: EAST FRONTAGE ROAD	COUNTY: KENOSHA	TYPICAL SECTIONS	SHEET 13	E

SEE CONCRETE CURB & GUTTER MILLING AND OVERLAY DETAILS FOR MORE INFORMATION

^TURN LANE IS 10' OVERALL WIDTH. REFERENCE LINE IS BEST-FIT AND WITHIN 0.2' OF PAVEMENT EDGE

#BOTTOM OF CURB & GUTTER SHALL BE CONSTRUCTED TO MATCH BOTTOM OF CONCRETE BASE 8-INCH

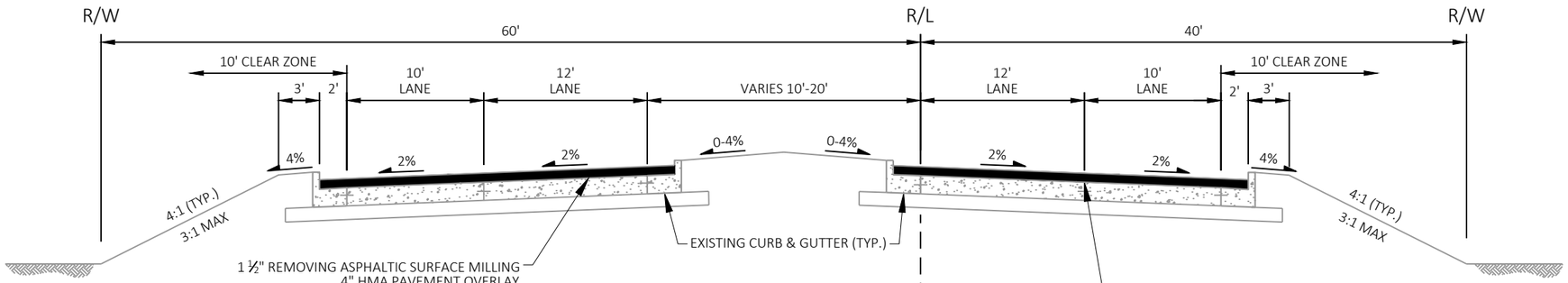

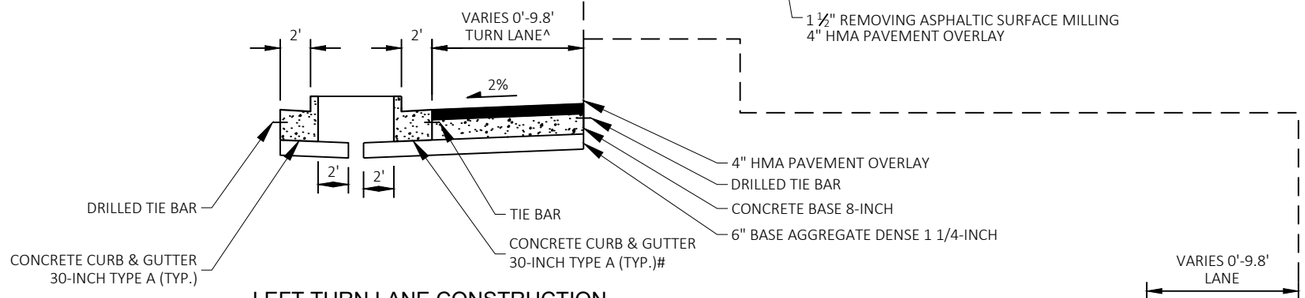

LEFT TURN LANE CONSTRUCTION
STA 1994+13 - 1997+85, LT

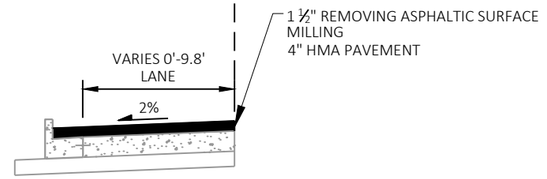

LEFT TURN LANE
STA 1997+85 - 1998+99.47, LT

PROPOSED TYPICAL SECTION - EAST FRONTAGE ROAD
STA 1993+54 - 1998+99.47

*S.E. = 2% NORMAL CROWN CURVE 6&7 SEE PLAN SHEETS FOR CURVE INFO

SEE CONCRETE CURB & GUTTER MILLING AND OVERLAY DETAILS FOR MORE INFORMATION

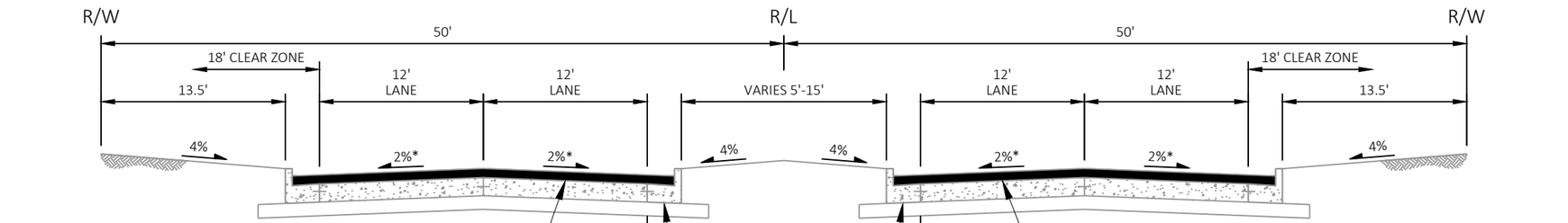

LEFT TURN LANE
STA 3128+64 - 3131+30, LT

PROPOSED TYPICAL SECTION - EAST FRONTAGE ROAD
STA 3122+55.97 - 3144+88

LEFT TURN LANE
STA 3125+00 - 3127+70, RT

PROJECT NO: 1032-10-75	HWY: EAST FRONTAGE ROAD	COUNTY: KENOSHA	TYPICAL SECTIONS	SHEET 14	E

FILE NAME : Y:\52XX\5252_DP20.NSFWYEFR.KNS\CADDS\10321015\SHEETSPLAN\020301-TS.DWG
LAYOUT NAME - 020311-ts 1in-10ft
PLOT DATE : 10/22/2021 11:30 AM PLOT BY : AARON SCHRAMM PLOT NAME : PLOT SCALE : 1 IN:10 FT
WISDOT/CADDS SHEET 42

=SHOULDER SLOPES
4% TYP. 6% MAX

A SAFETY EDGE

SEE CONCRETE CURB & GUTTER
MILLING AND OVERLAY DETAILS
FOR MORE INFORMATION

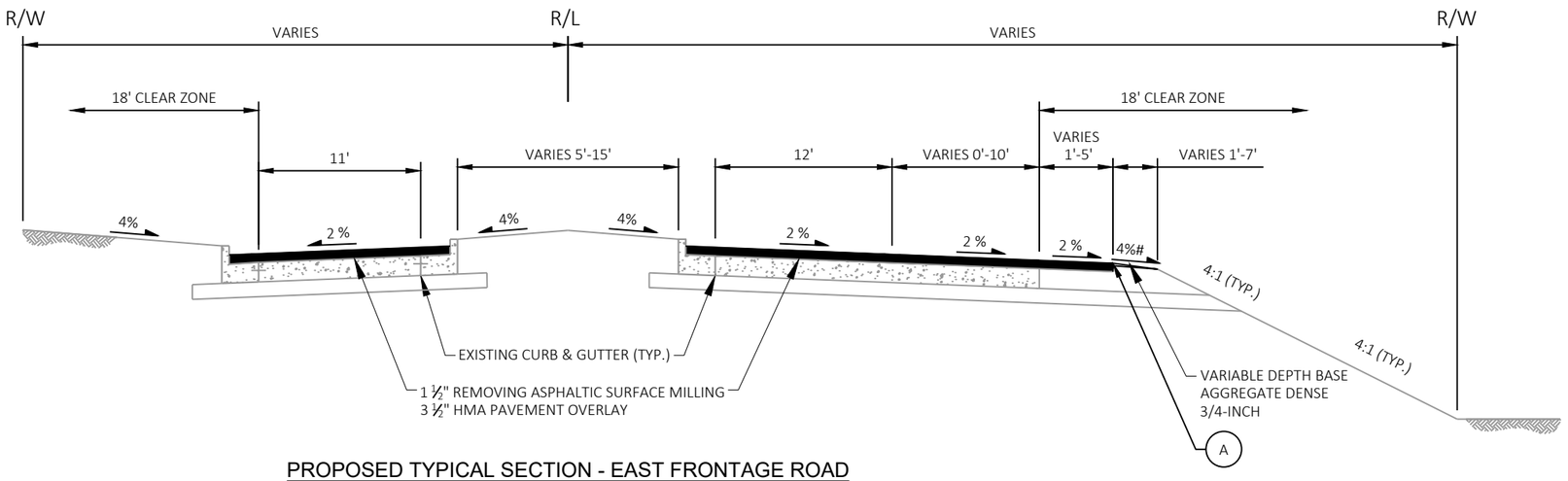

PROPOSED TYPICAL SECTION - EAST FRONTAGE ROAD

STA 3144+88 - 3147+34

*S.E. = 2% NORMAL CROWN CURVE 8
=SHOULDER SLOPES
4% TYP. 6% MAX
SEE PLAN SHEETS FOR CURVE INFO

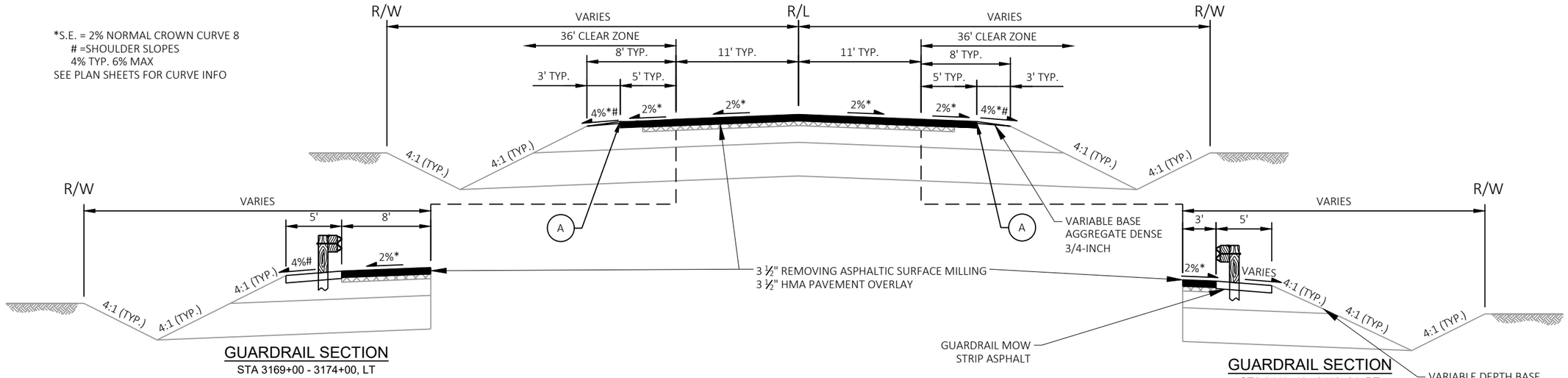

GUARDRAIL SECTION

STA 3169+00 - 3174+00, LT

GUARDRAIL SECTION

STA 3147+43 - 3150+94, RT

PROPOSED TYPICAL SECTION - EAST FRONTAGE ROAD

STA 3147+34 - 3154+80
STA 3169+00 - 3174+00

PROJECT NO: 1032-10-75	HWY: EAST FRONTAGE ROAD	COUNTY: KENOSHA	TYPICAL SECTIONS	SHEET 15	E

2

= SHOULDER SLOPES
4% TYP. 6% MAX

A SAFETY EDGE

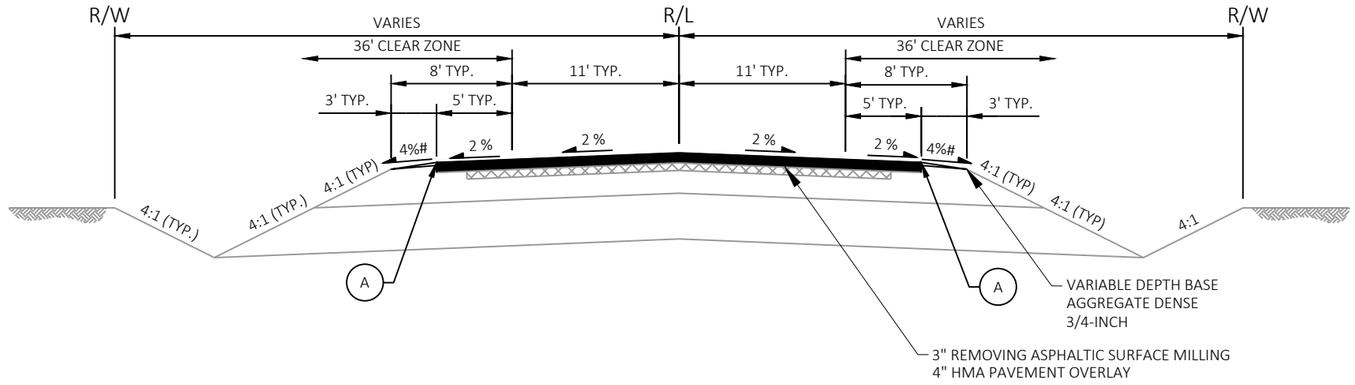

PROPOSED TYPICAL SECTION - EAST FRONTAGE ROAD

STA 3154+80 - 3169+00

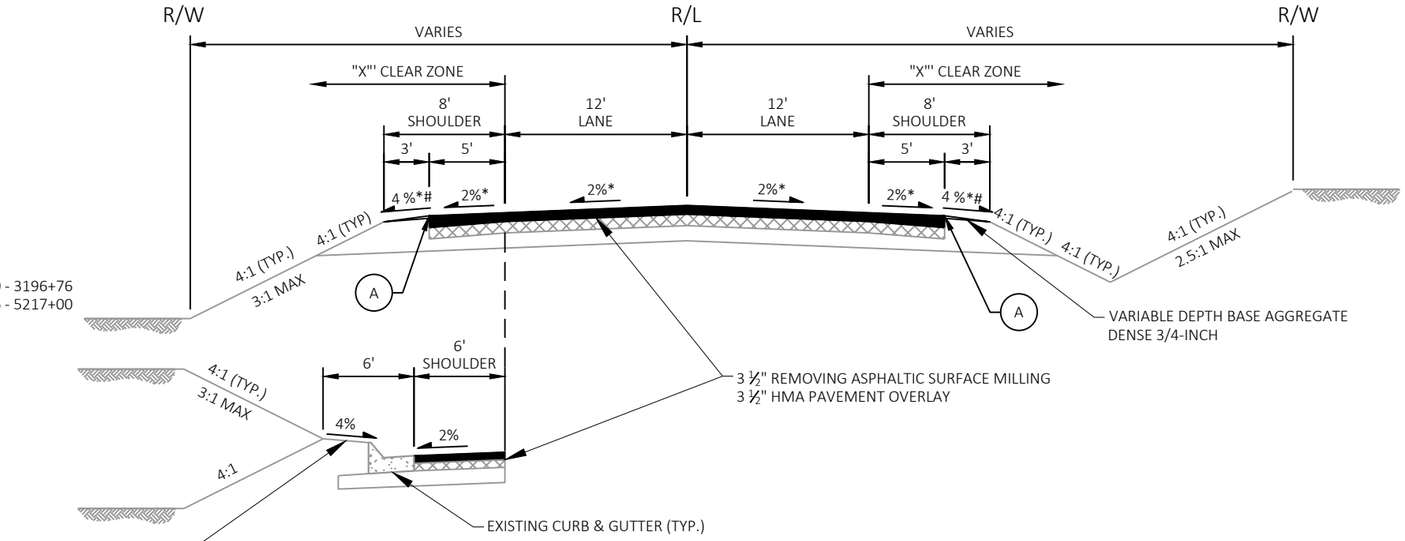

*S.E. = 4.08% CURVE 9 & 10
S.E. = 4.5% CURVE 12
"X" = 36' CLEAR ZONE FOR STA 3174+00 - 3196+76
"X" = 20' CLEAR ZONE FOR STA 5210+66 - 5217+00
= SHOULDER SLOPES
4% TYP. 6% MAX
SEE PLAN SHEETS FOR CURVE INFO

CURB AND GUTTER SECTION

STA 3174+00 - 3180+00, LT
STA 5214+00 - 5220+00, LT

PROPOSED TYPICAL SECTION - EAST FRONTAGE ROAD

STA 3174+00 - 3197+20
STA 5210+63 - 5220+00

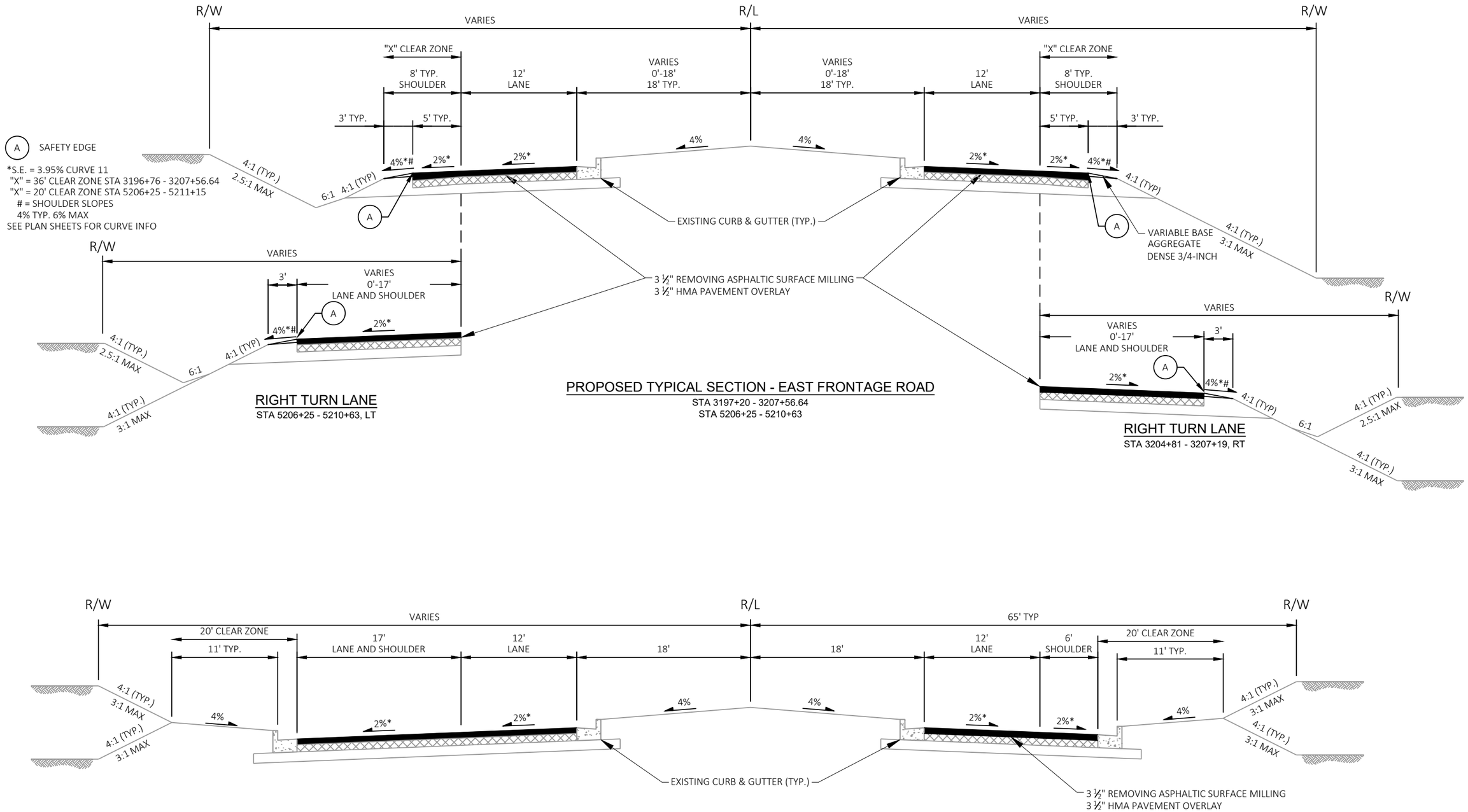

RIGHT TURN LANE
STA 5206+25 - 5210+63, LT

PROPOSED TYPICAL SECTION - EAST FRONTAGE ROAD
STA 3197+20 - 3207+56.64
STA 5206+25 - 5210+63

RIGHT TURN LANE
STA 3204+81 - 3207+19, RT

PROPOSED TYPICAL SECTION - EAST FRONTAGE ROAD
STA 5204+31.10 - 5206+25

PROJECT NO: 1032-10-75	HWY: EAST FRONTAGE ROAD	COUNTY: KENOSHA	TYPICAL SECTIONS	SHEET 17	E

FILE NAME : Y:\52XX\5252_DP20.NSFWYEFR.KNS\CADDS\10321015\SHEETSPLAN\020301-TS.DWG
LAYOUT NAME - 020314-ts 1in-10ft
PLOT DATE : 10/22/2021 11:30 AM
PLOT BY : AARON SCHRAMM
PLOT NAME :
PLOT SCALE : 1 IN:10 FT
WISDOT/CADDS SHEET 42

2

= SHOULDER SLOPES
4% TYP. 6% MAX

A SAFETY EDGE

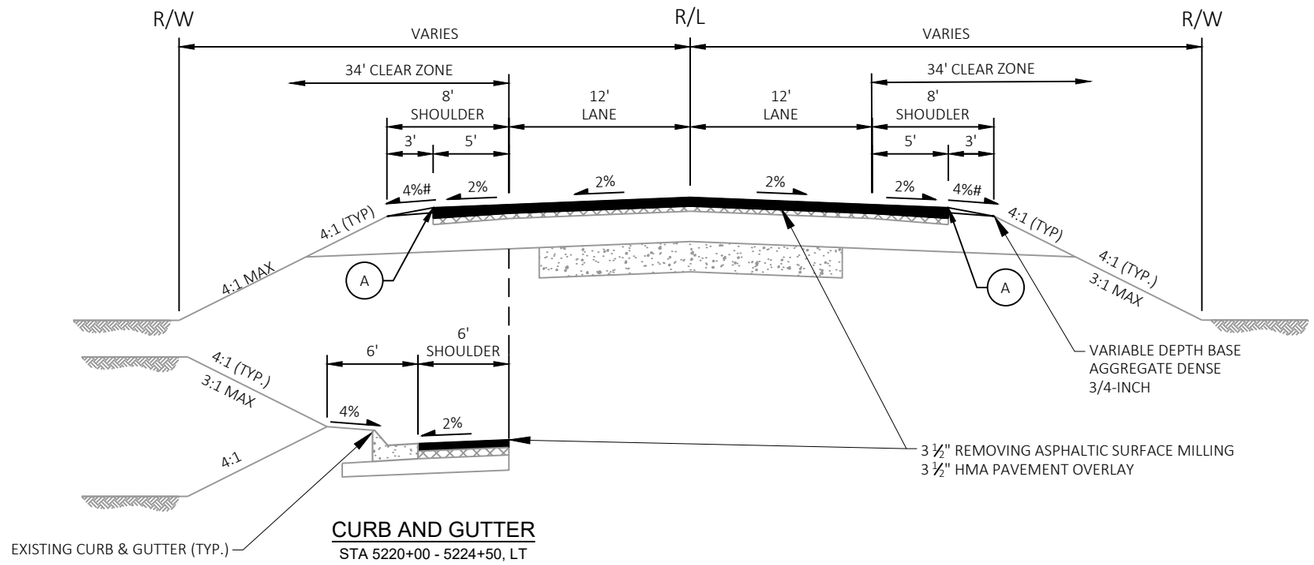

CURB AND GUTTER
STA 5220+00 - 5224+50, LT

PROPOSED TYPICAL SECTION- EAST FRONTAGE ROAD
STA 5220+00 - 5241+50

= SHOULDER SLOPES
4% TYP. 6% MAX

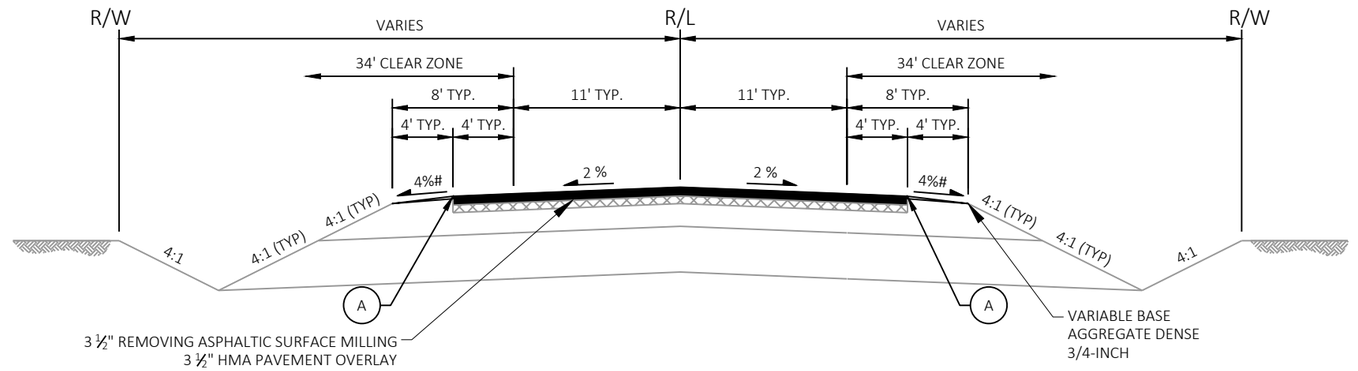

PROPOSED TYPICAL SECTION - EAST FRONTAGE ROAD
STA 5241+50 - 5242+61

PROJECT NO: 1032-10-75	HWY: EAST FRONTAGE ROAD	COUNTY: KENOSHA	TYPICAL SECTIONS	SHEET 18	E

*S.E. = 2% NORMAL CROWN CURVE 13
= SHOULDER SLOPES
4% TYP. 6% MAX
SEE PLAN SHEETS FOR CURVE INFO

(A) SAFETY EDGE

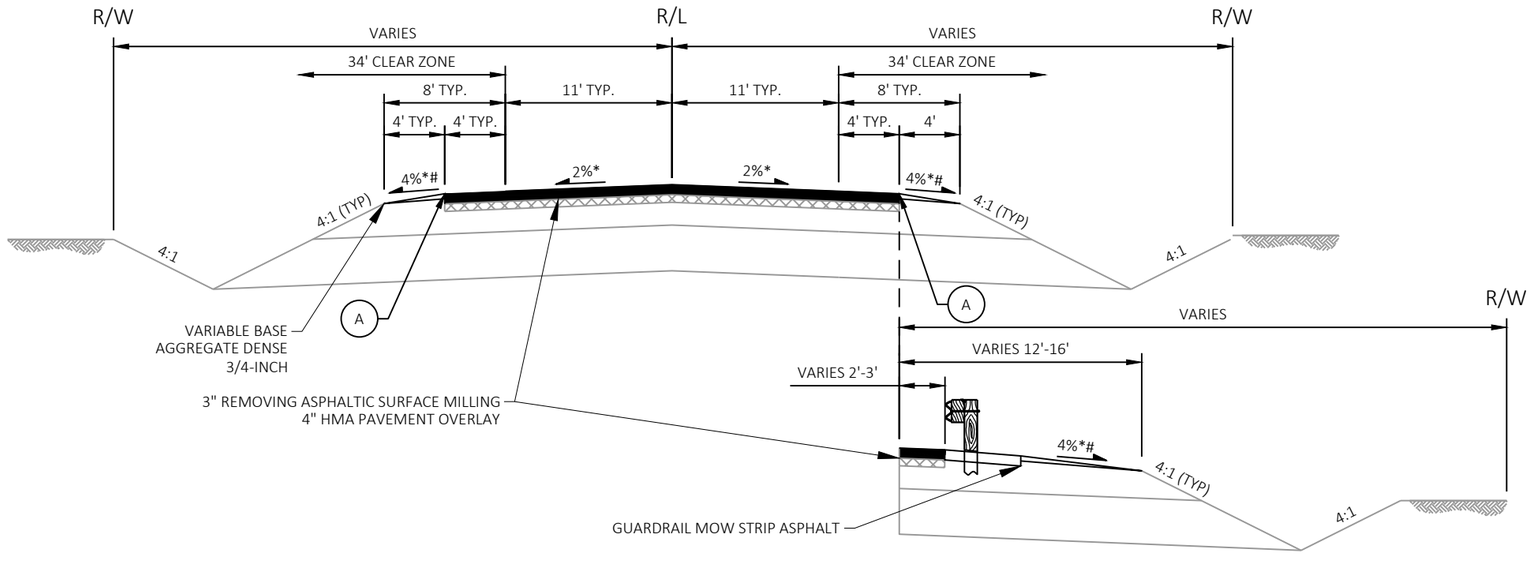

GUARDRAIL SECTION

STA 5242+45 - 5246+70, RT
STA 5256+67 - 5260+63, RT

PROPOSED TYPICAL SECTION - EAST FRONTAGE ROAD

STA 5242+61 - 5263+78

*S.E. = 6.0% CURVE 14 & 15
= SHOULDER SLOPES
4% TYP. 6% MAX
SEE PLAN SHEETS FOR CURVE INFO

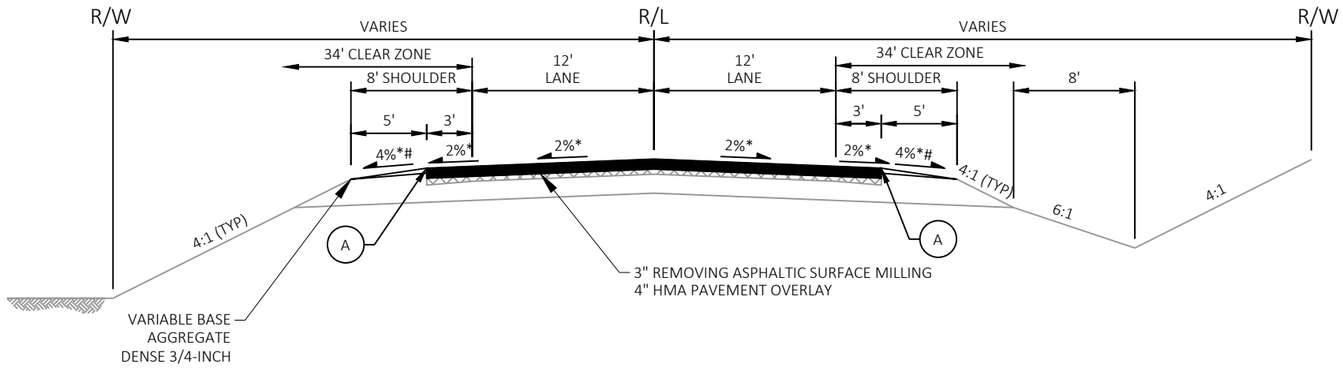

PROPOSED TYPICAL SECTION - EAST FRONTAGE ROAD

STA 5263+78 - 5283+67.36

PROJECT NO: 1032-10-75	HWY: EAST FRONTAGE ROAD	COUNTY: KENOSHA	TYPICAL SECTIONS	SHEET 19	E

2

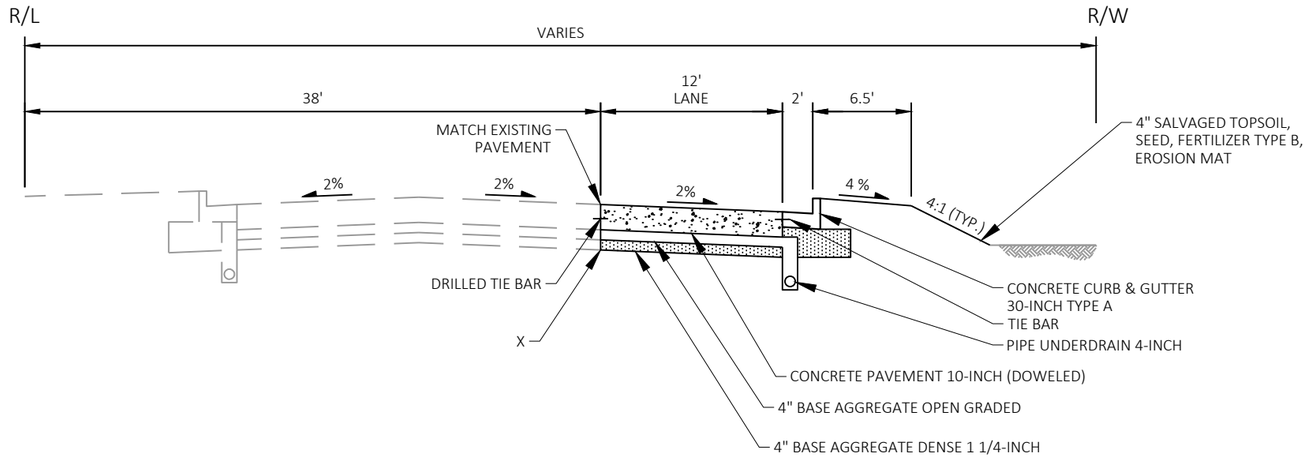

PROPOSED TYPICAL SECTION - STH 165

STA 406+37.55 - 411+79.32. RIGHT SIDE ONLY

NOTE:

X = POINT REFERENCED TO ON CROSS-SECTION

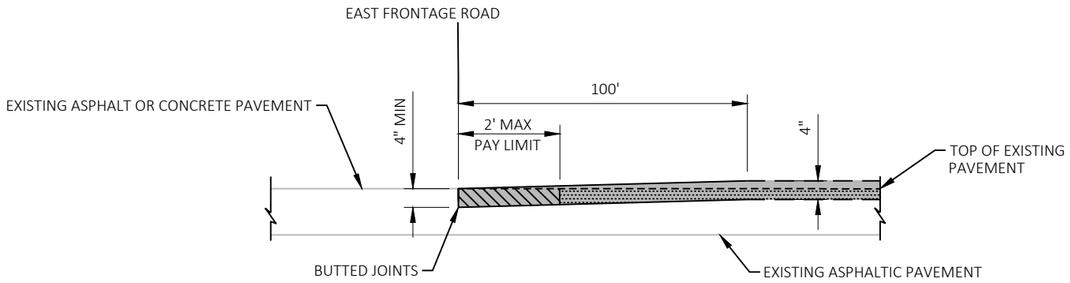

EAST FRONTAGE ROAD BUTT JOINT AND PROFILE MATCH DETAIL

STA 1907+45.56 (BEGIN PROJECT)
STA 1969+72.81 (END CONSTRUCTION)
STA 1990+02.64 (BEGIN CONSTRUCTION)
STA 1998+99.47 (END CONSTRUCTION)
STA 3122+55.97 (BEGIN CONSTRUCTION)
STA 5283+67.36 (END PROJECT)

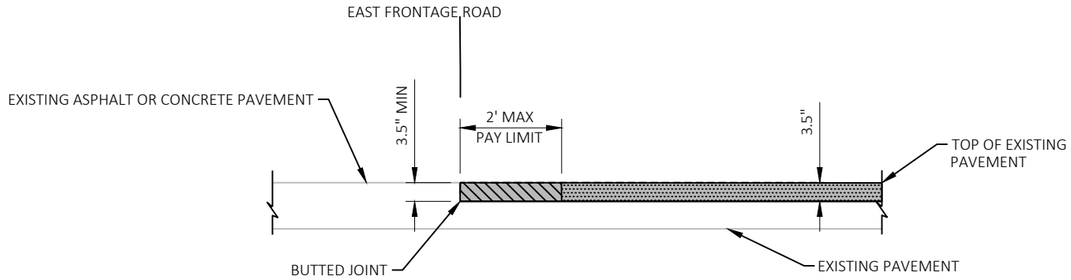

EAST FRONTAGE ROAD BUTT JOINT AND PROFILE MATCH DETAIL

STA 3207+56.64 (END CONSTRUCTION)
STA 5204+31.10 (BEGIN CONSTRUCTION)
STA 5236+11.20 (END CONSTRUCTION)
STA 5237+88.88 (BEGIN CONSTRUCTION)

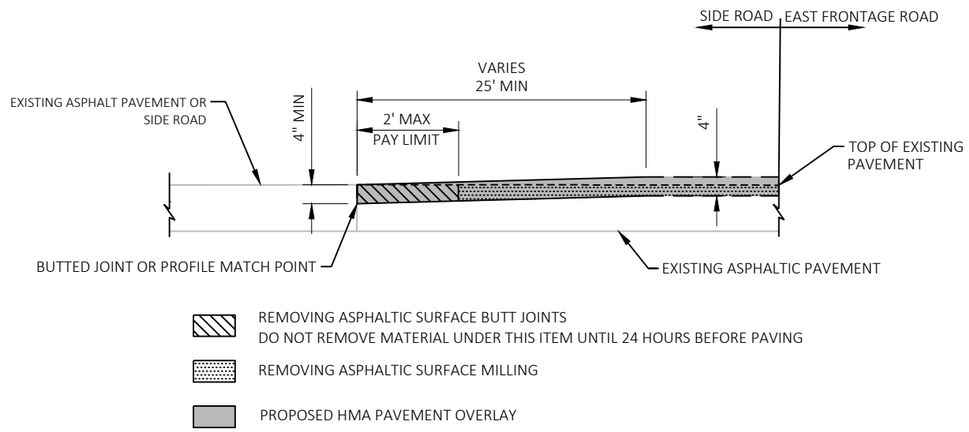

SIDE ROAD BUTT JOINT AND PROFILE MATCH DETAIL

STA 1939+00 (120TH CT)

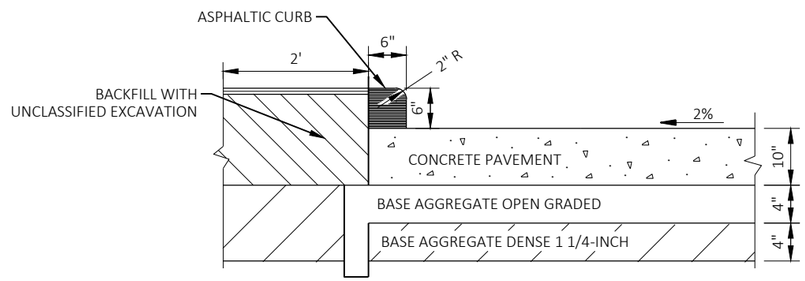

ASPHALTIC CURB DETAIL

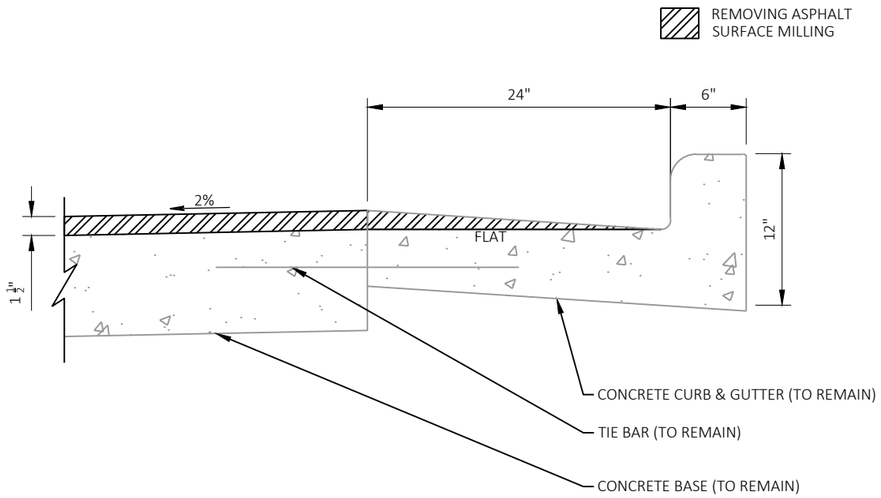

CONCRETE CURB & GUTTER INSIDE MILLING DETAIL
STA 1993+54 - 1998+99.47
STA 3122+55.97 - 3147+34

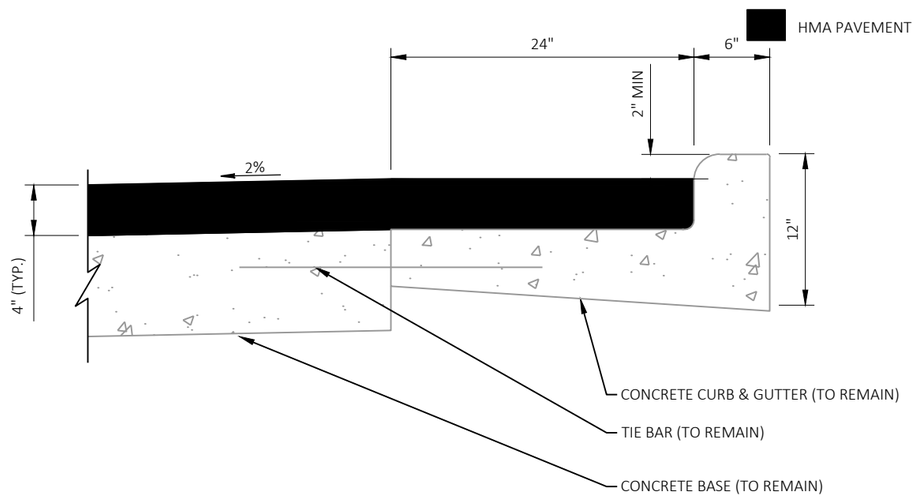

CONCRETE CURB & GUTTER INSIDE OVERLAY DETAIL
STA 1993+54 - 1998+99.47
STA 3122+55.97 - 3147+34

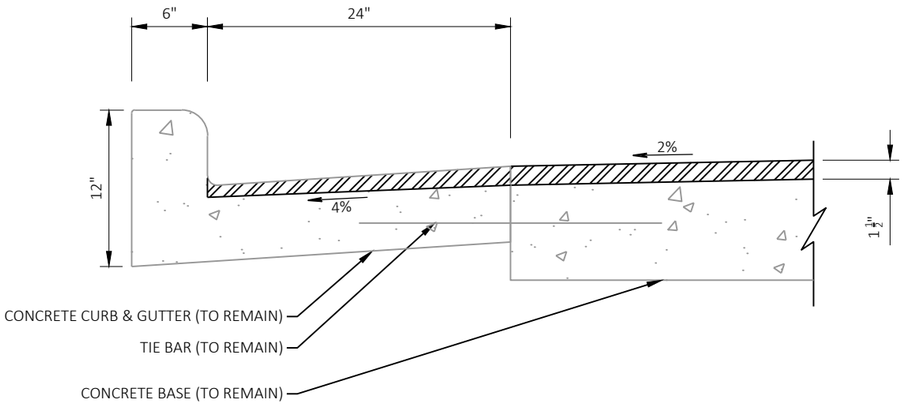

CONCRETE CURB & GUTTER OUTSIDE MILLING DETAIL
STA 1966+95 - 1969+72.81
STA 1990+02.64 - 1998+99.47
STA 3122+55.97 - 3147+34

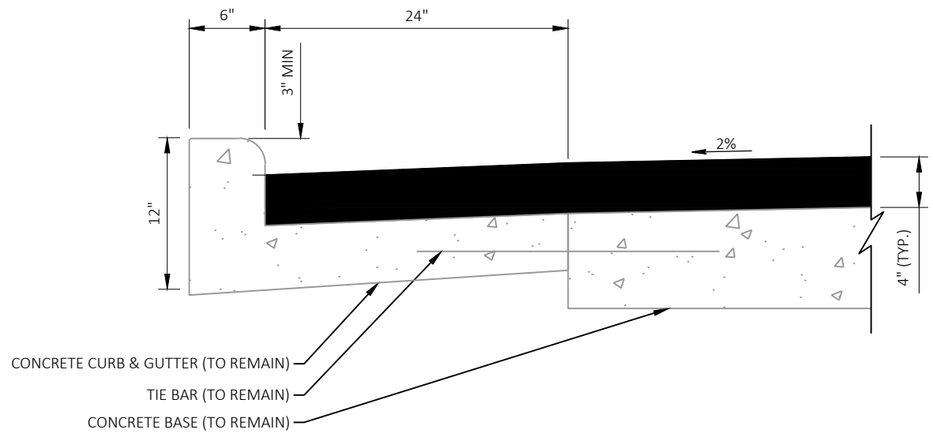

CONCRETE CURB & GUTTER OUTSIDE OVERLAY DETAIL
STA 1966+95 - 1969+72.81
STA 1990+02.64 - 1998+99.47
STA 3122+55.97 - 3147+34

2

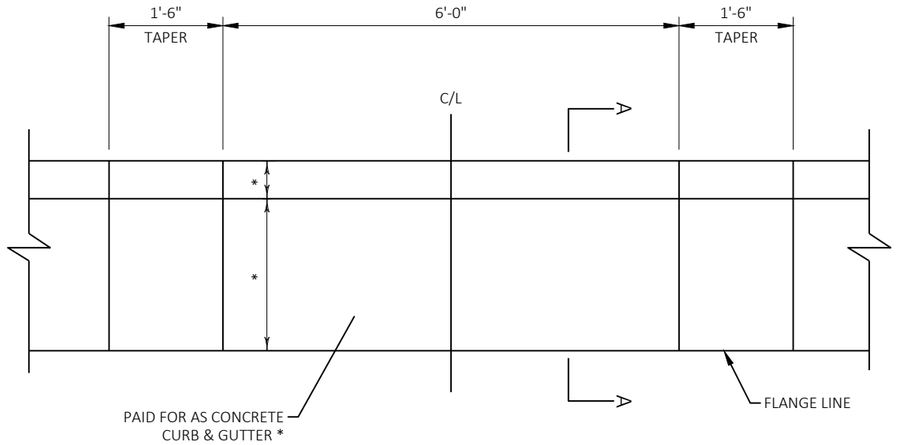

PLAN VIEW

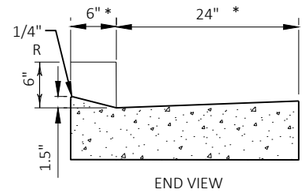

END VIEW

SECTION A-A

* TYPE AND DIMENSIONS TO MATCH ADJACENT CURB AND GUTTER.

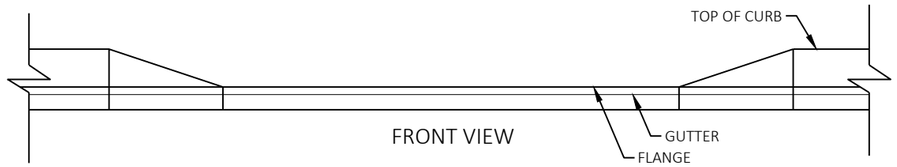

FRONT VIEW

MAINTENANCE OPENING

LOCATIONS SHOWN ON PAVING DETAILS

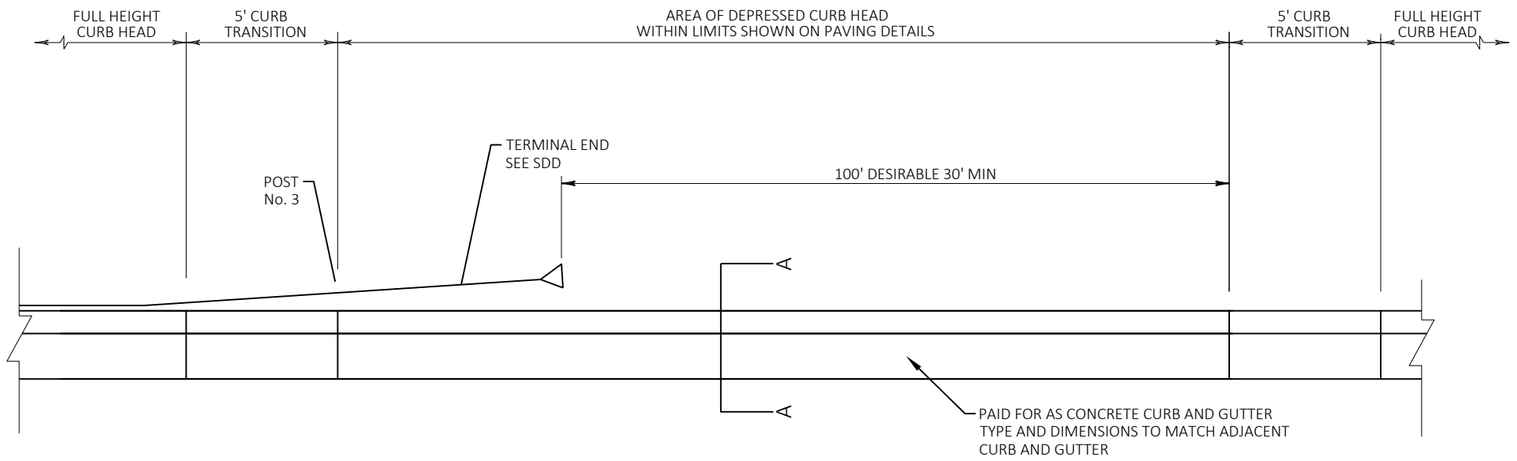

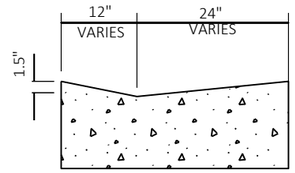

* SECTION A-A

DEPRESSED CURB

DEPRESSED CURB HEAD AT BEAM GUARD TERMINAL

PROJECT NO: 1032-10-75	HWY: EAST FRONTAGE ROAD	COUNTY: KENOSHA	CONSTRUCTION DETAILS	SHEET 23	E

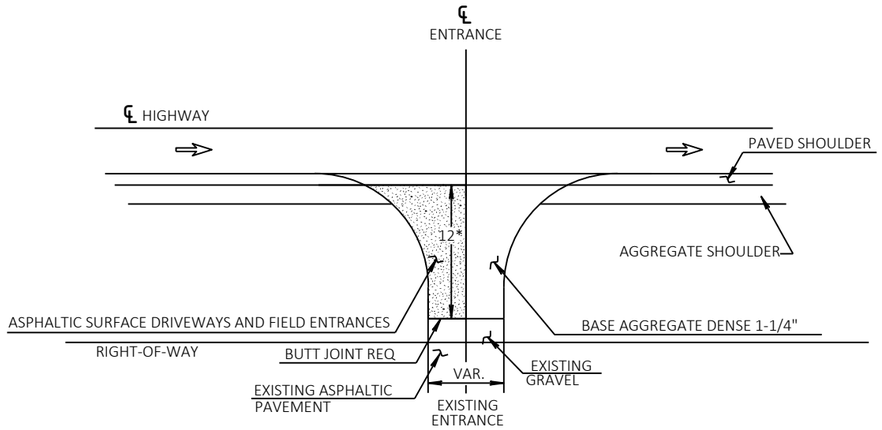

NOTE
* USE 12' EXCEPT WHERE NOTED ON PLAN DETAILS

PLAN VIEW

RURAL DRIVEWAY & FIELD ENTRACE INTERSECTION DETAIL

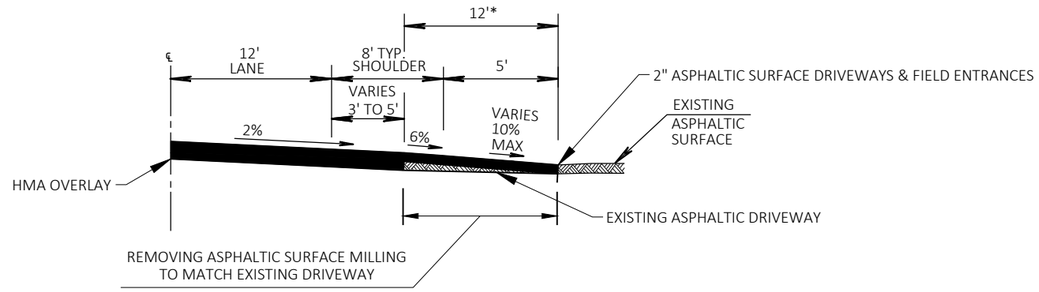

PROFILE VIEW

RURAL DRIVEWAY & FIELD ENTRANCE WITH ASPHALTIC SURFACE

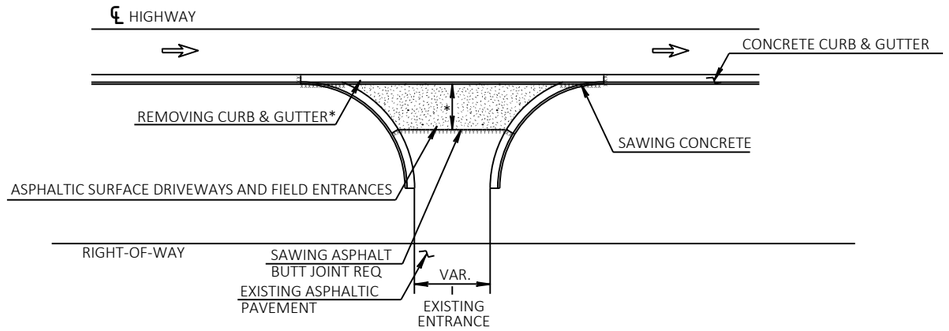

NOTE
* DISTANCE DENOTED ON PLAN DETAIL SHEETS
* CURB AND GUTTER LIMITS SHOW ON PLAN DETAIL SHEETS

PLAN VIEW

URBAN DRIVEWAY DETAIL

*OR LIMIT TO BE DETERMINED BY ENGINEER TO ENSURE DRAINAGE

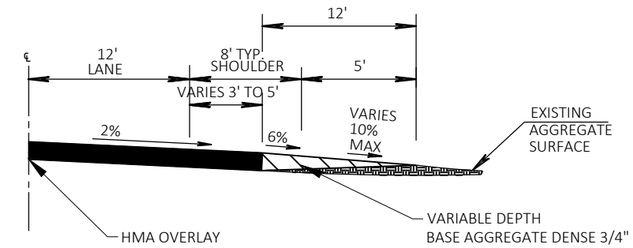

PROFILE VIEW

RURAL DRIVEWAY & FIELD ENTRANCE WITH AGGREGATE SURFACE

PROJECT NO: 1032-10-75	HWY: EAST FRONTAGE ROAD	COUNTY: KENOSHA	CONSTRUCTION DETAILS	SHEET 24	E

FILE NAME : Y:\52XX\5252_DP20.NSFWYEFR.KNS\CADDS\10321015\SHEETSPLAN\021001-CD.DWG
LAYOUT NAME - 021004-cd
PLOT DATE : 12/20/2021 1:57 PM PLOT BY : AARON SCHRAMM PLOT NAME : PLOT SCALE : 1:10
WISDOT/CADDS SHEET 42

2

REMOVING PAVEMENT (INCIDENTAL TO ADJUSTING/RECONSTRUCTING MANHOLE)

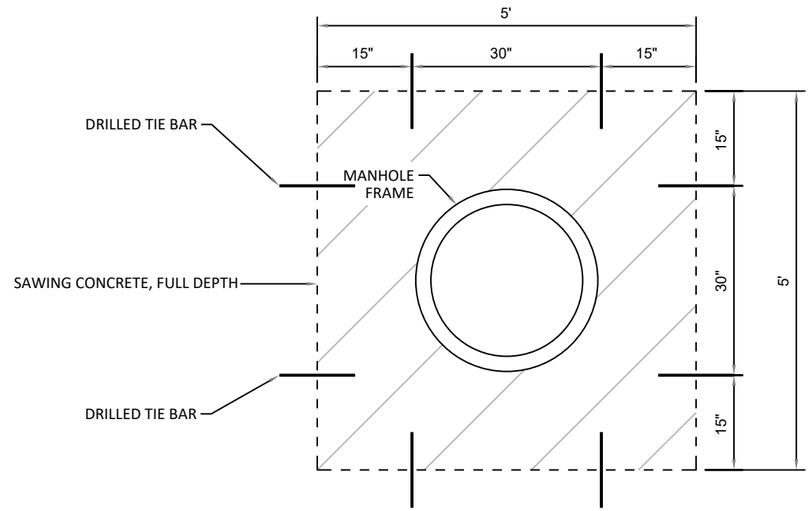

PLAN VIEW

STEP 1

PRIOR TO REMOVING ASPHALTIC SURFACE MILLING:
· SAW PAVEMENT FULL DEPTH
· SALVAGE* OR REMOVE MANHOLE COVER
· FURNISH AND INSTALL TEMPORARY COVER PLATE
· BACKFILL USING ASPHALT SURFACE PATCHING

*SALVAGED MANHOLE LOCATIONS

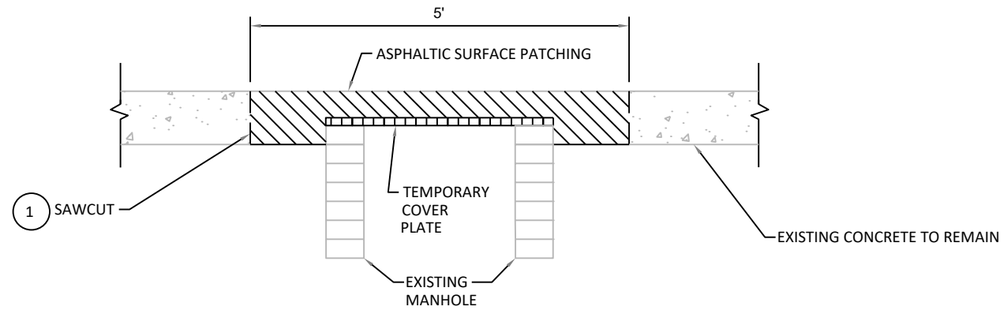

STEP 2

AFTER PAVING LOWER LAYER:

· EXCAVATE AND REMOVE TEMPORARY COVER PLATE
· ADJUST AND REINSTALL SALVAGED MANHOLE FRAME OR INSTALL NEW CASTING AND COVER USING MONOLITHIC CONCRETE SHIM

ALL WORK EXCEPT ASPHALT PATCHING, SAWING CONCRETE, DRILLED TIE BARS, AND INSTALLATION AND REMOVAL OF TEMPORARY COVER PLATE IS INCLUDED IN THE COST OF ADJUSTING MANHOLE COVERS.

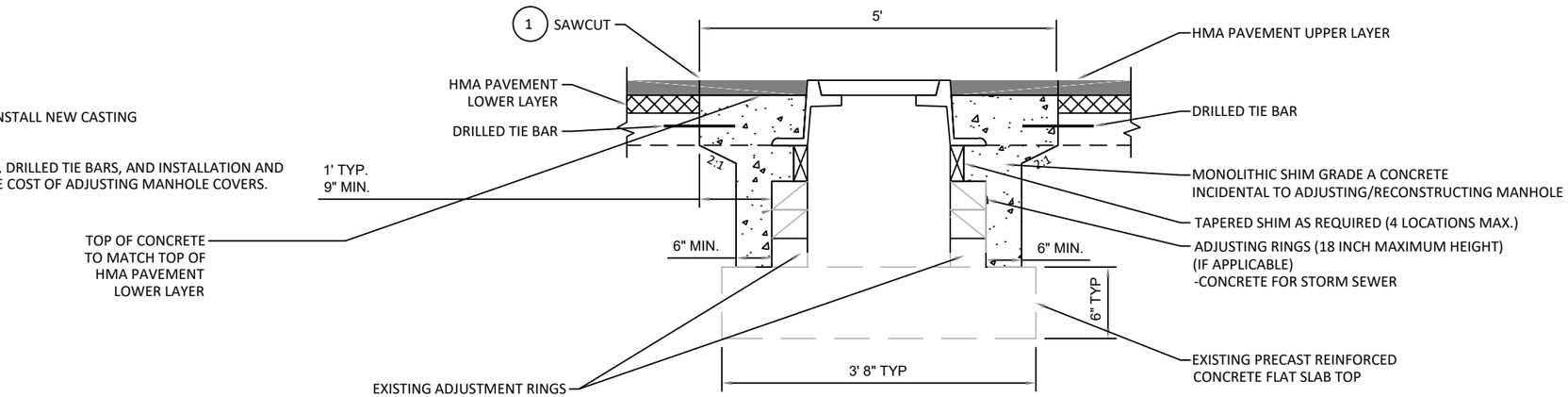

ADJUSTING/RECONSTRUCTING STORM SEWER MANHOLE DETAILS

PROJECT NO: 1032-10-75	HWY: EAST FRONTAGE ROAD	COUNTY: KENOSHA	CONSTRUCTION DETAILS	SHEET 25	E

FILE NAME : Y:\52XX\5252_DP20.NSFWYEFR.KNS\CADDS\10321015\SHEETSPLAN\021001-CD.DWG
LAYOUT NAME - 021005-cd
PLOT DATE : 10/22/2021 2:13 PM PLOT BY : AARON SCHRAMM PLOT NAME : PLOT SCALE : 1:10
WISDOT/CADDS SHEET 42

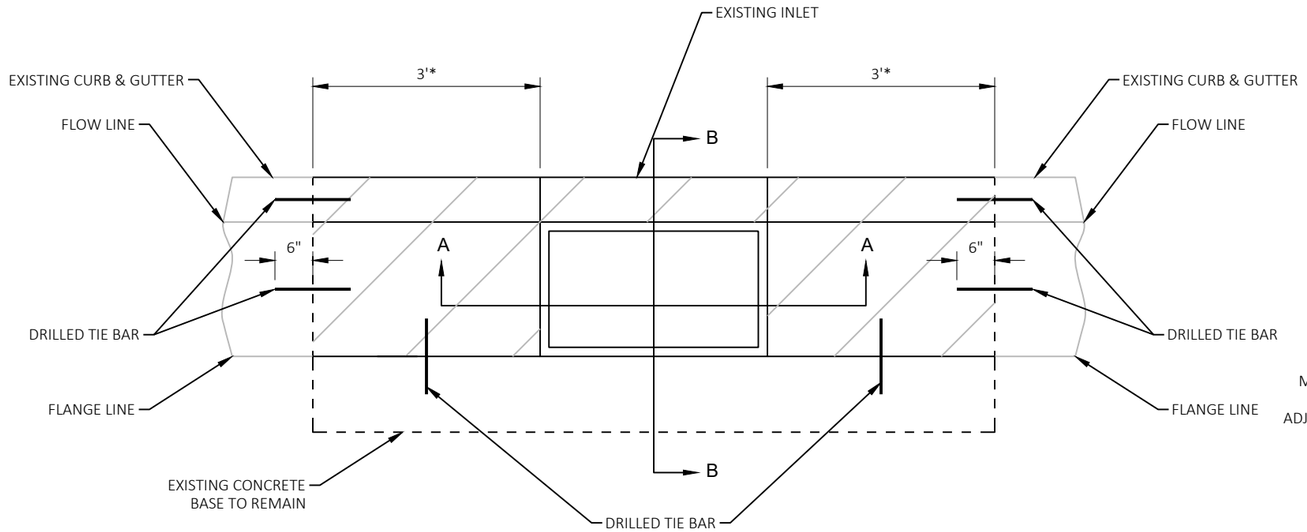

TO BE PAID AS REMOVING CURB & GUTTER

*REMOVE 3' CURB & GUTTER MIN. OR TO THE NEAREST JOINT, 6' MAX. UNLESS OTHERWISE NOTED.

PLAN VIEW

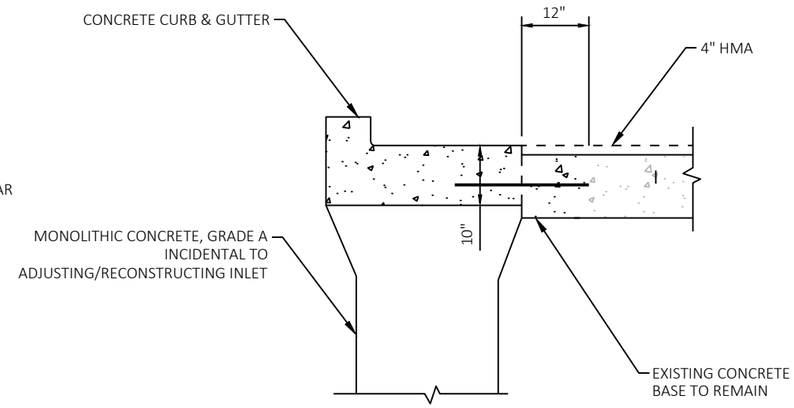

SECTION B-B

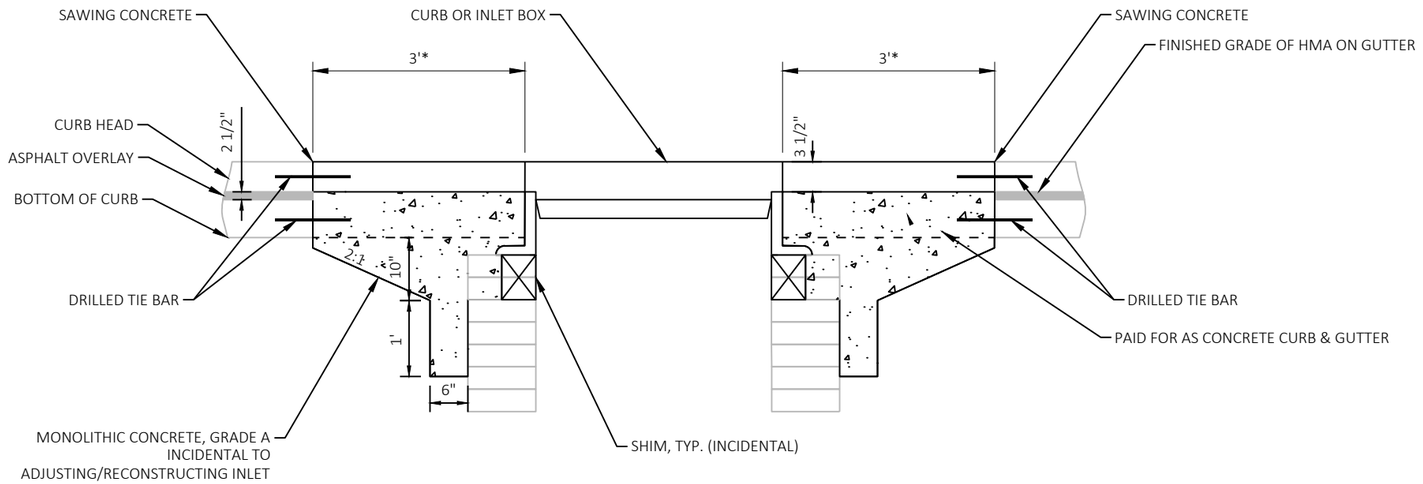

SECTION A-A

GENERAL DRAINAGE STRUCTURE NOTES:

1) WHEN SALVAGED COVERS ARE USED, ANY ADJUSTMENT OR REPAIR OF BRICKWORK BETWEEN 0" AND 12" WILL BE PAID AS ADJUSTING INLET COVERS, AND ANY ADJUSTMENT OR REPAIRS GREATER THAN 12" WIL BE PAID AS RECONSTRUCTING INLETS

2) THE CURB BOX OPENING SHALL BE SEALED BEFORE POURING CONCRETE CURB TO PREVENT CONCRETE FROM ENTERING STRUCTURE.

3) SAWING OF EXISTING CURB AND GUTTER AND PAVEMENT SHALL BE PAID FOR AS "SAWING CONCRETE"

4. LOCATIONS TO BE DETERMINED BY ENGINEER IN THE FIELD.

ADJUSTING INLET DETAIL

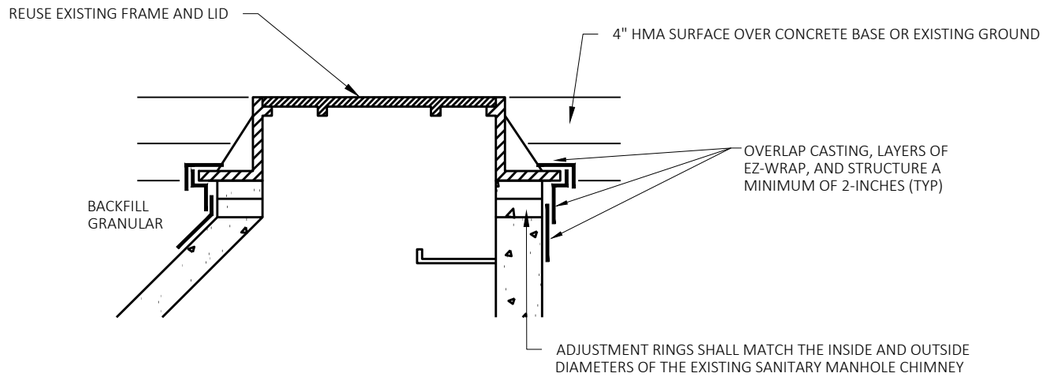

ADJUSTING SANITARY MANHOLES

NOT TO SCALE

NOTE

1) LOCATION OF STRUCTURE MAY BE ADJUSTED TO FIT FIELD CONDITIONS.

2) LOCATION OF STRUCTURE OPENING DEPENDS ON TYPE OF CASTING. CASTING TYPES ARE SHOWN ON THE STORM SEWER TABLE.

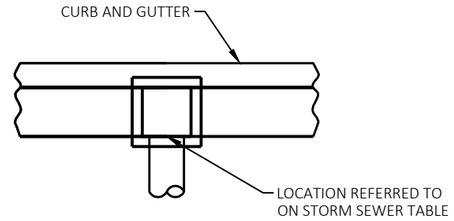

INLET (RECTANGULAR) IN CURB AND GUTTER

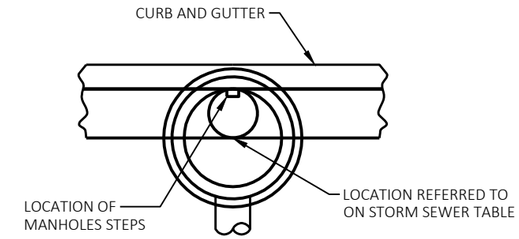

INLET (CIRCULAR) IN CURB AND GUTTER

STRUCTURE LOCATION DETAIL

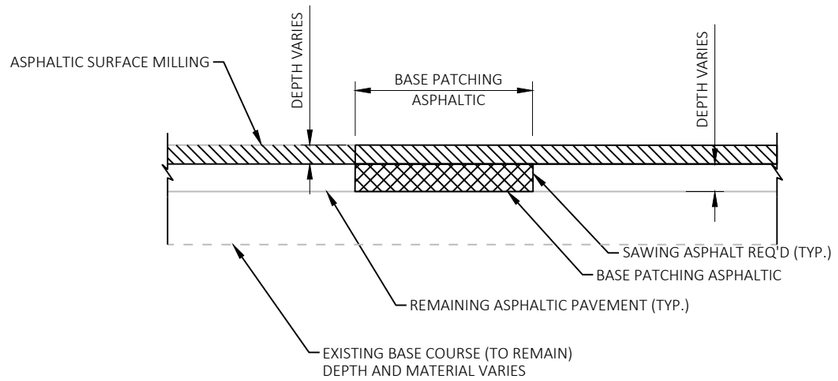

BASE PATCHING ASPHALTIC DETAIL

LOCATION AND LIMITS TO BE DETERMINED BY ENGINEER IN THE FIELD

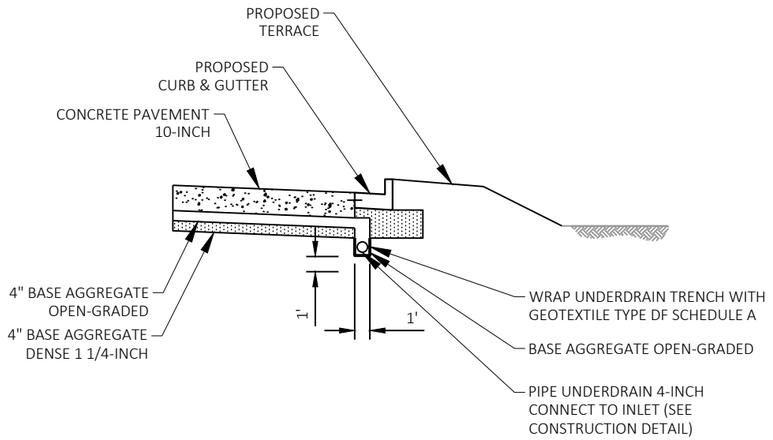

NOTES:
1. WRAP THE UNDERDRAIN TRENCH WITH GEOTEXTILE TYPE DF SCHEDULE A. OVERLAP THE FABRIC BY 6" AT THE TOP OF THE TRENCH. TOTAL FABRIC WIDTH IS 4' FOR PAYMENT.
2. CONNECT THE UNDERDRAIN TO THE INLET (INCIDENTAL TO PIPE UNDERDRAIN 4-INCH). MORTAR THE UNDERDRAIN TO THE INLET STRUCTURE.

PIPE UNDERDRAIN DETAIL

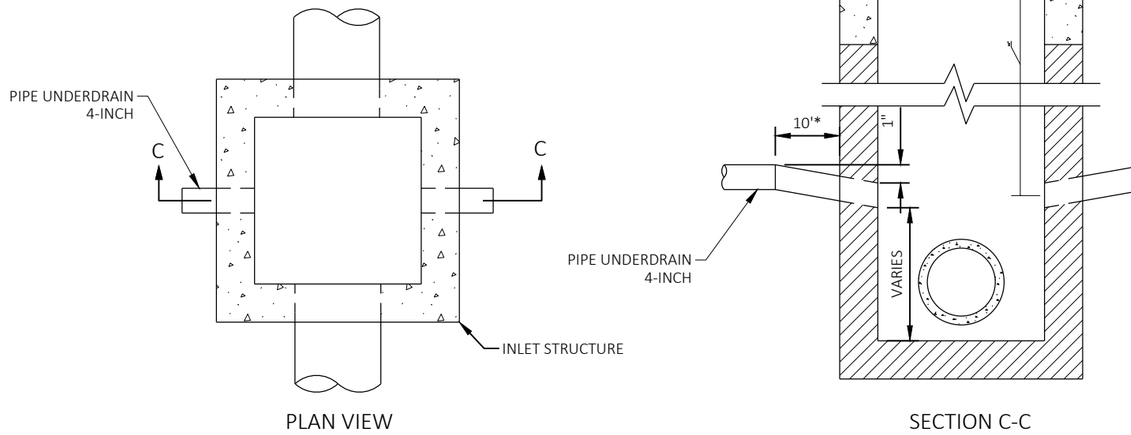

UNDERDRAIN OUTFALL AT DRAINAGE STRUCTURE

NOTES
1. SEE TYPICAL SECTIONS, STORM SEWER, AND UNDERDRAIN PLANS FOR PIPE UNDERDRAIN LOCATIONS.
2. DIMENSION SHOULD BE SHOWN ON MISCELLANEOUS QUANTITIES TABLE

RUNOFF COEFFICIENT TABLE

	HYDROLOGIC SOIL GROUP											
	A			B			C			D		
	SLOPE RANGE (PERCENT)			SLOPE RANGE (PERCENT)			SLOPE RANGE (PERCENT)			SLOPE RANGE (PERCENT)		
LAND USE:	0-2	2-6	6 & OVER	0-2	2-6	6 & OVER	0-2	2-6	6 & OVER	0-2	2-6	6 & OVER
ROW CROPS	.08 .22	.16 .30	.22 .38	.12 .26	.20 .34	.27 .44	.15 .30	.24 .37	.33 .50	.19 .34	.28 .41	.38 .56
MEDIAN STRIP- TURF	.19 .24	.20 .26	.24 .30	.19 .25	.22 .28	.26 .33	.20 .26	.23 .30	.30 .37	.20 .27	.25 .32	.30 .40
SIDE SLOPE- TURF			.25 .32			.27 .34			.28 .36			.30 .38
PAVEMENT:												
ASPHALT	.70 - .95											
CONCRETE	.80 - .95											
BRICK	.70 - .80											
DRIVES, WALKS	.75 - .85											
ROOFS	.75 - .95											
GRAVEL ROADS, SHOULDERS	.40 - .60											

TOTAL PROJECT AREA = 61.97 ACRES
TOTAL AREA EXPECTED TO BE DISTURBED BY CONSTRUCTION ACTIVITIES = 1.85 ACRES

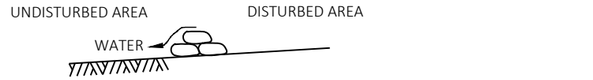

SECTION A-A

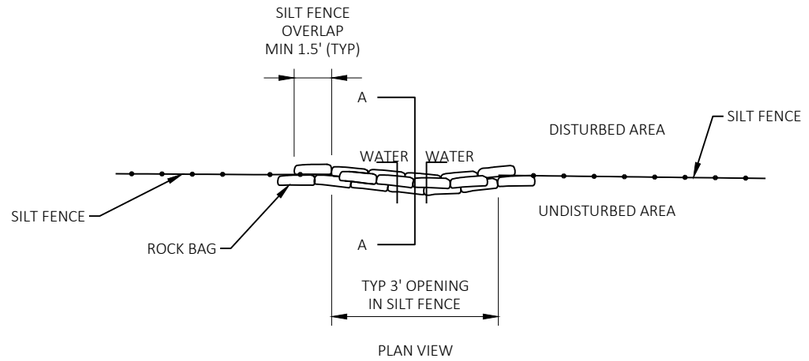

PLAN VIEW

ROCK BAGS USED FOR SILT FENCE RELIEF POINT

2

LEGEND

- A1 BASE AGGREGATE DENSE 3/4-INCH
- B1 GUARDRAIL MOW STRIP ASPHALT
- B2 MGS GUARDRAIL 3
- B3 MGS THRIE BEAM TRANSITION
- B4 MGS GUARDRAIL TERMINAL EAT
- B5 MGS GUARDRAIL 3 L
- B6 MGS GUARDRAIL 3 HS
- B7 GUARDRAIL MOW STRIP EMULSIFIED ASPHALT
- C1 CONCRETE CURB & GUTTER 30-INCH TYPE A
- C2 CONCRETE CURB & GUTTER 30-INCH TYPE D
- C3 CONCRETE CURB & GUTTER 36-INCH 6-INCH SLOPED TYPE D
- C4 CONCRETE CURB & GUTTER 36-INCH 4-INCH SLOPED TYPE TBT
- C5 CONCRETE CURB & GUTTER 36-INCH 4-INCH SLOPED TYPE TBTT
- D1 ASPHALTIC SURFACE DRIVEWAYS AND FIELD ENTRANCES
- D2 CONCRETE SURFACE DRAIN
- I1 ADJUSTING INLETS COVERS
- M1 ADJUSTING MANHOLE COVERS
- P1 CONCRETE PAVEMENT 10-INCH
- P2 CONCRETE BASE 8-INCH W/ HMA OVERLAY
- S1 CONCRETE SIDEWALK 5-INCH
- T1 CURB HEAD HEIGHT TRANSITION (3' LENGTH)
- .XXX. SAWING CONCRETE
- .YYY. SAWING ASPHALT

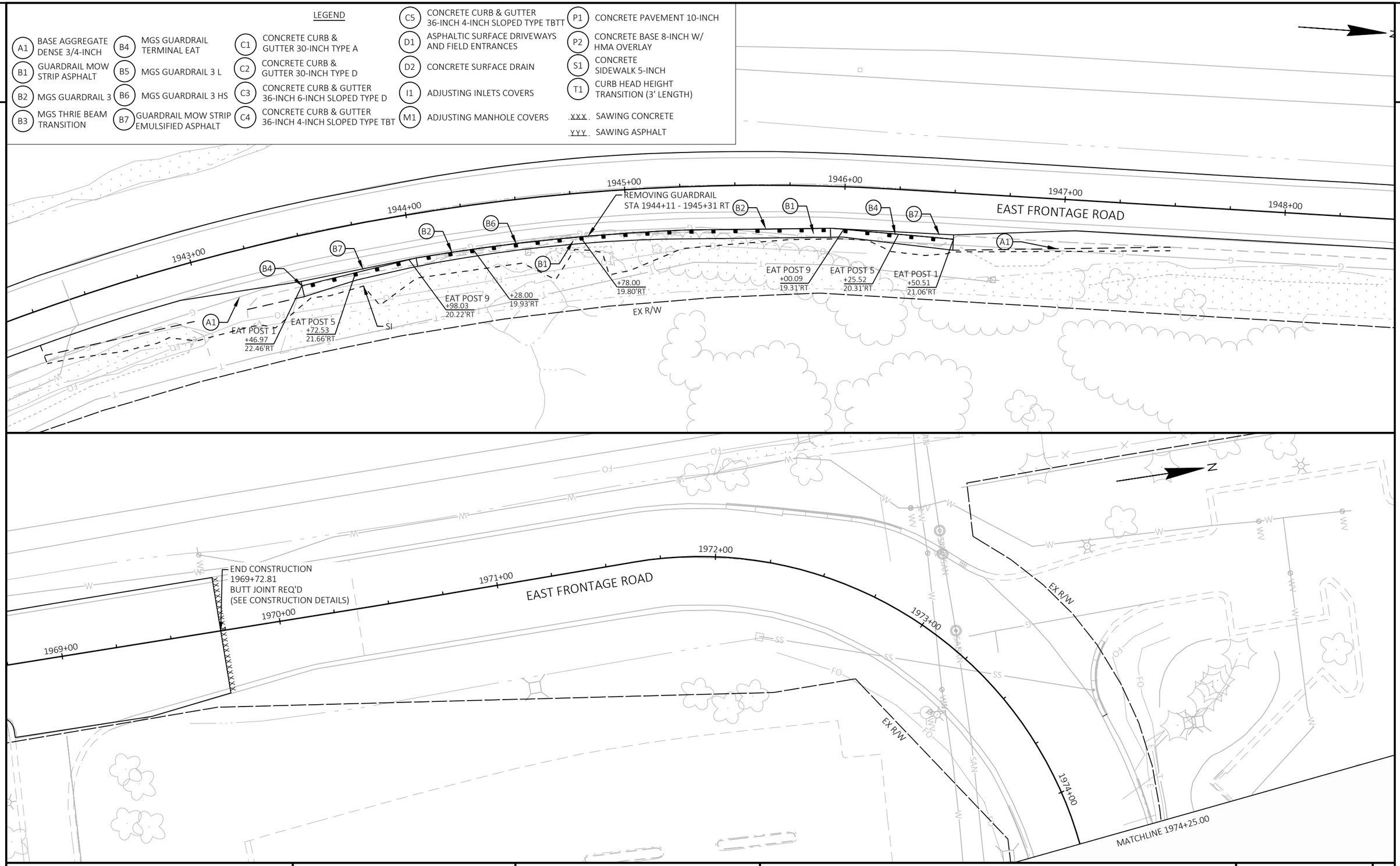

PROJECT NO: 1032-10-75	HWY: EAST FRONTAGE ROAD	COUNTY: KENOSHA	PLAN DETAILS - EAST FRONTAGE ROAD	SHEET 30	E

FILE NAME : Y:\52XX\5252_DP20.NSFWYEFR.KNS\CADDS\10321015\SHEETSPLAN\021201-PD.DWG
LAYOUT NAME - 021201
PLOT DATE : 10/25/2021 11:58 AM PLOT BY : AARON SCHRAMM PLOT NAME : PLOT SCALE : 1 IN:40 FT
WISDOT/CADDS SHEET 44

2

N

NO WORK PERFORMED THIS SHEET

1975+00 1976+00 1977+00 1978+00 1979+00 1980+00

EAST FRONTAGE ROAD

EX R/W

MATCHLINE 1974+25.00

MATCHLINE 1980+00.00

LEGEND

A1	BASE AGGREGATE DENSE 3/4-INCH	B4	MGS GUARDRAIL TERMINAL EAT	C1	CONCRETE CURB & GUTTER 30-INCH TYPE A	C5	CONCRETE CURB & GUTTER 36-INCH 4-INCH SLOPED TYPE TBTT
B1	GUARDRAIL MOW STRIP ASPHALT	B5	MGS GUARDRAIL 3 L	C2	CONCRETE CURB & GUTTER 30-INCH TYPE D	D1	ASPHALTIC SURFACE DRIVEWAYS AND FIELD ENTRANCES
B2	MGS GUARDRAIL 3	B6	MGS GUARDRAIL 3 HS	C3	CONCRETE CURB & GUTTER 36-INCH 6-INCH SLOPED TYPE D	D2	CONCRETE SURFACE DRAIN
B3	MGS THRIE BEAM TRANSITION	B7	GUARDRAIL MOW STRIP EMULSIFIED ASPHALT	C4	CONCRETE CURB & GUTTER 36-INCH 4-INCH SLOPED TYPE TBT	I1	ADJUSTING INLETS COVERS
						M1	ADJUSTING MANHOLE COVERS

P1	CONCRETE PAVEMENT 10-INCH		
P2	CONCRETE BASE 8-INCH W/ HMA OVERLAY		
S1	CONCRETE SIDEWALK 5-INCH		
T1	CURB HEAD HEIGHT TRANSITION (3' LENGTH)		
		.xxx.	SAWING CONCRETE
		.yyy.	SAWING ASPHALT

MATCHLINE 1980+00.00

MATCHLINE 1986+00.00

N

NO WORK PERFORMED THIS SHEET

1981+00 1982+00 1983+00 1984+00 1985+00

EAST FRONTAGE ROAD

EX R/W

PROJECT NO: 1032-10-75	HWY: EAST FRONTAGE ROAD	COUNTY: KENOSHA	PLAN DETAILS - EAST FRONTAGE ROAD	SHEET 31 E

FILE NAME : Y:\52XX\5252_DP20.NSFWYEFR.KNS\CADDS\10321015\SHEETSPLAN\021201-PD.DWG
LAYOUT NAME - 021202

PLOT DATE : 10/25/2021 11:59 AM PLOT BY : AARON SCHRAMM PLOT NAME : PLOT SCALE : 1 IN:40 FT

2

LEGEND

- A1 BASE AGGREGATE DENSE 3/4-INCH
- B1 GUARDRAIL MOW STRIP ASPHALT
- B2 MGS GUARDRAIL 3
- B3 MGS THRIE BEAM TRANSITION
- B4 MGS GUARDRAIL TERMINAL EAT
- B5 MGS GUARDRAIL 3 L
- B6 MGS GUARDRAIL 3 HS
- B7 GUARDRAIL MOW STRIP EMULSIFIED ASPHALT
- C1 CONCRETE CURB & GUTTER 30-INCH TYPE A
- C2 CONCRETE CURB & GUTTER 30-INCH TYPE D
- C3 CONCRETE CURB & GUTTER 36-INCH 6-INCH SLOPED TYPE D
- C4 CONCRETE CURB & GUTTER 36-INCH 4-INCH SLOPED TYPE TBT
- C5 CONCRETE CURB & GUTTER 36-INCH 4-INCH SLOPED TYPE TBTT
- D1 ASPHALTIC SURFACE DRIVEWAYS AND FIELD ENTRANCES
- D2 CONCRETE SURFACE DRAIN
- I1 ADJUSTING INLETS COVERS
- M1 ADJUSTING MANHOLE COVERS
- P1 CONCRETE PAVEMENT 10-INCH
- P2 CONCRETE BASE 8-INCH W/ HMA OVERLAY
- S1 CONCRETE SIDEWALK 5-INCH
- T1 CURB HEAD HEIGHT TRANSITION (3' LENGTH)
- XXX SAWING CONCRETE
- YYY SAWING ASPHALT

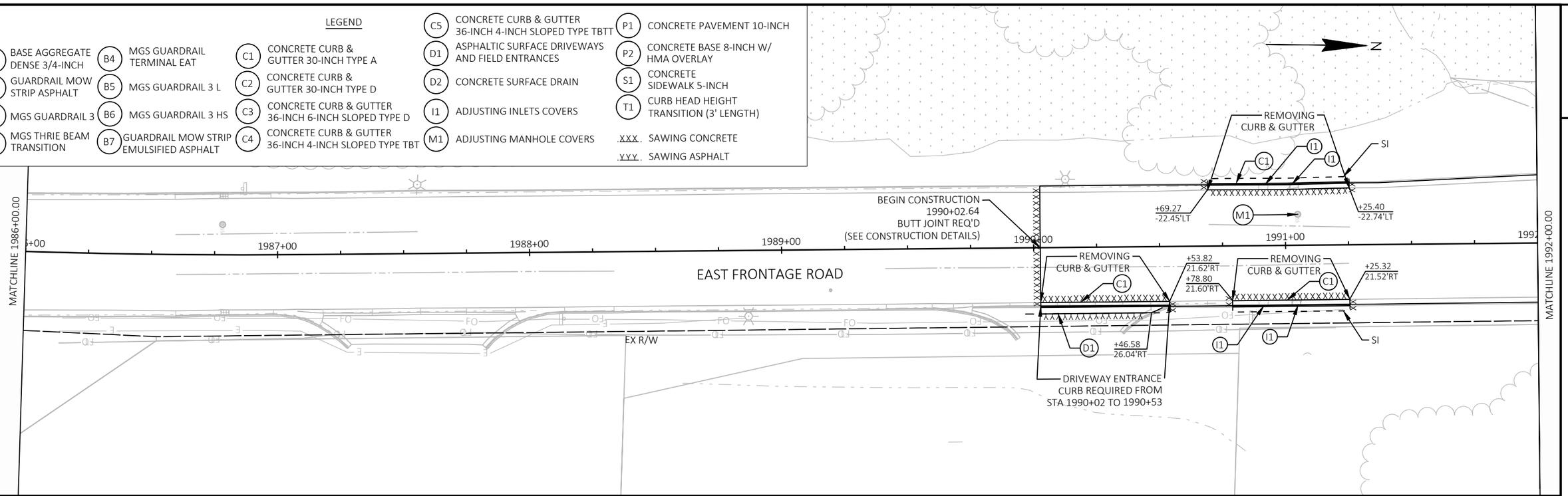

PROJECT NO: 1032-10-75	HWY: EAST FRONTAGE ROAD	COUNTY: KENOSHA	PLAN DETAILS - EAST FRONTAGE ROAD	SHEET 32	E

FILE NAME : Y:\52XX\5252_DP20.NSFWYEFR.KNS\CADDS\10321015\SHEETSPLAN\021201-PD.DWG
LAYOUT NAME - 021203
PLOT DATE : 10/25/2021 12:01 PM PLOT BY : AARON SCHRAMM PLOT NAME : PLOT SCALE : 1 IN:40 FT
WISDOT/CADDS SHEET 44

2

SEE CURB RAMP DETAILS FOR STATION/OFFSET INFORMATION FOR CURB RAMP REMOVALS AND PROPOSED CONSTRUCTION

N

STH 165

EAST FRONTAGE ROAD

EX R/W

MATCHLINE 1998+00.00

MATCHLINE 3125+25.00

MATCHLINE 413+00.00

REMOVING CONCRETE SIDEWALK

REMOVING CURB & GUTTER

REMOVING CONCRETE PAVEMENT

END CONSTRUCTION
1998+99.56
BUTT JOINT REQ'D
(SEE CONSTRUCTION DETAILS)

STA AHEAD = 3121+57.83
STA BACK = 1999+88.58

BEGIN CONSTRUCTION
3122+55.96
BUTT JOINT REQ'D
(SEE CONSTRUCTION DETAILS)

1998+00
1999+00
412+00
3122+00
3123+00
3124+00
3125+00
3126+00
3127+00
3128+00
3129+00
3130+00
3131+00

+41.84 -42.32'LT
+01.71 -42.11'LT
+58.15 -42.31'LT
+76.73 38.00'RT
+24.84 3.57'RT
+36.28 -10.31'LT
+36.12 0.01'RT
+35.77 21.79'RT
+99.96 -10.14'LT
+99.54 0.01'RT
+98.60 22.50'RT
+02.58 -21.58'LT
+02.61 -11.88'LT
+03.39 0.27'RT
+14.27 -21.88'LT
+65.34 -22.09'LT
+65.40 -10.49'LT
+65.47 0.70'RT
+14.96 -33.88'LT
+14.93 -19.89'LT
+14.78 0.54'RT
+25.80 -33.85'LT
+25.40 -19.70'LT
+24.77 0.53'RT
+68.06 34.00'RT
+85.55 -3.94'LT
+85.30 -13.92'LT

+47.73 -33.97'LT
+47.73 -19.29'LT
+47.73 -10.18'LT
+54.24 -33.95'LT
+54.01 -19.25'LT
+53.81 -10.17'LT
+63.78 -10.02'LT
+72.90 -9.95'LT
+61.92 3.01'RT
+70.85 2.32'RT
+52.19 34.03'RT
+81.40 -33.85'LT
+52.03 -33.67'LT
+64.72 34.12'RT
+70.54 34.05'RT
+01.05 -33.97'LT
+10.05 -33.92'LT
+00.00 -2.02'LT
+08.99 -2.06'LT
+99.81 10.08'RT
+08.96 9.93'RT
+99.31 34.18'RT
+08.29 34.12'RT

LEGEND

A1	BASE AGGREGATE DENSE 3/4-INCH	B4	MGS GUARDRAIL TERMINAL EAT	C1	CONCRETE CURB & GUTTER 30-INCH TYPE A	C5	CONCRETE CURB & GUTTER 36-INCH 4-INCH SLOPED TYPE TBTT
B1	GUARDRAIL MOW STRIP ASPHALT	B5	MGS GUARDRAIL 3 L	C2	CONCRETE CURB & GUTTER 30-INCH TYPE D	D1	ASPHALTIC SURFACE DRIVEWAYS AND FIELD ENTRANCES
B2	MGS GUARDRAIL 3	B6	MGS GUARDRAIL 3 HS	C3	CONCRETE CURB & GUTTER 36-INCH 6-INCH SLOPED TYPE D	D2	CONCRETE SURFACE DRAIN
B3	MGS THRIE BEAM TRANSITION	B7	GUARDRAIL MOW STRIP EMULSIFIED ASPHALT	C4	CONCRETE CURB & GUTTER 36-INCH 4-INCH SLOPED TYPE TBT	I1	ADJUSTING INLETS COVERS
						M1	ADJUSTING MANHOLE COVERS

P1	CONCRETE PAVEMENT 10-INCH	S1	CONCRETE SIDEWALK 5-INCH	XXX	SAWING CONCRETE		
P2	CONCRETE BASE 8-INCH W/ HMA OVERLAY	T1	CURB HEAD HEIGHT TRANSITION (3' LENGTH)	YYY	SAWING ASPHALT		

PROJECT NO: 1032-10-75	HWY: EAST FRONTAGE ROAD	COUNTY: KENOSHA	PLAN DETAILS - EAST FRONTAGE ROAD	SHEET 33	E

FILE NAME : Y:\52XX\5252_DP20.NSFWYEFR.KNS\CADDS\10321015\SHEETSPLAN\021201-PD.DWG
LAYOUT NAME - 021204
PLOT DATE : 10/25/2021 12:02 PM
PLOT BY : AARON SCHRAMM
PLOT NAME :
PLOT SCALE : 1 IN:40 FT
WISDOT/CADDS SHEET 44

2

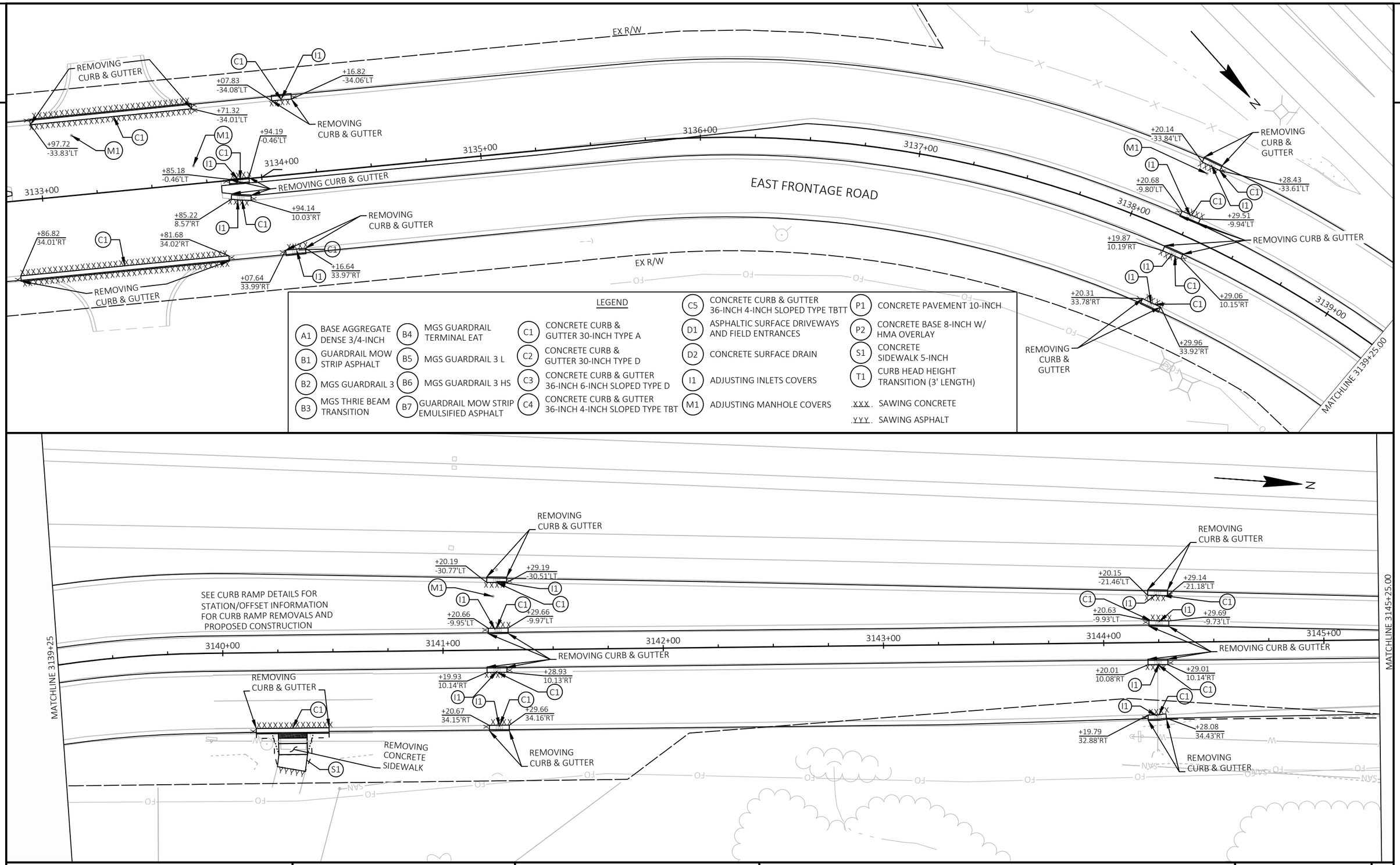

PROJECT NO: 1032-10-75	HWY: EAST FRONTAGE ROAD	COUNTY: KENOSHA	PLAN DETAILS - EAST FRONTAGE ROAD	SHEET 34	E

2

LEGEND

- A1 BASE AGGREGATE DENSE 3/4-INCH
- B1 GUARDRAIL MOW STRIP ASPHALT
- B2 MGS GUARDRAIL 3
- B3 MGS THRIE BEAM TRANSITION
- B4 MGS GUARDRAIL TERMINAL EAT
- B5 MGS GUARDRAIL 3 L
- B6 MGS GUARDRAIL 3 HS
- B7 GUARDRAIL MOW STRIP EMULSIFIED ASPHALT
- C1 CONCRETE CURB & GUTTER 30-INCH TYPE A
- C2 CONCRETE CURB & GUTTER 30-INCH TYPE D
- C3 CONCRETE CURB & GUTTER 36-INCH 6-INCH SLOPED TYPE D
- C4 CONCRETE CURB & GUTTER 36-INCH 4-INCH SLOPED TYPE TBT
- C5 CONCRETE CURB & GUTTER 36-INCH 4-INCH SLOPED TYPE TBTT
- D1 ASPHALTIC SURFACE DRIVEWAYS AND FIELD ENTRANCES
- D2 CONCRETE SURFACE DRAIN
- I1 ADJUSTING INLETS COVERS
- M1 ADJUSTING MANHOLE COVERS
- P1 CONCRETE PAVEMENT 10-INCH
- P2 CONCRETE BASE 8-INCH W/ HMA OVERLAY
- S1 CONCRETE SIDEWALK 5-INCH
- T1 CURB HEAD HEIGHT TRANSITION (3' LENGTH)
- .XXX. SAWING CONCRETE
- .YYY. SAWING ASPHALT

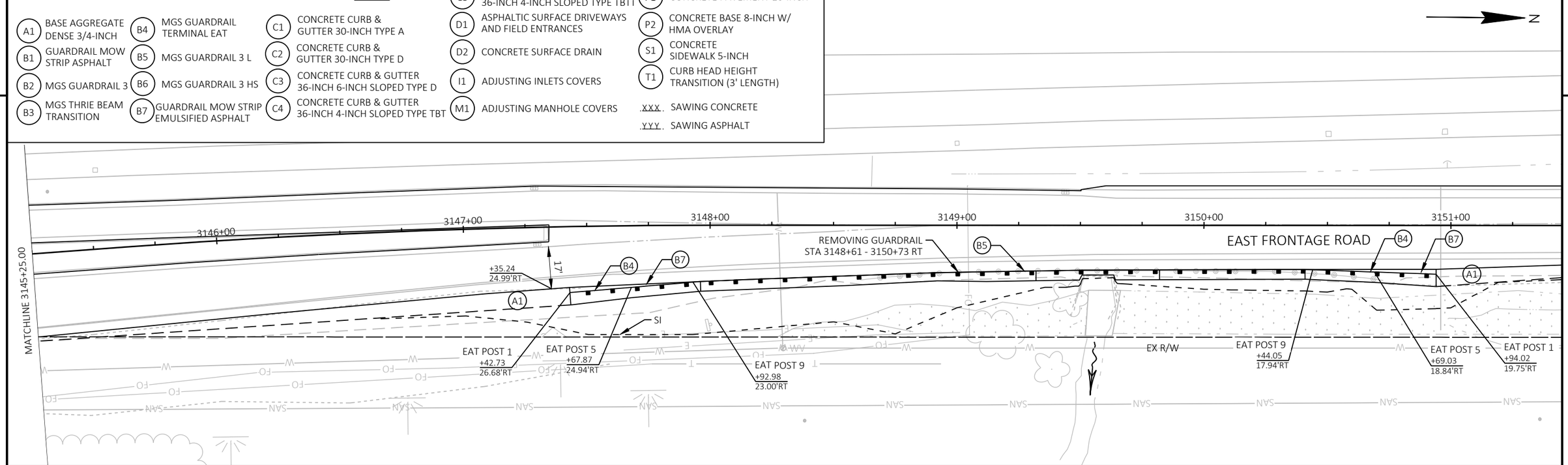

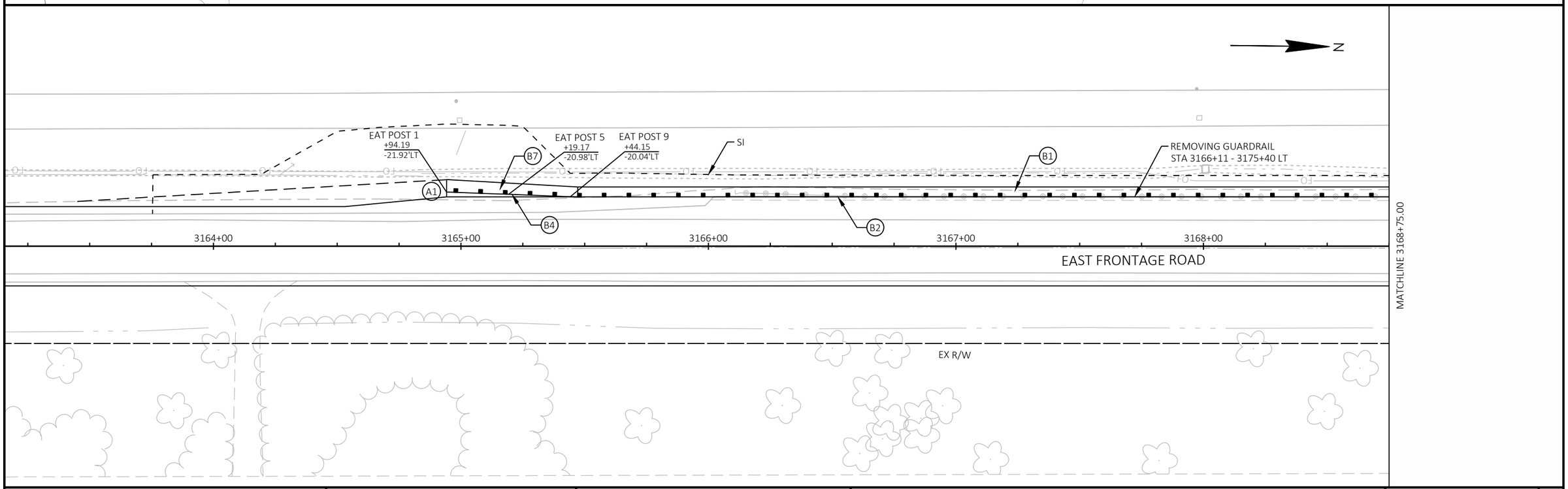

PROJECT NO: 1032-10-75	HWY: EAST FRONTAGE ROAD	COUNTY: KENOSHA	PLAN DETAILS - EAST FRONTAGE ROAD	SHEET 35	E

FILE NAME : Y:\52XX\5252_DP20.NSFWYEFR.KNS\CADDS\10321015\SHEETSPLAN\021201-PD.DWG
LAYOUT NAME - 021206

PLOT DATE : 10/25/2021 12:04 PM PLOT BY : AARON SCHRAMM PLOT NAME : PLOT SCALE : 1 IN:40 FT

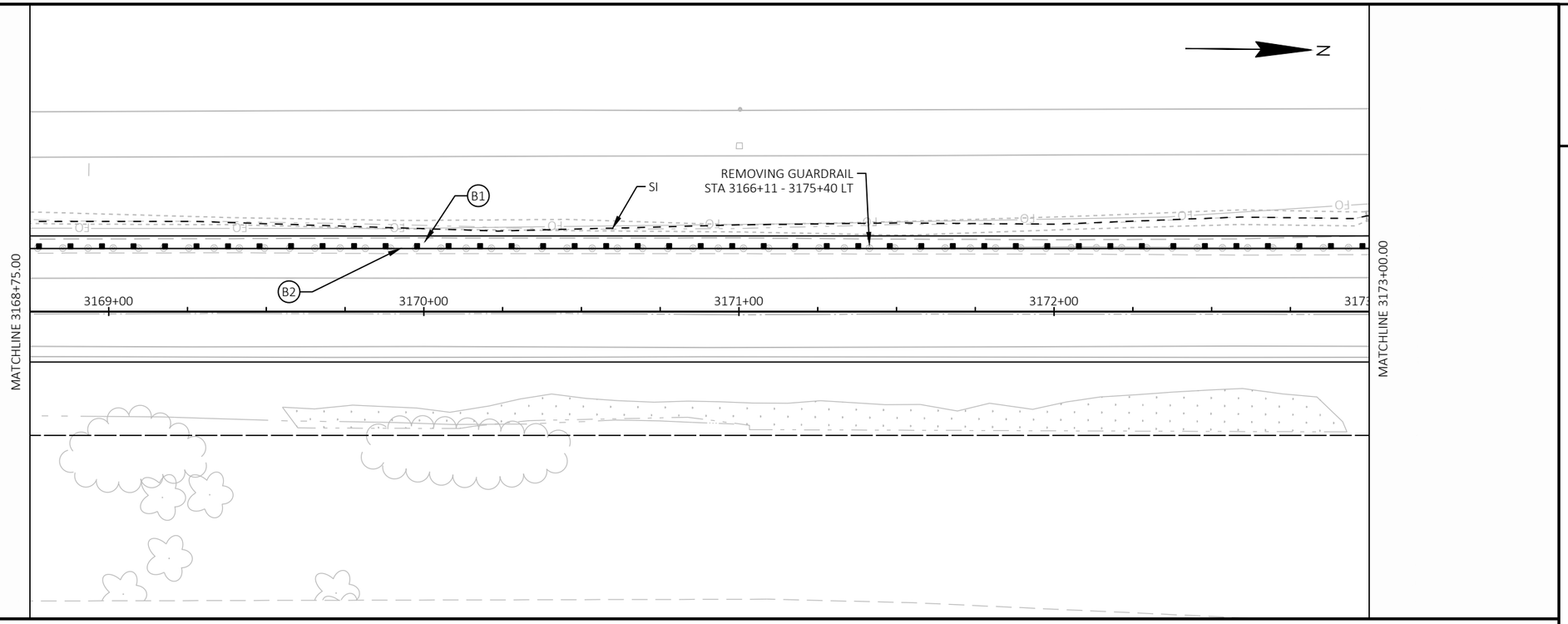

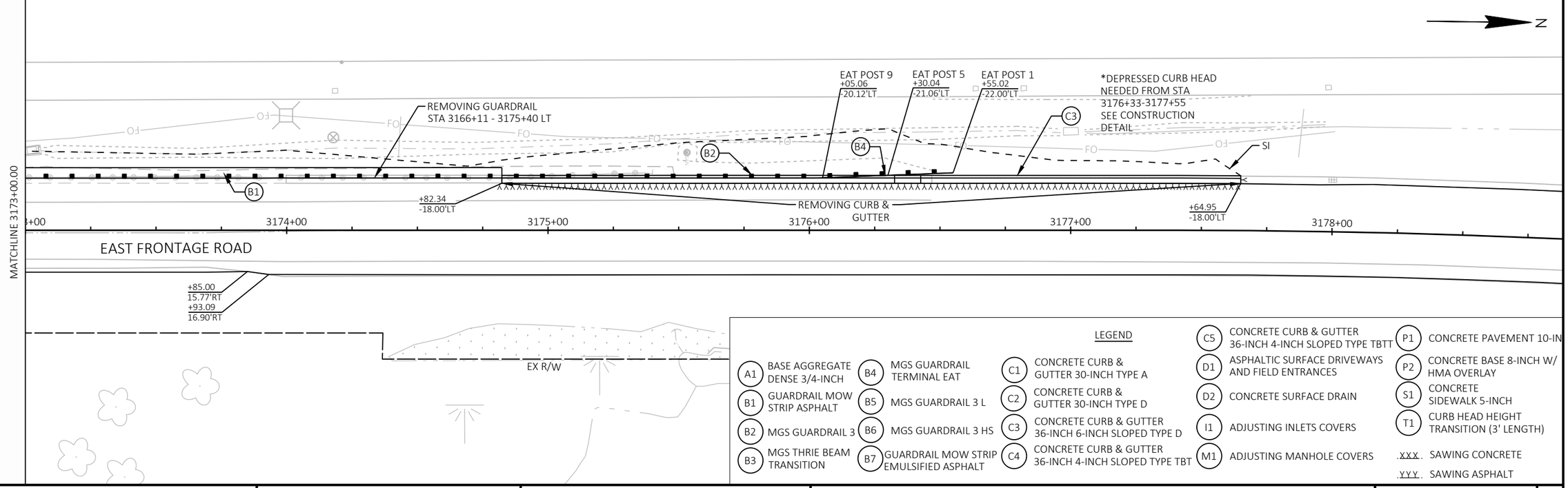

LEGEND

- A1 BASE AGGREGATE DENSE 3/4-INCH
- B1 GUARDRAIL MOW STRIP ASPHALT
- B2 MGS GUARDRAIL 3
- B3 MGS THRIE BEAM TRANSITION
- B4 MGS GUARDRAIL TERMINAL EAT
- B5 MGS GUARDRAIL 3 L
- B6 MGS GUARDRAIL 3 HS
- B7 GUARDRAIL MOW STRIP EMULSIFIED ASPHALT
- C1 CONCRETE CURB & GUTTER 30-INCH TYPE A
- C2 CONCRETE CURB & GUTTER 30-INCH TYPE D
- C3 CONCRETE CURB & GUTTER 36-INCH 6-INCH SLOPED TYPE D
- C4 CONCRETE CURB & GUTTER 36-INCH 4-INCH SLOPED TYPE TBT
- C5 CONCRETE CURB & GUTTER 36-INCH 4-INCH SLOPED TYPE TBTT
- D1 ASPHALTIC SURFACE DRIVEWAYS AND FIELD ENTRANCES
- D2 CONCRETE SURFACE DRAIN
- I1 ADJUSTING INLETS COVERS
- M1 ADJUSTING MANHOLE COVERS
- P1 CONCRETE PAVEMENT 10-IN
- P2 CONCRETE BASE 8-INCH W/ HMA OVERLAY
- S1 CONCRETE SIDEWALK 5-INCH
- T1 CURB HEAD HEIGHT TRANSITION (3' LENGTH)
- XXX. SAWING CONCRETE
- YYY. SAWING ASPHALT

PROJECT NO: 1032-10-75	HWY: EAST FRONTAGE ROAD	COUNTY: KENOSHA	PLAN DETAILS - EAST FRONTAGE ROAD	SHEET 36	E

FILE NAME : Y:\52XX\5252_DP20.NSFWYEFR.KNS\CADDS\10321015\SHEETSPLAN\021201-PD.DWG
LAYOUT NAME - 021207
PLOT DATE : 10/25/2021 12:05 PM
PLOT BY : AARON SCHRAMM
PLOT NAME :
PLOT SCALE : 1 IN:40 FT
WISDOT/CADDS SHEET 44

2

2

EX R/W

3197+00

3198+00

+42.53
-1.71'LT

S1

+54.27
-2.02'LT

+42.66
1.13'RT

+54.35
1.40'RT

REMOVING
CONCRETE
SIDEWALK

3199+00

3200+00

3201+00

3202+00

EAST FRONTAGE ROAD

MATCHLINE 3202+50.00

EX R/W

EX R/W

N

LEGEND

A1	BASE AGGREGATE DENSE 3/4-INCH	B4	MGS GUARDRAIL TERMINAL EAT	C1	CONCRETE CURB & GUTTER 30-INCH TYPE A	C5	CONCRETE CURB & GUTTER 36-INCH 4-INCH SLOPED TYPE TBTT
B1	GUARDRAIL MOW STRIP ASPHALT	B5	MGS GUARDRAIL 3 L	C2	CONCRETE CURB & GUTTER 30-INCH TYPE D	D1	ASPHALTIC SURFACE DRIVEWAYS AND FIELD ENTRANCES
B2	MGS GUARDRAIL 3	B6	MGS GUARDRAIL 3 HS	C3	CONCRETE CURB & GUTTER 36-INCH 6-INCH SLOPED TYPE D	D2	CONCRETE SURFACE DRAIN
B3	MGS THRIE BEAM TRANSITION	B7	GUARDRAIL MOW STRIP EMULSIFIED ASPHALT	C4	CONCRETE CURB & GUTTER 36-INCH 4-INCH SLOPED TYPE TBT	I1	ADJUSTING INLETS COVERS
						M1	ADJUSTING MANHOLE COVERS

P1	CONCRETE PAVEMENT 10-IN		
P2	CONCRETE BASE 8-INCH W/ HMA OVERLAY		
S1	CONCRETE SIDEWALK 5-INCH		
T1	CURB HEAD HEIGHT TRANSITION (3' LENGTH)		
		XXX	SAWING CONCRETE
		YYY	SAWING ASPHALT

EX R/W

3203+00

3204+00

+81.92
-16.98'LT

REMOVING
CURB & GUTTER

+15.86
-17.39'LT

C2

SJ

I1

3205+00

3206+00

320

EAST FRONTAGE ROAD

MATCHLINE 3202+50.00

MATCHLINE 3207+00.00

EX R/W

EX R/W

EX R/W

PROJECT NO: 1032-10-75	HWY: EAST FRONTAGE ROAD	COUNTY: KENOSHA	PLAN DETAILS - EAST FRONTAGE ROAD	SHEET 37	E

FILE NAME : Y:\52XX\5252_DP20.NSFWYEFR.KNS\CADDS\10321015\SHEETSPLAN\021201-PD.DWG
LAYOUT NAME - 021208
PLOT DATE : 10/25/2021 12:07 PM PLOT BY : AARON SCHRAMM PLOT NAME : PLOT SCALE : 1 IN:40 FT
WISDOT/CADDS SHEET 44

2

2

SEE CURB RAMP DETAILS FOR
STATION/OFFSET INFORMATION
FOR CURB RAMP REMOVALS AND
PROPOSED CONSTRUCTION

N

EAST FRONTAGE ROAD

EX R/W

REMOVING CONCRETE SIDEWALK

REMOVING CURB & GUTTER

S1

C1

CTH C

MARKING REMOVAL LINE 4-INCH

SI

MATCHLINE 3207+00.00

3208+00

5203+00

5204+00

5205+00

5206+00

5207+00

BEGIN CONSTRUCTION
5204+33.10
BUTT JOINT REQ'D
(SEE CONSTRUCTION DETAILS)

END CONSTRUCTION
3207+36.75
BUTT JOINT REQ'D
(SEE CONSTRUCTION DETAILS)

STA BACK = 3208+96.35
STA AHEAD = 5202+83.06

LEGEND

A1	BASE AGGREGATE DENSE 3/4-INCH	B4	MGS GUARDRAIL TERMINAL EAT	C1	CONCRETE CURB & GUTTER 30-INCH TYPE A	C5	CONCRETE CURB & GUTTER 36-INCH 4-INCH SLOPED TYPE TBTT
B1	GUARDRAIL MOW STRIP ASPHALT	B5	MGS GUARDRAIL 3 L	C2	CONCRETE CURB & GUTTER 30-INCH TYPE D	D1	ASPHALTIC SURFACE DRIVEWAYS AND FIELD ENTRANCES
B2	MGS GUARDRAIL 3	B6	MGS GUARDRAIL 3 HS	C3	CONCRETE CURB & GUTTER 36-INCH 6-INCH SLOPED TYPE D	D2	CONCRETE SURFACE DRAIN
B3	MGS THRIE BEAM TRANSITION	B7	GUARDRAIL MOW STRIP EMULSIFIED ASPHALT	C4	CONCRETE CURB & GUTTER 36-INCH 4-INCH SLOPED TYPE TBT	I1	ADJUSTING INLETS COVERS
						M1	ADJUSTING MANHOLE COVERS

P1	CONCRETE PAVEMENT 10-INCH			
P2	CONCRETE BASE 8-INCH W/ HMA OVERLAY			
S1	CONCRETE SIDEWALK 5-INCH			
T1	CURB HEAD HEIGHT TRANSITION (3' LENGTH)			
XXX.	SAWING CONCRETE			
YYY.	SAWING ASPHALT			

PROJECT NO: 1032-10-75	HWY: EAST FRONTAGE ROAD	COUNTY: KENOSHA	PLAN DETAILS - EAST FRONTAGE ROAD	SHEET 38	E

NOTES

(*1) FINAL PLACEMENT OF THE FLUME MUST MAINTAIN THE MINIMUM POST SEPARATION DISTANCES IN THE STANDARD DETAIL.

(*2) WARP CURB AND GUTTER FLOW LINE TO DRAIN TOWARDS THE CONCRETE SURFACE DRAIN.

(*3) CONCRETE SURFACE DRAINS ARE TO BE CONSTRUCTED PERPENDICULAR TO THE ROADWAY.

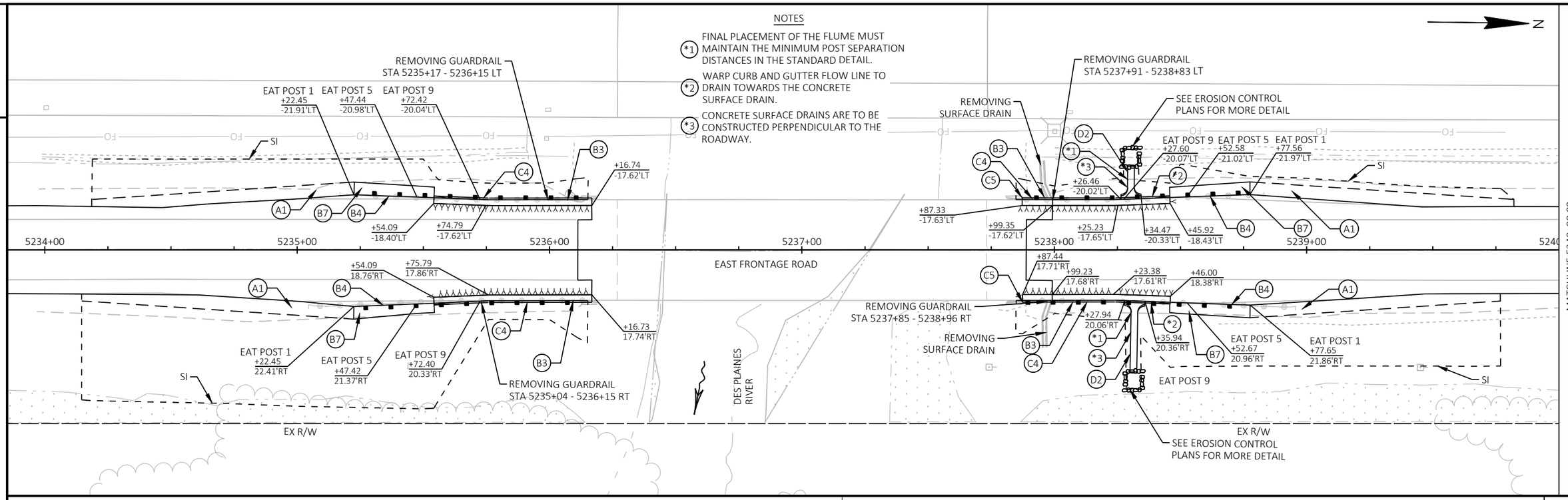

LEGEND

A1	BASE AGGREGATE DENSE 3/4-INCH	B4	MGS GUARDRAIL TERMINAL EAT	C1	CONCRETE CURB & GUTTER 30-INCH TYPE A	C5	CONCRETE CURB & GUTTER 36-INCH 4-INCH SLOPED TYPE TBTT
B1	GUARDRAIL MOW STRIP ASPHALT	B5	MGS GUARDRAIL 3 L	C2	CONCRETE CURB & GUTTER 30-INCH TYPE D	D1	ASPHALTIC SURFACE DRIVEWAYS AND FIELD ENTRANCES
B2	MGS GUARDRAIL 3	B6	MGS GUARDRAIL 3 HS	C3	CONCRETE CURB & GUTTER 36-INCH 6-INCH SLOPED TYPE D	D2	CONCRETE SURFACE DRAIN
B3	MGS THRIE BEAM TRANSITION	B7	GUARDRAIL MOW STRIP EMULSIFIED ASPHALT	C4	CONCRETE CURB & GUTTER 36-INCH 4-INCH SLOPED TYPE TBT	I1	ADJUSTING INLETS COVERS
						M1	ADJUSTING MANHOLE COVERS

P1	CONCRETE PAVEMENT 10-INCH
P2	CONCRETE BASE 8-INCH W/ HMA OVERLAY
S1	CONCRETE SIDEWALK 5-INCH
T1	CURB HEAD HEIGHT TRANSITION (3' LENGTH)
.XXX.	SAWING CONCRETE
.YYY.	SAWING ASPHALT

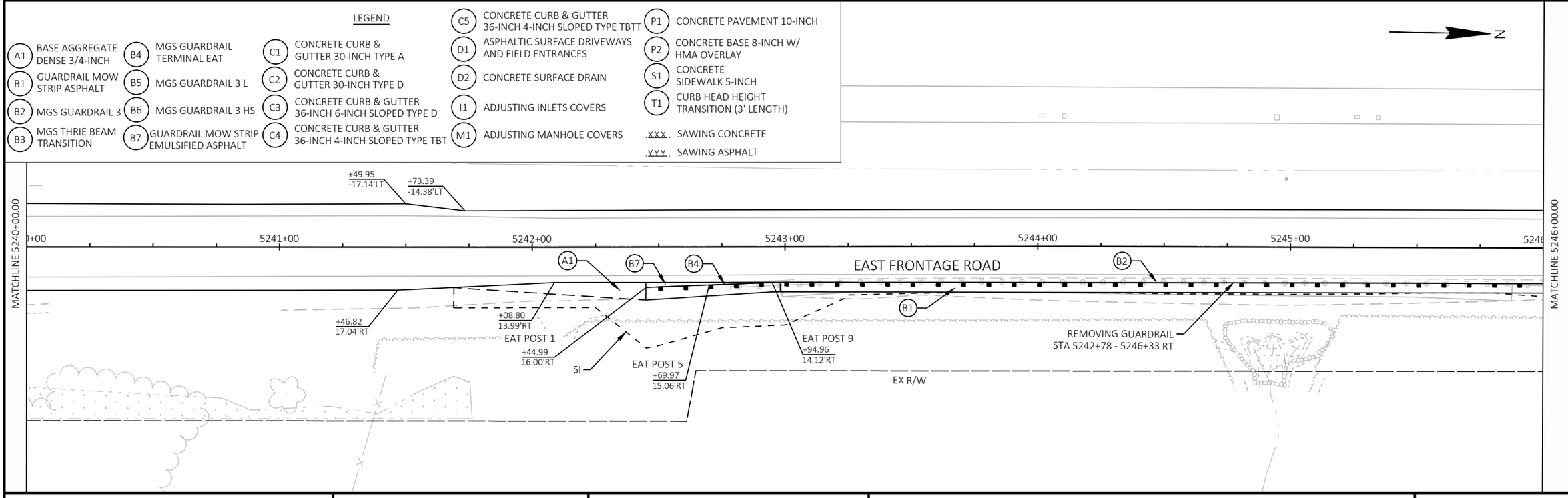

PROJECT NO: 1032-10-75	HWY: EAST FRONTAGE ROAD	COUNTY: KENOSHA	PLAN DETAILS - EAST FRONTAGE ROAD

SHEET 39 E

FILE NAME : Y:\52XX\5252_DP20.NSFWYEFR.KNS\CADDS\10321015\SHEETSPLAN\021201-PD.DWG
LAYOUT NAME - 021210

PLOT DATE : 10/25/2021 12:09 PM PLOT BY : AARON SCHRAMM PLOT NAME : PLOT SCALE : ##########

WISDOT/CADDS SHEET 44

2

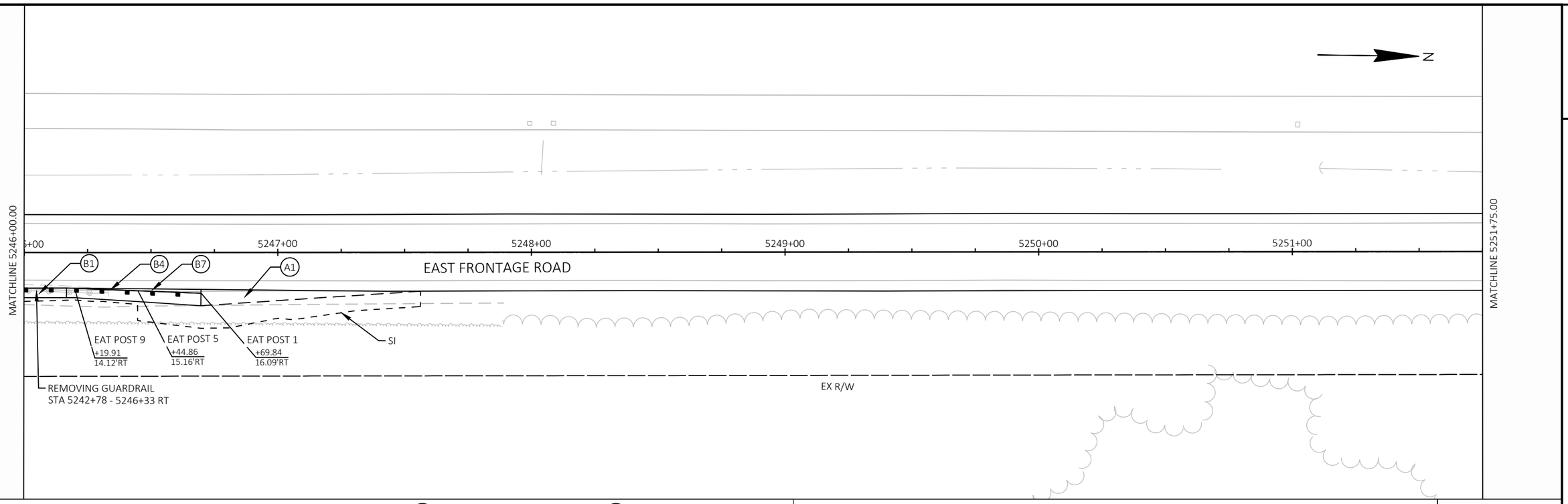

LEGEND

- A1 BASE AGGREGATE DENSE 3/4-INCH
- B1 GUARDRAIL MOW STRIP ASPHALT
- B2 MGS GUARDRAIL 3
- B3 MGS THRIE BEAM TRANSITION
- B4 MGS GUARDRAIL TERMINAL EAT
- B5 MGS GUARDRAIL 3 L
- B6 MGS GUARDRAIL 3 HS
- B7 GUARDRAIL MOW STRIP EMULSIFIED ASPHALT
- C1 CONCRETE CURB & GUTTER 30-INCH TYPE A
- C2 CONCRETE CURB & GUTTER 30-INCH TYPE D
- C3 CONCRETE CURB & GUTTER 36-INCH 6-INCH SLOPED TYPE D
- C4 CONCRETE CURB & GUTTER 36-INCH 4-INCH SLOPED TYPE TBT
- C5 CONCRETE CURB & GUTTER 36-INCH 4-INCH SLOPED TYPE TBTT
- D1 ASPHALTIC SURFACE DRIVEWAYS AND FIELD ENTRANCES
- D2 CONCRETE SURFACE DRAIN
- I1 ADJUSTING INLETS COVERS
- M1 ADJUSTING MANHOLE COVERS
- P1 CONCRETE PAVEMENT 10-INCH
- P2 CONCRETE BASE 8-INCH W/ HMA OVERLAY
- S1 CONCRETE SIDEWALK 5-INCH
- T1 CURB HEAD HEIGHT TRANSITION (3' LENGTH)
- .XXX. SAWING CONCRETE
- .YYY. SAWING ASPHALT

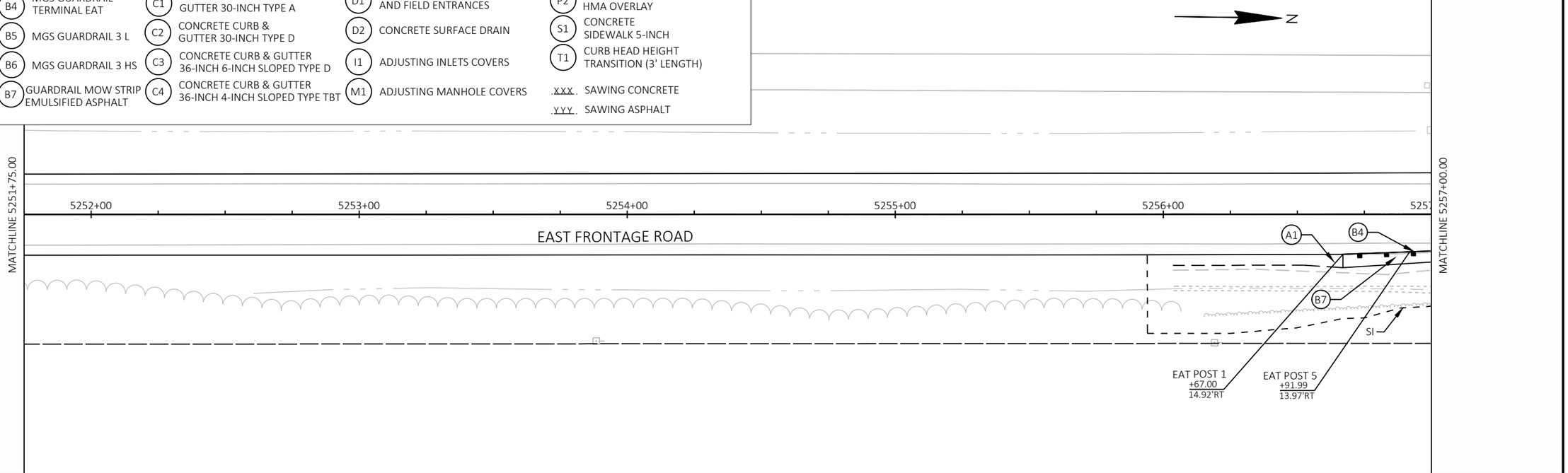

PROJECT NO: 1032-10-75	HWY: EAST FRONTAGE ROAD	COUNTY: KENOSHA	PLAN DETAILS - EAST FRONTAGE ROAD	SHEET 40	E

FILE NAME : Y:\52XX\5252_DP20.NSFWYEFR.KNS\CADDS\10321015\SHEETSPLAN\021201-PD.DWG
LAYOUT NAME - 021211
PLOT DATE : 10/25/2021 12:10 PM
PLOT BY : AARON SCHRAMM
PLOT NAME :
PLOT SCALE : ##########
WISDOT/CADDS SHEET 44

2

LEGEND

- A1 BASE AGGREGATE DENSE 3/4-INCH
- B1 GUARDRAIL MOW STRIP ASPHALT
- B2 MGS GUARDRAIL 3
- B3 MGS THRIE BEAM TRANSITION
- B4 MGS GUARDRAIL TERMINAL EAT
- B5 MGS GUARDRAIL 3 L
- B6 MGS GUARDRAIL 3 HS
- B7 GUARDRAIL MOW STRIP EMULSIFIED ASPHALT
- C1 CONCRETE CURB & GUTTER 30-INCH TYPE A
- C2 CONCRETE CURB & GUTTER 30-INCH TYPE D
- C3 CONCRETE CURB & GUTTER 36-INCH 6-INCH SLOPED TYPE D
- C4 CONCRETE CURB & GUTTER 36-INCH 4-INCH SLOPED TYPE TBT
- C5 CONCRETE CURB & GUTTER 36-INCH 4-INCH SLOPED TYPE TBTT
- D1 ASPHALTIC SURFACE DRIVEWAYS AND FIELD ENTRANCES
- D2 CONCRETE SURFACE DRAIN
- I1 ADJUSTING INLETS COVERS
- M1 ADJUSTING MANHOLE COVERS
- P1 CONCRETE PAVEMENT 10-INCH
- P2 CONCRETE BASE 8-INCH W/ HMA OVERLAY
- S1 CONCRETE SIDEWALK 5-INCH
- T1 CURB HEAD HEIGHT TRANSITION (3' LENGTH)
- XXX SAWING CONCRETE
- YYY SAWING ASPHALT

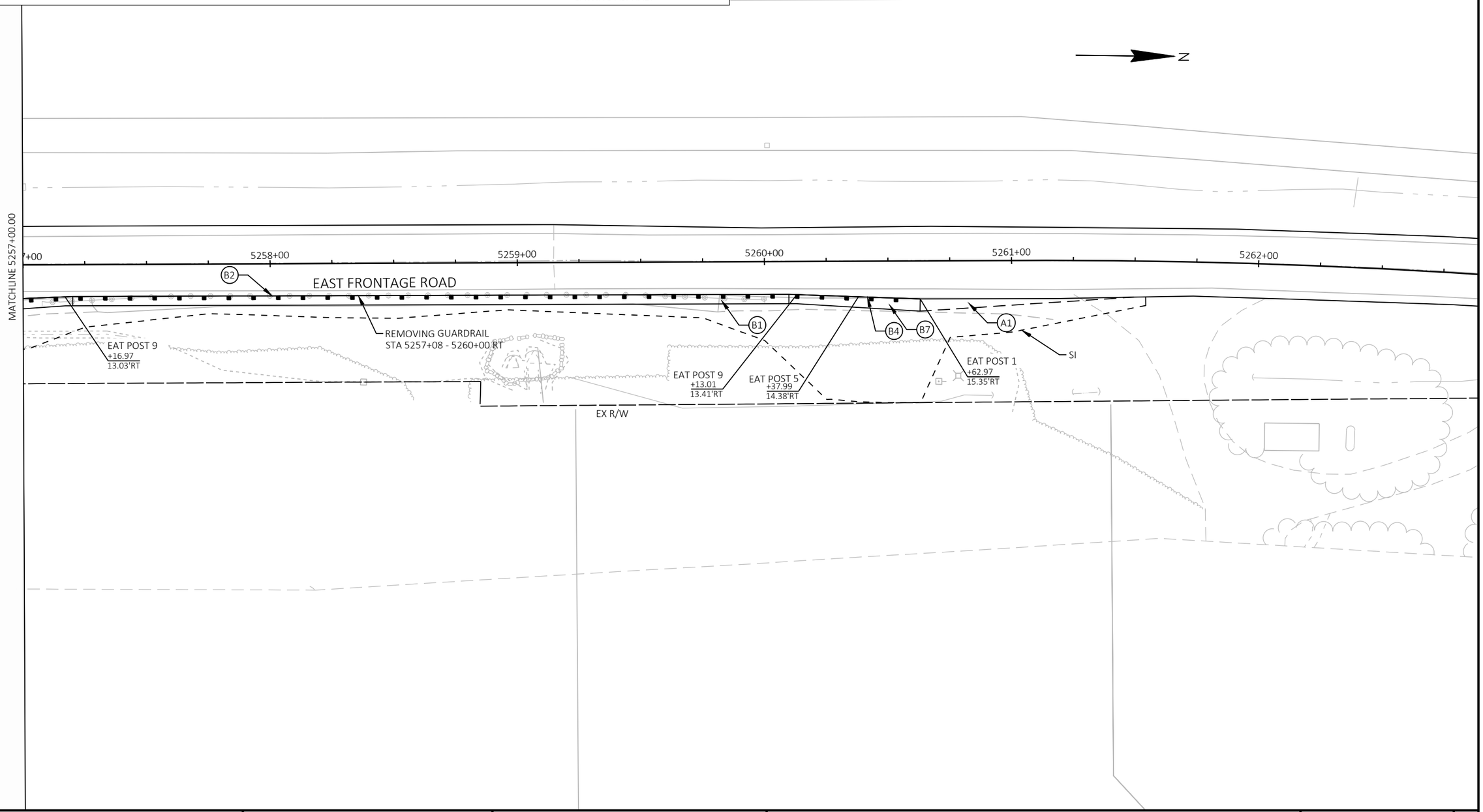

PROJECT NO: 1032-10-75	HWY: EAST FRONTAGE ROAD	COUNTY: KENOSHA	PLAN DETAILS - EAST FRONTAGE ROAD	SHEET 41	E

FILE NAME : Y:\52XX\5252_DP20.NSFWYEFR.KNS\CADDS\10321015\SHEETSPLAN\021201-PD.DWG
LAYOUT NAME - 021212

PLOT DATE : 10/25/2021 12:11 PM PLOT BY : AARON SCHRAMM PLOT NAME : PLOT SCALE : 1 IN:40 FT

406+00 407+00 408+00 409+00 410+00 411+00

N

REMOVING CURB & GUTTER

REMOVING CURB & GUTTER

REMOVING CONCRETE PAVEMENT

+59.05 38.00'RT

+37.55 59.66'RT

+67.35 50.28'RT

12'

+53.58 14.07'RT

+53.58 26.04'RT

+53.58 38.00'RT

+79.28 14.00'RT

+79.42 25.94'RT

+79.56 38.00'RT

REMOVING CONCRETE PAVEMENT

REMOVING UNDERDRAIN STA 406+37 -411+01

+50.22 3.80'RT

+50.35 13.85'RT

REMOVING CONCRETE PAVEMENT

+24.84 3.57'RT

+24.84 13.81'RT

STH 165

REMOVING STORM SEWER 12-INCH

+10.08 50.28'RT

REMOVING INLET

+76.73 38.00'RT

R52'

D2

C1

SI

+67.35 102.28'RT

EX R/W

R70'

REMOVING CONCRETE PAVEMENT

+10.08 120.28'RT

+41.84 -42.32'LT

REMOVING CURB & GUTTER

+58 -42.

T1

N

MATCHLINE 413+00

413+00 414+00 415+00 416+00

REMOVING CONCRETE PAVEMENT

+42.72 -13.52'LT

+42.71 -3.52'LT

+27.63 -36.72'LT

+27.40 -24.90'LT

+27.15 -12.70'LT

+46.18 -36.66'LT

+45.69 -24.57'LT

+45.22 -12.40'LT

REMOVING CONCRETE PAVEMENT

LEGEND

A1	BASE AGGREGATE DENSE 3/4-INCH	B4	MGS GUARDRAIL TERMINAL EAT	C1	CONCRETE CURB & GUTTER 30-INCH TYPE A	C5	CONCRETE CURB & GUTTER 36-INCH 4-INCH SLOPED TYPE TBTT
B1	GUARDRAIL MOW STRIP ASPHALT	B5	MGS GUARDRAIL 3 L	C2	CONCRETE CURB & GUTTER 30-INCH TYPE D	D1	ASPHALTIC SURFACE DRIVEWAYS AND FIELD ENTRANCES
B2	MGS GUARDRAIL 3	B6	MGS GUARDRAIL 3 HS	C3	CONCRETE CURB & GUTTER 36-INCH 6-INCH SLOPED TYPE D	D2	CONCRETE SURFACE DRAIN
B3	MGS THRIE BEAM TRANSITION	B7	GUARDRAIL MOW STRIP EMULSIFIED ASPHALT	C4	CONCRETE CURB & GUTTER 36-INCH 4-INCH SLOPED TYPE TBT	I1	ADJUSTING INLETS COVERS
						M1	ADJUSTING MANHOLE COVERS

P1	CONCRETE PAVEMENT 10-INCH	S1	CONCRETE SIDEWALK 5-INCH
P2	CONCRETE BASE 8-INCH W/ HMA OVERLAY	T1	CURB HEAD HEIGHT TRANSITION (3' LENGTH)
.XXX.	SAWING CONCRETE		
.YYY.	SAWING ASPHALT		

N

PROJECT NO: 1032-10-75	HWY: EAST FRONTAGE ROAD	COUNTY: KENOSHA	PLAN DETAILS - STH 165	SHEET 42	E

FILE NAME : Y:\52XX\5252_DP20.NSFWYEFR.KNS\CADDS\10321015\SHEETSPLAN\021201-PD.DWG
LAYOUT NAME - 021213

PLOT DATE : 10/25/2021 12:28 PM PLOT BY : AARON SCHRAMM PLOT NAME : PLOT SCALE : 1 IN:40 FT

WISDOT/CADDS SHEET 44

EAST FRONTAGE ROAD

STH 165 NE CURB RAMP
BOC RADIUS =46.5' CURB RAMP LANDING LENGTH ('XR')=11.8' RADIAL CHORD LENGTH =13.3' RADIAL WARNING FIELD AREA = 27.1 SF

STH 165 NE CURB RAMP					
POINT NUMBER	STATION	OFFSET	ELEVATION	NORTHING	EASTING
1	1999+79.51	87.70' R	693.31	111949.67	595828.15
2	1999+79.51	80.44' R	693.42	111949.76	595820.41
3	1999+79.51	75.19' R	693.51	111950.29	595814.55
4	1999+79.51	67.27' R	693.67	111953.02	595804.51
5	1999+79.51	67.52' R	693.67	111953.56	595804.50
6	1999+79.51	76.52' R	693.56	111953.70	595814.50
7	1999+79.51	77.36' R	693.66	111955.70	595814.47
8	3121+93.55	67.68' R	693.77	111955.56	595804.47
9	3121+98.13	67.52' R	694.00	111960.14	595804.41
10	3121+98.11	77.53' R	693.87	111959.91	595814.41
11	3121+98.07	92.00' R	693.73	111959.58	595828.88
12	3122+08.07	92.03' R	693.70	111969.57	595829.12
13	3122+08.12	77.18' R	694.02	111969.92	595814.27
14	3122+08.15	67.17' R	694.15	111970.16	595804.27
15	3122+09.83	61.94' R	694.32	111971.96	595799.07
16	3121+99.83	61.95' R	694.17	111961.96	595798.87
17	3121+99.83	56.95' R	694.07	111962.06	595793.87
18	3122+09.83	56.94' R	694.27	111972.05	595794.07
19	3121+99.82	53.03' R	694.01	111962.13	595789.95
20	3122+09.81	44.48' R	694.14	111972.30	595781.61
21	3122+22.55	38.81' R	695.10	111985.15	595776.21

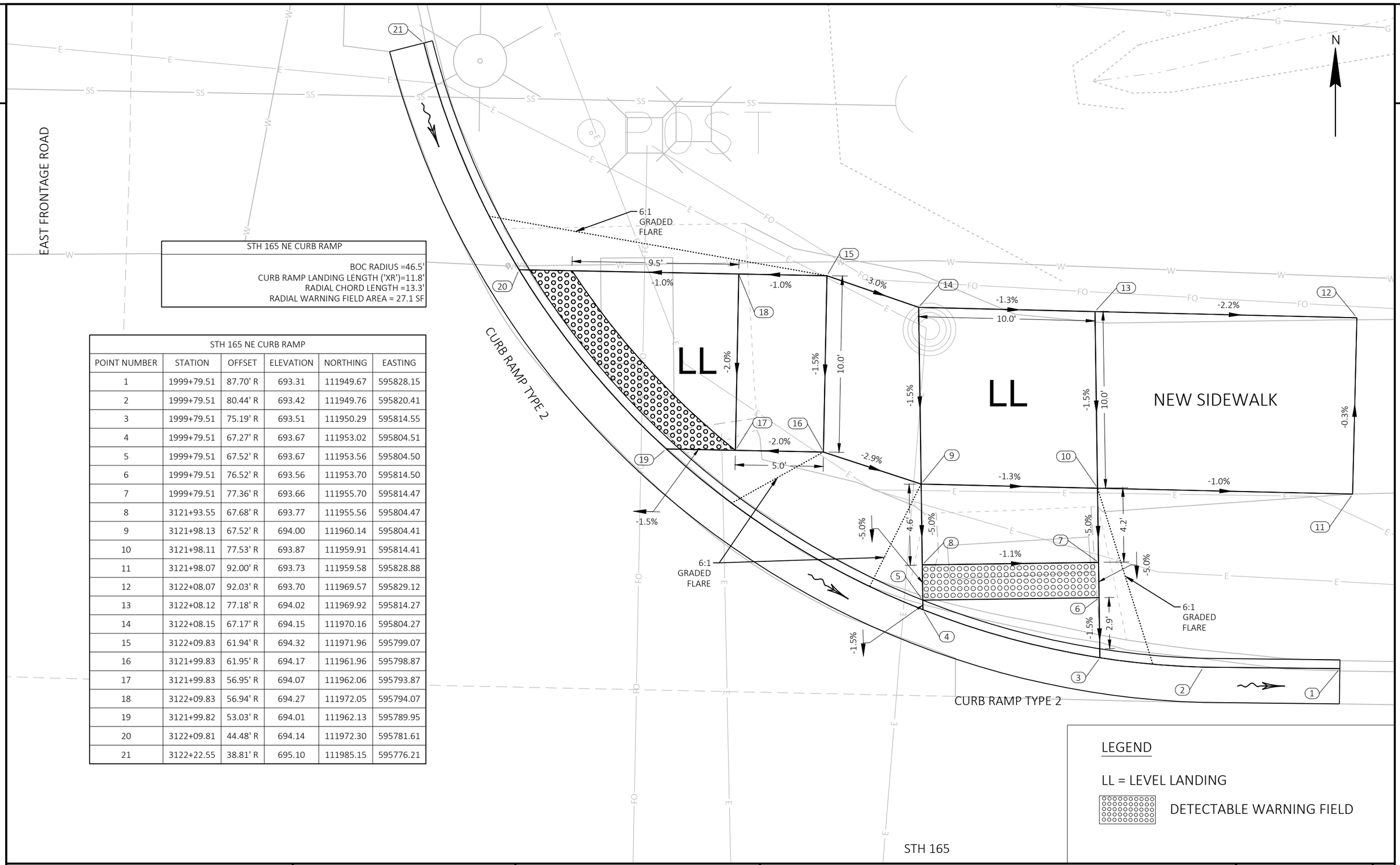

PROJECT NO: 1032-10-75	HWY: EAST FRONTAGE ROAD	COUNTY: KENOSHA	CURB RAMP DETAILS - STH 165 NE CURB RAMP	SHEET 43	E

FILE NAME : Y:\52XX\5252_DP20.NSFWYEFR.KNS\CADDS\10321015\SHEETSPLAN\021302-CR.DWG
LAYOUT NAME - STH 165-NE
PLOT DATE : 10/22/2021 12:29 PM PLOT BY : AARON SCHRAMM PLOT NAME : PLOT SCALE : 1 IN:5 FT
WISDOT/CADDS SHEET 42

STH 165 EAST MEDIAN CURB RAMP					
POINT NUMBER	STATION	OFFSET	ELEVATION	NORTHING	EASTING
22	412+93.49	11.86' R	694.50	111885.64	595820.97
23	412+88.02	11.88' R	694.69	111885.72	595815.47
24	412+78.04	11.94' R	694.84	111885.86	595805.46
25	412+72.53	11.98' R	695.03	111885.94	595799.96
26	412+87.79	4.97' R	694.65	111892.64	595815.37
27	412+77.79	5.02' R	694.81	111892.79	595805.36
28	412+93.07	1.95' L	694.41	111899.46	595820.77
29	412+87.56	1.95' L	694.62	111899.55	595815.27
30	412+77.55	1.91' L	694.77	111899.72	595805.27
31	412+72.05	1.89' L	694.99	111899.81	595799.76

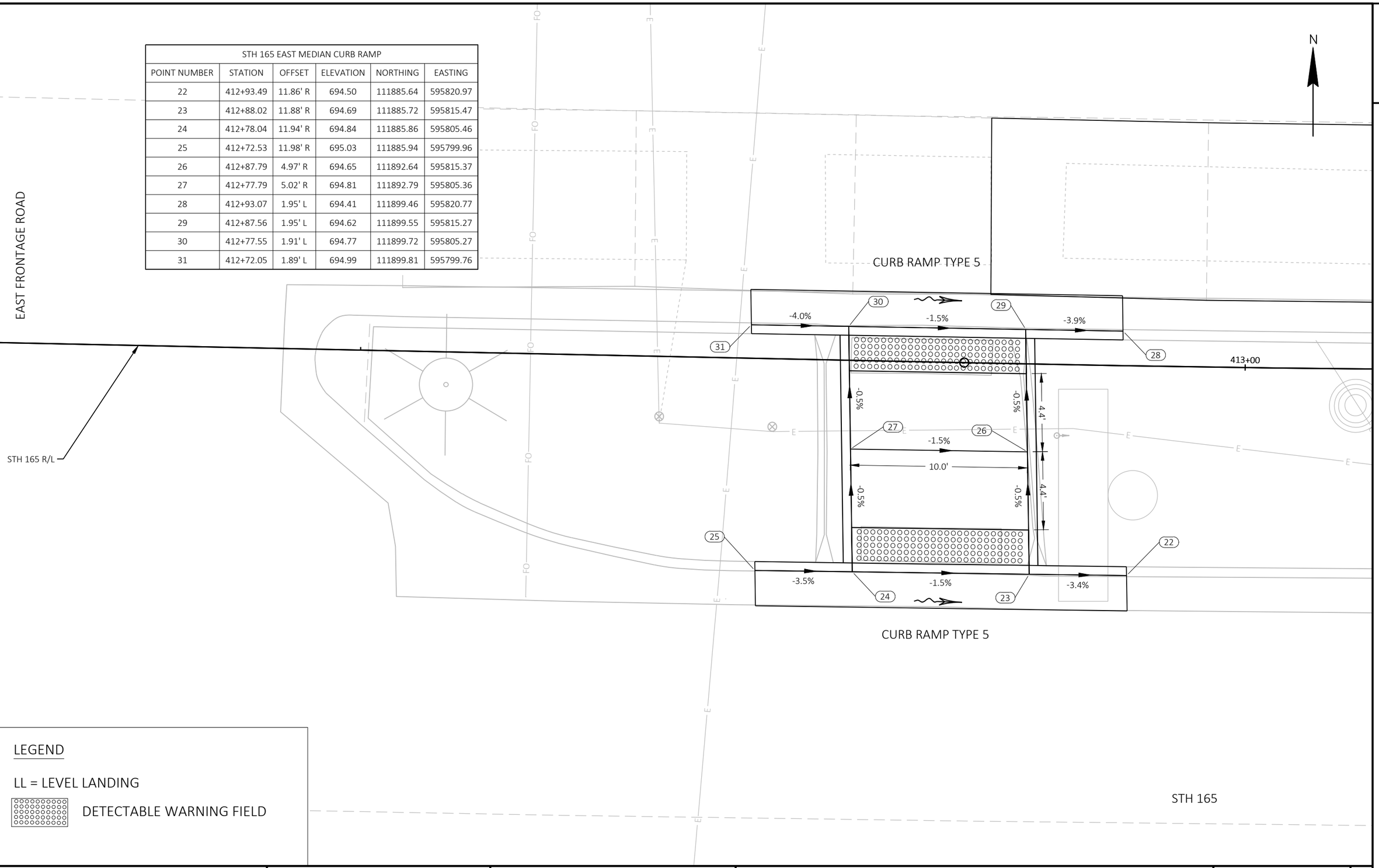

PROJECT NO: 1032-10-75	HWY: EAST FRONTAGE ROAD	COUNTY: KENOSHA	CURB RAMP DETAILS - STH 165 EAST MEDIAN CURB RAMP	SHEET 44	E

FILE NAME : Y:\52XX\5252_DP20.NSFWYEFR.KNS\CADDS\10321015\SHEETSPLAN\021302-CR.DWG
LAYOUT NAME - STH 165-EAST MEDIAN
PLOT DATE : 10/22/2021 12:31 PM PLOT BY : AARON SCHRAMM PLOT NAME : PLOT SCALE : 1 IN:5 FT
WISDOT/CADDS SHEET 42

2

STH 165 SE CURB RAMP					
POINT NUMBER	STATION	OFFSET	ELEVATION	NORTHING	EASTING
32	1998+90.66	59.55' R	696.07	111833.62	595806.20
33	1998+93.89	69.56' R	695.91	111837.02	595816.16
34	1998+96.22	69.57' R	695.89	111839.35	595816.12
35	1998+96.25	59.57' R	696.02	111839.21	595806.13
36	1998+98.25	59.58' R	696.00	111841.21	595806.10
37	1998+98.22	69.58' R	695.87	111841.35	595816.10
38	1999+01.52	69.59' R	695.84	111844.65	595816.06
39	1999+02.27	76.50' R	695.74	111845.52	595822.95
40	1998+98.79	59.58' R	695.99	111841.75	595806.09
41	1998+90.08	44.46' R	696.25	111832.78	595791.12

N

EAST FRONTAGE ROAD

STH 165

CURB RAMP TYPE 2

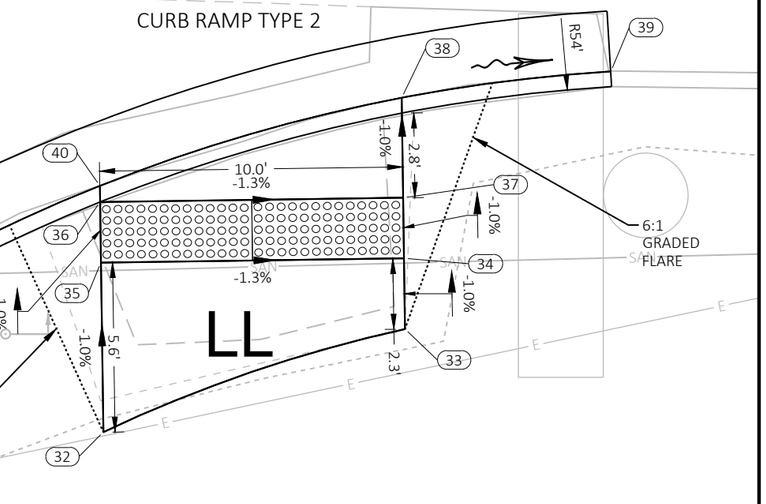

LEGEND

LL = LEVEL LANDING

DETECTABLE WARNING FIELD

PROJECT NO: 1032-10-75	HWY: EAST FRONTAGE ROAD	COUNTY: KENOSHA	CURB RAMP DETAILS - STH 165 SE CURB RAMP	SHEET 45	E

FILE NAME : Y:\52XX\5252_DP20.NSFWYEFR.KNS\CADDS\10321015\SHEETSPLAN\021302-CR.DWG
LAYOUT NAME - STH 165-SE
PLOT DATE : 10/22/2021 12:32 PM
PLOT BY : AARON SCHRAMM
PLOT NAME :
PLOT SCALE : 1 IN:5 FT
WISDOT/CADDS SHEET 42

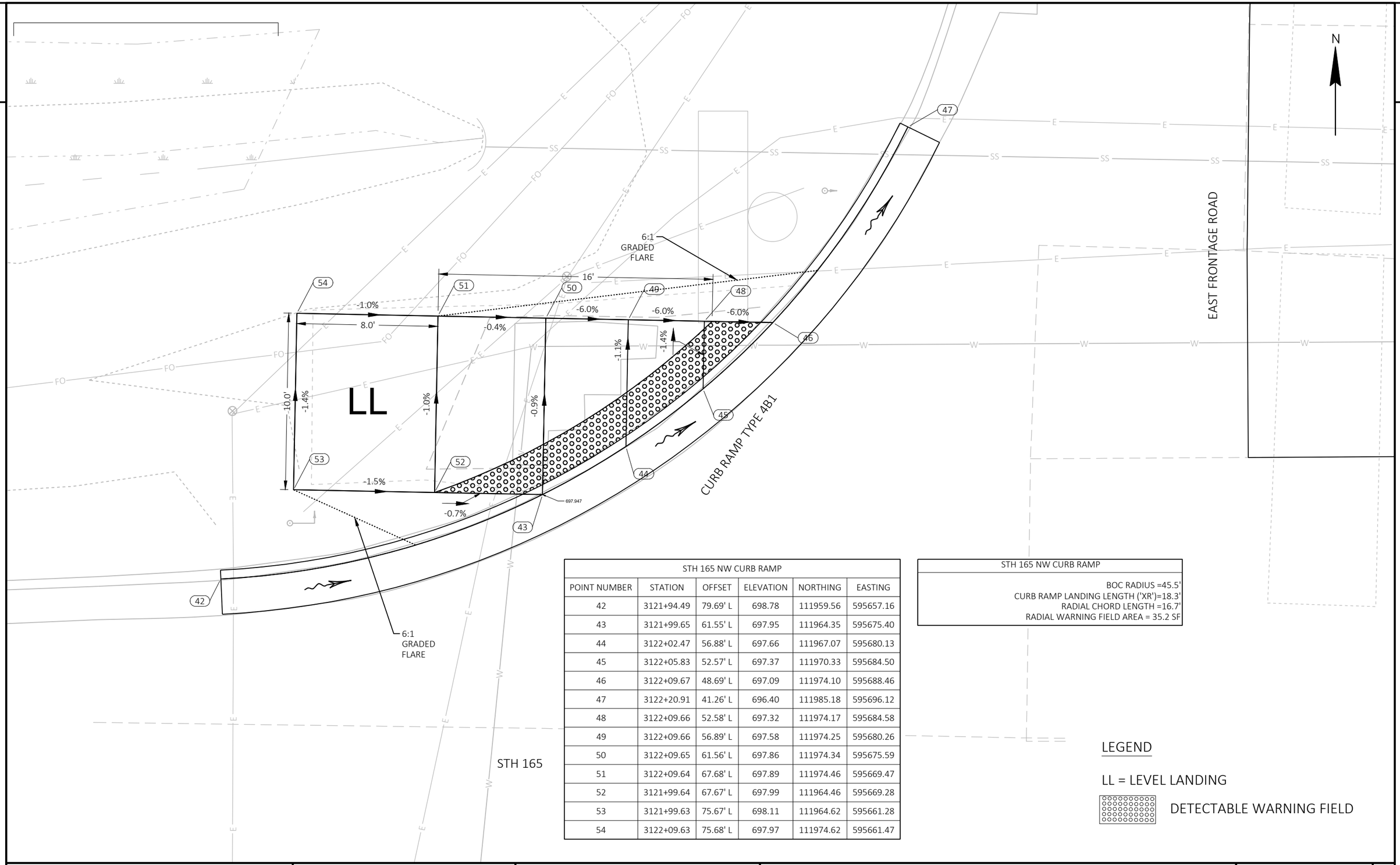

STH 165 NW CURB RAMP					
POINT NUMBER	STATION	OFFSET	ELEVATION	NORTHING	EASTING
42	3121+94.49	79.69' L	698.78	111959.56	595657.16
43	3121+99.65	61.55' L	697.95	111964.35	595675.40
44	3122+02.47	56.88' L	697.66	111967.07	595680.13
45	3122+05.83	52.57' L	697.37	111970.33	595684.50
46	3122+09.67	48.69' L	697.09	111974.10	595688.46
47	3122+20.91	41.26' L	696.40	111985.18	595696.12
48	3122+09.66	52.58' L	697.32	111974.17	595684.58
49	3122+09.66	56.89' L	697.58	111974.25	595680.26
50	3122+09.65	61.56' L	697.86	111974.34	595675.59
51	3122+09.64	67.68' L	697.89	111974.46	595669.47
52	3121+99.64	67.67' L	697.99	111964.46	595669.28
53	3121+99.63	75.67' L	698.11	111964.62	595661.28
54	3122+09.63	75.68' L	697.97	111974.62	595661.47

STH 165 NW CURB RAMP
BOC RADIUS =45.5'
CURB RAMP LANDING LENGTH ('XR')=18.3'
RADIAL CHORD LENGTH =16.7'
RADIAL WARNING FIELD AREA = 35.2 SF

LEGEND

LL = LEVEL LANDING

DETECTABLE WARNING FIELD

PROJECT NO: 1032-10-75	HWY: EAST FRONTAGE ROAD	COUNTY: KENOSHA	CURB RAMP DETAILS - STH 165 NW CURB RAMP	SHEET 46	E

FILE NAME : Y:\52XX\5252_DP20.NSFWYEFR.KNS\CADDS\10321015\SHEETSPLAN\021302-CR.DWG
LAYOUT NAME - STH 165-NW

PLOT DATE : 10/22/2021 12:33 PM PLOT BY : AARON SCHRAMM PLOT NAME : PLOT SCALE : 1 IN:5 FT

NORTH OF STH 165 CURB RAMP					
POINT NUMBER	STATION	OFFSET	ELEVATION	NORTHING	EASTING
1	3140+14.84	36.35' R	688.78	113304.52	594695.82
2	3140+24.84	36.37' R	688.67	113314.49	594695.00
3	3140+37.83	36.39' R	688.53	113327.44	594693.93
4	3140+47.84	36.41' R	688.41	113337.41	594693.10
5	3140+37.90	41.39' R	688.60	113327.93	594698.91
6	3140+24.90	41.37' R	688.74	113314.98	594699.98
7	3140+24.96	46.37' R	688.82	113315.46	594704.95
8	3140+37.97	46.39' R	688.68	113328.42	594703.88
9	3140+36.84	54.08' R	688.70	113327.94	594711.64
10	3140+24.24	51.79' R	688.88	113315.20	594710.42

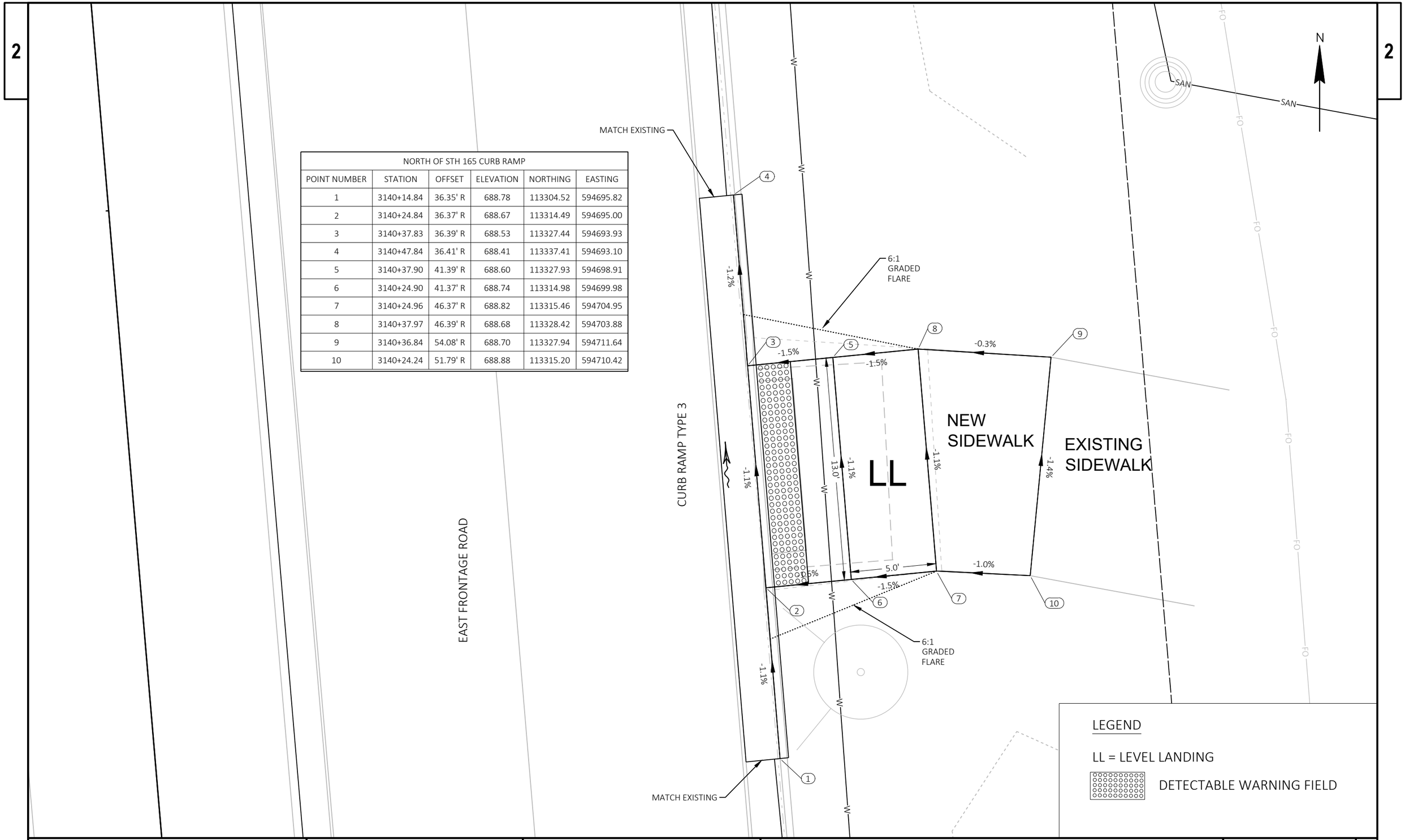

PROJECT NO: 1032-10-75	HWY: EAST FRONTAGE ROAD	COUNTY: KENOSHA	CURB RAMP DETAILS - NORTH OF STH 165 CURB RAMP	SHEET 47	E

FILE NAME : Y:\52XX\5252_DP20.NSFWYEFR.KNS\CADDS\10321015\SHEETSPLAN\021303-CR.DWG
LAYOUT NAME - KWIK TRIP
PLOT DATE : 10/22/2021 12:35 PM PLOT BY : AARON SCHRAMM PLOT NAME : PLOT SCALE : 1 IN:5 FT
WISDOT/CADDS SHEET 42

2

LEGEND

LL = LEVEL LANDING

DETECTABLE WARNING FIELD

CTH C NORTH MEDIAN CURB RAMP					
POINT NUMBER	STATION	OFFSET	ELEVATION	NORTHING	EASTING
151	5203+50.11	12.63' L	687.07	119833.80	595199.26
152	5203+44.39	9.65' L	687.13	119831.03	595205.09
153	5203+39.51	6.23' L	687.17	119829.18	595210.76
154	5203+33.69	0.75' L	687.21	119827.84	595218.64
155	5203+33.80	2.59' R	687.22	119829.94	595221.24
156	5203+44.52	5.78' L	687.16	119833.47	595208.10
157	5203+44.61	3.24' L	687.19	119835.06	595210.07
158	5203+39.61	3.07' L	687.20	119831.17	595213.22
159	5203+39.86	4.29' R	687.11	119835.80	595218.95
160	5203+44.86	4.12' R	687.05	119839.69	595215.80
161	5203+44.95	6.62' R	687.03	119841.26	595217.75
162	5203+39.95	6.79' R	687.08	119837.38	595220.89
163	5203+39.97	7.41' R	687.08	119837.76	595221.37
164	5203+45.08	10.42' R	686.99	119843.66	595220.71
165	5203+50.98	13.03' R	686.89	119849.94	595219.24

CTH C NORTH MEDIAN CURB RAMP
BOC RADIUS =47.5' CURB RAMP LANDING LENGTH ('XR')=5.8' RADIAL CHORD LENGTH =6.0' RADIAL WARNING FIELD AREA = 12.1 SF

CTH C NORTH MEDIAN CURB RAMP
BOC RADIUS =52.5 CURB RAMP LANDING LENGTH ('XR')=5.7' RADIAL CHORD LENGTH =6.0' RADIAL WARNING FIELD AREA =12.1 SF

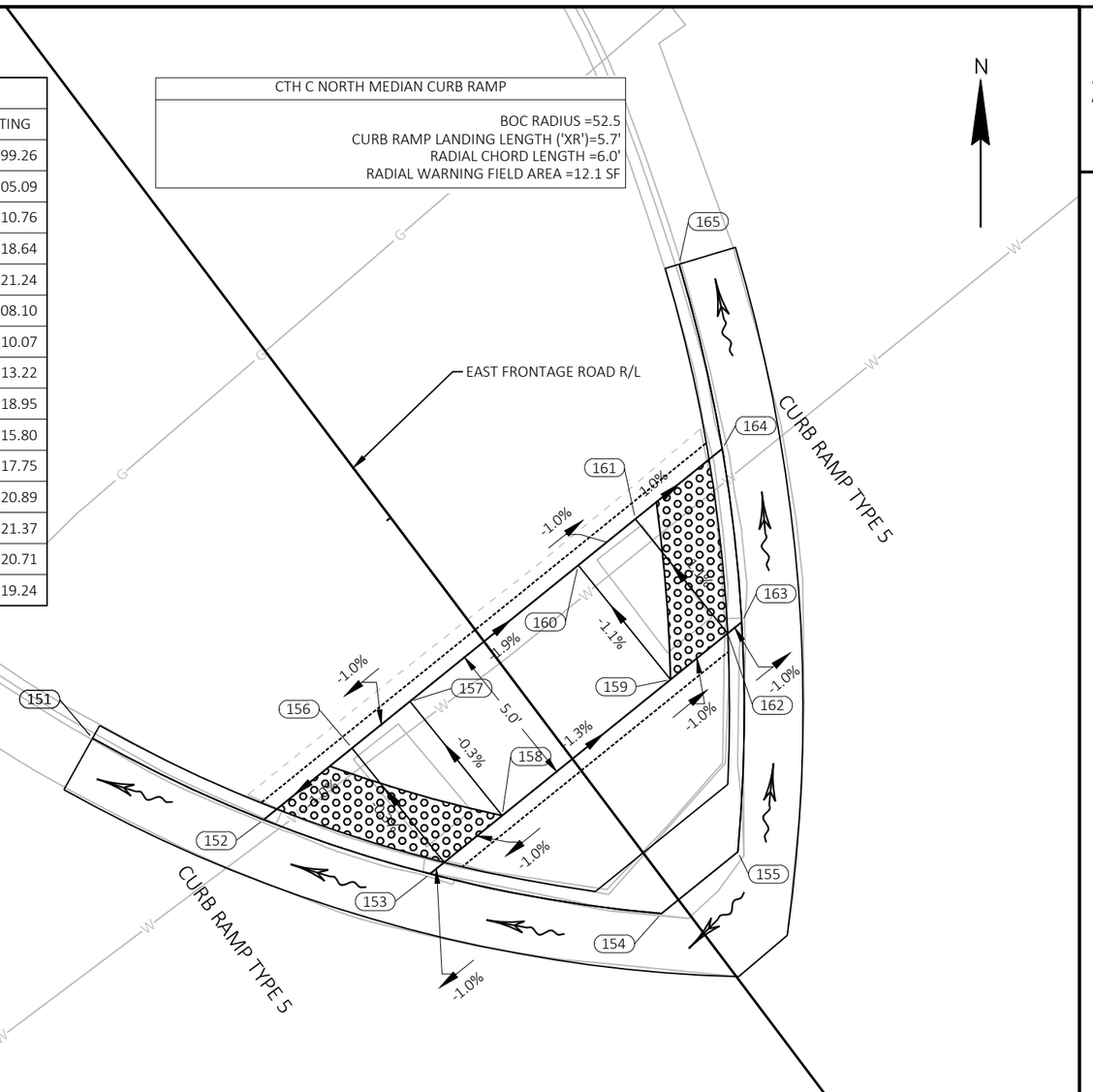

PROJECT NO: 1032-10-75	HWY: EAST FRONTAGE ROAD	COUNTY: KENOSHA	CURB RAMP DETAILS - CTH C NORTH MEDIAN CURB RAMP	SHEET 48	E

FILE NAME : Y:\52XX\5252_DP20.NSFWYEFR.KNS\CADDS\10321015\SHEETSPLAN\021304-CR.DWG
LAYOUT NAME - CTH C-MEDIAN NORTH

PLOT DATE : 10/22/2021 12:37 PM PLOT BY : AARON SCHRAMM PLOT NAME : PLOT SCALE : 1 IN:5 FT

WISDOT/CADDS SHEET 42

2

LEGEND

LL = LEVEL LANDING

DETECTABLE WARNING FIELD

N

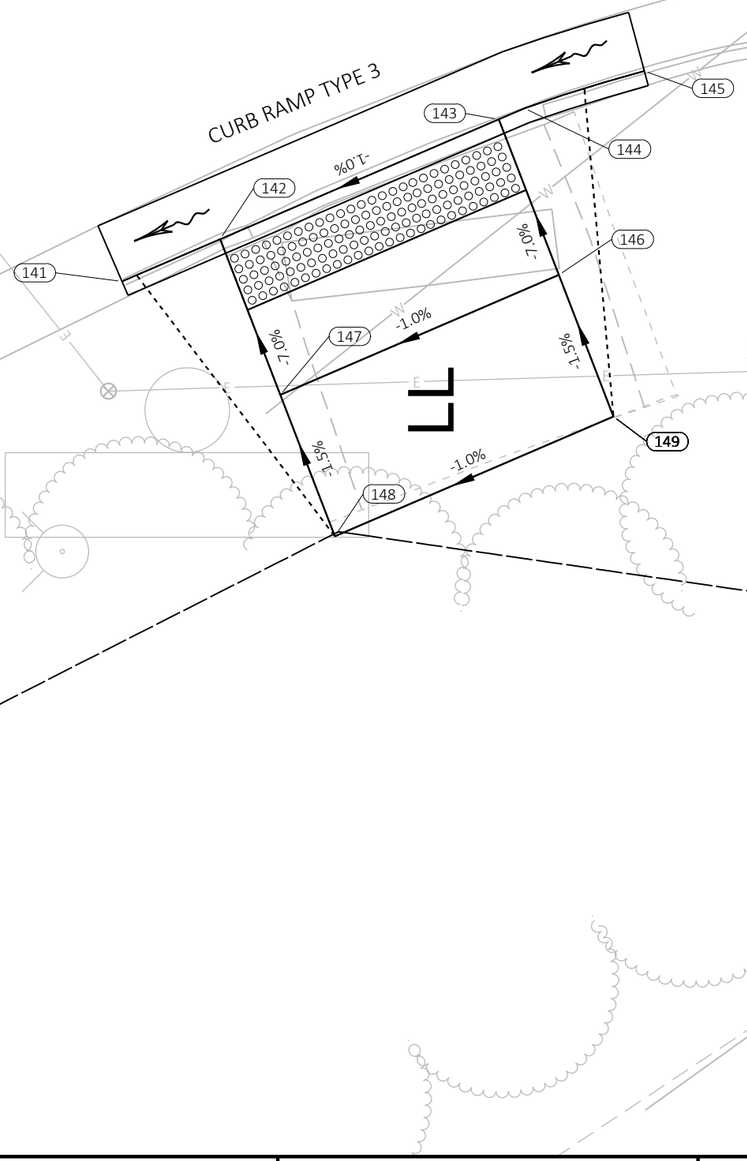

CTH C NW CORNER CURB RAMP					
POINT NUMBER	STATION	OFFSET	ELEVATION	NORTHING	EASTING
141	5203+83.19	75.68' L	686.28	119822.29	595129.00
142	5203+79.77	76.52' L	686.31	119819.05	595130.39
143	5203+70.04	78.89' L	686.42	119809.86	595134.35
144	5203+69.15	79.11' L	686.42	119809.01	595134.71
145	5203+65.25	80.51' L	686.47	119805.06	595135.94
146	5203+71.55	84.18' L	686.80	119807.88	595129.21
147	5203+81.27	81.81' L	686.70	119817.07	595125.26
148	5203+82.64	86.63' L	686.77	119815.27	595120.59
149	5203+72.92	89.00' L	686.88	119806.07	595124.54

LEGEND

LL = LEVEL LANDING

DETECTABLE WARNING FIELD

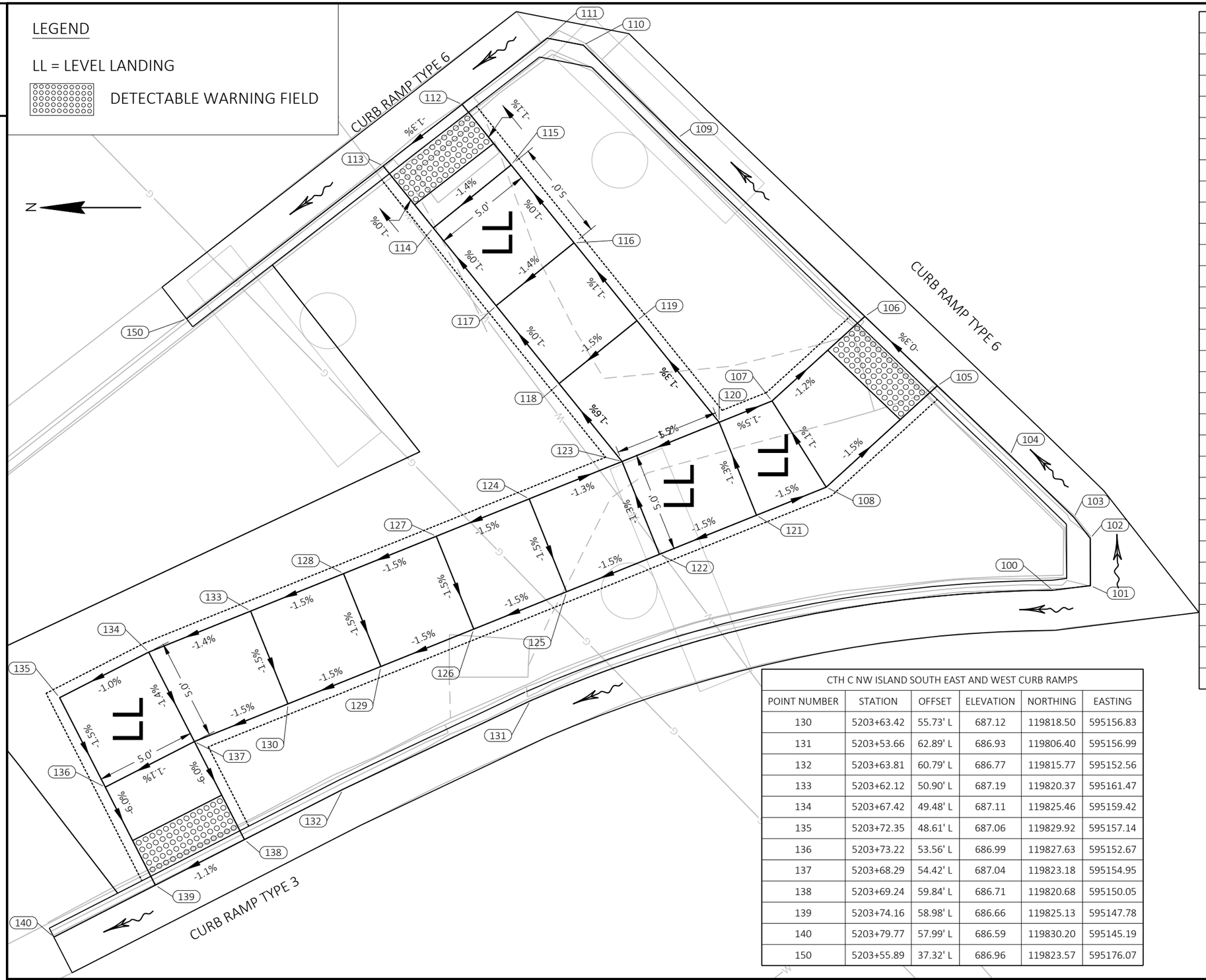

CTH C NW ISLAND SOUTH EAST AND WEST CURB RAMPS					
POINT NUMBER	STATION	OFFSET	ELEVATION	NORTHING	EASTING
100	5203+29.49	74.19' L	687.40	119780.29	595162.51
101	5203+27.84	75.13' L	687.45	119778.41	595162.74
102	5203+26.43	73.24' L	687.43	119778.42	595165.10
103	5203+26.45	71.92' L	687.36	119779.24	595166.15
104	5203+27.13	67.51' L	687.35	119782.43	595169.26
105	5203+27.95	62.56' L	687.33	119786.06	595172.72
106	5203+28.76	57.61' L	687.31	119789.68	595176.18
107	5203+35.00	58.20' L	687.39	119794.32	595171.96
108	5203+35.43	63.26' L	687.44	119791.62	595167.66
109	5203+30.85	44.86' L	687.25	119799.03	595185.11
110	5203+31.84	38.33' L	687.22	119803.75	595189.74
111	5203+33.06	36.96' L	687.21	119805.55	595190.09
112	5203+38.45	37.05' L	687.19	119809.80	595186.78
113	5203+43.45	37.12' L	687.13	119813.75	595183.71
114	5203+43.32	41.11' L	687.17	119811.25	595180.61
115	5203+38.32	40.94' L	687.24	119807.36	595183.75
116	5203+38.15	45.93' L	687.29	119804.21	595179.86
117	5203+43.15	46.10' L	687.22	119808.10	595176.72
118	5203+42.98	51.10' L	687.27	119804.96	595172.83
119	5203+37.98	50.93' L	687.34	119801.07	595175.97
120	5203+37.76	57.45' L	687.43	119796.97	595170.89
121	5203+39.06	62.28' L	687.50	119795.10	595166.26
122	5203+44.11	60.93' L	687.42	119799.95	595164.30
123	5203+42.81	56.10' L	687.35	119801.82	595168.94
124	5203+47.64	54.80' L	687.41	119806.46	595167.07
125	5203+48.93	59.63' L	687.34	119804.59	595162.44
126	5203+53.76	58.33' L	687.27	119809.23	595160.57
127	5203+52.46	53.50' L	687.34	119811.09	595165.21
128	5203+57.29	52.20' L	687.26	119815.73	595163.34
129	5203+58.59	57.03' L	687.19	119813.86	595158.70

CTH C NW ISLAND SOUTH EAST AND WEST CURB RAMPS					
POINT NUMBER	STATION	OFFSET	ELEVATION	NORTHING	EASTING
130	5203+63.42	55.73' L	687.12	119818.50	595156.83
131	5203+53.66	62.89' L	686.93	119806.40	595156.99
132	5203+63.81	60.79' L	686.77	119815.77	595152.56
133	5203+62.12	50.90' L	687.19	119820.37	595161.47
134	5203+67.42	49.48' L	687.11	119825.46	595159.42
135	5203+72.35	48.61' L	687.06	119829.92	595157.14
136	5203+73.22	53.56' L	686.99	119827.63	595152.67
137	5203+68.29	54.42' L	687.04	119823.18	595154.95
138	5203+69.24	59.84' L	686.71	119820.68	595150.05
139	5203+74.16	58.98' L	686.66	119825.13	595147.78
140	5203+79.77	57.99' L	686.59	119830.20	595145.19
150	5203+55.89	37.32' L	686.96	119823.57	595176.07

CTH C WEST MEDIAN CURB RAMP					
POINT NUMBER	STATION	OFFSET	ELEVATION	NORTHING	EASTING
92	3208+76.09	61.86' L	687.49	119734.45	595212.48
93	3208+76.48	56.50' L	687.52	119737.98	595216.53
94	3208+76.85	51.51' L	687.57	119741.28	595220.29
95	3208+76.99	49.54' L	687.49	119742.58	595221.77
96	3208+82.85	49.97' L	687.35	119747.00	595217.91
97	3208+82.66	52.05' L	687.32	119745.59	595216.36
98	3208+82.34	57.05' L	687.28	119742.33	595212.57
99	3208+81.97	62.20' L	687.26	119738.93	595208.67

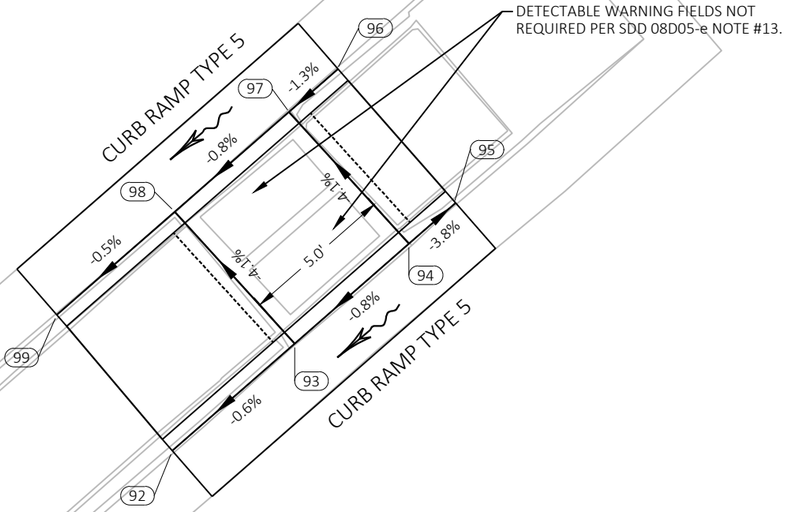

N

LEGEND

LL = LEVEL LANDING

DETECTABLE WARNING FIELD

PROJECT NO: 1032-10-75	HWY: EAST FRONTAGE ROAD	COUNTY: KENOSHA	CURB RAMP DETAILS - CTH C WEST MEDIAN CURB RAMP	SHEET 51	E

FILE NAME : Y:\52XX\5252_DP20.NSFWYEFR.KNS\CADDS\10321015\SHEETSPLAN\021304-CR.DWG
LAYOUT NAME - CTH C-MEDIAN WEST

PLOT DATE : 10/22/2021 12:41 PM PLOT BY : AARON SCHRAMM PLOT NAME : PLOT SCALE : 1 IN:5 FT

2

LEGEND

LL = LEVEL LANDING

DETECTABLE WARNING FIELD

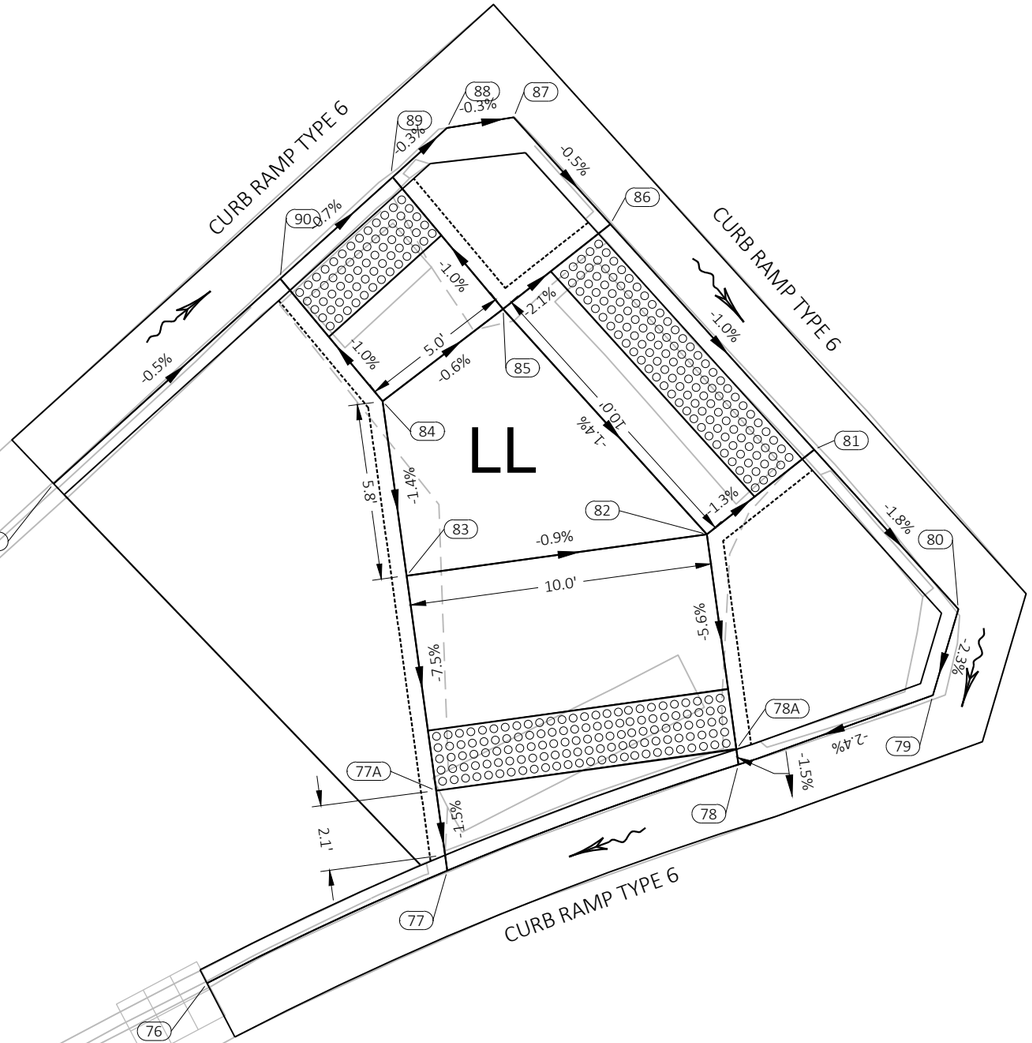

CTH C SW ISLAND SOUTH EAST AND NORTH CURB RAMPS					
POINT NUMBER	STATION	OFFSET	ELEVATION	NORTHING	EASTING
76	3208+26.00	71.29' L	686.74	119688.76	595235.09
77	3208+24.20	62.72' L	686.81	119692.48	595243.02
77A	3208+26.52	61.42' L	686.85	119695.12	595242.66
78	3208+21.21	52.94' L	686.89	119695.98	595252.63
78A	3208+21.65	52.69' L	686.90	119696.48	595252.56
79	3208+19.17	46.43' L	687.04	119698.27	595259.05
80	3208+20.94	44.06' L	687.11	119701.10	595259.89
81	3208+28.00	44.69' L	687.24	119706.37	595255.13
82	3208+27.90	49.20' L	687.30	119703.57	595251.59
83	3208+32.77	57.93' L	687.39	119702.21	595241.68
84	3208+37.85	55.10' L	687.47	119707.97	595240.89
85	3208+37.88	50.10' L	687.44	119711.01	595244.87
86	3208+37.99	45.59' L	687.34	119713.80	595248.41
87	3208+42.73	46.01' L	687.36	119717.33	595245.21
88	3208+43.77	47.98' L	687.37	119716.98	595243.02
89	3208+43.64	50.39' L	687.38	119715.43	595241.16
90	3208+43.11	55.37' L	687.41	119712.00	595237.51
91	3208+42.21	65.41' L	687.46	119705.24	595230.03

2

PROJECT NO: 1032-10-75	HWY: EAST FRONTAGE ROAD	COUNTY: KENOSHA	CURB RAMP DETAILS - CTH C SW ISLAND SOUTH EAST AND NORTH CURB RAMPS	SHEET 52	E

CTH C SW CORNER CURB RAMP
BOC RADIUS =60.5 CURB RAMP LANDING LENGTH ('XR')=12.9' RADIAL CHORD LENGTH =13.9' RADIAL WARNING FIELD AREA = 28.4 SF

CTH C SW CORNER CURB RAMP					
POINT NUMBER	STATION	OFFSET	ELEVATION	NORTHING	EASTING
66	3207+86.01	52.83' L	686.23	119667.93	595273.89
67	3207+92.09	57.86' L	686.24	119669.76	595266.22
68	3208+00.99	68.41' L	686.28	119670.52	595252.44
69	3208+05.24	75.87' L	686.27	119669.42	595243.92
70	3208+00.55	72.41' L	686.32	119667.77	595249.51
71	3207+90.61	71.31' L	686.44	119660.48	595256.36
72	3207+89.96	77.28' L	686.80	119656.37	595251.99
73	3207+99.90	78.37' L	686.68	119663.65	595245.14
74	3207+99.35	83.34' L	686.75	119660.23	595241.50
75	3207+89.29	83.30' L	686.89	119652.22	595247.58
75 A	3207+89.87	88.97' L	687.14	119649.27	595242.70
75 B	3207+99.83	88.01' L	686.99	119657.80	595237.49
75 C	3208+00.34	92.98' L	687.24	119655.21	595233.21
75 D	3207+90.38	93.95' L	687.38	119646.68	595238.43
75 E	3207+90.81	98.15' L	687.60	119644.50	595234.81
75 F	3208+00.76	97.18' L	687.42	119653.03	595229.59

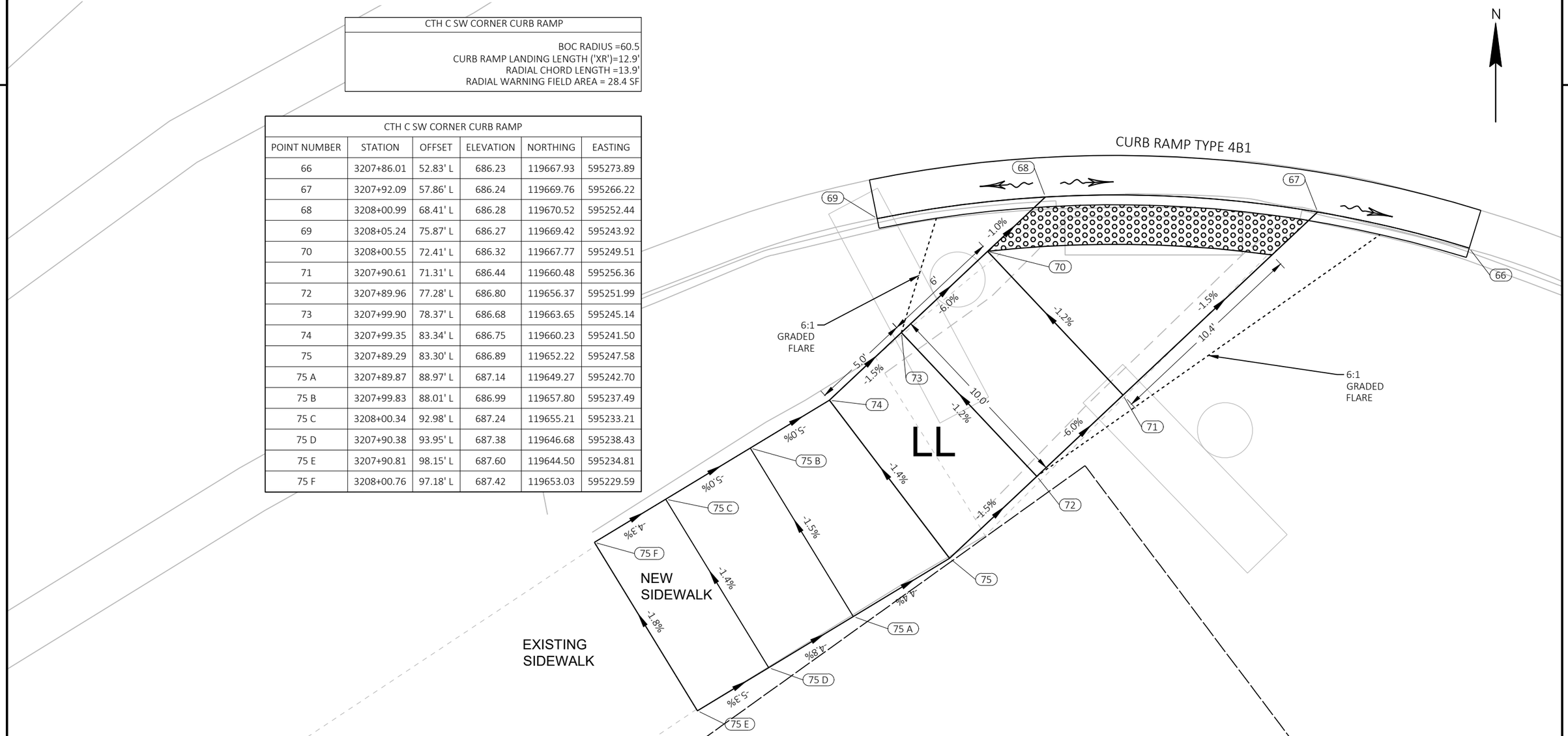

LEGEND

LL = LEVEL LANDING

DETECTABLE WARNING FIELD

PROJECT NO: 1032-10-75	HWY: EAST FRONTAGE ROAD	COUNTY: KENOSHA	CURB RAMP DETAILS - CTH C SW CORNER CURB RAMP	SHEET 53	E

FILE NAME : Y:\52XX\5252_DP20.NSFWYEFR.KNS\CADDS\10321015\SHEETSPLAN\021304-CR.DWG
LAYOUT NAME - CTH C-SW_1

PLOT DATE : 10/22/2021 12:43 PM PLOT BY : AARON SCHRAMM PLOT NAME : PLOT SCALE : 1 IN:5 FT

WISDOT/CADDS SHEET 42

CTH C SE ISLAND EAST NORTH AND WEST CURB RAMPS					
POINT NUMBER	STATION	OFFSET	ELEVATION	NORTHING	EASTING
41	3208+27.60	62.07' R	686.60	119770.28	595340.64
42	3208+33.68	64.44' R	686.67	119776.57	595338.87
43	3208+43.81	68.96' R	686.79	119787.38	595336.39
44	3208+48.96	71.55' R	686.80	119793.05	595335.37
45	3208+52.17	69.74' R	686.82	119794.52	595331.98
46	3208+51.81	64.86' R	686.84	119791.30	595328.30
47	3208+51.45	59.87' R	686.86	119788.01	595324.54
48	3208+51.37	58.72' R	686.87	119787.25	595323.67
49	3208+48.96	60.06' R	686.90	119786.13	595326.18
50	3208+49.32	65.04' R	686.88	119789.42	595329.95
51	3208+43.71	65.45' R	686.84	119785.19	595333.65
52	3208+43.58	60.45' R	686.87	119782.07	595329.73
53	3208+33.58	60.72' R	686.72	119774.25	595335.96
54	3208+33.48	56.70' R	686.77	119771.75	595332.82
55	3208+43.47	56.43' R	686.92	119779.57	595326.59
56	3208+43.34	51.43' R	687.01	119776.46	595322.68
57	3208+33.34	51.70' R	686.96	119768.63	595328.91
58	3208+33.21	46.70' R	687.03	119765.52	595325.00
59	3208+43.20	46.44' R	687.09	119773.34	595318.77
60	3208+26.28	37.59' R	686.83	119754.50	595321.89

CTH C SE ISLAND EAST NORTH AND WEST CURB RAMPS					
POINT NUMBER	STATION	OFFSET	ELEVATION	NORTHING	EASTING
61	3208+32.96	37.43' R	686.94	119759.74	595317.74
62	3208+42.95	37.20' R	686.99	119767.58	595311.53
63	3208+48.79	37.07' R	687.09	119772.17	595307.93
64	3208+50.01	38.11' R	687.05	119773.77	595308.03
65	3208+50.52	45.88' R	686.95	119778.85	595313.92

CTH C SE ISLAND EAST CURB RAMP
BOC RADIUS =179.5' CURB RAMP LANDING LENGTH ('XR')=7.0' RADIAL CHORD LENGTH =11.1' RADIAL WARNING FIELD AREA = 22.1 SF

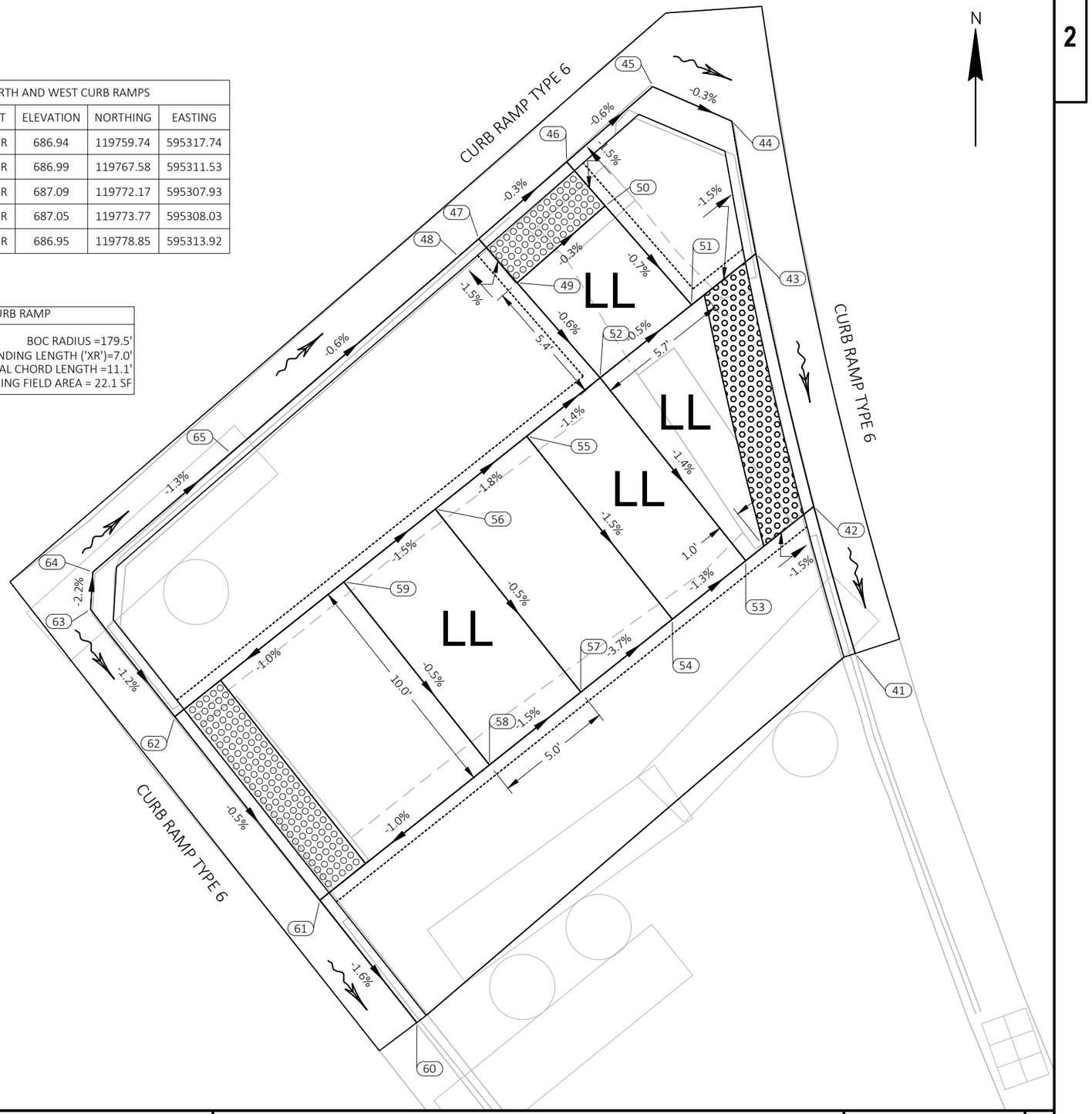

LEGEND

LL = LEVEL LANDING

DETECTABLE WARNING FIELD

PROJECT NO: 1032-10-75	HWY: EAST FRONTAGE ROAD	COUNTY: KENOSHA	CURB RAMP DETAILS - CTH C SE ISLAND CURB RAMP	SHEET 54	E

FILE NAME : Y:\52XX\5252_DP20.NSFWYEFR.KNS\CADDS\10321015\SHEETSPLAN\021304-CR.DWG
LAYOUT NAME - CTH C-SE_2
PLOT DATE : 10/22/2021 12:44 PM PLOT BY : AARON SCHRAMM PLOT NAME : PLOT SCALE : 1 IN:5 FT
WISDOT/CADDS SHEET 42

CTH C EAST MEDIAN CURB RAMP					
POINT NUMBER	STATION	OFFSET	ELEVATION	NORTHING	EASTING
152	5202+97.00	55.86' R	686.84	119832.59	595285.93
153	5202+97.08	57.08' R	686.83	119833.40	595286.85
154	5202+97.43	62.07' R	686.78	119836.68	595290.63
155	5202+97.60	64.41' R	686.77	119838.22	595292.40
156	5203+03.05	55.37' R	686.97	119837.13	595281.90
157	5203+03.13	56.78' R	686.96	119838.04	595282.97
158	5203+03.42	61.77' R	686.93	119841.27	595286.79
159	5203+03.52	63.67' R	686.93	119842.50	595288.24

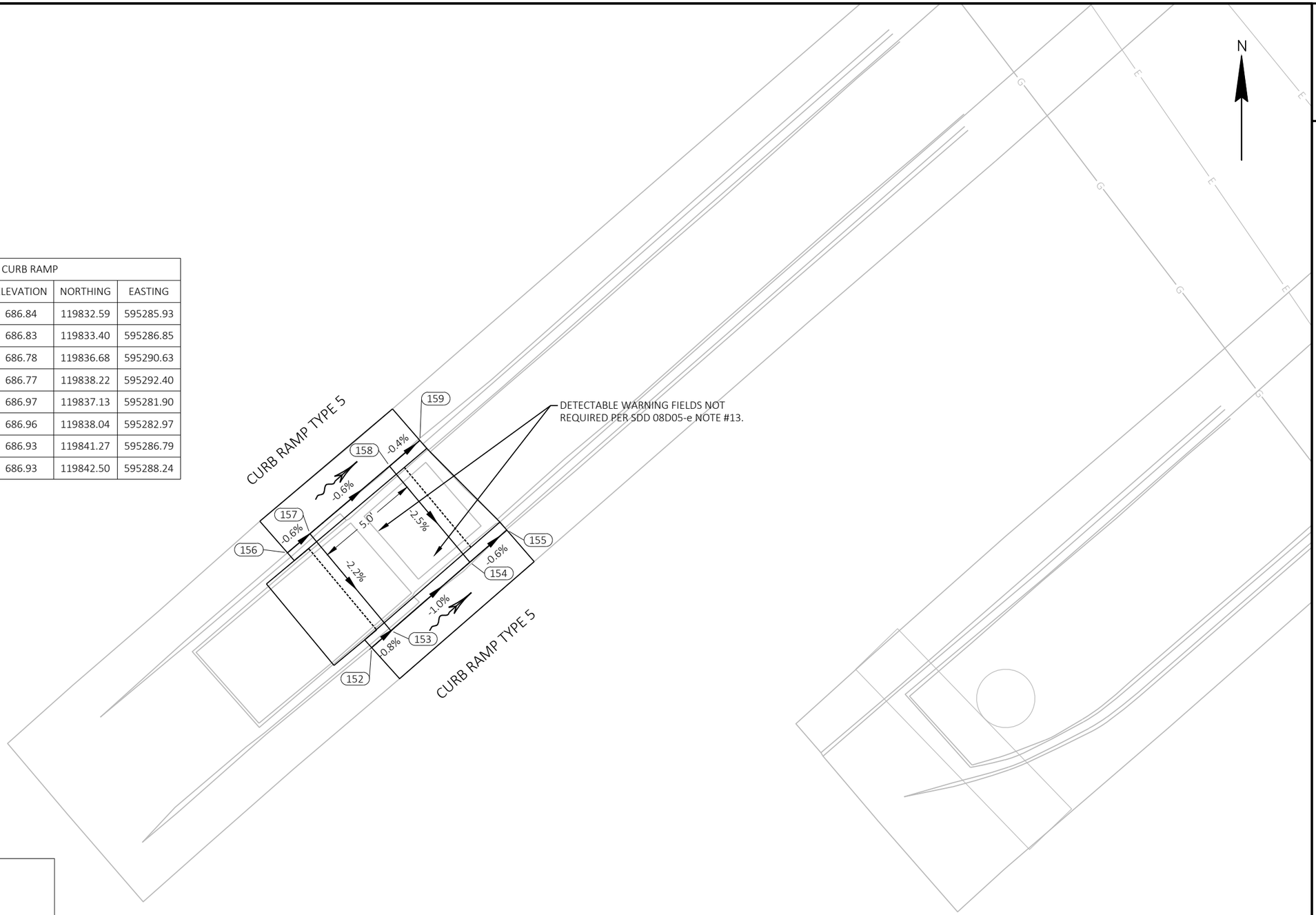

LEGEND

LL = LEVEL LANDING

DETECTABLE WARNING FIELD

PROJECT NO: 1032-10-15	HWY: EAST FRONTAGE ROAD	COUNTY: KENOSHA	CURB RAMP DETAILS - CTH C EAST MEDIAN CURB RAMP	SHEET 55	E

CTH C SE CORNER CURB RAMP					
POINT NUMBER	STATION	OFFSET	ELEVATION	NORTHING	EASTING
31	3208+45.89	111.55' R	686.43	119814.66	595369.16
32	3208+41.61	101.89' R	686.37	119805.44	595364.02
33	3208+32.21	89.36' R	686.29	119790.39	595359.67
34	3208+23.12	81.86' R	686.24	119778.62	595359.15
35	3208+31.38	106.45' R	686.55	119800.01	595373.81
36	3208+41.37	106.93' R	686.45	119808.28	595368.19
37	3208+41.08	112.93' R	686.87	119811.65	595373.15
38	3208+31.09	112.44' R	686.97	119803.38	595378.78
39	3208+30.85	117.44' R	687.02	119806.19	595382.91
40	3208+40.83	117.92' R	686.92	119814.46	595377.29
40 A	3208+40.59	122.91' R	687.18	119817.27	595381.42
40 B	3208+30.60	122.43' R	687.29	119809.00	595387.05
40 C	3208+30.47	125.18' R	687.37	119810.55	595389.32
40 D	3208+40.46	125.67' R	687.37	119818.82	595383.70

CTH C SE CORNER CURB RAMP
BOC RADIUS =57.5 CURB RAMP LANDING LENGTH ('XR')=16.4' RADIAL CHORD LENGTH =15.9' RADIAL WARNING FIELD AREA = 32.9 SF

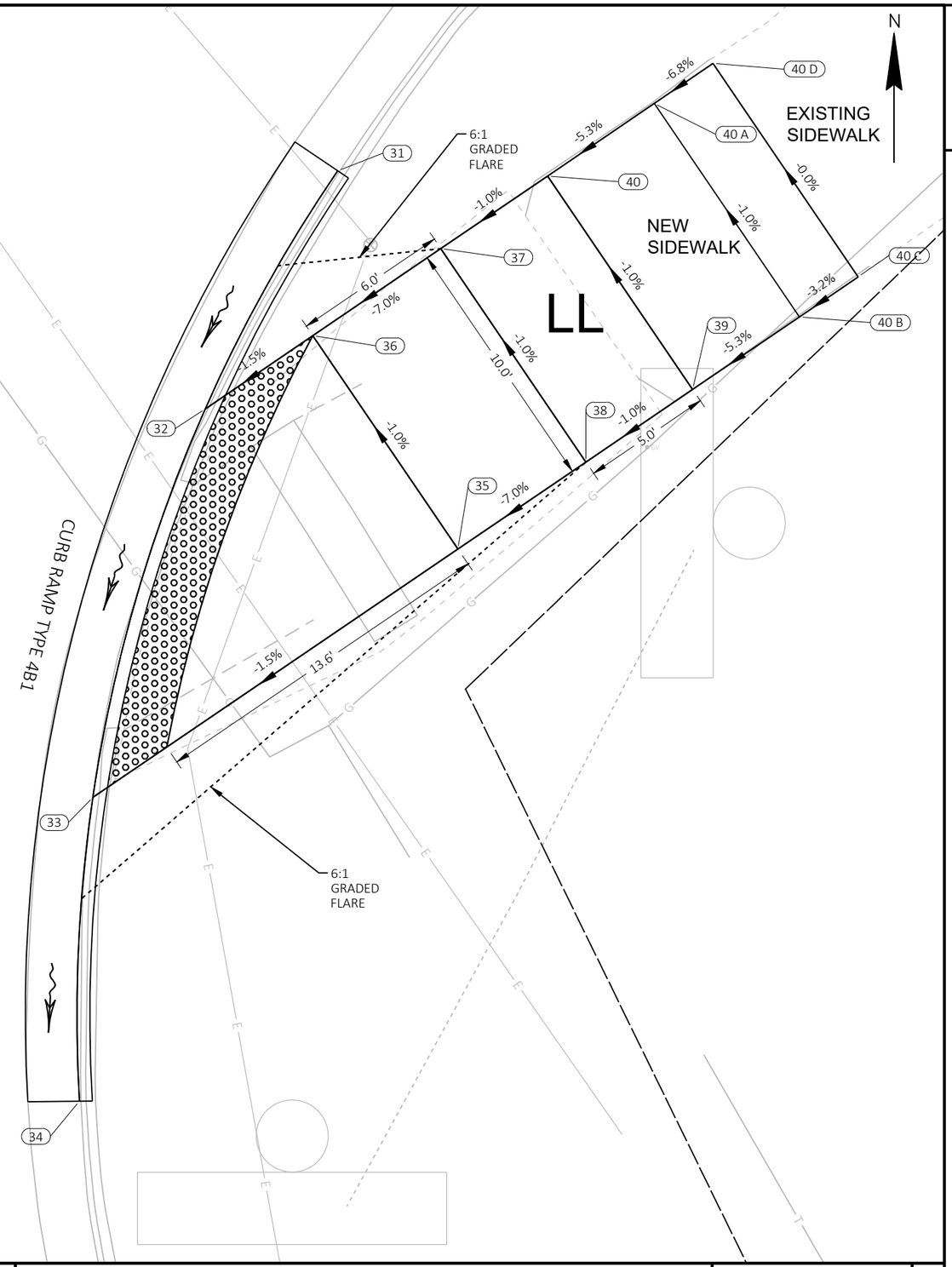

LEGEND

LL = LEVEL LANDING

DETECTABLE WARNING FIELD

PROJECT NO: 1032-10-75	HWY: EAST FRONTAGE ROAD	COUNTY: KENOSHA	CURB RAMP DETAILS - CTH C SE CORNER CURB RAMP	SHEET 56	E

FILE NAME : Y:\52XX\5252_DP20.NSFWYEFR.KNS\CADDS\10321015\SHEETSPLAN\021304-CR.DWG
LAYOUT NAME - CTH C-SE_1
PLOT DATE : 10/22/2021 12:46 PM PLOT BY : AARON SCHRAMM PLOT NAME : PLOT SCALE : 1 IN:5 FT
WISDOT/CADDS SHEET 42

CTH C NE ISLAND NORTH SOUTH AND WEST CURB RAMPS					
POINT NUMBER	STATION	OFFSET	ELEVATION	NORTHING	EASTING
7	5203+47.07	44.19' R	686.95	119865.56	595246.48
8	5203+45.86	44.18' R	686.96	119864.59	595247.20
9	5203+40.86	44.16' R	687.03	119860.58	595250.19
10	5203+36.53	44.14' R	687.10	119857.12	595252.78
11	5203+35.40	45.64' R	687.07	119857.12	595254.65
12	5203+40.79	46.66' R	687.07	119862.04	595252.23
13	5203+45.79	46.68' R	687.00	119866.04	595249.24
14	5203+45.69	50.68' R	687.04	119868.37	595252.49
15	5203+40.69	50.66' R	687.11	119864.36	595255.48
16	5203+40.59	54.66' R	687.13	119866.69	595258.74
17	5203+35.95	52.45' R	687.01	119861.66	595259.77
18	5203+36.23	55.12' R	686.99	119863.48	595261.73
19	5203+36.75	60.09' R	686.96	119866.89	595265.39
20	5203+37.32	65.57' R	686.92	119870.64	595269.42
21	5203+41.19	61.72' R	687.04	119871.41	595264.02
22	5203+45.59	54.68' R	687.06	119870.70	595255.75
23	5203+45.51	57.84' R	687.01	119872.53	595258.32
23A	5203+47.80	58.85' R	686.98	119874.97	595257.75
24	5203+43.45	62.68' R	687.00	119873.80	595263.42
24A	5203+45.75	63.66' R	686.96	119876.23	595262.82

CTH C NE ISLAND NORTH SOUTH AND WEST CURB RAMPS					
POINT NUMBER	STATION	OFFSET	ELEVATION	NORTHING	EASTING
25	5203+48.59	64.87' R	686.79	119879.22	595262.08
26	5203+50.62	60.10' R	686.78	119877.97	595257.05
27	5203+54.79	56.48' R	686.64	119879.12	595251.65
28	5203+52.91	61.12' R	686.60	119880.42	595256.49
29	5203+51.43	66.08' R	686.58	119882.22	595261.34
30	5203+50.66	69.74' R	686.49	119883.80	595264.73

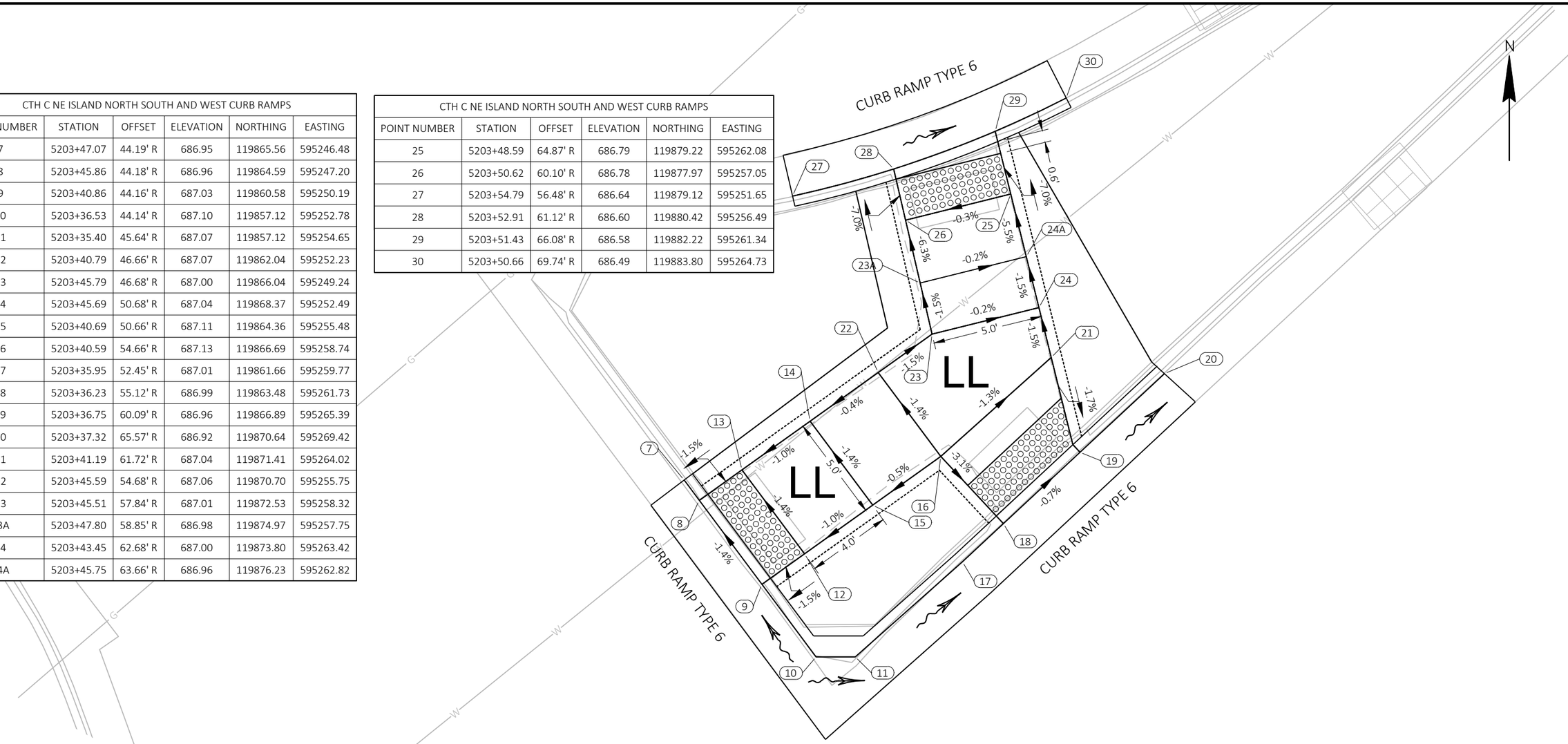

CTH C EAST MEDIAN CURB RAMP					
POINT NUMBER	STATION	OFFSET	ELEVATION	NORTHING	EASTING
152	5202+97.00	55.86' R	686.84	119832.59	595285.93
153	5202+97.08	57.08' R	686.83	119833.40	595286.85
154	5202+97.43	62.07' R	686.78	119836.68	595290.63
155	5202+97.60	64.41' R	686.77	119838.22	595292.40
156	5203+03.05	55.37' R	686.97	119837.13	595281.90
157	5203+03.13	56.78' R	686.96	119838.04	595282.97
158	5203+03.42	61.77' R	686.93	119841.27	595286.79
159	5203+03.52	63.67' R	686.93	119842.50	595288.24

LEGEND

LL = LEVEL LANDING

DETECTABLE WARNING FIELD

PROJECT NO: 1032-10-75	HWY: EAST FRONTAGE ROAD	COUNTY: KENOSHA	CURB RAMP DETAILS - CTH C NE ISLAND	SHEET 57	E

2

LEGEND

LL = LEVEL LANDING

DETECTABLE WARNING FIELD

CTH C NE CORNER CURB RAMP
BOC RADIUS =64.5'
CURB RAMP LANDING LENGTH ('XR')=3.0'
RADIAL CHORD LENGTH =10.1'
RADIAL WARNING FIELD AREA =20.1 SF

CTH C NE CORNER CURB RAMP					
POINT NUMBER	STATION	OFFSET	ELEVATION	NORTHING	EASTING
1	5203+69.26	85.03' R	686.31	119907.86	595265.74
2	5203+72.08	77.83' R	686.25	119905.78	595258.30
3	5203+76.98	69.07' R	686.16	119904.42	595248.35
4	5203+81.06	63.58' R	686.03	119904.39	595241.51
5	5203+81.68	82.09' R	686.38	119916.01	595255.93
6	5203+86.75	73.40' R	686.27	119914.83	595245.94

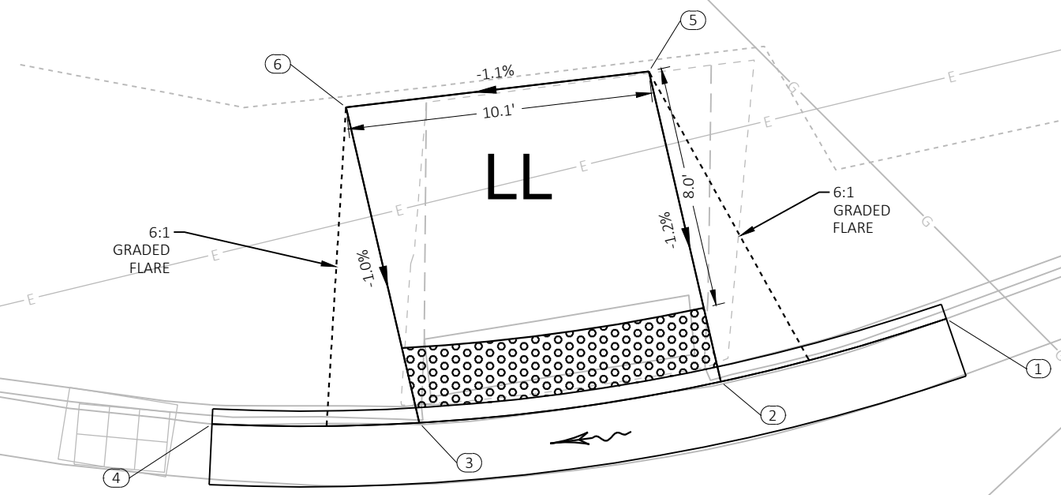

CURB RAMP TYPE 1

2

PROJECT NO: 1032-10-75	HWY: EAST FRONTAGE ROAD	COUNTY: KENOSHA	CURB RAMP DETAILS - CTH C NE CORNER CURB RAMP	SHEET 58	E

FILE NAME : Y:\52XX\5252_DP20.NSFWYEFR.KNS\CADDS\10321015\SHEETSPLAN\021304-CR.DWG
LAYOUT NAME - CTH C-NE_1

PLOT DATE : 10/22/2021 12:49 PM PLOT BY : AARON SCHRAMM PLOT NAME : PLOT SCALE : 1 IN:5 FT

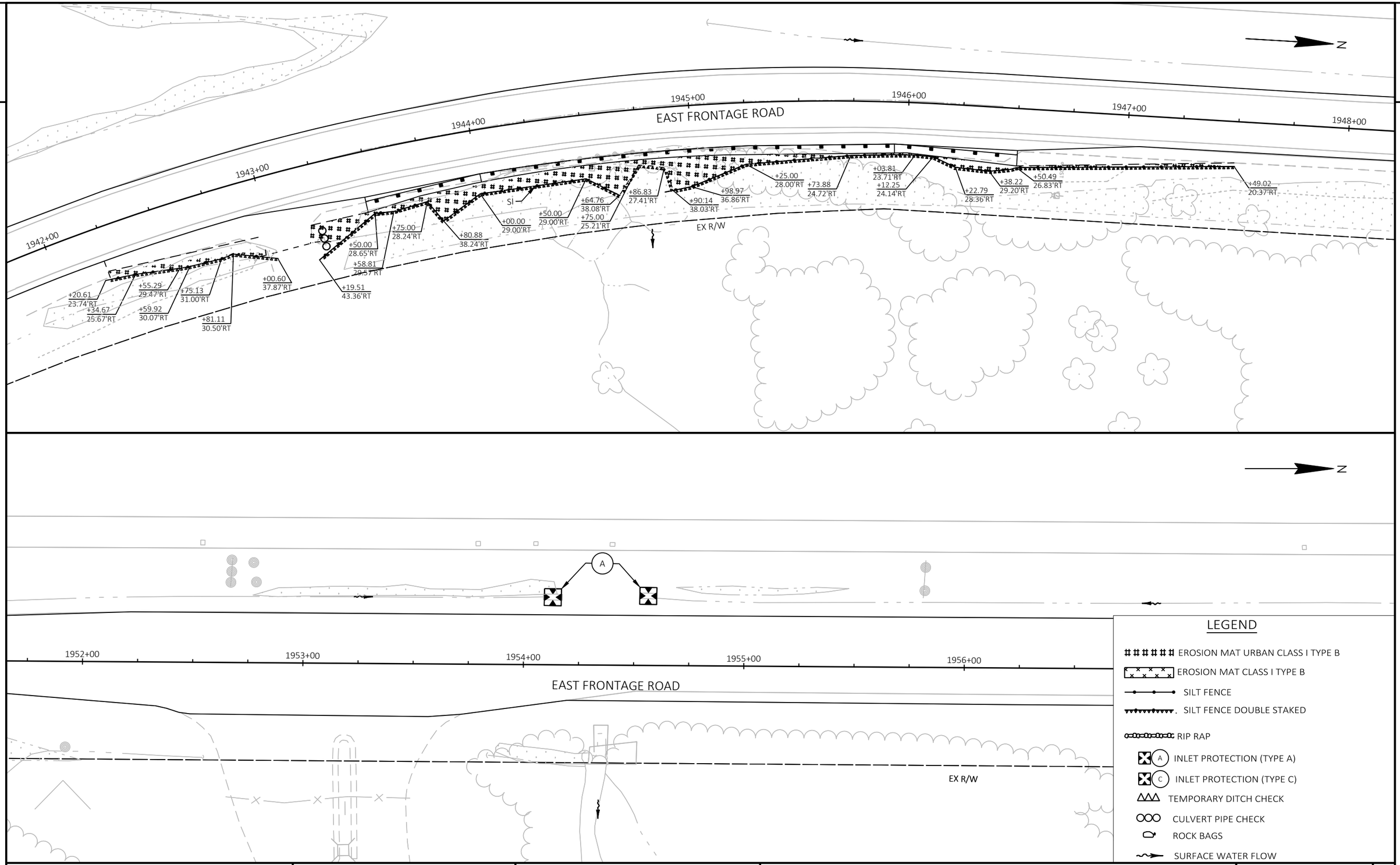

PROJECT NO: 1032-10-75	HWY: EAST FRONTAGE ROAD	COUNTY: KENOSHA	EROSION CONTROL - EAST FRONTAGE ROAD	SHEET 59	E

FILE NAME : Y:\52XX\5252_DP20.NSFWYEFR.KNS\CADDS\10321015\SHEETSPLAN\022001-EC.DWG
LAYOUT NAME - 022001
PLOT DATE : 12/17/2021 4:10 PM
PLOT BY : AARON SCHRAMM
PLOT NAME :
PLOT SCALE : 1 IN:40 FT
WISDOT/CADDS SHEET 44

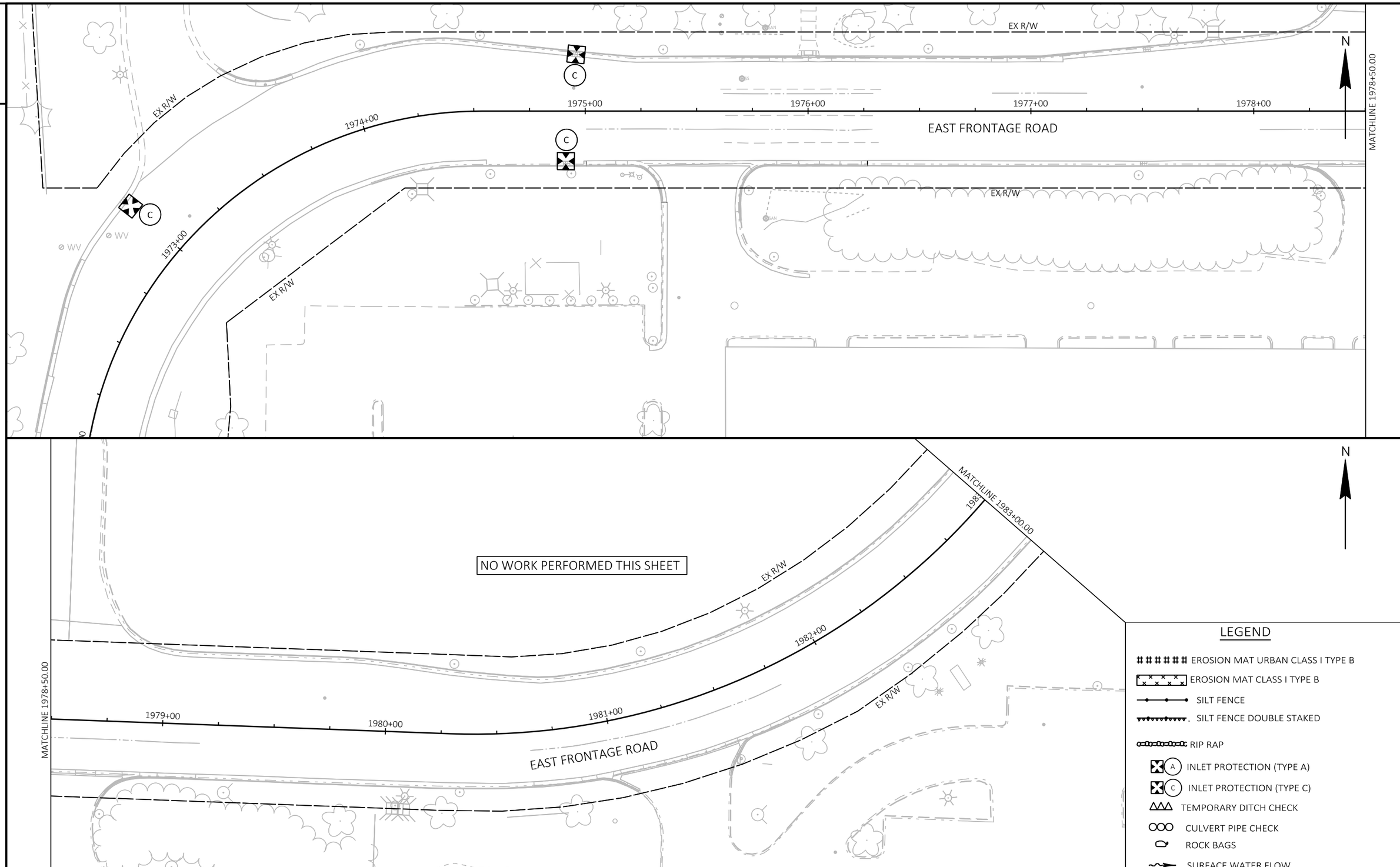

PROJECT NO: 1032-10-75	HWY: EAST FRONTAGE ROAD	COUNTY: KENOSHA	EROSION CONTROL - EAST FRONTAGE ROAD	SHEET 60	E

FILE NAME : Y:\52XX\5252_DP20.NSFWYEFR.KNS\CADDS\10321015\SHEETSPLAN\022001-EC.DWG
LAYOUT NAME - 022002
PLOT DATE : 12/17/2021 4:12 PM
PLOT BY : AARON SCHRAMM
PLOT NAME :
PLOT SCALE : ##########
WISDOT/CADDS SHEET 44

2

2

MATCHLINE 1983+00.00

+00

EX R/W

1984+00

NO WORK PERFORMED THIS SHEET

1985+00

1986+00

1987+00

1988+00

1989

EAST FRONTAGE ROAD

MATCHLINE 1989+00.00

EX R/W

EX R/W

N

SI

C

MATCHLINE 1989+00.00

9+00

1990+00

1991+00

1992+00

1993+00

1994+00

EAST FRONTAGE ROAD

C

N

MATCHLINE 1994+75.00

SI

EX R/W

LEGEND

- EROSION MAT URBAN CLASS I TYPE B
- EROSION MAT CLASS I TYPE B
- SILT FENCE
- SILT FENCE DOUBLE STAKED
- RIP RAP
- A INLET PROTECTION (TYPE A)
- C INLET PROTECTION (TYPE C)
- TEMPORARY DITCH CHECK
- CULVERT PIPE CHECK
- ROCK BAGS
- SURFACE WATER FLOW

PROJECT NO: 1032-10-75	HWY: EAST FRONTAGE ROAD	COUNTY: KENOSHA	EROSION CONTROL - EAST FRONTAGE ROAD	SHEET 61	E

FILE NAME : Y:\52XX\5252_DP20.NSFWYEFR.KNS\CADDS\10321015\SHEETSPLAN\022001-EC.DWG
LAYOUT NAME - 022003

PLOT DATE : 12/17/2021 4:13 PM PLOT BY : AARON SCHRAMM PLOT NAME : PLOT SCALE : 1 IN:40 FT

WISDOT/CADDS SHEET 44

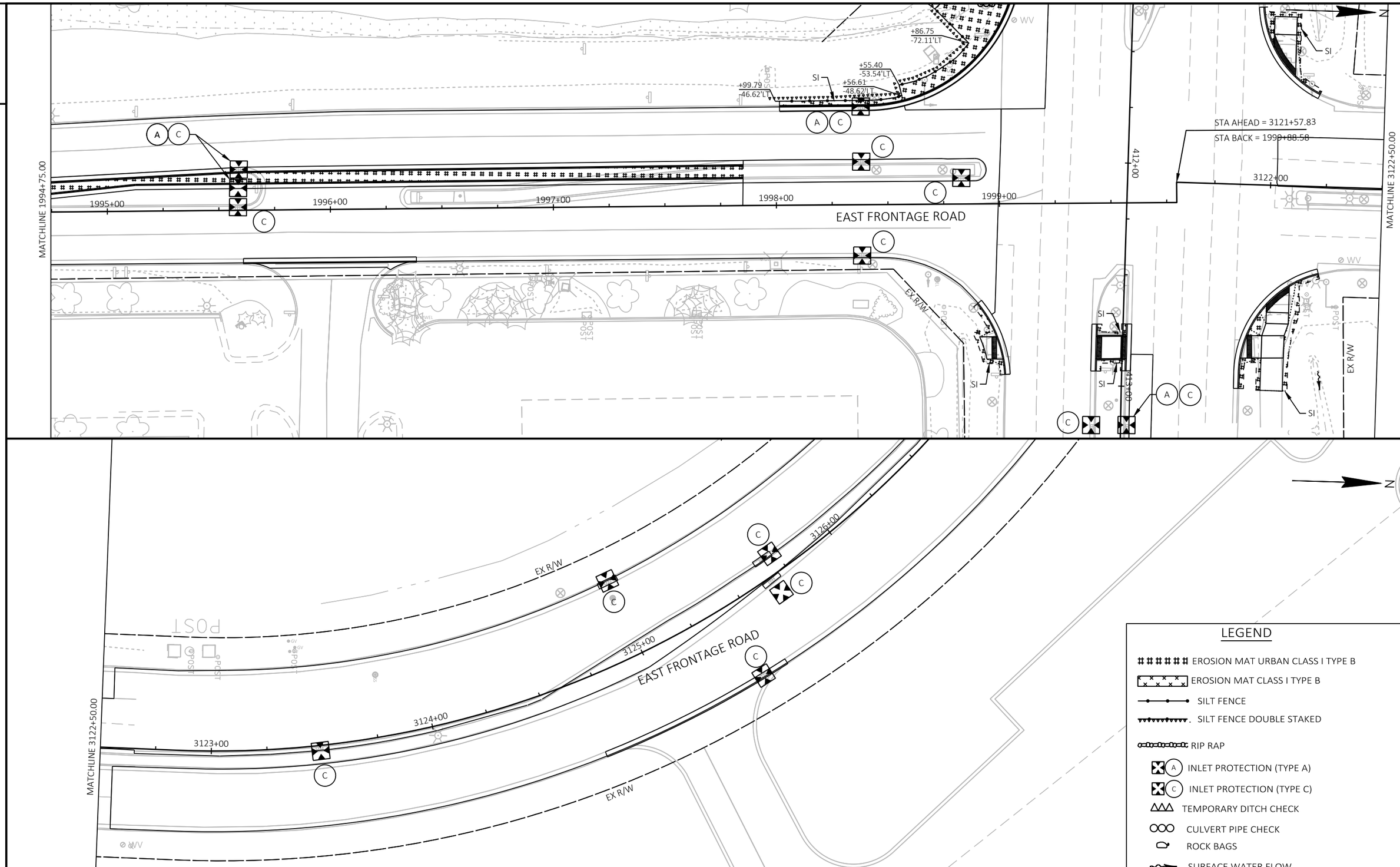

PROJECT NO: 1032-10-75	HWY: EAST FRONTAGE ROAD	COUNTY: KENOSHA	EROSION CONTROL - EAST FRONTAGE ROAD	SHEET 62	E

FILE NAME : Y:\52XX\5252_DP20.NSFWYEFR.KNS\CADDS\10321015\SHEETSPLAN\022001-EC.DWG
LAYOUT NAME - 022004
PLOT DATE : 12/17/2021 4:15 PM
PLOT BY : AARON SCHRAMM
PLOT NAME :
PLOT SCALE : 1 IN:40 FT
WISDOT/CADDS SHEET 44

2

2

N

EX R/W

3127+00 3128+00 3129+00 3130+00 3131+00

EAST FRONTAGE ROAD

EX R/W

LEGEND

- EROSION MAT URBAN CLASS I TYPE B
- EROSION MAT CLASS I TYPE B
- SILT FENCE
- SILT FENCE DOUBLE STAKED
- RIP RAP
- INLET PROTECTION (TYPE A)
- INLET PROTECTION (TYPE C)
- TEMPORARY DITCH CHECK
- CULVERT PIPE CHECK
- ROCK BAGS
- SURFACE WATER FLOW

N

3139+00 3140+00 3141+00 3142+00 3143+00 3144+00

EAST FRONTAGE ROAD

SI

EX R/W

PROJECT NO: 1032-10-75	HWY: EAST FRONTAGE ROAD	COUNTY: KENOSHA	EROSION CONTROL - EAST FRONTAGE ROAD	SHEET 63	E

FILE NAME : Y:\52XX\5252_DP20.NSFWYEFR.KNS\CADDS\10321015\SHEETSPLAN\022001-EC.DWG
LAYOUT NAME - 022005

PLOT DATE : 12/17/2021 4:16 PM PLOT BY : AARON SCHRAMM PLOT NAME : PLOT SCALE : 1 IN:40 FT

2

2

N

3147+00 3148+00 3149+00 3150+00 3151+00 3152+00 3153+00

EAST FRONTAGE ROAD

EX R/W

+00.00 34.12'RT
+25.04 38.28'RT
+50.00 43.81'RT
+92.75 44.21'RT
+50.06 39.05'RT
+74.96 43.93'RT
SI
+00.03 32.36'RT
+35.54 25.08'RT
+44.28 25.05'RT
+49.30 24.57'RT
+64.93 23.51'RT
SI
+99.95 25.84'RT
+10.88 26.09'RT
+19.22 26.22'RT
+40.91 26.53'RT
+50.00 26.97'RT
+57.87 25.64'RT
+59.94 25.82'RT
+69.98 34.27'RT
+93.87 33.69'RT
+00.00 33.33'RT
+19.10 22.95'RT
+44.13 21.95'RT
+49.86 21.41'RT
+61.13 20.76'RT

N

SI

A

3164+00 3165+00 3166+00 3167+00 3168+00 3169+00

MATCHLINE 3169+75.00

EAST FRONTAGE ROAD

EX R/W

LEGEND

- EROSION MAT URBAN CLASS I TYPE B
- EROSION MAT CLASS I TYPE B
- SILT FENCE
- SILT FENCE DOUBLE STAKED
- RIP RAP
- A INLET PROTECTION (TYPE A)
- C INLET PROTECTION (TYPE C)
- TEMPORARY DITCH CHECK
- CULVERT PIPE CHECK
- ROCK BAGS
- SURFACE WATER FLOW

PROJECT NO: 1032-10-75	HWY: EAST FRONTAGE ROAD	COUNTY: KENOSHA	EROSION CONTROL - EAST FRONTAGE ROAD	SHEET 64	E

FILE NAME : Y:\52XX\5252_DP20.NSFWYEFR.KNS\CADDS\10321015\SHEETSPLAN\022001-EC.DWG
LAYOUT NAME - 022006

PLOT DATE : 12/17/2021 4:18 PM PLOT BY : AARON SCHRAMM PLOT NAME : PLOT SCALE : 1 IN:40 FT

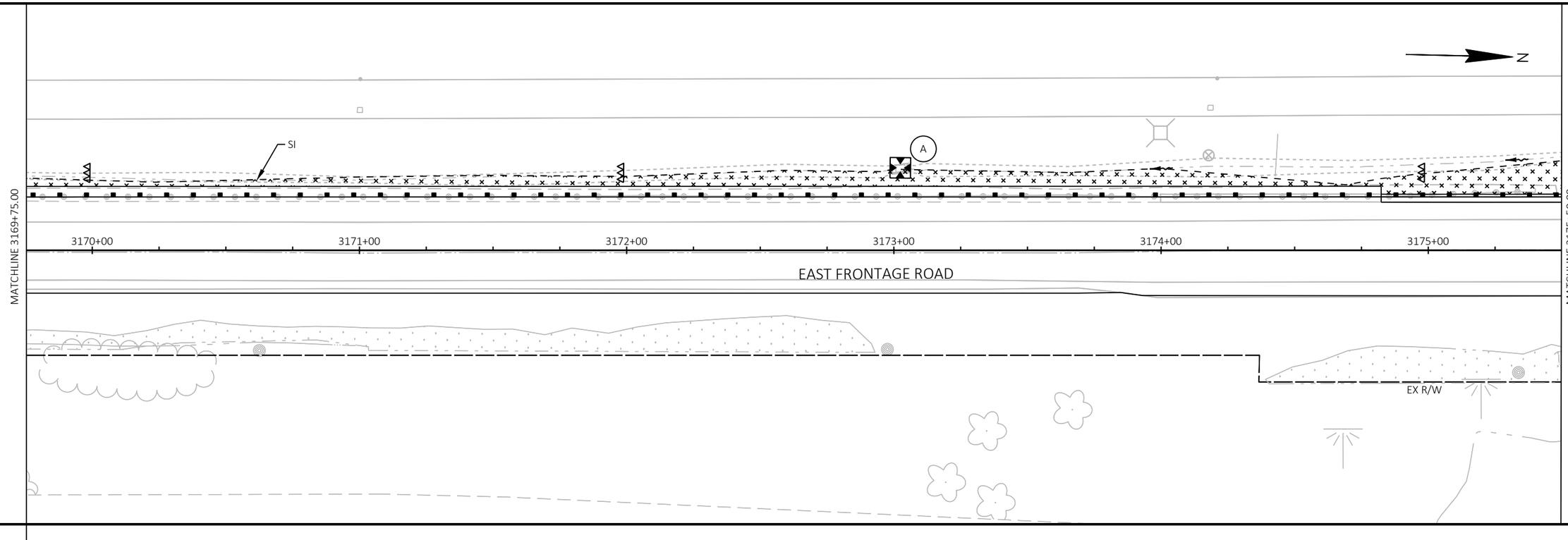

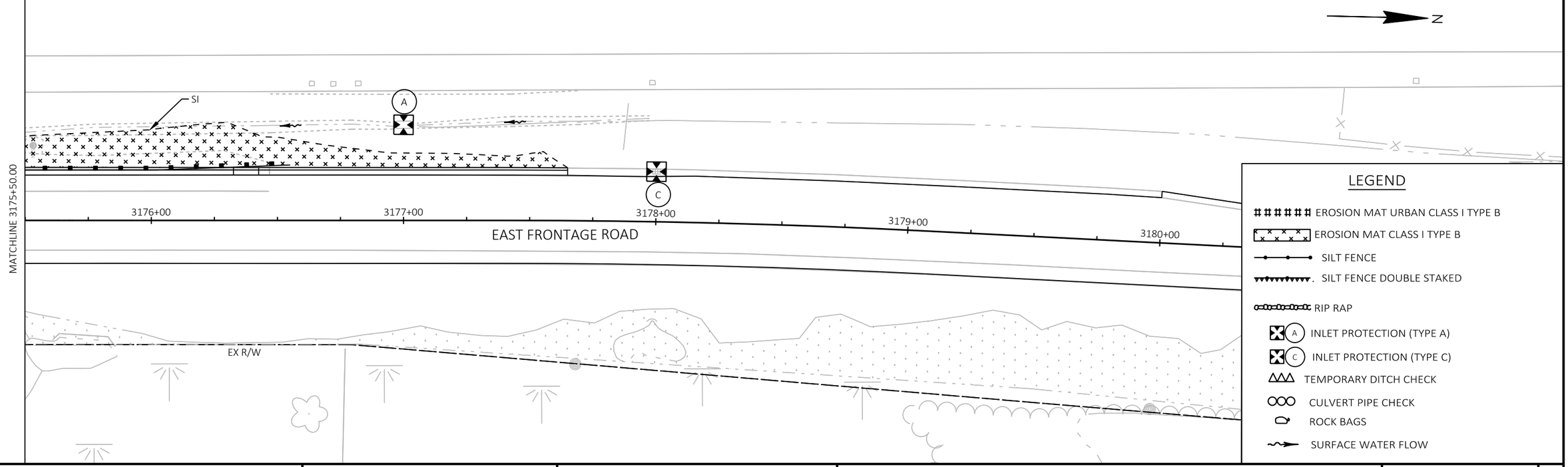

PROJECT NO: 1032-10-75	HWY: EAST FRONTAGE ROAD	COUNTY: KENOSHA	EROSION CONTROL - EAST FRONTAGE ROAD	SHEET 65	E

FILE NAME : Y:\52XX\5252_DP20.NSFWYEFR.KNS\CADDS\10321015\SHEETSPLAN\022001-EC.DWG
LAYOUT NAME - 022007
PLOT DATE : 12/17/2021 4:19 PM PLOT BY : AARON SCHRAMM PLOT NAME : PLOT SCALE : 1 IN:40 FT

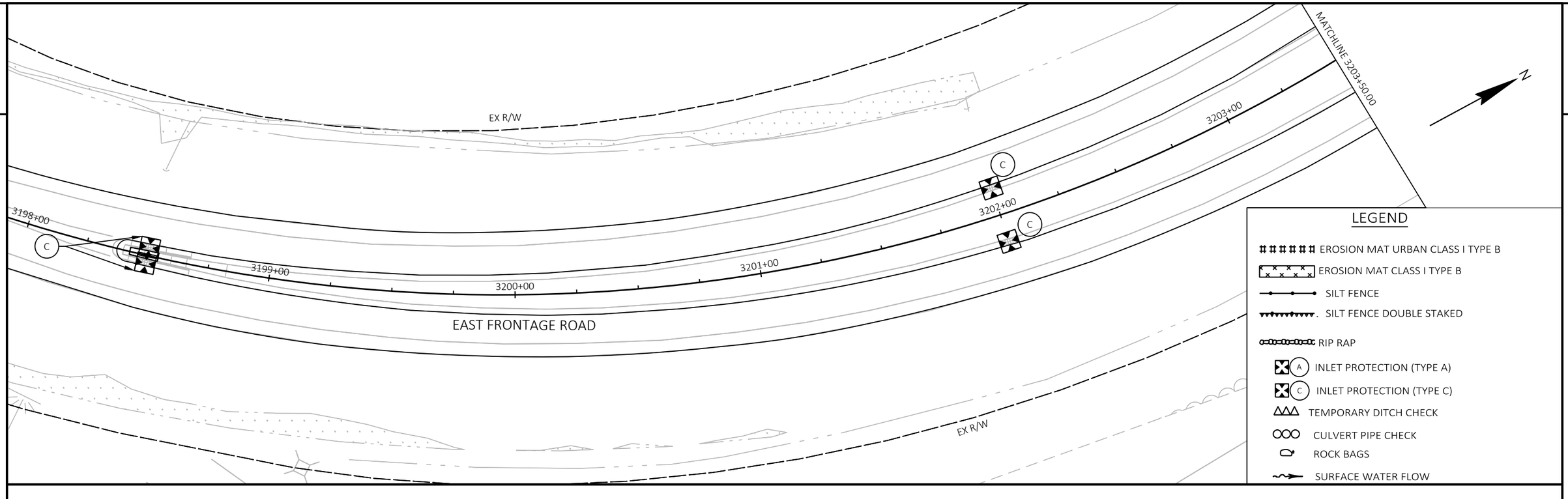

2

THIS PANEL INTENTIONALLY LEFT BLANK

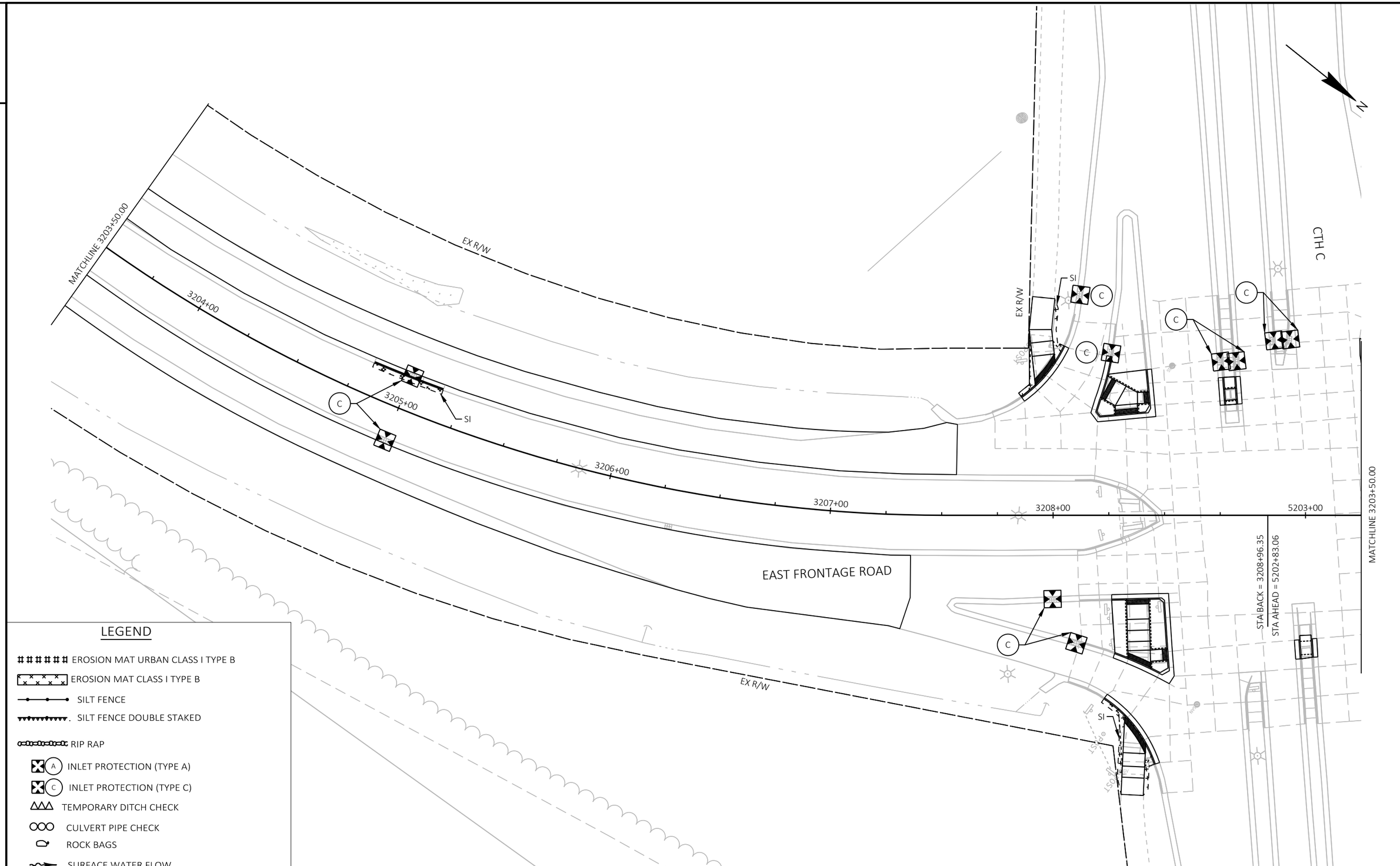

PROJECT NO: 1032-10-75	HWY: EAST FRONTAGE ROAD	COUNTY: KENOSHA	EROSION CONTROL - EAST FRONTAGE ROAD	SHEET 67	E

FILE NAME : Y:\52XX\5252_DP20.NSFWYEFR.KNS\CADDS\10321015\SHEETSPLAN\022001-EC.DWG
LAYOUT NAME - 022009
PLOT DATE : 12/17/2021 4:21 PM
PLOT BY : AARON SCHRAMM
PLOT NAME :
PLOT SCALE : 1 IN:40 FT
WISDOT/CADDS SHEET 44

2

2

MATCHLINE 5203+75.00

MATCHLINE 5209+00.00

SI

EX R/W

C

5204+00

5205+00

5206+00

5207+00

5208+00

EAST FRONTAGE ROAD

MATCHLINE 5209+00.00

5210+00

5211+00

5212+00

5213+00

5214+00

5215+00

N

LEGEND

- EROSION MAT URBAN CLASS I TYPE B
- EROSION MAT CLASS I TYPE B
- SILT FENCE
- SILT FENCE DOUBLE STAKED
- RIP RAP
- A INLET PROTECTION (TYPE A)
- C INLET PROTECTION (TYPE C)
- TEMPORARY DITCH CHECK
- CULVERT PIPE CHECK
- ROCK BAGS
- SURFACE WATER FLOW

PROJECT NO: 1032-10-75	HWY: EAST FRONTAGE ROAD	COUNTY: KENOSHA	EROSION CONTROL - EAST FRONTAGE ROAD	SHEET 68	E

FILE NAME : Y:\52XX\5252_DP20.NSFWYEFR.KNS\CADDS\10321015\SHEETSPLAN\022001-EC.DWG
LAYOUT NAME - 022010

PLOT DATE : 12/17/2021 4:22 PM PLOT BY : AARON SCHRAMM PLOT NAME : PLOT SCALE : 1 IN:40 FT

WISDOT/CADDS SHEET 44

2

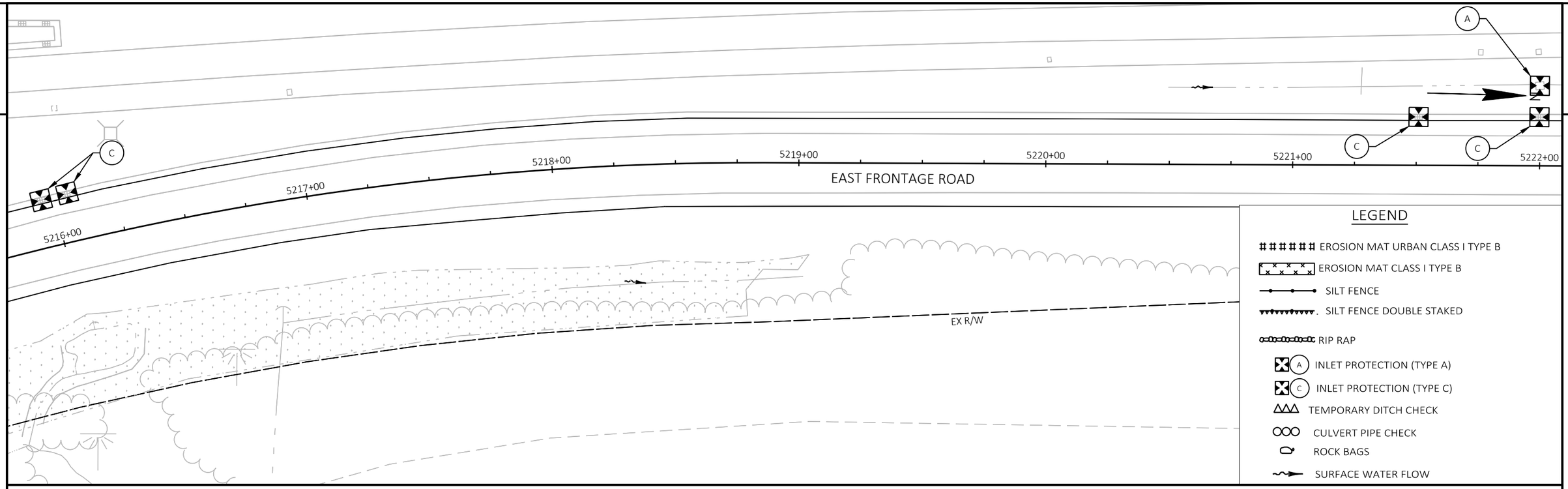

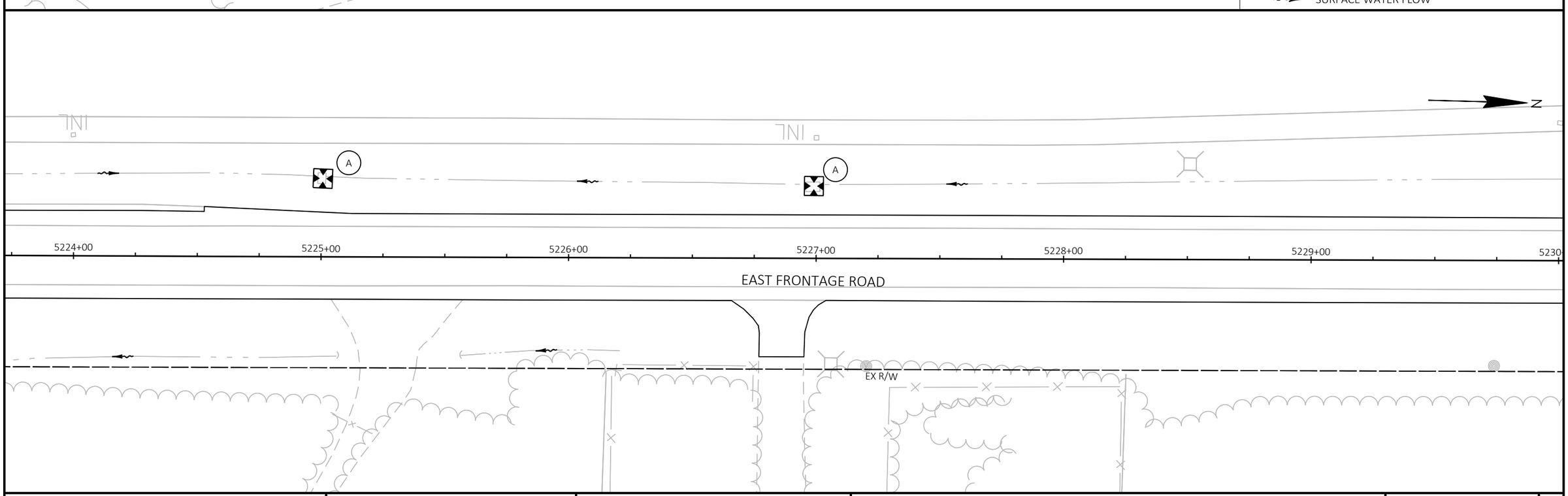

2

PROJECT NO: 1032-10-75	HWY: EAST FRONTAGE ROAD	COUNTY: KENOSHA	EROSION CONTROL - EAST FRONTAGE ROAD	SHEET 69	E

FILE NAME : Y:\52XX\5252_DP20.NSFWYEFR.KNS\CADDS\10321015\SHEETSPLAN\022001-EC.DWG
LAYOUT NAME - 022011

PLOT DATE : 12/17/2021 4:24 PM PLOT BY : AARON SCHRAMM PLOT NAME : PLOT SCALE : 1 IN:40 FT

2

N

RIPRAP MEDIUM

SI

SI

5234+00 5235+00 5236+00 5237+00 5238+00 5239+00 5240+00

EAST FRONTAGE ROAD

+16.14
37.34'RT

+75.81
27.54'RT

+00.00
27.62'RT

SI

+11.49
59.32'RT

+54.09
62.72'RT

EX R/W

+84.72
32.84'RT

+87.47
33.19'RT

+00.21
25.18'RT

+28.11
27.94'RT

RIPRAP MEDIUM

+28.57
55.37'RT

+34.57
55.27'RT

+34.21
33.87'RT

+46.00
46.53'RT

SI

+76.88
46.03'RT

N

5242+00 5243+00 5244+00 5245+00 5246+00 5247+00

EAST FRONTAGE ROAD

SI

EX R/W

SI

LEGEND

- EROSION MAT URBAN CLASS I TYPE B
- EROSION MAT CLASS I TYPE B
- SILT FENCE
- SILT FENCE DOUBLE STAKED
- RIP RAP
- A INLET PROTECTION (TYPE A)
- C INLET PROTECTION (TYPE C)
- TEMPORARY DITCH CHECK
- CULVERT PIPE CHECK
- ROCK BAGS
- SURFACE WATER FLOW

PROJECT NO: 1032-10-75	HWY: EAST FRONTAGE ROAD	COUNTY: KENOSHA	EROSION CONTROL - EAST FRONTAGE ROAD	SHEET 70	E

FILE NAME : Y:\52XX\5252_DP20.NSFWYEFR.KNS\CADDS\10321015\SHEETSPLAN\022001-EC.DWG
LAYOUT NAME - 022012

PLOT DATE : 12/17/2021 4:25 PM PLOT BY : AARON SCHRAMM PLOT NAME : PLOT SCALE : 1 IN:40 FT

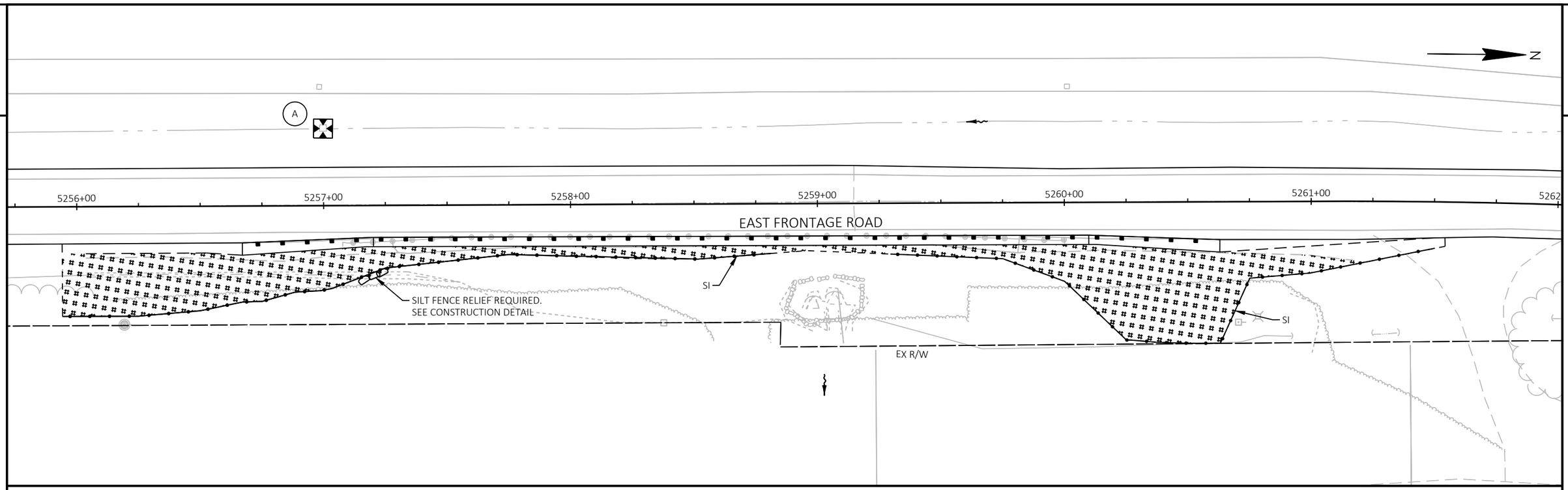

THIS PANEL INTENTIONALLY LEFT BLANK

LEGEND

- EROSION MAT URBAN CLASS I TYPE B
- EROSION MAT CLASS I TYPE B
- SILT FENCE
- SILT FENCE DOUBLE STAKED
- RIP RAP
- A INLET PROTECTION (TYPE A)
- C INLET PROTECTION (TYPE C)
- TEMPORARY DITCH CHECK
- CULVERT PIPE CHECK
- ROCK BAGS
- SURFACE WATER FLOW

PROJECT NO: 1032-10-75	HWY: EAST FRONTAGE ROAD	COUNTY: KENOSHA	EROSION CONTROL - EAST FRONTAGE ROAD	SHEET 71	E

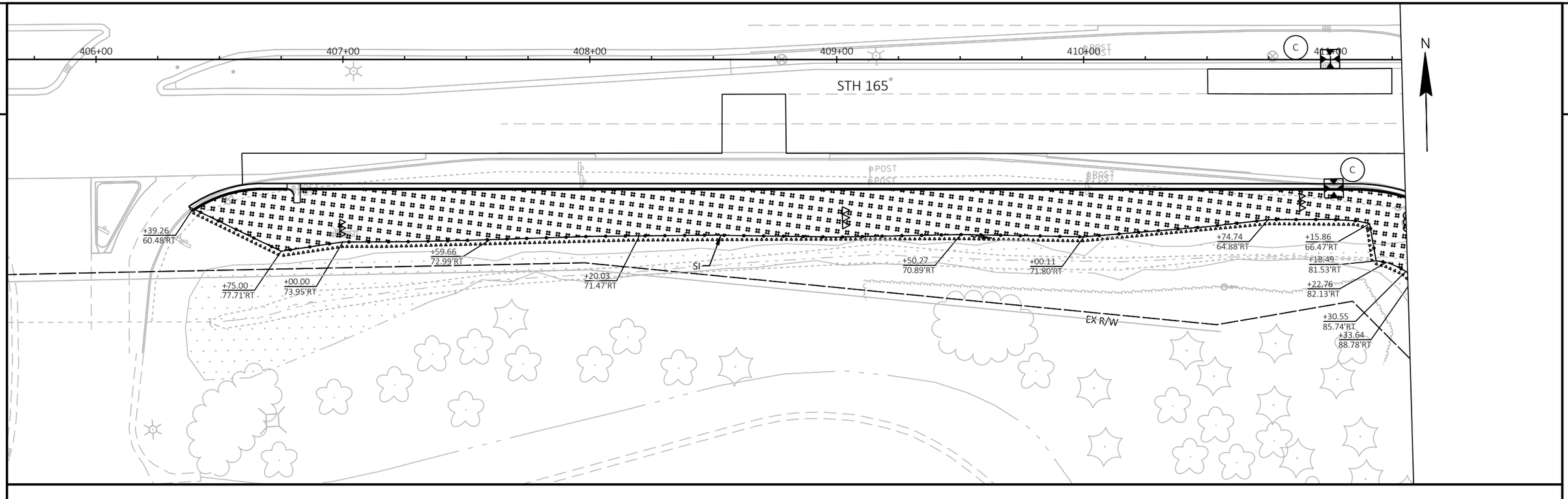

THIS PANEL INTENTIONALLY LEFT BLANK

LEGEND

- EROSION MAT URBAN CLASS I TYPE B
- EROSION MAT CLASS I TYPE B
- SILT FENCE
- SILT FENCE DOUBLE STAKED
- RIP RAP
- INLET PROTECTION (TYPE A)
- INLET PROTECTION (TYPE C)
- TEMPORARY DITCH CHECK
- CULVERT PIPE CHECK
- ROCK BAGS
- SURFACE WATER FLOW

PROJECT NO: 1032-10-75	HWY: EAST FRONTAGE ROAD	COUNTY: KENOSHA	EROSION CONTROL - STH 165	SHEET 72	E

FILE NAME : Y:\52XX\5252_DP20.NSFWYEFR.KNS\CADDS\10321015\SHEETSPLAN\022001-EC.DWG
LAYOUT NAME - 022014

PLOT DATE : 12/17/2021 4:26 PM PLOT BY : AARON SCHRAMM PLOT NAME : PLOT SCALE : 1 IN:40 FT

WISDOT/CADDS SHEET 44

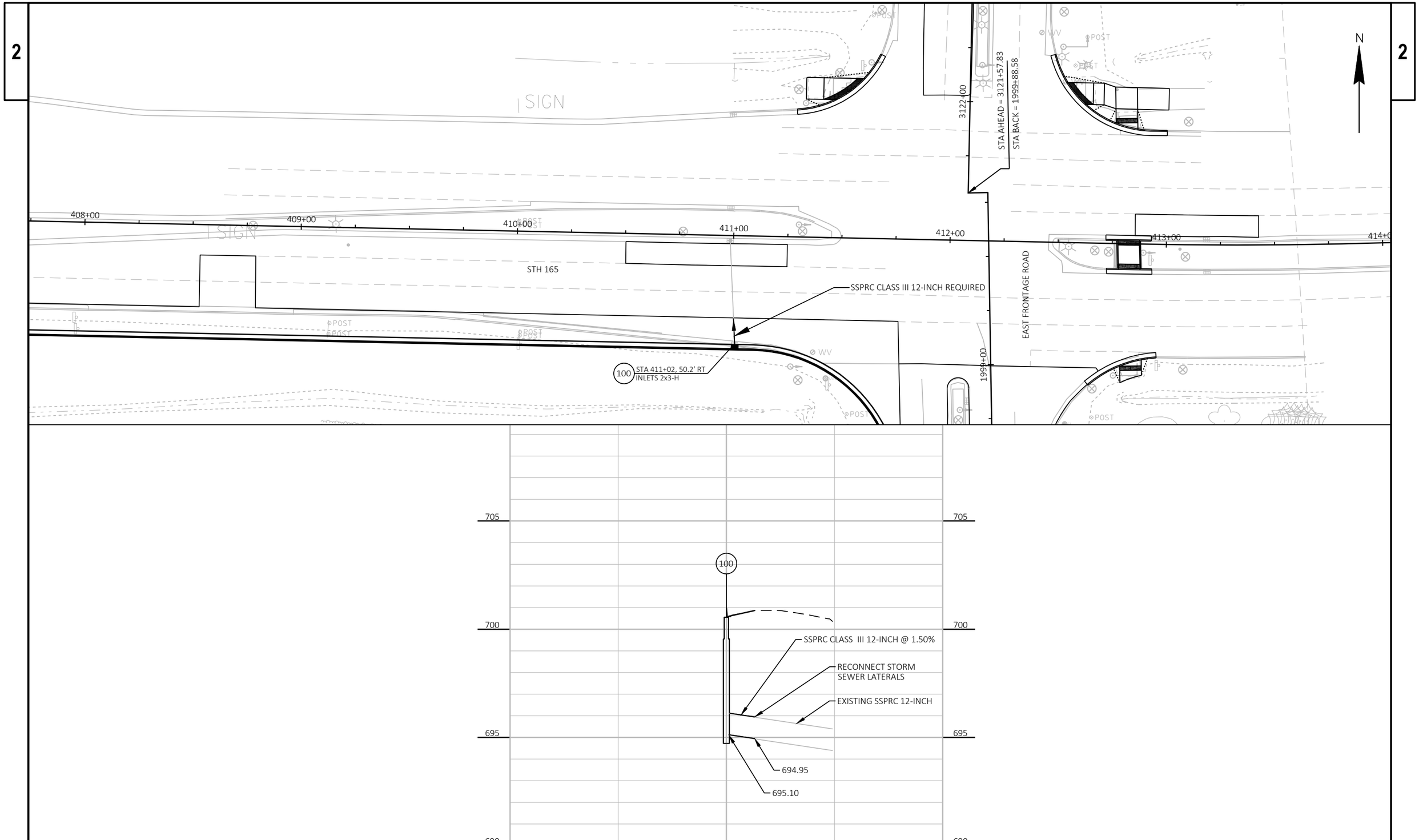

PROJECT NO: 1032-10-75	HWY: EAST FRONTAGE ROAD	COUNTY: KENOSHA	STORM SEWER	SHEET 73	E

FILE NAME : Y:\52XX\5252_DP20.NSFWYEFR.KNS\CADDS\10321015\SHEETSPLAN\022501-SS.DWG
LAYOUT NAME - 022501
PLOT DATE : 10/22/2021 2:40 PM
PLOT BY : AARON SCHRAMM
PLOT NAME :
PLOT SCALE : 1 IN:40 FT
WISDOT/CADDS SHEET 41

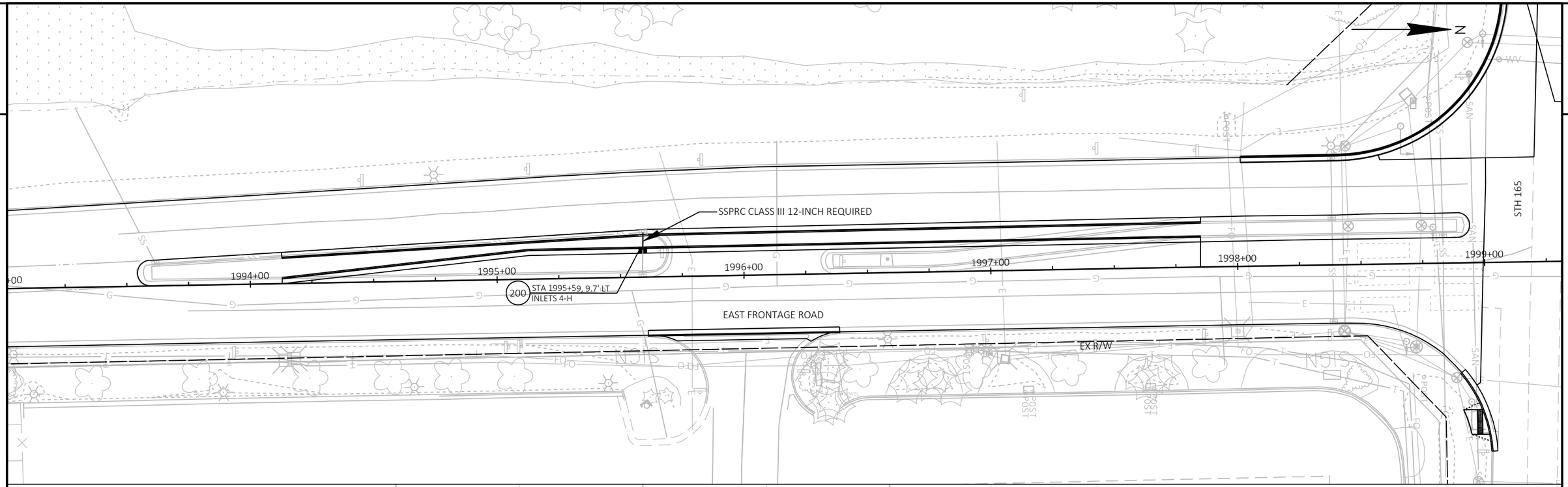

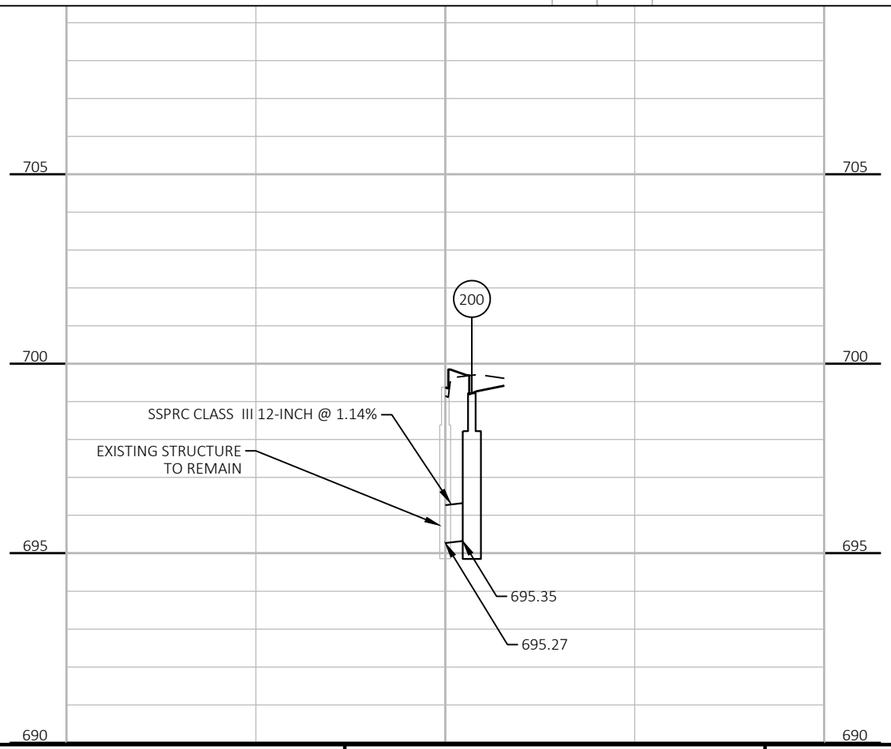

2

PROJECT NO: 1032-10-75	HWY: EAST FRONTAGE ROAD	COUNTY: KENOSHA	STORM SEWER	SHEET 74	E

2

2

LEGEND

EXISTING SIGN MOUNTED ON POST(S)

EXISTING SIGN MOUNTED ON BRIDGE OR SIGN BRIDGE

PROPOSED SIGN MOUNTED ON POST(S)

PROPOSED SIGN MOUNTED ON BRIDGE OR SIGN BRIDGE

EXISTING LIGHT OR SIGNAL POLE

CANTILEVER SIGN BRIDGE

XXX DENOTES SIGN NUMBER

(X) INDICATES SIGN SIZE

ESTR EXISTING SIGN TO REMAIN

CTH ML

PI: 1906+57.05

CTH ML

N

STREET NAME SIGN
122ND ST
BY OTHERS CITY

PT: 1904+52.49

1905

DEAD END
W14-1
ESTR

SPEED LIMIT 25
R2-1
ESTR

STOP
R1-1
ESTR

EAST
FRONTAGE ROAD
J13-1
ESTR

FLAG

BP: 1897+08.68

PC: 1900+72.44

1900

E FRONTAGE RD

MH

SIGN

TOWER

TYPE II ALUMINUM SIGNS REMOVED UNDER THE CONTRACT SHALL BE DELIVERED TO THE COUNTY SIGN SHOP. CONTACT THE FOLLOWING INDIVIDUAL AT THE SIGN SHOP FOR DISTRIBUTION COUNTY LOCATION.

SIGNING COORDINATOR	COUNTIES	PHONE #
DENNIS NEWTON	MILWAUKEE, RACINE	414-750-0257
JENNY BUCKETT	KENOSHA, WASHINGTON, OZAUKEE	414-750-2427
CHUCK SALDIVAR	WALWORTH, WAUKESHA	414-750-1682

SIGNS SHALL BE CAREFULLY REMOVED FROM SIGN SUPPORTS. THE SIGNS SHALL BE PALLETIZED FOR HANDLING WITH A FORKLIFT (SEE STANDARD SPEC 638.3.4). THE REGIONAL SIGN SHOP (414-266-1165) SHALL BE NOTIFIED THREE WORKING DAYS PRIOR TO DELIVERY OF THE SIGNS.

WHEN AN EXISTING STOP SIGN SUPPORT IS TO BE REMOVED AND A NEW STOP SIGN AND SUPPORT ERECTED, THE WORK SHALL BE DONE CONCURRENTLY. FOR OTHER SIGNS AND SUPPORTS THAT ARE TO BE REMOVED AND NEW SIGNS AND SUPPORTS ERECTED, THE REMOVAL OF THE EXISTING SIGN/SUPPORT AND ERECTION OF THE NEW SIGN/SUPPORT SHOULD BE DONE AS CONCURRENTLY AS POSSIBLE. IN NO CASE SHALL A NEW SIGN/SUPPORT BE DOWN FOR MORE THAN 24 HOURS AND THERE SHALL NOT BE MORE THAN ONE SIGN OF THE SAME LEGEND MISSING IN A ROW.

WOOD POST SIZES FOR TYPE II SIGNS ARE ESTIMATED LENGTHS AND THE ACTUAL LENGTH WILL BE DETERMINED IN THE FIELD.

STREET NAME SIGNS ARE PROPERTY OF THE MUNICIPALITY (CITY, VILLAGE OR TOWN). THE MUNICIPALITY SHALL BE CONTACTED TO REMOVE THEIR STREET NAME SIGNS PRIOR TO CONSTRUCTION AND IT IS THEIR RESPONSIBILITY TO REINSTALL THE OLD SIGNS OR REPLACE THEM FOLLOWING CONSTRUCTION. WISDOT DOES NOT FURNISH OR INSTALL STREET NAME SIGNS. THE STREET NAME SIGNS SHALL NOT BE PLACED ON TOP OF THE STOP SIGNS.

LOCATE NO PASSING PENNANTS BASED ON ESTABLISHING NO PASSING ZONES PAY ITEM. PLACE SIGNS BASED ON WHERE THE PAVEMENT MARKING FOR NO PASSING ZONES BEGIN.

SHEET 1 OF 22

PROJECT NO: 1032-10-75	HWY: EAST FRONTAGE RD	COUNTY: KENOSHA	PERMANENT SIGNING PLAN	SHEET 75	E

FILE NAME : N:\PDS\C3D\CAD\10321015\SIGN\023201_PS_18.DWG
LAYOUT NAME - 023201_PS
PLOT DATE : 11/9/2021 7:38 AM
PLOT BY : WAGNER, SCOTT H
PLOT NAME :
PLOT SCALE : 1 IN:100 FT
WISDOT/CADDS SHEET 42

2

LEGEND

- EXISTING SIGN MOUNTED ON POST(S)
- EXISTING SIGN MOUNTED ON BRIDGE OR SIGN BRIDGE
- PROPOSED SIGN MOUNTED ON POST(S)
- PROPOSED SIGN MOUNTED ON BRIDGE OR SIGN BRIDGE
- EXISTING LIGHT OR SIGNAL POLE
- CANTILEVER SIGN BRIDGE
- (XXX) DENOTES SIGN NUMBER
- (X) INDICATES SIGN SIZE
- ESTR EXISTING SIGN TO REMAIN

NO SIGNS THIS SHEET

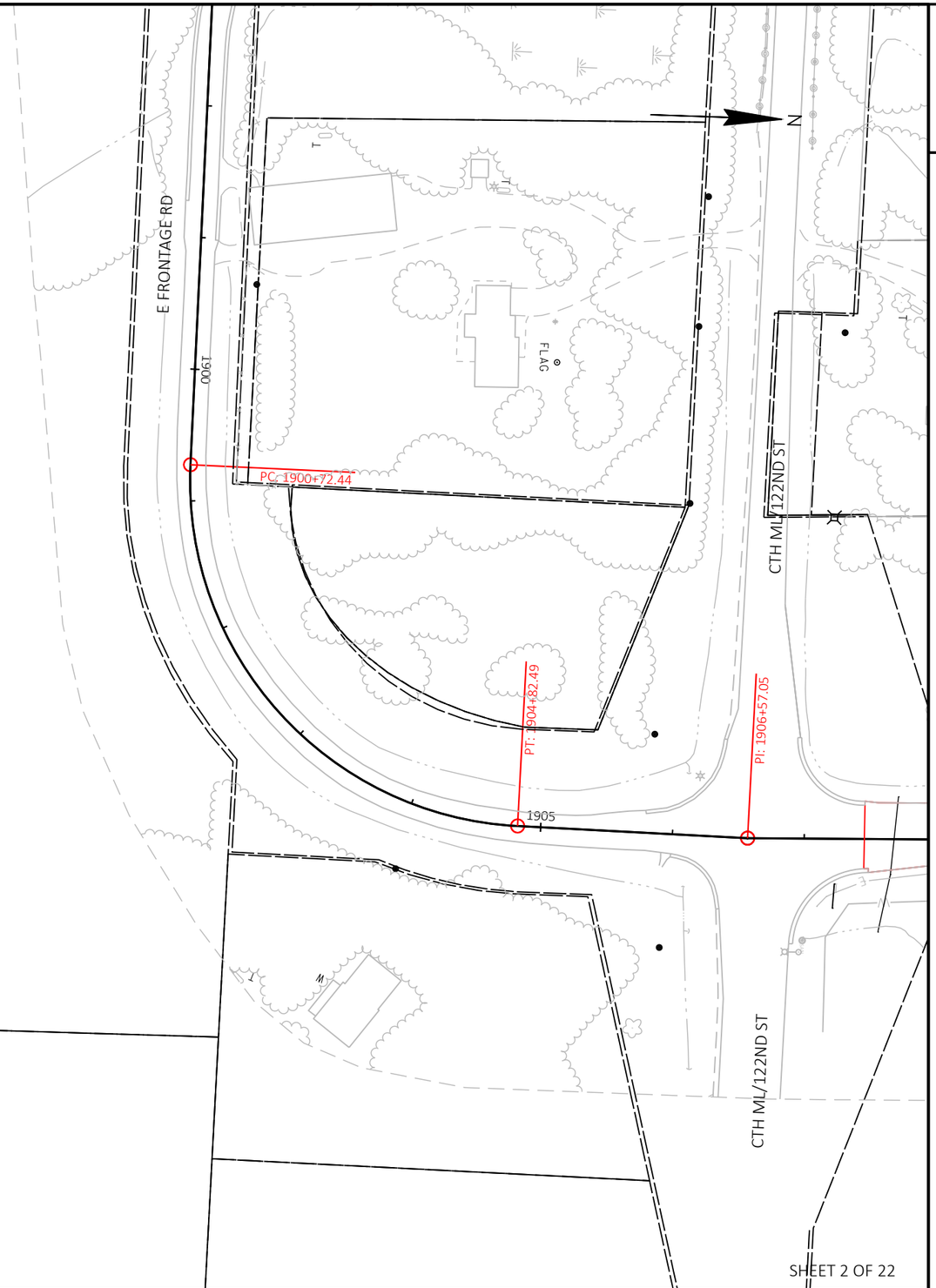

SHEET 2 OF 22

PROJECT NO: 1032-10-75	HWY: EAST FRONTAGE RD	COUNTY: KENOSHA	PERMANENT SIGNING PLAN	SHEET 76	E

FILE NAME : N:\PDS\C3D\CAD\10321015\SIGN\023201_PS_18.DWG
LAYOUT NAME - 023202_PS

PLOT DATE : 11/9/2021 7:39 AM PLOT BY : WAGNER, SCOTT H PLOT NAME : PLOT SCALE : 1 IN:100 FT

WISDOT/CADDS SHEET 42

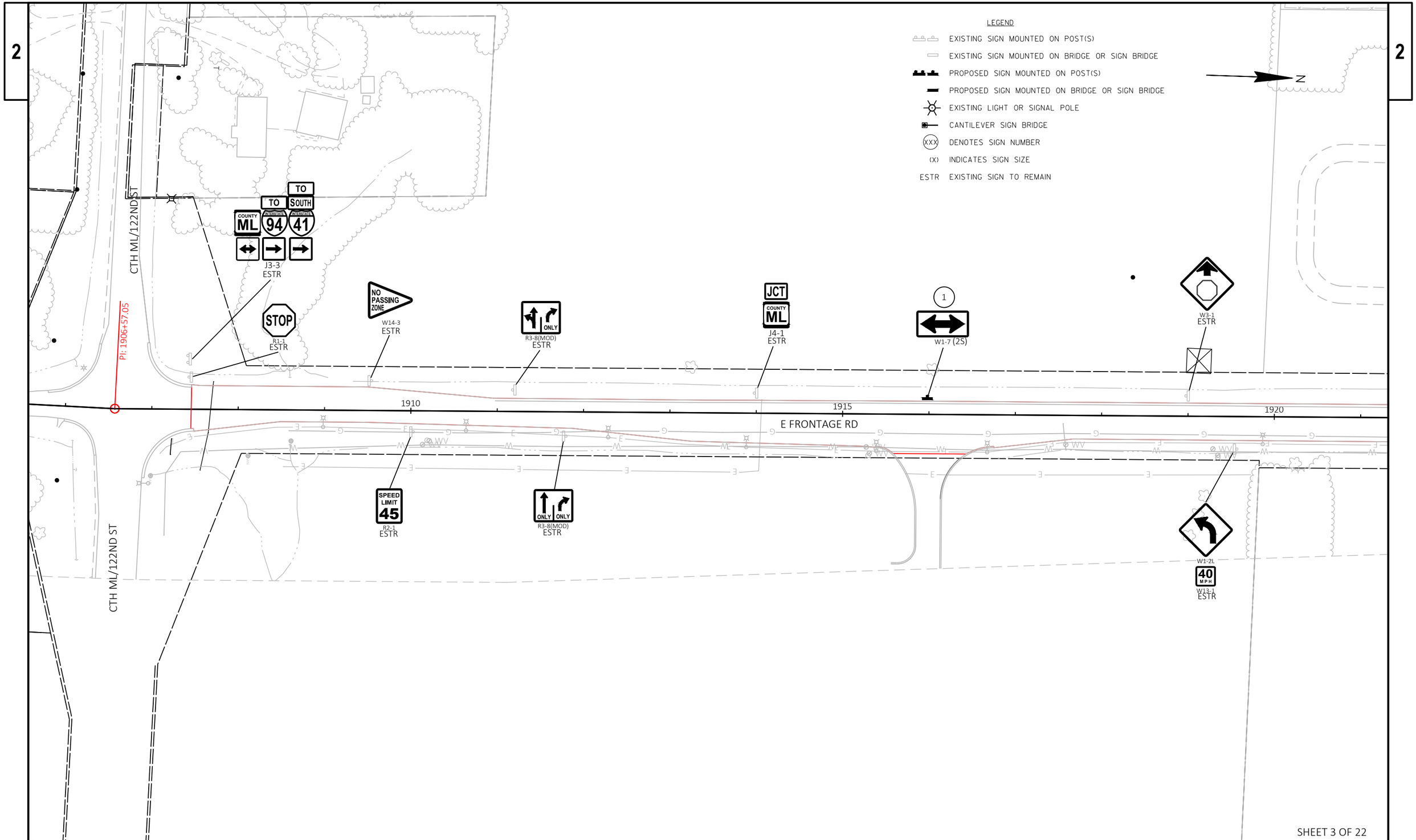

PROJECT NO: 1032-10-75	HWY: EAST FRONTAGE RD	COUNTY: KENOSHA	PERMANENT SIGNING PLAN	SHEET 77	E

FILE NAME : N:\PDS\C3D\CAD\10321015\SIGN\023201_PS_18.DWG
LAYOUT NAME - 023203_PS
PLOT DATE : 11/9/2021 7:40 AM
PLOT BY : WAGNER, SCOTT H
PLOT NAME :
PLOT SCALE : 1 IN:100 FT
WISDOT/CADDS SHEET 42

2

2

LEGEND

EXISTING SIGN MOUNTED ON POST(S)

EXISTING SIGN MOUNTED ON BRIDGE OR SIGN BRIDGE

PROPOSED SIGN MOUNTED ON POST(S)

PROPOSED SIGN MOUNTED ON BRIDGE OR SIGN BRIDGE

EXISTING LIGHT OR SIGNAL POLE

CANTILEVER SIGN BRIDGE

XXX DENOTES SIGN NUMBER

(X) INDICATES SIGN SIZE

ESTR EXISTING SIGN TO REMAIN

PC: 1923+10.84

1925

E FRONTAGE RD

1930

PT: 1932+59.66

1935

2

W1-6 (2S)

ESTR

3

W1-6 (2S)

4

W1-2R (2S)

N

SHEET4 OF 22

PROJECT NO: 1032-10-75	HWY: EAST FRONTAGE RD	COUNTY: KENOSHA	PERMANENT SIGNING PLAN	SHEET 78	E

FILE NAME : N:\PDS\C3D\CAD\10321015\SIGN\023201_PS_18.DWG
LAYOUT NAME - 023204_PS

PLOT DATE : 11/9/2021 7:40 AM PLOT BY : WAGNER, SCOTT H PLOT NAME : PLOT SCALE : 1 IN:100 FT

WISDOT/CADDS SHEET 42

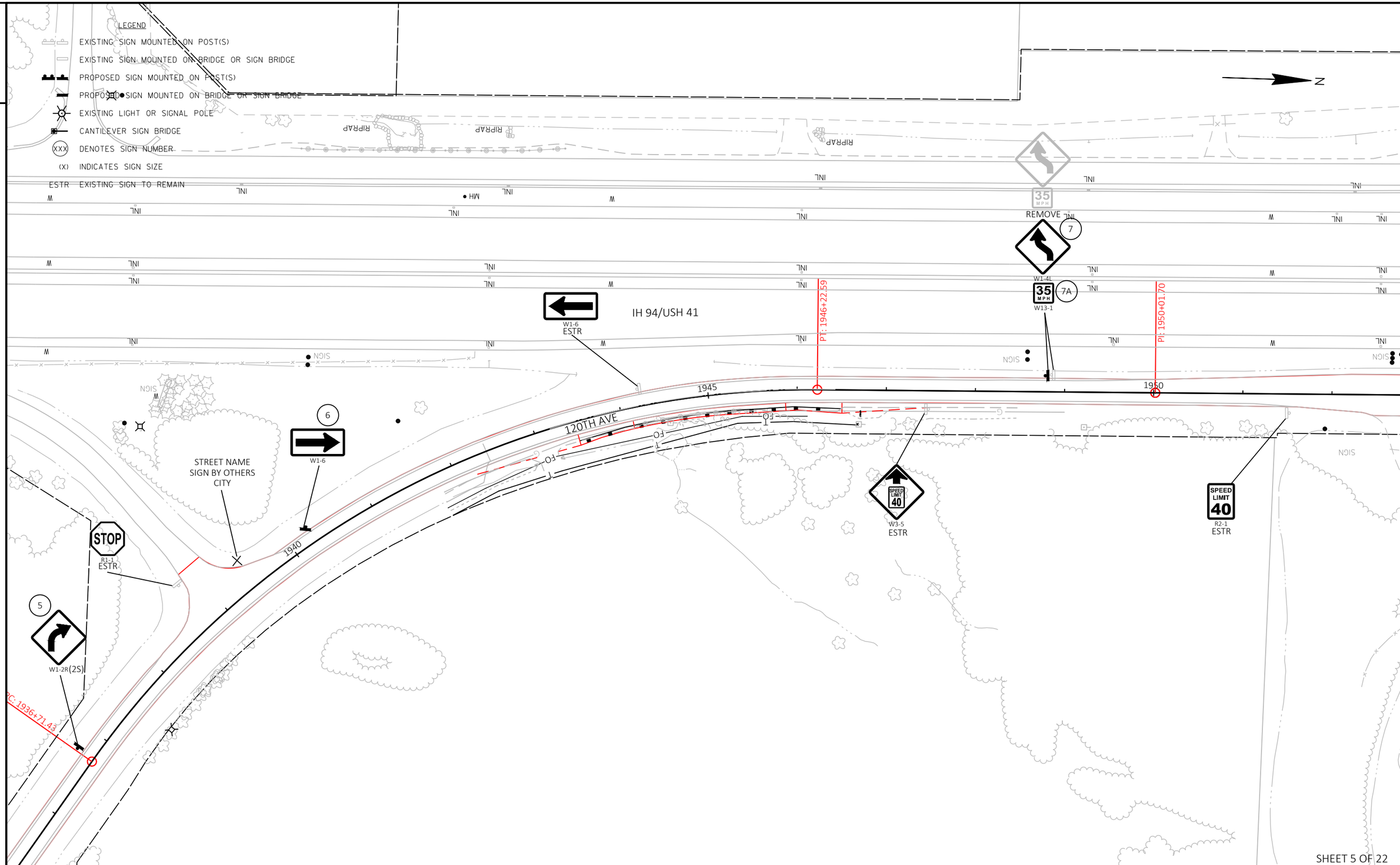

SHEET 5 OF 22

PROJECT NO: 1032-10-75	HWY: EAST FRONTAGE RD	COUNTY: KENOSHA	PERMANENT SIGNING PLAN	SHEET 79	E

FILE NAME : N:\PDS\C3D\CAD\10321015\SIGN\023201_PS_18.DWG
LAYOUT NAME - 023205_PS
PLOT DATE : 11/9/2021 7:41 AM
PLOT BY : WAGNER, SCOTT H
PLOT NAME :
PLOT SCALE : 1 IN:100 FT
WISDOT/CADDS SHEET 42

2

2

LEGEND

EXISTING SIGN MOUNTED ON POST(S)

EXISTING SIGN MOUNTED ON BRIDGE OR SIGN BRIDGE

PROPOSED SIGN MOUNTED ON POST(S)

PROPOSED SIGN MOUNTED ON BRIDGE OR SIGN BRIDGE

EXISTING LIGHT OR SIGNAL POLE

CANTILEVER SIGN BRIDGE

XXX DENOTES SIGN NUMBER

(X) INDICATES SIGN SIZE

ESTR EXISTING SIGN TO REMAIN

N

IH 94/USH 41

120TH AVE

1955

1960

1965

9 W1-7 (2S)

W14-3 ESTR

W1-7 ESTR

TO EAST INTERSTATE 94 J33-1 ESTR

TO SOUTH INTERSTATE 41 J33-1 ESTR

SPEED LIMIT 40 R2-1 ESTR

PI: 1962+59.45

PI: 1966+47.41

8 R4-7 (2S)

SPEED LIMIT 40 R2-1 ESTR

10 REMOVE NO PARKING ANY TIME R7-1D (2S)

STOP R1-1 PRIVATE DRIVEWAY SIGN (BY OTHERS) ESTR

SPEED LIMIT 30 W3-5 ESTR

SPEED LIMIT 30 R2-1 ESTR

NO PASSING ZONE W14-3 ESTR

RIGHT LANE MUST TURN RIGHT R3-7R ESTR

SHEET 6 OF 22

PROJECT NO: 1032-10-75	HWY: EAST FRONTAGE RD	COUNTY: KENOSHA	PERMANENT SIGNING PLAN'	SHEET 80	E

FILE NAME : N:\PDS\C3D\CAD\10321015\SIGN\023201_PS_18.DWG
LAYOUT NAME - 023206_PS

PLOT DATE : 11/9/2021 7:41 AM PLOT BY : WAGNER, SCOTT H PLOT NAME : PLOT SCALE : 1 IN:100 FT

WISDOT/CADDS SHEET 42

2

LEGEND

- EXISTING SIGN MOUNTED ON POST(S)
- EXISTING SIGN MOUNTED ON BRIDGE OR SIGN BRIDGE
- PROPOSED SIGN MOUNTED ON POST(S)
- PROPOSED SIGN MOUNTED ON BRIDGE OR SIGN BRIDGE
- EXISTING LIGHT OR SIGNAL POLE
- CANTILEVER SIGN BRIDGE
- (XXX) DENOTES SIGN NUMBER
- (X) INDICATES SIGN SIZE
- ESTR EXISTING SIGN TO REMAIN

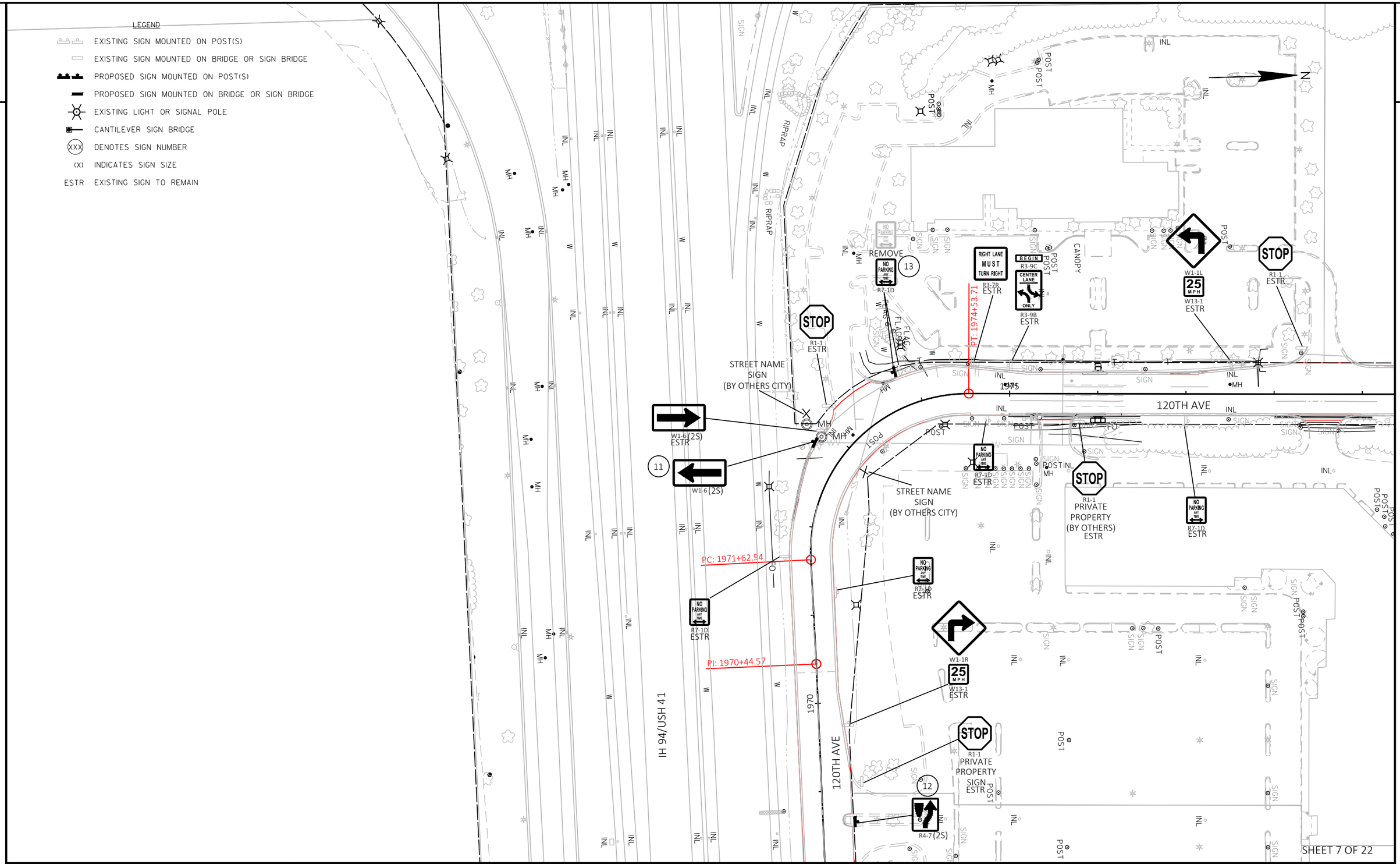

SHEET 7 OF 22

PROJECT NO: 1032-10-75	HWY: EAST FRONTAGE RD	COUNTY: KENOSHA	PERMANENT SIGNING PLAN	SHEET 81	E

FILE NAME : N:\PDS\C3D\CAD\10321015\SIGN\023201_PS_18.DWG
LAYOUT NAME - 023207_PS

PLOT DATE : 11/9/2021 7:42 AM PLOT BY : WAGNER, SCOTT H PLOT NAME : PLOT SCALE : 1 IN:100 FT

WISDOT/CADDS SHEET 42

2

2

LEGEND

EXISTING SIGN MOUNTED ON POST(S)

EXISTING SIGN MOUNTED ON BRIDGE OR SIGN BRIDGE

PROPOSED SIGN MOUNTED ON POST(S)

PROPOSED SIGN MOUNTED ON BRIDGE OR SIGN BRIDGE

EXISTING LIGHT OR SIGNAL POLE

CANTILEVER SIGN BRIDGE

XXX DENOTES SIGN NUMBER

(X) INDICATES SIGN SIZE

ESTR EXISTING SIGN TO REMAIN

16

BEGIN RIGHT TURN LANE

R3-20R (2S)

PC: 1980+29.05

NO PARKING ANY TIME

R7-1D

ESTR

W1-1L

NO PARKING ANY TIME

R7-1D

ESTR

STREET NAME SIGN

REMOVE

NO PARKING ANY TIME

R7-1D (2S)

15

STREET NAME SIGN (BY OTHERS CITY)

PCC: 1984+96.89

PT: 1987+13.25

1980

1985

120TH AVE

WATER TOWER

STREET NAME SIGN (BY OTHERS CITY)

REMOVE

14

W2-2 (2S)

SPEED LIMIT 30

REMOVE

SPEED LIMIT 30

17

R2-1 (2S)

STOP

R1-1

ESTR

116TH AVE

114TH AVE

SHEET 8 OF 22

PROJECT NO: 1032-10-75	HWY: EAST FRONTAGE RD	COUNTY: KENOSHA	PERMANENT SIGNING PLAN	SHEET 82	E

FILE NAME : N:\PDS\C3D\CAD\10321015\SIGN\023201_PS_18.DWG
LAYOUT NAME - 023208_PS

PLOT DATE : 11/9/2021 7:42 AM PLOT BY : WAGNER, SCOTT H PLOT NAME : PLOT SCALE : 1 IN:100 FT

WISDOT/CADDS SHEET 42

2

2

LEGEND

EXISTING SIGN MOUNTED ON POST(S)

EXISTING SIGN MOUNTED ON BRIDGE OR SIGN BRIDGE

PROPOSED SIGN MOUNTED ON POST(S)

PROPOSED SIGN MOUNTED ON BRIDGE OR SIGN BRIDGE

EXISTING LIGHT OR SIGNAL POLE

CANTILEVER SIGN BRIDGE

XXX DENOTES SIGN NUMBER

(X) INDICATES SIGN SIZE

ESTR EXISTING SIGN TO REMAIN

N

R7-1D ESTR

W2-2 ESTR

REMOVE BEGIN R3-9C 19

CENTER LANE ONLY R3-9B 19A

21 DO NOT ENTER R5-1 (2S)

1990

E FRONTAGE RD

PI: 1994+12.94

JCT 165 J1-1 ESTR

R7-1D ESTR

STOP R1-1 PRIVATE SIGN ESTR

REMOVE 18

W6-1 (2S)

END R3-9D

CENTER LANE ONLY R3-9B ESTR

R7-1D ESTR

R4-7 ESTR

W3-3 ESTR

20 BEGIN LEFT TURN LANE R3-20L (2S)

SIGN

CANOPY

INL

MH

FO

SHEET 9 OF 22

PROJECT NO: 1032-10-75	HWY: EAST FRONTAGE RD	COUNTY: KENOSHA	PERMANENT SIGNING PLAN	SHEET 83	E

FILE NAME : N:\PDS\C3D\CAD\10321015\SIGN\023201_PS_18.DWG
LAYOUT NAME - 023209_PS

PLOT DATE : 11/9/2021 7:43 AM PLOT BY : WAGNER, SCOTT H PLOT NAME : PLOT SCALE : 1 IN:40 FT

WISDOT/CADDS SHEET 42

LEGEND

- EXISTING SIGN MOUNTED ON POST(S)
- EXISTING SIGN MOUNTED ON BRIDGE OR SIGN BRIDGE
- PROPOSED SIGN MOUNTED ON POST(S)
- PROPOSED SIGN MOUNTED ON BRIDGE OR SIGN BRIDGE
- EXISTING LIGHT OR SIGNAL POLE
- CANTILEVER SIGN BRIDGE
- (XXX) DENOTES SIGN NUMBER
- (X) INDICATES SIGN SIZE
- ESTR EXISTING SIGN TO REMAIN

STH 165 TRAP LANE

STH 165/104TH ST

E FRONTAGE RD

1995

PI: 1997+84.93

PI: 1999+79.51

PI: 3121+57.83

STA AHEAD = 312+57.83

STA BACK = 1999+88.58

PC: 412+84.11

22 — R2-1 SPEED LIMIT 30 ESTR; R3-8(MOD) ONLY ONLY (2S)

23 — R6-2R ONE WAY

24 — REMOVE

25 — R7-1D NO PARKING ANY TIME ESTR

26 — R3-53R RIGHT TURN ONLY (2S)

W6-2 ESTR

I55-56 ADOPT A HIGHWAY ESTR

R3-8(MOD) ONLY ONLY ESTR

J3-2 TO COUNTY Q EAST 165 ESTR

J33-2 TO INTERSTATE 41 TO INTERSTATE 94 ESTR

30 — R5-1 DO NOT ENTER (2M) S.P.

31 — REMOVE R1-1F(3) S.P.

46 — REMOVE R7-1D (2S)

47 — R6-2L ONE WAY (2M) S.P.

42 — R5-1 DO NOT ENTER (2M) S.P.

44 — REMOVE

45 — R1-1F S.P.

41 — REMOVE R4-7 (2M) S.P.

45 — REMOVE M1-94S ON SIGNAL

39 — R6-2L ONE WAY (2M) S.P.

32 — REMOVE R4-7 (2S) S.P.

33 — REMOVE 120th AVE M1-94 SIGNAL ARM

38 — REMOVE M1-94S ON SIGNAL ARM

40 — REMOVE R4-7 (2M) S.P.

27 — R1-1F(3) STOP

28 — R6-3 DIVIDED HIGHWAY (3) S.P.

29 — R6-2L ONE WAY (2M) S.P.

34 — REMOVE

35 — R1-1F(3) STOP S.P.

36 — R5-1 DO NOT ENTER (2M) S.P.

37 — R6-2L ONE WAY (2M) S.P.

SPEED LIMIT 35 R2-1 ESTR

REMOVE PART OF #22

FLAG

FILLER CAP

CANOPY

STH 165/104TH ST

SHEET 10 OF 22

PROJECT NO: 1032-10-75	HWY: EAST FRONTAGE RD	COUNTY: KENOSHA	PERMANENT SIGNING PLAN	SHEET 84 E

FILE NAME : N:\PDS\C3D\CAD\10321015\SIGN\023201_PS_18.DWG
LAYOUT NAME - 023210_PS

PLOT DATE : 11/9/2021 7:43 AM PLOT BY : WAGNER, SCOTT H PLOT NAME : PLOT SCALE : 1 IN:40 FT

WISDOT/CADDS SHEET 42

LEGEND

EXISTING SIGN MOUNTED ON POST(S)

EXISTING SIGN MOUNTED ON BRIDGE OR SIGN BRIDGE

PROPOSED SIGN MOUNTED ON POST(S)

PROPOSED SIGN MOUNTED ON BRIDGE OR SIGN BRIDGE

EXISTING LIGHT OR SIGNAL POLE

CANTILEVER SIGN BRIDGE

(XXX) DENOTES SIGN NUMBER

(X) INDICATES SIGN SIZE

ESTR EXISTING SIGN TO REMAIN

N

STH 165 (104TH ST)

120TH AVE

PC: 3122+84.64

PI: 1999+79.51

PI: 1997+84.9

48 TO SOUTH INTERSTATE 41 EAST INTERSTATE 94
JV2-1
MOVE

49 RIGHT LANE MUST TURN RIGHT
R3-7R (3)

50 ADOPT A HIGHWAY I55-56
MOVE

51 120 th Ave
East Frontage Rd
NORTH SOUTH
D1-61 (MOD)
MOVE

53 RIGHT LANE MUST TURN RIGHT
R3-7R (3)

52 TO SOUTH INTERSTATE 41 TO EAST INTERSTATE 94
J3-2
MOVE

104 Access To Businesses On Hwy 165 Use Corporate Dr

PB1 PB2 PB3 PB4 PB5 PB6 PB7 PB24 PB25

SB1 SB2 SB3 SB13

CB1

2-3"

SHEET 10A OF 22

PROJECT NO: 1032-10-75	HWY: EAST FRONTAGE RD	COUNTY: KENOSHA	PERMANENT SIGNING PLAN	SHEET 85	E

FILE NAME : N:\PDS\C3D\CAD\10321015\SIGN\023201_PS_18.DWG
LAYOUT NAME - 023210A_PS

PLOT DATE : 11/9/2021 10:46 AM PLOT BY : WAGNER, SCOTT H PLOT NAME : PLOT SCALE : 1 IN:40 FT

WISDOT/CADDS SHEET 42

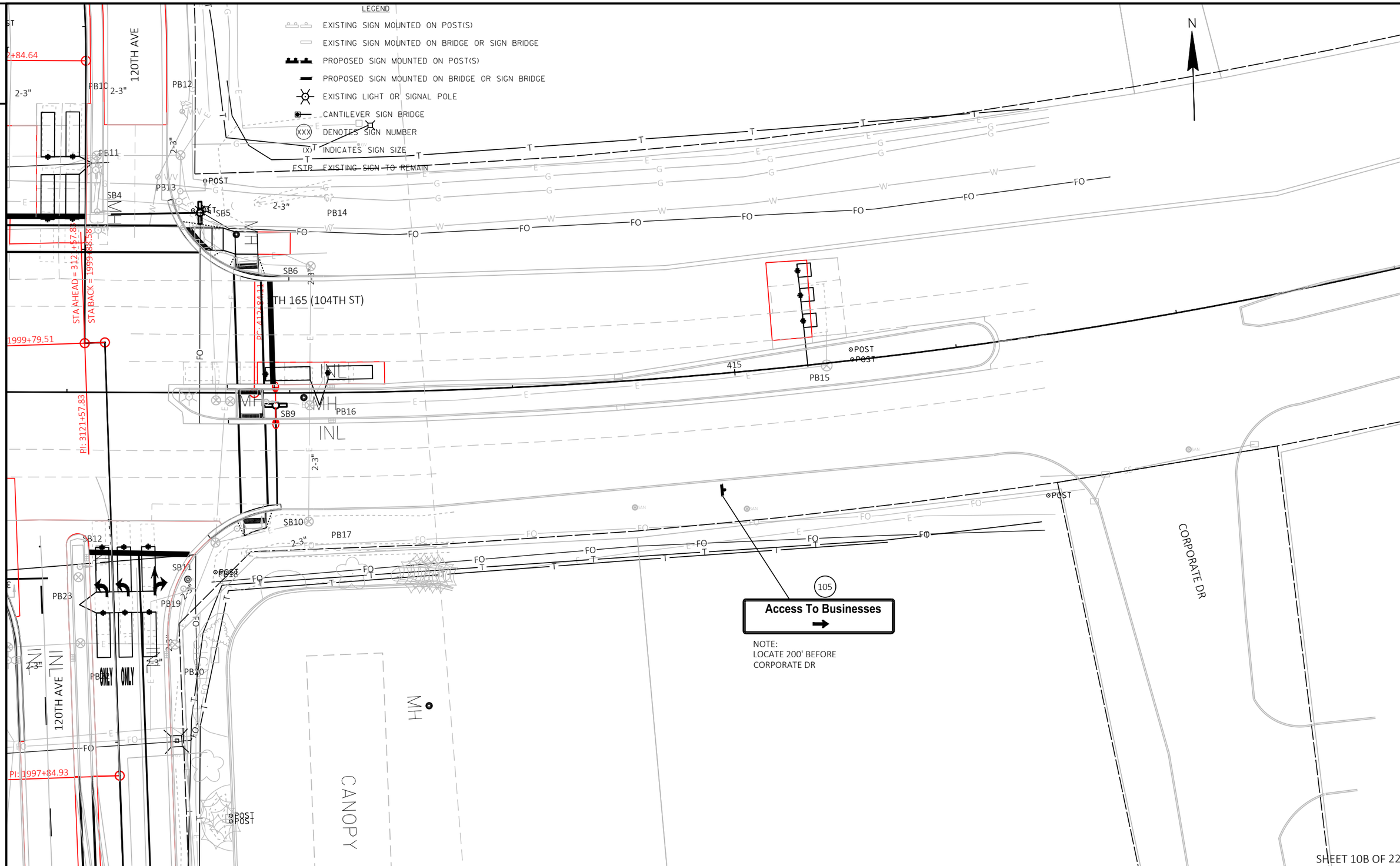

PROJECT NO: 1032-10-75	HWY: EAST FRONTAGE RD	COUNTY: KENOSHA	PERMANENT SIGNING PLAN	SHEET 86	E

FILE NAME : N:\PDS\C3D\CAD\10321015\SIGN\023201_PS_18.DWG
LAYOUT NAME - 023210B_PS
PLOT DATE : 11/9/2021 10:47 AM PLOT BY : WAGNER, SCOTT H PLOT NAME : PLOT SCALE : 1 IN:40 FT
WISDOT/CADDS SHEET 42

2

2

LEGEND

EXISTING SIGN MOUNTED ON POST(S)

EXISTING SIGN MOUNTED ON BRIDGE OR SIGN BRIDGE

PROPOSED SIGN MOUNTED ON POST(S)

PROPOSED SIGN MOUNTED ON BRIDGE OR SIGN BRIDGE

EXISTING LIGHT OR SIGNAL POLE

CANTILEVER SIGN BRIDGE

(XXX) DENOTES SIGN NUMBER

(X) INDICATES SIGN SIZE

ESTR EXISTING SIGN TO REMAIN

STH 165/104TH ST

SIGN

RD

120th AVE
REMOVE
120th AVE
M1-94
SIGNAL ARM

54

JCT 41 INTERSTATE 94
REMOVE
JCT 41 INTERSTATE 94
SIGNAL POLE ESTR

STREET NAME SIGN BY OTHERS

DO NOT ENTER
REMOVE
DO NOT ENTER
R5-1
SIGNAL POLE

56

STOP
DIVIDED HIGHWAY
REMOVE
STOP
R1-1F (3)
57
DIVIDED HIGHWAY
R6-3 (3)
S.P.
58

RIGHT LANE MUST TURN RIGHT
R3-7R
ESTR

EAST 165 TO INTERSTATE 41 TO INTERSTATE 94 TO COUNTY Q
J3-4
ESTR

ONLY ONLY ONLY
R3-8(MOD)
ESTR

BEGIN LEFT TURN LANE
R3-20L
ESTR

EAST 165 WEST 165
J2-2
ESTR

PT: 312+02.21

E FRONTAGE RD

N

NO SEMI TRUCKS FUELING OR PARKING
PRIVATE PERMIT SIGN
ESTR

61
W1-6 (2S)

RIGHT TURN ONLY
R3-53R
ESTR

ONE WAY
R6-2R
ESTR

DO NOT ENTER
R5-1
ESTR

SPEED LIMIT 40
R2-1
ESTR

STOP
DIVIDED HIGHWAY
REMOVE
STOP
R1-1F (3)
59
DIVIDED HIGHWAY
60
R6-3 (3)
S.P.

PC: 312+84.04

STA AHEAD = 312+57.80

STA BACK = 1999+88.58

412+84.11

E FRONTAGE RD

STH 165/104TH ST

SHEET 11 OF 22

PROJECT NO: 1032-10-75	HWY: EAST FRONTAGE RD	COUNTY: KENOSHA	PERMANENT SIGNING PLAN	SHEET 87	E

FILE NAME : N:\PDS\C3D\CAD\10321015\SIGN\023201_PS_18.DWG
LAYOUT NAME - 023211_PS

PLOT DATE : 11/9/2021 7:45 AM PLOT BY : WAGNER, SCOTT H PLOT NAME : PLOT SCALE : 1 IN:40 FT

WISDOT/CADDS SHEET 42

2

LEGEND

- EXISTING SIGN MOUNTED ON POST(S)
- EXISTING SIGN MOUNTED ON BRIDGE OR SIGN BRIDGE
- PROPOSED SIGN MOUNTED ON POST(S)
- PROPOSED SIGN MOUNTED ON BRIDGE OR SIGN BRIDGE
- EXISTING LIGHT OR SIGNAL POLE
- CANTILEVER SIGN BRIDGE
- XXX DENOTES SIGN NUMBER
- (X) INDICATES SIGN SIZE
- ESTR EXISTING SIGN TO REMAIN

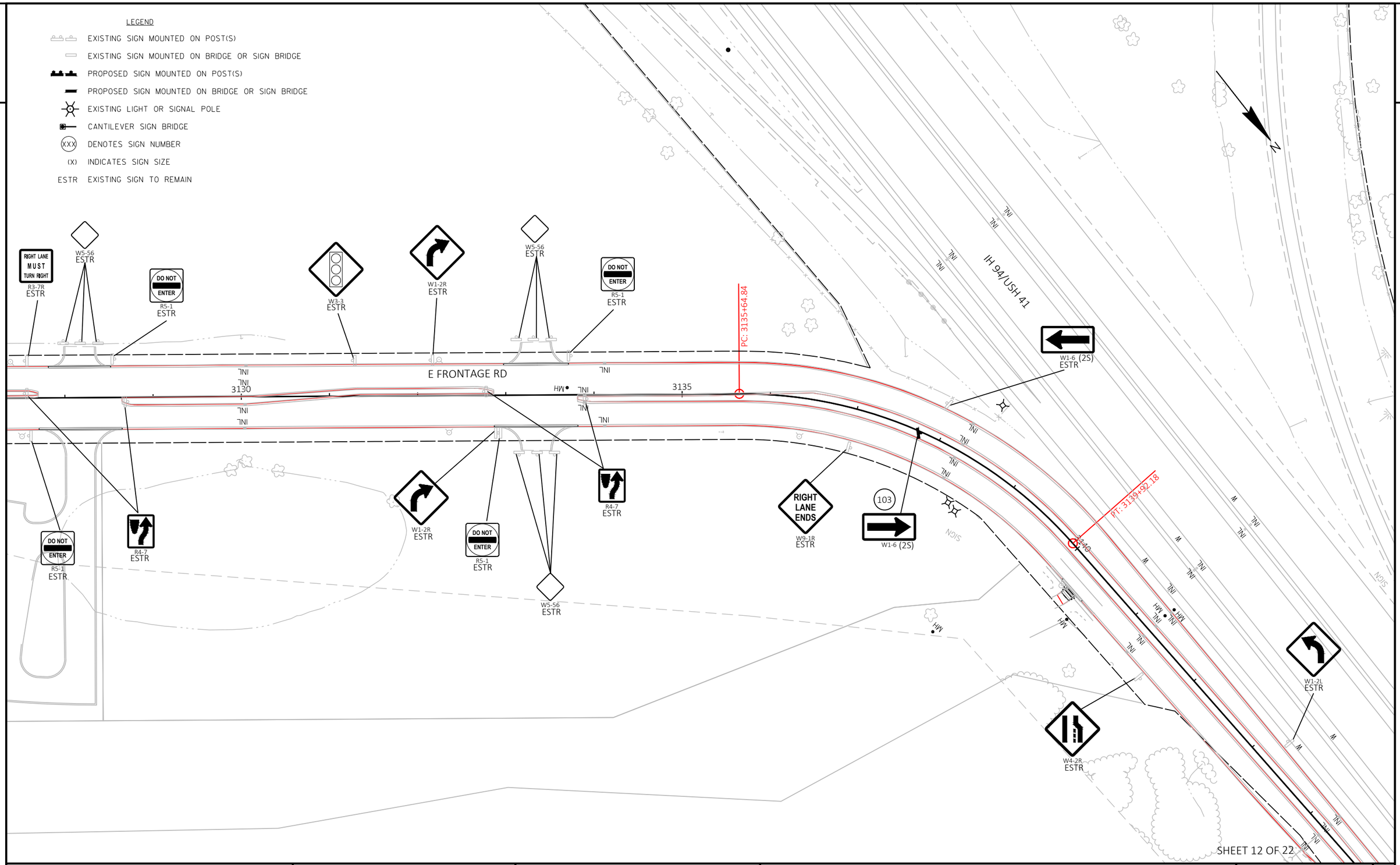

SHEET 12 OF 22

PROJECT NO: 1032-10-75	HWY: EAST FRONTAGE RD	COUNTY: KENOSHA	PERMANENT SIGNING PLAN	SHEET 88	E

FILE NAME : N:\PDS\C3D\CAD\10321015\SIGN\023201_PS_18.DWG
LAYOUT NAME - 023212_PS

PLOT DATE : 11/9/2021 7:46 AM PLOT BY : WAGNER, SCOTT H PLOT NAME : PLOT SCALE : 1 IN:100 FT

WISDOT/CADDS SHEET 42

2

2

LEGEND

EXISTING SIGN MOUNTED ON POST(S)

EXISTING SIGN MOUNTED ON BRIDGE OR SIGN BRIDGE

PROPOSED SIGN MOUNTED ON POST(S)

PROPOSED SIGN MOUNTED ON BRIDGE OR SIGN BRIDGE

EXISTING LIGHT OR SIGNAL POLE

CANTILEVER SIGN BRIDGE

(XXX) DENOTES SIGN NUMBER

(X) INDICATES SIGN SIZE

ESTR EXISTING SIGN TO REMAIN

N

IH 94/USH 41

E FRONTAGE RD

3145

3150

3155

PC: 3145+63.48

PT: 3148+04.72

PI: 3153+06.02

SPEED LIMIT 40
R2-1
ESTR

R4-7
ESTR

64
W5-52R (2S)
START OF CURB
4' HEIGHT

W6-1
ESTR

SPEED LIMIT 40
W3-5
ESTR

W6-2
ESTR

DO NOT ENTER
R5-1 (2S)
ESTR

SPEED LIMIT 55
REMOVE
SPEED LIMIT 55
62
R2-1 (2S)

REMOVE
63
W6-3 (2S)

NO PASSING ZONE
W14-3
ESTR

SHEET 13 OF 22

PROJECT NO: 1032-10-75	HWY: EAST FRONTAGE RD	COUNTY: KENOSHA	PERMANENT SIGNING PLAN	SHEET 89	E

FILE NAME : N:\PDS\C3D\CAD\10321015\SIGN\023201_PS_18.DWG
LAYOUT NAME - 023213_PS

PLOT DATE : 11/9/2021 7:46 AM PLOT BY : WAGNER, SCOTT H PLOT NAME : PLOT SCALE : 1 IN:100 FT

WISDOT/CADDS SHEET 42

2

2

LEGEND

EXISTING SIGN MOUNTED ON POST(S)

EXISTING SIGN MOUNTED ON BRIDGE OR SIGN BRIDGE

PROPOSED SIGN MOUNTED ON POST(S)

PROPOSED SIGN MOUNTED ON BRIDGE OR SIGN BRIDGE

EXISTING LIGHT OR SIGNAL POLE

CANTILEVER SIGN BRIDGE

(XXX) DENOTES SIGN NUMBER

(X) INDICATES SIGN SIZE

ESTR EXISTING SIGN TO REMAIN

IH 94/USH 41

E FRONTAGE RD

3160

3165

3170

3175

NO PASSING ZONE

REMOVE

NO PASSING ZONE

W14-3 (2S)

ESTR

SPEED LIMIT 35

W3-5

ESTR

SHEET 14 OF 22

PROJECT NO: 1032-10-75	HWY: EAST FRONTAGE RD	COUNTY: KENOSHA	PERMANENT SIGNING PLAN	SHEET 90	E

FILE NAME : N:\PDS\C3D\CAD\10321015\SIGN\023201_PS_18.DWG
LAYOUT NAME - 023214_PS

PLOT DATE : 11/9/2021 7:47 AM PLOT BY : WAGNER, SCOTT H PLOT NAME : PLOT SCALE : 1 IN:100 FT

WISDOT/CADDS SHEET 42

2

LEGEND

EXISTING SIGN MOUNTED ON POST(S)

EXISTING SIGN MOUNTED ON BRIDGE OR SIGN BRIDGE

PROPOSED SIGN MOUNTED ON POST(S)

PROPOSED SIGN MOUNTED ON BRIDGE OR SIGN BRIDGE

EXISTING LIGHT OR SIGNAL POLE

CANTILEVER SIGN BRIDGE

XXX DENOTES SIGN NUMBER

(X) INDICATES SIGN SIZE

ESTR EXISTING SIGN TO REMAIN

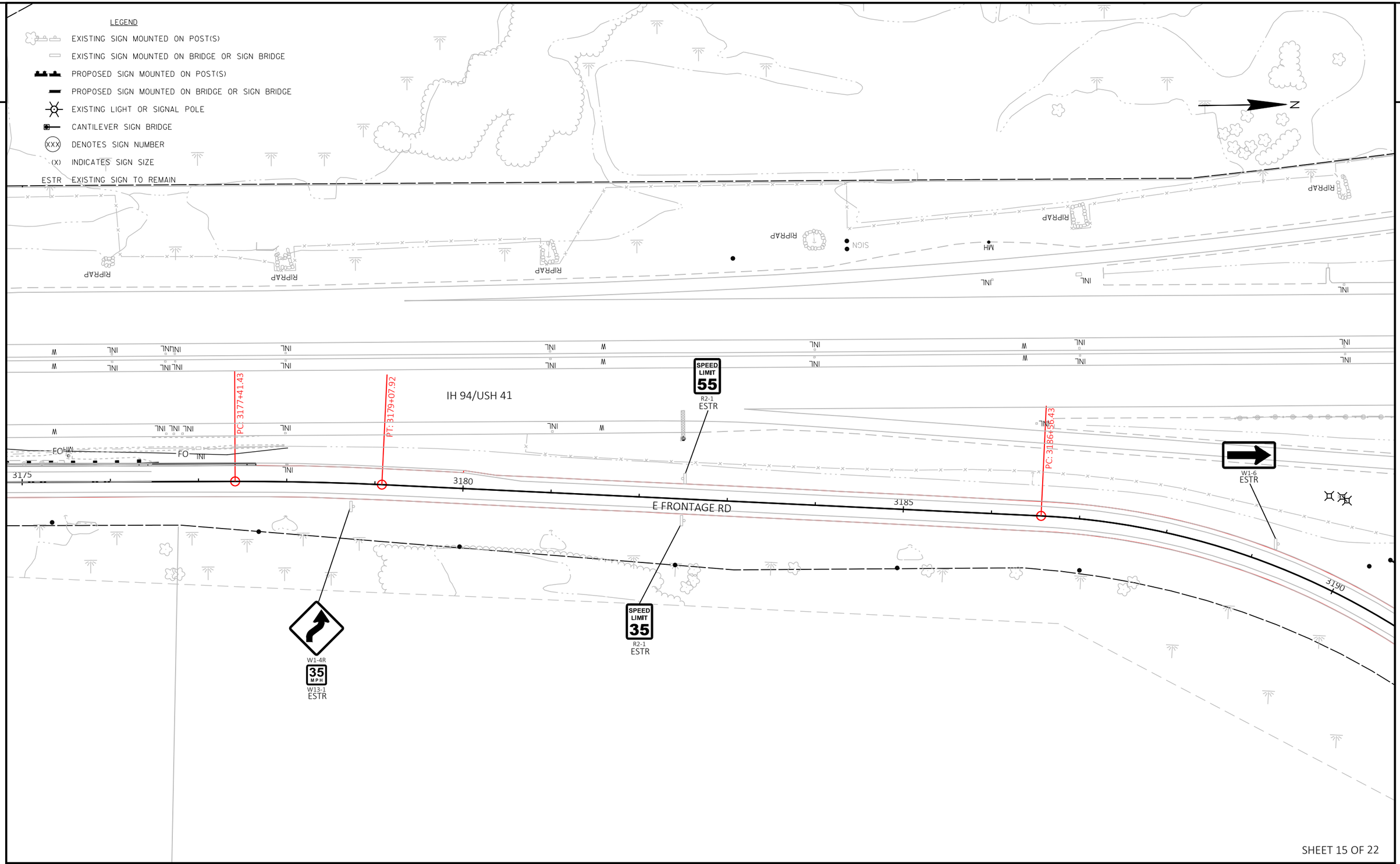
N
RIPRAP
RIPRAP
RIPRAP
RIPRAP
SIGN
MH
RIPRAP
INL
INL
INL
W
W
W
INL
INL
INL

LEGEND

- EXISTING SIGN MOUNTED ON POST(S)
- EXISTING SIGN MOUNTED ON BRIDGE OR SIGN BRIDGE
- PROPOSED SIGN MOUNTED ON POST(S)
- PROPOSED SIGN MOUNTED ON BRIDGE OR SIGN BRIDGE
- EXISTING LIGHT OR SIGNAL POLE
- CANTILEVER SIGN BRIDGE
- (XXX) DENOTES SIGN NUMBER
- (X) INDICATES SIGN SIZE
- ESTR EXISTING SIGN TO REMAIN

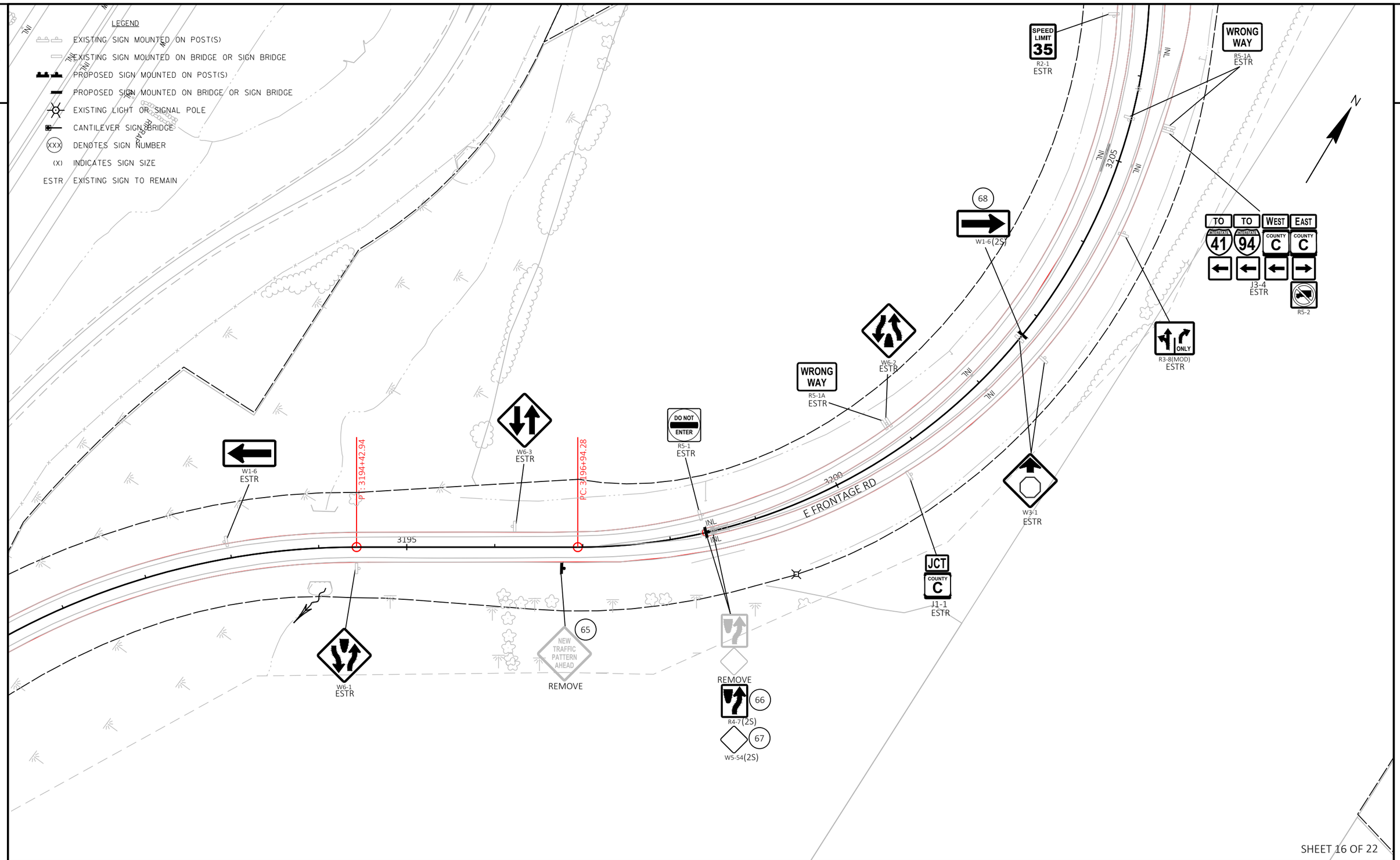

SHEET 16 OF 22

PROJECT NO: 1032-10-75	HWY: EAST FRONTAGE RD	COUNTY: KENOSHA	PERMANENT SIGNING PLAN	SHEET 92	E

FILE NAME : N:\PDS\C3D\CAD\10321015\SIGN\023201_PS_18.DWG
LAYOUT NAME - 023216_PS

PLOT DATE : 11/9/2021 7:48 AM PLOT BY : WAGNER, SCOTT H PLOT NAME : PLOT SCALE : 1 IN:100 FT

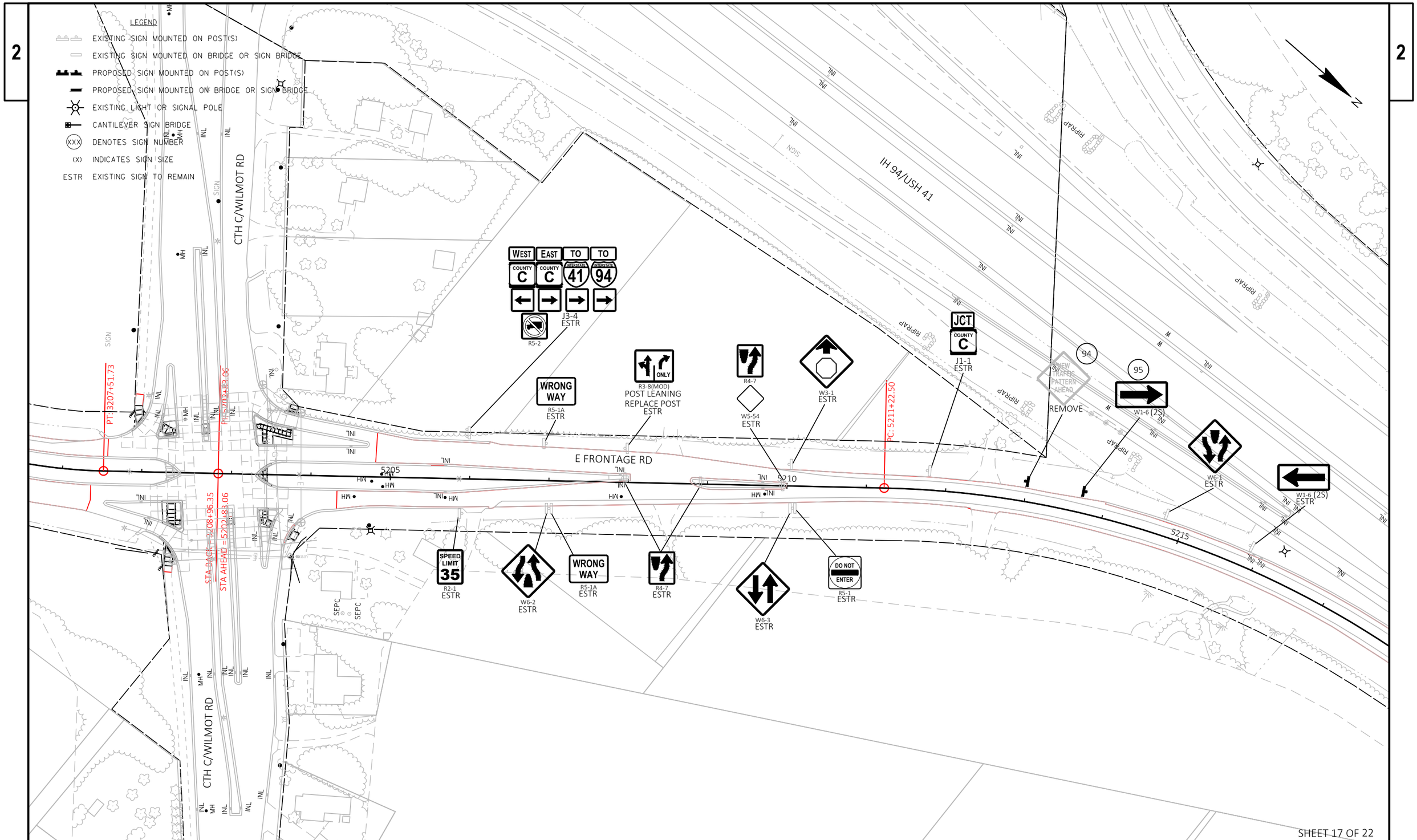

PROJECT NO: 1032-10-75	HWY: EAST FRONTAGE RD	COUNTY: KENOSHA	PERMANENT SIGNING PLAN	SHEET 93	E

FILE NAME : N:\PDS\C3D\CAD\10321015\SIGN\023201_PS_18.DWG
LAYOUT NAME - 023217_PS
PLOT DATE : 11/9/2021 7:48 AM PLOT BY : WAGNER, SCOTT H PLOT NAME : PLOT SCALE : Custom
WISDOT/CADDS SHEET 42

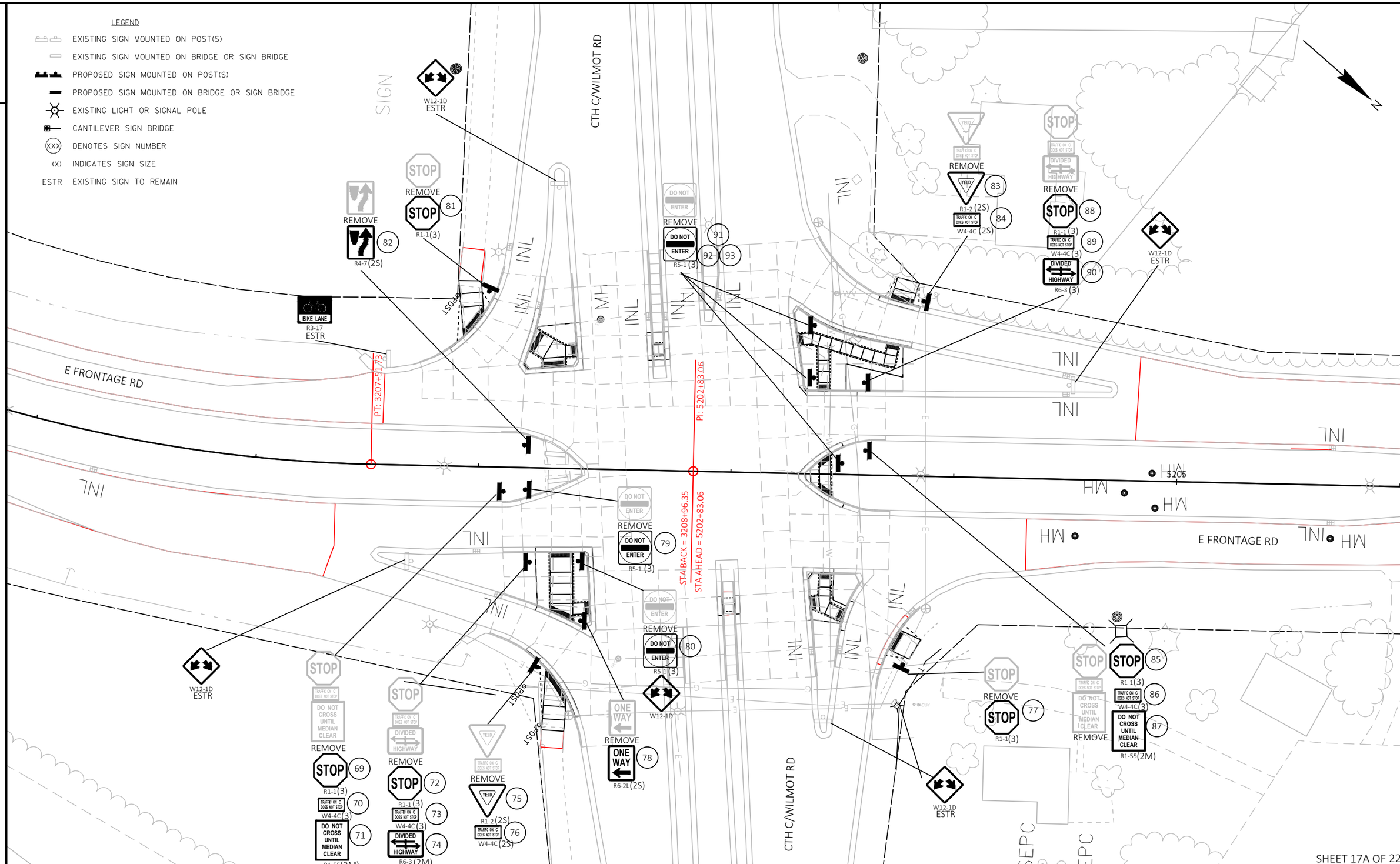

PROJECT NO: 1032-10-75	HWY: EAST FRONTAGE RD	COUNTY: KENOSHA	PERMANENT SIGNING PLAN	SHEET 94	E

FILE NAME : N:\PDS\C3D\CAD\10321015\SIGN\023201_PS_18.DWG
LAYOUT NAME - 023217A_PS
PLOT DATE : 11/9/2021 7:49 AM
PLOT BY : WAGNER, SCOTT H
PLOT NAME :
PLOT SCALE : 1 IN:40 FT
WISDOT/CADDS SHEET 42

2

LEGEND

EXISTING SIGN MOUNTED ON POST(S)

EXISTING SIGN MOUNTED ON BRIDGE OR SIGN BRIDGE

PROPOSED SIGN MOUNTED ON POST(S)

PROPOSED SIGN MOUNTED ON BRIDGE OR SIGN BRIDGE

EXISTING LIGHT OR SIGNAL POLE

CANTILEVER SIGN BRIDGE

XXX DENOTES SIGN NUMBER

(X) INDICATES SIGN SIZE

ESTR EXISTING SIGN TO REMAIN

N

W1-4L

35 MPH

W13-1

ESTR

PI: 5218+85.99

PI: 5224+73.99

PI: 5232+47.61

IH 94/USH 41

E FRONTAGE RD

5220

5225

5230

SPEED LIMIT 55

R2-1

ESTR

NO PASSING ZONE

W14-3

ESTR

SHEET 18 OF 22

PROJECT NO: 1032-10-75	HWY: EAST FRONTAGE RD	COUNTY: KENOSHA	PERMANENT SIGNING PLAN	SHEET 95	E

FILE NAME : N:\PDS\C3D\CAD\10321015\SIGN\023201_PS_18.DWG
LAYOUT NAME - 023218_PS

PLOT DATE : 11/9/2021 7:50 AM PLOT BY : WAGNER, SCOTT H PLOT NAME : PLOT SCALE : 1 IN:100 FT

2

2

LEGEND

- EXISTING SIGN MOUNTED ON POST(S)
- EXISTING SIGN MOUNTED ON BRIDGE OR SIGN BRIDGE
- PROPOSED SIGN MOUNTED ON POST(S)
- PROPOSED SIGN MOUNTED ON BRIDGE OR SIGN BRIDGE
- EXISTING LIGHT OR SIGNAL POLE
- CANTILEVER SIGN BRIDGE
- XXX DENOTES SIGN NUMBER
- (X) INDICATES SIGN SIZE
- ESTR EXISTING SIGN TO REMAIN

N

REMOVE 96 W5-52L 4' HEIGHT

REMOVE 99 W5-52R 4' HEIGHT

REMOVE 98 W5-52L 4' HEIGHT

REMOVE 97 W5-52R 4' HEIGHT

IH 94/USH 41

E FRONTAGE RD

PI: 5242+00.30

PI: 5244+13.15

PI: 5246+26.01

5235

5240

5245

RIPRAP

SHEET 19 OF 22

PROJECT NO: 1032-10-75	HWY: EAST FRONTAGE RD	COUNTY: KENOSHA	PERMANENT SIGNING PLAN	SHEET 96	E

FILE NAME : N:\PDS\C3D\CAD\10321015\SIGN\023201_PS_18.DWG
LAYOUT NAME - 023219_PS

PLOT DATE : 11/9/2021 7:50 AM PLOT BY : WAGNER, SCOTT H PLOT NAME : PLOT SCALE : 1 IN:100 FT

WISDOT/CADDS SHEET 42

2

2

LEGEND

EXISTING SIGN MOUNTED ON POST(S)

EXISTING SIGN MOUNTED ON BRIDGE OR SIGN BRIDGE

PROPOSED SIGN MOUNTED ON POST(S)

PROPOSED SIGN MOUNTED ON BRIDGE OR SIGN BRIDGE

EXISTING LIGHT OR SIGNAL POLE

CANTILEVER SIGN BRIDGE

XXX DENOTES SIGN NUMBER

(X) INDICATES SIGN SIZE

ESTR EXISTING SIGN TO REMAIN

N

IH 94/USH 41

E FRONTAGE RD

5250

5255

5260

PC: 5261+14.04

SPEED LIMIT 55
R2-1
ESTR

NO PASSING ZONE
W14-3
ESTR

SPEED LIMIT 35
W3-5
ESTR

SPEED LIMIT 35
REMOVE

SPEED LIMIT 35
R2-1

100

SHEET 20 OF 22

PROJECT NO: 1032-10-75	HWY: EAST FRONTAGE RD	COUNTY: KENOSHA	PERMANENT SIGNING PLAN	SHEET 97	E

FILE NAME : N:\PDS\C3D\CAD\10321015\SIGN\023201_PS_18.DWG
LAYOUT NAME - 023220_PS

PLOT DATE : 11/9/2021 7:51 AM PLOT BY : WAGNER, SCOTT H PLOT NAME : PLOT SCALE : 1 IN:100 FT

WISDOT/CADDS SHEET 42

2

LEGEND

EXISTING SIGN MOUNTED ON POST(S)

EXISTING SIGN MOUNTED ON BRIDGE OR SIGN BRIDGE

PROPOSED SIGN MOUNTED ON POST(S)

PROPOSED SIGN MOUNTED ON BRIDGE OR SIGN BRIDGE

EXISTING LIGHT OR SIGNAL POLE

CANTILEVER SIGN BRIDGE

XXX DENOTES SIGN NUMBER

(X) INDICATES SIGN SIZE

ESTR EXISTING SIGN TO REMAIN

IH 94/USH 41

BT: 5263+04.80

PC: 5271+82.20

5265

5270

5275

E FRONTAGE RD

W1-1R

25 MPH

W13-1

ESTR

W1-6

ESTR

101

W1-6 (2S)

PT: 5276+52.56

SHEET 21 OF 22

PROJECT NO: 1032-10-75	HWY: EAST FRONTAGE RD	COUNTY: KENOSHA	PERMANENT SIGNING PLAN	SHEET 98	E

FILE NAME : N:\PDS\C3D\CAD\10321015\SIGN\023201_PS_18.DWG
LAYOUT NAME - 023221_PS

PLOT DATE : 11/9/2021 7:51 AM PLOT BY : WAGNER, SCOTT H PLOT NAME : PLOT SCALE : 1 IN:100 FT

WISDOT/CADDS SHEET 42

LEGEND

EXISTING SIGN MOUNTED ON POST(S)

EXISTING SIGN MOUNTED ON BRIDGE OR SIGN BRIDGE

PROPOSED SIGN MOUNTED ON POST(S)

PROPOSED SIGN MOUNTED ON BRIDGE OR SIGN BRIDGE

EXISTING LIGHT OR SIGNAL POLE

CANTILEVER SIGN BRIDGE

XXX DENOTES SIGN NUMBER

(X) INDICATES SIGN SIZE

ESTR EXISTING SIGN TO REMAIN

PT: 5276+52.56

PC: 5278+51.37

W1-1L
25 MPH
W13-1
ESTR

W1-1L
25 MPH
W13-1
ESTR

W1-6
ESTR

W1-6
ESTR

JCT
50
ESTR

W3-3
ESTR

W1-1R (2S)
25 MPH
W13-1 (2S)
102
102A

W4-2R
ESTR

CITY ORDINANCES
OWNED BY OTHERS (CITY)
ESTR

SPEED LIMIT
35
R2-1
ESTR

PC: 5285+98.35

PT: 5284+20.81

PT: 5289+06.93

E FRONTAGE RD

STH 50/75TH ST

RIPRAP

CANOPY

FILLER CAP

5280

5285

5290

PT: 5295+05.04

PC: 5297+59.62

N

SHEET 22 OF 22

PROJECT NO: 1032-10-75	HWY: EAST FRONTAGE RD	COUNTY: KENOSHA	PERMANENT SIGNING PLAN	SHEET 99	E

FILE NAME : N:\PDS\C3D\CAD\10321015\SIGN\023201_PS_18.DWG
LAYOUT NAME - 023222_PS

PLOT DATE : 11/9/2021 7:52 AM PLOT BY : WAGNER, SCOTT H PLOT NAME : PLOT SCALE : 1 IN:100 FT

WISDOT/CADDS SHEET 42

2

LEGEND

- DISTRIBUTION CENTER
- CONDUIT - 2" UNLESS OTHERWISE NOTED
- EXISTING LIGHT POLE, ARM MOUNTED LUMINAIRE
- REMOVE LIGHTING UNIT
- PULL BOX
- JUNCTION BOX

N

STH 165 (LAKEVIEW PKWY)

E FRONTAGE RD (120TH AVE)

EX R/W

REMOVE WIRE ONLY

3122+36, 5.6'RT
CLV9

411+29, 68.2'LT
LPB104

412+76, 71.1'LT
LPB105

411+30, 5.7'LT
DLV8

412+73, 3.8'RT
LPB106

412+56, 1.7'RT
CLV10

SEE TRAFFIC SIGNAL REMOVAL PLAN FOR SIGNAL EQUIPMENT REMOVALS

407+04, 4.8'RT
DLV6
EXISTING LIGHTING UNIT TO REMAIN

409+17, 2.6'RT
CLV7
EXISTING LIGHTING UNIT TO REMAIN

EXISTING LIGHT CONTROLLER TO REMAIN (NO WORK UNDER THIS CONTRACT)

HL-30-LV	
A,C	RED
B,D	BLACK
N	WHITE
GND	GREEN OR BARE
A,B,C,D	30 A
240/480 VAC 3 WIRE ISOLATED NEUTRAL	

CONSTRUCTION NOTES:

1. DETAILS OF CONSTRUCTION MATERIALS AND WORKMANSHIP NOT SHOWN ON THESE DRAWINGS SHALL CONFORM TO THE PERTINENT REQUIREMENTS OF THE CONTRACT.
2. ALL OPEN AND UN-TERMINATED CONDUITS SHALL BE CAPPED OR PLUGGED WITH ENGINEER APPROVED FITTINGS IMMEDIATELY AFTER INSTALLATION.
3. UNDERGROUND WIRE & CONDUIT SHOWN ON REMOVAL PLANS FOR REMOVAL SHALL BE ABANDONED IN PLACE UNLESS DIRECTED BY THE ENGINEER. CONTRACTOR MAY CHOOSE TO REMOVE CONDUCTOR AT THEIR OWN EXPENSE.
4. EQUIPMENT SHOWN BOLD SHALL BE REMOVED UNLESS OTHERWISE NOTED.
5. CONTRACTOR SHALL DISPOSE OF REMOVED EXISTING LAMPS IN ACCORDANCE WITH THE SPECIAL PROVISIONS.
6. THE LOCATION OF EXISTING AND PROPOSED UTILITIES AS SHOWN ON THE PLANS ARE APPROXIMATE. IN ADDITION, THERE MAY BE OTHER UTILITIES WITHIN THE PROJECT AREA WHICH ARE NOT SHOWN. THE CONTRACTOR SHALL VERIFY THE LOCATIONS OF ALL UTILITIES PRIOR TO CONSTRUCTION.
7. LIGHTING PLAN REMOVAL QUANTITIES INCLUDED IN THE TRAFFIC SIGNAL PLAN QUANTITIES.

CANOPY

PROJECT NO: 1032-10-75	HWY: STH 165	COUNTY: KENOSHA	LIGHTING PLAN - REMOVAL	SHEET 100	E

FILE NAME : N:\PDS\C3D\CAD\10321015\LTG\023501_LP.DWG
LAYOUT NAME - 023501_lp

PLOT DATE : 10/19/2021 4:07 PM PLOT BY : VANDE LEEST, CYNTHIA PLOT NAME : PLOT SCALE : 1 IN:50 FT

WISDOT/CADDS SHEET 42

LEGEND

- CONTROL CABINET
- SIGNAL HEAD, TRAFFIC SIGNAL STANDARD, PEDESTAL BASE
- (XX) SIGNAL HEAD, TRAFFIC SIGNAL POLE, TRANSFORMER BASE
- LUMINAIRE, TRAFFIC POLE, TRANSFORMER BASE
- LOOP DETECTOR IN 1" NONMETALLIC CONDUIT
- PULL BOX, 24" X 36"
- PULL BOX, 24" X 42"
- WIRELESS ANTENNA
- XX SIGNAL HEAD NUMBER
- R RED CIRCULAR INDICATOR
- Y YELLOW CIRCULAR INDICATOR
- G GREEN CIRCULAR INDICATOR
- Y YELLOW ARROW
- G GREEN ARROW
- EVP DETECTOR HEAD

NOTES:
- ALL LENSES ARE 12-INCH

N

STH 165 (LAKEVIEW PKWY)

E FRONTAGE RD (120TH AVE)

3123+00

3122+00

1999+00

STA AHEAD = 3121+57.83
STA BACK = 1999+88.58

409+00 410+00 411+00 412+00 413+00

PB1 PB2 PB3 PB4 PB5 PB6 PB7 PB8 PB9 PB10 PB11 PB12 PB13 PB14 PB15 PB16 PB18 PB19 PB20 PB21 PB22 PB23

SB1 SB2 SB3 SB4 SB5 SB6 SB7 SB8 SB9 SB10 SB11 SB12

CB1

LPB104 LPB105 LPB106

ABANDON

SEE LIGHTING REMOVAL PLAN FOR REMOVAL OF LIGHTING EQUIPMENT

ABANDONED LOOP DETECTORS FROM PREVIOUS PROJECT TO REMAIN

EX R/W

CONSTRUCTION NOTES:
1. LOCATIONS OF EXISTING AND PROPOSED UTILITY INSTALLATIONS ARE APPROXIMATE. THERE MAY BE OTHER UTILITY INSTALLATIONS WITHIN THE PROJECT WHICH ARE NOT SHOWN.
2. EXISTING CONDUIT RUNS NO LONGER USED FOR THE PROPOSED TRAFFIC SIGNAL INSTALLATION TO BE ABANDONED IN PLACE UNLESS OTHERWISE NOTED. CONTRACTOR TO REMOVE ANY EXISTING TRAFFIC SIGNAL CABLE AND TRAFFIC SIGNAL WIRE NO LONGER USED FOR THE PROPOSED TRAFFIC SIGNAL INSTALLATION.
3. GRAYSHADE REPRESENTS EXISTING, BOLD REPRESENTS ITEMS TO BE REMOVED.
4. ABANDONED LOOP DETECTOR CONDUIT TO REMAIN IN PLACE. LOOP DETECTORS WIRES AND LEAD-IN CABLE TO BE REMOVED BY CONTRACTOR UNLESS OTHERWISE NOTED.
5. CONTRACTOR TO RETURN WIRELESS ANTENNA TO WISDOT AFTER REMOVAL.

TRAFFIC CONTROL SIGNAL
STH 165 (LAKEVIEW PKWY) & E FRONTAGE RD (120TH AVE)
VILLAGE OF PLEASANT PRAIRIE
KENOSHA COUNTY

SIGNAL NO. S30-0756

REGION CONTACT: J. GATES
DESIGNED BY: EMCS INC.
REVISED BY:

PROJECT NO: 1032-10-75	HWY: STH 165	COUNTY: KENOSHA	TRAFFIC SIGNAL REMOVAL	SHEET 101	E

FILE NAME : Y:\52XX\5252_DP20.NSFWYEFR.KNS\CADDS\10321015\SHEETSPLAN\024001-SR.DWG
LAYOUT NAME - 024201
PLOT DATE : 10/29/2021 9:38 AM
PLOT BY : NICHOLAS BECKER
PLOT NAME :
PLOT SCALE : 1 IN:40 FT
WISDOT/CADDS SHEET 42

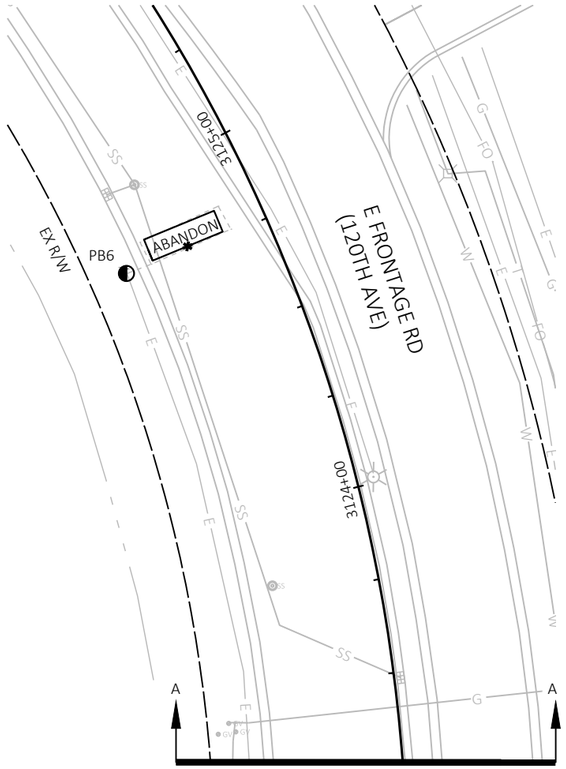

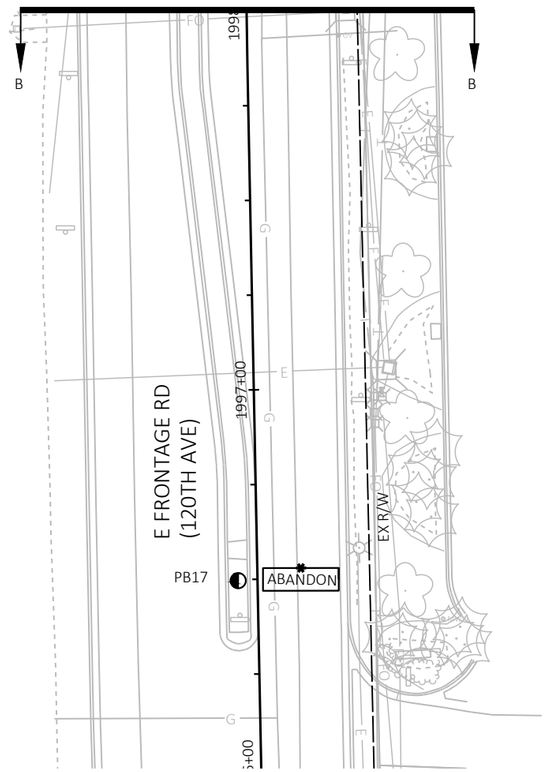

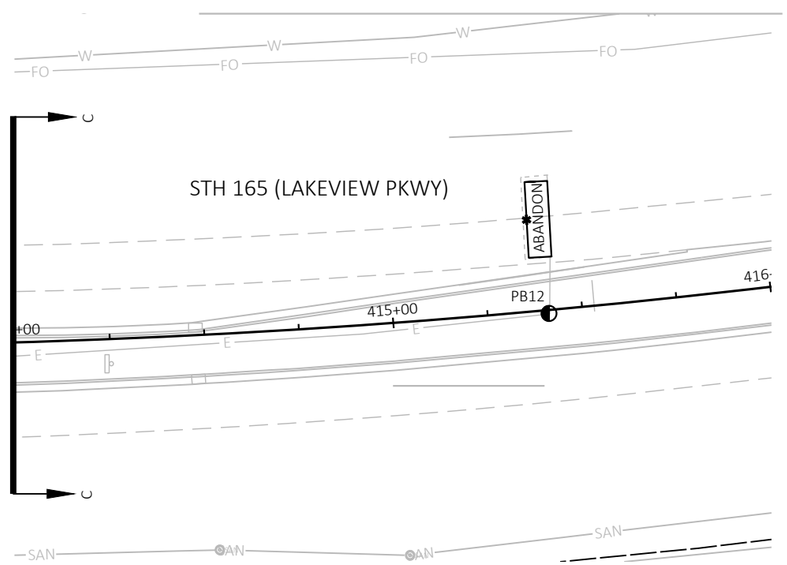

N

2

TRAFFIC CONTROL SIGNAL
STH 165 (LAKEVIEW PKWY) & E FRONTAGE RD (120TH AVE)
VILLAGE OF PLEASANT PRAIRE
KENOSHA COUNTY

SIGNAL NO. S30-0756

REGION CONTACT: J. GATES
DESIGNED BY: EMCS INC.
REVISED BY:

PAGE 2 OF 2

PROJECT NO: 1032-10-75	HWY: STH 165	COUNTY: KENOSHA	TRAFFIC SIGNAL REMOVAL	SHEET 102	E

FILE NAME : Y:\52XX\5252_DP20.NSFWYEFR.KNS\CADDS\10321015\SHEETSPLAN\024001-SR.DWG
LAYOUT NAME - 024202

PLOT DATE : 10/29/2021 9:39 AM PLOT BY : NICHOLAS BECKER PLOT NAME : PLOT SCALE : 1 IN:40 FT

2

CONSTRUCTION NOTES:

1. DURING CONSTRUCTION ALL NORTH/SOUTH EAST FRONTAGE ROAD THRU TRAFFIC WILL BE DETOURED. LANE SHIFTS/CLOSURES ARE FOR NIGHTTIME ONLY.
2. FINAL LOCATION OF SIGNAL POLES AND SIGNAL HEADS SHALL BE DIRECTED BY THE ENGINEER.
3. POLES AND POSTS INSTALLED BEHIND CURBS SHALL BE OFFSET A MINIMUM OF 2 FEET FROM THE FACE OF THE CURB TO THE SIDE OF THE POST OR POLE.
4. GUYING OF POLES IS REQUIRED AND LOCATIONS SHALL BE APPROVED BY THE ENGINEER.
5. CONTRACTOR TO ADJUST TEMPORARY SIGNALS WITHIN EACH CONSTRUCTION STAGE AS DIRECTED BY THE ENGINEER TO MAINTAIN MUTCD SIGNAL REQUIREMENTS.
6. CONTRACTOR SHALL COORDINATE WITH THE WISDOT ELECTRICAL FIELD UNIT. (414) 266-1170. 5 WORKING DAYS PRIOR TO BEGINNING ANY WORK AT THE INTERSECTION.
7. ANY KNOCKDOWNS TO PERMANENT/TEMPORARY SIGNAL EQUIPMENT SHALL BE REPLACED BY THE CONTRACTOR.
8. ALL LUMINAIRES ARE LED C
9. PROVIDE A MINIMUM 2 FEET CLEARANCE FROM FACE OF CURB AND PROPOSED CURB RAMP WORK FOR WOOD POLE 2.

SUMMARY OF SELECTED ITEMS FOR INFORMATION ONLY	
QUANTITY	DESCRIPTION
4 EA	WOOD POLES, CLASS 4
1 EA	GUY POLE
580 LF	SPAN WIRE
24 EA	SIGNAL HEADS
4 EA	EVP DETECTOR HEADS

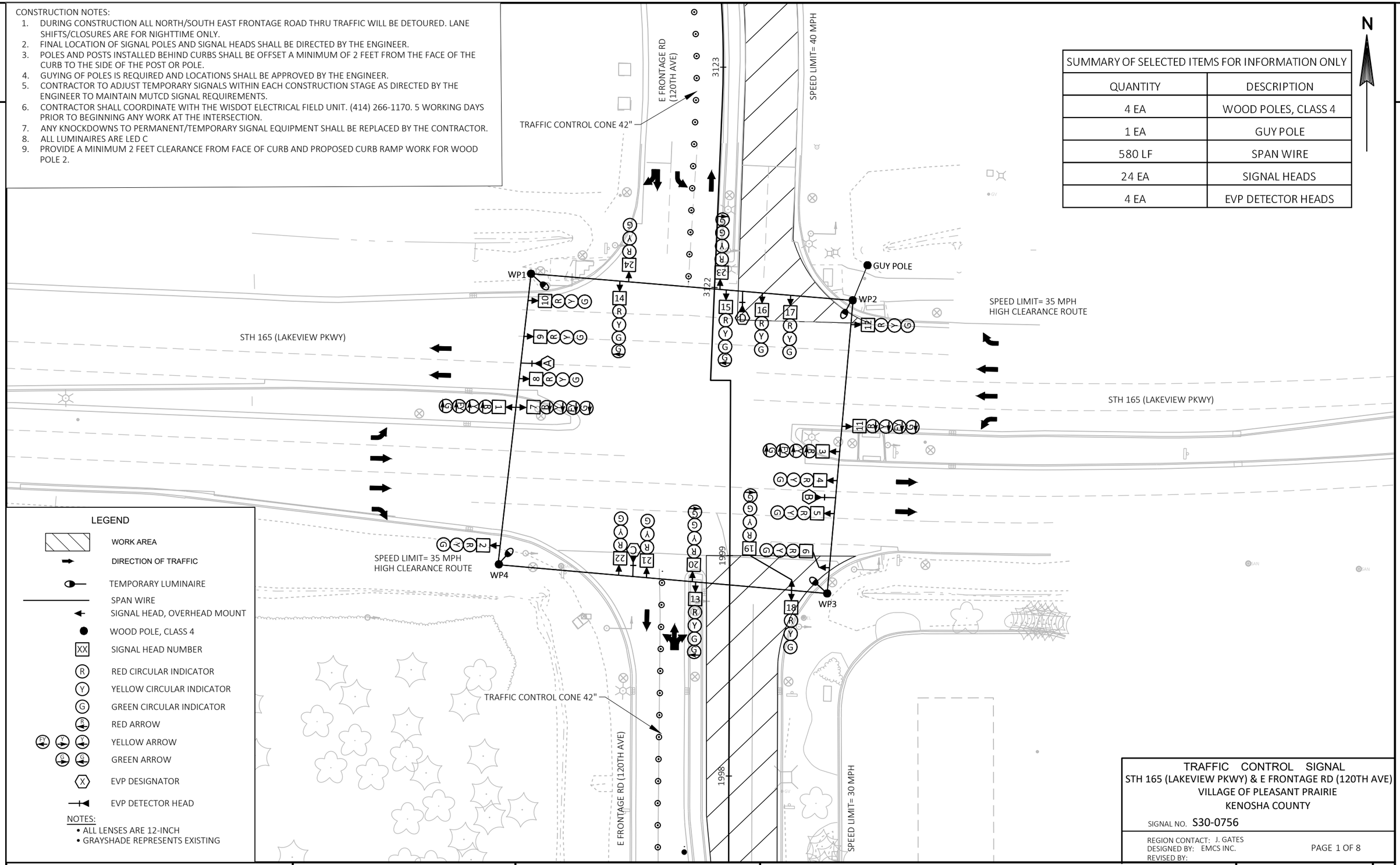

LEGEND

- WORK AREA
- DIRECTION OF TRAFFIC
- TEMPORARY LUMINAIRE
- SPAN WIRE
- SIGNAL HEAD, OVERHEAD MOUNT
- WOOD POLE, CLASS 4
- XX SIGNAL HEAD NUMBER
- R RED CIRCULAR INDICATOR
- Y YELLOW CIRCULAR INDICATOR
- G GREEN CIRCULAR INDICATOR
- RED ARROW
- YELLOW ARROW
- GREEN ARROW
- X EVP DESIGNATOR
- EVP DETECTOR HEAD

NOTES:
- ALL LENSES ARE 12-INCH
- GRAYSHADE REPRESENTS EXISTING

TRAFFIC CONTROL SIGNAL
STH 165 (LAKEVIEW PKWY) & E FRONTAGE RD (120TH AVE)
VILLAGE OF PLEASANT PRAIRIE
KENOSHA COUNTY

SIGNAL NO. S30-0756

REGION CONTACT: J. GATES
DESIGNED BY: EMCS INC.
REVISED BY:

PAGE 1 OF 8

PROJECT NO: 1032-10-75	HWY: STH 165	COUNTY: KENOSHA	TEMPORARY TRAFFIC SIGNAL PLANS- STAGE 1	SHEET 103	E

FILE NAME : Y:\52XX\5252_DP20.NSFWYEFR.KNS\CADDS\10321015\SHEETSPLAN\024101-ST.DWG
LAYOUT NAME - 024101

PLOT DATE : 10/29/2021 3:01 PM PLOT BY : LAUREN MAENHOUT PLOT NAME : PLOT SCALE : 1 IN:40 FT

WISDOT/CADDS SHEET 42

2

CONSTRUCTION NOTES:

1. DURING CONSTRUCTION ALL NORTH/SOUTH EAST FRONTAGE ROAD THRU TRAFFIC WILL BE DETOURED. LANE SHIFTS/CLOSURES ARE FOR NIGHTTIME ONLY.
2. FINAL LOCATION OF SIGNAL POLES AND SIGNAL HEADS SHALL BE DIRECTED BY THE ENGINEER.
3. POLES AND POSTS INSTALLED BEHIND CURBS SHALL BE OFFSET A MINIMUM OF 2 FEET FROM THE FACE OF THE CURB TO THE SIDE OF THE POST OR POLE.
4. GUYING OF POLES IS REQUIRED AND LOCATIONS SHALL BE APPROVED BY THE ENGINEER.
5. CONTRACTOR TO ADJUST TEMPORARY SIGNALS WITHIN EACH CONSTRUCTION STAGE AS DIRECTED BY THE ENGINEER TO MAINTAIN MUTCD SIGNAL REQUIREMENTS.
6. CONTRACTOR SHALL COORDINATE WITH THE WISDOT ELECTRICAL FIELD UNIT. (414) 266-1170. 5 WORKING DAYS PRIOR TO BEGINNING ANY WORK AT THE INTERSECTION.
7. ANY KNOCKDOWNS TO PERMANENT/TEMPORARY SIGNAL EQUIPMENT SHALL BE REPLACED BY THE CONTRACTOR.
8. ALL LUMINAIRES ARE LED C
9. PROVIDE A MINIMUM 2 FEET CLEARANCE FROM FACE OF CURB AND PROPOSED CURB RAMP WORK FOR WOOD POLE 2.

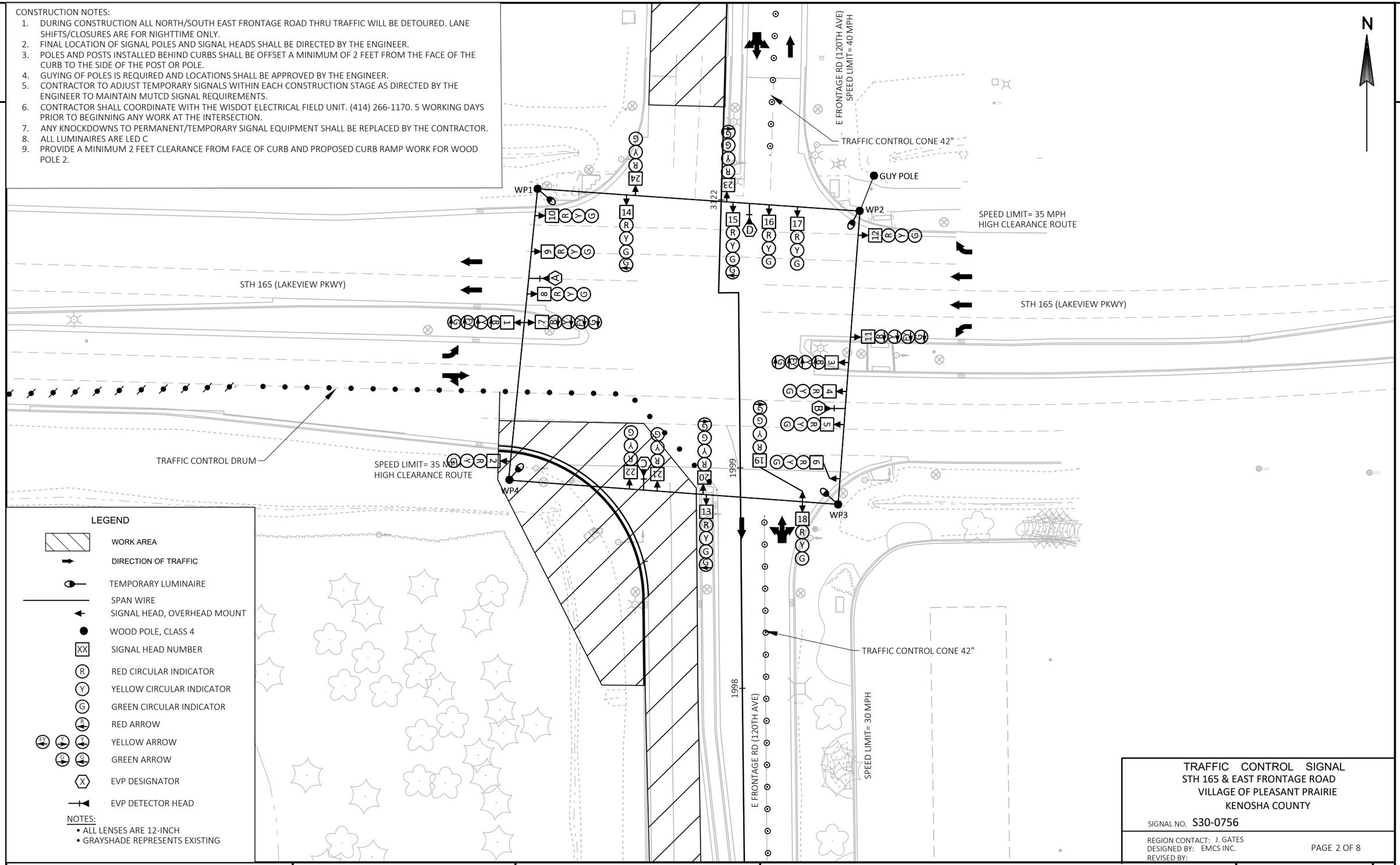

LEGEND

- WORK AREA
- DIRECTION OF TRAFFIC
- TEMPORARY LUMINAIRE
- SPAN WIRE
- SIGNAL HEAD, OVERHEAD MOUNT
- WOOD POLE, CLASS 4
- XX — SIGNAL HEAD NUMBER
- R — RED CIRCULAR INDICATOR
- Y — YELLOW CIRCULAR INDICATOR
- G — GREEN CIRCULAR INDICATOR
- RA — RED ARROW
- YA — YELLOW ARROW
- GA — GREEN ARROW
- X — EVP DESIGNATOR
- EVP DETECTOR HEAD

NOTES:

- ALL LENSES ARE 12-INCH
- GRAYSHADE REPRESENTS EXISTING

TRAFFIC CONTROL SIGNAL
STH 165 & EAST FRONTAGE ROAD
VILLAGE OF PLEASANT PRAIRIE
KENOSHA COUNTY

SIGNAL NO. S30-0756

REGION CONTACT: J. GATES
DESIGNED BY: EMCS INC.
REVISED BY:

PAGE 2 OF 8

PROJECT NO: 1032-10-75	HWY: STH 165	COUNTY: KENOSHA	TEMPORARY TRAFFIC SIGNAL PLAN STAGE 1 EFR SB CLOSURE	SHEET 104	E

FILE NAME : Y:\52XX\5252_DP20.NSFWYEFR.KNS\CADDS\10321015\SHEETSPLAN\024101-ST.DWG
LAYOUT NAME - 24102

PLOT DATE : 10/29/2021 3:01 PM PLOT BY : LAUREN MAENHOUT PLOT NAME : PLOT SCALE : 1 IN:40 FT

WISDOT/CADDS SHEET 42

CONSTRUCTION NOTES:

1. FINAL LOCATION OF SIGNAL POLES AND SIGNAL HEADS SHALL BE DIRECTED BY THE ENGINEER.
2. POLES AND POSTS INSTALLED BEHIND CURBS SHALL BE OFFSET A MINIMUM OF 2 FEET FROM THE FACE OF THE CURB TO THE SIDE OF THE POST OR POLE.
3. GUYING OF POLES IS REQUIRED AND LOCATIONS SHALL BE APPROVED BY THE ENGINEER.
4. CONTRACTOR TO ADJUST TEMPORARY SIGNALS WITHIN EACH CONSTRUCTION STAGE AS DIRECTED BY THE ENGINEER TO MAINTAIN MUTCD SIGNAL REQUIREMENTS.
5. CONTRACTOR SHALL COORDINATE WITH THE WISDOT ELECTRICAL FIELD UNIT. (414) 266-1170. 5 WORKING DAYS PRIOR TO BEGINNING ANY WORK AT THE INTERSECTION.
6. ANY KNOCKDOWNS TO PERMANENT/TEMPORARY SIGNAL EQUIPMENT SHALL BE REPLACED BY THE CONTRACTOR.
7. ALL LUMINAIRES ARE LED C
8. PROVIDE A MINIMUM 2 FEET CLEARANCE FROM FACE OF CURB AND PROPOSED CURB RAMP WORK FOR WOOD POLE 2.

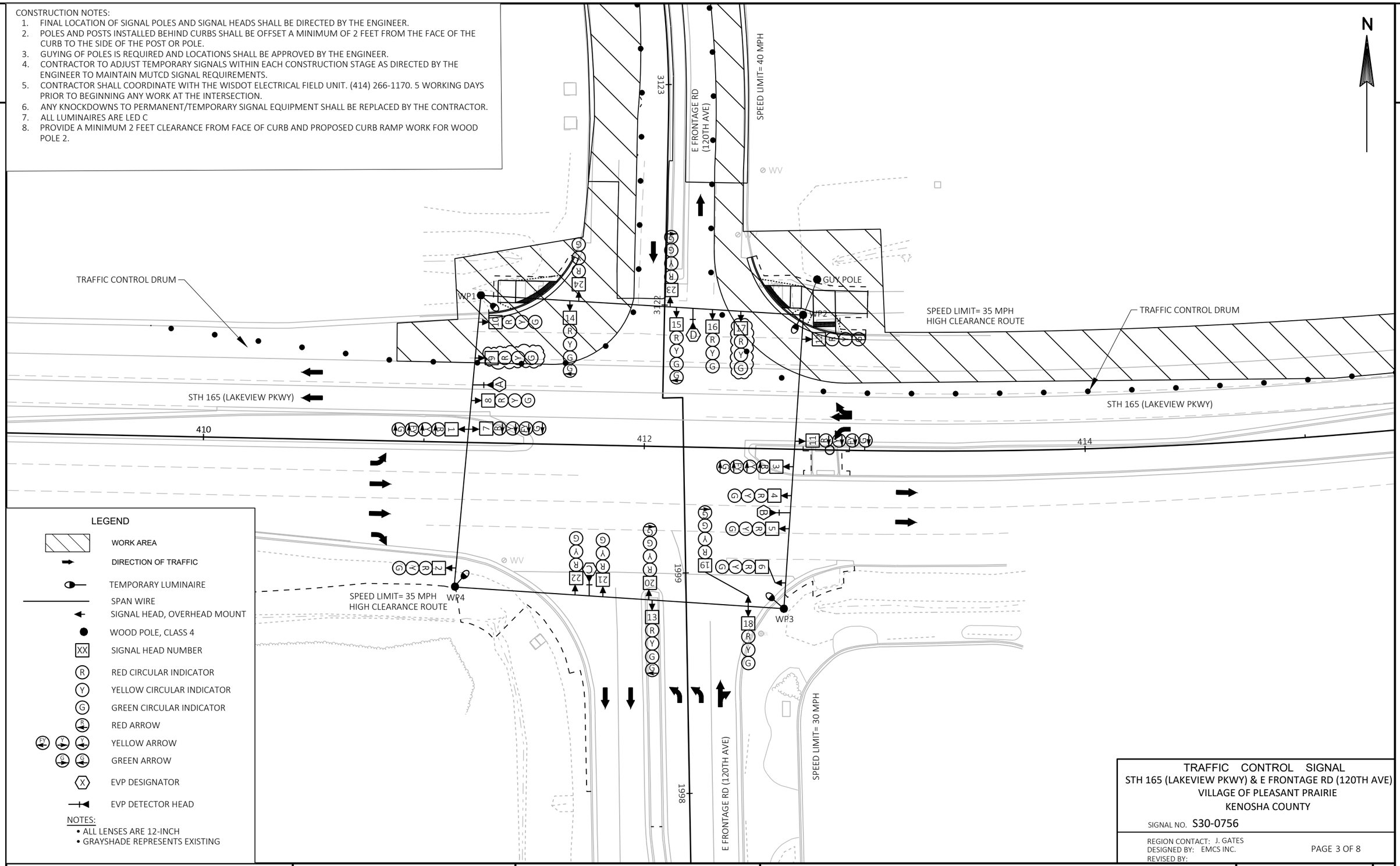

LEGEND

- WORK AREA
- DIRECTION OF TRAFFIC
- TEMPORARY LUMINAIRE
- SPAN WIRE
- SIGNAL HEAD, OVERHEAD MOUNT
- WOOD POLE, CLASS 4
- XX — SIGNAL HEAD NUMBER
- R — RED CIRCULAR INDICATOR
- Y — YELLOW CIRCULAR INDICATOR
- G — GREEN CIRCULAR INDICATOR
- R — RED ARROW
- EV Y G — YELLOW ARROW
- G — GREEN ARROW
- X — EVP DESIGNATOR
- EVP DETECTOR HEAD

NOTES:
- ALL LENSES ARE 12-INCH
- GRAYSHADE REPRESENTS EXISTING

TRAFFIC CONTROL SIGNAL
STH 165 (LAKEVIEW PKWY) & E FRONTAGE RD (120TH AVE)
VILLAGE OF PLEASANT PRAIRIE
KENOSHA COUNTY

SIGNAL NO. S30-0756

REGION CONTACT: J. GATES
DESIGNED BY: EMCS INC.
REVISED BY:

PAGE 3 OF 8

PROJECT NO: 1032-10-75	HWY: STH 165	COUNTY: KENOSHA	TEMPORARY TRAFFIC SIGNAL PLAN - STAGE 2A	SHEET 105	E

FILE NAME : Y:\52XX\5252_DP20.NSFWYEFR.KNS\CADDS\10321015\SHEETSPLAN\024102-ST.DWG
LAYOUT NAME - 024103

PLOT DATE : 10/29/2021 3:01 PM PLOT BY : LAUREN MAENHOUT PLOT NAME : PLOT SCALE : 1 IN:40 FT

WISDOT/CADDS SHEET 42

2

LEGEND

- WORK AREA
- DIRECTION OF TRAFFIC
- TEMPORARY LUMINAIRE
- SPAN WIRE
- SIGNAL HEAD, OVERHEAD MOUNT
- WOOD POLE, CLASS 4
- XX SIGNAL HEAD NUMBER
- R RED CIRCULAR INDICATOR
- Y YELLOW CIRCULAR INDICATOR
- G GREEN CIRCULAR INDICATOR
- R RED ARROW
- EV Y Y YELLOW ARROW
- G G GREEN ARROW
- X EVP DESIGNATOR
- EVP DETECTOR HEAD

NOTES:
- ALL LENSES ARE 12-INCH
- GRAYSHADE REPRESENTS EXISTING

N

E FRONTAGE RD (120TH AVE)

SPEED LIMIT= 40 MPH

3123

TRAFFIC CONTROL DRUM

WV

WP1

WP2

GUY POLE

3122

SPEED LIMIT= 35 MPH
HIGH CLEARANCE ROUTE

STH 165 (LAKEVIEW PKWY)

410

412

414

TRAFFIC CONTROL DRUM

STH 165 (LAKEVIEW PKWY)

SPEED LIMIT= 35 MPH
HIGH CLEARANCE ROUTE

WP4

WP3

1999

1998

CLOSE LEFT TURN LANE
FROM COMMERCE DRIVE

SPEED LIMIT= 30 MPH

E FRONTAGE RD (120TH AVE)

CONSTRUCTION NOTES:
1. DURING CONSTRUCTION ALL NORTH/SOUTH EAST FRONTAGE ROAD THRU TRAFFIC WILL BE DETOURED.
2. FINAL LOCATION OF SIGNAL POLES AND SIGNAL HEADS SHALL BE DIRECTED BY THE ENGINEER.
3. POLES AND POSTS INSTALLED BEHIND CURBS SHALL BE OFFSET A MINIMUM OF 2 FEET FROM THE FACE OF THE CURB TO THE SIDE OF THE POST OR POLE.
4. GUYING OF POLES IS REQUIRED AND LOCATIONS SHALL BE APPROVED BY THE ENGINEER.
5. CONTRACTOR TO ADJUST TEMPORARY SIGNALS WITHIN EACH CONSTRUCTION STAGE AS DIRECTED BY THE ENGINEER TO MAINTAIN MUTCD SIGNAL REQUIREMENTS.
6. CONTRACTOR SHALL COORDINATE WITH THE WISDOT ELECTRICAL FIELD UNIT. (414) 266-1170. 5 WORKING DAYS PRIOR TO BEGINNING ANY WORK AT THE INTERSECTION.
7. ANY KNOCKDOWNS TO PERMANENT/TEMPORARY SIGNAL EQUIPMENT SHALL BE REPLACED BY THE CONTRACTOR.
8. ALL LUMINAIRES ARE LED C
9. PROVIDE A MINIMUM 2 FEET CLEARANCE FROM FACE OF CURB AND PROPOSED CURB RAMP WORK FOR WOOD POLE 2.

TRAFFIC CONTROL SIGNAL
STH 165 (LAKEVIEW PKWY) & E FRONTAGE RD (120TH AVE)
VILLAGE OF PLEASANT PRAIRIE
KENOSHA COUNTY

SIGNAL NO. S30-0756

REGION CONTACT: J. GATES
DESIGNED BY: EMCS INC.
REVISED BY:

PAGE 4 OF 8

PROJECT NO: 1032-10-75	HWY: STH 165	COUNTY: KENOSHA	TEMPORARY TRAFFIC SIGNAL PLAN - STAGE 2B	SHEET 106	E

FILE NAME : Y:\52XX\5252_DP20.NSFWYEFR.KNS\CADDS\10321015\SHEETSPLAN\024102-ST.DWG
LAYOUT NAME - 024104

PLOT DATE : 11/11/2021 5:12 PM PLOT BY : LAUREN MAENHOUT PLOT NAME : PLOT SCALE : 1 IN:40 FT

WISDOT/CADDS SHEET 42

CONSTRUCTION NOTES:

1. DURING CONSTRUCTION ALL NORTH/SOUTH EAST FRONTAGE ROAD THRU TRAFFIC WILL BE DETOURED.
2. FINAL LOCATION OF SIGNAL POLES AND SIGNAL HEADS SHALL BE DIRECTED BY THE ENGINEER.
3. POLES AND POSTS INSTALLED BEHIND CURBS SHALL BE OFFSET A MINIMUM OF 2 FEET FROM THE FACE OF THE CURB TO THE SIDE OF THE POST OR POLE.
4. GUYING OF POLES IS REQUIRED AND LOCATIONS SHALL BE APPROVED BY THE ENGINEER.
5. CONTRACTOR TO ADJUST TEMPORARY SIGNALS WITHIN EACH CONSTRUCTION STAGE AS DIRECTED BY THE ENGINEER TO MAINTAIN MUTCD SIGNAL REQUIREMENTS.
6. CONTRACTOR SHALL COORDINATE WITH THE WISDOT ELECTRICAL FIELD UNIT. (414) 266-1170. 5 WORKING DAYS PRIOR TO BEGINNING ANY WORK AT THE INTERSECTION.
7. ANY KNOCKDOWNS TO PERMANENT/TEMPORARY SIGNAL EQUIPMENT SHALL BE REPLACED BY THE CONTRACTOR.
8. ALL LUMINAIRES ARE LED C
9. PROVIDE A MINIMUM 2 FEET CLEARANCE FROM FACE OF CURB AND PROPOSED CURB RAMP WORK FOR WOOD POLE 2.

LEGEND

- WORK AREA
- DIRECTION OF TRAFFIC
- TEMPORARY LUMINAIRE
- SPAN WIRE
- SIGNAL HEAD, OVERHEAD MOUNT
- WOOD POLE, CLASS 4
- XX SIGNAL HEAD NUMBER
- R RED CIRCULAR INDICATOR
- Y YELLOW CIRCULAR INDICATOR
- G GREEN CIRCULAR INDICATOR
- R RED ARROW
- Y YELLOW ARROW
- G GREEN ARROW
- X EVP DESIGNATOR
- EVP DETECTOR HEAD

NOTES:
- ALL LENSES ARE 12-INCH
- GRAYSHADE REPRESENTS EXISTING

N

E FRONTAGE RD (120TH AVE)
SPEED LIMIT= 40 MPH
3123
3122
1999
1998
WP1
WP2
WP3
WP4
GUY POLE
SPEED LIMIT= 35 MPH
HIGH CLEARANCE ROUTE
STH 165 (LAKEVIEW PKWY)
410
412
414
415
TRAFFIC CONTROL DRUM
SPEED LIMIT= 35 MPH
HIGH CLEARANCE ROUTE
COVER SIGNAL HEAD 5
FOR STAGE 3A
E FRONTAGE RD (120TH AVE)
SPEED LIMIT= 30 MPH
TRAFFIC CONTROL DRUM

TRAFFIC CONTROL SIGNAL
STH 165 (LAKEVIEW PKWY) & E FRONTAGE RD (120TH AVE)
VILLAGE OF PLEASANT PRAIRIE
KENOSHA COUNTY

SIGNAL NO. S30-0756

REGION CONTACT: J. GATES
DESIGNED BY: EMCS INC.
REVISED BY:

PAGE 5 OF 8

PROJECT NO: 1032-10-75	HWY: STH 165	COUNTY: KENOSHA	TEMPORARY TRAFFIC SIGNAL PLAN - STAGE 3A	SHEET 107	E

FILE NAME : Y:\52XX\5252_DP20.NSFWYEFR.KNS\CADDS\10321015\SHEETSPLAN\024103-ST.DWG
LAYOUT NAME - 024105

PLOT DATE : 10/29/2021 3:02 PM PLOT BY : LAUREN MAENHOUT PLOT NAME : PLOT SCALE : 1 IN:40 FT

WISDOT/CADDS SHEET 42

CONSTRUCTION NOTES:

1. DURING CONSTRUCTION ALL NORTH/SOUTH EAST FRONTAGE ROAD THRU TRAFFIC WILL BE DETOURED. LANE SHIFTS/CLOSURES ARE FOR NIGHTTIME ONLY.
2. FINAL LOCATION OF SIGNAL POLES AND SIGNAL HEADS SHALL BE DIRECTED BY THE ENGINEER.
3. POLES AND POSTS INSTALLED BEHIND CURBS SHALL BE OFFSET A MINIMUM OF 2 FEET FROM THE FACE OF THE CURB TO THE SIDE OF THE POST OR POLE.
4. GUYING OF POLES IS REQUIRED AND LOCATIONS SHALL BE APPROVED BY THE ENGINEER.
5. CONTRACTOR TO ADJUST TEMPORARY SIGNALS WITHIN EACH CONSTRUCTION STAGE AS DIRECTED BY THE ENGINEER TO MAINTAIN MUTCD SIGNAL REQUIREMENTS.
6. CONTRACTOR SHALL COORDINATE WITH THE WISDOT ELECTRICAL FIELD UNIT. (414) 266-1170. 5 WORKING DAYS PRIOR TO BEGINNING ANY WORK AT THE INTERSECTION.
7. ANY KNOCKDOWNS TO PERMANENT/TEMPORARY SIGNAL EQUIPMENT SHALL BE REPLACED BY THE CONTRACTOR.
8. ALL LUMINAIRES ARE LED C
9. PROVIDE A MINIMUM 2 FEET CLEARANCE FROM FACE OF CURB AND PROPOSED CURB RAMP WORK FOR WOOD POLE 2.

LEGEND

- WORK AREA
- DIRECTION OF TRAFFIC
- TEMPORARY LUMINAIRE
- SPAN WIRE
- SIGNAL HEAD, OVERHEAD MOUNT
- WOOD POLE, CLASS 4
- XX SIGNAL HEAD NUMBER
- R RED CIRCULAR INDICATOR
- Y YELLOW CIRCULAR INDICATOR
- G GREEN CIRCULAR INDICATOR
- RED ARROW
- YELLOW ARROW
- GREEN ARROW
- X EVP DESIGNATOR
- EVP DETECTOR HEAD

NOTES:
- ALL LENSES ARE 12-INCH
- GRAYSHADE REPRESENTS EXISTING

N

E FRONTAGE RD (120TH AVE)

SPEED LIMIT= 40 MPH

3123

3122

1999

1998

WP1

WP2

WP3

WP4

GUY POLE

SPEED LIMIT= 35 MPH
HIGH CLEARANCE ROUTE

SPEED LIMIT= 35 MPH
HIGH CLEARANCE ROUTE

STH 165 (LAKEVIEW PKWY)

STH 165 (LAKEVIEW PKWY)

409

410

412

414

415

TRAFFIC CONTROL CONE 42"

SPEED LIMIT= 30 MPH
E FRONTAGE RD (120TH AVE)

TRAFFIC CONTROL SIGNAL
STH 165 (LAKEVIEW PKWY) & E FRONTAGE RD (120TH AVE)
VILLAGE OF PLEASANT PRAIRIE
KENOSHA COUNTY

SIGNAL NO. S30-0756

REGION CONTACT: J. GATES
DESIGNED BY: EMCS INC.
REVISED BY:

PAGE 6 OF 8

PROJECT NO: 1032-10-75	HWY: STH 165	COUNTY: KENOSHA	TEMPORARY TRAFFIC SIGNAL PLAN - STAGE 3B/3D	SHEET 108	E

FILE NAME : Y:\52XX\5252_DP20.NSFWYEFR.KNS\CADDS\10321015\SHEETSPLAN\024103-ST.DWG
LAYOUT NAME - 024106

PLOT DATE : 10/29/2021 3:02 PM PLOT BY : LAUREN MAENHOUT PLOT NAME : PLOT SCALE : 1 IN:40 FT

WISDOT/CADDS SHEET 42

CONSTRUCTION NOTES:

1. DURING CONSTRUCTION ALL NORTH/SOUTH EAST FRONTAGE ROAD THRU TRAFFIC WILL BE DETOURED. LANE SHIFTS/CLOSURES ARE FOR NIGHTTIME ONLY.
2. FINAL LOCATION OF SIGNAL POLES AND SIGNAL HEADS SHALL BE DIRECTED BY THE ENGINEER.
3. POLES AND POSTS INSTALLED BEHIND CURBS SHALL BE OFFSET A MINIMUM OF 2 FEET FROM THE FACE OF THE CURB TO THE SIDE OF THE POST OR POLE.
4. GUYING OF POLES IS REQUIRED AND LOCATIONS SHALL BE APPROVED BY THE ENGINEER.
5. CONTRACTOR TO ADJUST TEMPORARY SIGNALS WITHIN EACH CONSTRUCTION STAGE AS DIRECTED BY THE ENGINEER TO MAINTAIN MUTCD SIGNAL REQUIREMENTS.
6. CONTRACTOR SHALL COORDINATE WITH THE WISDOT ELECTRICAL FIELD UNIT. (414) 266-1170. 5 WORKING DAYS PRIOR TO BEGINNING ANY WORK AT THE INTERSECTION.
7. ANY KNOCKDOWNS TO PERMANENT/TEMPORARY SIGNAL EQUIPMENT SHALL BE REPLACED BY THE CONTRACTOR.
8. ALL LUMINAIRES ARE LED C
9. PROVIDE A MINIMUM 2 FEET CLEARANCE FROM FACE OF CURB AND PROPOSED CURB RAMP WORK FOR WOOD POLE 2.

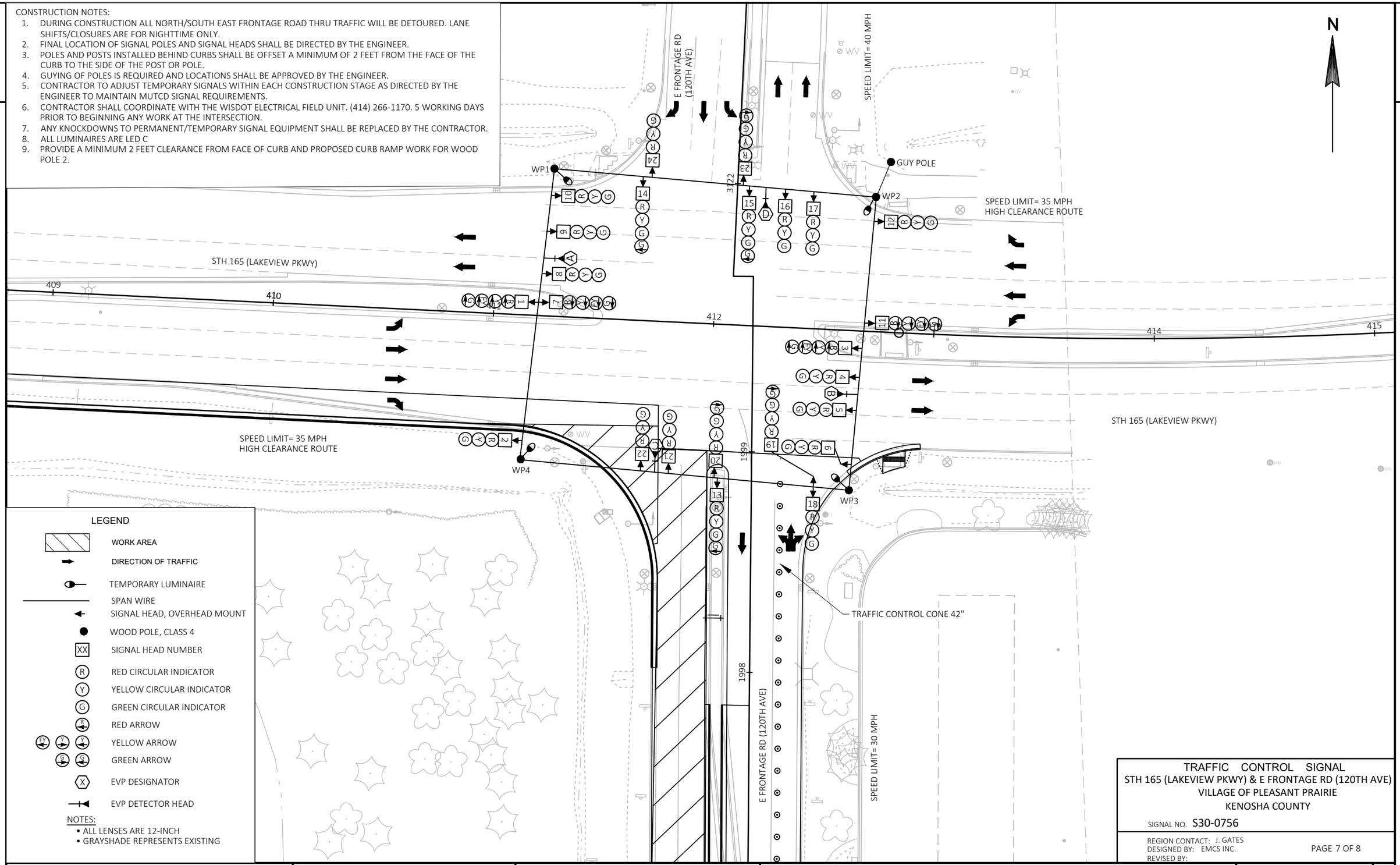

LEGEND

- WORK AREA
- DIRECTION OF TRAFFIC
- TEMPORARY LUMINAIRE
- SPAN WIRE
- SIGNAL HEAD, OVERHEAD MOUNT
- WOOD POLE, CLASS 4
- XX SIGNAL HEAD NUMBER
- R RED CIRCULAR INDICATOR
- Y YELLOW CIRCULAR INDICATOR
- G GREEN CIRCULAR INDICATOR
- RA RED ARROW
- YA YELLOW ARROW
- GA GREEN ARROW
- X EVP DESIGNATOR
- EVP DETECTOR HEAD

NOTES:
- ALL LENSES ARE 12-INCH
- GRAYSHADE REPRESENTS EXISTING

TRAFFIC CONTROL SIGNAL
STH 165 (LAKEVIEW PKWY) & E FRONTAGE RD (120TH AVE)
VILLAGE OF PLEASANT PRAIRIE
KENOSHA COUNTY

SIGNAL NO. S30-0756

REGION CONTACT: J. GATES
DESIGNED BY: EMCS INC.
REVISED BY:

PAGE 7 OF 8

PROJECT NO: 1032-10-75	HWY: STH 165	COUNTY: KENOSHA	TEMPORARY TRAFFIC SIGNAL PLAN - STAGE 3C/3E	SHEET 109	E

FILE NAME : Y:\52XX\5252_DP20.NSFWYEFR.KNS\CADDS\10321015\SHEETSPLAN\024103-ST.DWG
LAYOUT NAME - 024107

PLOT DATE : 10/29/2021 3:03 PM PLOT BY : LAUREN MAENHOUT PLOT NAME : PLOT SCALE : 1 IN:40 FT

WISDOT/CADDS SHEET 42

	HEAD NUMBERS	FLASH
Ø1	1,3	-
Ø2	8,9,10,11	R
Ø3	12,14,15,16,17,18	R ← R
Ø4	19,20,21,22,23,24	R ← R
Ø5	7,11	-
Ø6	2,4,5,6	R
Ø7		
Ø8		
Ø2P		
Ø3P		
Ø4P		
Ø6P		
OLA	1,3	R ←
OLB		
OLC	7,11	R ←
OLD		

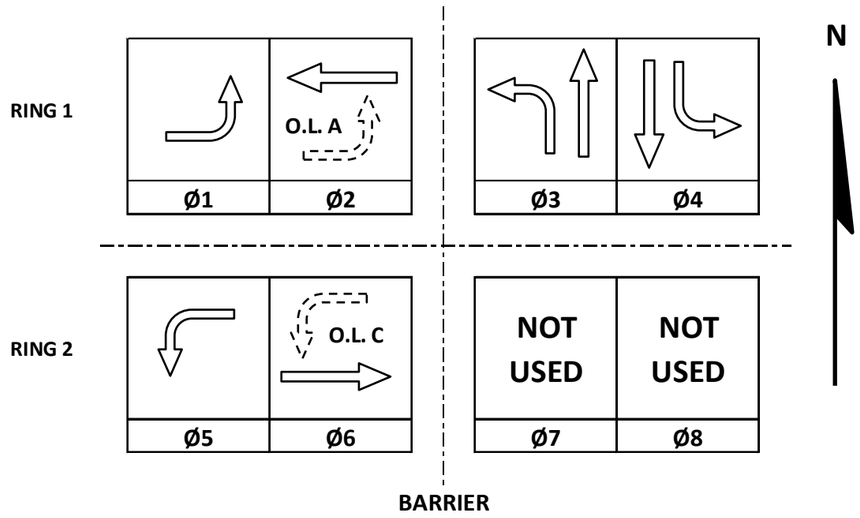

CONTROLLER LOGIC

PHASE NUMBER	PHASE LOCKING	DUAL ENTRY W / Ø	PHASE RECALL	PHASE ACTIVE
1				X
2	X	6	MIN	X
3				X
4				X
5		2		X
6	X	2	MIN	X
7				
8				

EMERGENCY VEHICLE PREEMPTION SEQUENCE

EMERGENCY VEHICLE PREEMPTOR	A	B	C	D
MOVEMENT				
PHASE	2+5	6+1	4	3

AFTER PREEMPTION SEQUENCE 2+5 OR 6+1, CONTROLLER SHALL RETURN TO PHASES 2+6.
AFTER PREEMPTION SEQUENCE 4, CONTROLLER SHALL RETURN TO PHASES 4.
AFTER PREEMPTION SEQUENCE 3, CONTROLLER SHALL RETURN TO PHASES 3.

TYPE OF INTERCONNECT/COMMUNICATION	
NONE	
CLOSED LOOP	
TWISTED PAIR	
FIBER OPTIC*	
FIBER OPTIC (ETHERNET)	
RADIO	
CELL MODEM	X

TYPE OF COORDINATION	
NONE	
TBC	X
TRAFFIC RESPONSIVE	
ADAPTIVE	
*LOCATION OF MASTER CONTROLLER NO:	S-
SIGNAL SYSTEM NO:	SS- 30-0170

TYPE OF LIGHTING	
BY OTHER AGENCY	
IN TRAFFIC CABINET	X
IN SEPARATE DOT LIGHTING CABINET	

TYPE OF PRE-EMPT	
NONE	
RAILROAD	
EMERGENCY VEHICLE	X
GTT	X
TOMAR	
HARDWIRE	
OTHER	
CONFIRMATION LIGHTS	
LIFT BRIDGE	
QUEUE DETECTION	

GENERAL NOTES:

1. USE MODE B FOR FLASHING YELLOW ARROW OPERATIONS
2. PHASE 1 WILL ONLY ACTIVATE WHEN EVP B IS CALLED
3.
4.

STH 165 (LAKEVIEWPKWY) & E FRONTAGE RD (120TH AVE)
VILLAGE OF PLEASANT PRAIRIE
KENOSHA COUNTY

SIGNAL NO: T30-7056	CABINET TYPE: TEMP
	CONTROLLER TYPE: ECONOLITE
DATE: 10/2021	PAGE NUMBER: 8 OF 8

FILE NAME: \\emcsdc01\projects\52xx\5252_DP20.NSFWYEFR.KNS\11 ITS-SIG-LIGHT\calcs\024301-ph.xlsx PLOT DATE: 8/5/2021 PLOT NAME: 024301-ph.xlsx PLOT BY: _____ PLOT SCALE: 1:1

LEGEND

- SERVICE POLE
- CONTROL CABINET
- NONMETALLIC CONDUIT 2", UNLESS OTHERWISE NOTED
- LOOP DETECTOR CONDUIT 1" NONMETALLIC
- SIGNAL HEAD, TRAFFIC SIGNAL STANDARD, PEDESTAL BASE
- (XX) MONOTUBE BASE, POLE, 35'-45' ARM
- (XX) MONOTUBE BASE, POLE OVERHEIGHT, 35'-55' ARM
- PEDESTRIAN HEAD WITH PUSH BUTTON
- LUMINAIRE, TRAFFIC POLE, TRANSFORMER BASE
- LOOP DETECTOR IN 1" NONMETALLIC CONDUIT
- WIRELESS ANTENNA
- PULL BOX, 24" X 36"
- PULL BOX, 24" X 42"
- SIGNAL HEAD NUMBER
- RED CIRCULAR INDICATOR
- YELLOW CIRCULAR INDICATOR
- GREEN CIRCULAR INDICATOR
- RED ARROW
- YELLOW ARROW
- GREEN ARROW
- DON'T WALK INDICATOR 16" / WALK INDICATOR 16"
- EVP DESIGNATOR
- EVP DETECTOR HEAD
- LANE DESIGNATION FOR INFO ONLY

NOTES:
- ALL LENSES ARE 12-INCH
- GRAYSHADE REPRESENTS EXISTING

EVP COSTRUCTION NOTES

1. INSTALL THE TRAFFIC SIGNAL EMERGENCY VEHICLE PRE-EMPTION DETECTOR CABLE TO RUN CONTINUOUSLY (WITHOUT SPLICES) FROM THE CABINET TO THE DETECTOR HEADS. MOUNT THE EVP DETECTOR HEADS AND WIRE THEM PER MANUFACTURER INSTRUCTIONS.
2. THE DEPARTMENT WILL DETERMINE THE EXACT LOCATIONS OF THE EVP DETECTORS TO ENSURE THAT THE INSTALLATION DOES NOT CREATE A SIGHT OBSTRUCTION.
3. ALL EVP DETECTOR CABLE SHALL BE ROUTED THOUGH EXISTING SIGNAL BASES, PULL BOXES, AND CONDUIT AS INDICATED. PROVIDE ENOUGH CABLE TO ALLOW 10 FEET OF SLACK IN THE CABINET, IN EACH PULL BOX,AND IN THE SIGNAL POLE HANDHOLE.
4. FOR A CABINET THAT IS NOT OPERATING THE SIGNAL, CABINET WIRING WILL BE DONE BY THE CONTRACTOR. THE CONTRACTOR SHALL INSTALL AND TERMINATE THE EVP CABLE AS DESCRIBED AND SHALL LABEL EACH CABLE AS NOTED ON THE PLAN SHEETS (I.E. EVP A-B-C-D).

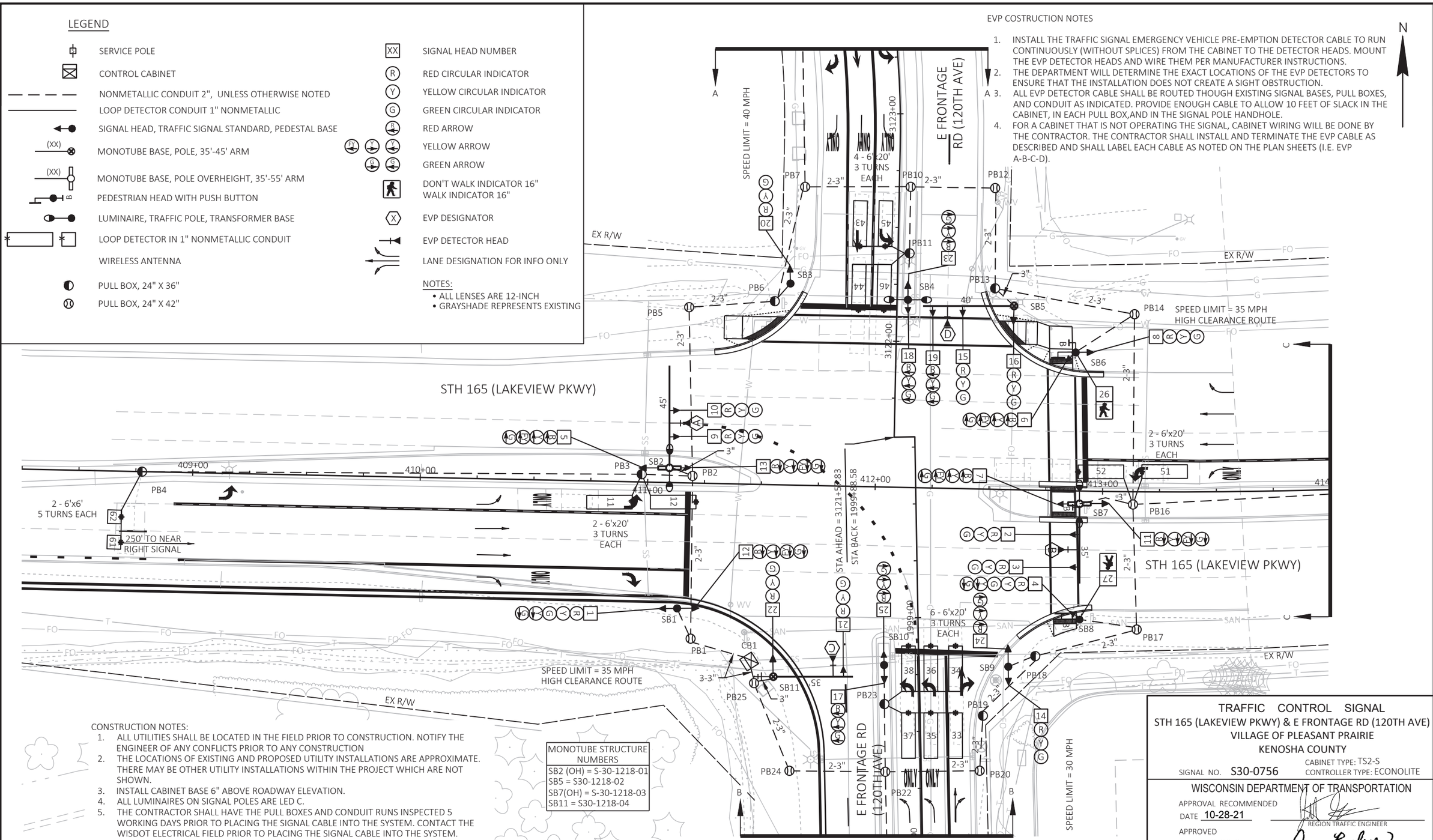

CONSTRUCTION NOTES:

1. ALL UTILITIES SHALL BE LOCATED IN THE FIELD PRIOR TO CONSTRUCTION. NOTIFY THE ENGINEER OF ANY CONFLICTS PRIOR TO ANY CONSTRUCTION
2. THE LOCATIONS OF EXISTING AND PROPOSED UTILITY INSTALLATIONS ARE APPROXIMATE. THERE MAY BE OTHER UTILITY INSTALLATIONS WITHIN THE PROJECT WHICH ARE NOT SHOWN.
3. INSTALL CABINET BASE 6" ABOVE ROADWAY ELEVATION.
4. ALL LUMINAIRES ON SIGNAL POLES ARE LED C.
5. THE CONTRACTOR SHALL HAVE THE PULL BOXES AND CONDUIT RUNS INSPECTED 5 WORKING DAYS PRIOR TO PLACING THE SIGNAL CABLE INTO THE SYSTEM. CONTACT THE WISDOT ELECTRICAL FIELD PRIOR TO PLACING THE SIGNAL CABLE INTO THE SYSTEM. CONTACT THE WISDOT ELECTRICAL FIELD UNIT TO MAKE ARRANGEMENTS. (414) 266-1170
6. * LOCATION IS TO FRONT OF DETECTOR LOOP
7. MINIMUM VERTICAL CLEARANCE FROM SIGNAL FACES TO ROADWAY IS 20'

MONOTUBE STRUCTURE NUMBERS
SB2 (OH) = S-30-1218-01
SB5 = S30-1218-02
SB7(OH) = S-30-1218-03
SB11 = S30-1218-04

TRAFFIC CONTROL SIGNAL

STH 165 (LAKEVIEW PKWY) & E FRONTAGE RD (120TH AVE)
VILLAGE OF PLEASANT PRAIRIE
KENOSHA COUNTY

SIGNAL NO. S30-0756
CABINET TYPE: TS2-S
CONTROLLER TYPE: ECONOLITE

WISCONSIN DEPARTMENT OF TRANSPORTATION

APPROVAL RECOMMENDED
DATE 10-28-21
REGION TRAFFIC ENGINEER

APPROVED
DATE 10-29-21
STATE TRAFFIC ENGINEER

REGION CONTACT: J. GATES
DESIGNED BY: EMCS INC.
REVISED BY:

PROJECT NO: 1032-10-75	HWY: STH 165	COUNTY: KENOSHA	TRAFFIC SIGNAL PLAN	SHEET 111	E

FILE NAME : Y:\S2XX\S252_DP20.NSFWYEFR.KNS\CADDS\10321015\SHEETSPLAN\024201-SP.DWG
LAYOUT NAME - 024201
PLOT DATE : 10/28/2021 11:05 AM
PLOT BY : LAUREN MAENHOUT
PLOT NAME :
PLOT SCALE : 1 IN:40 FT
WISDOT/CADDS SHEET 42

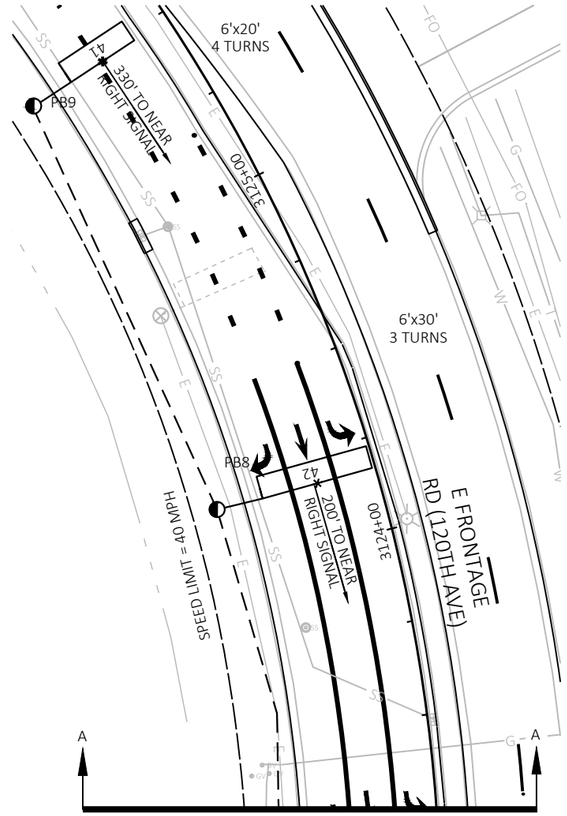

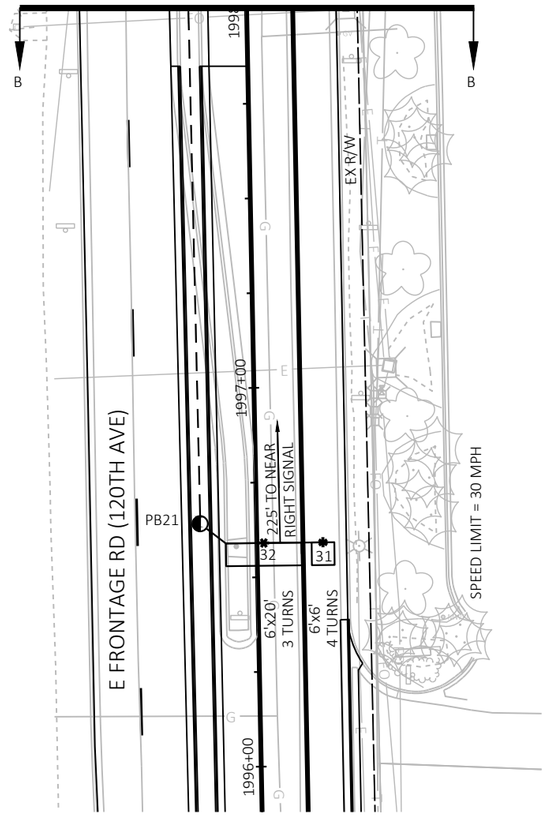

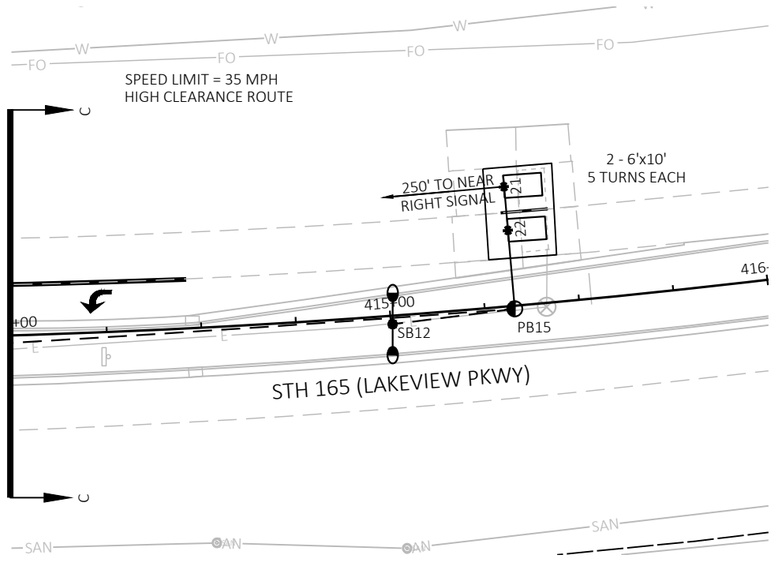

TRAFFIC CONTROL SIGNAL
STH 165 (LAKEVIEW PKWY) & E FRONTAGE RD (120TH AVE)
VILLAGE OF PLEASANT PRAIRIE
KENOSHA COUNTY

SIGNAL NO. S30-0756

REGION CONTACT: J. GATES
DESIGNED BY: EMCS INC.
REVISED BY:

PAGE 2 OF 3

PROJECT NO: 1032-10-75	HWY: STH 165	COUNTY: KENOSHA	TRAFFIC SIGNAL PLAN	SHEET 112	E

FILE NAME : Y:\52XX\5252_DP20.NSFWYEFR.KNS\CADDS\10321015\SHEETSPLAN\024201-SP.DWG
LAYOUT NAME - 024202

PLOT DATE : 10/29/2021 9:45 AM PLOT BY : NICHOLAS BECKER PLOT NAME : PLOT SCALE : 1 IN:40 FT

WISDOT/CADDS SHEET 42

	HEAD NUMBERS	FLASH
Ø1	5,6,7	R ←
Ø2	8,9,10	R
Ø3	1,4,14,15,16,17,18,19	R ← R
Ø4	20,21,22,23,24,25	R ← R
Ø5	11,12,13	R ←
Ø6	1,2,3,4	R
Ø7		
Ø8		
Ø2P		
Ø3P	26,27	
Ø4P		
Ø6P		
OLE	5,6,7	-
OLF		
OLG	11,12,13	-
OLH		

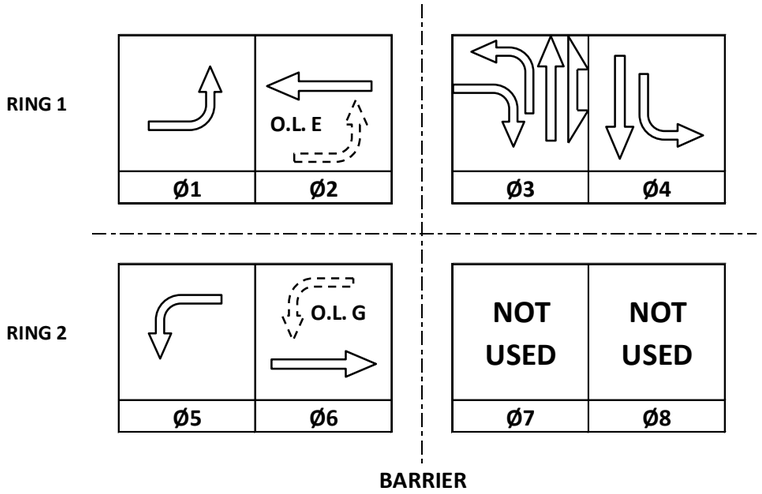

CONTROLLER LOGIC

PHASE NUMBER	PHASE LOCKING	DUAL ENTRY W / Ø	PHASE RECALL	PHASE ACTIVE
1		6		X
2	X	6	MIN	X
3				X
4				X
5		2		X
6	X	2	MIN	X
7				
8				

EMERGENCY VEHICLE PREEMPTION SEQUENCE

EMERGENCY VEHICLE PREEMPTOR	A	B	C	D
MOVEMENT	←	→	↓	↑
PHASE	2+5	6+1	4	3

AFTER PREEMPTION SEQUENCE 2+5 OR 6+1, CONTROLLER SHALL RETURN TO PHASES 2+6.
AFTER PREEMPTION SEQUENCE 4, CONTROLLER SHALL RETURN TO PHASES 4.
AFTER PREEMPTION SEQUENCE 3, CONTROLLER SHALL RETURN TO PHASES 3.

TYPE OF INTERCONNECT/COMMUNICATION	
NONE	
CLOSED LOOP	
TWISTED PAIR	
FIBER OPTIC*	
FIBER OPTIC (ETHERNET)	X
RADIO	
CELL MODEM	

TYPE OF COORDINATION	
NONE	
TBC	X
TRAFFIC RESPONSIVE	
ADAPTIVE	
*LOCATION OF MASTER CONTROLLER NO:	S-
SIGNAL SYSTEM NO:	SS- 30-0170

TYPE OF LIGHTING	
BY OTHER AGENCY	
IN TRAFFIC CABINET	X
IN SEPARATE DOT LIGHTING CABINET	

TYPE OF PRE-EMPT	
NONE	
RAILROAD	
EMERGENCY VEHICLE	X
GTT	X
TOMAR	
HARDWIRE	
OTHER	
CONFIRMATION LIGHTS	
LIFT BRIDGE	
QUEUE DETECTION	

DETECTOR LOGIC

DETECTOR INPUT	3	1	7	5	11	9	15	13	19	17	23	21	27	25	31	29	DETECTOR INPUT
PLAN LOOP DETECTOR*(S)	11	21	31	33	35	37	41	43	45	51	61						PLAN LOOP DETECTOR*(S)
CALLED PHASE	1	2	3	3	3	3	4	4	4	5	6						CALLED PHASE
CALL OPTION	X	X		X	X	X		X	X	X	X						CALL OPTION
DELAY TIME				X													DELAY TIME
EXTENTION OPTION	X	X	X	X	X	X	X	X	X	X	X						EXTENTION OPTION
EXTEND TIME			X				X										EXTEND TIME
USE ADDED INITIAL		X									X						USE ADDED INITIAL
CROSS SWITCH PHASE	2									6							CROSS SWITCH PHASE

DETECTOR INPUT	4	2	8	6	12	10	16	14	20	18	24	22	28	26	32	30	DETECTOR INPUT
PLAN LOOP DETECTOR*(S)	12	22	32	34	36	38	42	44	46	52	62						PLAN LOOP DETECTOR*(S)
CALLED PHASE	1	2	3	3	3	3	4	4	4	5	6						CALLED PHASE
CALL OPTION	X	X		X	X	X		X	X	X	X						CALL OPTION
DELAY TIME				X													DELAY TIME
EXTENTION OPTION	X	X	X	X	X	X	X	X	X	X	X						EXTENTION OPTION
EXTEND TIME			X				X										EXTEND TIME
USE ADDED INITIAL		X									X						USE ADDED INITIAL
CROSS SWITCH PHASE	2									6							CROSS SWITCH PHASE

STH 165 (LAKEVIEW PKWY) & E FRONTAGE RD (120TH AVE)
VILLAGE OF PLEASANT PRAIRIE
KENOSHA COUNTY
SIGNAL NO: S30-7056 CABINET TYPE: TS2-S
CONTROLLER TYPE: ECONOLITE
DATE: 10/2021 PAGE NUMBER: 3 OF 3

FILE NAME: I:\projects\53xx\5320\2_DSN\MSPW\TRANS\1 TS-SIG\DRT\sdx5320-01.dgn PLOT DATE: PLOT NAME: SD320-01.dgn PLOTBY: PLOT SCALE: 1:1

Project No:	1032-10-75
Intersection:	STH 165 (LAKEVIEW PKWY) & E FRONTAGE RD (120TH AVE)

Signal Wire Color Coding	BLK-black	RED-red	GRN-green
	WHT-white	BLU-blue	ORG-orange

CB1 TO	AWG 14 # OF CONDUCTORS	HEAD NO.	SIGNAL INDICATION WIRE COLOR									PED NEUTRAL	PED INPUT
			RED	YELLOW	GREEN	<RED>	<YELLOW>	<GREEN>	<FLASHING YELLOW>	D/WALK	WALK		
SB1	12	1	RED	ORG	GRN		ORG/BLK	GRN/BLK					
		12				BLK	BLU/BLK	BLU	BLK/WHT				
SB2	15	5				RED	ORG	GRN	BLK/WHT				
		9	RED/BLK	ORG/BLK	GRN/BLK								
		10	RED/BLK	ORG/BLK	GRN/BLK								
		13				RED/WHT	BLU/WHT	GRN/WHT	BLU/BLK				
SB3	12	20	RED	ORG	GRN								
SB4	12	18				RED	ORG	GRN					
		23				RED/BLK	ORG/BLK	GRN/BLK					
SB5	12	15	RED	ORG	GRN								
		16	RED	ORG	GRN								
		19				RED	ORG	GRN					
SB6	12	6				RED	ORG	GRN	BLK/WHT				
		8	RED/BLK	ORG/BLK	GRN/BLK								
		26								BLK	BLU		
		BUTTON											WHT/BLK
SB7	15	2	RED	ORG	GRN								
		3	RED	ORG	GRN								
		7				RED/BLK	ORG/BLK	GRN/BLK	BLK/WHT				
		11				RED/WHT	BLU/WHT	GRN/WHT	BLU/BLK				
		BUTTON											WHT/BLK
SB8	12	4	RED	ORG	GRN		ORG/BLK	GRN/BLK					
		27								BLK	BLU		
		BUTTON											WHT/BLK
SB9	12	14	RED	ORG	GRN								
		24				RED/BLK	ORG/BLK	GRN/BLK					
SB10	12	17				RED	ORG	GRN					
		25				RED/BLK	ORG/BLK	GRN/BLK					
SB11	12	21	RED	ORG	GRN								
		22	RED	ORG	GRN								

Equipment Grounding Conductor 10 AWG Green XLP	
From	To
CB1	SB1
SB1	SB2
SB2	SB3
SB3	SB4
SB4	SB5
SB5	SB6
SB6	SB7
SB7	SB8
SB8	SB9
SB9	SB10
SB10	SB11
SB11	CB1

Pull Box Bonding Jumper 10 AWG Green XLP	
From	To
CB1	PB1
SB2	PB2
SB3	PB5
SB3	PB6
SB3	PB7
SB4	PB10
SB4	PB11
SB5	PB12
SB5	PB13
SB6	PB14
SB7	PB16
SB8	PB17
SB9	PB18
SB9	PB19
SB9	PB20
SB10	PB22
SB10	PB23
SB11	PB24
SB11	PB25

Lighting UF 2-10 AWG Grounded	
From	To
CB1	SB2
SB2	SB4
CB1	SB7
SB7	SB12

Emergency Vehicle Preemption	
From	To
CB1	SB2 (HEAD A)
CB1	SB7 (HEAD B)
CB1	SB11 (HEAD C)
CB1	SB5 (HEAD D)

LEGEND

1. MARKING LINE EPOXY 4-INCH (WHITE)
2. MARKING LINE EPOXY 4-INCH (WHITE, 12.5 FT LINE, 37.5 FT SKIP)
3. MARKING LINE GROOVED CONTRAST PERMANENT TAPE 4-INCH (WHITE, 12.5 FT LINE, 37.5 FT SKIP)
4. MARKING CROSSWALK EPOXY TRANSVERSE LINE 6-INCH (WHITE)
5. MARKING LINE EPOXY 8-INCH (WHITE)
6. MARKING LINE GROOVED CONTRAST PERMANENT TAPE 8-INCH (WHITE)
7. MARKING LINE GROOVED CONTRAST PERMANENT TAPE 8-INCH (WHITE, 3FT LINE, 9FT SKIP)
8. MARKING LINE GROOVED CONTRAST PERMANENT TAPE 8-INCH (WHITE, 2 FT LINE, 6 FT SKIP)
9. MARKING STOP LINE EPOXY 18-INCH (WHITE)
10. MARKING ARROW EPOXY
11. MARKING WORD EPOXY

N

EAST FRONTAGE ROAD

1994+00
1995+00
1996+00
1997+00
1998+00
1999+00.00
MATCHLINE STA 1999+00.00

+12.73
-0.04'LT
+12.72
12.14'RT
+84.42
12.00'RT

10'
12'
11'

FOLLOW SDDS FOR PAVEMENT MARKING (SEE SECTION 5 PLAN SHEETS AND MISCELLANEOUS QUANTITIES FOR ADDITIONAL INFORMATION)

2

PROJECT NO: 1032-10-75	HWY: EAST FRONTAGE ROAD	COUNTY: KENOSHA	PAVEMENT MARKING-EAST FRONTAGE ROAD	SHEET 116	E

2

LEGEND

1. MARKING LINE EPOXY 4-INCH (WHITE)
2. MARKING LINE EPOXY 4-INCH (WHITE, 12.5 FT LINE, 37.5 FT SKIP)
3. MARKING LINE GROOVED CONTRAST PERMANENT TAPE 4-INCH (WHITE, 12.5 FT LINE, 37.5 FT SKIP)
4. MARKING CROSSWALK EPOXY TRANSVERSE LINE 6-INCH (WHITE)
5. MARKING LINE EPOXY 8-INCH (WHITE)
6. MARKING LINE GROOVED CONTRAST PERMANENT TAPE 8-INCH (WHITE)
7. MARKING LINE GROOVED CONTRAST PERMANENT TAPE 8-INCH (WHITE, 3FT LINE, 9FT SKIP)
8. MARKING LINE GROOVED CONTRAST PERMANENT TAPE 8-INCH (WHITE, 2 FT LINE, 6 FT SKIP)
9. MARKING STOP LINE EPOXY 18-INCH (WHITE)
10. MARKING ARROW EPOXY
11. MARKING WORD EPOXY

N

406+00 407+00 408+00 409+00 410+00 411+00

STH 165

+67.91
38.29'RT

+67.36
49.79'RT

+91.87
13.88'RT

+94.77
38.29'RT

+15.44
-26.24'LT

12'

12'

MATCHLINE STA 411+50.00

FOLLOW SDDS FOR PAVEMENT MARKING (SEE SECTION 5 PLAN SHEETS AND MISCELLANEOUS QUANTITIES FOR ADDITIONAL INFORMATION)

PROJECT NO: 1032-10-75	HWY: EAST FRONTAGE ROAD	COUNTY: KENOSHA	PAVEMENT MARKING-STH 165	SHEET 117	E

2

N

LEGEND

1. MARKING LINE EPOXY 4-INCH (WHITE)
2. MARKING LINE EPOXY 4-INCH (WHITE, 12.5 FT LINE, 37.5 FT SKIP)
3. MARKING LINE GROOVED CONTRAST PERMANENT TAPE 4-INCH (WHITE, 12.5 FT LINE, 37.5 FT SKIP)
4. MARKING CROSSWALK EPOXY TRANSVERSE LINE 6-INCH (WHITE)
5. MARKING LINE EPOXY 8-INCH (WHITE)
6. MARKING LINE GROOVED CONTRAST PERMANENT TAPE 8-INCH (WHITE)
7. MARKING LINE GROOVED CONTRAST PERMANENT TAPE 8-INCH (WHITE, 3FT LINE, 9FT SKIP)
8. MARKING LINE GROOVED CONTRAST PERMANENT TAPE 8-INCH (WHITE, 2 FT LINE, 6 FT SKIP)
9. MARKING STOP LINE EPOXY 18-INCH (WHITE)
10. MARKING ARROW EPOXY
11. MARKING WORD EPOXY

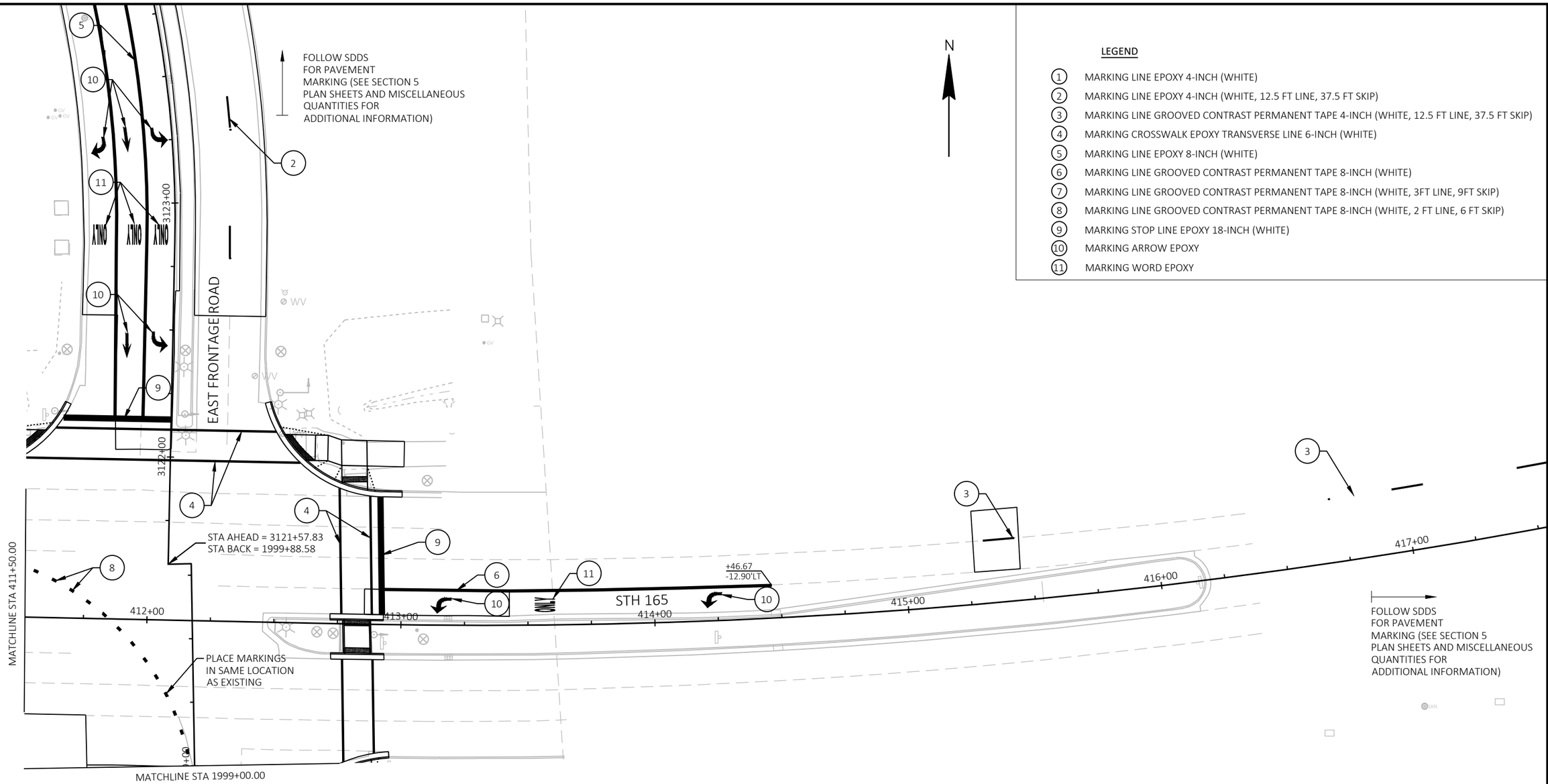

PROJECT NO: 1032-10-75	HWY: EAST FRONTAGE ROAD	COUNTY: KENOSHA	PAVEMENT MARKING-STH 165	SHEET 118	E

FILE NAME : Y:\52XX\5252_DP20.NSFWYEFR.KNS\CADDS\10321015\SHEETSPLAN\024501_PM.DWG
LAYOUT NAME - 024503
PLOT DATE : 10/22/2021 2:50 PM
PLOT BY : AARON SCHRAMM
PLOT NAME :
PLOT SCALE : 1 IN:40 FT
WISDOT/CADDS SHEET 42

2

LEGEND

WORK ZONE

WORK ZONE SPOT REPAIRS

N

VILLAGE OF BRISTOL

WEST FRONTAGE ROAD

WEST FRONTAGE ROAD

WEST FRONTAGE ROAD

WIS 165

I-41/94

I-41/94

1900

1910

1920

1930

1940

1950

1960

1970

1980

1990

2000

2010

2020

3130

3140

3150

COUNTY ML

EAST FRONTAGE ROAD

EAST FRONTAGE ROAD

EAST FRONTAGE ROAD

116TH AVE

114TH AVE

WIS 165

VILLAGE OF PLEASANT PRAIRIE

2

CONSTRUCTION ACTIVITIES

1. CONCRETE BASE PATCHING APPROXIMATELY STA 1990+02 TO STA 1998+99.47 AND STA 3122+56 TO STA 3147+34

2. ASPAHLTIC BASE PATCHING APPROXIMATELY STA 1946+00 TO STA 1958+00

3. INSTALL SIGNAL LOOPS SOUTH OF STH 165

4. SPOT PAVEMENT REPAIRS AS DETERMINED BY ENGINEER STA 1969+73 TO STA 1990+02

MAINTENANCE OF TRAFFIC

1. EAST FRONTAGE ROAD CLOSURE COUNTY ML TO WIS 50

2. THROUGH TRAFFIC IS TO BE DETOURED TO THE WEST FRONTAGE ROAD

3. LOCAL ACCESS TO ALL BUSINESSES AND RESIDENTS SHALL BE MAINTAINED AT ALL TIMES. TRAFFIC CONTROL DETAILS INCLUDED ARE FOR MAINTENANCE OF LOCAL AND BUSINESS TRAFFIC ONLY.

4. MAINTAIN ONE ENTRANCE TO THE OUTLET MALL AND HOTELS AT ALL TIMES

5. FOR SPOT PAVEMENT REPAIR BASE PATCHING OPERATIONS, FOLLOW STAGING CONCEPT FOR STA 1990+02 TO STA 1993+54.

6. CONCRETE BASE PATCHING TO BE PERFORMED AT NIGHT. ASPHALT BASE PATCHING TO BE PERFORMED DURING DAY.

PROJECT NO: 1032-10-75	HWY: EAST FRONTAGE ROAD	COUNTY: KENOSHA	TRAFFIC CONTROL - STAGE 1 OVERVIEW	SHEET 119	E

FILE NAME : Y:\52XX\5252_DP20.NSFWYEFR.KNS\CADDS\10321015\SHEETSPLAN\025001_TC.DWG
LAYOUT NAME - 025001-S1-TC_Overview

PLOT DATE : 10/25/2021 3:03 PM PLOT BY : NICHOLAS BECKER PLOT NAME : PLOT SCALE : 1 IN:725 FT

WISDOT/CADDS SHEET 42

2

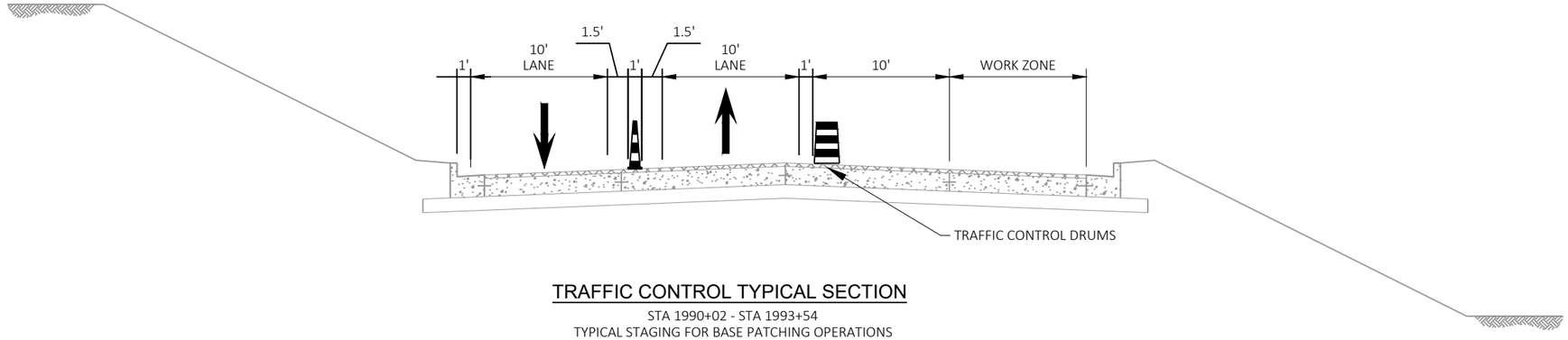

TRAFFIC CONTROL TYPICAL SECTION

STA 1990+02 - STA 1993+54
TYPICAL STAGING FOR BASE PATCHING OPERATIONS
(WORK ZONE FOR EAST FRONTAGE ROAD NB SHOWN,
MIRROR TYPICAL SECTION FOR SB WORK ZONE)

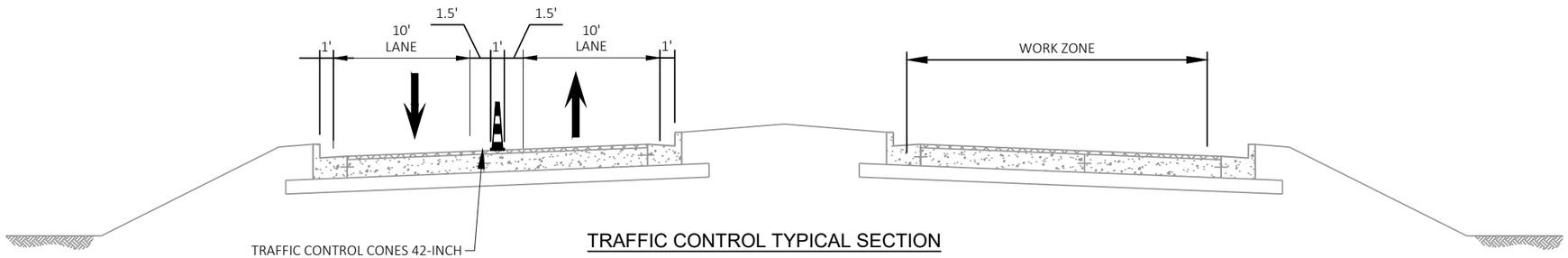

TRAFFIC CONTROL TYPICAL SECTION

STA 1993+54 - 1998+99.47
TYPICAL STAGING FOR BASE PATCHING OPERATIONS
(WORK ZONE FOR EAST FRONTAGE ROAD NB SHOWN,
MIRROR TYPICAL SECTION FOR SB WORK ZONE)

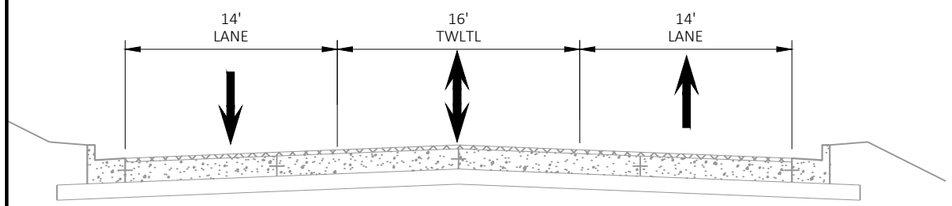

STA 1966+95 - STA 1993+54
TYPICAL STAGING FOR DAYTIME LOCAL TRAFFIC

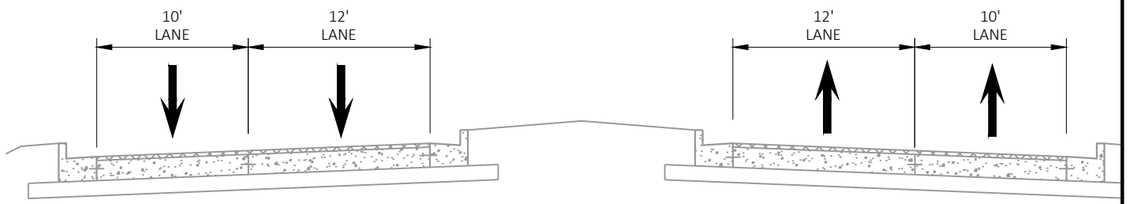

STA 1993+54 - 1998+99.47
TYPICAL STAGING FOR DAYTIME LOCAL TRAFFIC

PROJECT NO: 1032-10-75	HWY: EAST FRONTAGE ROAD	COUNTY: KENOSHA	TRAFFIC CONTROL - STAGE 1	SHEET 120	E

2

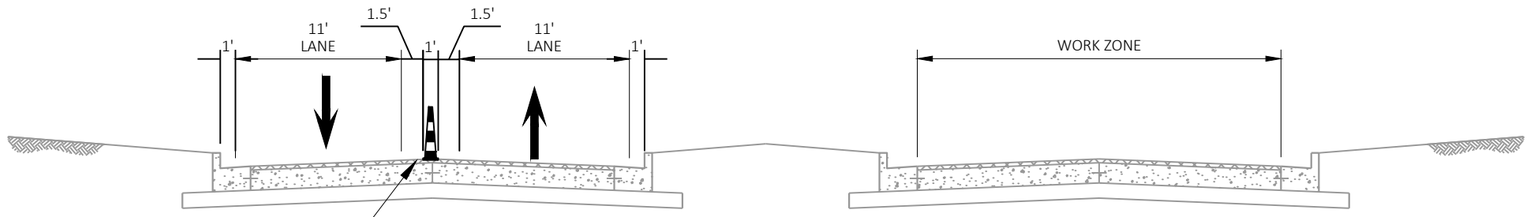

TRAFFIC CONTROL TYPICAL SECTION

STA 3122+55.97 - 3144+88
TYPICAL STAGING FOR BASE PATCHING OPERATIONS
(WORK ZONE FOR EAST FRONTAGE ROAD NB SHOWN,
MIRROR TYPICAL SECTION FOR SB WORK ZONE)

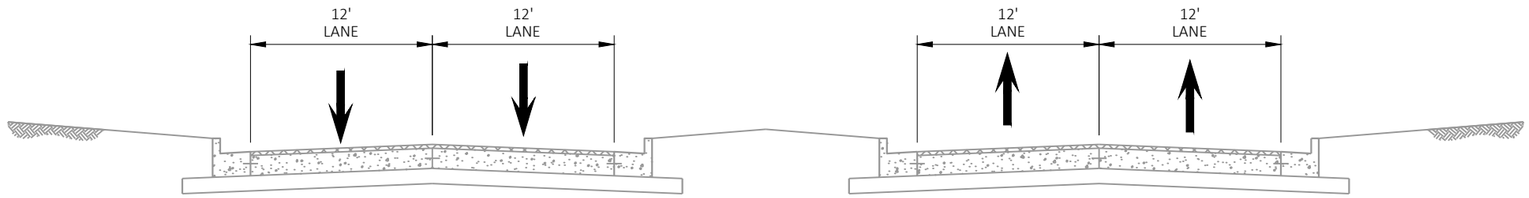

TRAFFIC CONTROL TYPICAL SECTION

STA 3122+55.97 - 3144+88
TYPICAL STAGING FOR DAYTIME LOCAL TRAFFIC

PROJECT NO: 1032-10-75	HWY: EAST FRONTAGE ROAD	COUNTY: KENOSHA	TRAFFIC CONTROL - STAGE 1	SHEET 121	E

FILE NAME : Y:\52XX\5252_DP20.NSFWYEFR.KNS\CADDS\10321015\SHEETSPLAN\025001_TC.DWG
LAYOUT NAME - 025003-S1-TC_Typicals
PLOT DATE : 10/21/2021 4:11 PM
PLOT BY : CORY INMAN
PLOT NAME :
PLOT SCALE : ############
WISDOT/CADDS SHEET 42

2

2

TRAFFIC CONTROL NOTES:

TRAFFIC CONTROL SHEET FOR MAINTENANCE OF LOCAL TRAFFIC DURING NIGHT TIME WORK ONLY.

SEE SDD "TRAFFIC CONTROL FULL LANE SHIFT, NON-FREEWAY/EXPRESSWAY OR MULTILANE DIVIDED 45 MPH AND UNDER

MAINTAIN ONE ENTRANCE TO OUTLET MALL AND HOTEL OPEN AT ALL TIMES.

OPEN ALL LANES TO LOCAL TRAFFIC DURING DAYTIME HOURS. EFR TO REMAIN CLOSED TO THROUGH TRAFFIC AND DETOUR SIGNS TO REMAIN IN USE.

LEGEND

- TYPE III BARRICADE
- TYPE III BARRICADE WTH ATTACHED SIGN
- TRAFFIC CONTROL DRUM
- TRAFFIC CONTROL DRUM WITH TYPE C STEADY BURN LIGHT
- FLASHING ARROW BOARD
- SIGN ON PERMANENT SUPPORT
- SIGN ON TEMPORARY SUPPORT
- TRAFFIC CONTROL CONE 42-INCH
- WORK AREA
- DIRECTION OF TRAFFIC

N

1975 1976 1977 1978 1979 1980 1981 1982 1983 1984 1985 1986 1987 1988 1989 1990 1991 1992 1993 1994 1995 1996

EAST FRONTAGE ROAD

116TH AVE

LANE CLOSED
R11-2L
48"X30"

WO1-4L

25'

WO1-6
48"X24"

LANE CLOSED
R11-2L
48"X30"

50'

ROAD CLOSED
R11-2
48"X30"

25'

EAST FRONTAGE ROAD

PROJECT NO: 1032-10-75	HWY: EAST FRONTAGE ROAD	COUNTY: KENOSHA	TRAFFIC CONTROL - STAGE 1 NB CLOSURE	SHEET 122	E

FILE NAME : Y:\52XX\5252_DP20.NSFWYEFR.KNS\CADDS\10321015\SHEETSPLAN\025001_TC.DWG
LAYOUT NAME - 025004-S1-TC_Details
PLOT DATE : 10/21/2021 4:11 PM PLOT BY : CORY INMAN PLOT NAME : PLOT SCALE : 1 IN:100 FT
WISDOT/CADDS SHEET 42

2

LEGEND

- TYPE III BARRICADE
- TYPE III BARRICADE WTH ATTACHED SIGN
- TRAFFIC CONTROL DRUM
- TRAFFIC CONTROL DRUM WITH TYPE C STEADY BURN LIGHT
- FLASHING ARROW BOARD
- SIGN ON PERMANENT SUPPORT
- SIGN ON TEMPORARY SUPPORT
- TRAFFIC CONTROL CONE 42-INCH
- WORK AREA
- DIRECTION OF TRAFFIC

TRAFFIC CONTROL NOTES:

TRAFFIC CONTROL SHEET FOR MAINTENANCE OF LOCAL TRAFFIC DURING NIGHT TIME WORK ONLY.

SEE SDD "BARRICADES AND SIGNS FOR SIDEROAD CLOSURES"

MAINTAIN ONE ENTRANCE TO OUTLET MALL AND HOTEL OPEN AT ALL TIMES.

OPEN ALL LANES TO LOCAL TRAFFIC DURING DAYTIME HOURS. EFR TO REMAIN CLOSED TO THROUGH TRAFFIC AND DETOUR SIGNS TO REMAIN IN USE.

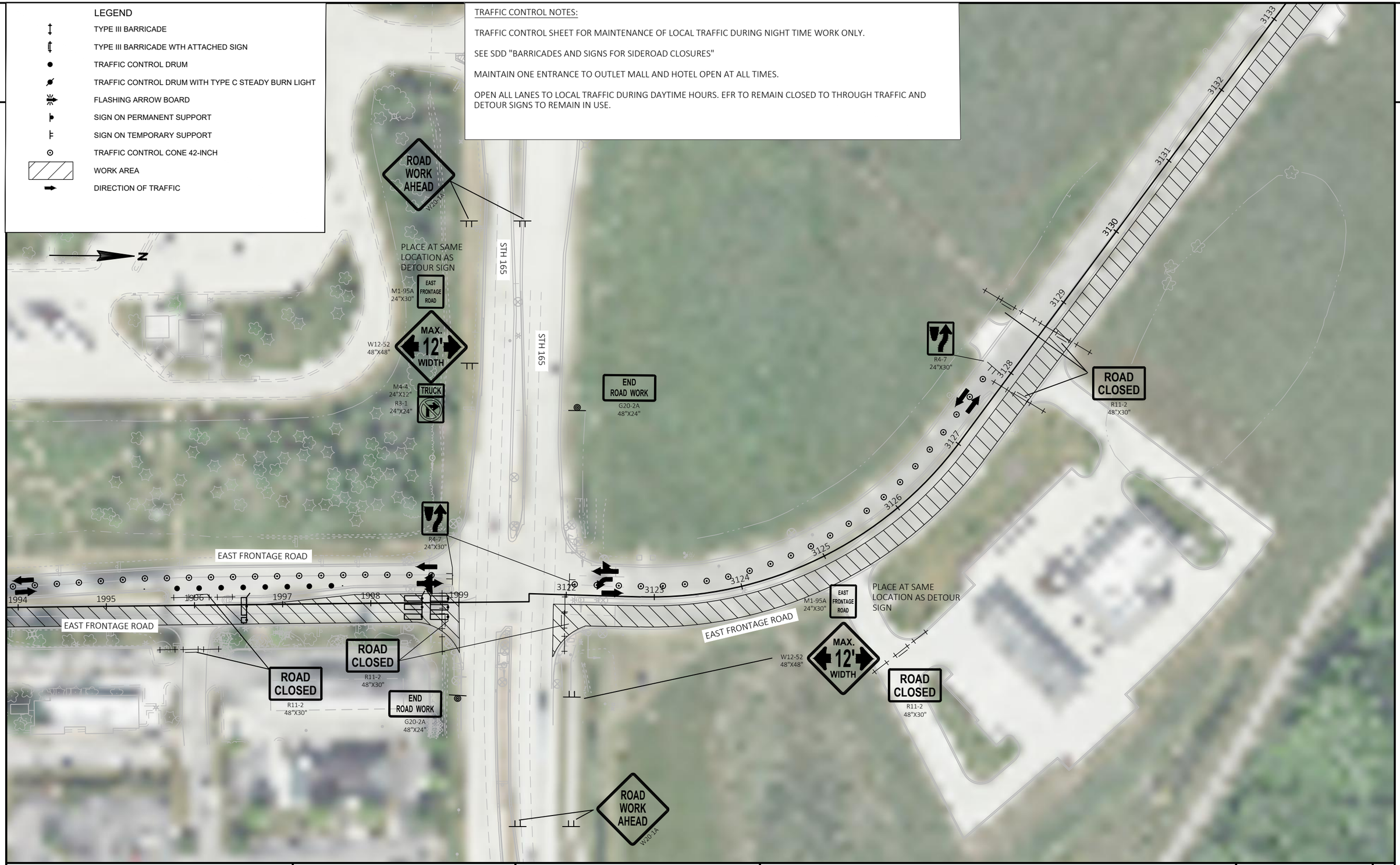

PROJECT NO: 1032-10-75	HWY: EAST FRONTAGE ROAD	COUNTY: KENOSHA	TRAFFIC CONTROL - STAGE 1 NB CLOSURE	SHEET 123	E

2

LEGEND

- TYPE III BARRICADE
- TYPE III BARRICADE WTH ATTACHED SIGN
- TRAFFIC CONTROL DRUM
- TRAFFIC CONTROL DRUM WITH TYPE C STEADY BURN LIGHT
- FLASHING ARROW BOARD
- SIGN ON PERMANENT SUPPORT
- SIGN ON TEMPORARY SUPPORT
- TRAFFIC CONTROL CONE 42-INCH
- WORK AREA
- DIRECTION OF TRAFFIC

TRAFFIC CONTROL NOTES:

TRAFFIC CONTROL SHEET FOR MAINTENANCE OF LOCAL TRAFFIC DURING NIGHT TIME WORK ONLY.

MAINTAIN ONE ENTRANCE TO OUTLET MALL AND HOTELS OPEN AT ALL TIMES.

OPEN ALL LANES TO LOCAL TRAFFIC DURING DAYTIME HOURS. EAST FRONTAGE ROAD TO REMAIN CLOSED TO THROUGH TRAFFIC. DETOUR SIGNS TO REMAIN IN USE.

N

2

3134 3135 3136 3137 3138 3139 3140 3141 3142 3143 3144 3145 3146 3147 3148 3149 3150

ROAD CLOSED
R11-2
48"X30"

ROAD CLOSED
R11-2
48"X30"

PROJECT NO: 1032-10-75	HWY: EAST FRONTAGE ROAD	COUNTY: KENOSHA	TRAFFIC CONTROL - STAGE 1 NB CLOSURE	SHEET 124	E

FILE NAME : Y:\52XX\5252_DP20.NSFWYEFR.KNS\CADDS\10321015\SHEETSPLAN\025001_TC.DWG
LAYOUT NAME - 025006-S1-TC_Details
PLOT DATE : 10/21/2021 4:12 PM PLOT BY : CORY INMAN PLOT NAME : PLOT SCALE : 1 IN:100 FT
WISDOT/CADDS SHEET 42

2

LEGEND

- TYPE III BARRICADE
- TYPE III BARRICADE WTH ATTACHED SIGN
- TRAFFIC CONTROL DRUM
- TRAFFIC CONTROL DRUM WITH TYPE C STEADY BURN LIGHT
- FLASHING ARROW BOARD
- SIGN ON PERMANENT SUPPORT
- SIGN ON TEMPORARY SUPPORT
- TRAFFIC CONTROL CONE 42-INCH
- WORK AREA
- DIRECTION OF TRAFFIC

TRAFFIC CONTROL NOTES:

TRAFFIC CONTROL SHEET FOR MAINTENANCE OF LOCAL TRAFFIC DURING NIGHT TIME WORK ONLY.

SEE SDD "TRAFFIC CONTROL, FULL LANE SHIFT, NON-FREEWAY/EXPRESSWAY OR MULTILANE DIVIDED 45 MPH AND UNDER"

SEE SDD "TRAFFIC CONTROL, SINGLE LANE CLOSURE, DIVIDED NON FREEWAY/EXPRESSWAY"

SEE SDD "TRAFFIC CONTROL, INTERSECTION WITHIN SINGLE LANE CLOSURE"

MAINTAIN ONE ENTRANCE TO OUTLET MALL AND HOTELS OPEN AT ALL TIMES.

OPEN ALL LANES ON EAST FRONTAGE ROAD TO LOCAL TRAFFIC DURING DAYTIME HOURS. DETOUR SIGNS TO REMAIN IN USE.

2

N

1975 1976 1977 1978 1979 1980 1981 1982 1983 1984 1985 1986 1987 1988 1989 1990 1991 1992 1993

CONCRETE BASE PATCHING IN TWLTL FROM STA 1990+02 TO 1993+50 TO BE CONSTRUCTED DURING A SINGLE NIGHT TIME FULL CLOSURE FROM 116TH AVE TO STH 165

LANE CLOSED
R11-2L
48"X30"

WO1-6
48"X24"

ROAD CLOSED
R11-2
48"X30"

R3-2
24"X24"

WO1-4R

EAST FRONTAGE ROAD

116TH AVE

PROJECT NO: 1032-10-75	HWY: EAST FRONTAGE ROAD	COUNTY: KENOSHA	TRAFFIC CONTROL - STAGE 1 EFR SB CLOSURE	SHEET 125	E

FILE NAME : Y:\52XX\5252_DP20.NSFWYEFR.KNS\CADDS\10321015\SHEETSPLAN\025001_TC.DWG
LAYOUT NAME - 025007-S1-TC_Details

PLOT DATE : 10/21/2021 4:13 PM PLOT BY : CORY INMAN PLOT NAME : PLOT SCALE : 1 IN:100 FT

WISDOT/CADDS SHEET 42

2

LEGEND

- TYPE III BARRICADE
- TYPE III BARRICADE WTH ATTACHED SIGN
- TRAFFIC CONTROL DRUM
- TRAFFIC CONTROL DRUM WITH TYPE C STEADY BURN LIGHT
- FLASHING ARROW BOARD
- SIGN ON PERMANENT SUPPORT
- SIGN ON TEMPORARY SUPPORT
- TRAFFIC CONTROL CONE 42-INCH
- WORK AREA
- DIRECTION OF TRAFFIC

TRAFFIC CONTROL NOTES:

TRAFFIC CONTROL SHEET FOR MAINTENANCE OF LOCAL TRAFFIC DURING NIGHT TIME WORK ONLY.

SEE SDD "TRAFFIC CONTROL, SINGLE LANE CLOSURE, DIVIDED NON FREEWAY/EXPRESSWAY"

SEE SDD "TRAFFIC CONTROL, INTERSECTION WITHIN SINGLE LANE CLOSURE"

MAINTAIN ONE ENTRANCE TO OUTLET MALL AND HOTELS OPEN AT ALL TIMES.

OPEN ALL LANES ON EAST FRONTAGE ROAD TO LOCAL TRAFFIC DURING DAYTIME HOURS. EAST FRONTAGE ROAD WILL REMAIN CLOSED TO THROUGH TRAFFIC AND DETOUR SIGNS WILL REMAIN IN USE.

2

ROAD WORK AHEAD W20-1A

RIGHT LANE CLOSED AHEAD W20-5A

W04-2R

ROAD WORK AHEAD W20-1A

N

PLACE AT SAME LOCATION AS DETOUR SIGN

M1-95A 24"X30"

EAST FRONTAGE ROAD

MAX. 12' WIDTH

W12-52 48"X48"

STH 165

END ROAD WORK G20-2A 48"X24"

BEGIN RIGHT TURN LANE R3-20R 24"X36"

REMOVE CURB AND GUTTER TO INLET
INSTALL 7 FT ASPHALTIC CURB AND GUTTER

ROAD CLOSED R11-2 48"X30"

R3-2 24"X24"

EAST FRONTAGE ROAD

1994 1995 1996 1997 1998 1999 3122 3123 3124 3125 3126 3127 3128 3129 3130 3131 3132

R4-7 24"X30"

EAST FRONTAGE ROAD

M1-95A 24"X30"

EAST FRONTAGE ROAD

PLACE AT SAME LOCATION AS DETOUR SIGN

ROAD CLOSED R11-2 48"X30"

R4-7 24"X30"

MAX. 12' WIDTH

W12-52 48"X48"

ROAD WORK AHEAD W20-1A

END ROAD WORK G20-2A 48"X24"

PROJECT NO: 1032-10-75	HWY: EAST FRONTAGE ROAD	COUNTY: KENOSHA	TRAFFIC CONTROL - STAGE 1 EFR SB CLOSURE	SHEET 126	E

FILE NAME : Y:\52XX\5252_DP20.NSFWYEFR.KNS\CADDS\10321015\SHEETSPLAN\025001_TC.DWG
LAYOUT NAME - 025008-S1-TC_Details

PLOT DATE : 10/21/2021 4:13 PM PLOT BY : CORY INMAN PLOT NAME : PLOT SCALE : 1 IN:100 FT

LEGEND

WORK ZONE

N

2

2

VILLAGE OF BRISTOL

VILLAGE OF PLEASANT PRAIRIE

COUNTY C

DES PLAINES RIVER

WIS 165

WIS 50

WEST FRONTAGE ROAD

EAST FRONTAGE ROAD

I-41/94

380

390

400

410

1990

3140 3150 3160 3170 3180 3190 3200

5210 5220 5230 5240 5250 5260 5270 5280 5290

CONSTRUCTION ACTIVITIES

1. ALL CONSTRUCTION OPERATIONS STA 3122+56 TO STA 5290+00. CONSTRUCTION OPERATIONS INCLUDE MILLING, ASPHALT PAVING, SIGNING, MARKING, CULVERT REPAIRS AND EXTENSION TO C-30-0002, BEAM GUARD, GRADING, AND CURB RAMP UPGRADES INCLUDING CURB RAMPS APPROXIMATELY STA 3122+56 TO STA 3123+00

2. WORK PERFORMED DURING DAYTIME

MAINTENANCE OF TRAFFIC

1. EAST FRONTAGE ROAD CLOSURE COUNTY ML TO WIS 50

2. THROUGH TRAFFIC IS TO BE DETOURED TO THE WEST FRONTAGE ROAD

3. TRAFFIC CONTROL DETAILS ARE FOR MAINTENANCE OF LOCAL TRAFFIC ONLY. ACCESS TO ALL BUSINESSES AND RESIDENTS SHALL BE MAINTAINED AT ALL TIMES

PROJECT NO: 1032-10-75	HWY: EAST FRONTAGE ROAD	COUNTY: KENOSHA	TRAFFIC CONTROL - STAGE 2 OVERVIEW	SHEET 127	E

FILE NAME : Y:\52XX\5252_DP20.NSFWYEFR.KNS\CADDS\10321015\SHEETSPLAN\025002_TC.DWG
LAYOUT NAME - 025001-S2-TC

PLOT DATE : 10/21/2021 4:13 PM PLOT BY : CORY INMAN PLOT NAME : PLOT SCALE : 1 IN:1125 FT

WISDOT/CADDS SHEET 42

2

2

LEGEND

- TYPE III BARRICADE
- TYPE III BARRICADE WTH ATTACHED SIGN
- TRAFFIC CONTROL DRUM
- TRAFFIC CONTROL DRUM WITH TYPE C STEADY BURN LIGHT
- FLASHING ARROW BOARD
- SIGN ON PERMANENT SUPPORT
- WORK AREA
- DIRECTION OF TRAFFIC

WORK ZONE

TRAFFIC CONTROL NOTES:

CLOSE RIGHT TURN LANE AND RIGHT THROUGH LANE FOR CURB RAMP WORK ON NORTH SIDE OF WIS 165, LOOP DETECTOR WORK, AND SIGNAL WORK ON THE NORTH SIDE OF THE INTERSECTION

TRAFFIC CONTROL DETAIL SHEET FOR MAINTENANCE OF LOCAL TRAFFIC WHILE WORK OCCURS BETWEEN STH 165 AND STA 3129+00. EFR IS CLOSED TO THROUGH TRAFFIC. THROUGH TRAFFIC WILL FOLLOW SIGNED DETOUR TO WFR

SEE SDD "TRAFFIC CONTROL, INTERSECTION WITHIN SINGLE LANE CLOSURE"

SEE SDD "TRAFFIC CONTROL, TRAFFIC CONTROL, SINGLE RIGHT LANE CLOSURE, UNDIVIDED NON-FREEWAY/EXPRESSWAY"

SEE SDD "TRAFFIC CONTROL, FULL LANE SHIFT NON-FREEWAY/EXPRESSWAY OR MULTILANE DIVIDED 45 MPH AND UNDER"

SEE SDD "BARRICADES AND SIGNS FOR SIDEROAD CLOSURES"

N

ROAD CLOSED
R11-2
48"X30"

PLACE ROAD CLOSED
BARRICADE ARRAY NORTH OF
DIVIDED MEDIAN

ROAD CLOSED
R11-2
48"X30"

LANE CLOSED
R11-2L
48"X30"

ROAD CLOSED
R11-2
48"X30"

EAST FRONTAGE ROAD

W01-6
48"X24"

PLACE AT SAME
LOCATION AS DETOUR
SIGN

EAST FRONTAGE ROAD
M1-95A
24"X30"

MAX. 12' WIDTH
W12-52
48"X48"

ROAD WORK AHEAD
W20-1A

LANE CLOSED
R11-2L
48"X30"

END ROAD WORK
G20-2A
48"X24"

R9-11L
24"X12"

PLACE AT SAME
LOCATION AS DETOUR
SIGN

EAST FRONTAGE ROAD
M1-95A
24"X30"

MAX. 12' WIDTH
W12-52
48"X48"

LANE CLOSED
R11-2L
48"X30"

SIDEWALK CLOSED
R9-9
24"X12"

TEMPORARY PEDESTRIAN SURFACE
TEMPORARY PEDESTRIAN CURB RAMP
TEMPORARY PEDESTRIAN BARRICADE

MARKING REMOVAL LINE 4-INCH

TEMPORARY MARKING LINE
REMOVABLE TAPE 4-INCH

TEMPORARY DETECTABLE WARNING FIELD REQ.

SAME SIGNS IN MEDIAN

W04-2R

RIGHT LANE CLOSED AHEAD
W20-5A

ROAD WORK AHEAD
W20-1A

STH 165

END ROAD WORK
G20-2A
48"X24"

LANE CLOSED
R11-2L
48"X30"

3134 3133 3132 3131 3130 3129 3128 3127 3126 3125 3124 3123 3122 404 406 408 410 412 414 416 418

PROJECT NO: 1032-10-75	HWY: EAST FRONTAGE ROAD	COUNTY: KENOSHA	TRAFFIC CONTROL - STAGE 2A	SHEET 128	E

FILE NAME : Y:\52XX\5252_DP20.NSFWYEFR.KNS\CADDS\10321015\SHEETSPLAN\025002_TC.DWG
LAYOUT NAME - 025002-S2-TC

PLOT DATE : 10/21/2021 4:14 PM PLOT BY : CORY INMAN PLOT NAME : PLOT SCALE : 1 IN:100 FT

WISDOT/CADDS SHEET 42

2

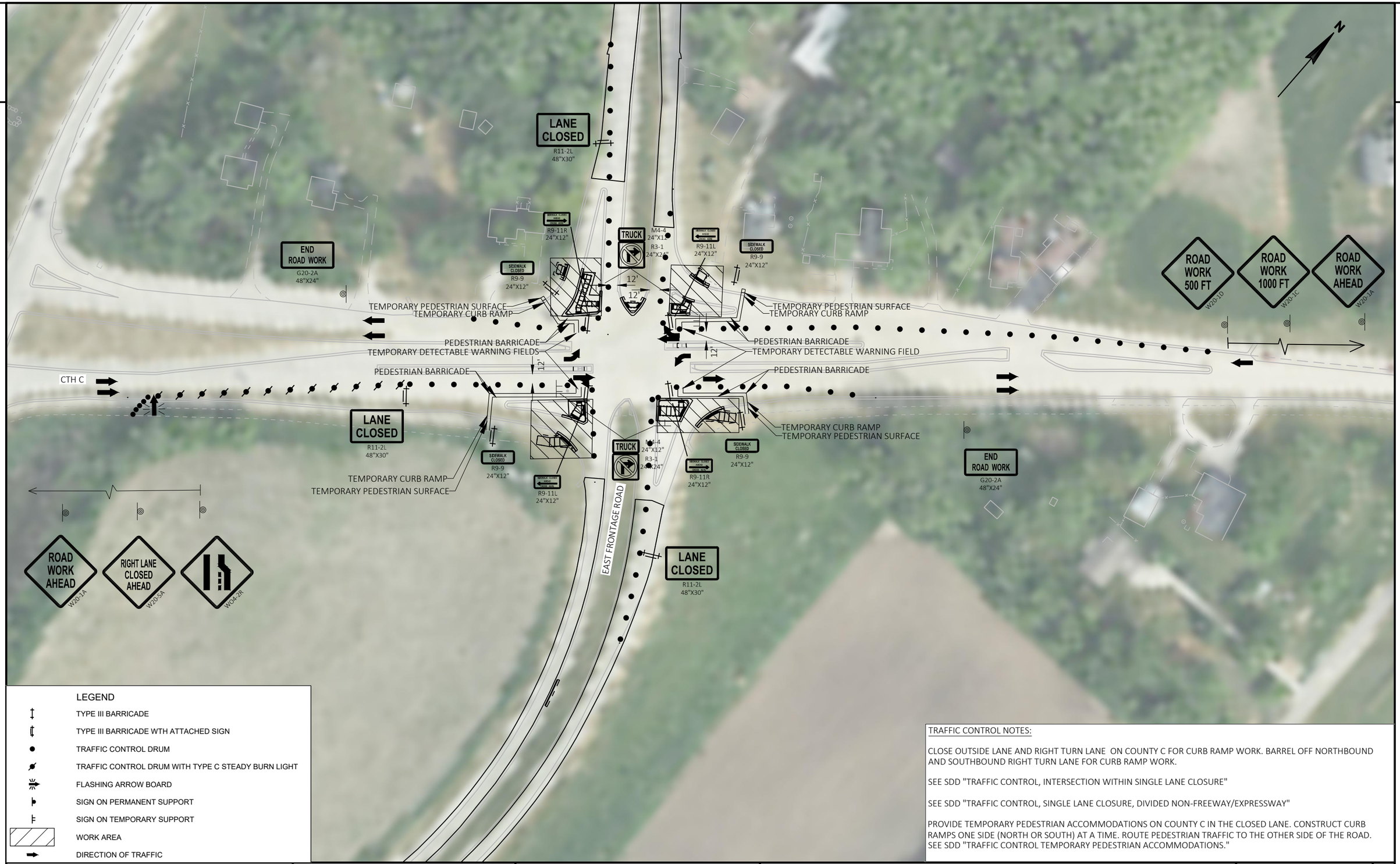

LEGEND

- TYPE III BARRICADE
- TYPE III BARRICADE WTH ATTACHED SIGN
- TRAFFIC CONTROL DRUM
- TRAFFIC CONTROL DRUM WITH TYPE C STEADY BURN LIGHT
- FLASHING ARROW BOARD
- SIGN ON PERMANENT SUPPORT
- SIGN ON TEMPORARY SUPPORT
- WORK AREA
- DIRECTION OF TRAFFIC

TRAFFIC CONTROL NOTES:

CLOSE OUTSIDE LANE AND RIGHT TURN LANE ON COUNTY C FOR CURB RAMP WORK. BARREL OFF NORTHBOUND AND SOUTHBOUND RIGHT TURN LANE FOR CURB RAMP WORK.

SEE SDD "TRAFFIC CONTROL, INTERSECTION WITHIN SINGLE LANE CLOSURE"

SEE SDD "TRAFFIC CONTROL, SINGLE LANE CLOSURE, DIVIDED NON-FREEWAY/EXPRESSWAY"

PROVIDE TEMPORARY PEDESTRIAN ACCOMMODATIONS ON COUNTY C IN THE CLOSED LANE. CONSTRUCT CURB RAMPS ONE SIDE (NORTH OR SOUTH) AT A TIME. ROUTE PEDESTRIAN TRAFFIC TO THE OTHER SIDE OF THE ROAD. SEE SDD "TRAFFIC CONTROL TEMPORARY PEDESTRIAN ACCOMMODATIONS."

PROJECT NO: 1032-10-75	HWY: EAST FRONTAGE ROAD	COUNTY: KENOSHA	TRAFFIC CONTROL - STAGE 2A	SHEET 129	E

FILE NAME : Y:\52XX\5252_DP20.NSFWYEFR.KNS\CADDS\10321015\SHEETSPLAN\025002_TC.DWG
LAYOUT NAME - 025003-S2-TC
PLOT DATE : 10/21/2021 4:14 PM
PLOT BY : CORY INMAN
PLOT NAME :
PLOT SCALE : 1 IN:100 FT
WISDOT/CADDS SHEET 42

2

2

LEGEND

- TYPE III BARRICADE
- TYPE III BARRICADE WTH ATTACHED SIGN
- TRAFFIC CONTROL DRUM
- TRAFFIC CONTROL DRUM WITH TYPE C STEADY BURN LIGHT
- FLASHING ARROW BOARD
- SIGN ON PERMANENT SUPPORT
- SIGN ON TEMPORARY SUPPORT
- WORK AREA
- DIRECTION OF TRAFFIC

TRAFFIC CONTROL NOTES:

CLOSE WIS 165 LEFT TURN LANE AND THROUGH LANE; CONSTRUCT CURB RAMPS, TRAFFIC LOOPS, AND SIGNALS IN MEDIAN AND LEFT TRHOUGH LANE

SEE SDD "TRAFFIC CONTROL, INTERSECTION WITHIN SINGLE LANE CLOSURE"

SEE SDD "TRAFFIC CONTROL, SINGLE LANE CLOSURE, DIVIDED NON-FREEWAY/EXPRESSWAY"

SEE SDD "TRAFFIC CONTROL, FULL LANE SHIFT NON-FREEWAY/EXPRESSWAY OR MULTILANE DIVIDED 45 MPH AND UNDER"

N

ROAD CLOSED
R11-2
48"X30"

LANE CLOSED
R11-2L
48"X30"

EAST FRONTAGE ROAD

ROAD CLOSED
R11-2
48"X30"

ROAD WORK AHEAD W20-1A
LEFT LANE CLOSED AHEAD W20-5SA
W04-2L

PAVEMENT MARKING REMOVAL 4-INCH
TEMPORARY MARKING LINE REMOVABLE TAPE 4-INCH

PLACE AT SAME LOCATION AS DETOUR SIGN

W12-52
48"X48"
MAX. 12' WIDTH

END ROAD WORK
G20-2A
48"X24"

WO1-6
48"X24"

LANE CLOSED
R11-2L
48"X30"

BEGIN LEFT TURN LANE
R3-20L
24"X36"

STH 165

R3-2
24"X24"

CONSTRUCT CURB RAMP HALF AND HALF TO MAINTAIN TEMPORARY PEDESTRIAN ACCOMMODATIONS. ELIMINATE DROP-OFF SAME DAY AS REMOVAL.

CLOSE LEFT TURN LANE FROM COMMERCE DRIVE

PROJECT NO: 1032-10-75	HWY: EAST FRONTAGE ROAD	COUNTY: KENOSHA	TRAFFIC CONTROL - STAGE 2B	SHEET 130	E

FILE NAME : Y:\52XX\5252_DP20.NSFWYEFR.KNS\CADDS\10321015\SHEETSPLAN\025002_TC.DWG
LAYOUT NAME - 025004-S2-TC

PLOT DATE : 10/21/2021 4:14 PM PLOT BY : CORY INMAN PLOT NAME : PLOT SCALE : 1 IN:100 FT

WISDOT/CADDS SHEET 42

2

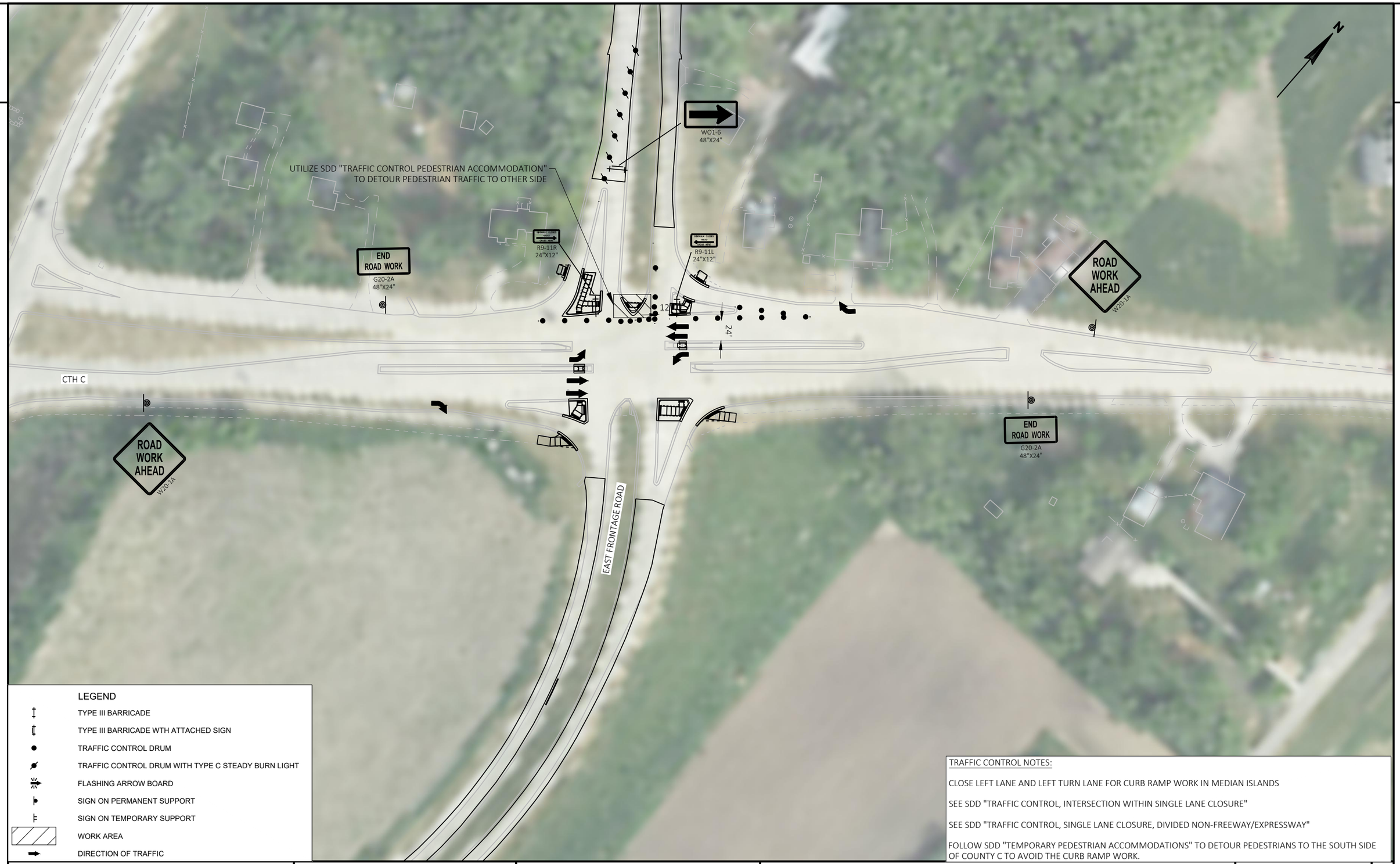

LEGEND

- TYPE III BARRICADE
- TYPE III BARRICADE WTH ATTACHED SIGN
- TRAFFIC CONTROL DRUM
- TRAFFIC CONTROL DRUM WITH TYPE C STEADY BURN LIGHT
- FLASHING ARROW BOARD
- SIGN ON PERMANENT SUPPORT
- SIGN ON TEMPORARY SUPPORT
- WORK AREA
- DIRECTION OF TRAFFIC

TRAFFIC CONTROL NOTES:

CLOSE LEFT LANE AND LEFT TURN LANE FOR CURB RAMP WORK IN MEDIAN ISLANDS

SEE SDD "TRAFFIC CONTROL, INTERSECTION WITHIN SINGLE LANE CLOSURE"

SEE SDD "TRAFFIC CONTROL, SINGLE LANE CLOSURE, DIVIDED NON-FREEWAY/EXPRESSWAY"

FOLLOW SDD "TEMPORARY PEDESTRIAN ACCOMMODATIONS" TO DETOUR PEDESTRIANS TO THE SOUTH SIDE OF COUNTY C TO AVOID THE CURB RAMP WORK.

PROJECT NO: 1032-10-75	HWY: EAST FRONTAGE ROAD	COUNTY: KENOSHA	TRAFFIC CONTROL - STAGE 2B	SHEET 131	E

FILE NAME : Y:\52XX\5252_DP20.NSFWYEFR.KNS\CADDS\10321015\SHEETSPLAN\025002_TC.DWG
LAYOUT NAME - 025005-S2-TC
PLOT DATE : 10/21/2021 4:14 PM
PLOT BY : CORY INMAN
PLOT NAME :
PLOT SCALE : 1 IN:100 FT
WISDOT/CADDS SHEET 42

2

2

CONSTRUCT MEDIAN CURB RAMPS ONE SIDE AT A TIME. WHILE MEDIAN CURB RAMP IS UNDER CONSTRUCTION UTILIZE SDD "TRAFFIC CONTROL PEDESTRIAN ACCOMMODATION" TO DETOUR PEDESTRIAN TRAFFIC TO OTHER SIDE

CTH C

R9-11AL 24"X12"

R9-11AR 24"X12"

R9-11AR 24"X12"

R9-11AL 24"X12"

EAST FRONTAGE ROAD

W04-2L

LEFT LANE CLOSED AHEAD W20-55A

ROAD WORK AHEAD W20-1A

ROAD WORK AHEAD W20-1A

LEFT LANE CLOSED AHEAD W20-55A

W04-2L

LEGEND

- TYPE III BARRICADE
- TYPE III BARRICADE WTH ATTACHED SIGN
- TRAFFIC CONTROL DRUM
- TRAFFIC CONTROL DRUM WITH TYPE C STEADY BURN LIGHT
- FLASHING ARROW BOARD
- SIGN ON PERMANENT SUPPORT
- SIGN ON TEMPORARY SUPPORT
- WORK AREA
- DIRECTION OF TRAFFIC

TRAFFIC CONTROL NOTES:

CLOSE LEFT LANE AND LEFT TURN LANE FOR CURB RAMP WORK IN MEDIAN ISLANDS

CONSTRUCT ONE MEDIAN CURB RAMP AT A TIME. WHILE MEDIAN CURB RAMP IS UNDER CONSTRUCTION FOLLOW SDD "TRAFFIC CONTROL, PEDESTRIAN ACCOMMODATION" TO DETOUR PEDESTRIAN TRAFFIC TO THE OTHER SIDE.

SEE SDD "TRAFFIC CONTROL, INTERSECTION WITHIN SINGLE LANE CLOSURE"

SEE SDD "TRAFFIC CONTROL, SINGLE LANE CLOSURE, DIVIDED NON-FREEWAY/EXPRESSWAY"

PROJECT NO: 1032-10-75	HWY: EAST FRONTAGE ROAD	COUNTY: KENOSHA	TRAFFIC CONTROL - STAGE 2C	SHEET 132	E

LEGEND

WORK ZONE

N

VILLAGE OF BRISTOL

VILLAGE OF PLEASANT PRAIRIE

WEST FRONTAGE ROAD

WEST FRONTAGE ROAD

WEST FRONTAGE ROAD

I-41/94

I-41/94

EAST FRONTAGE ROAD

EAST FRONTAGE ROAD

EAST FRONTAGE ROAD

EAST FRONTAGE ROAD

116TH AVE

114TH AVE

COUNTY ML

WIS 165

WIS 165

1900

1910

1920

1930

1940

1950

1960

1970

1980

1990

2000

3130

3140

3150

380

390

400

410

CONSTRUCTION ACTIVITIES

1. CONSTRUCTION OPERATION STA 1907+46 TO STA 1969+84 AND STA 1990+02 TO STA 1998+99.47. OPERATIONS INCLUDE MILLING, ASPHALT PAVING, GUARDRAIL, CURB RAMP UPGRADES, PAVEMENT MARKING, TURN LANE CONSTRUCTION, SIGNAL AND LOOP DETECTORS, AND SIGNING.

2. DAYTIME OPERATIONS SOUTH OF APPROXIMATELY 1969+84. FOLLOW SDD TRAFFIC CONTROL FOR LANE CLOSURE WITH FLAGGING OPERATION; NIGHT TIME OPERATIONS APPROXIMATELY STA 1990+02 TO 1998+99.47. SEE STAGING TYPICALS AND DETAILS

MAINTENANCE OF TRAFFIC

1. EAST FRONTAGE ROAD CLOSURE COUNTY ML TO WIS 50

2. THROUGH TRAFFIC IS TO BE DETOURED TO THE WEST FRONTAGE ROAD

3. LOCAL ACCESS TO ALL BUSINESSES AND RESIDENTS SHALL BE MAINTAINED AT ALL TIMES. TRAFFIC CONTROL DETAILS PROVIDED ARE FOR LOCAL ACCOMMODATIONS ONLY.

PROJECT NO: 1032-10-75	HWY: EAST FRONTAGE ROAD	COUNTY: KENOSHA	TRAFFIC CONTROL - STAGE 3 OVERVIEW	SHEET 133	E

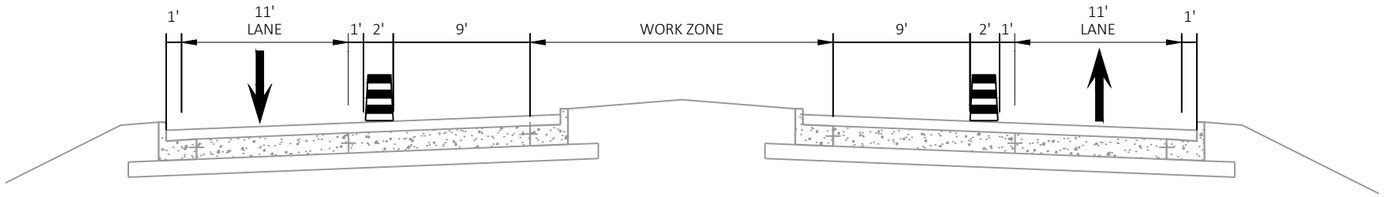

TRAFFIC CONTROL TYPICAL SECTION

STAGE 3A
STA 1993+54 - 1998+99.47
TYPICAL STAGING FOR MEDIAN LEFT TURN LANE EXTENSION

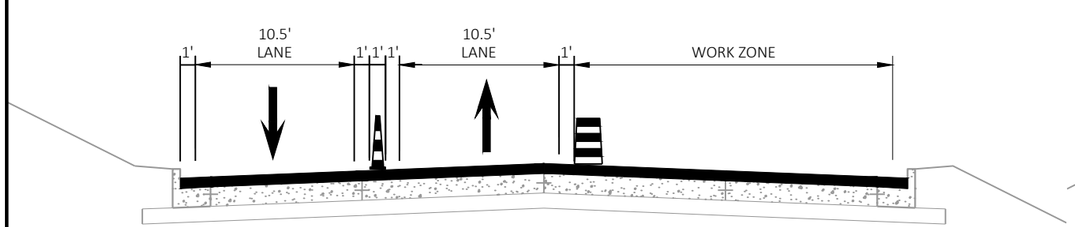

TRAFFIC CONTROL TYPICAL SECTION

STA 1990+02 - 1993+54
STAGE 3B/D TYPICAL STAGING FOR NORTHBOUND MILL AND OVERLAY OPERATIONS (MIRROR FOR SOUTHBOUND STAGE 3C/E)
NIGHT TIME WORK OPERATIONS

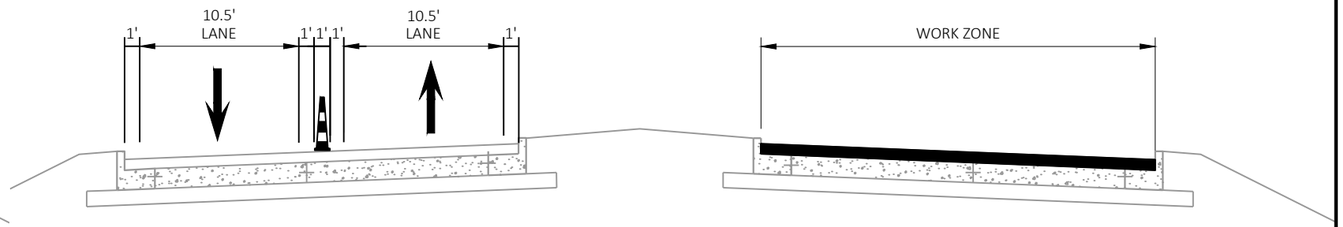

TRAFFIC CONTROL TYPICAL SECTION

STA 1993+54 - 1998+99.47
TYPICAL STAGING STAGE 3B/D FOR INORTHBOUND MILL AND OVERLAY OPERATIONS (MIRROR FOR SOUTHBOUND STAGE 3C/E)
NIGHT TIME WORK OPERATIONS

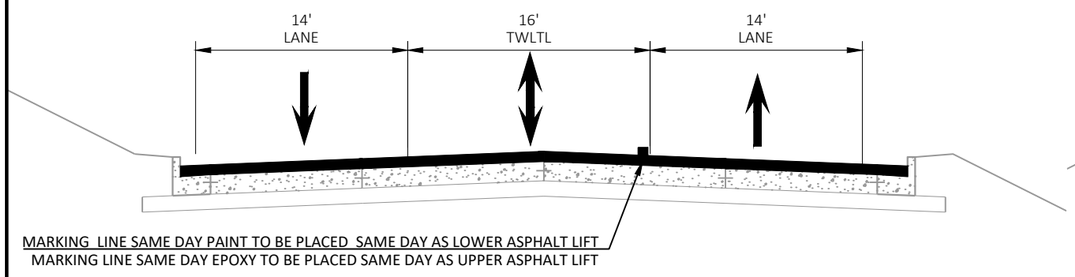

MARKING LINE SAME DAY PAINT TO BE PLACED SAME DAY AS LOWER ASPHALT LIFT
MARKING LINE SAME DAY EPOXY TO BE PLACED SAME DAY AS UPPER ASPHALT LIFT

TRAFFIC CONTROL TYPICAL SECTION

STA 1990+02 - 1993+54
STAGE 3 DAYTIME OPEN TO LOCAL TRAFFIC

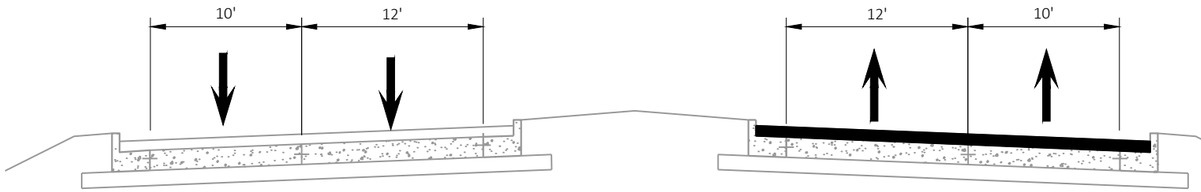

TRAFFIC CONTROL TYPICAL SECTION

STA 1993+54 - 1998+99.47
TYPICAL STAGING STAGE 3B/D FOR INORTHBOUND MILL AND OVERLAY OPERATIONS (MIRROR FOR SOUTHBOUND STAGE 3C/E)

PROJECT NO: 1032-10-75	HWY: EAST FRONTAGE ROAD	COUNTY: KENOSHA	TRAFFIC CONTROL - STAGE 3 TYPICALS	SHEET 134	E

FILE NAME : Y:\52XX\5252_DP20.NSFWYEFR.KNS\CADDS\10321015\SHEETSPLAN\025003_TC.DWG
LAYOUT NAME - 025002-S3-TC_Typicals
PLOT DATE : 10/21/2021 4:16 PM PLOT BY : CORY INMAN PLOT NAME : PLOT SCALE : ############
WISDOT/CADDS SHEET 42

2

2

LEGEND

- TYPE III BARRICADE
- TYPE III BARRICADE WTH ATTACHED SIGN
- TRAFFIC CONTROL DRUM
- TRAFFIC CONTROL DRUM WITH TYPE C STEADY BURN LIGHT
- TRAFFIC CONTROL CONE 42-INCH
- FLASHING ARROW BOARD
- SIGN ON PERMANENT SUPPORT
- SIGN ON TEMPORARY SUPPORT
- WORK AREA
- DIRECTION OF TRAFFIC

TRAFFIC CONTROL NOTES:

CLOSE EB RT LANE AND TURN LANE AND TRHOUGH LANE FOR RIGHT TURN LANE EXTENSION

SEE SDD "TRAFFIC CONTROL, INTERSECTION WITHIN SINGLE LANE CLOSURE"

SEE SDD "TRAFFIC CONTROL, SINGLE LANE CLOSURE, DIVIDED NPN-FREEWAY/EXPRESSWAY"

N

NB ENTRANCE RAMP

STH 165

395 396 397 398 399 400 401 402 403 404 405 406 407 408 409 410

STH 165

TEMPORARY PAVEMENT MARKING
4 INCH REMOVABLE TAPE
REMOVING PAVEMENT MARKING

LANE CLOSED
R11-2L
48"X30"

LANE CLOSED
R11-2L
48"X30"

ROAD WORK AHEAD W20-1A

RIGHT LANE CLOSED AHEAD W20-5A

W04-2R

PLACE SAME SIGNS IN MEDIAN

IH 43/94

SB ENTRANCE RAMP

NB EXIT RAMP

PROJECT NO: 1032-10-75	HWY: EAST FRONTAGE ROAD	COUNTY: KENOSHA	TRAFFIC CONTROL - STAGE 3A	SHEET 135	E

FILE NAME : Y:\52XX\5252_DP20.NSFWYEFR.KNS\CADDS\10321015\SHEETSPLAN\025003_TC.DWG
LAYOUT NAME - 025003-S3A-TC

PLOT DATE : 10/21/2021 4:17 PM PLOT BY : CORY INMAN PLOT NAME : PLOT SCALE : 1 IN:100 FT

WISDOT/CADDS SHEET 42

2

LEGEND

- TYPE III BARRICADE
- TYPE III BARRICADE WTH ATTACHED SIGN
- TRAFFIC CONTROL DRUM
- TRAFFIC CONTROL DRUM WITH TYPE C STEADY BURN LIGHT
- TRAFFIC CONTROL CONE 42-INCH
- FLASHING ARROW BOARD
- SIGN ON PERMANENT SUPPORT
- SIGN ON TEMPORARY SUPPORT
- WORK AREA
- DIRECTION OF TRAFFIC

N

STH 165

EAST FRONTAGE ROAD

M1-95A 24"X30"

MAX. 12' WIDTH

W12-52 48"X48"

PLACE AT SAME LOCATION AS DETOUR SIGN

END ROAD WORK G20-2A 48"X24"

ROAD WORK 500 FT W20-1D

ROAD WORK 1000 FT W20-1C

ROAD WORK AHEAD W20-1A

LANE CLOSED R11-2L 48"X30"

1987 1988 1989 1990 1991 1992 1993 1994 1995 1996 1997 1998 1999

407 408 409 410 411 412 413 414 415 416

3122 3123 3124

ROAD CLOSED R11-2 48"X30"

TRAFFIC CONTROL NOTES:

CLOSE EB RT LANE AND TROUGH LANE WEST OF EAST FRONTAGE ROAD FOR TURN LANE WORK. CLOSE MEDIAN LEFT TURN LANE AND THROUGH LANE ON SOUTH LEG FOR MEDIAN AND LEFT TURN LANE WORK.

SEE SDD "TRAFFIC CONTROL, INTERSECTION WITHIN SINGLE LANE CLOSURE"

SEE SDD "TRAFFIC CONTROL, SINGLE LANE CLOSURE, DIVIDED NPN-FREEWAY/EXPRESSWAY"

PROJECT NO: 1032-10-75	HWY: EAST FRONTAGE ROAD	COUNTY: KENOSHA	TRAFFIC CONTROL - STAGE 3A	SHEET 136	E

2

2

LEGEND

- TYPE III BARRICADE
- TYPE III BARRICADE WTH ATTACHED SIGN
- TRAFFIC CONTROL DRUM
- TRAFFIC CONTROL DRUM WITH TYPE C STEADY BURN LIGHT
- TRAFFIC CONTROL CONE 42-INCH
- FLASHING ARROW BOARD
- SIGN ON PERMANENT SUPPORT
- SIGN ON TEMPORARY SUPPORT
- WORK AREA
- DIRECTION OF TRAFFIC

N

1978 1979 1980 1981 1982 1983 1984 1985 1986 1987 1988 1989 1990 1991 1992 1993 1994 1995 1996 1997

25'

EAST FRONTAGE ROAD

LANE CLOSED
R11-2L
48"X30"

WO1-6
48"X24"

LANE CLOSED
R11-2L
48"X30"

ROAD CLOSED
R11-2
48"X30"

WO1-4L

116TH AVE

CORPORATE DRIVE

TRAFFIC CONTROL NOTES:

CLOSE NORTHBOUND OF EAST FRONTAGE ROAD DURING NIGHT TIME MILL AND OVERLAY OPERATIONS.

OPEN ALL LANES TO LOCAL TRAFFIC DURING DAYTIME NON-WORKING HOURS

SEE SDD TRAFFIC CONTROL FOR LANE CLOSURE WITH FLAGGING OPERATION

PROJECT NO: 1032-10-75	HWY: EAST FRONTAGE ROAD	COUNTY: KENOSHA	TRAFFIC CONTROL - STAGE 3B/3D	SHEET 137	E

2

2

LEGEND

- TYPE III BARRICADE
- TYPE III BARRICADE WTH ATTACHED SIGN
- TRAFFIC CONTROL DRUM
- TRAFFIC CONTROL DRUM WITH TYPE C STEADY BURN LIGHT
- TRAFFIC CONTROL CONE 42-INCH
- FLASHING ARROW BOARD
- SIGN ON PERMANENT SUPPORT
- SIGN ON TEMPORARY SUPPORT
- WORK AREA
- DIRECTION OF TRAFFIC

N

STH 165

407 408 409 410 411 412 413 414 415 416

3130 3129 3128 3127 3126 3125 3124 3123 3122

1992 1993 1994 1995 1996 1997 1998 1999

EAST FRONTAGE ROAD

ROAD WORK AHEAD
W20-1A

M1-95A
24"X30"
EAST FRONTAGE ROAD

MAX. 12' WIDTH
W12-52
48"X48"

PLACE AT SAME LOCATION AS DETOUR SIGN

R4-7
24"X30"

END ROAD WORK
G20-2A
48"X24"

ROAD WORK 500 FT
W20-1D

ROAD WORK 1000 FT
W20-1C

ROAD WORK AHEAD
W20-1A

EAST FRONTAGE ROAD

LANE CLOSED
R11-2L
48"X30"

WO1-6
48"X24"

END ROAD WORK
G20-2A
48"X24"

WO1-4R

ROAD CLOSED
R11-2
48"X30"

CONSTRUCT CURB RAMP HALF AND HALF TO MAINTAIN TEMPORARY PEDESTRIAN ACCOMMODATIONS. ELIMINATE DROP OFF SAME DAY AS REMOVAL

M1-95A
24"X30"
EAST FRONTAGE ROAD

MAX. 12' WIDTH
W12-52
48"X48"

PLACE AT SAME LOCATION AS DETOUR SIGN

END ROAD WORK
G20-2A
48"X24"

ROAD WORK AHEAD
W20-1A

TRAFFIC CONTROL NOTES:

CLOSE NORTHBOUND OF EAST FRONTAGE ROAD DURING NIGHT TIME MILL AND OVERLAY OPERATIONS.

OPEN ALL LANES TO TRAFFIC DURING DAYTIME NON-WORKING HOURS

PROJECT NO: 1032-10-75	HWY: EAST FRONTAGE ROAD	COUNTY: KENOSHA	TRAFFIC CONTROL - STAGE 3B/3D	SHEET 138	E

FILE NAME : Y:\52XX\5252_DP20.NSFWYEFR.KNS\CADDS\10321015\SHEETSPLAN\025003_TC.DWG
LAYOUT NAME - 025006-S3B-TC

PLOT DATE : 10/21/2021 4:18 PM PLOT BY : CORY INMAN PLOT NAME : PLOT SCALE : 1 IN:100 FT

2

2

LEGEND

- TYPE III BARRICADE
- TYPE III BARRICADE WTH ATTACHED SIGN
- TRAFFIC CONTROL DRUM
- TRAFFIC CONTROL DRUM WITH TYPE C STEADY BURN LIGHT
- TRAFFIC CONTROL CONE 42-INCH
- FLASHING ARROW BOARD
- SIGN ON PERMANENT SUPPORT
- SIGN ON TEMPORARY SUPPORT
- WORK AREA
- DIRECTION OF TRAFFIC

TRAFFIC CONTROL NOTES:

CLOSE SOUTHBOUND OF EAST FRONTAGE ROAD DURING NIGHT TIME MILL AND OVERLAY OPERATIONS.

OPEN ALL LANES TO LOCAL TRAFFIC DURING DAYTIME NON-WORKING HOURS; DETOUR TO REMAIN IN USE

N

1978 1979 1980 1981 1982 1983 1984 1985 1986 1987 1988 1989 1990 1991 1992 1993 1994 1995 1996 1997

LANE CLOSED
R11-2L
48"X30"

WO1-4R

EAST FRONTAGE ROAD

WO1-6
48"X24"

ROAD CLOSED
R11-2
48"X30"

116TH AVE

CORPORATE DRIVE

PROJECT NO: 1032-10-75	HWY: EAST FRONTAGE ROAD	COUNTY: KENOSHA	TRAFFIC CONTROL - STAGE 3C/3E	SHEET 139	E

FILE NAME : Y:\52XX\5252_DP20.NSFWYEFR.KNS\CADDS\10321015\SHEETSPLAN\025003_TC.DWG
LAYOUT NAME - 025007-S3C-TC

PLOT DATE : 10/21/2021 4:19 PM PLOT BY : CORY INMAN PLOT NAME : PLOT SCALE : 1 IN:100 FT

LEGEND

- TYPE III BARRICADE
- TYPE III BARRICADE WTH ATTACHED SIGN
- TRAFFIC CONTROL DRUM
- TRAFFIC CONTROL DRUM WITH TYPE C STEADY BURN LIGHT
- TRAFFIC CONTROL CONE 42-INCH
- FLASHING ARROW BOARD
- SIGN ON PERMANENT SUPPORT
- SIGN ON TEMPORARY SUPPORT
- WORK AREA
- DIRECTION OF TRAFFIC

ROAD WORK AHEAD
W20-1A

M1-95A
24"X30"
EAST FRONTAGE ROAD

MAX. 12' WIDTH
W12-52
48"X48"

PLACE AT SAME LOCATION AS DETOUR SIGN

ROAD CLOSED
R11-2
48"X30"

WO1-6
48"X24"

EAST FRONTAGE ROAD

1992 1993 1994 1995 1996 1997 1998 1999

STH 165

407 408 409 410 411 412 413 414 415 416

END ROAD WORK
G20-2A
48"X24"

ROAD WORK 500 FT
W20-1D

ROAD WORK 1000 FT
W20-1C

ROAD WORK AHEAD
W20-1A

WO1-4L

3122 3123 3124 3125 3126 3127 3128 3129 3130

EAST FRONTAGE ROAD

R4-7
24"X30"

M1-95A
24"X30"
EAST FRONTAGE ROAD

MAX. 12' WIDTH
W12-52
48"X48"

PLACE AT SAME LOCATION AS DETOUR SIGN

END ROAD WORK
G20-2A
48"X24"

END ROAD WORK
G20-2A
48"X24"

ROAD WORK AHEAD
W20-1A

TRAFFIC CONTROL NOTES:

CLOSE SOUTHBOUND OF EAST FRONTAGE ROAD DURING NIGHT TIME MILL AND OVERLAY OPERATIONS.

OPEN ALL LANES TO LOCAL TRAFFIC DURING DAYTIME NON-WORKING HOURS; DETOUR TO REMAIN IN USE

PROJECT NO: 1032-10-75	HWY: EAST FRONTAGE ROAD	COUNTY: KENOSHA	TRAFFIC CONTROL - STAGE 3C/3E	SHEET 140	E

2

DETOUR NOTES

THE EXACT LOCATION AND SPACING OF ALL SIGNS AND DEVICES SHALL BE ADJUSTED TO FIT FIELD CONDITIONS AS APPROVED BY THE ENGINEER.

ALL SIGNS INAPPROPRIATE TO THE STATUS OF THE TRAFFIC CONTROL PLAN, INCLUDING PRE-EXISTING SIGNING IN THE VICINITY, SHALL BE COVERED OR REMOVED AS SPECIFIED IN THE PLANS AND/OR AS DIRECTED BY THE ENGINEER.

ALL EXISTING SIGNS THAT NEED TO BE COVERED SHALL BE COVERED WITH A BLANK ORANGE PANEL. PAID FOR AS TRAFFIC CONTROL COVERING SIGNS TYPE II UNLESS OTHERWISE NOTED.

ALL "W" AND "WO" SIGNS SHALL BE 48" X 48" UNLESS OTHERWISE NOTED.

"WO" SIGNS ARE THE SAME AS "W" SIGNS EXCEPT THAT THE BACKGROUND IS ORANGE.

ALL "STOP" SIGNS THAT ARE REMOVED FOR A CONSTRUCTION OPERATION SHALL BE IMMEDIATELY RE-ESTABLISHED.

SEE SDD "BARRICADES AND SIGNS FOR MAINLINE CLOSURES" AND SDD "DETOUR SIGNING FOR MAINLINE CLOSURES" FOR ADDITIONAL DETAILS

TRAFFIC CONTROL PCMS MESSAGE	
PHASE	MESSAGE
1	ROAD TO CLOSE
2	{DATE}

LEGEND

- NEW SIGN
- POST MOUNTED SIGN (NEW)
- EXISTING SIGN
- POST MOUNTED SIGN (EXISTING)
- TRAFFIC CONTROL COVERING SIGNS TYPE II
- MULTIPLE POST MOUNTED SIGN (EXISTING)
- # TRAFFIC CONTROL COVERING SIGNS TYPE I
- TYPE III BARRICADE WITH/WITHOUT SIGN
- WORK ZONE

2

LEGEND

DETOUR ROUTE

WORK ZONE

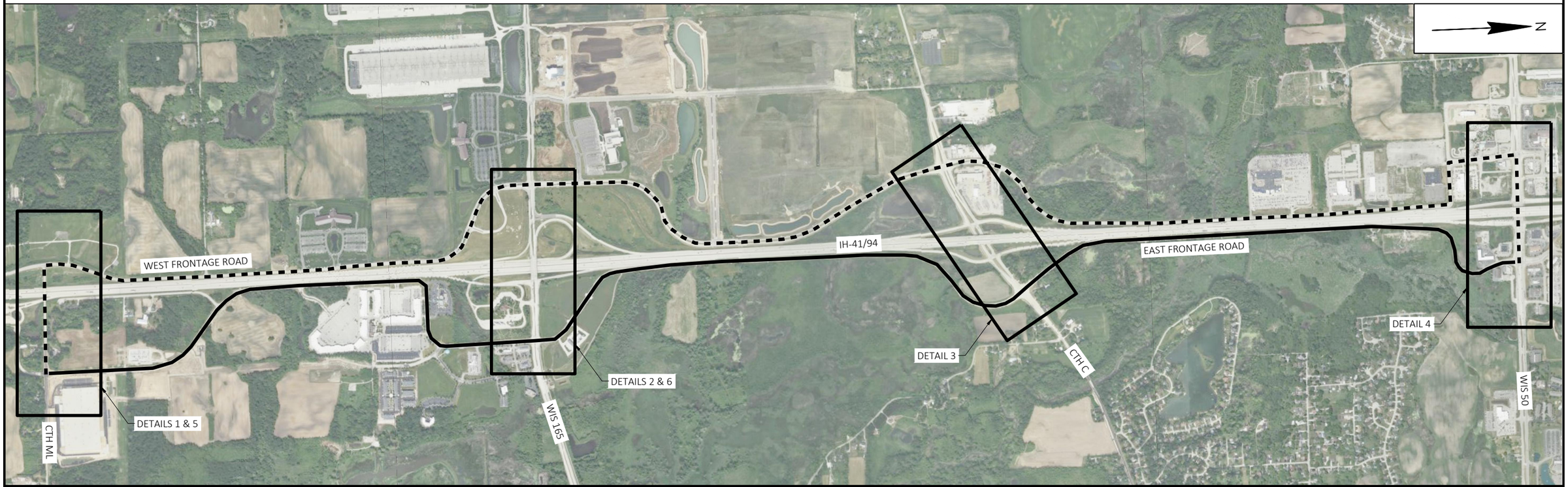

PROJECT NO: 1032-10-75	HWY: EAST FRONTAGE ROAD	COUNTY: KENOSHA	DETOUR EAST FRONTAGE ROAD - OVERVIEW	SHEET 141	E

FILE NAME : Y:\52XX\5252_DP20.NSFWYEFR.KNS\CADDS\10321015\SHEETSPLAN\027101-DT.DWG
LAYOUT NAME - OVERVIEW

PLOT DATE : 10/21/2021 2:17 PM PLOT BY : CORY INMAN PLOT NAME : PLOT SCALE : 1 IN:1600 FT

WISDOT/CADDS SHEET 44

2

2

N

EAST FRONTAGE ROAD
M1-95A
24"X30"

DETOUR AHEAD
W20-2A

DETOUR NORTH
M4-8
24"X12"
M3-1
24"X12"
EAST FRONTAGE ROAD
M1-95A
24"X30"
MO6-1
21"X21"

DETOUR NORTH
M4-8
24"X12"
M3-1
24"X12"
EAST FRONTAGE ROAD
M1-95A
24"X30"
MO6-1
21"X21"

DETOUR NORTH
M4-8
24"X12"
M3-1
24"X12"
EAST FRONTAGE ROAD
M1-95A
24"X30"
MO6-1
21"X21"

DETOUR SOUTH
M4-8
24"X12"
M3-3
24"X12"
EAST FRONTAGE ROAD
M1-95A
24"X30"
MO6-1

DETOUR SOUTH
M4-8
24"X12"
M3-3
24"X12"
EAST FRONTAGE ROAD
M1-95A
24"X30"
MO5-1L

WEST FRONTAGE ROAD

IH-41/94

EAST FRONTAGE ROAD

DETOUR NORTH
M4-8
24"X12"
M3-1
24"X12"
EAST FRONTAGE ROAD
M1-95A
24"X30"
MO5-1R
21"X21"

DETOUR SOUTH
M4-8
24"X12"
M3-3
24"X12"
EAST FRONTAGE ROAD
M1-95A
24"X30"

DETOUR NORTH
M4-8
24"X12"
M3-1
24"X12"
EAST FRONTAGE ROAD
M1-95A
24"X30"

M4-8A
24"X18"
END DETOUR
M3-3
24"X12"
SOUTH
M1-95A
24"X30"
EAST FRONTAGE ROAD

ROAD CLOSED TO THRU TRAFFIC
R11-4
60"X30"

DETOUR NORTH
M4-8
24"X12"
M3-1
24"X12"
EAST FRONTAGE ROAD
M1-95A
24"X30"
MO6-1
21"X21"

DETOUR NORTH
M4-8
24"X12"
M3-1
24"X12"
EAST FRONTAGE ROAD
M1-95A
24"X30"
MO6-1
21"X21"

CTH ML (122ND STREET)

EAST FRONTAGE ROAD
M1-95A
24"X30"

DETOUR AHEAD
W20-2A

LEGEND

- NEW SIGN
- EXISTING SIGN
- TRAFFIC CONTROL COVERING SIGNS TYPE II
- TRAFFIC CONTROL COVERING SIGNS TYPE I (#)
- WORK ZONE
- POST MOUNTED SIGN (NEW)
- POST MOUNTED SIGN (EXISTING)
- MULTIPLE POST MOUNTED SIGN (EXISTING)
- TYPE III BARRICADE WITH/WITHOUT SIGN

PROJECT NO: 1032-10-75	HWY: EAST FRONTAGE ROAD	COUNTY: KENOSHA	DETOUR EAST FRONTAGE ROAD - DETAIL 1 (STAGE 1 & 2)	SHEET 142	E

FILE NAME : Y:\52XX\5252_DP20.NSFWYEFR.KNS\CADDS\10321015\SHEETSPLAN\027101-DT.DWG
LAYOUT NAME - DETAIL 1

PLOT DATE : 10/21/2021 2:17 PM PLOT BY : CORY INMAN PLOT NAME : PLOT SCALE : 1 IN:500 FT

WISDOT/CADDS SHEET 44

2

N

WIS 165 (104TH STREET)

WEST FRONTAGE ROAD

EAST FRONTAGE ROAD

IH-41/94

DETOUR AHEAD W20-2A

ROAD CLOSED R11-2 48"X30"

ROAD CLOSED TO THRU TRAFFIC R11-4 60"X30"

DETOUR NORTH / "EAST" FRONTAGE ROAD M4-8 24"X12" M3-1 24"X12" M1-95A 24"X30" MO6-1 21"X21"

DETOUR SOUTH / "EAST" FRONTAGE ROAD M4-8 24"X12" M3-3 24"X12" M1-95A 24"X30" MO6-1 21"X21"

DETOUR NORTH / "EAST" FRONTAGE ROAD M4-8 24"X12" M3-1 24"X12" M1-95A 24"X30" MO5-1L 21"X21"

DETOUR SOUTH / "EAST" FRONTAGE ROAD M4-8 24"X12" M3-3 24"X12" M1-95A 24"X30" MO5-1R 21"X21"

LEGEND

- NEW SIGN
- EXISTING SIGN
- TRAFFIC CONTROL COVERING SIGNS TYPE II
- TRAFFIC CONTROL COVERING SIGNS TYPE I (#)
- WORK ZONE
- POST MOUNTED SIGN (NEW)
- POST MOUNTED SIGN (EXISTING)
- MULTIPLE POST MOUNTED SIGN (EXISTING)
- TYPE III BARRICADE WITH/WITHOUT SIGN

PROJECT NO: 1032-10-75	HWY: EAST FRONTAGE ROAD	COUNTY: KENOSHA	DETOUR EAST FRONTAGE ROAD - DETAIL 2 (STAGE 1 & 2)	SHEET 143	E

FILE NAME : Y:\52XX\5252_DP20.NSFWYEFR.KNS\CADDS\10321015\SHEETSPLAN\027101-DT.DWG
LAYOUT NAME - DETAIL 2
PLOT DATE : 10/21/2021 2:17 PM
PLOT BY : CORY INMAN
PLOT NAME :
PLOT SCALE : 1 IN:500 FT

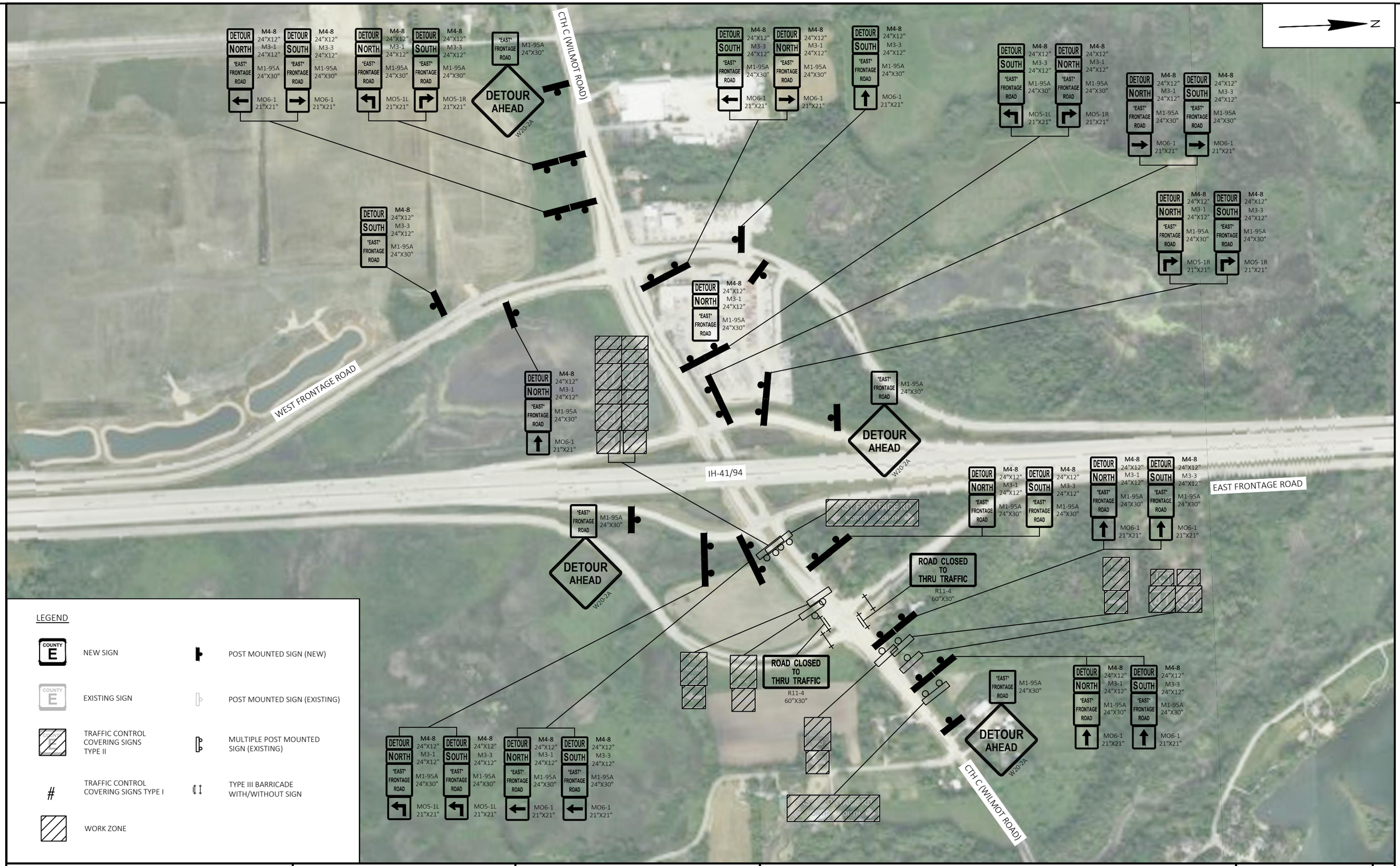

PROJECT NO: 1032-10-75	HWY: EAST FRONTAGE ROAD	COUNTY: KENOSHA	DETOUR EAST FRONTAGE ROAD - DETAIL 3 (STAGE 1 & 2)	SHEET 144	E

FILE NAME : Y:\52XX\5252_DP20.NSFWYEFR.KNS\CADDS\10321015\SHEETSPLAN\027101-DT.DWG
LAYOUT NAME - DETAIL 3
PLOT DATE : 10/21/2021 2:17 PM
PLOT BY : CORY INMAN
PLOT NAME :
PLOT SCALE : 1 IN:500 FT
WISDOT/CADDS SHEET 44

2

2

N

WIS 50 (75TH STREET)

125TH AVENUE

77TH STREET

123RD AVENUE

WEST FRONTAGE ROAD

EAST FRONTAGE ROAD

IH-41/94

71ST ST

68TH ST

118th AVENUE

117TH AVE

WIS 50 (75TH STREET)

DETOUR AHEAD W20-2A

ROAD CLOSED 500 FT W20-3D

ROAD CLOSED AHEAD W20-3A

ROAD CLOSED TO THRU TRAFFIC R11-4 60"X30"

DETOUR M4-9R 30"X24"

EAST FRONTAGE ROAD ONLY

DETOUR SOUTH M4-8 24"X12" M3-3 24"X12" "EAST" FRONTAGE ROAD M1-95A 24"X30" MO6-1 21"X21"

DETOUR SOUTH M4-8 24"X12" M3-3 24"X12" "EAST" FRONTAGE ROAD M1-95A 24"X30" MO5-1L 21"X21"

DETOUR SOUTH M4-8 24"X12" M3-3 24"X12" "EAST" FRONTAGE ROAD M1-95A 24"X30" MO5-1R 21"X21"

DETOUR NORTH M4-8 24"X12" M3-1 24"X12" "EAST" FRONTAGE ROAD M1-95A 24"X30" MO6-1 21"X21"

"EAST" FRONTAGE ROAD M1-95A 24"X30"

END DETOUR NORTH M4-8A 24"X18" M3-1 24"X12" "EAST" FRONTAGE ROAD M1-95A 24"X30"

ALTERNATE NORTH 41 WEST 94

LEGEND

- NEW SIGN
- EXISTING SIGN
- TRAFFIC CONTROL COVERING SIGNS TYPE II
- TRAFFIC CONTROL COVERING SIGNS TYPE I
- WORK ZONE
- POST MOUNTED SIGN (NEW)
- POST MOUNTED SIGN (EXISTING)
- MULTIPLE POST MOUNTED SIGN (EXISTING)
- TYPE III BARRICADE WITH/WITHOUT SIGN

PROJECT NO: 1032-10-75	HWY: EAST FRONTAGE ROAD	COUNTY: KENOSHA	DETOUR EAST FRONTAGE ROAD - DETAIL 4 (STAGE 1 & 2)	SHEET 145	E

FILE NAME : Y:\52XX\5252_DP20.NSFWYEFR.KNS\CADDS\10321015\SHEETSPLAN\027101-DT.DWG
LAYOUT NAME - DETAIL 4

PLOT DATE : 10/21/2021 2:17 PM PLOT BY : CORY INMAN PLOT NAME : PLOT SCALE : 1 IN:500 FT

2

2

N

EAST FRONTAGE ROAD M1-95A 24"X30"

DETOUR AHEAD W20-2A

DETOUR NORTH M4-8 24"X12" M3-1 24"X12" EAST FRONTAGE ROAD M1-95A 24"X30" MO6-1 21"X21"

DETOUR NORTH M4-8 24"X12" M3-1 24"X12" EAST FRONTAGE ROAD M1-95A 24"X30" MO6-1 21"X21"

DETOUR NORTH M4-8 24"X12" M3-1 24"X12" EAST FRONTAGE ROAD M1-95A 24"X30" MO6-1

DETOUR SOUTH M4-8 24"X12" M3-3 24"X12" EAST FRONTAGE ROAD M1-95A 24"X30" MO5-1L

DETOUR NORTH M4-8 24"X12" M3-1 24"X12" EAST FRONTAGE ROAD M1-95A 24"X30"

WEST FRONTAGE ROAD

IH-41/94

EAST FRONTAGE ROAD

DETOUR SOUTH M4-8 24"X12" M3-3 24"X12" EAST FRONTAGE ROAD M1-95A 24"X30"

DETOUR NORTH M4-8 24"X12" M3-1 24"X12" EAST FRONTAGE ROAD M1-95A 24"X30" MO5-1R 21"X21"

END DETOUR M4-8A 24"X18" SOUTH M3-3 24"X12" EAST FRONTAGE ROAD M1-95A 24"X30"

DETOUR NORTH M4-8 24"X12" M3-1 24"X12" EAST FRONTAGE ROAD M1-95A 24"X30"

ROAD CLOSED TO THRU TRAFFIC R11-4 60"X30"

DETOUR NORTH M4-8 24"X12" M3-1 24"X12" EAST FRONTAGE ROAD M1-95A 24"X30" MO6-1 21"X21"

DETOUR NORTH M4-8 24"X12" M3-1 24"X12" EAST FRONTAGE ROAD M1-95A 24"X30" MO6-1 21"X21"

EAST FRONTAGE ROAD M1-95A 24"X30"

DETOUR AHEAD W20-2A

CTH ML (122ND STREET)

LEGEND

- NEW SIGN
- EXISTING SIGN
- TRAFFIC CONTROL COVERING SIGNS TYPE II
- TRAFFIC CONTROL COVERING SIGNS TYPE I (#)
- WORK ZONE
- POST MOUNTED SIGN (NEW)
- POST MOUNTED SIGN (EXISTING)
- MULTIPLE POST MOUNTED SIGN (EXISTING)
- TYPE III BARRICADE WITH/WITHOUT SIGN

PROJECT NO: 1032-10-75	HWY: EAST FRONTAGE ROAD	COUNTY: KENOSHA	DETOUR EAST FRONTAGE ROAD - DETAIL 5 (STAGE 3)	SHEET 146	E

FILE NAME : Y:\52XX\5252_DP20.NSFWYEFR.KNS\CADDS\10321015\SHEETSPLAN\027101-DT.DWG
LAYOUT NAME - DETAIL 5

PLOT DATE : 10/21/2021 2:17 PM PLOT BY : CORY INMAN PLOT NAME : PLOT SCALE : 1 IN:500 FT

WISDOT/CADDS SHEET 44

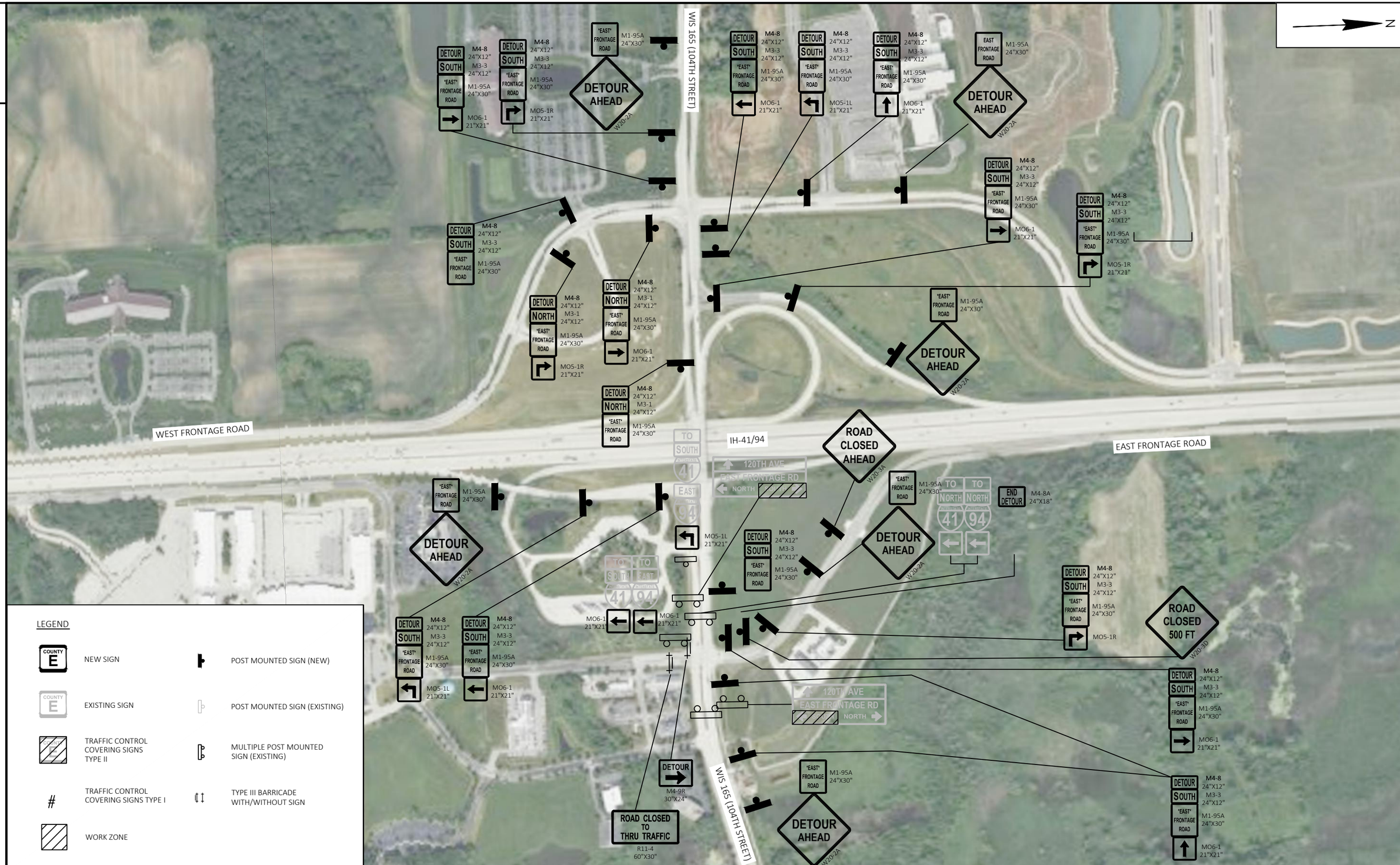

PROJECT NO: 1032-10-75	HWY: EAST FRONTAGE ROAD	COUNTY: KENOSHA	DETOUR EAST FRONTAGE ROAD - DETAIL 6 (STAGE 3)	SHEET 147	E

FILE NAME : Y:\52XX\5252_DP20.NSFWYEFR.KNS\CADDS\10321015\SHEETSPLAN\027101-DT.DWG
LAYOUT NAME - DETAIL 6
PLOT DATE : 10/21/2021 2:17 PM
PLOT BY : CORY INMAN
PLOT NAME :
PLOT SCALE : 1 IN:500 FT
WISDOT/CADDS SHEET 44

2

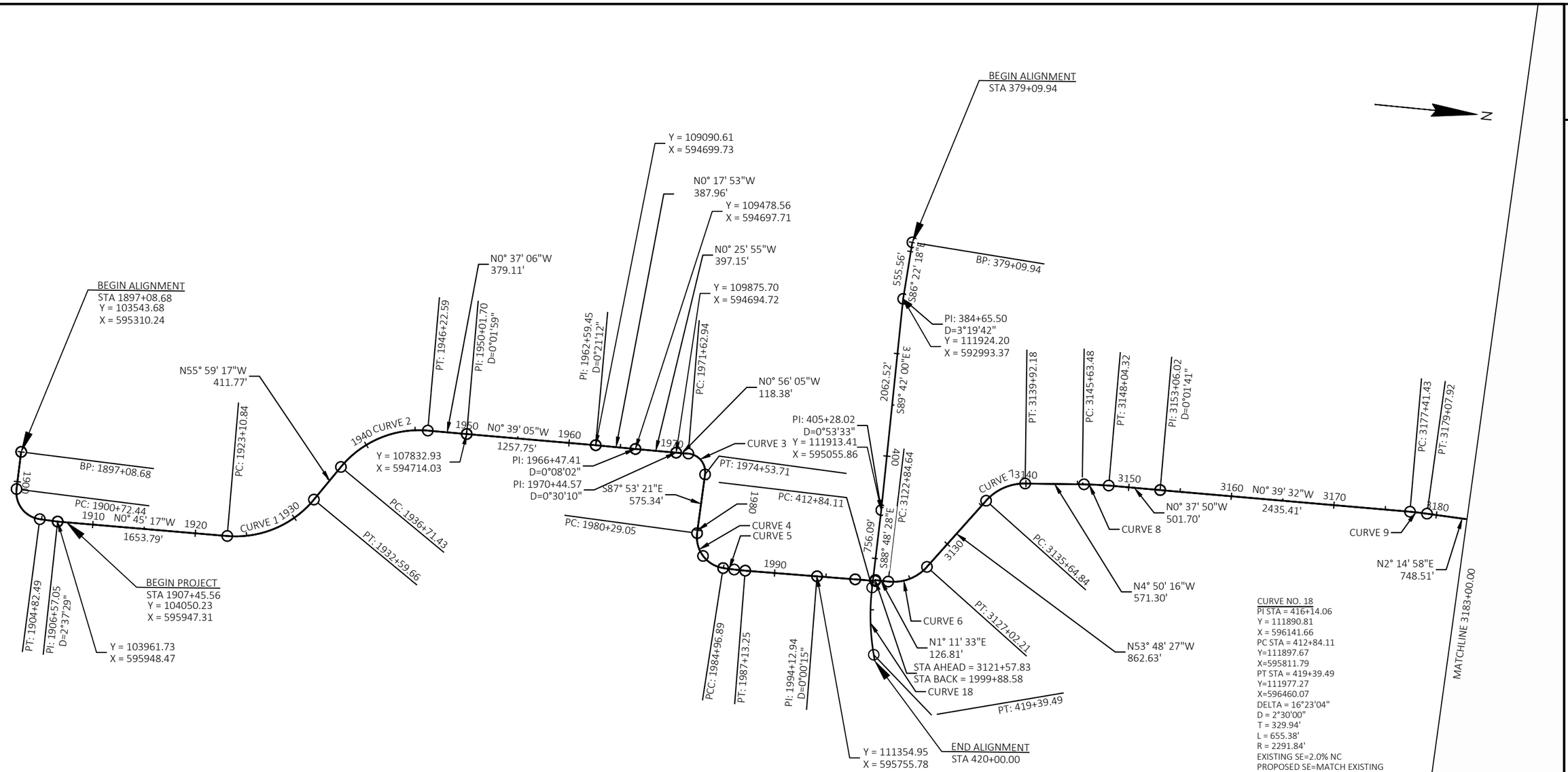

CURVE NO. 1
PI STA = 1928+25.76
Y = 106130.25
X = 595919.91
PC STA = 1923+10.84
Y=105615.37
X=595926.69
PT STA = 1932+59.66
Y=106418.28
X=595493.08
DELTA = 55°14'00"
D = 5°49'17"
T = 514.92'
L = 948.82'
R = 984.25'
EXISTING SE= 5.9%
PROPOSED SE= MATCH EXISTING

CURVE NO. 2
PI STA = 1941+87.84
Y = 106937.47
X = 594723.70
PC STA = 1936+71.43
Y=106648.61
X=595151.76
PT STA = 1946+22.59
Y=107453.85
X=594718.12
DELTA = 55°22'10"
D = 5°49'17"
T = 516.41'
L = 951.16'
R = 984.25'
EXISTING SE=5.9%
PROPOSED SE=MATCH EXISTING

CURVE NO. 3
PI STA = 1973+51.77
Y = 110182.87
X = 594689.70
PC STA = 1971+62.94
Y=109994.06
X=594692.79
PT STA = 1974+53.71
Y=110175.91
X=594878.41
DELTA = 93°02'44"
D = 32°00'00"
T = 188.83'
L = 290.77'
R = 179.05'
EXISTING SE=2.0% RC
PROPOSED SE=MATCH EXISTING

CURVE NO. 4
PI STA = 1983+24.81
Y = 110143.83
X = 595748.92
PC STA = 1980+29.05
Y=110154.72
X=595453.35
PT STA = 1984+96.89
Y=110439.13
X=595765.54
DELTA = 88°53'18"
D = 18°59'59"
T = 295.77'
L = 467.84'
R = 301.56'
EXISTING SE=2.0% RC
PROPOSED SE=MATCH EXISTING

CURVE NO. 5
PI STA = 1986+05.12
Y = 110547.19
X = 595771.63
PC STA = 1984+96.89
Y=110439.13
X=595765.54
PT STA = 1987+13.25
Y=110655.40
X=595769.54
DELTA = 4°19'38"
D = 2°00'00"
T = 108.23'
L = 216.36'
R = 2864.79'
EXISTING SE=2.0% RC
PROPOSED SE=MATCH EXISTING

CURVE NO. 6
PI STA = 3125+11.09
Y = 112274.44
X = 595743.41
PC STA = 3122+84.64
Y=112048.04
X=595738.70
PT STA = 3127+02.21
Y=112408.15
X=595560.66
DELTA = 55°00'00"
D = 13°10'17"
T = 226.45'
L = 417.57'
R = 435.00'
EXISTING SE=2.0% NC
PROPOSED SE=MATCH EXISTING

CURVE NO. 7
PI STA = 3137+92.54
Y = 113051.99
X = 594680.72
PC STA = 3135+64.84
Y=112917.53
X=594864.49
PT STA = 3139+92.18
Y=113278.88
X=594661.52
DELTA = 48°58'12"
D = 11°27'33"
T = 227.70'
L = 427.34'
R = 500.00'
EXISTING SE=2.0% NC
PROPOSED SE=MATCH EXISTING

CURVE NO. 8
PI STA = 3146+83.95
Y = 113968.19
X = 594603.18
PC STA = 3145+63.48
Y=113848.15
X=594613.34
PT STA = 3148+04.32
Y=114088.66
X=594601.85
DELTA = 4°12'26"
D = 1°44'49"
T = 120.48'
L = 240.84'
R = 3280.00'
EXISTING SE=2.0% NC
PROPOSED SE=MATCH EXISTING

CURVE NO. 9
PI STA = 3178+24.70
Y = 117108.84
X = 594567.37
PC STA = 3177+41.43
Y=117025.58
X=594568.33
PT STA = 3179+07.92
Y=117192.04
X=594570.64
DELTA = 2°54'30"
D = 1°44'49"
T = 83.26'
L = 166.49'
R = 3280.00'
EXISTING SE=4.08%
PROPOSED SE=MATCH EXISTING

CURVE NO. 18
PI STA = 416+14.06
Y = 111890.81
X = 596141.66
PC STA = 412+84.11
Y=111897.67
X=595811.79
PT STA = 419+39.49
Y=111977.27
X=596460.07
DELTA = 16°23'04"
D = 2°30'00"
T = 329.94'
L = 655.38'
R = 2291.84'
EXISTING SE=2.0% NC
PROPOSED SE=MATCH EXISTING

PROJECT NO: 1032-10-75	HWY: EAST FRONTAGE ROAD	COUNTY: KENOSHA	ALIGNMENT DETAILS	SHEET 148	E

FILE NAME : Y:\52XX\5252_DP20.NSFWYEFR.KNS\CADDS\10321015\SHEETSPLAN\027201-AD.DWG
LAYOUT NAME - 027201

PLOT DATE : 10/22/2021 3:40 PM PLOT BY : NICHOLAS BECKER PLOT NAME : PLOT SCALE : 1 IN:1000 FT

2

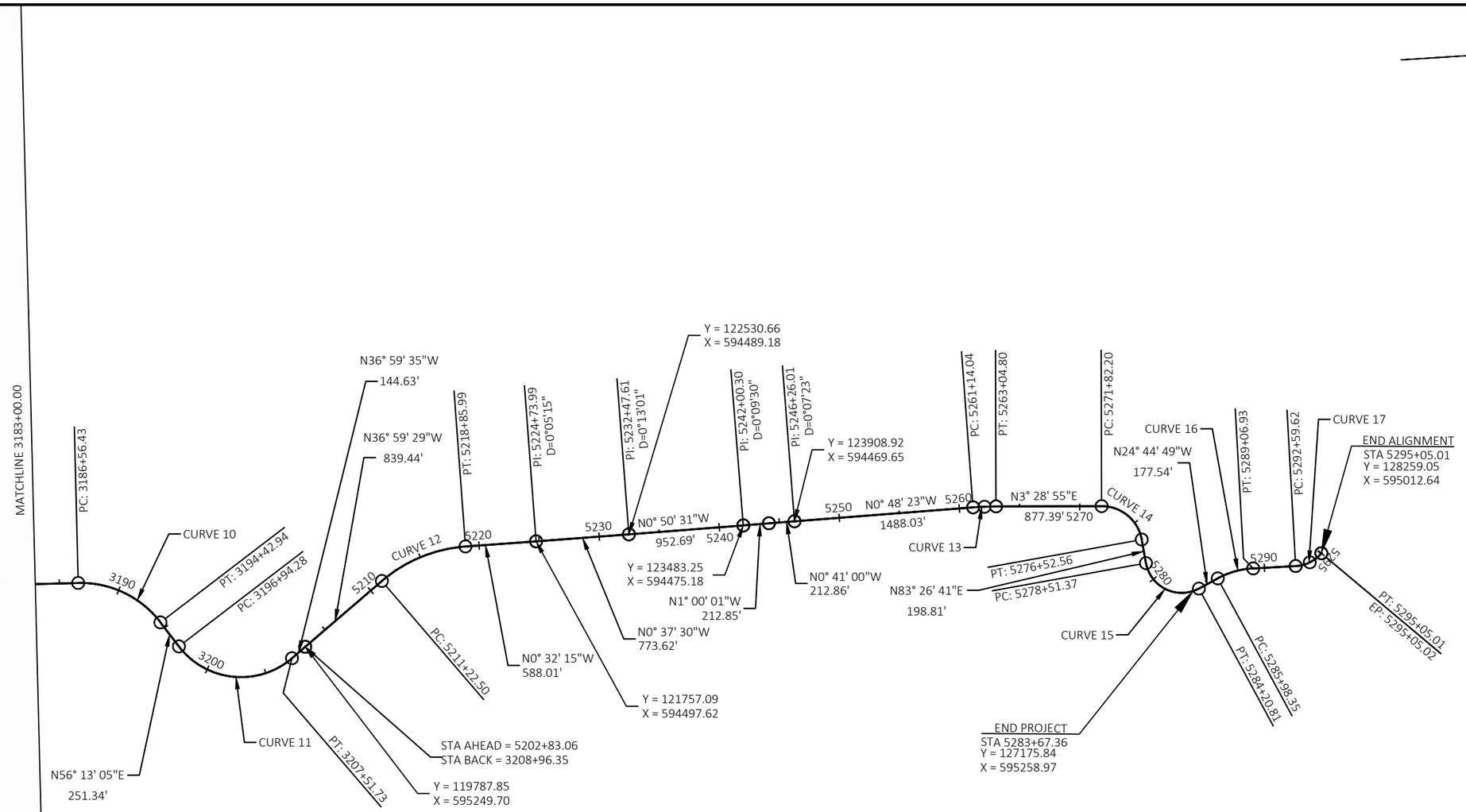

CURVE NO. 10
PI STA = 3190+81.60
Y = 118364.81
X = 594616.70
PC STA = 3186+56.43
Y=117939.97
X=594600.02
PT STA = 3194+42.94
Y=118601.21
X=594970.08
DELTA = 53°58'07"
D = 6°51'42"
T = 425.17'
L = 786.51'
R = 835.00'
EXISTING SE=5.3%
PROPOSED SE=MATCH EXISTING

CURVE NO. 11
PI STA = 3203+81.77
Y = 119123.23
X = 595750.40
PC STA = 3196+94.28
Y=118740.96
X=595178.98
PT STA = 3207+51.73
Y=119672.34
X=595336.72
DELTA = 93°12'40"
D = 8°48'53"
T = 687.49'
L = 1057.45'
R = 650.00'
EXISTING SE=3.95%
PROPOSED SE=MATCH EXISTING

CURVE NO. 12
PI STA = 5215+17.67
Y = 120773.96
X = 594506.84
PC STA = 5211+22.50
Y=120458.33
X=594744.61
PT STA = 5218+85.99
Y=121169.11
X=594503.14
DELTA = 36°27'14"
D = 4°46'29"
T = 395.16'
L = 763.49'
R = 1200.00'
EXISTING SE=4.5%
PROPOSED SE=MATCH EXISTING

CURVE NO. 13
PI STA = 5262+09.46
Y = 125492.21
X = 594447.04
PC STA = 5261+14.04
Y=125396.79
X=594447.98
PT STA = 5263+04.80
Y=125587.45
X=594452.84
DELTA = 4°02'53"
D = 2°07'19"
T = 95.42'
L = 190.76'
R = 2700.00'
EXISTING SE=2.0% NC
PROPOSED SE=MATCH EXISTING

CURVE NO. 14
PI STA = 5274+64.81
Y = 126745.32
X = 594523.29
PC STA = 5271+82.20
Y=126463.23
X=594506.12
PT STA = 5276+52.56
Y=126777.58
X=594804.06
DELTA = 79°57'46"
D = 17°00'01"
T = 282.62'
L = 470.36'
R = 337.03'
EXISTING SE=6.0%
PROPOSED SE=MATCH EXISTING

CURVE NO. 15
PI STA = 5282+67.90
Y = 126847.83
X = 595415.37
PC STA = 5278+51.37
Y=126800.28
X=595001.57
PT STA = 5284+20.81
Y=127226.10
X=595241.01
DELTA = 108°11'31"
D = 18°59'59"
T = 416.53'
L = 569.44'
R = 301.56'
EXISTING SE=6.0%
PROPOSED SE=MATCH EXISTING

CURVE NO. 16
PI STA = 5287+55.19
Y = 127529.78
X = 595101.03
PC STA = 5285+98.35
Y=127387.34
X=595166.68
PT STA = 5289+06.93
Y=127686.61
X=595102.43
DELTA = 25°15'28"
D = 8°11'06"
T = 156.84'
L = 308.58'
R = 700.00'

CURVE NO. 17
PI STA = 5293+89.65
Y = 128169.31
X = 595106.73
PC STA = 5292+59.62
Y=128039.29
X=595105.57
PT STA = 5295+05.01
Y=128259.05
X=595012.64
DELTA = 46°51'58"
D = 19°05'55"
T = 130.03'
L = 245.39'
R = 300.00'

PROJECT NO: 1032-10-75	HWY: EAST FRONTAGE ROAD	COUNTY: KENOSHA	ALIGNMENT DETAILS	SHEET 149	E

FILE NAME : Y:\52XX\5252_DP20.NSFWYEFR.KNS\CADDS\10321015\SHEETSPLAN\027201-AD.DWG
LAYOUT NAME - 027202
PLOT DATE : 10/22/2021 3:40 PM
PLOT BY : NICHOLAS BECKER
PLOT NAME :
PLOT SCALE : 1 IN:1000 FT
WISDOT/CADDS SHEET 42

2

2

N

CP 3347

CP 2299

1900

1910

1920

EAST FRONTAGE ROAD

1930

1940

1950

1960

CP 503

CP 7331

CP 504

1970

1980

CP 10013

CP 11545

CP 505

1990

EAST FRONTAGE ROAD

CP 506

STA AHEAD = 3121+57.83

STA BACK = 1999+88.58

CP 1517

400

STH 165

3130

3140

3150

3160

3170

CP 507

CP 1504

N

PROJECT NO: 1032-10-75	HWY: EAST FRONTAGE ROAD	COUNTY: KENOSHA	CONTROL POINTS	SHEET 150	E

FILE NAME : Y:\52XX\5252_DP20.NSFWYEFR.KNS\CADDS\10321015\SHEETSPLAN\027202-AD.DWG
LAYOUT NAME - 027203

PLOT DATE : 10/22/2021 3:42 PM PLOT BY : NICHOLAS BECKER PLOT NAME : PLOT SCALE : 1 IN:500 FT

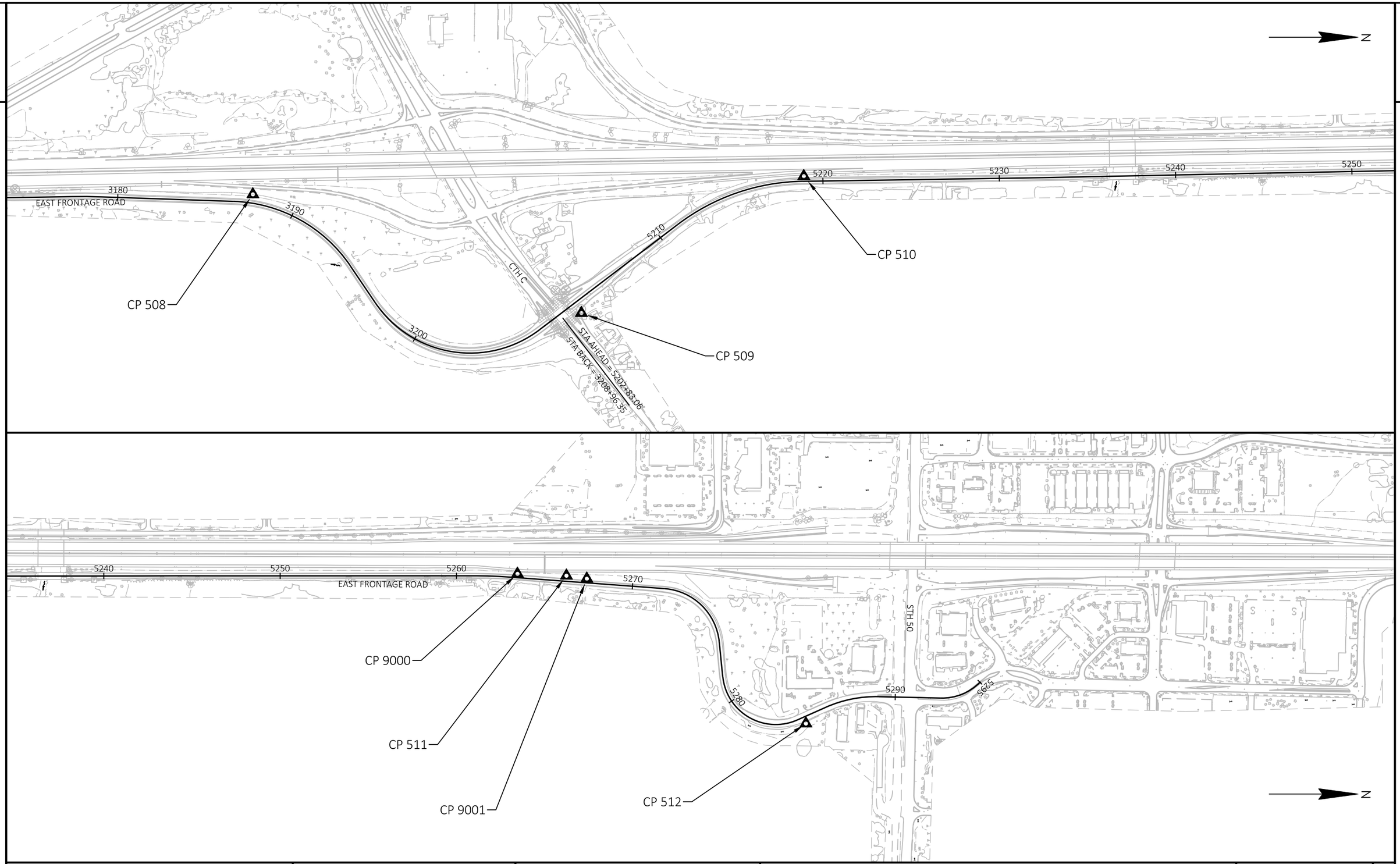

2

PROJECT NO: 1032-10-75	HWY: EAST FRONTAGE ROAD	COUNTY: KENOSHA	CONTROL POINTS	SHEET 151	E

FILE NAME : Y:\52XX\5252_DP20.NSFWYEFR.KNS\CADDS\10321015\SHEETSPLAN\027202-AD.DWG
LAYOUT NAME - 027204

PLOT DATE : 10/22/2021 3:43 PM PLOT BY : NICHOLAS BECKER PLOT NAME : PLOT SCALE : 1 IN:500 FT

WISDOT/CADDS SHEET 44

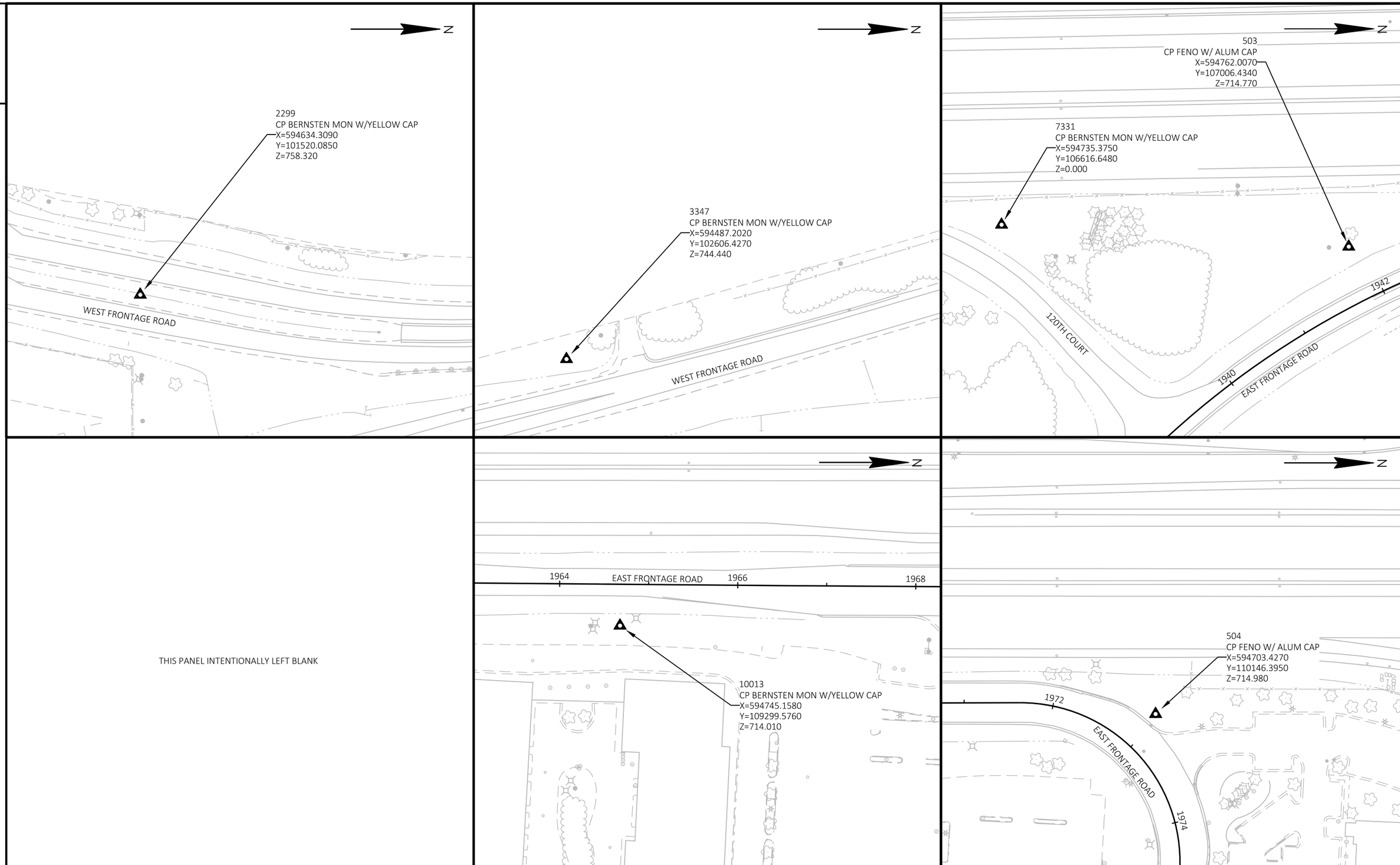

PROJECT NO: 1032-10-75 | HWY: EAST FRONTAGE ROAD | COUNTY: KENOSHA | CONTROL POINTS | SHEET 152 | E

FILE NAME : Y:\52XX\5252_DP20.NSFWYEFR.KNS\CADDS\10321015\SHEETSPLAN\027203-AD.DWG
LAYOUT NAME - 027205
PLOT DATE : 10/22/2021 3:45 PM PLOT BY : NICHOLAS BECKER PLOT NAME : PLOT SCALE : 1 IN:100 FT
WISDOT/CADDS SHEET 44

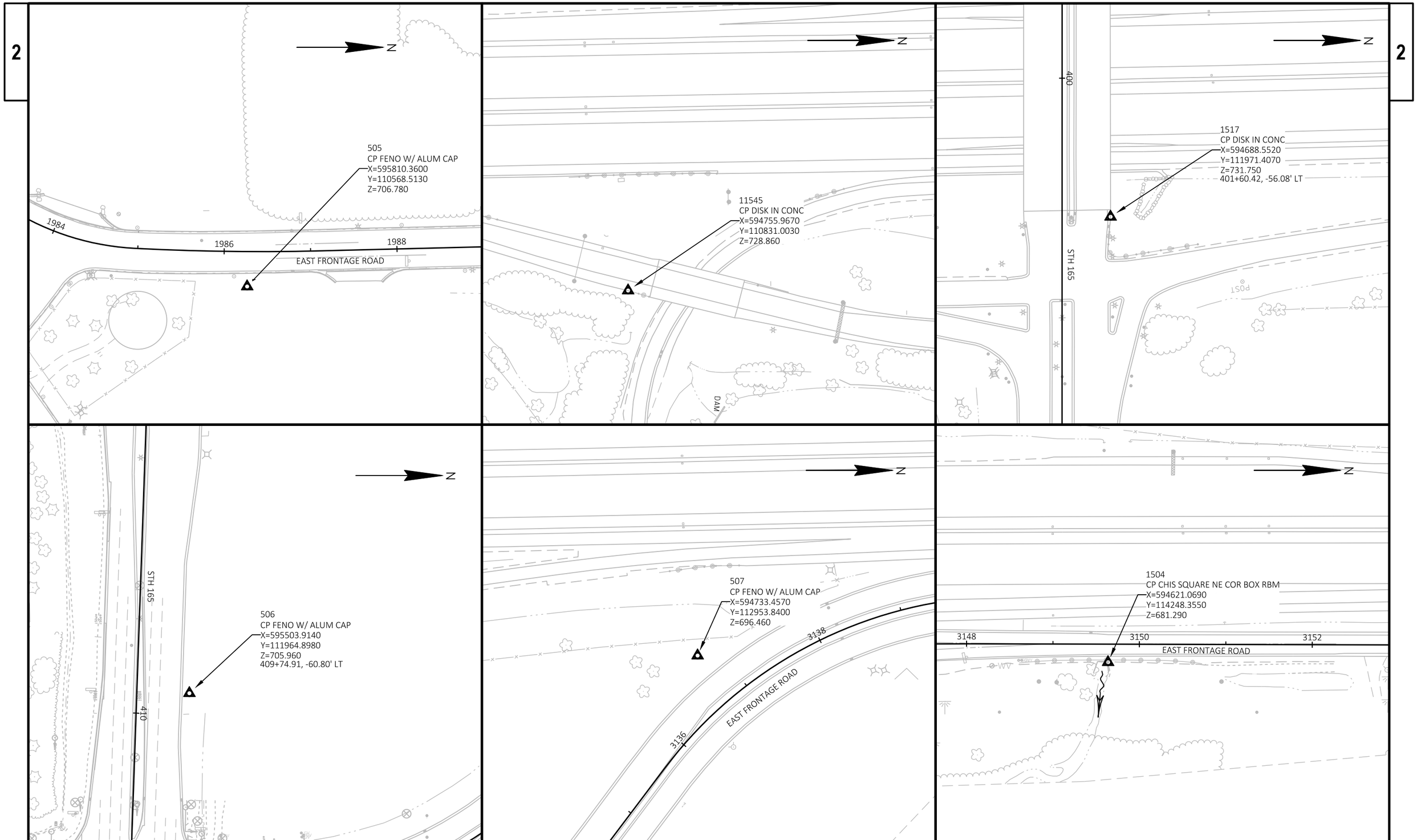

PROJECT NO: 1032-10-75	HWY: EAST FRONTAGE ROAD	COUNTY: KENOSHA	CONTROL POINTS	SHEET 153	E

FILE NAME : Y:\52XX\5252_DP20.NSFWYEFR.KNS\CADDS\10321015\SHEETSPLAN\027203-AD.DWG
LAYOUT NAME - 027206
PLOT DATE : 10/22/2021 3:48 PM
PLOT BY : NICHOLAS BECKER
PLOT NAME :
PLOT SCALE : 1 IN:100 FT
WISDOT/CADDS SHEET 44

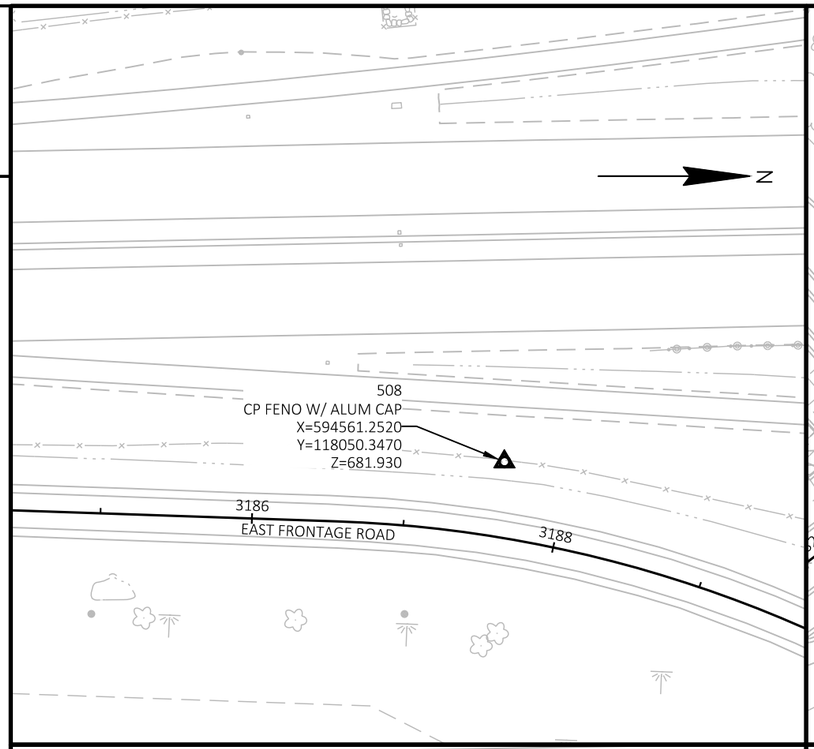

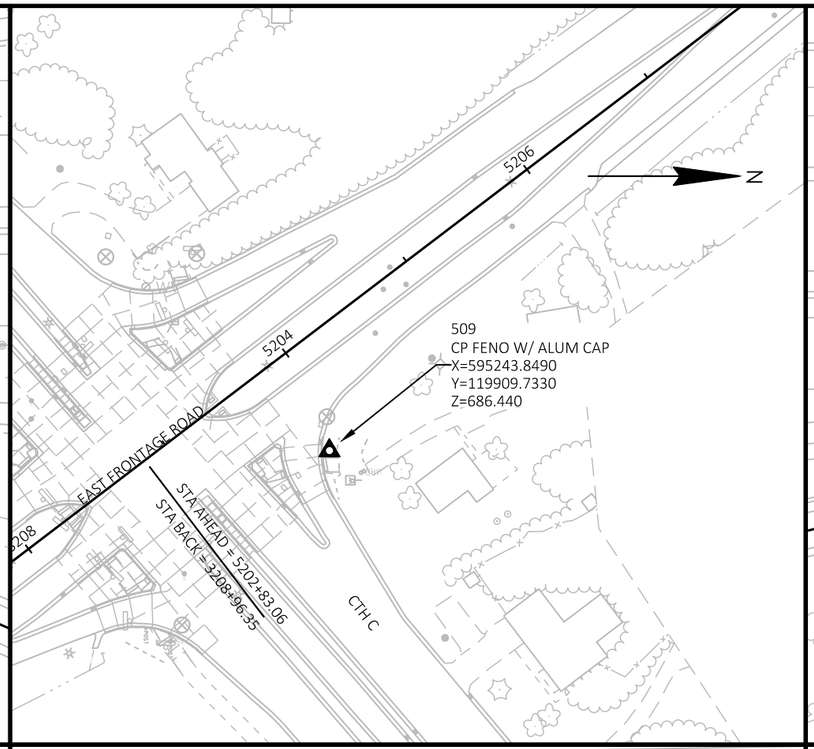

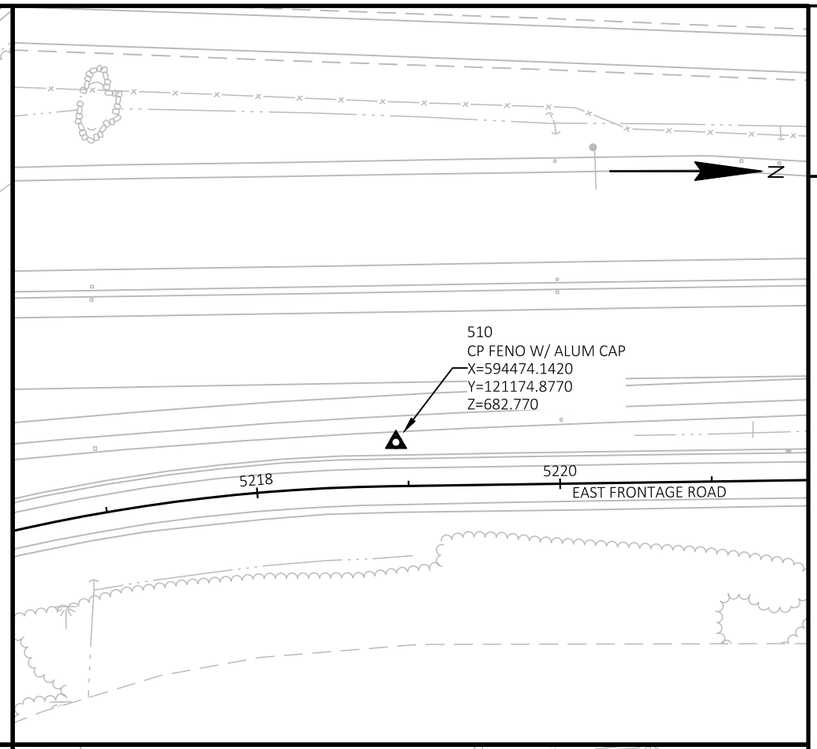

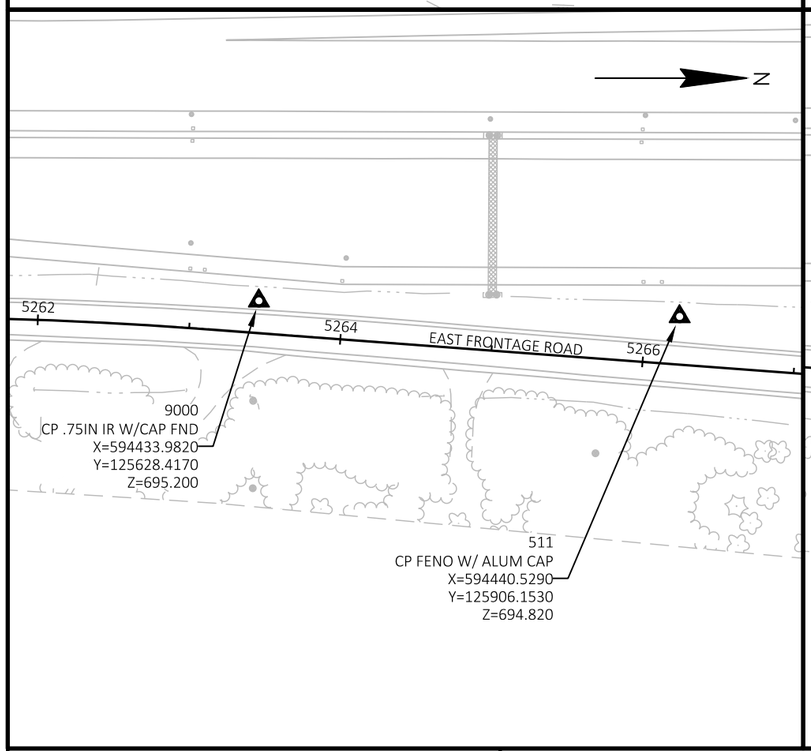

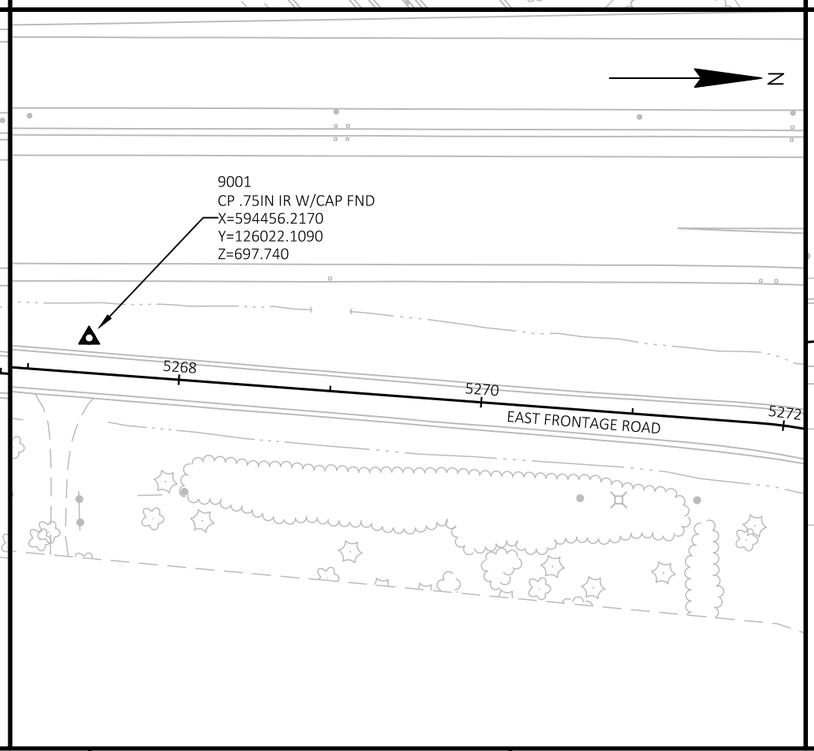

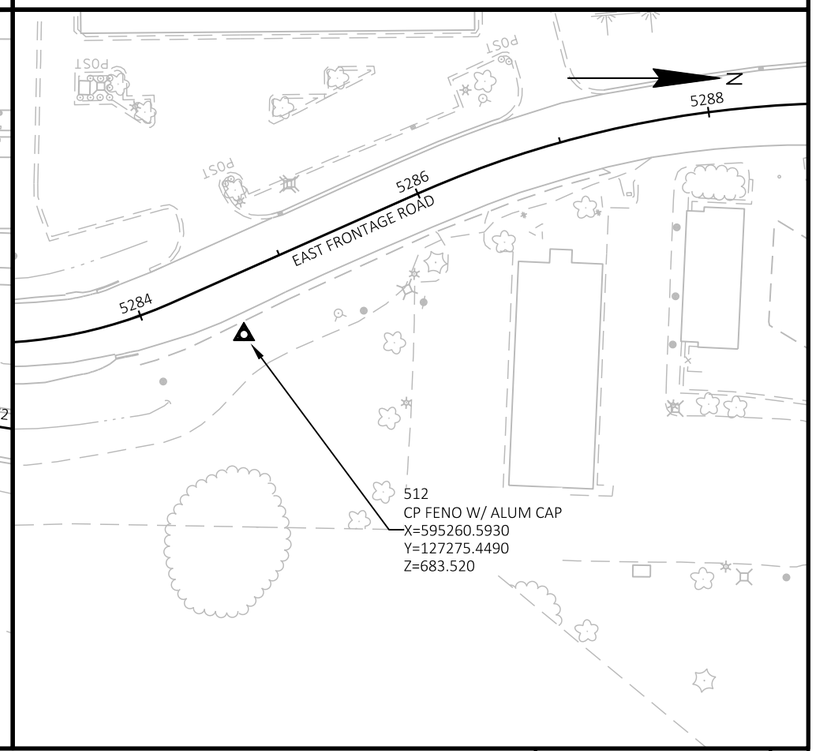

PROJECT NO: 1032-10-75	HWY: EAST FRONTAGE ROAD	COUNTY: KENOSHA	CONTROL POINTS	SHEET 154	E

FILE NAME : Y:\52XX\5252_DP20.NSFWYEFR.KNS\CADDS\10321015\SHEETSPLAN\027203-AD.DWG
LAYOUT NAME - 027207
PLOT DATE : 10/22/2021 3:50 PM
PLOT BY : NICHOLAS BECKER
PLOT NAME :
PLOT SCALE : 1 IN:100 FT
WISDOT/CADDS SHEET 44

1032-10-75

Line	Item	Item Description	Unit	Total	Qty
0002	201.0105	Clearing	STA	22.000	22.000
0004	201.0205	Grubbing	STA	22.000	22.000
0006	204.0100	Removing Concrete Pavement	SY	1,670.000	1,670.000
0008	204.0110	Removing Asphaltic Surface	SY	608.000	608.000
0010	204.0115	Removing Asphaltic Surface Butt Joints	SY	1,529.000	1,529.000
0012	204.0120	Removing Asphaltic Surface Milling	SY	99,500.000	99,500.000
0014	204.0150	Removing Curb & Gutter	LF	2,474.000	2,474.000
0016	204.0155	Removing Concrete Sidewalk	SY	436.000	436.000
0018	204.0165	Removing Guardrail	LF	2,330.000	2,330.000
0020	204.0190	Removing Surface Drains	EACH	2.000	2.000
0022	204.0195	Removing Concrete Bases	EACH	14.000	14.000
0024	204.0220	Removing Inlets	EACH	2.000	2.000
0026	204.0245	Removing Storm Sewer (size) 0001. 12-Inch	LF	22.000	22.000
0028	204.0270	Abandoning Culvert Pipes	EACH	1.000	1.000
0030	204.9060.S	Removing (item description) 0001. Traffic Signal STH 165 and East Frontage Road	EACH	1.000	1.000
0032	204.9060.S	Removing (item description) 0002. Lighting Units	EACH	6.000	6.000
0034	204.9060.S	Removing (item description) 0003. Loop Detector Wire & Lead-In Cable STH 165 and East Frontage Road	EACH	1.000	1.000
0036	204.9090.S	Removing (item description) 0001. Steel Barrier	LF	12.000	12.000
0038	204.9090.S	Removing (item description) 0002. Underdrain	LF	464.000	464.000
0040	205.0100	Excavation Common	CY	895.000	895.000
0042	209.0200.S	Backfill Controlled Low Strength	CY	2.000	2.000
0044	305.0110	Base Aggregate Dense 3/4-Inch	TON	2,985.000	2,985.000
0046	305.0120	Base Aggregate Dense 1 1/4-Inch	TON	418.000	418.000
0048	310.0110	Base Aggregate Open-Graded	TON	246.000	246.000
0050	320.0145	Concrete Base 8-Inch	SY	633.000	633.000
0052	390.0203	Base Patching Asphaltic	SY	950.000	950.000
0054	390.0303	Base Patching Concrete	SY	2,780.000	2,780.000
0056	390.0403	Base Patching Concrete Shes	SY	1,420.000	1,420.000
0058	415.0100	Concrete Pavement 10-Inch	SY	1,210.000	1,210.000
0060	416.0610	Drilled Tie Bars	EACH	2,166.000	2,166.000
0062	416.0620	Drilled Dowel Bars	EACH	1,456.000	1,456.000
0064	416.0750.S	Concrete Pavement Partial Depth Repair Joint Repair	LF	774.000	774.000
0066	416.0752.S	Concrete Pavement Partial Depth Repair Crack Repair	LF	774.000	774.000
0068	416.1010	Concrete Surface Drains	CY	3.000	3.000
0070	450.4000	HMA Cold Weather Paving	TON	1,000.000	1,000.000
0072	455.0605	Tack Coat	GAL	14,190.000	14,190.000
0074	460.0105.S	HMA Percent Within Limits (PWL) Test Strip Volumetrics	EACH	1.000	1.000
0076	460.0110.S	HMA Percent Within Limits (PWL) Test Strip Density	EACH	1.000	1.000
0078	460.2000	Incentive Density HMA Pavement	DOL	6,910.000	6,910.000
0080	460.2005	Incentive Density PWL HMA Pavement	DOL	5,933.000	5,933.000
0082	460.2007	Incentive Density HMA Pavement Longitudinal Joints	DOL	12,012.000	12,012.000
0084	460.2010	Incentive Air Voids HMA Pavement	DOL	13,280.000	13,280.000
0086	460.5223	HMA Pavement 3 LT 58-28 S	TON	8,470.000	8,470.000
0088	460.5224	HMA Pavement 4 LT 58-28 S	TON	13,280.000	13,280.000
0090	465.0120	Asphaltic Surface Driveways and Field Entrances	TON	88.000	88.000
0092	465.0125	Asphaltic Surface Temporary	TON	176.000	176.000
0094	465.0310	Asphaltic Curb	LF	7.000	7.000
0096	502.4204	Adhesive Anchors No. 4 Bar	EACH	120.000	120.000

1032-10-75

Line	Item	Item Description	Unit	Total	Qty
0098	505.0600	Bar Steel Reinforcement HS Coated Structures	LB	516.000	516.000
0100	509.1500	Concrete Surface Repair	SF	146.000	146.000
0102	509.9025.S	Epoxy Injection Crack Repair	LF	24.000	24.000
0104	509.9026.S	Cored Holes 2-Inch Diameter	EACH	2.000	2.000
0106	601.0409	Concrete Curb & Gutter 30-Inch Type A	LF	2,945.000	2,945.000
0108	601.0411	Concrete Curb & Gutter 30-Inch Type D	LF	33.000	33.000
0110	601.0557	Concrete Curb & Gutter 6-Inch Sloped 36-Inch Type D	LF	283.000	283.000
0112	601.0588	Concrete Curb & Gutter 4-Inch Sloped 36-Inch Type TBT	LF	218.000	218.000
0114	601.0590	Concrete Curb & Gutter 4-Inch Sloped 36-Inch Type TBTT	LF	24.000	24.000
0116	602.0410	Concrete Sidewalk 5-Inch	SF	4,132.000	4,132.000
0118	602.0505	Curb Ramp Detectable Warning Field Yellow	SF	267.000	267.000
0120	602.0605	Curb Ramp Detectable Warning Field Radial Yellow	SF	189.000	189.000
0122	606.0200	Riprap Medium	CY	4.000	4.000
0124	608.0312	Storm Sewer Pipe Reinforced Concrete Class III 12-Inch	LF	20.000	20.000
0126	611.0624	Inlet Covers Type H	EACH	2.000	2.000
0128	611.3004	Inlets 4-FT Diameter	EACH	1.000	1.000
0130	611.3230	Inlets 2x3-FT	EACH	1.000	1.000
0132	611.8110	Adjusting Manhole Covers	EACH	8.000	8.000
0134	611.8115	Adjusting Inlet Covers	EACH	37.000	37.000
0136	611.8120.S	Cover Plates Temporary	EACH	8.000	8.000
0138	612.0104	Pipe Underdrain 4-Inch	LF	451.000	451.000
0140	614.0010	Barrier System Grading Shaping Finishing 0001. STA 1942+24 to 1947+49 RT	EACH	1.000	1.000
0142	614.0010	Barrier System Grading Shaping Finishing 0002. STA 3146+65 to 3151+61 RT	EACH	1.000	1.000
0144	614.0010	Barrier System Grading Shaping Finishing 0003. STA 3163+76 to 3177+61 LT	EACH	1.000	1.000
0146	614.0010	Barrier System Grading Shaping Finishing 0004. STA 5234+11 to 5236+16 RT	EACH	1.000	1.000
0148	614.0010	Barrier System Grading Shaping Finishing 0005. STA 5234+19 to 5236+15 LT	EACH	1.000	1.000
0150	614.0010	Barrier System Grading Shaping Finishing 0006. STA 5237+85 to 5239+77 RT	EACH	1.000	1.000
0152	614.0010	Barrier System Grading Shaping Finishing 0007. STA 5237+85 to 5239+82 LT	EACH	1.000	1.000
0154	614.0010	Barrier System Grading Shaping Finishing 0008. STA 5241+69 to 5247+56 RT	EACH	1.000	1.000
0156	614.0010	Barrier System Grading Shaping Finishing 0009. STA 5255+94 to 5261+22 RT	EACH	1.000	1.000
0158	614.0396	Guardrail Mow Strip Asphalt	SY	850.000	850.000
0160	614.0397	Guardrail Mow Strip Emulsified Asphalt	SY	340.000	340.000
0162	614.2300	MGS Guardrail 3	LF	2,001.000	2,001.000
0164	614.2310	MGS Guardrail 3 HS	LF	50.000	50.000
0166	614.2340	MGS Guardrail 3 L	LF	50.000	50.000
0168	614.2500	MGS Thrie Beam Transition	LF	160.000	160.000
0170	614.2610	MGS Guardrail Terminal EAT	EACH	14.000	14.000
0172	618.0100	Maintenance And Repair of Haul Roads (project) 0001. 1032-10-75	EACH	1.000	1.000
0174	619.1000	Mobilization	EACH	1.000	1.000
0176	624.0100	Water	MGAL	76.000	76.000
0178	625.0100	Topsoil	SY	448.000	448.000
0180	625.0500	Salvaged Topsoil	SY	1,331.000	1,331.000
0182	628.1504	Silt Fence	LF	1,913.000	1,913.000
0184	628.1520	Silt Fence Maintenance	LF	4,796.000	4,796.000
0186	628.1905	Mobilizations Erosion Control	EACH	6.000	6.000
0188	628.1910	Mobilizations Emergency Erosion Control	EACH	6.000	6.000
0190	628.2004	Erosion Mat Class I Type B	SY	71.000	71.000
0192	628.2008	Erosion Mat Urban Class I Type B	SY	1,758.000	1,758.000
0194	628.7005	Inlet Protection Type A	EACH	13.000	13.000

1032-10-75

Line	Item	Item Description	Unit	Total	Qty
0196	628.7015	Inlet Protection Type C	EACH	71.000	71.000
0198	628.7504	Temporary Ditch Checks	LF	116.000	116.000
0200	628.7555	Culvert Pipe Checks	EACH	6.000	6.000
0202	628.7560	Tracking Pads	EACH	2.000	2.000
0204	628.7570	Rock Bags	EACH	20.000	20.000
0206	629.0210	Fertilizer Type B	CWT	0.300	0.300
0208	630.0130	Seeding Mixture No. 30	LB	28.000	28.000
0210	630.0200	Seeding Temporary	LB	22.000	22.000
0212	630.0500	Seed Water	MGAL	34.000	34.000
0214	634.0618	Posts Wood 4x6-Inch X 18-FT	EACH	73.000	73.000
0216	637.2210	Signs Type II Reflective H	SF	427.260	427.260
0218	637.2215	Signs Type II Reflective H Folding	SF	59.680	59.680
0220	637.2230	Signs Type II Reflective F	SF	184.250	184.250
0222	638.2102	Moving Signs Type II	EACH	9.000	9.000
0224	638.2602	Removing Signs Type II	EACH	53.000	53.000
0226	638.3000	Removing Small Sign Supports	EACH	49.000	49.000
0228	642.5401	Field Office Type D	EACH	1.000	1.000
0230	643.0300	Traffic Control Drums	DAY	23,413.000	23,413.000
0232	643.0420	Traffic Control Barricades Type III	DAY	4,004.000	4,004.000
0234	643.0705	Traffic Control Warning Lights Type A	DAY	9,570.000	9,570.000
0236	643.0715	Traffic Control Warning Lights Type C	DAY	6,040.000	6,040.000
0238	643.0800	Traffic Control Arrow Boards	DAY	375.000	375.000
0240	643.0900	Traffic Control Signs	DAY	50,264.000	50,264.000
0242	643.0910	Traffic Control Covering Signs Type I	EACH	1.000	1.000
0244	643.0920	Traffic Control Covering Signs Type II	EACH	78.000	78.000
0246	643.1050	Traffic Control Signs PCMS	DAY	21.000	21.000
0248	643.1070	Traffic Control Cones 42-Inch	DAY	6,740.000	6,740.000
0250	643.5000	Traffic Control	EACH	1.000	1.000
0252	644.1420	Temporary Pedestrian Surface Plywood	SF	190.000	190.000
0254	644.1601	Temporary Pedestrian Curb Ramp	DAY	240.000	240.000
0256	644.1810	Temporary Pedestrian Barricade	LF	1,424.000	1,424.000
0258	645.0111	Geotextile Type DF Schedule A	SY	200.000	200.000
0260	645.0120	Geotextile Type HR	SY	18.000	18.000
0262	646.1020	Marking Line Epoxy 4-Inch	LF	72,012.000	72,012.000
0264	646.1555	Marking Line Grooved Contrast Permanent Tape 4-Inch	LF	294.000	294.000
0266	646.3020	Marking Line Epoxy 8-Inch	LF	3,700.000	3,700.000
0268	646.3555	Marking Line Grooved Contrast Permanent Tape 8-Inch	LF	679.000	679.000
0270	646.5020	Marking Arrow Epoxy	EACH	38.000	38.000
0272	646.5120	Marking Word Epoxy	EACH	12.000	12.000
0274	646.6120	Marking Stop Line Epoxy 18-Inch	LF	88.000	88.000
0276	646.7120	Marking Diagonal Epoxy 12-Inch	LF	559.000	559.000
0278	646.7420	Marking Crosswalk Epoxy Transverse Line 6-Inch	LF	407.000	407.000
0280	646.8120	Marking Curb Epoxy	LF	125.000	125.000
0282	646.8220	Marking Island Nose Epoxy	EACH	12.000	12.000
0284	646.9000	Marking Removal Line 4-Inch	LF	37.000	37.000
0286	646.9055	Marking Removal Line Grooved Contrast Permanent Tape 4-Inch	LF	268.000	268.000
0288	648.0100	Locating No-Passing Zones	MI	4.550	4.550
0290	649.0150	Temporary Marking Line Removable Tape 4-Inch	LF	1,200.000	1,200.000
0292	652.0225	Conduit Rigid Nonmetallic Schedule 40 2-Inch	LF	1,101.000	1,101.000

1032-10-75

Line	Item	Item Description	Unit	Total	Qty
0294	652.0235	Conduit Rigid Nonmetallic Schedule 40 3-Inch	LF	832.000	832.000
0296	652.0615	Conduit Special 3-Inch	LF	904.000	904.000
0298	652.0800	Conduit Loop Detector	LF	1,563.000	1,563.000
0300	653.0135	Pull Boxes Steel 24x36-Inch	EACH	12.000	12.000
0302	653.0140	Pull Boxes Steel 24x42-Inch	EACH	13.000	13.000
0304	653.0905	Removing Pull Boxes	EACH	24.000	24.000
0306	654.0101	Concrete Bases Type 1	EACH	6.000	6.000
0308	654.0102	Concrete Bases Type 2	EACH	1.000	1.000
0310	654.0105	Concrete Bases Type 5	EACH	1.000	1.000
0312	654.0113	Concrete Bases Type 13	EACH	2.000	2.000
0314	654.0120	Concrete Bases Type 10-Special	EACH	2.000	2.000
0316	654.0217	Concrete Control Cabinet Bases Type 9 Special	EACH	1.000	1.000
0318	655.0260	Cable Traffic Signal 12-14 AWG	LF	3,442.000	3,442.000
0320	655.0270	Cable Traffic Signal 15-14 AWG	LF	969.000	969.000
0322	655.0320	Cable Type UF 2-10 AWG Grounded	LF	1,367.000	1,367.000
0324	655.0515	Electrical Wire Traffic Signals 10 AWG	LF	2,840.000	2,840.000
0326	655.0610	Electrical Wire Lighting 12 AWG	LF	1,152.000	1,152.000
0328	655.0700	Loop Detector Lead In Cable	LF	6,413.000	6,413.000
0330	655.0800	Loop Detector Wire	LF	5,245.000	5,245.000
0332	655.0900	Traffic Signal EVP Detector Cable	LF	945.000	945.000
0334	656.0200	Electrical Service Meter Breaker Pedestal (location) 0001. STH 165 & East Frontage Road	LS	1.000	1.000
0336	657.0100	Pedestal Bases	EACH	6.000	6.000
0338	657.0255	Transformer Bases Breakaway 11 1/2-Inch Bolt Circle	EACH	2.000	2.000
0340	657.0310	Poles Type 3	EACH	1.000	1.000
0342	657.0322	Poles Type 5-Aluminum	EACH	1.000	1.000
0344	657.0420	Traffic Signal Standards Aluminum 13-FT	EACH	3.000	3.000
0346	657.0425	Traffic Signal Standards Aluminum 15-FT	EACH	3.000	3.000
0348	657.0609	Luminaire Arms Single Member 4-Inch Clamp 6-FT	EACH	2.000	2.000
0350	657.0610	Luminaire Arms Single Member 4 1/2-Inch Clamp 6-FT	EACH	2.000	2.000
0352	658.0173	Traffic Signal Face 3S 12-Inch	EACH	17.000	17.000
0354	658.0174	Traffic Signal Face 4S 12-Inch	EACH	6.000	6.000
0356	658.0175	Traffic Signal Face 5S 12-Inch	EACH	2.000	2.000
0358	658.0416	Pedestrian Signal Face 16-Inch	EACH	2.000	2.000
0360	658.0500	Pedestrian Push Buttons	EACH	3.000	3.000
0362	658.5069	Signal Mounting Hardware (location) 0001. STH 165 & East Frontage Road	LS	1.000	1.000
0364	659.1125	Luminaires Utility LED C	EACH	8.000	8.000
0366	661.0200	Temporary Traffic Signals for Intersections (location) 0001. STH 165 & East Frontage Road	LS	1.000	1.000
0368	670.0100	Field System Integrator	LS	1.000	1.000
0370	678.0500	Communication System Testing	LS	1.000	1.000
0372	678.0700	Install Wireless Antennas	EACH	1.000	1.000
0374	690.0150	Sawing Asphalt	LF	1,036.000	1,036.000
0376	690.0250	Sawing Concrete	LF	13,566.000	13,566.000
0378	715.0720	Incentive Compressive Strength Concrete Pavement	DOL	500.000	500.000
0380	999.2005.S	Maintaining Bird Deterrent System (station) 0001. 3149+57	EACH	1.000	1.000
0382	ASP.1T0A	On-the-Job Training Apprentice at $5.00/HR	HRS	1,000.000	1,000.000
0384	ASP.1T0G	On-the-Job Training Graduate at $5.00/HR	HRS	2,160.000	2,160.000
0386	SPV.0045	Special 0001. Temporary Detectable Warning Field	DAY	240.000	240.000

1032-10-75

Line	Item	Item Description	Unit	Total	Qty
0388	SPV.0060	Special 0001. Reconnect Storm Sewer Laterals	EACH	1.000	1.000
0390	SPV.0060	Special 0003. Survey Project 1032-10-75	EACH	1.000	1.000
0392	SPV.0060	Special 0010. Install Monotube Arms 35-FT Type 12/13 Poles	EACH	1.000	1.000
0394	SPV.0060	Special 0011. Install Poles Type 9 Special	EACH	2.000	2.000
0396	SPV.0060	Special 0012. Install Poles Type 13 Overheight	EACH	2.000	2.000
0398	SPV.0060	Special 0013. Install Monotube Arms 35-FT Type 9/10 Special Pole	EACH	1.000	1.000
0400	SPV.0060	Special 0014. Install Monotube Arms 40-FT Type 9/10 Special Pole	EACH	1.000	1.000
0402	SPV.0060	Special 0015. Install Monotube Arms 45-FT Type 12/13 Pole	EACH	1.000	1.000
0404	SPV.0060	Special 0016. Install Luminaire Arms Steel 15-FT	EACH	4.000	4.000
0406	SPV.0060	Special 0017. Transport & Inst State Furn Traffic Signal Cabinet STH 165 & East Frontage	EACH	1.000	1.000
0408	SPV.0060	Special 0018. Transport & Inst St Furn EVP Detector Heads STH 165 & East Frontage Rd	EACH	1.000	1.000
0410	SPV.0060	Special 0019. Transport Traffic Signal & Int Lighting Materials STH 165 & East Frontage	EACH	1.000	1.000
0412	SPV.0060	Special 0020. Temporary Infrared EVP System STH 165 & East Frontage Road	EACH	1.000	1.000
0414	SPV.0060	Special 0100. Adjusting Sanitary Manholes	EACH	1.000	1.000
0416	SPV.0060	Special 0101. Adjusting Water Valve Boxes	EACH	3.000	3.000
0418	SPV.0075	Special 0001. Pavement Cleanup Project 1032-10-75	HRS	50.000	50.000
0420	SPV.0090	Special 0001. Silt Fence Double Staked	LF	2,883.000	2,883.000
0422	SPV.0165	Special 0001. Full Depth Culvert Wall Repair	SF	73.000	73.000
0424	SPV.0195	Special 0001. Joint and Crack Repair	TON	48.000	48.000

3

CLEARING AND GRUBBING ITEMS

CATEGORY	STAGE	LOCATION	STATION TO STATION	201.0105 CLEARING STA	201.0205 GRUBBING STA
1000	2				
		EAST FRONTAGE ROAD	5204+31 - 5283+67	19	19
		SUBTOTAL		19	19
	3				
		EAST FRONTAGE ROAD	1907+46 - 1999+01	3	3
		SUBTOTAL		3	3
		CATEGORY TOTAL		22	22

REMOVING DRAINAGE ITEMS

CATEGORY	STAGE	LOCATION	STATION TO STATION	204.0190 REMOVING SURFACE DRAINS EACH	204.9090.S.0002 REMOVING UNDERDRAIN LF	204.0220 REMOVING INLETS EACH	204.0245 REMOVING STORM SEWER (SIZE) 12-INCH LF
1000	2						
		EAST FRONTAGE ROAD	5202+83 - 5283+67	2	--	--	--
		SUBTOTAL		2	--	--	--
	3						
		EAST FRONTAGE ROAD	1995+59 --	--	--	1	10
		STH 165	411+01 --	--	464	1	12
		SUBTOTAL		--	464	2	22
		PROJECT TOTAL		2	464	2	22

3

REMOVAL ITEMS

CATEGORY	STAGE	LOCATION	STATION TO STATION	OFFSET ALIGNMENT	204.0100 REMOVING CONCRETE PAVEMENT SY	204.0115 REMOVING ASPHALTIC SURFACE BUTT JOINTS SY	204.0110 REMOVING ASPHALTIC SURFACE SY	204.0120 REMOVING ASPHALTIC SURFACE MILLING SY	204.0150 REMOVING CURB & GUTTER LF	204.0155 REMOVING CONCRETE SIDEWALK SY	204.0165 REMOVING GUARDRAIL LF
1000	1										
		EAST FRONTAGE ROAD	1907+46 - 1999+89	EFR	420	--	--	--	56	--	--
		STH 165	406+00 - 416+00	STH 165	220	--	--	--	--	--	--
		SUBTOTAL			640	--	--	--	56	--	--
	2										
		EAST FRONTAGE ROAD	3121+58 - 3208+96	EFR	210	27	--	37,600	1,226	187	1,140
		EAST FRONTAGE ROAD	5202+83 - 5283+67	EFR	--	48	580	30,300	268	179	1,070
		STH 165	406+00 - 416+00	STH 165	230	--	--	--	--	62	--
		SUBTOTAL			440	75	580	67,900	1,494	428	2,210
	3										
		EAST FRONTAGE ROAD	1907+46 - 1999+89	EFR	390	1,454	27	31,600	629	--	120
		STH 165	406+00 - 416+00	STH 165	200	--	--	--	295	8	--
		SUBTOTAL			590	1,454	27	31,600	924	8	120
		PROJECT TOTAL			1,670	1,529	608	99,500	2,474	436	2,330

3

DIVISION	FROM/TO STATION	205.0100* COMMON EXCAVATION (1) CUT (2)	SALVAGED/UNUSABLE PAVEMENT MATERIAL (2)	AVAILABLE MATERIAL (3)	UNEXPANDED FILL	EXPANDED FILL FACTOR 1.25	MASS ORDINATE +/- (4)	WASTE (5)	208.0100 BORROW	COMMENT
DIVISION 2										
EAST FRONTAGE ROAD LT & RT	3147+34/3174+00	100	0	100	0	0	100	100	0	BIKE ACCOMODATIONS
DIVISION 2 SUBTOTAL		100								
STAGE 3										
EFR NB LEFT TURN LANE	1994+13.11/1997+84.94	353	108	246	0	0	246	246	0	
STH 165 RIGHT TURN LANE AT EFR	406+67.01/411+10.08	442	73	369	216	270	99	99	0	
STAGE 3 SUBTOTAL		795	180	615	216	270	345	345	0	
GRAND TOTAL		895	180	615	216	270	345	345	0	
	TOTAL COMMON EXC	895								

NOTES:

(1) COMMON EXCAVATION IS THE SUM OF THE CUT COLUMN. ITEM NUMBER 205.0100

(2) SALVAGED/UNUSABLE PAVEMENT MATERIAL IS INCLUDED IN CUT.

(3) AVAILABLE MATERIAL = CUT-SALVAGED/UNUSABLE PAVEMENT MATERIAL

(4) THE MASS ORDINATE + OR - QTY CALCULATED FOR THE DIVISION. PLUS QUANTITY INDICATES AN EXCESS OF MATERIAL WITHIN THE DIVISION. MINUS INDICATES A SHORTAGE OF MATERIAL WITHIN THE DIVISION.

(5) FACTORS USED TO COMPUTE ANTICIPATED WASTE AND THE COMPUTED WASTE VOLUME IDENTIFIED ARE FOR GENERAL INFORMATION ONLY.

*ADDITIONAL QUANTITIES SHOWN ELSEWHERE

BASE PATCHING ITEMS

CATEGORY	STAGE	LOCATION	STATION TO STATION	OFFSET ALIGNMENT	390.0203 BASE PATCHING ASPHALTIC SY	390.0303 BASE PATCHING CONCRETE SY	390.0403 BASE PATCHING CONCRETE SHES SY	416.0610* DRILLED TIE BARS EACH	416.0620* DRILLED DOWEL BARS EACH	690.0150* SAWING ASPHALT LF	690.0250* SAWING CONCRETE LF
1000	1										
		EAST FRONTAGE ROAD	1946+00 - 1958+00	EFR	950	--	--	--	--	3,244	--
		EAST FRONTAGE ROAD	1966+95 - 1999+89	EFR	--	--	1,420	302	426	--	2,886
		EAST FRONTAGE ROAD	3122+56 - 3207+57	EFR	--	2,780	--	591	833	--	5,624
		PROJECT TOTAL			950	2,780	1,420	892	1,258	3,244	8,510

*ADDITIONAL QUANTITIES SHOWN ELSEWHERE

BASE AGGREGATE ITEMS

CATEGORY	STAGE	LOCATION	STATION TO STATION	305.0110* BASE AGGREGATE DENSE 3/4-INCH TON	305.0120 BASE AGGREGATE DENSE 1 1/4-INCH TON	310.0110* BASE AGGREGATE OPEN-GRADED TON
1000	1					
		STH 165	40600 - 41600	--	53	--
		SUBTOTAL		--	53	--
	2					
		EAST FRONTAGE ROAD	3121+58 - 3208+96	622	--	--
		EAST FRONTAGE ROAD	5202+83 - 5283+67	1,068	--	--
		SUBTOTAL		1,690	--	--
		CATEGORY TOTAL		1,690	53	--
	3					
		EAST FRONTAGE ROAD	1907+46 - 1999+89	1,182	180	--
		STH 165	406+00 - 416+00	--	185	216
		SUBTOTAL		1,182	365	216
		PROJECT TOTAL		2,872	418	216

*ADDITIONAL QUANTITIES SHOWN ELSEWHERE

DRIVEWAYS

CATEGORY	STAGE	LOCATION	STATION TO STATION	305.0110* BASE AGGREGATE DENSE 3/4-INCH TON	465.0120 ASPHALTIC SURFACE DRIVEWAYS AND FIELD ENTRANCES TON
1000	2				
		EAST FRONTAGE ROAD	3122+56 - 3207+57	11	--
		EAST FRONTAGE ROAD	5202+83 - 5283+67	102	40
		SUBTOTAL		113	40
	3				
		EAST FRONTAGE ROAD	1907+46 - 1999+89	--	48
		SUBTOTAL		--	48
		PROJECT TOTAL		113	88

*ADDITIONAL QUANTITIES SHOWN ELSEWHERE

3

3

CONCRETE PAVEMENT ITEMS

CATEGORY	STAGE	LOCATION	STATION TO		STATION	OFFSET ALIGNMENT	415.0100 CONCRETE PAVEMENT 10-INCH SY	320.0145 CONCRETE BASE 8-INCH SY
1000	1							
		EAST FRONTAGE ROAD	1907+45	-	1999+89		200	227
		SUBTOTAL					200	227
	2							
		EAST FRONTAGE ROAD	3122+56	-	3207+57		160	54
		STH 165	406+00		416+00	STH 165	230	--
		SUBTOTAL					390	54
	3							
		EAST FRONTAGE ROAD	1907+46	-	1999+89		--	352
		STH 165	406+00	-	416+00	STH 165	620	--
		SUBTOTAL					620	352
		PROJECT TOTAL					1,210	633

DRILLED BAR ITEMS

CATEGORY	STAGE	LOCATION	STATION TO		STATION	416.0610* DRILLED TIE BARS EACH	416.0620* DRILLED DOWEL BARS EACH
1000	1						
		EAST FRONTAGE ROAD	1996+36		1998+99	106	31
		EAST FRONTAGE ROAD CURB & GUTTER	1907+46	-	1999+89	16	--
		STH 165 CURB & GUTTER	406+00		416+00	45	--
		SUBTOTAL				167	31
	2						
		EAST FRONTAGE ROAD CURB & GUTTER	3122+56	-	3207+57	177	--
		EAST FRONTAGE ROAD	3122+03	-	3122+65	25	21
		STH 165	408+54	-	408+79	10	11
		STH 166	410+50	-	411+25	30	9
		STH 167	412+86	-	413+43	23	11
		STH 168	415+18	-	415+36	8	23
		STH 165	415+18	-	415+36	8	11
		STH 165	406+00	-	416+00	90	--
		SUBTOTAL				371	86
	3						
		EAST FRONTAGE ROAD CURB & GUTTER	1907+46	-	1999+89	339	--
		EAST FRONTAGE ROAD	1994+13	-	1997+85	115	9
		STH 165	406+59	-	411+77	208	11
		STH 165	408+54	-	408+79	10	11
		STH 165	411+10	-	411+79	28	50
		STH 165 CURB & GUTTER	406+00	-	416+00	36	--
		SUBTOTAL				736	81
		PROJECT TOTAL				1,274	198

*ADDITIONAL QUANTITIES SHOWN ELSEWHERE

COLD WEATHER PAVING

CATEGORY	STAGE	LOCATION	STATION TO		STATION	450.4000 HMA COLD WEATHER PAVING TON
1000	3					
		EAST FRONTAGE ROAD	1907+46	-	1999+89	1,000
		PROJECT TOTAL				1,000

ASPHALTIC ITEMS

CATEGORY	STAGE	LOCATION	STATION TO STATION	455.0605 TACK COAT GAL	460.5223 HMA PAVEMENT 3 LT 58-28 S TON	460.5224 HMA PAVEMENT 4 LT 58-28 S TON	465.0125 ASPHALTIC SURFACE TEMPORARY TON	465.0310 ASPHALTIC CURB LF
1000	1							
		STH 165	406+00 - 416+00	--	--	--	--	7
		SUBTOTAL		--	--	--		7
	2						--	--
		EAST FRONTAGE ROAD	3122+56 - 3144+88	2,240	2,010	1,570	--	--
		EAST FRONTAGE ROAD FLOODPLAIN	3144+88 - 3154+80	380	--	540	--	--
		EAST FRONTAGE ROAD	3154+80 - 3169+00	730	660	510	--	--
		EAST FRONTAGE ROAD FLOODPLAIN	3169+00 - 3207+57	2,110	--	2,960	--	--
		EAST FRONTAGE ROAD FLOODPLAIN	5204+31 - 5241+61	2,110	--	2,960	--	--
		EAST FRONTAGE ROAD	5242+61 - 5283+67	2,130	1,910	1,490	--	--
		SUBTOTAL		9,700	4,580	10,030	--	--
		CATEGORY TOTAL		9,700	4,580	10,030	--	7
	3							
		EAST FRONTAGE ROAD	1907+46 - 1943+00	2,100	1,890	1,470	100	--
		EAST FRONTAGE ROAD-FLOODPLAIN	1943+00 - 1946+07	170	--	230	--	--
		EAST FRONTAGE ROAD	1946+07 1998+99	2,220	2,000	1,550	76	--
		SUBTOTAL		4,490	3,890	3,250	176	--
		PROJECT TOTAL		14,190	8,470	13,280	176	7

CONCRETE SURFACE DRAINS

CATEGORY	STAGE	LOCATION	STATION TO STATION	416.1010 CONCRETE SURFACE DRAINS CY
1000	2			
		EAST FRONTAGE ROAD	5202+83 - 5283+67	3
		PROJECT TOTAL		3

PWL ITEMS

CATEGORY	LOCATION	460.0105.S HMA PERCENT WITHIN LIMITS (PWL) TEST STRIP VOLUMETRICS EACH	460.0110.S HMA PERCENT WITHIN LIMITS (PWL) TEST STRIP DENSITY EACH
1000	EAST FRONTAGE ROAD	1	1
	TOTALS	1	1

JOINT REPAIR

CATEGORY	STAGE	LOCATION	STATION TO STATION	416.0750.S CONCRETE PAVEMENT PARTIAL DEPTH REPAIR JOINT REPAIR LF	416.0752.S CONCRETE PAVEMENT PARTIAL DEPTH REPAIR CRACK REPAIR LF	SPV.0195.0001 JOINT AND CRACK REPAIR TON
1000	1					
		EAST FRONTAGE ROAD	1907+46 - 1999+89	432	432	--
		EAST FRONTAGE ROAD	3121+58 - 3208+96	342	342	--
		SUBTOTAL		774	774	--
	2					
		EAST FRONTAGE ROAD	3121+58 - 3208+96	--	--	20
		EAST FRONTAGE ROAD	5202+83 5283+67	--	--	20
		SUBTOTAL		--	--	40
	3					
		EAST FRONTAGE ROAD	1907+46 - 1999+89	--	--	8
		SUBTOTAL		--	--	8
		PROJECT TOTAL		774	774	48

HMA MIXTURE ACCEPTANCE

							QUALITY MANAGEMENT PROGRAM TO BE USED FOR:	
LOCATION	STA TO STA	MIXTURE USE	UNDERLYING SURFACE	BID ITEM	TONS	THICKNESS (IN)	MIXTURE ACCEPTANCE	DENSITY ACCEPTANCE
12 FOOT DRIVING LANE (NB AND SB)	1907+46 - 1943+00	LOWER LAYER	MILED EXISTING SURFACE	HMA PAVEMENT 3 LT 58-28 S	1,194	2.25	QMP AS PER SS 460.	QMP HMA PAVEMENT NUCLEAR DENSITY
	1907+46 - 1943+00	UPPER LAYER	HMA PAVEMENT 3 LT 58-28 S	HMA PAVEMENT 4 LT 58-28 S	929	1.75	PWL INCENTIVE AIR VOIDS HMA PAVEMENT 460.2010	INCENTIVE DENSITY PWL HMA PAVEMENT 460.2005
12 FOOT DRIVING LANE (NB AND SB)	1943+00 - 1946+07	LOWER LAYER	MILLED EXISTING SURFACE	HMA PAVEMENT 4 LT 58-28 S	80	1.75	PWL INCENTIVE AIR VOIDS HMA PAVEMENT 460.2010	QMP HMA PAVEMENT NUCLEAR DENSITY
	1943+00 - 1946+07	UPPER LAYER	HMA PAVEMENT 4 LT 58-28 S	HMA PAVEMENT 4 LT 58-28 S	80	1.75	PWL INCENTIVE AIR VOIDS HMA PAVEMENT 460.2010	INCENTIVE DENSITY PWL HMA PAVEMENT 460.2005
12 FOOT DRIVING LANE (NB AND SB)	1946+07 - 1966+95	LOWER LAYER	MILLED EXISTING SURFACE	HMA PAVEMENT 3 LT 58-28 S	702	2.25	QMP AS PER SS 460.	QMP HMA PAVEMENT NUCLEAR DENSITY
	1946+07 - 1966+95	UPPER LAYER	HMA PAVEMENT 3 LT 58-28 S	HMA PAVEMENT 4 LT 58-28 S	546	1.75	PWL INCENTIVE AIR VOIDS HMA PAVEMENT 460.2010	INCENTIVE DENSITY PWL HMA PAVEMENT 460.2005
14 FOOT DRIVING LANE (NB AND SB)	1966+95 - 1969+67	LOWER LAYER	MILLED EXISTING SURFACE	HMA PAVEMENT 3 LT 58-28 S	107	2.25	QMP AS PER SS 460.	QMP HMA PAVEMENT NUCLEAR DENSITY
	1989+96 - 1993+54	UPPER LAYER	HMA PAVEMENT 3 LT 58-28 S	HMA PAVEMENT 4 LT 58-28 S	109	1.75	PWL INCENTIVE AIR VOIDS HMA PAVEMENT 460.2010	INCENTIVE DENSITY PWL HMA PAVEMENT 460.2005
12 & 10 FOOT DRIVING LANE (NB AND SB)	1993+54 - 1998+99	LOWER LAYER	MILLED EXISTING SURFACE	HMA PAVEMENT 3 LT 58-28 S	168	2.25	QMP AS PER SS 460.	QMP HMA PAVEMENT NUCLEAR DENSITY
	1993+54 - 1998+99	UPPER LAYER	HMA PAVEMENT 3 LT 58-28 S	HMA PAVEMENT 4 LT 58-28 S	131	1.75	PWL INCENTIVE AIR VOIDS HMA PAVEMENT 460.2010	INCENTIVE DENSITY PWL HMA PAVEMENT 460.2005
12 FOOT DRIVING LANES (NB AND SB)	3122+56 - 3144+88	LOWER LAYER	MILLED EXISTING SURFACE	HMA PAVEMENT 3 LT 58-28 S	750	2.25	QMP AS PER SS 460.	QMP HMA PAVEMENT NUCLEAR DENSITY
	3122+56 - 3144+88	UPPER LAYER	HMA PAVEMENT 3 LT 58-28 S	HMA PAVEMENT 4 LT 58-28 S	583	1.75	PWL INCENTIVE AIR VOIDS HMA PAVEMENT 460.2010	INCENTIVE DENSITY PWL HMA PAVEMENT 460.2005
12 FOOT DRIVING LANE (NB) 11 FOOT DRIVIGN LANE (SB)	3144+88 - 3147+34	LOWER LAYER	MILLED EXISTING SURFACE	HMA PAVEMENT 4 LT 58-28 S	62	1.75	PWL INCENTIVE AIR VOIDS HMA PAVEMENT 460.2010	QMP HMA PAVEMENT NUCLEAR DENSITY
	3144+88 - 3147+34	UPPER LAYER	HMA PAVEMENT 4 LT 58-28 S	HMA PAVEMENT 4 LT 58-28 S	62	1.75	PWL INCENTIVE AIR VOIDS HMA PAVEMENT 460.2010	INCENTIVE DENSITY PWL HMA PAVEMENT 460.2005
11 FOOT DRIVING LANES (NB AND SB)	3147+34 - 3154+80	LOWER LAYER	MLLED EXISTING SURFACE	HMA PAVEMENT 4 LT 58-28 S	179	1.75	PWL INCENTIVE AIR VOIDS HMA PAVEMENT 460.2010	QMP HMA PAVEMENT NUCLEAR DENSITY
	3147+34 - 3154+80	UPPER LAYER	HMA PAVEMENT 4 LT 58-28 S	HMA PAVEMENT 4 LT 58-28 S	179	1.75	PWL INCENTIVE AIR VOIDS HMA PAVEMENT 460.2010	INCENTIVE DENSITY PWL HMA PAVEMENT 460.2005

11 FOOT DRIVING LANES (NB AND SB)	3154+80 - 3169+00	LOWER LAYER	MILLED EXISTING SURFACE	HMA PAVEMENT 3 LT 58-28 S	437	2.25	QMP AS PER SS 460.	QMP HMA PAVEMENT NUCLEAR DENSITY
	3154+80 - 3167+00	UPPER LAYER	HMA PAVEMENT 3 LT 58-28 S	HMA PAVEMENT 4 LT 58-28 S	292	1.75	PWL INCENTIVE AIR VOIDS HMA PAVEMENT 460.2010	INCENTIVE DENSITY PWL HMA PAVEMENT 460.2005
11 FOOT DRIVING LANES (NB AND SB)	3169+00 - 3174+00	LOWER LAYER	MILLED EXISTING SURFACE	HMA PAVEMENT 4 LT 58-28 S	120	1.75	PWL INCENTIVE AIR VOIDS HMA PAVEMENT 460.2010	QMP HMA PAVEMENT NUCLEAR DENSITY
	3169+00 - 3174+00	UPPER LAYER	HMA PAVEMENT 4 LT 58-28 S	HMA PAVEMENT 4 LT 58-28 S	120	1.75	PWL INCENTIVE AIR VOIDS HMA PAVEMENT 460.2010	INCENTIVE DENSITY PWL HMA PAVEMENT 460.2005
12 FOOT DRIVING LANES (NB AND SB)	3174+00 - 3207+57	LOWER LAYER	MILLED EXISTING SURFACE	HMA PAVEMENT 4 LT 58-28 S	877	1.75	PWL INCENTIVE AIR VOIDS HMA PAVEMENT 460.2010	QMP HMA PAVEMENT NUCLEAR DENSITY
	3174+00 - 3207+57	UPPER LAYER	HMA PAVEMENT 4 LT 58-28 S	HMA PAVEMENT 4 LT 58-28 S	877	1.75	PWL INCENTIVE AIR VOIDS HMA PAVEMENT 460.2010	INCENTIVE DENSITY PWL HMA PAVEMENT 460.2005
12 FOOT DRIVING LANES (NB AND SB)	5204+31 - 5241+50	LOWER LAYER	MILLED EXISTING SURFACE	HMA PAVEMENT 4 LT 58-28 S	972	1.75	PWL INCENTIVE AIR VOIDS HMA PAVEMENT 460.2010	QMP HMA PAVEMENT NUCLEAR DENSITY
	5204+31 - 5241+50	UPPER LAYER	HMA PAVEMENT 4 LT 58-28 S	HMA PAVEMENT 4 LT 58-28 S	972	1.75	PWL INCENTIVE AIR VOIDS HMA PAVEMENT 460.2010	INCENTIVE DENSITY PWL HMA PAVEMENT 460.2005
11 FOOT DRIVING LANES (NB AND SB)	5241+50 - 5242+61	LOWER LAYER	MILLED EXISTING SURFACE	HMA PAVEMENT 4 LT 58-28 S	27	1.75	PWL INCENTIVE AIR VOIDS HMA PAVEMENT 460.2010	QMP HMA PAVEMENT NUCLEAR DENSITY
	5241+50 - 5242+61	UPPER LAYER	HMA PAVEMENT 4 LT 58-28 S	HMA PAVEMENT 4 LT 58-28 S	27	1.75	PWL INCENTIVE AIR VOIDS HMA PAVEMENT 460.2010	INCENTIVE DENSITY PWL HMA PAVEMENT 460.2005
11 FOOT DRIVING LANES (NB AND SB)	5242+61 - 5263+78	LOWER LAYER	MILLED EXISTING SURFACE	HMA PAVEMENT 3 LT 58-28 S	652	2.25	QMP AS PER SS 460.	QMP HMA PAVEMENT NUCLEAR DENSITY
	5242+61 - 5263+78	UPPER LAYER	HMA PAVEMENT 3 LT 58-28 S	HMA PAVEMENT 4 LT 58-28 S	507	1.75	PWL INCENTIVE AIR VOIDS HMA PAVEMENT 460.2010	INCENTIVE DENSITY PWL HMA PAVEMENT 460.2005
12 FOOT DRIVING LANES (NB AND SB)	5263+78 - 5283+67	LOWER LAYER	MILLED EXISTING SURFACE	HMA PAVEMENT 3 LT 58-28 S	668	2.25	QMP AS PER SS 460.	QMP HMA PAVEMENT NUCLEAR DENSITY
	5263+78 - 5283+67	UPPER LAYER	HMA PAVEMENT 3 LT 58-28 S	HMA PAVEMENT 4 LT 58-28 S	520	1.75	PWL INCENTIVE AIR VOIDS HMA PAVEMENT 460.2010	INCENTIVE DENSITY PWL HMA PAVEMENT 460.2005
SHOULDERS, SIDEROADS, BEAMGUARD WIDENINGS, BYPASS LANES, TURN LANES	VARIOUS	LOWER LAYER	MILLED EXISTING SURFACE	HMA PAVEMENT 3 LT 58-28 S	3,792	VARIES	QMP AS PER SS 460.	QMP HMA PAVEMENT NUCLEAR DENSITY
		UPPER LAYER	HMA PAVEMENT 3 LT 58-28 S	HMA PAVEMENT 4 LT 58-28 S	5,031	1.75	PWL INCENTIVE AIR VOIDS HMA PAVEMENT 460.2010	ACCEPTANCE TESTING BY DEPARTMENT; NOT ELIGIBLE FOR INCENTIVE

STANDARD QMP FOR HMA PAVEMENT 3 LT 58-28 S AND PWL FOR HMA PAVEMENT 4 LT 58-28 S WILL BE EXTENDED TO THE APPURTENANCES, RESPECTIVELY

3

CONCRETE CURB & GUTTER

CATEGORY	STAGE	LOCATION	STATION TO STATION	601.0409 CONCRETE CURB & GUTTER 30-INCH TYPE A LF	601.0411 CONCRETE CURB & GUTTER 30-INCH TYPE D LF	601.0557 CONCRETE CURB & GUTTER 6-INCH SLOPED 36-INCH TYPE D LF	601.0588 CONCRETE CURB & GUTTER 4-INCH SLOPED 36-INCH TYPE TBT LF	601.0590 CONCRETE CURB & GUTTER 4-INCH SLOPED 36-INCH TYPE TBTT LF
1000	1							
		EAST FRONTAGE ROAD		56	--	--	--	--
		STH 165		87	--	--	--	--
		SUBTOTAL		143	--	--	--	--
	2							
		EAST FRONTAGE ROAD	3121+58 - 3208+96	890	33	283	--	--
		EAST FRONTAGE ROAD	5202+83 5283+67	268	--	--	218	24
		STH 165	406+00 - 412+00	159	--	--	--	--
		SUBTOTAL		1,317	33	283	218	24
		CATEGORY TOTAL		1,460	33	283	218	24
	3							
		EAST FRONTAGE ROAD	1907+46 - 1999+89	977	--	--	--	--
		STH 165	406+00 - 412+00	508	--	--	--	--
		SUBTOTAL		1,485	--	--	--	--
		PROJECT TOTAL		2,945	33	283	218	24

3

CONCRETE SIDEWALK

CATEGORY	STAGE	LOCATION	STATION TO STATION	602.0410 CONCRETE SIDEWALK 5-INCH SF
1000	2			
		EAST FRONTAGE ROAD	3121+58 - 3208+96	1,638
		EAST FRONTAGE ROAD	5202+83 5283+67	1,564
		STH 165	406+00 - 412+00	857
		SUBTOTAL		4,059
	3			
		STH 165	406+00 - 412+00	73
		SUBTOTAL		73
		PROJECT TOTAL		4,132

CURB RAMP DETECTABLE WARNING FIELDS

CATEGORY	STAGE	LOCATION		602.0505 CURB RAMP DETECTABLE WARNING FIELD YELLOW SF	602.0605 CURB RAMP DETECTABLE WARNING FIELD RADIAL YELLOW SF
1000	2				
		EAST FRONTAGE ROAD & STH 165	E MEDIAN	40	--
		EAST FRONTAGE ROAD & STH 165	NE QUADRANT	20	27
		EAST FRONTAGE ROAD & STH 165	NW QUADRANT	--	35
		EAST FRONTAGE ROAD	N OF STH 165	26	--
		EAST FRONTAGE ROAD & CTH C	SE QUADRANT	30	55
		EAST FRONTAGE ROAD & CTH C	SW QUADRANT	50	28
		EAST FRONTAGE ROAD & CTH C	NE QUADRANT	31	20
		EAST FRONTAGE ROAD & CTH C	N MEDIAN	--	24
		EAST FRONTAGE ROAD & CTH C	NW QUADRANT	50	--
		SUBTOTAL		247	189
	3				
		EAST FRONTAGE ROAD & STH 165	SE QUADRANT	20	--
		SUBTOTAL		20	--
		PROJECT TOTAL		267	189

STORM SEWER STRUCTURES

CATEGORY	STAGE	LOCATION	STATION	OFFSET	ALIGNMENT	RIM ELEVATION	STRUCTURE ELEVATION	BOTTOM OF STRUCTURE ELEVATION	DEPTH	611.3004 INLETS INLETS 4-FT DIAMETER EACH	611.3230 INLETS INLETS 2X3-FT EACH	611.0624 INLET COVERS INLET COVERS TYPE H EACH	608.0312 STORM SEWER PIPE REINFORCED CONCRETE CLASS III 12-INCH LF	SPV.0060.0001 RECONNECT STORM SEWER LATERALS EACH
1000	3	EAST FRONTAGE ROAD	1995+59	9.7' LT	EFR	699.22	698.22	695.35	2.87	1	--	1	7	--
		STH 165	411+02	50.2' RT	STH 165	700.55	699.55	695.14	4.41	--	1	1	13	1
		PROJECT TOTAL								1	1	2	20	1

NOTE
1) STATIONS SHOWN ARE TO THE CENTER OF STRUCTURE
2) OFFSETS ARE TO THE FLANGE LINE FOR STRUCTURES IN THE ROADWAY WITH INLET GRATES AND TO THE CENTER OF COVER FOR FIELD INLETS AND MANHOLES WITH SOLID LIDS
3) RIM ELEVATIONS ARE GIVEN AT THE FLANGE LINE FOR INLET GRATES OR THE CENTER OF THE MANHOLE COVER FOR MANHOLES

UNDERDRAIN ITEMS

CATEGORY	STAGE	LOCATION	STATION	OFFSET	TO	STATION	OFFSET	ALIGNMENT	310.0110* BASE AGGREGATE OPEN-GRADED TON	612.0104 PIPE UNDERDRAIN 4-INCH LF	645.0111 GEOTEXTILE TYPE DF SCHEDULE A SY	COMMENTS
1000	3											
		STH 165	406+00	RT	-	416+00	RT		30	451	200	
		PROJECT TOTAL							30	451	200	

*ADDITIONAL QUANTITIES SHOWN ELSEWHERE

ADJUSTING MANHOLE & INLET COVERS

CATEGORY	STAGE	LOCATION	STATION	TO	STATION	611.8110 ADJUSTING MANHOLE COVERS EACH	611.8115 ADJUSTING INLET COVERS EACH	611.8120.S COVER PLATES TEMPORARY EACH
1000	2							
		EAST FRONTAGE ROAD	3212+58	-	3208+96	7	27	7
		SUBTOTAL				7	27	7
	3	EAST FRONTAGE ROAD	1907+46	-	1999+89	1	10	1
		SUBTOTAL				1	10	1
		PROJECT TOTAL				8	37	8

3

RIPRAP ITEMS

CATEGORY	STAGE	LOCATION	STATION	OFFSET	606.0200 RIPRAP MEDIUM CY	645.0120 GEOTEXTILE TYPE HR SY
1000	2					
		EAST FRONTAGE ROAD	5238+31	RT	2	9
		EAST FRONTAGE ROAD	5238+31	LT	2	9
		SUBTOTAL			4	18
		PROJECT TOTAL			4	18

RESTORATION ITEMS

CATEGORY	STAGE	LOCATION	STATION TO	STATION	OFFSET	ALIGNMENT	625.0100 TOPSOIL SY	625.0500* SALVAGED TOPSOIL SY	629.0210* FERTILIZER TYPE B CWT	630.0130* SEEDING MIXTURE NO. 30 LB	630.0200* SEEDING TEMPORARY LB	630.0500* SEED WATER MGAL
1000	1											
		STH 165	406+00	- 416+00			12	128	0.0	3	2	3.0
		UNDISTRIBUTED					3	32	0.0	1	--	1.0
		SUBTOTAL					15	160	0.0	4	2	4.0
	2	EAST FRONTAGE ROAD	3122+56	- 3207+57			43	--	0.0	1	1	1.0
		EAST FRONTAGE ROAD	5202+83	- 5283+67			23	--	0.0	--	1	1.0
		STH 165	406+00	- 416+00			51	--	0.0	1	1	1.0
		UNDISTRIBUTED					29	--	0.1	1	1	1.0
		SUBTOTAL					146	--	0.1	3	4	4.0
	3	EAST FRONTAGE ROAD	1907+46	- 1999+89			219	--	0.1	--	--	0.0
		STH 165	406+00	- 416+00			11	937	0.0	17	13	21.0
		UNDISTRIBUTED					57	234	0.1	4	3	5.0
		SUBTOTAL					287	1,171	0.2	21	16	26.0
		PROJECT TOTAL					448	1,331	0.3	28	22	34.0

*ADDITIONAL QUANTITIES SHOWN ELSEWHERE

EROSION CONTROL ITEMS

CATEGORY	STAGE	LOCATION	STATION TO	STATION	628.1504 SILT FENCE LF	628.1520 SILT FENCE MAINTENANCE LF	628.2004* EROSION MAT CLASS I TYPE B SY	628.2008* EROSION MAT URBAN CLASS I TYPE B SY	628.7504 TEMPORARY DITCH CHECKS LF	628.7555 CULVERT PIPE CHECKS EACH	628.7570 ROCK BAGS EACH	SPV.0090.0001 SILT FENCE DOUBLE STAKED LF
1000	1											
		STH 165	406+00	- 416+00	--	161	--	140	--	2	--	161
		UNDISTRIBUTED			--	40	--	35	--	--	--	40
		SUBTOTAL			--	201	--	175	--	2	--	201
	2	EAST FRONTAGE ROAD	3122+56	- 3207+57	--	492	34	60	60	--	--	492
		EAST FRONTAGE ROAD	5202+83	- 5283+67	1,530	2,013	23	--	--	--	--	483
		STH 165	406+00	- 416+00	--	--	--	50	--	--	--	
		UNDISTRIBUTED			383	627	14	10	--	--	20	244
		SUBTOTAL			1,913	3,132	71	120	60	--	20	1,219
	3	EAST FRONTAGE ROAD	1907+46	- 1999+89	--	532	--	220	--	4	--	532
		STH 165	406+00	- 416+00	--	638	--	950	45	--	--	638
		UNDISTRIBUTED			--	293	--	293	11	--	--	293
		SUBTOTAL			--	1,463	--	1,463	56	4		1,463
		PROJECT TOTAL			1,913	4,796	71	1,758	116	6	20	2,883

*ADDITIONAL QUANTITIES SHOWN ELSEWHERE

3

INLET PROTECTION

CATEGORY	STAGE	LOCATION	STATION		TO STATION	628.7005 INLET PROTECTION TYPE A EACH	628.7015 INLET PROTECTION TYPE C EACH
1000	1						
		EAST FRONTAGE ROAD	1907+46	-	1999+89	5	15
		EAST FRONTAGE ROAD	3122+56	-	3207+57	--	25
		SUBTOTAL				5	40
	2						
		EAST FRONTAGE ROAD	3122+56	-	3207+57	3	14
		EAST FRONTAGE ROAD	5202+83	-	5283+67	4	15
		STH 165	406+00	-	416+00	1	2
		SUBTOTAL				8	31
		PROJECT TOTAL				13	71

EROSION CONTROL MOBILIZATION

CATEGORY	STAGE	LOCATION	628.1905 MOBILIZATIONS EROSION CONTROL EACH	628.1910 MOBILIZATIONS EMERGENCY EROSION CONTROL EACH
1000	1	UNDISTRIBUTED	2	2
		SUBTOTAL	2	2
	2	UNDISTRIBUTED	2	2
		SUBTOTAL	2	2
	3	UNDISTRIBUTED	2	2
		SUBTOTAL	2	2
		PROJECT TOTAL	6	6

TRACKING PADS

CATEGORY	STAGE	LOCATION	628.7560 EACH
1000	ALL	UNDISTRIBUTED	2
		PROJECT TOTAL	2

TYPE II PERMANENT SIGNING 1032-10-75

SIGN NO.	SIGN CODE & SIZE	SIGN MESSAGE	SIGN SIZE W [IN.]	x	H [IN.]	637.2210 SIGNS TYPE II REFLECTIVE H [SF]	637.2230 SIGNS TYPE II RELFECTIVE F [SF]	637.2215 SIGNS TYPE II REFLECTIVE H FOLDING (SF)	638.2102 MOVING SIGNS TYPE II [EA]	638.2602 REMOVING SIGNS TYPE II (EA)	638.3000 REM SMALL SIGN SUP [EA]	634.0618 POSTS WOOD 4" X 6" X 18' [EA]	MOUNT ON SAME POST AS SIGN #	REMARKS / NEW SIGN LOCATION
1	W1-7(2S)		48	X	24		8.000					1		
2	W1-6(2S)		48	X	24		8.000					1		
3	W1-6(2S)		48	X	24		8.000					1		
4	W1-2R(2S)		30	X	30		6.250					1		
5	W1-2R(2S)		30	X	30		6.250					1		
6	W1-6(2S)		48	X	24		8.000					1		
7	W1-4L(2S)		30	X	30		6.250			1	1	1		INCLUDES REMOVAL OF W13-1
7A	W13-1(2S)		18	X	18		2.250						7	
8	R4-7(2S)		24	X	30	5.000						1		
9	W1-7(2S)		48	X	24		8.000					1		
10	R7-1D(2S)		18	X	24	3.000				1	1	1		
11	W1-6(2S)		48	X	24		8.000					1		
12	R4-7(2S)		24	X	30	5.000						1		
13	R7-1D(2S)		18	X	24	3.000				1	1	1		
14	W2-2(2S)		30	X	30		6.250			1	1	1		
15	R7-1D(2S)		18	X	24	3.000				1	1	1		
16	R3-20R(2S)		24	X	36	6.000						1		
17	R2-1(2S)	SPEED LIMIT 30	24	X	30	5.000				1	1	1		
18	W6-1(2S)		36	X	36		9.000			1	1	1		
19	R3-9B(2S)		24	X	36	6.000				1	1	1		REMOVAL INCLUDES R3-9C REMOVAL
19A	R3-9C(2S)		24	X	6	1.000							19	
20	R3-20L(2S)		24	X	36	6.000						1		
21	R5-1(2S)		30	X	30	6.250						1		
22	R3-8LL		36	X	30	7.500				1	1	1		
23	R6-2R(2S)		24	X	30	5.000						1		
24	R4-7									1	1			
25	R4-7									1	1			
26	R3-53R(2S)		24	X	30	5.000						1		
27	R1-1F(3)		36	X	36			7.460		1				MOUNT ON SIGNAL POLE
28	R6-3(2M)		30	X	24	5.000							27	MOUNT ON SIGNAL POLE ABOVE SIGN # 27
29	R6-2L(2M)		30	X	36	7.500				1				MOUNT ON SIGNAL POLE
30	R5-1(2M)		36	X	36	9.000								MOUNT ON SIGNAL POLE

SHEET: 1 OF 4

TYPE II PERMANENT SIGNING 1032-10-75

SIGN NO.	SIGN CODE & SIZE	SIGN MESSAGE	SIGN SIZE W [IN.]	x	H [IN.]	637.2210 SIGNS TYPE II REFLECTIVE H [SF]	637.2230 SIGNS TYPE II RELFECTIVE F [SF]	637.2215 SIGNS TYPE II REFLECTIVE H FOLDING (SF)	638.2102 MOVING SIGNS TYPE II [EA]	638.2602 REMOVING SIGNS TYPE II (EA)	638.3000 REM SMALL SIGN SUP [EA]	634.0618 POSTS WOOD 4" X 6" X 18' [EA]	MOUNT ON SAME POST AS SIGN #	REMARKS / NEW SIGN LOCATION
31	R1-1F(3)		36	X	36			7.460						MOUNT ON SIGNAL POLE
32	R4-7(2S)		24	X	30	5.000				1				MOUNT ON SIGNAL POLE
33	M1-94H	120TH AVE	72	x	18	9.000				1				MOUNT ON SIGNAL ARM
34	R1-1F(3)		36	X	36			7.460		1				MOUNT ON SIGNAL POLE
35	R1-1F(3)		36	X	36			7.460		1				MOUNT ON SIGNAL POLE
36	R5-1(2M)		36	X	36	9.000								MOUNT ON SIGNAL POLE
37	R6-2L(2M)		30	X	36	7.500								MOUNT ON SIGNAL POLE
38	M1-94S	165 - 104TH AVE	84	x	18	10.500				1				MOUNT ON SIGNAL ARM
39	R6-2L(2M)		30	X	36	7.500								MOUNT ON SIGNAL POLE
40	R4-7(2M)		24	X	30	5.000				1				MOUNT ON SIGNAL POLE
41	R4-7(2M)		24	X	30	5.000				1				MOUNT ON SIGNAL POLE
42	R5-1(2M)		36	X	36	9.000								MOUNT ON SIGNAL POLE
43	M1-94S	165- 104TH ST	84	x	18	10.500				1				MOUNT ON SIGNAL ARM
44	R1-1F(3)		36	X	36			7.460		1				MOUNT ON SIGNAL POLE
45	R1-1F(3)		36	X	36			7.460		1				MOUNT ON SIGNAL POLE
46	R7-1D(2S)		18	X	24	3.000				1	1	1		
47	R6-2L(2M)		30	X	36	7.500								MOUNT ON SIGNAL POLE
48	JV2-1								1		1	1		
49	R3-7R(3)		36	X	36	9.000						1		
50	155-56	ADOPT A HIGHWAY							1		1	1		
51	D1-61 MODIFIED								1		2	2		
52	J3-2								1		2	2		
53	R3-7R(3)		36	X	36	9.000						1		
54	M1-94H	120TH AVE	72	x	18	9.000				1				MOUNT ON SIGNAL ARM
55	J1-1		24	X	63	10.500				1	1	1		
	MB2-1		24	X	15									
	M1-1	IH 41	24	X	24									
	M1-1	IH 94	24	X	24									
56	R5-1(2M)		36	X	36	9.000				1				MOUNT ON SIGNAL POLE
57	R1-1F(3)		36	X				7.460		1				MOUNT ON SIGNAL POLE
58	R6-3(2M)		30	X	24	5.000							57	MOUNT ON SIGNAL POLE ABOVE STOP SIGN
59	R6-3(2M)		30	X	24	5.000							60	MOUNT ON SIGNAL POLE ABOVE STOP SIGN
60	R1-1F(3)		36	X	36			7.460						MOUNT ON SIGNAL POLE

TYPE II PERMANENT SIGNING 1032-10-75

SIGN NO.	SIGN CODE & SIZE	SIGN MESSAGE	SIGN SIZE W [IN.]	x	H [IN.]	**637.2210** SIGNS TYPE II REFLECTIVE H [SF]	**637.2230** SIGNS TYPE II RELFECTIVE F [SF]	**637.2215** SIGNS TYPE II REFLECTIVE H FOLDING (SF)	**638.2102** MOVING SIGNS TYPE II [EA]	**638.2602** REMOVING SIGNS TYPE II (EA)	**638.3000** REM SMALL SIGN SUP [EA]	**634.0618** POSTS WOOD 4" X 6" X 18' [EA]	MOUNT ON SAME POST AS SIGN #	REMARKS / NEW SIGN LOCATION
61	W1-6(2S)		48	X	24		8.000					1		
62	R2-1(2S)	SPEED LIMIT 55	24	X	30	5.000				1	1	1		
63	W6-3(2S)		36	X	36		9.000			1	1	1		
64	W5-52R(2S)		12	X	36		3.000					1		4 FOOT HEIGHT
65	W23-2									1	1			
66	R4-7(2S)		24	X	30	5.000				1	1	1		
67	W5-54(2S)		18	X	18		2.250						66	REMOVAL IS PART OF # 66
68	W1-6(2S)		48	X	24		8.000					1		
69	R1-1 (3)		36	X	36	7.460				1	1	1		
70	W4-4C(3)		36	X	15		3.750						69	
71	R1-55(2M)		30	X	36	7.500							69	
72	R1-1(3)		36	X	36	7.460				1	1	1		
73	W4-4C(3)		36	X	15		3.750						72	
74	R6-3(2M)		30	X	24	5.000							72	
75	R1-2(2S)		36	X	31	3.875				1	1	1		
76	W4-4C(3)		36	X	15		3.750						75	
77	R1-1(3)		36	X	36	7.460				1	1	1		
78	R6-2R(2S)		24	X	30	5.000				1	1	1		
79	R5-1(3)		36	X	36	9.000				1	1	1		
80	R5-1(3)		36	X	36	9.000				1	1	1		
81	R1-1(3)		36	X	36	7.460				1	1	1		
82	R4-7(2S)		24	X	30	5.000				1	1	1		
83	R1-2(2S)		36	X	31	3.875				1	1	1		
84	W4-4C(3)		36	X	15		3.750						83	
85	R1-1(3)		36	X	36	7.460				1	1	1		
86	W4-4C(3)		36	X	15		3.750						85	
87	R1-55(2M)		30	X	36	7.500							85	
88	R1-1(3)		36	X	36	7.460				1	1	1		
89	W4-4C(3)		36	X	15		3.750						88	
90	R6-3(2M)		30	X	24	5.000							88	

TYPE II PERMANENT SIGNING 1032-10-75

SIGN NO.	SIGN CODE & SIZE	SIGN MESSAGE	SIGN SIZE W [IN.]	x	H [IN.]	637.2210 SIGNS TYPE II REFLECTIVE H [SF]	637.2230 SIGNS TYPE II RELFECTIVE F [SF]	637.2215 SIGNS TYPE II REFLECTIVE H FOLDING (SF)	638.2102 MOVING SIGNS TYPE II [EA]	638.2602 REMOVING SIGNS TYPE II (EA)	638.3000 REM SMALL SIGN SUP [EA]	634.0618 POSTS WOOD 4" X 6" X 18' [EA]	MOUNT ON SAME POST AS SIGN #	REMARKS / NEW SIGN LOCATION
91	R5-1(3)		36	X	36	9.000				1	1	1		
92	R5-1(3)		36	X	36	9.000				1	1	1		
93	R5-1(3)		36	X	36	9.000				1	1	1		
94	W23-2									1	1			
95	W1-6(2S)		48	X	24		8.000					1		
96	W5-52L(2S)		12	X	36		3.000			1	1	1		4 FOOT MOUNTING HEIGHT
97	W5-52R(2S)		12	X	36		3.000			1	1	1		4 FOOT MOUNTING HEIGHT
98	W5-52L(2S)		12	X	36		3.000			1	1	1		4 FOOT MOUNTING HEIGHT
99	W5-52R(2S)		12	X	36		3.000			1	1	1		4 FOOT MOUNTING HEIGHT
100	R2-1(2S)	SPEED LIMIT 35	24	X	30	5.000				1	1	1		
101	W1-6(2S)		48	X	24		8.000					1		
102	W1-1R(2S)		36	X	36		9.000					1		
102A	W13-1(2S)		18	X	18		2.250						102	
103	W1-6(2S)		48	X	24		8.000					1		
104	NONE	Access to Businesses on Hwy 165 . Use Corporate Dr (ahead arrow)	90	x	48	30.000						2		SHEET 10A
105	NONE	Access to Businesses UNDISTRIBUTED	66	x	36	16.500			5		5	5		SHEET 10B
						427.260	184.250	59.680	9	53	49	73		

SHEET: 4 OF 4

TRAFFIC CONTROL ITEMS

CATEGORY	STAGE	LOCATION	STAGE DURATION DAYS	643.0300 TRAFFIC CONTROL DRUMS NO.	643.0300 TRAFFIC CONTROL DRUMS DAY	643.0420* TRAFFIC CONTROL BARRICADES TYPE III NO.	643.0420* TRAFFIC CONTROL BARRICADES TYPE III DAY	643.0705* TRAFFIC CONTROL WARNING LIGHTS TYPE A NO.	643.0705* TRAFFIC CONTROL WARNING LIGHTS TYPE A DAY	643.0715 TRAFFIC CONTROL WARNING LIGHTS TYPE C NO.	643.0715 TRAFFIC CONTROL WARNING LIGHTS TYPE C DAY	643.0800 TRAFFIC CONTROL ARROW BOARDS NO.	643.0800 TRAFFIC CONTROL ARROW BOARDS DAY	643.0900* TRAFFIC CONTROL SIGNS NO.	643.0900* TRAFFIC CONTROL SIGNS DAY	643.1050 TRAFFIC CONTROL SIGNS PCMS NO.	643.1050 TRAFFIC CONTROL SIGNS PCMS DAY	643.1070 TRAFFIC CONTROL CONES 42-INCH NO.	643.1070 TRAFFIC CONTROL CONES 42-INCH DAY
1000	1		30																
		EAST FRONTAGE ROAD		63	3,276	35	1,092	70	3,640	14	728	--	--	23	1,196	1	7	129	3,870
		STH 165		10	520		--	--	--	10	520	1	52	14	728	--	--	--	--
		SUBTOTAL			3,796		1,092		3,640		1,248		52		1,924		7		3,870
	2		48																
		EAST FRONTAGE ROAD		101	4,848	12	576	24	1,152	10	480		--	22	1,056	1	7	--	--
		STH 165		80	3,840	4	192	8	384	22	1,056	3	144	45	2,160	--	--	--	--
		CTH C		113	5,424	8	384	8	384	31	1,488	3	144	33	1,584	--	--	--	--
		GUARDRAIL LOCATIONS		108	324	--	--	--	--	--	--	--	--	30	90	--	--	--	--
		SUBTOTAL			14,436		1,152		1,920		3,024		288		4,890		7		--
	3		35																
		EAST FRONTAGE ROAD		103	3,605	15	420	30	1,050	14	728	--	--	33	1,584	1	7	82	2,870
		STH 165		44	1,540	4	140	8	280	20	1,040	1	35	22	1,056	--	--	--	--
		GUARDRAIL LOCATIONS		12	36	--	--	--	--	--	--	--	--	5	15	--	--	--	--
		SUBTOTAL			5,181		560		1,330		1,768		35		2,655		7		2,870
		PROJECT TOTAL			23,413		2,804		6,890		6,040		375		9,469		21		6,740

*ADDITIONAL QUANTITIES SHOWN ELSEWHERE

TRAFFIC CONTROL ITEMS-DETOUR

CATEGORY	STAGE	LOCATION	643.0900* TRAFFIC CONTROL SIGNS NO.	643.0900* TRAFFIC CONTROL SIGNS DAY	643.0420* TRAFFIC CONTROL BARRICADES TYPE III NO.	643.0420* TRAFFIC CONTROL BARRICADES TYPE III DAY	643.0705* TRAFFIC CONTROL WARNING LIGHTS TYPE A NO.	643.0705* TRAFFIC CONTROL WARNING LIGHTS TYPE A DAY
1000	1&2	EAST FRONTAGE ROAD	7	700	12	1,200	24	2,400
		WEST FRONTAGE ROAD	35	3,500	--	--		--
		CTH ML (122ND STREET)	27	2,700	--	--		--
		STH 165 (104TH STREET)	58	5,800	--	--		--
		IH-41/94	92	9,200	--	--		--
		CTH C (WILMOT ROAD)	58	5,800	--	--		--
		STH 50 (75THE STREET)	42	4,200	--	--		--
		123RD ROAD	16	1,600	--	--		--
		118TH STREET	14	1,400	--	--		--
		77TH STREET	11	1,100	--	--		--
		SUBTOTAL		36,000		1,200		2,400
	3	EAST FRONTAGE ROAD	15	525	4	140	8	280
		WEST FRONTAGE ROAD	38	1,330	--	--	--	--
		CTH ML (122ND STREET)	27	945	--	--	--	--
		STH 165 (104TH STREET)	37	1,295	--	--	--	--
		IH-41/94	20	700	--	--	--	--
		SUBTOTAL		4,795		--		280
		PROJECT TOTAL		40,795		1,200		2,680

*ADDITIONAL QUANTITIES SHOWN ELSEWHERE

TRAFFIC CONTROL COVERING SIGNS

CATEGORY	STAGE	LOCATION	NUMBER OF CYCLES	643.0910 TRAFFIC CONTROL COVERING SIGNS TYPE I NO.	643.0910 TRAFFIC CONTROL COVERING SIGNS TYPE I EACH	643.0920 TRAFFIC CONTROL COVERING SIGNS TYPE II NO.	643.0920 TRAFFIC CONTROL COVERING SIGNS TYPE II EACH
1000	1&2						
		CTH ML	1	--	--	6	6
		STH 165	1	--	--	24	24
		CTH C	1	--	--	26	26
		STH 50	1	1	1	12	12
		SUBTOTAL			1		68
	3						
		CTH ML	1	--	--	8	8
		STH 165	1	--	--	2	2
		SUBTOTAL			--		10
		PROJECT TOTAL			1		78

TRAFFIC CONTROL

CATEGORY	STAGE	LOCATION	643.5000 TRAFFIC CONTROL EACH
1000	ALL	PROJECT	1
		PROJECT TOTAL	1

TEMPORARY PEDESTRIAN ITEMS

CATEGORY	STAGE	LOCATION	644.1420 TEMPORARY PEDESTRIAN SURFACE PLYWOOD SF	644.1601 TEMPORARY PEDESTRIAN CURB RAMP NO	644.1601 TEMPORARY PEDESTRIAN CURB RAMP DAY	644.1810 TEMPORARY PEDESTRIAN BARRICADE LF	SPV.0045.0001 TEMPORARY DETECTABLE WARNING FIELD NO	SPV.0045.0001 TEMPORARY DETECTABLE WARNING FIELD DAY
1000	2							
		STH 165	50	1	48	150	1	48
		CTH C	140	4	192	1,274	4	192
		PROJECT TOTAL	190		240	1,424		240

TEMPORARY PAVEMENT MARKING ITEMS

CATEGORY	STAGE	LOCATION	STATION TO	STATION	646.9055 REMOVAL LINE GROOVED CONTRAST PERMANENT TAPE 4-INCH 12.5' LINE 37.5' SKIP WHITE LF	649.0150 TEMPORARY MARKING LINE REMOVABLE TAPE 4-INCH SOLID WHITE LF
1000	1					
		STH 165	406+00	- 416+00	--	--
		SUBTOTAL			--	--
	2					
		STH 165	406+00	- 416+00	143	536
		SUBTOTAL			143	536
	3					
		EAST FRONTAGE ROAD	1907+46	- 1999+89	--	
		STH 165	406+00	- 416+00	125	500
		PROJECT TOTAL			268	1,036

3

PAVEMENT MARKING ITEMS

CATEGORY	STAGE	LOCATION	STATION TO	STATION	ALIGNMENT	646.1020 MARKING LINE EPOXY 4-INCH 12.5' LINE 37.5' SKIP WHITE LF	646.1020 MARKING LINE EPOXY 4-INCH 12.5' LINE 37.5' SKIP YELLOW LF	646.1020 MARKING LINE EPOXY 4-INCH SOLID WHITE LF	646.1020 MARKING LINE EPOXY 4-INCH SOLID YELLOW LF	646.1555 MARKING LINE GROOVED CONTRAST PERMANENT TAPE 4-INCH 12.5' LINE 37.5' SKIP WHITE LF	COMMENTS
1000	2										
		EAST FRONTAGE ROAD	3122+56	3141+83	RT	482	--	--	--	--	LANE SKIPS
		EAST FRONTAGE ROAD	3128+68	3140+33	LT	296	--	--	--	--	LANE SKIPS
		EAST FRONTAGE ROAD	3144+27	3207+57	LT/RT	--	--	12,113	--	--	OUTER EDGELINES
		EAST FRONTAGE ROAD	3147+42	3148+63	LT/RT	--	--	--	408	--	MEDIAN ISLAND APPROACH
		EAST FRONTAGE ROAD	3148+63	3155+12	LT/RT	--	167	--	668	--	SOLID LEFT, SKIPS RIGHT
		EAST FRONTAGE ROAD	3155+12	3177+83	RT	--	568	--	--	--	SKIPS RIGHT
		EAST FRONTAGE ROAD	3177+83	3187+42	LT/RT	--	240	--	958	--	SKIPS LEFT, SOLID RIGHT
		EAST FRONTAGE ROAD	3187+42	3196+94	LT/RT	--	--	--	1,904	--	DOUBLE YELLOW
		EAST FRONTAGE ROAD	3196+94	3198+37	LT/RT	--	--	--	565	--	MEDIAN ISLAND APPROACH
		EAST FRONTAGE ROAD	3198+97	3207+57	LT/RT	--	--	--	1,811	--	MEDIAN EDGELINES
		EAST FRONTAGE ROAD	5204+81	5283+67	LT/RT	--	--	15,773	--	--	OUTER EDGELINES
		EAST FRONTAGE ROAD	5204+33	5207+95	LT/RT	--	--	--	676	--	MEDIAN ISLAND & APPROACH
		EAST FRONTAGE ROAD	5208+83	5211+22	LT/RT	--	--	--	690	--	MEDIAN ISLAND & APPROACH
		EAST FRONTAGE ROAD	5211+22	5216+44	LT/RT	--	--	--	1,044	--	DOUBLE YELLOW
		EAST FRONTAGE ROAD	5216+44	5227+26	LT/RT	--	270	--	1,081	--	SOLID LEFT, SKIPS RIGHT
		EAST FRONTAGE ROAD	5227+26	5261+41	RT	--	854	--	--	--	SKIPS RIGHT
		EAST FRONTAGE ROAD	5261+41	5262+50	LT/RT	--	27	--	109	--	SKIPS LEFT, SOLID RIGHT
		EAST FRONTAGE ROAD	5262+50	5283+67	LT/RT	--	--	--	4,233	--	DOUBLE YELLOW
		STH 165	405+00	415+44	LT	--	--	--	--	-- 156 --	SKIPS
		SUBTOTAL				778	2,126	27,886	14,147	156	
	3										
		EAST FRONTAGE ROAD	1907+45	1968+01	LT/RT	--	--	11,601	--	--	OUTER EDGELINES
		EAST FRONTAGE ROAD	1907+45	1909+83	LT/RT	--	--	--	476	--	DOUBLE YELLOW
		EAST FRONTAGE ROAD	1909+83	1915+70	LT/RT	--	--	--	2,362	--	DOUBLE YELLOW, MEDIAN
		EAST FRONTAGE ROAD	1916+55	1919+05	RT	--	--	--	500	--	DOUBLE YELLOW
		EAST FRONTAGE ROAD	1919+05	1924+59	LT/RT	--	--	--	2,191	--	DOUBLE YELLOW, MEDIAN
		EAST FRONTAGE ROAD	1924+59	1943+86	LT/RT	--	--	--	3,852	--	DOUBLE YELLOW
		EAST FRONTAGE ROAD	1943+86	1961+00	LT/RT	--	428	--	1,713	--	SOLID LEFT, SKIP RIGHT
		EAST FRONTAGE ROAD	1952+21	1962+59	LT	260	--	--	--		BYPASS LANE SKIPS
		EAST FRONTAGE ROAD	1961+00	1965+40	LT/RT	--	--	--	880	--	DOUBLE YELLOW
		EAST FRONTAGE ROAD	1965+40	1968+50	LT/RT	--	--	--	1,232	--	DOUBLE YELLOW, MEDIAN
		EAST FRONTAGE ROAD	1969+32	1969+67	LT/RT	--	--	--	153	--	DOUBLE YELLOW MEDIAN
		EAST FRONTAGE ROAD	1989+97	1991+28	LT/RT	--	66	--	262	--	TWLTL
		EAST FRONTAGE ROAD	1991+28	1993+53	LT/RT	--	--	--	928	--	MEDIAN ISLAND APPROACH
		EAST FRONTAGE ROAD	1993+53	1998+85	LT/RT	171	--	--	--	--	SKIPS LEFT, SKIPS RIGHT
		STH 165	396+50	408+81		--	--	--	--	138 --	SKIPS
		SUBTOTAL				431	494	11,601	14,549	138	
		CATEGORY SUBTOTAL				1,209	2,620	39,487	28,696	294	
		PROJECT TOTAL						72,012		294	

PAVEMENT MARKING ITEMS

CATEGORY	STAGE	LOCATION	STATION TO	STATION	ALIGNMENT	646.3020 MARKING LINE EPOXY 8-INCH 3' LINE 9' SKIP WHITE LF	646.3020 MARKING LINE EPOXY 8-INCH SOLID WHITE LF	646.3555 MARKING LINE GROOVED CONTRAST PERMANENT TAPE 8-INCH 2' LINE 6' SKIP WHITE LF	646.3555 MARKING LINE GROOVED CONTRAST PERMANENT TAPE 8-INCH 3' LINE 9' SKIP WHITE LF	646.3555 MARKING LINE GROOVED CONTRAST PERMANENT TAPE 8-INCH SOLID WHITE LF	COMMENTS
1000	2										
		EAST FRONTAGE ROAD	3122+14	3124+57	LT	--	413	--	--	--	TURN LANES
			3124+57	3127+74	LT	95	--	--	--	--	TURN LANES
			3126+12	3127+73	RT	--	163	--	--	--	TURN LANE
			3127+73	3130+12	LT	--	146	--	--	--	TURN LANE
			3131+40	3132+90	RT	--	150	--	--	--	TURN LANE
			3133+80	3135+30	LT	--	147	--	--	--	TURN LANE
			3205+18	3206+32	RT	30	--	--	--	--	TURN LANE
			3206+32	3207+36	RT	--	145	--	--	--	TURN LANE
			5204+82	5208+02	LT	--	643	--	--	--	BIKE SLIP LANE
			5208+02	5210+52		63	--	--	--	--	TURN LANE
		STH 165				--	--	--	--	--	
			408+92	411+17	RT	--	--	--	--	226	TURN LANE
			412+92	414+46	LT	--	--	--	--	153	TURN LANE
						--	--	--	--	--	
		SUBTOTAL				188	1,807	--	--	379	
	3										
		EAST FRONTAGE ROAD	1907+45	1909+42	LT	--	197	--	--	--	TURN LANE
			1909+42	1910+93	LT	38	--	--	--	--	TURN LANE
			1911+91	1913+40	RT	38	--	--	--	--	TURN LANE
			1913+40	1915+65	RT	--	225	--	--	--	TURN LANE
			1916+55	1919+05	LT	--	250	--	--	--	TURN LANE
			1919+05	1920+52	LT	37	--	--	--	--	TURN LANE
			1967+00	1968+00	RT	--	100	--	--	--	TURN LANE
			1968+90	1969+67	LT	--	76	--	--	--	TURN LANE
			1995+13	1998+85	RT	--	744	--	--	--	TURN LANE
		STH 165				--	--	--	--	--	
			408+95	411+18	RT	--	--	20	57	223	TURN LANES
			411+15	412+20	LT/RT						INTERSECTION TURNING TRACKS
		SUBTOTAL				113	1,592	20	57	223	
		PROJECT TOTAL				3,700			679		

LOCATING NO-PASSING ZONES

CATEGORY	STAGE	LOCATION	STATION TO	STATION	648.0100 LOCATING NO-PASSING ZONES MI
1000	2				
		EAST FRONTAGE ROAD	5204+31	5283+67	1.52
		EAST FRONTAGE ROAD	3122+55	3207+56	1.63
		SUBTOTAL			3.14
	3	EAST FRONTAGE ROAD	1907+45	1969+67	1.19
		EAST FRONTAGE ROAD	1989+97	1999+89	0.21
		SUBTOTAL			1.40
		PROJECT TOTAL			4.55

MARKING LINE REMOVAL

CATEGORY	STAGE	LOCATION	STATION	OFFSET	646.9000 MARKING LINE REMOVAL 4-INCH LF
1000	2				
		EAST FRONTAGE ROAD	5203+74	LT	37
		SUBTOTAL			37
		PROJECT TOTAL			37

3

MISCELLANEOUS PAVEMENT MARKING ITEMS

CATEGORY	STAGE	LOCATION	STATION TO	STATION	ALIGNMENT	646.5020 MARKING ARROW EPOXY TYPE 1 ARROW EACH	646.5020 MARKING ARROW EPOXY TYPE 2 ARROW EACH	646.5020 MARKING ARROW EPOXY TYPE 3 ARROW EACH	646.5120 MARKING WORD EPOXY EACH	646.6120 MARKING STOP LINE EPOXY 18-INCH LF	646.7120 MARKING DIAGONAL EPOXY 12-INCH LF	646.7420 CROSSWALK EPOXY TRANSVERSE LINE 6-INCH LF	646.8120 MARKING CURB EPOXY LF	646.8220 MARKING ISLAND NOSE EPOXY EACH
1000														
	2													
		EAST FRONTAGE ROAD	3122+14	3124+57	LT	3	5	--	3	42	--	197	10	1
			3124+57	3127+74	LT	--	1	--	--	--	--	--	--	--
			3126+12	3127+73	RT	--	2	--	--	--	--	--	10	1
			3127+73	3130+12	LT	--	1	--	--	--	--	--	10	1
			3131+40	3132+90	RT	--	2	--	--	--	--	--	10	1
			3133+80	3135+30	LT	--	2	--	--	--	--	--	10	1
			3147+42	--	LT/RT	--	--	--	--	--	--	--	10	1
			3198+37	--	LT/RT	--	--	--	--	--	--	--	10	1
			5203+74	--	LT	--	--	--	--	--	--	37	--	--
			5208+02	--	LT/RT	--	--	--	--	--	--	--	10	1
			5208+82	5210+00	LT/RT	--	--	--	--	--	--	--	25	2
			5209+97	5211+22	LT/RT	--	--	--	--	--	15	--	--	--
		STH 165	412+92	414+46	LT	--	2	--	1	46	--	96	--	--
	3						--							
		EAST FRONTAGE ROAD	1907+45	1909+42	LT	--	1	1	1	--	--	--	--	--
			1910+93	1915+70	RT	--	--	--	--	--	150	--	--	--
			1913+40	1915+65	RT	--	2	--	1	--	--	--	--	--
			1916+55	1919+05	RT	--	2	--	1	--	--	--	--	--
			1919+05	1923+10	LT/RT	--	--	--	--	--	98	--	--	--
			1965+40	1968+50	LT/RT	--	--	--	--	--	97	--	--	--
			1967+00	1968+00	RT	--	1	--	1	--	--	--	--	--
			1969+32	1969+67	LT	--	1	--	--	--	--	--	--	--
			1969+32	1969+67	LT/RT	--	--	--	--	--	9	--	--	--
			1989+97	1993+54	LT/RT	--	2	--	--	--	--	--	--	--
			1991+28	1993+53	LT/RT	--	--	--	--	--	190	--	--	--
			1993+54	1998+85	RT	--	4	2	2	--	--	--	20	2
		STH 165	406+67	411+18	RT	--	4	--	2	--	--	77	--	--
							--							
		SUBTOTAL				3	32	3	12	88	559	407	125	12
		PROJECT TOTAL					38		12	88	559	407	125	12

GUARDRAIL ITEMS

CATEGORY	STAGE	LOCATION	STATION TO		STATION	OFFSET	ALIGNMENT	614.0396 GUARDRAIL MOW STRIP ASPHALT SY	614.0397 GUARDRAIL MOW STRIP EMULSIFIED ASPHALT SY	614.2300 MGS GUARDRAIL 3 LF	614.2310 MGS GUARDRAIL 3 HS LF	614.2340 MGS GUARDRAIL 3 L LF	614.2500 MGS THRIE BEAM TRANSITION LF	614.2610 MGS GUARDRAIL TERMINAL EAT EACH
1000	2													
		EAST FRONTAGE ROAD	3212+58	-	3208+96		EFR	260	180	1,250	--	50	--	4
		EAST FRONTAGE ROAD	5202+83		5283+67		EFR	520	100	613	--	--	160	8
		SUBTOTAL						780	280	1,863	--	50	160	12
	3													
		EAST FRONTAGE ROAD	1907+46	-	1999+89		EFR	70	60	138	50	--	--	2
		SUBTOTAL						70	60	138	50	--	--	2
		PROJECT TOTAL						850	340	2,001	50	50	160	14

SAWING

CATEGORY	STAGE	LOCATION	STATION TO		STATION	690.0150* SAWING ASPHALT LF	690.0250* SAWING CONCRETE LF
1000							
	1						
		EAST FRONTAGE ROAD	1907+46	-	1999+89	--	370
		STH 165	406+00	-	416+00	--	144
		SUBTOTAL				--	514
	2						
		EAST FRONTAGE ROAD	3212+58	-	3208+96	333	1,932
		EAST FRONTAGE ROAD	5202+83		5283+67	227	334
		STH 165	406+00	-	412+00	10	665
		SUBTOTAL				570	2,931
	3						
		EAST FRONTAGE ROAD	1907+46	-	1999+89	222	1,029
		STH 165	406+00	-	412+00	--	582
		SUBTOTAL				222	1,611
		PROJECT TOTAL				792	5,056

VILLAGE OF PLEASANT PRAIRIE UTILITIES

PROJECT	CATEGORY	ROADWAY	STATION	OFFSET	SPV.0060.0100 ADJUSTING SANITARY MANHOLES EACH	SPV.0060.0101 ADJUSTING WATER VALVE BOXES EACH
1032-10-75	7000					
		EAST FRONTAGE ROAD	1915+28	38' RT	--	1
			1998+95	77' LT	1	--
			1999+06	82' LT	--	1
			3122+10	43' RT	--	1
		PROJECT TOTAL			1	3

BARRIER SYSTEM GRADING SHAPING FINISHING

CATEGORY	STAGE	LOCATION	STATION TO	STATION	OFFSET	614.0010.0001 BARRIER SYSTEM GRADING SHAPING FINISHING EACH	614.0010.0002 BARRIER SYSTEM GRADING SHAPING FINISHING EACH	614.0010.0003 BARRIER SYSTEM GRADING SHAPING FINISHING EACH	614.0010.0004 BARRIER SYSTEM GRADING SHAPING FINISHING EACH	614.0010.0005 BARRIER SYSTEM GRADING SHAPING FINISHING EACH	614.0010.0006 BARRIER SYSTEM GRADING SHAPING FINISHING EACH	614.0010.0007 BARRIER SYSTEM GRADING SHAPING FINISHING EACH	614.0010.0008 BARRIER SYSTEM GRADING SHAPING FINISHING EACH	614.0010.0009 BARRIER SYSTEM GRADING SHAPING FINISHING EACH
1000														
	2													
		EAST FRONTAGE ROAD	3146+65 -	3151+61	RT	--	1	--	--	--	--	--	--	--
		EAST FRONTAGE ROAD	3163+76 -	3177+65	LT	--	--	1	--	--	--	--	--	--
		EAST FRONTAGE ROAD	5234+11 -	5236+16	RT	--	--	--	1		--	--	--	--
		EAST FRONTAGE ROAD	5234+19 -	5236+15	LT	--	--	--	--	1	--	--	--	--
		EAST FRONTAGE ROAD	5237+85 -	5239+77	RT	--	--	--	--	--	1	--	--	--
		EAST FRONTAGE ROAD	5237+85 -	5239+82	LT	--	--	--	--	--	--	1	--	--
		EAST FRONTAGE ROAD	5241+69 -	5247+56	RT	--	--	--	--	--	--	--	1	--
		EAST FRONTAGE ROAD	5255+94 -	5261+22	RT	--	--	--	--	--	--	--	--	1
		SUBTOTAL				--	1	1	1	1	1	1	1	1
	3													
		EAST FRONTAGE ROAD	1942+21 -	1947+49	RT	1	--	--	--	--	--	--	--	--
		SUBTOTAL				1	--	--	--	--	--	--	--	--
		PROJECT TOTAL				1	1	1	1	1	1	1	1	1

BARRIER SYSTEM GRADING SHAPING FINISHING INFORMATION ITEMS

CATEGORY	STAGE	LOCATION	STATION TO	STATION	OFFSET	* EXCAVATION COMMON CY	** FILL CY	* BORROW CY	* EROSION MAT CLASS I TYPE B SY	* EROSION MAT URBAN CLASS I TYPE B SY	* SALVAGED TOPSOIL SY	* SEEDING MIXTURE NO. 30 LB	* SEEDING TEMPORARY LB	* SEED WATER MGAL
1000	2													
		EAST FRONTAGE ROAD	3146+65 -	3151+61	RT	30	43	23	--	425	425	8	6	10
		EAST FRONTAGE ROAD	3163+76 -	3177+61	LT	33	74	60	1,083	--	1,083	19	29	24
		EAST FRONTAGE ROAD	5234+11 -	5236+16	RT	11	14	6	--	668	668	12	18	15
		EAST FRONTAGE ROAD	5234+19 -	5236+15	LT	26	37	20	--	222	222	4	6	5
		EAST FRONTAGE ROAD	5237+85	5239+77	RT	4	4	0	--	394	394	7	11	9
		EAST FRONTAGE ROAD	5237+85	5239+82	LT	43	6	0	--	100	100	2	3	2
		EAST FRONTAGE ROAD	5241+69 -	5247+56	RT	18	14	0	--	285	285	5	8	6
		EAST FRONTAGE ROAD	5255+94 -	5261+22	RT	64	85	42	--	747	747	13	20	17
		UNDISTRIBUTED				--	--	--	271	710	981	18	26	22
		SUBTOTAL				229	277	151	1,354	3,551	4,905	88	127	110
	3													
		EAST FRONTAGE ROAD	1942+21 -	1947+49	RT	52	12	--	--	223	223	4	3	5
		UNDISTRIBUTED				--	--	--	--	56	56	1	1	1
		SUBTOTAL				52	12	--	--	279	279	5	4	6
		PROJECT TOTAL				281	289	151	1,354	3,830	5,184	93	131	116

*NON-BID ITEM, ITEMS AND QUANTITIES LISTED FR BID INFORMATION ONLY. ITEMS INCIDENTAL TO BARRIER SYSTEM GRADING SHAPING FINISHING. ADDITIONAL QUANTITIES SHOWN ELSEWHERE
** NON-BID ITEM, ITEMS AND QUANTITIES LISTED FR BID INFORMATION ONLY. ITEMS INCIDENTAL TO BARRIER SYSTEM GRADING SHAPING FINISHING

3

SURVEY PROJECT

CATEGORY	STAGE	LOCATION	SPV.0060.0003 SURVEY PROJECT (1032-10-75) EACH
1000	ALL	PROJECT	1
		PROJECT TOTAL	1

WATER

CATEGORY	STAGE	LOCATION	624.0100 MGAL
1000	ALL	PROJECT-BASE COMPACTION	72
		PROJECT-COMMON EXCAVATION	4
		PROJECT TOTAL	76

3

MOBILIZATION

CATEGORY	STAGE	LOCATION	619.1000 MOBILIZATION EACH
1000	ALL	PROJECT	1
		PROJECT TOTAL	1

FIELD OFFICE

CATEGORY	STAGE	LOCATION	642.5401 FIELD OFFICE TYPE D EACH
1000	ALL	PROJECT	1
		PROJECT TOTAL	1

PAVEMENT CLEANUP PROJECT (1032-10-75)

CATEGORY	STAGE	LOCATION	SPV.0075.0001 PAVEMENT CLEANUP PROJECT (1032-10-75) HR
1000	ALL	PROJECT	50
		PROJECT TOTAL	50

MAINTENANCE AND REPAIR OF HAUL ROADS 1032-10-75

CATEGORY	STAGE	LOCATION	618.0100 MAINTENANCE AND REPAIR OF HAUL ROADS 1032-10-75 EACH
1000	ALL	PROJECT	1
		PROJECT TOTAL	1

STH 165 & EAST FRONTAGE RD
KENOSHA COUNTY
CATEGORY 1100
S30-0756

REMOVE LIGHTING UNITS

	204.9060.S.0002
	REMOVING LIGHTING UNITS
SIGNAL BASE NO.	EACH
DLV8	2
CLV9	2
CVL10	2
TOTAL	6

POLES

	657.0609	657.0610	659.1125	SPV.0060.0016
	LUMINAIRE ARMS SINGLE MEMBER 4-INCH CLAMP 6-FT	LUMINAIRE ARMS SINGLE MEMBER 4 1/2-INCH CLAMP 6-FT	LUMINAIRES UTILITY LED C	INSTALL LUMINAIRE ARMS STEEL 15-FT
SIGNAL BASE NO.	EACH	EACH	EACH	EACH
SB1	-	-	-	-
SB2	-	-	2	2
SB3	-	-	-	-
SB4	2	-	2	-
SB5	-	-	-	-
SB6	-	-	-	-
SB7	-	-	2	2
SB8	-	-	-	-
SB9	-	-	-	-
SB10	-	-	-	-
SB11	-		-	-
SB12	-	2	2	-
TOTAL	2	2	8	4

TRAFFIC SIGNAL CABLE AND WIRE

		655.0610
		ELECTRICAL WIRE LIGHTING 12 AWG
FROM	TO	LF
SB2	LUMIN (2)	288
SB4	LUMIN (2)	288
SB7	LUMIN (2)	288
SB12	LUMIN (2)	288
	TOTAL	1,152

STH 165 & EAST FRONTAGE RD
KENOSHA COUNTY
CATEGORY 1500
S30-0756

STATE FURNISHED MATERIALS SUMMARY

EACH	DESCRIPTION
1	TRAFFIC SIGNAL CABINET
2	POLE TYPE 9 SPECIAL
2	POLE TYPE 13 OVERHEIGHT
1	35-FT MONOTUBE ARM REGULAR
1	35-FT MONOTUBE ARM SPECIAL
1	40-FT MONOTUBE ARM SPECIAL
1	45-FT MONOTUBE ARM
4	LUMINAIRE ARMS, STEEL 15-FT
4	EVP DETECTOR HEADS
1	WIRELESS ANTENNA

STATE FURNISHED FOR INFORMATION ONLY

SIGNAL BASE NO.	POLE TYPE 9 SPECIAL EACH	POLE TYPE 13 OVERHEIGHT EACH	MONO 35' ARM EACH	MONO 40' ARM EACH	MONO 45' ARM EACH	LUMINAIRE ARMS STEEL 15-FT EACH	EVP DETECTOR HEADS EACH
SB2	-	1	-	-	1	2	1
SB5	1	-	-	1	-	-	1
SB7	-	1	1	-	-	2	1
SB11	1	-	1	-	-	-	1
TOTAL	2	2	2	1	1	4	4

REMOVE CONCRETE BASES

SIGNAL BASE NO.	204.0195 REMOVING CONCRETE BASES EACH
CB1	1
SB1	1
SB2	1
SB3	1
SB4	1
SB5	1
SB6	1
SB7	1
SB8	1
SB9	1
SB10	1
SB11	1
SB12	1
CLV9	1
TOTAL	14

REMOVE TRAFFIC SIGNALS

LOCATION	204.9060.S.0001 REMOVING TRAFFIC SIGNALS EACH	204.9060.S.0003 REMOVING LOOP DETECTOR WIRE & LEAD-IN CABLE EACH
STH 165 & EAST FRONTAGE ROAD	1	1
TOTAL	1	1

CONDUIT

FROM	TO	652.0225 CONDUIT RIGID NONMETALLIC SCHEDULE 40 2-INCH LF	652.0235 CONDUIT RIGID NONMETALLIC SCHEDULE 40 3-INCH LF	652.0615 CONDUIT SPECIAL 3-INCH LF
CB1	PB1	-	87	-
PB1	SB1	15	-	-
PB1	PB2	-	-	144
PB2	SB2	-	8	-
PB2	PB3	21	-	-
PB3	PB4	220	-	-
PB2	PB5	-	-	148
PB5	PB6	-	76	-
PB6	SB3	10	-	-
PB6	PB7	-	104	-
PB7	PB8	137	-	-
PB8	PB9	117	-	-
PB7	PB10	-	-	92
PB10	PB11	29	-	-
PB11	SB4	20	-	-
PB10	PB12	-	-	74
PB12	PB13	-	85	-
PB13	SB5	-	10	-
PB13	PB14	-	125	-
PB14	SB6	29	-	-
PB14	PB16	-	-	168
PB16	PB15	220	-	-
PB15	SB12	31	-	-
PB16	SB7	-	22	-
PB16	PB17	-	-	110
PB17	SB8	24	-	-
PB17	PB18	-	92	-
PB18	SB9	13	-	-
PB18	PB19	-	70	-
PB19	PB20	-	48	-
PB20	PB22	-	-	84
PB22	PB21	168	-	-
PB22	PB23	30	-	-
PB23	SB10	17	-	-
PB22	PB24	-	-	84
PB24	PB25	-	80	-
PB25	SB11	-	6	-
PB25	CB1	-	19	-
	TOTAL	1,101	832	904

STH 165 & EAST FRONTAGE RD
KENOSHA COUNTY
CATEGORY 1500
S30-0756

TRAFFIC DETECTOR LOOPS

LOOP NO.	HOME RUN PB	LOCATION***	SIZE (FT) * (FT)	NO. OF TURNS	SSD INSTALLATION REFERENCE	652.0800 CONDUIT LOOP DETECTOR LF	655.0700 LOOP DETECTOR LEAD IN CABLE LF	655.0800 LOOP DETECTOR WIRE LF
11	PB3	410+93.41, 8.90' RT	6'X20'	3	9F15-4B- LOOP DETECTOR INSTALLED IN BASE COURSE WITH PULL (SPLICE) BOX OFF ROADWAY (OPTION 2)	60	138	180
12	PB3	411+21.40, 8.29' RT	6'X20'	3	9F15-4B- LOOP DETECTOR INSTALLED IN BASE COURSE WITH PULL (SPLICE) BOX OFF ROADWAY (OPTION 2)	60	138	180
21	PB15	415+32.89, 31.55' LT	6'X10'	5	9F15-4B- LOOP DETECTOR INSTALLED IN BASE COURSE WITH	65	529	325
22	PB15	415+32.90, 19.91' LT	6'X10'	5	9F15-4B- LOOP DETECTOR INSTALLED IN BASE COURSE WITH PULL (SPLICE) BOX OFF ROADWAY (OPTION 2)	65	529	325
31	PB21	412+46.91, 297.35' RT	6'X6'	4	9F15-4B- LOOP DETECTOR INSTALLED IN BASE COURSE WITH PULL (SPLICE) BOX OFF ROADWAY (OPTION 2)	54	271	216
32	PB21	412+31.32, 297.81' RT	6'X20'	3	9F15-4B- LOOP DETECTOR INSTALLED IN BASE COURSE WITH PULL (SPLICE) BOX OFF ROADWAY (OPTION 2)	82	271	246
33	PB23	412+37.42, 98.60' RT	6'X20'	3	9F15-4B- LOOP DETECTOR INSTALLED IN BASE COURSE WITH PULL (SPLICE) BOX OFF ROADWAY (OPTION 2)	85	136	255
34	PB23	412+36.77, 69.24' RT	6'X20'	3	9F15-4B- LOOP DETECTOR INSTALLED IN BASE COURSE WITH PULL (SPLICE) BOX OFF ROADWAY (OPTION 2)	86	136	258
35	PB23	412+26.47, 98.86' RT	6'X20'	3	9F15-4B- LOOP DETECTOR INSTALLED IN BASE COURSE WITH PULL (SPLICE) BOX OFF ROADWAY (OPTION 2)	85	136	255
36	PB23	412+25.90, 69.44' RT	6'X20'	3	9F15-4B- LOOP DETECTOR INSTALLED IN BASE COURSE WITH PULL (SPLICE) BOX OFF ROADWAY (OPTION 2)	86	136	258
37	PB23	412+16.69, 99.02' RT	6'X20'	3	9F15-4B- LOOP DETECTOR INSTALLED IN BASE COURSE WITH PULL (SPLICE) BOX OFF ROADWAY (OPTION 2)	85	136	255
38	PB23	412+16.13, 69.66' RT	6'X20'	3	9F15-4B- LOOP DETECTOR INSTALLED IN BASE COURSE WITH PULL (SPLICE) BOX OFF ROADWAY (OPTION 2)	86	136	258

STH 165 & EAST FRONTAGE RD
KENOSHA COUNTY
CATEGORY 1500
S30-0756

TRAFFIC DETECTOR LOOPS CONTINUED

LOOP NO.	HOME RUN PB	LOCATION***	SIZE (FT) * (FT)	NO. OF TURNS	SSD INSTALLATION REFERENCE	652.0800 CONDUIT LOOP DETECTOR LF	655.0700 LOOP DETECTOR LEAD IN CABLE LF	655.0800 LOOP DETECTOR WIRE LF
41	PB9	411+13.81, 384.49' LT	6'X20'	4	9F15-4B- LOOP DETECTOR INSTALLED IN BASE COURSE WITH PULL (SPLICE) BOX OFF ROADWAY (OPTION 2)	62	540	248
42	PB8	411+67.98, 272.89' LT	6'X30'	3	9F15-4B- LOOP DETECTOR INSTALLED IN BASE COURSE WITH PULL (SPLICE) BOX OFF ROADWAY (OPTION 2)	82	423	246
43	PB11	411+91.02, 105.59' LT	6'X20'	3	9F15-4B- LOOP DETECTOR INSTALLED IN BASE COURSE WITH PULL (SPLICE) BOX OFF ROADWAY (OPTION 2)	76	356	228
44	PB11	411+91.04, 77.57' LT	6'X20'	3	9F15-4B- LOOP DETECTOR INSTALLED IN BASE COURSE WITH PULL (SPLICE) BOX OFF ROADWAY (OPTION 2)	77	356	231
45	PB11	412+02.20, 105.78' LT	6'X20'	3	9F15-4B- LOOP DETECTOR INSTALLED IN BASE COURSE WITH PULL (SPLICE) BOX OFF ROADWAY (OPTION 2)	76	356	228
46	PB11	412+02.19, 77.80' LT	6'X20'	3	9F15-4B- LOOP DETECTOR INSTALLED IN BASE COURSE WITH PULL (SPLICE) BOX OFF ROADWAY (OPTION 2)	77	356	231
51	PB16	413+17.21, 8.89' LT	6'X20'	3	9F15-4B- LOOP DETECTOR INSTALLED IN BASE COURSE WITH PULL (SPLICE) BOX OFF ROADWAY (OPTION 2)	62	309	186
52	PB16	412+89.14, 8.43' LT	6'X20'	3	9F15-4B- LOOP DETECTOR INSTALLED IN BASE COURSE WITH PULL (SPLICE) BOX OFF ROADWAY (OPTION 2)	62	309	186
61	PB4	408+69.00, 31.30' RT	6'X6'	5	9F15-4B- LOOP DETECTOR INSTALLED IN BASE COURSE WITH PULL (SPLICE) BOX OFF ROADWAY (OPTION 2)	54	358	270
62	PB4	408+68.97, 20.13' RT	6'X6'	5	9F15-4B- LOOP DETECTOR INSTALLED IN BASE COURSE WITH PULL (SPLICE) BOX OFF ROADWAY (OPTION 2)	36	358	180
					PROJECT TOTAL	1,563	6,413	5,245

*** FINAL LOCATION TO BE DETERMINED BY THE ENGINEER IN THE FIELD.
ALL LOCATIONS ARE OFF STH 165 ALIGNMENT.
LOCATION IS TO FRONT CENTER OF DETECTOR LOOP.

STH 165 & EAST FRONTAGE RD
KENOSHA COUNTY
CATEGORY 1500
S30-0756

PULL BOXES

PULL BOX NO.	LOCATION***	653.0135 PULL BOXES STEEL 24X36-INCH EACH	653.0140 PULL BOXES STEEL 24X42-INCH EACH
PB 1	411+20.28, 68.42' RT	-	1
PB2	411+19.64, 3.13' LT	-	1
PB3	410+97.30, 3.39' LT	1	-
PB4	408+77.70, 0.05' RT	1	-
PB5	411+16.59, 77.23' LT	-	1
PB6	411+54.20, 80.28' LT	1	-
PB7	411+66.47, 131.19' LT	-	1
PB8	411+46.46, 266.88' LT	1	-
PB9	410+95.83, 372.35' LT	1	-
PB10	412+12.84, 132.15' LT	-	1
PB11	412+13.08, 102.95' LT	1	-
PB12	412+49.99, 132.39' LT	-	1
PB13	412+50.91, 88.29' LT	1	-
PB14	413+13.40, 78.04' LT	-	1
PB15	415+32.90, 0.80' RT	1	-
PB16	413+13.40, 5.45' RT	-	1
PB17	413+15.24, 60.60' RT	-	1
PB18	412+71.91, 72.97' RT	1	-
PB19	412+49.45, 99.63' RT	1	-
PB20	412+48.56, 123.81' RT	-	1
PB21	412+14.38, 293.13' RT	1	-
PB22	412+07.05, 125.15' RT	-	1
PB23	412+06.05, 95.40' RT	1	-
PB24	411+64.91, 125.60' RT	-	1
PB25	411+48.53, 87.39' RT	-	1
	TOTAL	12	13

*** FINAL LOCATION TO BE DETERMINED BY THE ENGINEER IN THE FIELD. ALL LOCATIONS ARE OFF STH 165 ALIGNMENT

CONCRETE BASES

SIGNAL BASE NO.	LOCATION***	654.0101 CONCRETE BASES TYPE 1 EACH	654.0102 CONCRETE BASES TYPE 2 EACH	654.0105 CONCRETE BASES TYPE 5 EACH	654.0113 CONCRETE BASES TYPE 13 EACH	654.0120 CONCRETE BASES TYPE 10-SPECIAL EACH	654.0217 CONCRETE CONTROL CABINET BASES TYPE 9 SPECIAL EACH
CB1	411+47.09, 77.37' RT	-	-	-	-	-	1
SB1	411+14.05, 55.22' RT	1	-	-	-	-	-
SB2	411+09.45, 6.43' LT	-	-	-	1	-	-
SB3	411+60.92, 88.57' LT	1	-	-	-	-	-
SB4	412+12.67, 82.49' LT	-	1	-	-	-	-
SB5	412+59.39, 80.74' LT	-	-	-	-	1	-
SB6	412+91.0, 59.05' LT	1	-	-	-	-	-
SB7	412+93.72, 5.56' RT	-	-	-	1	-	-
SB8	412+91.97, 63.25' RT	1	-	-	-	-	-
SB9	412+60.13, 77.85' RT	1	-	-	-	-	-
SB10	412+05.56, 78.22' RT	1	-	-	-	-	-
SB11	411+56.86, 84.35' RT	-	-	-	-	1	-
SB12	415+00.52, 2.09' RT	-	-	1	-	-	-
	TOTAL	6	1	1	2	2	1

*** FINAL LOCATION TO BE DETERMINED BY THE ENGINEER IN THE FIELD.
ALL LOCATIONS ARE OFF STH 165 ALIGNMENT

REMOVE PULL BOXES

PULL BOX NO.	653.0905 REMOVING PULL BOXES EACH
PB1	1
PB2	1
PB3	1
PB5	1
PB6	1
PB7	1
PB8	1
PB9	1
PB10	1
PB12	1
PB13	1
PB14	1
PB15	1
PB16	1
PB17	1
PB18	1
PB19	1
PB20	1
PB21	1
PB22	1
PB23	1
LPB104	1
LPB105	1
LPB106	1
TOTAL	24

STH 165 & EAST FRONTAGE RD
KENOSHA COUNTY
CATEGORY 1500
S30-0756

TRAFFIC SIGNAL CABLE AND WIRE

FROM	TO	655.0515 ELECTRICAL WIRE TRAFFIC SIGNALS 10 AWG LF
CB1	SB1	71
SB1	SB2	138
SB2	SB3	191
SB3	SB4	232
SB4	SB5	215
SB5	SB6	146
SB6	SB7	148
SB7	SB8	146
SB8	SB9	125
SB9	SB10	250
SB10	SB11	211
SB11	CB1	46
PB1	CB1	46
PB2	SB2	28
PB5	SB3	61
PB6	SB3	27
PB7	SB3	68
PB10	SB4	64
PB11	SB4	39
PB12	SB5	68
PB13	SB5	28
PB14	SB6	49
PB16	SB7	42
PB17	SB8	44
PB18	SB9	29
PB19	SB9	61
PB20	SB9	81
PB22	SB10	61
PB23	SB10	35
PB24	SB11	64
PB25	SB11	26
	TOTAL	2,840

FACES

SIGNAL HEAD NO.	SIGNAL BASE NO.	658.0173 TRAFFIC SIGNAL FACE 3S 12-INCH EACH	658.0174 TRAFFIC SIGNAL FACE 4S 12-INCH EACH	658.0175 TRAFFIC SIGNAL FACE 5S 12-INCH EACH	658.0416 PEDESTRIAN SIGNAL FACE 16-INCH EACH
1	SB1	-	-	1	-
2	SB7	1	-		-
3	SB7	1		-	-
4	SB8	-	-	1	-
5	SB2	-	1	-	-
6	SB6	-	1	-	-
7	SB7	-	1	-	-
8	SB6	1	-	-	-
9	SB2	1	-	-	-
10	SB2	1	-	-	-
11	SB7	-	1	-	-
12	SB1	-	1	-	-
13	SB2	-	1	-	-
14	SB9	1	-	-	-
15	SB5	1	-	-	-
16	SB5	1	-	-	-
17	SB10	1	-	-	-
18	SB4	1	-	-	-
19	SB5	1	-	-	-
20	SB3	1	-	-	-
21	SB11	1	-	-	-
22	SB11	1	-	-	-
23	SB4	1	-	-	-
24	SB9	1	-	-	-
25	SB10	1	-	-	-
26	SB6	-	-	-	1
27	SB8	-	-	-	1
	TOTAL	17	6	2	2

STH 165 & EAST FRONTAGE RD
KENOSHA COUNTY
CATEGORY 1500
S30-0756

TRAFFIC SIGNAL CABLE AND WIRE

FROM	TO	655.0260* CABLE TRAFFIC SIGNAL 12-14 AWG LF	655.0270* CABLE TRAFFIC SIGNAL 15-14 AWG LF
SB 1	HEAD 1	-	24
SB1	HEAD 12	-	24
SB2	HEAD 5	-	34
SB2	HEAD 9	-	47
SB2	HEAD 10	-	59
SB2	HEAD 13	-	34
SB3	HEAD 20	24	-
SB4	HEAD 18	34	-
SB4	HEAD 23	34	-
SB5	HEAD 15	46	-
SB5	HEAD 16	23	-
SB5	HEAD 19	59	-
SB6	HEAD 6	24	-
SB6	HEAD 8	24	-
SB6	HEAD 26	24	-
SB7	HEAD 2	-	37
SB7	HEAD 3	-	51
SB7	HEAD 7	-	23
SB7	HEAD 11	-	23
SB8	HEAD 4	24	-
SB8	HEAD 27	24	-
SB9	HEAD 14	24	-
SB9	HEAD 24	24	-
SB10	HEAD 17	24	-
SB10	HEAD 25	24	-
SB11	HEAD 21	54	-
SB11	HEAD 22	23	-
	TOTAL	513	356

*ADDITIONAL QUANTITIES SHOWN ELSEWHERE

TRAFFIC SIGNAL CABLE AND WIRE

FROM	TO	655.0260* CABLE TRAFFIC SIGNAL 12-14 AWG LF	655.0270* CABLE TRAFFIC SIGNAL 15-14 AWG LF	655.0320 CABLE TYPE UF 2-10 AWG GROUNDED LF
CB1	SB1	71	-	-
CB1	SB2	-	155	155
CB1	SB3	300	-	-
CB1	SB4	486	-	-
CB1	SB5	546	-	-
CB1	SB6	564	-	-
CB1	SB7	-	458	458
CB1	SB8	388	-	-
CB1	SB9	313	-	-
CB1	SB10	215	-	-
CB1	SB11	46	-	-
SB2	SB4	-	-	377
SB7	SB12	-	-	377
	TOTAL	2,929	613	1,367

*ADDITIONAL QUANTITIES SHOWN ELSEWHERE

TRAFFIC SIGNAL EVP DETECTOR CABLE

FROM	TO	655.0900 TRAFFIC SIGNAL EVP DETECTOR CABLE LF
CB1	SB2 (HEAD A)	149
CB1	SB7 (HEAD B)	325
CB1	SB11 (HEAD C)	56
CB1	SB5 (HEAD D)	414
	TOTAL	945

STH 165 & EAST FRONTAGE RD
KENOSHA COUNTY
CATEGORY 1500
S30-0756

POLES

	657.0100	657.0255	657.0310	657.0322	657.0420	657.0425	658.0500	SPV.0060.0010	SPV.0060.0011	SPV.0060.0012	SPV.0060.0013	SPV.0060.0014	SPV.0060.0015
	PEDESTAL BASES	TRANSFORMER BASES BREAKAWAY 11 1/2-INCH BOLT CIRCLE	POLES TYPE 3	POLES TYPE 5-ALUMINUM	TRAFFIC SIGNAL STANDARDS ALUMINUM 13-FT	TRAFFIC SIGNAL STANDARDS ALUMINUM 15-FT	PEDESTRIAN PUSH BUTTONS	INSTALL MONOTUBE ARMS 35-FT TYPE 12/13 POLE	INSTALL POLES TYPE 9 SPECIAL	INSTALL POLES TYPE 13 OVERHEIGHT	INSTALL MONOTUBE ARMS 35-FT TYPE 9/10 SPEC POLE	INSTALL MONOTUBE ARMS 40-FT TYPE 9/10 SPEC POLE.	INSTALL MONOTUBE ARMS 45-FT TYPE 12/13 POLE
SIGNAL BASE NO.	EACH	EACH	EACH	EACH	EACH	EACH	EACH	EACH	EACH	EACH	EACH	EACH	EACH
SB1	1	-	-	-	-	1	-	-	-	-	-	-	-
SB2	-	-	-	-	-	-	-	-	-	1	-	-	1
SB3	1	-	-		1	-	-	-	-	-	-	-	-
SB4	-	1	1	-	-	-	-	-	-	-	-	-	-
SB5	-	-	-	-	-	-	-	-	1	-	-	1	-
SB6	1	-	-	-	-	1	1	-	-	-	-	-	-
SB7	-	-	-	-	-	-	1	1	-	1	-	-	-
SB8	1	-	-	-	-	1	1	-	-	-	-	-	-
SB9	1	-	-	-	1	-	-	-	-	-	-	-	-
SB10	1	-	-	-	1	-	-	-	-	-	-	-	-
SB11	-	-	-	-	-	-	-	-	1	-	1	-	-
SB12	-	1	-	1	-	-	-	-	-	-	-	-	-
TOTAL	6	2	1	1	3	3	3	1	2	2	1	1	1

3

FIELD SYSTEM INTEGRATOR

LOCATION	678.0500 COMMUNICATION SYSTEM TESTING LS	670.0100 FIELD SYSTEM INTEGRATOR LS
STH 165 & EAST FRONTAGE ROAD	1	1
TOTAL	1	1

WIRELESS ANTENNA

LOCATION	678.0700 INSTALL WIRELESS ANTENNAS EACH
SB11	1
TOTAL	1

SIGNAL MOUNTING HARDWARE

LOCATION	658.5069 SIGNAL MOUNTING HARDWARE (.0001 STH 165 & EAST FRONTAGE ROAD) LS
STH 165 & EAST FRONTAGE ROAD	1
TOTAL	1

3

EVP DETECTOR HEAD INSTALLATION

LOCATION	SPV.00060.0018 TRANSPORT AND INSTALL STATE FURNISHED EVP DETECTOR HEADS STH 165 & EAST FRONTAGE ROAD EACH
STH 165 & EAST FRONTAGE ROAD	1
TOTAL	1

TRANSPORT TRAFFIC SIGNAL AND INTERSECTION LIGHTING MATERIALS

LOCATION	SPV.0060.0019 TRANSPORT TRAFFIC SIGNAL AND INTERSECTION LIGHTING MATERIALS STH 165 & EAST FRONTAGE ROAD EACH
STH 165 & EAST FRONTAGE ROAD	1
TOTAL	1

TEMPORARY TRAFFIC SIGNALS FOR INTESECTIONS

LOCATION	661.0200.0001 TEMPORARY TRAFFIC SIGNAL FOR INTERSECTIONS STH 165 & EAST FRONTAGE ROAD LS
STH 165 & EAST FRONTAGE ROAD	1
TOTAL	1

TEMP INFRARED EVP SYSTEM

LOCATION	SPV.0060.0020 TEMP INFRARED EVP SYSTEM STH 165 & EAST FRONTAGE ROAD EACH
STH 165 & EAST FRONTAGE ROAD	1
TOTAL	1

TRANSPORT AND INSTALL STATE FURNISHED TRAFFIC SIGNAL CABINET

LOCATION	SPV.0060.0017 TRANSPORT AND INSTALL STATE FURNISHED TRAFFIC SIGNAL CABINET STH 165 & EAST FRONTAGE ROAD EACH
STH 165 & EAST FRONTAGE ROAD	1
TOTAL	1

ELECTRICAL SERVICE METER BREAKER PEDESTAL

LOCATION	656.0200.0001 ELECTRICAL SERVICE METER BREAKER PEDESTAL STH 165 & EAST FRONTAGE ROAD LS
STH 165 & EAST FRONTAGE ROAD	1
TOTAL	1

BENCHMARKS			
NO.	STATION	ELEV.	DESCRIPTION
615	3122+67	697.60	HYD WNW UPPER FLANGE BOLT

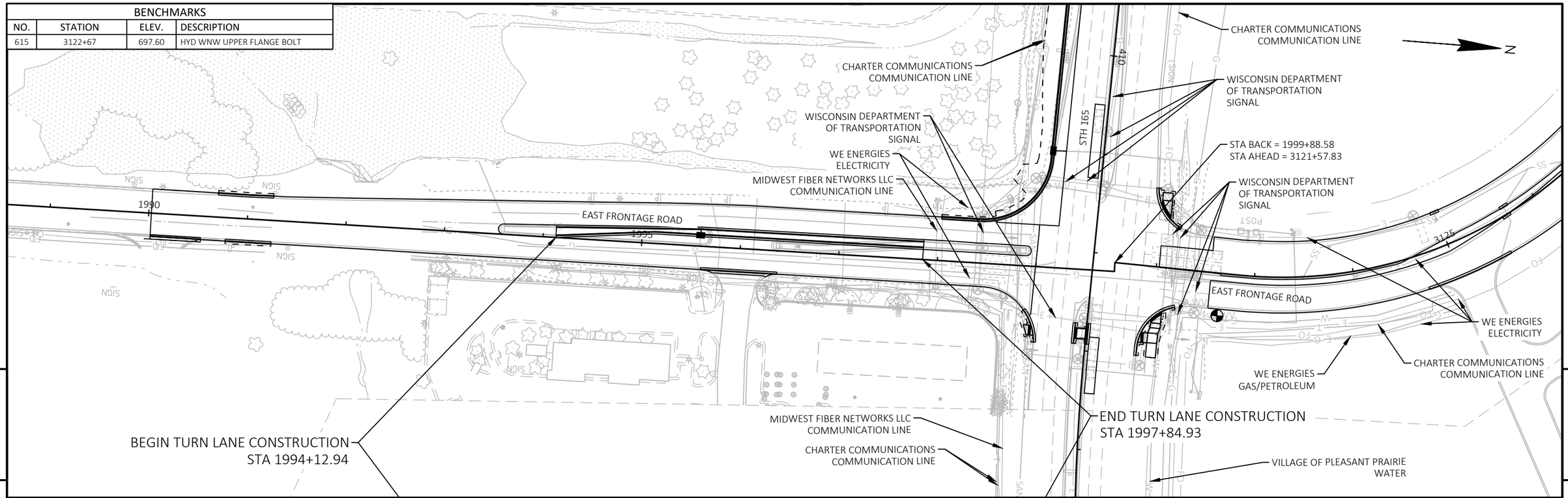

PROJECT NO: 1032-10-75	HWY: EAST FRONTAGE ROAD	COUNTY: KENOSHA	PLAN AND PROFILE: EAST FRONTAGE ROAD	SHEET 192	E

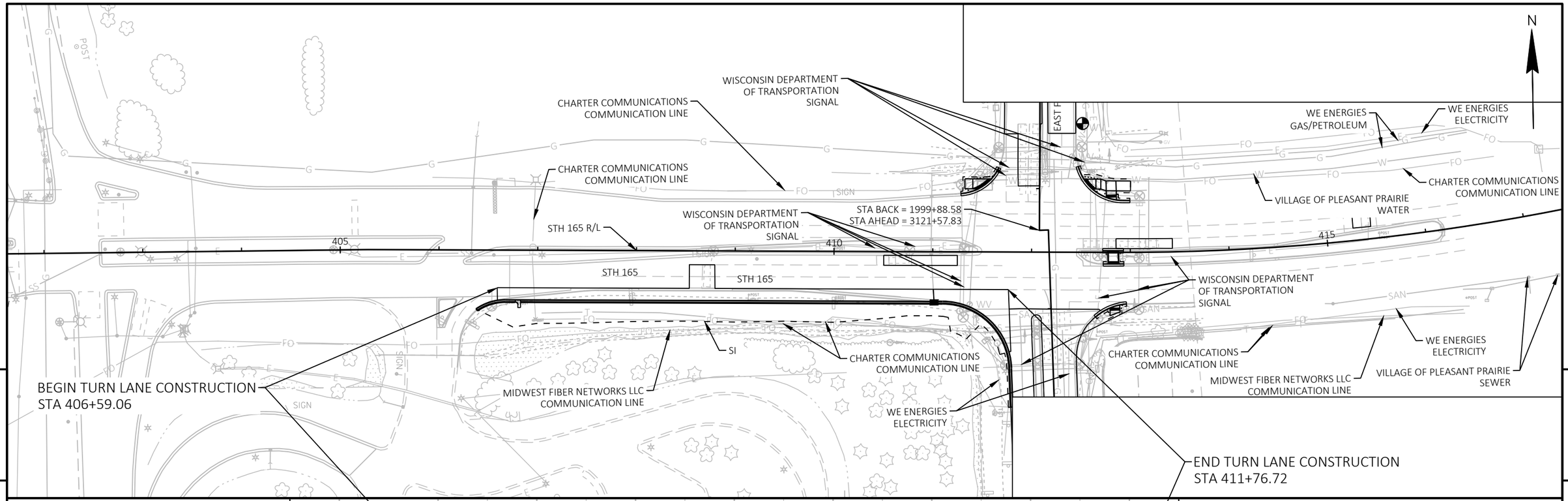

PROJECT NO: 1032-10-75	HWY: EAST FRONTAGE ROAD	COUNTY: KENOSHA	PLAN AND PROFILE: STH 165	SHEET 193	E

FILE NAME : Y:\52XX\5252_DP20.NSFWYEFR.KNS\CADDS\10321015\SHEETSPLAN\050101-PP.DWG
LAYOUT NAME - 050102
PLOT DATE : 10/22/2021 3:55 PM
PLOT BY : NICHOLAS BECKER
PLOT NAME :
PLOT SCALE : 1 IN:100 FT
WISDOT/CADDS SHEET 44

CTH ML

THOMAS KING

N

EX R/W

BEGIN PROJECT
STA 1907+45.56

1910

1915

1920

EAST FRONTAGE ROAD

EX R/W

ASPH CE

45.6' RT

CAUTION

UNNAMED TRIBUTARY
TO DES PLAINES RIVER
(WBIC 5042185)

WE ENERGIES
GAS/PETROLEUM

WE ENERGIES
ELECTRICITY

VILLAGE OF PLEASANT PRAIRIE
WATER

ADJUSTING WATER VALVE BOXES

BLUEPOINT 94 LLC

5

5

WISCONSIN ELECTRIC POWER COMPANY

MATCHLINE 1920+75.00

N

RIVERVIEW GROUP LLC

PC: 1923+10.84

PT: 1932+59.66

1935

MATCHLINE 1935+50.00

45.4' LT

ASPH CE

EX R/W

1925

1930

EAST FRONTAGE ROAD

60.4' RT

ASPH CE

RIVERVIEW GROUP LLC

CAUTION

LEGEND

WETLAND AREAS

*PAVEMENT MARKINGS SHOWN FOR INFORMATIONAL PURPOSES. REFER TO STANDARD DETAIL DRAWINGS FOR DETAILED LAYOUT INSTRUCTIONS.

WE ENERGIES
GAS/PETROLEUM

WE ENERGIES
ELECTRICITY

VILLAGE OF PLEASANT PRAIRIE
WATER

EX R/W

RIVERVIEW GROUP LLC

PROJECT NO: 1032-10-75	HWY: EAST FRONTAGE ROAD	COUNTY: KENOSHA	PLANS	SHEET 194	E

FILE NAME : Y:\52XX\5252_DP20.NSFWYEFR.KNS\CADDS\10321015\SHEETSPLAN\050201-PN.DWG
LAYOUT NAME - 050201

PLOT DATE : 10/22/2021 3:57 PM PLOT BY : NICHOLAS BECKER PLOT NAME : PLOT SCALE : 1 IN:100 FT

WISDOT/CADDS SHEET 44

END CONSTRUCTION
1939+00.51
BUTT JOINT REQ'D
(SEE CONSTRUCTION DETAILS)

120TH CT

WE ENERGIES
GAS/PETROLEUM

VILLAGE OF PLEASANT PRAIRIE
WATER

EAST FRONTAGE ROAD

EX R/W

1940

PC: 1936+71.43

MATCHLINE 1935+50.00

BASE AGG
CE
SI

CAUTION

1945

PI: 1946+22.59

EX R/W

RIES PARTNERS LP

UNNAMED TRIBUTARY
TO DES PLAINES RIVER
(WBIC 5042163)

STRUCTURE C-30-17
NO WORK PERFORMED

REMOVING GUARDRAIL
SEE PLAN DETAILS FOR MORE
INFORMATION

FRONTIER COMMUNICATION OF WI LLC
COMMUNICATION LINE

FRONTIER COMMUNICATION OF WI LLC
COMMUNICATION LINE

PI: 1950+01.70
D=0°01'59"

1950

MATCHLINE 1950+25.00

5

5

MATCHLINE 1950+25.00

1955

1960

PI: 1962+59.45
D=0°21'12"

EAST FRONTAGE ROAD

23.7' RT

ASPH CE

25.8' RT

ASPH CE

EX R/W

UNNAMED TRIBUTARY
TO DES PLAINES RIVER
(WBIC 5042098)

LEGEND

WETLAND AREAS

*PAVEMENT MARKINGS SHOWN FOR
INFORMATIONAL PURPOSES. REFER TO STANDARD
DETAIL DRAWINGS FOR DETAILED
LAYOUT INSTRUCTIONS.

PLEASANT PRAIRIE PREMIUM OUTLETS LLC

PLEASANT PRAIRIE PREMIUM OUTLETS LLC

MATCHLINE 1965+00.00

PROJECT NO: 1032-10-75	HWY: EAST FRONTAGE ROAD	COUNTY: KENOSHA	PLANS	SHEET 195	E

FILE NAME : Y:\52XX\5252_DP20.NSFWYEFR.KNS\CADDS\10321015\SHEETSPLAN\050201-PN.DWG
LAYOUT NAME - 050202

PLOT DATE : 10/22/2021 3:58 PM PLOT BY : NICHOLAS BECKER PLOT NAME : PLOT SCALE : 1 IN:100 FT

WISDOT/CADDS SHEET 44

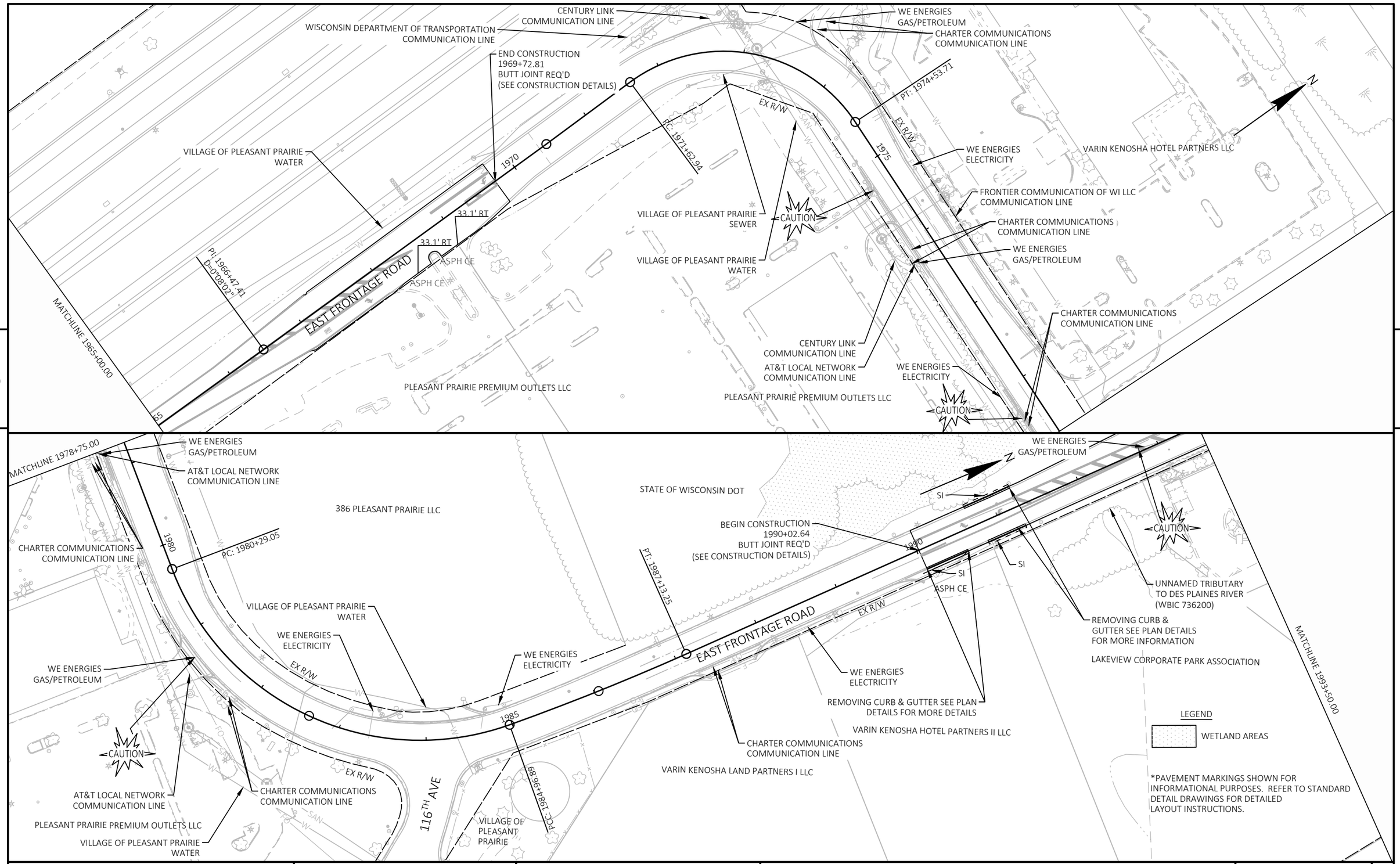

PROJECT NO: 1032-10-75	HWY: EAST FRONTAGE ROAD	COUNTY: KENOSHA	PLANS	SHEET 196	E

FILE NAME : Y:\52XX\5252_DP20.NSFWYEFR.KNS\CADDS\10321015\SHEETSPLAN\050201-PN.DWG
LAYOUT NAME - 050203
PLOT DATE : 10/22/2021 3:59 PM PLOT BY : NICHOLAS BECKER PLOT NAME : PLOT SCALE : 1 IN:100 FT
WISDOT/CADDS SHEET 44

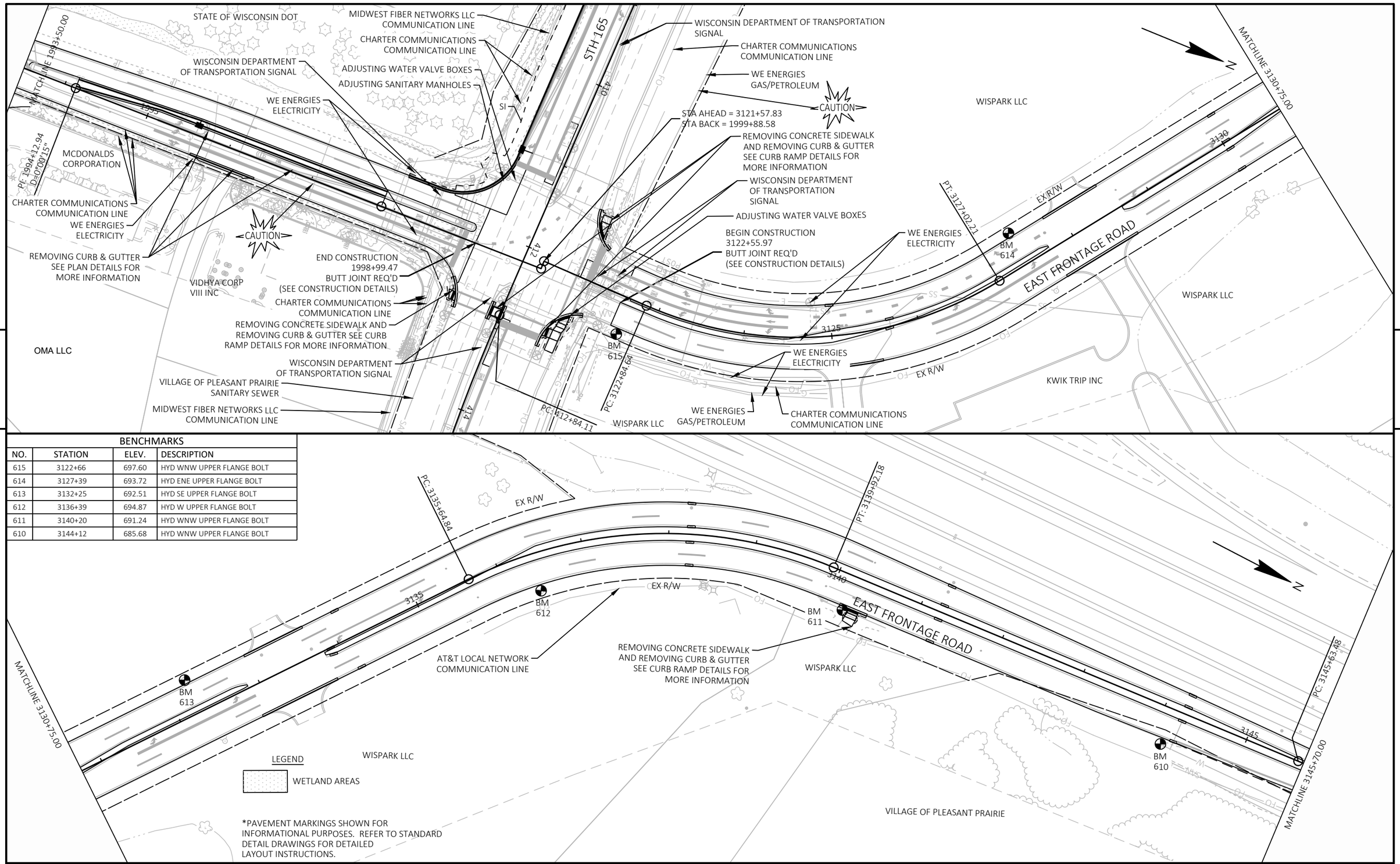

BENCHMARKS			
NO.	STATION	ELEV.	DESCRIPTION
615	3122+66	697.60	HYD WNW UPPER FLANGE BOLT
614	3127+39	693.72	HYD ENE UPPER FLANGE BOLT
613	3132+25	692.51	HYD SE UPPER FLANGE BOLT
612	3136+39	694.87	HYD W UPPER FLANGE BOLT
611	3140+20	691.24	HYD WNW UPPER FLANGE BOLT
610	3144+12	685.68	HYD WNW UPPER FLANGE BOLT

PROJECT NO: 1032-10-75	HWY: EAST FRONTAGE ROAD	COUNTY: KENOSHA	PLANS	SHEET 197	E

MATCHLINE 3145+70.00

PIT: 3148+04.32

PI: 3153+06.02
D=0°01'41"

VILLAGE OF PLEASANT PRAIRIE
WATER

SECTION CORNER
DO NOT DISTURB

BM
609

3150

3155

EAST FRONTAGE ROAD

3160

BASE AGG
PE

BASE AGG
PE

BASE AGG
PE

BASE AGG
CE

SI

EX R/W

VILLAGE OF PLEASANT PRAIRIE
WATER

VILLAGE OF PLEASANT PRAIRIE
SEWER

WE ENERGIES
ELECTRICITY

AT&T LOCAL NETWORK
COMMUNICATION LINE

STRUCTURE C-30-0002
STA 3149+51 - STA 3149+63

VILLAGE OF PLEASANT PRAIRIE
SANITARY SEWER

REMOVING GUARDRAIL
SEE PLAN DETAILS FOR
MORE INFORMATION

UNNAMED TRIBUTARY
TO DES PLAINES RIVER
(WBIC 5042011)

SAMARTAL LLC

VILLAGE OF PLEASANT PRAIRIE

SAMARTAL LLC

MATCHLINE 3160+45.00

5

5

BENCHMARKS			
NO.	STATION	ELEV.	DESCRIPTION
609	3157+51	688.87	E BOLT SIGN BASE
607	3174+43	678.52	SE BOLT E LEG BSGN

MATCHLINE 3160+45.00

SI

REMOVING GUARDRAIL
SEE PLAN DETAILS FOR
MORE INFORMATION

WISCONSIN DEPARTMENT OF TRANSPORTATION
COMMUNICATION LINE

BM
607

3165

3170

3175

EAST FRONTAGE ROAD

BASE AGG
PE

EX R/W

LEGEND

WETLAND AREAS

*PAVEMENT MARKINGS SHOWN FOR INFORMATIONAL PURPOSES. REFER TO STANDARD DETAIL DRAWINGS FOR DETAILED LAYOUT INSTRUCTIONS.

SAMARTAL LLC

MATCHLINE 3175+20.00

PROJECT NO: 1032-10-75	HWY: EAST FRONTAGE ROAD	COUNTY: KENOSHA	PLANS	SHEET 198	E

FILE NAME : Y:\52XX\5252_DP20.NSFWYEFR.KNS\CADDS\10321015\SHEETSPLAN\050201-PN.DWG
LAYOUT NAME - 050205

PLOT DATE : 10/22/2021 4:01 PM PLOT BY : NICHOLAS BECKER PLOT NAME : PLOT SCALE : 1 IN:100 FT

WISDOT/CADDS SHEET 44

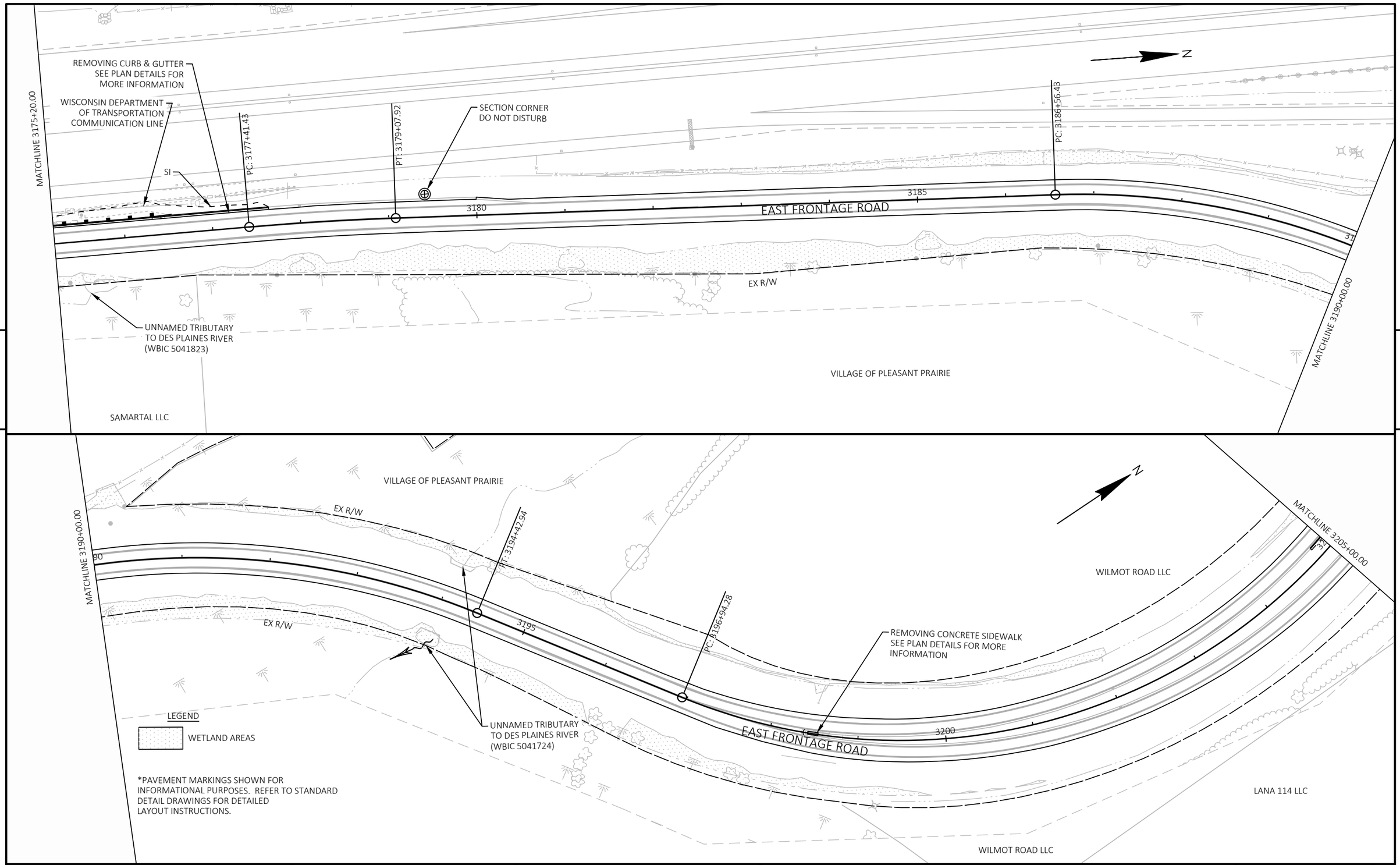

PROJECT NO: 1032-10-75	HWY: EAST FRONTAGE ROAD	COUNTY: KENOSHA	PLANS	SHEET 199	E

FILE NAME : Y:\52XX\5252_DP20.NSFWYEFR.KNS\CADDS\10321015\SHEETSPLAN\050201-PN.DWG
LAYOUT NAME - 050206

PLOT DATE : 10/22/2021 4:02 PM PLOT BY : NICHOLAS BECKER PLOT NAME : PLOT SCALE : 1 IN:100 FT

WISDOT/CADDS SHEET 44

WILMOT ROAD LLC

SANDRA L MAROLT

SANDRA L MAROLT

REMOVING CONCRETE SIDEWALK AND REMOVING CURB & GUTTER SEE CURB RAMP DETAILS FOR MORE INFORMATION

VILLAGE OF PLEASANT PRAIRIE WATER

WE ENERGIES GAS/PETROLEUM

ROSCOE FAMILY TRUST

DAVID R BARNES

NANCY G EISEN

REMOVING CONCRETE SIDEWALK AND REMOVING CURB & GUTTER SEE CURB RAMP DETAILS FOR MORE INFORMATION

PC: 5211+22.50

CTH C

MATCHLINE 3205+00.00

EX R/W

PT: 3207+51.73

EAST FRONTAGE ROAD

STA AHEAD = 5202+83.06
STA BACK = 3208+96.35

5210

5205

END CONSTRUCTION
3207+56.67
BUTT JOINT REQ'D
(SEE CONSTRUCTION DETAILS)

BASE AGG PE

BEGIN CONSTRUCTION
5204+31.10
BUTT JOINT REQ'D
(SEE CONSTRUCTION DETAILS)

EX R/W

DAVID R BARNES

EX R/W

REMOVING CONCRETE SIDEWALK AND REMOVING CURB & GUTTER SEE CURB RAMP DETAILS FOR MORE INFORMATION

MATCHLINE 5213+31.00

AT&T LOCAL NETWORK COMMUNICATION LINE

CAUTION

WE ENERGIES GAS/PETROLEUM

WE ENERGIES ELECTRICITY

11700 WILMOT RD LLC

CHARTER COMMUNICATIONS COMMUNICATION LINE

IMMY LLC

IMMY LLC

N

PT: 5218+85.99

PI: 5224+73.99
D=0°05'15"

5220

5215

EAST FRONTAGE ROAD

5225

EX R/W

BASE AGG PE

39.8' RT

ASPH PE

MATCHLINE 5213+31.00

MATCHLINE 5228+00.00

LEGEND

WETLAND AREAS

UNNAMED TRIBUTARY TO DES PLAINES RIVER (WBIC 5041724)

NANCY G EISEN

BRANKO TUPANJAC

MAHMOOD GHOUSE

*PAVEMENT MARKINGS SHOWN FOR INFORMATIONAL PURPOSES. REFER TO STANDARD DETAIL DRAWINGS FOR DETAILED LAYOUT INSTRUCTIONS.

PROJECT NO: 1032-10-75	HWY: EAST FRONTAGE ROAD	COUNTY: KENOSHA	PLANS	SHEET 200	E

FILE NAME : Y:\52XX\5252_DP20.NSFWYEFR.KNS\CADDS\10321015\SHEETSPLAN\050201-PN.DWG
LAYOUT NAME - 050207

PLOT DATE : 10/22/2021 4:03 PM PLOT BY : NICHOLAS BECKER PLOT NAME : PLOT SCALE : 1 IN:100 FT

WISDOT/CADDS SHEET 44

BENCHMARKS			
NO.	STATION	ELEV.	DESCRIPTION
618	5231+17	682.53	SE BOLT EAST SIGN LEG

MATCHLINE 5228+00.00

SECTION CORNER
DO NOT DISTURB

BM
618

PI: 5232+47.61
D=0°13'01"

WISCONSIN DEPARTMENT OF TRANSPORTATION
COMMUNICATION LINE

SI

DES PLAINES
RIVER

STRUCTURE B-30-99
STA 5236+11.20 - STA 5237+88.89
NO WORK PERFORMED

N

PI: 5242+00.30
D=0°09'30"

5230

5235

5240

EAST FRONTAGE ROAD

EX R/W

REMOVING GUARDRAIL
SEE PLAN DETAILS FOR
MORE INFORMATION

END CONSTRUCTION
5236+11.20
BUTT JOINT REQ'D
(SEE CONSTRUCTION DETAILS)

BEGIN CONSTRUCTION
5237+88.89
BUTT JOINT REQ'D
(SEE CONSTRUCTION DETAILS)

KENOSHA RACINE LAND TRUST INC

VILLAGE OF PLEASANT PRAIRIE

MATCHLINE 5243+00.00

5

5

MATCHLINE 5243+00.00

N

PI: 5246+26.01
D=0°07'23"

REMOVING GUARDRAIL
SEE PLAN DETAILS FOR
MORE INFORMATION

5245

5250

5255

EAST FRONTAGE ROAD

SI

EX R/W

KILBOURN ROAD
DITCH
(WBIC 736900)

LEGEND

WETLAND AREAS

*PAVEMENT MARKINGS SHOWN FOR
INFORMATIONAL PURPOSES. REFER TO STANDARD
DETAIL DRAWINGS FOR DETAILED
LAYOUT INSTRUCTIONS.

VILLAGE OF PLEASANT PRAIRIE

MATCHLINE 5257+55.00

PROJECT NO: 1032-10-75	HWY: EAST FRONTAGE ROAD	COUNTY: KENOSHA	PLANS	SHEET 201	E

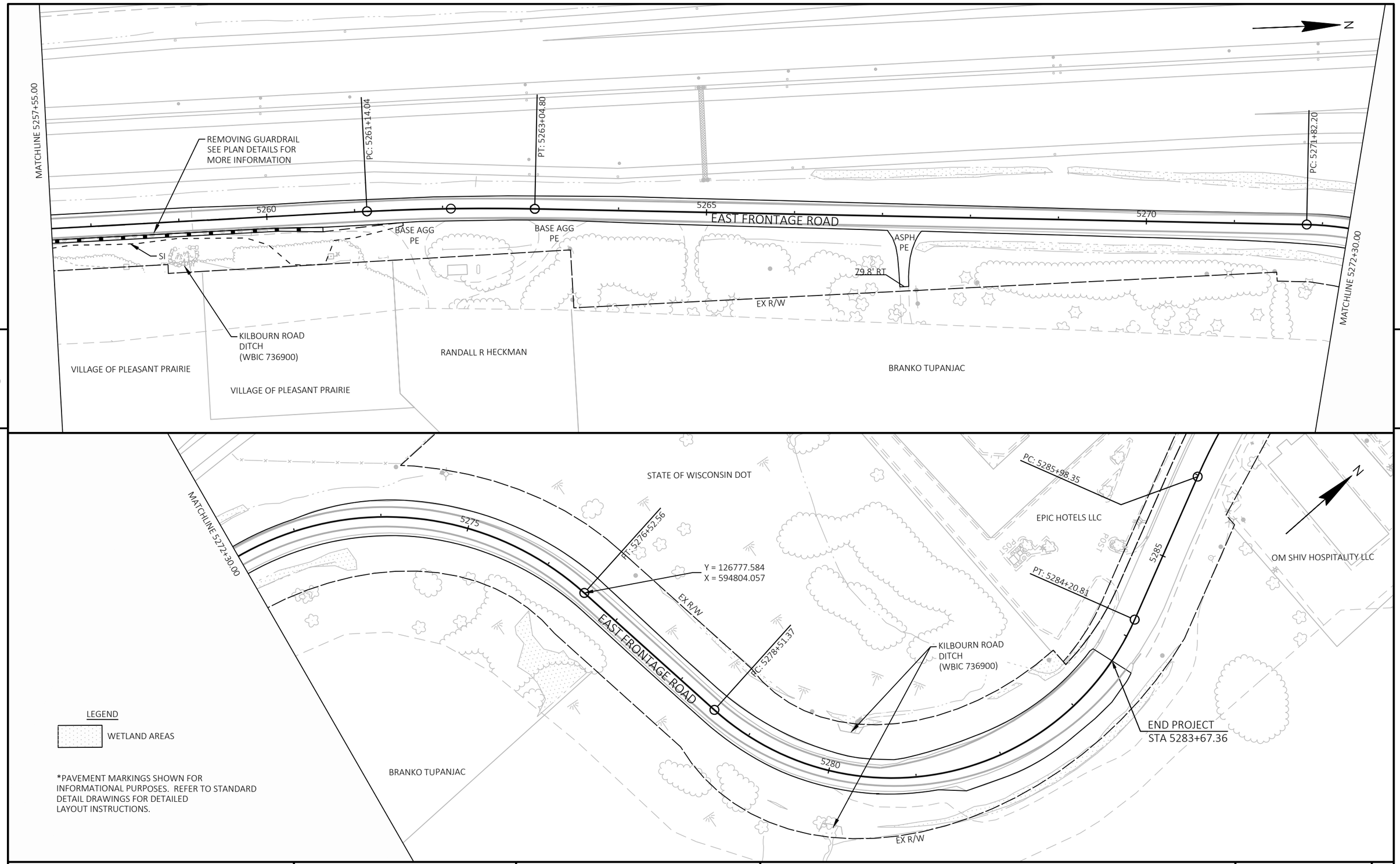

PROJECT NO: 1032-10-75	HWY: EAST FRONTAGE ROAD	COUNTY: KENOSHA	PLANS	SHEET 202	E

Standard Detail Drawing List

08A05-19A	INLET COVERS TYPE A, H, A-S, H-S & Z
08C06-02	INLETS 3-FT AND 4-FT DIAMETER
08C07-02	INLETS 2X2-FT, 2X2.5-FT, 2X3-FT AND 2.5X3-FT
08D01-22A	CONCRETE CURB & GUTTER
08D01-22B	CONCRETE CURB, TIES AND CURB AND GUTTER APPLICATIONS
08D02-07A	CONCRETE SURFACE DRAINS FLUME TYPE AT STRUCTURES
08D02-07B	CONCRETE SURFACE DRAINS FLUME TYPE AT STRUCTURES
08D02-07C	CONCRETE SURFACE DRAINS FLUME TYPE AT STRUCTURES
08D05-20A	CURB RAMPS TYPES 1 AND 1-A
08D05-20B	CURB RAMPS TYPES 2 AND 3
08D05-20D	CURB RAMPS TYPE 4B AND 4B1
08D05-20E	CURB RAMPS TYPES 5, 6, 7A, 7B & 8
08D05-20F	CURB RAMPS RADIAL DETECTABLE WARNING FIELD APPLICATIONS
08D05-20G	CURB RAMPS RECTANGULAR AND RADIAL DETECTABLE WARNING PLATES
08D21-01	DRIVEWAYS WITHOUT CURB & GUTTER
08D22-01	DRIVEWAYS WITHOUT CURB & GUTTER RESURFACING PROJECTS RURAL
08E08-03	TYPICAL INSTALLATIONS OF EROSION BALES / TEMPORARY DITCH CHECKS
08E09-06	SILT FENCE
08E10-02	INLET PROTECTION TYPE A, B, C AND D
08E14-01	TRACKING PAD
08E15-01	CULVERT PIPE CHECK
09B02-10	CONDUIT
09B04-11	PULL BOX
09B16-01	PULL BOX NON-CONDUCTIVE
09C02-09	CONCRETE BASES, TYPES 1, 2, 5, & 6
09C03-04	TRANSFORMER/PEDESTAL BASES
09C06-07	CONCRETE CONTROL CABINET BASE, TYPE 9, SPECIAL
09C12-09A	CONCRETE BASE TYPE 13
09C12-09B	CONCRETE BASE TYPE 13
09C15-01	CONCRETE BASE TYPE 10 SPECIAL
09D02-03	SIGNAL CONTROL CABINET
09E01-15B	POLE MOUNTINGS FOR TRAFFIC SIGNALS AND LIGHTING UNITS, TYPE 3 (HEAVY DUTY)
09E01-15D	POLE MOUNTINGS FOR LIGHTING UNITS, TYPE 5 (30 FEET)
09E01-15G	HARDWARE DETAILS FOR POLE MOUNTINGS
09E03-06	NON-FREEWAY LIGHTING UNIT POLE WIRING
09E07-06	TRAFFIC SIGNAL STANDARD PEDESTRIAN AND FLASHER TYPICAL MOUNTING DETAILS
09E08-09B	TYPE 9 SPECIAL POLE 35' MONOTUBE ARM
09E08-09C	TYPE 9 SPECIAL POLE 40' MONOTUBE ARM
09E08-09K	GENERAL NOTES,HARDWARE DETAILS FOR TYPE 9/10,9/10 SPECIAL,12 & 13 POLES W/MONOTUBE ARMS
09E12-01C	OVER HEIGHT TYPE 12 POLE 35'-55' MONOTUBE ARM
09E12-01D	OVER HEIGHT TYPE 13 POLE 35'-55' MONOTBE ARM
09E12-01E	GENERAL NOTES AND HARDWARE DETAILS FOR OVER HEIGHT TYPE 9, 10, 12 & 13 POLES WITH MONOTUBE ARMS
09F04-05	LOOP DETECTOR INSTALLED IN NEW CONCRETE PAVEMENT ROUND CSCP PULLBOX
09F07-05	LOOP DETECTOR INSTALLED IN NEW CONCRETE BASE WITH NEW ASPHALTIC OVERLAY ROUND CSCP PULLBOX
09F15-04B	LOOP DETECTOR INSTALLED IN BASE COURSE WITH PULL (SPLICE) BOX OFF ROADWAY (OPTION 2)
09G01-04B	SPAN WIRE TEMPORARY TRAFFIC SIGNAL
09G01-04D	SPAN WIRE TEMPORARY TRAFFIC SIGNAL
09G01-04E	SPAN WIRE TEMPORARY TRAFFIC SIGNAL
09G01-04F	SPAN WIRE TEMPORARY TRAFFIC SIGNAL
09G01-04G	SPAN WIRE TEMPORARY TRAFFIC SIGNAL
09H16-01	INSTALL WIRELESS ANTENNA
12A04-03	STRUCTURE IDENTIFICATION PLAQUES, RAMP GATES, SIGN BRIDGES & OVERHEAD SIGN SUPPORTS & TRAFFIC SIGNALS
13C01-19	CONCRETE PAVEMENT LONGITUDINAL JOINTS AND TIES
13C08-02	CONCRETE PAVEMENT PARTIAL DEPTH REPAIR
13C09-15A	CONCRETE PAVEMENT REPAIR AND REPLACEMENT
13C09-15B	CONCRETE PAVEMENT REPAIR AND REPLACEMENT
13C09-15C	CONCRETE PAVEMENT REPAIR AND REPLACEMENT
13C13-09	URBAN DOWELED CONCRETE PAVEMENT
13C14-07A	BASE PATCHING CONCRETE
13C14-07B	BASE PATCHING CONCRETE
13C14-07C	BASE PATCHING CONCRETE
13C15-06A	CONCRETE BASE
13C15-06B	CONCRETE BASE
13C18-07A	CONCRETE PAVEMENT JOINTING
13C18-07B	CONCRETE PAVEMENT STEEL REINFORCEMENT
13C18-07C	CONCRETE PAVEMENT JOINT TYPES
13C18-07D	CONCRETE PAVEMENT JOINT TYPES AT UTILITY FIXTURES

6

Standard Detail Drawing List

13C19-03	HMA LONGITUDINAL JOINTS
14B28-04A	GUARDRAIL MOW STRIP
14B28-04B	GUARDRAIL MOW STRIP
14B29-01	SAFETY EDGE
14B42-07A	MIDWEST GUARDRAIL SYSTEM (MGS) GUARDRAIL
14B42-07B	MIDWEST GUARDRAIL SYSTEM (MGS) GUARDRAIL
14B42-07C	MIDWEST GUARDRAIL SYSTEM (MGS) GUARDRAIL
14B42-07D	MIDWEST GUARDRAIL SYSTEM (MGS) GUARDRAIL
14B43-04A	MIDWEST GUARDRAIL SYSTEM LONG SPAN MGS (L)
14B43-04B	MIDWEST GUARDRAIL SYSTEM LONG SPAN MGS (L)
14B43-04C	MIDWEST GUARDRAIL SYSTEM LONG SPAN MGS (L)
14B44-04A	MIDWEST GUARDRAIL SYSTEM ENERGY ABSORBING TERMINAL (MGS)
14B44-04B	MIDWEST GUARDRAIL SYSTEM ENERGY ABSORBING TERMINAL (MGS)
14B44-04C	MIDWEST GUARDRAIL SYSTEM ENERGY ABSORBING TERMINAL (MGS)
14B45-05A	MIDWEST GUARDRAIL SYSTEM THRIE BEAM TRANSITION (MGS)
14B45-05B	MIDWEST GUARDRAIL SYSTEM THRIE BEAM TRANSITION (MGS)
14B45-05C	MIDWEST GUARDRAIL SYSTEM THRIE BEAM TRANSITION (MGS)
14B45-05D	MIDWEST GUARDRAIL SYSTEM THRIE BEAM TRANSITION (MGS)
15C02-08A	BARRICADES AND SIGNS FOR MAINLINE CLOSURES
15C02-08B	BARRICADES AND SIGNS FOR VARIOUS CLOSURES
15C02-08C	DETOUR SIGNING FOR MAINLINE CLOSURES
15C03-05	BARRICADES AND SIGNS FOR SIDEROAD CLOSURES
15C04-05	TRAFFIC CONTROL, ADVANCE WARNING SIGNS 45 M.P.H. OR GREATER TWO-WAY UNDIVIDED ROAD OPEN TO TRAFFIC
15C05-05	TRAFFIC CONTROL, ADVANCE WARNING SIGNS 40 M.P.H. OR LESS
15C07-15B	PAVEMENT MARKING WORDS
15C07-15C	PAVEMENT MARKING ARROWS
15C08-20A	LONGITUDINAL MARKING (MAINLINE)
15C08-20B	PAVEMENT MARKING (TURN LANES)
15C08-20C	PAVEMENT MARKING (TURN LANES)
15C11-09B	CHANNELIZING DEVICES DRUMS, CONES, BARRICADES AND VERTICAL PANELS
15C12-07	TRAFFIC CONTROL FOR LANE CLOSURE WITH FLAGGING OPERATION
15C18-05A	MEDIAN ISLAND MARKING PAVEMENT MARKINGS
15C18-05B	MEDIAN ISLAND MARKING MEDIAN ISLAND NOSE
15C18-05C	MEDIAN PAVEMENT MARKINGS DOUBLE ARROW WARNING SIGN PLACEMENT
15C21-10	SIGNING AND MARKING FOR TWO LANE TO FOUR LANE DIVIDED TRANSITIONS
15C33-04	STOP LINE AND CROSSWALK PAVEMENT MARKING
15C35-04A	PAVEMENT MARKING (INTERSECTIONS)
15D12-09A	TRAFFIC CONTROL, LANE CLOSURE
15D20-05B	TRAFFIC CONTROL, SINGLE RIGHT LANE CLOSURE, UNDIVIDED NON-FREEWAY/EXPRESSWAY
15D20-05C	TRAFFIC CONTROL, SINGLE LEFT LANE CLOSURE, UNDIVIDED NON-FREEWAY/EXPRESSWAY
15D21-07A	TRAFFIC CONTROL, INTERSECTION WITHIN SINGLE LANE CLOSURE
15D21-07B	TRAFFIC CONTROL, INTERSECTION WITHIN SINGLE LANE CLOSURE
15D28-04	TRAFFIC CONTROL, WORK ON SHOULDER OR PARKING LANE, UNDIVIDED ROADWAY
15D30-06A	TRAFFIC CONTROL, PEDESTRIAN ACCOMMODATION
15D30-06B	TRAFFIC CONTROL, TEMPORARY ADA COMPLIANT PEDESTRIAN ACCOMMODATION
15D30-06C	TRAFFIC CONTROL, PEDESTRIAN ACCOMMODATION
15D40-02A	TRAFFIC CONTROL, FULL LANE SHIFT NON-FREEWAY OR MULTILANE DIVIDED 45 MPH AND UNDER
15D44-02	TRAFFIC CONTROL, SIGNING ON ROADWAYS WITH MILLED SURFACES

6

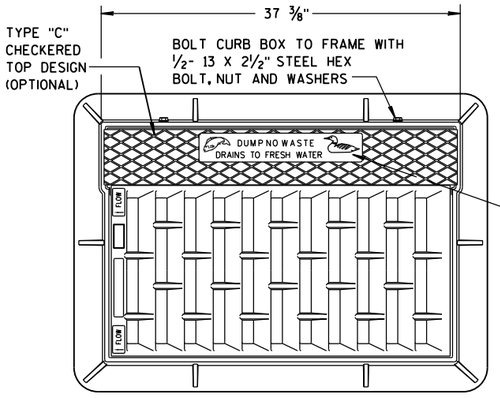

NOTE:
GRATE IS REVERSIBLE.

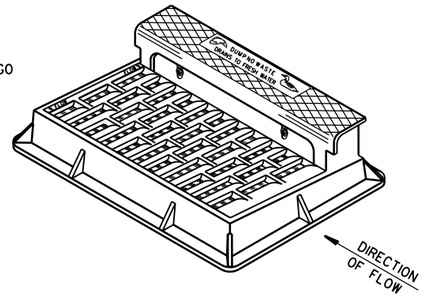

NOTE: CURB BOX HEIGHT ADJUSTABLE 6" TO 9"

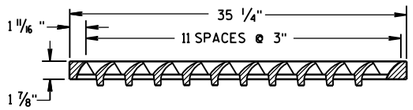

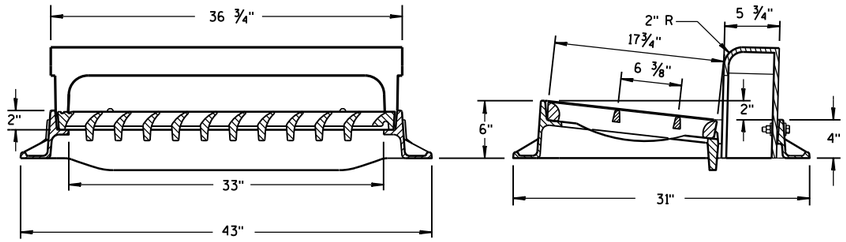

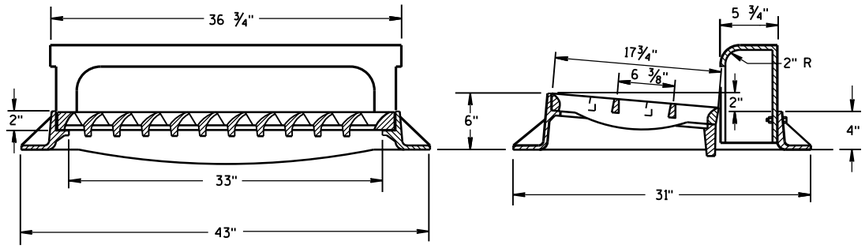

TYPE "H"

NOTE: EITHER CASTING IS ACCEPTABLE

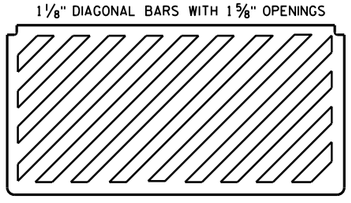

SPECIAL GRATE FOR TYPE "H" COVER

(MEASURES 35 1/4" X 17 3/4" X 2")

(NOTED AS TYPE H-S ON DRAINAGE TABLE)

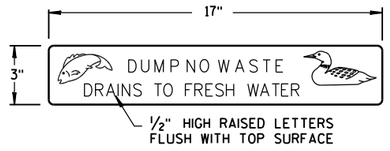

LOGO DETAIL

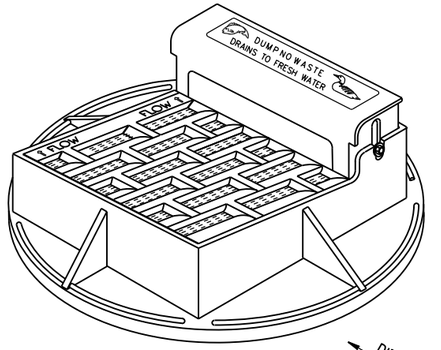

NOTE: CURB BOX ADJUSTABLE 4" TO 9"

NOTE:
GRATE IS REVERSIBLE.

GENERAL NOTES

DETAILS OF CONSTRUCTION, MATERIALS AND WORKMANSHIP NOT SHOWN ON THIS DRAWING SHALL CONFORM TO THE PERTINENT REQUIREMENTS OF THE STANDARD SPECIFICATIONS AND THE APPLICABLE SPECIAL PROVISIONS.

DETAIL DRAWINGS FOR PROPOSED ALTERNATE DESIGNS FOR CATCH BASIN, MANHOLE AND INLET COVERS SHALL BE SUBMITTED TO THE ENGINEER FOR APPROVAL PROVIDING THAT SUCH ALTERNATE DESIGNS MAKE PROVISION FOR EQUIVALENT CAPACITY AND STRENGTH.

ROUND FRAMES AND COVERS SHALL HAVE CONTINUOUSLY MACHINED BEARING SURFACES TO PREVENT ROCKING AND RATTLING.

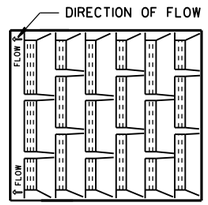

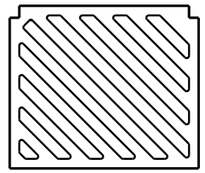

SPECIAL GRATE FOR TYPE "A" COVER

(MEASURES 19 3/4" X 17" X 1 7/8")

(NOTED AS TYPE A-S ON DRAINAGE TABLE)

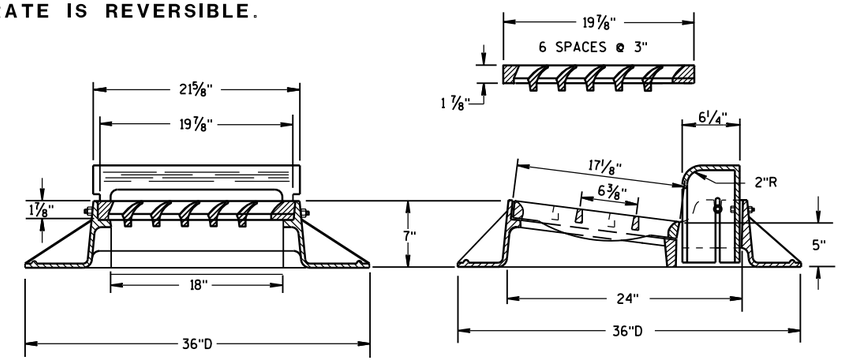

TYPE "A"

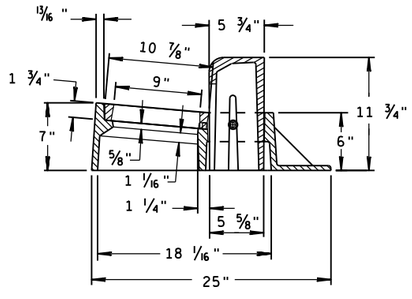

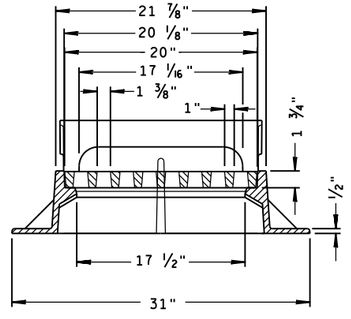

TYPE "Z"

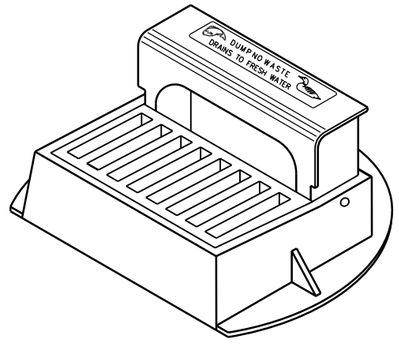

INLET COVERS
TYPE A, H, A-S, H-S & Z

STATE OF WISCONSIN
DEPARTMENT OF TRANSPORTATION

APPROVED
11-27-13 — DATE
/S/ Jerry H. Zogg — ROADWAY STANDARDS ENGINEER
FHWA

6

S.D.D. 8 A 5-19a

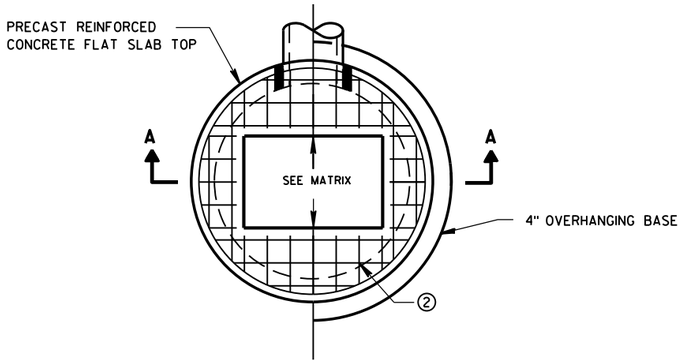

PLAN VIEW RECTANGULAR OPENING

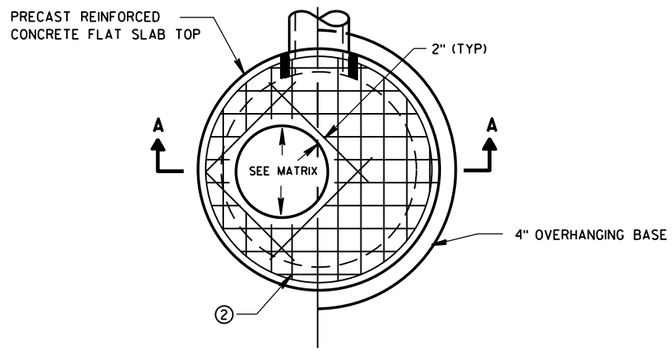

PLAN VIEW CIRCULAR OPENING

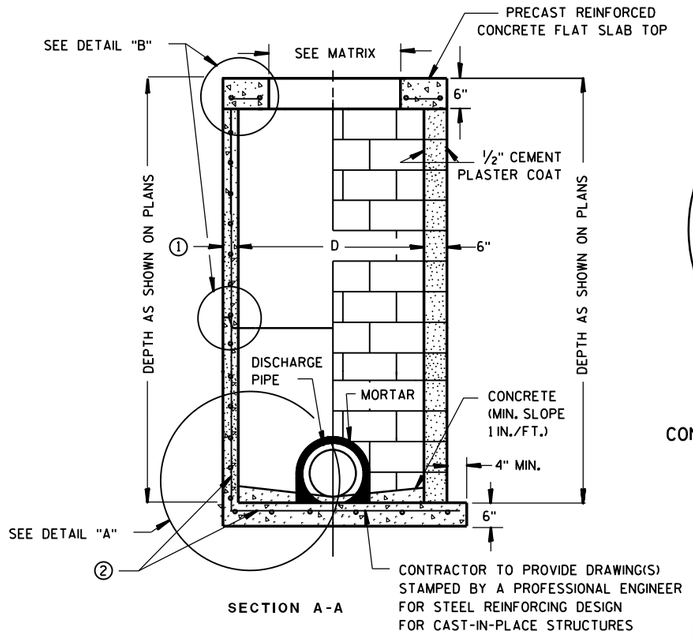

SECTION A-A

PRECAST REINFORCED CONCRETE WITH MONOLITHIC BASE

CONCRETE BLOCK WITH CAST-IN-PLACE OR PRECAST REINFORCED CONCRETE BASE ②

CIRCULAR INLETS W/ FLAT TOP

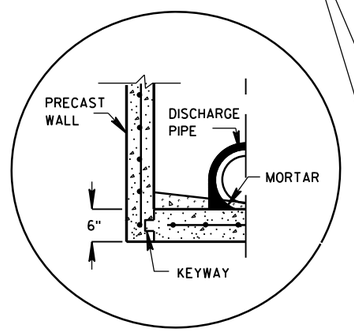

PRECAST REINFORCED CONCRETE WITH INTEGRAL BASE OPTION

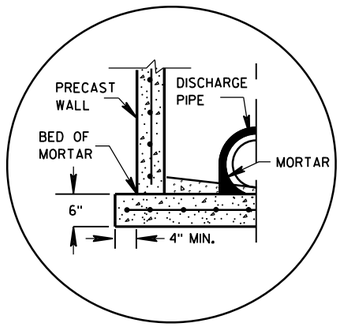

SEPARATE PRECAST REINFORCED CONCRETE BASE OPTION

DETAIL "A"

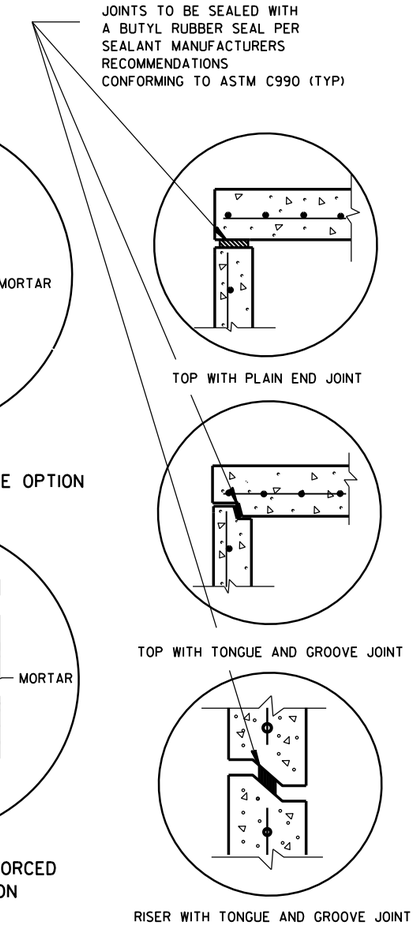

DETAIL "B"

GENERAL NOTES

DETAILS OF CONSTRUCTION, MATERIALS AND WORKMANSHIP NOT SHOWN ON THIS DRAWING SHALL CONFORM TO THE PERTINENT REQUIREMENTS OF THE STANDARD SPECIFICATIONS AND THE APPLICABLE SPECIAL PROVISIONS.

UNLESS OTHERWISE AUTHORIZED IN WRITING BY THE ENGINEER, THE CONTRACTOR SHALL NOT ORDER AND DELIVER PRECAST INLET UNITS REQUIRED FOR THE PROJECT UNTIL A LIST OF SIZES IS FURNISHED BY THE ENGINEER.

DETAILED DRAWINGS FOR PROPOSED ALTERNATE DESIGNS FOR UNDERGROUND DRAINAGE STRUCTURES SHALL BE SUBMITTED TO THE ENGINEER FOR APPROVAL PROVIDING THAT SUCH ALTERNATE DESIGNS MAKE PROVISION FOR EQUIVALENT CAPACITY AND STRENGTH.

ALL DRAINAGE STRUCTURES ARE DESIGNATED ON THE PLANS AS "MANHOLES 3X3-L", "CATCH BASINS 4-B", "INLETS 2X3-H", ETC. THE FIRST NUMBERS DESIGNATE THE SIZE OF THE STRUCTURE, AND THE FOLLOWING LETTER DESIGNATES THE TYPE OF COVER TO BE USED TO COMPRISE THE COMPLETE UNIT.

BASES SHALL BE PLACED ON A BED OF MATERIAL AT LEAST 6 INCHES IN DEPTH, WHICH MEETS THE REQUIREMENTS OF FOUNDATION BACKFILL. THIS BEDDING SHALL BE COMPACTED AND PROVIDE UNIFORM SUPPORT FOR THE ENTIRE AREA OF THE BASE.

ALL BAR STEEL REINFORCEMENT SHALL BE EMBEDDED 2 INCHES CLEAR UNLESS OTHERWISE SHOWN OR NOTED.

ALL PRECAST INLET UNITS SHALL CONFORM TO THE PERTINENT REQUIREMENTS OF AASHTO DESIGNATION M199.

PRECAST REINFORCED RISERS SHALL HAVE A TONGUE AND GROOVE JOINT WITH TONGUE UP OR DOWN.

4" OVERHANGING BASES ARE REQUIRED FOR ALL CONCRETE BLOCK INSTALLATIONS. 4" OVERHANG IS REQUIRED WHEN SEPARATE PRECAST BASE IS PROVIDED. OVERHANG IS NOT REQUIRED ON PRECAST STRUCTURES WITH AN INTEGRAL OR MONOLITHIC BASE.

FOR ADDITIONAL CONFIGURATIONS, MAINTAIN A MINIMUM OF 12 INCHES AS MEASURED FROM THE INSIDE OF THE STRUCTURE WALL BETWEEN THE OUTSIDE PIPE WALLS OF ADJACENT PIPES. SEE DETAIL "C".

① MINIMUM WALL THICKNESS SHALL BE 4-IN FOR 3-FT DIAMETER AND 5-IN FOR 4-FT DIAMETER PRECAST INLETS.

② FOR PRECAST CATCH BASINS PROVIDE REINFORCING STEEL IN ACCORDANCE TO AASHTO M199.

INLET COVER OPENING MATRIX

	INLET COVER TYPE	ALL A'S	ALL B'S	BW	C	F	ALL H'S	S	T	V	WM	Z
INLET SIZE	OPENING SIZE (FT)											
3-FT	2 DIA.				X							X
	2X2	X	X					X		X		
4-FT	2 DIA.				X							X
	2X2	X	X					X		X		
	2X2.5			X				X	X	X	X	
	2X3						X					
	2.5X3					X						

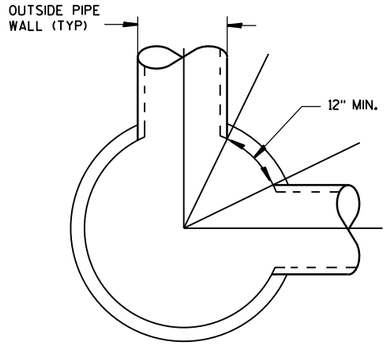

DETAIL "C"

PIPE MATRIX

INLET SIZE	MAXIMUM INSIDE PIPE DIAMETER FOR TWO PIPES	
	180° SEPARATION (IN)	90° SEPARATION (IN)
3-FT	15	12
4-FT	24	18

INLETS 3-FT AND 4-FT DIAMETER

STATE OF WISCONSIN
DEPARTMENT OF TRANSPORTATION

APPROVED
Sept., 2016 — /S/ Rodney Taylor
DATE — ROADWAY STANDARDS | UNIT SUPERVI ENT
FHWA

6

S.D.D. 8 C 6-2

6

S.D.D. 8 C 6-2

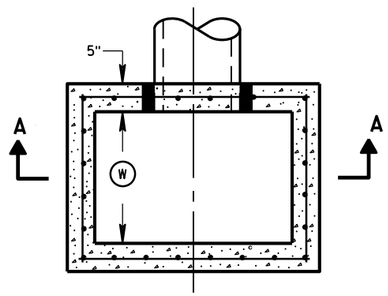

PLAN VIEW

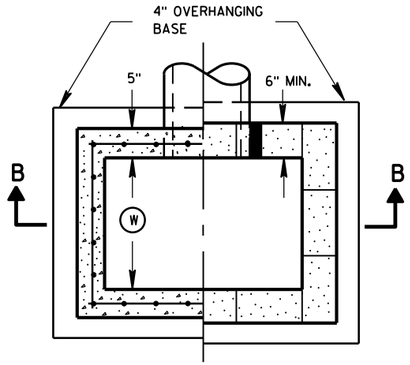

PLAN VIEW

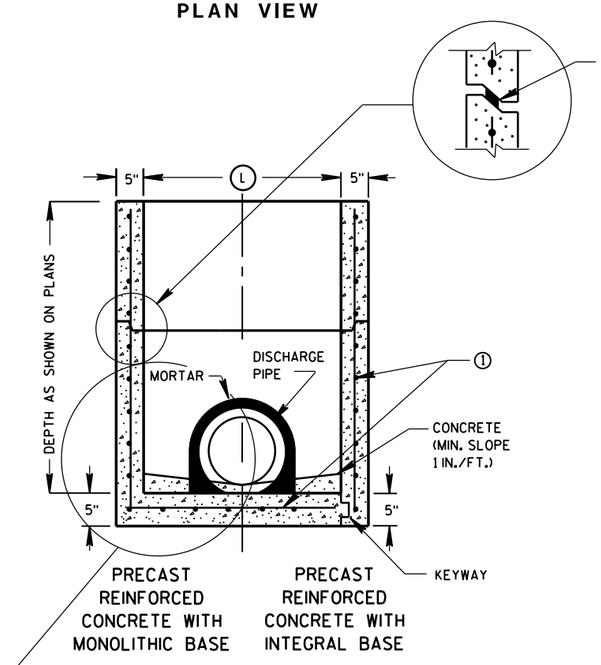

SECTION A-A

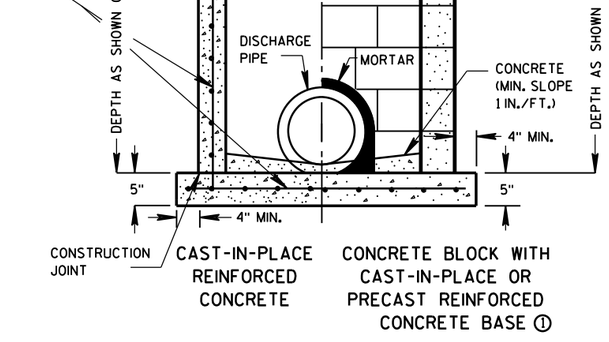

SECTION B-B

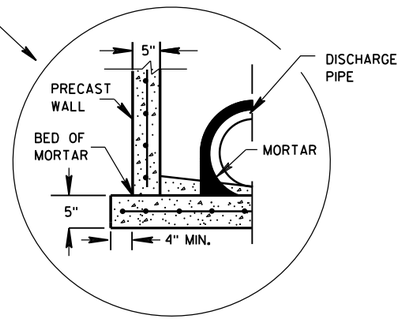

SEPARATE PRECAST REINFORCED CONCRETE BASE OPTION

GENERAL NOTES

DETAILS OF CONSTRUCTION, MATERIALS AND WORKMANSHIP NOT SHOWN ON THIS DRAWING SHALL CONFORM TO THE PERTINENT REQUIREMENTS OF THE STANDARD SPECIFICATIONS AND THE APPLICABLE SPECIAL PROVISIONS.

UNLESS OTHERWISE AUTHORIZED IN WRITING BY THE ENGINEER, THE CONTRACTOR SHALL NOT ORDER AND DELIVER PRECAST INLET UNITS REQUIRED FOR THE PROJECT UNTIL A LIST OF SIZES IS FURNISHED BY THE ENGINEER.

DETAILED DRAWINGS FOR PROPOSED ALTERNATE DESIGNS FOR UNDERGROUND DRAINAGE STRUCTURES SHALL BE SUBMITTED TO THE ENGINEER FOR APPROVAL PROVIDING THAT SUCH ALTERNATE DESIGNS MAKE PROVISION FOR EQUIVALENT CAPACITY AND STRENGTH.

ALL PRECAST INLET UNITS SHALL CONFORM TO THE PERTINENT REQUIREMENTS OF ASTM C 913.

ALL DRAINAGE STRUCTURES ARE DESIGNATED ON THE PLANS AS "MANHOLES 3X3-L", "CATCH BASINS 4-B", "INLETS 2X3-H", ETC. THE FIRST NUMBERS DESIGNATES THE SIZE OF THE STRUCTURE, AND THE FOLLOWING LETTER DESIGNATES THE TYPE OF COVER TO BE USED TO COMPRISE THE COMPLETE UNIT.

BASES SHALL BE PLACED ON A BED OF MATERIAL AT LEAST 6 INCHES IN DEPTH, WHICH MEETS THE REQUIREMENTS OF FOUNDATION BACKFILL. THIS BEDDING SHALL BE COMPACTED AND PROVIDE UNIFORM SUPPORT FOR THE ENTIRE AREA OF THE BASE.

ALL BAR STEEL REINFORCEMENT SHALL BE EMBEDDED 2 INCHES CLEAR UNLESS OTHERWISE SHOWN OR NOTED.

PRECAST REINFORCED RISERS SHALL HAVE A TONGUE AND GROOVE JOINT WITH TONGUE UP OR DOWN.

4" OVERHANGING BASES ARE REQUIRED FOR CAST-IN-PLACE REINFORCED CONCRETE AND CONCRETE BLOCK INSTALLATIONS.
4" OVERHANG IS REQUIRED WHEN SEPARATE PRECAST BASE IS PROVIDED.
OVERHANG IS NOT REQUIRED ON PRECAST STRUCTURES WITH AN INTEGRAL OR MONOLITHIC BASE.

MAXIMUM INSIDE PIPE DIAMETER DETERMINED BY 3 INCH CLEARANCE ON EACH SIDE OF THE OUTSIDE WALL OF THE PIPE. SEE DETAIL "A". ASSUMES PIPE ENTERS PERPENDICULAR TO THE STRUCTURE.

① FOR PRECAST INLETS PROVIDE REINFORCING STEEL IN ACCORDANCE TO ASTM C 913.

② CONTRACTOR TO PROVIDE DRAWING(S) STAMPED BY A PROFESSIONAL ENGINEER FOR STEEL REINFORCING DESIGN FOR CAST-IN-PLACE STRUCTURES.

INLET COVER MATRIX

INLET SIZE		INLET COVER TYPE	ALL A'S	ALL B'S	BW	F	ALL H'S	S	T	V	WM
	WIDTH (W) (FT)	LENGTH (L) (FT)									
2X2-FT	2	2	X	X				X		X	
2X2.5-FT	2	2.5			X			X	X	X	X
2X3-FT	2	3					X				
2.5X3-FT	2.5	3				X					

PIPE MATRIX

INLET SIZE	MAXIMUM INSIDE PIPE DIAMETER	
	WIDTH (IN)	LENGTH (IN)
2X2-FT	12	12
2X2.5-FT	12	18
2X3-FT	12	24
2.5X3-FT	18	24

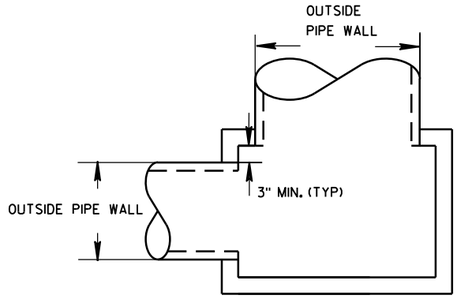

DETAIL "A"

INLETS 2X2-FT, 2X2.5-FT, 2X3-FT AND 2.5X3-FT

STATE OF WISCONSIN
DEPARTMENT OF TRANSPORTATION

APPROVED
Sept., 2016
DATE
/S/ Rodney Taylor
ROADWAY STANDARDS D IT
UNIT SUPERVIS
FHWA

6
S.D.D. 8 C 7-2

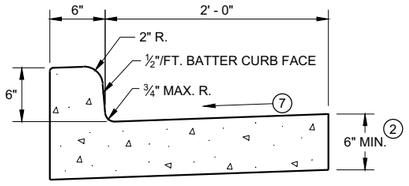

TYPES A (1) & D

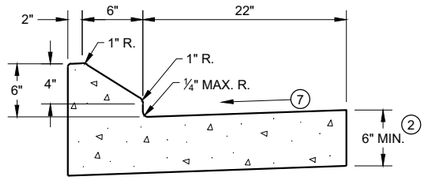

6" SLOPED CURB TYPES G (1) & J

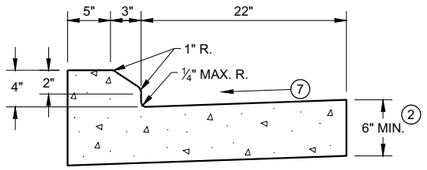

4" SLOPED CURB TYPES G (1) & J

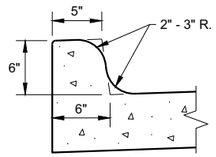

TYPES K (1) & L
(OPTIONAL CURB SHAPE)

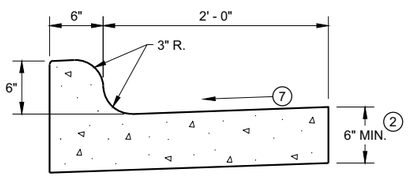

TYPES K (1) & L

CONCRETE CURB AND GUTTER 30"

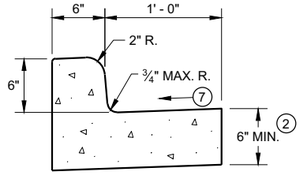

TYPES A (1) & D

CONCRETE CURB AND GUTTER 18"

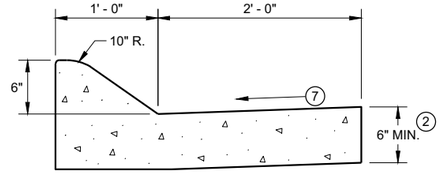

6" SLOPED CURB TYPES A (1) & D

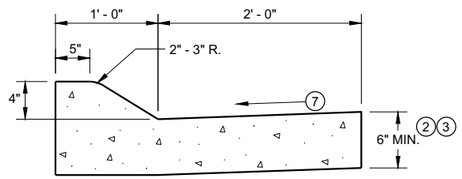

4" SLOPED CURB TYPES A (1) & D

CONCRETE CURB AND GUTTER 36"

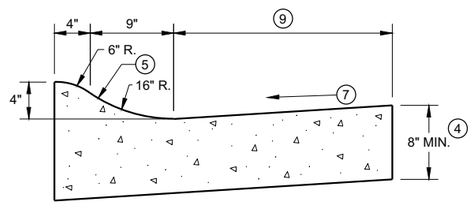

4" SLOPED CURB TYPES R (1) & T

TBT & TBTT	X
30"	22"
36"	28"

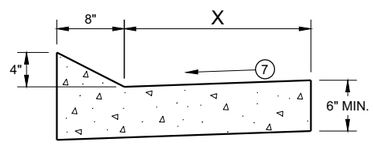

TYPES TBT & TBTT (1)

CONCRETE CURB AND GUTTER

PAVEMENT THICKNESS AND MAXIMUM CONCRETE PANEL WIDTH TABLE

PAVEMENT THICKNESS	MAXIMUM PANEL WIDTH
LESS THAN 10"	12'
10" & ABOVE	15'

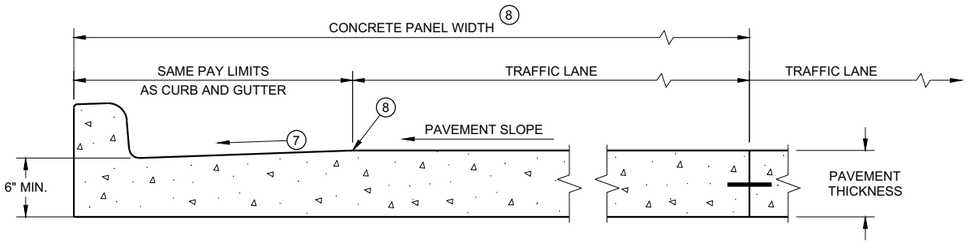

PARTIAL SECTION OF PAVEMENT * WITH INTEGRAL CURB AND GUTTER

* BIKE LANE IS NOT SHOWN

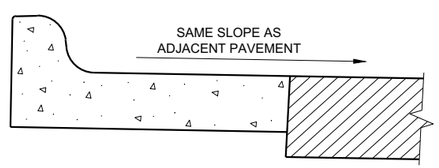

REVERSE SLOPE GUTTER (6)
(TYPICAL FOR ALL CURB & GUTTER TYPES)

GENERAL NOTES

DETAILS OF CONSTRUCTION AND WORKMANSHIP NOT SHOWN ON THIS DRAWING SHALL CONFORM TO THE PERTINENT REQUIREMENTS OF THE CONTRACT.

PAVEMENT TIES AND TIE BARS SHALL BE EPOXY COATED IN CONFORMANCE WITH SUBSECTION 505.2.6.2 OF THE STANDARD SPECIFICATIONS.

INTEGRAL CURB AND GUTTER SHALL CONFORM TO THE DETAILS SHOWN FOR CONCRETE CURB AND GUTTER INCLUDING THE TRANSVERSE GUTTER SLOPE.

UNLESS OTHERWISE SHOWN ON THE TYPICAL CROSS SECTIONS, THE BASE AGGREGATE AND COMMON EXCAVATION LIMITS ARE 2' - 0" BEHIND THE BACK OF CURBS.

(1) TIE BARS ARE REQUIRED FOR CURB AND GUTTERS TYPES A, G, K, R, AND TBTT.

(2) THE BOTTOM OF CURB AND GUTTER MAY BE CONSTRUCTED EITHER LEVEL OR PARALLEL TO THE SLOPE OF THE SUBGRADE OR BASE AGGREGATE PROVIDED A 6" MINIMUM GUTTER THICKNESS IS MAINTAINED.

(3) USE 8" MINIMUM GUTTER THICKNESS WHEN USED WITH AN ADJACENT CONCRETE TRUCK APRON PLACED BEHIND BACK OF CURB.

(4) THE BOTTOM OF CURB AND GUTTER MAY BE CONSTRUCTED EITHER LEVEL OR PARALLEL TO THE SLOPE OF THE SUBGRADE OR BASE AGGREGATE PROVIDED A 8" MINIMUM GUTTER THICKNESS IS MAINTAINED.

(5) UNLESS OTHERWISE NOTED, FOR STAKING PURPOSES THE FACE OF CURB IS 6" FROM THE BACK OF CURB.

(6) WHEN REVERSE SLOPE GUTTER IS REQUIRED, THE LOCATION(S) WILL BE SHOWN ELSEWHERE IN THE PLAN.

(7) USE 4% GUTTER CROSS SLOPE UNLESS OTHERWISE NOTED IN THE PLANS.

(8) INCLUDE LONGITUDINAL JOINT AND TIE BARS ALONG LANE EDGE WHEN CONCRETE PANEL WIDTH EXCEEDS THE MAXIMUM WIDTH PER TABLE BELOW. LONGITUDINAL JOINT(S) ARE NOT ALLOWED WITHIN TRAFFIC LANES AND BIKE LANES. LONGITUDINAL JOINT MAY BE SAWED.

(9) CONCRETE CURB AND GUTTER 4-INCH SLOPED 30-INCH TYPE "R" AND "T" = 17 INCHES
CONCRETE CURB AND GUTTER 4-INCH SLOPED 36-INCH TYPE "R" AND "T" = 23 INCHES

CONCRETE CURB AND GUTTER

STATE OF WISCONSIN
DEPARTMENT OF TRANSPORTATION

6

SDD 08D01 - 22a

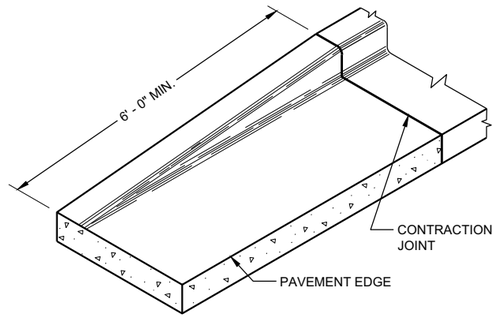

END SECTIONCURB AND GUTTER

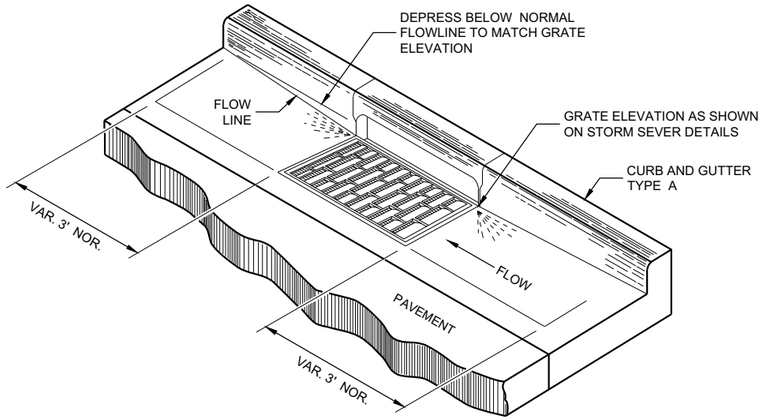

DETAIL OF CURB AND GUTTER AT INLETS
(TYPICAL H INLET COVER SHOWN)

GENERAL NOTES

DETAILS OF CONSTRUCTION AND WORKMANSHIP NOT SHOWN ON THIS DRAWING SHALL CONFORM TO THE PERTINENT REQUIREMENTS OF THE CONTRACT.

PAVEMENT TIES AND TIE BARS SHALL BE EPOXY COATED IN CONFORMANCE WITH SUBSECTION 505.2.6.2 OF THE STANDARD SPECIFICATIONS.

UNLESS OTHERWISE SHOWN ON THE TYPICAL CROSS SECTIONS, THE BASE AGGREGATE AND COMMON EXCAVATION LIMITS ARE 2' - 0" BEHIND THE BACK OF CURBS.

(1) TIE BARS ARE REQUIRED FOR CURB AND GUTTERS TYPES A, G, K, R, AND TBTT.

(2) THE BOTTOM OF CURB AND GUTTER MAY BE CONSTRUCTED EITHER LEVEL OR PARALLEL TO THE SLOPE OF THE SUBGRADE OR BASE AGGREGATE PROVIDED A 6" MINIMUM GUTTER THICKNESS IS MAINTAINED.

(9) REFER TO SDD 08D18 AND 08D19 FOR ADDITIONAL DRIVEWAY ENTRANCE CURB DETAILS.

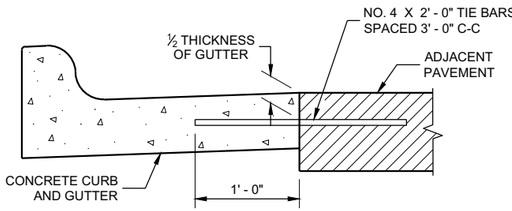

TYPICAL TIE BAR LOCATION (1)

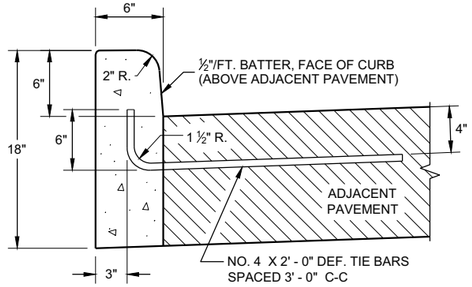

TYPES A (1) & D

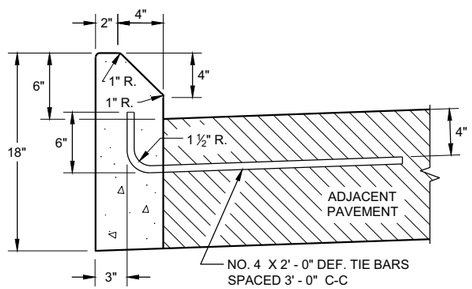

TYPES G (1) & J

CONCRETE CURB

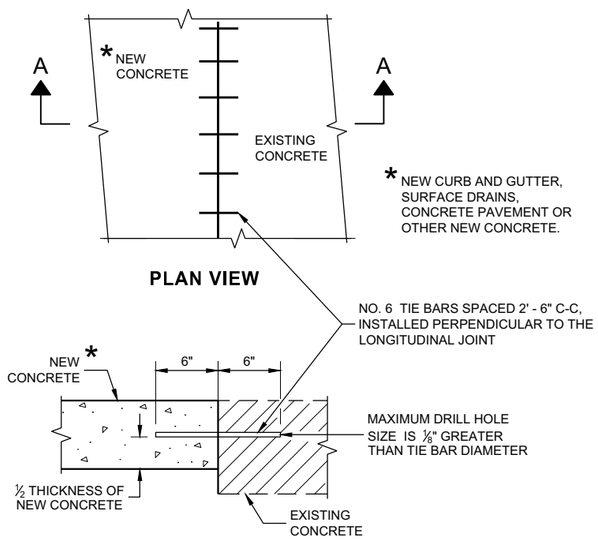

PLAN VIEW

SECTION A - A

TIE BARS DRILLED INTO EXISTING PAVEMENT

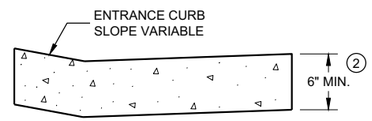

DRIVEWAY ENTRANCE CURB (9)
(WHEN DIRECTED BY THE ENGINEER)

CONCRETE CURB, TIES AND CURB AND GUTTER APPLICATIONS

STATE OF WISCONSIN
DEPARTMENT OF TRANSPORTATION

APPROVED
February 2021 — DATE
/S/ Rodnery Taylor — ROADWAY STANDARDS DEVE ENGINEER
FHWA

6

SDD08D01 - 22b

GENERAL NOTES

DETAILS OF CONSTRUCTION, MATERIALS AND WORKMANSHIP NOT SHOWN ON THIS DRAWING SHALL CONFORM TO THE PERTINENT REQUIREMENTS OF THE STANDARD SPECIFICATIONS AND THE APPLICABLE SPECIAL PROVISIONS.

ALL STEEL REINFORCEMENT SHALL BE EMBEDDED 2 INCHES CLEAR UNLESS OTHERWISE SHOWN OR NOTED.

(1) USE A JOINT SEALANT CONFORMING TO STANDARD SPECIFICATION 415.2.6.

(2) NO. 4 X 2' - 0" TIE BARS SPACED AT 12" C-C TO BE PLACED BY BRIDGE CONTRACTOR OR DRILLED TIE BARS PLACED AS DIRECTED BY THE ENGINEER.

(3) PAVED CONCRETE SHOULDER (SDD 13A03) OR CONCRETE DRAINAGE SLAB.

(4) CONCRETE PAVEMENT APPROACH SLAB (SHOWN) OR STRUCTURE APPROACH SLAB AND CONCRETE PAVEMENT APPROACH SLAB. SEE SDD 13B02.

(5) PAVED CONCRETE SHOULDER (SDD 13A03) OR ASPHALT SHOULDER.

(6) CONCRETE CURB AND GUTTER 4-INCH SLOPED 36-INCH TYPE TBT OR TBTT. USE TYPE TBTT CURB WITH NO. 4 X 2' -0" TIE BARS SPACED AT 3' - 0" C-C ONLY WHEN ADJACENT TO CONCRETE PAVEMENTS.

(7) PLACE FLUME BEFORE MSG THRIE BEAM TRANSITION POST 1 (SEE SDD 14B45)

(8) CENTER FLUME BETWEEN POSTS. 6-INCH MINIMUM SEPARATION FROM OUTSIDE EDGE OF FLUME TO POSTS.

(9) MINIMUM REINFORCEMENT SHALL BE 4" X 4" - W3.0 X W3.0 OR NO. 3 BARS LONGITUDINAL AND TRANSVERSE SPACING 12" C -C.

(10) SEE ROADWAY PLANS FOR FLUME LOCATION.

(11) START CURB AND GUTTER TRANSITION OR END SECTION.

(12) DEPRESS FLOW LINE (SEE DETAIL)

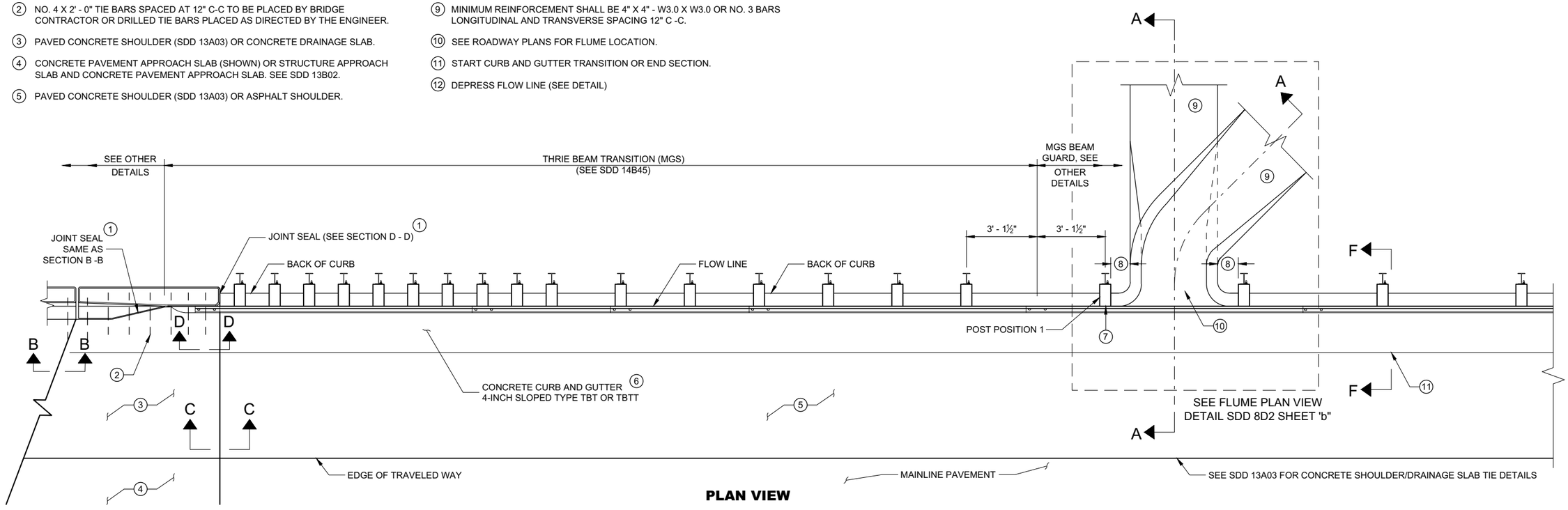

PLAN VIEW

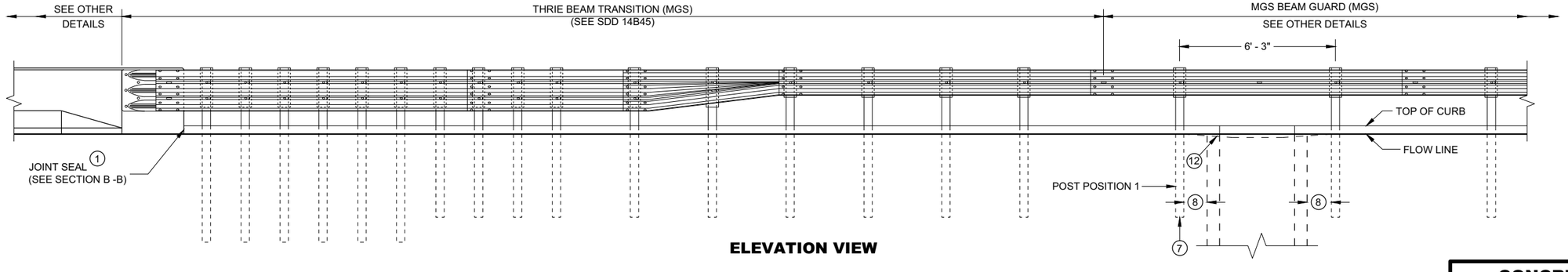

ELEVATION VIEW

CONCRETE SURFACE DRAINS FLUME TYPE AT STRUCTURES

STATE OF WISCONSIN
DEPARTMENT OF TRANSPORTATION

SDD 08D02 - 07a

SDD 08D02 - 07a

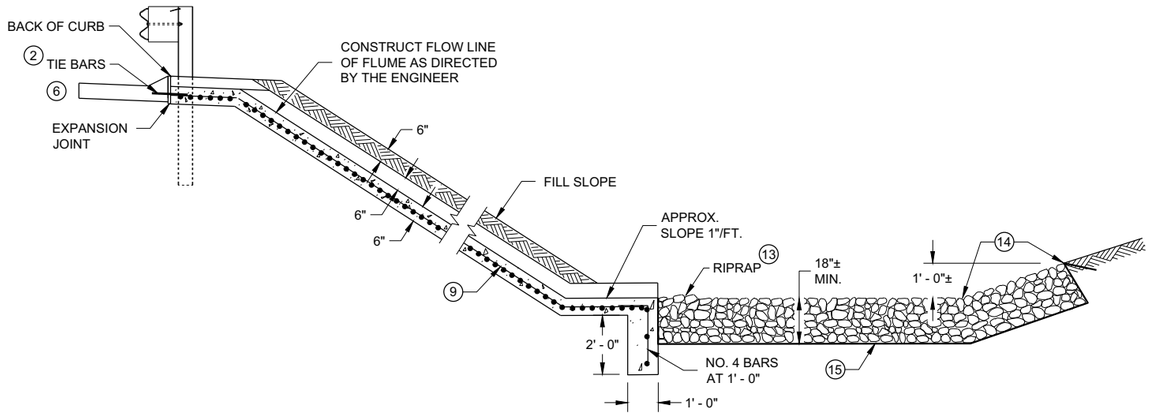

SECTION A - A

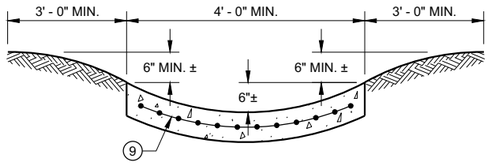

SECTION G - G

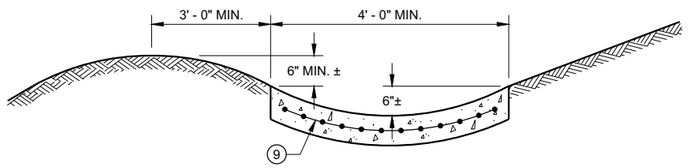

SECTION H - H

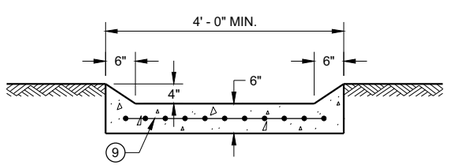

SECTION I - I

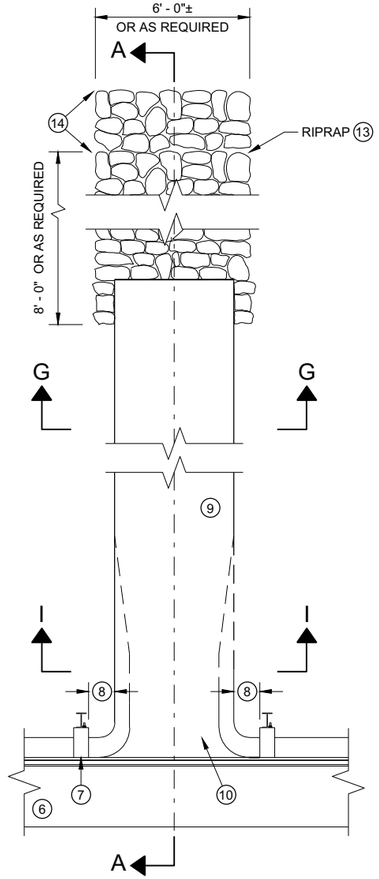

PLAN VIEW PERPENDICULAR FLUME

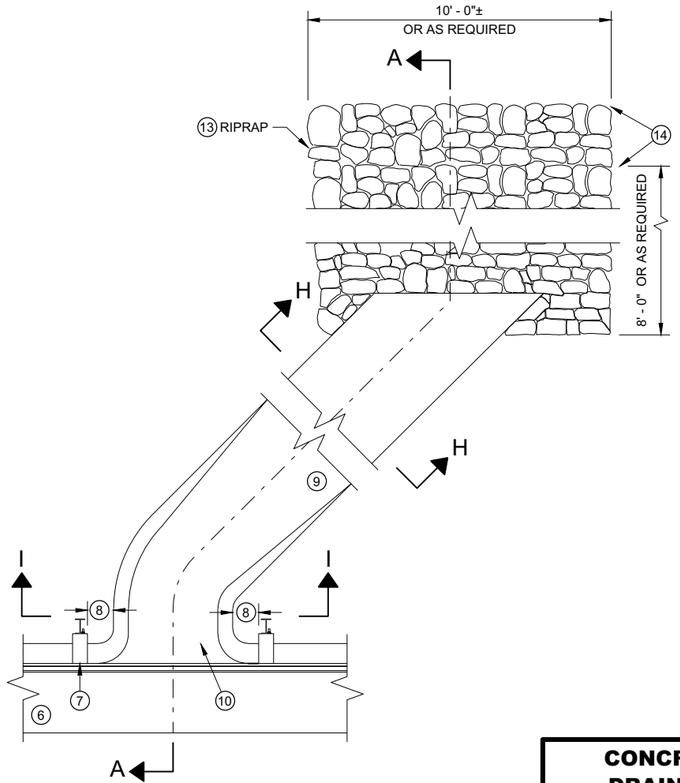

PLAN VIEW SKEWED FLUME

GENERAL NOTES

DETAILS OF CONSTRUCTION, MATERIALS AND WORKMANSHIP NOT SHOWN ON THIS DRAWING SHALL CONFORM TO THE PERTINENT REQUIREMENTS OF THE STANDARD SPECIFICATIONS AND THE APPLICABLE SPECIAL PROVISIONS.

ALL STEEL REINFORCEMENT SHALL BE EMBEDDED 2 INCHES CLEAR UNLESS OTHERWISE SHOWN OR NOTED.

1. USE A JOINT SEALANT CONFORMING TO STANDARD SPECIFICATION 415.2.6.
2. NO. 4 X 2' - 0" TIE BARS SPACED AT 12" C-C TO BE PLACED BY BRIDGE CONTRACTOR OR DRILLED TIE BARS PLACED AS DIRECTED BY THE ENGINEER.
3. PAVED CONCRETE SHOULDER (SDD 13A03) OR CONCRETE DRAINAGE SLAB.
4. CONCRETE PAVEMENT APPROACH SLAB (SHOWN) OR STRUCTURE APPROACH SLAB AND CONCRETE PAVEMENT APPROACH SLAB. SEE SDD 13B02 AND STRUCTURE PLANS.
5. PAVED CONCRETE SHOULDER (SDD 13A03) OR ASPHALT SHOULDER.
6. CONCRETE CURB AND GUTTER 4-INCH SLOPED 36-INCH TYPE TBT OR TBTT. USE TYPE TBTT CURB WITH NO. 4 X 2' -0" TIE BARS SPACED AT 3' - 0" C-C ONLY WHEN ADJACENT TO CONCRETE PAVEMENTS.
7. PLACE FLUME BEFORE MSG THRIE BEAM TRANSITION POST 1 (SEE SDD 14B45)
8. CENTER FLUME BETWEEN POSTS. 6-INCH MINIMUM SEPARATION FROM OUTSIDE EDGE OF FLUME TO POSTS.
9. MINIMUM REINFORCEMENT SHALL BE 4" X 4" - W3.0 X W3.0 OR NO. 3 BARS LONGITUDINAL AND TRANSVERSE SPACING 12" C -C.
10. SEE ROADWAY PLANS FOR FLUME LOCATION.
11. START CURB AND GUTTER TRANSITION OR END SECTION.
12. DEPRESS FLOW LINE (SEE DETAIL)
13. MEDIUM RIPRAP UNLESS OTHERWISE SPECIFIED.
14. LIMITS OF ADDITIONAL RIPRAP WHEN SPECIAL DITCH AS REQUIRED.
15. GEOTEXTILE FABRIC TYPE HR.

CONCRETE SURFACE DRAINS FLUME TYPE AT STRUCTURES

STATE OF WISCONSIN
DEPARTMENT OF TRANSPORTATION

6

SDD 08D02 - 07b
SDD 08D02 - 07b

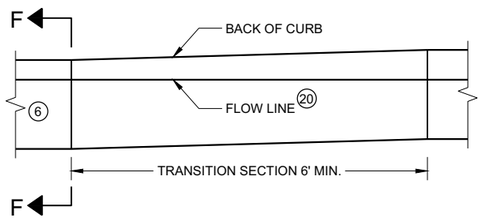

CURB AND GUTTER TRANSITION SECTION
CONCRETE CURB AND GUTTER 4-INCH SLOPED
36 INCH TYPE TBT OR TBTT

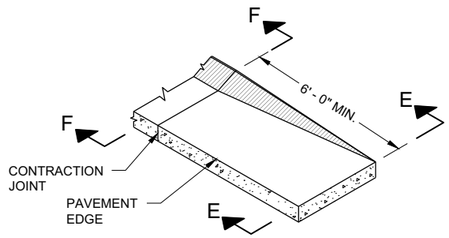

CURB AND GUTTER END SECTION
CONCRETE CURB AND GUTTER 4-INCH SLOPED
36 INCH TYPE TBT OR TBTT

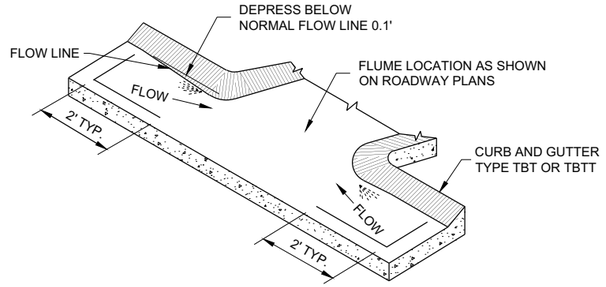

CURB AND GUTTER FLOW LINE DEPRESSION
AT FLUMES CONCRETE CURB AND GUTTER
4-INCH SLOPED 36 INCH TYPE TBT OR TBTT

GENERAL NOTES

DETAILS OF CONSTRUCTION, MATERIALS AND WORKMANSHIP NOT SHOWN ON THIS DRAWING SHALL CONFORM TO THE PERTINENT REQUIREMENTS OF THE STANDARD SPECIFICATIONS AND THE APPLICABLE SPECIAL PROVISIONS.

ALL STEEL REINFORCEMENT SHALL BE EMBEDDED 2 INCHES CLEAR UNLESS OTHERWISE SHOWN OR NOTED.

(1) USE A JOINT SEALANT CONFORMING TO STANDARD SPECIFICATION 415.2.6.

(2) NO. 4 X 2' - 0" TIE BARS SPACED AT 12" C-C TO BE PLACED BY BRIDGE CONTRACTOR OR DRILLED TIE BARS PLACED AS DIRECTED BY THE ENGINEER.

(3) PAVED CONCRETE SHOULDER (SDD 13A03) OR CONCRETE DRAINAGE SLAB.

(4) CONCRETE PAVEMENT APPROACH SLAB (SHOWN) OR STRUCTURE APPROACH SLAB AND CONCRETE PAVEMENT APPROACH SLAB. SEE SDD 13B02 AND STRUCTURE PLANS.

(5) PAVED CONCRETE SHOULDER (SDD 13A03) OR ASPHALT SHOULDER.

(6) CONCRETE CURB AND GUTTER 4-INCH SLOPED 36-INCH TYPE TBT OR TBTT. USE TYPE TBTT CURB WITH NO. 4 X 2' -0" TIE BARS SPACED AT 3' - 0" C-C ONLY WHEN ADJACENT TO CONCRETE PAVEMENTS.

(7) PLACE FLUME BEFORE MSG THRIE BEAM TRANSITION POST 1 (SEE SDD 14B45)

(8) CENTER FLUME BETWEEN POSTS. 6-INCH MINIMUM SEPARATION FROM OUTSIDE EDGE OF FLUME TO POSTS.

(9) MINIMUM REINFORCEMENT SHALL BE 4" X 4" - W3.0 X W3.0 OR NO. 3 BARS LONGITUDINAL AND TRANSVERSE SPACING 12" C -C.

(10) SEE ROADWAY PLANS FOR FLUME LOCATION.

(11) START CURB AND GUTTER TRANSITION OR END SECTION.

(12) DEPRESS FLOW LINE (SEE DETAIL)

(13) MEDIUM RIPRAP UNLESS OTHERWISE SPECIFIED.

(14) LIMITS OF ADDITIONAL RIPRAP WHEN SPECIAL DITCH IS REQUIRED.

(15) GEOTEXTILE FABRIC TYPE HR.

(16) MINIMUM REINFORCEMENT SHALL BE 6" X 6" - W4.0 X W4.0 OR NO. 3 BARS LONGITUDINAL AND TRANSVERSE SPACING 12" C - C.

(17) MSG THRIE BEAM TRANSITION POST 1. SEE SDD 14B45 FOR ADDITIONAL CONSTRUCTION DETAILS AND ACCEPTABLE MATERIALS.

(18) MAINTAIN WIDTH, THICKNESS AND CROSS SLOPE OF ADJACENT TYPE TBT OR TBTT CURB. SEE NOTE 6 FOR TIE BAR SPACING.

(19) ALIGN FACE OF POST BLOCK WITH FLOW LINE.

(20) MAINTAIN FLOW LINE AT EDGE OF PAVEMENT/FACE OF BEAM GUARD AS APPLICABLE.

(21) DO NOT CONSTRUCT AN EXPANSION JOINT OR INSTALL DOWEL BARS WHEN ABUTTING HMA PAVEMENTS.

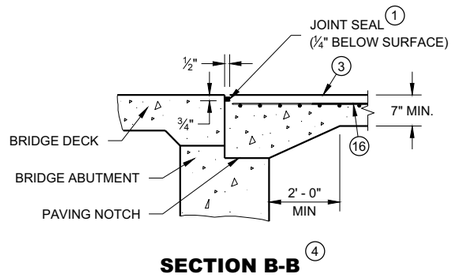

SECTION B-B (4)

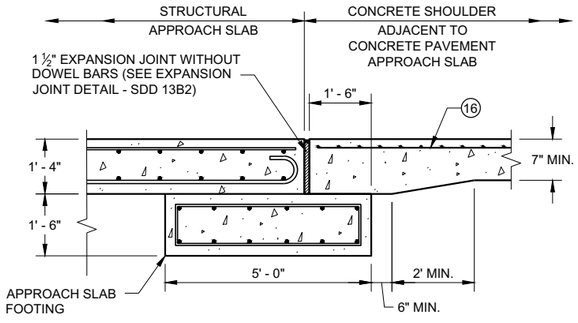

SECTION C - C
JOINT DETAIL FOR BRIDGE WITH STRUCTURAL APPROACH SLAB AND CONCRETE APPROACH SLAB

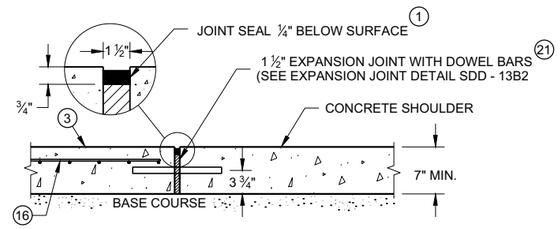

SECTION C - C
JOINT DETAIL FOR BRIDGE APPROACH WITH CONCRETE SHOULDERS

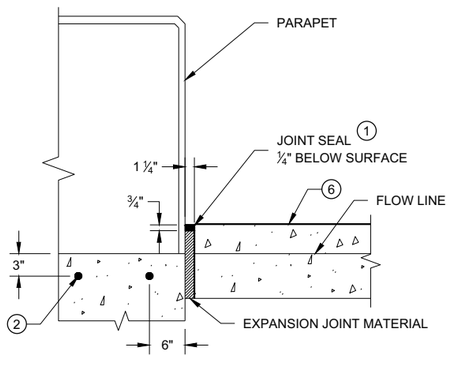

SECTION D - D

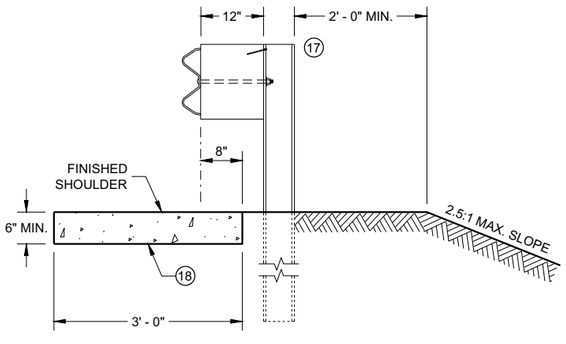

SECTION E - E

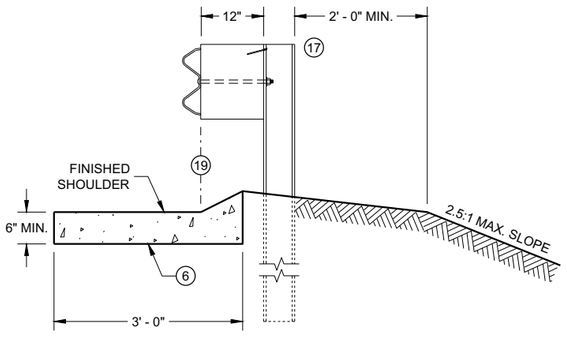

SECTION F - F

CONCRETE SURFACE DRAINS FLUME TYPE AT STRUCTURES

STATE OF WISCONSIN
DEPARTMENT OF TRANSPORTATION

APPROVED
February 2020 — DATE
/S/ Rodney Taylor — ROADWAY STANDARDS DEVE ENGINEER

FHWA

SDD 08D02 - 07c

SDD 08D02 - 07c

6

6

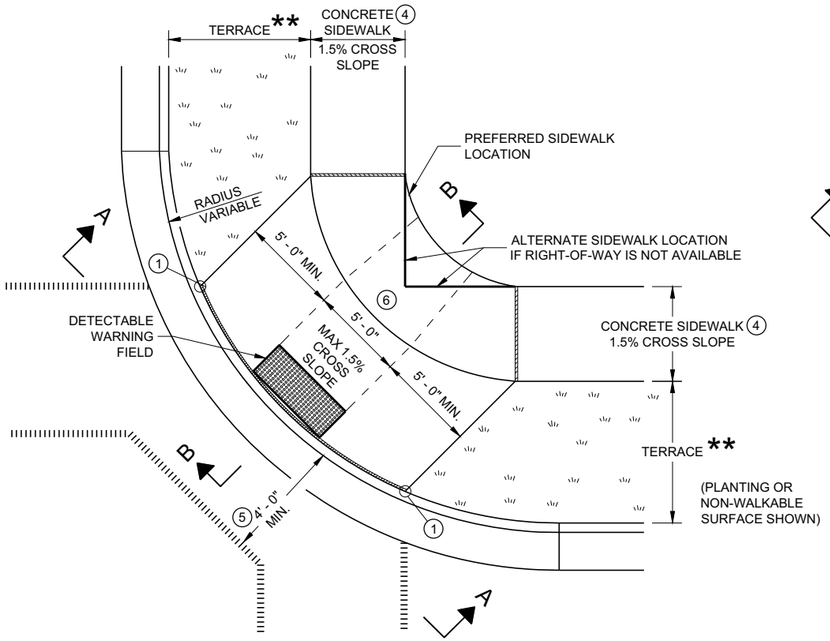

PLAN VIEW

CURB RAMP TYPE 1

(CENTER OF CORNER RADIUS)

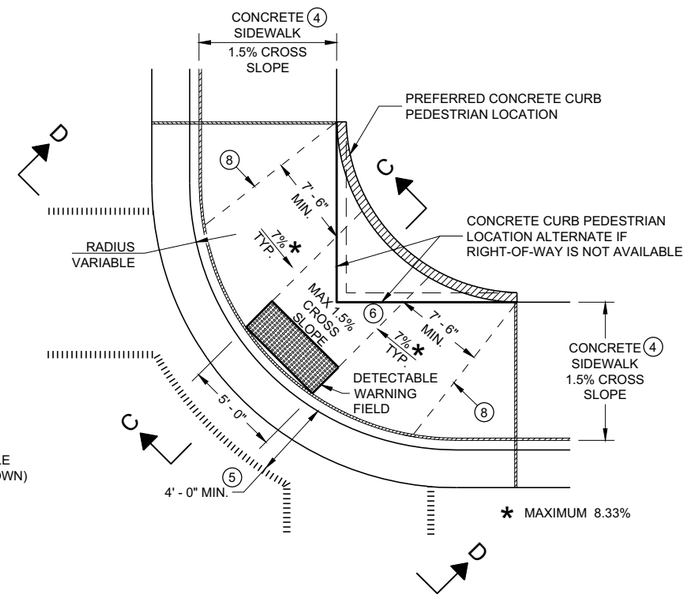

PLAN VIEW

CURB RAMP TYPE 1 - A

(NO TERRACE)

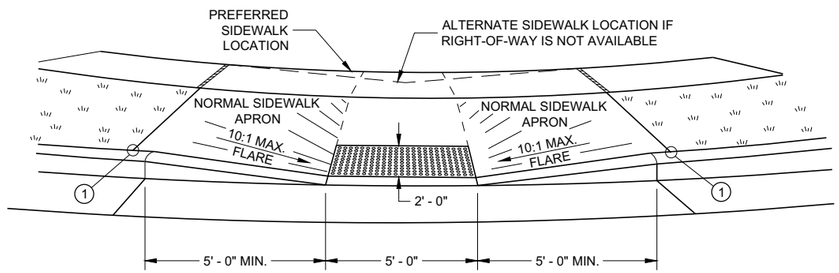

VIEW A - A FOR TYPE 1

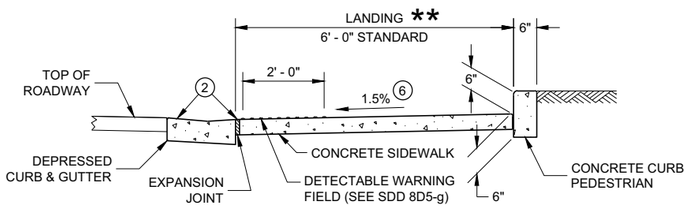

SECTION C - C FOR TYPE 1 - A

** WIDTH SHOWN ELSEWHERE IN THE PLANS

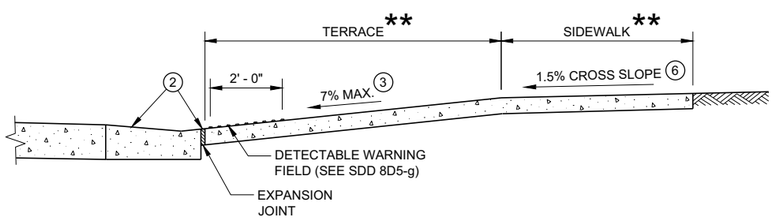

SECTION B - B FOR TYPE 1

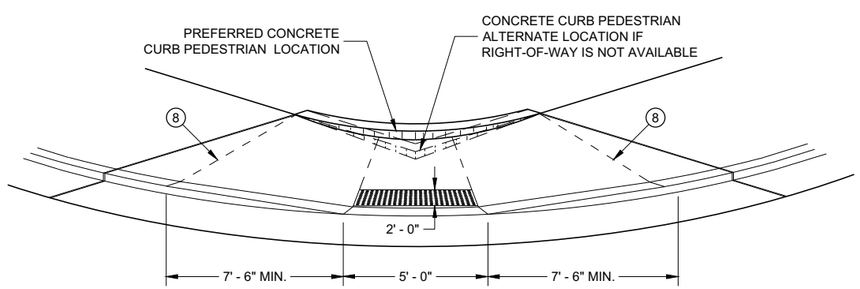

VIEW D - D FOR TYPE 1 - A

GENERAL NOTES

AVOID PLACING DRAINAGE STRUCTURES, JUNCTION BOXES OR OTHER OBSTRUCTIONS IN FRONT OF RAMP ACCESS AREAS.

DETAILS OF CONSTRUCTION, MATERIALS AND WORKMANSHIP NOT SHOWN ON THIS DRAWING SHALL CONFORM TO THE PERTINENT REQUIREMENTS OF THE STANDARD SPECIFICATIONS AND THE APPLICABLE SPECIAL PROVISIONS.

WHEN NECESSARY, THE SIDEWALK ELEVATION MAY BE LOWERED TO MEET THE HIGH POINT ON THE RAMP.

TYPE 1 CURB RAMPS SHALL HAVE A NORMAL SIDEWALK APRON AND CURB ON BOTH SIDES OF RAMP.

DETECTABLE WARNING FILED SHALL BE MEASURED AND PAID BY THE SQUARE FOOT AS "CURB RAMP DETECTABLE WARNING FIELD". THE CONCRETE PEDESTRIAN CURB, IF NEEDED, SHALL BE MEASURED AND PAID BY THE LINEAR FOOT AS "CONCRETE CURB PEDESTRIAN". CONCRETE SIDEWALK IN THE CURB RAMP AREA SHALL BE MEASURED AND PAID BY THE SQUARE FOOT AS CONCRETE SIDEWALK, INCLUDING THE AREA UNDER THE DETECTABLE WARNING FIELD.

SELECT CURB RAMP DETECTABLE WARNING FIELD MATERIALS AND DEVICES FROM THE DEPARTMENT'S APPROVED MATERIALS LIST. THE COLOR OF THE DETECTABLE WARNING FIELD IS SPECIFIED ELSEWHERE AND IS INCIDENTAL TO THE BID ITEM OF "CURB RAMP DETECTABLE WARNING FIELD"

DETECTABLE WARNING FIELDS THAT ARE INSTALLED AS A GROUP OR SIDE BY SIDE, SHALL BE FROM THE SAME MANUFACTURER.

SURFACE TEXTURE OF THE RAMP SHALL BE OBTAINED BY COARSE BROOMING TRANSVERSE TO THE SLOPE OF THE RAMP.

(1) THIS POINT IS AN EXTENSION OF OUTSIDE EDGE OF APPROACHING SIDEWALK WHERE IT MEETS THE BACK OF CONCRETE CURB. POINT LOCATION MAY BE ADJUSTED TO ALIGN WITH BEGINNING OF FULL-HEIGHT CURB IF THIS DISTANCE IS SHORT.

(2) GRADE CHANGE BETWEEN GUTTER FLAG SLOPE AND THE CURB RAMP SLOPE SHALL NOT EXCEED 11%. MAXIMUM GUTTER FLAG SLOPE IS 4%. PROVIDE LONGITUDINAL DRAINAGE AROUND CURB AND AWAY FROM CURB RAMP. NO VERTICAL LIPS OR DISCONTINUITIES GREATER THAN ¼ - INCH ARE ALLOWED. SLOPE OF CURB HEAD OPENING SHALL MATCH THE RAMP SLOPE, MINIMALLY 1.5% AND NOT TO EXCEED 7%. WHEN ADJACENT TO 1.5% LANDING, CONSTRUCT CURB HEAD OPENING AT 1.5% IN THE DIRECTION OF PEDESTRIAN TRAVEL.

(3) MAXIMUM 8.33% CURB RAMP SLOPE IS ALLOWABLE WITH FLATTENED GUTTER FLAG SLOPE AND NOT TO EXCEED 11% GRADE CHANGE.

(4) ±0.5% CONSTRUCTION TOLERANCE IN SIDEWALK CROSS SLOPE. THE SIDEWALK CROSS SLOPE SHALL NOT EXCEED 2% WITHOUT PRIOR APPROVAL FROM THE ENGINEER.

(5) PROVIDE A LEVEL LANDING IN THE STREET AND GUTTER AREA (2% MAXIMUM SLOPE IN ANY DIRECTION). WHEN THE GUTTER SLOPE EXCEEDS 2%, CONSTRUCT THE LEVEL LANDING IN THE STREET AREA.

(6) PROVIDE A LEVEL LANDING (MAXIMUM 2% SLOPE) IN ANY DIRECTION OF PEDESTRIAN TRAVEL. STANDARD LEVEL LANDING SIZE IS 5 FEET BY 5 FEET.

(8) PROVIDE GRADE BREAK PERPENDICULAR TO DIRECTION OF WHEELCHAIR TRAVEL.

LEGEND

- ½" EXPANSION JOINT SIDEWALK
- CONTRACTION JOINT FIELD LOCATED
- PAVEMENT MARKING CROSSWALK (WHITE)

CURB RAMPS
TYPE 1 AND 1-A

STATE OF WISCONSIN
DEPARTMENT OF TRANSPORTATION

6

SDD 08D05 - 20a

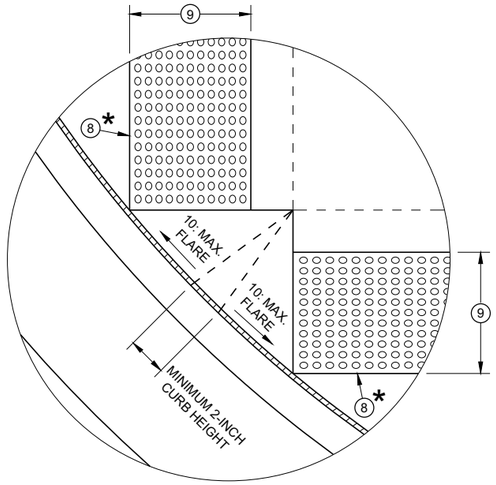

DETAIL A

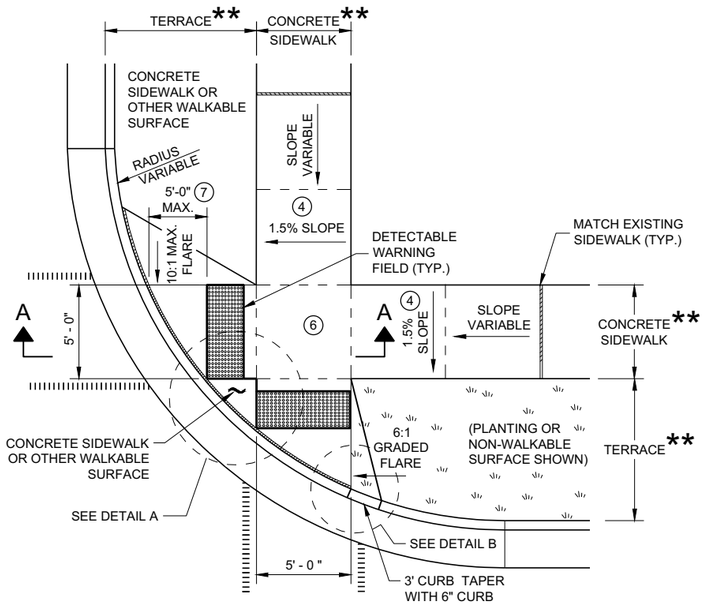

PLAN VIEW
CURB RAMP TYPE 2
(CENTER OF CORNER RADIUS)

GENERAL NOTES

AVOID PLACING DRAINAGE STRUCTURES, JUNCTION BOXES OR OTHER OBSTRUCTIONS IN FRONT OF RAMP ACCESS AREAS.

DETAILS OF CONSTRUCTION, MATERIALS AND WORKMANSHIP NOT SHOWN ON THIS DRAWING SHALL CONFORM TO THE PERTINENT REQUIREMENTS OF THE STANDARD SPECIFICATIONS AND THE APPLICABLE SPECIAL PROVISIONS.

DETECTABLE WARNING FIELDS THAT ARE INSTALLED AS A GROUP OR SIDE BY SIDE SHALL BE FROM THE SAME MANUFACTURER.

(2) GRADE CHANGE BETWEEN GUTTER FLAG SLOPE AND THE CURB RAMP SLOPE SHALL NOT EXCEED 11%. MAXIMUM GUTTER FLAG SLOPE IS 4%. PROVIDE LONGITUDINAL DRAINAGE AROUND CURB AND AWAY FROM CURB RAMP. NO VERTICAL LIPS OR DISCONTINUITIES GREATER THAN ¼ - INCH ARE ALLOWED. SLOPE OF CURB HEAD OPENING SHALL MATCH THE RAMP SLOPE, MINIMALLY 1.5% AND NOT TO EXCEED 7%. WHEN ADJACENT TO 1.5% LANDING, CONSTRUCT CURB HEAD OPENING AT 1.5% IN THE DIRECTION OF PEDESTRIAN TRAVEL.

(3) AN 8.33% CURB RAMP SLOPE IS ALLOWABLE WITH FLATTENED GUTTER FLAG SLOPE (2.67% OR LESS) AND NOT TO EXCEED 11% GRADE CHANGE.

(4) ±0.5% CONSTRUCTION TOLERANCE IN SIDEWALK CROSS SLOPE. THE SIDEWALK CROSS SLOPE SHALL NOT EXCEED 2% WITHOUT PRIOR APPROVAL FROM THE ENGINEER.

(6) PROVIDE A LEVEL LANDING (MAXIMUM 2% SLOPE) IN ANY DIRECTION OF PEDESTRIAN TRAVEL. STANDARD LEVEL LANDING SIZE IS 5 FEET X 5 FEET.

(7) WHEN GRADE BREAK DISTANCE EXCEEDS 5 FEET, USE RADIAL DETECTABLE WARNING FIELD PER SDD 8D5-f.

(8) PROVIDE GRADE BREAK PERPENDICULAR TO DIRECTION OF WHEELCHAIR TRAVEL.

(9) WHEN DISTANCE IS LESS THAN 6' - 0", IT MAY BE DIFFICULT TO ACHIEVE A 7% SLOPE OR FLATTER ALONG THE RAMP. REDUCE CURB HEIGHT IN TRIANGLE AREA TO ACHIEVE 7% SLOPE OR FLATTER ON RAMP. CONSTRUCT 2-INCH MINIMUM CURB HEIGHT BETWEEN 10:1 FLARES.

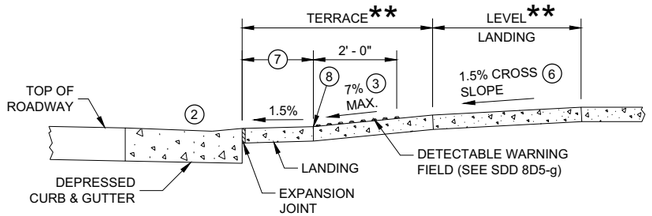

SECTION A - A FOR TYPE 2

* MAXIMUM 2.0% SLOPE IN ALL DIRECTIONS IN FRONT OF GRADE BREAK

** WIDTH SHOWN ELSEWHERE IN THE PLANS

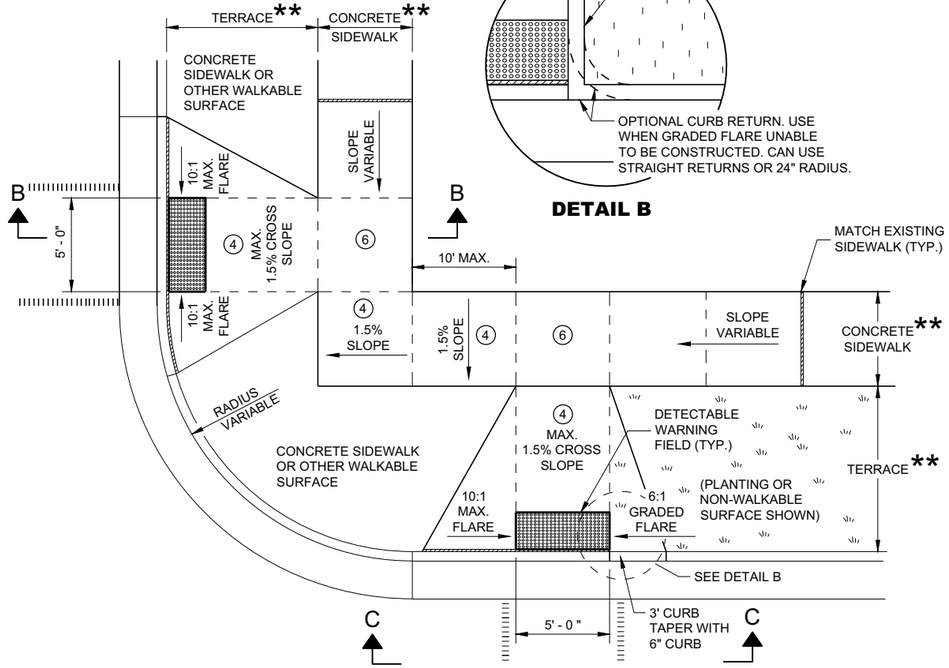

DETAIL B

PLAN VIEW
CURB RAMP TYPE 3
(OUTSIDE OF CROSSWALK AREA)

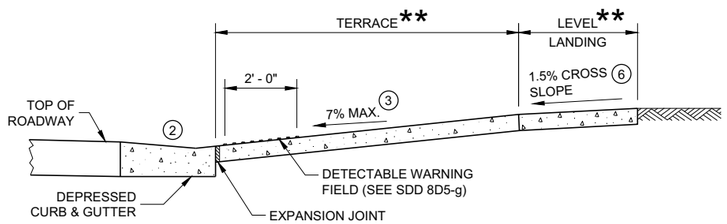

SECTION B - B FOR TYPE 3

LEGEND

- ½" EXPANSION JOINT SIDEWALK
- CONTRACTION JOINT SIDEWALK
- PAVEMENT MARKING CROSSWALK (WHITE)

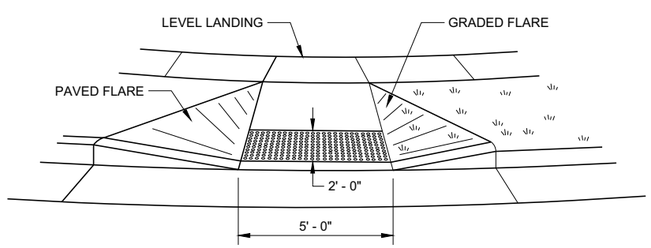

VIEW C - C FOR TYPE 3

CURB RAMPS TYPE 2 AND 3

STATE OF WISCONSIN
DEPARTMENT OF TRANSPORTATION

6

SDD 08D05 - 20b

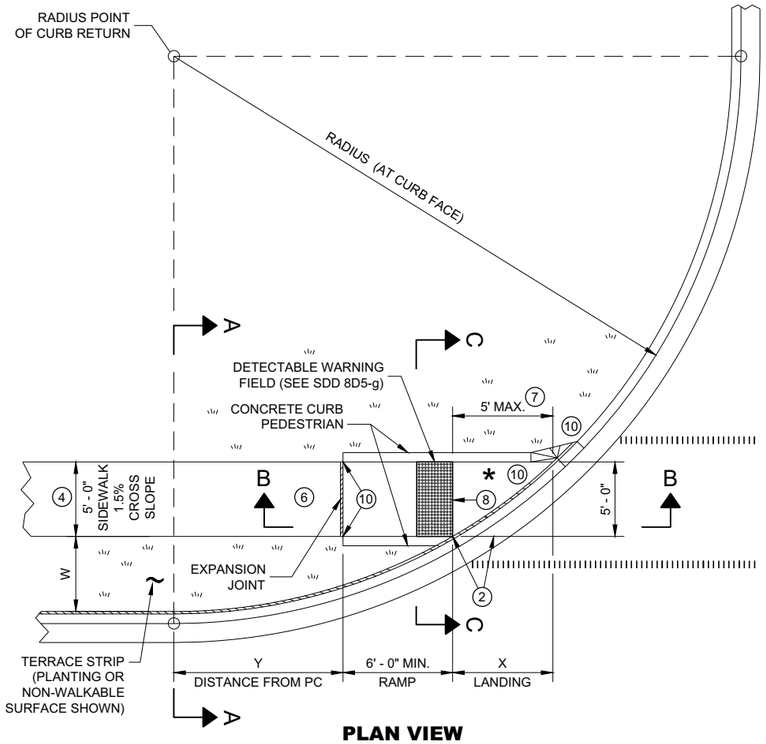

PLAN VIEW

CURB RAMP TYPE 4B

RADIUS (AT CURB FACE)	W = 3' - 0"		W = 4' - 0"		W = 5' - 0"		W = 6' - 0"		W = 7' - 0"		W = 8' - 0"		W = 9' - 0"		W = 10' - 0"	
	X	Y	X	Y	X	Y	X	Y	X	Y	X	Y	X	Y	X	Y
10 FEET	2' - 10 ¼"	0' - 5"	2' - 1"	1' - 4 ½"	1' - 5"	2' - 1"	0' - 10"	2' - 7 ½"	0' - 3 ¼"	3' - 0 ¼"						
15 FEET	4' - 6 ¾"	2' - 1 ¾"	3' - 9"	3' - 5 ¾"	3' - 1 ¼"	4' - 6"	2' - 6 ¾"	5' - 4 ½"	2' - 1"	6' - 1"	1' - 8"	6' - 8 ½"	1' - 3 ¼"	7' - 2 ½"	0' - 10 ¾"	7' - 7 ¼"
20 FEET	5' - 9 ¾"	3' - 6 ½"	4' - 11 ½"	5' - 1 ¾"	4' - 3 ¼"	6' - 5 ½"	3' - 8 ¾"	7' - 7"	3' - 3"	8' - 6 ½"	2' - 10"	9' - 4 ½"	2' - 5 ½"	10' - 1 ¼"	2' - 1 ¼"	10' - 9"
30 FEET			6' - 9 ¼"	7' - 11 ¼"	6' - 0 ¼"	9' - 8"	5' - 5"	11' - 1 ¾"	4' - 10 ¾"	12' - 5 ¾"	4' - 5 ½"	13' - 7 ¾"	4' - 0 ¾"	14' - 8 ½"	3' - 8 ½"	15' - 8 ¼"
40 FEET									6' - 1 ¾"	15' - 8 ½"	5' - 8"	17' - 2"	5' - 3"	18' - 5 ¾"	4' - 10 ¾"	19' - 8 ¼"
50 FEET															5' - 10 ¼"	23' - 2"

INTERMEDIATE RADII CAN BE INTERPOLATED
DIMENSION "Y" IS CALCULATED BASED ON 6'-0" RAMP LENGTH
DIMENSION "X" IS CALCULATED BASED ON 5'-0" SIDEWALK WIDTH

LEGEND

- ½" EXPANSION JOINT SIDEWALK
- CONTRACTION JOINT SIDEWALK
- PAVEMENT MARKING CROSSWALK (WHITE)

GENERAL NOTES

AVOID PLACING DRAINAGE STRUCTURES, JUNCTION BOXES OR OTHER OBSTRUCTIONS IN FRONT OF RAMP ACCESS AREAS.

DETAILS OF CONSTRUCTION, MATERIALS AND WORKMANSHIP NOT SHOWN ON THIS DRAWING SHALL CONFORM TO THE PERTINENT REQUIREMENTS OF THE STANDARD SPECIFICATIONS AND THE APPLICABLE SPECIAL PROVISIONS.

DETECTABLE WARNING FIELDS THAT ARE INSTALLED AS A GROUP OR SIDE BY SIDE, SHALL BE FROM THE SAME MANUFACTURER.

(2) GRADE CHANGE BETWEEN GUTTER FLAG SLOPE AND THE CURB RAMP SLOPE SHALL NOT EXCEED 11%. MAXIMUM GUTTER FLAG SLOPE IS 4%. PROVIDE LONGITUDINAL DRAINAGE AROUND CURB AND AWAY FROM CURB RAMP. NO VERTICAL LIPS OR DISCONTINUITIES GREATER THAN ¼ - INCH ARE ALLOWED. SLOPE OF CURB HEAD OPENING SHALL MATCH THE RAMP SLOPE, MINIMALLY 1.5% AND NOT TO EXCEED 7%. WHEN ADJACENT TO 1.5% LANDING, CONSTRUCT CURB HEAD OPENING AT 1.5% IN THE DIRECTION OF PEDESTRIAN TRAVEL.

(3) AN 8.33% CURB RAMP SLOPE IS ALLOWABLE WITH FLATTENED GUTTER FLAG SLOPE AND NOT TO EXCEED 11% GRADE CHANGE.

(4) ±0.5% CONSTRUCTION TOLERANCE IN SIDEWALK CROSS SLOPE. THE SIDEWALK CROSS SLOPE SHALL NOT EXCEED 2% WITHOUT PRIOR APPROVAL FROM THE ENGINEER.

(6) PROVIDE A LEVEL LANDING (MAXIMUM 2% SLOPE) IN ANY DIRECTION OF PEDESTRIAN TRAVEL. STANDARD LEVEL LANDING SIZE IS 5 FEET BY 5 FEET.

(7) WHEN THIS GRADE BREAK DISTANCE EXCEEDS 5 FEET, USE RADIAL DETECTABLE WARNING FIELD PER SDD 8D5-f.

(8) PROVIDE GRADE BREAK PERPENDICULAR TO DIRECTION OF WHEELCHAIR TRAVEL.

(10) INSTALL TRANSITION NOSE (INCIDENTAL TO OTHER PAY ITEMS). DO NOT MARK TRANSITION NOSE.

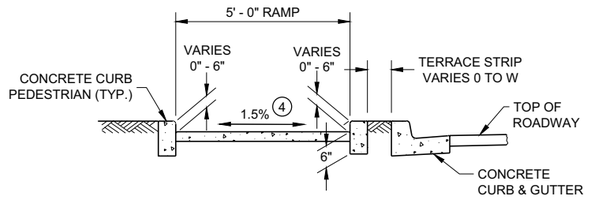

SECTION C - C FOR TYPE 4B

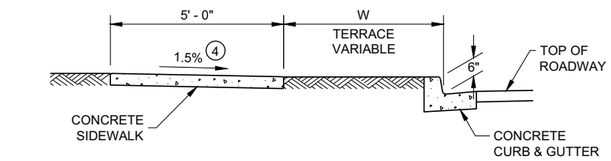

SECTION A - A FOR TYPE 4B

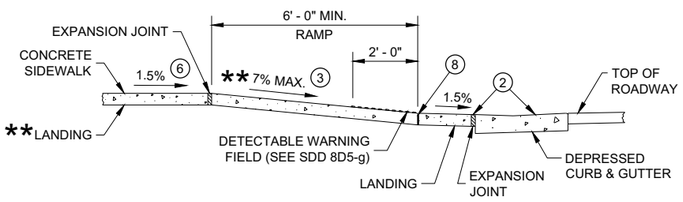

SECTION B - B FOR TYPE 4B AND TYPE 4B1

** IF RAMP SLOPE IS LESS THAN 5.0%, THEN NO ADJACENT UPHILL LANDING IS REQUIRED

* MAXIMUM 2.0% SLOPE IN ALL DIRECTIONS IF FRONT OF GRADE BREAK

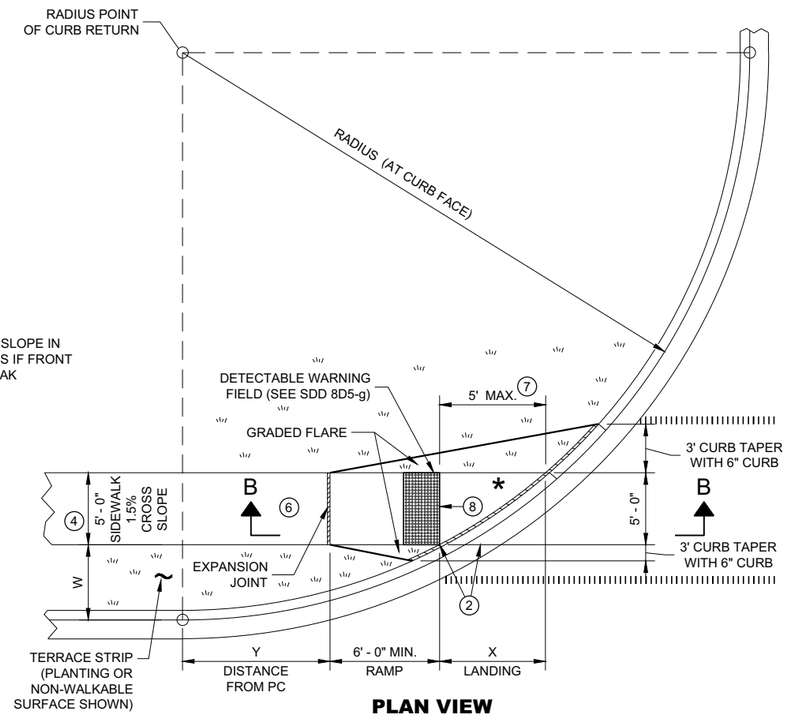

PLAN VIEW

CURB RAMP TYPE 4B1

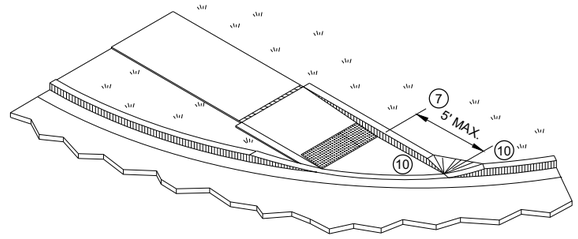

ISOMETRIC VIEW FOR TYPE 4B

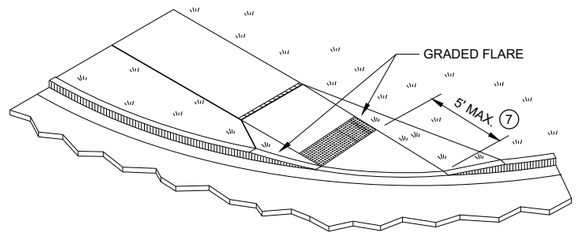

ISOMETRIC VIEW FOR TYPE 4B1

CURB RAMPS TYPE 4B AND 4B1

STATE OF WISCONSIN
DEPARTMENT OF TRANSPORTATION

6

SDD 08D05 - 20d

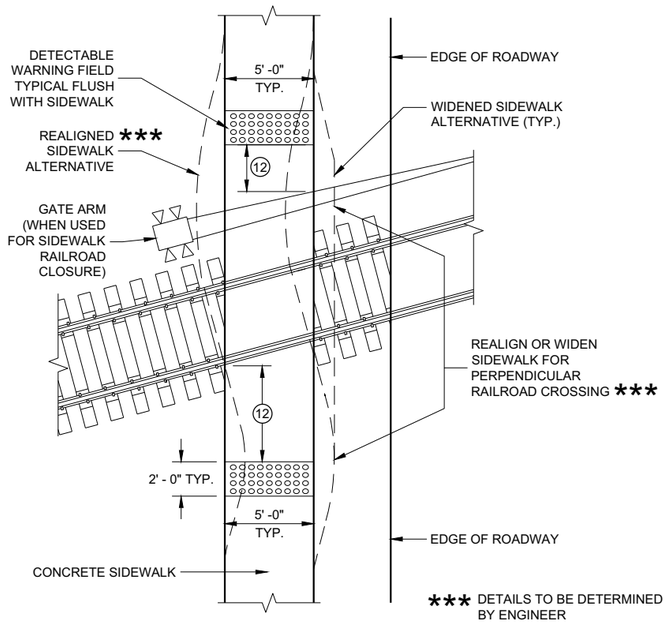

CURB RAMP TYPE 8

DETECTABLE WARNINGS AT RAILROAD CROSSING

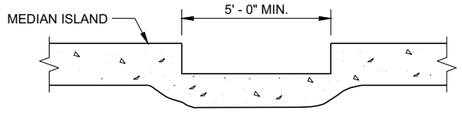

SECTION A - A FOR TYPE 5

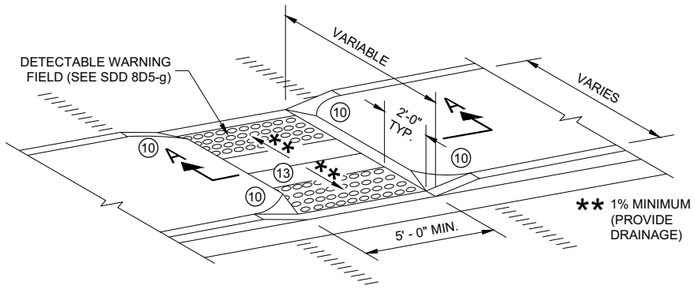

CURB RAMP TYPE 5

MEDIAN ISLAND NON-ELEVATED PEDESTRIAN CROSSING

GENERAL NOTES

AVOID PLACING DRAINAGE STRUCTURES, JUNCTION BOXES OR OTHER OBSTRUCTIONS IN FRONT OF RAMP ACCESS AREAS.

DETAILS OF CONSTRUCTION, MATERIALS AND WORKMANSHIP NOT SHOWN ON THIS DRAWING SHALL CONFORM TO THE PERTINENT REQUIREMENTS OF THE STANDARD SPECIFICATIONS AND THE APPLICABLE SPECIAL PROVISIONS.

SIDEWALK CROSS SLOPE SHALL NOT EXCEED 2%.

DETECTABLE WARNING FIELDS THAT ARE INSTALLED AS A GROUP OR SIDE BY SIDE, SHALL BE FROM THE SAME MANUFACTURER.

(2) GRADE CHANGE BETWEEN GUTTER FLAG SLOPE AND THE CURB RAMP SLOPE SHALL NOT EXCEED 11%. MAXIMUM GUTTER FLAG SLOPE IS 4%. PROVIDE LONGITUDINAL DRAINAGE AROUND CURB AND AWAY FROM CURB RAMP. NO VERTICAL LIPS OR DISCONTINUITIES GREATER THAN ¼ - INCH ARE ALLOWED. SLOPE OF CURB HEAD OPENING SHALL MATCH THE RAMP SLOPE, MINIMALLY 1.5% AND NOT TO EXCEED 7%. WHEN ADJACENT TO 1.5% LANDING, CONSTRUCT CURB HEAD OPENING AT 1.5% IN THE DIRECTION OF PEDESTRIAN TRAVEL.

(3) AN 8.33% CURB RAMP SLOPE IS ALLOWABLE WITH FLATTENED GUTTER FLAG SLOPE AND NOT TO EXCEED 11% GRADE CHANGE.

(4) ±0.5% CONSTRUCTION TOLERANCE IN SIDEWALK CROSS SLOPE. THE SIDEWALK CROSS SLOPE SHALL NOT EXCEED 2% WITHOUT PRIOR APPROVAL FROM THE ENGINEER.

(6) PROVIDE A LEVEL LANDING (MAXIMUM 2% SLOPE) IN ANY DIRECTION OF PEDESTRIAN TRAVEL. STANDARD LEVEL LANDING SIZE IS 5 FEET BY 5 FEET.

(10) INSTALL TRANSITION NOSE (INCIDENTAL TO OTHER PAY ITEMS). DO NOT MARK TRANSITION NOSE.

(11) SLOPE SIDEWALK TOWARD LANDING AS SHOWN WHERE THERE IS NO TERRACE OR WHERE THE TERRACE WIDTH IS LESS THAN 6 FEET WIDE.

(12) THE EDGE OF THE DETECTABLE WARNING FIELD NEAREST TO A RAILROAD CROSSING SHALL BE 1.5 FEET ±0.1' FROM THE FACE OF THE GATE ARM IF THE GATE ARM EXTENDS ACROSS THE SIDEWALK. WHERE THERE IS NO PEDESTRIAN GATE, THE EDGE OF THE DETECTABLE WARNING FIELD NEAREST TO THE RAILROAD CROSSING SHALL BE 15 FEET FROM THE NEAREST RAIL.

(13) DO NOT INSTALL DETECTABLE WARNING FIELDS AT THE EDGES OF STEET-LEVEL PEDESTRIAN REFUGE ISLANDS IF A MINIMUM 2 FOOT CONCRETE SURFACE WITHOUT DETECTABLE WARNINGS (MEASURED IN THE DIRECTION OF PEDESTRIAN TRAVEL) CANNOT BE ACHIEVED.

LEGEND

- ½" EXPANSION JOINT SIDEWALK
- CONTRACTION JOINT FIELD LOCATED
- PAVEMENT MARKING CROSSWALK (WHITE)

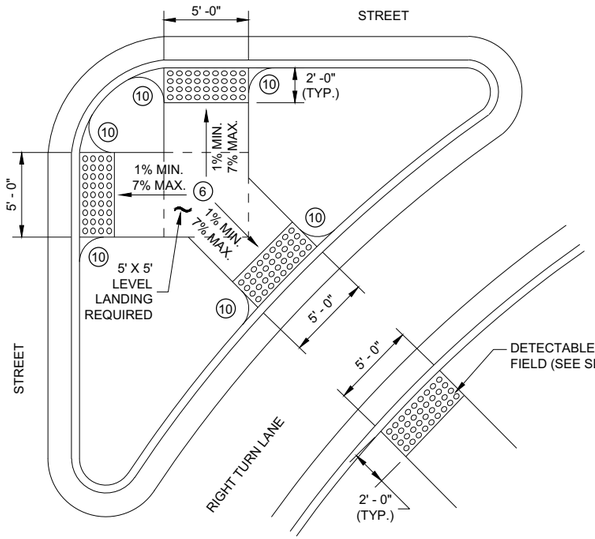

CURB RAMP TYPE 6

DETECTABLE WARNING AT ISLANDS

REFER TO GENERAL NOTES (2) AND (3) FOR ALL ISLAND CURB RAMPS

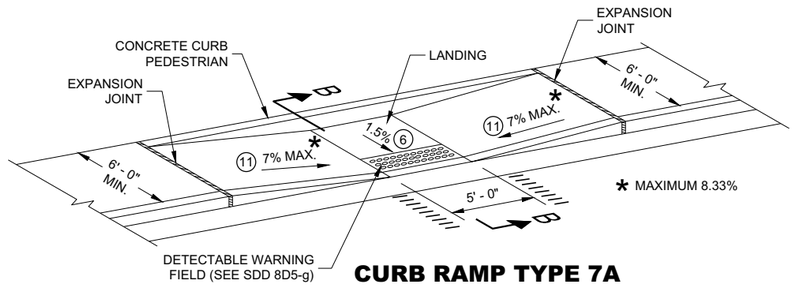

CURB RAMP TYPE 7A

MID BLOCK CROSSING

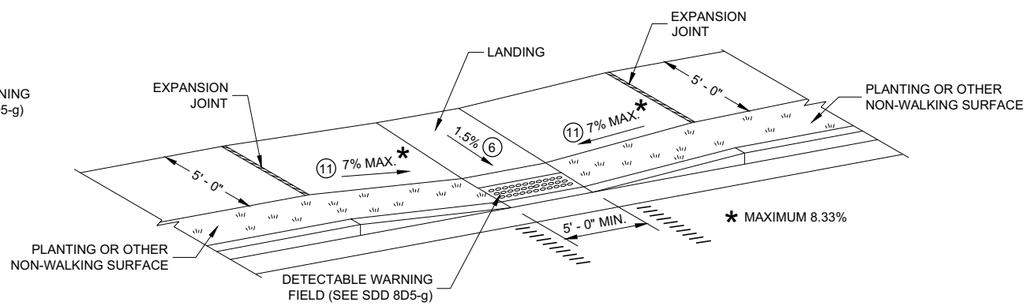

CURB RAMP TYPE 7B

MID BLOCK CROSSING

NOTE: THESE PARALLEL AND PARALLEL/PERPENDICULAR CURB RAMPS MAY BE USED AT INTERSECTIONS AND MID BLOCK LOCATIONS.

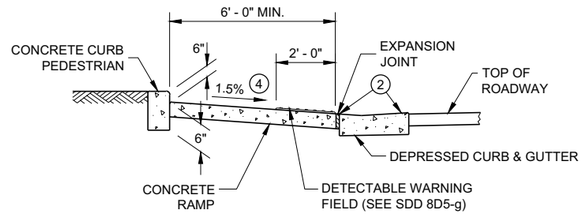

SECTION B - B FOR TYPE 7A

CURB RAMPS TYPE 5, 6, 7A, 7B & 8

STATE OF WISCONSIN
DEPARTMENT OF TRANSPORTATION

SDD 08D05 - 20e

SDD 08D05 - 20e

RADIAL DETECTABLE WARNING FIELD PLACEMENT WHEN 5 FOOT GRADE BREAK DISTANCE PER SDD 8D5-c IS EXCEEDED

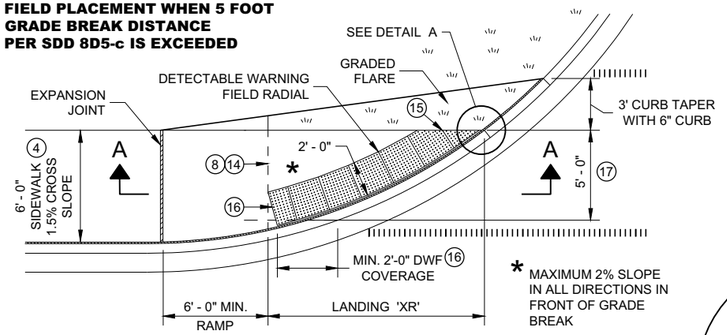

PLAN VIEW

CURB RAMP TYPE 4A1

(GRADE BREAK DISTANCE GREATER THAN 5 FEET)

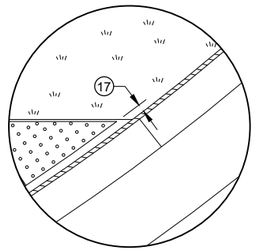

DETAIL A

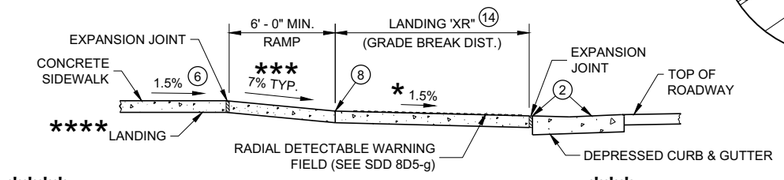

**** IF RAMP SLOPE IS LESS THAN 5.0%, THEN NO ADJACENT UPHILL LANDING IS REQUIRED

*** MAXIMUM 8.33%

SECTION A - A FOR TYPE 4A1

RADIAL DETECTABLE WARNING FIELD PLACEMENT WHEN 5 FOOT GRADE BREAK DISTANCE PER SDD 8D5-d IS EXCEEDED

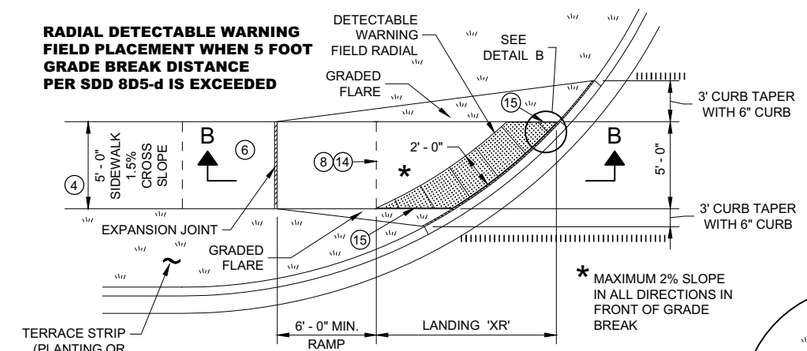

PLAN VIEW

CURB RAMP TYPE 4B1

(GRADE BREAK DISTANCE GREATER THAN 5 FEET)

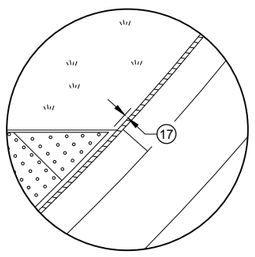

DETAIL B

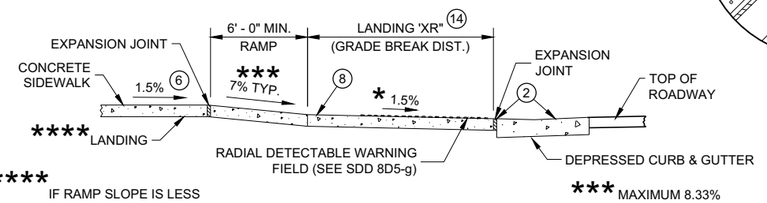

**** IF RAMP SLOPE IS LESS THAN 5.0%, THEN NO ADJACENT UPHILL LANDING IS REQUIRED

*** MAXIMUM 8.33%

SECTION B - B FOR TYPE 4B1

LEGEND

- ½" EXPANSION JOINT SIDEWALK
- CONTRACTION JOINT SIDEWALK
- PAVEMENT MARKING CROSSWALK (WHITE)

GENERAL NOTES

AVOID PLACING DRAINAGE STRUCTURES, JUNCTION BOXES OR OTHER OBSTRUCTIONS IN FRONT OF RAMP ACCESS AREAS.

DETAILS OF CONSTRUCTION, MATERIALS AND WORKMANSHIP NOT SHOWN ON THIS DRAWING SHALL CONFORM TO THE PERTINENT REQUIREMENTS OF THE STANDARD SPECIFICATIONS AND THE APPLICABLE SPECIAL PROVISIONS.

DETECTABLE WARNING FIELDS THAT ARE INSTALLED AS A GROUP OR SIDE BY SIDE, SHALL BE FROM THE SAME MANUFACTURER.

APPLY RADIAL DETECTABLE WARNING PLACEMENT SIMILARLY FOR TYPE 4A AND 4A1 CURB RAMPS AND SIMILARLY FOR TYPE 4B AND 4B1 CURB RAMPS. TYPE 4A AND 4B CURB RAMPS ARE NOT SHOWN.

REFER TO SDD 8D5-g FOR ADDITIONAL RADIAL PLATE REQUIREMENTS.

FIELD CUTS AT INTERMEDIATE JOINTS WITHIN THE RADIAL DETECTABLE WARNING FILED ARE PROHIBITED.

DETERMINE FINAL RADIAL WARNING FIELD CONFIGURATION AD ITS INDIVIDUAL PLATE LOCATIONS. PERFORM PRE-LAYOUT PRIOR TO PLACEMENT IN PLASTIC CONCRETE. FOLLOW MANUFACTURER'S PRODUCT LIST AND INSTALLATION RECOMMENDATIONS.

(2) GRADE CHANGE BETWEEN GUTTER FLAG SLOPE AND THE CURB RAMP SLOPE SHALL NOT EXCEED 11%. MAXIMUM GUTTER FLAG SLOPE IS 4%. PROVIDE LONGITUDINAL DRAINAGE AROUND CURB AND AWAY FROM CURB RAMP. NO VERTICAL LIPS OR DISCONTINUITIES GREATER THAN ¼ - INCH ARE ALLOWED. SLOPE OF CURB HEAD OPENING SHALL MATCH THE RAMP SLOPE, MINIMALLY 1.5% AND NOT TO EXCEED 7%. WHEN ADJACENT TO 1.5% LANDING, CONSTRUCT CURB HEAD OPENING AT 1.5% IN THE DIRECTION OF PEDESTRIAN TRAVEL.

(3) AN 8.33% CURB RAMP SLOPE IS ALLOWABLE WITH FLATTENED GUTTER FLAG SLOPE AND NOT TO EXCEED 11% GRADE CHANGE.

(4) ±0.5% CONSTRUCTION TOLERANCE IN SIDEWALK CROSS SLOPE. THE SIDEWALK CROSS SLOPE SHALL NOT EXCEED 2% WITHOUT PRIOR APPROVAL FROM THE ENGINEER.

(6) PROVIDE A LEVEL LANDING (MAXIMUM 2% SLOPE) IN ANY DIRECTION OF PEDESTRIAN TRAVEL. STANDARD LANDING SIZE IS 5 FEET BY 5 FEET.

(8) PROVIDE GRADE BREAK PERPENDICULAR TO DIRECTION OF WHEELCHAIR TRAVEL.

(14) CONSULT ENGINEER IF GRADE BREAK LOCATION (END OF LANDING DIMENSION "XR") REQUIRES FIELD ADJUSTMENT WHEN ESTABLISHING FINAL RADIAL DETECTABLE WARNING FIELD LOCATION.

(15) FIELD SAW CUTS ALONG RADIAL DETECTABLE WARNING PLATES WILL BE NECESSARY TO MATCH EACH CURB RAMP EDGE. AVOID CUTTING THROUGH DOMES WHENEVER POSSIBLE. MAKE FIELD CUTS TRUE TO LINE AND WITHIN ⅛" DEVIATION. SMOOTH EDGES OF FIELD CUT PLATES.

(16) USE 1' X 2" RECTANGULAR END PLATE AT END OF TYPE 4A1 RAMP AND PROVIDE MINIMUM 2' - 0" DETECTABLE WARNING FIELD COVERAGE (IN DIRECTION OF PEDESTRIAN TRAVEL) ALONG THE ENTIRE CURB RAMP WIDTH.

(17) A MAXIMUM 3 INCH CONCRETE BORDER WITH IS ALLOWABLE IN FROM OF RADIAL DETECTABLE WARNING FIELD FOR CONSTRUCTABILITY PURPOSES. CONCRETE BORDER WIDTH MAY VARY UP TO 1 INCH.

RADIAL DETECTABLE WARNING FIELD PLACEMENT WHEN 5 FOOT GRADE BREAK DISTANCE PER SDD 8D5-b IS EXCEEDED

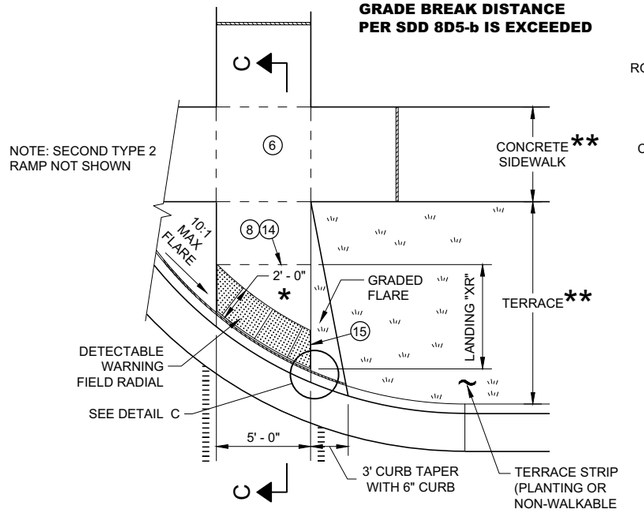

PLAN VIEW

CURB RAMP TYPE 2

(GRADE BREAK DISTANCE GREATER THAN 5 FEET)

(ON LINE WITH SIDEWALK)

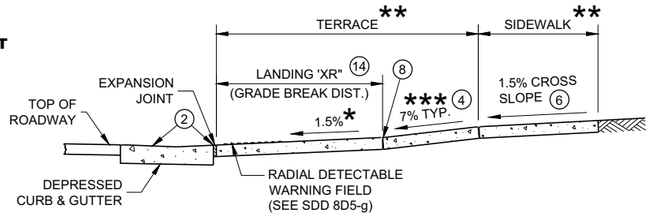

SECTION C - C FOR TYPE 2

* MAXIMUM 2% SLOPE IN ALL DIRECTIONS IN FRONT OF GRADE BREAK

** WIDTH SHOWN ELSEWHERE IN THE PLANS

*** MAXIMUM 8.33%

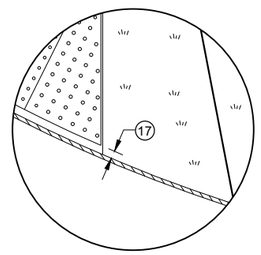

DETAIL C

CURB RAMPS
RADIAL DETECTABLE WARNING FIELD APPLICATIONS

STATE OF WISCONSIN
DEPARTMENT OF TRANSPORTATION

6

SDD 08D05 - 20f

	MIN.	MAX.
A	1.6"	2.4"
B	0.65"	1.5"
C	*	*
D	0.9"	1.4"

* THE C DIMENSION IS 50% TO 65% OF THE D DIMENSION.

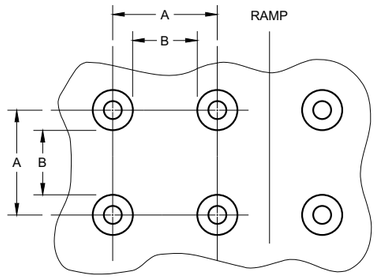

PLAN VIEW

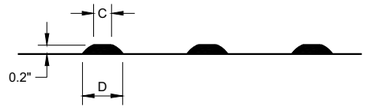

ELEVATION VIEW

TRUNCATED DOMES
DETECTABLE WARNING PATTERN DETAIL

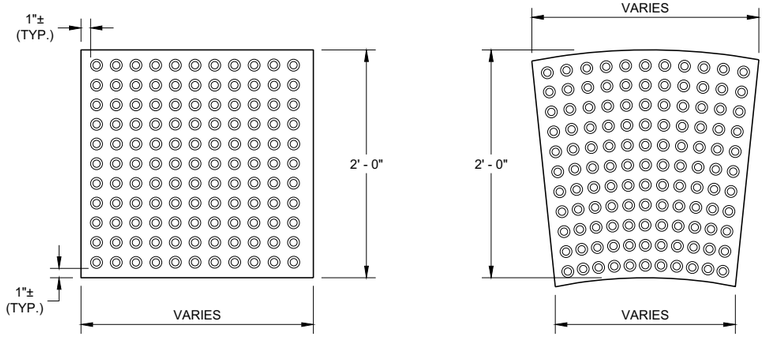

RECTANGULAR PLATES

RADIAL PLATES

PLAN VIEW
DETECTABLE WARNING FIELDS (TYPICAL)

GENERAL NOTES

DETECTABLE WARNING FIELDS THAT ARE INSTALLED AT A CURB RAMP SHALL BE FROM THE SAME MANUFACTURER.

PLACE ALL DETECTABLE WARNING FIELD SYSTEMS IN ACCORDANCE TO THE MANUFACTURER'S RECOMMENDATION.

FIELD CUTS AT INTERMEDIATE JOINTS WITHIN THE RADIAL DETECTABLE WARNING FILED ARE PROHIBITED.

DETERMINE FINAL RADIAL WARNING FIELD CONFIGURATION AND ITS INDIVIDUAL PLATE LOCATIONS. PERFORM PRE-LAYOUT PRIOR TO PLACEMENT IN PLASTIC CONCRETE. FOLLOW MANUFACTURER'S PRODUCT LIST AND INSTALLATION RECOMMENDATIONS.

FOR RADIAL DETECTABLE WARNING FIELD APPLICATIONS WHERE STANDARD RADIAL PLATES ARE NOT AVAILABLE AT AN INTERSECTION CURB RADIUS, A COMBINATION OF SQUARE OR RECTANGULAR PLATES AND RADIAL PLATES MAY BE USED TO FORM RADIAL CONFIGURATION. RADIAL WEDGE PLATES IN COMBINATION WITH SQUARE PLATES ARE ALSO ACCEPTABLE. FOLLOW MANUFACTURER'S RECOMMENDATIONS.

REFER TO CONTRACT AND STANDARD SPECIFICATIONS FOR FIELD CUTTING REQUIREMENTS.

DO NOT EMBED IN CONCRETE ANY FIELD-CUT PLATES WITH CUT EDGES SHORTER THAN 6 INCHES. CONSULT WITH MANUFACTURER FOR RE-DRILLING AND ANCHORING REQUIREMENTS OF FIELD-CUT PLATES.

(15) FIELD SAW CUTS ALONG RADIAL DETECTABLE WARNING PLATES WILL BE NECESSARY TO MATCH EACH CURB RAMP EDGE. AVOID CUTTING THROUGH DOMES WHENEVER POSSIBLE. MAKE FIELD CUTS TRUE TO LINE AND WITHIN ⅛" DEVIATION. SMOOTH EDGES OF FIELD CUT PLATES.

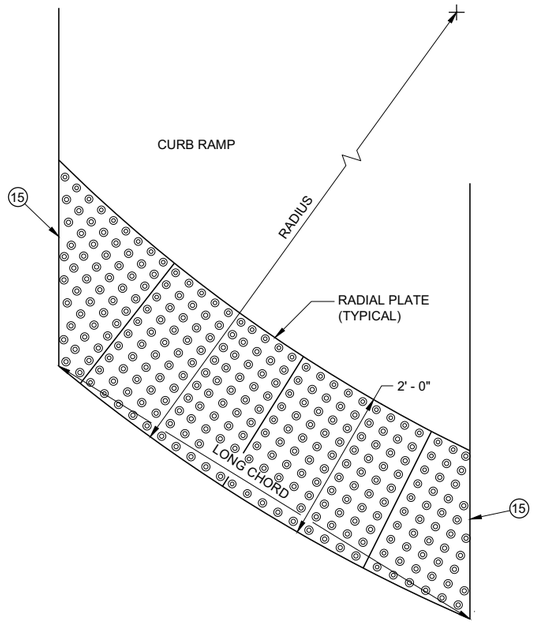

PLAN VIEW
RADIAL DETECTABLE WARNING FIELD ATTRIBUTES

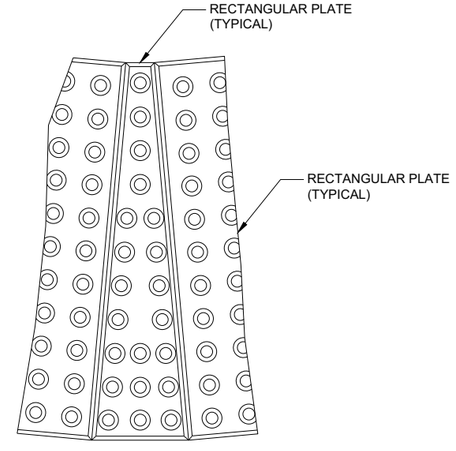

PLAN VIEW
RADIAL WEDGE PLATE CONNECTION DETAIL

CURB RAMPS
RECTANGULAR AND RADIAL
DETECTABLE WARNING PLATES

STATE OF WISCONSIN
DEPARTMENT OF TRANSPORTATION

APPROVED
May 2019
DATE
/S/ Rodney Taylor
ROADWAY STANDARDS DEVE UNIT SUPERVISOR

FHWA

6
SDD 08D05 - 20g

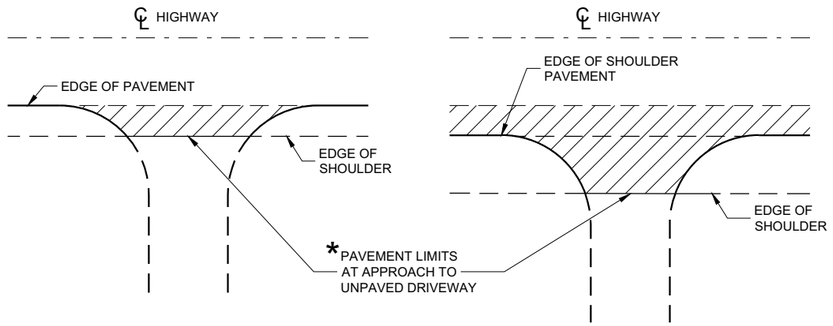

PLAN VIEW
(UNPAVED SHOULDER ON HIGHWAY)

PLAN VIEW
(PAVED SHOULDER ON HIGHWAY)

RURAL DRIVEWAY INTERSECTION DETAIL
(NO CURB AND GUTTER OR SIDEWALK)

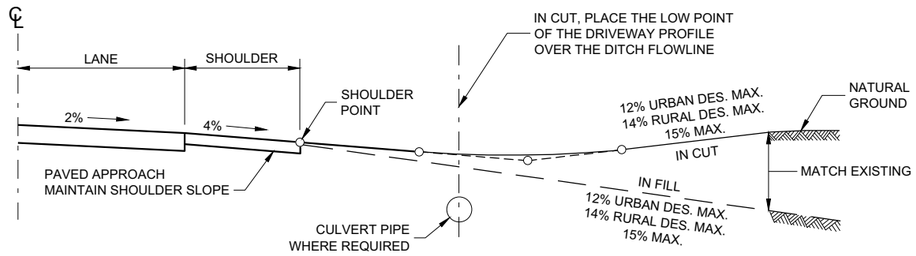

TYPICAL DRIVEWAY PROFILES

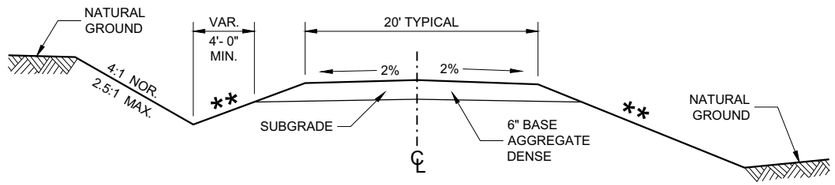

IN CUT **IN FILL**

TYPICAL CROSS SECTION FOR PRIVATE DRIVE OR FIELD ENTRANCE AGGREGATE SURFACE

** SLOPE CAN VARY WITH SPEED. SEE 11-45-30.6.2

POSTED SPEED MPH	MAX. SLOPE
<35	4:1
≥ 35 TO < 60	6:1
≥60	10:1

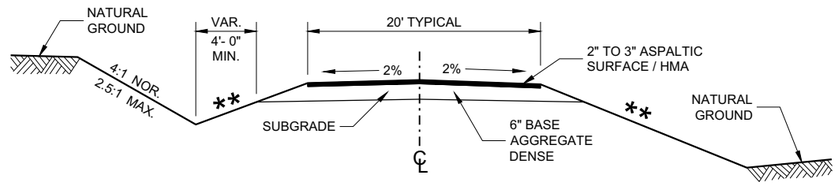

IN CUT **IN FILL**

TYPICAL CROSS SECTION FOR PRIVATE DRIVE OR FIELD ENTRANCE ASPHALTIC SURFACE

6

SDD 08D21 - 01

DRIVEWAYS WITHOUT CURB AND GUTTER

STATE OF WISCONSIN
DEPARTMENT OF TRANSPORTATION

APPROVED
December 2017 — DATE
/S/ Rodney Taylor — ROADWAY STANDARDS DEVE UNIT SUPERVISOR

FHWA

6

SDD 08D21 - 01

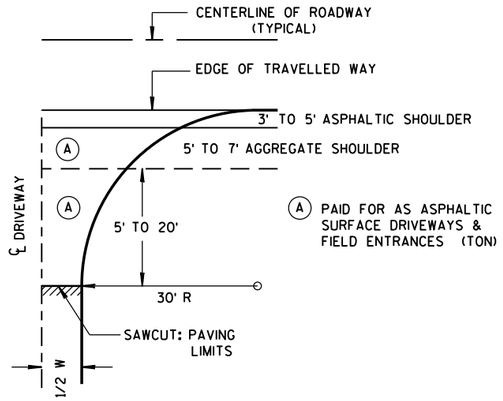

PLAN VIEW
HALF SECTION

W MIN. = 16'
W MAX. = 24'

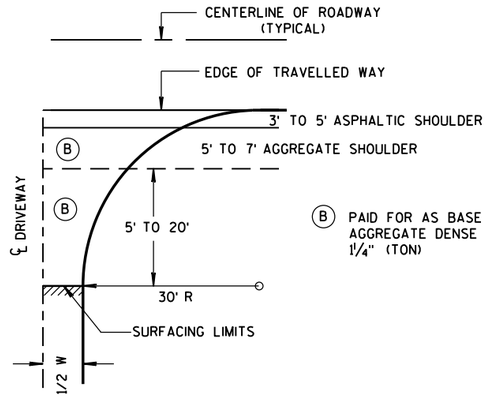

PLAN VIEW
HALF SECTION

GENERAL NOTES

(1) DESIGN WILL DETERMINE FINAL DRIVEWAY ASPHALTIC THICKNESS BASED ON TYPE OF USAGE AND LOADINGS.

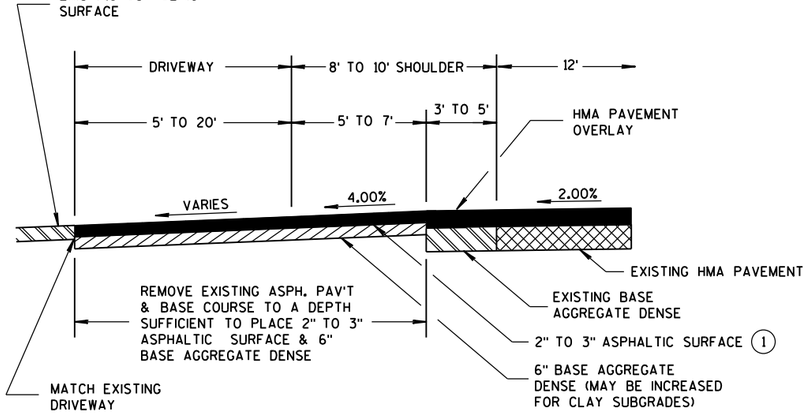

PROFILE VIEW

RURAL ENTRANCE WITH ASPHALTIC SURFACE

RESURFACING PROJECTS

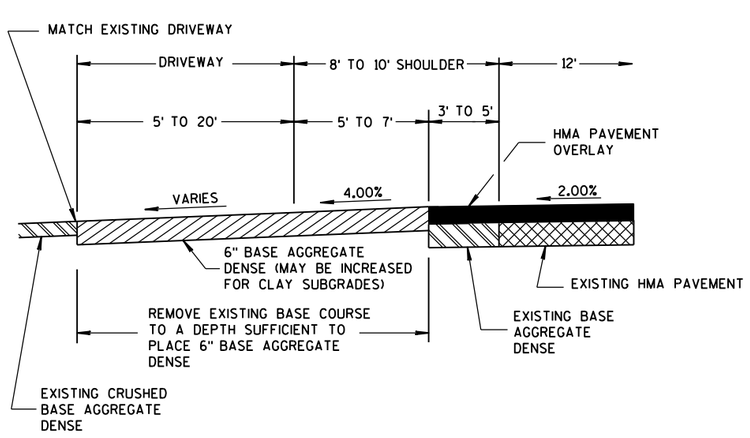

PROFILE VIEW

RURAL ENTRANCE WITH AGGREGATE SURFACE

6" BASE AGGREGATE DENSE
RESURFACING PROJECTS

DRIVEWAYS WITHOUT CURB & GUTTER RESURFACING PROJECTS RURAL

STATE OF WISCONSIN
DEPARTMENT OF TRANSPORTATION

APPROVED
December, 2016 — DATE
/S/ Rodney Taylor — ROADWAY STANDARDS UNIT SUPERV
ENT
FHWA

6

S.D.D. 8 D 22-1

6

S.D.D. 8 D 22-1

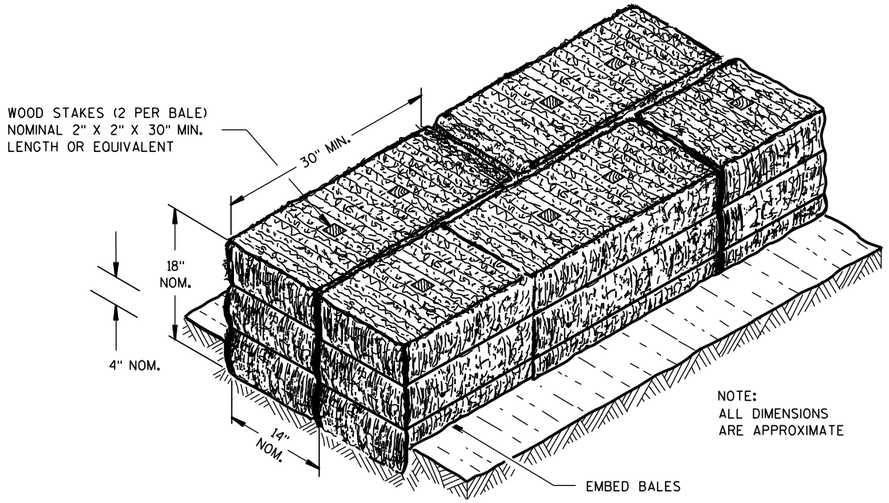

SECTION A-A

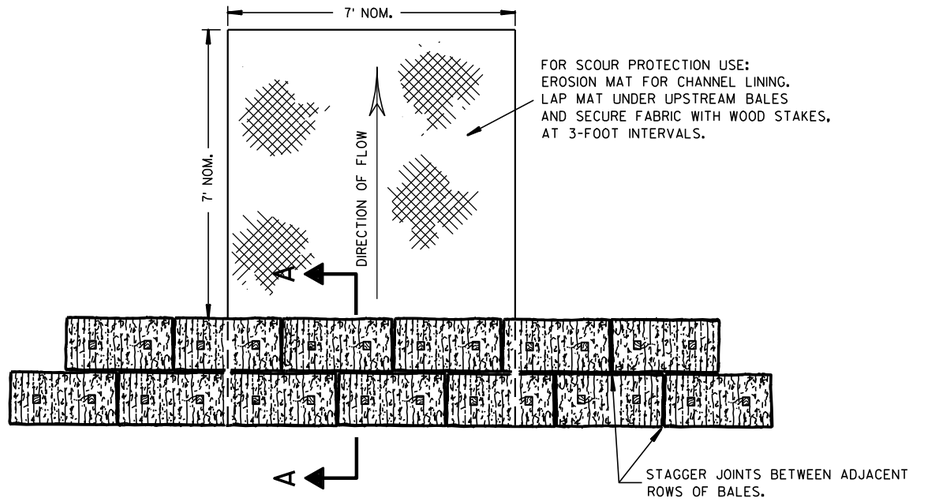

PLAN VIEW

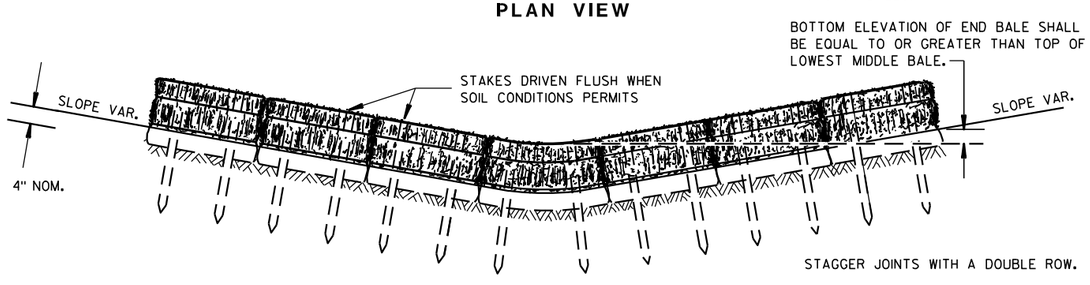

FRONT ELEVATION

TEMPORARY DITCH CHECK USING EROSION BALES (1)

GENERAL NOTES

DETAILS OF CONSTRUCTION, MATERIALS AND WORKMANSHIP NOT SHOWN ON THIS DRAWING SHALL CONFORM TO THE PERTINENT REQUIREMENTS OF THE STANDARD SPECIFICATIONS AND THE APPLICABLE SPECIAL PROVISIONS.

(1) TEMPORARY DITCH CHECKS EITHER EROSION BALES OR MANUFACTURED SHALL BE PAID FOR UNDER THE BID ITEM OF TEMPORARY DITCH CHECK. THE DEPARTMENT WILL NOT PAY FOR TEMPORARY DITCH CHECKS CONSTRUCTED OF A SINGLE ROW OF EROSION BALES.

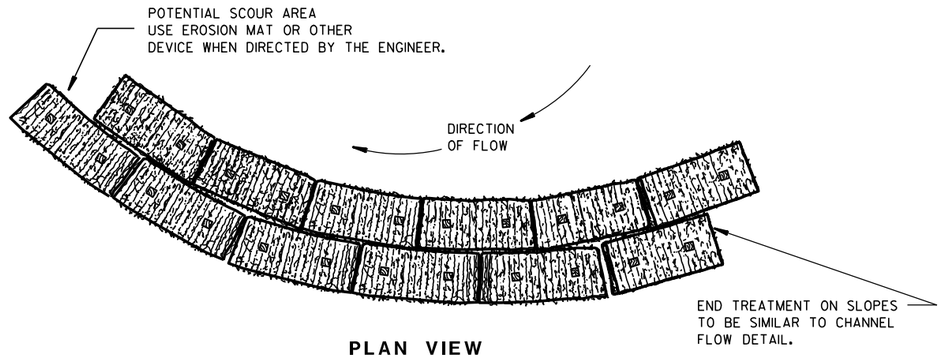

PLAN VIEW

WHEN ALTERING THE DIRECTION OF FLOW

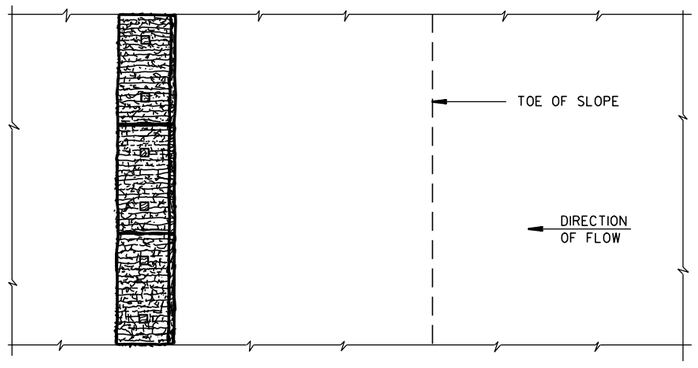

PLAN VIEW

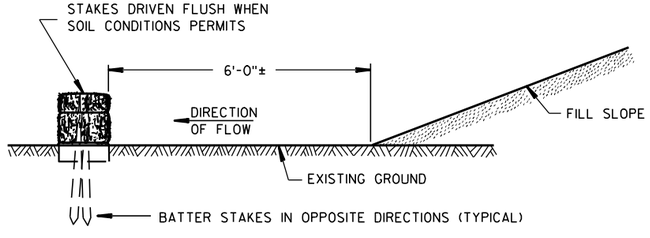

FRONT ELEVATION

WHEN EXISTING GROUND SLOPES AWAY FROM FILL SLOPE

EROSION BALES FOR SHEET FLOW

TYPICAL INSTALLATIONS OF EROSION BALES / TEMPORARY DITCH CHECKS

STATE OF WISCONSIN
DEPARTMENT OF TRANSPORTATION

APPROVED
6/04/02 DATE
/S/ Beth Cannestra
CHIEF ROADWAY DEVELOPMENT ENGINEER
FHWA

6

S.D.D. 8 E 8-3

6

S.D.D. 8 E 8-3

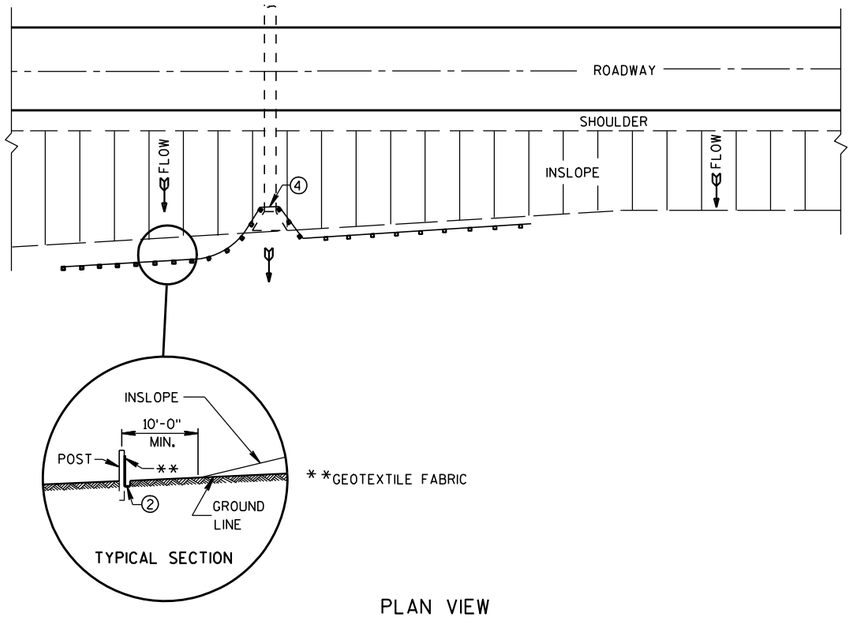

PLAN VIEW

TYPICAL APPLICATION OF SILT FENCE

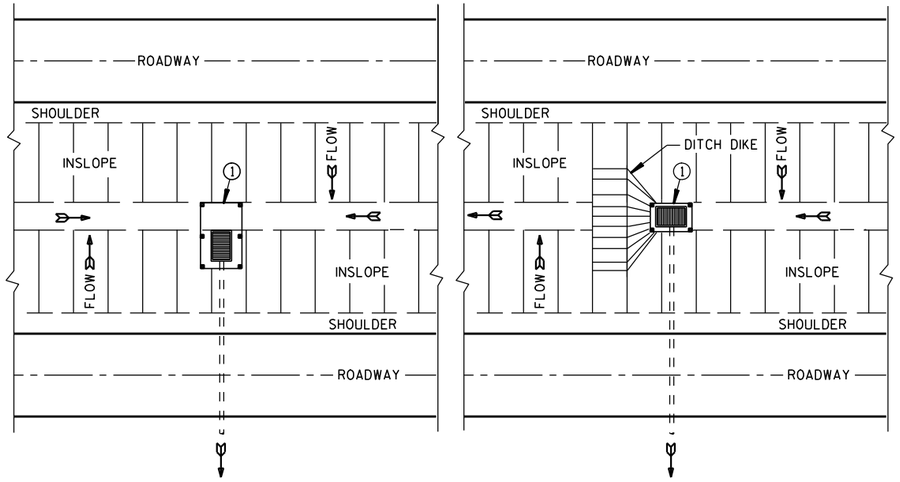

PLAN VIEW

SILT FENCE AT MEDIAN SURFACE DRAINS

GENERAL NOTES

DETAILS OF CONSTRUCTION NOT SHOWN ON THIS DRAWING SHALL CONFORM TO THE PERTINENT REQUIREMENTS OF THE STANDARD SPECIFICATIONS AND APPLICABLE SPECIAL PROVISIONS.

1. HORIZONTAL BRACE REQUIRED WITH 2" X 4" WOODEN FRAME OR EQUIVALENT AT TOP OF POSTS.
2. FOR MANUAL INSTALLATIONS THE TRENCH SHALL BE A MINIMUM OF 4" WIDE & 6" DEEP TO BURY AND ANCHOR THE GEOTEXTILE FABRIC. FOLD MATERIAL TO FIT TRENCH AND BACKFILL & COMPACT TRENCH WITH EXCAVATED SOIL.
3. WOOD POSTS SHALL BE A MINIMUM SIZE OF 1⅛" X 1⅛" OF OAK OR HICKORY.
4. SILT FENCE TO EXTEND ACROSS THE TOP OF THE PIPE.
5. CONSTRUCT SILT FENCE FROM A CONTINUOUS ROLL IF POSSIBLE BY CUTTING LENGTHS TO AVOID JOINTS. IF A JOINT IS NECESSARY USE ONE OF THE FOLLOWING TWO METHODS; A) OVERLAP THE END POSTS AND TWIST, OR ROTATE, AT LEAST 180 DEGREES, B) HOOK THE END OF EACH SILT FENCE LENGTH.

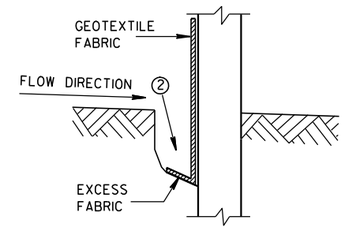

TRENCH DETAIL

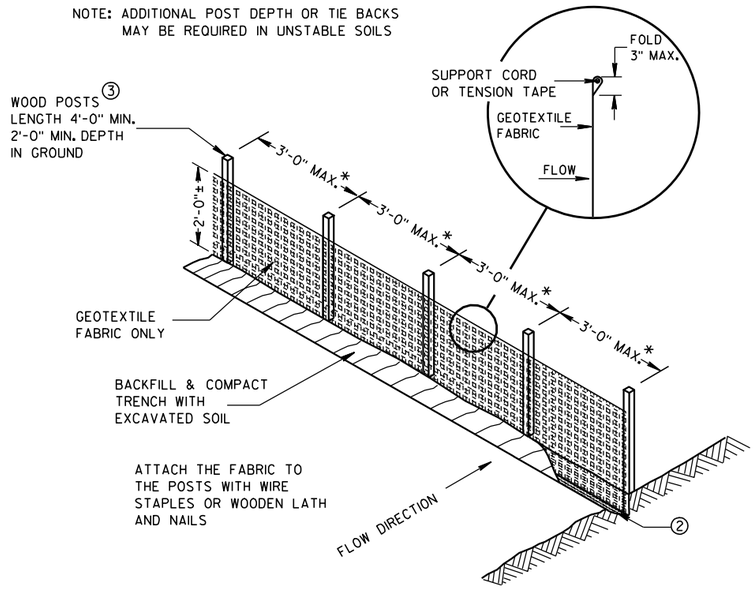

*NOTE: 8'-0" POST SPACING ALLOWED IF A WOVEN GEOTEXTILE FABRIC IS USED.

SILT FENCE

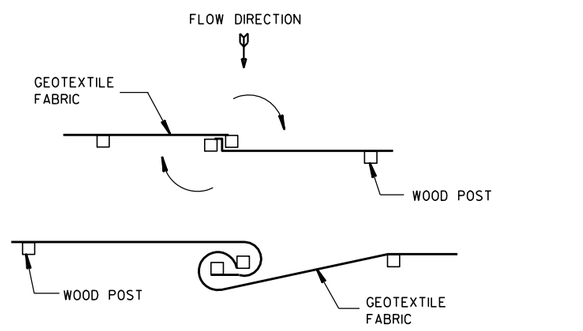

TWIST METHOD

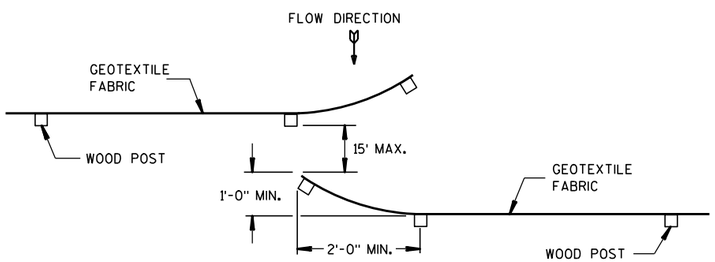

HOOK METHOD

JOINING TWO LENGTHS OF SILT FENCE 5

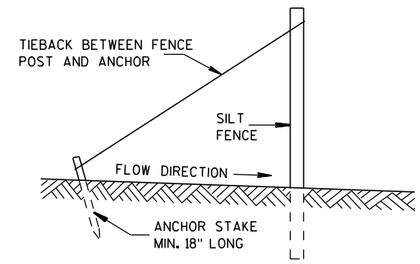

SILT FENCE TIE BACK

(WHEN REQUIRED BY THE ENGINEER)

SILT FENCE

STATE OF WISCONSIN
DEPARTMENT OF TRANSPORTATION

APPROVED
4-29-05 DATE
/S/ Beth Cannestra
CHIEF ROADWAY DEVELOPMENT ENGINEER
FHWA

6

S.D.D. 8 E 9-6

6

S.D.D. 8 E 9-6

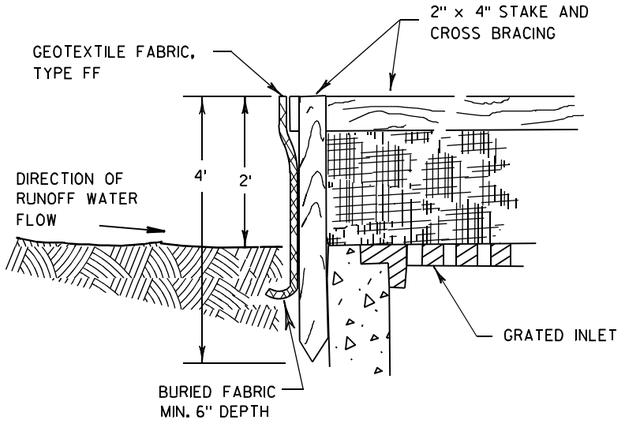

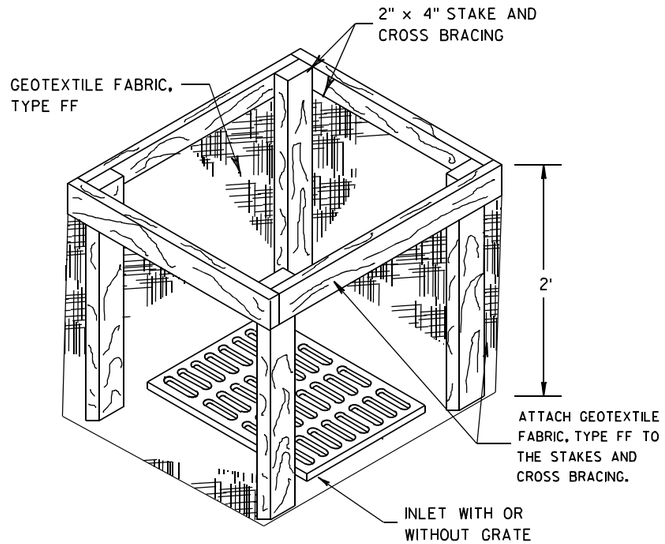

INLET PROTECTION, TYPE A

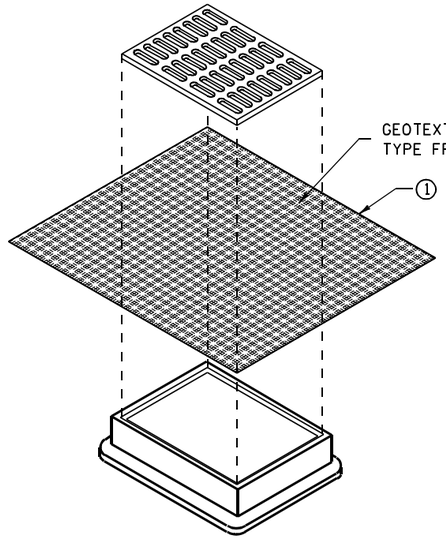

INLET PROTECTION, TYPE B
(WITHOUT CURB BOX)

(CAN BE INSTALLED IN ANY INLET WITHOUT A CURB BOX)

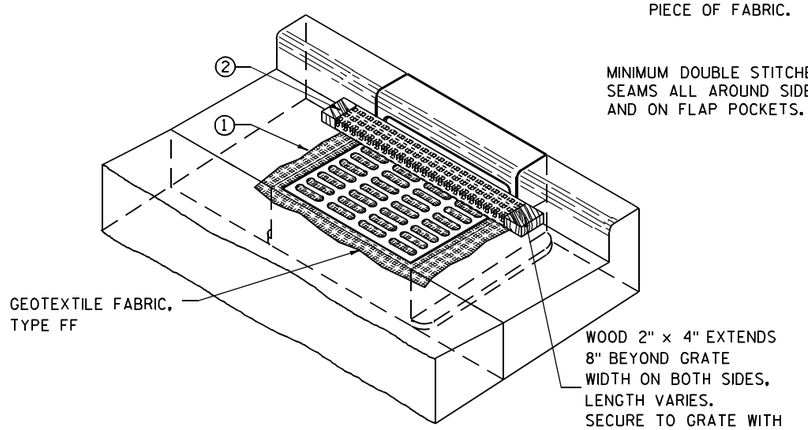

INLET PROTECTION, TYPE C (WITH CURB BOX)

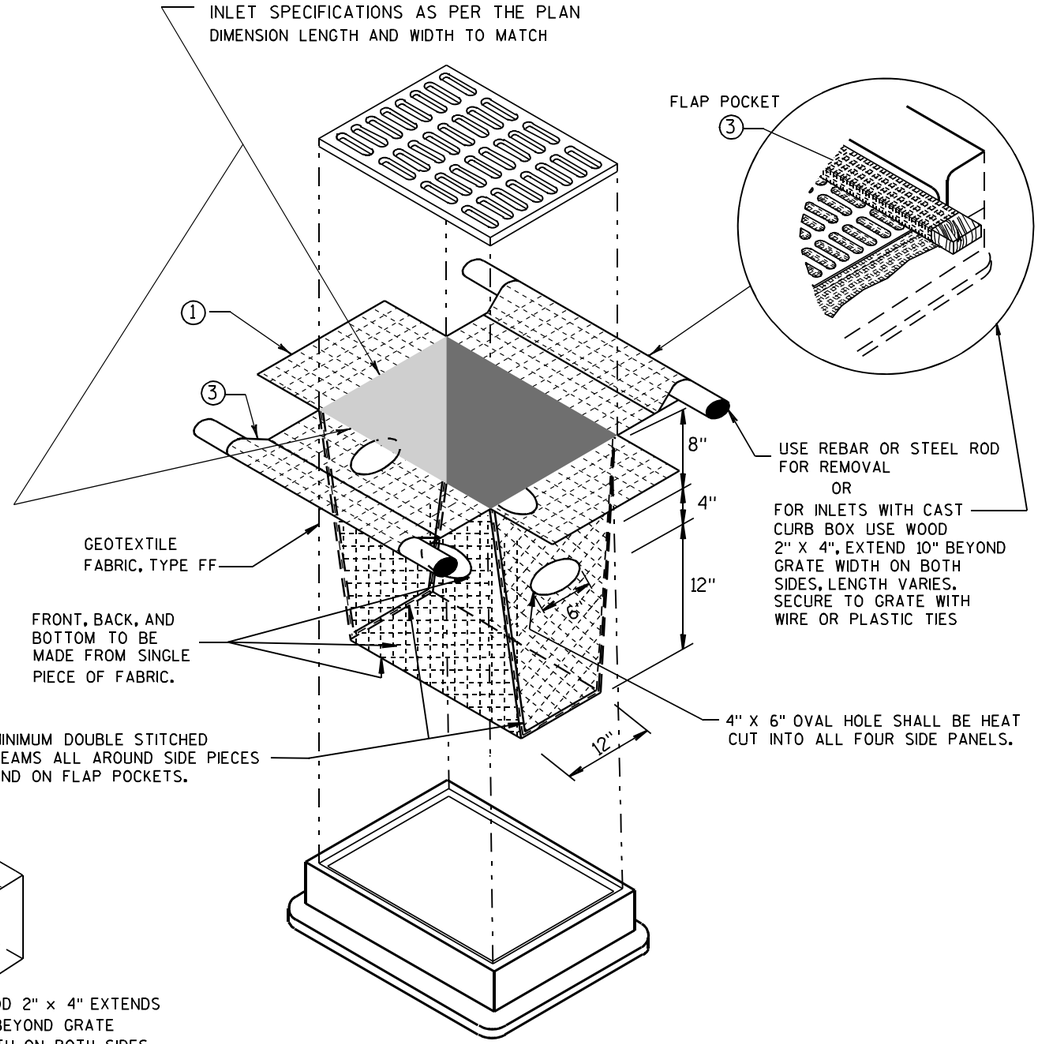

INLET PROTECTION, TYPE D

(CAN BE INSTALLED IN ANY INLET TYPE WITH
OR WITHOUT A CURB BOX AS PER NOTE ②)

GENERAL NOTES

INLET PROTECTION DEVICES SHALL BE MAINTAINED OR REPLACED AT THE DIRECTION OF THE ENGINEER.

MANUFACTURED ALTERNATIVES APPROVED AND LISTED ON THE DEPARTMENT'S EROSION CONTROL PRODUCT ACCEPTABILITY LIST MAY BE SUBSTITUTED.

WHEN REMOVING OR MAINTAINING INLET PROTECTION, CARE SHALL BE TAKEN SO THAT THE SEDIMENT TRAPPED ON THE GEOTEXTILE FABRIC DOES NOT FALL INTO THE INLET. ANY MATERIAL FALLING INTO THE INLET SHALL BE REMOVED IMMEDIATELY.

① FINISHED SIZE, INCLUDING FLAP POCKETS WHERE REQUIRED, SHALL EXTEND A MINIMUM OF 10" AROUND THE PERIMETER TO FACILITATE MAINTENANCE OR REMOVAL.

② FOR INLET PROTECTION, TYPE C (WITH CURB BOX), AN ADDITIONAL 18" OF FABRIC IS WRAPPED AROUND THE WOOD AND SECURED WITH STAPLES. THE WOOD SHALL NOT BLOCK THE ENTIRE HEIGHT OF THE CURB BOX OPENING.

③ FLAP POCKETS SHALL BE LARGE ENOUGH TO ACCEPT WOOD 2X4.

INSTALLATION NOTES

TYPE B & C

TRIM EXCESS FABRIC IN THE FLOW LINE TO WITHIN 3" OF THE GRATE.

THE CONTRACTOR SHALL DEMONSTRATE A METHOD OF MAINTENANCE, USING A SEWN FLAP, HAND HOLDS OR OTHER METHOD TO PREVENT ACCUMULATED SEDIMENT FROM ENTERING THE INLET.

TYPE D

DO NOT INSTALL INLET PROTECTION TYPE D IN INLETS SHALLOWER THAN 30", MEASURED FROM THE BOTTOM OF THE INLET TO THE TOP OF THE GRATE.

TRIM EXCESS FABRIC IN THE FLOW LINE TO WITHIN 3" OF THE GRATE.

THE INSTALLED BAG SHALL HAVE A MINIMUM SIDE CLEARANCE, BETWEEN THE INLET WALLS AND THE BAG, MEASURED AT THE BOTTOM OF THE OVERFLOW HOLES, OF 3". WHERE NECESSARY THE CONTRACTOR SHALL CINCH THE BAG, USING PLASTIC ZIP TIES, TO ACHIEVE THE 3" CLEARANCE. THE TIES SHALL BE PLACED AT A MAXIMUM OF 4" FROM THE BOTTOM OF THE BAG.

INLET PROTECTION
TYPE A, B, C, AND D

STATE OF WISCONSIN
DEPARTMENT OF TRANSPORTATION

APPROVED

10/16/02
DATE

/S/ Beth Cannestra
CHIEF ROADWAY DEVELOPMENT ENGINEER

FHWA

6
S.D.D. 8 E 10-2

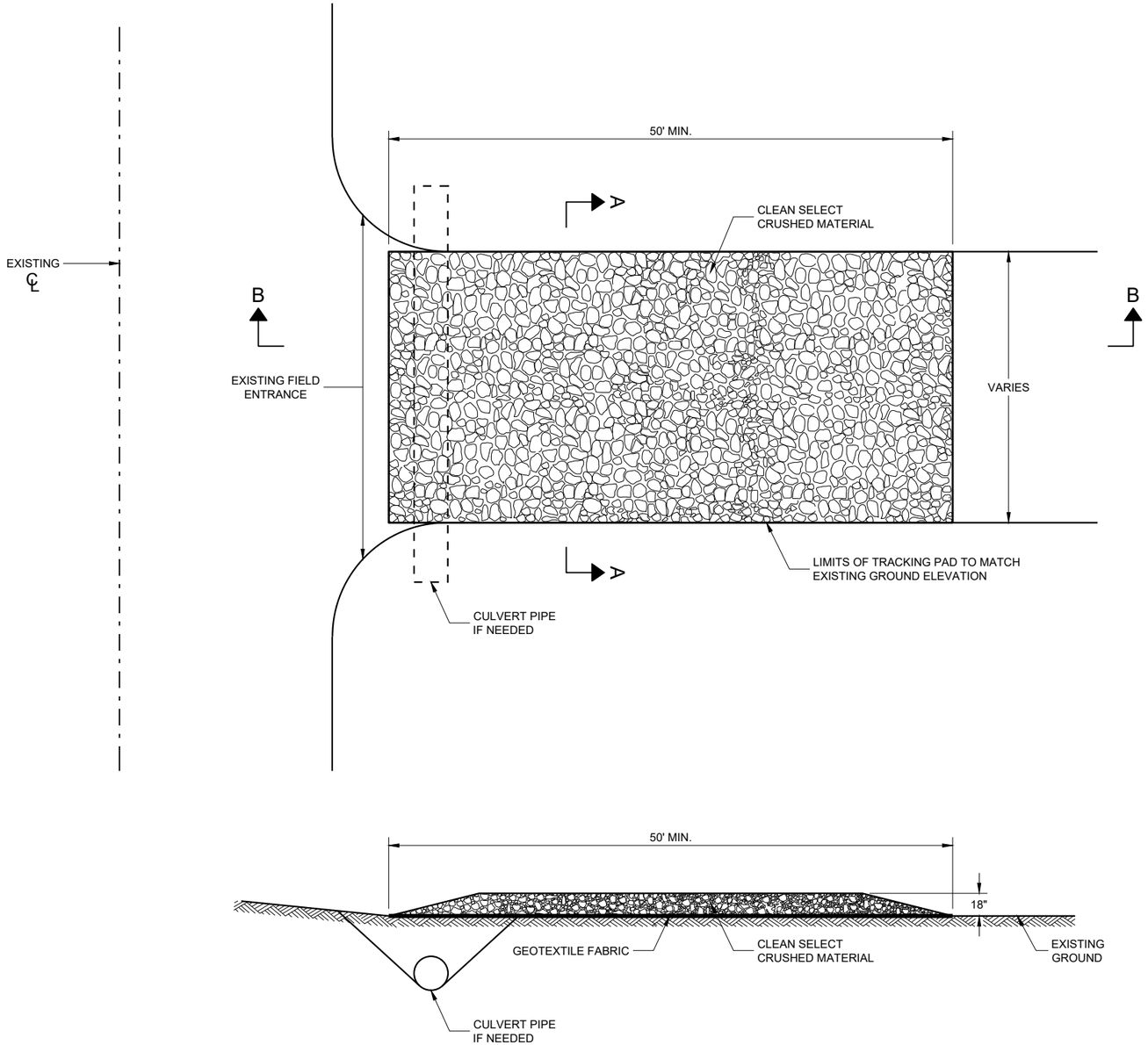

SECTION B - B

GENERAL NOTES

DETAILS OF CONSTRUCTION, MATERIALS AND WORKMANSHIP NOT SHOWN ON THIS DRAWING SHALL CONFORM TO THE PERTINENT REQUIREMENTS OF THE STANDARD SPECIFICATIONS AND THE APPLICABLE SPECIAL PROVISIONS.

TRACKING PAD SHALL BE INSPECTED DAILY. DEFICIENT AREAS SHALL BE REPAIRED OR REPLACED IMMEDIATELY.

TRACKING PAD TO BE REMOVED AFTER CONSTRUCTION IS COMPLETED.

TRACKING PAD SHALL BE THE FULL WIDTH OF THE EGRESS POINT.

SURFACE WATER MUST BE PREVENTED FROM PASSING THROUGH THE TRACKING PAD. FLOWS SHALL BE DIVERTED AWAY, AROUND OR CONVEYED UNDER THE TRACKING PAD.

CULVERT PIPE OR OTHER BMP USED TO DIVERT WATER AWAY, AROUND OR UNDER THE TRACKING PAD SHALL BE DESIGNED TO CONVEY THE 2 YEAR - 24 HOUR EVENT.

THE COST OF ADDITIONAL BMP TO DIVERT WATER ARE INCIDENTAL TO THE TRACKING PAD BID ITEM.

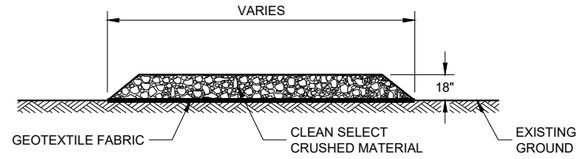

SECTION A - A

TRACKING PAD

STATE OF WISCONSIN
DEPARTMENT OF TRANSPORTATION

APPROVED
3/24/2011
DATE
/S/ Jerry H. Zogg
ROADWAY STANDARDS DEVE ENGINEER

FHWA

6

SDD 08E14 - 01

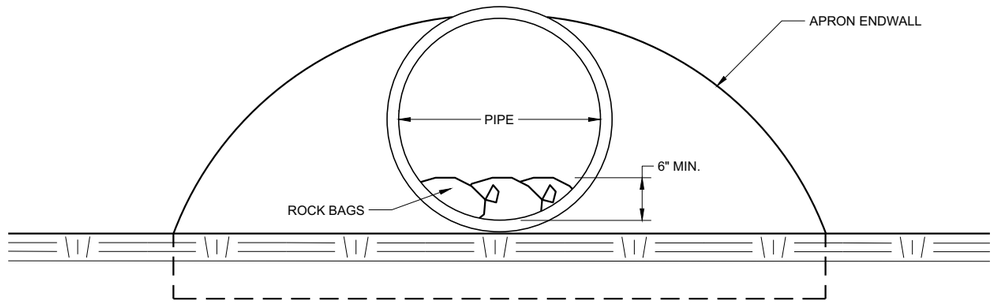

END VIEW

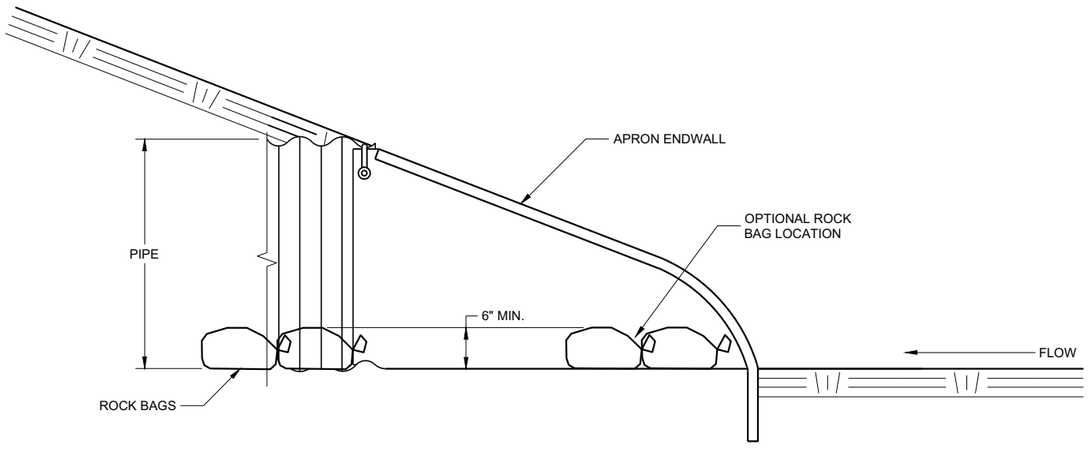

SIDE VIEW

CULVERT PIPE CHECK

(INSTALL ON INLET END ONLY)

CULVERT PIPE CHECK

STATE OF WISCONSIN
DEPARTMENT OF TRANSPORTATION

APPROVED
May 2019
DATE

/S/ Daniel Schave
EROSION CONTROL ENGI

FHWA

6

SDD 08E15 - 01

6

SDD 08E15 - 01

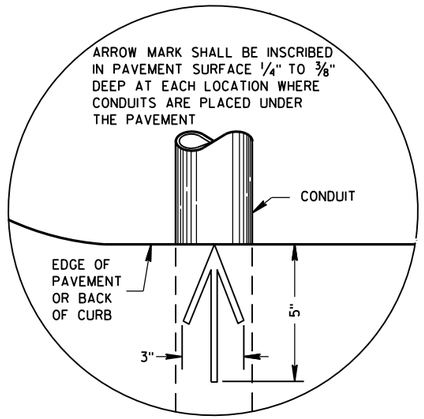

PLAN VIEW

ARROW MARK

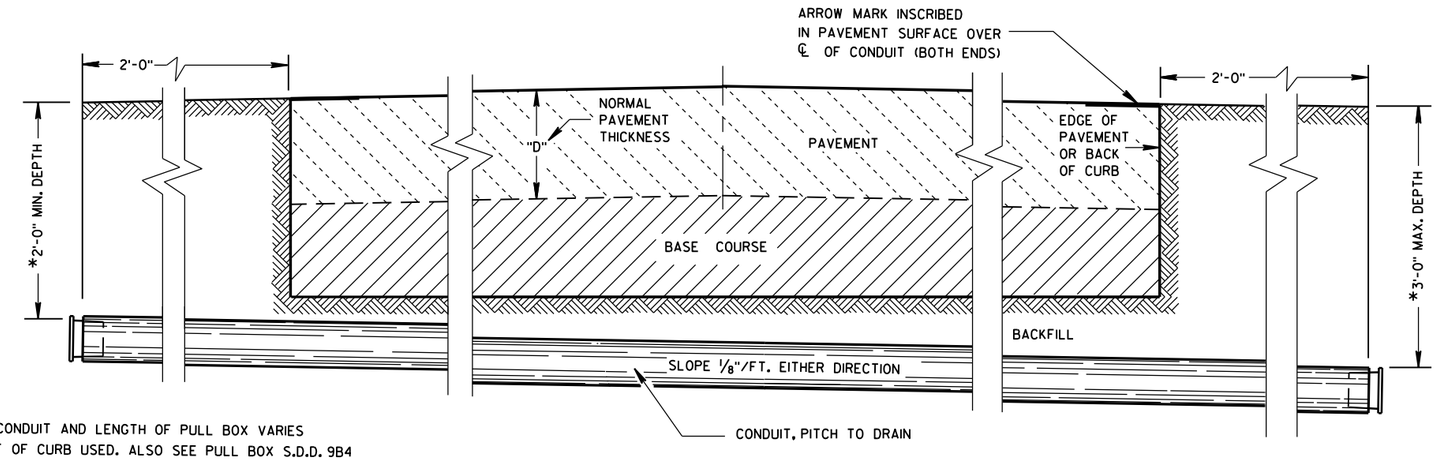

*DEPTH OF CONDUIT AND LENGTH OF PULL BOX VARIES WITH HEIGHT OF CURB USED. ALSO SEE PULL BOX S.D.D. 9B4

SIDE ELEVATION

DETAIL FOR CONDUIT UNDER PAVED HIGHWAYS

GENERAL NOTES

DETAILS OF CONSTRUCTION, MATERIALS AND WORKMANSHIP NOT SHOWN ON THIS DRAWING SHALL CONFORM TO THE PERTINENT REQUIREMENTS OF THE CONTRACT.

METALLIC (STANDARD SPECIFICATION 652.2.2) OR NONMETALLIC (STANDARD SPECIFICATION 652.2.3) CONDUIT SHALL BE FURNISHED AND PLACED AS SHOWN.

DEPTH OF CONDUIT INSTALLED BELOW THE TRAVELED WAY SHALL BE 24 INCHES MINIMUM AND 36 INCHES MAXIMUM.

DEPTH OF CONDUIT INSTALLED THAT IS NOT BELOW THE TRAVELED WAY SHALL BE 18 INCHES MINIMUM AND 36 INCHES MAXIMUM.

ANY EXCEPTION TO THE MAXIMUM DEPTH SHALL BE ONLY WITH THE WRITTEN APPROVAL OF THE ENGINEER.

THE TRENCH SHALL NOT BE BACKFILLED PRIOR TO INSPECTION OF THE CONDUIT.

ALL METALLIC CONDUIT RACEWAY ENDS SHALL BE REAMED AND THREADED.

ALL METALLIC CONDUIT IN WHICH WIRE OR CABLE IS TO BE INSTALLED SHALL BE BUSHED WITH APPROVED THREADED BUSHINGS BEFORE INSTALLATION OF THE WIRE OR CABLE.

ALL METALLIC CONDUITS IN WHICH WIRE OR CABLE IS NOT TO BE INSTALLED SHALL BE CAPPED WITH THREADED PROTECTIVE CAPS, AS APPROVED BY THE ENGINEER.

ALL NONMETALLIC CONDUIT SHALL BE CAPPED OR PLUGGED IMMEDIATELY AFTER INSTALLATION AND SHALL REMAIN CAPPED OR PLUGGED UNTIL WIRE/CABLES ARE INSTALLED.

NONMETALLIC CONDUITS IN WHICH WIRE OR CABLE IS NOT BEING INSTALLED SHALL REMAIN CAPPED OR PLUGGED.

BENDING OF PVC ELECTRICAL CONDUIT SHALL BE ACCOMPLISHED BY USING A BLANKET OR EMERSION TYPE TANK DESIGNED FOR THE PURPOSE OF BENDING PVC ELECTRICAL CONDUIT.

ALL CUT ENDS SHALL BE TRIMMED INSIDE AND OUTSIDE TO REMOVE ALL ROUGH EDGES ON NONMETALLIC CONDUIT. (SEE NEC 347.5)

WHEN REQUIRED TO CONNECT NONMETALLIC CONDUIT TO METALLIC CONDUIT, ONLY U.L. LISTED ADAPTER FITTINGS SHALL BE USED.

PRIOR TO CONDUIT ACCEPTANCE, CONDUIT CAPS OR PLUGS SHALL BE REMOVED, AND THE CAPS, PLUGS AND CONDUIT ENDS SHALL BE THOROUGHLY CLEANED AND THEN THE CAPS OR PLUGS REINSTALLED TO ENSURE THAT THE CAPS OR PLUGS CAN BE EASILY REMOVED IN THE FUTURE.

ALL CONDUIT BEING FURNISHED AND INSTALLED SHALL HAVE THE U.L. LABEL FIRMLY ATTACHED.

CONDUIT RUNS SHALL BE THE SAME SIZE OF CONDUIT FROM ONE END TO THE OTHER (FROM PULL BOX TO PULL BOX-OR-JUNCTION BOX TO JUNCTION BOX-OR-BASE TO BASE, ETC.).

TRACER WIRE SHALL BE INSTALLED AS STATED IN THE STANDARD SPECIFICATION, ITEM 652.3.1.1.

ALL CONDUIT RUNS SHALL BE STRAIGHT (WITHOUT BENDS) FROM PULL BOX TO PULL BOX, PULL BOX TO BASE AND BASE TO BASE AS SHOWN ON THE PLANS.

CONDUIT

STATE OF WISCONSIN
DEPARTMENT OF TRANSPORTATION

APPROVED
March, 2017 — DATE
/S/ Ahmet Demirbilek — STATE ELECTRICAL
FHWA

6

S.D.D. 9 B 2-10

TABLE OF NOMINAL DIMENSIONS AND WEIGHTS

DIMENSION IN INCHES		CORRUGATED STEEL PIPE								
PIPE DIAMETER (INSIDE)	A	12	12	12	18	18	18	24	24	24
PIPE LENGTH **	B	24	30	36	24	30	36	36	42	48
WALL THICKNESS	C	0.064	0.064	0.064	0.064	0.064	0.064	0.064	0.064	0.064
COVER	D	10 1/4	10 1/4	10 1/4	16 1/4	16 1/4	16 1/4	22 1/4	22 1/4	22 1/4
FRAME	E	14 1/2	14 1/2	14 1/2	20 1/2	20 1/2	20 1/2	26 1/2	26 1/2	26 1/2
FRAME	F	8 1/2	8 1/2	8 1/2	14 1/2	14 1/2	14 1/2	20 1/2	20 1/2	20 1/2
FRAME	G	11 1/2	11 1/2	11 1/2	17 1/2	17 1/2	17 1/2	23 1/2	23 1/2	23 1/2
WEIGHT IN POUNDS *										
FRAME AND COVER		60	60	60	110	110	110	155	155	155

* THE ACTUAL WEIGHT OF THE MANHOLE FRAME AND COVER MAY VARY WITHIN 5 PERCENT PLUS OR MINUS OF THE WEIGHTS SHOWN.

** NORMALLY USED LENGTHS. THE PROJECT ENGINEER SHALL DETERMINE IF PIPE LENGTHS, OTHER THAN THOSE SPECIFIED, SHALL BE USED, TO A MAXIMUM OF 48" (CONTINUOUS LENGTH, NON-SPLICED). THE ADDITIONAL LENGTH SHALL BE INCIDENTAL TO THE PULL BOX BID PRICE.

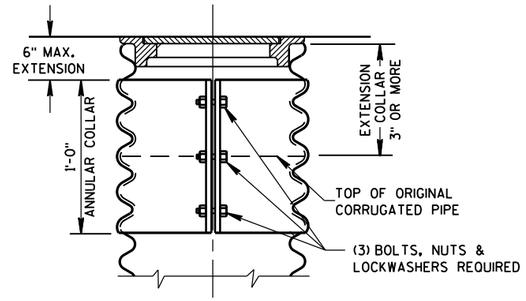

CORRUGATED PIPE EXTENDER

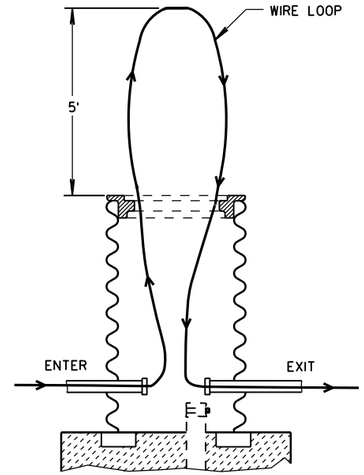

MEASUREMENT DETAIL FOR WIRE/CABLE IN THE PULL BOX

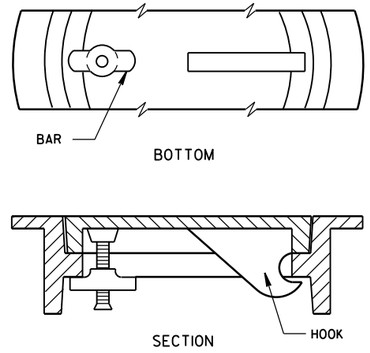

ALTERNATE COVER (LOCKING)

TIGHTENING BAR TYPE

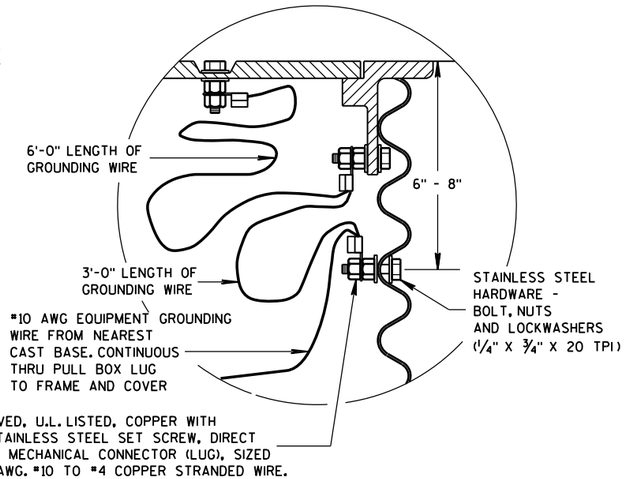

EQUIPMENT GROUNDING LUG AND LOCATION IN STEEL PULL BOXES

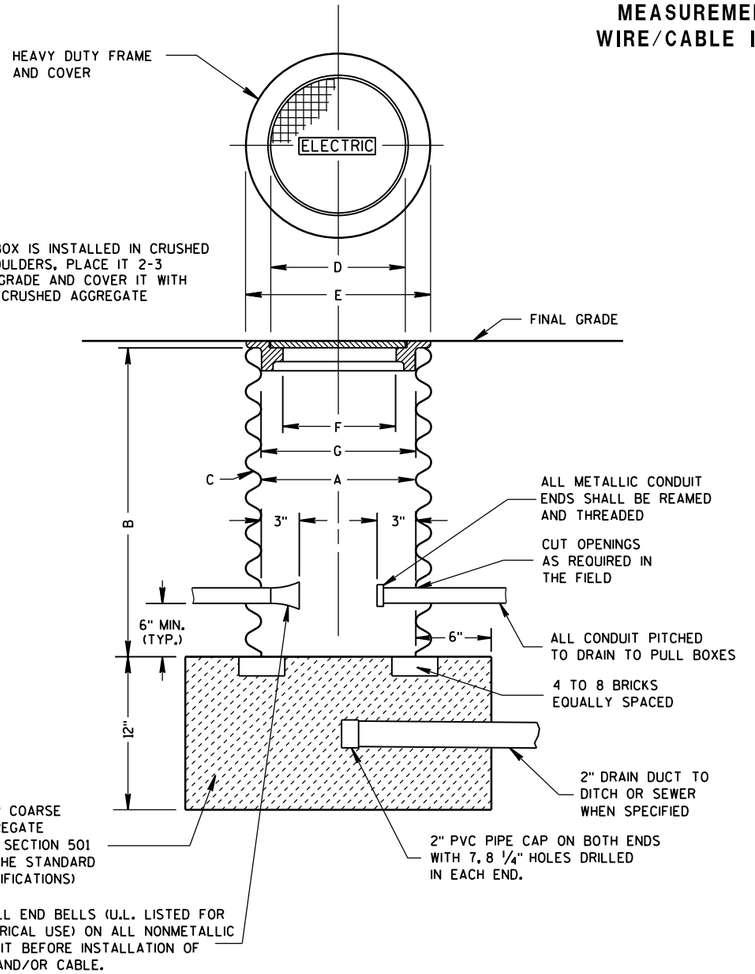

PULL BOX

GENERAL NOTES

DETAILS OF CONSTRUCTION, MATERIALS AND WORKMANSHIP NOT SHOWN ON THIS DRAWING SHALL CONFORM TO THE PERTINENT REQUIREMENTS OF THE CONTRACT.

ALL FRAMES AND COVERS SHALL BE HEAVY DUTY TYPE, SUITABLE FOR VEHICULAR TRAFFIC LOADS.

PULL BOXES LOCATED IN THE ROADWAYS SHALL HAVE LOCKING COVERS.

ENTRANCE HOLES INTO PULL BOXES SHALL BE CUT WITH A CIRCULAR HOLE SAW OR HYDRAULIC CONDUIT PUNCH. HOLE SIZE SHALL BE THE OUTSIDE DIAMETER OF THE CONDUIT THAT IS TO FIT IN THE OPENING PLUS NO MORE THAN 1/4".

THE CONTRACTOR SHALL NOT INSTALL WIRE IN ANY PULL BOX UNTIL ITS INSTALLATION HAS BEEN INSPECTED AND ACCEPTED BY THE ENGINEER.

GROUNDING LUGS (MECHANICAL CONNECTORS) SHALL BE U.L. LISTED AND APPROVED FOR USE WITH COPPER WIRE.

ALL METALLIC CONDUIT IN WHICH WIRE AND/OR CABLE IS TO BE INSTALLED, SHALL BE BUSHED BEFORE INSTALLATION OF THE WIRE AND/OR CABLE.

WHEN PULL BOXES ARE INSTALLED FOR FUTURE USE, DO NOT INSTALL THE EQUIPMENT GROUNDING LUG. THE EQUIPMENT GROUNDING LUG, THE EQUIPMENT GROUNDING ELECTRODE AND THE EQUIPMENT GROUNDING CONDUCTOR SHALL BE REQUIRED AND INSTALLED UNDER A FUTURE WIRING CONTRACT.

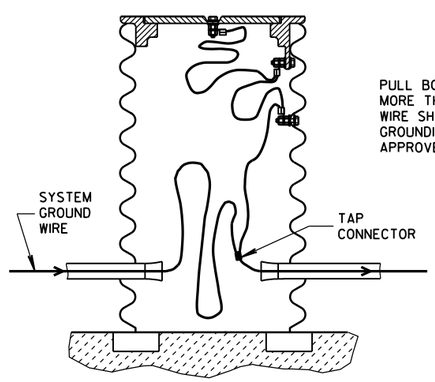

PULL BOX TO NEAREST BASE DISTANCE MORE THAN 20 FEET. PULL BOX GROUND WIRE SHALL CONNECT AT SYSTEM GROUNDING WIRE. USE DEPARTMENT APPROVED TAP CONNECTOR.

EQUIPMENT GROUNDING LUG AND LOCATION IN STEEL PULL BOXES

PULL BOX

STATE OF WISCONSIN
DEPARTMENT OF TRANSPORTATION

APPROVED
Sept. 2014
DATE
/S/ Ahmet Demirbilek
STATE ELECTRICAL 227
FHWA

6

S.D.D. 9 B 4-11

TABLE OF NOMINAL DIMENSIONS AND WEIGHTS

DIMENSION IN INCHES		NON-CONDUCTIVE PULL BOX	
BOX DIAMETER ** (INSIDE)	A	24	24
BOX OVERALL OUTSIDE DIAMETER	B	27	27
BOX LENGTH	C	36	42
FRAME OPENING	D	22 1/2	22 1/2
WEIGHT IN POUNDS *			
COVER		50	50
BOX ONLY		75	85

* THE ACTUAL WEIGHT OF THE COVER OR BOX ONLY MAY VARY NOT TO EXCEED 100 LBS INDIVIDUALLY.

** DIAMETER VARIES FROM TOP TO BOTTOM WITH THE DIAMETER LARGER AT THE BOTTOM TO PREVENT FROST HEAVE

GENERAL NOTES

DETAILS OF CONSTRUCTION, MATERIALS AND WORKMANSHIP NOT SHOWN ON THIS DRAWING SHALL CONFORM TO THE PERTINENT REQUIREMENTS OF THE CONTRACT.

ALL BOXES, FRAMES AND COVERS SHALL BE SUITABLE FOR TIER 15 LOADING AS SPECIFIED IN ANSI/SCTE 77.

PROVIDE AN OPENING FOR TOOL ASSISTED COVER REMOVAL NOT LARGE ENOUGH TO PERMIT PASSAGE OF A SPHERE MORE THAN 1/2" DIAMETER

ENSURE COVER SURFACE IS SKID RESISTANT WITH A COEFFICIENT OF FRICTION OF AT LEAST 0.5 AND VERTICAL SURFACE DICONTINUITIES LESS THAN 1/4".

COVER SHALL BE MAGNETICALLY LOCATABLE.

BOXES AND EXTENSIONS ARE TRIMMABLE FOR CUSTOM LENGTHS. TRIMMED PIECES SHALL MAINTAIN A UNIFORM LENGTH.

ENTRANCE HOLES INTO PULL BOXES SHALL BE CUT WITH A CIRCULAR HOLE SAW OR HYDRAULIC CONDUIT PUNCH. HOLE SIZE SHALL BE THE OUTSIDE DIAMETER OF THE CONDUIT THAT IS TO FIT IN THE OPENING PLUS NO MORE THAN 1/4".

THE CONTRACTOR SHALL NOT INSTALL WIRE IN ANY PULL BOX UNTIL ITS INSTALLATION HAS BEEN INSPECTED AND ACCEPTED BY THE ENGINEER.

ALL METALLIC CONDUIT IN WHICH WIRE AND/OR CABLE IS TO BE INSTALLED, SHALL BE BUSHED BEFORE INSTALLATION OF THE WIRE AND/OR CABLE.

ENTIRE BOX MUST BE CONSTRUCTED OF NON-CONDUCTIVE MATERIALS WITH THE EXCEPTION OF STAINLESS STEEL FASTENERS AND MAGNETIC LOCATABLE DEVICE.

WHEN A PULL BOX IS INSTALLED IN CRUSHED AGGREGATE SHOULDERS, PLACE IT 2-3 INCHES BELOW GRADE AND COVER IT WITH 2-3 INCHES OF CRUSHED AGGREGATE

LABEL ON COVER SHALL READ "ELECTRIC" FOR SIGNAL AND LIGHTING SYSTEMS, "WISDOT ITS" FOR COMMUNICATIONS AND ITS EQUIPMENT SYSTEMS.

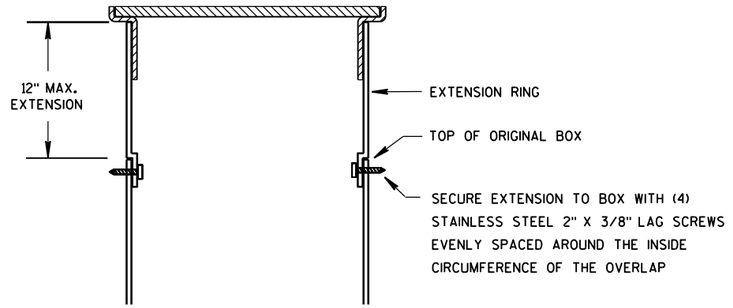

BOX EXTENSION

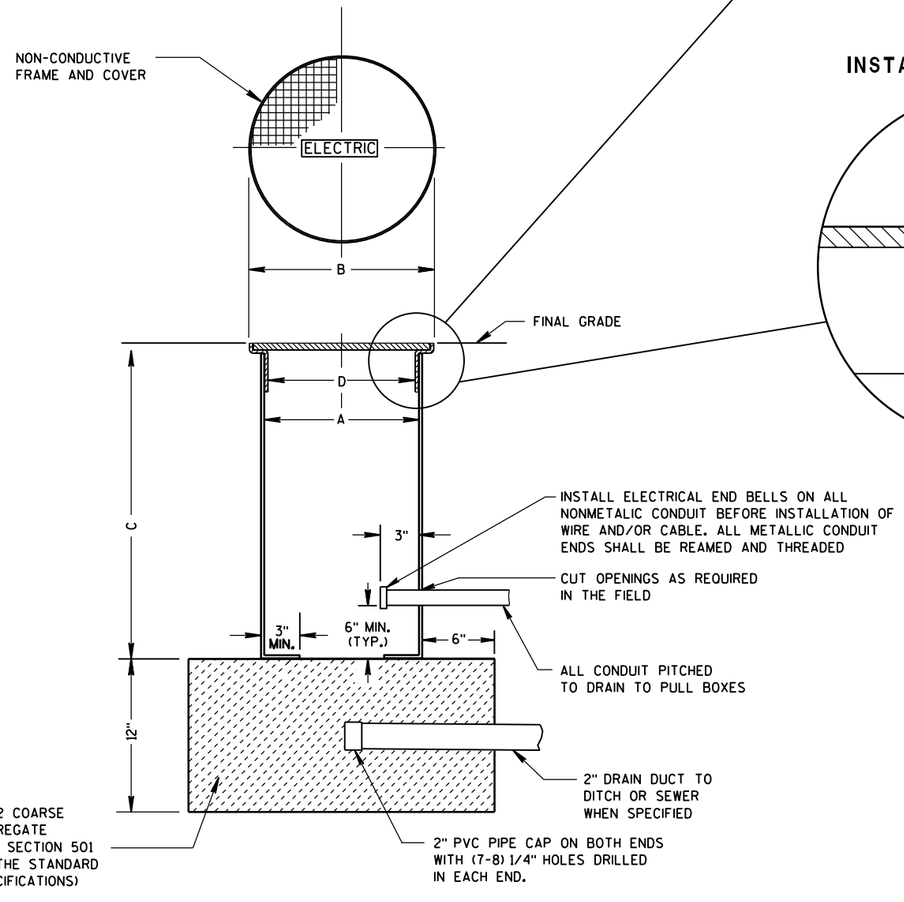

NON-CONDUCTIVE PULL BOX

INSTALLED IN SOD OR CRUSHED AGGREGATE

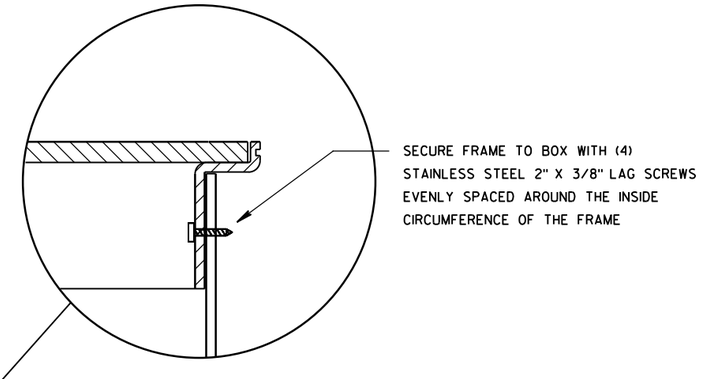

INSTALLED IN SIDEWALK

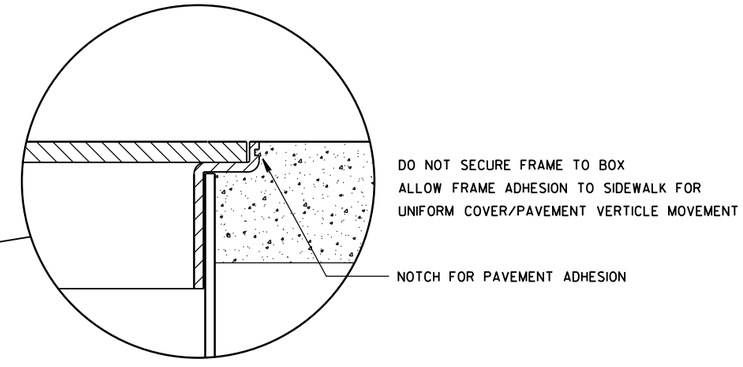

PULL BOX NON-CONDUCTIVE

STATE OF WISCONSIN
DEPARTMENT OF TRANSPORTATION

APPROVED
May 2017 — DATE
/S/ Ahmet Demirbilek — STATE ELECTRICAL
FHWA

6

S.D.D. 9 B 16-1

FORM DEPTH SHALL BE NO MORE THAN 6" BELOW GRADE ON THE LOWER SIDE OF BASE

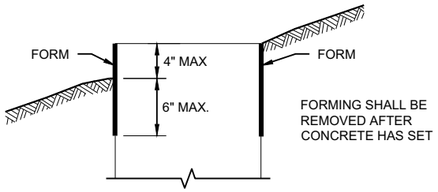

FORMING DETAIL

QUANTITY REQUIREMENTS	CONCRETE BASE TYPE		
	1	2	5 & 6
APPROX. CUBIC YARDS OF CONCRETE	0.40	0.57	0.40
LBS. OF HOOP BAR STEEL	NONE	23	16
LBS. OF VERTICAL BAR STEEL	NONE	60	18

GENERAL NOTES

DETAILS OF CONSTRUCTION, MATERIALS AND WORKMANSHIP NOT SHOWN ON THIS DRAWINGSHALL CONFORM TO THE PERTINENT REQUIREMENTS OF THE CONTRACT.

BASES SHALL BE EXCAVATED BY USE OF A CIRCULAR AUGER.

TOP SURFACES OF CONCRETE BASES SHALL BE TROWEL FINISHED SMOOTH AND LEVEL.

CONDUIT SIZES AND LOCATIONS SHALL BE SHOWN ON THE PLANS

THE FINAL OR TERMINATING CONCRETE BASE IN A CONDUIT RUN SHALL HAVE A 6" EXIT STUB INSTALLED FOR FUTURE CABLING USE. THE EXIT STUB SHALL BE SIZED AS USED THROUGHOUT THE CONDUIT RUN AS SHOWN A THE ENTRANCE OF THE BASE.

ENDS OF CONDUIT INSTALLED BELOW GRADE FRO FUTURE USE SHALL BE CAPPED IF METALLIC OR PLUGGED IF NON-METALLIC.

MINIMUM BENDING RADIUS OF CONDUIT IS EQUAL TO 6X THE DIAMETER.

CONDUIT HEIGHT ABOVE CONCRETE BASES SHALL BE 1 INCH. ALL METALLIC CONDUIT ENDS SHALL BE REAMED AND THREADED.

ALL CONDUIT ENDS AT THE TOP OF CONCRETE BASES SHALL BE CAPPED IF METALLIC OR PLUGGED IF NON-METALLIC IMMEDIATELY AFTER PLACEMENT AND BEFORE CONCRETE IS POURED. CONDUITS IN WHICH WIRE OR CABLE IS NOT INSTALLED SHALL REMAIN CAPPED OR PLUGGED.

BELL ENDS SHALL BE INSTALLED ON ALL PVC CONDUIT EXPOSED AT THE TOP OF CONCRETE BASES BEFORE INSTALLATION.

WHEN REQUIRED TO CONNECT NON-METALLIC CONDUIT TO METALLIC CONDUIT, ONLY ADAPTER FITTINGS, U.L. LISTED FOR ELECTRICAL USE, SHALL BE USED.

IF A BASE REQUIRES A DEEP FORM BECAUSE OF LOOSE DIRT OR FILL, THE FORM SHALL BE REMOVED BEFORE BACKFILLING AROUND THE BASE. BACKFILL SHALL BE TAMPED TIGHT AGAINST THE BARE CONCRETE BASE IN LAYERS OF 1 FOOT OR LESS.

A NO. 4 AWG STRANDED COPPER EQUIPMENT GROUNDING CONDUCTOR SHALL BE EXOTHERMICALLY WELDED TO THE EQUIPMENT GROUNDING ELECTRODE (GROUND ROD) FOR TYPE 2, TYPE 5 AND TYPE 6 BASES.

THE EQUIPMENT GROUNDING CONDUCTOR SHALL BE FURNISHED AND INSTALLED TO ENTER ALL BASE TYPES THROUGH A 1 INCH CONDUIT INSTALLED FOR GROUNDING PURPOSES, LEAVING A 4 FOOT COIL OF WIRE ABOVE THE CONCRETE BASE. THE EQUIPMENT GROUNDING CONDUCTOR SHALL BE NEATLY COILED AND THE COILS TIED TOGETHER.

ANCHOR RODS SHALL BE THREADED 12" IN LENGTH ON EACH END OF THE ROD. ANCHOR RODS SHALL BE MANUFACTURED IN ACCORDANCE WITH SECTION 654.2.1 OF THE STANDARD SPECIFICATIONS.

WASHERS AND LOCK WASHERS ARE REQUIRED ON ALL ANCHOR RODS.

WHEN ANCHOR RODS USING THE ALTERNATE "L" BEND ARE FURNISHED, THE 4 INCH"L" BEND SHALL BE IN ADDITION TO THE SPECIFIED ANCHOR ROD BAR LENGTH. THE "L" BEND SHALL NOT BE THREADED.

ANCHOR RODS SHALL BE INSTALLED WITH MISALIGNMENTS OF LESS THAN 1:40 FROM VERTICAL.

WELDING OF THE ANCHOR RODS TO THE CAGE IS UNACCEPTABLE. TIE WIRES SHALL BE USED.

BAR STEEL REINFORCEMENT SHALL BE COATED WITH POWDERED EPOXY RESIN IN ACCORDANCE WITH SECTION 505 OF THE STANDARD SPECIFICATIONS (LATEST EDITION).

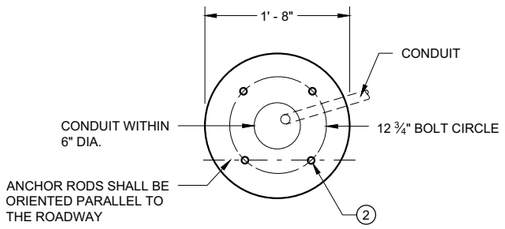

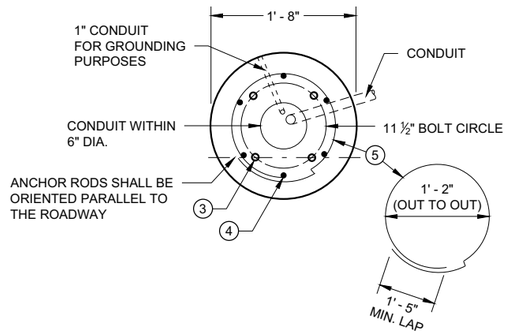

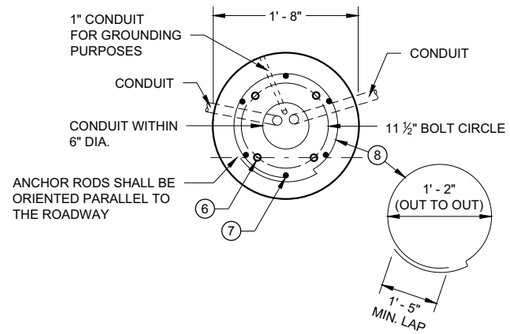

1 THE MINIMUM DEPTH OF CONDUIT EXITING THE CONCRETE BASE AND INSTALLED BELOW THE TRAVELED WAY SHALL BE 24 INCHES. THE MINIMUM DEPTH OF CONDUIT EXITING THE CONCRETE BASE THAT IS NOT INSTALLED BELOW THE TRAVELED WAY SHALL BE 18 INCHES. THE MAXIMUM DEPTH OF ALL CONDUIT SHALL BE 36 INCHES EXCEPT WITH WRITTEN APPROVAL OF THE ENGINEER.

2 (4) 1" DIA. X 3' - 6" ANCHOR RODS.

3 (4) 1" DIA. X 5' - 0" ANCHOR RODS.

4 (6) NO. 6 X 6' - 8" BAR STEEL REINFORCEMENT.

5 (7) NO. 4 X 5' - 1" BAR STEEL REINFORCEMENT @ 1' - 0" C - C.

6 (4) 1" DIA. X 3' - 6" ANCHOR RODS.

7 (6) NO. 4 X 4' - 8" BAR STEEL REINFORCEMENT.

8 (5) NO. 4 X 5' - 1" BAR STELL REINFORCEMENT @ 1' - 0" C -C.

9 EXOTHERMIC CONNECTION TO EUIPMENT GROUNDING CONDUCTOR

10 ⅝" DIA. X 8' -0" COPPERCLAD EQUIPMENT GROUNDING ELECTRODE REQUIRED

11 ANY ANCHOR ROD PROJECTION SHORTER THAN 2 ¾" OR LONGER THAN 3 ¼" SHALL REQUIRE THE BASE TO BE REMOVED AND REPLACED AT THE CONTRACTORS EXPENSE.

12 FOR NON - BREAKAWAY INSTALLATIONS, 4 ½" ± ANCHOR ROD PROJECTION WITH THE USE OF LEVELING NUTS. RODENT SCREEN REQUIRED.

HALF SECTION IN UNPAVED AREA
(TYPICAL FOR TYPES 1, 2, 5 & 6)

HALF SECTION IN PAVEMENT
(TYPICAL FOR TYPES 1, 2, 5 & 6)

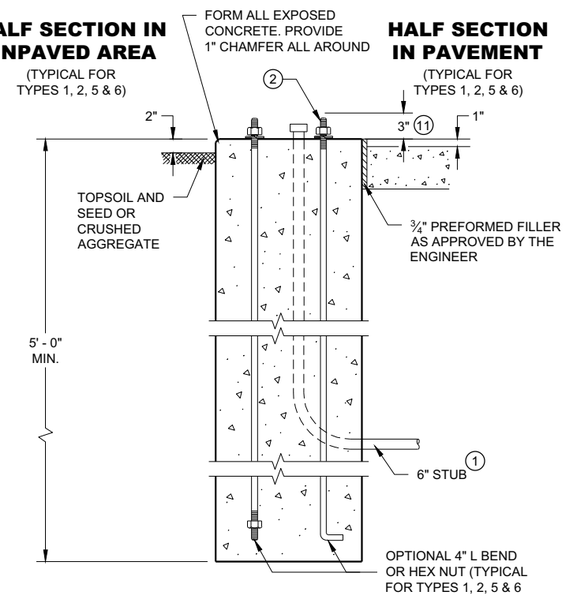

TYPE 1

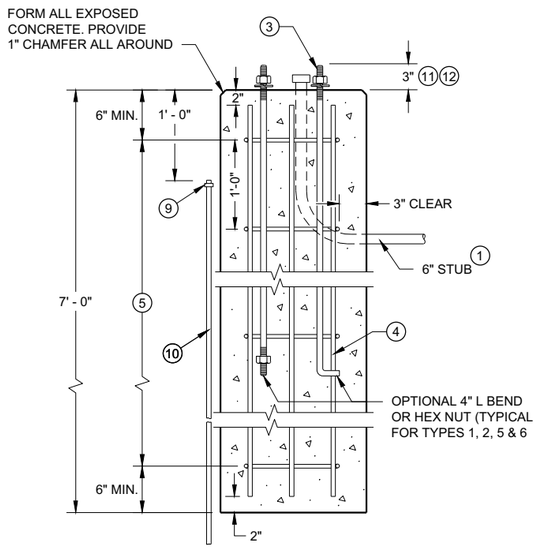

TYPE 2

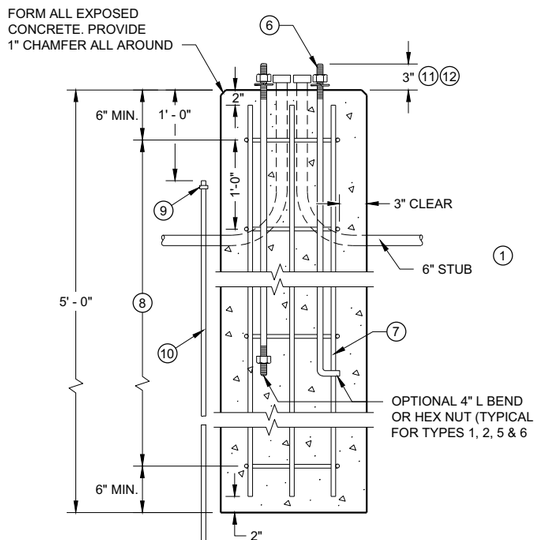

TYPE 5 & 6

CONCRETE BASES

CONCRETE BASES TYPES 1, 2, 5, & 6

STATE OF WISCONSIN
DEPARTMENT OF TRANSPORTATION

APPROVED
May 2019
DATE
/S/ Ahmet Demirbilek
STATE ELECTRICAL ENGI

FHWA

6
SDD 09C02 - 09

GENERAL NOTES

DETAILS OF CONSTRUCTION, MATERIALS AND WORKMANSHIP NOT SHOWN ON THIS DRAWING SHALL CONFORM TO THE PERTINENT REQUIREMENTS OF THE CONTRACT.

FOUR (4) BOLTS SHALL BE FURNISHED WITH EACH TRANSFORMER BASE. BOLTS SHALL BE 1" DIAMETER, 4" IN LENGTH, WITH WASHERS, LOCK WASHERS AND NUTS. BOLTS, NUTS AND WASHERS SHALL BE MANUFACTURED IN ACCORDANCE WITH SECTION 531.2.2 OF THE STANDARD SPECIFICATIONS.

LEVELING SHIMS, IF NEEDED, SHALL BE DESIGNED FOR THE PURPOSE AND USED UNDER CAST BASES WHEN PLUMBING POLES OR STANDARDS DURING INSTALLATION. THE USE OF WASHERS IN LIEU OF PROPER LEVELING SHIMS IS NOT ACCEPTABLE.

SHIM LENGTH SHALL BE LONG ENOUGH TO COMPLETELY COVER THE AREA UNDER THE LENGTH AND WIDTH OF THE BASE MOUNTING FLANGE.

DOUBLE NUTTING IS NOT ACCEPTABLE FOR LEVELING OR MOUNTING PURPOSES.

A NEMA APPROVED, U.L. LISTED, COPPER WITH BRASS OR STAINLESS STEEL SET SCREW, DIRECT BURY RATED, MECHANICAL CONNECTOR (LUG), SIZED TO ACCEPT AWG. #10 TO #4 COPPER STRANDED WIRE SHALL BE FURNISHED AND INSTALLED IN THE PEDESTAL AND TRANSFORMER BASES.

THE MECHANICAL CONNECTOR SHALL BE INSTALLED USING A 1/4" - 20 (TPI) STAINLESS STEEL HEX HEAD BOLT OF SUFFICIENT LENGTH TO FIRMLY ATTACH THE LUG TO THE BASE.

SHOULD THE MANNER OF ATTACHMENT OF THE LUG REQUIRE WASHERS, HEX NUTS, LOCK WASHER - THEY SHALL BE STAINLESS STEEL AS IS THE BOLT. THE MANNER OF ATTACHMENT SHALL NOT BLOCK ACCESSIBILITY TO WIRE PLACEMENT IN THE CONNECTOR.

PEDESTAL BASE COLLAR THREADING SHALL BE TAPERED AND IN ACCORDANCE WITH NATIONAL PIPE THREADING DIMENSIONS.

BASE COLLAR THREADING SHALL EXTEND INTO THE BASE COLLAR WITH SUFFICIENT DEPTH TO ACCEPT THE INSTALLATION OF TRAFFIC SIGNAL STANDARDS TO A DEPTH OF 1 1/2", THEN TIGHTENING TO A POINT OF BEING IMMOVABLE.

THE ACCESS DOOR SHALL BE OF THE SAME MATERIAL AS THE BASE.

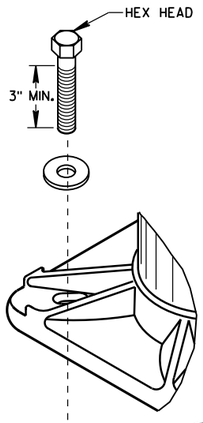

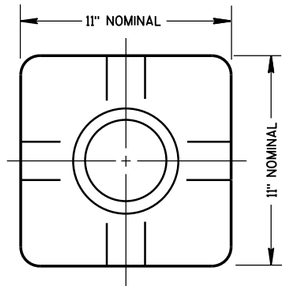

TOP VIEW
(PEDESTAL BASE)

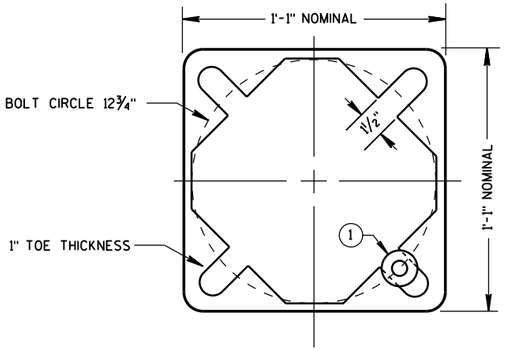

BOTTOM VIEW
(PEDESTAL BASE)

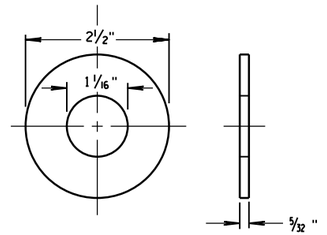

ZINC COATED STEEL WASHER
TO BE PROVIDED BY THE CONTRACTOR

PEDESTAL BASE WASHER (1)

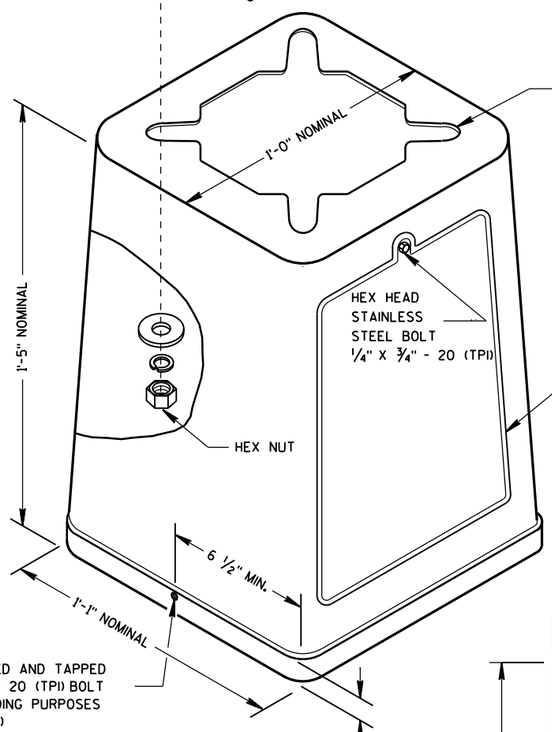

ISOMETRIC VIEW

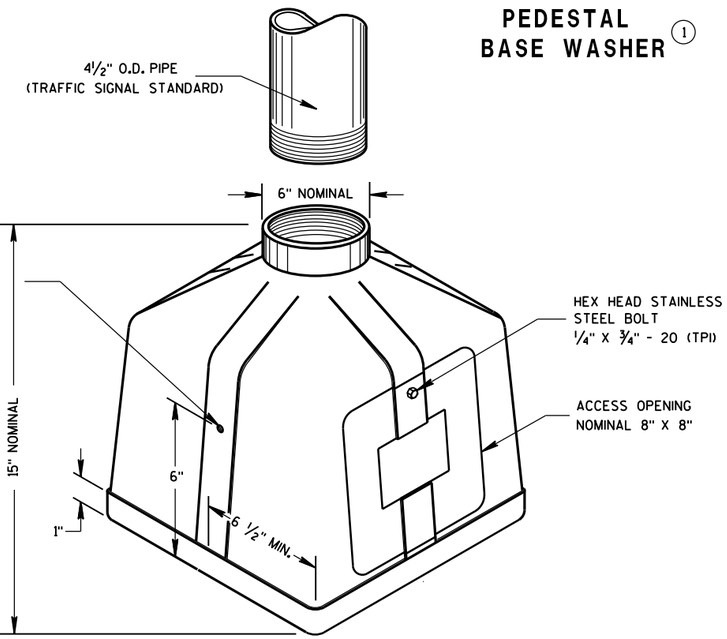

ISOMETRIC VIEW

PEDESTAL BASE

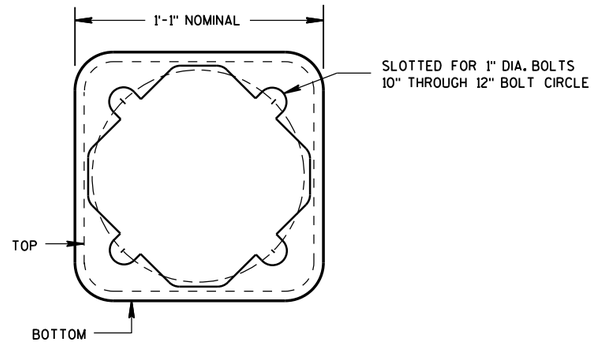

BOTTOM VIEW
(TRANSFORMER BASE)

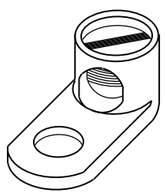

TYPICAL MECHANICAL CONNECTOR LUG

TO BE FURNISHED WITH EACH BASE

TRANSFORMER BASE

INTENDED FOR USE WITH TYPE 2, 3, 4, 5 & 6 POLES

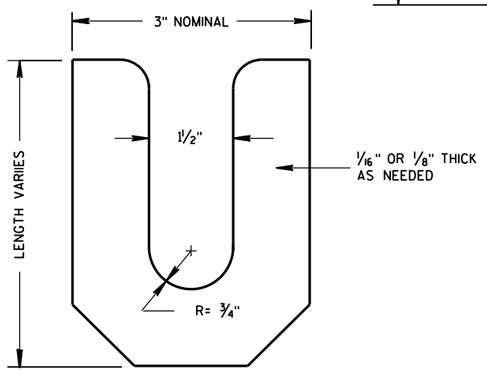

LEVELING SHIM

TRANSFORMER/PEDESTAL BASES

STATE OF WISCONSIN
DEPARTMENT OF TRANSPORTATION

APPROVED
Sept. 2014 — DATE
/S/ Ahmet Demirbilek — STATE ELECTRICAL
FHWA

6

S.D.D. 9 C 3-4

6

S.D.D. 9 C 3-4

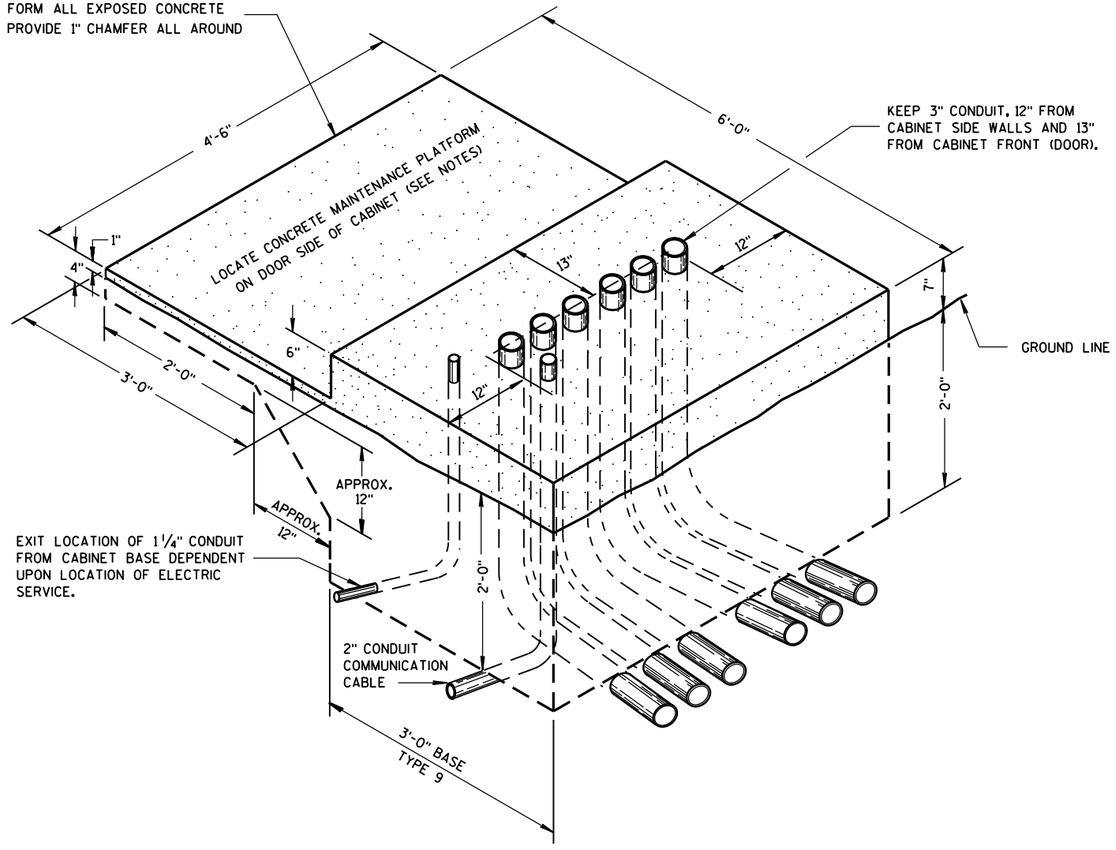

ISOMETRIC VIEW

TYPE 9, SPECIAL

(C.Y. CONCRETE = APPROX. 1.56)

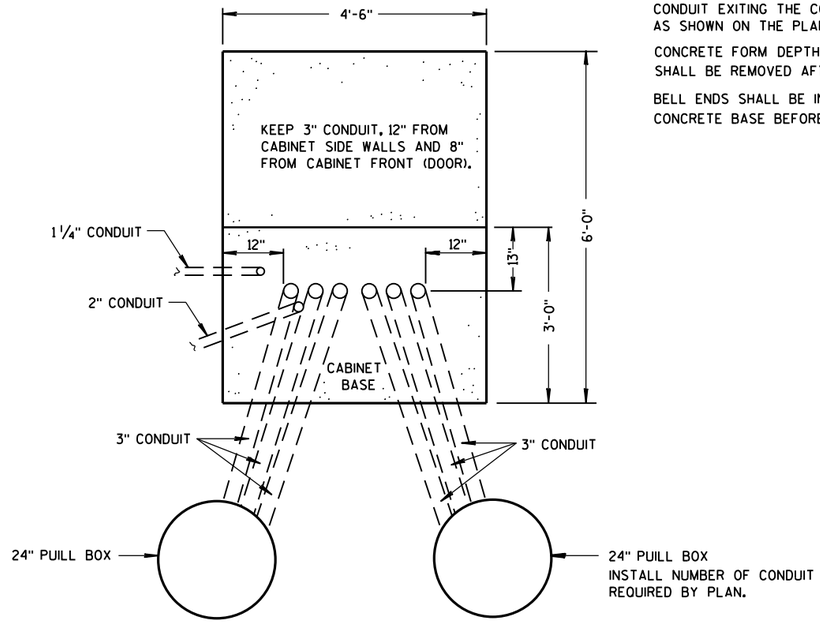

PLAN VIEW

CONCRETE CONTROL CABINET BASE, TYPE 9, SPECIAL

GENERAL NOTES

DETAILS OF CONSTRUCTION, MATERIALS AND WORKMANSHIP NOT SHOWN ON THIS DRAWING SHALL CONFORM TO THE PERTINENT REQUIREMENTS OF THE CONTRACT.

INSTALL FOUR ½ INCH MINIMUM DIAMETER X 4 INCH MINIMUM LENGTH STAINLESS STEEL APPROVED CONCRETE MASONRY ANCHORS WITH A PULLOUT STRENGTH OF 9,000 LBS. TO ANCHOR THE CABINET TO TYPE 6, 7, 8, AND 9 BASES. THE ANCHOR STUDS SHALL BE LOCATED AS DIRECTED BY THE ENGINEER TO PROPERLY ANCHOR THE CONTROL CABINET TO THE BASE.

WHEN REQUIRED TO CONNECT NONMETALLIC CONDUIT TO METALLIC CONDUIT, ONLY ADAPTER FITTINGS, U.L. LISTED FOR ELECTRICAL USE, SHALL BE USED.

CONDUIT HEIGHT ABOVE THE CONCRETE BASE SHALL BE 1 INCH.

DEPTH OF CONDUIT INSTALLED BELOW THE TRAVELED WAY SHALL BE 24 INCHES MINIMUM AND 36 INCHES MAXIMUM.

DEPTH OF CONDUIT INSTALLED THAT IS NOT BELOW THE TRAVELED WAY SHALL BE 18 INCHES MINIMUM AND 36 INCHES MAXIMUM.

ANY EXCEPTION TO THE MAXIMUM DEPTH SHALL BE ONLY WITH THE WRITTEN APPROVAL OF THE ENGINEER.

CONTROL CABINET BASE TOP SURFACE SHALL BE TROWEL FINISHED SMOOTH AND LEVEL.

MAINTENANCE PLATFORM SHALL BE FLOAT OR BROOM FINISHED AND BE LEVEL.

MAINTENANCE PLATFORMS ARE NOT REQUIRED WHEN THE SURROUNDING AREA IS PAVED.

MINIMUM BENDING RADIUS OF CONDUIT = 6 X THE DIAMETER.

ALL METALLIC CONDUIT ENDS SHALL BE REAMED AND THREADED.

CAP ALL BELOW GRADE METALLIC CONDUIT ENDS IN WHICH WIRE OR CABLE IS NOT BEING INSTALLED.

PLUG ALL BELOW GRADE NONMETALLIC CONDUIT ENDS IN WHICH WIRE OR CABLE IS NOT BEING INSTALLED.

ALL CONDUIT ENDS AT THE TOP OF CONCRETE BASES SHALL BE CAPPED IF METALLIC OR PLUGGED IF NONMETALLIC IMMEDIATELY AFTER PLACEMENT AND BEFORE CONCRETE IS POURED. CONDUITS IN WHICH WIRE OR CABLE IS NOT BEING INSTALLED SHALL REMAIN CAPPED OR PLUGGED.

CONDUIT EXITING THE CONCRETE BASE (SIX THREE INCH) SHALL TERMINATE IN PULL BOXES AS SHOWN ON THE PLANS.

CONCRETE FORM DEPTH BELOW FINISHED GRADE SHALL BE 6" MAXIMUM. CONCRETE FORMS SHALL BE REMOVED AFTER CONCRETE HAS SET.

BELL ENDS SHALL BE INSTALLED ON ALL PVC CONDUIT EXPOSED AT THE TOP OF THE CONCRETE BASE BEFORE INSTALLATION OF CABLE OR WIRE.

CONCRETE CONTROL CABINET BASE, TYPE 9, SPECIAL

STATE OF WISCONSIN
DEPARTMENT OF TRANSPORTATION

APPROVED
Sept. 2014 — DATE
/S/ Ahmet Demirbilek — STATE ELECTRICAL 231
FHWA

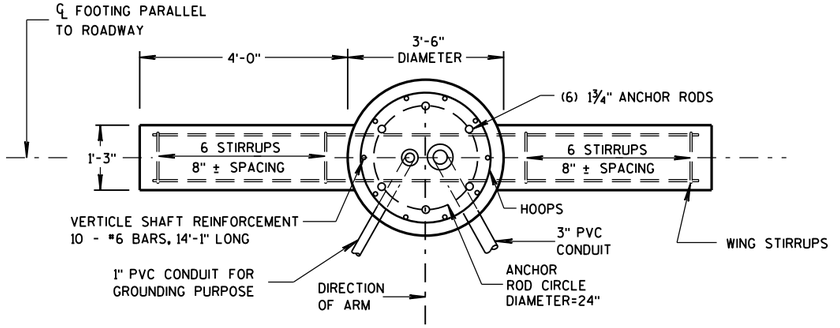

PLAN VIEW

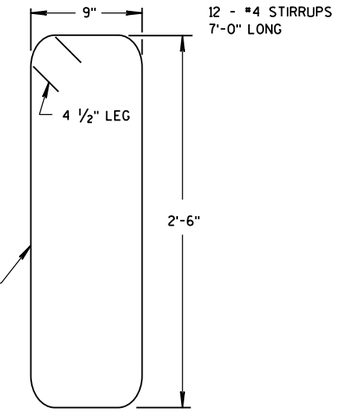

WING STIRRUP

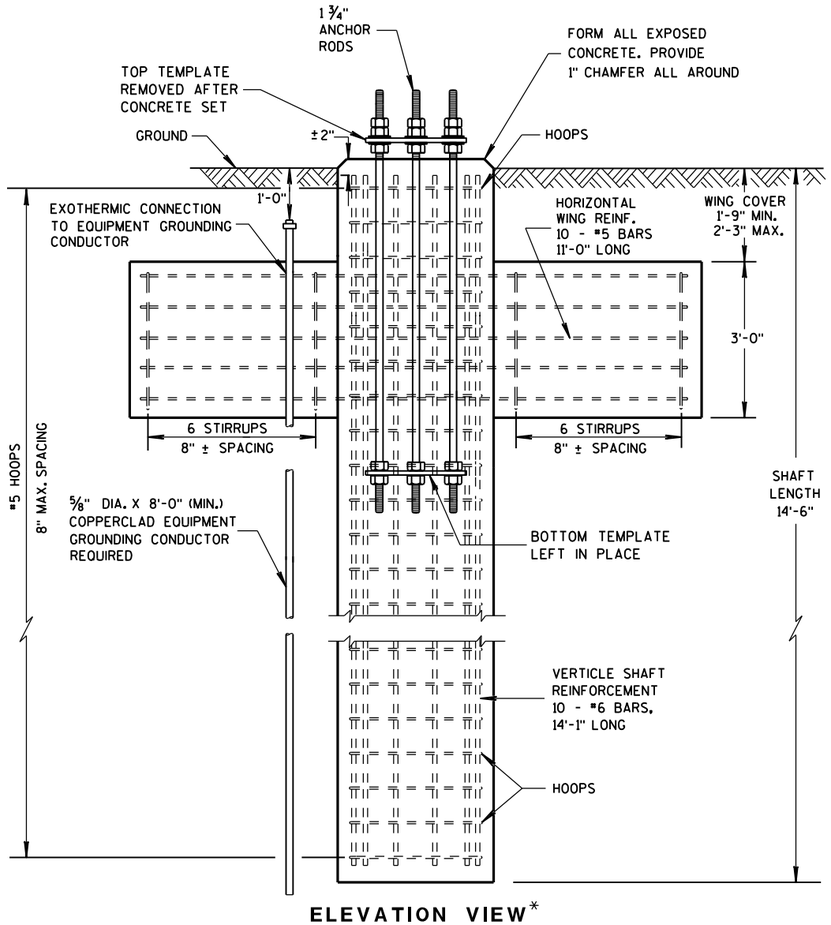

ELEVATION VIEW*

* CONDUITS ARE NOT SHOWN ON THIS VIEW FOR CLARITY

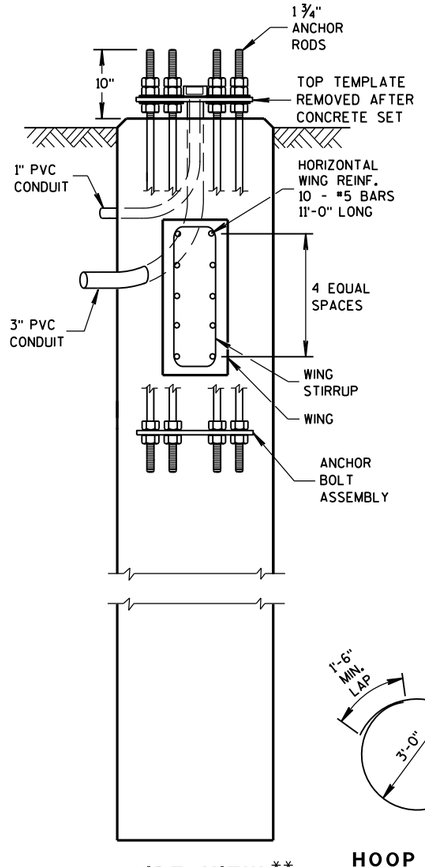

SIDE VIEW**

** HOOPS AND VERTICAL SHAFT REINFORCEMENT NOT SHOWN ON THIS VIEW FOR CLARITY

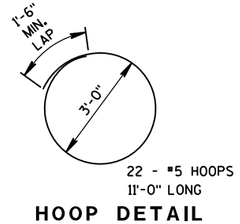

HOOP DETAIL

GENERAL NOTES

DETAILS OF CONSTRUCTION, MATERIALS AND WORKMANSHIP NOT SHOWN ON THIS DRAWING SHALL CONFORM TO THE PERTINENT REQUIREMENTS OF THE CONTRACT.

ORIENT ANCHOR RODS IN FOOTING AND PROVIDE ANCHOR ROD PROJECTION ABOVE TOP OF CONCRETE FOOTING BASE PER THIS SHEET.

BENDING DIMENSIONS FOR REINFORCING BARS ARE OUT TO OUT.

USE 3" CLEAR FOR ALL REINFORCEMENT UNLESS NOTED OTHERWISE.

THE CONTRACTOR IS RESPONSIBLE FOR MAKING HIS OWN DETERMINATION AS TO THE TYPE AND LOCATION OF THE UNDERGROUND UTILITIES AS MAY BE NECESSARY TO AVOID DAMAGE THERETO.

WELDING OF ANCHOR RODS TO THE CAGE IS UNACCEPTABLE. TEMPLATES SHALL BE USED.

BASES (SHAFT), BELOW THE WING, SHALL BE EXCAVATED BY THE USE OF A CIRCULAR AUGER. IF A BASE REQUIRES A DEEP FORM BECAUSE OF LOOSE SOIL, THE FORM SHALL BE REMOVED BEFORE BACKFILLING AROUNG THE BASE. BACKFILL SHALL BE TAMPED TIGHT AGAINST THE BARE CONCRETE BASE IN LAYERS OF 1 FOOT OR LESS.

TOP SURFACE OF THE CONCRETE BASE SHALL BE TROWEL FINISHED AND LEVEL.

CONDUIT SIZE AND LOCATIONS SHALL BE AS SHOWN ON THE PLANS.

MINIMUM BENDING RADIUS OF CONDUIT IS EQUAL TO 6 X THE DIAMETER.

CONDUIT HEIGHT ABOVE CONCRETE BASE SHALL BE 4½" INCHES. ALL METALLIC CONDUIT ENDS SHALL BE REAMED AND THREADED. NONMETALLIC CONDUIT SHALL HAVE BELL ENDS INSTALLED. ALL CONDUIT SHALL SLOPE TO PULL BOX.

ALL CONDUIT ENDS AT THE TOP OF THE BASES SHALL BE CAPPED IF METALLIC OR PLUGGED IF NONMETALLIC IMMEDIATELY AFTER PLACEMENT AND BEFORE CONCRETE IS POURED. CONDUITS IN WHICH WIRE OR CABLE IS NOT INSTALLED SHALL REMAIN CAPPED OR PLUGGED.

BELL ENDS SHALL BE INSTALLED ON ALL PVC CONDUIT EXPOSED AT THE TOP OF CONCRETE BASES BEFORE INSTALLATION OF CABLE OR WIRE.

WHEN REQUIRED TO CONNECT NONMETALLIC CONDUIT TO METALLIC CONDUIT, ONLY ADAPTOR FITTINGS, UL LISTED FOR ELECTRICAL USE, SHALL BE USED.

A NO. 4 AWG, STRANDED COPPER EQUIPMENT GROUNDING CONDUCTOR SHALL BE EXOTHERMICALLY WELDED TO THE EQUIPMENT GROUNDING ELECTRODE (GROUND ROD).

THE EQUIPMENT GROUNDING CONDUCTOR SHALL BE FURNISHED AND INSTALLED TO ENTER THE BASE THROUGH A 1-INCH CONDUIT INSTALLED FOR GROUNDING PURPOSES, LEAVING A 4-FOOT COIL OF WIRE ABOVE THE CONCRETE BASE, THE EQUIPMENT GROUNDING CONDUCTOR SHALL BE NEATLY COILED AND THE COILS TIED TOGETHER.

BAR STEEL REINFORCEMENT SHALL BE COATED WITH POWDERED EPOXY RESIN IN ACCORDANCE WITH SECTION 505 OF THE STANDARD SPECIFICATIONS.

THE MINIMUM DEPTH OF CONDUIT EXITING THE CONCRETE BASE AND INSTALLED BELOW THE TRAVEL WAY SHALL BE 24-INCHES. THE MINIMUM DEPTH OF CONDUIT EXITING THE CONCRETE BASE THAT IS NOT INSTALLED BELOW THE TRAVELED WAY SHALL BE 18-INCHES. THE MAXIMUM DEPTH OF ALL CONDUIT SHALL BE 36-INCHES, (GREATER THAN 36-INCHES IF INSTALLED IN BREAKER-RUN), EXCEPT WITH THE WRITTEN APPROVAL OF THE ENGINEER.

ANCHOR RODS SHALL BE INSTALLED WITH MISALIGNMENTS OF LESS THAN 1:40 FROM VERTICAL.

CONCRETE MASONRY	fc=3,500 p.s.i.
HIGH STRENGTH BAR STEEL REINFORCEMENT, GRADE 60	fy=60,000 p.s.i.
ANCHOR RODS, ASTM F1554 GRADE 55 (IN ACCORDANCE WITH SECTION 531.2.2 OF THE STANDARD SPECIFICATIONS	fy=55,000 p.s.i.
TEMPLATES, ASTM A709 GRADE 36	fy=36,000 p.s.i.

(FOR TYPE 12 & 13 & OVER HEIGHT (OH) POLES)

CONCRETE = 6.3 C.Y.
H.S. REINFORCEMENT = 635 LBS.

TO BE USED WHEN GROUND ELEVATION AT BASE EQUALS OR IS GREATER THAN HIGH POINT OF ROADWAY ELEVATION.
SEE S.D.D. 9C13-2 WHEN GROUND ELEVATION AT BASE IS LOWER THAN HIGH POINT OF ROADWAY ELEVATION.

CONCRETE BASE TYPE 13

STATE OF WISCONSIN
DEPARTMENT OF TRANSPOI

6

S.D.D. 9 C 12-9a

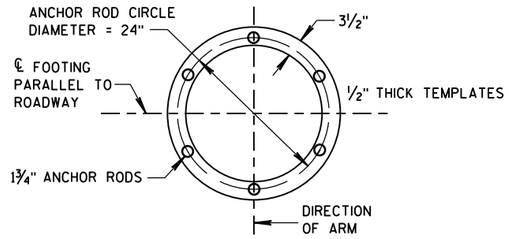

TOP AND BOTTOM TEMPLATES

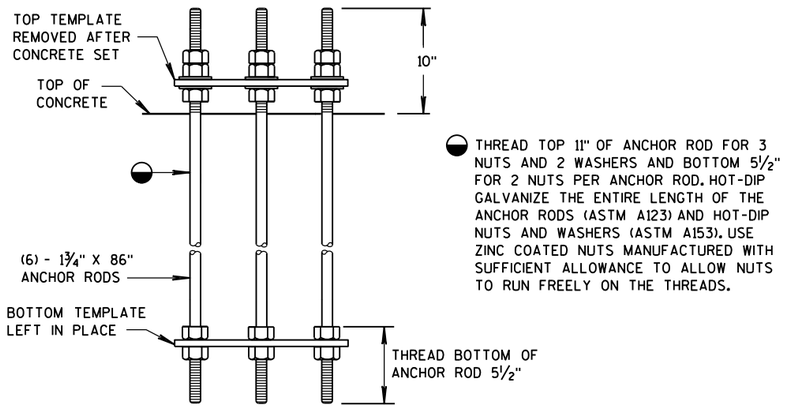

ANCHOR BOLT ASSEMBLY DETAIL

CONCRETE BASE TYPE 13 ANCHOR ASSEMBLY

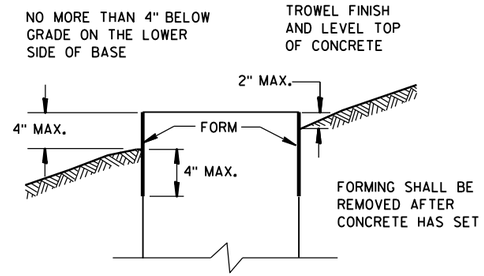

FORMING DETAIL

CONCRETE BASE TYPE 13	
STATE OF WISCONSIN DEPARTMENT OF TRANSPORTATION	
APPROVED May 2017 DATE FHWA	/S/ Ahmet Demirbilek STATE ELECTRICAL

6

S.D.D. 9 C 12-9b

GENERAL NOTES

DETAILS OF CONSTRUCTION, MATERIALS AND WORKMANSHIP NOT SHOWN ON THIS DRAWING SHALL CONFORM TO THE PERTINENT REQUIREMENTS OF THE CONTRACT.

THE CONTRACTOR IS RESPONSIBLE FOR MAKING THEIR OWN DETERMINATION AS TO THE TYPE AND LOCATION OF UNDERGROUND UTILITIES AS MAY BE NECESSARY TO AVOID DAMAGE THERETO.

BASES (SHAFT) SHALL BE EXCAVATED BY THE USE OF A CIRCULAR AUGER. IF BASE REQUIRES A DEEP FORM BECAUSE OF LOOSE SOIL, THE FORM SHALL BE REMOVED BEFORE BACKFILLING. A STEEL CASING OR CORRUGATED METAL PIPE IS ALLOWED TO REMAIN. BACKFILL SHALL BE TAMPED TIGHT AGAINST THE BASE IN LAYERS OF ONE FOOT OR LESS.

TOP SURFACE OF THE CONCRETE BASE SHALL BE TROWEL FINISHED AND LEVEL.

ANY DAMAGE TO THE CONCRETE BASE AND ANCHOR RODS DURING CONSTRUCTION OPERATIONS SHALL BE REPAIRED AT THE ENGINEER'S DIRECTION, AT THE EXPENSE OF THE CONTRACTOR.

THE REINFORCEMENT AND ANCHOR RODS SHALL BE ADEQUATELY SUPPORTED IN THE PROPER POSITIONS SO NO MOVEMENT OCCURS DURING CONCRETE PLACEMENT.

ORIENT ANCHOR RODS IN FOOTING AND PROVIDE ANCHOR RODS STICK OUT ABOVE TOP OF CONCRETE FOOTING BASE PER THIS SHEET.

ANCHOR RODS SHALL BE INSTALLED WITH MISALIGNMENTS OF LESS THAN 1:40 FROM VERTICAL.

BAR STEEL REINFORCEMENT SHALL BE COATED WITH POWDERED EPOXY RESIN IN ACCORDANCE WITH SECTION 505 OF THE STANDARD SPECIFICATIONS (LATEST EDITION).

BENDING DIMENSIONS FOR REINFORCING BARS ARE OUT TO OUT.

WELDING OF ANCHOR RODS TO THE CAGE IS UNACCEPTABLE. TEMPLATES SHALL BE USED.

USE 3" CLEAR FOR ALL REINFORCEMENT UNLESS NOTED OTHERWISE.

FORM ALL EXPOSED CONCRETE CORNERS WITH 1" CHAMFER ALL AROUND. TOP OF THE CONCRETE BASE SHALL BE TROWEL FINISHED AND LEVEL.

CONDUIT SIZES AND LOCATIONS SHALL BE SHOWN ON THE PLANS.

MINIMUM BENDING RADIUS OF CONDUIT IS EQUAL TO 6 TIMES THE DIAMETER.

CONDUIT HEIGHT ABOVE CONCRETE BASES SHALL BE 4 ½" INCHES. ALL METALLIC CONDUIT ENDS SHALL BE REAMED AND THREADED. NON-METALLIC CONDUIT SHALL HAVE BELL ENDS INSTALLED. ALL CONDUIT SHALL SLOPE TO PULL BOX.

ALL CONDUIT ENDS AT THE TOP OF CONCRETE BASES SHALL BE CAPPED IF METALLIC OR PLUGGED IF NON-METALLIC IMMEDIATELY AFTER PLACEMENT AND BEFORE CONCRETE IS POURED. CONDUITS IN WHICH WIRE OR CABLE IS NOT INSTALLED SHALL REMAIN CAPPED OR PLUGGED.

BELL ENDS SHALL BE INSTALLED ON ALL PVC CONDUIT EXPOSED AT THE TOP OF CONCRETE BASES BEFORE INSTALLATION OF CABLE OR WIRE.

WHEN REQUIRED TO CONNECT NON-METALLIC CONDUIT TO METALLIC CONDUIT, ONLY ADAPTER FITTINGS, U.L. LISTED FOR ELECTRICAL USE, SHALL BE USED.

A NO. 4 AWG STRANDED COPPER EQUIPMENT GROUNDING CONDUCTOR SHALL BE EXOTHERMICALLY WELDED TO THE EQUIPMENT GROUNDING ELECTRODE (GROUND ROD).

THE EQUIPMENT GROUNDING CONDUCTOR SHALL BE FURNISHED AND INSTALLED TO ENTER THE BASE THROUGH A 1 INCH CONDUIT INSTALLED FOR GROUNDING PURPOSES, LEAVING A 4 FOOT COIL OF WIRE ABOVE THE CONCRETE BASE. THE EQUIPMENT GROUNDING CONDUCTOR SHALL BE NEATLY COILED AND THE COILS TIED TOGETHER.

THE FINAL OR TERMINATING CONCRETE BASE IN A CONDUIT RUN SHALL HAVE A 6" EXIT STUB INSTALLED FOR FUTURE CABLING USE. THE EXIT STUB SHALL BE SIZED AS USED THROUGHOUT THE CONDUIT RUN AS SHOWN A THE ENTRANCE OF THE BASE.

(1) THE MINIMUM DEPTH OF CONDUIT EXITING THE CONCRETE BASE AND INSTALLED BELOW THE TRAVELED WAY SHALL BE 24 INCHES. THE MINIMUM DEPTH OF CONDUIT EXITING THE CONCRETE BASE THAT IS NOT INSTALLED BELOW THE TRAVELED WAY SHALL BE 18 INCHES. THE MAXIMUM DEPTH OF ALL CONDUIT SHALL BE 36 INCHES (GREATER THAN 36 INCHES IF INSTALLED IN BREAKER RUN) EXCEPT WITH WRITTEN APPROVAL OF THE ENGINEER.

CONCRETE MASONRY.....fc = 3,500 p.s.i
HIGH STRENGTH BAR STEEL REINFORCEMENT, GRADE 60.....fy = 60,000 p.s.i.
ANCHOR RODS, ASTM F1554 GRADE 55 (IN ACCORDANCE WITH SECTION 531.2.2 OF THE STANDARD SPECIFICATION).....fy = 55,000 p.s.i.
TEMPLATES, ASTM A709, GRADE 36.....fy = 36,000 p.s.i.

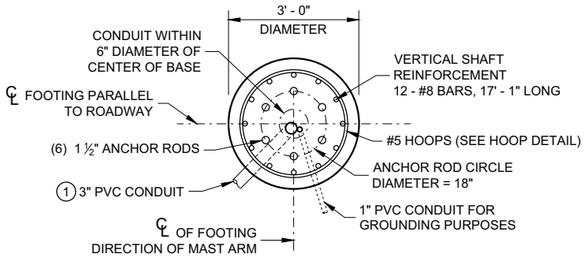

PLAN VIEW

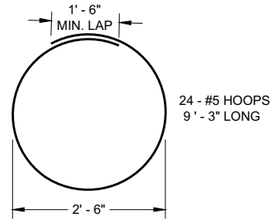

HOOP DETAIL

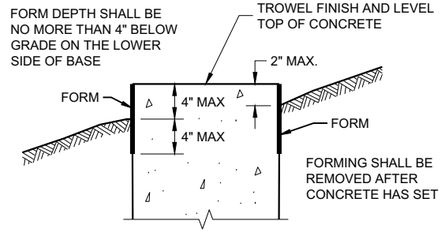

FORMING DETAIL

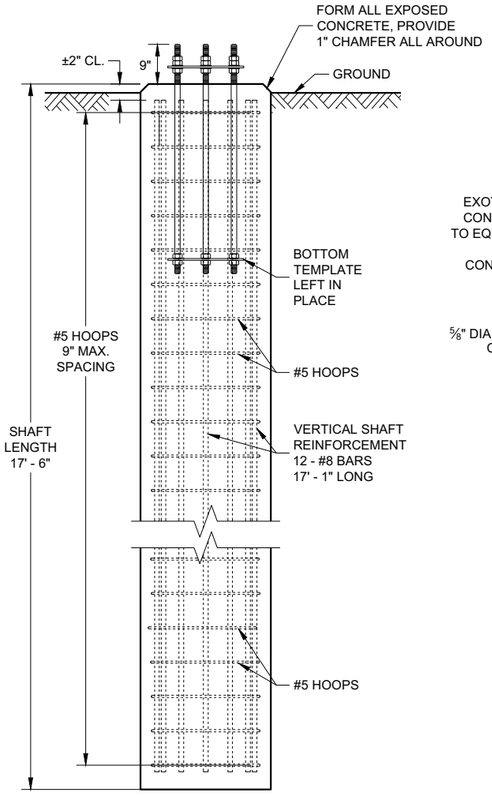

ELEVATION VIEW
(CONDUITS NOT SHOWN ON THIS VIEW FOR CLARITY)

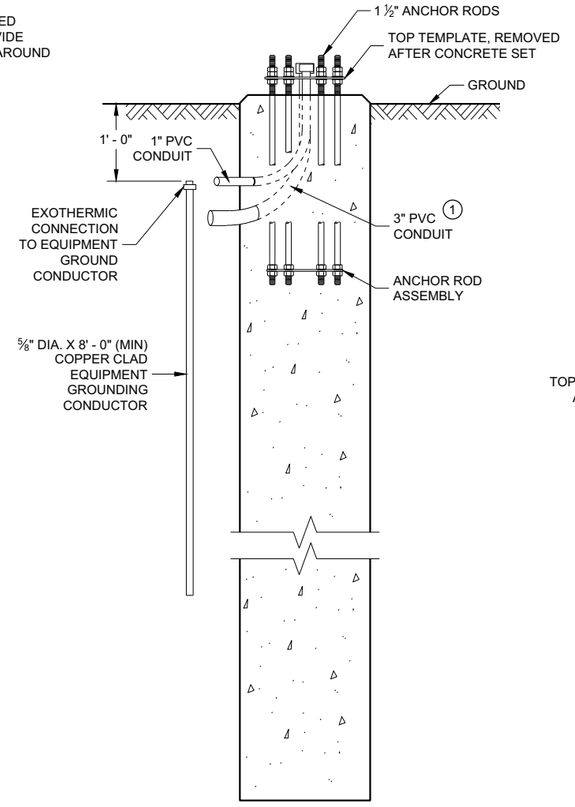

SIDE VIEW
(HOOPS AND VERTICAL SHAFT REINFORCEMENT NOT SHOWN ON THIS VIEW FOR CLARITY)

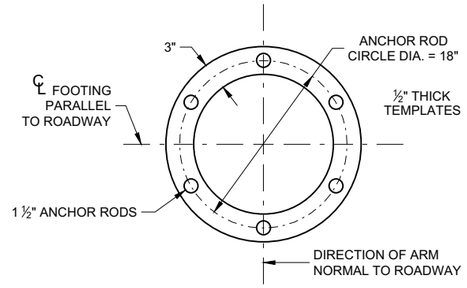

TOP AND BOTTOM TEMPLATE

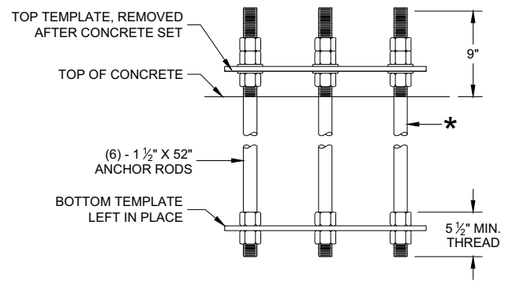

ANCHOR ROD ASSEMBLY DETAILS

* THREAD TOP 10" OF ANCHOR ROD FOR 3 NUTS AND 2 WASHERS AND BOTTOM 5 ½" FOR 2 NUTS PER ANCHOR ROD. HOT DIP GALVANIZE THE ENTIRE LENGTH OF THE ANCHOR ROD (ASTM A123) AND HOT DIP NUTS AND WASHERS (ASTM A153. USE ZINC COATED NUTS MANUFACTURED WITH SUFFICIENT ALLOWANCE TO ALLOW NUTS TO RUN FREELY ON THE THREADS.

CONCRETE BASE, TYPE 10 SPECIAL
(FOR TYPE 9 SPECIAL AND TYPE 10 SPECIAL POLES)

CONCRETE = 4.6 CUBIC YARD
H.S. REINFORCEMENT = 779 LBS.

FOR USE WHEN GROUND ELEVATION AT BASE EQUALS OR IS GREATER THAN HIGH POINT OF ROADWAY ELEVATION.

CONCRETE BASE TYPE 10 SPECIAL

STATE OF WISCONSIN
DEPARTMENT OF TRANSPORTATION

APPROVED
August 2020 — DATE
/S/ Alex Crabtree — WIND LOADED STRUCTU PROGRAM LEADER
FHWA

SDD 09C15 - 01

SDD 09C15 - 01

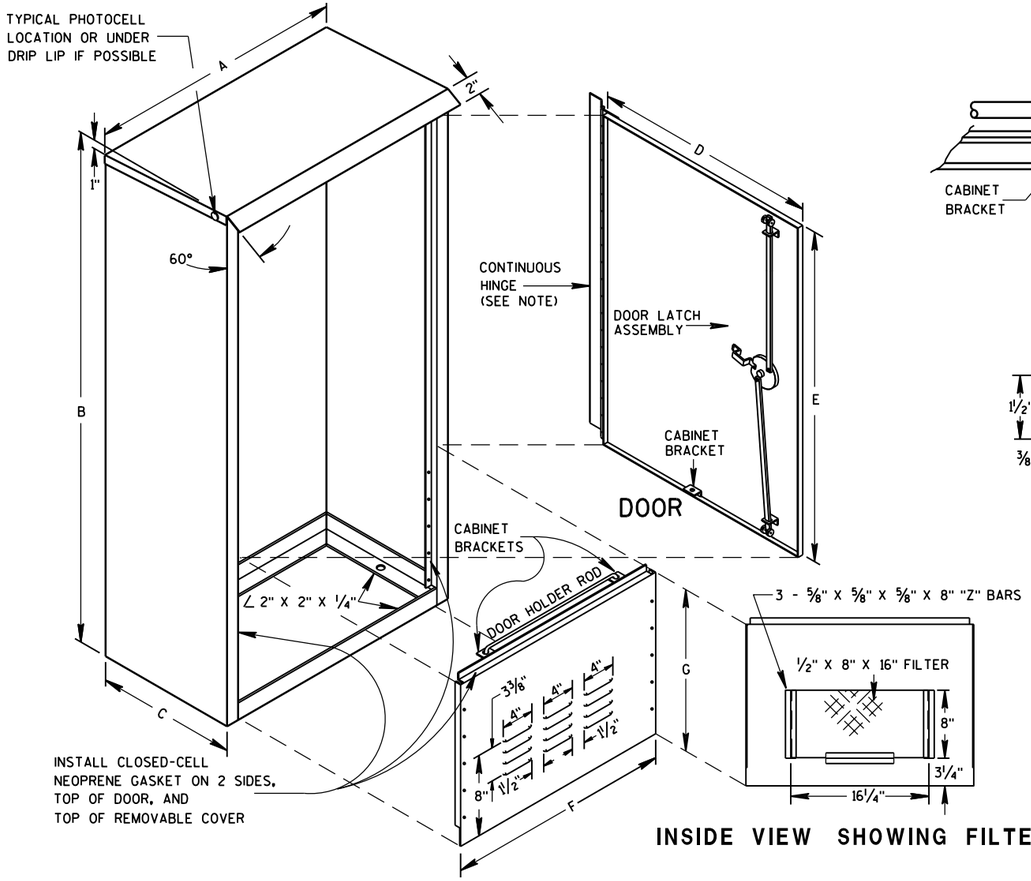

REMOVABLE COVER

INSIDE VIEW SHOWING FILTER

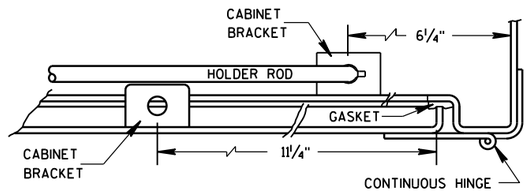

HINGE & DOOR HOLDER

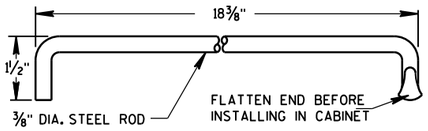

HOLDER ROD

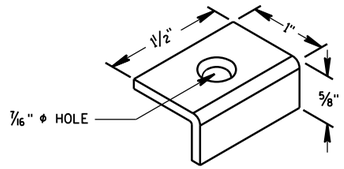

CABINET BRACKET

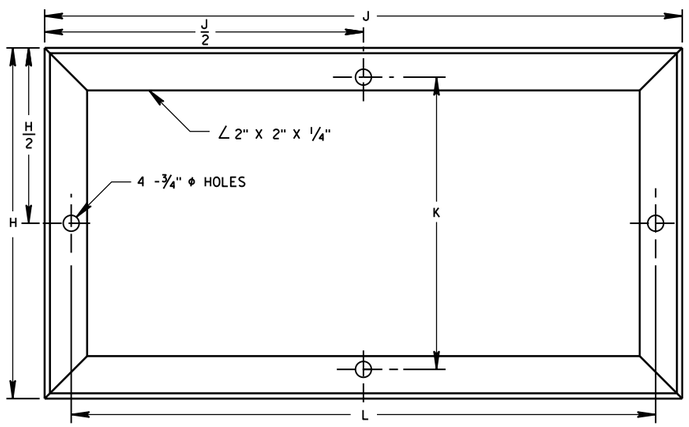

MOUNTING BASE

TABLE OF DIMENSIONS (INCHES)

MARK	CABINET TYPE		
	3060	3860	3866
A	30	38	38
B	60	60	66
C	16 1/2	16 1/2	24
D	26 1/2	34 3/4	33 3/4
E	38 3/4	38 3/4	38 3/4
F	26 1/2	34 3/4	33 3/4
G	19	19	25
H	16 1/2	16 1/2	24
H/2	8 1/4	8 1/4	12
J	30	38	38
J/2	15	19	19
K	13 3/4	13 3/4	21 1/4
L	27 1/2	35 1/2	35 1/2

GENERAL NOTES

DETAILS OF CONSTRUCTION, MATERIALS AND WORKMANSHIP NOT SHOWN ON THIS DRAWING SHALL CONFORM TO THE PERTINENT REQUIREMENTS OF THE STANDARD SPECIFICATIONS AND APPLICABLE SPECIAL PROVISIONS.

PRIME WITH PHOSPHATE TREATMENT AND PRIMER.

FINISH EXTERIOR SURFACES WITH RUSTOLEUM #906 SILVER GRAY OR APPROVED EQUAL.

FINISH INTERIOR WITH RUSTOLEUM #2766 HIGH GLOSS WHITE ENAMEL OR APPROVED EQUAL.

ALL SHEET METAL PARTS SHALL BE .125 INCH THICK ALUMINUM.

ALL SEAMS SHALL BE CONTINUOUSLY WELDED.

ALUMINUM SHALL BE TYPE 5052-H32.

CONTINUOUS HINGE SHALL BE HEAVY GAUGE ALUMINUM WITH 1/4" DIAMETER STAINLESS STEEL HINGE PIN. HINGE IS SECURED WITH 1/4" X 20 TPI STAINLESS STEEL CARRIAGE BOLTS AND STAINLESS STEEL NYLOCK NUTS.

A SINGLE PHOTOCELL SHALL BE LOCATED ON THE NORTH-NORTHEAST SIDE OF THE CABINET UNLESS OTHERWISE CALLED FOR IN THE SPECIAL PROVISIONS. THE PHOTOCELL SHALL BE PLACED AS SHOWN AND SHALL BE LISTED ON THE DEPARTMENTS APPROVED PRODUCTS LIST.

DOOR LATCH ASSEMBLY TO BE PROVIDED WITH THREE-POINT LOCKING MECHANISM.

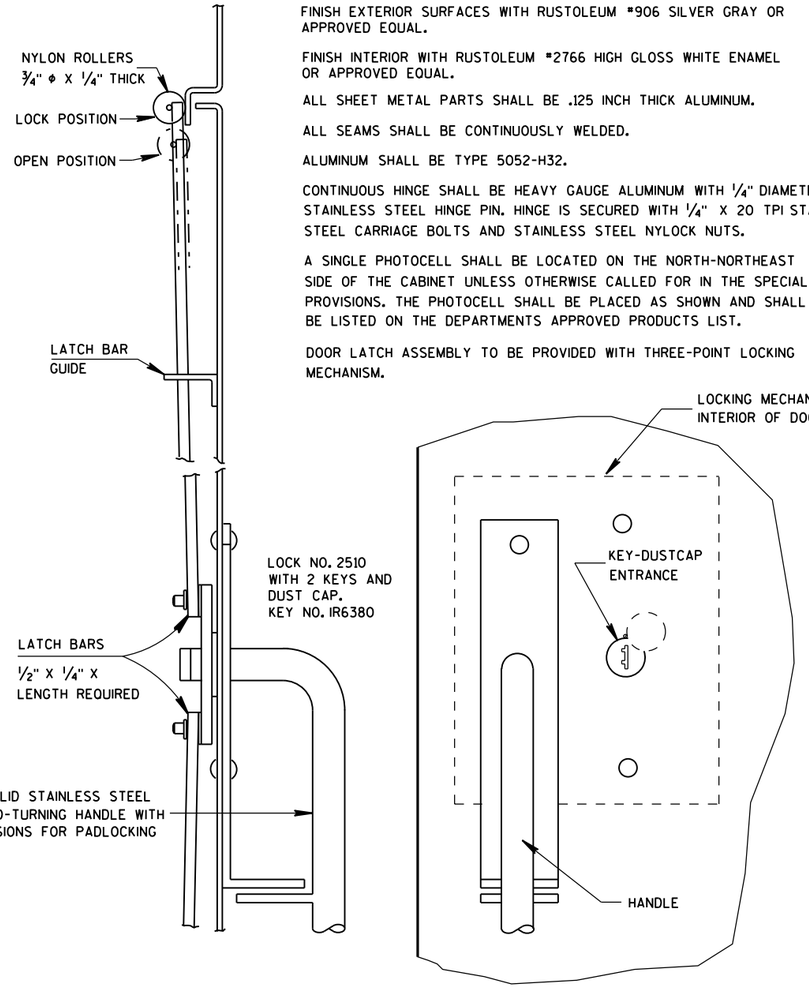

SIDE VIEW

FRONT VIEW

LATCH ASSEMBLY

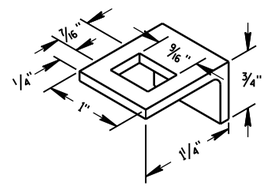

LATCH BAR GUIDE

SIGNAL CONTROL CABINET

STATE OF WISCONSIN
DEPARTMENT OF TRANSPORTATION

APPROVED
Sept. 2014
DATE
/S/ Ahmet Demirbilek
STATE ELECTRICAL 235
FHWA

6

S.D.D. 9 D 2-3

6

S.D.D. 9 D 2-3

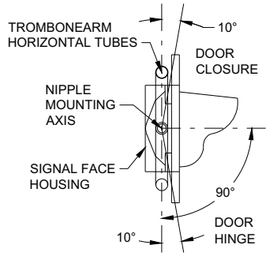

SECTION A-A

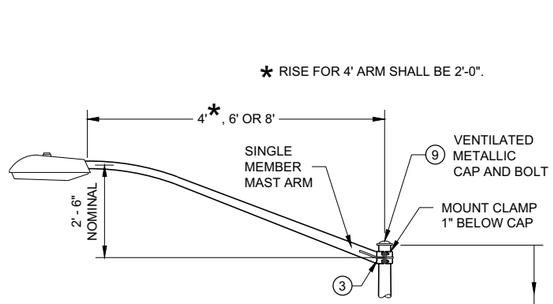

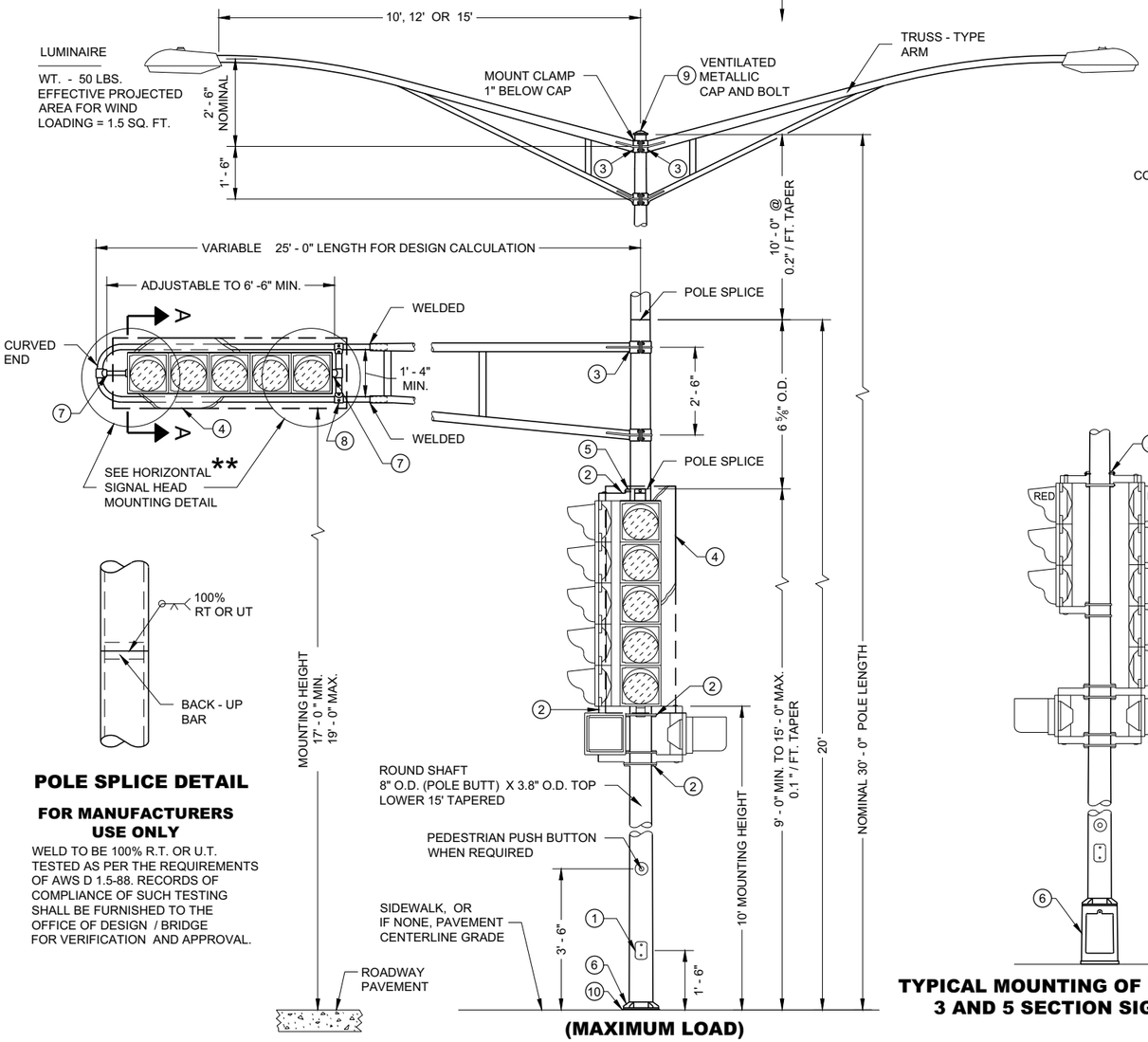

(MAXIMUM LOAD)

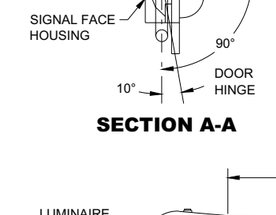

POLE SPLICE DETAIL

FOR MANUFACTURERS USE ONLY

WELD TO BE 100% R.T. OR U.T. TESTED AS PER THE REQUIREMENTS OF AWS D 1.5-88. RECORDS OF COMPLIANCE OF SUCH TESTING SHALL BE FURNISHED TO THE OFFICE OF DESIGN / BRIDGE FOR VERIFICATION AND APPROVAL.

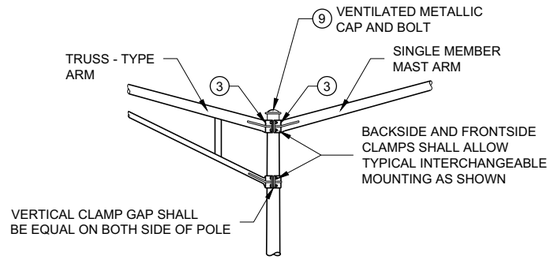

INTERCHANGEABLE MOUNTING DETAIL

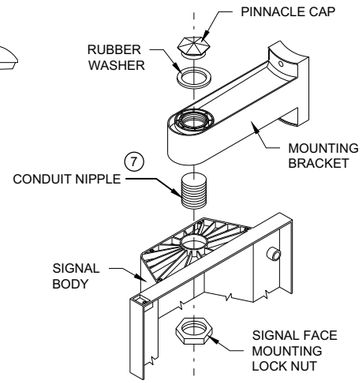

SIGNAL FACE MOUNTING DETAIL

(BANDED)

TYPICAL MOUNTING OF BACK TO BACK 3 AND 5 SECTION SIGNAL FACES

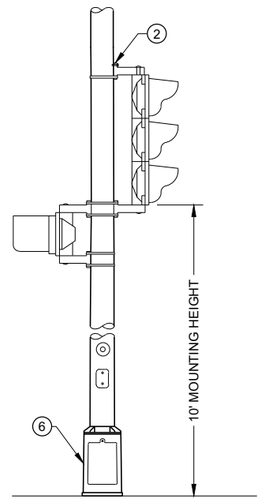

TYPICAL MOUNTING OF 3 SECTION SIGNAL FACE

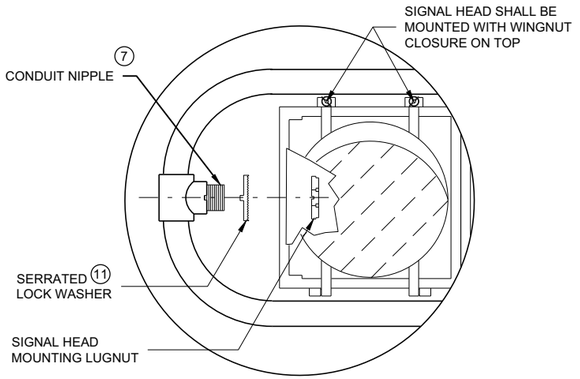

HORIZONTAL SIGNAL HEAD ** MOUNTING DETAIL

** SIGNAL HEAD ATTACHMENT ALSO APPLIES TO MOUNTING AT CROSS BAR

TYPE 3 POLE MOUNTING CONFIGURATION

GENERAL NOTES

DETAILS OF CONSTRUCTION, MATERIALS AND WORKMANSHIP NOT SHOWN ON THIS DRAWING SHALL CONFORM TO THE PERTINENT REQUIREMENTS OF THE CONTRACT.

ALL TYPE 3 POLE MOUNTINGS SHALL BE DESIGNED TO INCLUDE TWIN 15' ARMS WITH LUMINAIRES.

POLES SHALL BE GALVANIZED STEEL.

SECTION 657, POLES, OF THE STANDARD SPECIFICATIONS SHALL APPLY TO THIS DRAWING.

A PULL WIRE / ROPE SHALL BE INSTALLED IN EACH TROMBONE ARM RACEWAY DURING THE MANUFACTURING PROCESS.

THE SLIPFITTER END OF THE LUMINAIRE MAST ARM SHALL BE A NOMINAL 2 3/8 INCHES IN OUTSIDE DIAMETER. THE STRAIGHT PORTION OF THE SLIPFITTER END OF THE LUMINAIRE MAST ARM SHALL BE A NOMINAL 12 INCHES IN LENGTH.

WHEN TRANSFORMER BASES ARE USED, WIRE CONNECTIONS SHALL BE MADE IN THE TRANSFORMER BASE.

(1) 4" X 6" REINFORCED HANDHOLE AND COVER ASSEMBLY WITH TWO (2) ¼" X ¾" - 20 TPI , STAINLESS STEEL, HEX HEAD BOLTS.

(2) SIGNAL FACE MOUNTING BRACKETS. MOUNT WITH CAP SCREWS AND BANDING.

(3) GROMMETS. 1" CHASE NIPPLES OR 1" CLOSE CONDUIT NIPPLES WITH BUSHINGS SHALL BE PROVIDED FOR 1 3/8" HOLE IN POLE SHAFT FOR WIRING.

(4) SECURELY MOUNT DULL BLACK POLYCARBONATE BACKPLATES, PROJECTING 5" BEYOND ALL SIDES OF THE SIGNAL FACE HOUSING, PER MANUFACTURER'S RECOMMENDATIONS.

(5) POLE MOUNTED SIGNAL FACES SHALL REQUIRE ONE OR MORE MOUNTING SPACERS UNDER THE TOP MOUNTING BRACKET(S) AS REQUIRED, TO PLUMB THE SIGNAL FACE.

(6) CAST ALUMINUM TRANSFORMER BASE, WHEN REQUIRED. UNDER MAX LOADING, TYPE 3 POLE SHALL BE MOUNTED DIRECTLY TO ITS CONCRETE BASE.

(7) USE 1 ½" ID NIPPLES ZINC-COATED RIGID METAL CONDUIT, LONG ENOUGH TO ACCOMMODATE FULL DEPTH THREADING INTO THE HEAD MOUNTING LOCK NUT IN ORDER TO TIGHTEN THE FACE, BUT THAT DO NOT INTERFERE WITH REFLECTOR CLOSURE. THREAD THE NIPPLE INTO THE MOUNTING BRACKET/ELBOW UNTIL TIGHT. USE APPROVED PINNACLE TYPE HARDWARE FROM A DEPARTMENT APPROVED MANUFACTURER TO CLOSE THE UNUSED 1 ½" OPENING IN SIGNAL FACES AND BRACKET ENDS.

(8) VERTICAL STRUT (ADJUSTABLE). ONE (1) SET SCREW (¼" X ¾" - 20 TPI STAINLESS STEEL, HEX HEAD) INTO EACH ARM MEMBER IF STRUT IS THE SLIDING TYPE.

(9) FURNISH AND INSTALL VENTILATED, CAST METALLIC (ALUMINUM ALLOY) CAPS. FASTEN CAPS WITH ONE (1) ¼" X ¾" - 20 TPI STAINLESS STEEL, HEX HEAD BOLT.

(10) SHIMMING, IF NEEDED, SHALL BE LOCATED BETWEEN THE CONCRETE FOUNDATION AND POLE.

(11) USE SERRATED LOCK WASHERS WITH NOTCHES BETWEEN END TEE AND SIGNAL HEAD.

POLE MOUNTINGS FOR TRAFFIC SIGNALS AND LIGHTING UNITS TYPE 3 (HEAVY DUTY)

STATE OF WISCONSIN
DEPARTMENT OF TRANSPORTATION

6

SDD 09E01 - 15b
SDD 09E01 - 15b

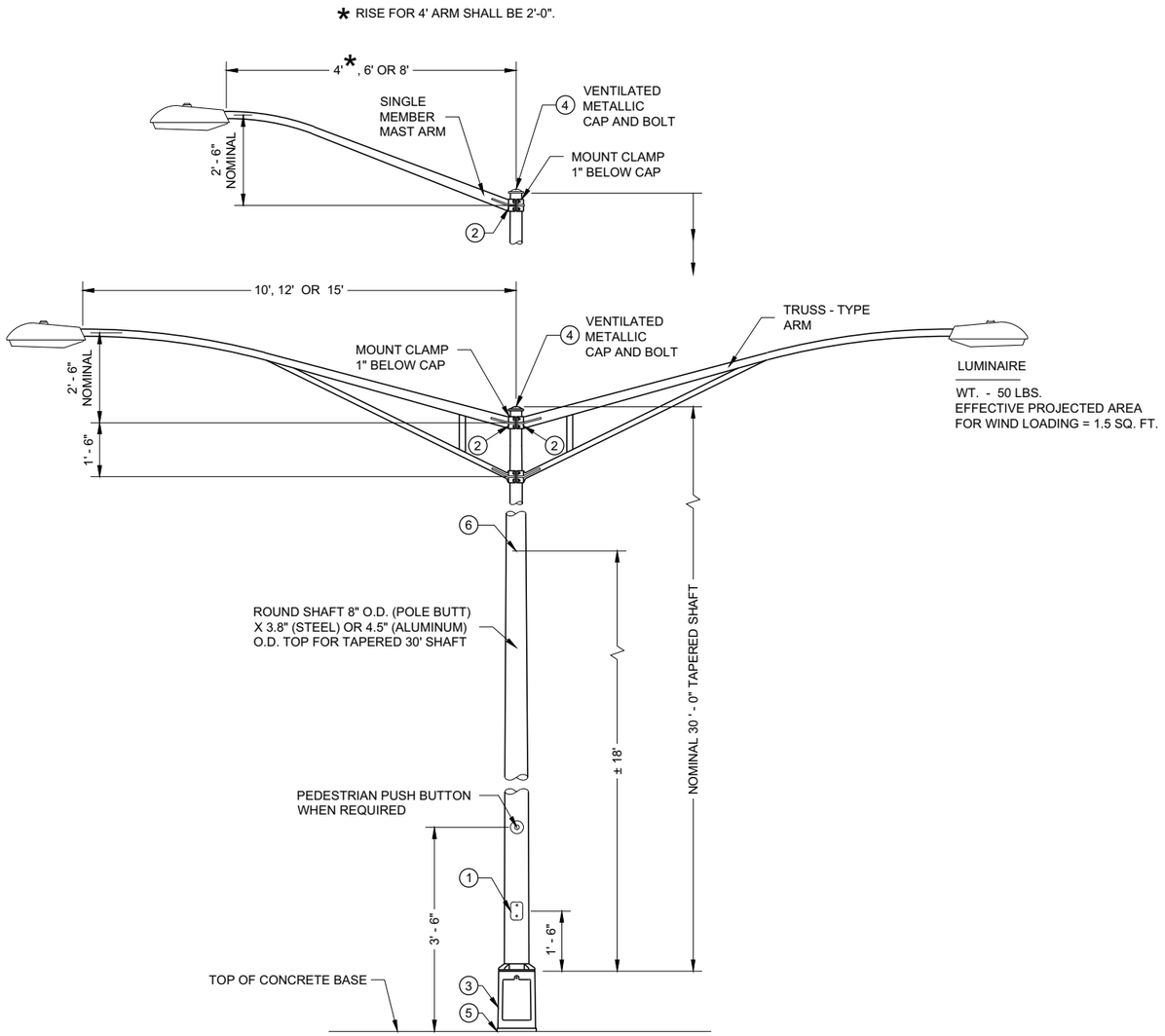

TYPE 5 POLE MOUNTING CONFIGURATION
(MAXIMUM LOAD)
LIGHTING ONLY

GENERAL NOTES

DETAILS OF CONSTRUCTION, MATERIALS AND WORKMANSHIP NOT SHOWN ON THIS DRAWING SHALL CONFORM TO THE PERTINENT REQUIREMENTS OF THE CONTRACT.

SECTION 657, POLES, OF THE STANDARD SPECIFICATIONS SHALL APPLY TO THIS DRAWING.

ALL TYPE 5 POLE MOUNTINGS SHALL BE DESIGNED TO INCLUDE TWIN 15' ARMS WITH LUMINAIRES.

POLES SHALL BE GALVANIZED STEEL OR ALUMINUM, AS CALLED FOR IN THE CONTRACT.

TYPE 5 ALUMINUM POLES SHALL BE CONSTRUCTED OF 6063 - T6 ALUMINUM ALLOY. SLEEVING INSIDE THE POLE IS NOT ACCEPTABLE.

TYPE 5 ALUMINUM POLES SHALL HAVE A MINIMUM WALL THICKNESS OF 0.1888".

TYPE 5 STEEL POLES SHALL HAVE A MINIMUM WALL THICKNESS OF U.S. STANDARD 11 GAGE (0.1196").

THE SLIPFITTER END OF THE LUMINAIRE MAST ARM SHALL BE A NOMINAL 2 ⅜ INCHES IN OUTSIDE DIAMETER. THE STRAIGHT PORTION OF THE SLIPFITTER END OF THE LUMINAIRE MAST ARM SHALL BE A NOMINAL 12 INCHES IN LENGTH.

WHEN TRANSFORMER BASES ARE USED, WIRE CONNECTIONS SHALL BE MADE IN THE TRANSFORMER BASE.

(1) 4" X 6" REINFORCED HANDHOLE AND COVER ASSEMBLY WITH TWO (2) ¼" X ¾" - 20 TPI , STAINLESS STEEL, HEX HEAD BOLTS.

(2) GROMMETS. 1" CHASE NIPPLES OR 1" CLOSE CONDUIT NIPPLES WITH BUSHINGS SHALL BE PROVIDED FOR 1 ⅜" HOLE IN POLE SHAFT FOR WIRING.

(3) CAST ALUMINUM TRANSFORMER BASE, WHEN REQUIRED.

(4) FURNISH AND INSTALL VENTILATED, CAST METALLIC (ALUMINUM ALLOY) CAPS. FASTEN CAPS WITH ONE (1) ¼" X ¾" - 20 TPI STAINLESS STEEL, HEX HEAD BOLT.

(5) SHIMMING, IF NEEDED, SHALL BE LOCATED BETWEEN THE CONCRETE FOUNDATION AND POLE.

(6) INTERNAL DUMBBELL - TYPE VIBRATION DAMPER.

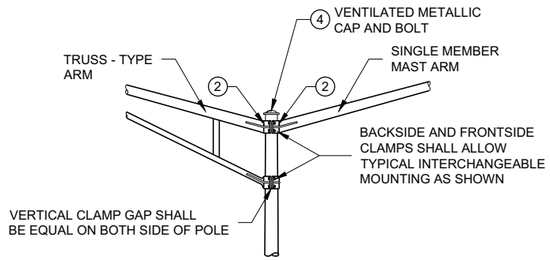

INTERCHANGEABLE MOUNTING DETAIL

POLE MOUNTINGS FOR LIGHTING UNITS, TYPE 5 (30 FEET)

6

SDD 09E01 - 15d

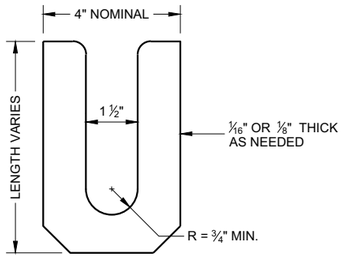

LEVELING SHIM (1)
SHALL BE ALUMINUM

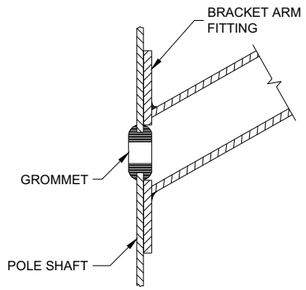

TYPICAL APPLICATION OF GROMMET IN POLE SHAFT

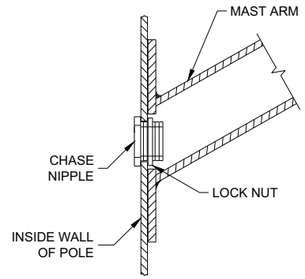

TYPICAL APPLICATION OF CHASE NIPPLE IN POLE SHAFT

GENERAL NOTES

CLAMP BOLT-NUT TIGHTENING TORQUE SHALL BE INDICATED BY INDENT STAMPING (1/2 INCH NUMERALS AND LETTERS) OR WEATHERPROOF PRINTING ON THE INSIDE OF THE CLAMP THAT IS WELDED TO THE ARM MEMBER.

(1) 4.5" I.D. FOR LUMINAIRE MAST ARM CLAMP. 6.625" I.D. FOR TROMBONE MAST ARM CLAMP.

(2) INDIVIDUAL BASE PLATE ANCHOR ROD COVERS. (4 REQUIRED)

(3) BASE PLATE SLOTTED TO ACCEPT 11" THROUGH 12" BOLT CIRCLE USING 1" DIAMETER ANCHOR RODS.

(4) LEVELING SHIMS, DESIGNED FOR THE PURPOSE, SHALL BE USED WHEN PLUMBING POLES. THE USE OF WASHERS IN LIEU OF PROPER LEVELING SHIMS IS NOT ACCEPTABLE. LEVELING SHIMS SHALL BE USED ONLY BETWEEN THE TOP OF THE CONCRETE BASE AND A METALLIC BASE PLATE.

SHIMS SHALL BE LONG ENOUGH AND WIDE ENOUGH TO COMPLETELY COVER THE AREA UNDER THE LENGTH AND WIDTH OF THE BASE MOUNTING FLANGE.

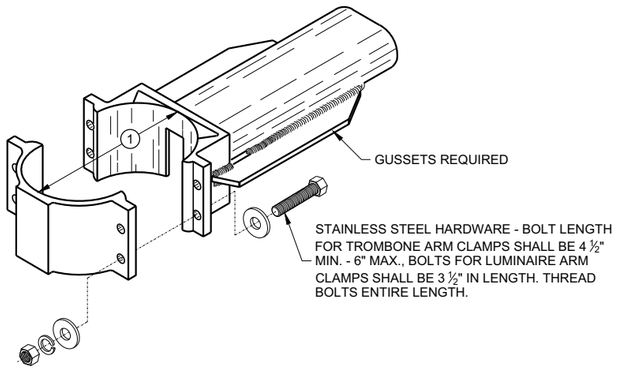

TYPICAL TROMBONE MAST ARM AND SINGLE LUMINAIRE MAST ARM MOUNTING CLAMP

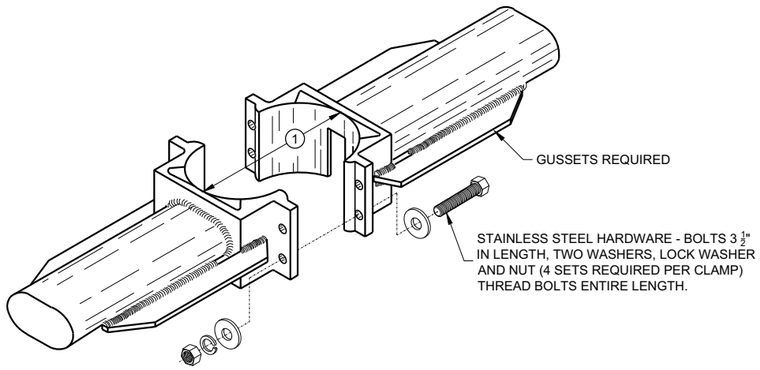

TYPICAL LUMINAIRE MAST ARM (DOUBLE) MOUNTING BRACKETS

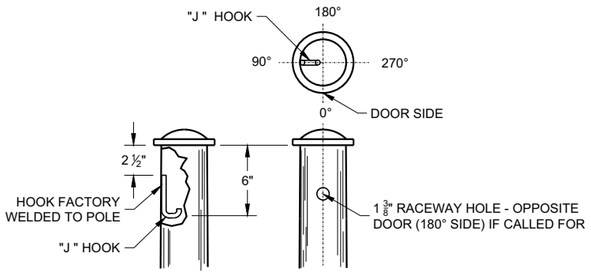

TYPICAL "J" HOOK LOCATION

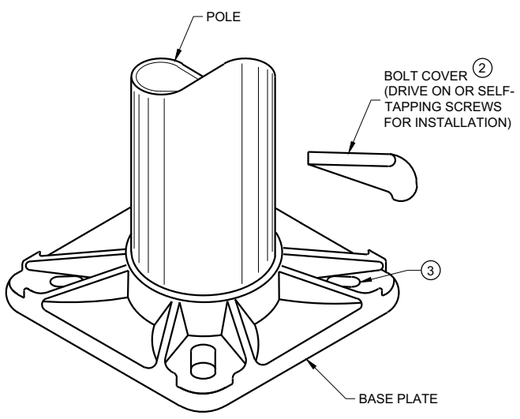

BASE PLATE

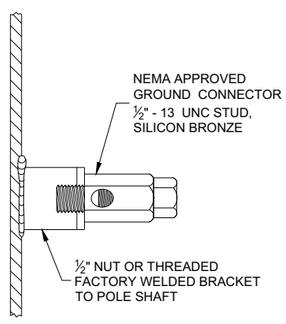

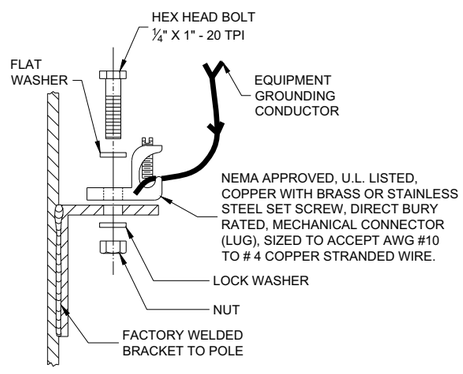

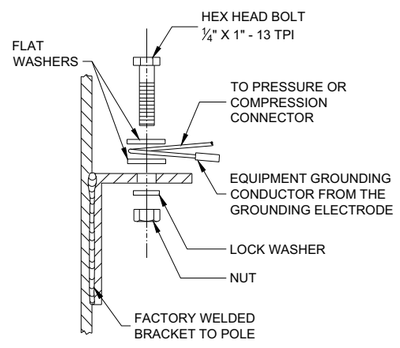

TYPICAL GROUNDING CONNECTIONS
NUT, BOLT AND WASHERS SHALL BE STAINLESS STEEL

HARDWARE DETAILS FOR POLE MOUNTING

STATE OF WISCONSIN
DEPARTMENT OF TRANSPORTATION

APPROVED
November 2018
DATE

/S/ Ahmet Demirbilek
STATE ELECTRICAL ENGI 238

FHWA

6

SDD 09A01 - 15g

GENERAL NOTES

DETAILS OF CONSTRUCTION, MATERIALS AND WORKMANSHIP NOT SHOWN ON THIS DRAWING SHALL CONFORM TO THE PERTINENT REQUIREMENTS OF THE CONTRACT.

THE EQUIPMENT GROUND CONNECTOR SHALL BE TAPED WITH 3 WRAPS (MINIMUM) OF APPROVED RUBBER TAPE AND 3 WRAPS (MINIMUM) OF APPROVED VINYL TAPE TO COVER SHARP WIRE ENDS AFTER THE CONNECTION IS COMPLETED.

WHEN TRANSFORMER BASES ARE USED, ALL WIRING CONNECTIONS SHALL OCCUR WITHIN THE TRANSFORMER BASES.

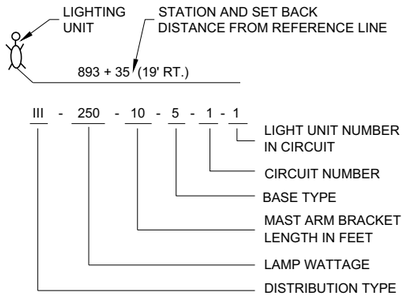

LIGHTING UNIT CODE
(TYPICAL)

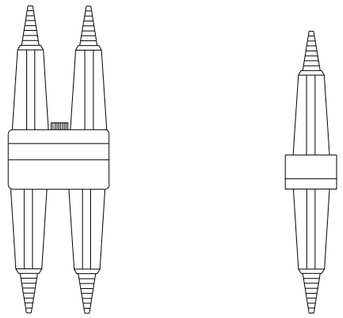

DETAIL "A"
BREAKAWAY DOUBLE POLE WITH WATERPROOF INSULATING BOOT

DETAIL "B"
BREAKAWAY SINGLE POLE WITH WATERPROOF INSULATING BOOT

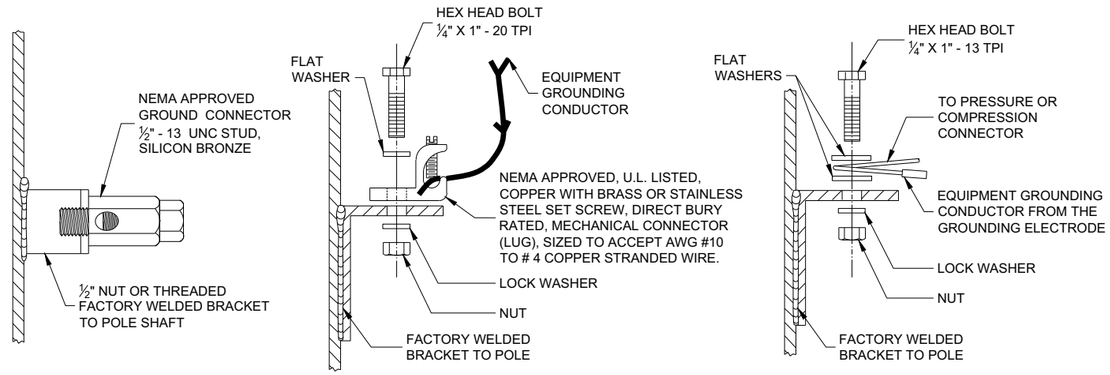

TYPICAL GROUNDING CONNECTIONS
NUT, BOLT AND WASHERS SHALL BE STAINLESS STEEL

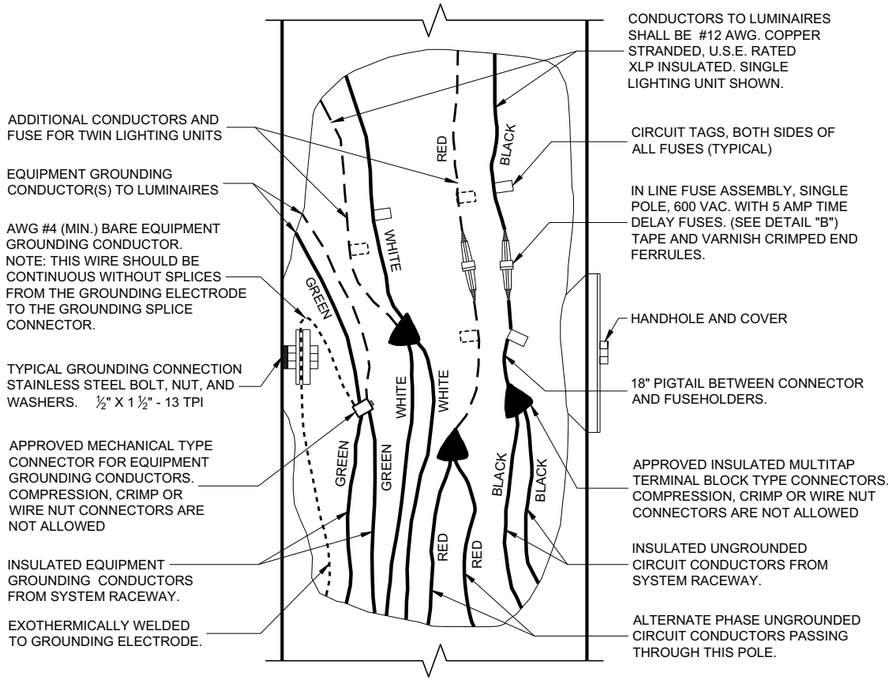

3 WIRE - 120, 240 OR 480 VAC (UNGROUNDED CONDUCTORS) WITH GROUNDING CONDUCTOR AND EQUIPMENT GROUNDING CONDUCTOR

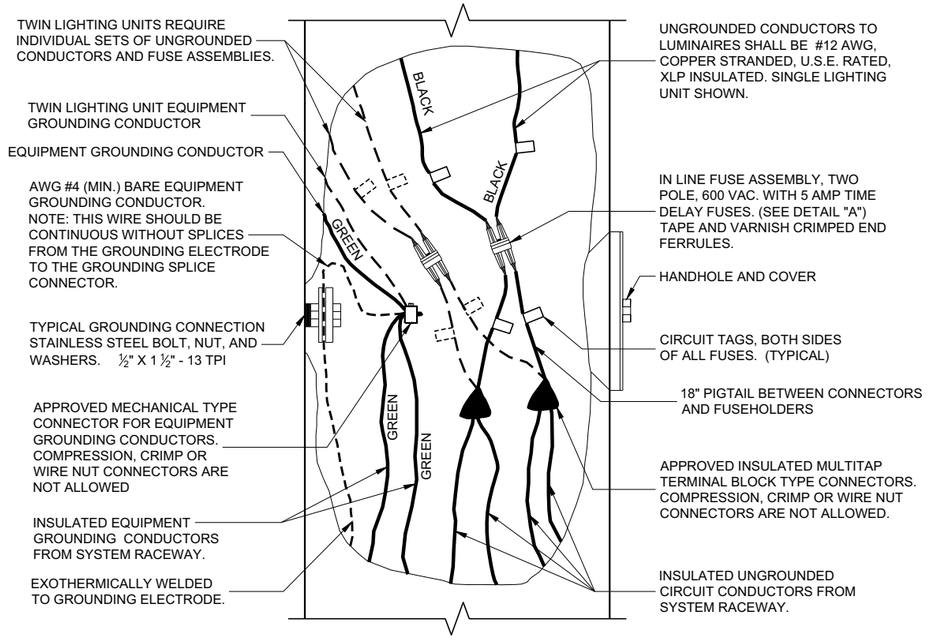

2 WIRE - 240 OR 480 VAC (UNGROUNDED CONDUCTORS) WITH EQUIPMENT GROUNDING CONDUCTOR

NON - FREEWAY LIGHTING UNIT POLE WIRING

STATE OF WISCONSIN
DEPARTMENT OF TRANSPORTATION

APPROVED
November 2018
DATE
/S/ Ahmet Demirbilek
STATE ELECTRICAL ENGI

FHWA

6
SDD 09E03 - 06

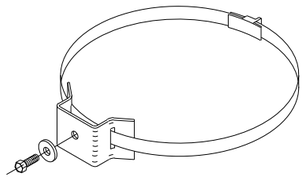

TYPICAL SIGN MOUNTING BAND
(TOP AND BOTTOM OF SIGN)

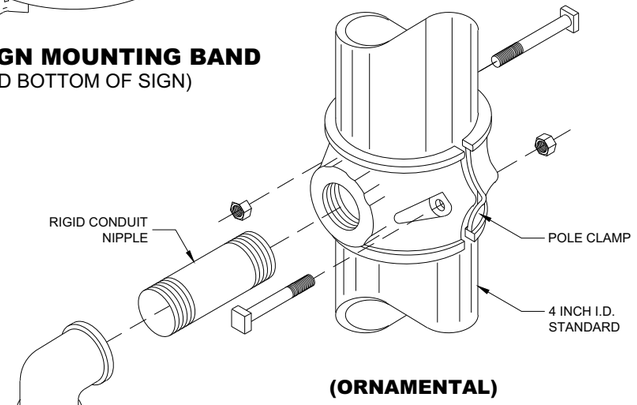

(ORNAMENTAL)

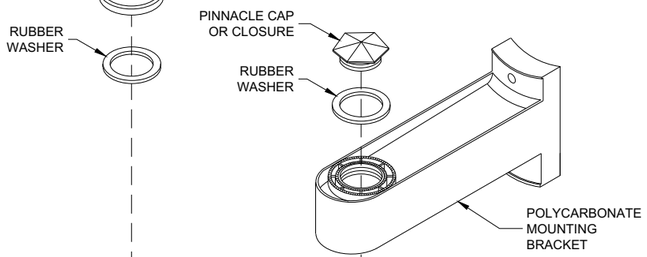

(BANDED)

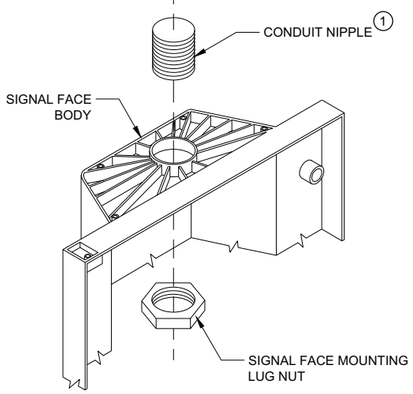

SIGNAL FACE MOUNTING DETAILS

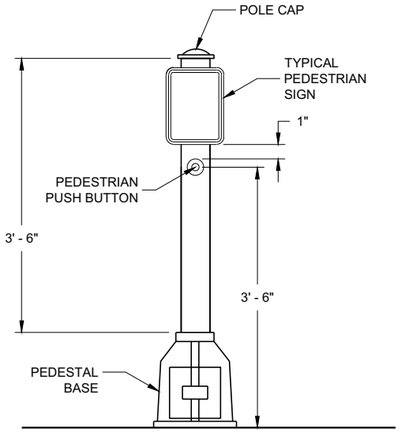

PEDESTRIAN PUSH BUTTON TYPICAL MOUNTING

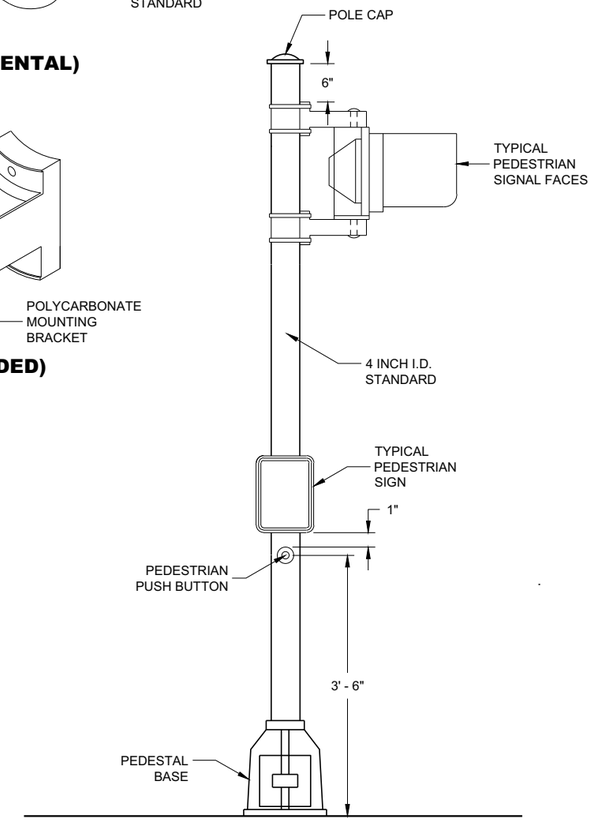

PEDESTRIAN FACE STANDARD - 10 FT.
(WALK - DON'T WALK)

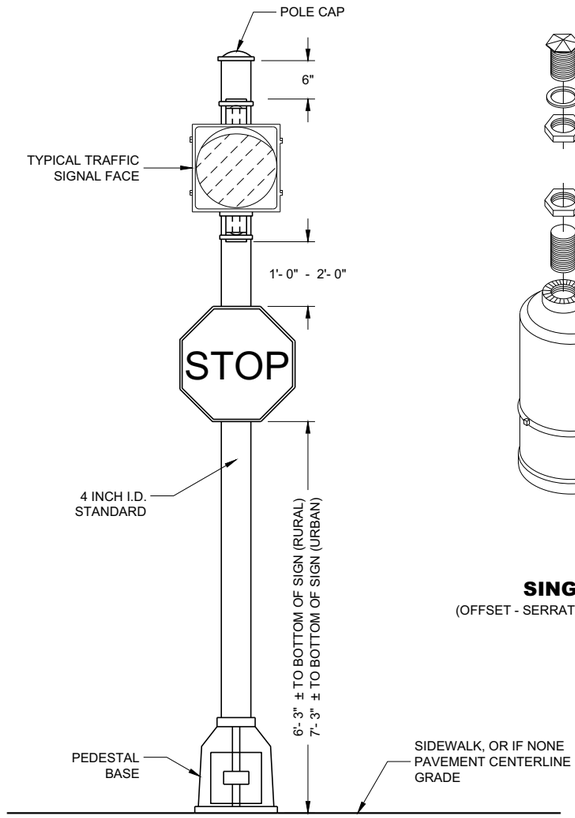

STANDARD FLASHER
10 FOOT, 13 FOOT OR 15 FOOT AS REQUIRED

GENERAL NOTES

DETAILS OF CONSTRUCTION, MATERIALS AND WORKMANSHIP NOT SHOWN ON THIS DRAWING SHALL CONFORM TO THE PERTINENT REQUIREMENTS OF THE CONTRACT.

SEE THE SIGNAL PLAN FOR REQUIRED SIGNAL FACE SIZES.

LOCATIONS SHALL BE AS SHOWN ON THE PLANS, UNLESS APPROVED BY THE ENGINEER IN THE FIELD.

ALL PEDESTAL BASES SHALL BE MOUNTED ON CONCRETE BASE - TYPE 1.

FOR APPROVED MOUNTING HARDWARE, SEE THE CONTRACT SPECIFICATIONS.

POLYCARBONATE SIGNAL FACE MOUNTING BRACKETS SHALL BE USED UNLESS ORNAMENTAL POLE CLAMPS ARE SPECIFIED.

LENGTH OF TRAFFIC STANDARDS SHALL BE AS SHOWN ON THE PLANS.

MOUNTINGS AND BRACKETS SHALL BE AS SHOWN ON THE PLANS OR DESCRIBED IN THE SPECIAL PROVISIONS (BY THE REGION TRAFFIC ENGINEER).

PEDESTRIAN SIGNS SHALL BE AS DESIGNATED IN THE PLANS.

FURNISH AND INSTALL VENTILATED, CAST, METALLIC (ALUMINUM ALLOY) CAPS. FASTEN CAPS WITH ONE (1) ¼" X ¾" - 20 TPI STAINLESS STEEL, HEX HEAD BOLT.

(1) USE 1 ½" ID NIPPLES ZINC-COATED RIGID METAL CONDUIT, LONG ENOUGH TO ACCOMMODATE FULL DEPTH THREADING INTO THE HEAD MOUNTING LOCK NUT IN ORDER TO TIGHTEN THE FACE, BUT THAT DO NOT INTERFERE WITH REFLECTOR CLOSURE. THREAD THE NIPPLE INTO THE MOUNTING BRACKET/ELBOW UNTIL TIGHT. USE APPROVED PINNACLE TYPE HARDWARE FROM A DEPARTMENT APPROVED MANUFACTURER TO CLOSE THE UNUSED 1 ½" OPENING IN SIGNAL FACESAND BRACKET ENDS.

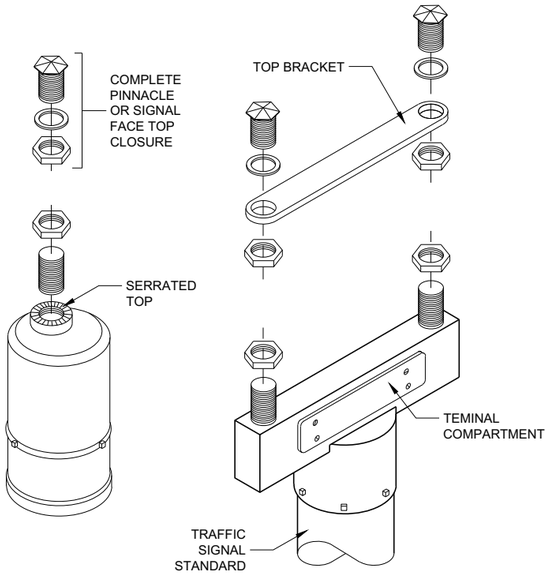

SINGLE
(OFFSET - SERRATED MOUNTING)

DOUBLE
(SERRATED MOUNTING)

SLIPFITTERS

TRAFFIC SIGNAL STANDARD PEDESTRIAN AND FLASHER TYPICAL MOUNTING DETAILS

STATE OF WISCONSIN
DEPARTMENT OF TRANSPORTATION

APPROVED
November 2018
DATE

/S/ Ahmet Demirbilek
STATE ELECTRICAL ENGI 240

FHWA

6

SDD 09E07 - 06

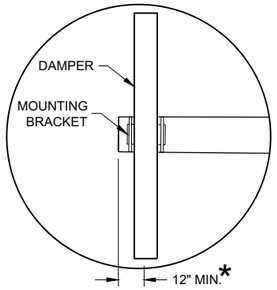

DUMBBELL VIBRATION DAMPER

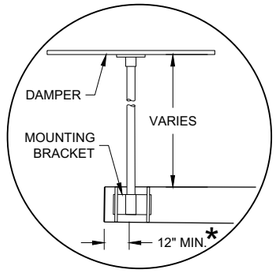

FLAT VIBRATION DAMPER

* MOUNT AS CLOSE TO END OF MAST ARM FOR MAXIMUM DAMPING PER MANUFACTURER'S RECOMMENDATIONS.

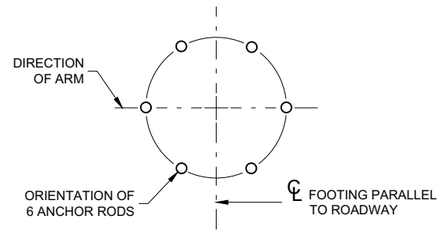

ANCHOR ROD LOCATION

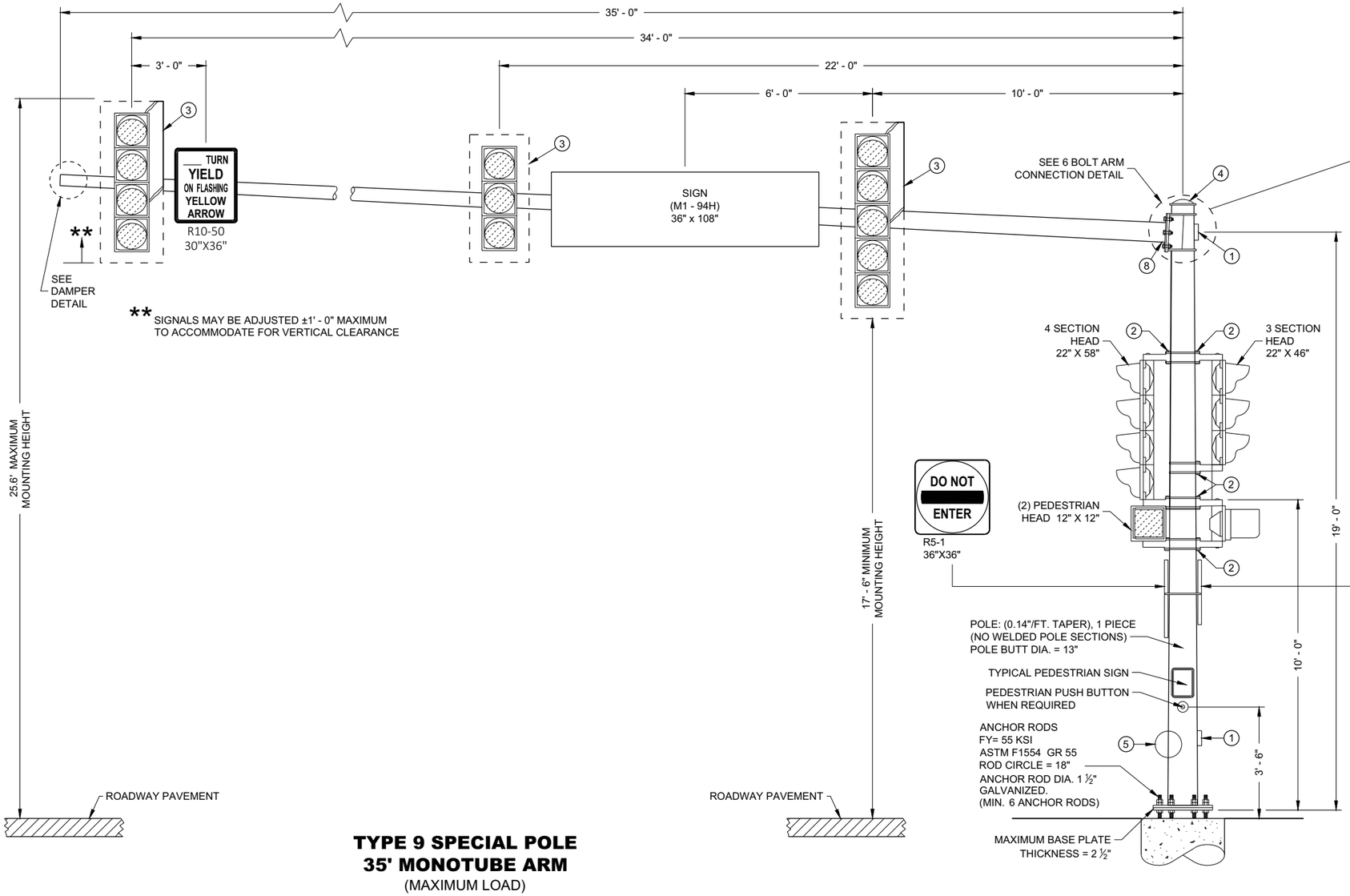

** SIGNALS MAY BE ADJUSTED ±1' - 0" MAXIMUM TO ACCOMMODATE FOR VERTICAL CLEARANCE

TYPE 9 SPECIAL POLE
35' MONOTUBE ARM
(MAXIMUM LOAD)

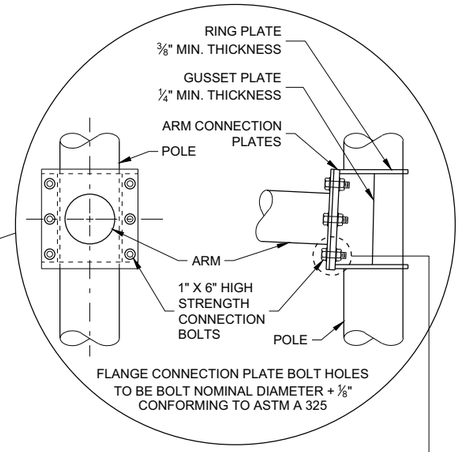

6 BOLT ARM CONNECTION DETAIL

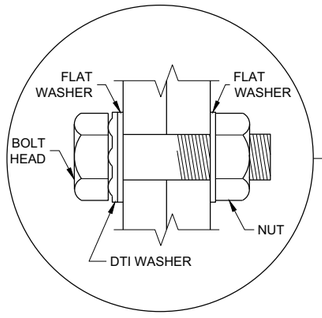

RECOMMENDED BOLT ASSEMBLY DETAIL

TYPE 9 SPECIAL POLE
35' MONOTUBE ARM

STATE OF WISCONSIN
DEPARTMENT OF TRANSPORTATION

APPROVED
August 2020
DATE

/S/ Ahmet Demirbilek
STATE ELECTRICAL ENGI 241

FHWA

6
SDD 09E08 - 09b

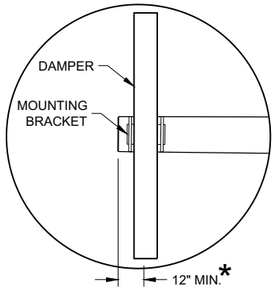

DUMBBELL VIBRATION DAMPER

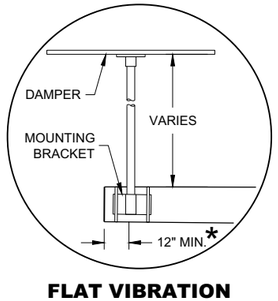

FLAT VIBRATION DAMPER

* MOUNT AS CLOSE TO END OF MAST ARM FOR MAXIMUM DAMPING PER MANUFACTURER'S RECOMMENDATIONS.

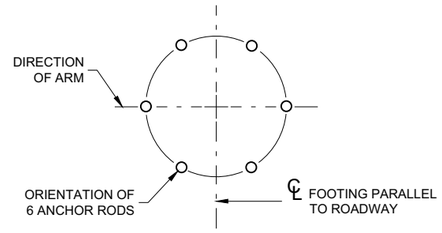

ANCHOR ROD LOCATION

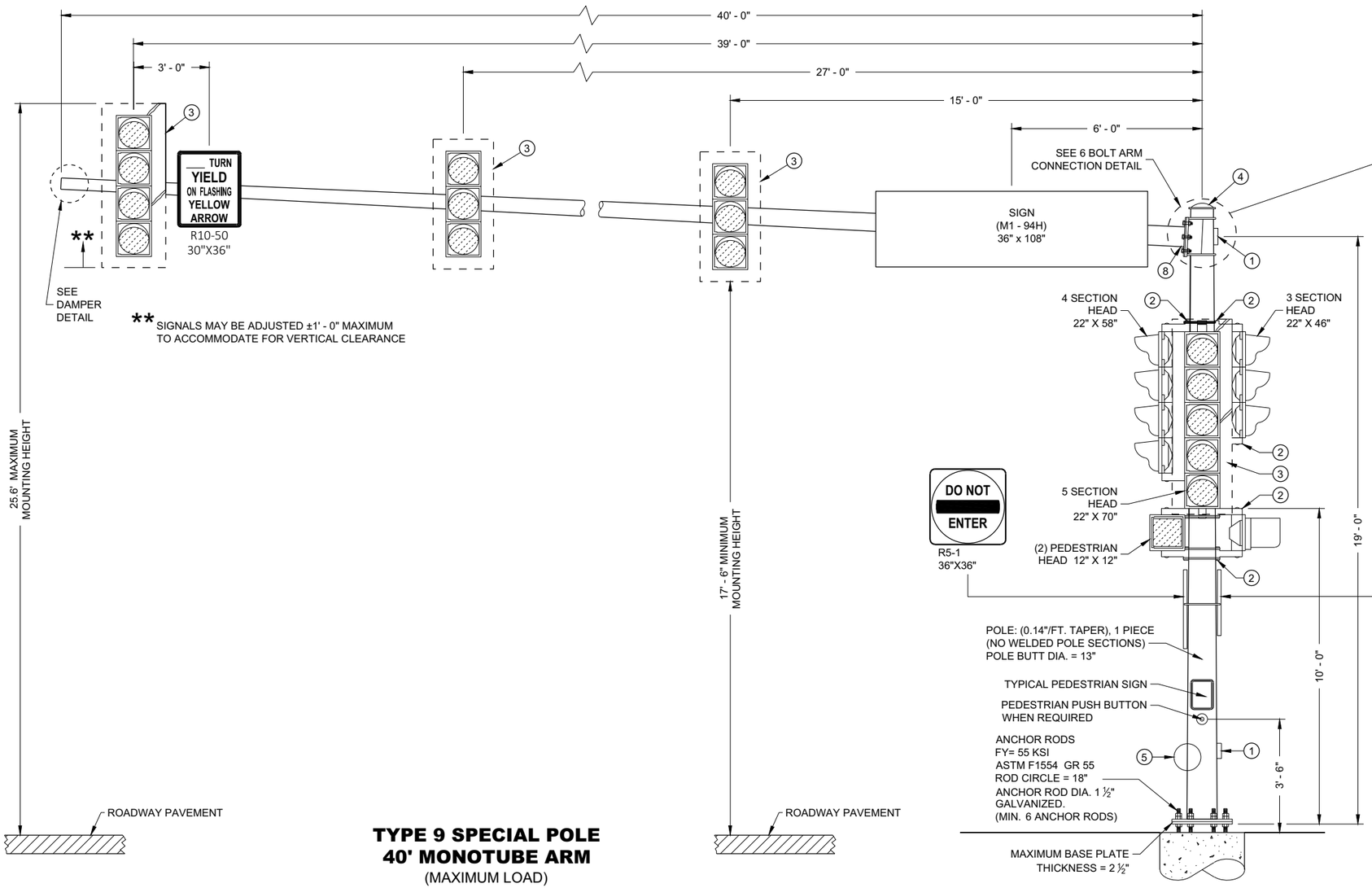

TYPE 9 SPECIAL POLE 40' MONOTUBE ARM
(MAXIMUM LOAD)

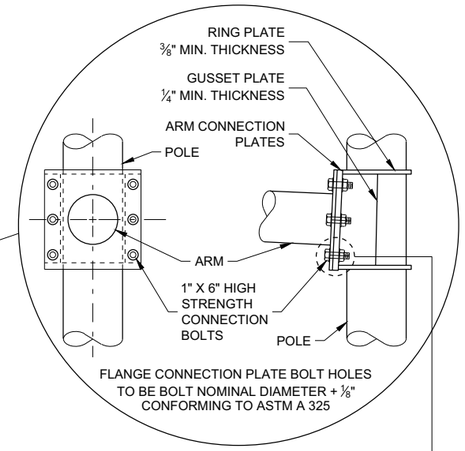

6 BOLT ARM CONNECTION DETAIL

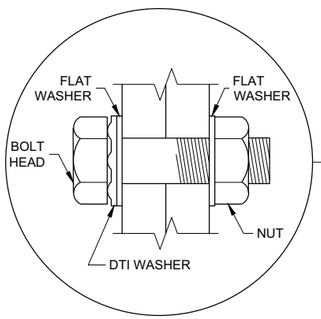

RECOMMENDED BOLT ASSEMBLY DETAIL

TYPE 9 SPECIAL POLE 40' MONOTUBE ARM

STATE OF WISCONSIN
DEPARTMENT OF TRANSPORTATION

APPROVED
August 2020
DATE

/S/ Ahmet Demirbilek
STATE ELECTRICAL ENGI

FHWA

6

SDD 09E08 - 09c

GENERAL NOTES

DETAILS OF CONSTRUCTION NOT SHOWN ON THIS DRAWING SHALL CONFORM TO THE PERTINENT REQUIREMENTS OF THE CONTRACT.

POLE TYPES 9 AND 10 ARE FOR ARM LENGTHS 15 FOOT TO 30 FOOT.

POLE TYPES 9 SPECIAL AND 10 SPECIAL ARE FOR ARM LENGTHS 35 FOOT, 40 FOOT, AND 45 FOOT.

POLE TYPES 12 AND 13 ARE FOR ARM LENGTHS 35 FOOT TO 55 FOOT.

MONOTUBE POLES AND ARMS SHALL BE GALVANIZED STEEL.

RING STIFFENED BUILT UP BOX TYPE OF ATTACHMENT FOR TRAFFIC SIGNAL ARM.

ONE PIECE POLE CONSTRUCTION (NO WELDED POLE SECTIONS).

STANDARD STRAIGHT ARM DESIGN (3% ± RISE).

SECTION 657, POLES OF THE STANDARD SPECIFICATION SHALL APPLY TO THIS DRAWING.

PROVIDE WIREWAY THRU POLE WALL AND ARM CONNECTION PLATES. PROVIDE ROUND, SMOOTH INSIDE SURFACE.

MANUFACTURER'S SUBMITTED POLE DESIGNS AND DRAWINGS SHALL BE SIGNED AND STAMPED BY A REGISTERED PROFESSIONAL ENGINEER AND CERTIFIED AS BEING IN COMPLIANCE WITH THE AASHTO "LRFD SPECIFICATIONS FOR STRUCTURAL SUPPORTS FOR HIGHWAY SIGNS, LUMINAIRES AND TRAFFIC SIGNAL 2015 1ST EDITION (INCLUDING INTERIM REVISIONS)" AND ALL PERTINENT WISDOT SPECIFICATIONS AND DRAWINGS FOR THE LIGHTING STRUCTURES AS FOLLOWS:

CATEGORY III FATIGUE LOADS OF GALLOPING, TRUCK GUSTS (AT 45 MPH VEHICLE VELOCITY) AND NATURAL WIND GUSTS FOR DESIGN OF TYPE 9 AND TYPE 10 STRUCTURES.

CATEGORY II FATIGUE LOADS OF TRUCK GUSTS (AT 45 MPH VEHICLE VELOCITY) AND NATURAL WIND GUSTS FOR DESIGN OF TYPE 9 SPECIAL AND TYPE 10 SPECIAL STRUCTURES. IN LIEU OF DESIGNING FOR GALLOPING, A VIBRATION DAMPER MITIGATION DEVICE IS REQUIRED TO BE SUPPLIED AND INSTALLED AT THE END OF THE MAST ARM.

CATEGORY II FATIGUE FATIGUE LOADS OF GALLOPING, TRUCK GUSTS (AT 45 MPH VEHICLE VELOCITY) AND NATURAL WIND GUSTS FOR DESIGN OF TYPE12 AND TYPE 13 STRUCTURES.

115 MPH (700 YEAR MRI BASIC WIND SPEED).

SECURE THE OPENING BELOW THE BASE PLATE WITH STAINLESS STEEL OR GALVANIZED STEEL MESH AND SECURE THE MESH WITH ¾" STAINLESS STEEL BANDING AROUND THE LEVELING NUTS.

INDENT PRINT (NOMINAL ½" HIGH) THE POLE LENGTH AND FIRST TWO LETTERS OF THE MANUFACTURERS NAME ON TWO SIDES OF THE BASE PLATE 180 DEGREES APART, BEFORE GALVANIZING. THE ARM SHALL BE IDENTIFIED WITH THE SAME INFORMATION BY INDENT PRINT.

SIGNAL FACE SHALL BE MOUNTED 6 INCHES (NOMINAL) FROM THE END OF THE MONOTUBE ARM OR AS SHOWN ON THE PLAN CONSTRUCTION DETAIL OR A S DIRECTED BY THE PROJECT ENGINEER/ELECTRICAL OPERATIONS PERSONNEL. MOUNT ALL LIKE HEAD AT SAME ELEVATION.

SIGN MOUNTING BRACKETS SHALL BE FURNISHED IN ACCORDANCE WITH SECTION 637 OF THE STANDARD SPECIFICATIONS FOR HIGHWAY AND STRUCTURE CONSTRUCTION.

(1) DESIGN FOR MAXIMUM ALLOWABLE HAND HOLE WITH COVER ASSEMBLY WITH TWO ¼" X ¾" - 20 TPI STAINLESS STEEL HEX HEAD BOLTS.

(2) SIGNAL MOUNTING BRACKETS FOR POLE MOUNTING, MOUNT WITH CAP SCREW AND BANDING (SEE SPECIFICATION SECTION 658).

(3) SECURELY MOUNT BACK PLATES, PROJECTING 5" BEYOND ALL SIDES OF THE SIGNAL FACE HOUSING, PER MANUFACTURERS RECOMMENDATIONS.

(4) THE TOP OF THE POLE SHAFT AND THE MONOTUBE ARM SHALL BE EQUIPPED WITH A REMOVABLE, VENTILATED CAP HELD SECURELY IN PLACE WITH SET SCREWS.

(5) FACTORY WELDED BRACKET FOR GROUNDING LUG, OPPOSITE HAND HOLD, (LUG AND HARDWARE PAID UNDER SEPARATE ITEM). PROVIDE HOLE IN BRACKET FOR ¼" X ¾" - 20 TPI STAINLESS STEEL HEX HEAD BOLT.

(6) FACTORY WELDED "J" HOOK FOR STRAIN RELIEF FOR POLE LUMINAIRE WIRE.

(7) INSTALL STRUCTURAL IDENTIFICATION PLAQUES.

STRUCTURAL IDENTIFICATION PLAQUES SHALL BE PLACED ON THE POLES IN THE SAME DIRECTION AS THE ARM.

MOUNTING HEIGHT SHALL BE 6' - 0" ABOVE THE CURB OR SHOULDER. ADJUST IF IT IS KNOWN THAT REQUIRED TRAFFIC SIGNS WILL BE OBSTRUCTED.

(8) FACTORY DRILLED ½" DRAIN HOLE 2" FROM FLANGE CONNECTION PLATE.

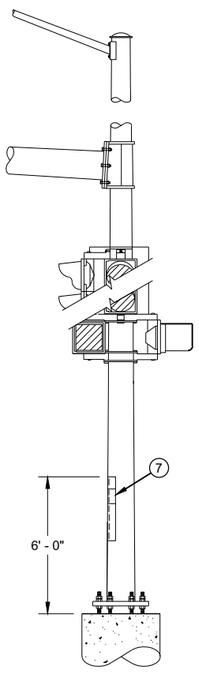

STRUCTURAL IDENTIFICATION PLAQUE PLACEMENT

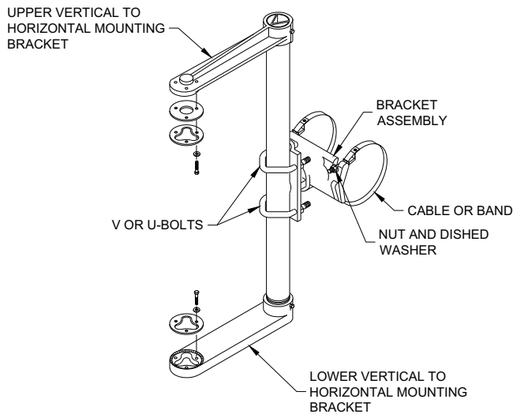

SIGNAL FACE MOUNTING BRACKET DETAIL FOR MONOTUBE ARM

(MOUNT PER MANFACTURER'S RECOMMENDATION)

TYPICAL GROUNDING (5) CONNECTIONS

NUT, BOLT AND WASHERS SHALL BE STAINLESS STEEL

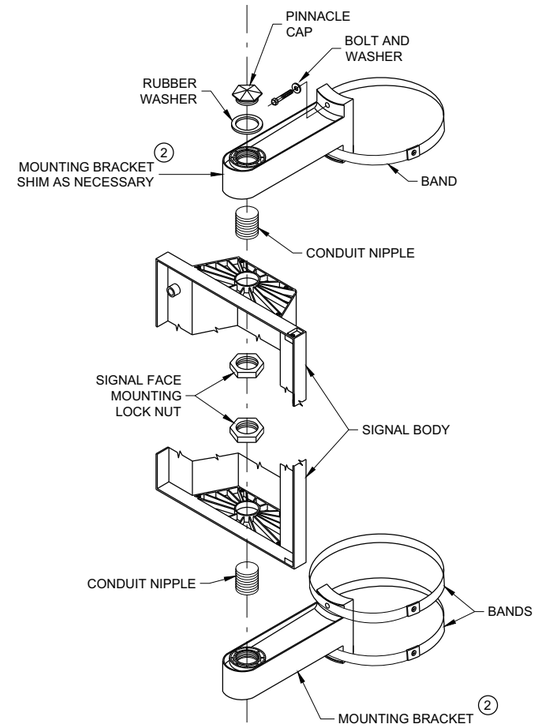

SIGNAL FACE VERTICAL MOUNTING DETAIL

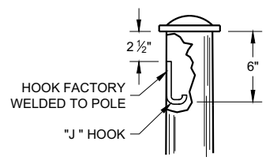

TYPICAL "J" HOOK (6) WIRE SUPPORT

GENERAL NOTES AND HARDWARE FOR TYPES 9,10, 9/10 SPECIAL, 12 AND 13 POLES WITH MONOTUBE ARMS

STATE OF WISCONSIN
DEPARTMENT OF TRANSPORTATION

APPROVED
August 2020 — DATE
/S/ Ahmet Demirbilek — STATE ELECTRICAL ENGINEER

FHWA

6

SDD 09E08 - 09k

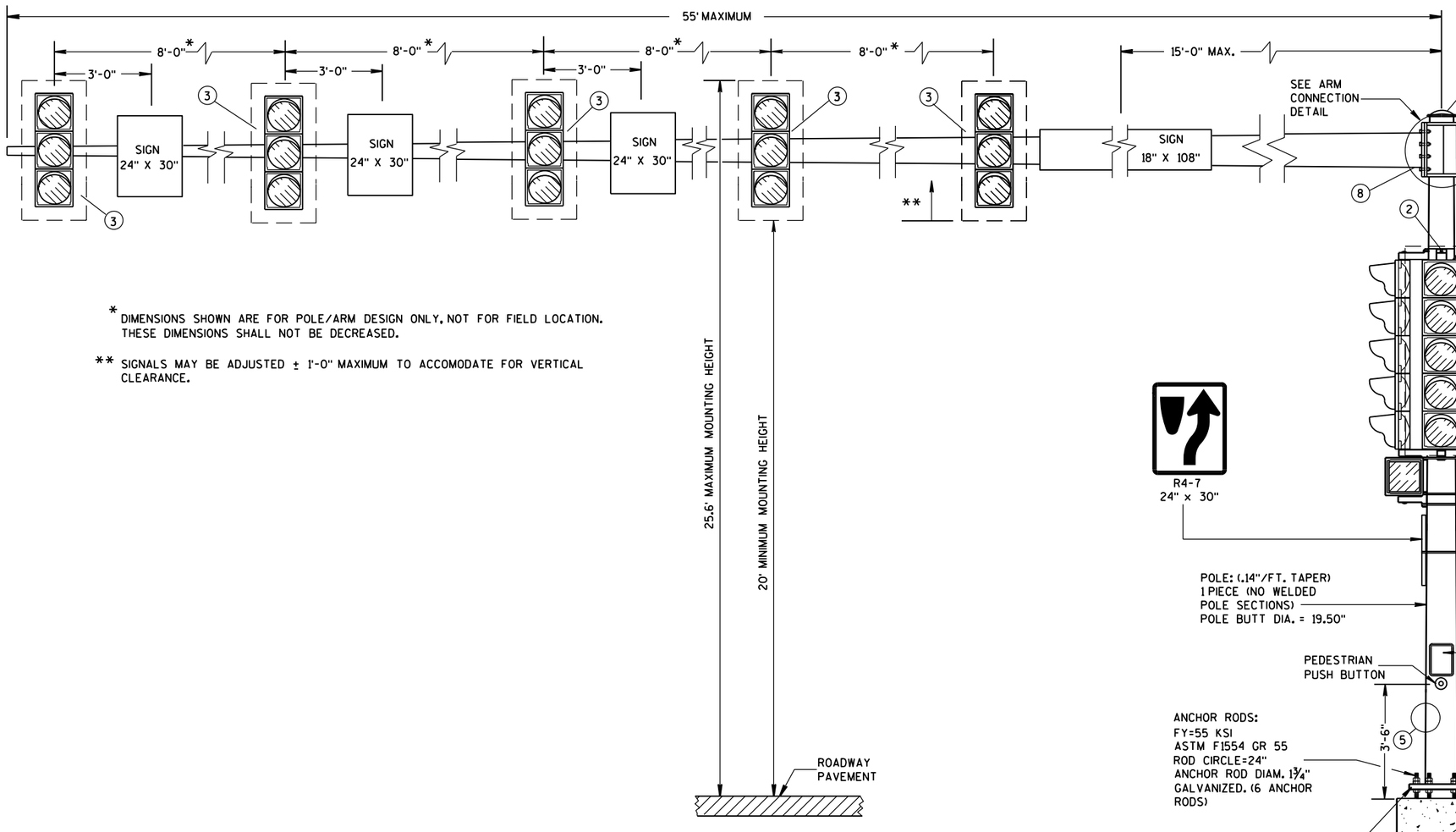

* DIMENSIONS SHOWN ARE FOR POLE/ARM DESIGN ONLY, NOT FOR FIELD LOCATION. THESE DIMENSIONS SHALL NOT BE DECREASED.

** SIGNALS MAY BE ADJUSTED ± 1'-0" MAXIMUM TO ACCOMODATE FOR VERTICAL CLEARANCE.

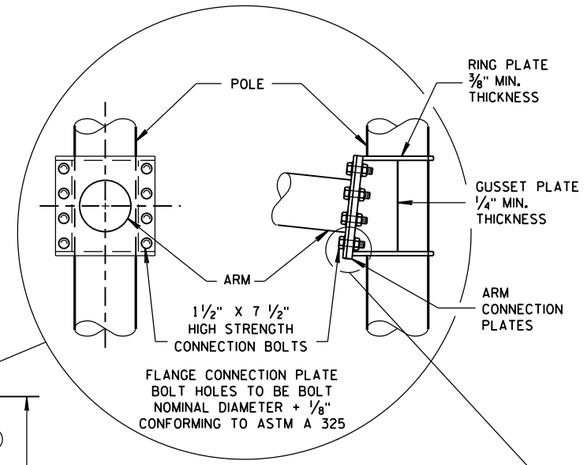

8 BOLT ARM CONNECTION DETAIL

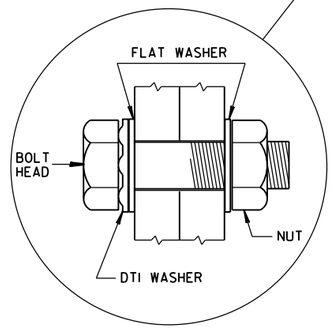

RECOMMENDED BOLT ASSEMBLY DETAIL

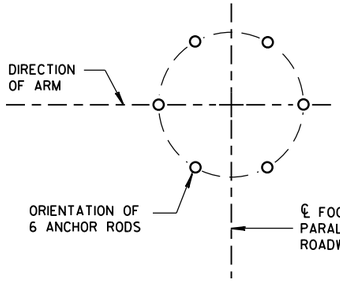

ANCHOR ROD LOCATION

(MAXIMUM LOAD)

OVER HEIGHT TYPE 12 POLE 35'- 55' MONOTUBE ARM

OVER HEIGHT TYPE 12 POLE 35' - 55' MONOTUBE ARM

STATE OF WISCONSIN
DEPARTMENT OF TRANSPORTATION

APPROVED
May, 2017 — DATE
/S/ Ahmet Demirbilek — STATE ELECTRICAL
FHWA

6

S.D.D. 9 E 12-1c

6

S.D.D. 9 E 12-1c

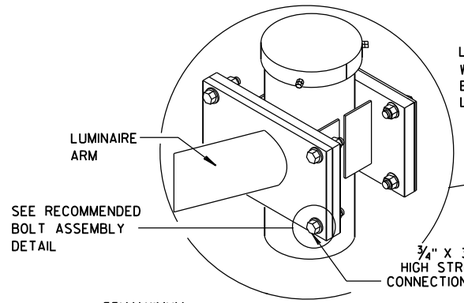

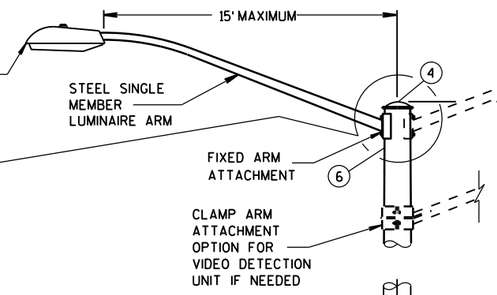

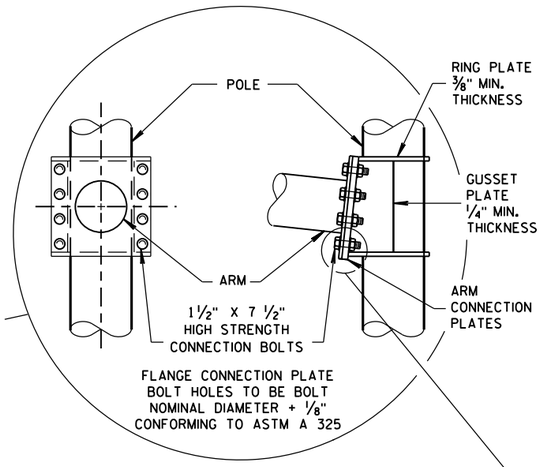

8 BOLT ARM CONNECTION DETAIL

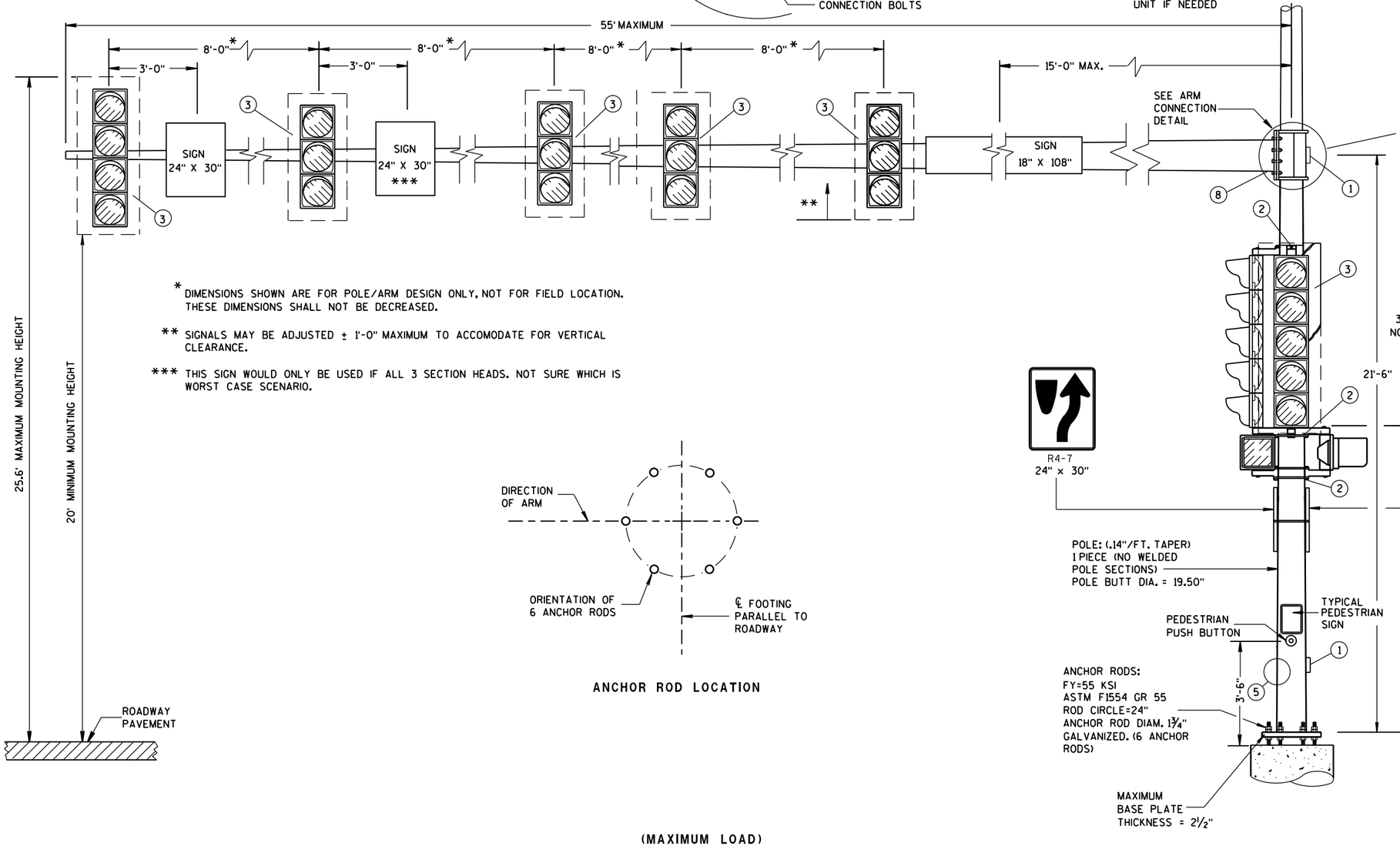

* DIMENSIONS SHOWN ARE FOR POLE/ARM DESIGN ONLY. NOT FOR FIELD LOCATION. THESE DIMENSIONS SHALL NOT BE DECREASED.

** SIGNALS MAY BE ADJUSTED ± 1'-0" MAXIMUM TO ACCOMODATE FOR VERTICAL CLEARANCE.

*** THIS SIGN WOULD ONLY BE USED IF ALL 3 SECTION HEADS. NOT SURE WHICH IS WORST CASE SCENARIO.

ANCHOR ROD LOCATION

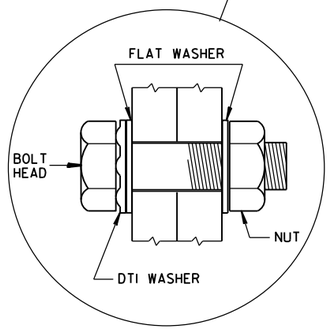

RECOMMENDED BOLT ASSEMBLY DETAIL

(MAXIMUM LOAD)

OVER HEIGHT TYPE 13 POLE 35'- 55' MONOTUBE ARM

OVER HEIGHT TYPE 13 POLE 35' - 55' MONOTUBE ARM

STATE OF WISCONSIN
DEPARTMENT OF TRANSPORTATION

APPROVED
May, 2017 — DATE
/S/ Ahmet Demirbilek — STATE ELECTRICAL
FHWA

6

S.D.D. 9 E 12-1d

6

S.D.D. 9 E 12-1d

GENERAL NOTES

DETAILS OF CONSTRUCTION, MATERIALS AND WORKMANSHIP NOT SHOWN ON THIS DRAWING SHALL CONFORM TO THE PERTINENT REQUIREMENTS OF THE CONTRACT.

OVER HEIGHT POLE TYPES 9 AND 10 ARE FOR ARM LENGTHS 15-FOOT TO 30-FOOT.

OVER HEIGHT POLE TYPES 12 AND 13 ARE FOR ARM LENGTHS 35-FOOT TO 55-FOOT.

MONOTUBE POLE AND ARM SHALL BE GALVANIZED STEEL.

RING-STIFFENED BUILT-UP BOX TYPE OF ATTACHMENT FOR TRAFFIC SIGNAL ARM.

ONE (1) PIECE POLE CONSTRUCTION (NO WELDED POLE SECTIONS).

STANDARD STRAIGHT ARM DESIGN (3 % ± RISE).

SECTION 657, POLES OF THE STANDARD SPECIFICATIONS SHALL APPLY TO THIS DRAWING.

PROVIDE WIREWAY THRU POLE WALL AND ARM CONNECTION PLATES. PROVIDE ROUND, SMOOTH INSIDE SURFACE.

MANUFACTURER'S SUBMITTED POLE DESIGNS AND DRAWINGS SHALL BE SIGNED AND STAMPED BY A REGISTERED PROFESSIONAL ENGINEER AND CERTIFIED AS BEING IN COMPLIANCE WITH THE AASHTO LRFD SPECIFICATIONS FOR STRUCTURAL SUPPORTS FOR HIGHWAY SIGNS, LUMINAIRES, AND TRAFFIC SIGNAL 2015 1ST EDITION (INCLUDING 2017 INTERIM REVISIONS) AND ALL PERTINENT WISDOT SPECIFICATIONS AND DRAWINGS FOR TRAFFIC AND LIGHTING STRUCTURES AND AS FOLLOWS:

- CATEGORY III FATIGUE LOADS OF GALLOPING, TRUCK GUSTS (AT 45 MPH VEHICLE VELOCITY) AND NATURAL WIND GUSTS FOR DESIGN OF TYPE 9 AND TYPE 10 STRUCTURES.
- CATEGORY II FATIGUE LOADS OF GALLOPING, TRUCK GUSTS (AT 45 MPH VEHICLE VELOCITY) AND NATURAL WIND GUSTS FOR DESIGN OF TYPE 12 AND TYPE 13 STRUCTURES.
- 90 MPH (3-SECOND GUST) WIND SPEED AND A 50 YEAR DESIGN LIFE.

SECURE THE OPENING BELOW THE BASE PLATE WITH STAINLESS STEEL OR GALVANIZED STEEL MESH AND SECURE THE MESH WITH ¾" S.S. BANDING AROUND THE LEVELING NUTS.

INDENT PRINT (NOMINAL ½" HIGH) THE POLE LENGTH AND FIRST TWO LETTERS OF THE MANUFACTURERS NAME ON TWO SIDES OF THE BASE PLATE 180 DEGREES APART, BEFORE GALVANIZING. THE ARM SHALL BE IDENTIFIED WITH THE SAME INFORMATION BY INDENT PRINT.

SIGNAL FACE SHALL BE MOUNTED 6 INCHES (NOMINAL) FROM THE END OF THE MONOTUBE ARM OR AS SHOWN ON THE PLAN CONSTRUCTION DETAIL OR AS DIRECTED BY THE PROJECT ENGINEER/ELECTRICAL OPERATIONS PERSONNEL. MOUNT ALL LIKE HEADS AT SAME ELEVATION.

SIGN MOUNTING BRACKETS SHALL BE FURNISHED IN ACCORDANCE WITH SECTION 637 OF THE STANDARD SPECIFICATIONS FOR HIGHWAY AND STRUCTURE CONSTRUCTION.

(1) DESIGN FOR MAXIMUM ALLOWABLE HANDHOLE WITH COVER ASSEMBLY WITH TWO ¼" X ¾" - 20 TPI STAINLESS STEEL HEX HEAD BOLTS.

(2) SIGNAL MOUNTING BRACKETS FOR POLE MOUNTING, MOUNT WITH CAP SCREW AND BANDING, (SEE SPECIFICATIONS SEC. 658).

(3) SECURELY MOUNT BACKPLATES, PROJECTING 5" BEYOND ALL SIDES OF THE SIGNAL FACE HOUSING, PER MANUFACTURERS RECOMMENDATIONS.

(4) THE TOP OF THE POLE SHAFT AND THE END OF THE MONOTUBE ARM SHALL BE EQUIPPED WITH A REMOVABLE, VENTILATED CAP HELD SECURELY IN PLACE WITH SET SCREWS.

(5) FACTORY-WELDED BRACKET FOR GROUNDING LUG, OPPOSITE HANDHOLE, (LUG AND HARDWARE PAID UNDER SEPARATE ITEM). PROVIDE HOLE IN BRACKET FOR ¼" X ¾" - 20 TPI STAINLESS STEEL HEX HEAD BOLT.

(6) FACTORY-WELDED "J" HOOK FOR STRAIN RELIEF FOR POLE LUMINAIRE WIRE.

(7) INSTALL STRUCTURAL IDENTIFICATION PLAQUES.

STRUCTURAL IDENTIFICATION PLAQUES SHALL BE PLACED ON THE POLES IN THE SAME DIRECTION AS THE ARM.

MOUNTING HEIGHT SHALL BE 6'-0" ABOVE THE CURB OR SHOULDER. ADJUST IF IT IS KNOWN THAT REQUIRED TRAFFIC SIGNS WILL BE OBSTRUCTED.

(8) FACTORY DRILLED ½" DRAIN HOLE 2" FROM FLANGE CONNECTION PLATE.

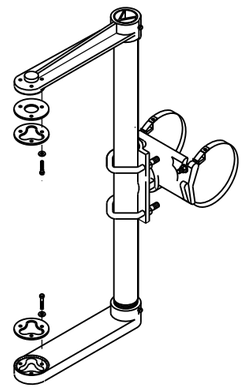

SIGNAL FACE MOUNTING BRACKET DETAIL FOR MONOTUBE ARM

(MOUNT PER MANUFACTURER'S RECOMMENDATION)

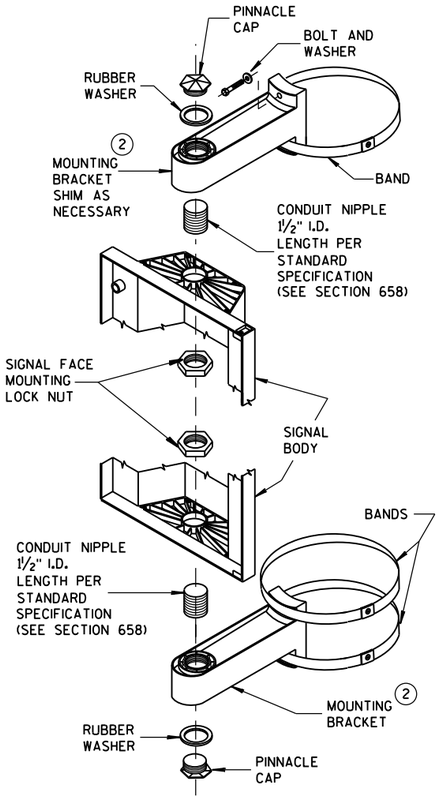

SIGNAL FACE VERTICAL MOUNTING DETAIL

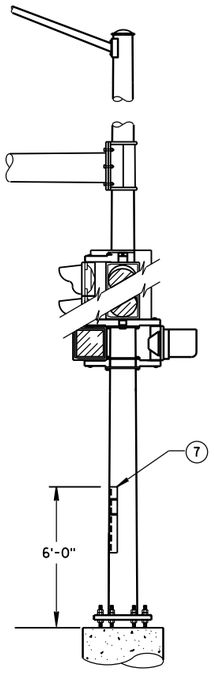

STRUCTURAL IDENTIFICATION PLAQUE PLACEMENT

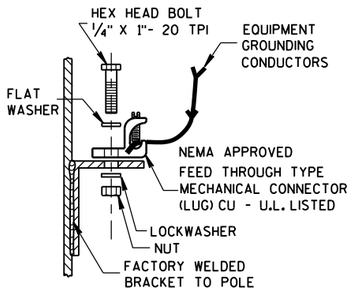

TYPICAL GROUNDING CONNECTIONS (5)

NUT, BOLT AND WASHERS SHALL BE STAINLESS STEEL

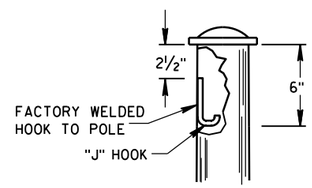

"J" HOOK WIRE SUPPORT (6)

GENERAL NOTES AND HARDWARE DETAILS FOR OVER HEIGHT TYPE 9, 10, 12 & 13 POLES WITH MONOTUBE ARMS

STATE OF WISCONSIN
DEPARTMENT OF TRANSPORTATION

APPROVED
May 2017 — DATE
/S/ Ahmet Demirbilek — STATE ELECTRICAL
FHWA

6

S.D.D. 9 E 12-1e

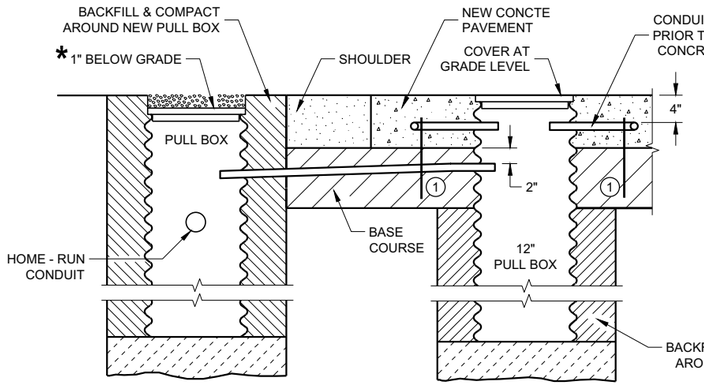

SECTION A - A
NO CURB AND GUTTER

LOOP DETECTOR INSTALLATION DETAIL

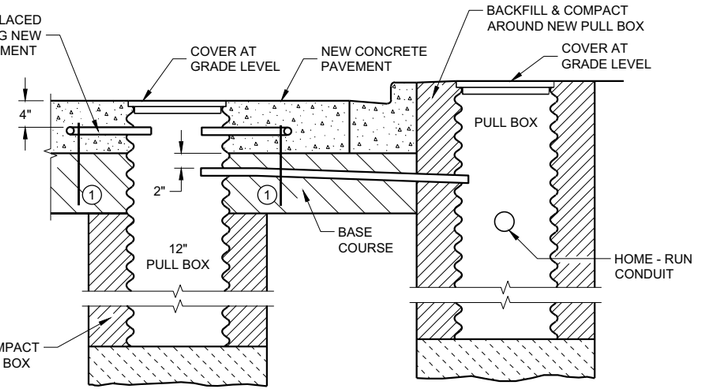

SECTION B - B
CURB AND GUTTER

LOOP DETECTOR INSTALLATION DETAIL

* RECESS PULL BOX SO THAT THE COVER IS 3" BELOW GRADE IN SHOULDER AREAS OF CRUSHED AGGREGATE. BACKFILL OVER COVER WITH THE CRUSHED AGGREGATE TO BRING THE AREA TO GRADE LEVEL.

GENERAL NOTES

DETAILS OF CONSTRUCTION, MATERIALS AND WORKMANSHIP NOT SHOWN ON THIS DRAWING SHALL CONFORM TO THE PERTINENT REQUIREMENTS OF THE CONTRACT.

PITCH LEAD OUT CONDUIT TO DRAIN TO ROADSIDE PULL BOX.

LOOP SIZE, LOCATION, NUMBER OF TURNS OF WIRE AND ASSOCIATED SIGNAL PHASE SHALL BE AS SHOWN ON THE PLANS.

SPLICES SHALL BE INSTALLED BY USING CAST IN PLACE SPLICE KITS LISTED ON THE DEPARTMENTS APPROVED PRODUCTS LIST OR AN ENGINEER APPROVED EQUAL. NON-INSULATED BUTT SPLICES TO FIT #12 AWG STRANDED WIRE SHALL BE USED. SPLICES SHALL BE SOLDERED AND INSULATED FROM EACH OTHER AS PER INSTRUCTIONS INCLUDED IN THE SPLICE KIT.

MEASURE GROUND RESISTANCE USING A MEGGER. REPLACE LOOP WIRE NOT ATTAINING A READING OF INFINITY TO GROUND.

AFTER SPLICING THE LOOP WIRE TO THE LOOP LEAD-IN CABLE, THE CONTRACTOR SHALL MEASURE INDUCTANCE, GROUND RESISTANCE AND WIRE RESISTANCE AT THE CABINET END OF THE LEAD-IN CABLE AND FURNISH A COPY OF THE READING TO THE PROJECT ENGINEER FOR EVALUATION.

LOOP DETECTOR LEADS SHALL BE IDENTIFIED WITH THEIR ASSOCIATED LOOP BY USE OF WATERPROOF TAGS AT BOTH ENDS OF THE CABLE. A LISTING OF THE CABLE IDENTIFICATION PER INDIVIDUAL LOOP LEAD-IN SHALL BE PLACED IN THE CABINET.

ANY PVC LEADOUT CONDUIT CONTAINING MORE THAN ONE TWISTED PAIR OF LOOP LEAD WIRE SHALL BE 2".

THE #12 AWG LOOP WIRE FROM THE LOOP TO THE ROADSIDE PULL BOX, SHALL BE HAND TWISTED AT LEAST 3 TWISTS PER FOOT BEFORE INSTALLATION.

SPLICES OF LOOP WIRE TO LEAD-IN CABLE SHALL BE MADE ONLY IN PULL BOXES AT THE SIDE OF THE ROAD.

THE #12 AWG LOOP WIRE SHALL BE INSTALLED FROM THE ROADSIDE PULL BOX, INTO THE PULL BOX IN THE PAVEMENT, THROUGH THE LOOP CONDUIT, BACK TO THE ROADSIDE PULL BOX, AND BE INSTALLED IN ONE NON-SPLICED CONTINUOUS LENGTH.

PROTECTION OF THE PULL BOX IN THE BASE COURSE, AND THE RELATED CONDUITS SHALL BE REQUIRED AFTER INSTALLATION AND BEFORE NEW CONCRETE PAVEMENT IS POURED.

12" PULL BOXES IN PAVEMENT SHALL BE CORRUGATED STEEL ONLY.

(1) HOLD DOWN PINS TO HOLD CONDUIT DURING POUR.

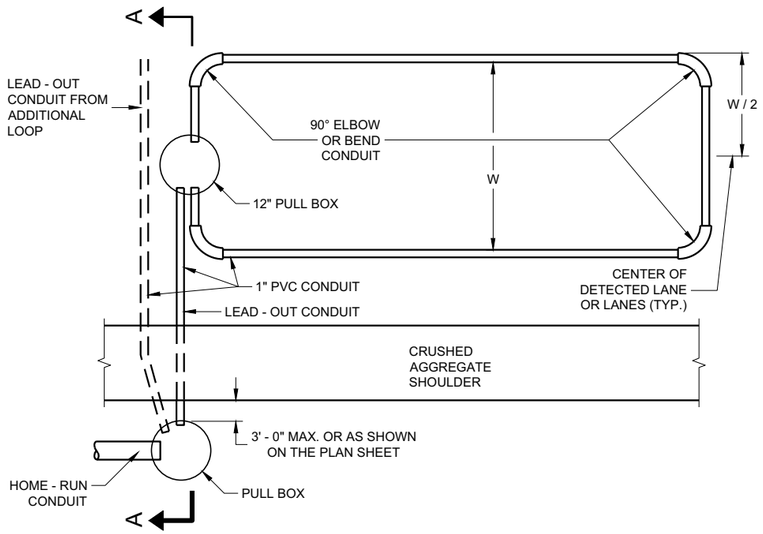

TYPICAL PLAN OF LOOP DETECTOR WITH 12" PULLBOX

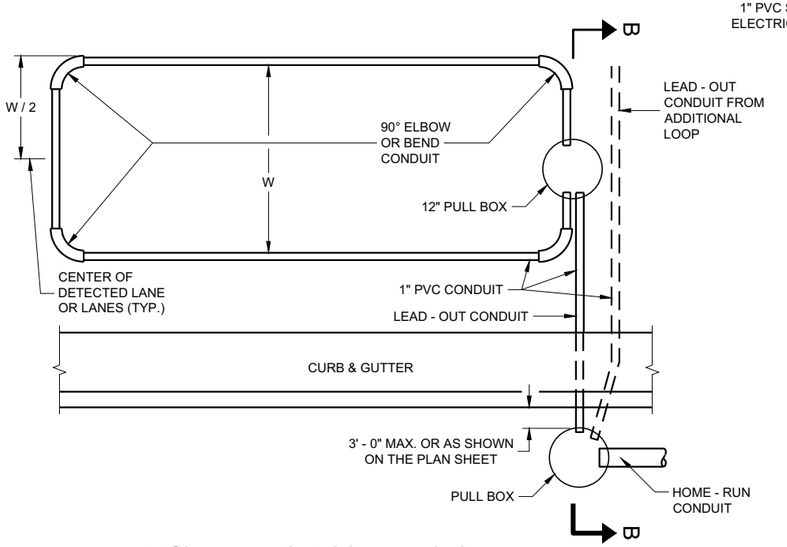

TYPICAL PLAN OF LOOP DETECTOR WITH 12" PULLBOX

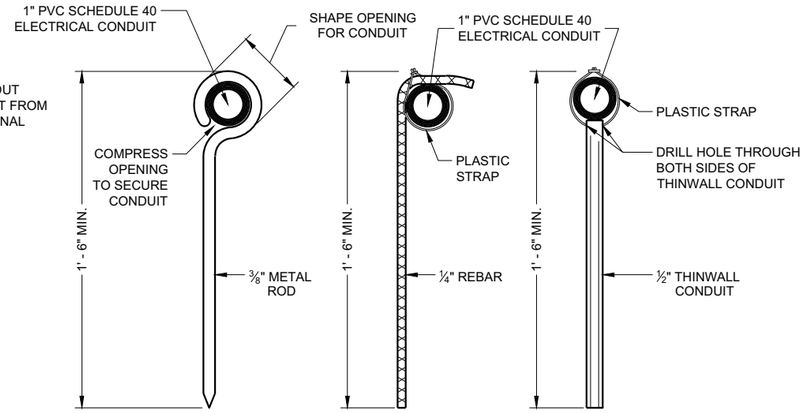

TYPICAL DETAILS FOR HOLD DOWN PINS (1)

LOOP DETECTOR INSTALLED IN NEW CONCRETE PAVEMENT ROUND CSCP PULLBOX

STATE OF WISCONSIN
DEPARTMENT OF TRANSPORTATION

APPROVED
November 2018
DATE

/S/ Ahmet Demirbilek
STATE ELECTRICAL ENGI

247

FHWA

6

SDD 09F04 - 05

6

SDD 09F04 - 05

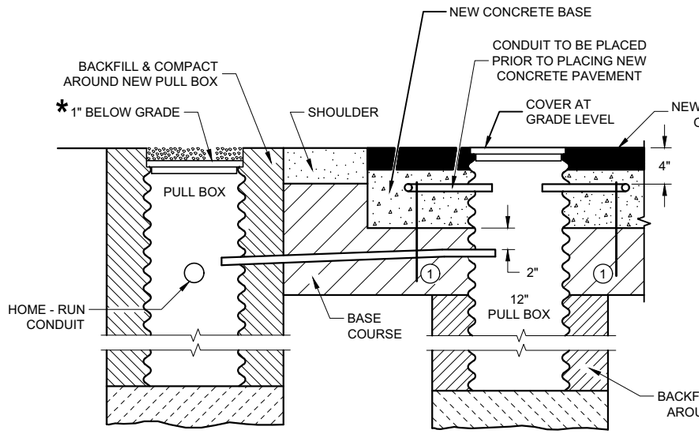

SECTION A - A
NO CURB AND GUTTER

LOOP DETECTOR INSTALLATION DETAIL

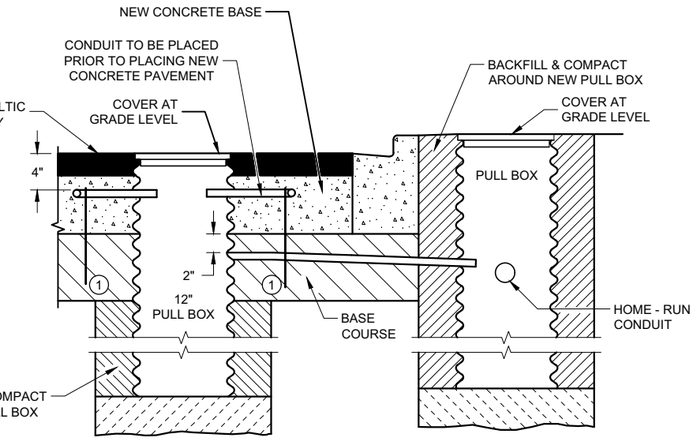

SECTION B - B
CURB AND GUTTER

LOOP DETECTOR INSTALLATION DETAIL

* RECESS PULL BOX SO THAT THE COVER IS 3" BELOW GRADE IN SHOULDER AREAS OF CRUSHED AGGREGATE. BACKFILL OVER COVER WITH THE CRUSHED AGGREGATE TO BRING THE AREA TO GRADE LEVEL.

GENERAL NOTES

DETAILS OF CONSTRUCTION, MATERIALS AND WORKMANSHIP NOT SHOWN ON THIS DRAWING SHALL CONFORM TO THE PERTINENT REQUIREMENTS OF THE CONTRACT.

PITCH LEAD OUT CONDUIT TO DRAIN TO ROADSIDE PULL BOX.

LOOP SIZE, LOCATION, NUMBER OF TURNS OF WIRE AND ASSOCIATED SIGNAL PHASE SHALL BE AS SHOWN ON THE PLANS.

SPLICES SHALL BE INSTALLED BY USING CAST IN PLACE SPLICE KITS LISTED ON THE DEPARTMENTS APPROVED PRODUCTS LIST OR AN ENGINEER APPROVED EQUAL. NON-INSULATED BUTT SPLICES TO FIT #12 AWG STRANDED WIRE SHALL BE USED. SPLICES SHALL BE SOLDERED AND INSULATED FROM EACH OTHER AS PER INSTRUCTIONS INCLUDED IN THE SPLICE KIT.

MEASURE GROUND RESISTANCE USING A MEGGER. REPLACE LOOP WIRE NOT ATTAINING A READING OF INFINITY TO GROUND.

AFTER SPLICING THE LOOP WIRE TO THE LOOP LEAD-IN CABLE, THE CONTRACTOR SHALL MEASURE INDUCTANCE, GROUND RESISTANCE AND WIRE RESISTANCE AT THE CABINET END OF THE LEAD-IN CABLE AND FURNISH A COPY OF THE READING TO THE PROJECT ENGINEER FOR EVALUATION.

VERIFY THICKNESS OF NEW ASPHALTIC OVERLAY BEFORE INSTALLING PULL BOX AND RELATED CONDUIT.

CONDUIT SHALL BE FULLY ENCASED IN NEW CONCRETE BASE (2" MINIMUM COVERAGE.)

LOOP DETECTOR LEADS SHALL BE IDENTIFIED WITH THEIR ASSOCIATED LOOP BY USE OF WATERPROOF TAGS AT BOTH ENDS OF THE CABLE. A LISTING OF THE CABLE IDENTIFICATION PER INDIVIDUAL LOOP LEAD-IN SHALL BE PLACED IN THE CABINET.

ANY PVC LEADOUT CONDUIT CONTAINING MORE THAN ONE TWISTED PAIR OF LOOP LEAD WIRE SHALL BE 2".

THE #12 AWG LOOP WIRE FROM THE LOOP TO THE ROADSIDE PULL BOX, SHALL BE HAND TWISTED AT LEAST 3 TWISTS PER FOOT BEFORE INSTALLATION.

SPLICES OF LOOP WIRE TO LEAD-IN CABLE SHALL BE MADE ONLY IN PULL BOXES AT THE SIDE OF THE ROAD.

THE #12 AWG LOOP WIRE SHALL BE INSTALLED FROM THE ROADSIDE PULL BOX, INTO THE PULL BOX IN THE PAVEMENT, THROUGH THE LOOP CONDUIT, BACK TO THE ROADSIDE PULL BOX, AND BE INSTALLED IN ONE NON-SPLICED CONTINUOUS LENGTH.

PROTECTION OF THE PULL BOX IN THE BASE COURSE, AND THE RELATED CONDUITS SHALL BE REQUIRED AFTER INSTALLATION AND BEFORE NEW CONCRETE PAVEMENT IS POURED.

PROTECTION OF THE PULL BOX SHALL BE REQUIRED AFTER THE NEW CONCRETE BASE IS POURED AND BEFORE THE NEW ASPHALTIC OVERLAY IS REPLACED.

12" PULL BOXES IN PAVEMENT SHALL BE CORRUGATED STEEL ONLY.

(1) HOLD DOWN PINS TO HOLD CONDUIT DURING POUR.

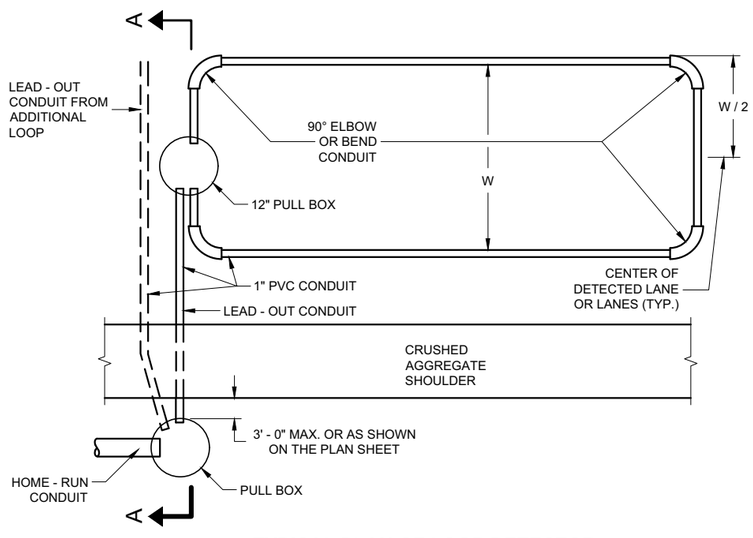

TYPICAL PLAN OF LOOP DETECTOR WITH 12" PULLBOX

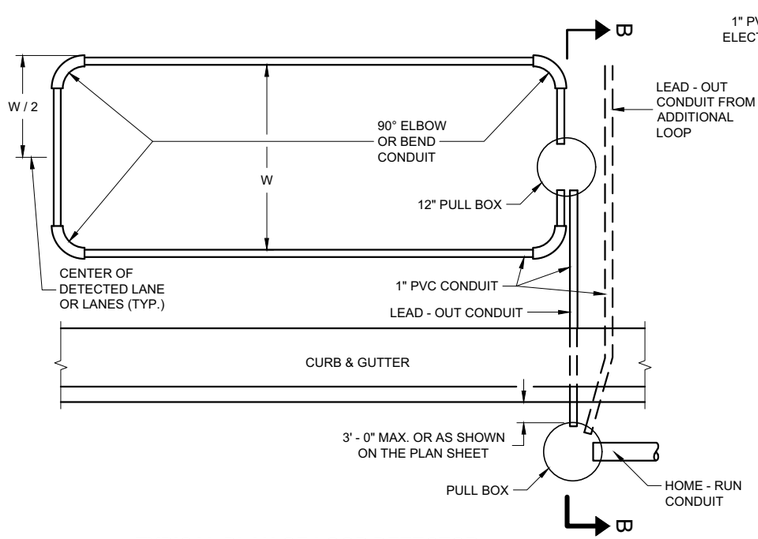

TYPICAL PLAN OF LOOP DETECTOR WITH 12" PULLBOX

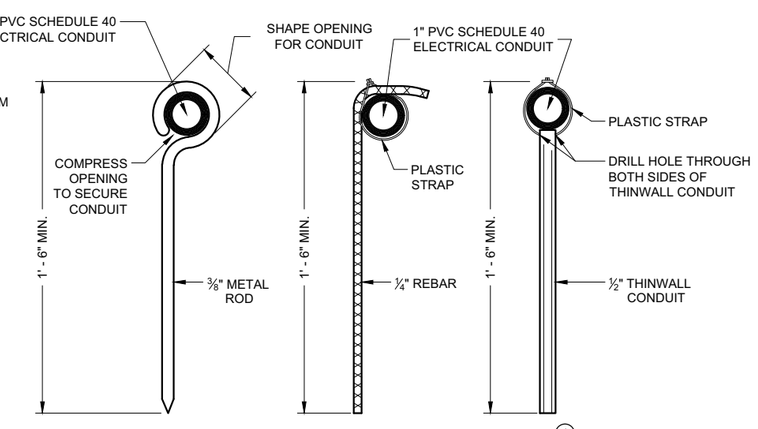

TYPICAL DETAILS FOR HOLD DOWN PINS (1)

LOOP DETECTOR INSTALLED IN NEW CONCRETE BASE WITH NEW ASPHALTIC OVERLAY ROUND CSCP PULLBOX

STATE OF WISCONSIN
DEPARTMENT OF TRANSPORTATION

APPROVED
November 2018 — DATE
/S/ Ahmet Demirbilek — STATE ELECTRICAL ENG

FHWA

6
SDD 09F07-05

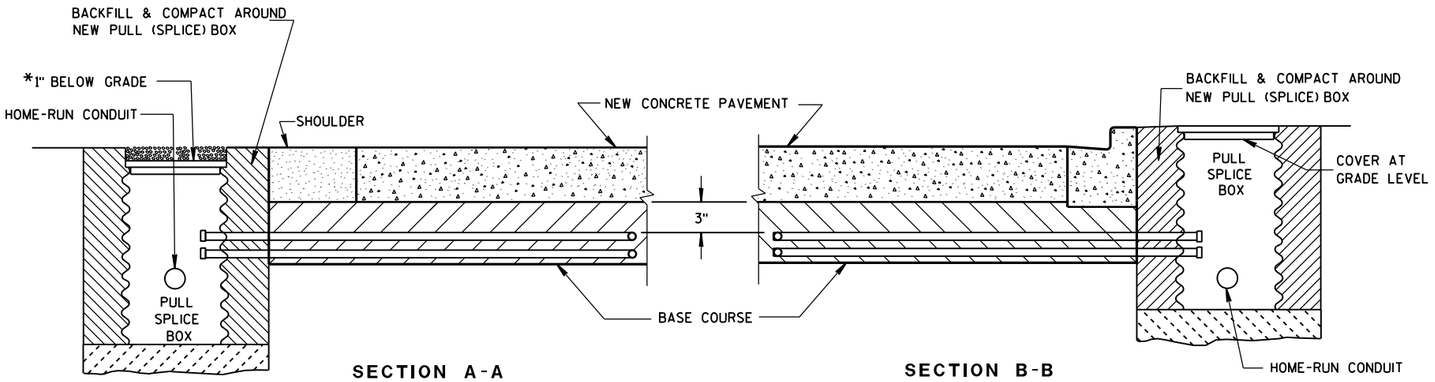

SECTION A-A
NO CURB & GUTTER

SECTION B-B
CURB & GUTTER

*RECESS PULL (SPLICE) BOX SO THAT THE COVER IS 3" BELOW GRADE IN SHOULDER AREAS OF CRUSHED AGGREGATE. BACKFILL OVER COVER WITH THE CRUSHED AGGREGATE TO BRING THE AREA TO GRADE LEVEL.

LOOP DETECTOR INSTALLATION DETAIL

GENERAL NOTES

DETAILS OF CONSTRUCTION, MATERIALS AND WORKMANSHIP NOT SHOWN ON THIS DRAWING SHALL CONFORM TO THE PERTINENT REQUIREMENTS OF THE CONTRACT.

LOOP SIZE, CONFIGURATION LOCATION, NUMBER OF TURNS OF WIRE AND ASSOCIATED SIGNAL PHASE SHALL BE AS SHOWN ON THE PLANS.

PITCH LEAD OUT CONDUIT TO DRAIN TO ROADSIDE PULL (SPLICE) BOX.

SPLICES SHALL BE INSTALLED BY USING CAST IN PLACE SPLICE KITS LISTED ON THE DEPARTMENTS APPROVED PRODUCTS LIST OR AN ENGINEER APPROVED EQUAL. NON-INSULATED BUTT SPLICES TO FIT #12 AWG STRANDED WIRE SHALL BE USED. SPLICES SHALL BE SOLDERED AND INSULATED FROM EACH OTHER AS PER INSTRUCTIONS INCLUDED IN THE SPLICE KIT.

MEASURE GROUND RESISTANCE USING A MEGGER. REPLACE LOOP WIRE NOT ATTAINING A READING OF INFINITY TO GROUND.

AFTER SPLICING THE LOOP WIRE TO THE LOOP LEAD-IN CABLE, THE CONTRACTOR SHALL MEASURE INDUCTANCE, GROUND RESISTANCE AND WIRE RESISTANCE AT THE CABINET END OF THE LEAD-IN CABLE AND FURNISH A COPY OF THE READINGS TO THE PROJECT ENGINEER FOR EVALUATION.

LOOP DETECTOR LEADS SHALL BE IDENTIFIED WITH THEIR ASSOCIATED LOOP BY USE OF WATERPROOF TAGS AT BOTH ENDS OF THE CABLE. A LISTING OF THE CABLE IDENTIFICATION PER INDIVIDUAL LOOP LEAD-IN SHALL BE PLACED IN THE CABINET.

THE #12 AWG. LOOP WIRE IN THE PULL (SPLICE) BOX SHALL BE HAND TWISTED AT LEAST 3 TWISTS PER FOOT BEFORE BEING SPLICED TO THE LOOP LEAD-IN CABLE.

SPLICES OF LOOP WIRE TO LEAD-IN CABLE SHALL BE MADE ONLY IN PULL (SPLICE) BOXES AT THE SIDE OF THE ROAD.

THE #12 AWG LOOP WIRE SHALL BE INSTALLED FROM THE ROADSIDE PULL (SPLICE) BOX, THROUGH THE LOOP CONDUIT, BACK TO THE ROADSIDE PULL (SPLICE) BOX, AND BE INSTALLED IN ONE, NON-SPLICED CONTINUOUS LENGTH.

PROTECTION OF THE CONDUITS IN THE BASE COURSE SHALL BE REQUIRED AFTER INSTALLATION AND BEFORE NEW PAVEMENT IS INSTALLED.

SHOULD INSTALLATION REPAIR BE REQUIRED, IT SHALL BE DONE UNDER THE DIRECTION OF THE PROJECT ENGINEER.

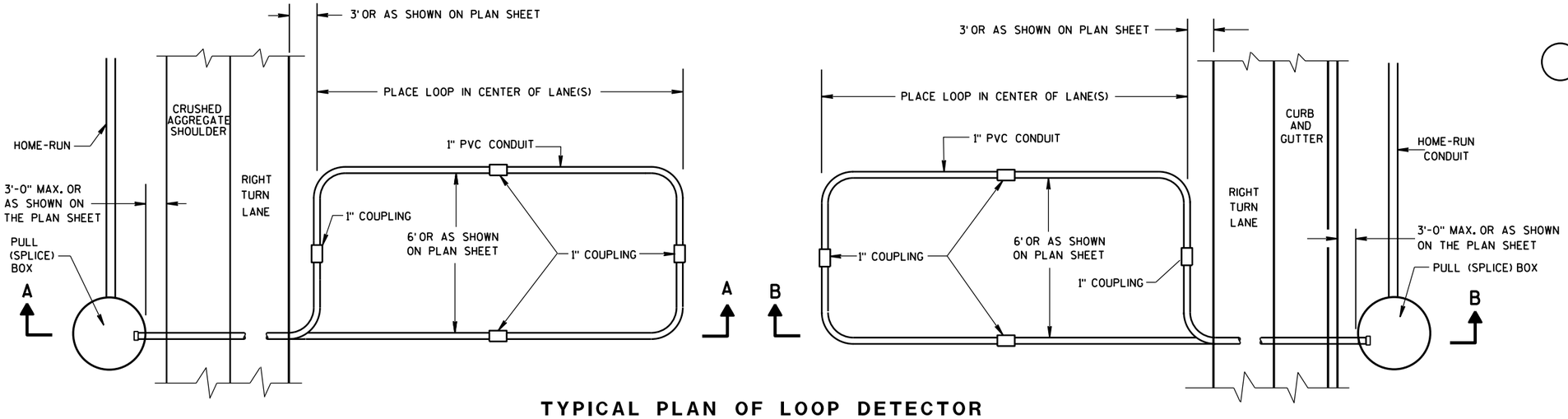

TYPICAL PLAN OF LOOP DETECTOR WITH 24" PULL (SPLICE) BOX

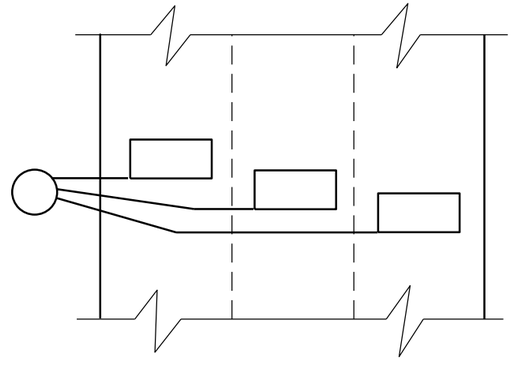

MULTI-LANE INSTALLATION

LOOP DETECTOR INSTALLED IN BASE COURSE WITH PULL (SPLICE) BOX OFF ROADWAY (OPTION 2)

STATE OF WISCONSIN
DEPARTMENT OF TRANSPORTATION

APPROVED
Sept. 2014 — DATE
/S/ Ahmet Demirbilek — STATE ELECTRICAL
FHWA

6

S.D.D. 9 F 15-4b

6

S.D.D. 9 F 15-4b

MINIMUM POLE LENGTHS	CLASS	POLE BURIAL DEPTHS
25'	V	5'
30'	V	6'
35'	IV	7'
40'	IV	8'
45'	IV	9'

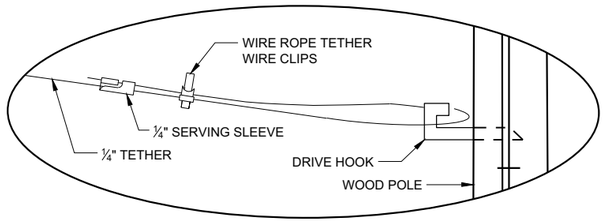

DETAIL "A"

GENERAL NOTES

DETAILS OF CONSTRUCTION, MATERIALS AND WORKMANSHIP NOT SHOWN ON THIS DRAWING SHALL CONFORM TO THE PERTINENT REQUIREMENTS OF THE CONTRACT.

1. WOOD POLES SHALL BE CLASS 4. LENGTH DETERMINED BY SIGNAL PLAN.

2. SIGNAL FACES:
   - A. ALL SECTIONS SHALL BE 12" AND POLYCARBONATE.
   - B. EACH SHALL CONTAIN A 5" WIDE DULL BLACK POLYCARBONATE BACKPLATE.
   - C. EACH SHALL BE WIRED FROM THE TOP SIGNAL MOUNTING BRACKET.
   - D. NEAR RIGHT SIGNAL FACE SUSPENDED ON THE TETHER (NO BACKPLATE) SHALL NOT BE OVER THE TRAVELED WAY. IF THE POLE IS WITHIN 5 FEET OF THE TRAVELED WAY MOUNT THE SIGNAL FACE ON THE WOOD POLE WITH BACKPLATE.
   - E. FAR INDICATION SHALL BE MAINTAINED OVER CENTER OF TRAFFIC LANE.

3. SPAN WIRE:
   - A. EACH SPAN WIRE SHALL BE INDIVIDUALLY DOWN GUYED
   - B. SIGNAL AND LIGHTING CABLES SHALL ONLY BE ATTACHED TO THE UPPER SPAN WIRE.
   - C. THE SIGNAL ASSEMBLY SHALL HAVE A 17' MIN. HEIGHT ABOVE THE ROADWAY. THIS SHALL BE MEASURED AFTER THE SPAN WIRE INSTALLATION IS COMPLETED WITH ALL CABLES AND SIGNAL FACES IN PLACE. MAINTAIN MINIMUM AND MAXIMUM HEIGHTS AS ROADWAY WORK PROGRESSES.

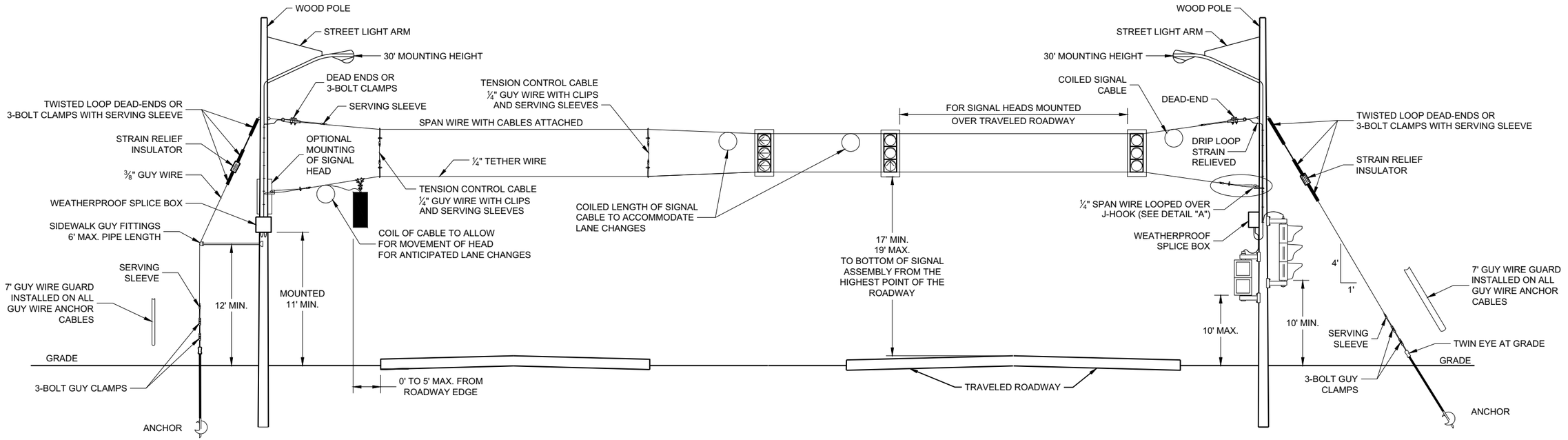

SPAN WIRE
TEMPORARY SIGNALS
4 LANE ROADWAYS

SPAN WIRE TEMPORARY TRAFFIC SIGNAL

STATE OF WISCONSIN
DEPARTMENT OF TRANSPORTATION

APPROVED
June 2015
DATE

/S/ Ahmet Demerbilek
STATE ELECTRICAL ENGI

FHWA

SDD09G01 - 04b

SDD09G01 - 04b

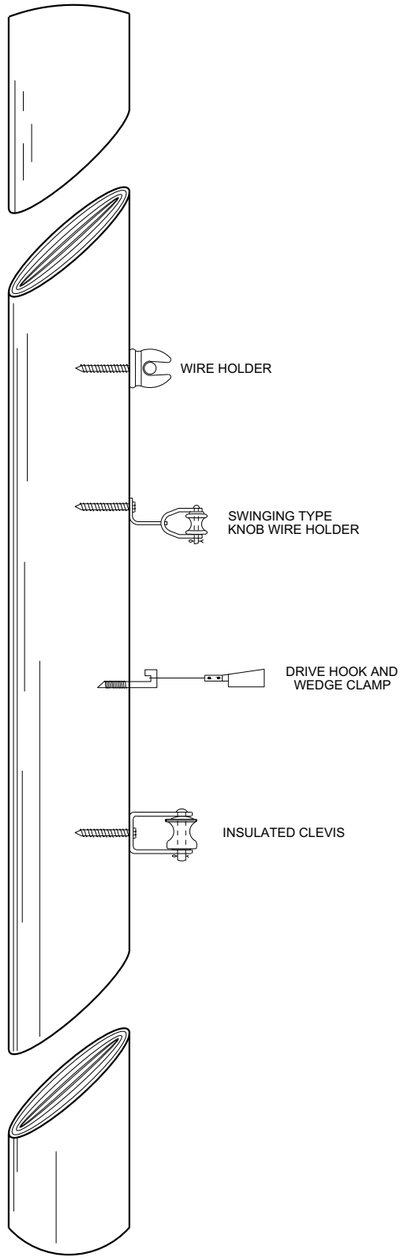

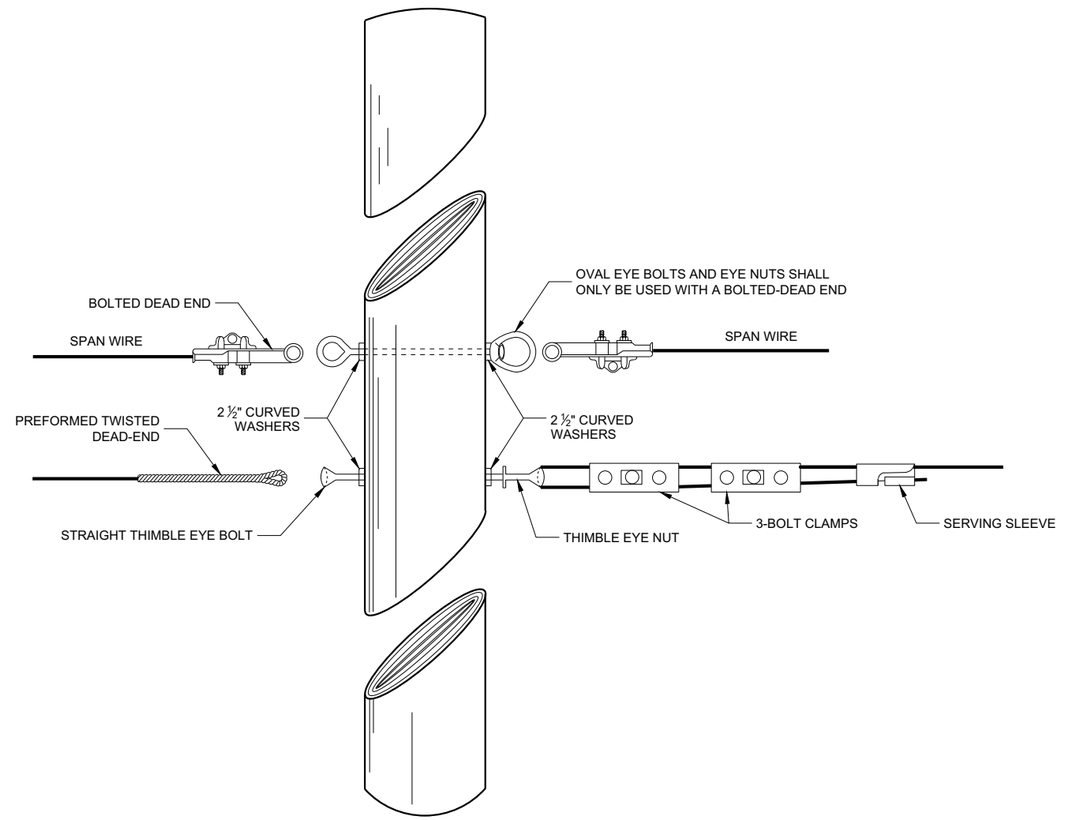

6

SDD 09G01 - 4d

SPAN WIRE TEMPORARY TRAFFIC SIGNAL

STATE OF WISCONSIN
DEPARTMENT OF TRANSPORTATION

APPROVED

June 2015
DATE

/S/ Ahmet Demerbilek
ROADWAY STANDARDS DEVE ENGINEER

FHWA

6

SDD 09G01 - 4d

GENERAL NOTES

1. USE ¾" DRILL IN WOOD POLE TO PROVIDE FOR ⅝" BOLTS.
2. SAFETY LOOP REQUIRED ON EACH END OF ALL SPAN WIRES.

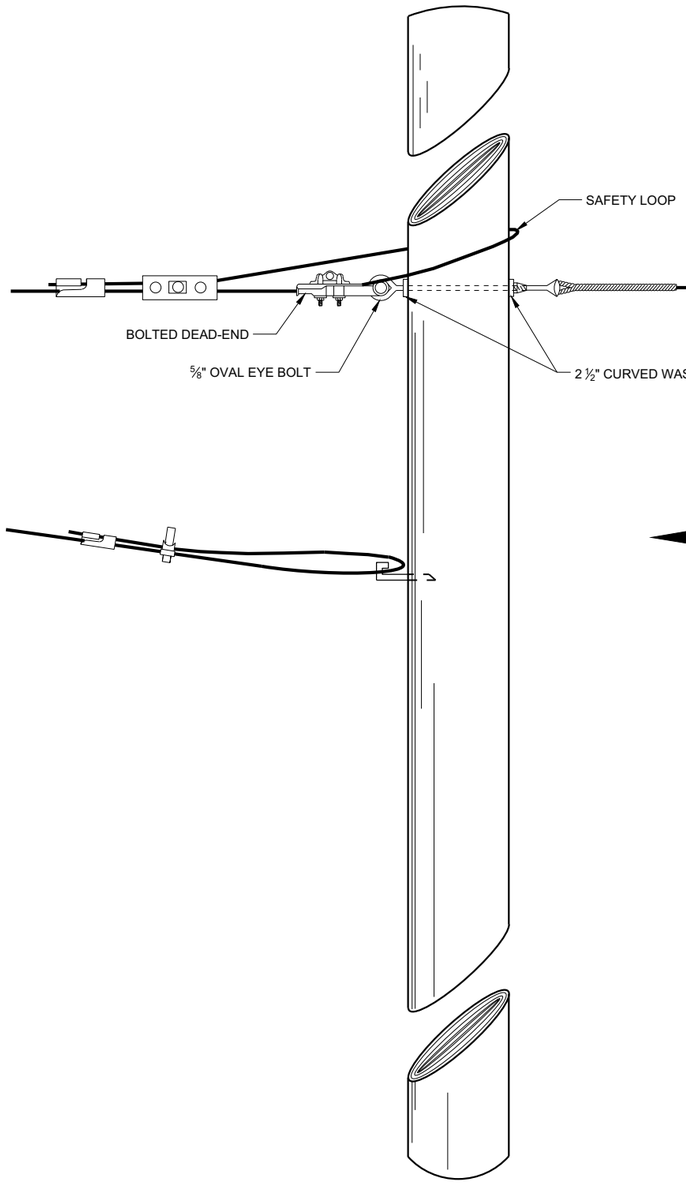

SPAN WIRE POLE

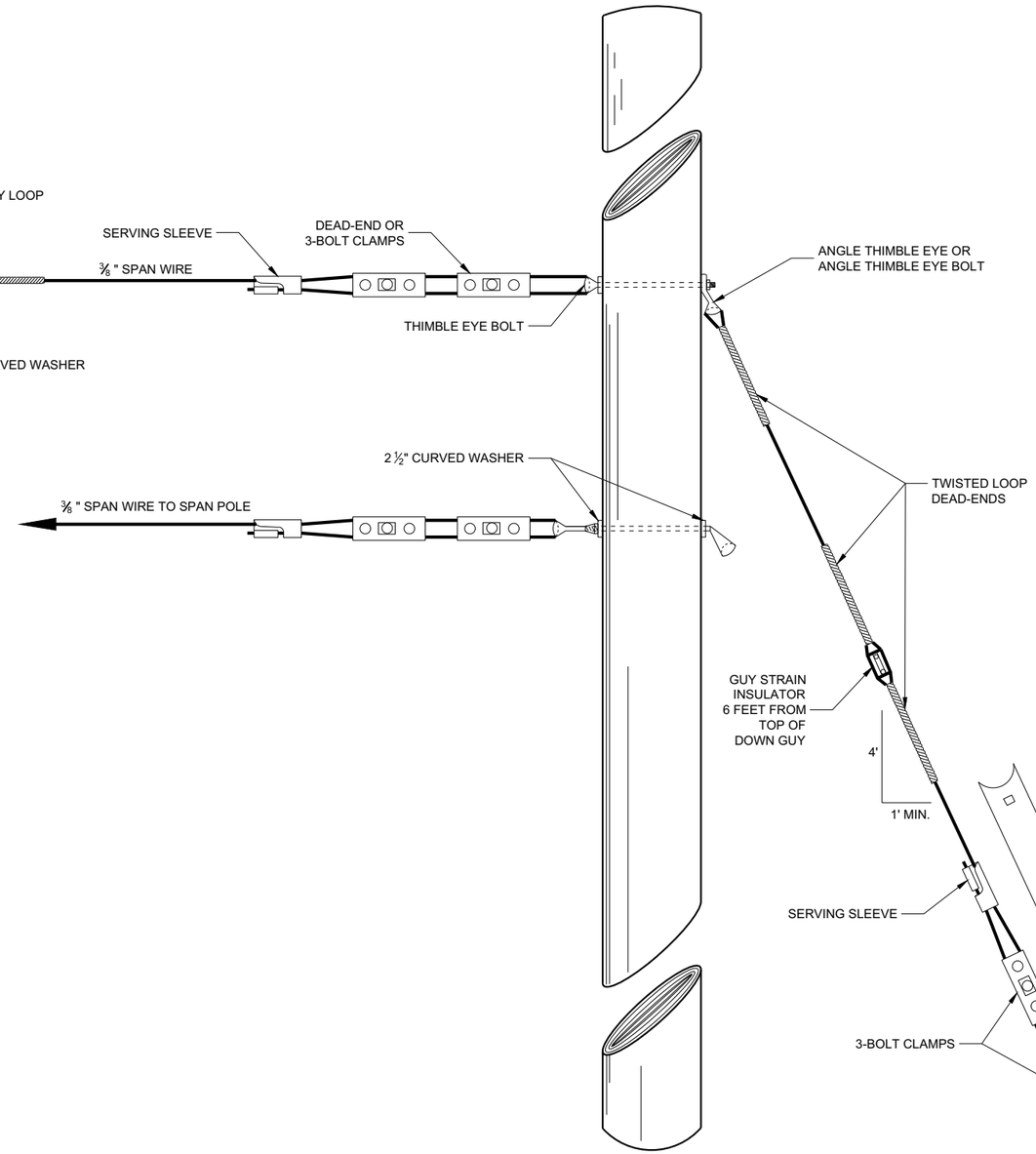

GUY POLE

TYPICAL DEAD-ENDINGS OR GUYING

SPAN WIRE TEMPORARY TRAFFIC SIGNAL

STATE OF WISCONSIN
DEPARTMENT OF TRANSPORTATION

APPROVED
June 2015 — DATE
/S/ Ahmet Demerbilek — ROADWAY STANDARDS DEVE ENGINEER
FHWA

6

SDD 09G01 - 4e

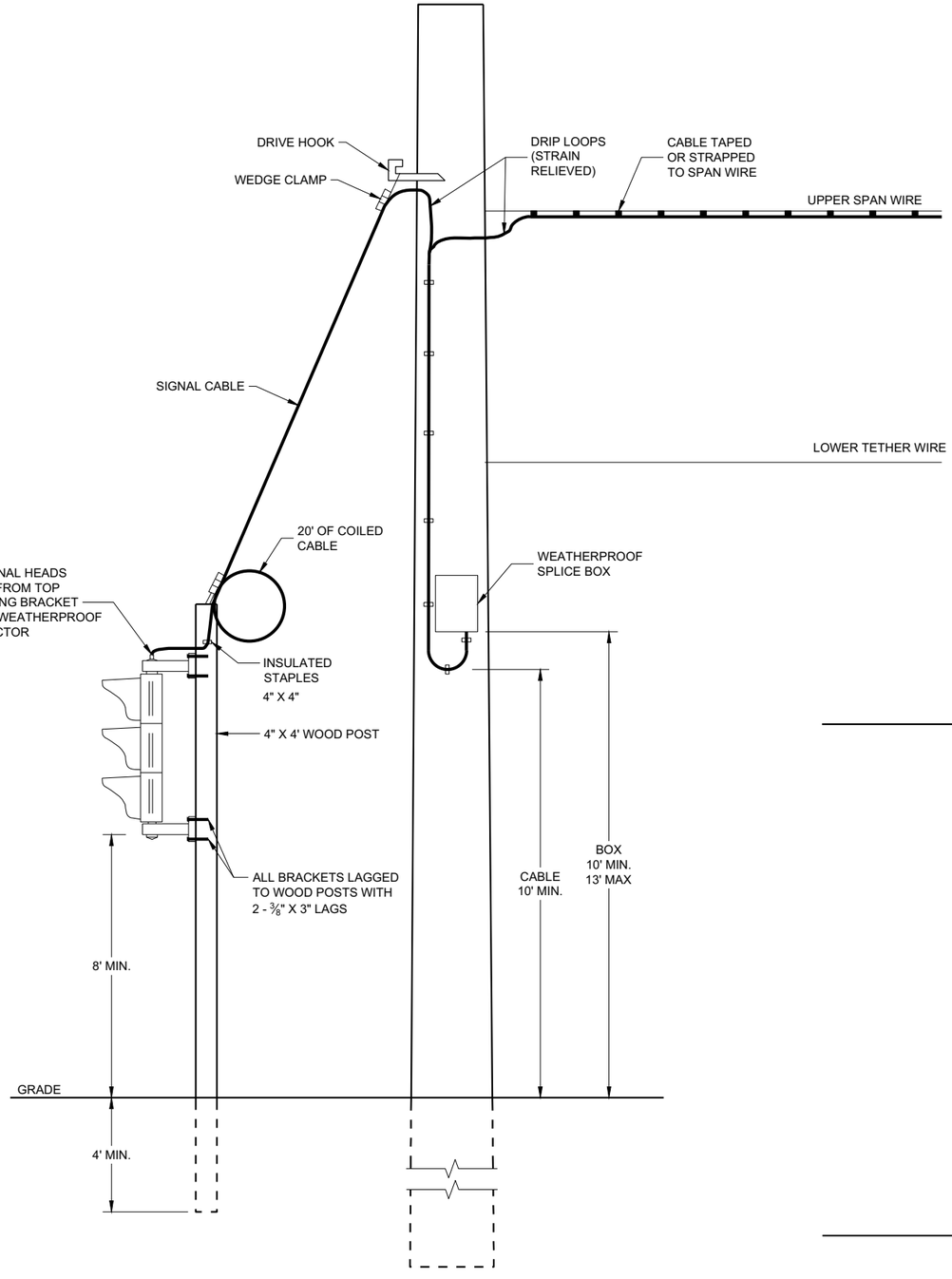

TYPICAL DROP TO TEMPORARY MOVEABLE SIGNAL

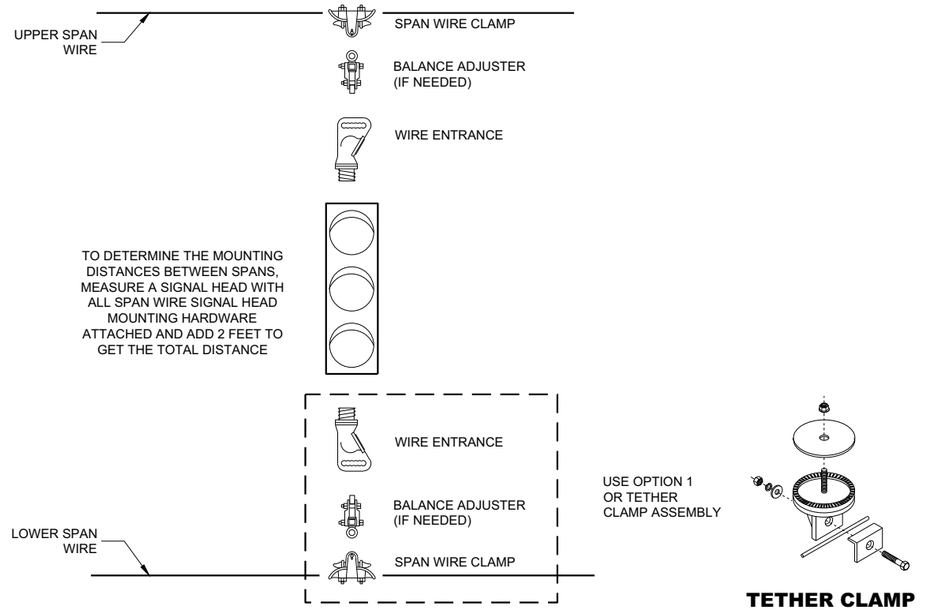

OPTION 1

USE OPTION 1 OR TETHER CLAMP ASSEMBLY

TETHER CLAMP ASSEMBLY OPTION

TYPICAL SPAN WIRE MOUNTING HARDWARE

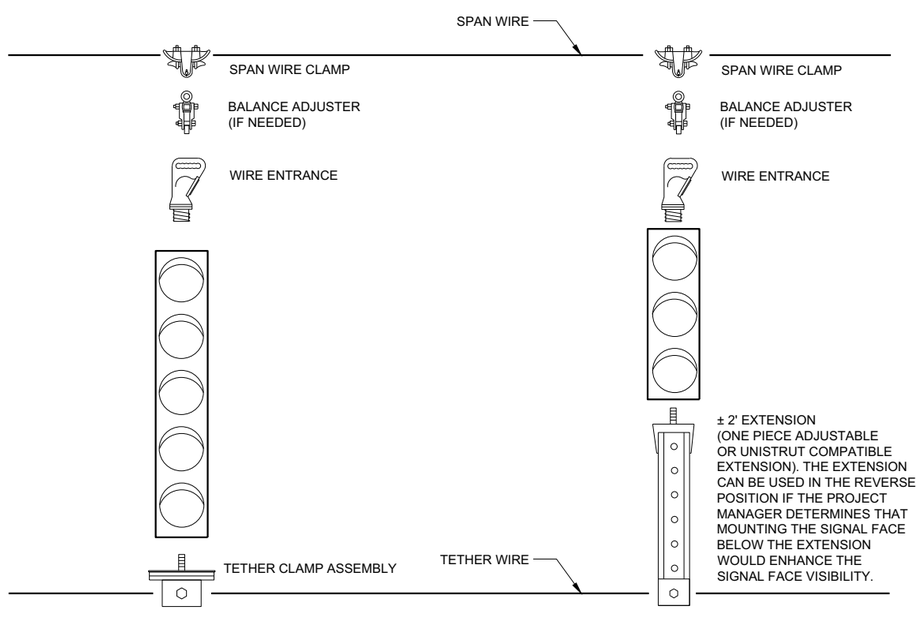

5 SECTION VERTICAL WITH 3 SECTION VERTICAL ON ONE SPAN WIRE

SPAN WIRE TEMPORARY TRAFFIC SIGNAL

STATE OF WISCONSIN
DEPARTMENT OF TRANSPORTATION

APPROVED
June 2015 — DATE
/S/ Ahmet Demerbilek — ROADWAY STANDARDS DEVE ENGINEER

FHWA

6

SDD 09G01 - 4f

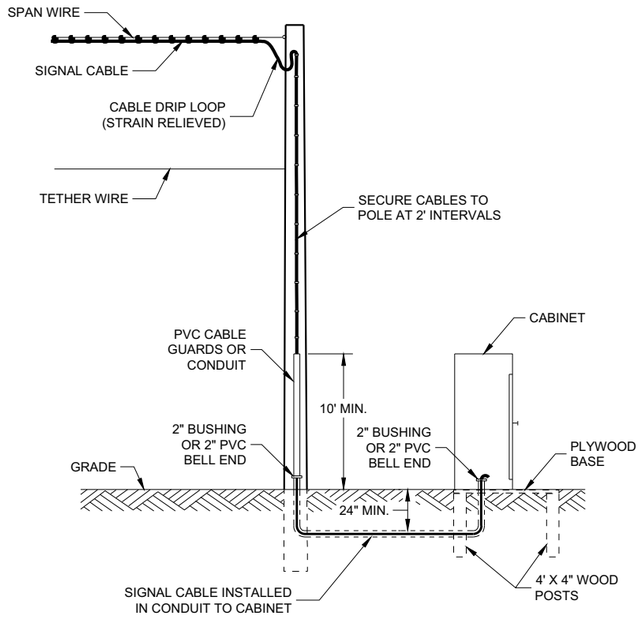

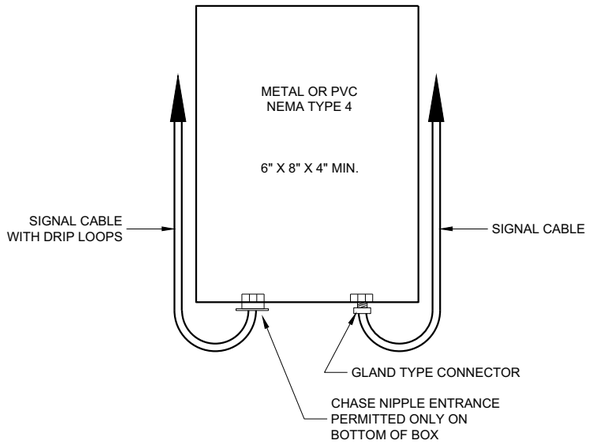

SPLICE BOX

TYPICAL SKID TYPE TEMPORARY

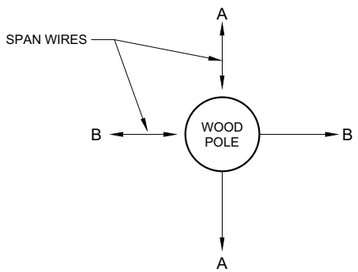

ALL DOWN OR SIDEWALK GUYS
SHALL BE INSTALLED IN THE
OPOSITE DIRECTION OF THE
STRAIN OF THE SPAN WIRE

CORNER POLES

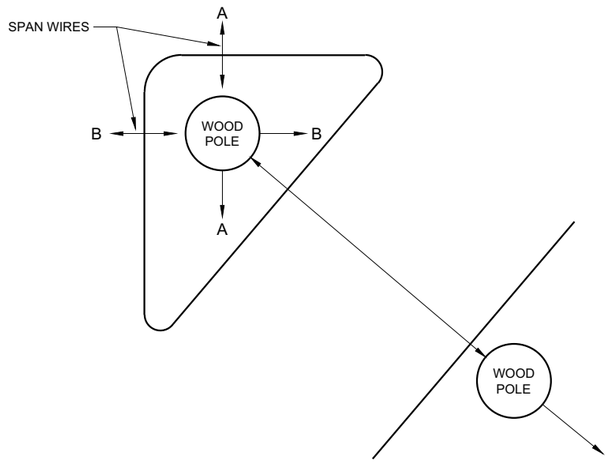

ISLAND POLES

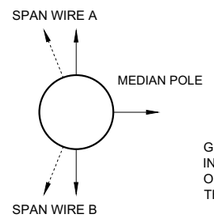

GUY AWAY FROM
INTERSECTION OR IN
OPPOSITE DIRECTION OF
THE SPAN LOADING

MEDIAN POLES

SPAN WIRE TEMPORARY TRAFFIC SIGNAL

STATE OF WISCONSIN
DEPARTMENT OF TRANSPORTATION

APPROVED
June 2015
DATE

/S/ Ahmet Demerbilek
ROADWAY STANDARDS DEVE ENGINEER

FHWA

SDD 09G01 - 4g

6

GENERAL NOTES

INSTALL DRIP LOOPS ON LOOSE CABLES TO PREVENT WATER FROM FLOWING ON CABLE AND ENTERING POLES/ENCLOSURES.

ALL MOUNTING EQUIPMENT REQUIRED IS INCIDENTIAL TO BID ITEM "INSTALL WIRELESS ANTENNA".

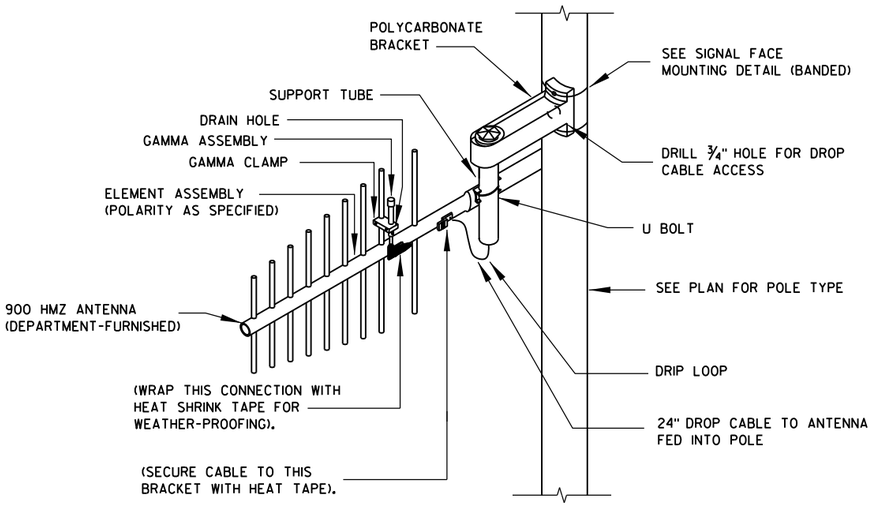

900 MHZ ANTENNA

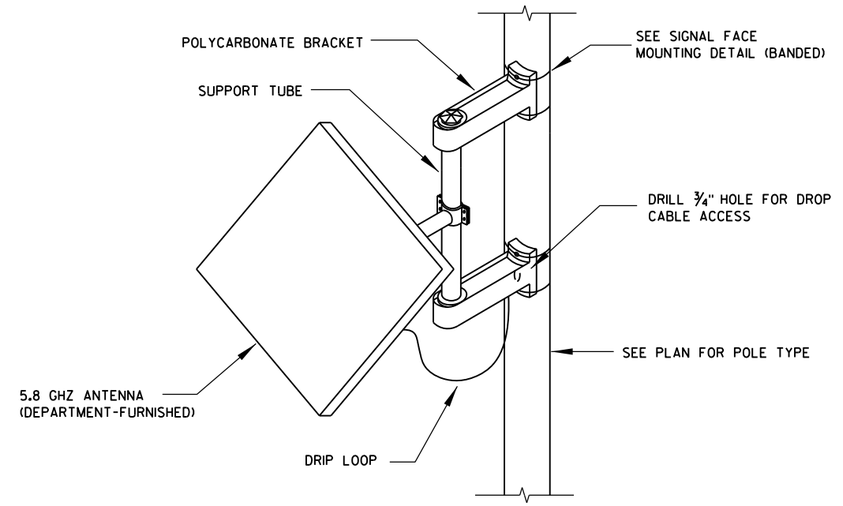

5.8 GHZ ANTENNA

INSTALL WIRELESS ANTENNA

INSTALL WIRELESS ANTENNA	
STATE OF WISCONSIN DEPARTMENT OF TRANSPORTATION	
APPROVED	
May 2017 DATE	/S/ Ahmet Demirbilek STATE ELECTRICAL
FHWA	

S.D.D. 9 H 16-1

S.D.D. 9 H 16-1

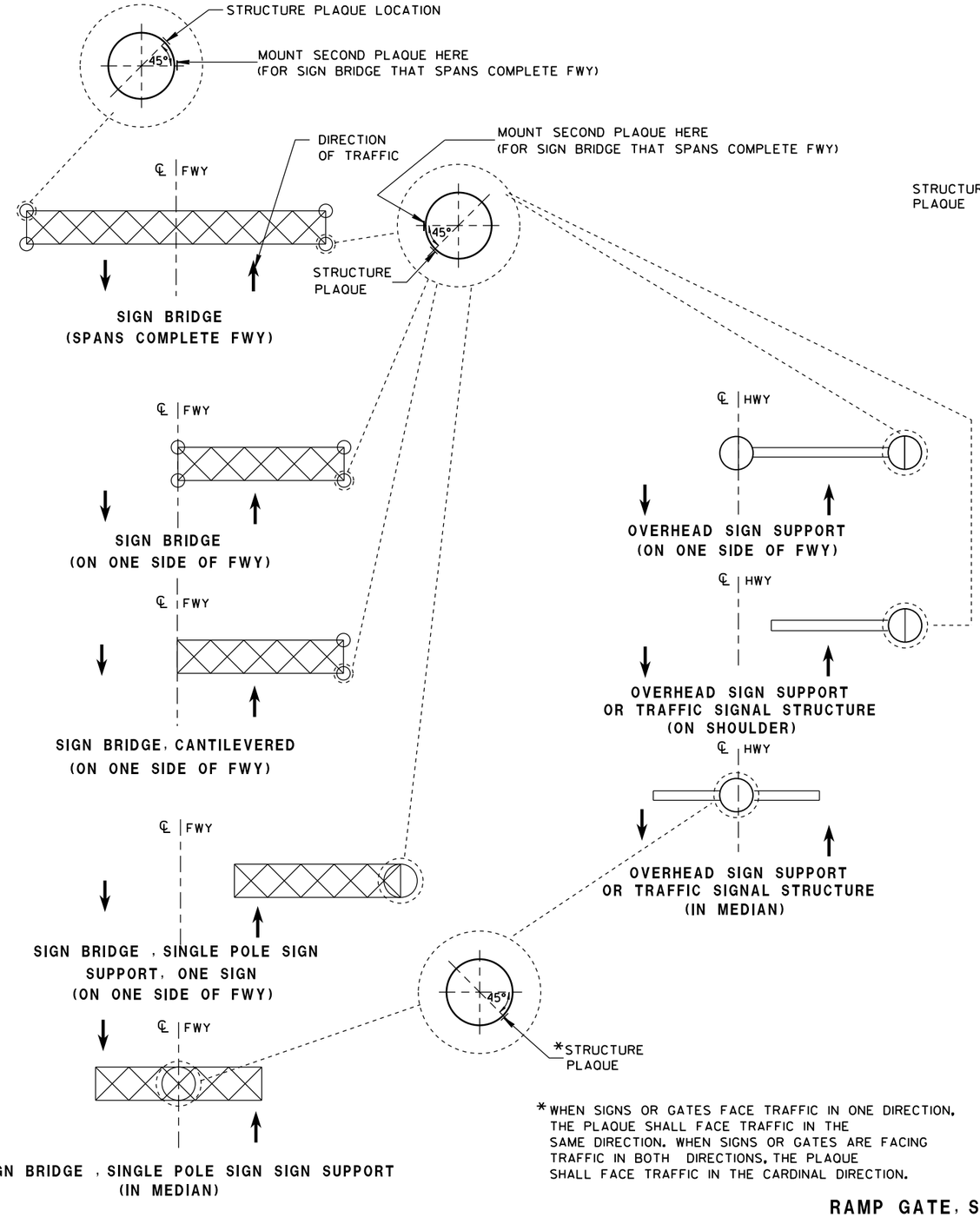

*WHEN SIGNS OR GATES FACE TRAFFIC IN ONE DIRECTION, THE PLAQUE SHALL FACE TRAFFIC IN THE SAME DIRECTION. WHEN SIGNS OR GATES ARE FACING TRAFFIC IN BOTH DIRECTIONS, THE PLAQUE SHALL FACE TRAFFIC IN THE CARDINAL DIRECTION.

LOCATION OF RAMP GATE, SIGN BRIDGE, OVERHEAD SIGN SUPPORT & TRAFFIC SIGNAL STRUCTURE PLAQUES

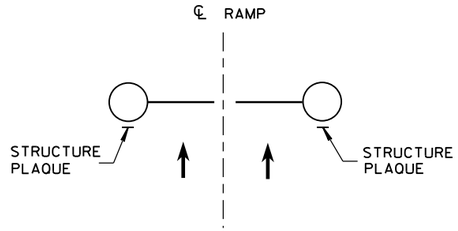

RAMP GATE
(ACROSS FWY ON-RAMP)

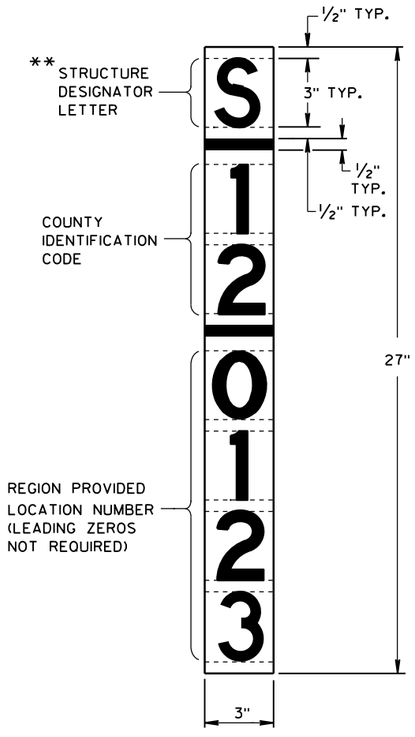

** LETTER "G" UTILIZED FOR RAMP GATES. LETTER "S" UTILIZED FOR SIGN BRIDGES, OVERHEAD SIGN SUPPORTS, AND TRAFFIC SIGNALS.

RAMP GATE, SIGN BRIDGE, OVERHEAD SIGN SUPPORT AND TRAFFIC SIGNAL STRUCTURE PLAQUE FOR SIGN BRIDGES AND OVERHEAD SIGN SUPPORT WHICH ARE NOT STRUCTURE MOUNTED

GENERAL NOTES

DETAILS OF CONSTRUCTION AND WORKMANSHIP NOT SHOWN IN THIS DRAWING SHALL CONFORM TO THE PERTINENT REQUIREMENTS OF THE CONTRACT.

PLAQUES SHALL BE INCIDENTAL TO ALL NEW INSTALLATIONS.

IF THE PROPOSED SIGN BRIDGE OR OVERHEAD SIGN SUPPORT IS REPLACING AN EXISTING SIGN BRIDGE OR OVERHEAD SIGN SUPPORT, A NEW IDENTIFICATION PLAQUE WILL BE REQUIRED.

FASTEN TOP, CENTER AND BOTTOM OF PLAQUE TO POLE OR OTHER LOCATION AS FOLLOWS:

GALVANIZED STEEL SHAFT - 3 STAINLESS STEEL POP RIVETS

A588 STEEL SHAFT - SHIM FOR DRAINAGE WITH STAINLESS WASHERS; FASTEN WITH STAINLESS SELF-TAPPING SCREWS

ALUMINUM SHAFTS - 3 ALUMINUM POP RIVETS

MOUNTING HEIGHT SHALL BE APPROXIMATELY 5.0' ABOVE CURB OR SHOULDER. ADJUST IF IT IS KNOWN THAT REQUIRED TRAFFIC SIGNS WILL OBSTRUCT.

PLAQUE MATERIALS:

BASE - SHEET ALUMINUM, 0.060" THICK.

FACE - WHITE, SELF-ADHESIVE VINYL SHEETING, NON-RETROREFLECTIVE

LINES - BLACK, ½" WIDE, SELF-ADHESIVE

CHARACTERS:- BLACK, SELF ADHESIVE, SERIES "D", SIZE AS SHOWN.

FOR SIGN BRIDGES, STRUCTURE MOUNTED, THE STRUCTURE PLAQUE SHALL BE MOUNTED HORIZONTALLY AS SHOWN ON THE DRAWING. THE STRUCTURE PLAQUE SHALL BE MOUNTED HORIZONTALLY TO THE BACK OF THE SIGN, BETWEEN THE ALUMINUM EXTRUSIONS, NEAR THE TOP LEFT HAND CORNER OF THE SIGN. THE BASE MATERIAL SHALL BE OMITTED AND THE FACE ADHERED DIRECTLY TO THE ALUMINUM SURFACE. PRIOR TO ADHERING THE MATERIAL, THE ALUMINUM SURFACE SHALL BE SMOOTH, CLEAN AND DRY.

WHERE SIGN BRIDGE ILLUMINATION IS PROVIDED, THE STRUCTURE MUST ALSO HAVE A SIGN BRIDGE CIRCUIT PLAQUE AS SHOWN IN THE ELECTRICAL DETAILS.

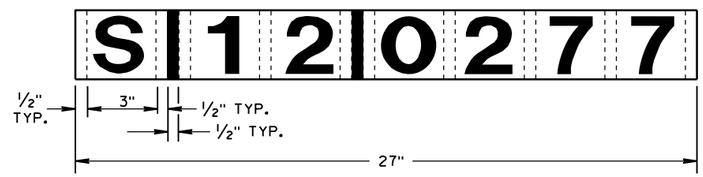

IDENTIFICATION PLAQUE FOR SIGN BRIDGE, STRUCTURE MOUNTED

STRUCTURE IDENTIFICATION PLAQUES, RAMP GATES, SIGN BRIDGES, OVERHEAD SIGN SUPPORTS, & TRAFFIC SIGNALS

STATE OF WISCONSIN
DEPARTMENT OF TRANSPORTATION

APPROVED
12/4/2012 — DATE
/S/ Travis Feltes — STATE TRAFFIC ENGINEER
FHWA

6

S.D.D. 12 A 4-3

6

S.D.D. 12 A 4-3

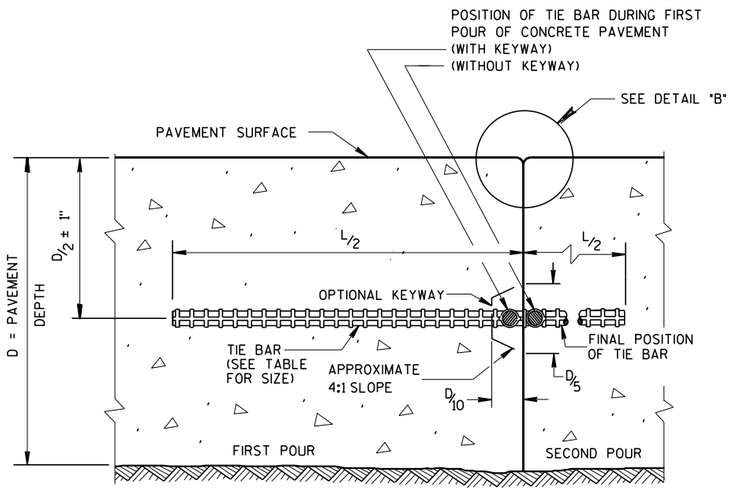

CONSTRUCTION JOINT

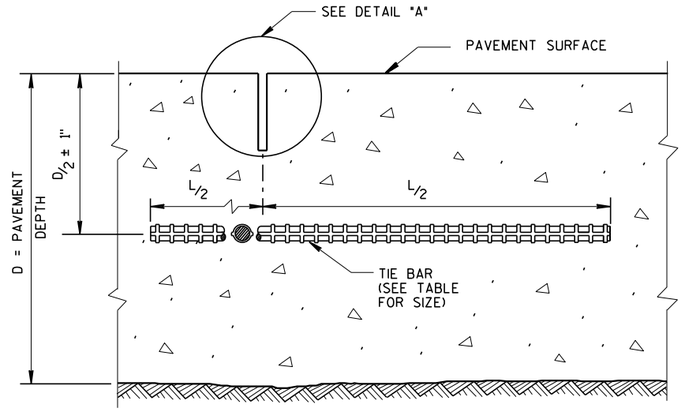

SAWED JOINT

GENERAL NOTES

CREATE A LONGITUDINAL JOINT FOR PAVEMENT WIDTHS GREATER THAN 15 FEET.

CORRELATE LONGITUDINAL JOINTS WITH LANE LINES WHEN POSSIBLE.

(1) ANCHOR TIE BARS INTO DRILLED HOLES WITH AN EPOXY.

(2) PAVEMENT THAT WAS IN PLACE PRIOR TO THE CONTRACT.

PLAN VIEW

SECTION A-A

LONGITUDINAL CONSTRUCTION JOINT TIE BARS ANCHORED INTO EXISTING PAVEMENT

DETAIL "A"

DETAIL "B"

DETAIL "C"

TIE BAR TABLE

PAVEMENT DEPTH (D)	TIE BAR SIZE	TIE BAR LENGTH (L)	MAX. TIE BAR SPACING
< 10 1/2"	NO. 4	30"	36"
≥ 10 1/2"	NO. 5	36"	36"
	NO. 4 *	30"	24" **

* SUBSTITUTE BENT BARS AT LONGITUDINAL JOINTS WHEN EQUIPMENT LIMITATIONS DURING CONSTRUCTION WARRANT (e.g. AUXILIARY LANES OR TURN LANES)

** CONFORM TO 15" MINUMUM SPACING FROM TRANSVERSE JOINTS; SPACING BETWEEN TIE BARS WILL BE 30" AT TRANSVERSE JOINTS.

PLAN VIEW
SHOWING LOCATION OF TIE BARS

CONCRETE PAVEMENT LONGITUDINAL JOINTS AND TIES

STATE OF WISCONSIN
DEPARTMENT OF TRANSPORTATION

APPROVED
March 2018 — DATE
/S/ Peter Kemp PE — PAVEMENT SUPE
FHWA

6

S.D.D. 13 C 1-19

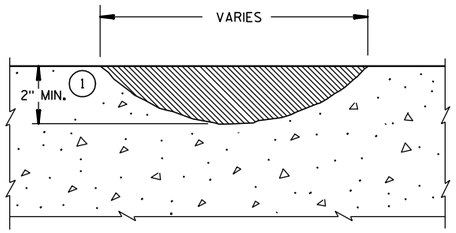

PROFILE VIEW

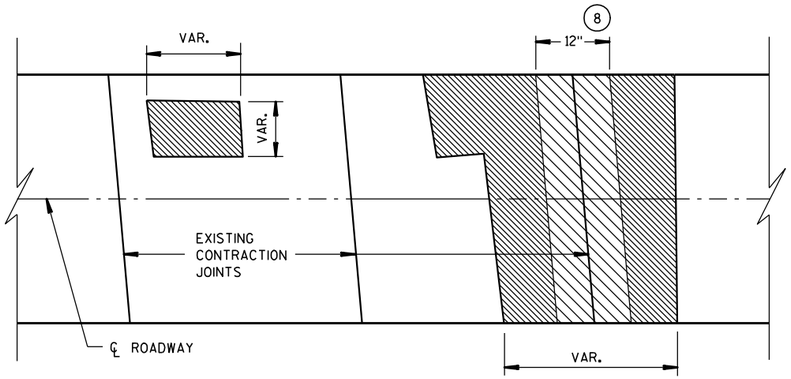

PLAN VIEW

SURFACE REPAIR

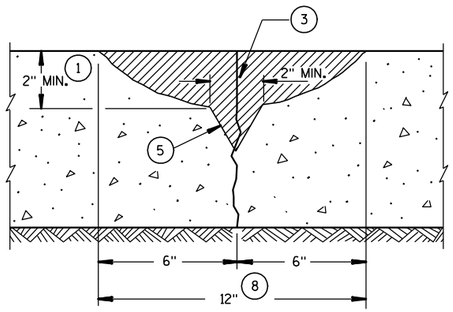

SECTION A-A

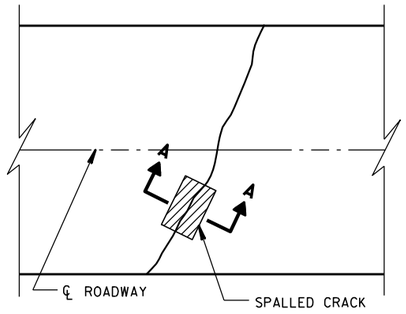

PLAN VIEW

CRACK REPAIR

GENERAL NOTES

1. REMOVE ALL CONCRETE, TO LIMITS SHOWN, TO A MAXIMUM OF ½ THE PAVEMENT DEPTH OR TOP OF DOWELS.
2. IF REPAIR IS DEEPER THAN ANTICIPATED SAWCUT, COMPRESSION RELIEF MATERIAL MUST BE USED. THE THICKNESS OF COMPRESSION RELIEF MATERIAL MUST BE EQUAL TO OR GREATER THAN THE WIDTH OF THE JOINT OR CRACK (1/4"). THIS MATERIAL SHOULD EXTEND FULL DEPTH OF THE REPAIR.
3. COMPRESSION RELIEF MATERIAL MUST BE USED. THE THICKNESS OF COMPRESSION RELIEF MATERIAL MUST BE EQUAL TO OR GREATER THAN THE WIDTH OF THE JOINT OR CRACK (1/4"). THIS MATERIAL SHOULD EXTEND FULL DEPTH OF THE REPAIR.
4. CLEAN, DRY SAND WHEN NECESSARY.
5. REMOVE UNSOUND MATERIAL BY CHIPPING AT 1:1 SLOPE.
6. ¼" MINIMUM PREFORMED JOINT FILLER IF ADJACENT TO CONCRETE. EDGING REQUIRED. FULLY FORMED EDGE IF ADJACENT TO SHOULDER.
7. PAVEMENT TIES AS SHOWN. ALL EMBEDMENTS 6" MINIMUM AND INSTALLED WITH GROUT.
8. OVER 12" (NOMINAL WIDTH) WILL BE PAID AS SURFACE REPAIR.
9. PAID AS JOINT OR CRACK REPAIR.
10. FULL-DEPTH ADJUSTMENT SHALL BE CHIPPED TO BOTTOM OF PCC PAVEMENT AT 1:1 SLOPE.
11. BEYOND 18" WILL BE PAID AS SURFACE REPAIR.

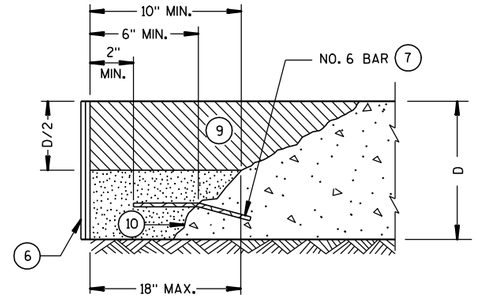

PROFILE VIEW

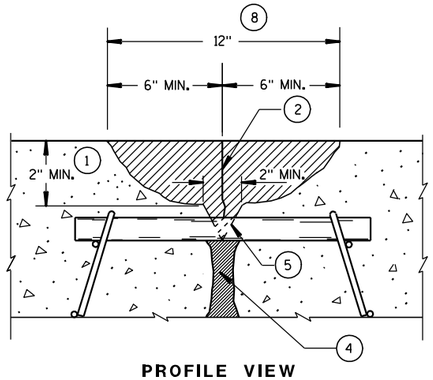

PROFILE VIEW

JOINT REPAIR

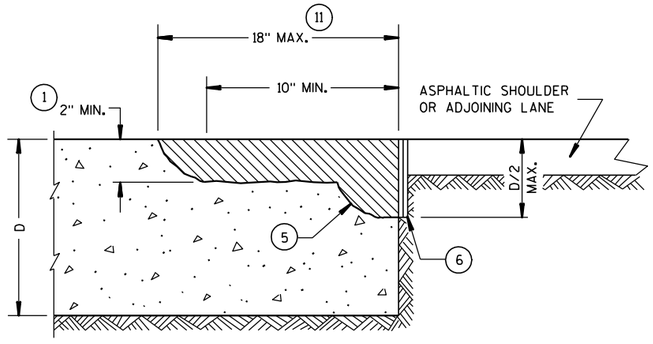

PROFILE VIEW

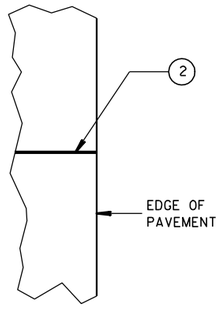

PLAN VIEW

EDGE REPAIR

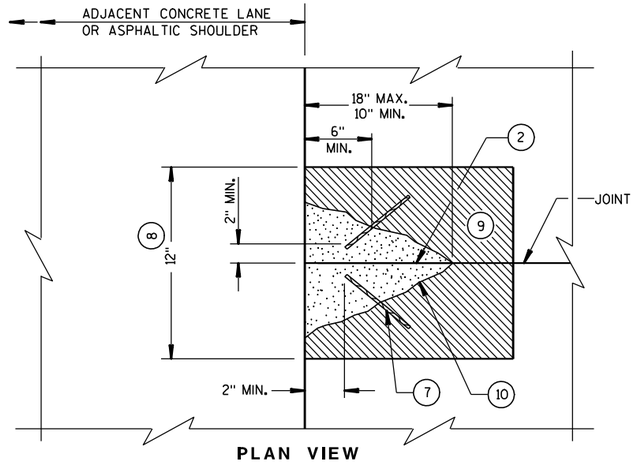

PLAN VIEW

FULL DEPTH REPAIR ADJUSTMENT

CONCRETE PAVEMENT PARTIAL DEPTH REPAIR

STATE OF WISCONSIN
DEPARTMENT OF TRANSPORTATION

APPROVED
3/21/03 DATE
/S/ Bill Duckett PAVEMENT ENGR
FHWA

6

S.D.D. 13 C 8-2

GENERAL NOTES

SAW CUT, DRILL, AND LIFT OUT EXISTING CONCRETE PAVEMENT WITHIN THE BOUNDARIES OF CONCRETE REPAIR AREAS. THE CONTRACTOR MAY MAKE ADDITIONAL SAW CUTS INSIDE THE REPAIR LIMITS TO REDUCE WEIGHT AND SIZE OF CONCRETE PIECES.

PROVIDE A 6-FOOT MINIMUM DISTANCE FROM BOUNDARIES OF CONCRETE REPAIR AREAS TO ADJACENT TRANSVERSE JOINT OR CRACK IN THE SAME LANE.

THE LENGTH OF THE REPAIRS MAY VARY FROM THE DIMENSIONS SHOWN IF THE EXISTING CONCRETE PAVEMENT IS NONDOWELED AND THE PAVEMENT IS TO BE OVERLAID AFTER REPAIRING.

(1) DOWEL BARS MIGHT NOT EXIST.

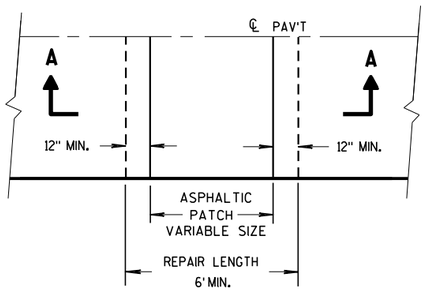

PLAN VIEW

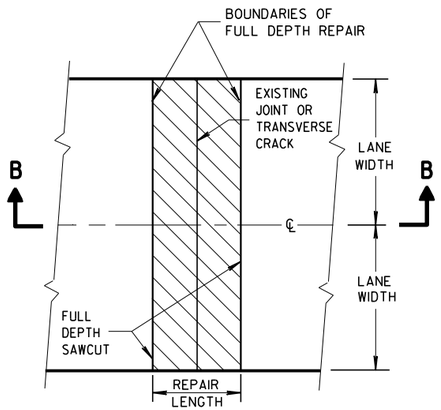

PLAN VIEW
(DOUBLE LANE REPAIR)

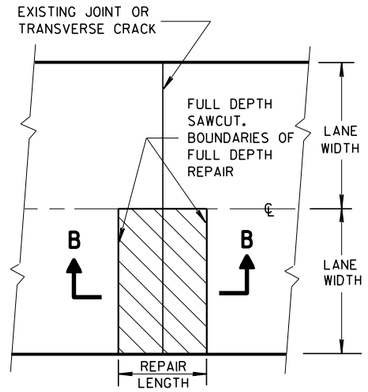

PLAN VIEW
(SINGLE LANE REPAIR)

FULL DEPTH CONCRETE PAVEMENT REMOVAL

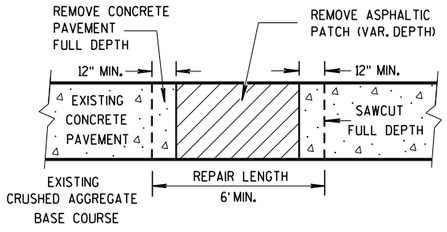

SECTION A-A

HMA PATCH REMOVAL

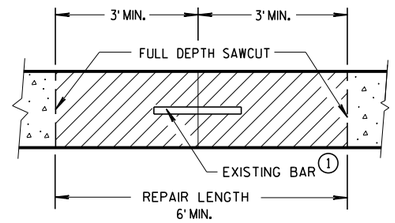

SECTION B-B

CONCRETE REMOVAL

CONCRETE PAVEMENT REPAIR AND REPLACEMENT

STATE OF WISCONSIN
DEPARTMENT OF TRANSPORTATION

6

S.D.D. 13 C 9-15a

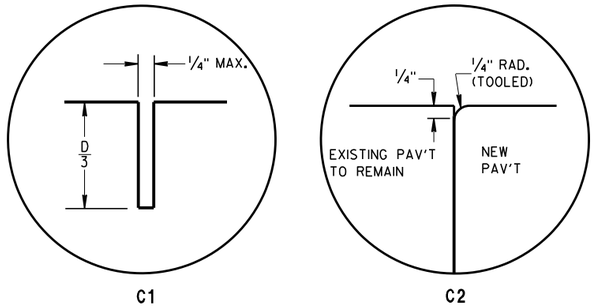

C1 C2

TRANSVERSE JOINTS

TIE BAR TABLE

PAVEMENT DEPTH (D)	TIE BAR SIZE	TIE BAR LENGTH (L)	MAX. TIE BAR SPACING
< 10 1/2"	NO. 4	30"	36"
≥ 10 1/2"	NO. 5	36"	36"
	NO. 4 *	30"	24"**

* SUBSTITUTE BENT BARS AT LONGITUDINAL JOINTS WHEN EQUIPMENT LIMITATIONS DURING CONSTRUCTION WARRANT (e.g. AUXILIARY LANES OR TURN LANES)

** CONFORM TO 15" MINUMUM SPACING FROM TRANSVERSE JOINTS; SPACING BETWEEN TIE BARS WILL BE 30" AT TRANSVERSE JOINTS.

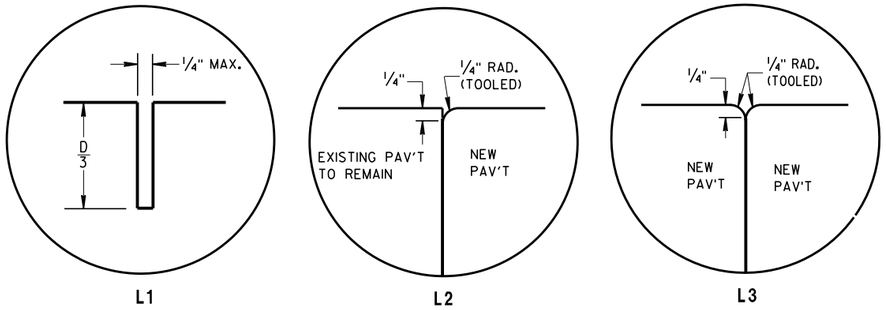

L1 L2 L3

LONGITUDINAL JOINTS

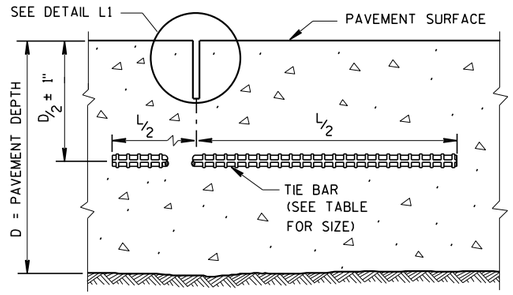

SECTION C-C

SAWED LONGITUDINAL JOINT

GENERAL NOTES

INSTALL DOWEL BARS PARALLEL TO THE PAVEMENT CENTERLINE AND PAVEMENT SURFACE.

CONCRETE PAVEMENT REPAIRS OF EXISTING NONDOWELED CONCRETE PAVEMENTS DO NOT NEED TO BE DOWELED.

ANCHOR DOWEL BARS AND TIE BARS INTO DRILLED HOLES WITH AN EPOXY.

FOR MULTI-LANE CONCRETE PAVEMENT REPLACEMENTS, PROVIDE A MINIMUM DISTANCE OF 15 INCHES FROM ALL TRANSVERSE JOINTS OR EDGES OF REPLACEMENT TO THE CENTER OF THE TIE BAR NEAREST THAT JOINT OR EDGE.

(1) APPLY A THIN UNIFORM COATING OF SURFACE TREATMENT TO THE FREE END OF DOWEL BARS TO PREVENT BONDING.

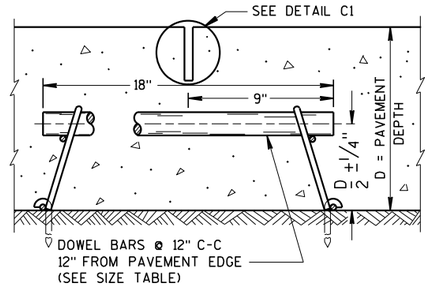

SECTION F-F

CONTRACTION JOINT

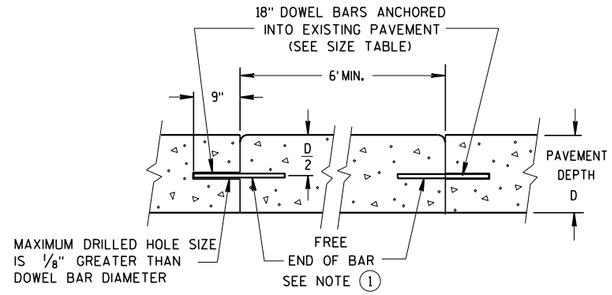

SECTION D-D

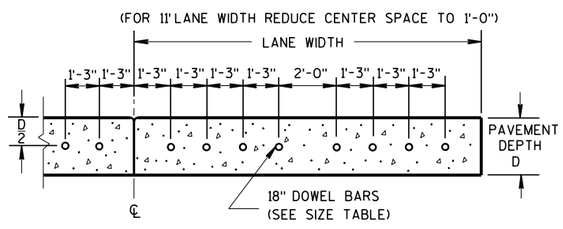

SECTION E-E

DRILLED DOWEL BAR CONSTRUCTION JOINT

PAVEMENT DEPTH, DOWEL BAR SIZE AND JOINT SPACING TABLE

PAVEMENT DEPTH (D)	DOWEL BAR DIAMETER	DRILLED DOWEL BAR DIAMETER	CONTRACTION JOINT SPACING
5 1/2", 6", 6 1/2"	NONE	NONE	12'
7", 7 1/2"	1"	1"	14'
8", 8 1/2"	1 1/4"	1 1/4"	15'
9", 9 1/2"	1 1/4"	1 1/4"	15'
10" & ABOVE	1 1/2"	1 1/4"	15'

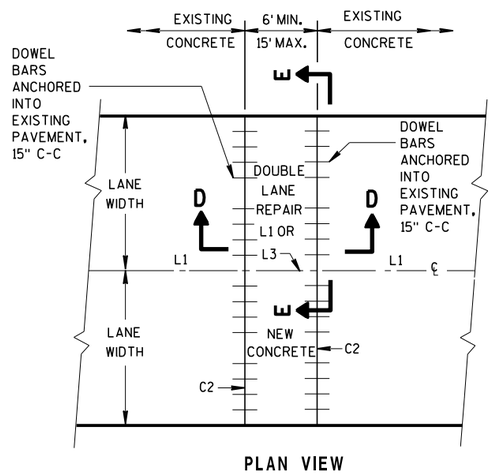

PLAN VIEW

MULTI-LANE CONCRETE PAVEMENT REPAIR

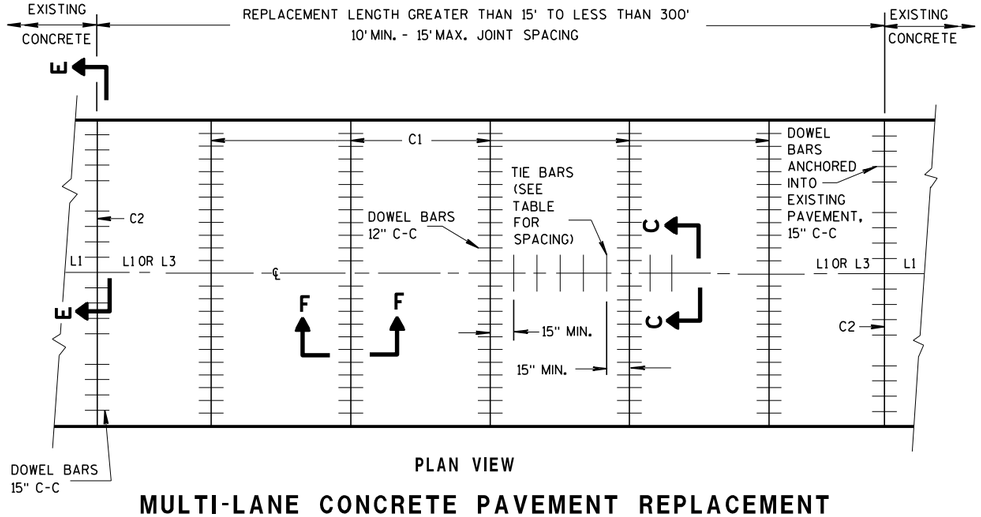

PLAN VIEW

MULTI-LANE CONCRETE PAVEMENT REPLACEMENT

CONCRETE PAVEMENT REPAIR AND REPLACEMENT

6

S.D.D. 13 C 9-15b

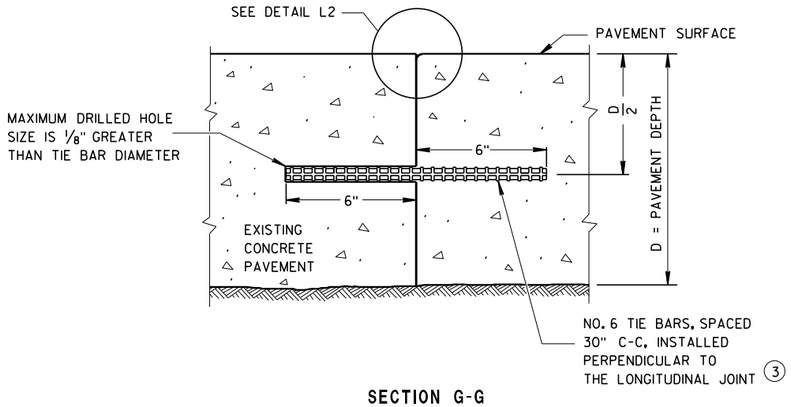

SECTION G-G

TIE BARS ANCHORED INTO EXISTING PAVEMENT

GENERAL NOTES

(1) WITH THE APPROVAL OF THE ENGINEER, FOR SINGLE LANE PAVEMENT REPLACEMENTS LESS THAN 30 FEET IN LENGTH, THE CONTRACTOR MAY INSTALL DRILLED TIE BARS ON 6:1 SKEW HORIZONTALLY, DIRECTION OF SKEW ALTERNATING WITH EACH SUCCESSIVE BAR. DRIVE SKEWED TIE BARS TO A DEPTH OF 6 INCHES IN A HOLE OF SUCH A DIAMETER AS TO PROVIDE A TIGHT DRIVEN FIT.

(2) USE AN ENGINEER-APPROVED BOND BREAKER (E.G. RELEASE AGENT, CURING COMPOUND) FOR SINGLE LANE REPAIRS UP TO 15 FEET IN LENGTH.

(3) ANCHOR TIE BARS INTO DRILLED HOLES WITH AN EPOXY.

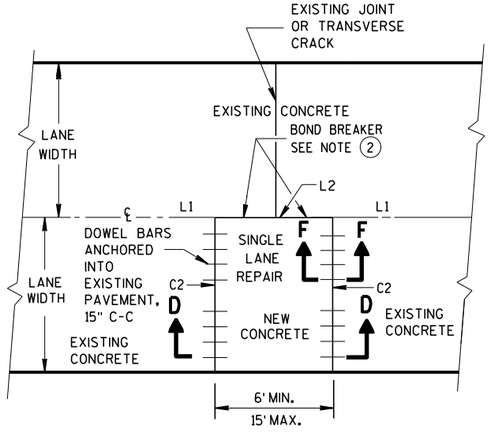

PLAN VIEW

SINGLE LANE CONCRETE PAVEMENT REPAIR

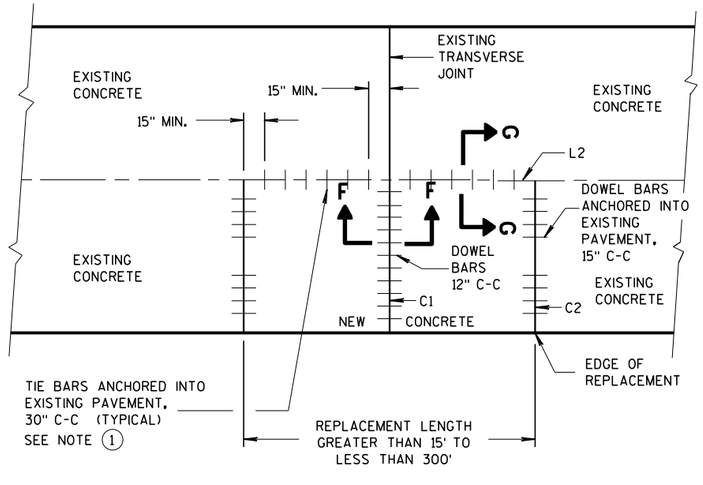

PLAN VIEW

SINGLE LANE CONCRETE PAVEMENT REPLACEMENT

CONCRETE PAVEMENT REPAIR AND REPLACEMENT

STATE OF WISCONSIN
DEPARTMENT OF TRANSPORTATION

APPROVED
March 2018 — DATE
/S/ Peter Ken... — PAVEMENT SUPE...
FHWA

6
S.D.D. 13 C 9-15c

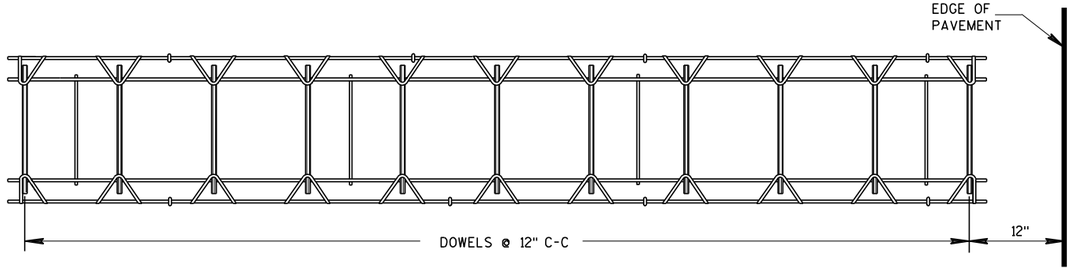

PLAN VIEW



SIDE VIEW

CONTRACTION JOINT DOWEL ASSEMBLY ①

PAVEMENT DEPTH, DOWEL BAR SIZE AND JOINT SPACING TABLE

PAVEMENT DEPTH (D)	DOWEL BAR DIAMETER	CONTRACTION JOINT SPACING
5 ½", 6", 6 ½"	NONE	12'
7", 7 ½"	1"	14'
8", 8 ½"	1 ¼"	15'
9", 9 ½"	1 ¼"	15'
10" & ABOVE	1 ½"	15'

GENERAL NOTES

CONTRACTION JOINTS

CONSTRUCT TRANSVERSE CONTRACTION JOINTS NORMAL TO THE CENTERLINE. SHOW THE LOCATION OF CONTRACTION JOINTS THROUGH INTERSECTIONS ON THE PLANS OR AS DIRECTED BY THE ENGINEER.

INSTALL DOWEL BARS PARALLEL TO THE PAVEMENT CENTERLINE AND PAVEMENT SURFACE.

FOR PAVEMENT SLABS OF VARYING WIDTHS, LOCATE THE OUTER MOST DOWEL BAR SO THAT THE CENTER OF THE BAR IS A MINIMUM OF 6 INCHES AND A MAXIMUM OF 18 INCHES FROM THE LONGITUDINAL JOINT AND THE FREE EDGE OF PAVEMENT.

CONSTRUCTION JOINTS

LOCATE CONSTRUCTION JOINTS A MINIMUM OF 6 FEET FROM THE NEAREST CONTRACTION JOINT AND ALIGN PARALLEL TO CONTRACTION JOINTS.

① OBTAIN THE ENGINEER'S APPROVAL FOR THE USE OF ALTERNATIVE DESIGNS OF THE DOWEL ASSEMBLY. USE MECHANICAL DOWEL BAR INSERTERS OR DOWEL ASSEMBLIES WHEN CONSTRUCTING CONTRACTION JOINTS.

② SECURE BASKETS WITH ANCHORS TO HOLD DOWEL BARS IN THE CORRECT POSITION AND ALIGNMENT. TYPE, LOCATION, NUMBER AND LENGTH OF ANCHORS ARE DEPENDENT UPON FIELD CONDITIONS.

③ FORM OR SAW CONSTRUCTION JOINTS. PROVIDE A ¼-INCH RADIUS AT FORMED JOINTS.

④ PROVIDE A SMOOTH VERTICAL FACE FOR THE ENTIRE DEPTH OF THE PAVEMENT WHEN FORMING CONSTRUCTION JOINTS.

⑤ INSTALL DOWEL BARS AT CONSTRUCTION JOINTS BY FORMING OR DRILLING. INSTALL FORMED DOWEL BARS 12 INCHES C-C AND 12 INCHES FROM PAVEMENT EDGE. REMOVE EXCESS CONCRETE FROM THE FREE END OF THE DOWEL BAR IF DOWEL BARS ARE FORMED THROUGH A HEADER BOARD. INSTALL DRILLED DOWEL BARS ACCORDING TO *DRILLED DOWEL BAR CONSTRUCTION JOINT* DETAIL.

⑥ APPLY A THIN UNIFORM COATING OF SURFACE TREATMENT TO THE FREE END OF DOWEL BARS TO PREVENT BONDING.

⑦ ANCHOR DOWEL BARS INTO DRILLED HOLES WITH AN EPOXY. MAXIMUM DRILLED HOLE SIZE IS ⅛-INCH GREATER THAN DOWEL BAR DIAMETER, 9 INCHES IN LENGTH.

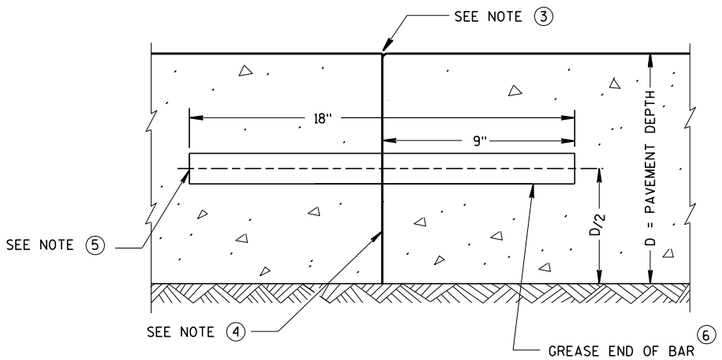

TRANSVERSE CONSTRUCTION JOINT

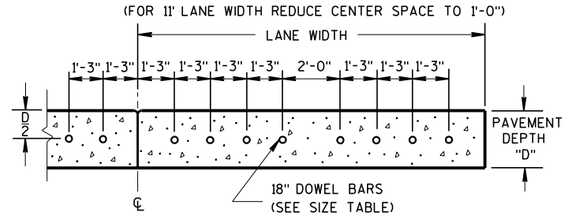

DRILLED DOWEL BAR CONSTRUCTION JOINT ⑦

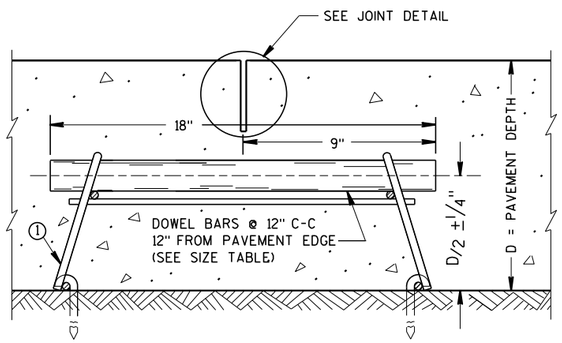

DOWELED CONTRACTION JOINT

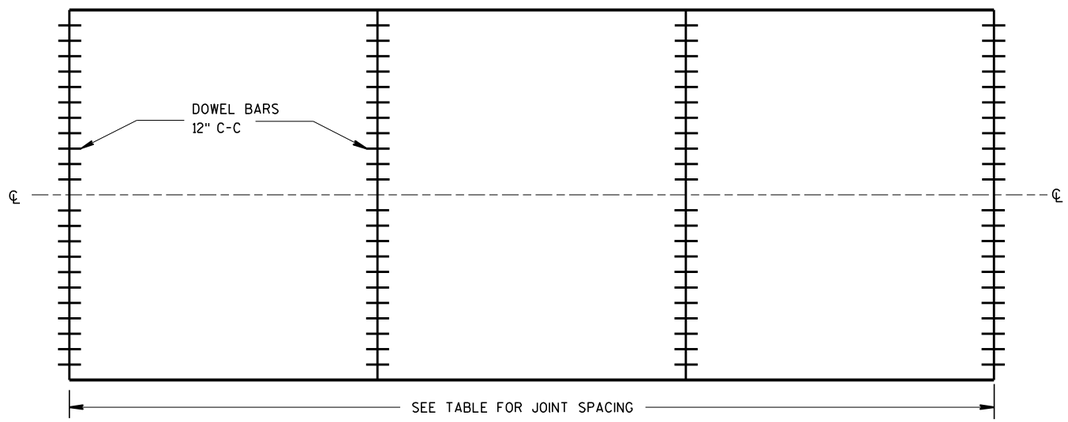

CONTRACTION JOINT LOCATIONS

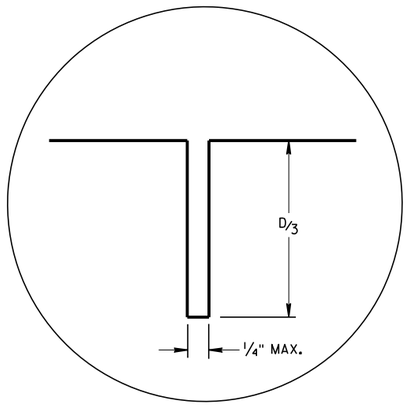

JOINT DETAIL

URBAN DOWELED CONCRETE PAVEMENT

STATE OF WISCONSIN
DEPARTMENT OF TRANSPORTATION

APPROVED
March 2018 — DATE
/S/ Peter Kemp P.E. — PAVEMENT SUP
FHWA

6

S.D.D. 13 C 13-9

GENERAL NOTES

SAW CUT, DRILL, AND LIFT OUT EXISTING CONCRETE PAVEMENT WITHIN THE BOUNDARIES OF CONCRETE REPAIR AREAS. THE CONTRACTOR MAY MAKE ADDITIONAL SAW CUTS INSIDE THE REPAIR LIMITS TO REDUCE WEIGHT AND SIZE OF CONCRETE PIECES.

PROVIDE 6-FOOT MINIMUM DISTANCE FROM BOUNDARIES OF CONCRETE REPAIR AREAS TO ADJACENT TRANSVERSE JOINT OR CRACK.

THE LENGTH OF THE REPAIRS MAY VARY FROM THE DIMENSIONS SHOWN IF THE EXISTING CONCRETE PAVEMENT IS NONDOWELED AND THE PAVEMENT IS TO BE OVERLAID AFTER REPAIRING.

(1) DOWEL BARS MIGHT NOT EXIST.

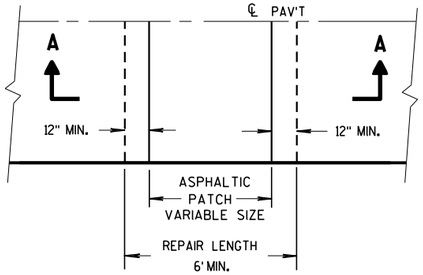

PLAN VIEW

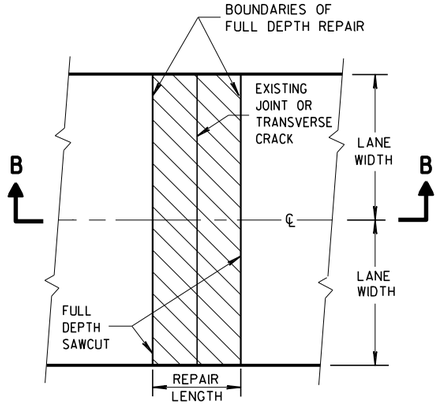

PLAN VIEW
(DOUBLE LANE REPAIR)

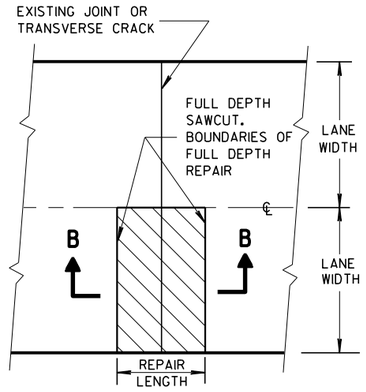

PLAN VIEW
(SINGLE LANE REPAIR)

FULL DEPTH CONCRETE PAVEMENT REMOVAL

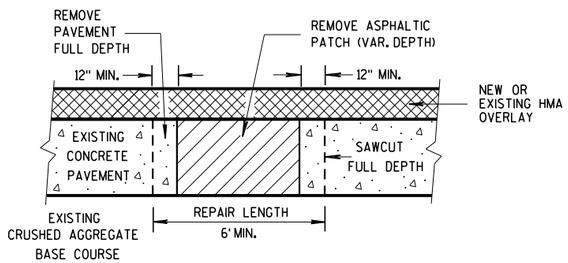

SECTION A-A

HMA PATCH REMOVAL

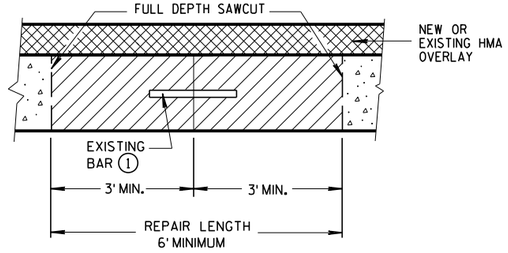

SECTION B-B

CONCRETE REMOVAL

6

6

S.D.D. 13 C 14-7a

S.D.D. 13 C 14-7a

BASE PATCHING CONCRETE

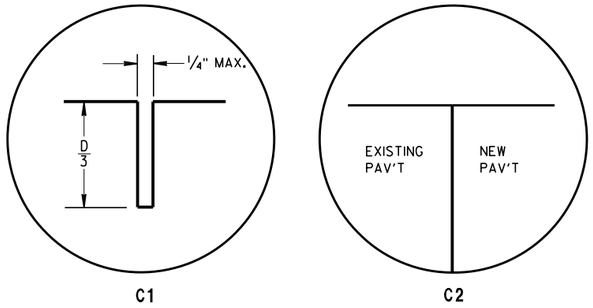

TRANSVERSE JOINTS

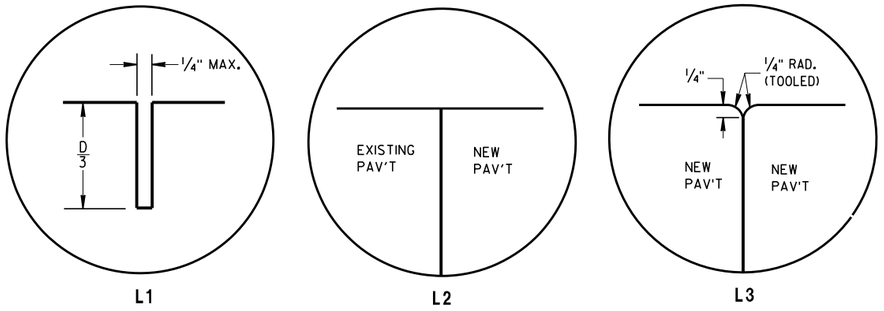

LONGITUDINAL JOINTS

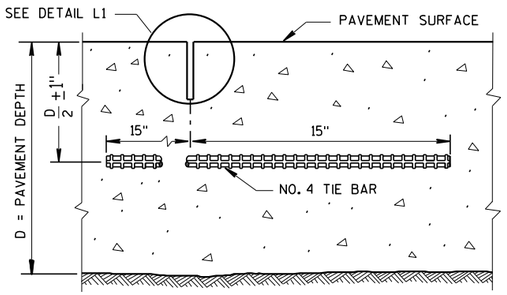

SECTION C-C

SAWED LONGITUDINAL JOINT

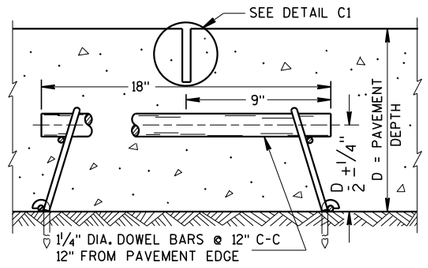

SECTION F-F

CONTRACTION JOINT

GENERAL NOTES

INSTALL DOWEL BARS PARALLEL TO THE PAVEMENT CENTERLINE AND PAVEMENT SURFACE.

CONCRETE BASE PATCHES OF EXISTING NONDOWELED CONCRETE PAVEMENTS DO NOT NEED TO BE DOWELED.

ANCHOR DOWEL BARS AND TIE BARS INTO DRILLED HOLES WITH AN EPOXY.

PROVIDE A MINIMUM DISTANCE OF 15 INCHES FROM AN EXISTING TRANSVERSE JOINT OR THE EDGE OF REPLACEMENT TO THE CENTER OF THE TIE BAR NEAREST THAT JOINT OR EDGE.

(1) APPLY A THIN UNIFORM COATING OF SURFACE TREATMENT TO THE FREE END OF DOWEL BARS TO PREVENT BONDING.

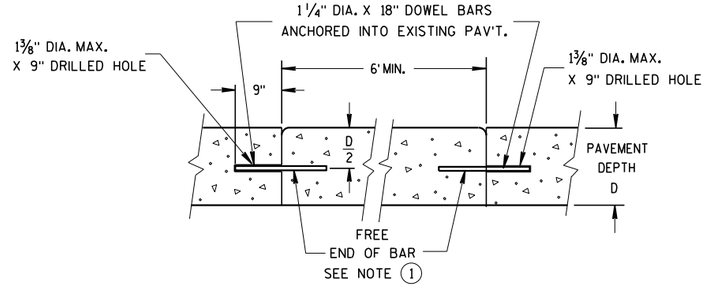

SECTION D-D

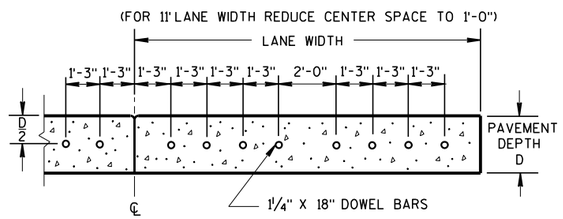

SECTION E-E

SPACING OF DOWEL BARS ANCHORED INTO EXISTING PAVEMENT

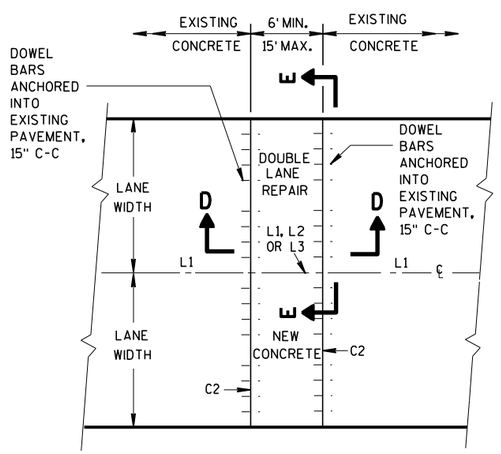

PLAN VIEW

MULTI-LANE CONCRETE BASE PATCH 15' MAXIMUM LENGTH

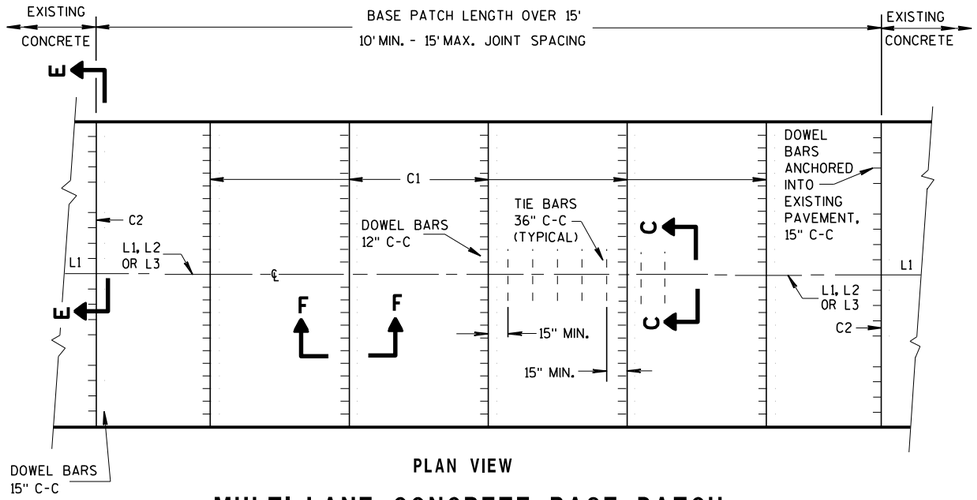

PLAN VIEW

MULTI-LANE CONCRETE BASE PATCH GREATER THAN 15' IN LENGTH

BASE PATCHING CONCRETE

STATE OF WISCONSIN
DEPARTMENT OF TRANSPORTATION

6

S.D.D. 13 C 14-7b

6

S.D.D. 13 C 14-7b

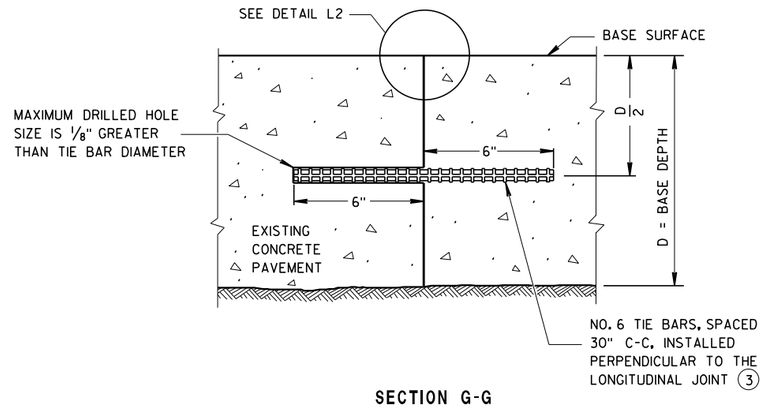

SECTION G-G

TIE BARS ANCHORED INTO EXISTING PAVEMENT

GENERAL NOTES

(1) USE AN ENGINEER-APPROVED BOND BREAKER (E.G. RELEASE AGENT, CURING COMPOUND) FOR SINGLE LANE BASE PATCHES UP TO 15 FEET IN LENGTH.

(2) WITH THE APPROVAL OF THE ENGINEER, FOR SINGLE LANE PAVEMENT REPLACEMENTS LESS THAN 30 FEET IN LENGTH, DRILLED TIE BARS MAY BE INSTALLED ON 6:1 SKEW HORIZONTALLY, DIRECTION OF SKEW ALTERNATING WITH EACH SUCCESSIVE BAR. DRIVE SKEWED TIE BARS TO A DEPTH OF 6 INCHES IN A HOLE OF SUCH A DIAMETER AS TO PROVIDE A TIGHT DRIVEN FIT.

(3) ANCHOR TIE BARS INTO DRILLED HOLES WITH AN EPOXY.

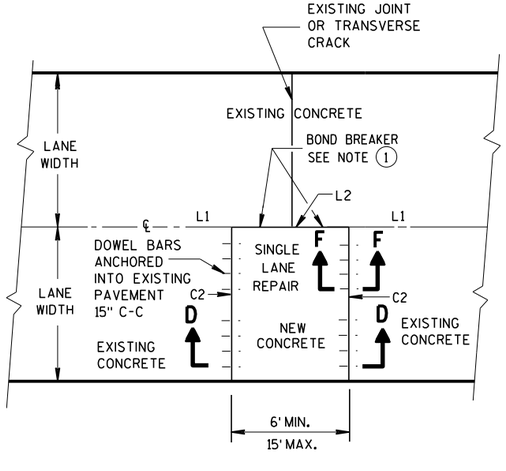

PLAN VIEW

SINGLE LANE CONCRETE BASE PATCH 15' MAXIMUM LENGTH

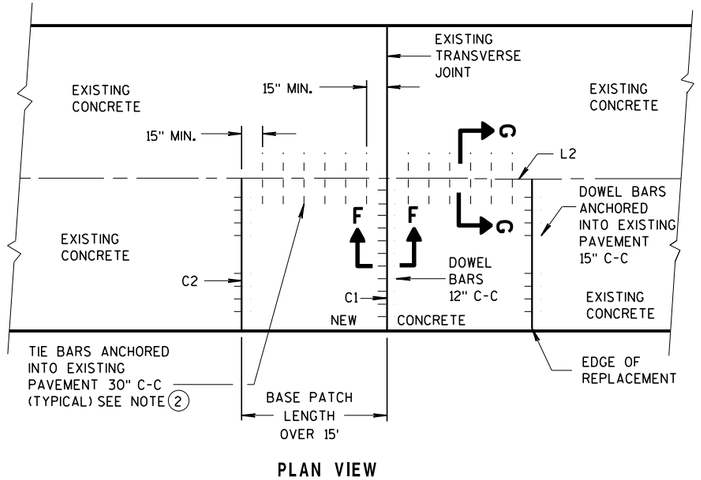

PLAN VIEW

SINGLE LANE CONCRETE BASE PATCH GREATER THAN 15' IN LENGTH

BASE PATCHING CONCRETE

STATE OF WISCONSIN
DEPARTMENT OF TRANSPORTATION

APPROVED
March 2018 — DATE
/S/ Peter Kemp P.E. — PAVEMENT SUPERVISOR
FHWA

6

S.D.D. 13 C 14-7c

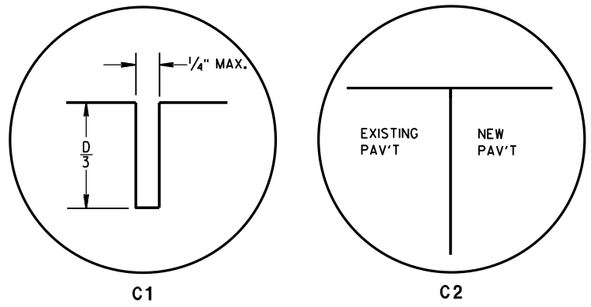

TRANSVERSE JOINTS

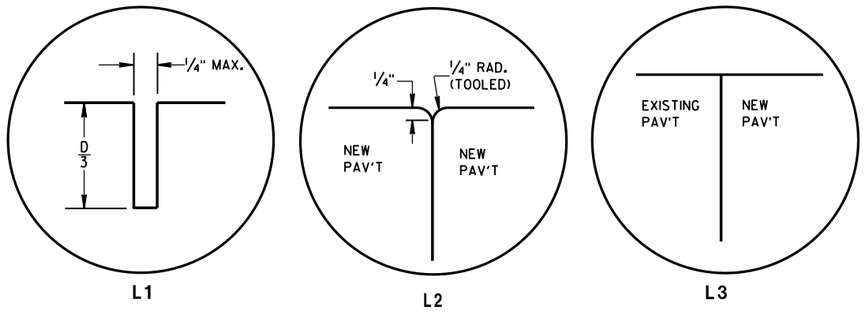

LONGITUDINAL JOINTS

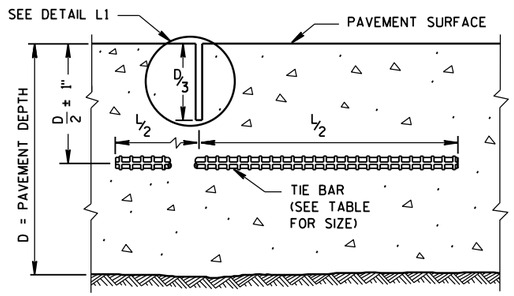

SECTION C-C

SAWED JOINT

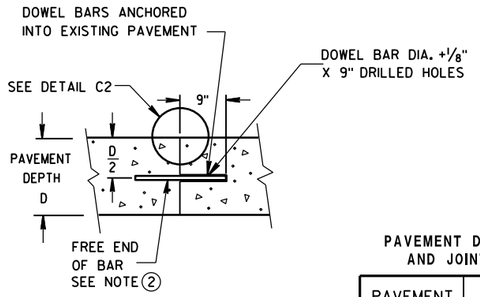

SECTION D-D

GENERAL NOTES

ANCHOR TIE BARS AND DOWEL BARS INTO DRILLED HOLES WITH AN EPOXY.

PROVIDE A MINIMUM DISTANCE OF 15 INCHES FROM AN EXISTING TRANSVERSE JOINT OR THE EDGE OF REPLACEMENT TO THE CENTER OF THE TIE BAR NEAREST THAT JOINT OR EDGE.

(1) INSTALL DOWEL BARS PARALLEL TO THE PAVEMENT CENTERLINE AND PAVEMENT SURFACE.

(2) APPLY A THIN UNIFORM COATING OF SURFACE TREATMENT TO THE FREE END OF DOWEL BARS TO PREVENT BONDING.

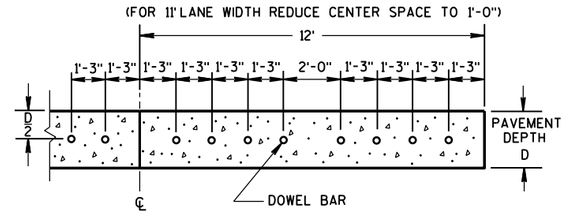

SECTION E-E

SPACING OF DOWEL BARS ANCHORED INTO EXISTING PAVEMENT

PAVEMENT DEPTH, DOWEL BAR SIZE AND JOINT SPACING TABLE

PAVEMENT DEPTH (D)	DOWEL BAR DIAMETER	CONTRACTION JOINT SPACING
5½", 6, 6 ½"	NONE	12'
7, 7 ½"	1"	14'
8, 8 ½"	1 ¼"	15'
9, 9 ½"	1 ¼"	15'
10" & ABOVE	1 ½"	15'

TIE BAR TABLE

PAVEMENT DEPTH (D)	TIE BAR SIZE	TIE BAR LENGTH (L)	MAX. TIE BAR SPACING
< 10 ½"	NO. 4	30"	36"
≥ 10 ½"	NO. 5	36"	36"
	NO. 4 *	30"	24" **

* SUBSTITUTE BENT BARS AT LONGITUDINAL JOINTS WHEN EQUIPMENT LIMITATIONS DURING CONSTRUCTION WARRANT (e.g. AUXILIARY LANES OR TURN LANES)

** CONFORM TO 15" MINUMUM SPACING FROM TRANSVERSE JOINTS; SPACING BETWEEN TIE BARS WILL BE 30" AT TRANSVERSE JOINTS.

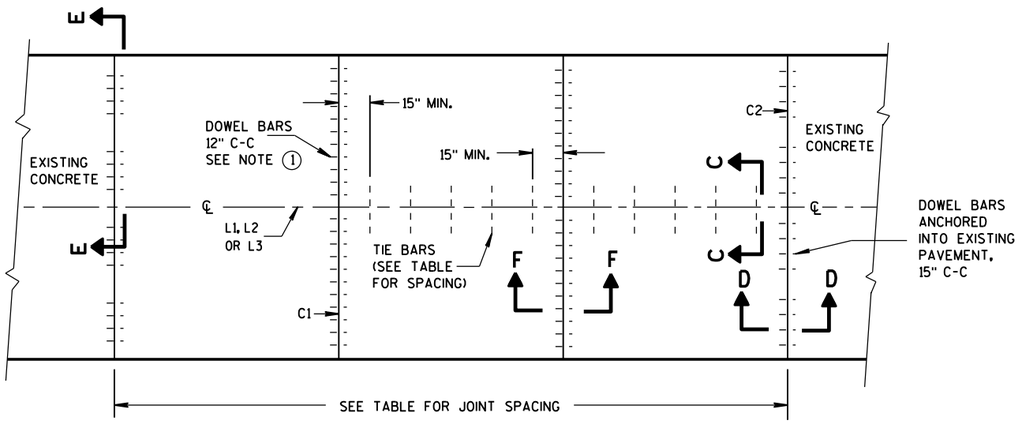

PLAN VIEW

CONCRETE BASE CONTRACTION JOINT LOCATIONS

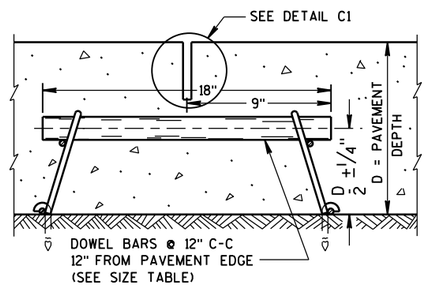

SECTION F-F

CONTRACTION JOINT

CONCRETE BASE

STATE OF WISCONSIN
DEPARTMENT OF TRANSPO

6
S.D.D. 13 C 15-6a

GENERAL NOTES

(1) USE AN ENGINEER-APPROVED BOND BREAKER (E.G. RELEASE AGENT, CURING COMPOUND) AT THE LONGITUDINAL JOINT IN LIEU OF TIE BARS FOR SINGLE LANE CONCRETE BASE REPAIRS UP TO 15 FEET IN LENGTH.

(2) ANCHOR TIE BARS INTO DRILLED HOLES WITH AN EPOXY.

(3) PAVEMENT THAT WAS IN PLACE PRIOR TO THE CONTRACT.

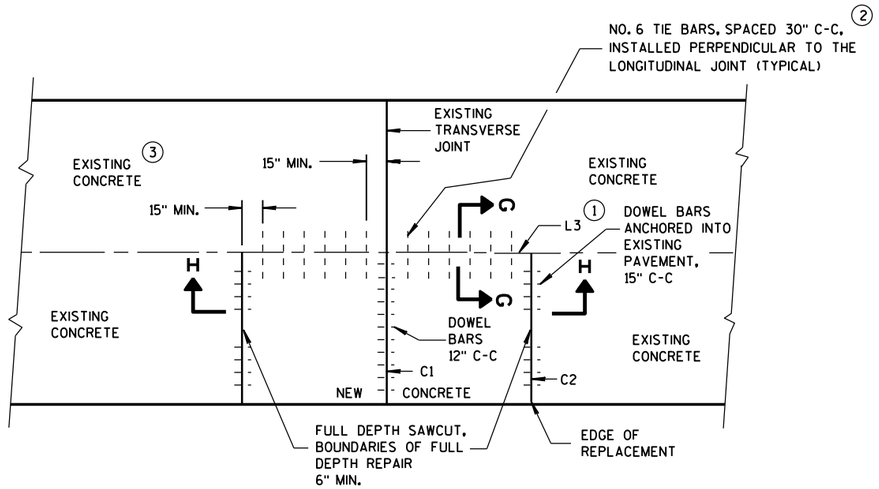

PLAN VIEW

SINGLE LANE CONCRETE BASE REPAIR

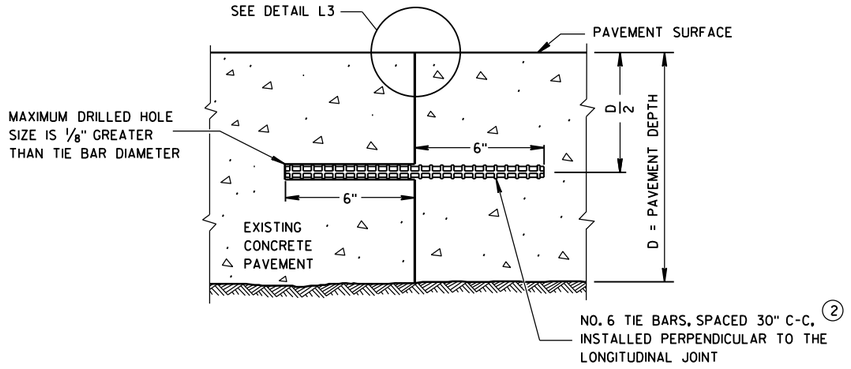

SECTION G-G

TIE BARS ANCHORED INTO EXISTING PAVEMENT

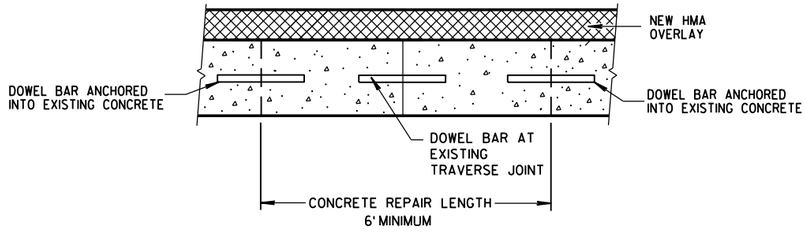

SECTION H-H

CONCRETE BASE

STATE OF WISCONSIN
DEPARTMENT OF TRANSPORTATION

APPROVED
June, 2015 — DATE
/S/ Peter Kemp, P.E. — PAVEMENT SUPEI
FHWA

6

S.D.D. 13 C 15-6b

6

S.D.D. 13 C 15-6b

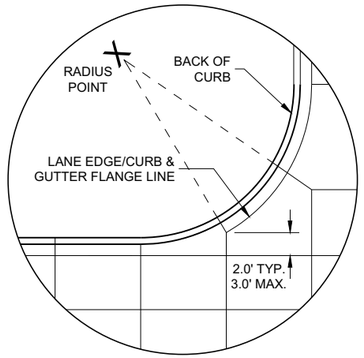

DETAIL "A"

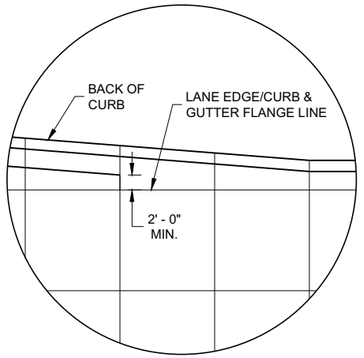

DETAIL "B"

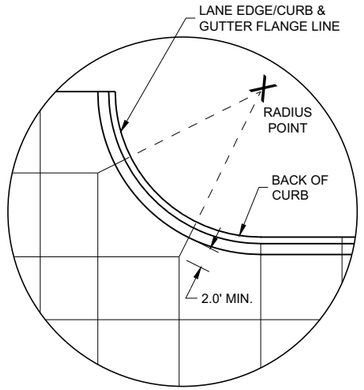

DETAIL "C"

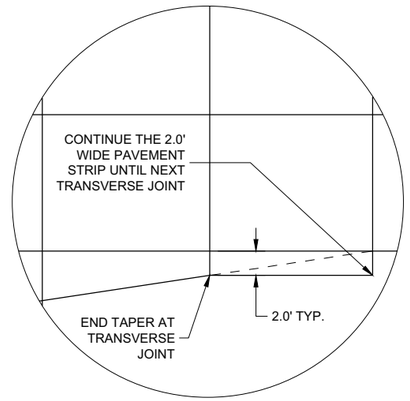

DETAIL "D"

GENERAL NOTES

THE PRIMARY ROADWAY CONTROLS THE TRANSVERSE JOINT PATTERN.

ALIGN NEW JOINTS WITH EXISTING JOINTS OR CRACKS.

CONSTRUCT TRANSVERSE JOINTS PERPENDICULAR TO THE ROADWAY.

ADJUST TRANSVERSE JOINTS TO ALIGN WITH UTILITY FIXTURES (E.G MANHOLES AND INLETS) IN THE PAVEMENT STRUCTURE WHEN POSSIBLE. WATER VALVES DO NOT REQUIRE JOINT ADJUSTMENT.

AVOID SLABS LESS THAN 2 FEET WIDE OR GREATER THAN 15 FEET WIDE.

SEE TABLE FOR TRANSVERSE JOINT SPACING. JOINT SPACING SPECIFIED IS MAXIMUM AND ACTUAL SPACING CAN BE ADJUSTED TO ACCOMMODATE INTERSECTIONS.

AVOID ANGLES LESS THAN 60° BY DOGLEGGING JOINTS THROUGH CURVE RADIUS POINTS. USE 90° ANGLES WHEN POSSIBLE.

CORRELATE LONGITUDINAL JOINTS WITH LANE LINES WHEN POSSIBLE.

(1) PROVIDE TRANSVERSE JOINTS AT ALL PAVEMENT WIDTH CHANGES.

(2) CONSTRUCT DOWELED EXPANSION JOINT ON THE SIDE ROAD OF AN INTERSECTION IF THE SIDE ROAD IS CONCRETE PAVEMENT AND GREATER THAN 300 FEET IN LENGTH. ALIGN EXPANSION JOINT WITHEDGE OF RADIUS.

(3) THE ENGINEER MAY APPROVE SLIGHT VARIATIONS FROM THESE JOINTING DETAILS.

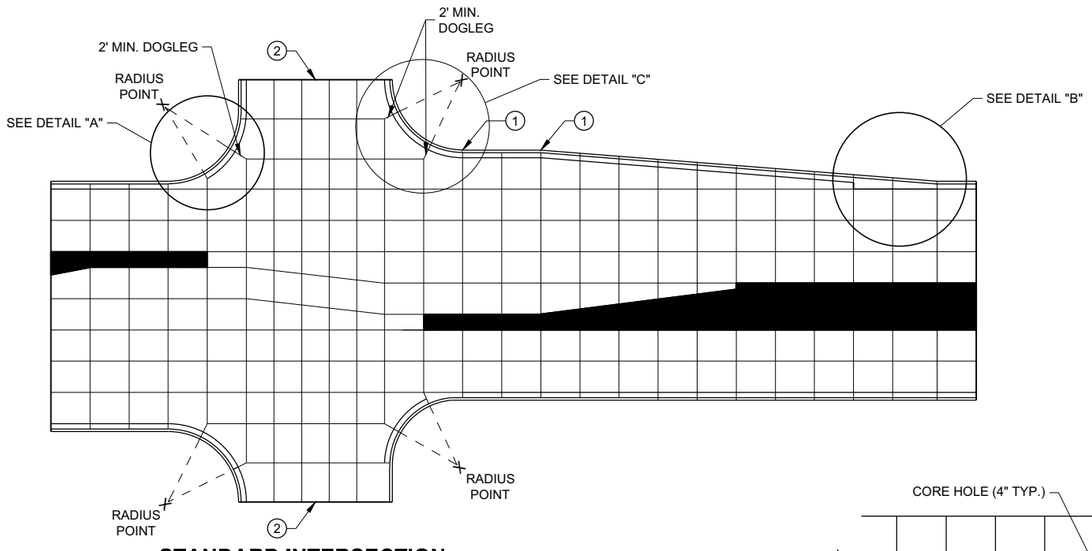

STANDARD INTERSECTION

PAVEMENT DEPTH AND JOINT SPACING TABLE

PAVEMENT DEPTH (D)	CONTRACTION JOINT SPACING
6", 6 ½"	12'
7", 7 ½"	14'
8" & ABOVE	15'

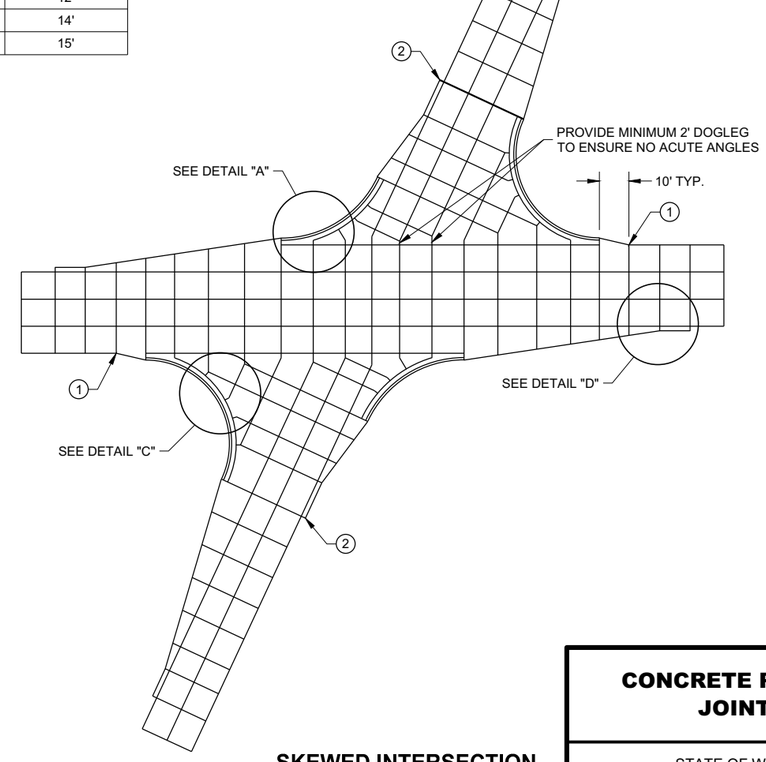

SKEWED INTERSECTION

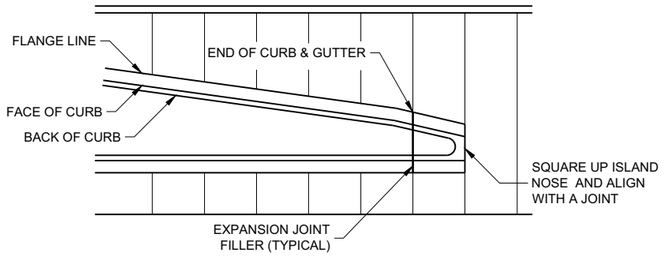

APPROACH TO MEDIAN

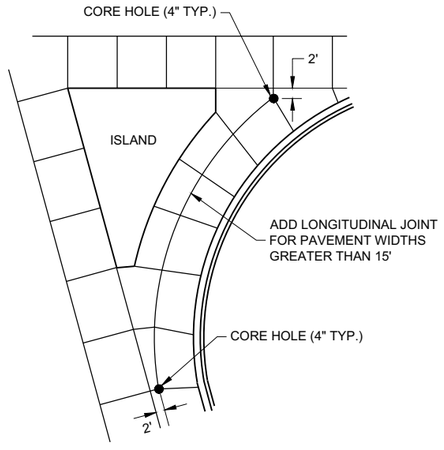

LARGE RIGHT TURN

CONCRETE PAVEMENT JOINTING

STATE OF WISCONSIN
DEPARTMENT OF TRANSPORTATION

6

SDD 13C18 - 07a

6

SDD 13C18 - 07a

LEGEND

POTENTIAL DOWELED EXPANSION JOINT

DOWELED JOINT

TIED JOINT

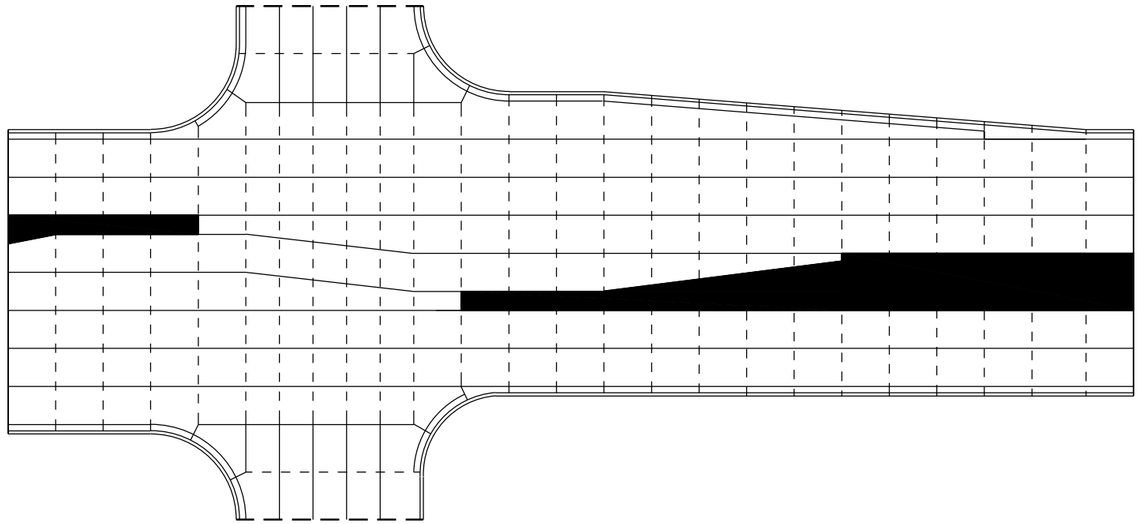

STANDARD INTERSECTION

GENERAL NOTES

USE AN EXPANSION JOINT FILLER MEETING THE REQUIREMENTS OF STANDARD SPECIFICATION 415.

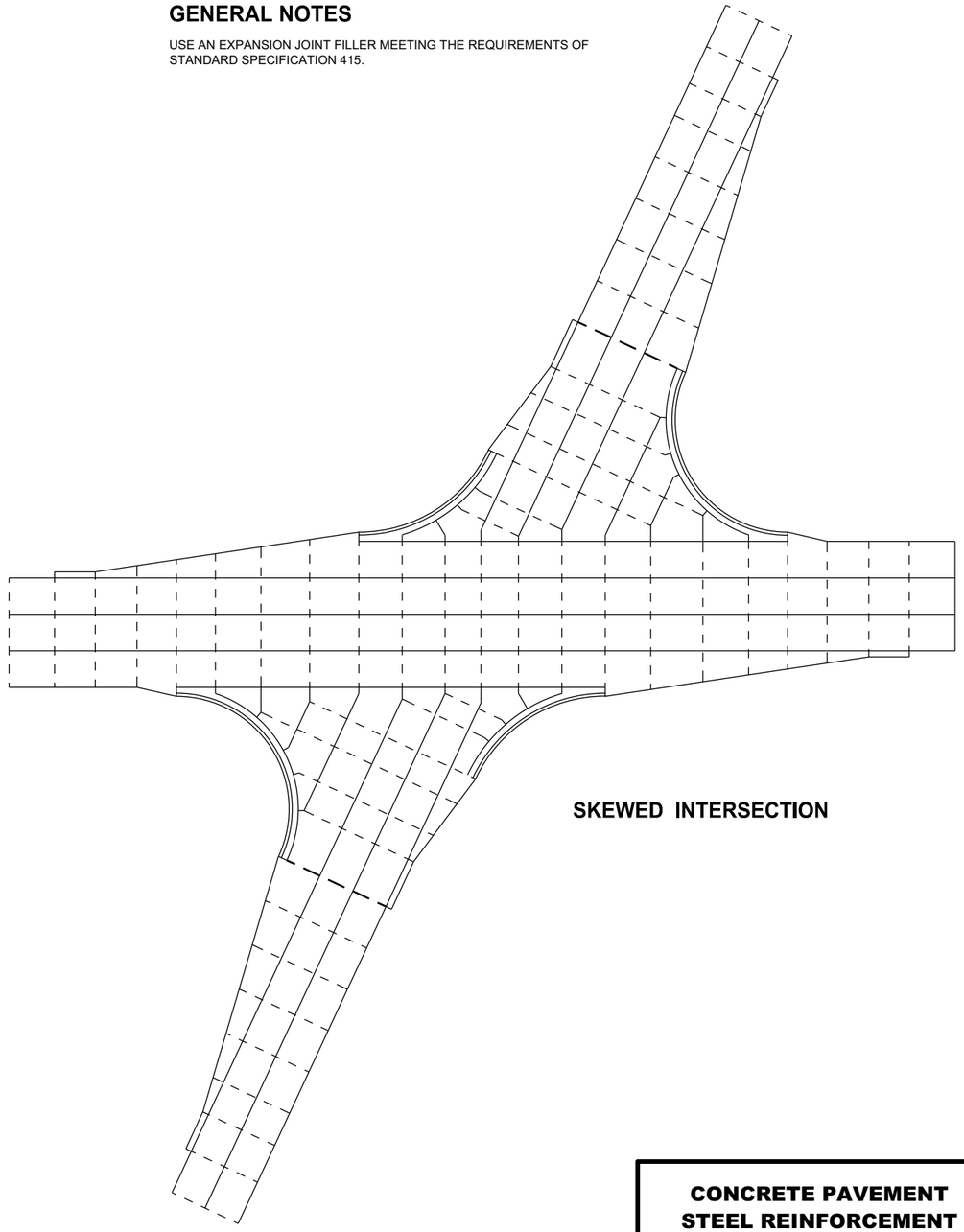

SKEWED INTERSECTION

6

SDD 13C18 - 07b

CONCRETE PAVEMENT
STEEL REINFORCEMENT

STATE OF WISCONSIN
DEPARTMENT OF TRANSPORTATION

6

SDD 13C18 - 07b

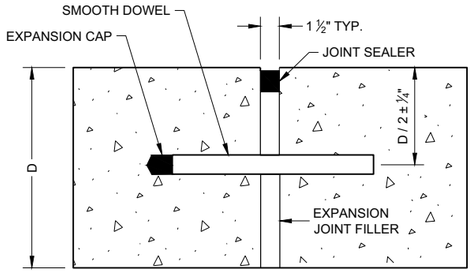

DOWELED TRANSVERSE (1)

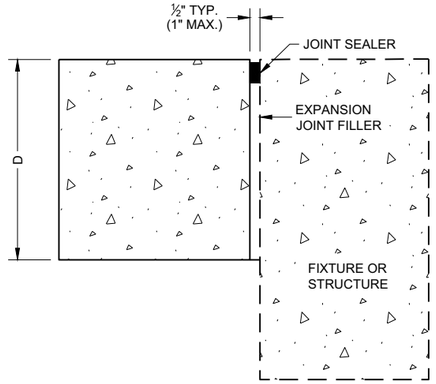

UNTIED - LONGITUDINAL

EXPANSION JOINTS

TIE BAR TABLE

PAVEMENT DEPTH (D)	TIE BAR SIZE	TIE BAR LENGTH (L)	MAX. TIE BAR SPACING
< 10 ½"	NO. 4	30"	36"
≥ 10 ½"	NO. 5	36"	36"
	NO. 4*	30"	24"**

* SUBSTITUTE BENT BARS AT LONGITUDINAL JOINTS WHEN EQUIPMENT LIMITATIONS DURING CONSTRUCTION WARRANT (e.g. AUXILIARY LANES OR TURN LANES)

** CONFORM TO 15" MINIMUM SPACING FROM TRANSVERSE JOINTS; SPACING BETWEEN TIE BARS WILL BE 30" AT TRANSVERSE JOINTS.

GENERAL NOTES

1. USE DOWELED EXPANSION JOINTS ON SIDE ROADS AT INTERSECTIONS (TO ISOLATETHE SIDE ROAD FROM THE THROUGH STREET) IF THE SIDE ROAD IS CONCRETE PAVEMENT AND GREATER THAN 300 FEET IN LENGTH.
2. SPACE CONTRACTION JOINTS IN ACCORDANCE WITH SDD 13C4, 13C11 OR 13C13.
3. LOCATE CONSTRUCTION JOINTS A MINIMUM OF 6 FEET FROM THE NEAREST CONTRACTION JOINT AND ALIGN PARALLEL TO CONTRACTION JOINTS.
4. CONSTRUCTION JOINTS CAN BE FORMED OR SAWED.
5. IF JOINT IS FORMED, PROVIDE A ¼" RADIUS.
6. ANCHOR TIE BARS INTO DRILLED HOLES WITH AN EPOXY.

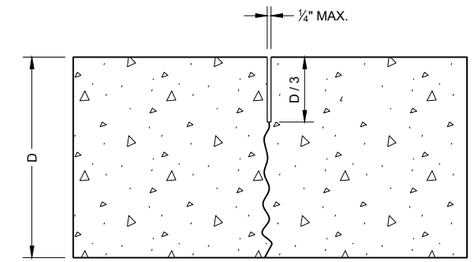

UNDOWELED TRANSVERSE

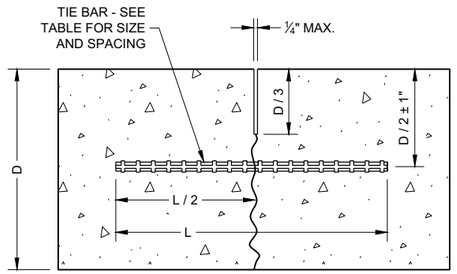

TIED LONGITUDINAL

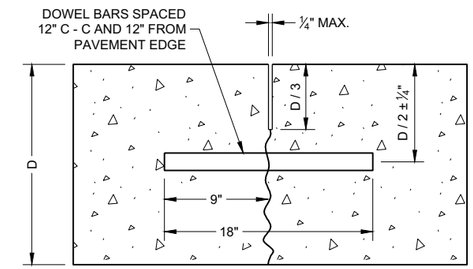

DOWELED TRANSVERSE

CONTRACTION JOINTS (2)

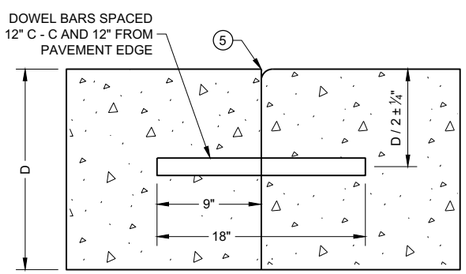

DOWELED TRANSVERSE (3)

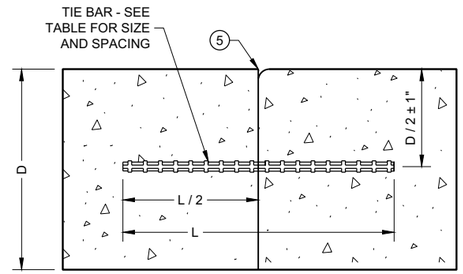

TIED LONGITUDINAL

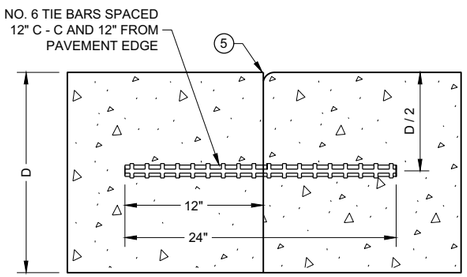

TIED TRANSVERSE (3)
(FOR USE ON NON-DOWELED PAVEMENTS ONLY)

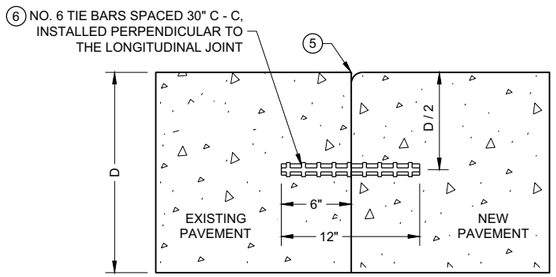

TIED LONGITUDINAL TO EXISTING

CONSTRUCTION JOINTS (4)

CONCRETE PAVEMENT JOINT TYPES

STATE OF WISCONSIN
DEPARTMENT OF TRANSPORTATION

6

SDD 13C18 - 07c
SDD 13C18 - 07c

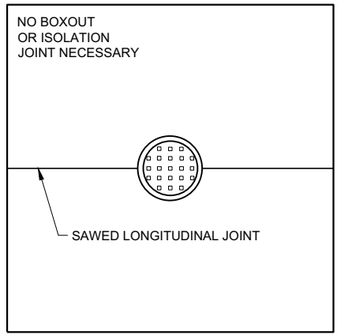

MANHOLE WITH LONGITUDINAL JOINT

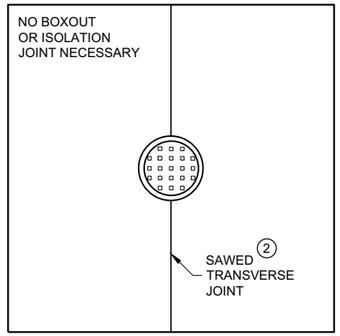

MANHOLE WITH TRANSVERSE JOINT

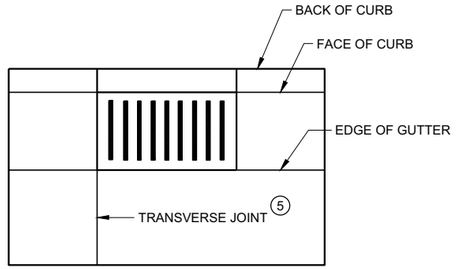

INLET WITH TRANSVERSE JOINT

GENERAL NOTES

1. USE BOXOUTS WHEN UTILITY STRUCTURE IS IN THE PATH OF CONSTRUCTION JOINTS. PROVIDE A 1 FOOT MINIMUM CLEARANCE BETWEEN THE EXTERIOR LIMIT OF THE STRUCTURE TO THE DIAMOND BOXOUT.
2. ADJUST TRANSVERSE JOINT TO INTERSECT MANHOLE IF POSSIBLE.
3. IF DISTANCE BETWEEN THE LONGITUDINAL JOINT AND THE EDGE OF MANHOLE IS 2 FEET OR LESS, DIVERT THE LONGITUDINAL JOINT AT A 2:1 TAPER RATE TO THE CENTER OF THE MANHOLE. IF THE DISTANCE IS GREATER THAN 2 FEET, DO NOT DIVERT THE JOINT AND SAW AS NORMAL. PLACE REINFORCEMENT REBAR AROUND THE MANHOLE.
4. IF THE DISTANCE FROM THE EDGE OF THE MANHOLE TO THE NEAREST TRANSVERSE JOINT IS LESS 4 FEET OR LESS, REDIRECT JOINT TO INTERSECT THE CENTER OF THE MANHOLE. IF DISTANCE IS GREATER THAN 4 FEET, DO NOT DIVERT THE JOINT AND SAW AS NORMAL. PLACE REINFORCEMENT REBAR AROUND THE MANHOLE.
5. ALIGN TRANSVERSE JOINT WITH ONE EDGE OF INLET WHEN PRACTICAL.

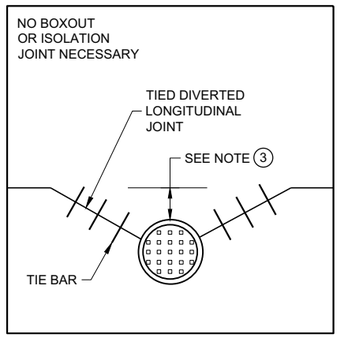

MANHOLE WITH DIVERTED LONGITUDINAL CONTRACTION JOINT

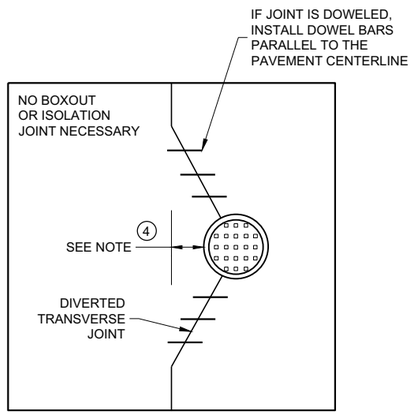

MANHOLE WITH DIVERTED TRANSVERSE CONTRACTION JOINT

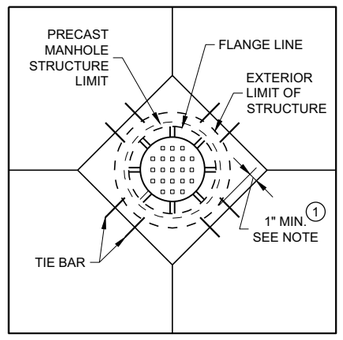

DIAGONAL MANHOLE BOXOUT FOR CONSTRUCTION JOINTS

CONCRETE PAVEMENT JOINTING AT UTILITY FIXTURES

STATE OF WISCONSIN
DEPARTMENT OF TRANSPORTATION

APPROVED
November 2018
DATE
/S/ Peter Kemp P.E.
PAVEMENT SUPERVIS

FHWA

6

SDD 13C18 - 07d

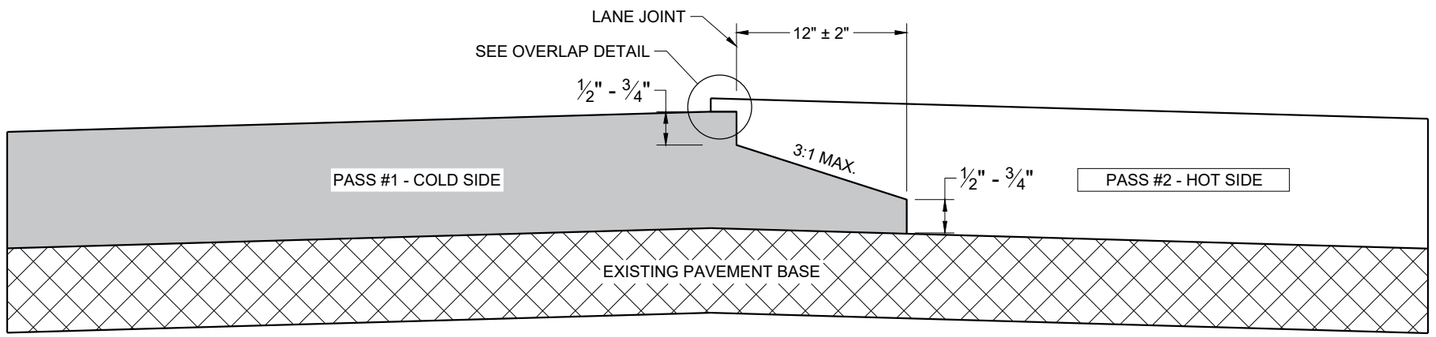

TYPICAL PAVEMENT CROSS SECTION
NOTCHED WEDGE JOINT

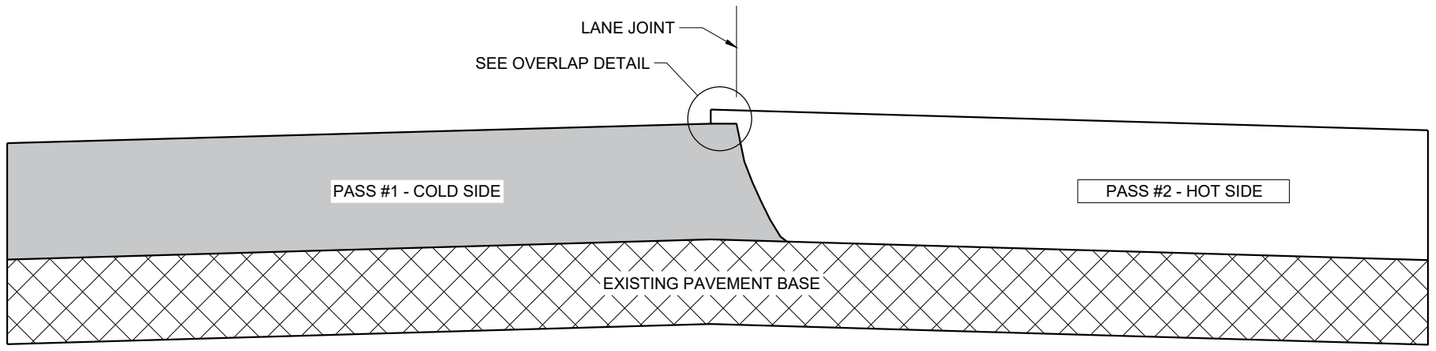

TYPICAL PAVEMENT CROSS SECTION
VERTICAL JOINT

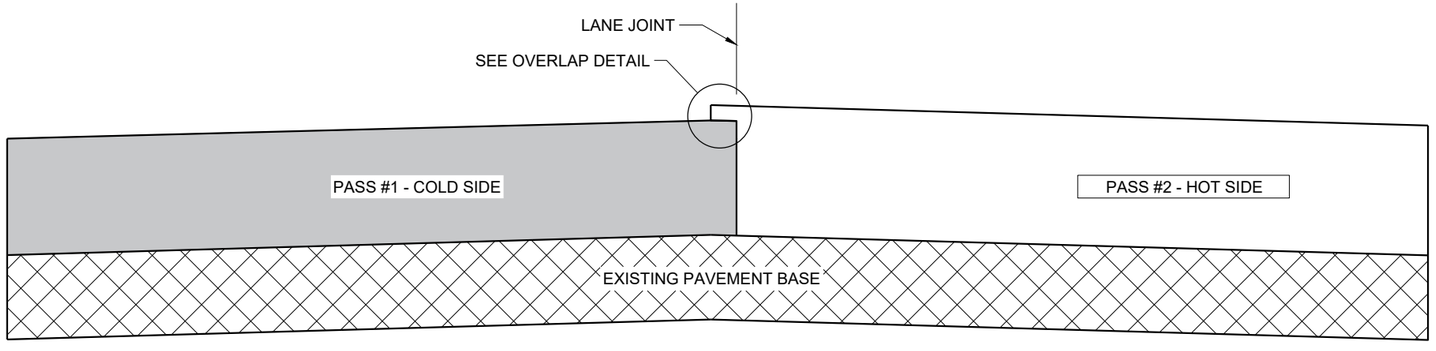

TYPICAL PAVEMENT CROSS SECTION
VERTICAL JOINT (MILLED)

GENERAL NOTES

IN ADDITION TO THE DETAILS PROVIDED IN THIS DRAWING, CONFORM TO STANDARD SPECIFICATION 450.3.2.8 FOR WHEN A NOTCHED WEDGE JOINT IS REQUIRED AND FOR GENERAL JOINT CONSTRUCTION REQUIREMENTS.

FOR ALL LONGITUDINAL JOINTS, ENSURE THE PAVER SCREED OVERLAPS THE PREVIOUSLY PLACED PAVEMENT BY 1" ± 0.5" AND THE HOT SIDE OF THE JOINT REMAINS HIGHER THAN THE COLD SIDE BY APPROXIMATELY 0.1" AFTER FINAL COMPACTION. (IT WILL BE FLUSH WHEN PAVING IN ECHELON.)

ONLY REMOVE THE LONGITUDINAL NOTCHED WEDGE JOINT FOR SMA PAVEMENT OR AS DIRECTED BY THE ENGINEER TO ADDRESS SPECIFIC LENGTHS OF JOINT DAMAGED BY TRAFFIC.

WHEN MILLING BACK OR REMOVING ANY LONGITUDINAL JOINT, LIMIT THE MATERIAL REMOVED TO 2" FROM THE TOP NOTCH OR FROM THE VERTICAL JOINT EDGE ON THE COLD SIDE OF THE JOINT.

USE LONGITUDINAL MILLED JOINT AS PLANS SHOW OR THE AS THE ENGINEER DIRECTS.

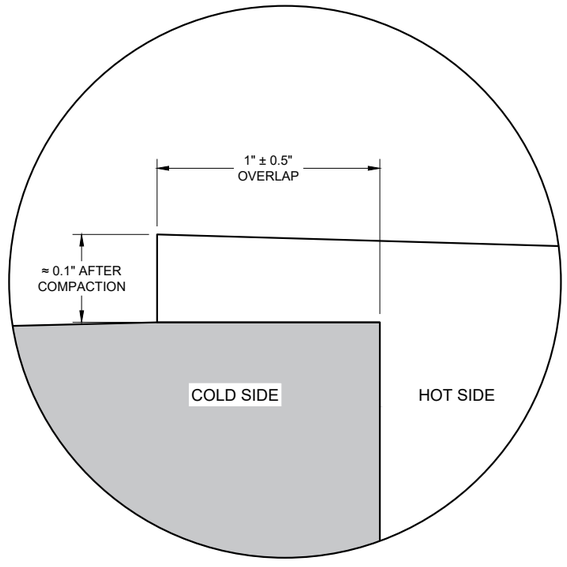

OVERLAP DETAIL (TYPICAL)

6

6

SDD 13C19 - 03

SDD 13C19 - 03

HMA LONGITUDINAL JOINTS

STATE OF WISCONSIN
DEPARTMENT OF TRANSPORTATION

APPROVED
November 2020
DATE

/S/ Steven Hefel
HMA PAVEMENT ENGIN

FHWA

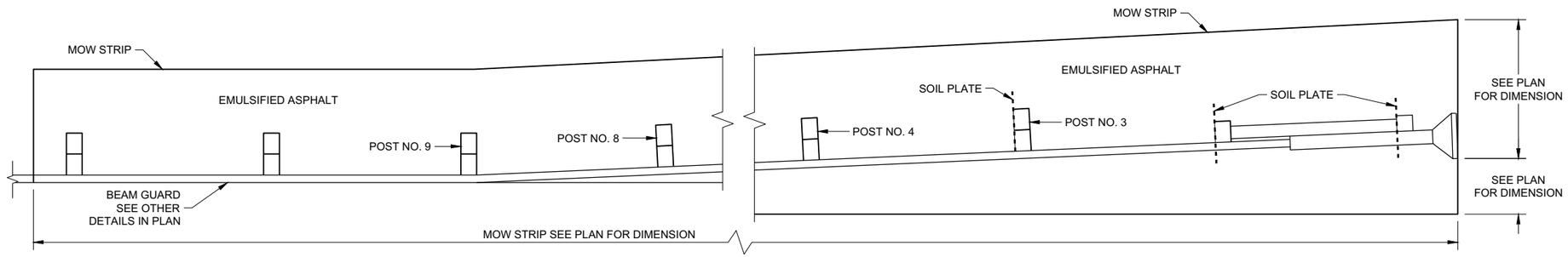

PLAN VIEW

MOW STRIP LAYOUT FOR ENERGY ABSORBING TERMINAL

GENERAL NOTES

ONLY USE STEEL POSTS IN CONCRETE AND ASPHALT MOW STRIPS.

1. CONTROLLED LOW-STRENGTH BACKFILL OR EMULSIFIED ASPHALT.
2. DEPTH OF MOW STRIP:
   ASPHALT - 4"
   CONCRETE - 4"
   EMULSIFIED ASPHALT - 1" OR LESS
3. FOR EMULSIFIED ASPHALT, MOW STRIP STRIP LEAVE OUTS NOT REQUIRED. (TYPICAL FOR ALL POSTS)

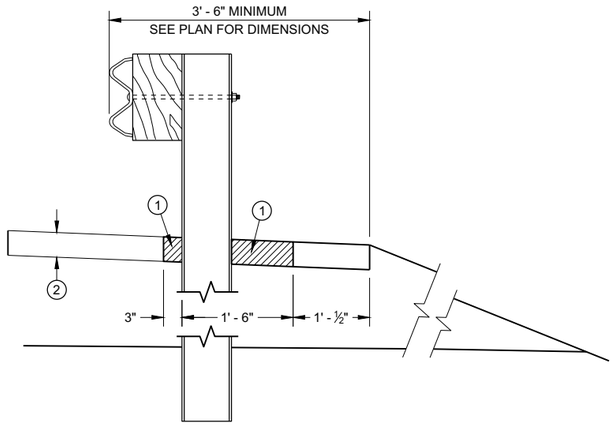

SECTION A - A

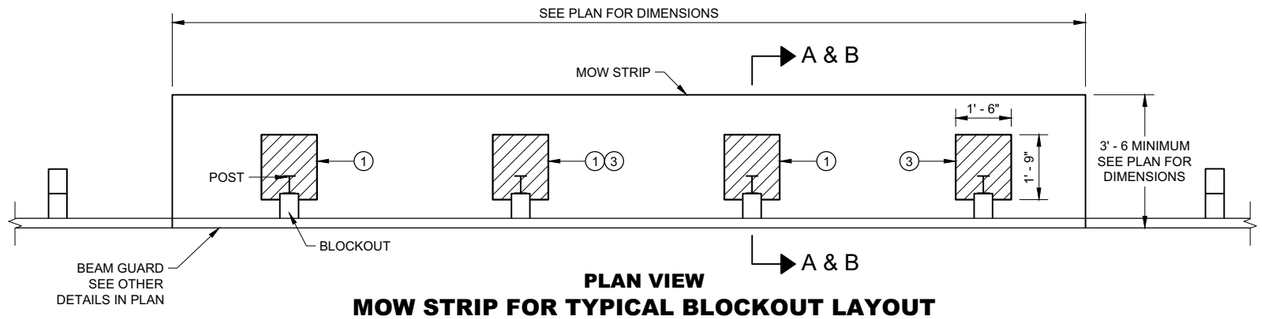

PLAN VIEW

MOW STRIP FOR TYPICAL BLOCKOUT LAYOUT

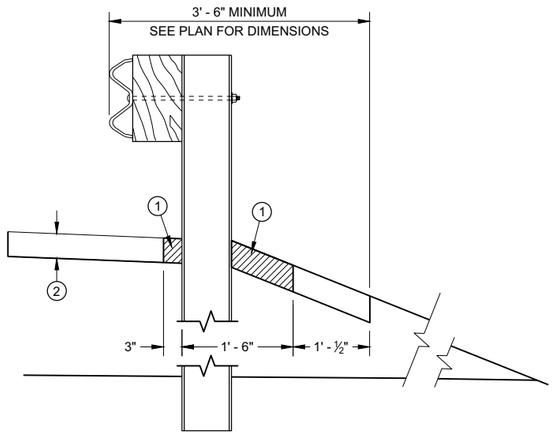

SECTION B - B

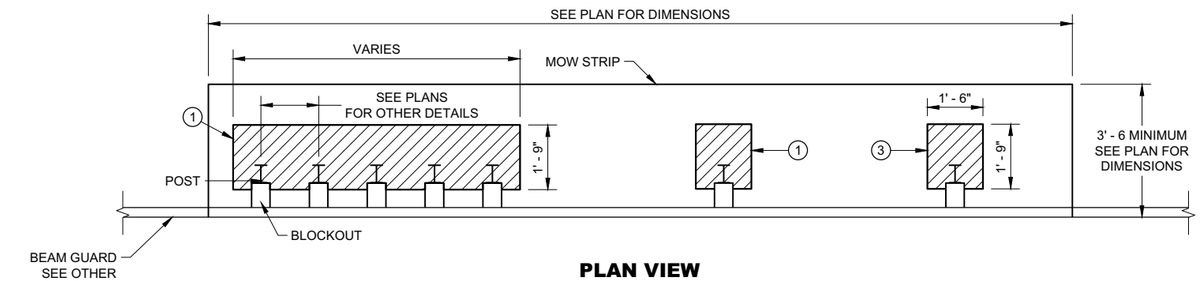

PLAN VIEW

MOW STRIP FOR TIGHT SPACING LAYOUT

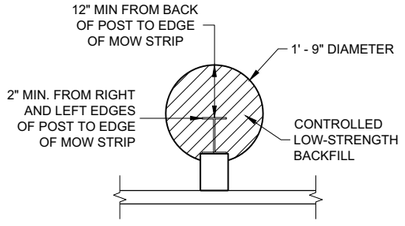

ALTERNATIVE HMA MOW STRIP DESIGN

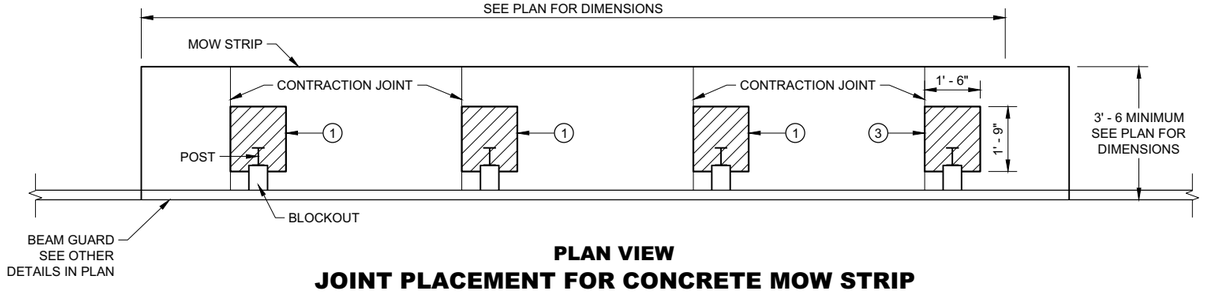

PLAN VIEW

JOINT PLACEMENT FOR CONCRETE MOW STRIP

GUARDRAIL MOW STRIP

STATE OF WISCONSIN
DEPARTMENT OF TRANSPORTATION

6

SDD 14B28 - 04a

LEGEND

CONCRETE, ASPHALT, OR EMULSIFIED ASPHALT MOW STRIP (SEE OTHER DETAILS)

EMULSIFIED ASPHALT MOW STRIP (SEE OTHER DETAILS)

GENERAL NOTES

EXISTING THRIE BEAM BULLNOSES MAY HAVE WOOD POSTS. NEW THRIE BEAM BULLNOSE WILL HAVE STEEL POSTS.

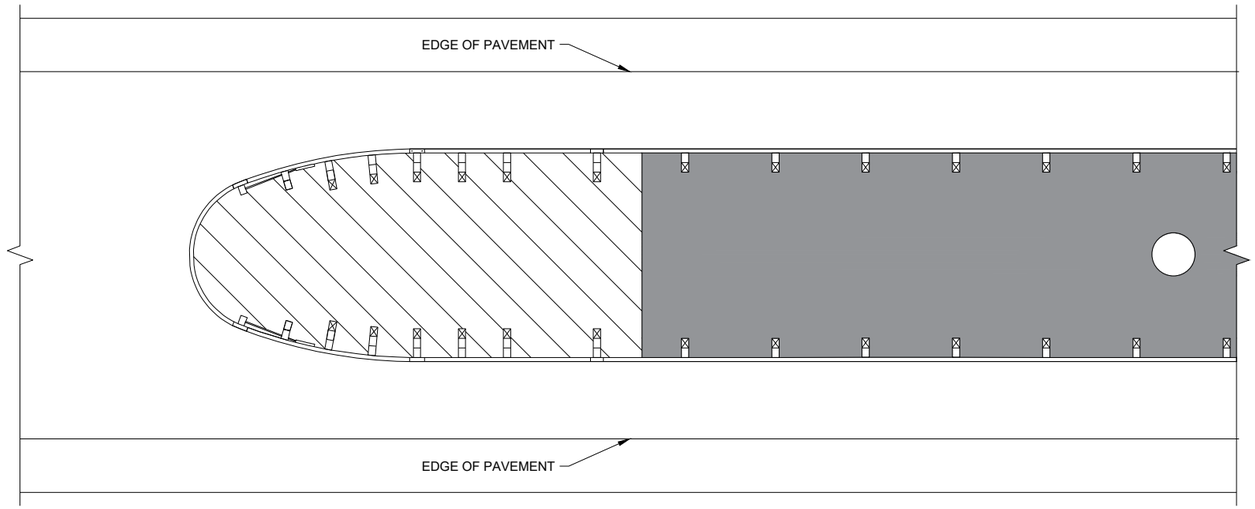

THRIE BEAM BULLNOSE

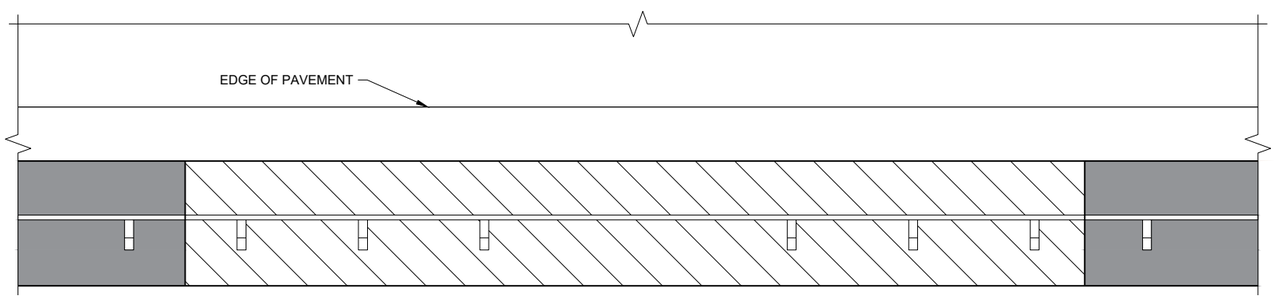

LONG - SPAN

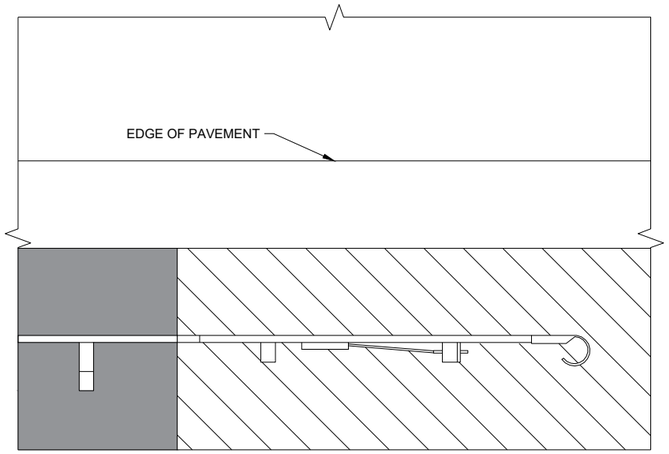

TYPE 2 TERMINAL

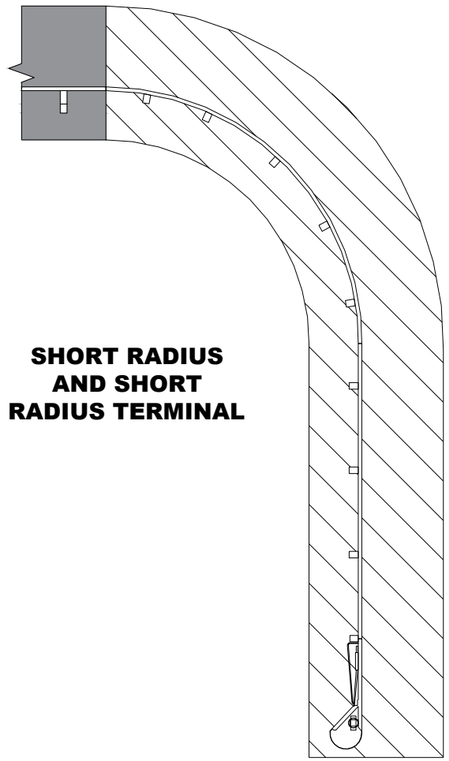

SHORT RADIUS AND SHORT RADIUS TERMINAL

GUARDRAIL MOW STRIP

STATE OF WISCONSIN
DEPARTMENT OF TRANSPORTATION

APPROVED
August 2020
DATE

/S/ Rodney Taylor
ROADWAY STANDARDS DEVE ENGINEER

FHWA

6

SDD 14B28 - 04b

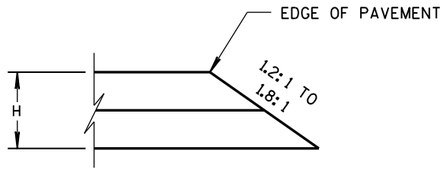

CONSTRUCTED WITH FINAL TWO LAYERS

FOR H 5" OR LESS

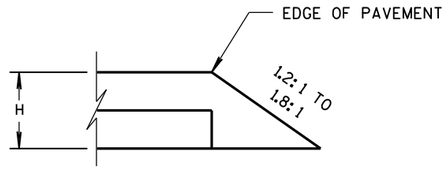

CONSTRUCTED WITH FINAL LAYER

FOR H 5" OR LESS

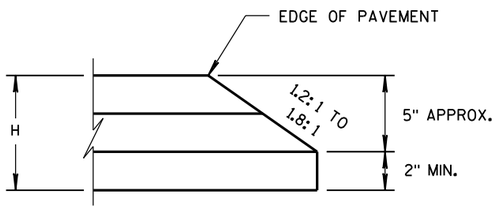

CONSTRUCTED WITH FINAL TWO LAYERS

FOR H GREATER THAN 5"

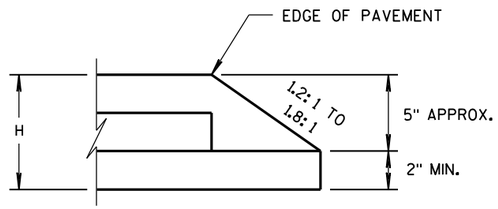

CONSTRUCTED WITH FINAL LAYER

FOR H GREATER THAN 5"

HMA PAVEMENT AND HMA OVERLAYS

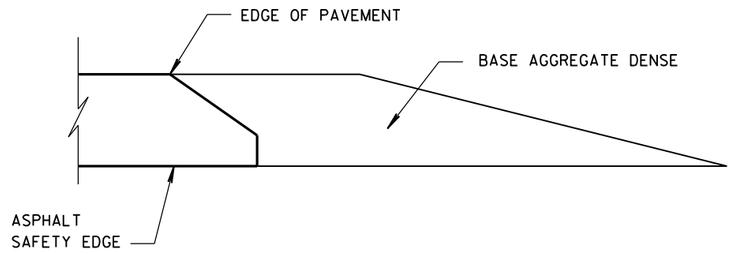

FINISHED SHOULDER AGGREGATE PLACEMENT

6

6

S.D.D. 14 B 29-1

S.D.D. 14 B 29-1

SAFETY EDGE SM

STATE OF WISCONSIN
DEPARTMENT OF TRANSPORTATION

APPROVED

11/30/2012
DATE

/S/ Jerry H. Zoda
ROADWAY STANDARDS DEVELOPMENT ENGINEER

FHWA

(1) WOOD OR STEEL POSTS (w6X9 OR w6X8.5) MAY BE USED. DO NOT INTERMIX WOOD AND STEEL POSTS. INSTALL STEEL POSTS WITH HOLES ON APPROACHING TRAFFIC SIDE.

(2) USE WOOD OR APPROVED PLASTIC BLOCKOUTS. WOOD BLOCKOUTS MAY BE CONSTRUCTED OUT OF TWO OR MORE WOOD BLOCKOUTS. SEE ALTERNATE WOOD BLOCKOUT DETAIL. DIMENSIONS OF APPROVED PLASTIC BLOCKOUTS MAY VARY.

(3) IF ROCK IS ENCOUNTERED DURING EXCAVATION, PROVIDE A HOLE 12 INCHES IN DIAMETER EXTENDING 20 INCHES DEEP INTO THE ROCK. PLACE APPROXIMATELY 2 1/2" INCHES OF GRANULAR MATERIAL IN THE BOTTOM OF THE HOLE. CUT THE POSTS THE TO LENGTH AMD INSTALL. BACKFILL WITH EXCAVATED MATERIAL AND COMPACT. BACKFILL IS TO BE FREE OF LARGE ROCKS.

(4) WHEN THE DISTANCE FROM BACK OF POST TO SHOULDER HINGE POINT IS LESS THAN 2 FEET INSTALL LONGER POST AT HALF POST SPACING (K).

(5) FOR NEW MGS INSTALLATION TOP OF W-BEAM RAIL TOLERANCE IS ±1". FOR EXISTING MGS INSTALLATION TOP OF W-BEAM IS BETWEEN 27 ¾" TO 32".

(6) WHEN USING STEEL POST AND WOOD BLOCKOUTS INSTALL FOUR 16D GALVANIZED NAILS. INSTALL NAILS AT THE BACK CORNERS OF THE BLOCK AND BEND THE NAILS OVER THE FLANGE OF THE STEEL POST.

(7) TOTAL POST LENGTH FOR TYPE K IS 7' - 0".
TOTAL POST LENGTH FOR OTHER MGS TYPES IS 6' - 0".

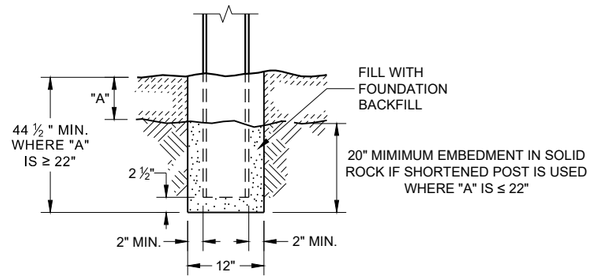

END VIEW
SETTING STEEL OR WOOD POST IN ROCK (3)

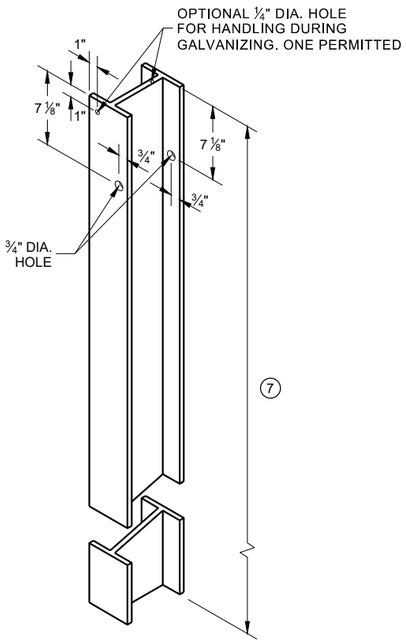

STEEL POST & HOLE PUNCHING DETAIL (W 6 X 9) (1)

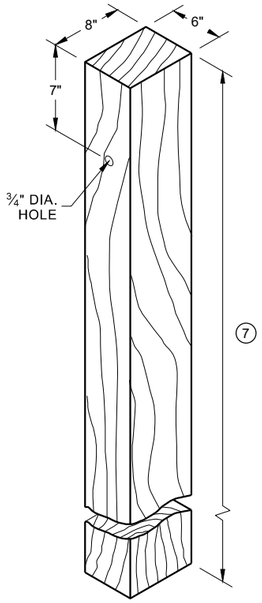

WOOD POST (6" X 8") NOMINAL (1)

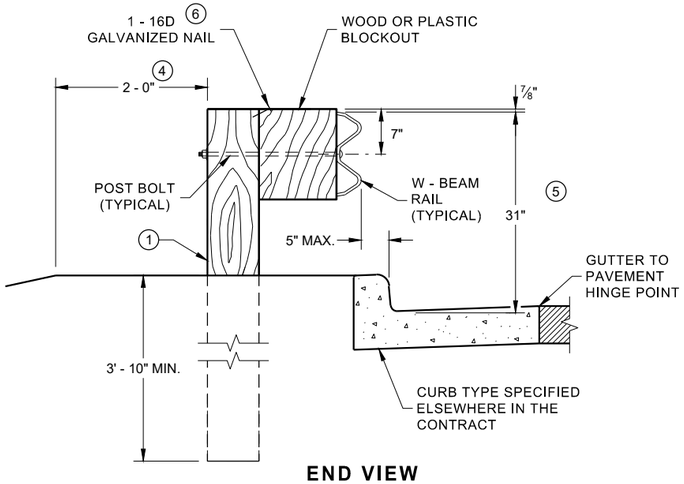

END VIEW
LOCATED ALONG A CURBED ROADWAY

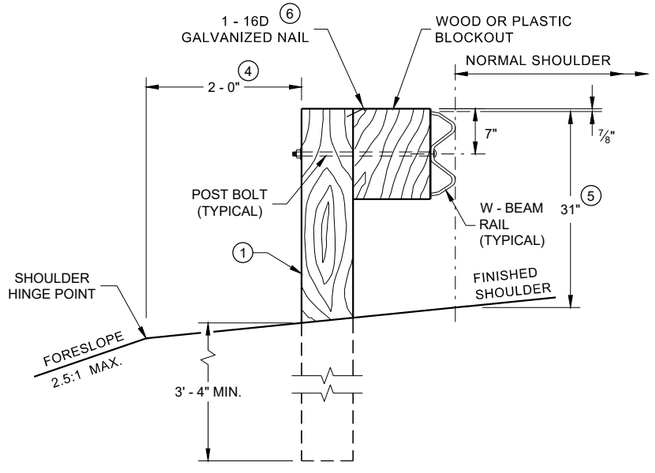

END VIEW
LOCATED ALONG A ROADWAY SHOULDER STANDARD INSTALLATION

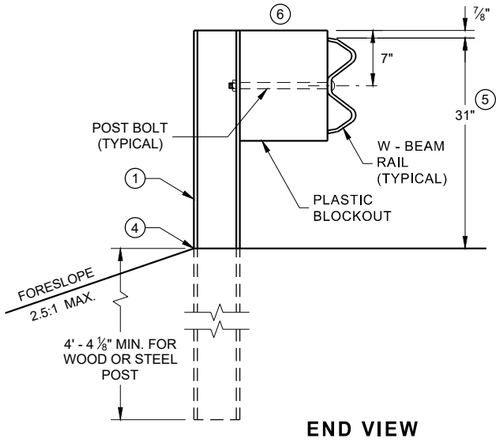

END VIEW
MGS LONGER POST AT HALFPOST SPACING W BEAM (K)

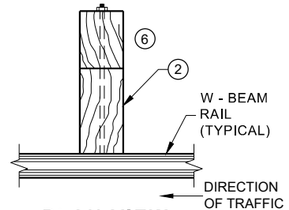

PLAN VIEW
WOOD POST, BLOCKOUT & BEAM

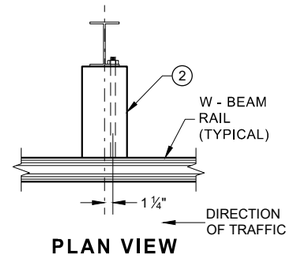

PLAN VIEW
STEEL POST, PLASTIC BLOCKOUT & BEAM

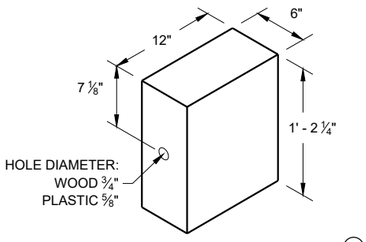

WOOD OR PLASTIC BLOCKOUT (2)

MIDWEST GUARDRAIL SYSTEM (MGS) GUARDRAIL

STATE OF WISCONSIN
DEPARTMENT OF TRANSPORTATION

SDD 14B42 - 07a

6

SDD 14B42 - 07a

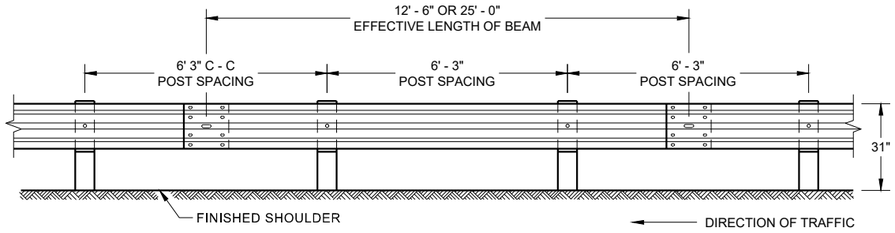

FRONT VIEW
POST SPACING STANDARD INSTALLATION

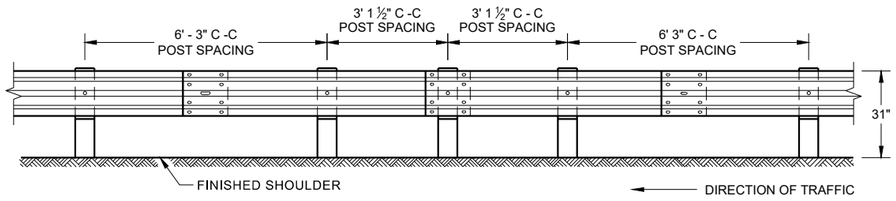

FRONT VIEW
HALF POST SPACING (HS) AND HALF POST SPACING WITH LONGER POSTS (K)

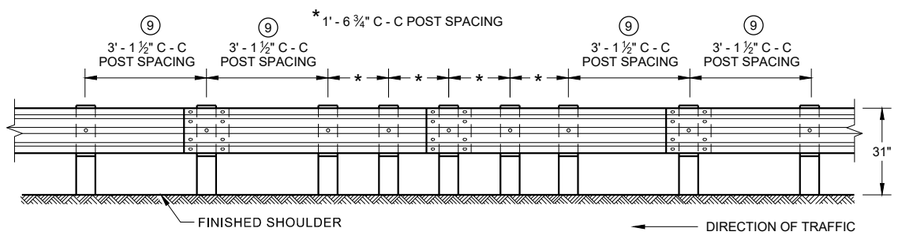

FRONT VIEW
QUARTER POST SPACING (QS)

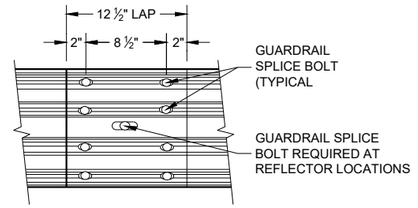

FRONT VIEW
MID-SPAN BEAM SPLICE

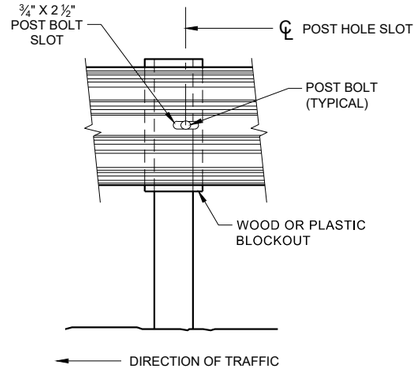

FRONT VIEW AT STEEL POST

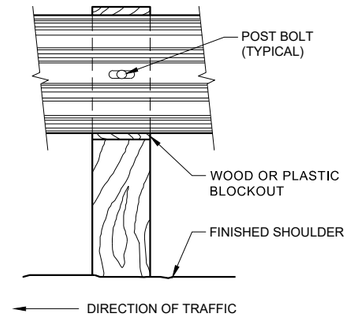

FRONT VIEW AT WOOD POST

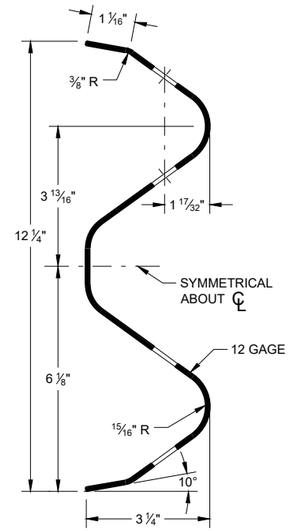

SECTION THRU W-BEAM RAIL

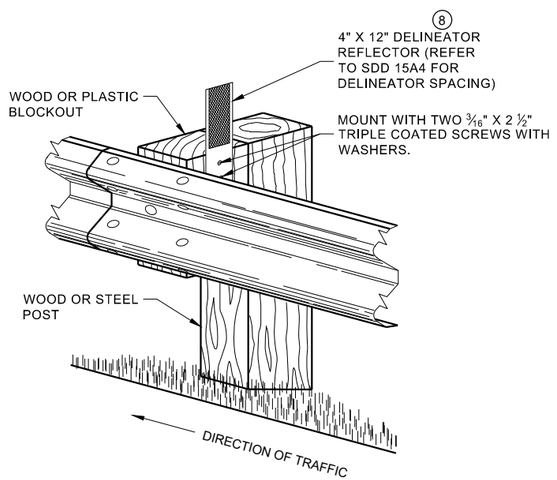

ONE SIDED REFLECTOR DETAIL AND TYPICAL INSTALLATION

GENERAL NOTES

⑧ DO NOT INSTALL REFLECTORS ON THE FIRST 50 FEET OF THE APPROACH END OF THE ENERGY ABSORBING TERMINAL.

⑨ 25 FEET OF HALF POST SPACING IS REQUIRED ON APPROACH AND DEPARTURE ENDS OF QUARTER POST SPACING.

POST BOLTS ARE A ⅝" DIAMETER ASTM A307 GUARDRAIL BOLT. A POST BOLT REQUIRES ⅝" DIAMETER A563A DOUBLE RECESSED (DR) HEAVY HEX NUT AND ⅝" DIAMETER F844 FLAT WASHER. POST BOLTS MAY BE LONGER IF MULTIPLE BLOCKOUTS ARE BEING USED.

GUARD RAIL SPLICE BOLTS ARE A ⅝" DIAMETER ASTM A307 GUARDRAIL HEAD BOLT. A GUARDRAIL SPLICE BOLT REQUIRES ⅝" DIAMETER A563A DOUBLE RECESSED (DR) HEAVY HEX NUT.

MIDWEST GUARDRAIL SYSTEM (MGS) GUARDRAIL

STATE OF WISCONSIN
DEPARTMENT OF TRANSPORTATION

6

SDD 14B42 - 07b

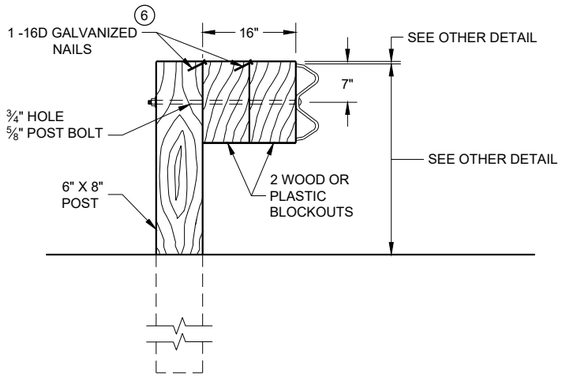

DETAIL FOR 16" BLOCKOUT DEPTH

IT IS ACCEPTABLE TO USE BLOCKOUTS UP TO 16" DEEP TO INCREASE THE POST OFFSET TO AVOID UNDERGROUND OBSTACLES. THERE IS NO LIMIT TO THE NUMBER OF POSTS THAT CAN HAVE ADDITIONAL BLOCKOUTS UP TO 16" DEEP.

NOTE:

1. ALL FILLETS SHALL HAVE A MINIMUM RADIUS OF 3⁄16".
2. IF THE BOLT EXTENDS MORE THAN ¼" FROM THE NUT THE BOLT SHOULD BE TRIMMED BACK.

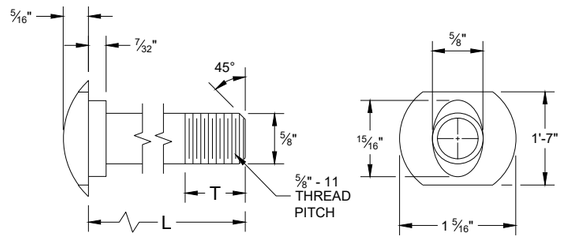

POST BOLT TABLE

L	T (MIN.)
1 ¼"	1 ⅛"
2"	1 ¾"
10"	4"
14"	4 1⁄16"
18"	4"
21"	4 1⁄16"
25"	4"

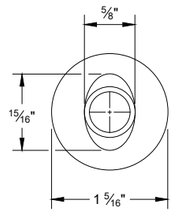

ALTERNATE BOLT HEAD

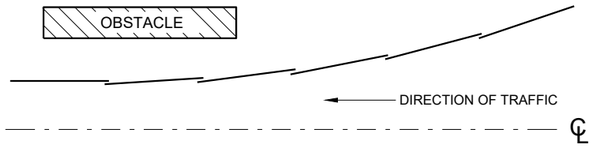

PLAN VIEW
BEAM LAPPING DETAIL

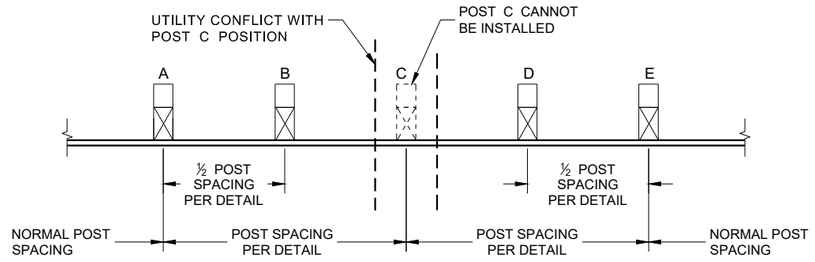

POST DRIVING FOR CONTINUOUS UNDERGROUND OBSTRUCTION

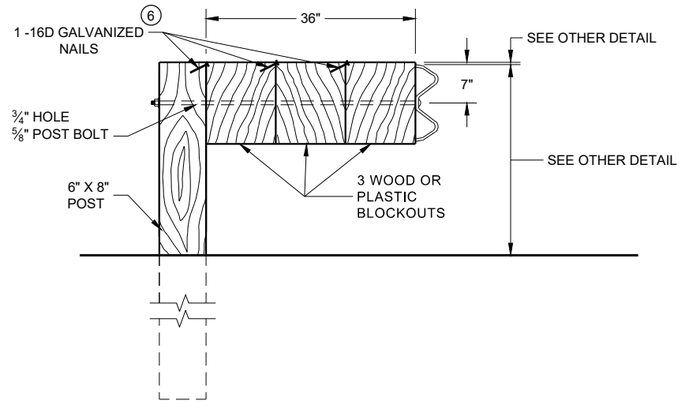

DETAIL FOR 36" BLOCKOUT DEPTH

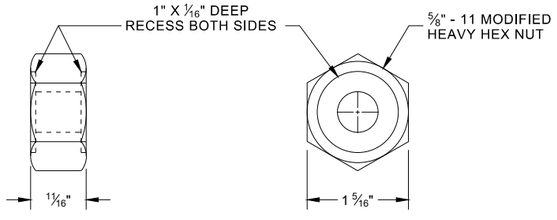

POST BOLT, SPLICE BOLT AND RECESS NUT

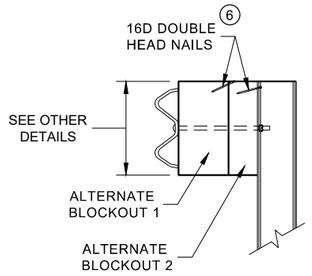

SIDE VIEW

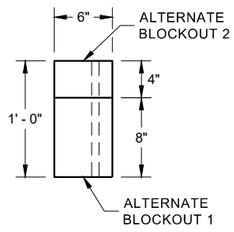

PLAN VIEW

ALTERNATE WOOD BLOCKOUT DETAIL

NOTES: UNDER SPECIAL CIRCUMSTANCES, SUCH AS AVOIDING OBSTACLES THAT ARE NOT RELOCATED, IT IS ACCEPTABLE TO INSTALL ADDITIONAL BLOCKOUTS TO OBTAIN UP TO 36" DEPTH FOR ONE OR TWO POSTS IN A SECTION OF GUARDRAIL.

DO NOT USE 16" OR 36" BLOCKOUTS IF IT CAUSES THE POST TO BE DRIVEN BEYOND SHOULDER HINGE POINT OR CAUSES A FIXED OBJECT TO BE WITHIN THE DEFLECTION DISTANCE OF THE BARRIER.

(6) WHEN USING STEEL POST AD WOOD BLOCKOUTS, INSTALL FOUR 16D GALVANIZED NAILS. INSTALL NAILS AT THE BACK CORNERS OF THE BLOCK AND BEND THE NAILS OVER THE FLANGE OF THE STEEL POST.

MIDWEST GUARDRAIL SYSTEM (MGS) GUARDRAIL

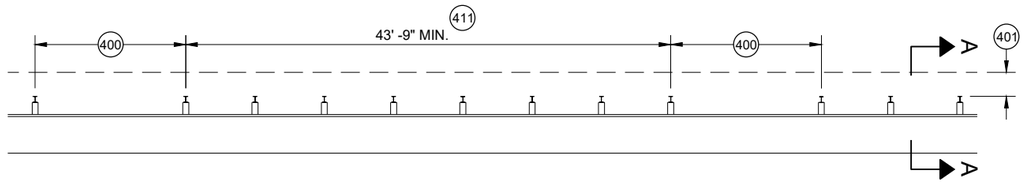

MISSING POST IN MGS GUARDRAIL

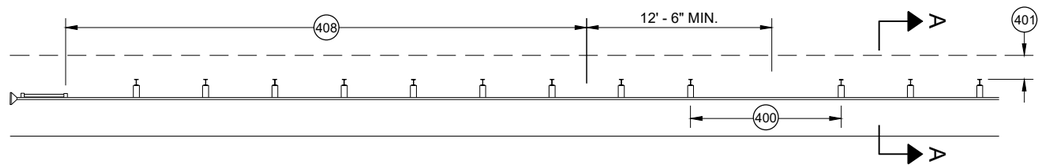

MISSING POST IN MGS GUARDRAIL NEAR EAT

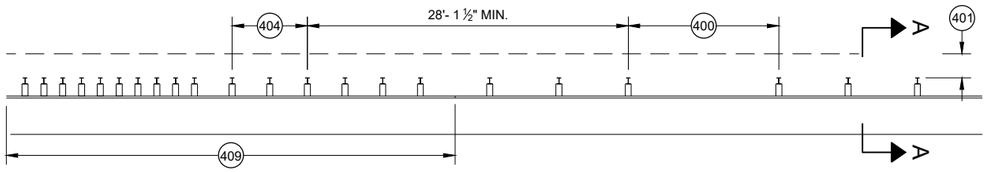

MISSING POST IN MGS GUARDRAIL NEAR AN APPROACH TRANSITION

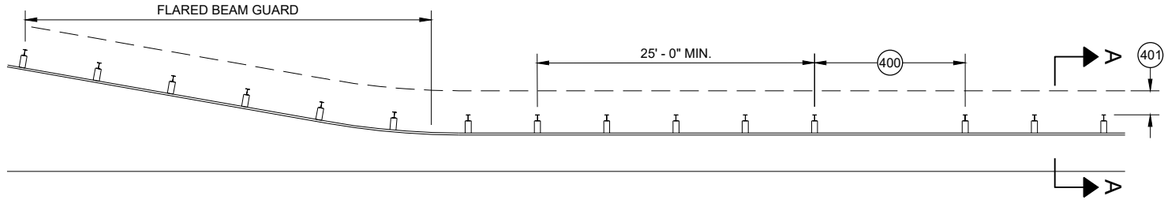

MISSING POST IN MGS GUARDRAIL NEAR FLARED BEAM GUARD

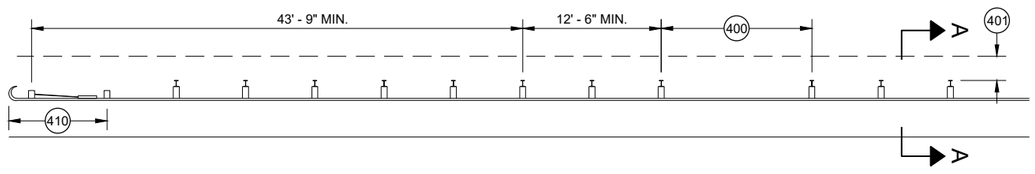

MISSING POST IN MGS GUARDRAIL NEAR A TYPE 2 END TERMINAL

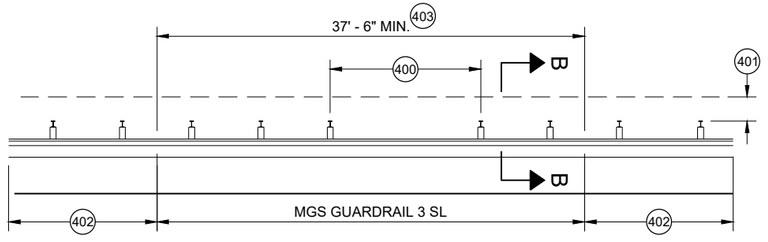

MISSING POST IN SHORT SPAN MGS GUARDRAIL NEAR CURB (SL) 407

(400) MAX SPAN 12' - 6"
(401) 2' MIN.
(402) MGS GUARDRAIL 3
(403) NESTING BEAM GUARD
(404) ASYMMETRIC TRANSITION
(405) SOIL WELL DRAINED AND COMPACTED
(406) SEE OTHER DRAWINGS IN THIS SDD
(407) SEE OTHER DRAWINGS FOR MIN. SPACING BETWEEN SPANS
(408) SEE SDD 14B44
(409) SEE SDD 14B45
(410) SEE SDD 14B47
(411) MINIMUM DISTANCE BETWEEN MISSING POST SPANS.

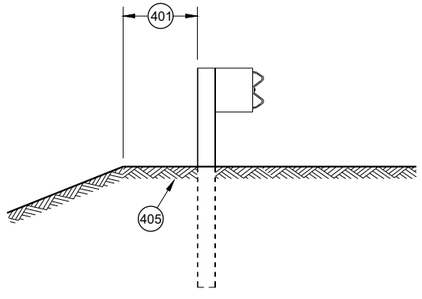

SECTION A - A 406

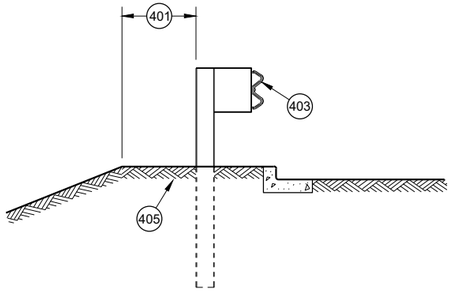

SECTION B - B 406

MIDWEST GUARDRAIL SYSTEM (MGS) GUARDRAIL

STATE OF WISCONSIN
DEPARTMENT OF TRANSPORTATION

APPROVED
May 2021
DATE
/S/ Rodney Taylor
ROADWAY STANDARDS DEVE
UNIT SUPERVISOR

FHWA

6

SDD 14B42 - 07d

6

SDD 14B42 - 07d

GENERAL NOTES

POSTS 1 THROUGH 3 ARE CRT POSTS.
ALL OTHER POSTS SHALL BE WOOD OR STEEL.

SEE SDD 14 B 42 FOR MORE DETAILS.

(A) FLARE FOR MGS EAT SHOWN. IF INSTALLING MGS NO FLARE NEEDED.

(B) VALUES SHOWN ON DRAWING REPRESENT THE MAXIMUM LENGTH. SHORTER DIMENSIONS ARE POSSIBLE. SEE OTHER SECTION OF PLAN FOR MORE INFORMATION.

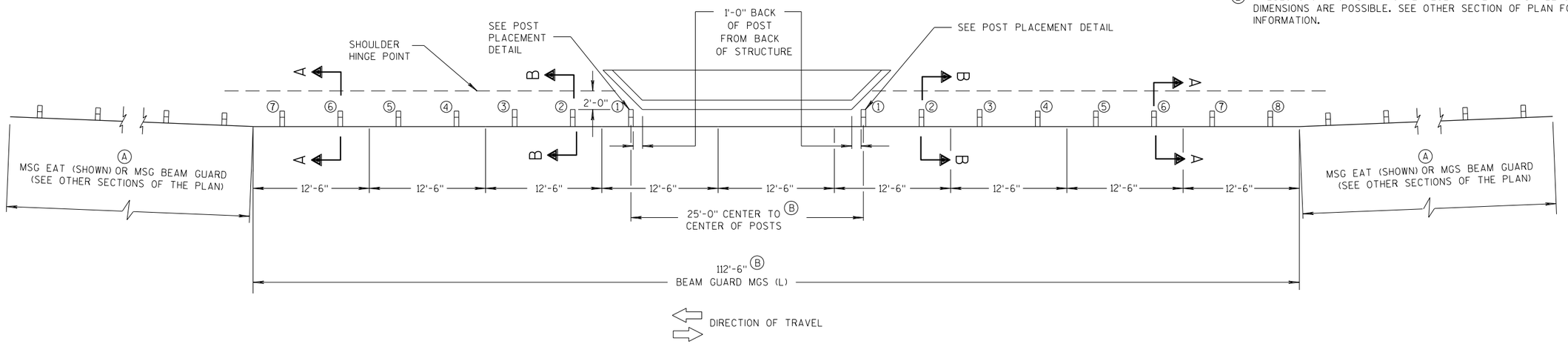

PLAN VIEW

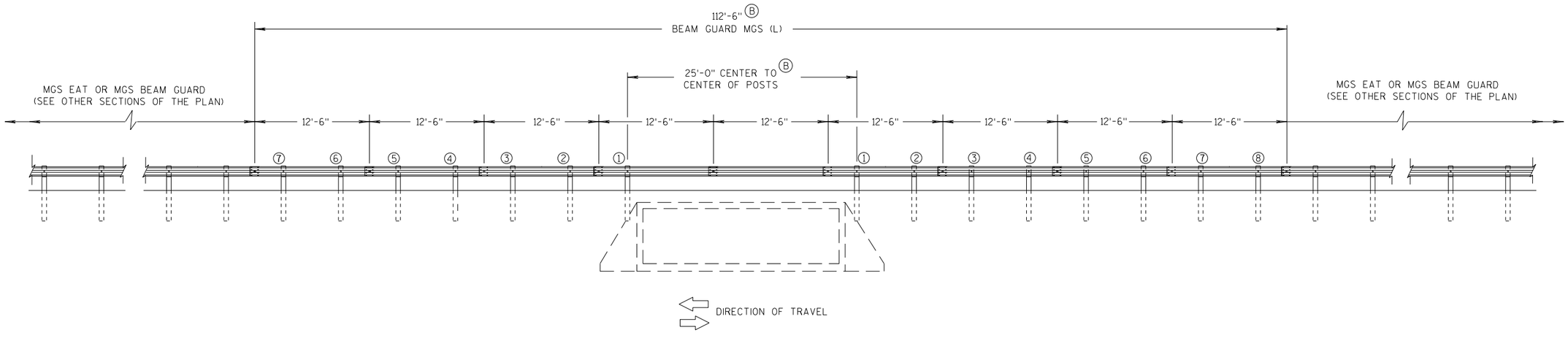

ELEVATION VIEW

MIDWEST GUARDRAIL SYSTEM LONG SPAN MGS (L) TWO-WAY TRAFFIC

MIDWEST GUARDRAIL SYSTEM LONG SPAN MGS (L)

STATE OF WISCONSIN
DEPARTMENT OF TRANSPORTATION

6

S.D.D. 14 B 43-4a

GENERAL NOTES

POSTS 1 THROUGH 3 ARE CRT POSTS.
ALL OTHER POSTS SHALL BE WOOD OR STEEL.

SEE SDD 14 B 42 FOR MORE DETAILS.

(A) FLARE FOR MGS EAT SHOWN. IF INSTALLING MGS NO FLARE NEEDED.

(B) VALUES SHOWN ON DRAWING REPRESENT THE MAXIMUM LENGTH. SHORTER DIMENSIONS ARE POSSIBLE. SEE OTHER SECTION OF PLAN FOR MORE INFORMATION.

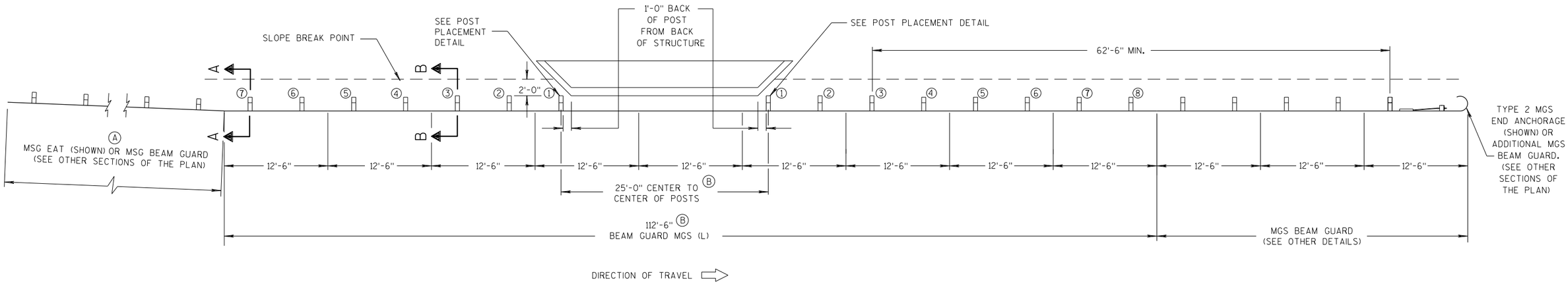

PLAN VIEW

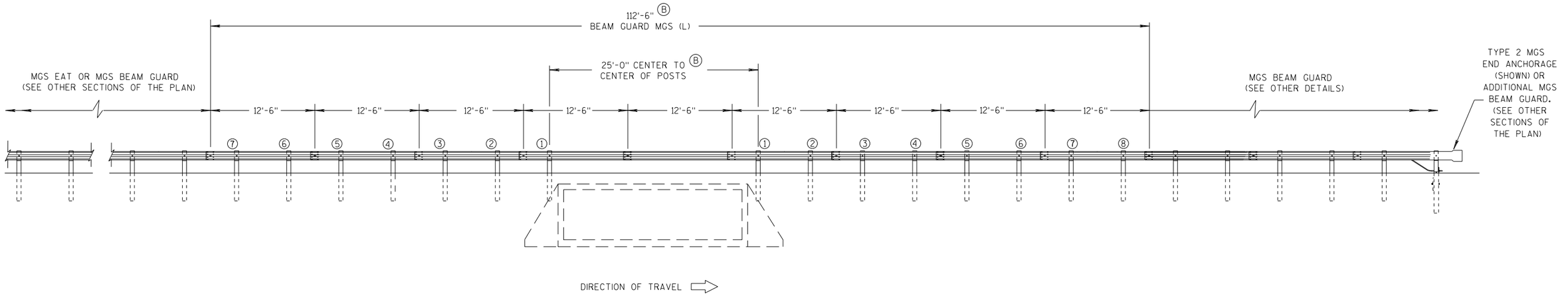

ELEVATION VIEW

MIDWEST GUARDRAIL SYSTEM LONG SPAN MGS (L) ONE-WAY TRAFFIC

MIDWEST GUARDRAIL SYSTEM LONG SPAN MGS (L)	
STATE OF WISCONSIN DEPARTMENT OF TRANSPORTATION	281

6

S.D.D. 14 B 43-4b

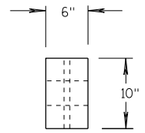

PLAN VIEW

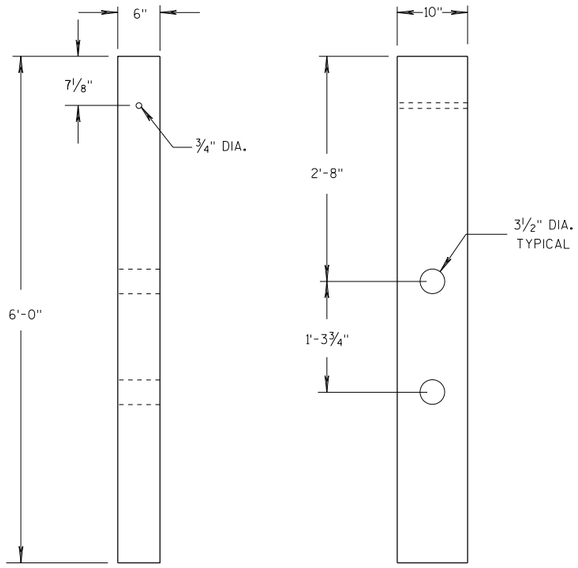

FRONT VIEW SIDE VIEW

CRT WOOD POST

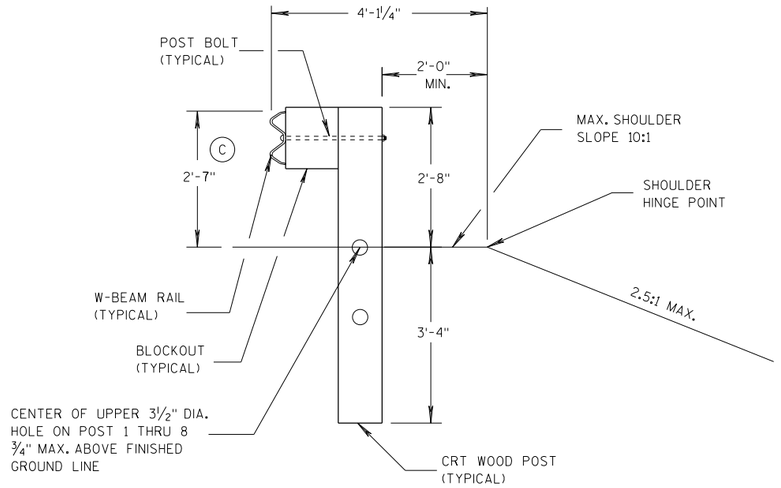

SECTION B-B

POSTS NO. 1-3

SEE OTHER DETAILS

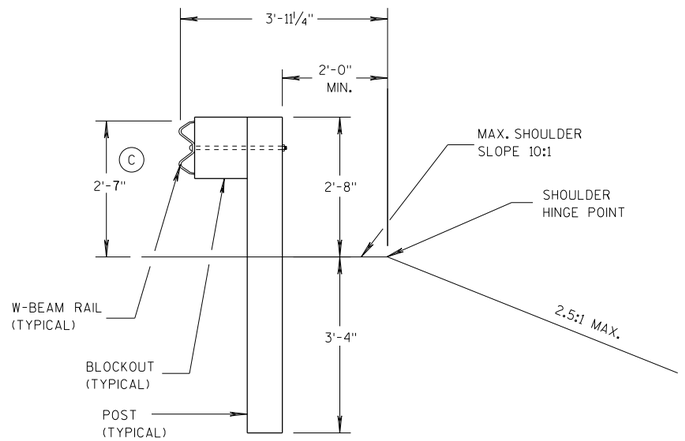

SECTION A-A

POSTS NO. 4-8

SEE OTHER DETAILS

GENERAL NOTES

(C) TOLERANCE FOR TOP OF W-BEAM RAIL IS ± 1".

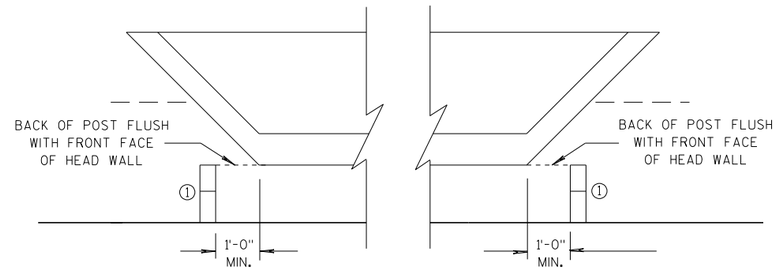

POST PLACEMENT DETAIL

MIDWEST GUARDRAIL SYSTEM
LONG SPAN MGS (L)

STATE OF WISCONSIN
DEPARTMENT OF TRANSPORTATION

APPROVED
07/2018
DATE
FHWA

/S/ Rodney Taylor
ROADWAY STANDARDS DEVELOPMENT ENGINEER

282

NT

6

S.D.D. 14 B 43-4c

6

S.D.D. 14 B 43-4c

GENERAL NOTES

(A) THE SLOPE IN THE AREA BOUNDED BY THE GRADELINE, THE HINGE POINT LINE (HPL) AND THE CLEAR ZONE LIMITS (CZL) SHALL BE 4:1 OR FLATTER.

(B) AFTER FINAL ASSEMBLY, RECHECK CABLE TO BE SURE IT IS TAUT AND HAS NOT RELAXED

(C) DIFFERENT MANUFACTURERS REQUIRE DIFFERENT PERFORATED W - BEAM RAIL END PANELS. SEE MANUFACTURER'S INFORMATION.

(D) ATTACH ALUMINUM SHEET TO E.A.T. HEAD USING 4 STAINLESS STEEL SELF - TAPPING SCREWS. ONE SCREW PER CORNER.

(E) HARDWARE MAY VARY BETWEEN MANUFACTURER. SEE MANUFACTURER'S DRAWING FOR INFORMATION.

DIMENSIONS MAY VARY, MANUFACTURER'S INFORMATION.

SEE SDD 14B42 FOR MORE INFORMATION.

* DO NOT ATTACH BLOCKOUTS TO POST 1 AND 2.

DO NOT INSTALL REFLECTORS ON THE FIRST 50 FEET OF THE APPROACH END OF THE ENERGY ABSORBING TERMINAL.

SEE MANUFACTURER'S DRAWING FOR SPLICE LOCATION, HARDWARE DIMENSIONS AND INSTALLATION INSTRUCTIONS.

THE CENTER OF THE UPPER 3 ½" DIAMETER HOLE ON POST NUMBER 3 THROUGH POST 9 IS TO BE FLUSH WITH THE GROUND LINE UP TO A MAXIMUM OF 2" ABOVE GROUND LINE. WOOD BLOCKS ON POSTS NUMBERED 3 THROUGH 9 MAY BE ADJUSTED UP TO 3" ABOVE THE TOP OF POST.

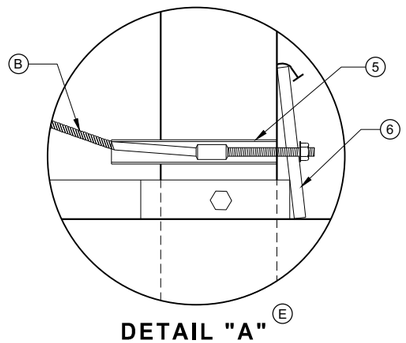

DETAIL "A" (E)

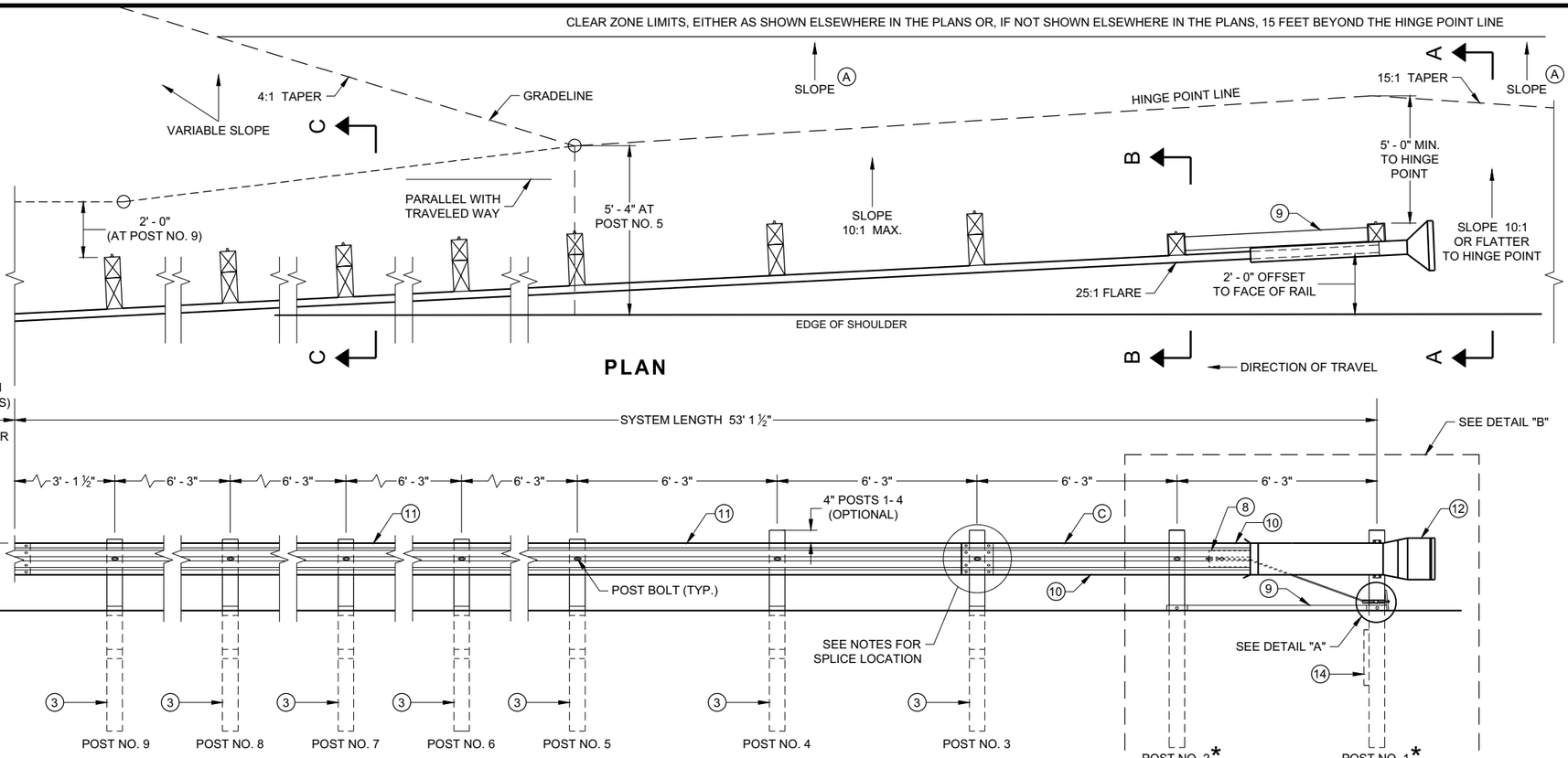

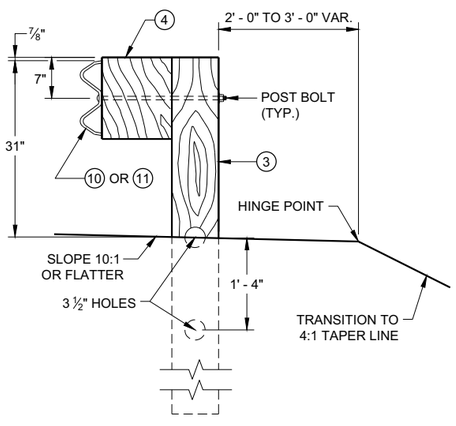

SECTION C - C
TYPICAL AT POST NOS. 3 - 9

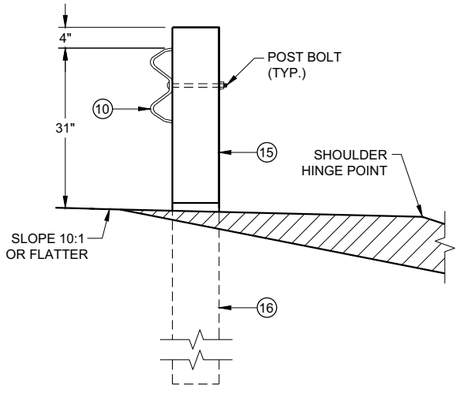

SECTION B - B
TYPICAL AT POST NO. 2*

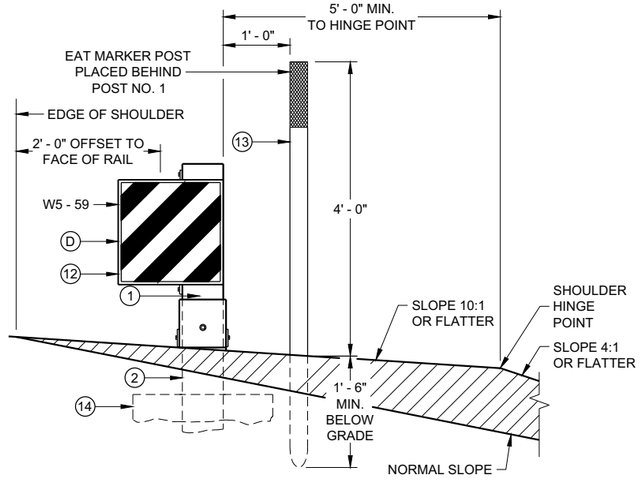

SECTION A - A
TYPICAL AT POST NO. 1*

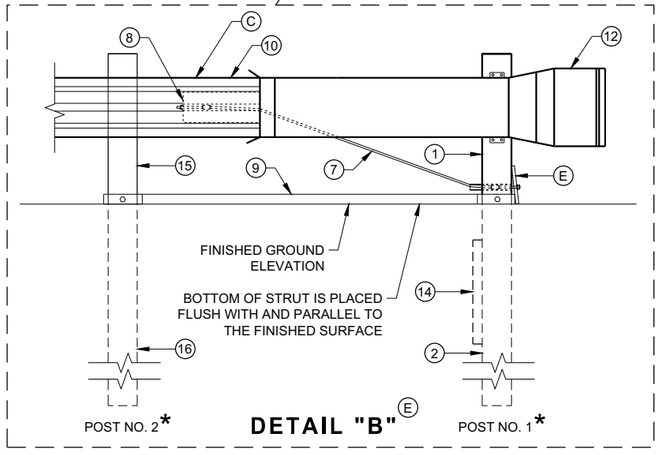

MIDWEST GUARDRAIL SYSTEM
ENERGY ABSORBING TERMINAL (MGS)

STATE OF WISCONSIN
DEPARTMENT OF TRANSPORTATION

SDD 14B44 - 04a

6

SDD 14B44 - 04a

6

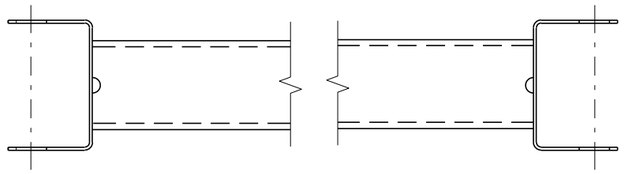

GENERIC GROUND STRUT ⑨ Ⓔ

BILL OF MATERIALS

PART NO.	DESCRIPTION MATERIALS PROVIDED BY MGS EAT MANUFACTURER. SEE MANUGACTURER'S DETAILS FOR MORE INFORMATION.
①	UPPER POST NO. 1 6" X 6" TUBE
②	LOWER POST NO. 1
③	WOOD CRT
④	WOOD BLOCKOUT
⑤	PIPE SLEEVE
⑥	BEARING PLATE
⑦	BCT CABLE ASSEMBLY
⑧	ANCHOR CABLE BOX
⑨	GROUND STRUT
⑩	PERFORATED W-BEAM RAIL END PANEL, 12'-6" LONG.
⑪	STANDARD W-BEAM RAIL. MULTIPLE SECTIONS REQUIRED. SECTIONS VARY IN LENGTH.
⑫	IMPACT HEAD
⑬	EAT MARKER POST - YELLOW (SEE APPROVED PRODUCTS LIST)
⑭	SOIL PLATE
⑮	UPPER POST NO. 2
⑯	LOWER POST NO. 2

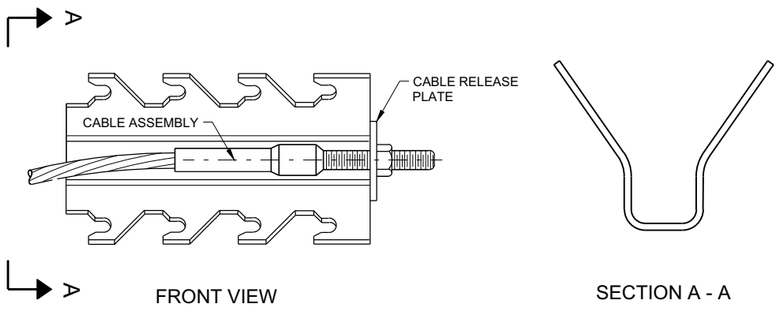

GENERIC ANCHOR CABLE BOX ⑧ Ⓔ

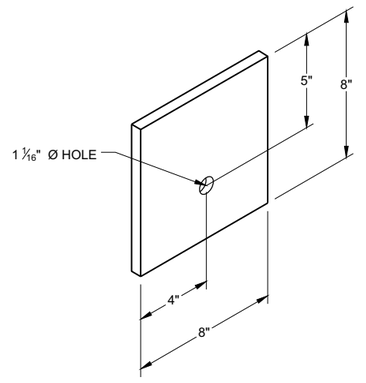

BEARING PLATE ⑥ Ⓔ

6

6

SDD 14B44 - 04b

SDD 14B44 - 04b

MIDWEST GUARDRAIL SYSTEM
ENERGY ABSORBING TERMINAL
(MGS)

STATE OF WISCONSIN
DEPARTMENT OF TRANSPORTATION

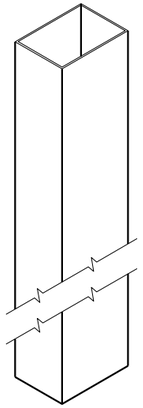

UPPER POST NO. 1 (1) (E)

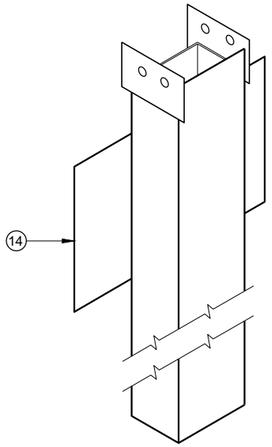

LOWER POST NO. 1 (2) (E)

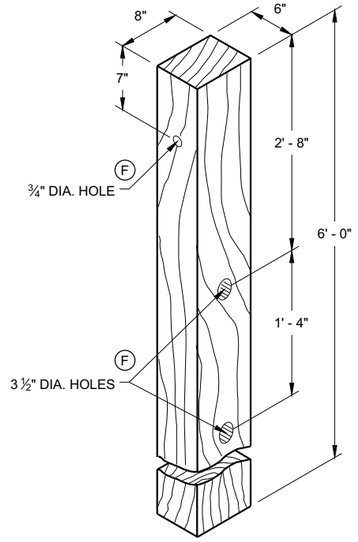

WOOD CRT POST (3) (E)
POSTS NUMBER 3-9

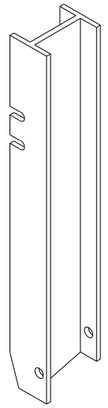

UPPER POST NO. 2 (15) (E)

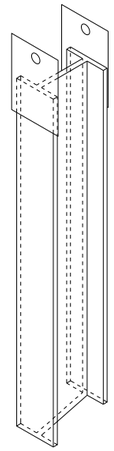

LOWER POST NO. 2 (16) (E)

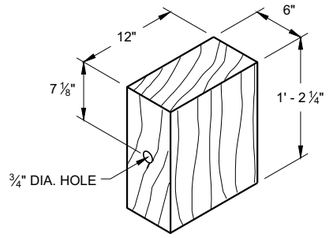

WOOD BLOCKOUT (4)
REQ'D. AT ALL POSTS EXCEPT POST NO'S 1 & 2

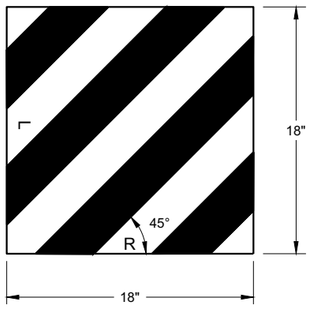

W5 - 59

REFLECTIVE SHEETING DETAIL (E)

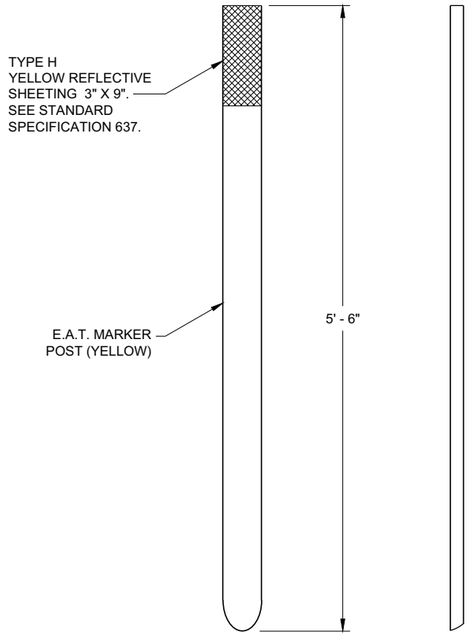

FRONT VIEW SIDE VIEW

E.A.T. MARKER POST (13)

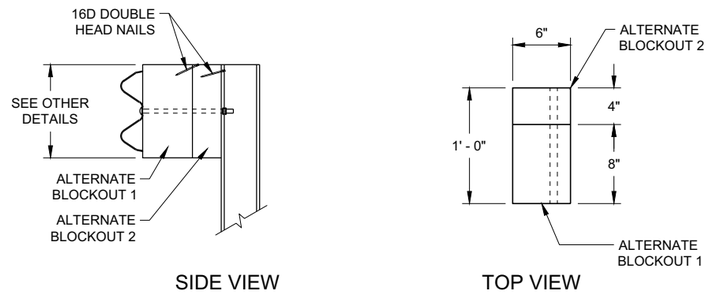

SIDE VIEW TOP VIEW

ALTERNATE WOOD BLOCKOUT DETAIL

MIDWEST GUARDRAIL SYSTEM ENERGY ABSORBING TERMINAL (MGS)

STATE OF WISCONSIN
DEPARTMENT OF TRANSPORTATION

APPROVED
7/2018 — DATE
/S/ Rodney Taylor — ROADWAY STANDARDS DEVE UNIT SUPERVISOR

FHWA

6

SDD 14B44 - 04c

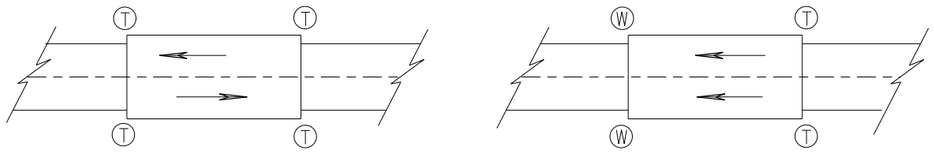

TWO WAY TRAFFIC

ONE WAY TRAFFIC

(T) THRIE BEAM CONNECTION

(W) W-BEAM CONNECTION WHEN REQUIRED

TYPICAL LOCATIONS OF THRIE BEAM AND W-BEAM CONNECTIONS TO BRIDGE

GENERAL NOTES

IF ROCK IS ENCOUNTERED, REMOVE ROCK TO FULL DEPTH OF POST PLUS 2½", AND 12" DIAMETER AROUND POST. SEE 14B42 FOR MORE DETAILS.

TRANSITION USES STEEL POSTS ONLY.

SEE STANDARD DETAIL DRAWING 14 B 42 FOR MORE INFORMATION.

POST 2 THROUGH 17 USES STEEL POST ONLY

(1) BRIDGE RAILING TYPE "W" DOES NOT REQUIRE A TERMINAL CONNECTOR.

(2) OPTIONAL CURB AND GUTTER OR DRAINAGE FEATURE SEE PLAN FOR INFORMATION.

(13) STEEL OR WOOD POST IS ACCEPTABLE AT POST 1. SEE SDD14B42

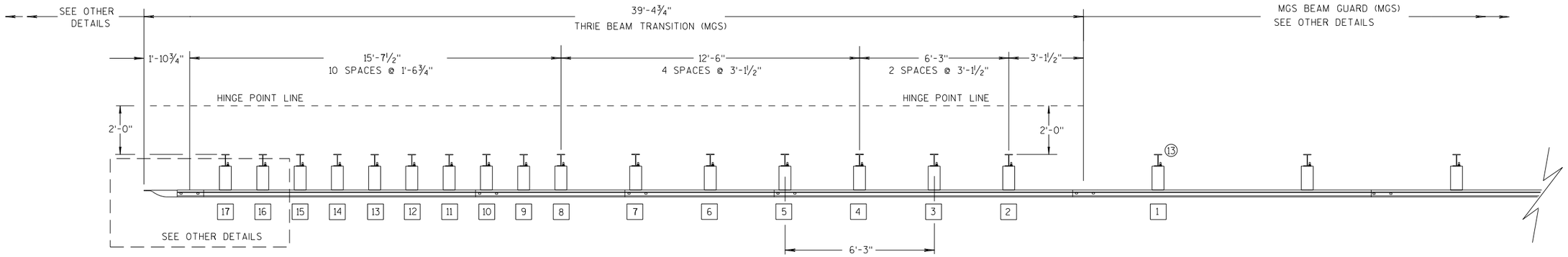

PLAN VIEW

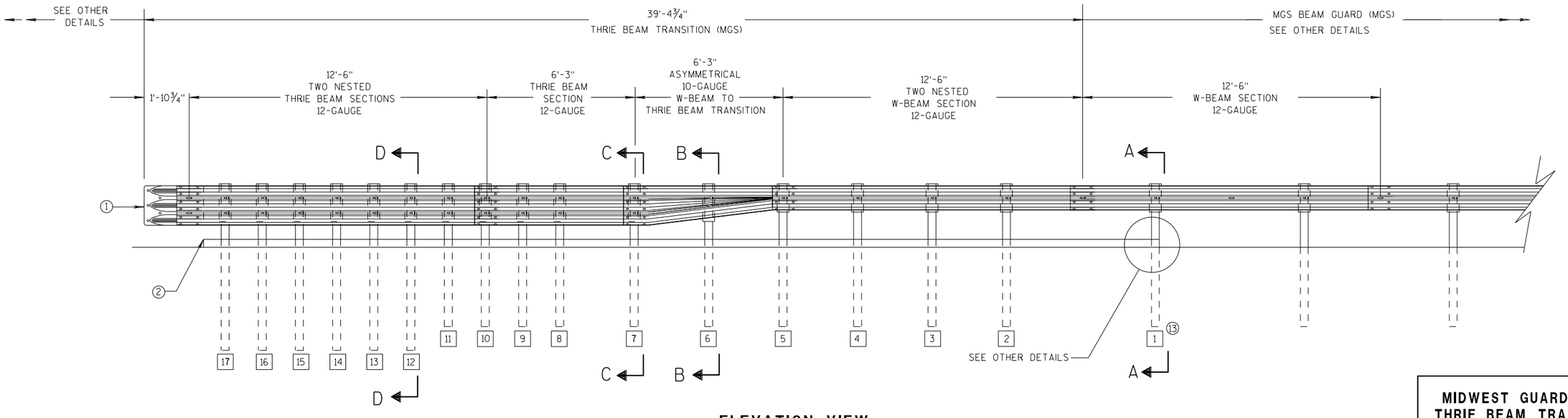

ELEVATION VIEW

MIDWEST GUARDRAIL SYSTEM THRIE BEAM TRANSITION

MIDWEST GUARDRAIL SYSTEM
THRIE BEAM TRANSITION (MGS)

STATE OF WISCONSIN
DEPARTMENT OF TRANSPOR

6

S.D.D. 14 B 45-5a

GENERAL NOTES

(2) OPTIONAL CURB AND GUTTER OR DRAINAGE FEATURE SEE PLAN FOR INFORMATION.

(3) WHEN USING STEEL POSTS AND WOOD BLOCKOUTS INSTALL FOUR 10D GALVANIZED NAILS. INSTALL NAILS AT THE BACK CORNERS OF THE BLOCK AND BEND THE NAILS OVER THE FLANGE OF THE STEEL POST.

(4) TOLERANCE FOR TOP OF W-BEAM RAIL IS ± 1".

(13) STEEL OR WOOD POST IS ACCEPTABLE AT POST 1. SEE SDD 14B42

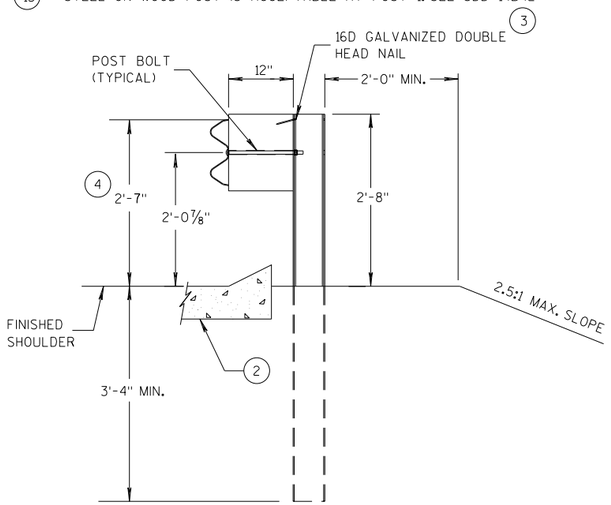

SECTION A-A (13)

POSTS 1-5

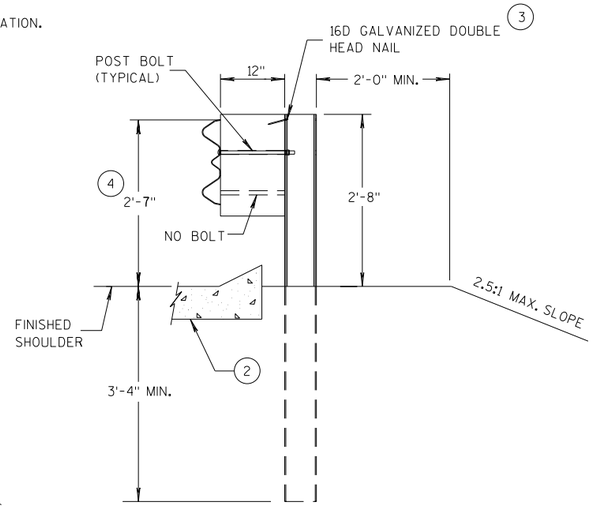

SECTION B-B

POST 6

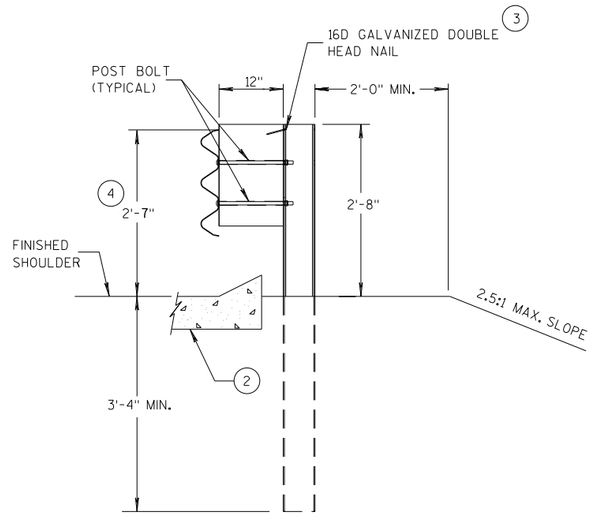

SECTION C-C

POSTS 7-11

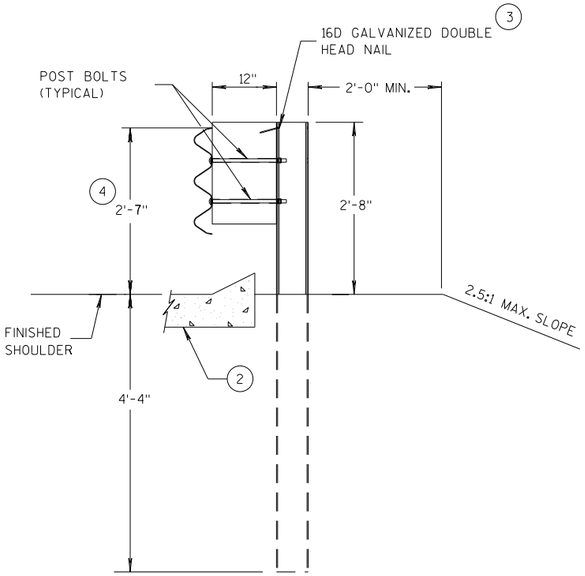

SECTION D-D

POSTS 12-17

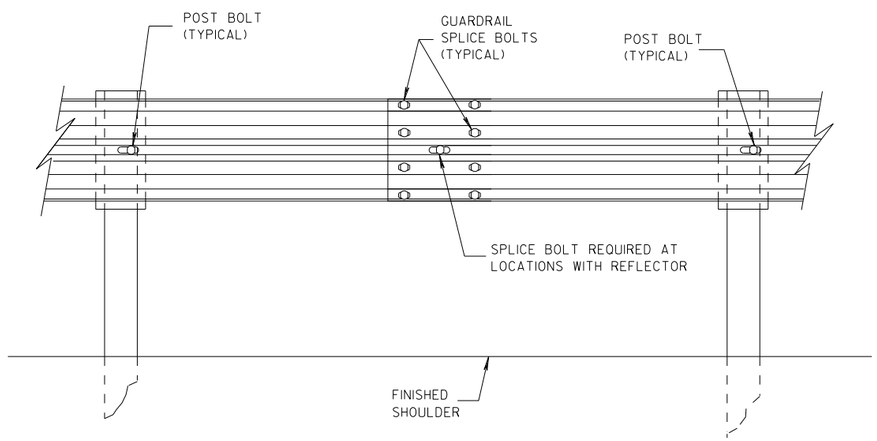

SPLICE DETAIL

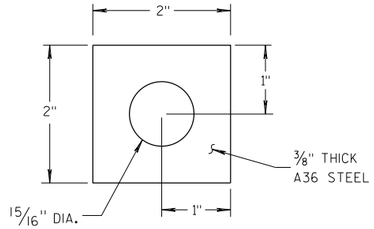

PLATE WASHER DETAIL

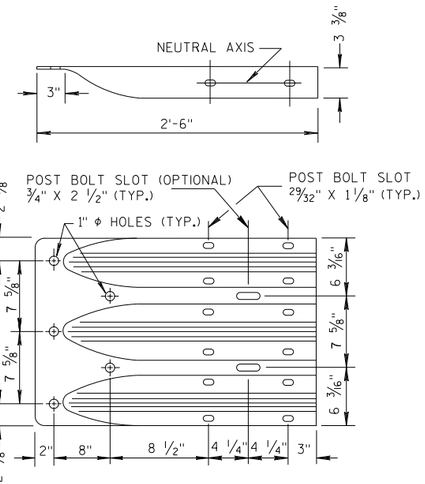

THRIE BEAM TERMINAL CONNECTOR

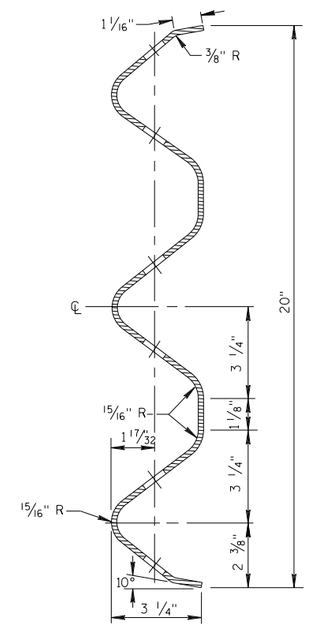

SECTION THRU THRIE BEAM RAIL ELEMENT

MIDWEST GUARDRAIL SYSTEM
THRIE BEAM TRANSITION (MGS)

STATE OF WISCONSIN
DEPARTMENT OF TRANSPOR 287

6

S.D.D. 14 B 45-5b

6

S.D.D. 14 B 45-5b

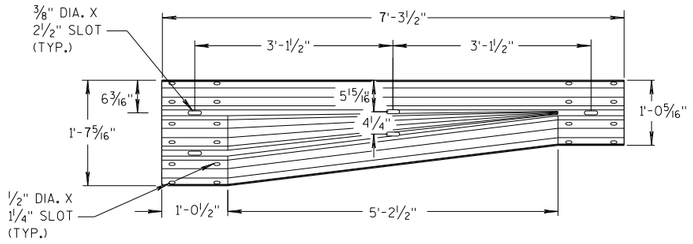

W-BEAM TO THRIE BEAM TRANSITION SECTION

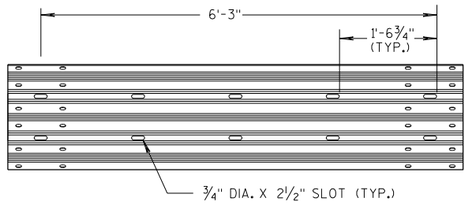

6'-3" THRIE BEAM SECTION

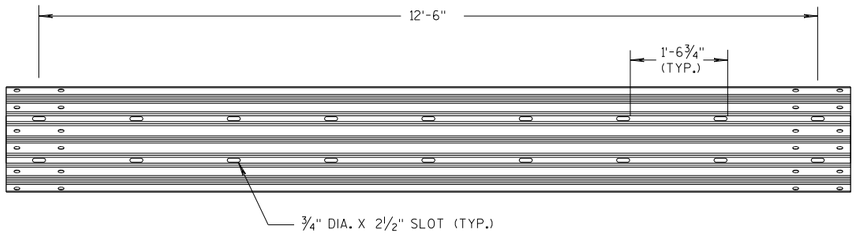

12'-6" THRIE BEAM SECTION

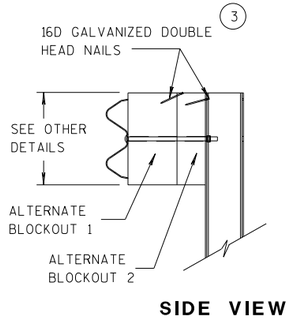

SIDE VIEW

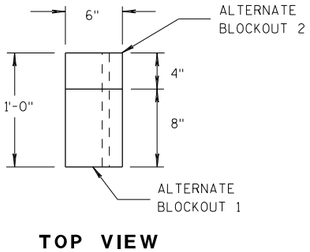

TOP VIEW

ALTERNATE WOOD BLOCKOUT DETAIL

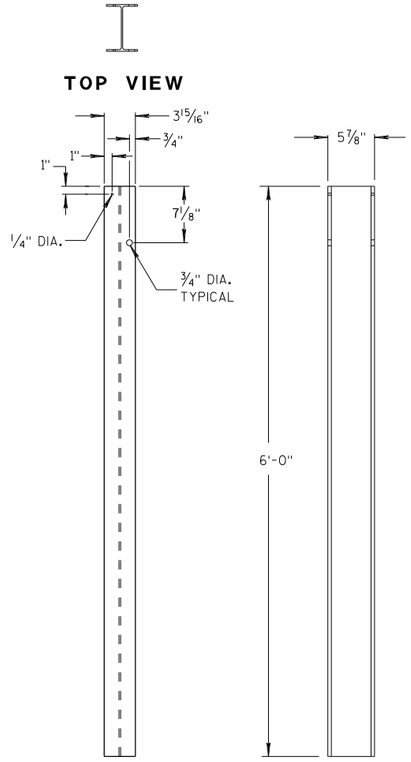

FRONT VIEW SIDE VIEW

STEEL POSTS 1-5 (13)

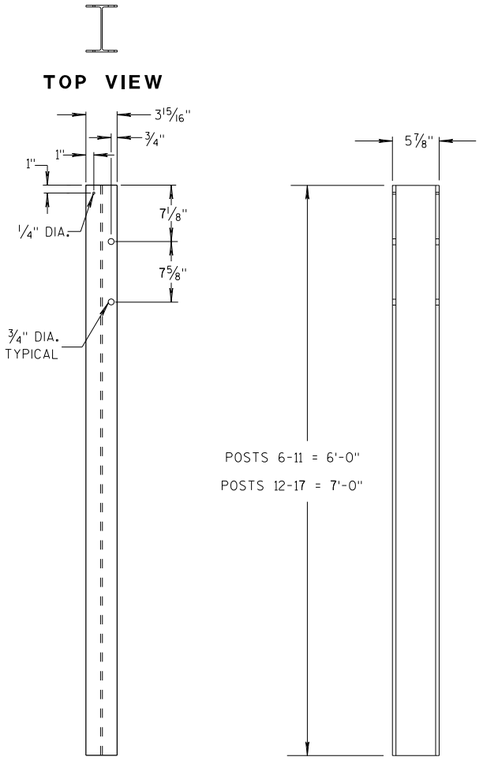

FRONT VIEW SIDE VIEW

STEEL POSTS 6-17

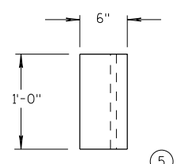

TOP VIEW (5)

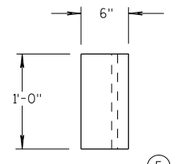

TOP VIEW (5)

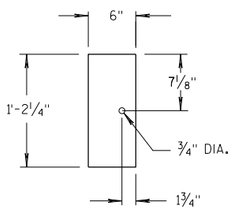

FRONT VIEW

BLOCKOUT POSTS 1-5

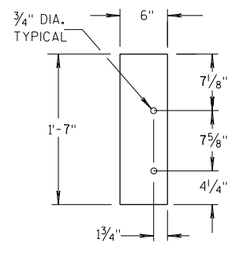

FRONT VIEW

BLOCKOUT POSTS 6-17

GENERAL NOTES

STEEL POSTS ARE W6X9 OR W6X8.5.

BOLT HOLES FOR POST ARE ON FRONT AND OF SIDE OF POST.

(3) WHEN USING STEEL POSTS AND WOOD BLOCKOUTS INSTALL FOUR 16D GALVANIZED NAILS. INSTALL NAILS AT THE BACK CORNERS OF THE BLOCK AND BEND THE NAILS OVER THE FLANGE OF THE STEEL POST.

(5) WOOD BLOCKS MAY BE CONSTRUCTED OUT OF 2 WOOD BLOCKS. SEE ALTERNATE WOOD BLOCK DETAIL.

(13) STEEL OR WOOD POST IS ACCEPTABLE AT POST 1. SEE SDD 14B42.

MIDWEST GUARDRAIL SYSTEM
THRIE BEAM TRANSITION (MGS)

STATE OF WISCONSIN
DEPARTMENT OF TRANSPOR 288

6

S.D.D. 14 B 45-5c

6

S.D.D. 14 B 45-5c

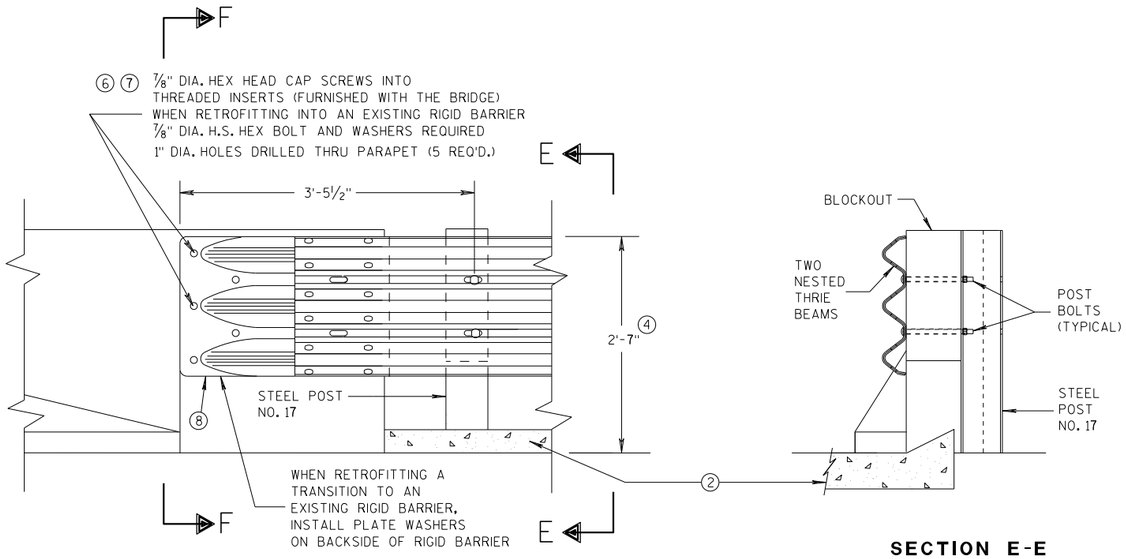

FRONT VIEW

SECTION E-E

THRIE BEAM CONNECTION TO BRIDGE PARAPET WITH SQUARE ENDS

GENERAL NOTES

THESE ARE TYPICAL CONNECTION DETAILS. ADJUST THE POSTION OF CONNECTIONS TO EXISTING BRIDGES TO FIT THE ACTUAL BRIDGE AND SITE DIMENSIONS.

② OPTIONAL CURB AND GUTTER OR DRAINAGE FEATURE SEE PLAN FOR INFORMATION.

④ TOLERANCE FOR TOP OF BEAM IS ± 1".

⑥ DRILLING BOLT HOLES THROUGH THE PARAPET, BOLTS, NUTS, WASHERS AND REPAIRING DAMAGED CONCRETE ARE INCIDENTAL TO THE CONTRACT.

⑦ BOLTS MAY BE A325 BOLTS OR A449 BOLTS. BOLT LENGTH AND THREADING LENGTH ARE TO ALLOW FOR A TIGHT CONNECTION BETWEEN RIGID BARRIER AND THRIE BEAM CONNECTION PLATE. CONTRACTOR IS TO FIELD VERIFY BOLT LENGTH AND THREAD LENGTH. ONE ROUND WASHER REQUIRED BETWEEN BOLT HEAD AND THRIE BEAM CONNECTOR PLATE. BOLTS THAT EXTEND THROUGH THE PARAPET AND OUT THE BACK FACE REQUIRE A HARDENED ROUND STEEL WASHER THAT IS 2" O.D. X 5/32" THICK AND ONE PLATE WASHER. REPAIR ANY DAMAGED CONCRETE FROM BOLT INSTALLATION.

⑧ THE RECESS FOR A W-BEAM CONNECTION, WHICH EXISTS ON SOME PARAPETS OF THIS TYPE, SHALL BE FILLED WITH A TREATED TIMBER BLOCKOUT. BLOCKOUT SIZE IS 1'-6" X 2'-0" X 3 1/2".

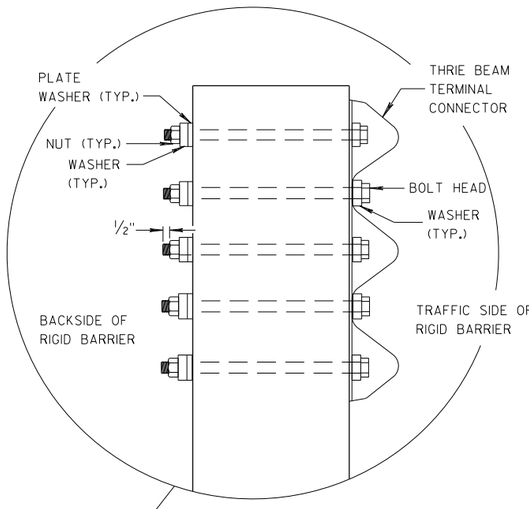

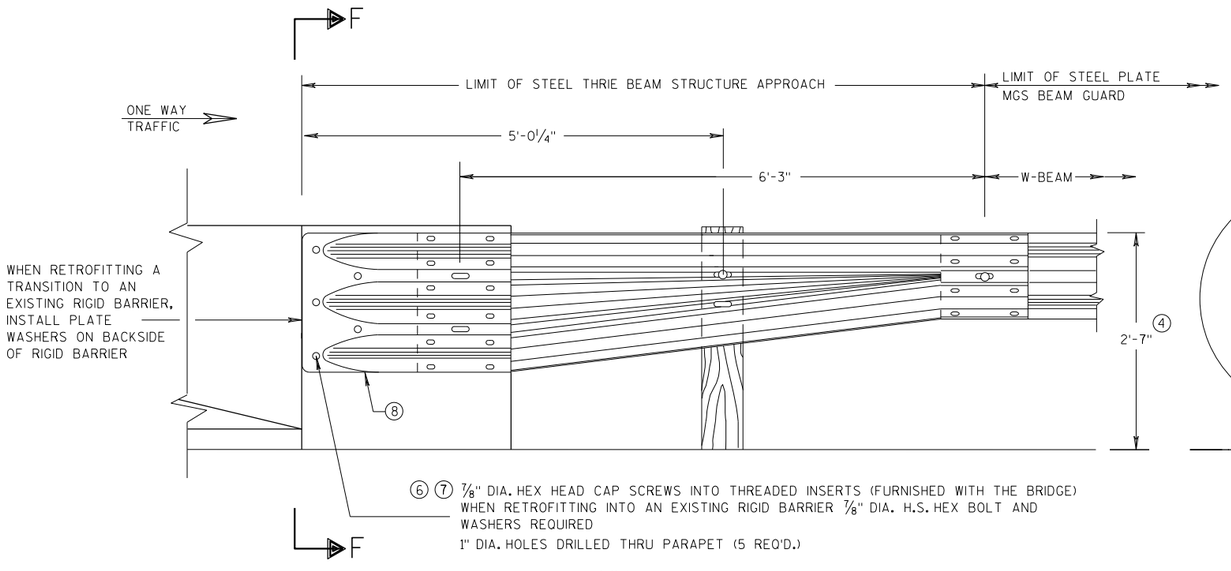

FRONT VIEW

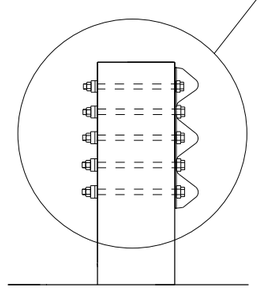

SECTION F-F

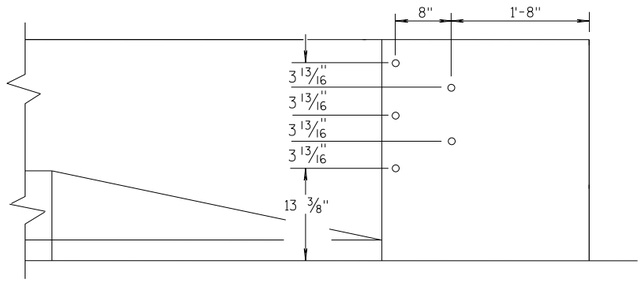

DRILL HOLE LOCATION

W BEAM TRANSITION AND CONNECTION TO BRIDGE PARAPETS WITH SQUARE ENDS

(USE ONLY ON THE TRAFFIC EXIT END OF ONE WAY BRIDGES)

MIDWEST GUARDRAIL SYSTEM
THRIE BEAM TRANSITION (MGS)

STATE OF WISCONSIN
DEPARTMENT OF TRANSPORTATION

APPROVED
07/2018 DATE
/S/ Rodney Taylor
ROADWAY STANDARDS D UNIT SUPERVI NT
FHWA

6

S.D.D. 14 B 45-5d

6

S.D.D. 14 B 45-5d

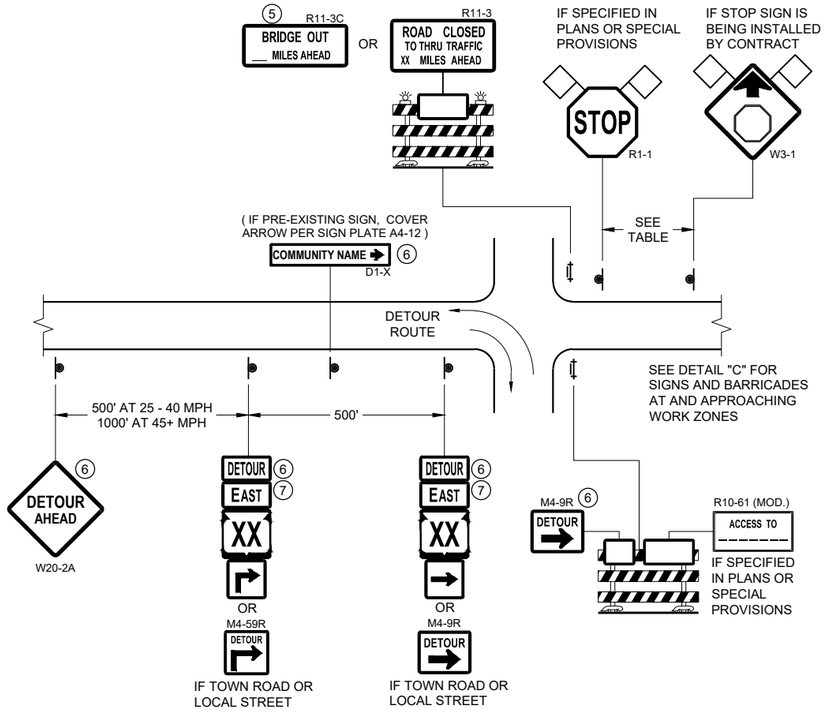

DETAIL A
MAINLINE CLOSURE WITH POSTED DETOUR

WORK ZONE GREATER THAN OR EQUAL TO ½ MILE FROM DETOUR ROUTE (1000 FEET IF URBAN)

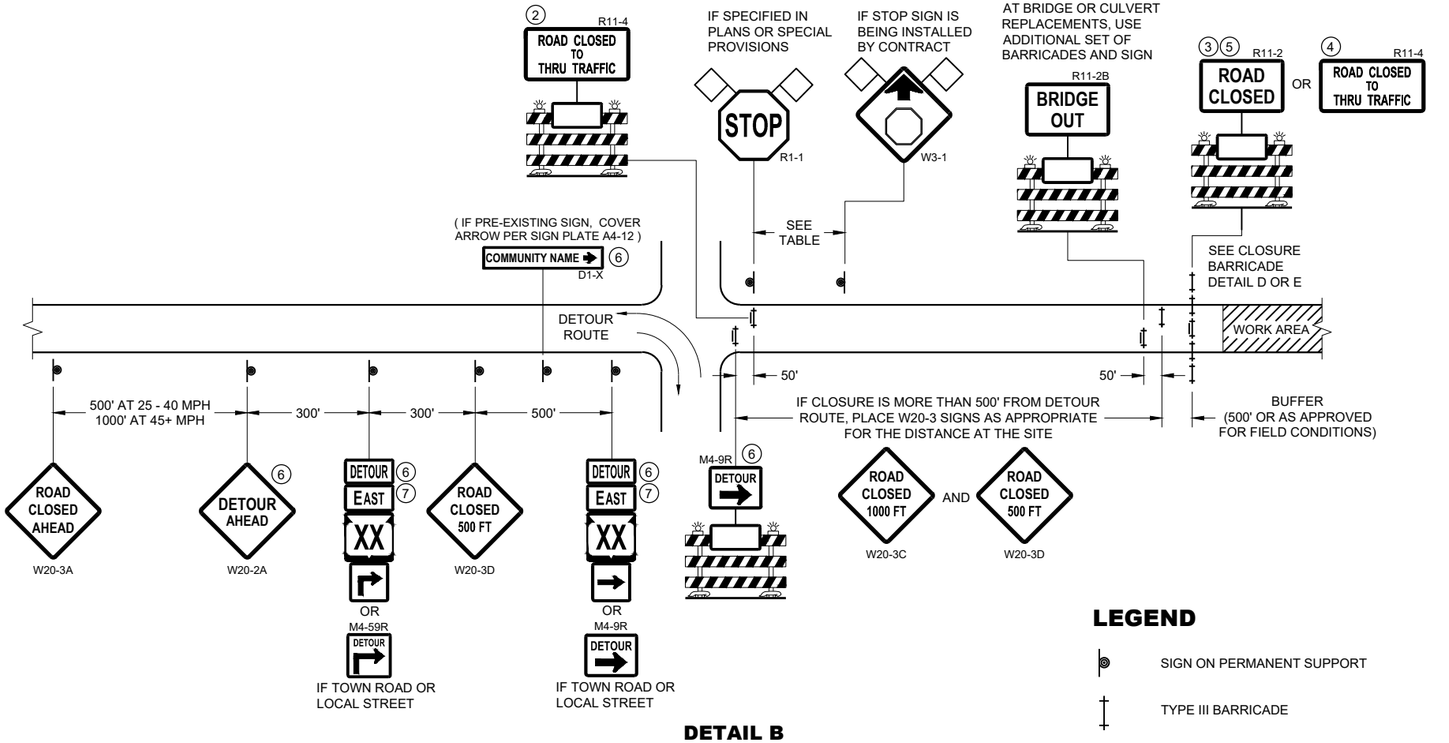

DETAIL B
MAINLINE CLOSURE WITH POSTED DETOUR

WORK ZONE LESS THAN ½ MILE FROM DETOUR ROUTE (1000 FEET IF URBAN)

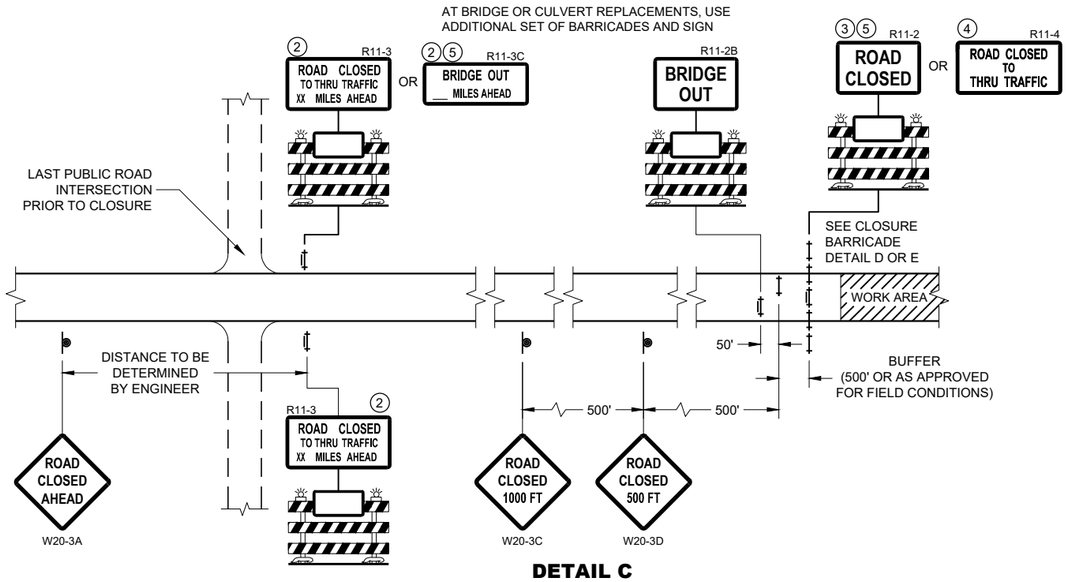

DETAIL C
MAINLINE CLOSURE, NO POSTED DETOUR

SPEED LIMIT (MPH)	"STOP AHEAD" ADVANCE WARNING DISTANCE (FT)
25	200
30	200
35	350
40	350
45	500
50	550
55	750

SEE SDD 15C2-SHEET "b"
FOR GENERAL NOTES
AND FOOTNOTES ① THROUGH ⑦

LEGEND

- SIGN ON PERMANENT SUPPORT
- TYPE III BARRICADE
- TYPE III BARRICADE WITH ATTACHED SIGN
- TYPE "A" WARNING LIGHT (FLASHING)
- WORK AREA
- FLAGS, 16" X 16" MIN. (ORANGE)
- DETOUR — M4 - 8
- EAST — M3 - X
- XX — M1 - 4 OR XX — M1 - 6 OR COUNTY X — M1 - 5A
- M05 - 1 OR M06 - 1

BARRICADES AND SIGNS FOR MAINLINE CLOSURES

STATE OF WISCONSIN
DEPARTMENT OF TRANSPORTATION

APPROVED
February 2020
DATE
/S/ Andrew Heidtke
WORK ZONE ENGINEER

FHWA

6

SDD 15C02 - 08a

SDD 15C02 - 08a

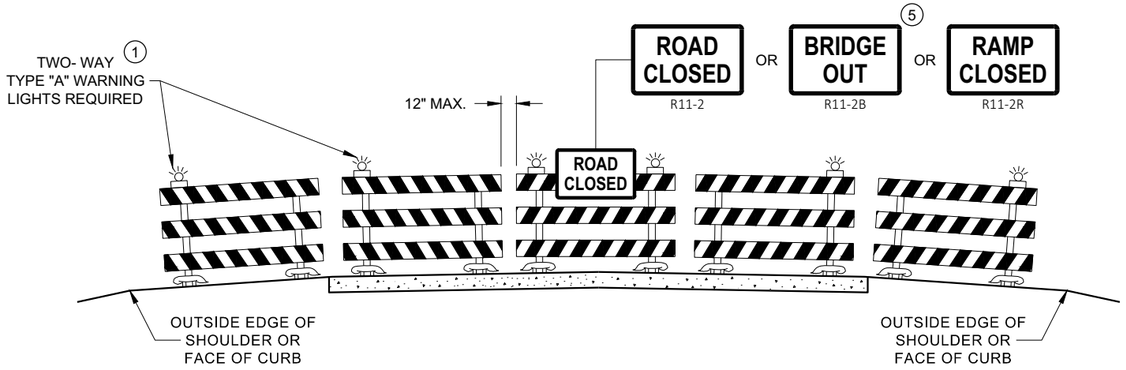

DETAIL D
ROAD CLOSURE BARRICADE DETAIL
APPROACH VIEW

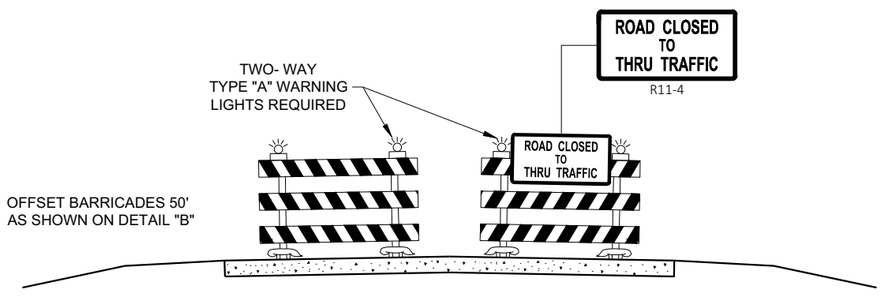

DETAIL E
LANE CLOSURE BARRICADE DETAIL
APPROACH VIEW

SEE SDD 15C2 - SHEET "a" FOR LEGEND

GENERAL NOTES

THE EXACT NUMBER, LOCATION, AND SPACING OF ALL SIGNS AND BARRICADES SHALL BE ADJUSTED TO FIT FIELD CONDITIONS AS APPROVED BY THE ENGINEER.

ANY SIGNS TEMPORARY OR EXISTING, WHICH CONFLICT WITH TRAFFIC CONTROL "IN USE", SHALL BE REMOVED OR COVERED AS NEEDED AND AS APPROVED BY THE ENGINEER.

THE SPACING BETWEEN TRAFFIC CONTROL SIGNS SHOULD BE ADJUSTED TO NOT CONFLICT WITH AND SHOULD PROVIDE A DESIRABLE MINIMUM OF 200 FEET CLEARANCE TO EXISTING SIGNS THAT WILL REMAIN IN PLACE.

BARRICADES THAT MUST BE MOVED FOR A WORK OPERATION SHALL BE IMMEDIATELY RE-ESTABLISHED UPON COMPLETION OF THE OPERATION, OR FOR CONTINUING OPERATIONS, AT THE END OF EACH WORKING DAY.

SIGNS THAT WILL BE IN PLACE LESS THAN 7 CONTINUOUS DAYS AND NIGHTS MAY BE MOUNTED ON PORTABLE SUPPORTS.

ALL TYPE III BARRICADES SHALL HAVE RAILS REFLECTORIZED ON BOTH FACES. STRIPES SHALL BE PROPERLY SLOPED DOWN TOWARD THE TRAFFIC SIDE OR AS SHOWN IN THE ROAD CLOSURE BARRICADE DETAIL "D" FOR FULL ROAD CLOSURES.

TYPE "A" LOW - INTENSITY FLASHING WARNING LIGHTS SHALL BE VISIBLE ON BOTH SIDES OF THE BARRICADE.

THE R11 - 2, R11 - 3, M4 - 9, R11 - 4, AND R10 - 61 SIGNS PLACED ON THE BARRICADES SHALL COVER NO MORE THAN THE TOP RAIL. THE SIGNS SHALL NOT COVER ANY PORTION OF THE MIDDLE RAIL OR BOTTOM RAILS.

"WO" AND "MO" SIGNS ARE THE SAME AS "W" AND "M" SIGNS EXCEPT THE BACKGROUND IS ORANGE.

ALL SIGNS SHALL BE 48" X 48" UNLESS OTHERWISE NOTED BELOW:
- R11 - 2 SHALL BE 48" X 30"
- R11 - 3 SHALL, R11 - 4 AND R10 - 61 SHALL BE 60 " X 30"
- M4 - 9 SHALL BE 30" X 24"
- M3 - X SHALL BE 24" X 12" (36" X 18" IF NEEDED TO MATCH EXISTING SIGNS)
- M4 - 8 SHALL BE 24" X 12" (36" X 18" IF NEEDED TO MATCH EXISTING SIGNS)
- M1 - 4, M1 - 5A AND M1 - 6 SHALL BE 24" X 24" (36" X 36" IF NEEDED TO MATCH EXISTING SIGNS)
- MO5 - 1 AND MO6 - 1 SHALL BE 21" X 21" (30" X 30" IF NEEDED TO MATCH EXISTING SIGNS)
- D1 - X SHALL BE AS SHOWN ON SPECIFIC PROJECT SIGNING DETAIL SHEETS.
- R1 - 1 SHALL BE 36" X 36"

(1) TWO WARNING LIGHTS SHALL BE PROVIDED ON THE CENTER BARRICADE AND A MINIMUM OF ONE WARNING LIGHT SHALL BE PROVIDED ON EACH OF THE OTHER BARRICADES WITHIN THE ROADWAY LIMITS. SPACING OF THE WARNING LIGHTS SHALL BE UNIFORM TO THE EDGE OF ROADWAY AS SHOWN (APPROX. 8 FOOT LIGHT SPACING.

(2) THESE SIGNS AND BARRICADES ARE NOT REQUIRED IF ROAD CLOSURE BEGINS AT AN INTERSECTION.

(3) FOR ROAD CLOSURE WITHOUT LOCAL ACCESS TO PROJECT, SEE ROAD CLOSURE BARRICADE DETAIL "D".

(4) FOR ROAD CLOSURE WITH LOCAL ACCESS TO PROJECT, SEE ROAD CLOSURE BARRICADE DETAIL "E".

(5) FOR BRIDGE OR CULVERT REPLACEMENTS, SUBSTITUTE "BRIDGE OUT" INSTEAD OF "ROAD CLOSED" ON R11 - 2 AND R11 - 3 SIGNS.

(6) INSTALL DETOUR AND COMMUNITY GUIDE SIGNS AND ARROWS ONLY IF SPECIFIED IN THE CONTRACT. IF THERE ARE EXISTING ROUTE MARKER ASSEMBLIES THAT WILL REMAIN IN PLACE, ADJUST THE LOCATION OF THE DETOUR ROUTE SIGNS TO CORRESPOND WITH THE EXISTING ASSEMBLIES. MODIFY EXISTING SIGNS WHERE POSSIBLE. SEE SPECIFIC PROJECT DETOUR SIGNING DETAIL SHEETS. IF DETOUR SIGNS ARE BEING INSTALLED BY OTHERS, PLACE THE CONTRACTED TRAFFIC CONTROL SIGNS TO ALLOW FOR PLACEMENT OF ALL WARNING, DETOUR AND GUIDE SIGNS AS SHOWN.

(7) "EAST" CARDINAL DIRECTION MARKERS AND RIGHT TURN ARROWS ARE SHOWN. USE OTHER CARDINAL DIRECTIONS AND ARROWS AS APPROPRIATE.

BARRICADES AND SIGNS FOR VARIOUS CLOSURES

STATE OF WISCONSIN
DEPARTMENT OF TRANSPORTATION

APPROVED
February 2020
DATE
/S/ Andrew Heidtke
WORK ZONE ENGINEE

FHWA

6

SDD 15C02 - 08b

6

SDD 15C02 - 08b

THIS DRAWING PROVIDES GENERAL GUIDANCE ON TYPICAL DETOUR SIGN LAYOUT AND SPACING. SEE PROJECT DETOUR SIGNING SHEETS FOR SPECIFIC DETAILS FOR EACH PROJECT.

LEGEND

- SIGN ON PERMANENT SUPPORT
- WORK AREA
- DETOUR — M4 - 8
- EAST — M3 - X
- XX — M1 - 4 OR XX — M1 - 6 OR COUNTY X — M1 - 5A
- M05 - 1 OR M06 - 1 OR M06 - 1

GENERAL NOTES

THE EXACT NUMBER, LOCATION AND SPACING OF ALL SIGNS SHALL BE ADJUSTED TO FIT FIELD CONDITIONS AS APPROVED BY THE ENGINEER.

IF THERE ARE EXISTING ROUTE MARKER ASSEMBLIES THAT WILL REMAIN IN PLACE, ADJUST THE LOCATION OF THE DETOUR ROUTE SIGNS TO CORRESPOND WITH THE EXISTING ASSEMBLIES. SEE SPECIFIC PROJECT DETOUR SIGNING DETAIL SHEETS. MODIFY EXISTING SIGNS WHERE POSSIBLE.

THE SPACING BETWEEN TRAFFIC CONTROL AND DETOUR SIGNS SHOULD BE ADJUSTED TO NOT CONFLICT WITH AND TO PROVIDE A DESIRABLE MINIMUM OF 200 FEET CLEARANCE TO EXISTING SIGNS THAT WILL REMAIN IN PLACE.

ANY SIGNS TEMPORARY OR EXISTING, WHICH CONFLICT WITH TRAFFIC CONTROL "IN USE" SHALL BE REMOVED OR COVERED AS NEEDED AND AS APPROVED BY THE ENGINEER.

SIGNS THAT WILL BE IN PLACE LESS THAN 7 CONTINUOUS DAYS AND NIGHTS MAY BE MOUNTED ON PORTABLE SUPPORTS.

"MO" SIGNS ARE THE SAME AS "M" SIGNS EXCEPT THE BACKGROUND IS ORANGE.

SIGN SIZES SHALL BE AS FOLLOWS:

- M3-X SHALL BE 24" X 12" (36" X 18" IF NEEDED TO MATCH EXISTING SIGNS)
- M4-8 SHALL BE 24" X 12" (36" X 18" IF NEEDED TO MATCH EXISTING SIGNS)
- M1-4, M1-5A AND M1-6 SHALL BE 24" X 24" (36" X 36" IF NEEDED TO MATCH EXISTING SIGNS)
- M05-1 AND M06-1 SHALL BE 21" X 21" (30" X 30" IF NEEDED TO MATCH EXISTING SIGNS)
- M4-9 AND M4-59 SHALL BE 30" X 24"
- M4-8a SHALL BE 24" X 18"
- G20-51 SHALL BE 60" X 24"
- W20-2A SHALL BE 48" X 48"
- D1-X SHALL BE AS SHOWN ON SPECIFIC PROJECT SIGNING DETAIL SHEETS.

* OPTIONAL SIGNS. SEE SPECIFIC PROJECT DETOUR SIGNING DETAIL SHEETS.

** FOR A TOWN ROAD OR LOCAL STREET DETOURED ONTO A STATE TRUNK HIGHWAY, PLACE A ROAD NAME PLAQUE ABOVE THE M4-9 SIGN AS SPECIFIED IN THE CONTRACT.

M3-X 24" X 12"
M1-X 24" X 24"
DETOUR AHEAD
W20-2A
USE ON STATE TRUNK, U.S. OR INTERSTATE HIGHWAYS, OR AS SPECIFIED IN THE CONTRACT

500' AT 25-40 MPH
1000' AT 45+ MPH

500'

DETOUR EAST XX *

D1-X COMMUNITY NAME *
(IF PRE-EXISTING SIGN, COVER ARROW PER SIGN PLATE A4-12)

M4-8a END DETOUR WEST XX *

DETOUR EAST XX WEST XX

DETOUR ROUTE

WORK AREA

DETOUR EAST XX

WEST XX OR M4-9L DETOUR ** IF TOWN ROAD OR LOCAL STREET

500'

DETOUR NEXT X MILES * G20-51

DETOUR WEST XX * OR M4-59L DETOUR ** IF TOWN ROAD OR LOCAL STREET

SEE SPECIFIC PROJECT DETOUR SIGNING DETAIL SHEETS AND DETAIL A OR B ON SDD SHEET 15C02 - SHEET "a"

MATCH POINT

* M4-59L DETOUR ** OR DETOUR EAST XX * IF TOWN ROAD OR LOCAL STREET

D1-X COMMUNITY NAME *
(IF PRE-EXISTING SIGN, COVER ARROW PER SIGN PLATE A4-12)

500'

M4-9L DETOUR ** OR DETOUR EAST XX IF TOWN ROAD OR LOCAL STREET

DETOUR WEST XX

DETOUR WEST XX M4-9R DETOUR ** OR IF TOWN ROAD OR LOCAL STREET

DETOUR WEST XX * M4-59R DETOUR ** * OR IF TOWN ROAD OR LOCAL STREET

500'

DETOUR ROUTE

500' AT 25 - 40 MPH
1000' AT 45+ MPH

500'

M3-X 24" X 12"
M1-X 24" X 24"
DETOUR AHEAD
W20-2A
USE ON STATE TRUNK, U.S. OR INTERSTATE HIGHWAYS, OR AS SPECIFIED IN THE CONTRACT

DETOUR EAST XX *

D1-X COMMUNITY NAME *
(IF PRE-EXISTING SIGN, COVER ARROW PER SIGN PLATE A4-12)

DETOUR EAST XX

500'

DETOUR EAST XX

D1-X COMMUNITY NAME *
(IF PRE-EXISTING SIGN, COVER ARROW PER SIGN PLATE A4-12)

DETOUR EAST XX *

PLACE SIGNS BEYOND INTERSECTIONS WITH STATE OR COUNTY TRUNK HIGHWAYS OR AT 4 MILE MAXIMUM SPACING (4 BLOCKS IF URBAN AREA)

500' AT 25 - 40 MPH
1000' AT 45+ MPH

DETOUR EAST XX *

M3-X 24" X 12"
M1-X 24" X 24"
DETOUR AHEAD
W20-2A
USE ON STATE TRUNK, U.S. OR INTERSTATE HIGHWAYS, OR AS SPECIFIED IN THE CONTRACT

DETAIL F
DETOUR SIGNING

DETOUR SIGNING FOR MAINLINE CLOSURES

STATE OF WISCONSIN
DEPARTMENT OF TRANSPORTATION

APPROVED
February 2020
DATE

/S/ Andrew Heidtke
WORK ZONE ENGINEER

FHWA

SDD 15C02 - 08c

6

SDD 15C02 - 08c

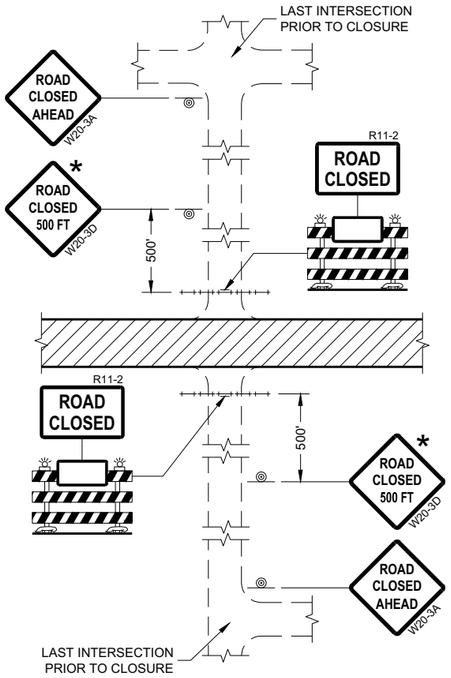

DETAIL 1
(NO ACCESS TO PROJECT)

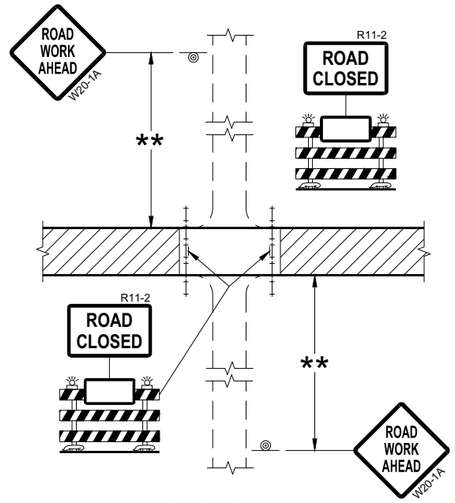

DETAIL 2
(PUBLIC CROSS-TRAFFIC MAINTAINED.
NO ACCESS TO PROJECT)

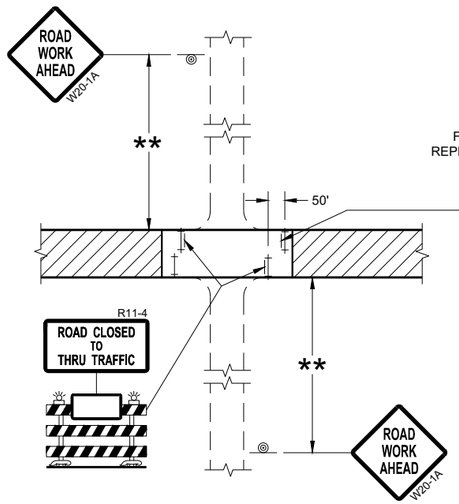

DETAIL 3
(PUBLIC CROSS-TRAFFIC MAINTAINED.
CONTRACTOR, LOCAL BUSINESS AND
RESIDENT ACCESS TO PROJECT)

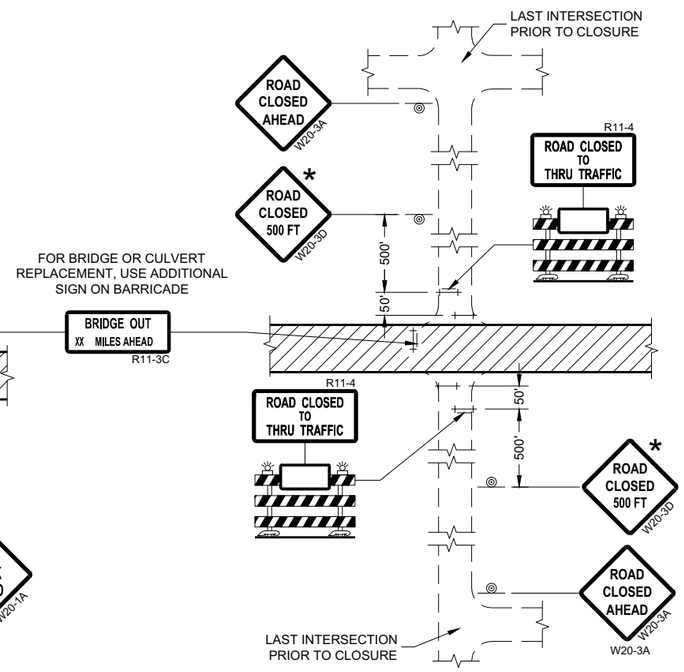

DETAIL 4
(CONTRACTOR, LOCAL BUSINESS AND
RESIDENT ACCESS TO PROJECT)

GENERAL NOTES

THE EXACT NUMBER, LOCATION, AND SPACING OF ALL SIGNS AND BARRICADES SHALL BE ADJUSTED TO FIT FIELD CONDITIONS AS APPROVED BY THE ENGINEER.

ANY SIGNS TEMPORARY OR EXISTING, WHICH CONFLICT WITH TRAFFIC CONTROL "IN USE" SHALL BE REMOVED OR COVERED AS NEEDED AND AS APPROVED BY THE ENGINEER.

THE SPACING BETWEEN TRAFFIC CONTROL SIGNS SHOULD BE ADJUSTED TO NOT CONFLICT WITH AND SHOULD PROVIDE A DESIRABLE MINIMUM OF 200 FEET CLEARANCE (500 FEET DESIRABLE) TO EXISTING SIGNS THAT WILL REMAIN IN PLACE.

IF A "STOP" SIGN MUST BE REMOVED FOR A WORK OPERATION, A TEMPORARY "STOP" SIGN SHALL BE PLACED PRIOR TO THE SIGN REMOVAL, OR A FLAGGER SHALL BE PROVIDED UNTIL THE SIGN IS REESTABLISHED.

BARRICADES THAT MUST BE MOVED FOR A WORK OPERATION SHALL BE IMMEDIATELY REESTABLISHED UPON COMPLETION OF THE OPERATION OR FOR CONTINUING OPERATIONS, AT THE END OF EACH WORKING DAY.

SIGNS THAT WILL BE IN PLACE LESS THAN SEVEN CONTINUOUS DAYS AND NIGHTS MAY BE MOUNTED ON PORTABLE SUPPORTS.

ALL TYPE III BARRICADES SHALL HAVE RAILS REFLECTORIZED ON BOTH FACES. STRIPES SHALL BE PROPERLY SLOPED DOWN TOWARD THE TRAFFIC SIDE OR AS SHOWN IN THE ROAD CLOSURE BARRICADE DETAIL "D" FOR FULL ROAD CLOSURES.

TYPE "A" LOW-INTENSITY FLASHING WARNING LIGHTS SHALL BE VISIBLE ON BOTH SIDES OF THE BARRICADE.

THE R11-2, R11-3, AND R11-4 SIGNS PLACED ON BARRICADES SHALL COVER NO MORE THAN THE TOP RAIL. THE SIGNS SHALL NOT COVER ANY PORTION OF THE MIDDLE OR BOTTOM RAILS.

ALL SIGNS SHALL BE 48" X 48" UNLESS OTHERWISE NOTED BELOW:
R11-2 SHALL BE 48" X 30".
R11-4 AND R11-3 SHALL BE 60" X 30".

* OMIT THE "ROAD CLOSED 500 FT." SIGN IF THE LAST INTERSECTION IS 500 FEET OR LESS FROM THE WORK ZONE.

** 500' MAX. OR AT LAST INTERSECTION, WHICHEVER IS CLOSEST.

LEGEND

- SIGN ON PERMANENT SUPPORT
- TYPE III BARRICADE
- TYPE III BARRICADE WITH ATTACHED SIGN
- TYPE "A" WARNING LIGHT (FLASHING)
- WORK AREA

BARRICADES AND SIGNS FOR SIDEROAD CLOSURES

STATE OF WISCONSIN
DEPARTMENT OF TRANSPORTATION

APPROVED
July 2018
DATE

/S/ Andrew Heidtke
WORK ZONE ENGINEER

FHWA

6

SDD 15C03 - 05

6

SDD 15C03 - 05

GENERAL NOTES

THE EXACT NUMBER, LOCATION, AND SPACING OF ALL SIGNS AND DEVICES SHALL BE ADJUSTED TO FIT FIELD CONDITIONS.

THE SPACING BETWEEN TRAFFIC CONTROL SIGNS SHOULD BE ADJUSTED TO NOT CONFLICT WITH AND SHOULD PROVIDE A MINIMUM OF 200 FEET (500 FEET DESIRABLE) CLEARANCE TO EXISTING SIGNS THAT WILL REMAIN IN PLACE.

ALL SIGNS ARE 48" X 48" UNLESS OTHERWISE NOTED.

SIGNS THAT WILL BE IN PLACE LESS THAN SEVEN CONTINUOUS DAYS AND NIGHTS MAY BE MOUNTED ON PORTABLE SUPPORTS.

IF A "STOP" SIGN MUST BE REMOVED FOR A WORK OPERATION, A TEMPORARY "STOP" SIGN SHALL BE PLACED PRIOR TO THE SIGN REMOVAL, OR A FLAGGER SHALL BE PROVIDED UNTIL THE SIGN IS REESTABLISHED.

* OMIT G20-1 SIGNS IF LENGTH OF WORK AREA IS 2 MILES OR LESS

** PLACE AN ADDITIONAL W20-1A "ROAD WORK AHEAD" SIGN IF WORK AREA WITHIN THE PROJECT IS SEPARATED BY MORE THAN 2 MILES FROM PREVIOUS WORK AREA.

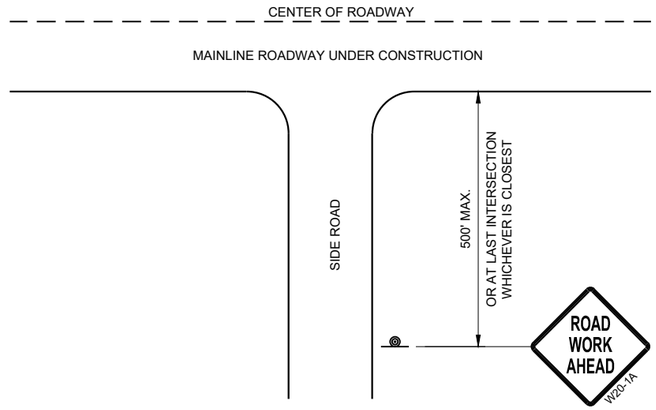

TYPICAL SIDE ROAD APPROACH WARNING SIGN DETAIL

LEGEND

SIGN ON PERMANENT SUPPORT

DIRECTION OF TRAFFIC

WORK AREA

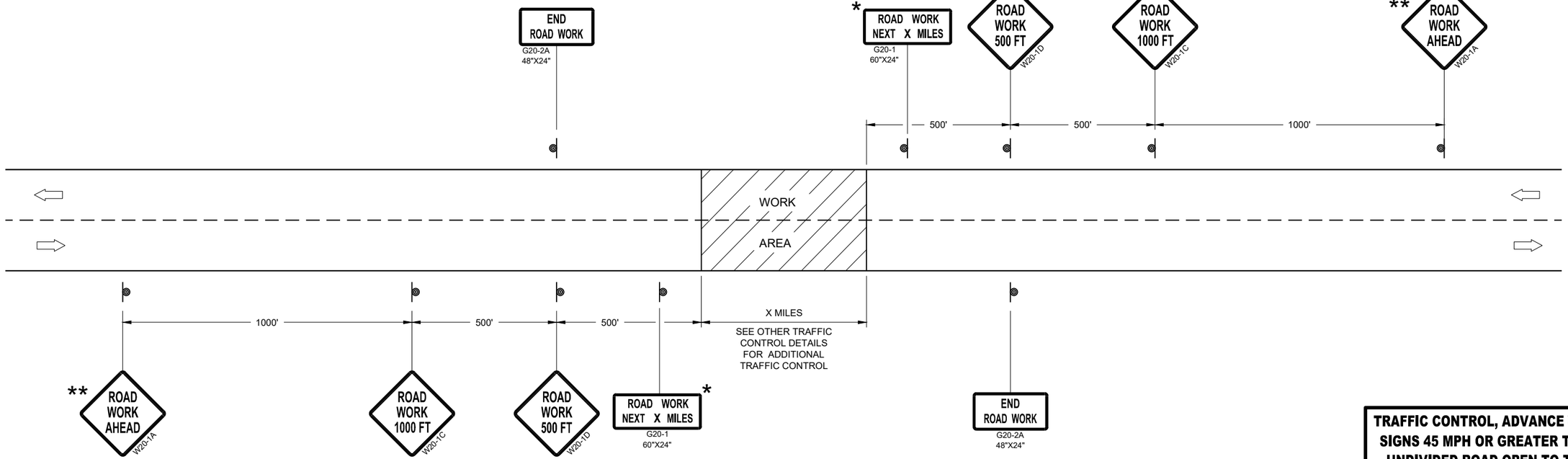

TRAFFIC CONTROL, ADVANCE WARNING SIGNS 45MPH OR GREATER

TRAFFIC CONTROL, ADVANCE WARNING SIGNS 45 MPH OR GREATER TWO-WAY UNDIVIDED ROAD OPEN TO TRAFFIC

STATE OF WISCONSIN
DEPARTMENT OF TRANSPORTATION

APPROVED
July 2018
DATE

/S/ Andrew Heidtke
WORK ZONE ENGINEE

FHWA

6

SDD 15C04 - 05

GENERAL NOTES

THE EXACT NUMBER, LOCATION, AND SPACING OF ALL SIGNS AND DEVICES SHALL BE ADJUSTED TO FIT FIELD CONDITIONS.

THE SPACING BETWEEN TRAFFIC CONTROL SIGNS SHOULD BE ADJUSTED TO NOT CONFLICT WITH AND SHOULD PROVIDE A MINIMUM OF 200 FEET (500 FEET DESIRABLE) CLEARANCE TO EXISTING SIGNS THAT WILL REMAIN IN PLACE.

ALL SIGNS ARE 48" X 48" UNLESS OTHERWISE NOTED. IF NECESSARY DUE TO SPACE CONSTRAINTS, 36"X36" SIGNS MAY BE USED INSTEAD OF 48" X 48" SIGNS.

SIGNS THAT WILL BE IN PLACE LESS THAN SEVEN CONTINUOUS DAYS AND NIGHTS MAY BE MOUNTED ON PORTABLE SUPPORTS.

IF A "STOP" SIGN MUST BE REMOVED FOR A WORK OPERATION, A TEMPORARY "STOP" SIGN SHALL BE PLACED PRIOR TO THE SIGN REMOVAL, OR A FLAGGER SHALL BE PROVIDED UNTIL THE SIGN IS REESTABLISHED.

* THE THIRD W20-1 SIGN IS REQUIRED ONLY IF THERE IS AN INTERSECTION BETWEEN THE "ROAD WORK 500 FEET" SIGN AND THE WORK ZONE. ADJUST THE PLACEMENT OF THIS SIGN BASED ON INTERSECTION LOCATION AND OTHER FIELD CONDITIONS.

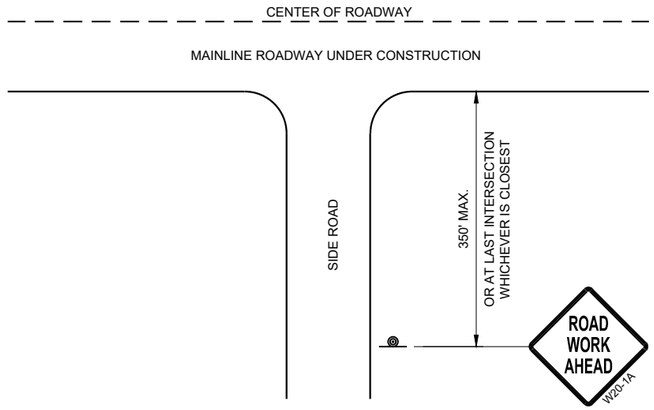

TYPICAL SIDE ROAD APPROACH WARNING SIGN DETAIL

LEGEND

SIGN ON PERMANENT SUPPORT

DIRECTION OF TRAFFIC

WORK AREA

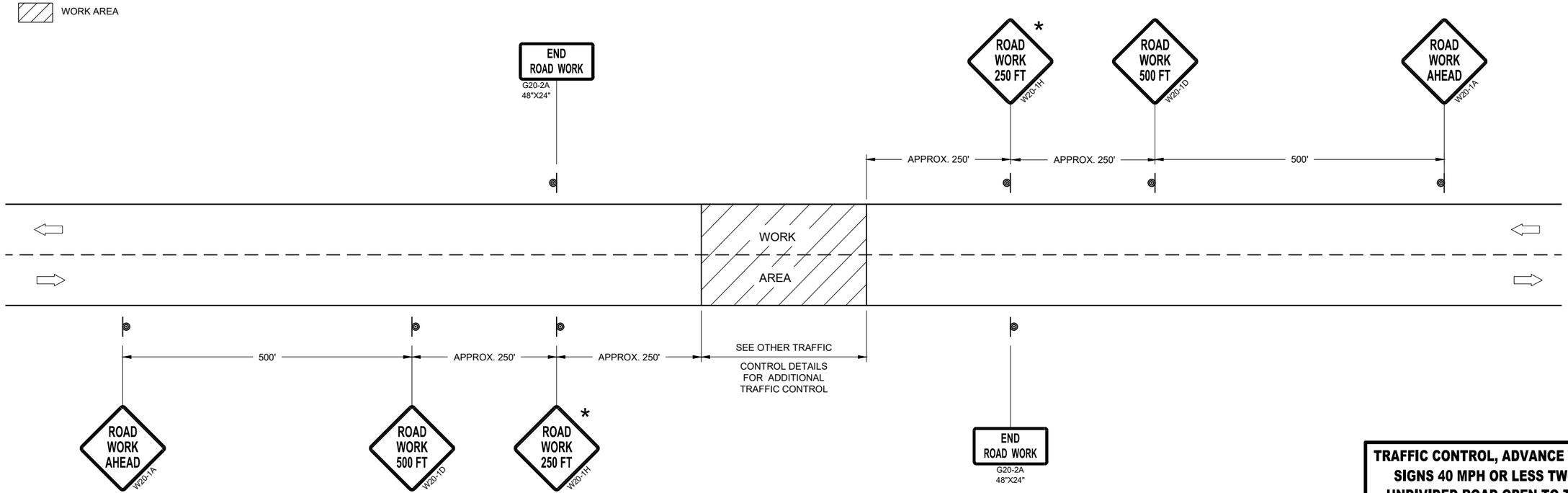

TRAFFIC CONTROL, ADVANCE WARNING SIGNS 40MPH OR LESS

TRAFFIC CONTROL, ADVANCE WARNING SIGNS 40 MPH OR LESS TWO-WAY UNDIVIDED ROAD OPEN TO TRAFFIC

STATE OF WISCONSIN
DEPARTMENT OF TRANSPORTATION

APPROVED
July 2018
DATE

/S/ Andrew Heidtke
WORK ZONE ENGINEE

FHWA

6

SDD 15C05 - 05

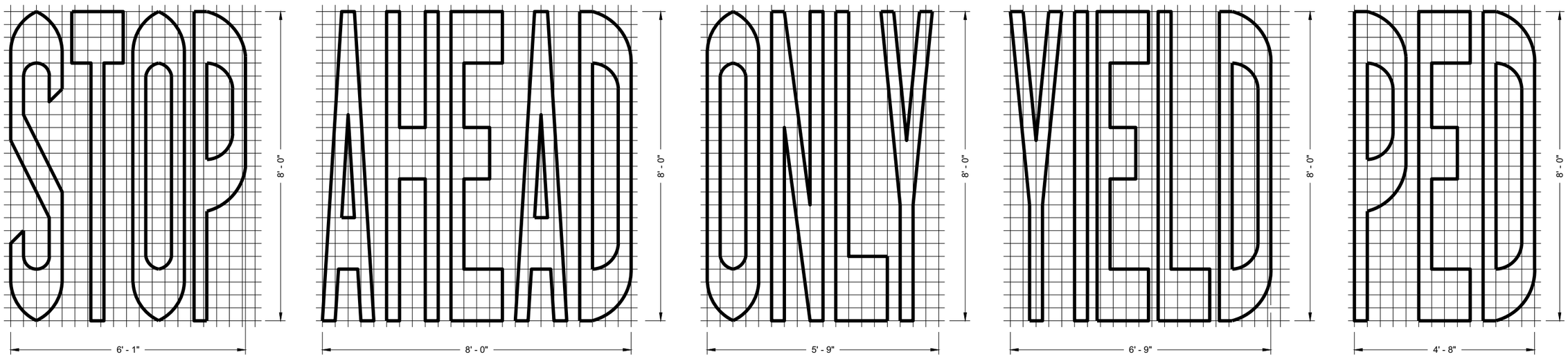

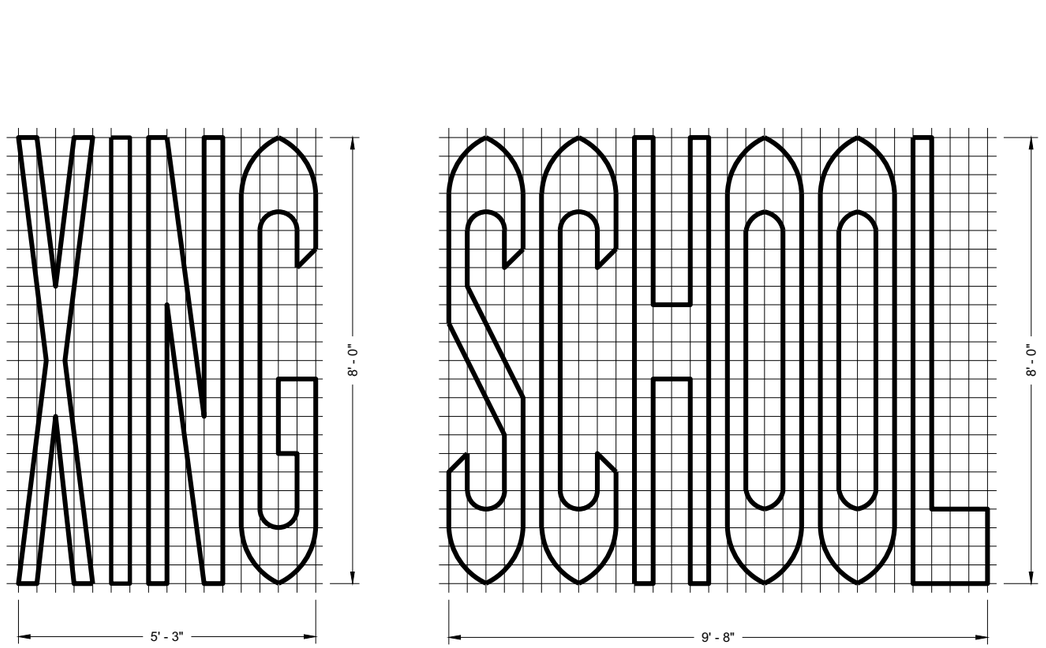

SINGLE LANE

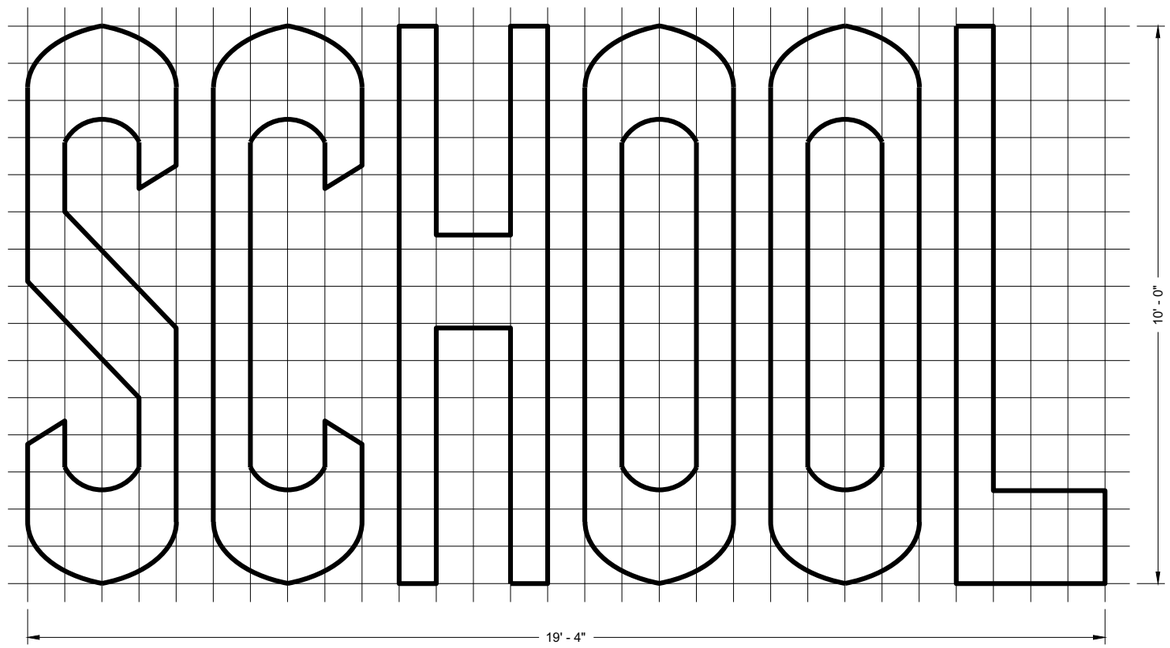

TWO - LANE

GENERAL NOTES

DETAILS OF INSTALLATION, MATERIALS AND WORKMANSHIP NOT SHOWN ON THIS DRAWING SHALL CONFORM TO THE PERTINENT REQUIREMENTS OF THE STANDARD SPECIFICATIONS AND APPLICABLE SPECIAL PROVISIONS.

PAVEMENT MARKING WORDS

STATE OF WISCONSIN
DEPARTMENT OF TRANSPORTATION

APPROVED
November 2019
DATE

/S/ Matthew Rauch
STATE SIGNING AND MAF ENGINEER

FHWA

6

SDD 15C07 - 15b

6

SDD 15C07 - 15b

GENERAL NOTES

DETAILS OF INSTALLATION, MATERIALS AND WORKMANSHIP NOT SHOWN ON THIS DRAWING SHALL CONFORM TO THE PERTINENT REQUIREMENTS OF THE STANDARD SPECIFICATIONS AND APPLICABLE SPECIAL PROVISIONS.

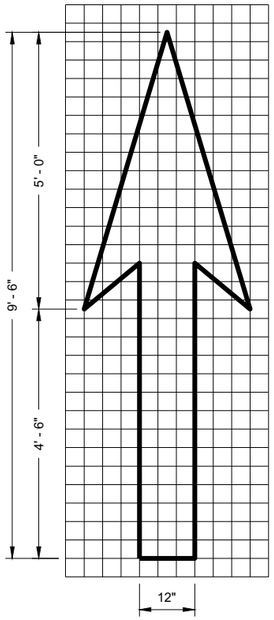

TYPE 1

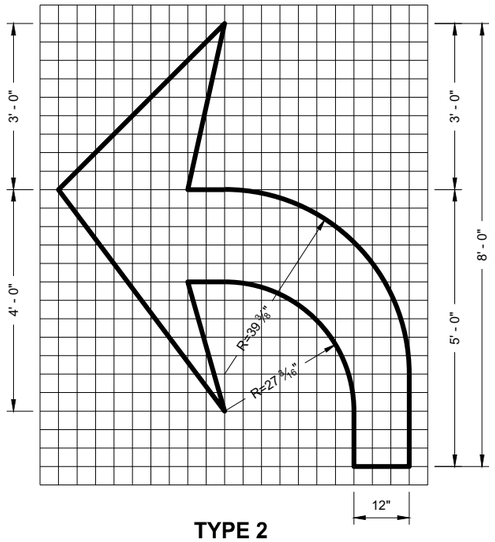

TYPE 2

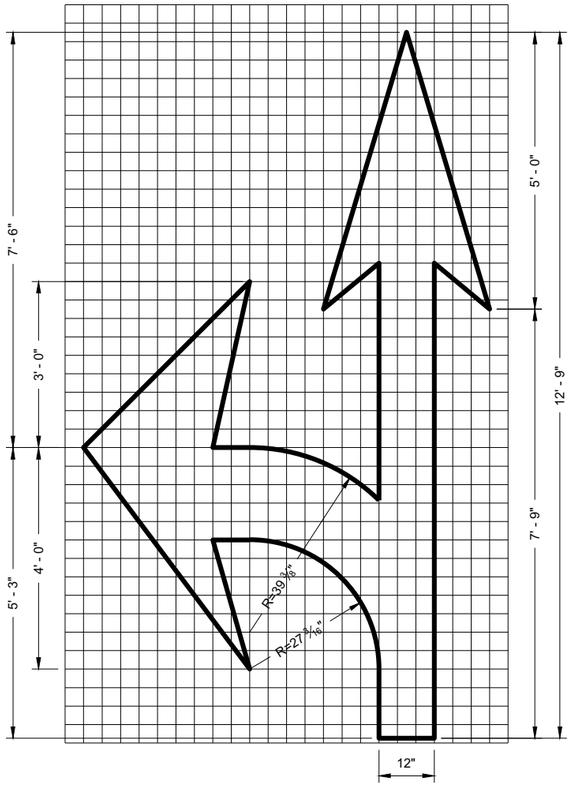

TYPE 3

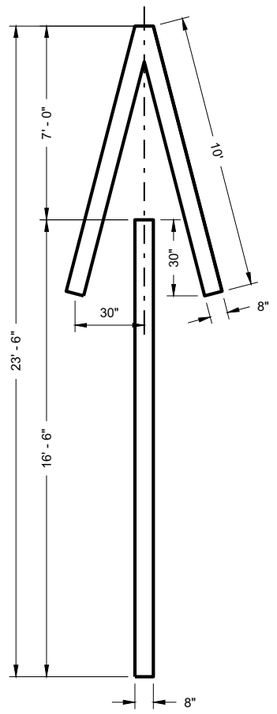

TYPE 4

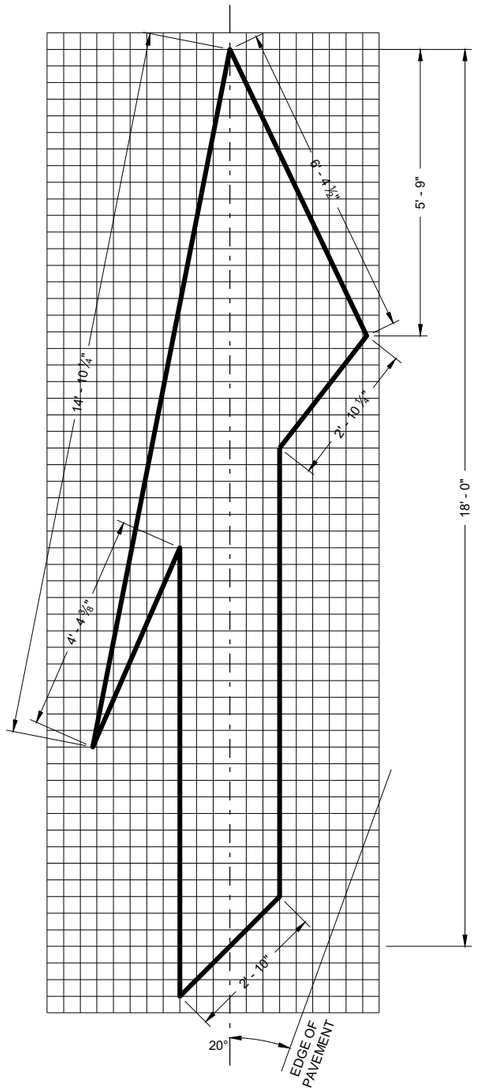

TYPE 5 LANE DROP ARROW

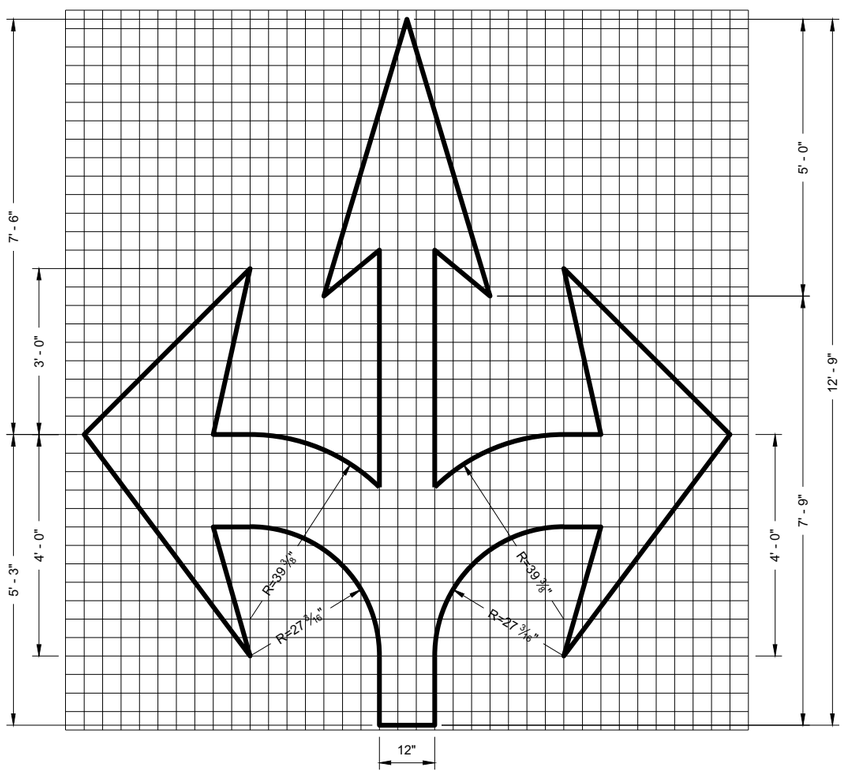

TYPE 6

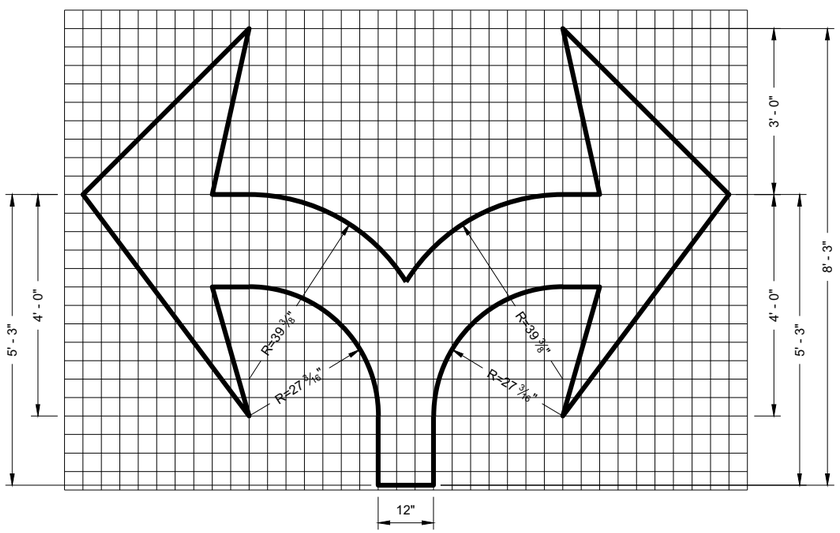

TYPE 7

PAVEMENT MARKING ARROWS

STATE OF WISCONSIN
DEPARTMENT OF TRANSPORTATION

APPROVED
November 2019 — DATE
/S/ Matthew Rauch — STATE SIGNING AND MARKING ENGINEER

FHWA

297

6

SDD 15C07 - 15c

6

SDD 15C07 - 15c

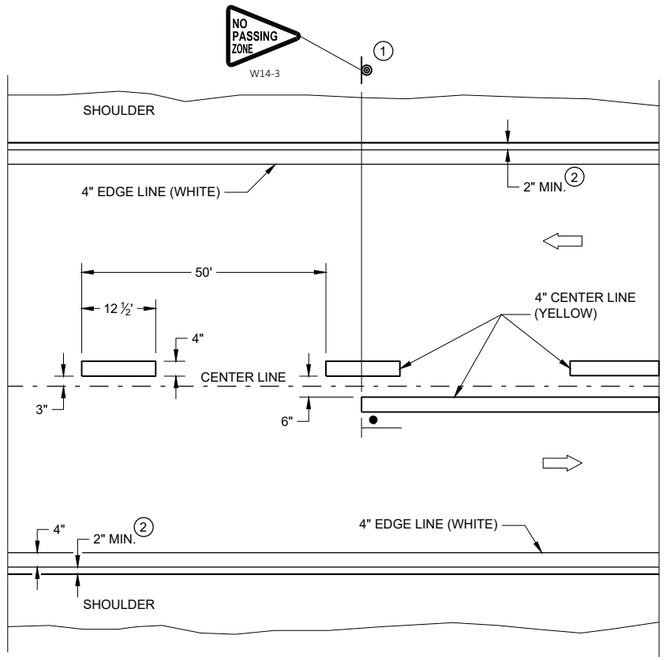

TWO WAY TRAFFIC

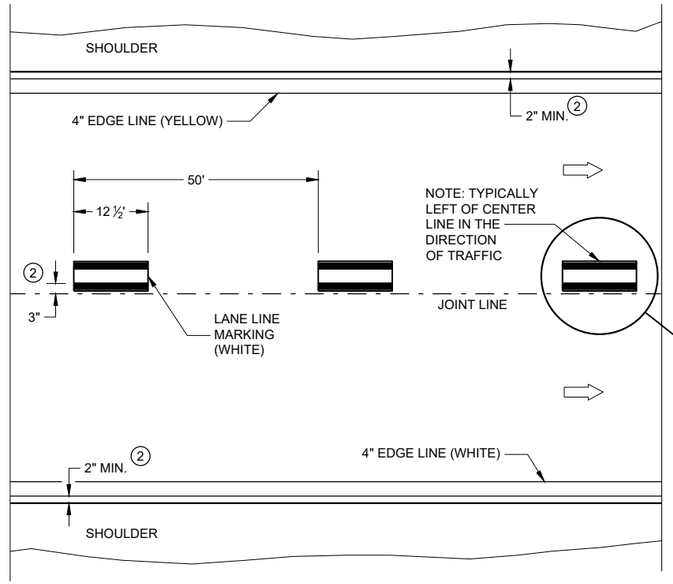

ONE WAY TRAFFIC

PERMANENT PAVEMENT MARKING

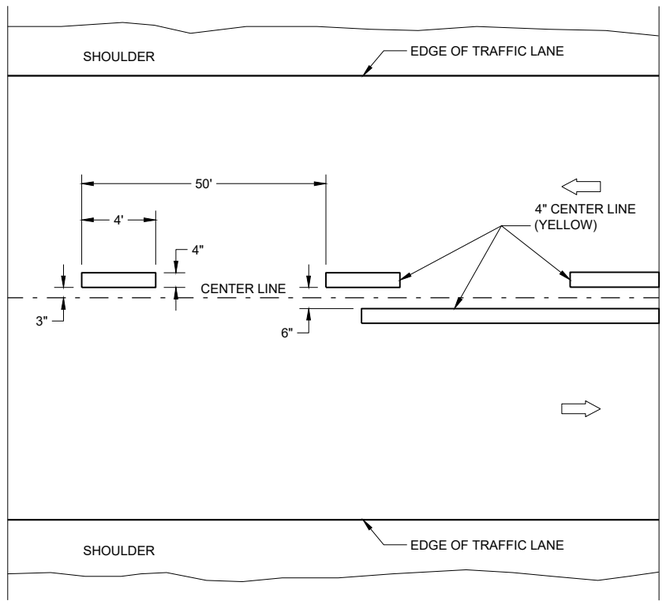

TWO WAY TRAFFIC

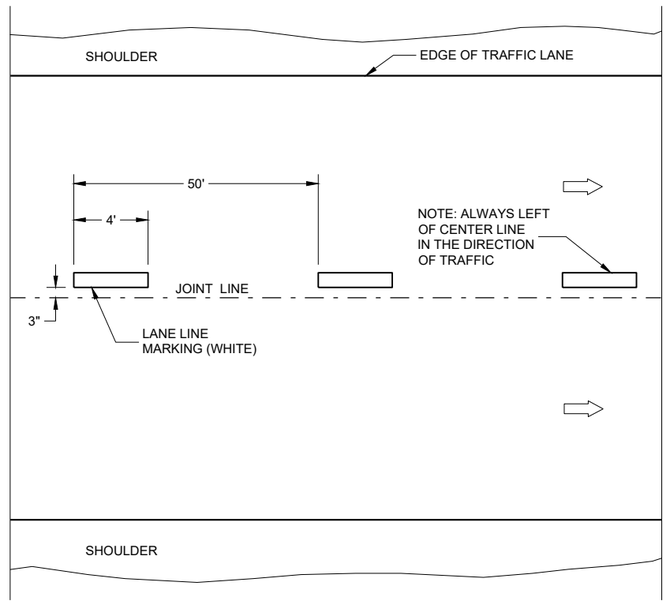

ONE WAY TRAFFIC

TEMPORARY PAVEMENT MARKING

GENERAL NOTES

DETAILS OF CONSTRUCTION NOT SHOWN ON THIS DRAWING SHALL CONFORM TO STANDARD SPECIFICATIONS AND SPECIAL PROVISIONS.

1. LOCATE THE NO PASSING ZONE W14-3 SIGN WITHIN 50 FEET OF THE "T" MARKING
2. MEASURE FROM EDGE OF MARKING TO JOINT LINE. THIS DOES NOT INCLUDE SPACE NEEDED FOR GROOVING OPERATIONS.

LEGEND

"T" MARKING

SIGN ON PERMANENT SUPPORT

DIRECTION OF TRAFFIC

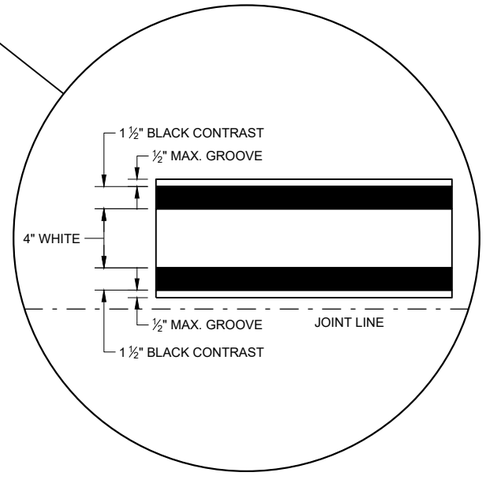

LONGITUDINAL MARKING (MAINLINE)

STATE OF WISCONSIN
DEPARTMENT OF TRANSPORTATION

APPROVED
February 2020
DATE
/S/ Matthew Rauch
STATEWIDE SIGNING AND M ENGINEER

FHWA

SDD 15C08 - 20a

SDD 15C08 - 20a

GENERAL NOTES

1. A SET OF ARROWS IS REQUIRED EVERY 400 FEET OR NEAR INTERSECTIONS OR DRIVEWAYS WITH TURNING TRAFFIC.
2. 8" WHITE
3. TURN BAY LENGTH OF LESS THAN 48' DOES NOT REQUIRE PAVEMENT ARROWS OR TEXT.

DIRECTION OF TRAFFIC

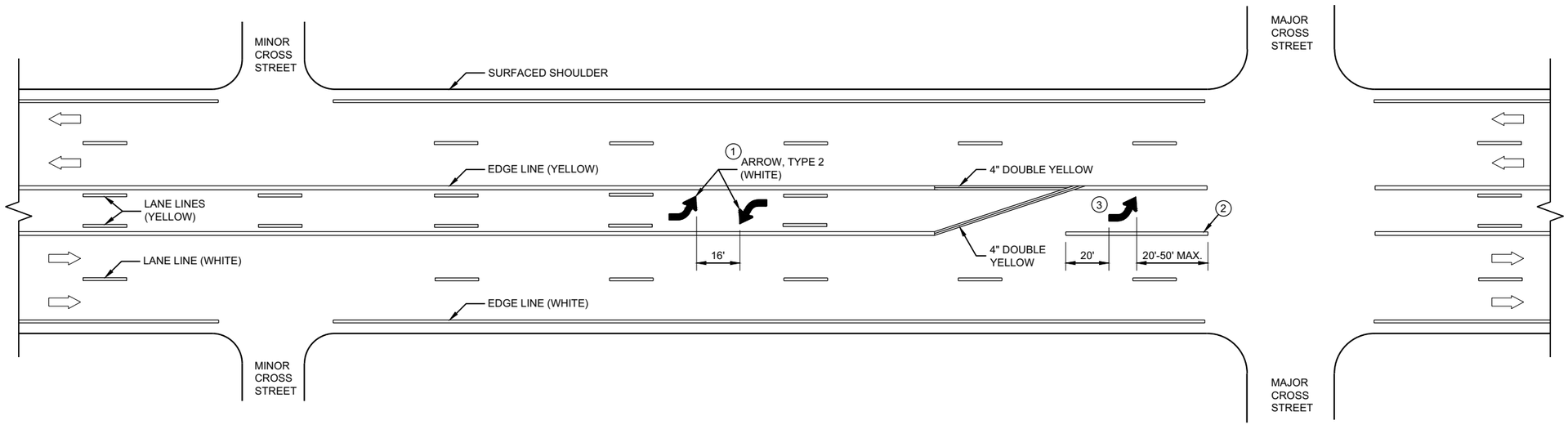

TWO WAY LEFT TURN LANE

6

6

SDD 15C08 - 20b

SDD 15C08 - 20b

PAVEMENT MARKING (TURN LANES)

STATE OF WISCONSIN
DEPARTMENT OF TRANSPORTATION

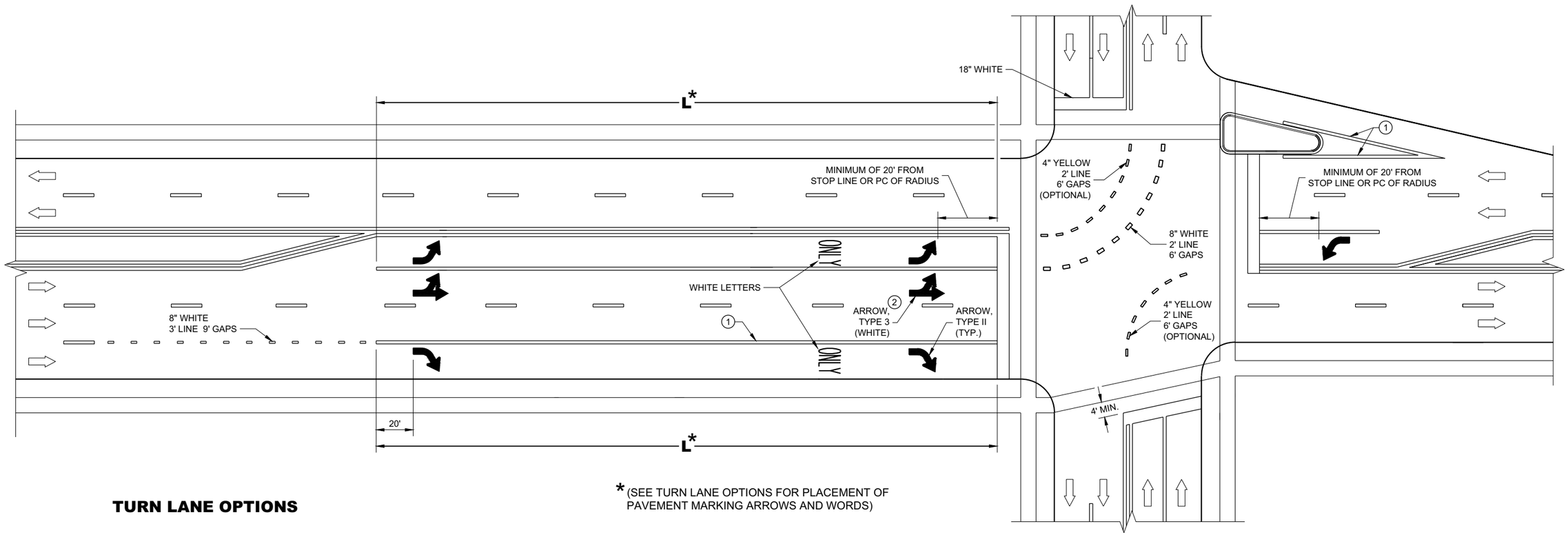

* (SEE TURN LANE OPTIONS FOR PLACEMENT OF PAVEMENT MARKING ARROWS AND WORDS)

TURN LANE OPTIONS

LENGTH OF TURN BAY (**L**) OF 0 - 47' DOES NOT REQUIRE PAVEMENT MARKING ARROWS OR WORDS

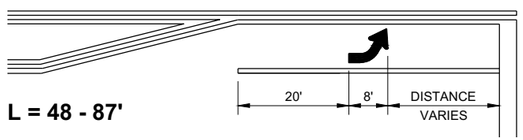

L = 48 - 87'

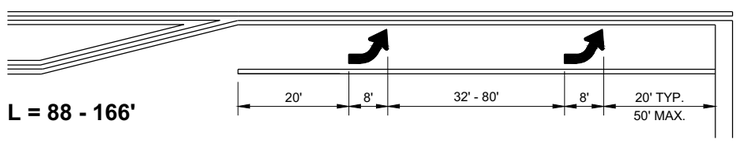

L = 88 - 166'

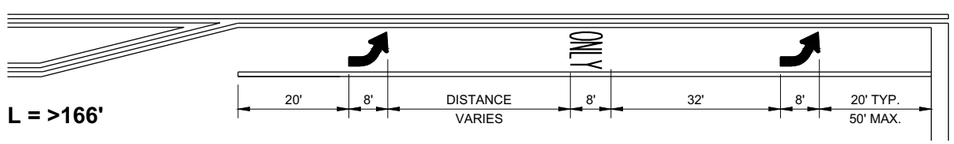

L = >166'

GENERAL NOTES

1. 8" WHITE
2. QUANTITY AND LOCATION OF TYPE 3 ARROWS ARE THE SAME AS THE TYPE II ARROWS IN THE ADJACENT TURN LANE. FOR TURN LANES WITH A PHYSICAL SEPARATION IN THE SAME DIRECTION OF TRAVEL, THE ARROWS AND "ONLY" MARKING MAY BE ELIMINATED.

DIRECTION OF TRAFFIC

L = LENGTH OF TURN BAY

PAVEMENT MARKING (TURN LANES)

STATE OF WISCONSIN
DEPARTMENT OF TRANSPORTATION

6

SDD 15C08 - 20c

GENERAL NOTES

1. REFLECTIVE SHEETING SHALL FOLLOW THE REQUIREMENTS IN THE APPROVED PRODUCTS LISTING FOR SIGN SHEETING.
2. LOCATION OF WARNING LIGHTS WHEN SHOWN ON THE PLAN.

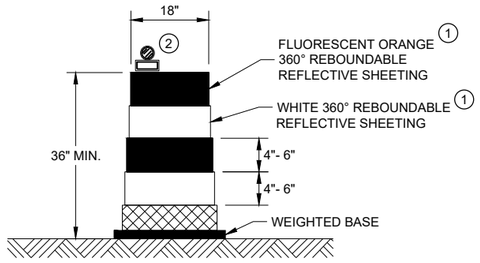

DRUM

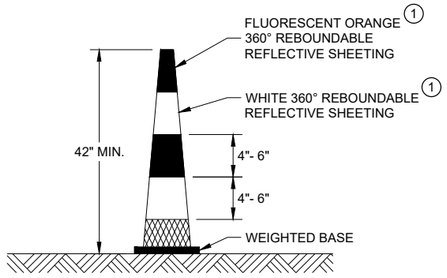

42" CONE

DO NOT USE IN TAPERS
½ SPACING OF DRUMS

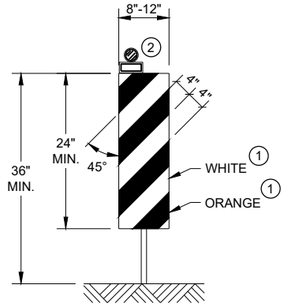

VERTICAL PANEL

THE STRIPES SHALL SLOPE DOWNWARD TO
THE TRAFFIC SIDE FOR CHANNELIZATION.

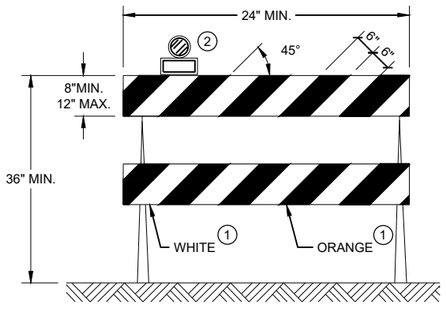

TYPE II BARRICADE

FOR RAILS LESS THAN 36" LONG, 4" WIDE STRIPES
MAY BE USED. ALL STRIPES SHALL SLOPE DOWNWARD
TO THE TRAFFIC SIDE FOR CHANNELIZATION.

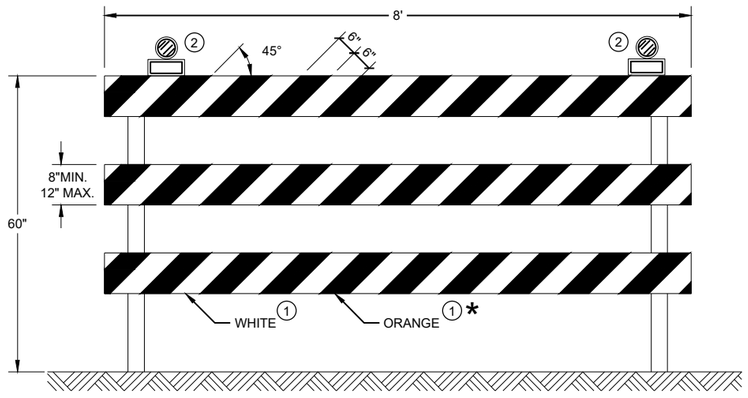

TYPE III BARRICADE

IF SIGN MOUNTED, DO NOT COVER MORE THAN 50% OF THE TOP
TWO RAILS OR 33% OF THE TOTAL AREA OF THE THREE RAILS.

* IF USED FOR A PERMANENT APPLICATION USE RED SHEETING.

CHANNELIZING DEVICES
DRUMS, CONES, BARRICADES
AND VERTICAL PANELS

STATE OF WISCONSIN
DEPARTMENT OF TRANSPORTATION

APPROVED
May 2021
DATE

/S/ Andrew Heidtke
WORK ZONE ENGINEE

FHWA

6

SDD 15C11 - 09b

6

SDD 15C11 - 09b

LEGEND

SIGN ON PORTABLE OR PERMANENT SUPPORT

TEMPORARY PORTABLE RUMBLE STRIP ARRAY

DIRECTION OF TRAFFIC

WORK AREA

FLAGGER, EQUIPPED WITH STOP/SLOW PADDLE FASTENED ON SUPPORT STAFF

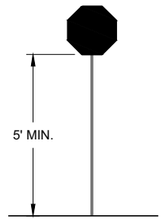

STOP/SLOW PADDLE ON SUPPORT STAFF

GENERAL NOTES

DETAILS OF TRAFFIC CONTROL DEVICES AND INSTALLATION NOT SHOWN ON THIS DRAWING SHALL CONFORM TO THE PERTINENT REQUIREMENTS OF THE STANDARD SPECIFICATIONS, THE SPECIAL PROVISIONS, AND THE MANUAL ON UNIFORM TRAFFIC CONTROL DEVICES.

ALL SIGNS ARE 48" X 48" UNLESS OTHERWISE NOTED.

"WO" SIGNS ARE THE SAME AS "W" SIGNS EXCEPT THE BACKGROUND IS ORANGE.

THE EXACT NUMBER, LOCATION AND SPACING OF ALL SIGNS, DEVICES, AND LOCATION OF ALL FLAGGERS SHALL BE ADJUSTED TO FIT FIELD CONDITIONS AS APPROVED BY THE ENGINEER.

THE FIRST ADVANCE WARNING SIGN SHOULD TYPICALLY BE LOCATED IN ADVANCE OF THE ANTICIPATED TRAFFIC BACKUP OR QUEUE.

WHEN A SIDE ROAD OR RAMP INTERSECTS THE FACILITY ON WHICH THE WORK IS BEING PERFORMED, ADDITIONAL TRAFFIC CONTROLS SHALL BE PROVIDED AS SPECIFIED IN THE PLANS AND/OR THE SPECIAL PROVISIONS OR AS APPROVED BY THE ENGINEER.

FLAGGING

FLAGGERS SHALL BE IN SIGHT OF EACH OTHER OR IN DIRECT COMMUNICATION AT ALL TIMES. THEY SHALL BE EQUIPPED WITH STOP/SLOW PADDLES FASTENED ON SUPPORT STAFFS. WHEN THE FLAGGING OPERATION IS NOT IN EFFECT REMOVE TEMPORARY PORTABLE RUMBLE STRIPS PRIOR TO COVERING OR REMOVING ALL ADVANCE SIGNING.

(1) FOR MOVING WORK OPERATIONS, POST ADDITIONAL W20-7A FLAGGER SIGNS AT APPROXIMATELY 3,500' INTERVALS IN THE MOVING WORK OPERATION OR AS APPROVED BY THE ENGINEER.

(2) SIGN NOT REQUIRED IF FLAGGING OPERATION OCCURS WITHIN A SIGNED ROAD WORK ZONE AREA.

WHEN THE DISTANCE BETWEEN FLAGGERS EXCEEDS 2 MILES, A PILOT CAR IS REQUIRED. WHEN CURVES REDUCE SIGHT DISTANCE BELOW 400', A PILOT CAR IS REQUIRED.

TEMPORARY PORTABLE RUMBLE STRIPS

UTILIZE TEMPORARY PORTABLE RUMBLE STRIPS ON ALL FLAGGING OPERATIONS.

(3) EACH TEMPORARY PORTABLE RUMBLE STRIP ARRAY CONSISTS OF THREE RUMBLE STRIPS SPACED ACCORDING TO MANUFACTURER'S RECOMMENDATION, PLACED TRANSVERSE ACROSS THE LANE AT LOCATIONS SHOWN.

ONLY USE TEMPORARY PORTABLE RUMBLE STRIPS FOR THE APPROVED PRODUCTS LIST.

INSTALL TEMPORARY RUMBLE STRIPS PER MANUFACTURER'S RECOMMENDATIONS.

PLACE ADVANCE SIGNING PRIOR TO INSTALLING TEMPORARY RUMBLE STRIPS.

DO NOT INSTALL TEMPORARY PORTABLE RUMBLE STRIPS ON GRAVEL, MILLED SURFACES, OR ASPHALT THAT HAS BEEN PAVED LESS THAN 12 HOURS.

SIGN AND TEMPORARY RUMBLE STRIP ARRAY SPACING TABLE

SPEED LIMIT	SPACING "A"
25-30 MPH	200'
35-40 MPH	350'
45-55 MPH	500'



WO3-4

USE OF WO3-4 SIGN IS OPTIONAL. WHEN USED, THIS SIGN SHALL BE LOCATED BETWEEN THE W20-7A AND W20-4A SIGNS, USING SPACING "A".

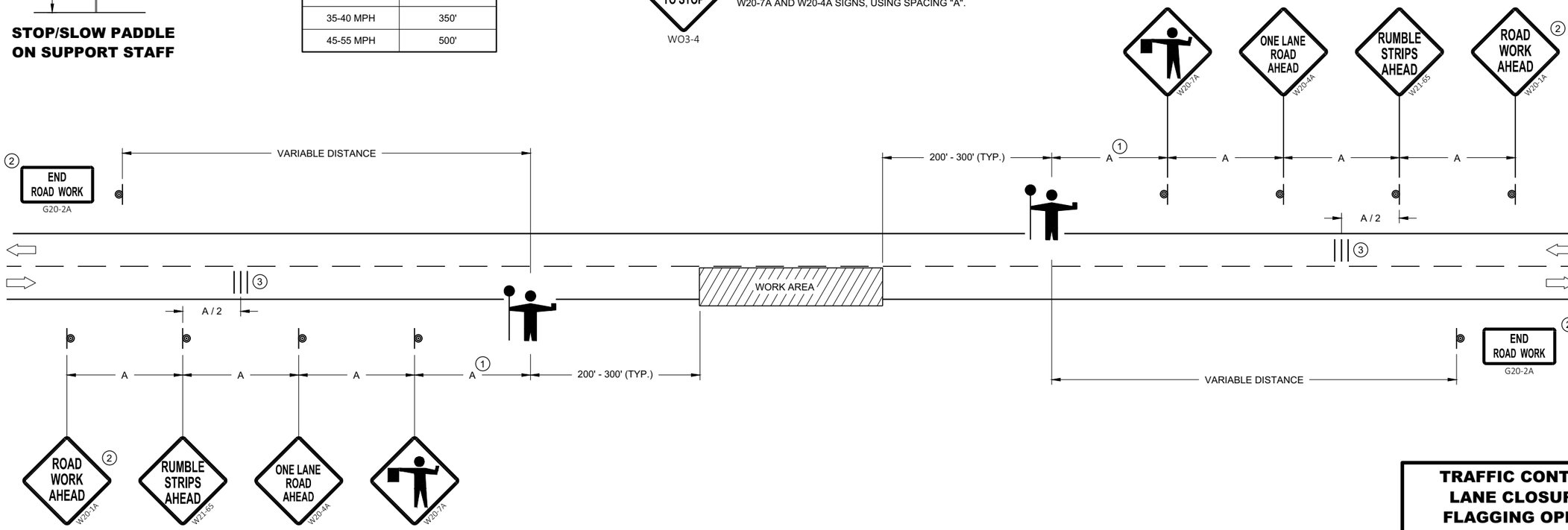

TRAFFIC CONTROL FOR LANE CLOSURE WITH FLAGGING OPERATION

TRAFFIC CONTROL FOR LANE CLOSURE WITH FLAGGING OPERATION

STATE OF WISCONSIN
DEPARTMENT OF TRANSPORTATION

APPROVED
May 2019
DATE

/S/ Andrew Heidtke
WORK ZONE ENGINEER

FHWA

6

SDD 15C12 - 07

SDD 15C12 - 07

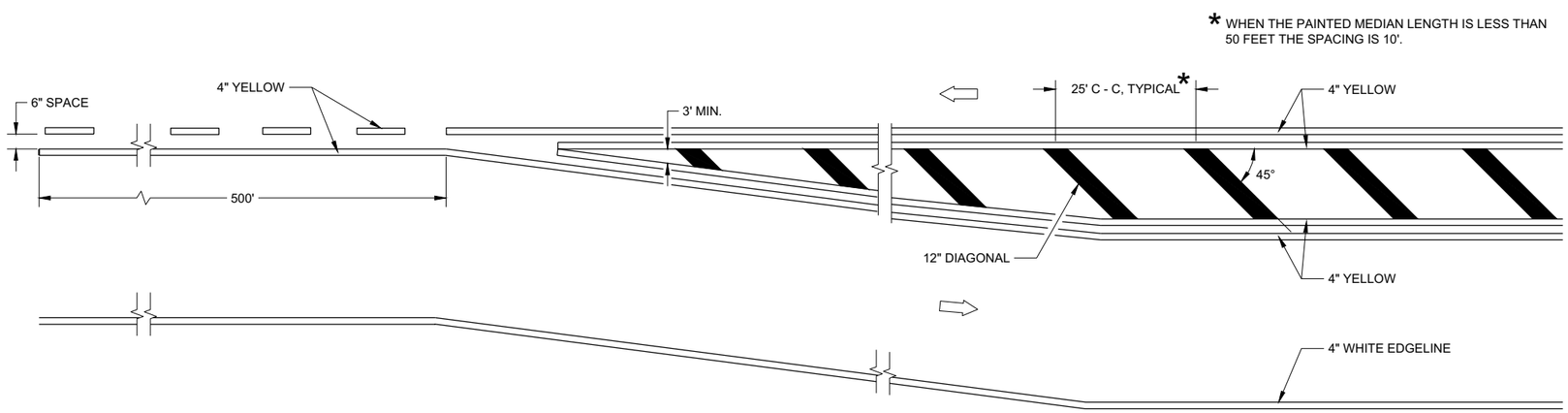

MEDIAN ISLAND DETAIL

GENERAL NOTES

DIAGONALS ARE OPTIONAL WHEN PAINED ISLAND IS LESS THAN 6 FEET AT WIDEST POINT.

DIRECTION OF TRAVEL

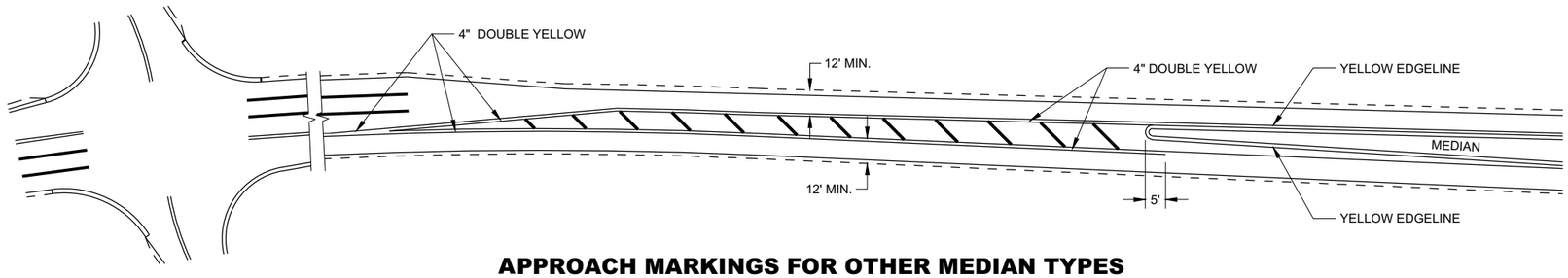

APPROACH MARKINGS FOR OTHER MEDIAN TYPES

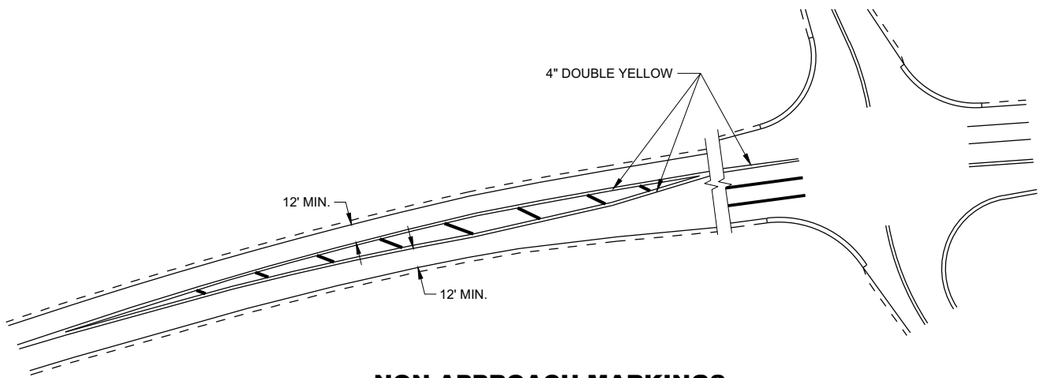

NON-APPROACH MARKINGS

MEDIAN ISLAND PAVEMENT MARKINGS

STATE OF WISCONSIN
DEPARTMENT OF TRANSPORTATION

APPROVED

February 2021
DATE

/S/ Matthew R. Rauch
STATE SIGNING AND MAF ENGINEER

FHWA

6

SDD 15C18 - 05a

6

SDD 15C18 - 05a

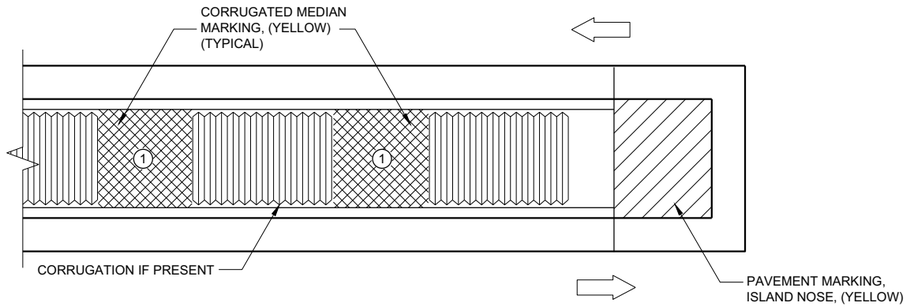

MEDIAN ISLAND WITH SQUARE BLUNT NOSE

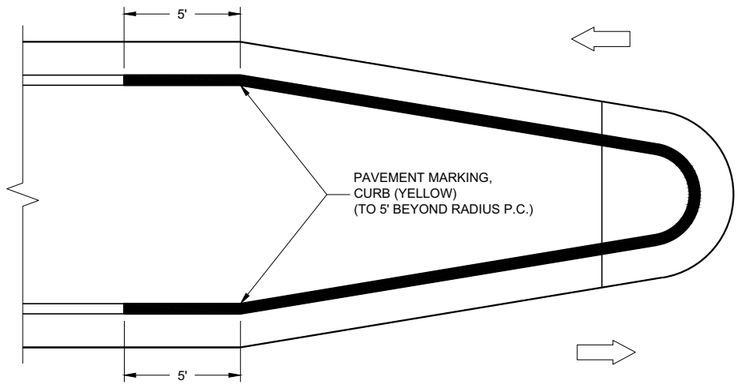

MEDIAN ISLAND WITH ROUND BLUNT NOSE

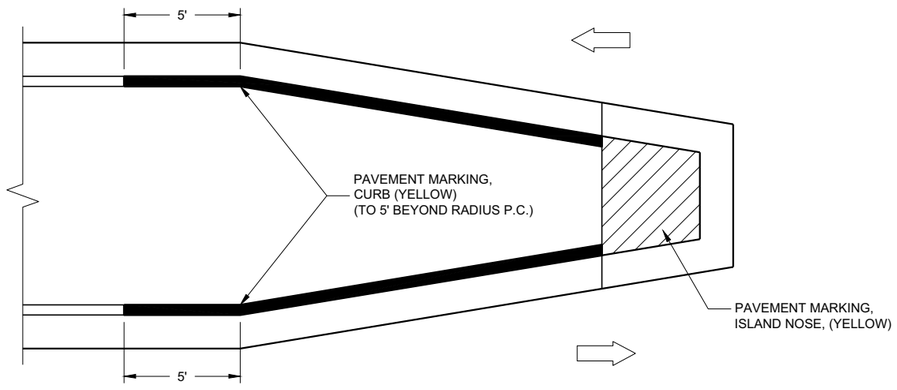

MEDIAN ISLAND WITH SLOPED NOSE

TYPICAL PLACEMENT OF PAVEMENT MARKING ON MEDIAN ISLANDS

GENERAL NOTES

WHEN CONCRETE CORRUGATED MEDIAN IS CONSTRUCTED TO SEPARATE TRAFFIC OPERATING IN THE OPPOSING DIRECTION, YELLOW PAVEMENT MARKING SHALL BE APPLIED TO THE FLAT PORTION OF THE CONCRETE CORRUGATED MEDIAN. THE ITEM OF PAVEMENT MARKING, CONCRETE CORRUGATED MEDIAN, WILL BE MEASURED IN PLACE AND ACCEPTED IN ACCORDANCE WITH THE CONTRACT AND PAID FOR AT THE CONTRACT UNIT PRICE PER SQUARE FOOT.

ISLAND NOSE MARKING

CURB MARKING

CORRUGATED MEDIAN MARKING

DIRECTION OF TRAVEL

**PAVEMENT MARKINGS,
MEDIAN ISLAND NOSE**

STATE OF WISCONSIN
DEPARTMENT OF TRANSPORTATION

APPROVED

February 2021
DATE

/S/ Matthew R. Rauch
STATE SIGNING AND MAR
ENGINEER

FHWA

6

SDD 15C18 - 05b

6

SDD15C18 - 05b

REQUIREMENTS FOR EDGE LINES		
POSTED SPEED	IS THERE CONTINUOUS LIGHTING?	
	YES	NO
≤ 30 MPH	NO	OPTIONAL
35 OR 40 MPH	OPTIONAL	RECOMMENDED
≥ 45 MPH	RECOMMENDED	REQUIRED

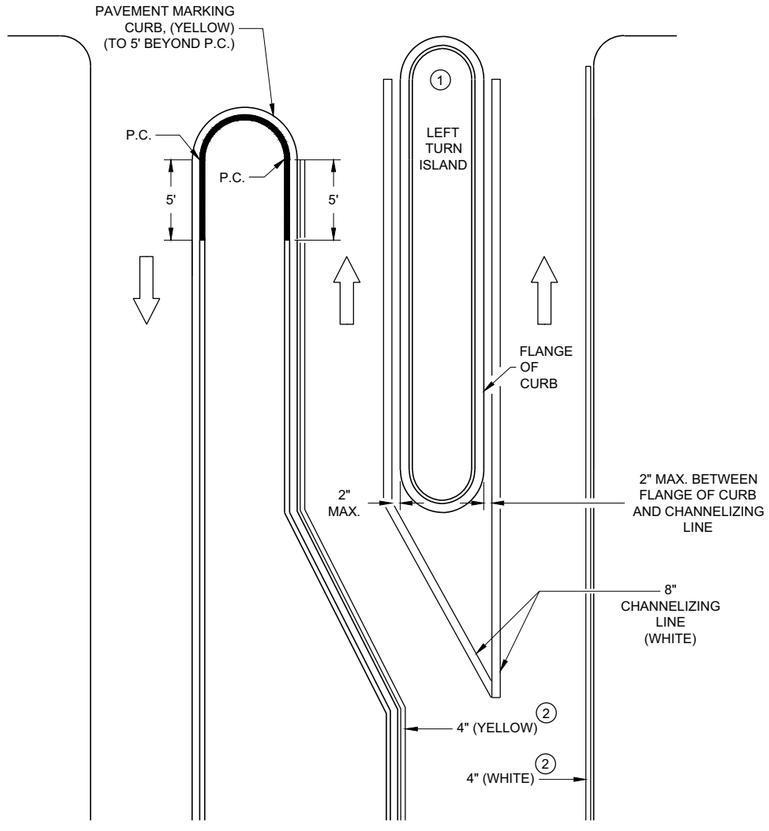

LEFT TURN & MEDIAN ISLAND

GENERAL NOTES

APPLIES TO ISLANDS AT LEFT TURNS AT ONE WAY ROADWAYS AS WELL.

SEE MISCELLANEOUS QUANTITIES FOR SIGN SIZE.

(1) MARK CURB NOSES YELLOW.

(2) MARK ACCORDING TO TABLE.

DIRECTION OF TRAVEL

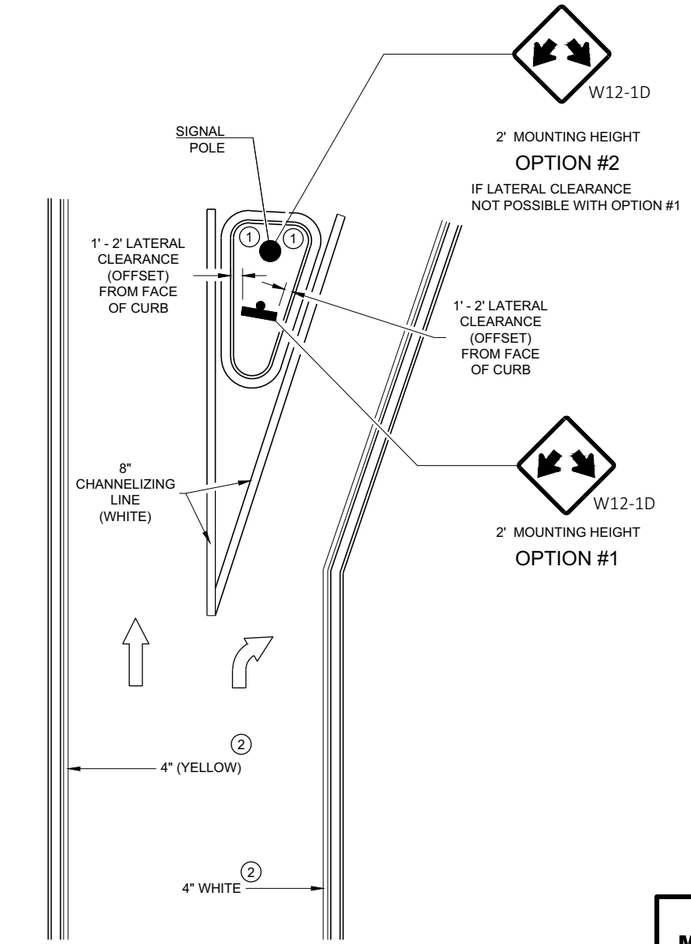

RIGHT TURN ISLAND

MEDIAN PAVEMENT MARKINGS, DOUBLE ARROW WARNING SIGN PLACEMENT

STATE OF WISCONSIN
DEPARTMENT OF TRANSPORTATION

APPROVED

February 2021 — DATE

/S/ Matthew R. Rauch — STATE SIGNING AND MAF ENGINEER

FHWA

6

SDD 15C18 - 05c

6

SDD15C18 - 05c

GENERAL NOTES

SIGNING AND MARKING IS SHOWN AS TYPICAL PLACEMENT. FIELD CONDITIONS MAY DICTATE CHANGES IN SIGNING AND MARKING PLACEMENT.

(1) USED ONLY WHEN APPROVED BY REGION TRAFFIC ENGINEER.

* SIGNS MAY BE OMITTED IF SPACE DOES NOT PERMIT PLACEMENT.

** IF POSTED SPEED IS 45 MPH OR GREATER, PLACE W5-54 SIGN UNDER R4-7 SIGN. MOUNT W5-54 SIGN AT 4' MOUNTING HEIGHT (TOP OF ROADWAY TO BOTTOM OF SIGN).

LEGEND

A DISTANCE DEPENDENT ON SPEED (SEE TABLE)

SIGN MOUNTED ON PERMANENT SUPPORT

DIRECTION OF TRAFFIC

DISTANCE TABLE

POSTED OR 85TH PERCENTILE SPEED	DISTANCE "A"
25	325'
30	460'
35	565'
40	670'
45	775'
50	885'
55	990'
65	1200'
70	1250'

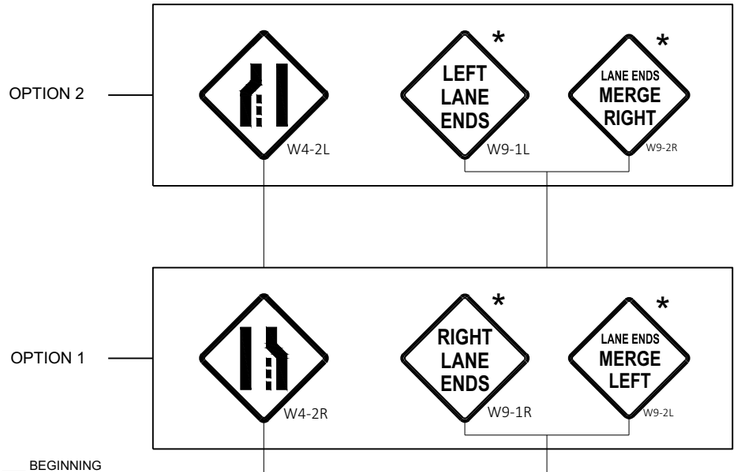

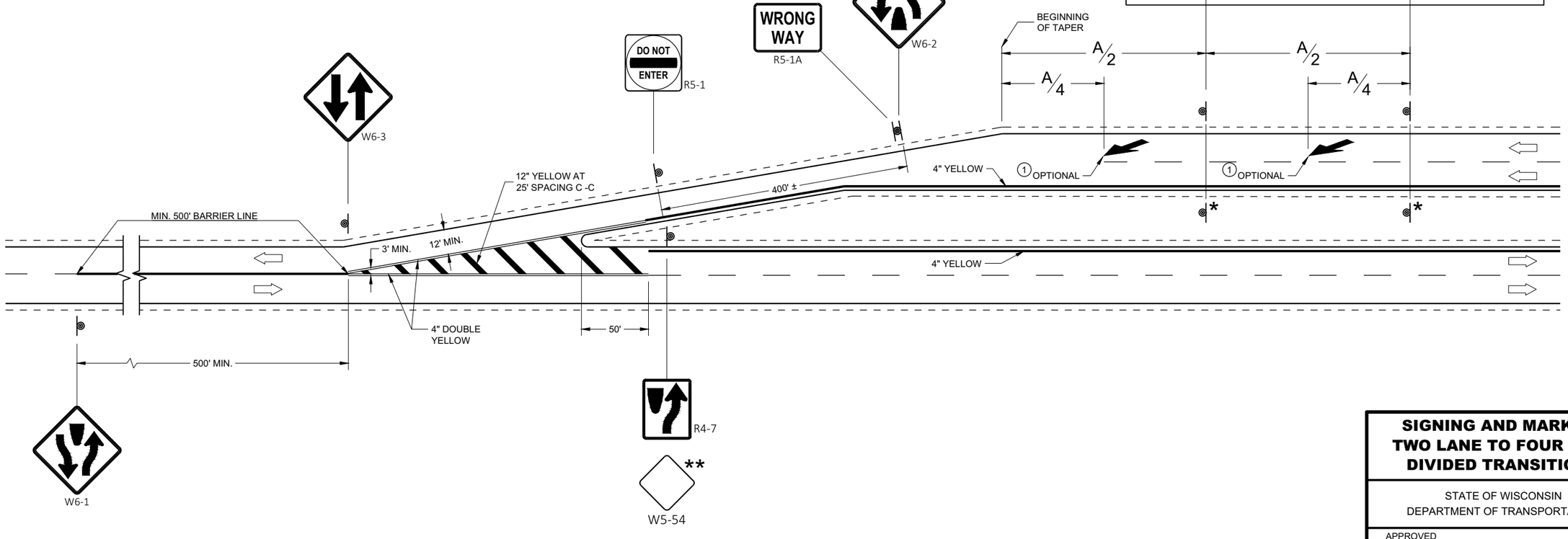

SIGNING AND MARKING TWO LANE TO FOUR LANE DIVIDED TRANSITIONS

STATE OF WISCONSIN
DEPARTMENT OF TRANSPORTATION

APPROVED
May 2020 — DATE
/S/ Matthew Rauch — STATE SIGNING AND MAR ENGINEER
FHWA

6
SDD 15C21 - 10

GENERAL NOTES

STOP SIGN SHALL BE PLACED A MINIMUM OF 6 FEET TO A MAXIMUM OF 50 FEET FROM THE EDGELINE LOCATION.

1. 18-INCH STOP LINES MAY BE DELETED OR ADDED BY THE REGION MARKING ENGINEER BASED ON VISIBILITY AND SIGHT LINES.
2. NO STOP LINE IS REQUIRED IF STOP SIGN IS LESS THAN OR EQUAL TO 40 FEET FROM THE EDGELINE.
3. NO STOP LINE IS REQUIRED IF STOP SIGN IS LESS THAN OR EQUAL TO 30 FEET FROM THE FLANGELINE EXTENSION.
4. MOVE CLOSER TO THE EDGE OF TRAVEL LINE AS NEEDED FOR VISIBILITY AND SIGHT LINES (NO CLOSER THAN 4 FEET).
5. LADDER BAR CROSSWALKS SHOULD ONLY BE USED FOR MID BLOCK CROSSINGS. USE 2 - 6" TRANSVERSE LINES INSTEAD.

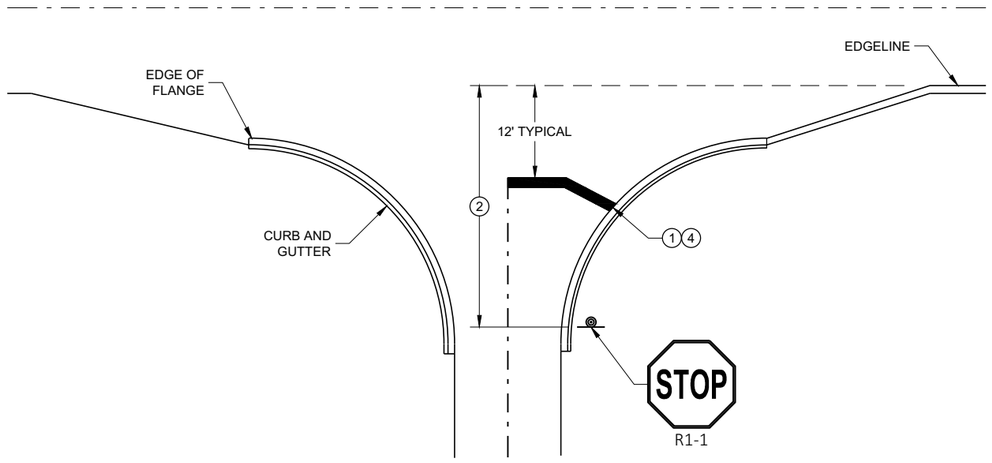

TYPICAL STOP LINE PAVEMENT MARKING WITH CURB AND GUTTER

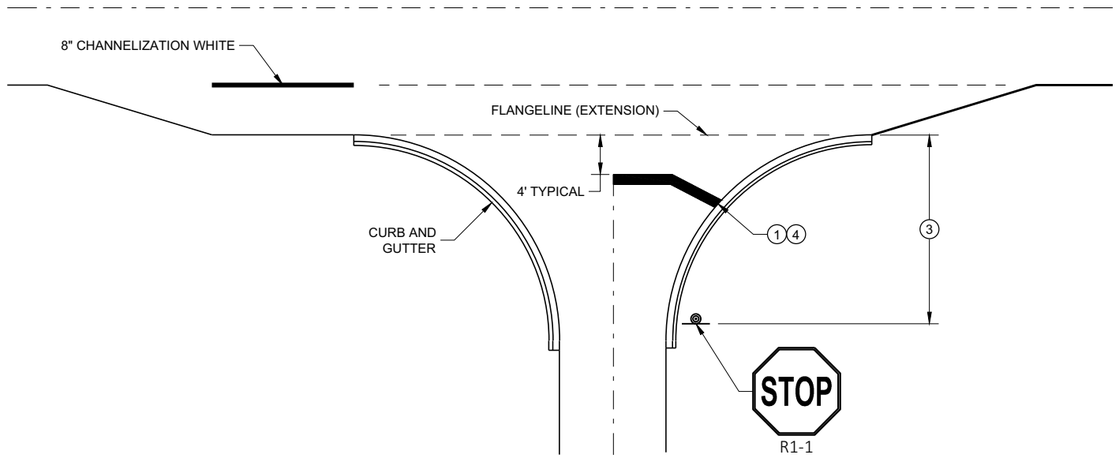

TYPICAL STOP LINE PAVEMENT MARKING FOR SIDEROADS WITH RIGHT TURN LANE

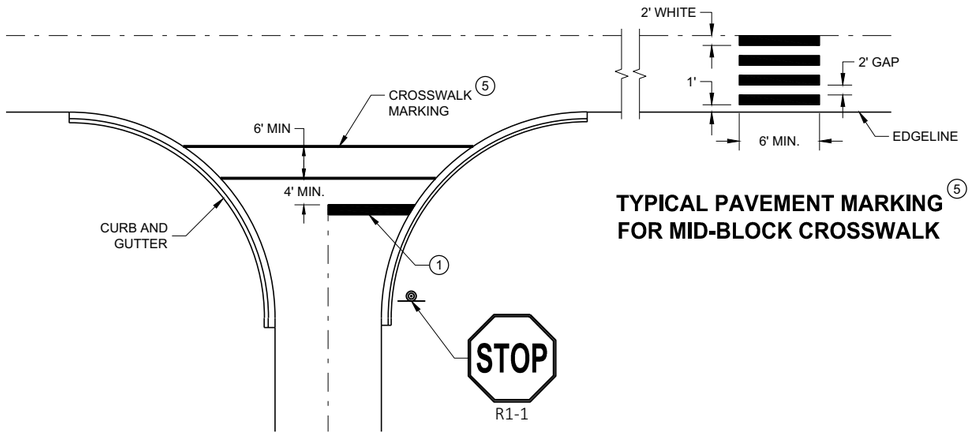

TYPICAL PAVEMENT MARKING FOR MID-BLOCK CROSSWALK 5

TYPICAL STOP LINE PAVEMENT MARKING FOR SIDEROADS WITH CROSSWALK MARKING

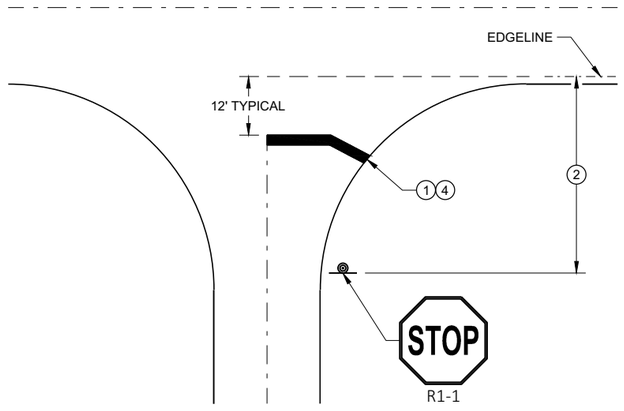

TYPICAL STOP LINE PAVEMENT MARKING WITHOUT CURB AND GUTTER

STOP LINE AND CROSSWALK PAVEMENT MARKING

STATE OF WISCONSIN
DEPARTMENT OF TRANSPORTATION

APPROVED
November 2019
DATE

/S/ Matthew Rauch
STATE SIGNING AND MAF ENGINEER

FHWA

6

SDD 15C33 - 04

6

SDD 15C33 - 04

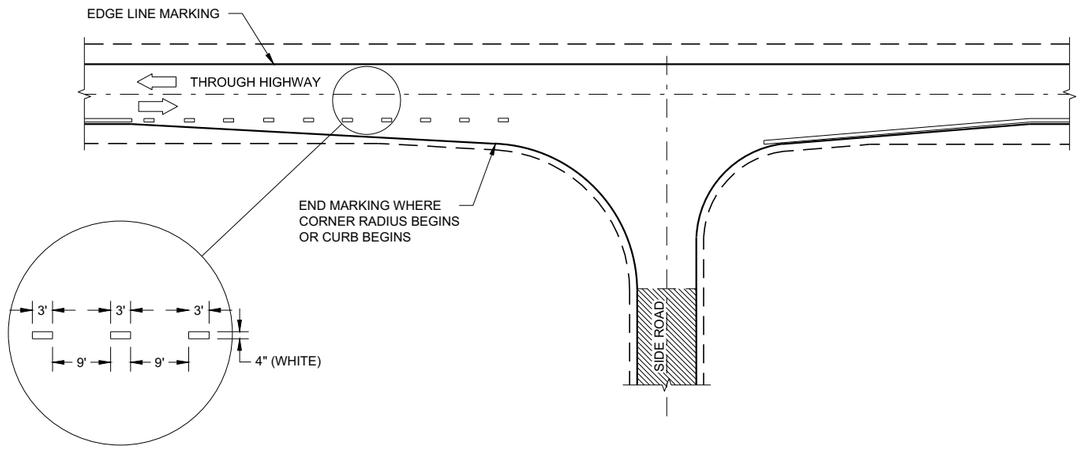

MINOR INTERSECTION

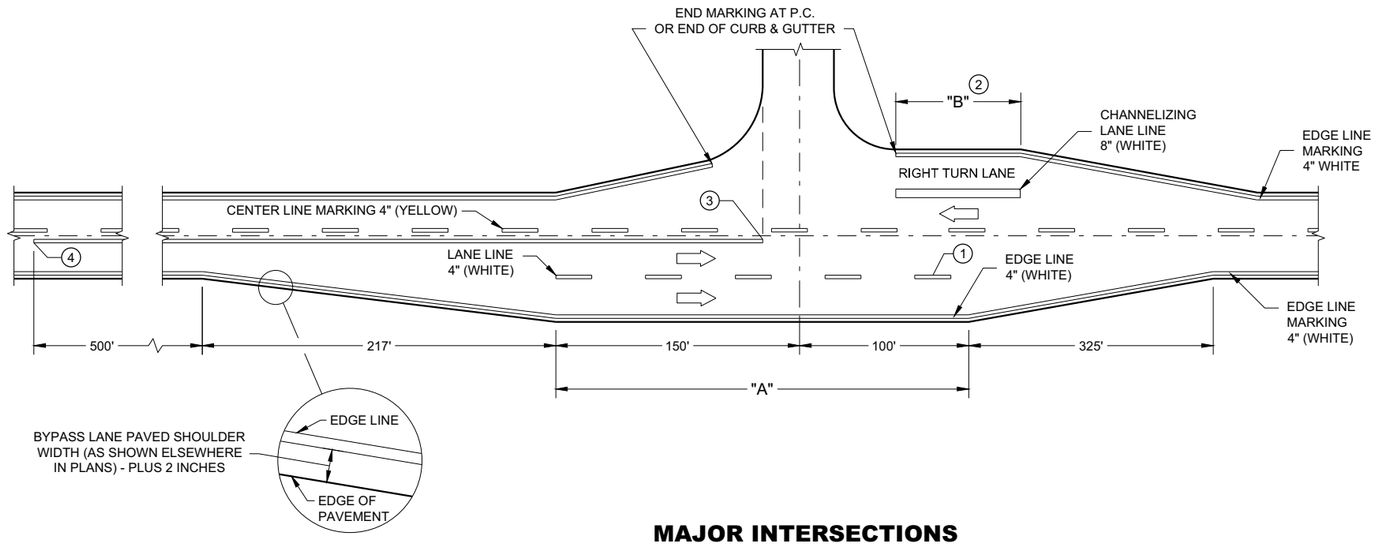

MAJOR INTERSECTIONS

(INTERSECTION WITH FULL RIGHT TURN LANE OR BYPASS LANE)

GENERAL NOTES

OMIT EDGE LINES THROUGH INTERSECTIONS. CONTINUE EDGE LINES THROUGH DRIVEWAYS.

1. WHEN DISTANCE "A" IS LESS THAN 250 FEET, OMIT LANE LINE.
2. WHEN DISTANCE "B" IS LESS THAN 100 FEET, OMIT CHANNELIZING LANE LINE.
3. BARRIER LINE ENDS AT SIDE ROAD PAVEMENT / SURFACE EDGE EXTENSION.
4. BARRIER LINE STARTS 500 FEET PRIOR TO THE BYPASS TAPER.

LEGEND

DIRECTION OF TRAVEL

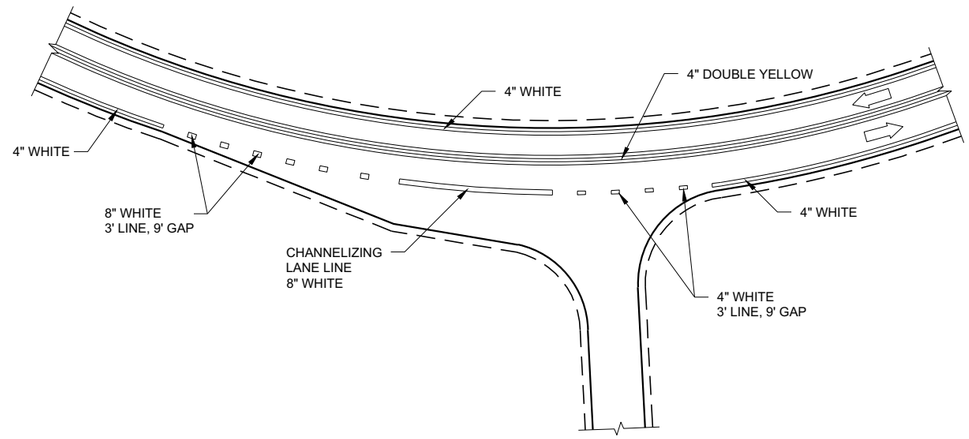

INTERSECTION ON OUTSIDE OF CURVE

PAVEMENT MARKING (INTERSECTIONS)

STATE OF WISCONSIN
DEPARTMENT OF TRANSPORTATION

6

SDD 15C35 - 04a

6

SDD 15C35 - 04a

GENERAL NOTES

THE EXACT NUMBER, LOCATION, AND SPACING OF ALL SIGNS AND DEVICES SHALL BE ADJUSTED TO FIT FIELD CONDITIONS AS APPROVED BY THE ENGINEER.

THE SPACING BETWEEN SIGNS SHOULD BE ADJUSTED TO NOT CONFLICT WITH AND TO PROVIDE A MINIMUM OF 200 FEET (500 FEET DESIRABLE) CLEARANCE TO EXISTING SIGNS.

THIS LANE CLOSURE IS TYPICAL FOR CLOSING RIGHT LANE - REVERSE FOR CLOSING LEFT LANE.

ALL SIGNS ARE 48" x 48" UNLESS OTHERWISE NOTED.

"WO" IS THE SAME AS "W" EXCEPT THE BACKGROUND IS ORANGE.

ANY SIGNS TEMPORARY OR EXISTING, WHICH CONFLICT WITH TRAFFIC CONTROL "IN USE" SHALL BE REMOVED OR COVERED AS NEEDED OR AS APPROVED BY THE ENGINEER.

FOR A LANE CLOSURE THAT IS IN PLACE LESS THAN 7 CONTINUOUS DAYS AND NIGHTS, THE ADVANCED WARNING SIGNS MAY BE MOUNTED ON PORTABLE SUPPORTS.

REMOVE PAVEMENT MARKINGS IF LANE CLOSURE IS TO BE IN PLACE 4 OR MORE CONTINUOUS DAYS AND NIGHTS.

IF THE HORIZONTAL ALIGNMENT IS SUCH THAT A CURVE MAY REQUIRE ADDITIONAL DELINEATION, THE DEVICE SPACING MAY BE DECREASED TO 50 FEET.

WARNING LIGHTS ARE NOT REQUIRED IF THE LANE CLOSURE IS A DAYTIME ONLY OPERATION.

ADJUSTMENTS IN BUFFER SPACE NEED TO BE INCORPORATED WHEN THE LANE CLOSURE OCCURS NEAR AN INTERCHANGE EXIT OR ENTRANCE RAMP OR INTERSECTION. THE LANE CLOSURE MUST TAKE PLACE FAR ENOUGH IN ADVANCE OF AN EXIT OR ENTRANCE RAMP TO STILL ALLOW FOR ADEQUATE BUFFER SPACE. THE MINIMUM LENGTH OF THE BUFFER SPACE BEFORE AN EXIT RAMP SHOULD BE ONE HALF THE LENGTH OF THE TRANSITION AREA. THE ENTRANCE RAMP SHOULD BE FOLLOWED BY THE ORIGINAL BUFFER SPACE LENGTH OF 800 FEET DESIRABLE PRIOR TO ANOTHER TRAFFIC CONTROL CHANGE SUCH AS A CROSSOVER MANEUVER.

CONSIDER ROADWAY GEOMETRICS WHEN LOCATING SIGNS AND ARROW BOARD SO THE DRIVER HAS A CLEAR VIEW OF THE ARROW BOARD AND LANE CLOSURE DRUMS.

LEGEND

- SIGN ON PERMANENT SUPPORT
- TRAFFIC CONTROL DRUM
- TRAFFIC CONTROL DRUM WITH TYPE "C" STEADY BURN LIGHT
- TYPE III BARRICADE WITH ATTACHED SIGN
- TYPE "A" WARNING LIGHT (FLASHING)
- REMOVING PAVEMENT MARKINGS
- DIRECTION OF TRAFFIC
- WORK AREA
- FLASHING ARROW BOARD

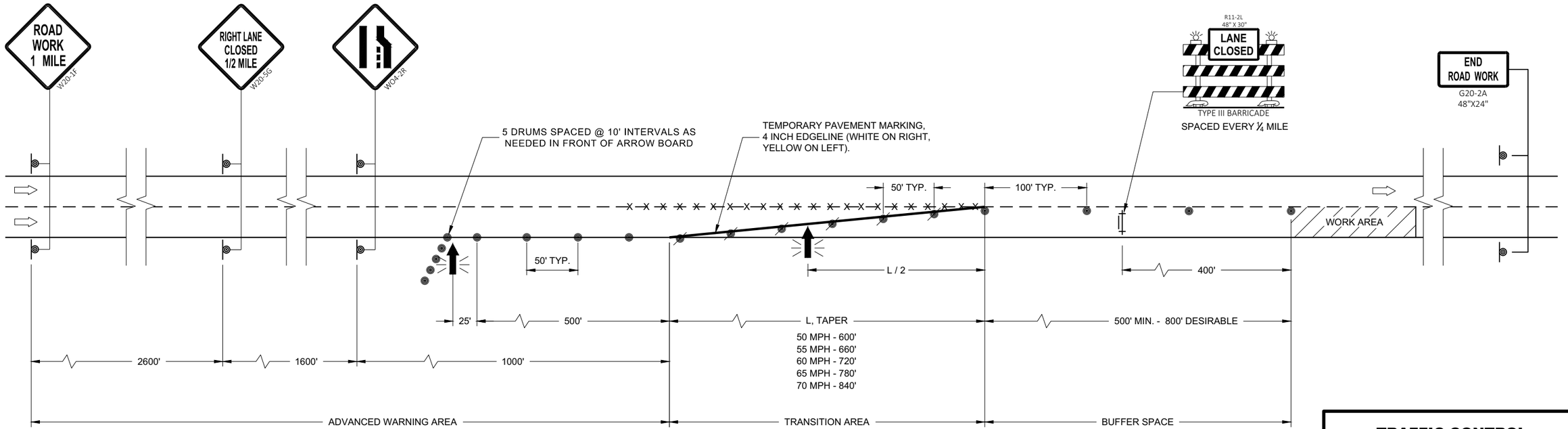

TRAFFIC CONTROL LANE CLOSURE

STATE OF WISCONSIN
DEPARTMENT OF TRANSPORTATION

APPROVED
August 2020
DATE

/S/ Andrew Heidtke
WORK ZONE ENGINEER

FHWA

6

SDD 15D12 - 09a

6

SDD 15D12 - 09a

LEGEND

- SIGN ON PERMANENT SUPPORT
- TRAFFIC CONTROL DRUM
- TRAFFIC CONTROL DRUM WITH TYPE "C" STEADY BURN LIGHT
- TYPE III BARRICADE WITH ATTACHED SIGN
- TYPE "A" WARNING LIGHT (FLASHING)
- FLASHING ARROW BOARD
- DIRECTION OF TRAFFIC
- REMOVE PAVEMENT MARKING (SEE GENERAL NOTES)
- WORK AREA



GENERAL NOTES

THIS DETAIL MAY BE USED FOR ROADWAYS WITH EITHER TWO OR THREE LANES IN EACH DIRECTION.

ALL SIGNS ARE 48"X48" UNLESS OTHERWISE NOTED. IF NECESSARY DUE TO SPACE CONSTRAINTS IN URBAN AREAS, 36"X 36" SIGNS MAY BE USED IF APPROVED BY REGIONAL TRAFFIC UNIT.

"WO" SIGN IS THE SAME AS "W" SIGN EXCEPT THE BACKGROUND IS ORANGE.

ANY SIGNS TEMPORARY OR EXISTING, WHICH CONFLICT WITH THE TRAFFIC CONTROL "IN USE" SHALL BE REMOVED OR COVERED AS NEEDED AND AS APPROVED BY THE ENGINEER. NO WARNING LIGHTS SHALL BE WORKING ON COVERED OR "DOWNED" SIGNS.

SIGNS THAT WILL BE IN PLACE LESS THAN 7 CONTINUOUS DAYS AND NIGHTS OR THAT WILL BE PLACED IN A CLOSED LANE MAY BE MOUNTED ON TEMPORARY SUPPORTS.

THE EXACT NUMBER, LOCATION, AND SPACING OF ALL SIGNS AND DEVICES SHALL BE ADJUSTED TO FIT FIELD CONDITIONS AS APPROVED BY THE ENGINEER.

THE SPACING BETWEEN TRAFFIC CONTROL SIGNS SHOULD BE ADJUSTED TO NOT CONFLICT WITH AND TO PROVIDE A MINIMUM OF 200 FEET (500' DESIRABLE) DISTANCE TO EXISTING SIGNS THAT WILL REMAIN IN PLACE

W20-1A, G20-1 AND G20-2A SIGNS ARE NOT REQUIRED IF THE LANE CLOSURE IS WITHIN A LARGER WORK ZONE WHERE THESE SIGNS ARE ALREADY PRESENT.

REMOVE PAVEMENT MARKINGS AND PLACE TEMPORARY PAVEMENT MARKING, REMOVABLE TAPE IF LANE CLOSURE IS TO BE IN PLACE FOR 4 OR MORE CONTINUOUS DAYS AND NIGHTS.

CONSIDER GEOMETRICS WHEN LOCATING SIGNS AND ARROW BOARDS SO THE APPROACHING DRIVER HAS A CLEAR VIEW OF THE ARROW BOARDS AND LANE CLOSURE DRUMS FOR A MINIMUM 1500 FEET IN FRONT OF DRUMS.

BARRICADES IN A CLOSED LANE THAT MUST BE MOVED FOR A WORK OPERATION SHALL BE IMMEDIATELY REESTABLISHED UPON COMPLETION OF THE OPERATION, OR FOR CONTINUING OPERATIONS, AT THE END OF EACH WORKING DAY.

CHANNELIZING DEVICES PLACED ADJACENT TO WORK AREA SHALL BE PULLED BACK FROM THE TRAVEL LANE WHEN WORK IS NOT IN PROGRESS.

WARNING LIGHTS ARE NOT REQUIRED IF THE LANE CLOSURE IS A DAYTIME ONLY OPERATION.

(1) OMIT G20-1 SIGNS IF LENGTH OF WORK AREA IS 2 MILES OR LESS.

POSTED SPEED LIMIT PRIOR TO WORK STARTING (MPH)	ADVANCE WARNING SIGN SPACING (A) FEET	TAPER LENGTH (12 FT. LANE) (L) FEET	BUFFER SPACE (B) FEET
25	200'	125'	55'
30	200'	180'	85'
35	350'	245'	120'
40	350'	320'	170'
45	500'	540'	220'
50	500'	600'	280'
55	500'	660'	335'



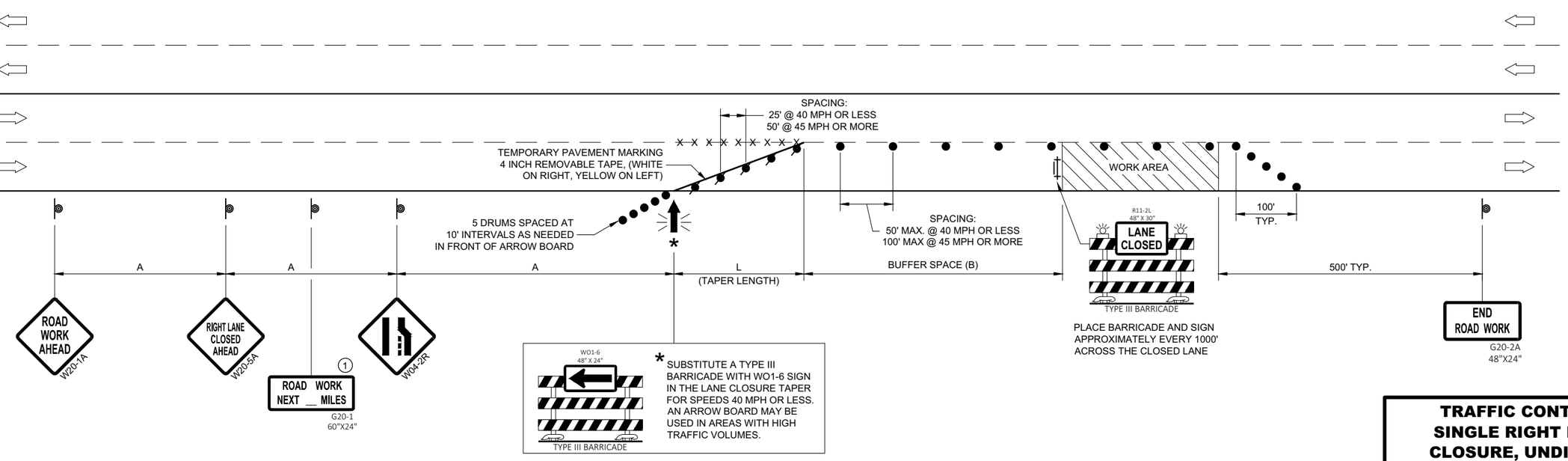

TRAFFIC CONTROL, SINGLE RIGHT LANE CLOSURE, UNDIVIDED NON-FREEWAY/EXPRESSWAY

STATE OF WISCONSIN
DEPARTMENT OF TRANSPORTATION

APPROVED

May 2020
DATE

/S/ Andrew Heidtke
STATEWIDE WORK ZONE T SAFETY ENGINEER

FHWA

SDD 15D20 - 05b

SDD 15D20 - 05b

LEGEND

- SIGN ON PERMANENT SUPPORT
- TRAFFIC CONTROL DRUM
- TRAFFIC CONTROL DRUM WITH TYPE "C" STEADY BURN LIGHT
- TYPE III BARRICADE WITH ATTACHED SIGN
- TYPE "A" WARNING LIGHT (FLASHING)
- FLASHING ARROW BOARD
- DIRECTION OF TRAFFIC
- REMOVE PAVEMENT MARKING (SEE GENERAL NOTES)
- WORK AREA

GENERAL NOTES

THIS DETAIL MAY BE USED FOR ROADWAYS WITH EITHER TWO OR THREE LANES IN EACH DIRECTION.

ALL SIGNS ARE 48"X48" UNLESS OTHERWISE NOTED. IF NECESSARY DUE TO SPACE CONSTRAINTS IN URBAN AREAS, 36"X 36" SIGNS MAY BE USED IF APPROVED BY REGIONAL TRAFFIC UNIT.

"WO" SIGN IS THE SAME AS "W" SIGN EXCEPT THE BACKGROUND IS ORANGE.

ANY SIGNS TEMPORARY OR EXISTING, WHICH CONFLICT WITH THE TRAFFIC CONTROL "IN USE" SHALL BE REMOVED OR COVERED AS NEEDED AND AS APPROVED BY THE ENGINEER. NO WARNING LIGHTS SHALL BE WORKING ON COVERED OR "DOWNED" SIGNS.

SIGNS THAT WILL BE IN PLACE LESS THAN 7 CONTINUOUS DAYS AND NIGHTS OR THAT WILL BE PLACED IN A CLOSED LANE MAY BE MOUNTED ON TEMPORARY SUPPORTS.

THE EXACT NUMBER, LOCATION, AND SPACING OF ALL SIGNS AND DEVICES SHALL BE ADJUSTED TO FIT FIELD CONDITIONS AS APPROVED BY THE ENGINEER.

THE SPACING BETWEEN TRAFFIC CONTROL SIGNS SHOULD BE ADJUSTED TO NOT CONFLICT WITH AND TO PROVIDE A MINIMUM OF 200 FEET (500' DESIRABLE) DISTANCE TO EXISTING SIGNS THAT WILL REMAIN IN PLACE.

W20-1A, G20-1 AND G20-2A SIGNS ARE NOT REQUIRED IF THE LANE CLOSURE IS WITHIN A LARGER WORK ZONE WHERE THESE SIGNS ARE ALREADY PRESENT.

REMOVE PAVEMENT MARKINGS AND PLACE TEMPORARY PAVEMENT MARKING, REMOVABLE TAPE IF LANE CLOSURE IS TO BE IN PLACE FOR 4 OR MORE CONTINUOUS DAYS AND NIGHTS.

CONSIDER GEOMETRICS WHEN LOCATING SIGNS AND ARROW BOARDS SO THE APPROACHING DRIVER HAS A CLEAR VIEW OF THE ARROW BOARDS AND LANE CLOSURE DRUMS FOR A MINIMUM 1500 FEET IN FRONT OF DRUMS.

DUE TO LACK OF SHOULDER/MEDIAN, ARROW BOARD IS PLACED AT THE THE END OF THE TAPER.

BARRICADES IN A CLOSED LANE THAT MUST BE MOVED FOR A WORK OPERATION SHALL BE IMMEDIATELY REESTABLISHED UPON COMPLETION OF THE OPERATION, OR FOR CONTINUING OPERATIONS, AT THE END OF EACH WORKING DAY.

CHANNELIZING DEVICES PLACED ADJACENT TO WORK AREA SHALL BE PULLED BACK FROM THE TRAVEL LANE WHEN WORK IS NOT IN PROGRESS.

WARNING LIGHTS ARE NOT REQUIRED IF THE LANE CLOSURE IS A DAYTIME ONLY OPERATION.

(1) OMIT G20-1 SIGNS IF LENGTH OF WORK AREA IS 2 MILES OR LESS.

(2) LANE MAY BE OPENED WHEN WORKERS ARE NOT PRESENT IN THE WORK AREA.

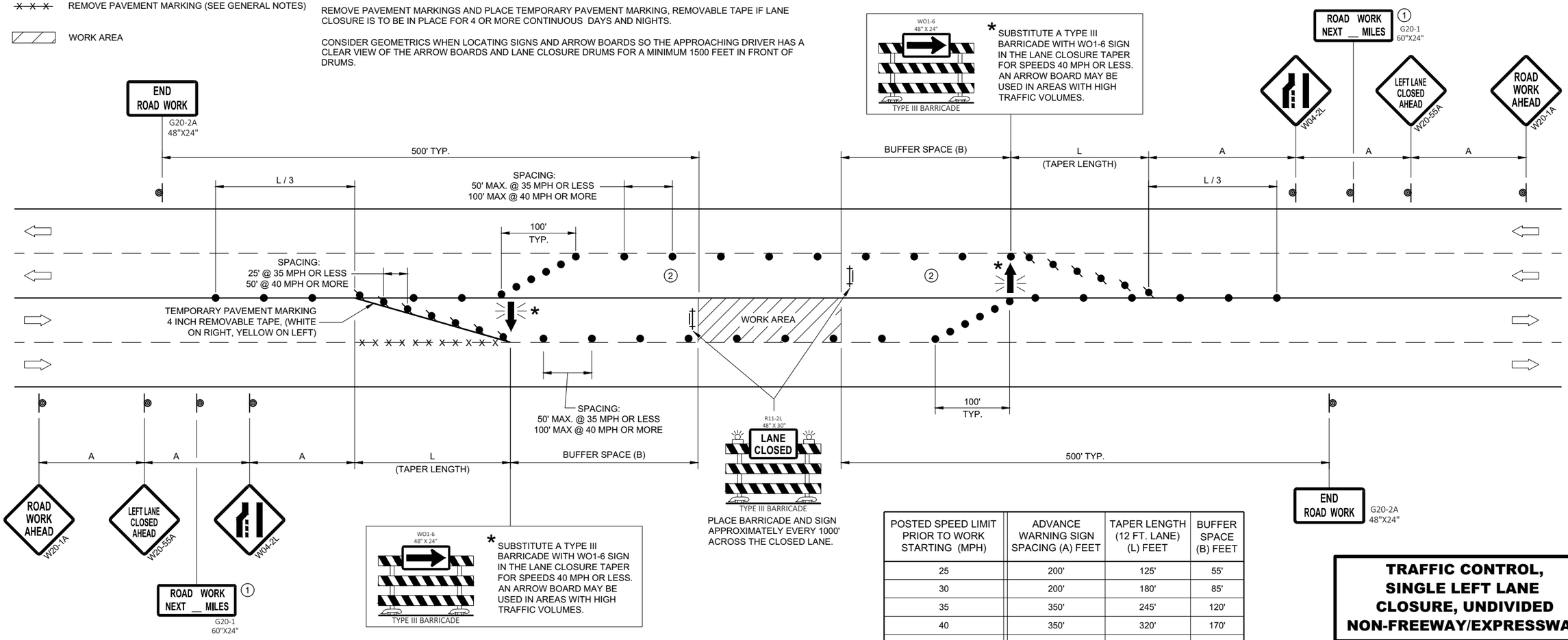

WO1-6 48" X 24"

TYPE III BARRICADE

* SUBSTITUTE A TYPE III BARRICADE WITH WO1-6 SIGN IN THE LANE CLOSURE TAPER FOR SPEEDS 40 MPH OR LESS. AN ARROW BOARD MAY BE USED IN AREAS WITH HIGH TRAFFIC VOLUMES.

* SUBSTITUTE A TYPE III BARRICADE WITH WO1-6 SIGN IN THE LANE CLOSURE TAPER FOR SPEEDS 40 MPH OR LESS. AN ARROW BOARD MAY BE USED IN AREAS WITH HIGH TRAFFIC VOLUMES.

POSTED SPEED LIMIT PRIOR TO WORK STARTING (MPH)	ADVANCE WARNING SIGN SPACING (A) FEET	TAPER LENGTH (12 FT. LANE) (L) FEET	BUFFER SPACE (B) FEET
25	200'	125'	55'
30	200'	180'	85'
35	350'	245'	120'
40	350'	320'	170'
45	500'	540'	220'
50	500'	600'	280'
55	500'	660'	335'

TRAFFIC CONTROL, SINGLE LEFT LANE CLOSURE, UNDIVIDED NON-FREEWAY/EXPRESSWAY

STATE OF WISCONSIN
DEPARTMENT OF TRANSPORTATION

APPROVED
May 2020
DATE

/S/ Andrew Heidtke
STATEWIDE WORK ZONE T SAFETY ENGINEER

FHWA

6

SDD 15D20 - 05c

6

SDD 15D20 - 05c

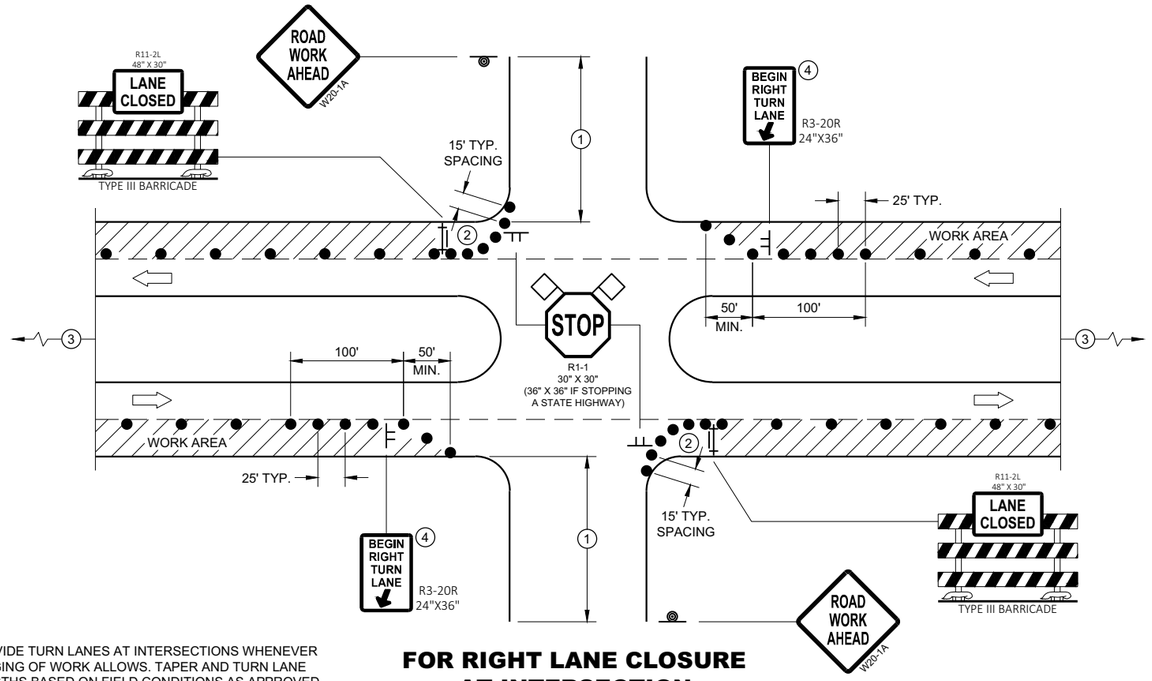

PROVIDE TURN LANES AT INTERSECTIONS WHENEVER STAGING OF WORK ALLOWS. TAPER AND TURN LANE LENGTHS BASED ON FIELD CONDITIONS AS APPROVED BY THE ENGINEER.

FOR RIGHT LANE CLOSURE AT INTERSECTION

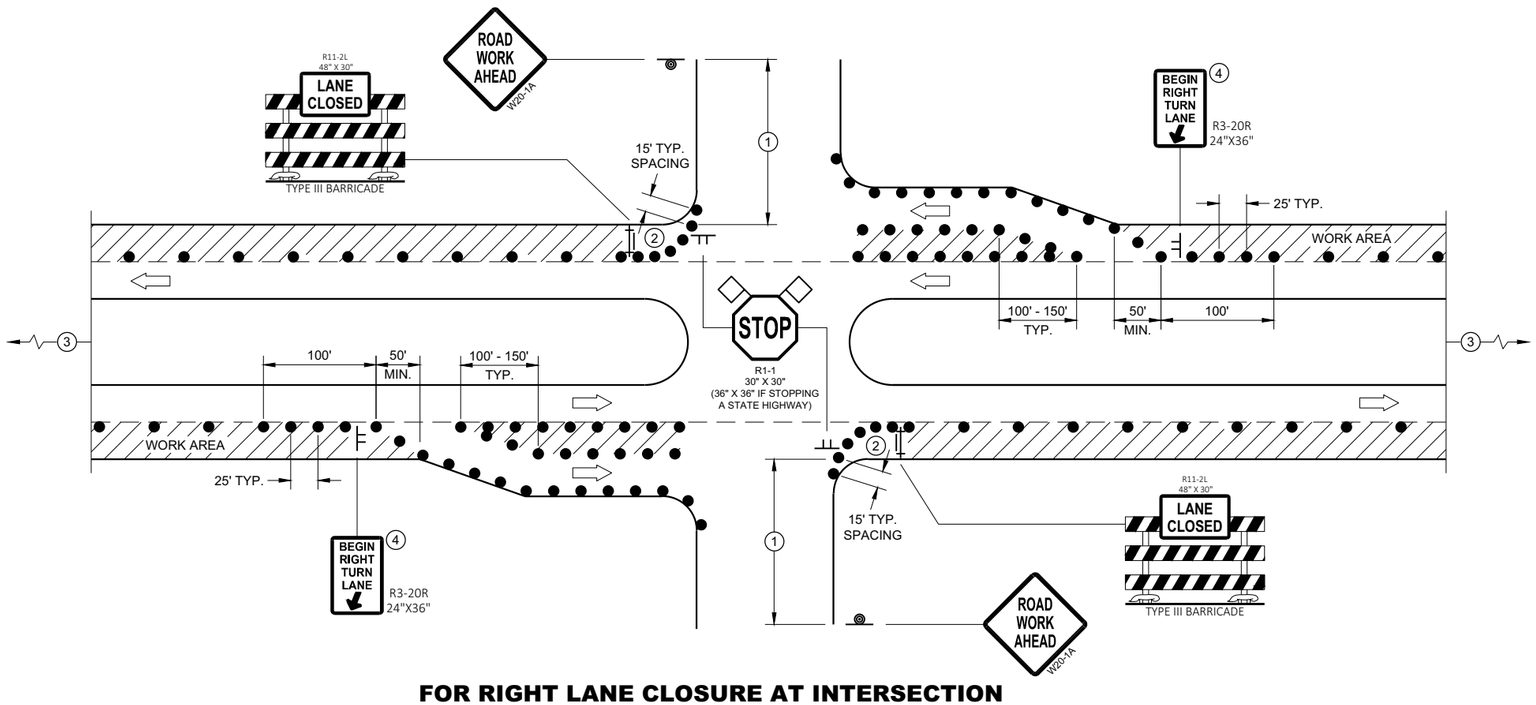

FOR RIGHT LANE CLOSURE AT INTERSECTION (WITH RIGHT TURN BAY OPEN)

GENERAL NOTES

ALL SIGNS ARE 48"X48" UNLESS OTHERWISE NOTED. IF NECESSARY DUE TO SPACE CONSTRAINTS IN URBAN AREAS, 36" X 36" MAY BE USED IF APPROVED BY THE DISTRICT TRAFFIC UNIT.

"WO" SIGN IS THE SAME AS "W" SIGN EXCEPT THE BACKGROUND IS ORANGE.

ANY SIGNS TEMPORARY OR EXISTING, WHICH CONFLICT WITH THE TRAFFIC CONTROL "IN USE" SHALL BE REMOVED OR COVERED AS NEEDED AND AS APPROVED BY THE ENGINEER. NO WARNING LIGHTS SHALL BE WORKING ON COVERED OR "DOWNED" SIGNS.

THE EXACT NUMBER, LOCATION, AND SPACING OF ALL SIGNS AND DEVICES SHALL BE ADJUSTED TO FIT FIELD CONDITIONS AS APPROVED BY THE ENGINEER.

THE SPACING BETWEEN TRAFFIC CONTROL SIGNS SHOULD BE ADJUSTED TO NOT CONFLICT WITH AND TO PROVIDE A MINIMUM OF 200 FEET (500' DESIRABLE) DISTANCE TO EXISTING SIGNS THAT WILL REMAIN IN PLACE

SIGN LAYOUTS SHALL BE IN ACCORDANCE WITH THE FHWA'S MANUAL OF STANDARD HIGHWAY SIGNS OR THE WISCONSIN STANDARD SIGN PLATES.

SIGNS THAT WILL REMAIN IN PLACE LESS THAN 7 CONTINUOUS DAYS AND NIGHTS OR THAT WILL BE PLACED IN A CLOSED LANE MAY BE MOUNTED ON PORTABLE SUPPORTS.

BARRICADES IN A CLOSED LANE THAT MUST BE MOVED FOR A WORK OPERATION SHALL BE IMMEDIATELY REESTABLISHED UPON COMPLETION OF THE OPERATION, OR FOR CONTINUING OPERATIONS, AT THE END OF EACH WORKING DAY.

CHANNELIZING DEVICES PLACED ADJACENT TO WORK AREA SHALL BE PULLED BACK FROM THE TRAVEL LANE WHEN WORK IS NOT IN PROGRESS.

(1) 500' TYPICAL OR AT LAST INTERSECTION, WHICHEVER IS CLOSER.
350' IF 35 - 40 MPH.
200' IF 25 - 30 MPH.

(2) ALSO USE BARRICADE AND 15 FOOT TYPICAL DRUM SPACING AT COMMERCIAL DRIVEWAYS

(3) SEE SEPARATE LANE CLOSURE DETAIL FOR ADDITIONAL TRAFFIC CONTROL.

(4) MINIMUM MOUNTING HEIGHT OF 5 FEET FROM EDGE OF PAVEMENT (AT EDGE LINE LOCATION) TO BOTTOM OF SIGN.

LEGEND

- SIGN ON TEMPORARY SUPPORT
- SIGN ON PERMANENT SUPPORT
- TRAFFIC CONTROL DRUM
- TYPE III BARRICADE WITH ATTACHED SIGN
- DIRECTION OF TRAFFIC
- FLAGS, 16" X 16" MIN., ORANGE
- WORK AREA

TRAFFIC CONTROL, INTERSECTION WITHIN SINGLE RIGHT LANE CLOSURE

STATE OF WISCONSIN
DEPARTMENT OF TRANSPORTATION

6

SDD 15D21 - 07a

6

SDD 15D21 - 07a

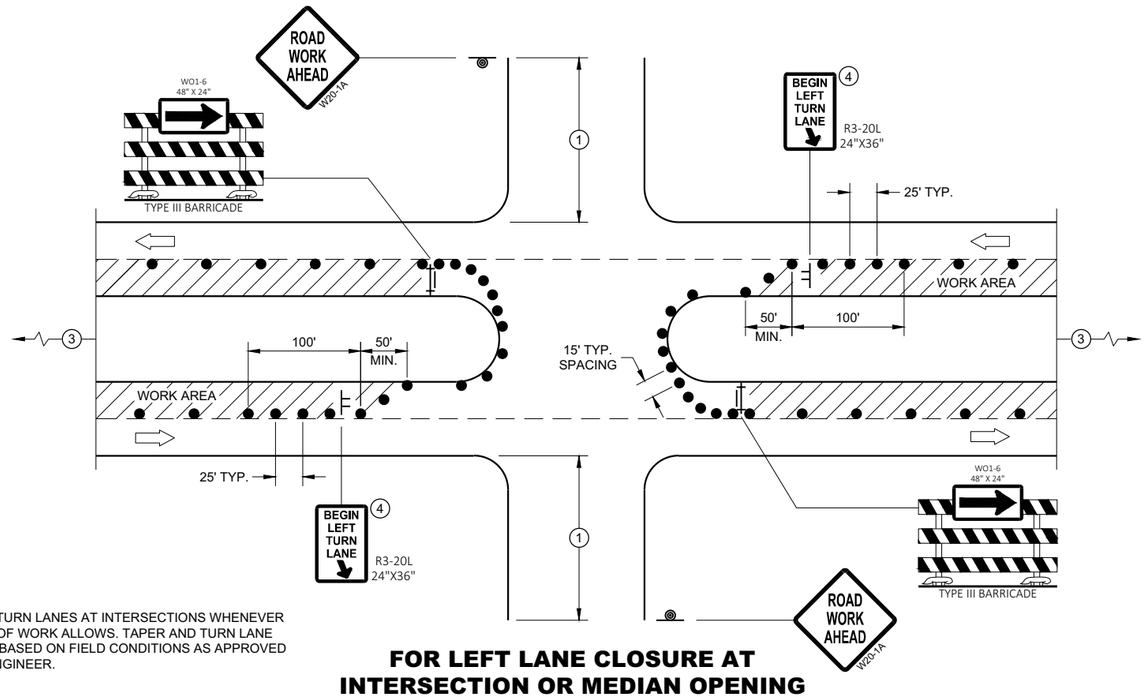

PROVIDE TURN LANES AT INTERSECTIONS WHENEVER STAGING OF WORK ALLOWS. TAPER AND TURN LANE LENGTHS BASED ON FIELD CONDITIONS AS APPROVED BY THE ENGINEER.

FOR LEFT LANE CLOSURE AT INTERSECTION OR MEDIAN OPENING

GENERAL NOTES

ALL SIGNS ARE 48"X48" UNLESS OTHERWISE NOTED. IF NECESSARY DUE TO SPACE CONSTRAINTS IN URBAN AREAS, 36" X 36" MAY BE USED IF APPROVED BY THE DISTRICT TRAFFIC UNIT.

"WO" SIGN IS THE SAME AS "W" SIGN EXCEPT THE BACKGROUND IS ORANGE.

ANY SIGNS TEMPORARY OR EXISTING, WHICH CONFLICT WITH THE TRAFFIC CONTROL "IN USE" SHALL BE REMOVED OR COVERED AS NEEDED AND AS APPROVED BY THE ENGINEER. NO WARNING LIGHTS SHALL BE WORKING ON COVERED OR "DOWNED" SIGNS.

THE EXACT NUMBER, LOCATION, AND SPACING OF ALL SIGNS AND DEVICES SHALL BE ADJUSTED TO FIT FIELD CONDITIONS AS APPROVED BY THE ENGINEER.

THE SPACING BETWEEN TRAFFIC CONTROL SIGNS SHOULD BE ADJUSTED TO NOT CONFLICT WITH AND TO PROVIDE A MINIMUM OF 200 FEET (500' DESIRABLE) DISTANCE TO EXISTING SIGNS THAT WILL REMAIN IN PLACE

SIGN LAYOUTS SHALL BE IN ACCORDANCE WITH THE FHWA'S MANUAL OF STANDARD HIGHWAY SIGNS OR THE WISCONSIN STANDARD SIGN PLATES.

SIGNS THAT WILL REMAIN IN PLACE LESS THAN 7 CONTINUOUS DAYS AND NIGHTS OR THAT WILL BE PLACED IN A CLOSED LANE MAY BE MOUNTED ON PORTABLE SUPPORTS.

BARRICADES IN A CLOSED LANE THAT MUST BE MOVED FOR A WORK OPERATION SHALL BE IMMEDIATELY REESTABLISHED UPON COMPLETION OF THE OPERATION, OR FOR CONTINUING OPERATIONS, AT THE END OF EACH WORKING DAY.

CHANNELIZING DEVICES PLACED ADJACENT TO WORK AREA SHALL BE PULLED BACK FROM THE TRAVEL LANE WHEN WORK IS NOT IN PROGRESS.

(1) 500' TYPICAL OR AT LAST INTERSECTION, WHICHEVER IS CLOSER.
350' IF 35 - 40 MPH.
200' IF 25 - 30 MPH.

(2) ALSO USE BARRICADE AND 15 FOOT TYPICAL DRUM SPACING AT COMMERCIAL DRIVEWAYS

(3) SEE SEPARATE LANE CLOSURE DETAIL FOR ADDITIONAL TRAFFIC CONTROL.

(4) MINIMUM MOUNTING HEIGHT OF 5 FEET FROM EDGE OF PAVEMENT (AT EDGE LINE LOCATION) TO BOTTOM OF SIGN.

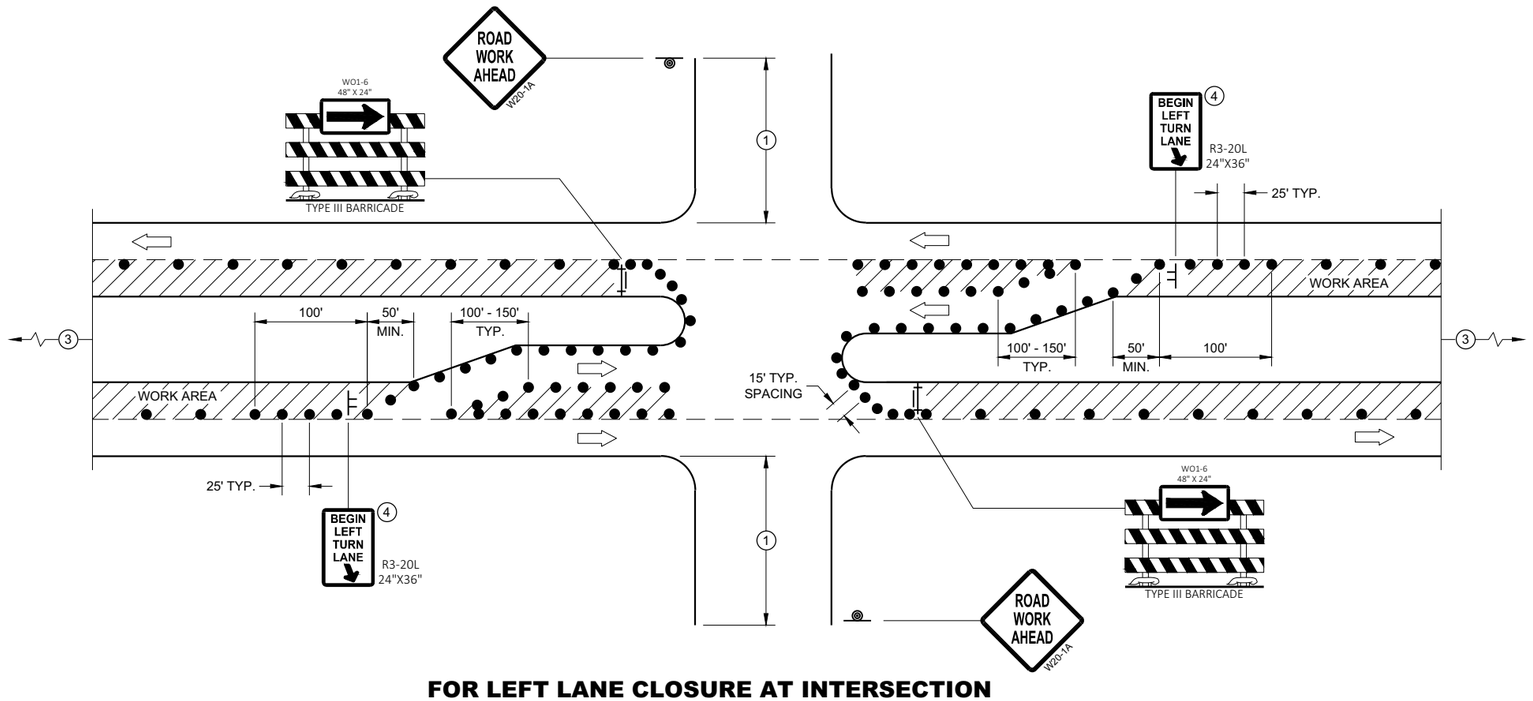

FOR LEFT LANE CLOSURE AT INTERSECTION OR MEDIAN OPENING (WITH LEFT TURN BAY OPEN)

LEGEND

- SIGN ON TEMPORARY SUPPORT
- SIGN ON PERMANENT SUPPORT
- TRAFFIC CONTROL DRUM
- TYPE III BARRICADE WITH ATTACHED SIGN
- DIRECTION OF TRAFFIC
- FLAGS, 16" X 16" MIN., ORANGE
- WORK AREA

TRAFFIC CONTROL, INTERSECTION WITHIN SINGLE LEFT LANE CLOSURE

STATE OF WISCONSIN
DEPARTMENT OF TRANSPORTATION

APPROVED
August 2020
DATE

/S/ Andrew Heidtke
WORK ZONE ENGINEER

FHWA

6

SDD 15D21 - 07b

6

SDD 15D21 - 07b

LEGEND

SIGN ON PERMANENT SUPPORT

TRAFFIC CONTROL DRUM

DIRECTION OF TRAFFIC

WORK ZONE

GENERAL NOTES

ALL SIGNS ARE 48"X48" UNLESS OTHERWISE NOTED. IF NECESSARY DUE TO SPACE CONSTRAINTS IN URBAN AREAS, 36" X 36" SIGNS MAY BE USED IF APPROVED BY THE REGIONAL TRAFFIC UNIT.

"WO" SIGN IS THE SAME AS "W" SIGN EXCEPT THE BACKGROUND IS ORANGE.

ANY SIGNS TEMPORARY OR EXISTING, WHICH CONFLICT WITH THE TRAFFIC CONTROL "IN USE" SHALL BE REMOVED OR COVERED AS NEEDED AND AS APPROVED BY THE ENGINEER.

THE EXACT NUMBER, LOCATION, AND SPACING OF ALL SIGNS AND DEVICES SHALL BE ADJUSTED TO FIT FIELD CONDITIONS AS APPROVED BY THE ENGINEER.

CHANNELIZING DEVICES PLACED ADJACENT TO WORK AREA SHALL BE PULLED BACK FROM THE TRAVEL LANE WHEN WORK IS NOT IN PROGRESS.

SIGNS THAT WILL BE IN PLACE LESS THAN 7 CONTINUOUS DAYS AND NIGHTS MAY BE MOUNTED ON PORTABLE SUPPORTS.

W20-1A AND G20-2A SIGNS ARE NOT REQUIRED IF THE WORK AREA IS WITHIN A LARGER WORK ZONE WHERE THESE SIGNS ARE ALREADY PRESENT. G20-2A SIGNS MAY ALSO BE OMITTED IF DURATION OF WORK IS LESS THAN 7 CONTINUOUS DAYS AND NIGHTS.

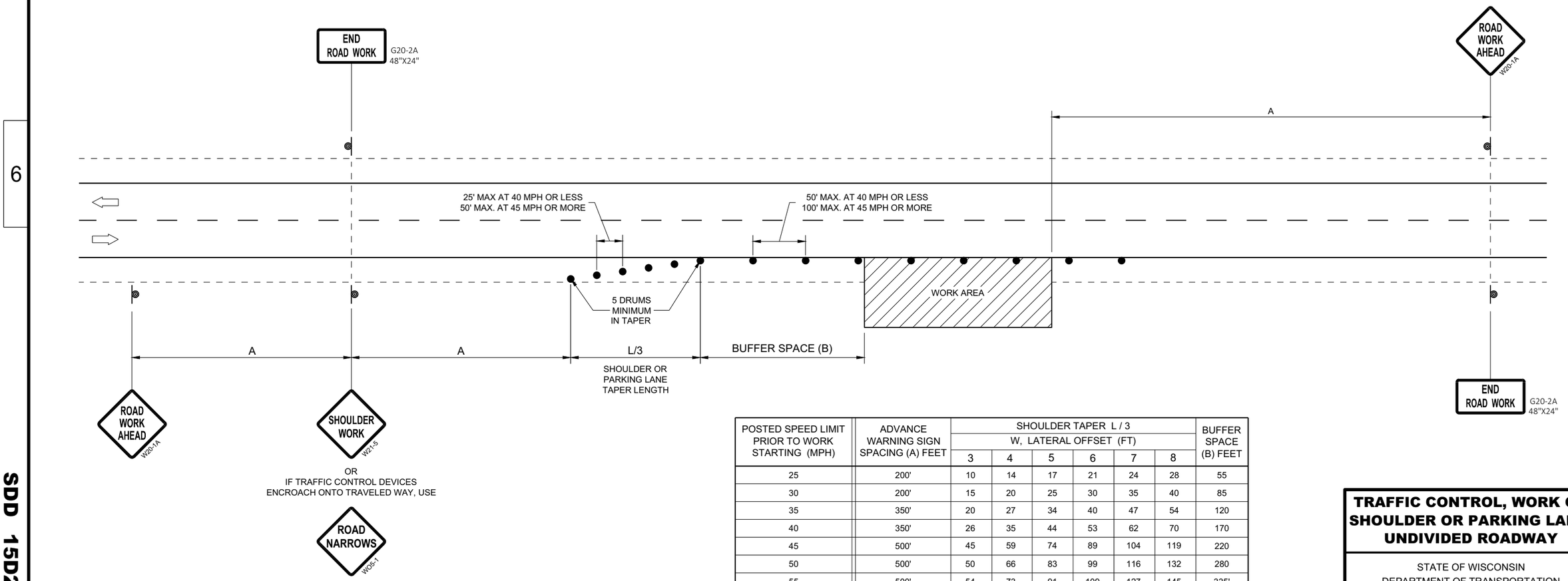

POSTED SPEED LIMIT PRIOR TO WORK STARTING (MPH)	ADVANCE WARNING SIGN SPACING (A) FEET	SHOULDER TAPER L / 3 W, LATERAL OFFSET (FT)						BUFFER SPACE (B) FEET
		3	4	5	6	7	8	
25	200'	10	14	17	21	24	28	55
30	200'	15	20	25	30	35	40	85
35	350'	20	27	34	40	47	54	120
40	350'	26	35	44	53	62	70	170
45	500'	45	59	74	89	104	119	220
50	500'	50	66	83	99	116	132	280
55	500'	54	73	91	109	127	145	335'

TRAFFIC CONTROL, WORK ON SHOULDER OR PARKING LANE, UNDIVIDED ROADWAY

STATE OF WISCONSIN
DEPARTMENT OF TRANSPORTATION

APPROVED
May 2020
DATE

/S/ Andrew Heidtke
STATEWIDE WORK ZONE T SAFETY ENGINEER

FHWA

SDD 15D28 - 04

SDD 15D28 - 04

NOTE: MAY BE USED ON ROADWAY WITH POSTED SPEED OF LESS THAN 40 MPH.

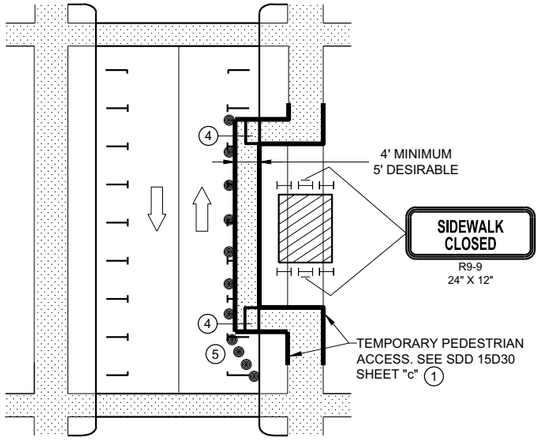

MID-BLOCK SIDEWALK SIDEWALK CLOSURE IN PARKING LANE

NOTE: LAYOUT SAME AS ABOVE.

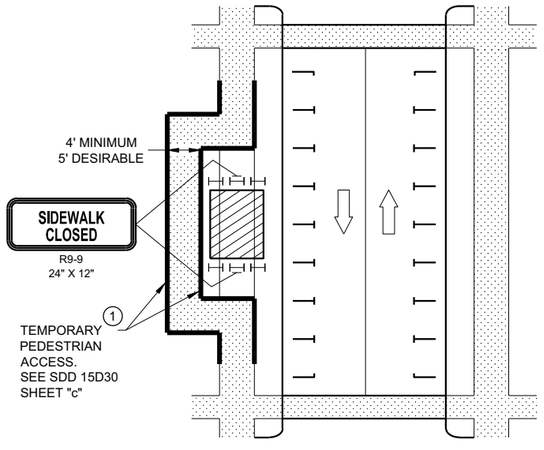

SIDEWALK DIVERSION

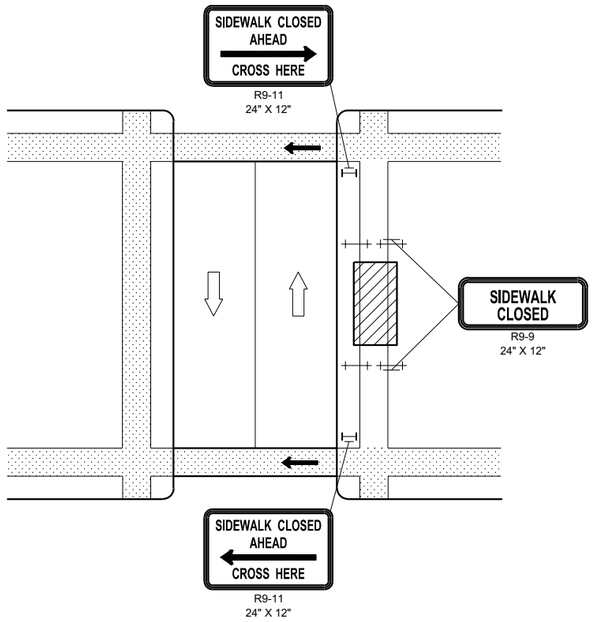

MID-BLOCK SIDEWALK CLOSURE

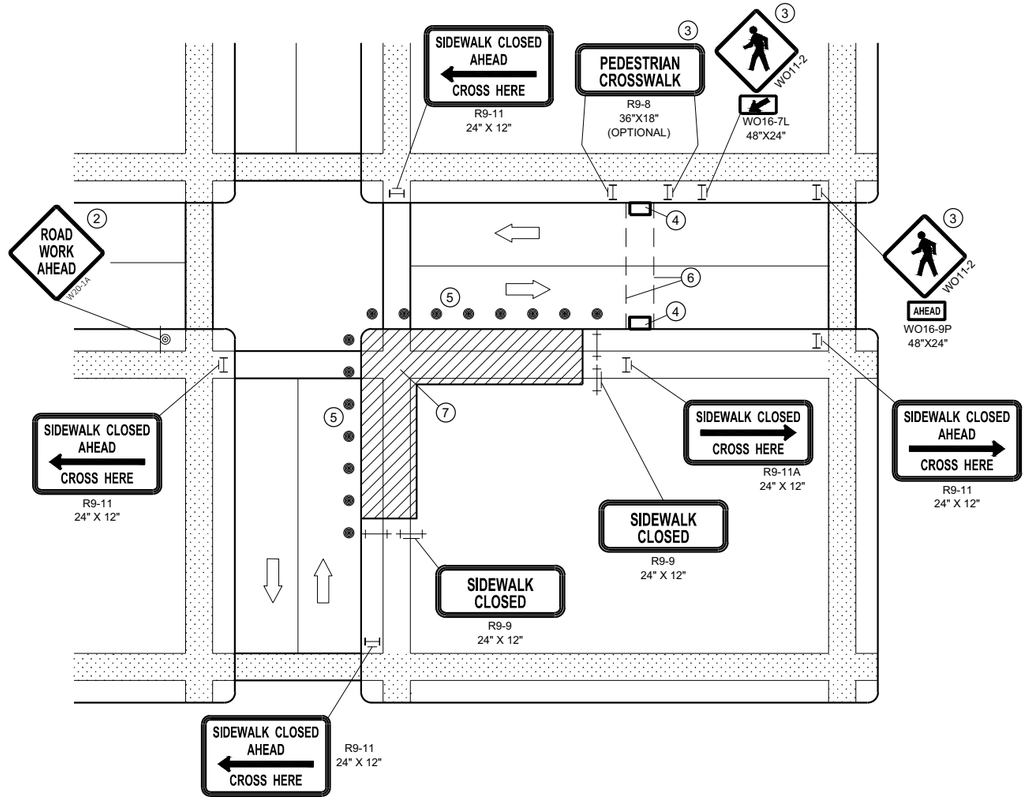

CORNER SIDEWALK CLOSURE WITH TEMPORARY CROSSWALK

GENERAL NOTES

WHEN CLOSING OR RELOCATING CROSSWALKS OR SIDEWALKS, PROVIDE DETECABLE TEMPORARY FACILITIES AND INCLUDE ACCESSIBILITY FEATURES CONSISTENT WITH EXISTING PEDESTRIAN FACILITIES.

TEMPORARY TRAFFIC CONTROL DEVICES FOR PEDESTRIANS ARE SHOWN. OTHER DEVICES MAY BE NECESSARY TO CONTROL VEHICULAR TRAFFIC. STAGE WORK AS NECESSARY, TO PROVIDE A TEMPORARY PEDESTRIAN ACCESS ROUTE AT ALL TIMES. FOR ROADWAYS WITH NO AVAILABLE DETOURS, MAINTAIN ONE OPEN SIDEWALK AT ALL TIMES.

"WO" SIGN IS THE SAME AS "W" SIGN, EXCEPT THE BACKGROUND IS ORANGE.

FOR NIGHTIME CLOSURE, USE TYPE "A" FLASHING WARNING LIGHTS ON BARRICADES, SUPPORTING SIGNS AND CLOSING SIDEWALK. USE TYPE "C" STEADY BURN LIGHTS ON CHANNELIZING DEVICES SEPARATING THE WORK AREA FROM VEHICULAR TRAFFIC.

PEDESTRIAN TRAFFIC SIGNAL DISPLAY CONTROLLING CLOSED CROSSWALK SHALL BE COVERED OR DEACTIVATED.

POST MOUNTED SIGNS LOCATED ADJACENT TO A SIDEWALK SHALL HAVE A 7 FOOT MINIMUM CLEARANCE FROM THE BOTTOM OF THE SIGN TO THE SIDEWALK SURFACE.

ALTERNATE SIDEWALK WORK BETWEEK LEFT AND RIGHT SIDE OF ROADWAY TO MAINTAIN PEDESTRIAN ACCESS.

1. IF SIDEWALK CLOSURE AFFECTS AN ACCESSIBLE AND DETECTABLE FACILITY, MAINTAIN ACCESSIBILITY AND DETECTABILITY ALONG THE ALTERNATE PEDESTRIAN ROUTE
2. "ROAD WORK AHEAD" SIGNS ARE NOT REQUIRED IF THE SIDEWALK CLOSURE OCCURS WITHIN A LARGER WORK ZONE WHERE ADVANCE WARNING SIGNS ARE ALREADY PRESENT, OR IF THE WORK AREA AND EQUIPMENT ARE MORE THAN 2 FEET BEHIND THE CURB.
3. IF TEMPORARY PEDESTRIAN CROSSWALK IS NOT PROVIDED, OMIT R9-8 AND WO11-2 SIGN ASSEMBLIES. IF PROVIDED INCLUDE ON BOTH SIDES OF THE CROSSWALK.
4. TEMPORARY CURB RAMPS. SEE SDD 15D30 SHEET "b'.
5. DRUMS OR BARRICADES AT 25 FOOT SPACING. STREET PARKING SHALL BE PROHIBITED FOR AT LEAST 50 FEET IN ADVANCE OF THE MID-BLOCK CROSSWALK.
6. TEMPORARY PAVEMENT MARKING FOR CROSSWALK LINES.
7. LIMIT WORK TO ONE QUADRANT AT A TIME TO MINIMIZE PEDESTRIAN DISRUPTION.

LEGEND

- SIGN ON PERMANENT SUPPORT
- TRAFFIC CONTROL DRUM
- TYPE II BARRICADE WITH/WITHOUT SIGN (ALL WITH ONE WARNING LIGHT, TYPE A, LOW INTENSITY FLASHING)
- TYPE III BARRICADE WITH/WITHOUT SIGN (ALL WITH ONE WARNING LIGHT, TYPE A, LOW INTENSITY FLASHING)
- UNDER PEDESTRIAN TRAFFIC
- WORK AREA
- PEDESTRIAN CHANNELIZATION DEVICE
- DIRECTION OF TRAFFIC

TRAFFIC CONTROL, PEDESTRIAN ACCOMMODATION

STATE OF WISCONSIN
DEPARTMENT OF TRANSPORTATION

6

SDD15D30 - 06a

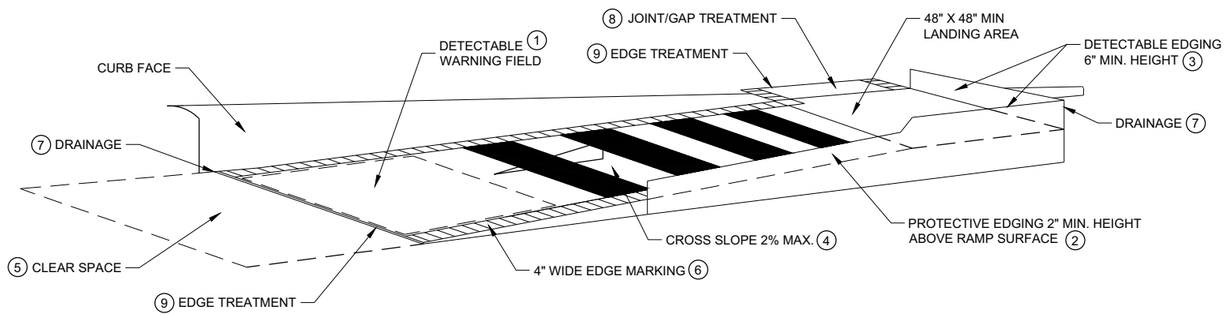

TEMPORARY CURB RAMP PARALLEL TO CURB

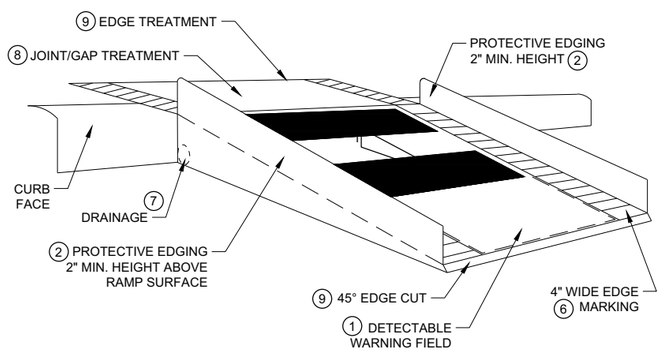

WITH PROTECTIVE EDGE

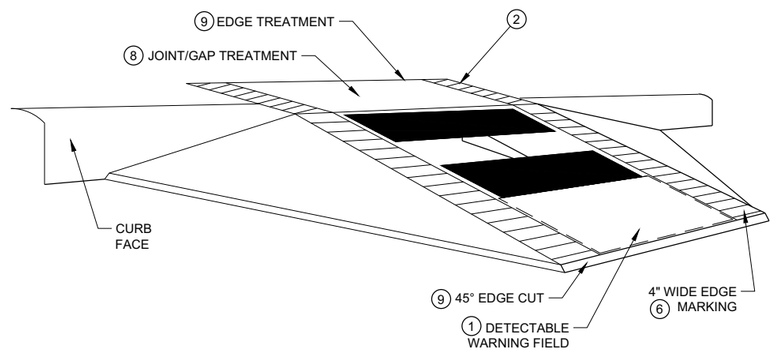

WITH SIDE APRON

TEMPORARY CURB RAMP PERPENDICULAR TO CURB

GENERAL NOTES

NOTIFY THE BUS COMPANY 7 DAYS IN ADVANCE OF THE BUS STOP RELOCATION.

ALTERNATE SIDEWALK WORK BETWEEN LEFT AND RIGHT SIDE OF ROADWAY TO MAINTAIN PEDESTRIAN ACCESS.

1. CURB RAMPS SHALL BE 48" MIN. WIDTH WITH A A FIRM, STABLE AND SLIP RESISTANT SURFACE. INSTALL CONTRASTING DETECTABLE WARNING FIELD AT PEDESTRIAN STREET CROSSINGS. REFER TO SDD 08D05, SHEET "e".
2. PROTECTIVE EDGING WITH A 2" MIN. HEIGHT SHALL BE INSTALLED WHEN A CURB RAMP OR LANDING PLATFORM HAS A VERTICAL DROP OF 6" OR GREATER OR HAS A SIDE APRON SLOPE STEEPER THAN 1:3 (33%). PROTECTIVE EDGING SHOULD BE CONSIDERED WHEN CURB RAMPS OR LANDING PLATFORMS HAVE A VERTICAL DROP OF 3" OR MORE.
3. DETECTABLE EDGING WITH 6" MIN. HEIGHT AND CONTRASTING COLOR SHALL BE INSTALLED ON ALL CURB RAMP LANDINGS WHERE THE WALKWAY CHANGES DIRECTION (TURNS).
4. CURB RAMPS AND LANDINGS SHALL HAVE A 1:50 (2%) MAX. CROSS-SLOPE.
5. CLEAR SPACE OF 48" X 48" SHALL BE PROVIDED ABOVE AND BELOW THE CURB RAMP.
6. THE CURB RAMP WALKWAY EDGE SHALL BE MARKED WITH A YELLOW COLOR, 4" WIDE MARKING, UNLESS A CONTRASTING DETECTABLE WARNING FIELD IS PROVIDED.
7. DO NOT RESTRICT WATER FLOW IN THE GUTTER SYSTEM.
8. LATERAL JOINTS OR GAPS BETWEEN SURFACES SHALL BE LESS THAN ½" WIDTH.
9. CHANGES BETWEEN SURFACE HEIGHTS SHALL NOT EXCEED ½". LATERAL EDGES SHALL BE VERTICAL UP TO ¼" HIGH AND BEVELED AT 1:2 BETWEEN ¼" AND ½".
10. 5" WIDE MIN. WITH PEDESTRIAN SAFETY BARRICADE, 10' WIDE MIN. WITHOUT PEDESTRIAN SAFETY BARRICADE.

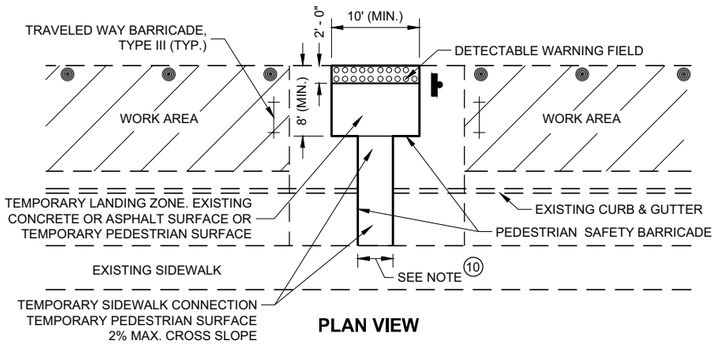

PLAN VIEW

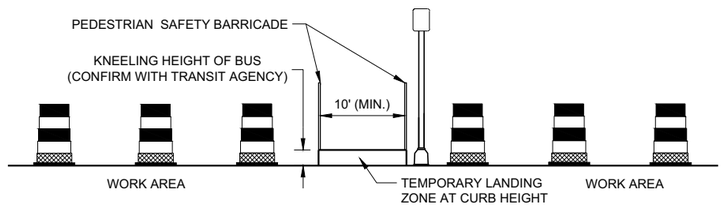

PROFILE VIEW

TEMPORARY BUS STOP PAD

LEGEND

- TRAFFIC CONTROL DRUM
- TYPE III BARRICADE
- WORK AREA

TRAFFIC CONTROL, PEDESTRIAN ACCOMMODATION

STATE OF WISCONSIN
DEPARTMENT OF TRANSPORTATION

6

SDD 15D30 - 06b

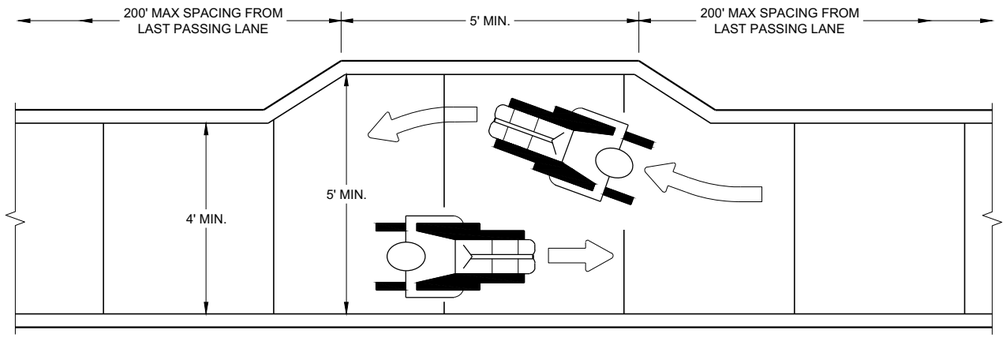

NARROW SIDEWALK PASSING DETAIL

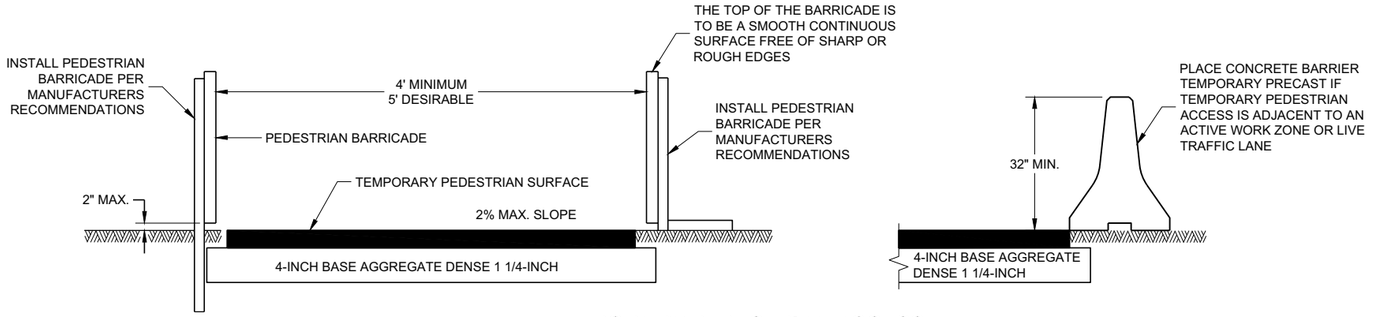

TEMPORARY PEDESTRIAN ACCESS

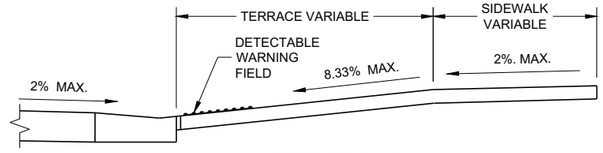

SECTION A - A

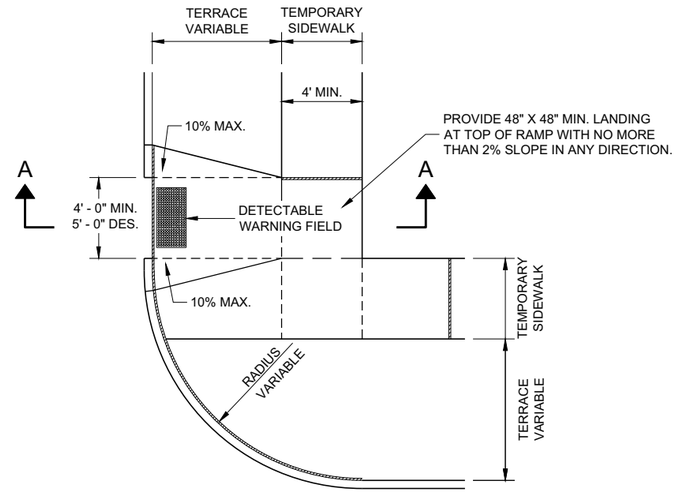

PLAN VIEW

TEMPORARY TYPE 3 RAMP

(OUTSIDE OF CROSSWALK AREA)

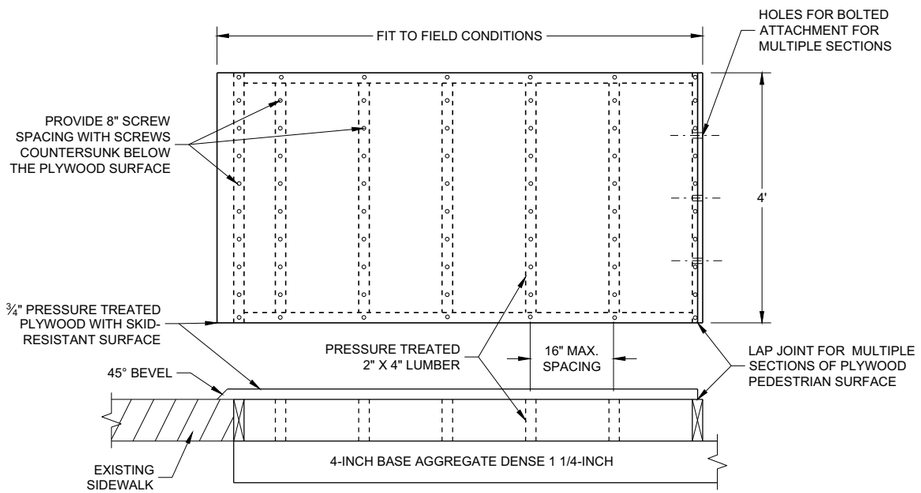

TEMPORARY PEDESTRIAN SURFACE PLYWOOD

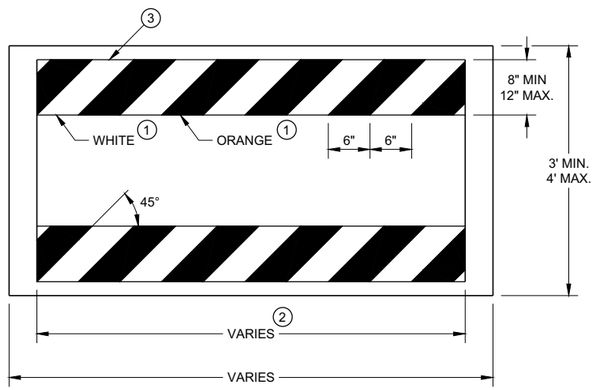

TEMPORARY PEDESTRIAN BARRICADE *

GENERAL NOTES

BARRICADE DEVICE SELECTED FROM APPROVED PRODUCT LIST

(1) REFLECTIVE SHEETING SHALL FOLLOW THE REQUIREMENTS IN THE APPROVED PRODUCTS LISTING FOR SIGN SHEETING.

(2) SHEETING REQUIRED ON MORE THAN 50% OF BARRICADE WIDTH.

(3) PLACE SHEETING ON BOTH SIDES OF THE BARRICADE.

* USE THIS DETAIL FOR SHEETING PLACEMENT REFERENCE.

TRAFFIC CONTROL, PEDESTRIAN ACCOMMODATION

STATE OF WISCONSIN
DEPARTMENT OF TRANSPORTATION

APPROVED
November 2019
DATE

/S/ Andrew Heidtke
WORK ZONE ENGINEE

FHWA

SDD 15D30 - 06c

6

SDD 15D30 - 06c

LEGEND

- TYPE III BARRICADE WITH ATTACHED SIGN
- SIGN ON PERMANENT SUPPORT
- TRAFFIC CONTROL DRUM
- TRAFFIC CONTROL DRUM WITH TYPE "C" STEADY BURN LIGHT
- TYPE "A" WARNING LIGHT (FLASHING)
- DIRECTION OF TRAFFIC
- WORK AREA
- REMOVING PAVEMENT MARKING (SEE GENERAL NOTES)

GENERAL NOTES

THE EXACT NUMBER, LOCATION, AND SPACING OF ALL SIGNS AND DEVICES SHALL BE ADJUSTED TO FIT FIELD CONDITIONS AS APPROVED BY THE ENGINEER.

THE SPACING BETWEEN SIGNS SHOULD BE ADJUSTED TO NOT CONFLICT WITH AND TO PROVIDE A MINIMUM OF 200 FEET, (500 FEET DESIREABLE) DISTANCE TO EXISTING SIGNS.

THIS LANE CLOSURE IS TYPICAL FOR LANE SHIFT RIGHT - REVERSE FOR SHIFTING LEFT.

ALL SIGNS ARE 48"x48" UNLESS OTHERWISE NOTED.

"WO" IS THE SAME AS "W" EXCEPT THE BACKGROUND IS ORANGE.

ANY SIGNS TEMPORARY OR EXISTING, WHICH CONFLICT WITH TRAFFIC CONTROL "IN USE" SHALL BE REMOVED OR COVERED AS NEEDED AND AS APPROVED BY THE ENGINEER. NO WARNING LIGHTS SHALL BE WORKING ON ANY "COVERED" OR "DOWNED" SIGNS.

CONSIDER GEOMETRICS WHEN LOCATING SIGNS AND ARROW BOARDS SO THE DRIVER HAS A CLEAR VIEW OF THE ARROW BOARD AND LANE CLOSURE DRUMS FOR A MINIMUM 1500 FEET IN FRONT OF DRUMS.

FOR A LANE CLOSURE THAT IS IN PLACE LESS THAN 7 CONTINUOUS DAYS AND NIGHTS, THE ADVANCED WARNING SIGNS MAY BE MOUNTED ON PORTABLE SUPPORTS.

REMOVE PAVEMENT MARKINGS IF LANE CLOSURE IS TO BE IN PLACE FOR LONGER THAN 4 OR MORE DAYS AND NIGHTS.

WARNING LIGHTS ARE NOT REQUIRED IF THE LANE CLOSURE IS A DAYTIME ONLY OPERATION.

IF THE HORIZONTAL ALIGNMENT IS SUCH THAT A CURVE MAY REQUIRE ADDITIONAL DELINEATION, THE DEVICE SPACING MAY BE DECREASED TO 50 FEET.

ADJUSTMENTS IN BUFFER SPACE NEED TO BE INCORPORATED WHEN THE LANE SHIFT OCCURS NEAR AN INTERCHANGE EXIT OR ENTRANCE RAMP. THE LANE SHIFT MUST TAKE PLACE FAR ENOUGH IN ADVANCE OF AN EXIT OR ENTRANCE RAMP TO STILL ALLOW FOR ADEQUATE BUFFER SPACE. THE MINIMUM LENGTH OF THE BUFFER SPACE BEFORE AN EXIT RAMP SHOULD BE 1/2 THE LENGTH OF THE TRANSITION AREA. THE ENTRANCE RAMP SHOULD BE FOLLOWED BY THE ORIGINAL BUFFER SPACE LENGTH OF 800 FEET DESIRABLE PRIOR TO ANOTHER TRAFFIC CONTROL CHANGE SUCH AS A CROSSOVER MANEUVER.

POSTED SPEED LIMIT PRIOR TO WORK STARTING (MPH)	ADVANCE WARNING SIGN SPACING (A) FEET	SHIFTING TAPER L½ W, LATERAL OFFSET (FT)					BUFFER SPACE (B) FEET
		10	11	12	13	14	
25	200	52	57	63	68	73	55
30	200	75	83	90	98	105	85
35	350	102	112	123	133	102	120
40	350	133	133	133	133	143	170
45	500	225	248	270	293	315	220

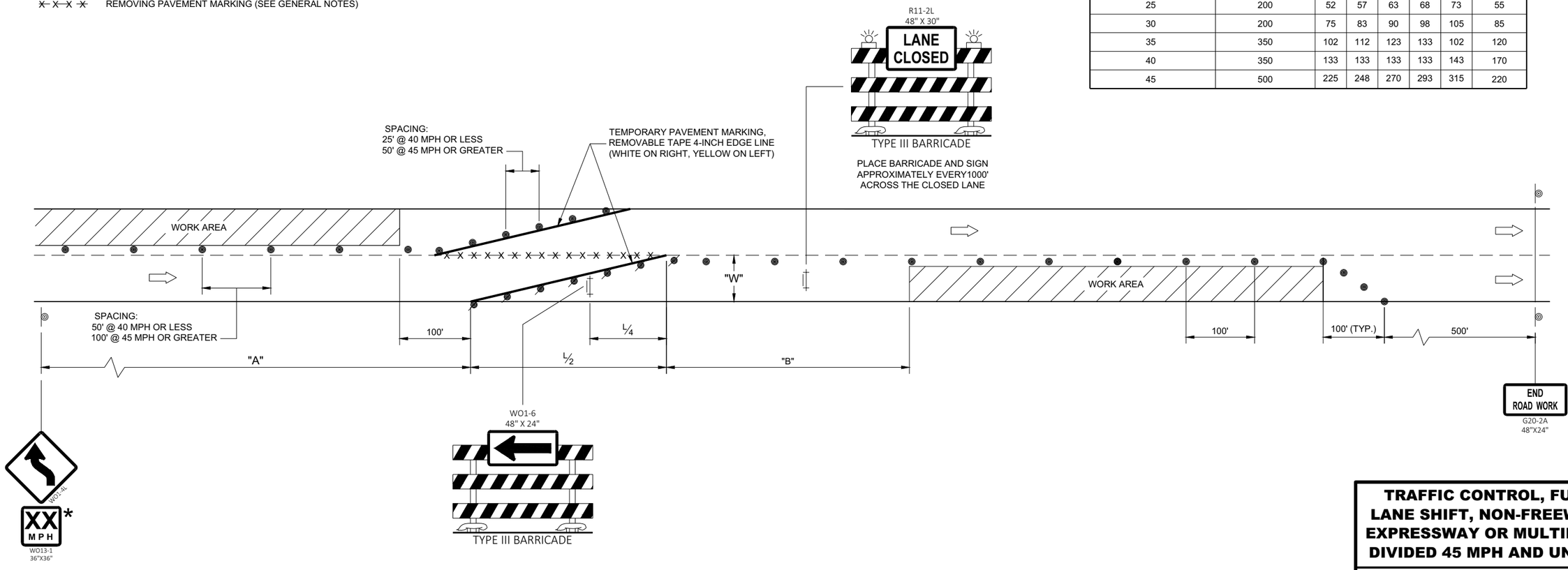

TRAFFIC CONTROL, FULL LANE SHIFT, NON-FREEWAY/ EXPRESSWAY OR MULTILANE DIVIDED 45 MPH AND UNDER

STATE OF WISCONSIN
DEPARTMENT OF TRANSPORTATION

APPROVED
February 2021 — DATE
/S/ Andrew Heidtke — ROADWAY STANDARDS DEVE ENGINEER

FHWA

6

SDD 15D40 - 02a

6

SDD 15D40 - 02a

GENERAL NOTES

DRAWING NOT TO SCALE. ALL SIGNS AND POSTS ON THIS SHEET SHALL BE PAID FOR WITH 'TRAFFIC CONTROL SIGNS' BID ITEM. ALL SIDE ROADS WHICH ARE UNDER CONSTRUCTION OF CURB AND GUTTER AND/OR GRADING SHALL BE ADEQUATELY SIGNED.

ALL SIGNS AND DEVICES SHALL BE IN CONFORMANCE WITH THE WISCONSIN MANUAL OF UNIFORM TRAFFIC CONTROL DEVICES (WMUTCD). SIGN LAYOUTS SHALL BE IN ACCORDANCE WITH THE WISDOT STANDARD SIGN PLATES.

"WO" SIGNS ARE THE SAME AS "W" SIGNS EXCEPT THAT THE BACKGROUND IS ORANGE.

ALL SIGNS ARE 48" X 48" UNLESS OTHERWISE NOTED.

THE EXACT NUMBER, LOCATION AND SPACING OF ALL SIGNS AND DEVICES SHALL BE ADJUSTED TO FIT FIELD CONDITIONS AS DIRECTED BY THE ENGINEER.

ALL SIGNS INAPPROPRIATE TO THE STATUS OF THE CONTROL ZONE, INCLUDING PRE-EXISTING SIGNS IN THE VICINITY, SHALL BE COVERED OR REMOVED AS DIRECTED BY THE ENGINEER.

SEE 15C34 FOR ADDITIONAL TRAFFIC CONTROL SIGNING WHEN CENTERLINE PAVEMENT MAKINGS ARE MISSING. 'DO NOT PASS' SIGNS MUST BE INSTALLED ON THE SAME DAY AS MILLING OPERATIONS.

(1) PLACE SIGNS 350' IN ADVANCE OF MILLED SURFACES AND AT 1 MILE INTERVALS, OR AS DIRECTED BY THE ENGINEER.

(2) PLACE SIGN 200' MIN. FROM INTERSECTION AND 200' MIN. AFTER ADVANCE WARNING SIGN SHOWN IN SDD 15C04.

LEGEND

SIGN ON TEMPORARY SUPPORT

DIRECTION OF TRAFFIC

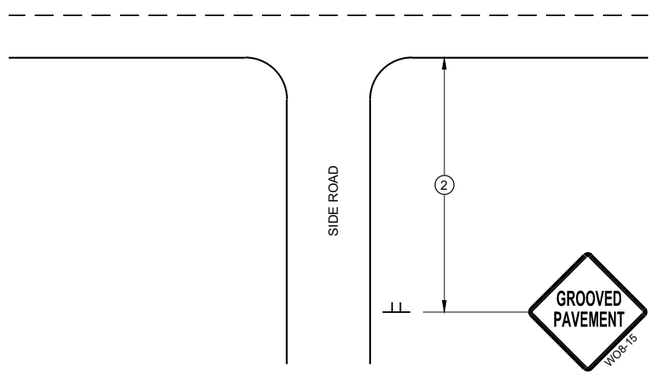

TYPICAL SIDE ROAD APPROACH SIGN DETAIL

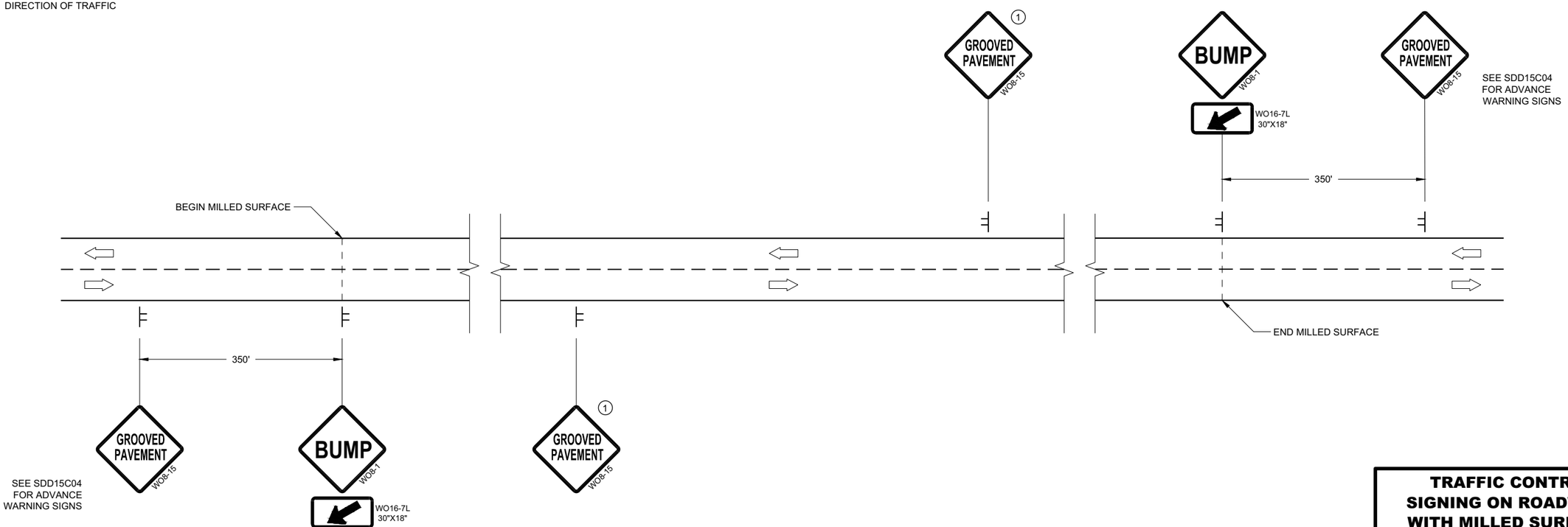

DETAIL FOR SIGNING ON MILLED SURFACES

TRAFFIC CONTROL, SIGNING ON ROADWAYS WITH MILLED SURFACES

STATE OF WISCONSIN
DEPARTMENT OF TRANSPORTATION

APPROVED
February 2020
DATE

/S/ Andrew Heidtke
WORK ZONE ENGINEE

FHWA

6
SDD 15D44 - 02

NOTES

1. All Signs Type II - Type H Reflective
2. Color:
   Background - Green
   Message - White
3. Message Series - C

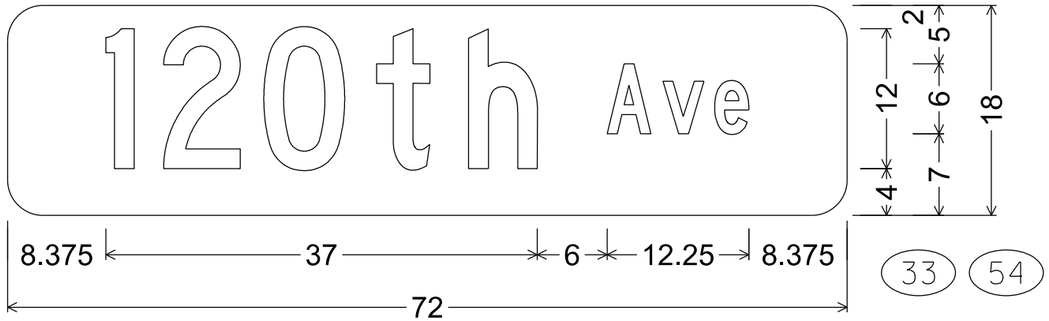

M1-94H; 3.000" Radius, No border

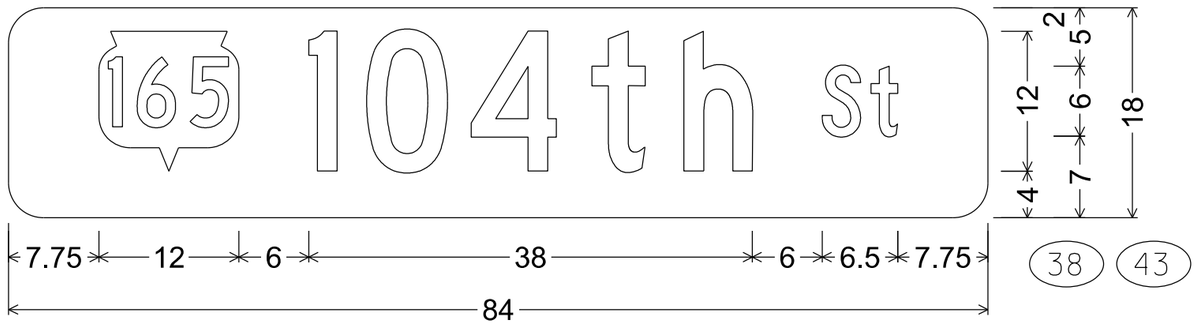

M1-94S; 3.000" Radius, No border

NOTES

1. All Signs Type II - Type H Reflective
2. Color:
   Background - Green
   Message - White
3. Message Series - C except as noted

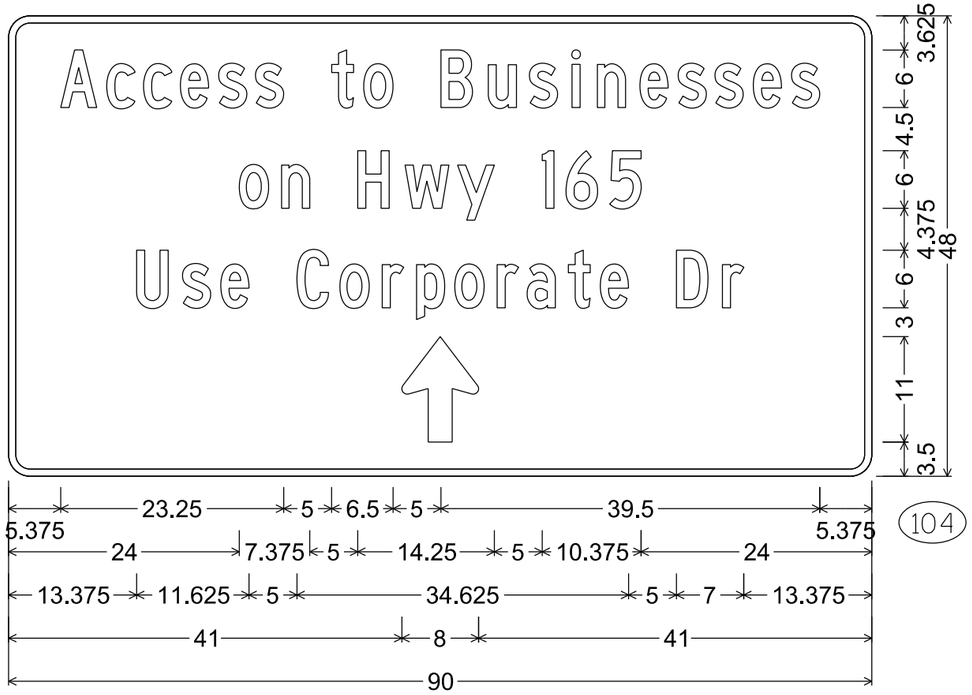

D1-3; 2.250" Radius, 0.750" Border

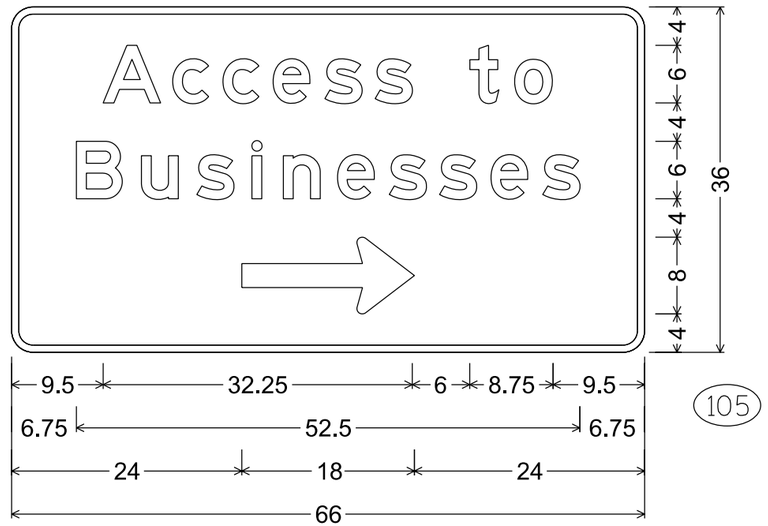

D1-2; 2.250" Radius, 0.750" Border,
"Access", E; "to", E; "Businesses", E

TYPICAL ASSEMBLIES

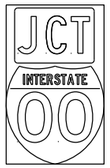

J1-1

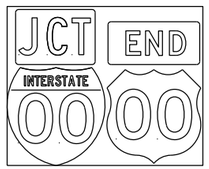

J1-2

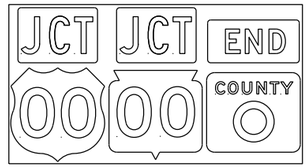

J1-3



JR1-1



J2-1

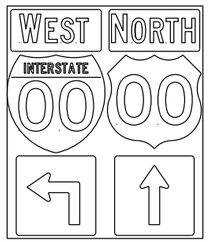

J2-2

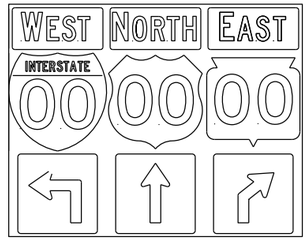

J2-3



JV
(Typical Vertical J-Assembly
See Note 10 and 11)

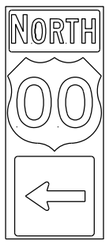

J3-1

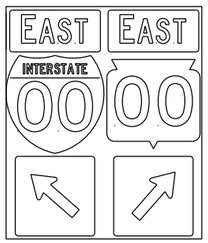

J3-2

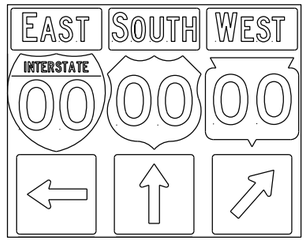

J3-3

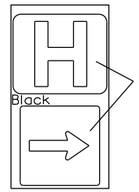

Blue Background
JH-1



J4-1

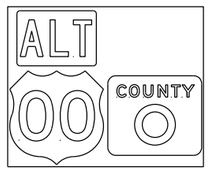

J4-2

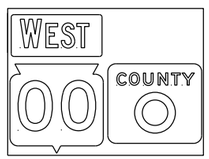

J4-2



J12-1

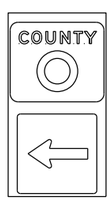

J13-1



J32-1



J33-1



J22-1



J23-1



JR13-1



JR23-1



JR99-1

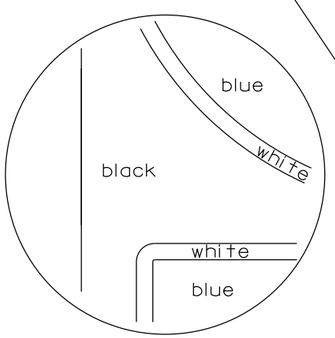

[blue background with interstate]

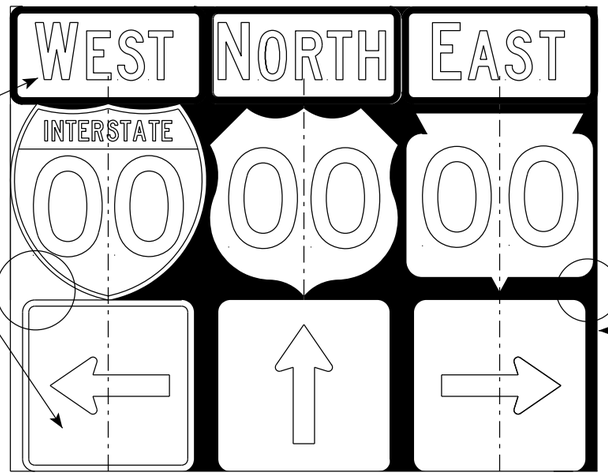

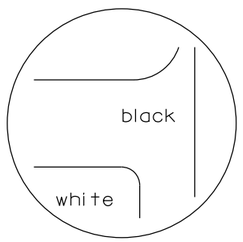

[black background]

NOTES

1. Signs are Type II - Type H Reflective
2. Color:
   Background - Black Non-reflective
   Message - see Note 5
3. Message Series - See Note 5
4. Corners shall be square or rounded if base material is plywood. If base material is metal the corners shall be rounded.
5. The colors and message spacing on each marker shall be according to the applicable route marker panel specifications.
6. Certain marker heads require the component pieces to be the same color. As an example, all the components used with an M1-1 Interstate marker shall be blue.
7. Single panel j-assemblies shall only be used with route marker shields that are same size. If the route marker shields are different size use multiple piece component.
8. Route assemblies that have 24 inch route shields and have dimensions greater than 48 inches (both vertical and horizontal) shall have one horizontal splice between the arrows and route shields. Vertical splices shall not be used on route assemblies with a horizontal dimension of 144 inches or less. The contractor shall not use more than one vertical joint per sign and the joint shall be between route shields.
9. Route assemblies that have 36 inch shields and have dimensions greater than 48 inchs (both vertical and horizontal) shall have two horizontal splices. One horizontal splice shall be between the cardinal direction and route shields and the other horizontal splice shall be between the arrows and route shields. Vertical splices shall not be used on route assemblies with a horizontal dimension of 144 or less. The contractor shall not use more than one vertical joint per sign and the joint shall be between route shields.
10. All Vertical J Assemblies are given a Sign Code of JV
11. For JV Assemblies that have a mixture of Interstate and non Interstate shields, arrows and cardinals shall be white on blue.

ROUTE MARKERS & COMPONENTS
IN TYPICAL ASSEMBLIES

WISCONSIN DEPT OF TRANSPORTATION

APPROVED Matthew R Rauch
for State Traffic Engineer

DATE 3/18/21 PLATE NO. A2-1S.9

PROJECT NO:

SHEET NO: 322 E

FILE NAME : C:\CAEfiles\Projects\tr_stdplate_A21S.dgn PLOT DATE : 18-MAR 2021 1:37 PLOT BY : mscj9h PLOT NAME :

WISDOT/CADDS SHEET 42

7

7

URBAN AREA

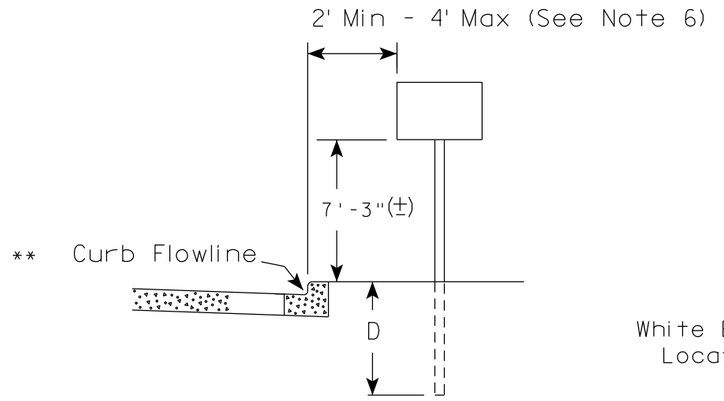

RURAL AREA (See Note 2)

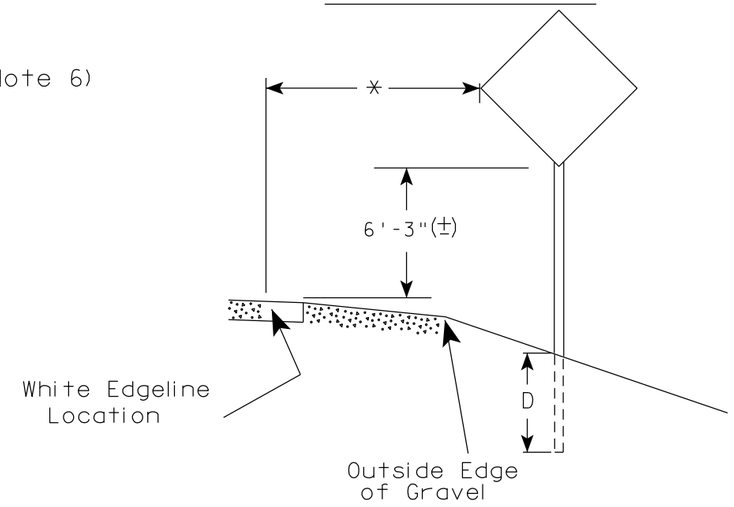

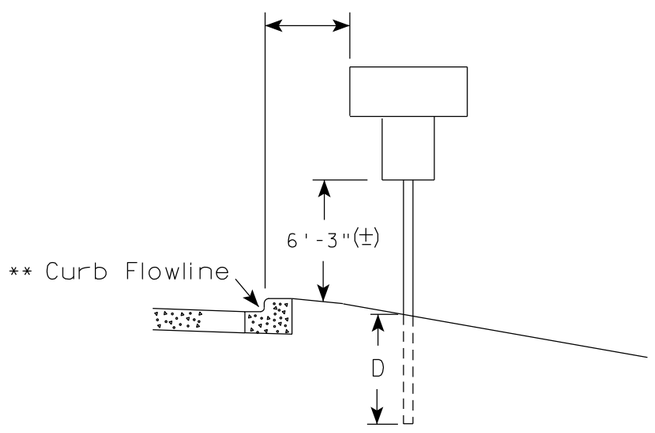

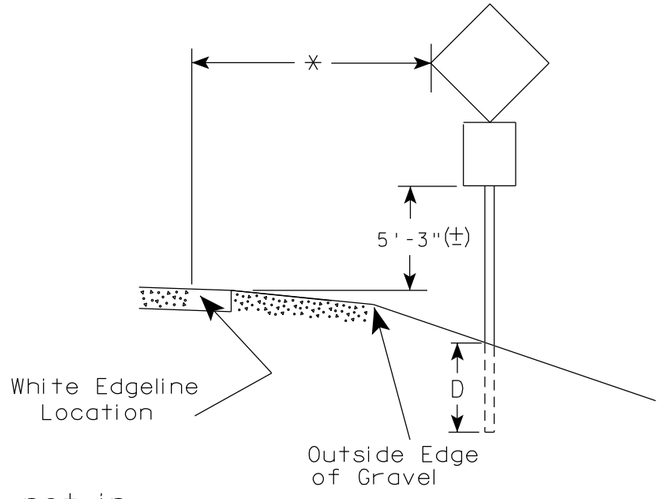

** The existence of curb and gutter does not in itself mandate the vertical clearance illustrated. That height is typically measured where there is sidewalk adjacent to the roadway or parking is permitted. In the absence of sidewalk vertical clearance is measured from the top of the curb. Offset of signs is measured from the flow line.

* 6 feet from edge of a paved shoulder or 12 feet from the edge of pavement (edge line location) or 2 feet from outside edge of gravel, whichever is greater unless directed by project engineer.

POST EMBEDMENT DEPTH

Area of Sign Installation (Sq.Ft.)	D (Min)
20 or Less	4'
Greater than 20	5'

GENERAL NOTES

1. Signs wider than 4 feet or 20 sq.ft or larger, shall be mounted on multiple posts. Refer to plate A4-4.
2. If signs are mounted on or behind barrier wall, see A4-10 sign plate.
   The Double Arrow sign (W12-1D) shall be mounted at a height of 2'-3" (±). The Chevron sign (W1-8), Roundabout Chevron panel (R6-4B), Enhanced Reference Markers, Clearance Markers (W5-52), Mile Markers (D10 series), In Road Object Markers (W5-54) & End of Road Markers (W5-56) shall be mounted at a height of 4'-3" (±).
3. For expressways and freeways, mounting height is 7'- 3" (±) or 6'-3" (±) depending upon existence of a sub-sign.
4. Minimum mounting height for signs mounted on traffic signal poles is 5'- 3" (±).
5. Offset distance shall be consistent with existing signs or consistent throughout length of project.
6. The (±) tolerance for mounting height is 3 inches.
7. Folding signs shall be mounted at a height of 5'-3" (±) or as directd by the Engineer.

TYPICAL INSTALLATION OF PERMANENT TYPE II SIGNS ON SINGLE POSTS

WISCONSIN DEPT OF TRANSPORTATION

APPROVED Matthew R Rauch
for State Traffic Engineer

DATE 5/13/2020 PLATE NO. A4-3.22

PROJECT NO:	HWY:	COUNTY:		SHEET NO: 323	E

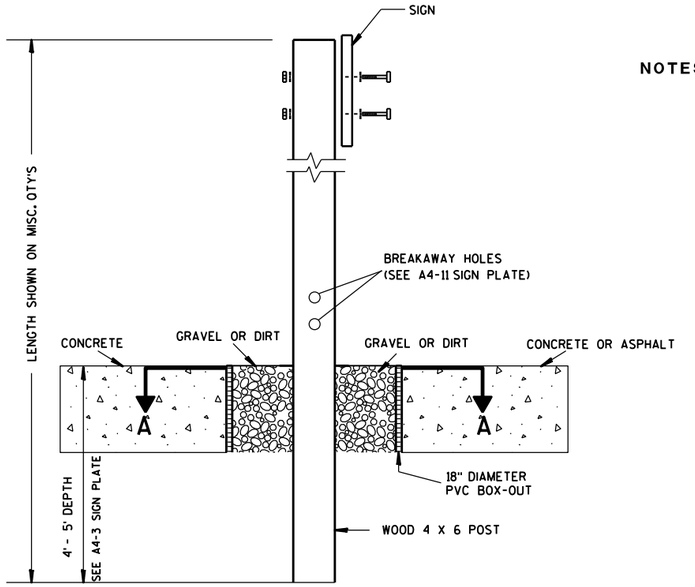

ELEVATION VIEW

DETAIL OF WOOD 4 X 6 SIGN POST IN BOX-OUT

NOTES:
1. ALL MATERIAL TO BE APPROVED BY ENGINEER PRIOR TO INSTALLATION
2. SEE SIGN PLATE A4-8 FOR SIGN HARDWARE REQUIREMENTS
3. 18 INCH X 18 INCH SQUARE BOX-OUTS MAY BE USED FOR INSTALLATIONS IN EXISTING CONCRETE OR ASPHALT LOCATIONS.

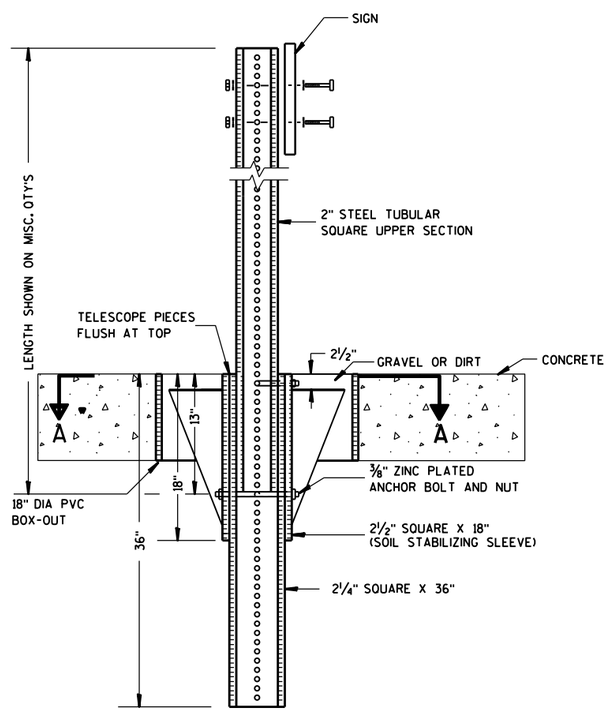

ELEVATION VIEW

DETAIL OF STEEL 2 X 2 SIGN POST IN BOX-OUT

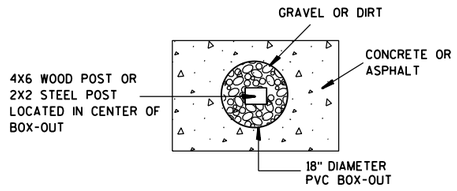

PLAN VIEW

FOR NEW CONCRETE/ASPHALT INSTALLATIONS

SIGN POST BOX-OUTS A4-3B

WISCONSIN DEPT OF TRANSPORTATION

APPROVED Matthew R Rauch
for State Traffic Engineer

DATE 1/27/14 PLATE NO. A4-3B.1

PROJECT NO:	HWY:	COUNTY:		SHEET NO:	E

FILE NAME : C:\CAEFiles\Projects\tr_stdplate\A43B.DGN PLOT DATE : 27-JAN-2014 09:48 PLOT BY : mscsja PLOT NAME : PLOT SCALE : 13.659812:1.000000 WISDOT/CADDS SHEET 42

URBAN AREA

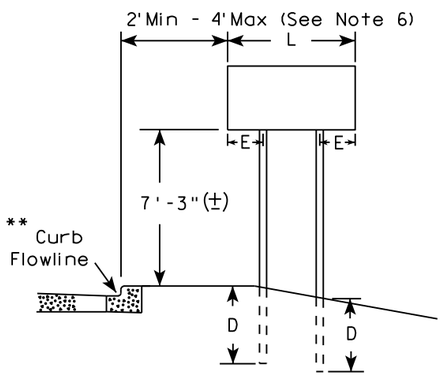

RURAL AREA (See Note 3)

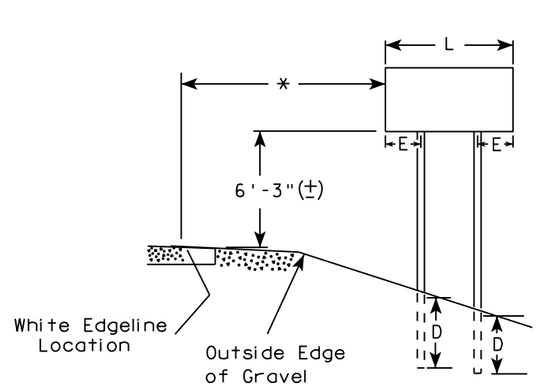

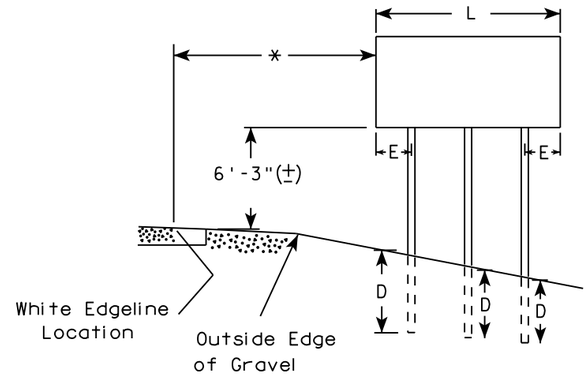

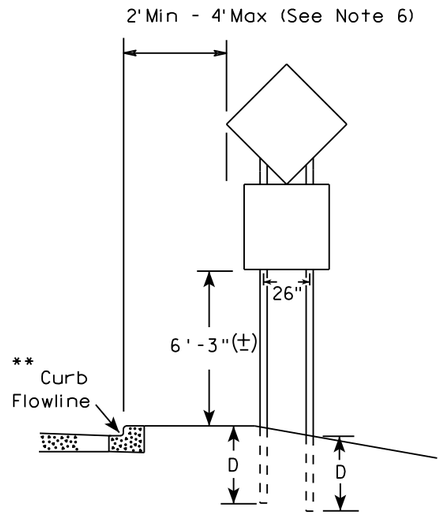

48" DIAMOND WARNING SIGN

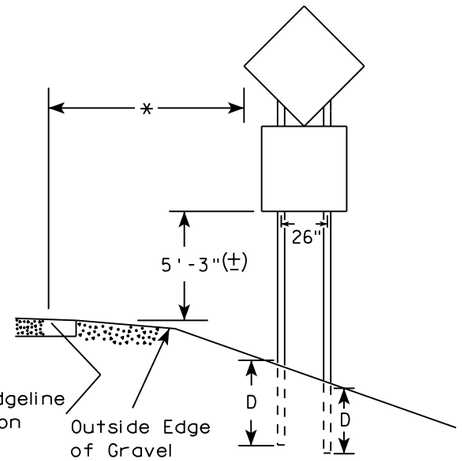

48" DIAMOND WARNING SIGN

SIGN SHAPE OTHER THAN DIAMOND (TWO POSTS REQUIRED)		
	L	E
***	Greater than 48" Less than 60"	12"
	60" to 108"	L/5

SIGN SHAPE OTHER THAN DIAMOND (THREE POSTS REQUIRED)	
L	E
Greater than 108" to 144"	12"

GENERAL NOTES

1. For 3 or 4 post installations, individual post spacing shall be greater than 3'-6".
2. See tables below for required number of posts.
3. For expressways and freeways, mounting height is 7'-3" (±) or 6'-3" (±) depending upon existence of sub-sign.
4. The (±) tolerance for mounting height is 3 inches.
5. J-Assemblies are considered to be one sign for mounting height.
6. Offset distance shall be consistent with existing signs or consistent throughout length of project.
7. Folding signs shall be mounted at a height of 5'-3" (±) or as directed by the engineer.
8. The Double Arrow sign (W12-1) shall be mounted at a height of 2'-3" (±). The Chevron sign (W1-8), Roundabout Chevron panel (R6-4B), Clearance Markers (W5-52), Mile Markers (D10 series), In Road Object Markers (W5-54) & End of Road Markers (W5-56) shall be mounted at a height of 4"-3" (±).

* 6 feet from edge of a paved shoulder or 12 feet from the edge of pavement (edge line location) or 2 feet from outside edge of gravel, whichever is greater unless directed by project engineer.

** The existence of curb and gutter does not in itself mandate the vertical clearance illustrated. That height is typically measured where there is sidewalk adjacent to the roadway or parking is permitted. In the absence of sidewalk vertical clearance is measured from the top of the curb. Offset of signs is measured from the flow line.

*** See A4-3 sign plate for signs 4' or less in width and less than 20 S.F. in area.

POST EMBEDMENT DEPTH

Area of Sign Installation (Sq. Ft.)	D (Min)
20 or Less	4'
Greater than 20	5'

TYPICAL INSTALLATION OF TYPE II SIGNS ON MULTIPLE POSTS

WISCONSIN DEPT OF TRANSPORTATION

APPROVED Matthew R Rauch
for State Traffic Engineer

DATE 8/21/17 PLATE NO. A4-4.15

PROJECT NO:	HWY:	COUNTY:		SHEET NO: 325	E

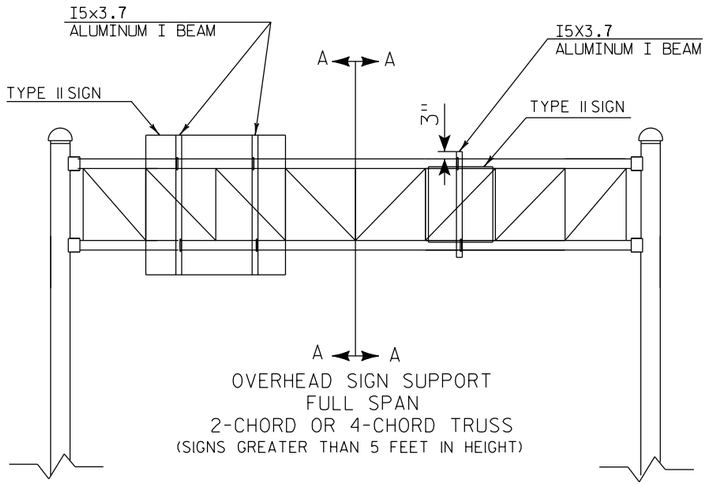

OVERHEAD SIGN SUPPORT
FULL SPAN
2-CHORD OR 4-CHORD TRUSS
(SIGNS GREATER THAN 5 FEET IN HEIGHT)

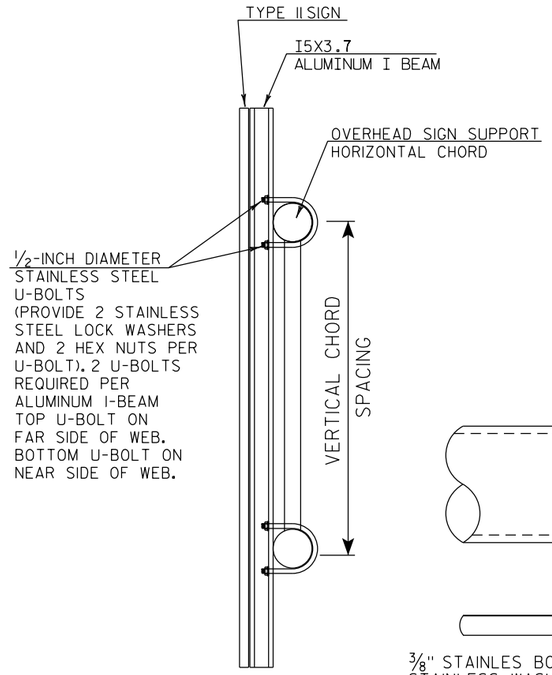

CUT SECTION A-A

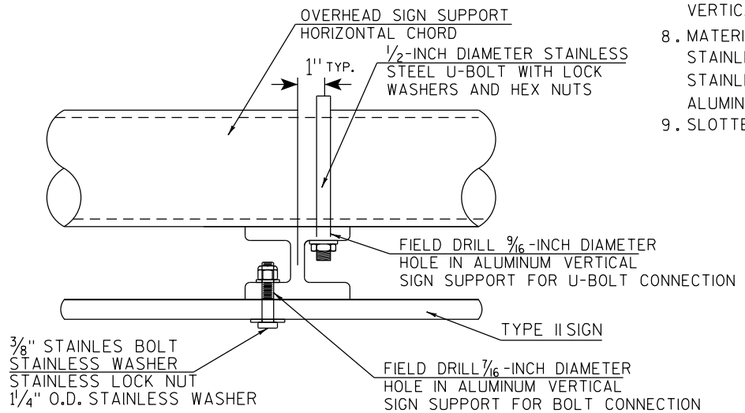

TYPICAL SIGN CONNECTION FOR
2-CHORD OR 4-CHORD TRUSS
PLAN VIEW

GENERAL NOTES

1. USE STAINLESS STEEL U-BOLTS, WASHERS, AND NUTS.
2. USE STAINLESS BOLTS AT BOLT HOLES IN SIGN PANEL PER SIGN PLATE A4-18.
3. USE ALUMINUM VERTICAL SIGN SUPPORT BEAMS HAVING A 5 INCH BEAM DEPTH AND WEIGHT OF 3.7 LBS PER FOOT.
4. U-BOLTS SHALL BE STAINLESS STEEL AND MANUFACTURED TO THE PROPER SIZE TO FIT THE CHORDS OF THE OVERHEAD SIGN STRUCTURE.
5. DIAMETER OF U-BOLTS SHALL BE AS SHOWN.
6. THE LENGTH OF THE ALUMINUM VERTICAL SIGN SUPPORT BEAMS SHALL BE THE SAME AS THE HEIGHT OF THE SIGN THEY ARE SUPPORTING. BEAM LENGTHS MAY BE LONGER FOR PROPER ATTACHMENT TO CHORDS.
7. SEE DETAIL BELOW FOR SPACING OF ALUMINUM VERTICAL SIGN SUPPORTS
8. MATERIAL NOTES:
   STAINLESS STEEL U-BOLTS, BOLTS, AND LOCKWASHERS ASTM 304.
   STAINLESS STEEL HEX NUTS ASTM A276.
   ALUMINUM I-BEAMS ARE 6061-T6.
9. SLOTTED HOLES IN I-BEAMS ARE NOT ALLOWED

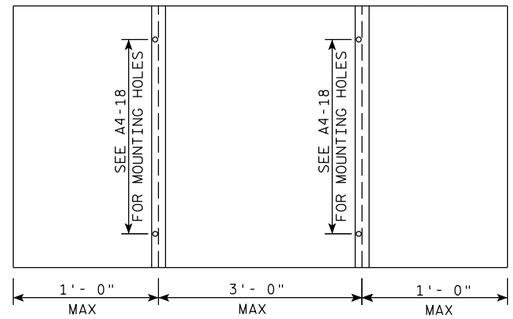

SPACING OF I5X3.7 ALUMINUM
MULTIPLE VERTICAL SIGN SUPPORTS

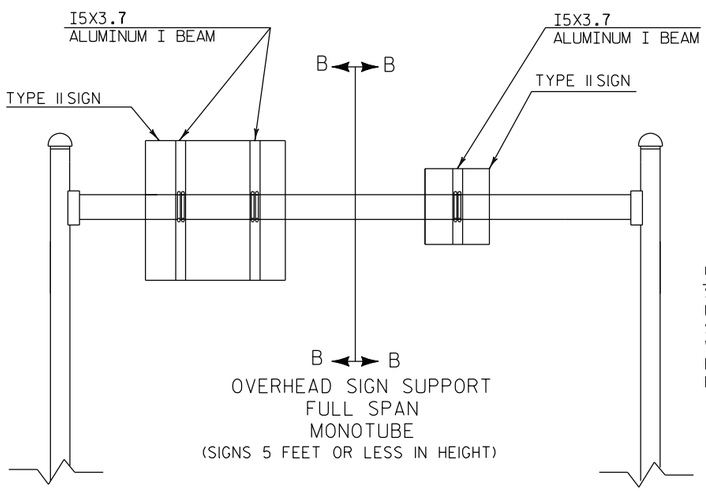

OVERHEAD SIGN SUPPORT
FULL SPAN
MONOTUBE
(SIGNS 5 FEET OR LESS IN HEIGHT)

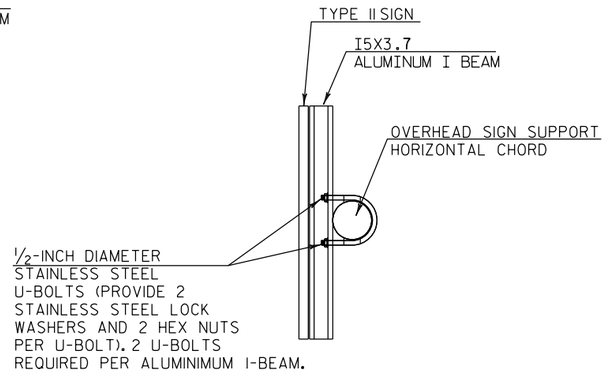

CUT SECTION B-B

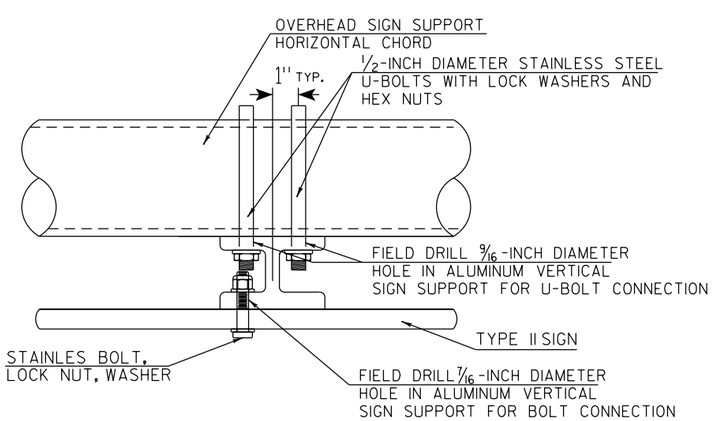

TYPICAL SIGN CONNECTION FOR
MONOTUBE
PLAN VIEW

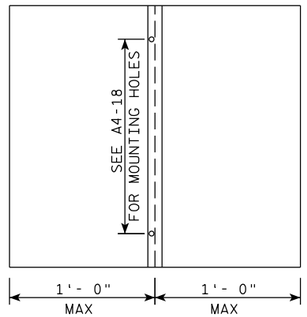

SPACING OF I5X3.7 ALUMINUM
SINGLE VERTICAL SIGN SUPPORT

TYPE II SIGN CONNECTION
TO OVERHEAD SIGN SUPPORT

WISCONSIN DEPT OF TRANSPORTATION

APPROVED Matthew R Rauch
for State Traffic Engineer

DATE 1/07/20 PLATE NO. A4-7B.1

PROJECT NO:	HWY:	COUNTY:		SHEET NO: 326	E

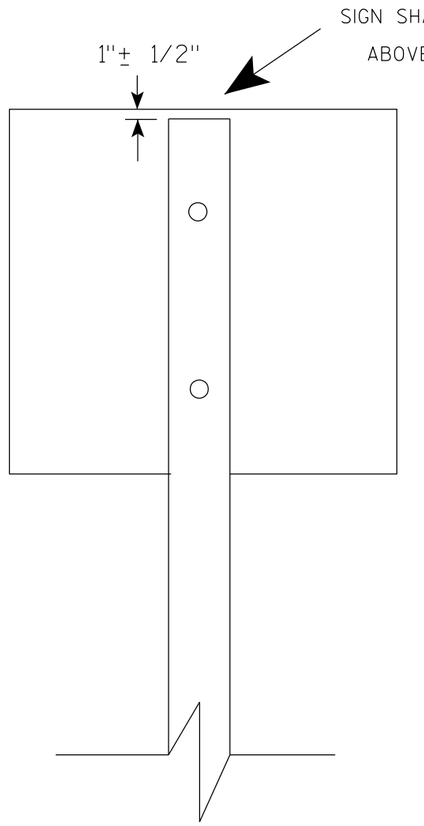

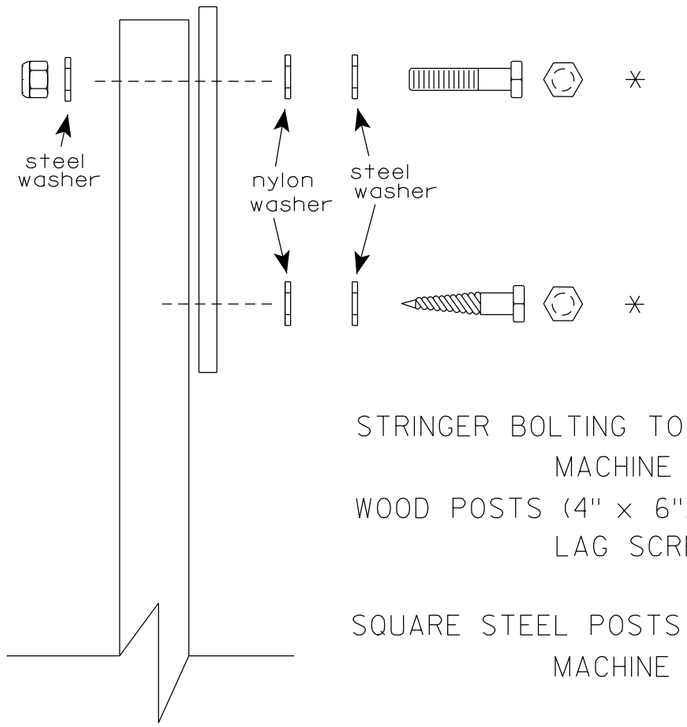

Nuts, bolts and lags used for mounting signs shall have hexagonal heads and shall be either :

a. Hot dip galvanized in accordance with ASTM Designation: A 153, Class D, or SC 3

b. Electro-galvanized in accordance with ASTM Designation : B 633, TYPE III, SC 3.

Threads on bolts and nuts shall be manufactured with sufficient allowance for the cadmium plate or galvanized coating to permit the nuts to run freely on the bolts.

STRINGER BOLTING TO ALUMINUM SIGNS (SEE SIGN PLATE A4-18)

MACHINE BOLTS - 5/16" X 1-3/4" Length w/ lock nuts

WOOD POSTS (4" x 6")

LAG SCREWS - 3/8" X 3" (NO STRINGERS ON BACK OF SIGN)
3/8" X 4" (STRINGERS ON BACK OF SIGN)

SQUARE STEEL POSTS (2" x 2")

MACHINE BOLTS - 3/8" X 3-1/4" Length w/ nuts (NO STRINGER ON BACK OF SIGN)
3/8" X 5" Length w/ nuts (STRINGERS ON BACK OF SIGN)

RIVETS - 9/32" (6605-9-6) BULB-TITE, TRI-FOLD, ALUMINUM BODY/MANDREL
O.D. FLANGE .720-.765 INCH, GRIP RANGE .042-.375 INCH

WASHERS (ALL POSTS) -

1-1/4" O.D. X 3/8" I.D. X 1/16" STEEL
1-1/4" O.D. X 3/8" I.D. X .080 NYLON

* Two different fastening systems are shown for illustration purposes. On any individual sign, either one or the other system shall be used. Actual number of fasteners per sign varies with the sign area, but normally there are two. For a single post installation, all signs greater than 9 sq. ft. require the use of 3 fasteners.

ATTACHMENT OF SIGNS TO POSTS

WISCONSIN DEPT OF TRANSPORTATION

APPROVED Matthew R Rauch
for State Traffic Engineer

DATE 4/1/2020 PLATE NO. A4-8.9

TELESCOPIC TUBING ANCHORS
TWO PIECE SYSTEM

2 1/4 " SQUARE
12 GAUGE
PERFORATED
GALVANIZED FINISH

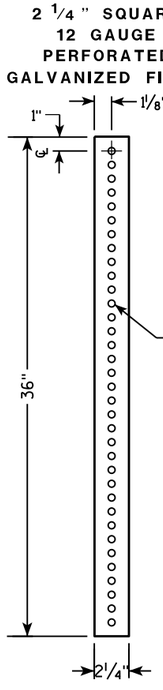

2 1/2 " SQUARE
12 GAUGE
OMNI-DIRECTIONAL
PERFORATED
SOIL STABILIZING SLEEVE
GALVANIZED FINISH

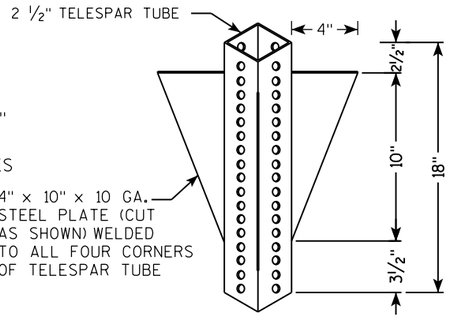

DETAIL OF TUBULAR STEEL SIGN POST
(IN POURED CONCRETE OR ASPHALT)

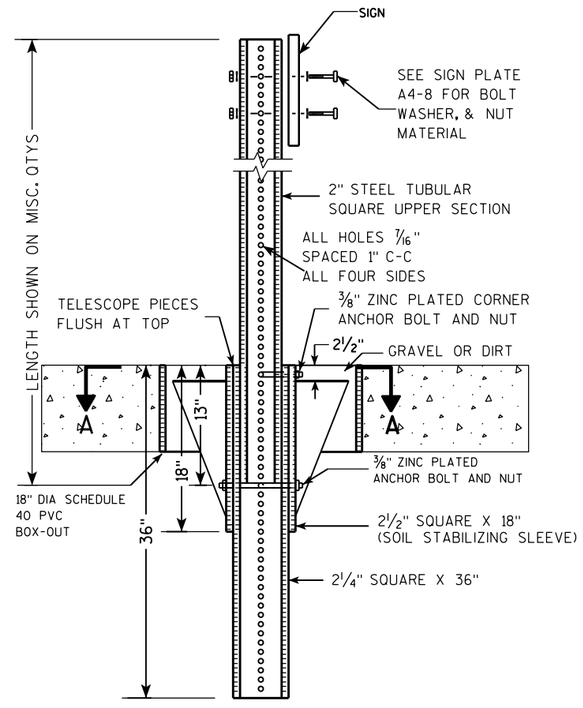

DETAIL OF TUBULAR STEEL SIGN POST
(IN LOCATIONS OTHER THAN POURED CONCRETE OR ASPHALT)

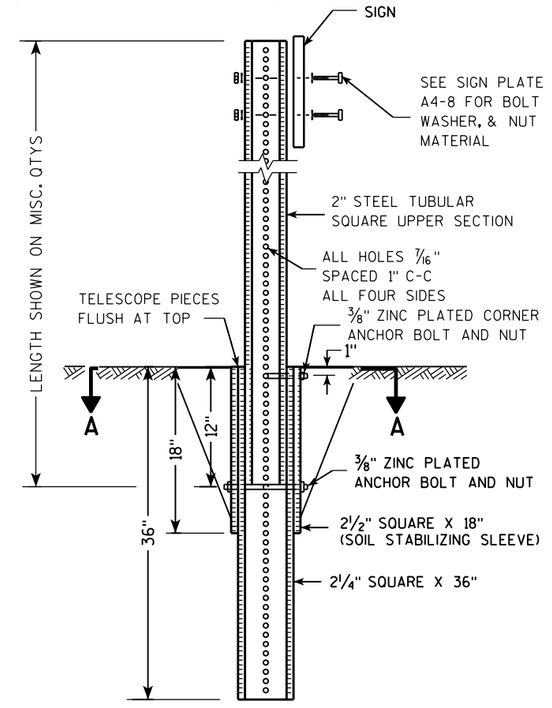

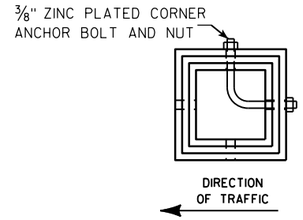

SECTION A-A

Area of Sign Installation (Sq. Ft.)	Number of Required Posts
9 or less	1
Greater than 9 less than or equal to 18	2
Greater than 18 less than or equal to 27	3

Signs wider than 3 feet or larger than 9 sq. ft shall be mounted on multiple posts (see above table).

TUBULAR STEEL
SIGN POST
A4-9

WISCONSIN DEPT OF TRANSPORTATION

APPROVED Matthew R Rauch
for State Traffic Engineer

DATE 2/05/15 PLATE A4-9.9

PROJECT NO:	HWY:	COUNTY:		SHEET NO:	E

FILE NAME : C:\CAEFiles\Projects\tr_stdplate\A49.DGN PLOT DATE : 05-FEB-2015 17:09 PLOT BY : mscsja PLOT NAME : PLOT SCALE : 13.659812:1.000000
WISDOT/CADDS SHEET 42

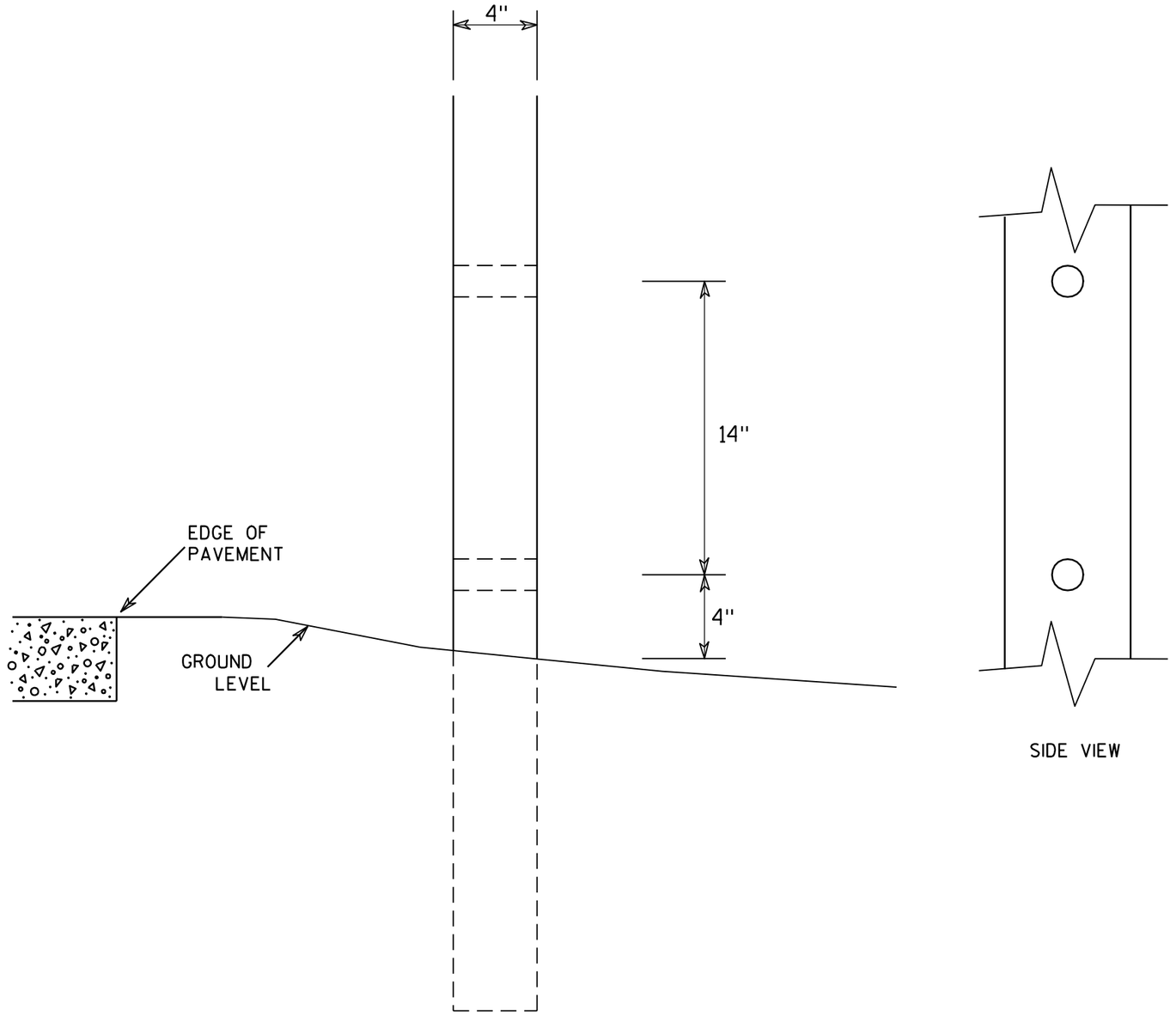

SIDE VIEW

GENERAL NOTES

1. All 4 x 6 Wood Posts shall be modified by having two 1½" diameter holes drilled perpendicular to the roadway centerline.

7

7

4 X 6 WOOD POST MODIFICATIONS

WISCONSIN DEPT OF TRANSPORTATION

APPROVED Chester J Spang for State Traffic Engineer

DATE 3/27/97 PLATE NO. A4-11.2

PROJECT NO:	HWY:	COUNTY:		SHEET NO: 329	E

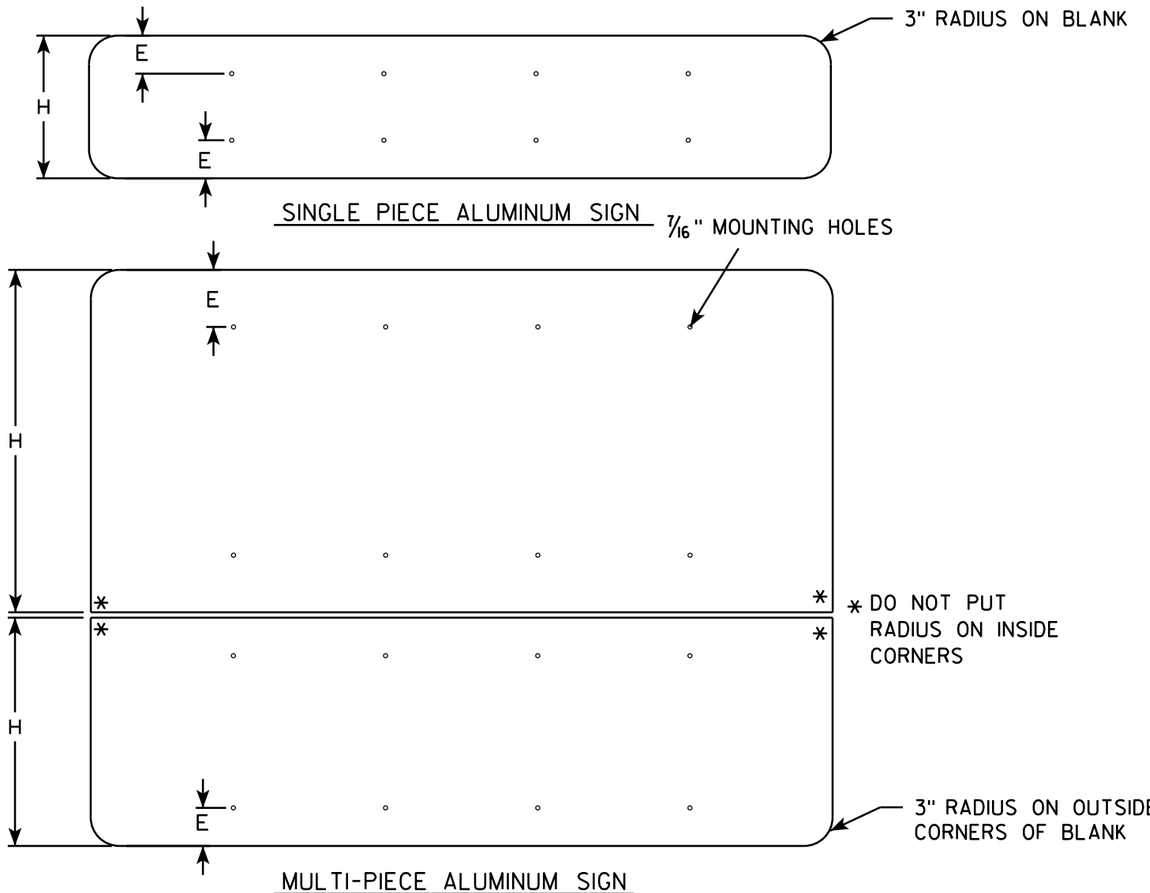

GENERAL NOTES

- ALL SIGNS OVER 60" IN WIDTH SHALL HAVE A 3" RADIUS ON THE OUTSIDE CORNERS OF THE ALUMINUM BLANK.
- MOUNTING HOLES SHALL BE 7/16" DIAMETER.
- SEE CHART FOR HOLE SPACING REQUIREMENTS
- FOR SIGN PANELS WITH DIMENSION (H) 36" AND OVER, DIMENSION E SHALL BE 6"
- FOR SIGN PANELS WITH DIMENSION (H) UNDER 36", DIMENSION E SHALL BE 4"
- SIGN STRINGER MATERIAL SHALL CONSIST OF STEEL CHANNEL POST SECTIONS, WEIGHING 1.12 LBS/FT IN ACCORDANCE WITH SECTION 633.2.1 OF THE STANDARD SPECIFICATIONS FOR HIGHWAY AND STRUCTURE CONSTRUCTION.
- SEE SIGN PLATE A4-8 FOR SIGN STRINGER BOLTING REQUIREMENTS.

SIGN WIDTH	STRINGER WIDTH	POSTS	HOLE SPACING	MOUNTING HOLES
78"	72"	2	16"	15" 31" 47" 63"
84"	72"	2	17"	16½" 33½" 50½" 67½"
90"	72"	2	18"	18" 36" 54" 72"
96"	90"	2	19"	19½" 38½" 57½" 76½"
102"	90"	2	20"	21" 41" 61" 81"
108"	90"	2	21"	22½" 43½" 64½" 85½"
114"	108"	3	15"	12" 27" 42" 57" 72" 87" 102"
120"	108"	3	16"	12" 28" 44" 60" 76" 92" 108"
126"	108"	3	17"	12" 29" 46" 63" 80" 97" 114"
132"	126"	3	18"	12" 30" 48" 66" 84" 102" 120"
138"	126"	3	19"	12" 31" 50" 69" 88" 107" 126"
144"	126"	3	20"	12" 32" 52" 72" 92" 112" 132"

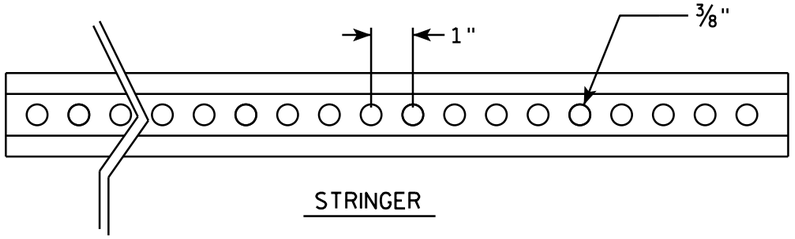

STRINGER

CROSS SECTION VIEW OF CHANNEL

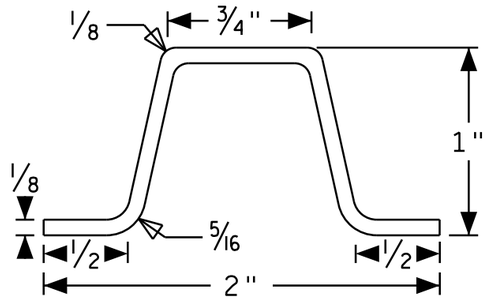

POST MOUNTING

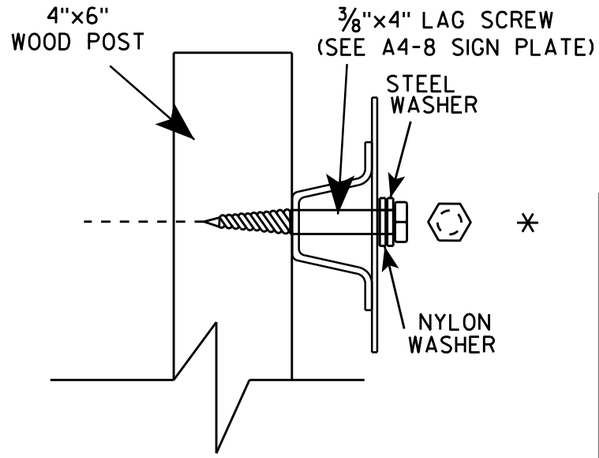

SIGN STRINGER MOUNTING REQUIREMENTS

WISCONSIN DEPT OF TRANSPORTATION

APPROVED Matthew R Rauch

for State Traffic Engineer

DATE 4/26/16 PLATE NO A4-18.1

PROJECT NO:	HWY:	COUNTY:		SHEET NO:	E

FILE NAME : C:\CAEfiles\Projects\tr_stdplate\A418.dgn PLOT DATE : 27-APR-2016 13:56 PLOT BY : mscj9h PLOT NAME : PLOT SCALE : 41.805205:1.000000 WISDOT/CADDS SHEET 42

BANDING

SINGLE SIGN

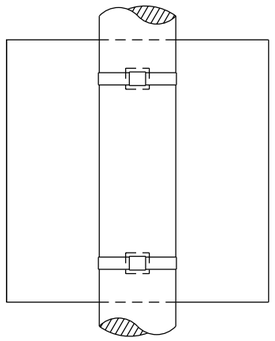

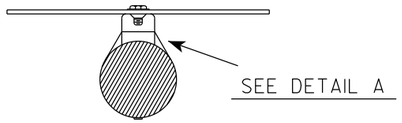

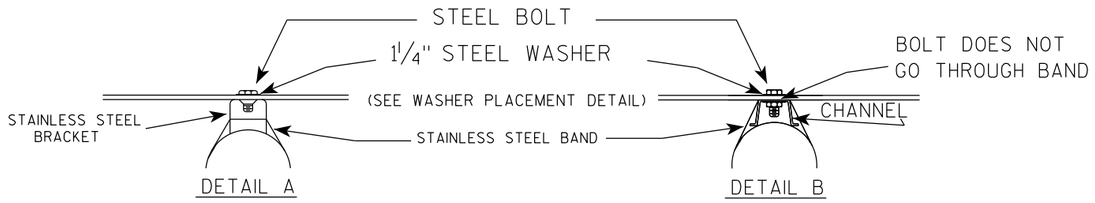

GENERAL NOTES

1. Any sign over 3 feet in width shall use the V-Block banding method. See A5-10 standard plate.
2. Signs 3 feet or greater in height shall have three bracket bands installed. Signs less than 3 feet in height shall have two bracket bands installed.
3. Banding and assembly bracket shall be stainless steel. All bands shall be ¾" in width and 0.025" thickness.
4. ALL SIGN MOUNTING BOLTS AND WASHERS SHALL BE EITHER:
   a. Hot dip or mechanically galvanized in accordance with ASTM Designation: A 153, Class D
   b. Electro-galvanized in accordance with ASTM designation: B 633, Type III, SC 3

"J" ASSEMBLY

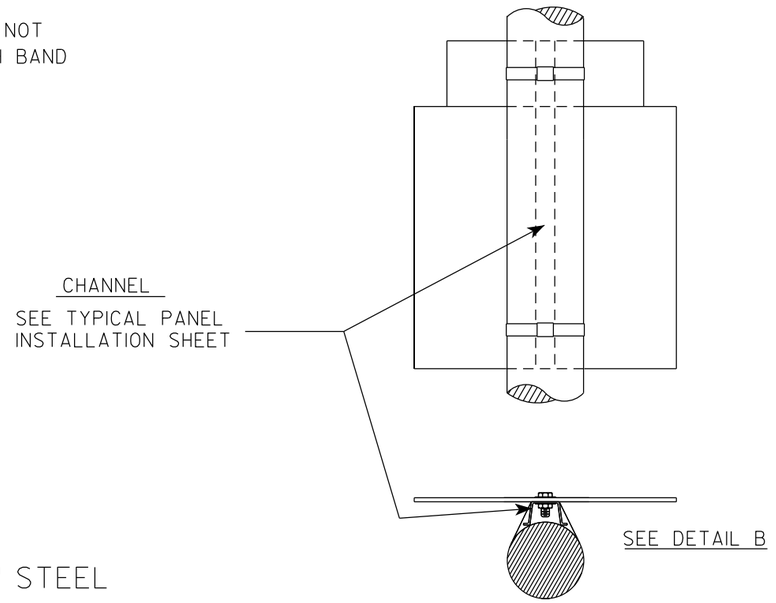

WASHER PLACEMENT

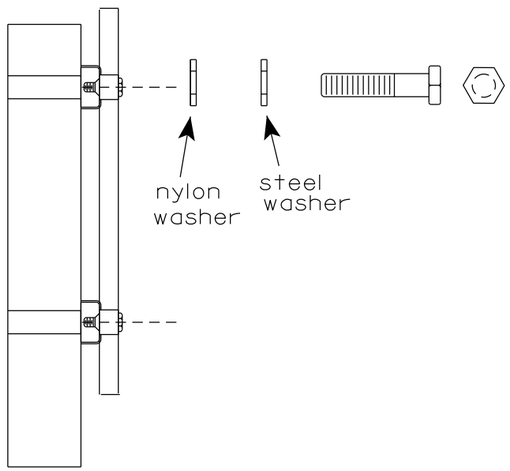

WASHERS (ALL POSTS) -
1-1/4" O.D. X ⅜" I.D. X 1/16" STEEL
1-1/4" O.D. X ⅜" I.D. X .080 NYLON
FOR ALL TYPE H SIGNS

STANDARD SIGN
SIGN BANDING DETAILS

WISCONSIN DEPT OF TRANSPORTATION

APPROVED Matthew R Rauch
for State Traffic Engineer

DATE 6/10/19 PLATE NO. A5-9.4

PROJECT NO:	HWY:	COUNTY:		SHEET NO: 331	E

FILE NAME : C:\CAEfiles\Projects\tr_stdplate\A59.dgn PLOT DATE : 10-JUN 2019 4:10 PLOT BY : mscj9h PLOT NAME : PLOT SCALE : $$.....plotscale.....$$ WISDOT/CADDS SHEET 42

7

7

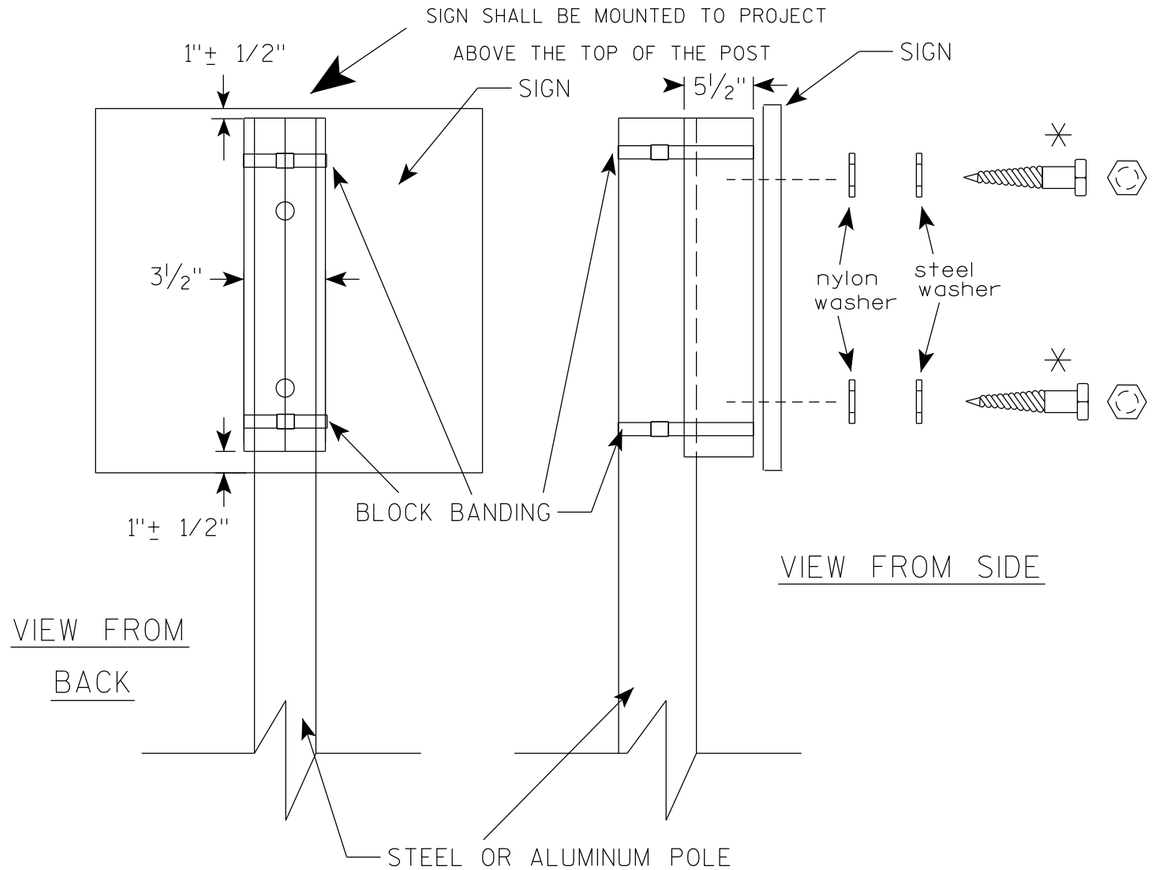

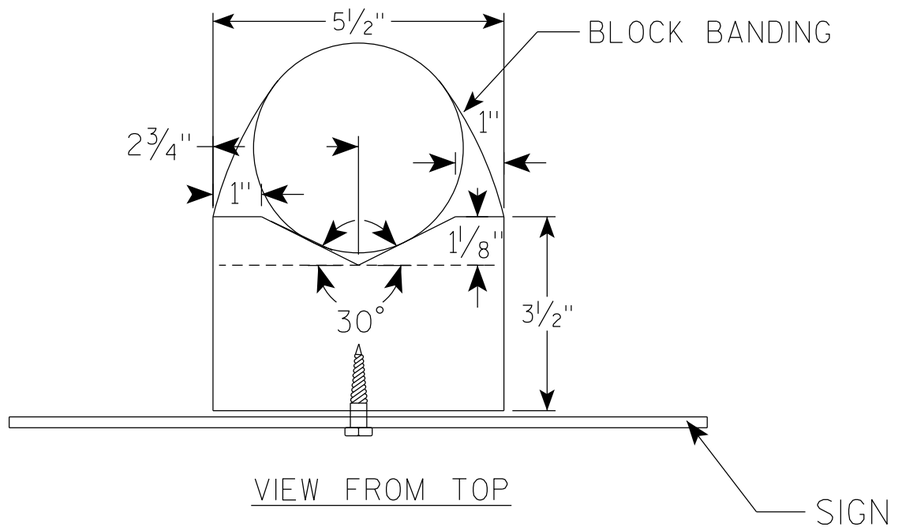

GENERAL NOTES

1. WOOD 4"X6" POST MATERIAL SHALL CONFORM TO 507.2.2 OF THE WisDOT STANDARD SPECIFICATIONS
2. BLOCK BANDING AND CLIPS SHALL BE STAINLESS STEEL, ¾" WIDTH AND 0.025" THICKNESS
3. SIGNS 3' OR GREATER IN HEIGHT SHALL UTILIZE 3 BLOCK BANDS. SIGNS UNDER 3' IN HEIGHT SHALL UTILIZE 2 BLOCK BANDS
4. ACTUAL NUMBER OF FASTENERS PER SIGN VARIES WITH THE SIGN AREA, BUT NORNALLY THERE ARE TWO. FOR SIGNS GREATER THAN 9 S.F. 3 FASTENERS SHALL BE USED.
5. ALL SIGN MOUNTING BOLTS AND WASHERS SHALL BE EITHER:
   a. Hot dip or mechanically galvanized in accordance with ASTM Designation: A 153, Class D
   b. Electro-galvanized in accordance with ASTM Designation : B 633, TYPE III, SC 3
6. ALL BOLTS SHALL HAVE HEXAGONAL HEADS.
7. STEEL WASHERS SHALL BE 1¼" O.D. X ⅜" I.D. X 1/16"
8. NYLON WASHERS SHALL BE 1¼" O.D. X ⅜" I.D. X .080 FOR TYPE H OR TYPE F FACE SIGN

✳ LAG BOLTS SHALL BE ⅜" X 2½"

BLOCK BANDING DETAIL (V-BLOCK OPTION)

WISCONSIN DEPT OF TRANSPORTATION

APPROVED Matthew R Rauch
For State Traffic Engineer

DATE 6/10/19 PLATE NO. A5-10.2

PROJECT NO:				SHEET NO: 332	E

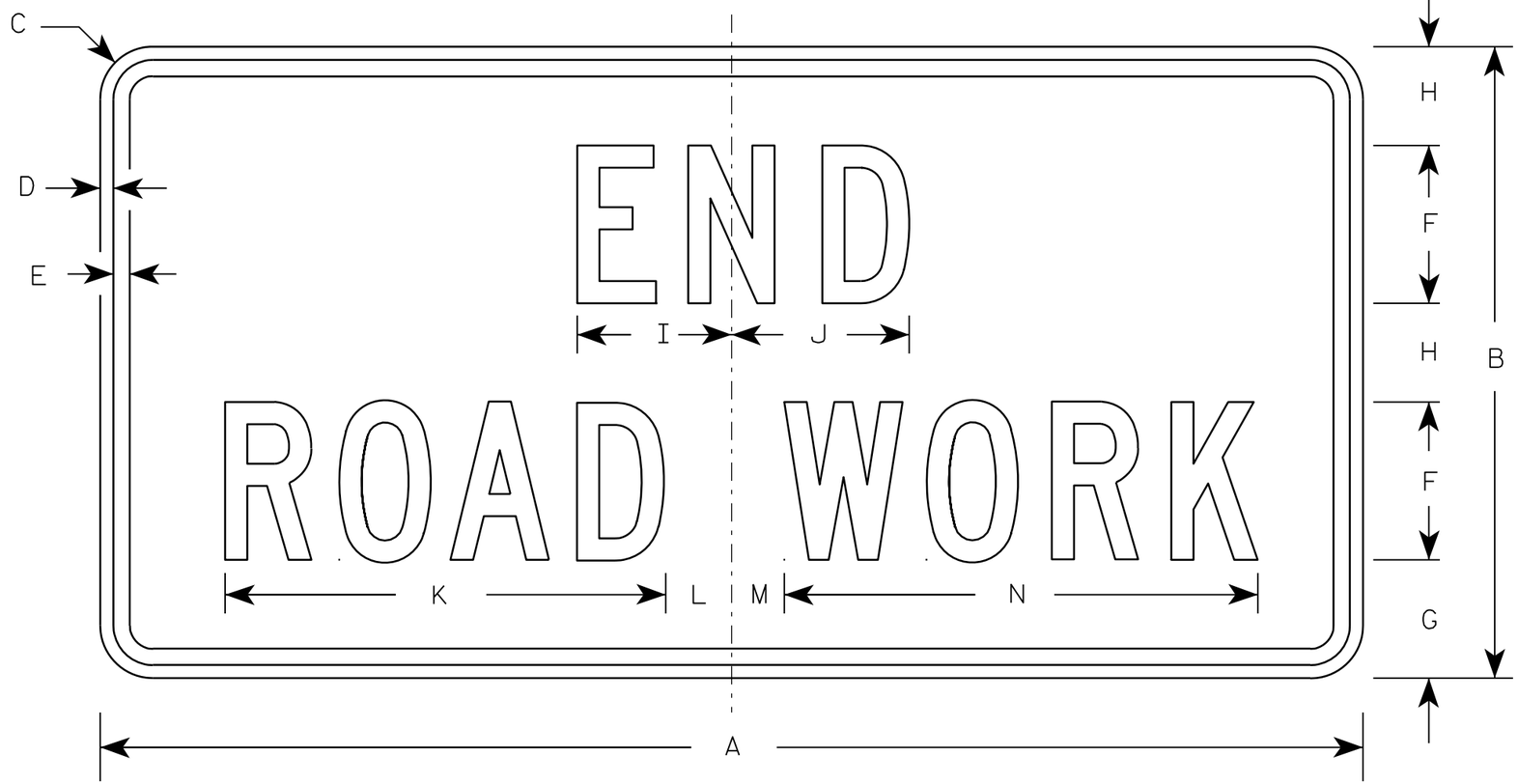

G20-2A

NOTES

1. Sign is Type II - Type F Reflective - reference WIS DOT Standard Specification for HIGHWAY and STRUCTURE CONSTRUCTION latest edition.
2. Color:
   Background - Orange
   Message - Black
3. Message Series - C
4. Corners may be square or rounded when base material is plywood but borders shall be rounded as shown. When base material is metal, the corners and borders shall be rounded.

Metric equivalent for this sign is:

SIZE	
1	900 mm X 450 mm
2	1200 mm X 600 mm
3	1200 mm X 600 mm
4	1200 mm X 600 mm
5	1200 mm X 600 mm

SIZE	A	B	C	D	E	F	G	H	I	J	K	L	M	N	O	P	Q	R	S	T	U	V	W	X	Y	Z	Area sq. ft.	Area m2
1	36	18	1 1/8	3/8	1/2	4	3 3/4	2 1/2	4 1/8	4 1/8	11 1/8	2	1	12 1/8													4.5	0.41
2	48	24	1 1/2	1/2	5/8	6	4 1/2	3 3/4	5 7/8	6 3/4	16 3/4	2 1/2	1 3/4	18 1/2													8.0	0.72
3	48	24	1 1/2	1/2	5/8	6	4 1/2	3 3/4	5 7/8	6 3/4	16 3/4	2 1/2	1 3/4	18 1/2													8.0	0.72
4	48	24	1 1/2	1/2	5/8	6	4 1/2	3 3/4	5 7/8	6 3/4	16 3/4	2 1/2	1 3/4	18 1/2													8.0	0.72
5	48	24	1 1/2	1/2	5/8	6	4 1/2	3 3/4	5 7/8	6 3/4	16 3/4	2 1/2	1 3/4	18 1/2													8.0	0.72

STANDARD SIGN
G20-2A

WISCONSIN DEPT OF TRANSPORTATION

APPROVED Matthew R Rauch
for State Traffic Engineer

DATE 9/30/09 PLATE NO. G20-2A.8

PROJECT NO:	HWY:	COUNTY:		SHEET NO: 333	E

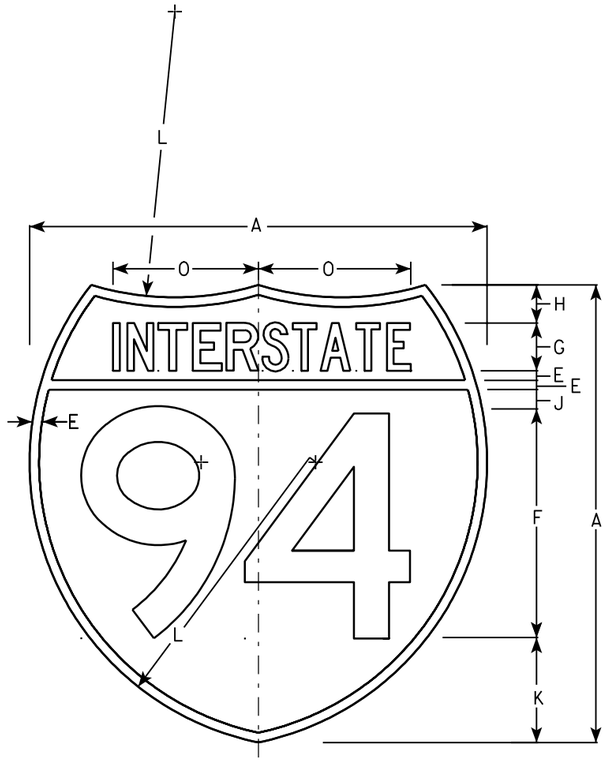

M1-1

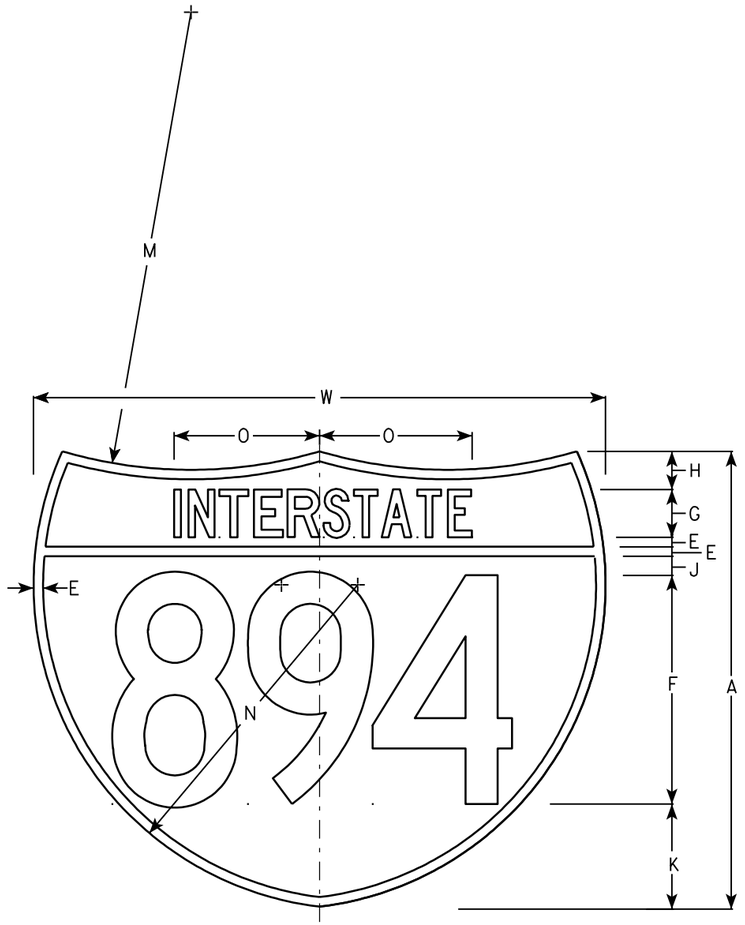

M1-1A

NOTES

1. Sign is Type II - See Note 6 - reference WIS DOT Standard Specification for HIGHWAY and STRUCTURE CONSTRUCTION latest edition.
2. Color:
   Background - Top Red - Bottom Blue (See Note 6)
   Message - White - See Note 6
3. Message Series - See note 5
4. Substitute appropriate numerals & ajust spacing as per plate A10-1.
5. M1-1 - Numerals - D
   Interstate - C
   M1-1A - All copy - C
6. Permanent Signs
   Message - Type H Reflective
   Detour or other temporary signs
   Background - Reflective
   Message - Reflective

Metric equivalent for these signs are:

SIZE	M1-1	SIZE	M1-1A
1			
2	600 mm X 600 mm	2	600 mm X 750 mm
3	900 mm X 900 mm	3	900 mm X 1125 mm
4	900 mm X 900 mm	4	900 mm X 1125 mm
5	900 mm X 900 mm	5	900 mm X 1125 mm

SIZE	A	B	C	D	E	F	G	H	I	J	K	L	M	N	O	P	Q	R	S	T	U	V	W	X	Y	M1-1 Area sq. ft.	M1-1A Area sq. ft.	M1-1 Area m2	M1-1A Area m2
1																													
2	24				1/2	12	2 1/2	2		1	5 1/2	15	24	17	7 7/8								30			3.13	3.91	.36	.46
3	36				3/4	18	3 3/4	3		1 1/2	8 1/4	22 1/2	36	25 1/2	11 3/4								45			7.03	8.79	.81	1.05
4	36				3/4	18	3 3/4	3		1 1/2	8 1/4	22 1/2	36	25 1/2	11 3/4								45			7.03	8.79	.81	1.05
5	36				3/4	18	3 3/4	3		1 1/2	8 1/4	22 1/2	36	25 1/2	11 3/4								45			7.03	8.79	.81	1.05

INTERSTATE ROUTE MARKER
M1-1 FOR ASSEMBLIES

WISCONSIN DEPT OF TRANSPORTATION

APPROVED Matthew R Rauch
for State Traffic Engineer

DATE 08/23/05 PLATE NO. M1-1.8

PROJECT NO:	HWY:	COUNTY:		SHEET NO: 334	E

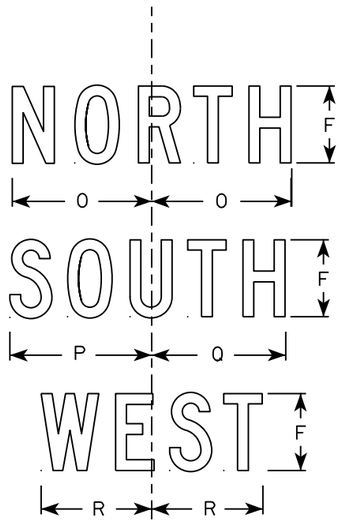

NOTES

1. Sign is Type II - Type H Reflective
2. Color:
   Background - White
   Message - Black
3. Message Series - C
4. Substitute appropriate message as required.

SIZE	A	B	C	D	E	F	G	H	I	J	K	L	M	N	O	P	Q	R	S	T	U	V	W	X	Y	Z	Area sq. ft.
1																											
2	24	24	1 1/8	3/8	1/2	4	3	3	5	5 1/4	9 7/8	10 1/4	5 3/8	6	7 1/4	7 3/8	7	5 3/4									4.0
3																											
4	36	36	1 3/8	5/8	5/8	6	4 1/2	4 1/2	7 1/2	7 7/8	14 3/4	15 3/8	8	9	10 7/8	11	10 1/2	8 5/8									9.0
5																											

STANDARD SIGN
M1-95A

WISCONSIN DEPT OF TRANSPORTATION

APPROVED Matthew R Rauch
for State Traffic Engineer

DATE 3/15/18 PLATE NO. M1-95A.4

PROJECT NO: | HWY: | COUNTY: | SHEET NO: 335 | E

7

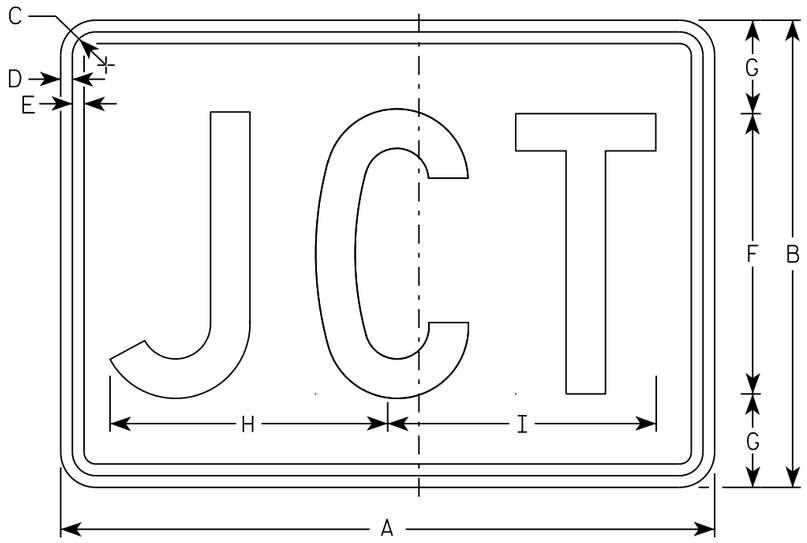

M2-1
MM2-1
MP2-1

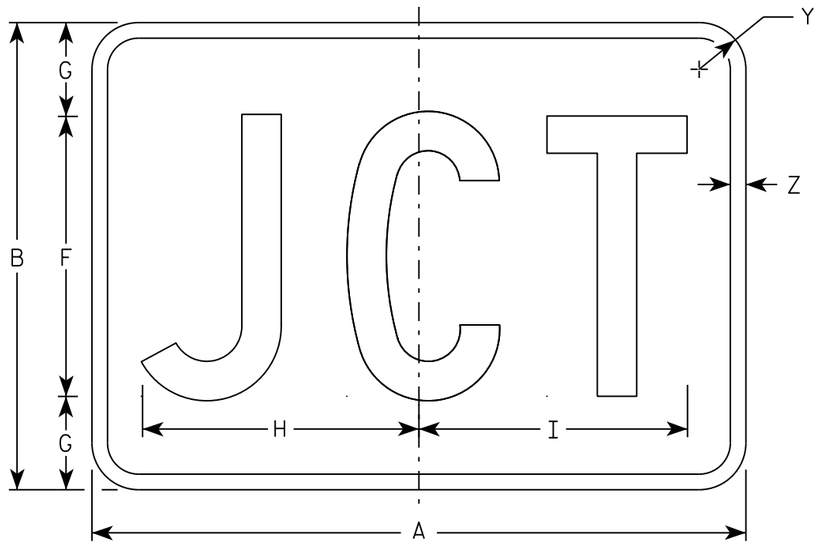

MB2-1
MK2-1
MN2-1
MR2-1

NOTES

1. Sign is Type II - Type H
2. Color:
   Background - See note 5
   Message - See note 5
3. Message Series - C
4. Corners may be square or rounded when base material is plywood but borders shall be rounded as shown. When base material is metal, the corners and borders shall be rounded.
5. M2-1 Background - White
   Message - Black
   MB2-1 Background - Blue
   Message - White
   MK2-1 Background - Green
   Message - White
   MM2-1 Background - White
   Message - Green
   MN2-1 Background - Brown
   Message - White
   MP2-1 Background - White
   Message - Blue
   MR2-1 Background - Brown
   Message - Yellow

SIZE	A	B	C	D	E	F	G	H	I	J	K	L	M	N	O	P	Q	R	S	T	U	V	W	X	Y	Z	Area sq. ft.
1																											
2	21	15	1 1/8	3/8	3/8	9	3	8 7/8	8 5/8																1 1/2	1/2	2.20
3	30	21	1 1/8	3/8	3/8	13	4	12 7/8	12 3/8																1 1/2	1/2	4.40
4	30	21	1 1/8	3/8	3/8	13	4	12 7/8	12 3/8																1 1/2	1/2	4.40
5	30	21	1 1/8	3/8	3/8	13	4	12 7/8	12 3/8																1 1/2	1/2	4.40

STANDARD SIGN
M2-1

WISCONSIN DEPT OF TRANSPORTATION

APPROVED Matthew R Rauch
for State Traffic Engineer

DATE 10/15/15 PLATE 336 12-1.12

PROJECT NO:	HWY:	COUNTY:		SHEET NO:	E

FILE NAME : C:\CAEfiles\Projects\tr_stdplate\M21.DGN PLOT DATE : 01-DEC-2015 17:54 PLOT BY : $$ plotuser $$ PLOT NAME : PLOT SCALE : 4.864603:1.000000

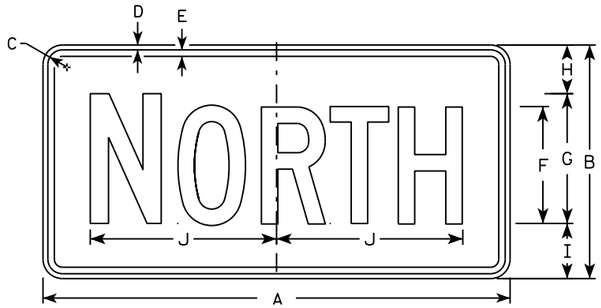

M3-1
MM3-1
MP3-1

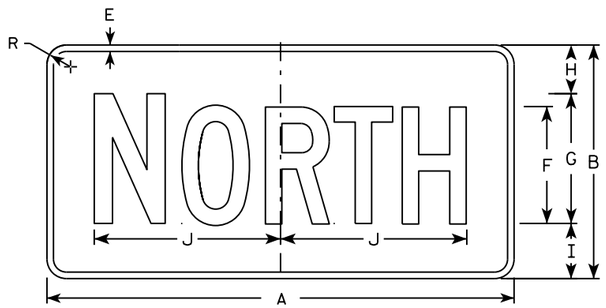

MB3-1
MK3-1
MN3-1



M3-2
MM3-2
MP3-2



MB3-2
MK3-2
MN3-2

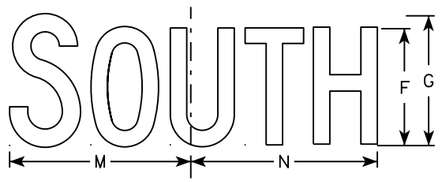

M3-3
MM3-3
MP3-3

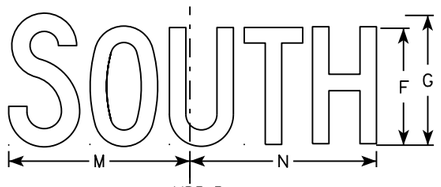

MB3-3
MK3-3
MN3-3

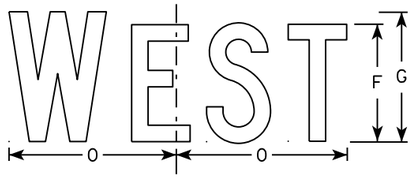

M3-4
MM3-4
MP3-4

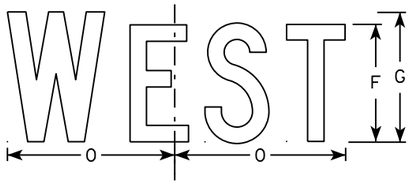

MB3-4
MK3-4
MN3-4

NOTES

1. All Signs Type II - Type H
2. Color:
   Background - See note 5
   Message - See note 5
3. Message Series - C
4. Corners may be square or rounded when base material is plywood but borders shall be rounded as shown. When base material is metal, the corners and borders shall be rounded.
5. M3-1 thru M3-4 Background - White
   Message - Black
   MB3-1 thru MB3-4 Background - Blue
   Message - White
   MK3-1 thru MK3-4 Background - Green
   Message - White
   MM3-1 thru MM3-4 Background - White
   Message - Green
   MN3-1 thru MN3-4 Background - Brown
   Message - White
   MP3-1 thru MP3-4 Background - White
   Message - Blue
6. Note the first letter of each direction is larger than the remainder of the message.

SIZE	A	B	C	D	E	F	G	H	I	J	K	L	M	N	O	P	Q	R	S	T	U	V	W	X	Y	Z	Area sq. ft.
1																											
2	24	12	1 1/8	3/8	3/8	6	7	2 1/4	2 3/4	10 1/4	7 7/8	8 3/8	10 1/4	9 3/4	8 3/4			1 1/2									2.00
3	36	18	1 1/8	3/8	1/2	9	10	3 3/4	4 1/4	14 3/8	12	12 1/8	14	14 1/8	13			1 1/2									4.5
4	36	18	1 1/8	3/8	1/2	9	10	3 3/4	4 1/4	14 3/8	12	12 1/8	14	14 1/8	13			1 1/2									4.5
5	36	18	1 1/8	3/8	1/2	9	10	3 3/4	4 1/4	14 3/8	12	12 1/8	14	14 1/8	13			1 1/2									4.5

STANDARD SIGNS
M3-1 thur M3-4
SERIES

WISCONSIN DEPT OF TRANSPORTATION

APPROVED Matthew P Rauch for State Traffic Engineer

DATE 10/15/15 PLATE NO M3-1.14

PROJECT NO: | HWY: | COUNTY: | SHEET NO: E

FILE NAME : C:\CAEfiles\Projects\tr_stdplate\M31.DGN PLOT DATE : 01-DEC-2015 17:54 PLOT BY : $$ plotuser $$ PLOT NAME : PLOT SCALE : 11.675051:1.000000

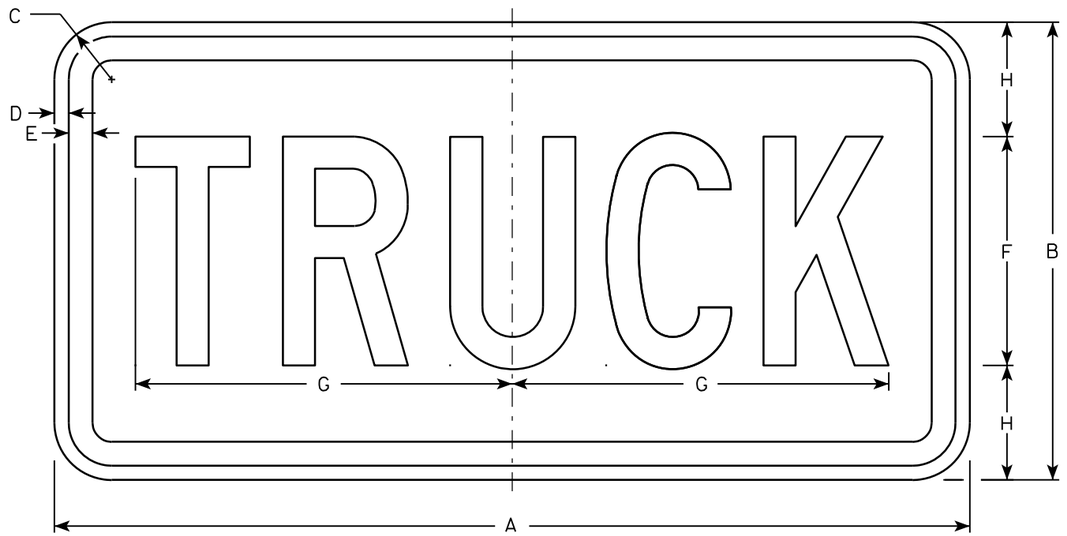

M4-4

NOTES

1. Sign is Type II - See Note 5 - reference WIS DOT Standard Specification for HIGHWAY and STRUCTURE CONSTRUCTION latest edition.
2. Color:
   Background - White - See Note 5
   Message - Black
3. Message Series - C
4. Corners may be square or rounded when base material is plywood but borders shall be rounded as shown. When base material is metal, the corners and borders shall be rounded.
5. Permanent Signs
   Background - Type H Reflective
   Temporary or other temporary Signs
   Background - Reflective

SIZE	A	B	C	D	E	F	G	H	I	J	K	L	M	N	O	P	Q	R	S	T	U	V	W	X	Y	Z	Area sq. ft.
1																											
2	24	12	1 1/2	3/8	3/8	6	9 7/8	3																			2.0
3	36	18	1 1/2	3/8	1/2	9	15 5/8	4 1/2																			4.5
4																											
5																											

STANDARD SIGN
M4-4

WISCONSIN DEPT OF TRANSPORTATION

APPROVED Matthew R Rauch
for State Traffic Engineer

DATE 11/10/10 PLATE NO. M4-4.3

PROJECT NO: | HWY: | COUNTY: | SHEET NO: 338 | E

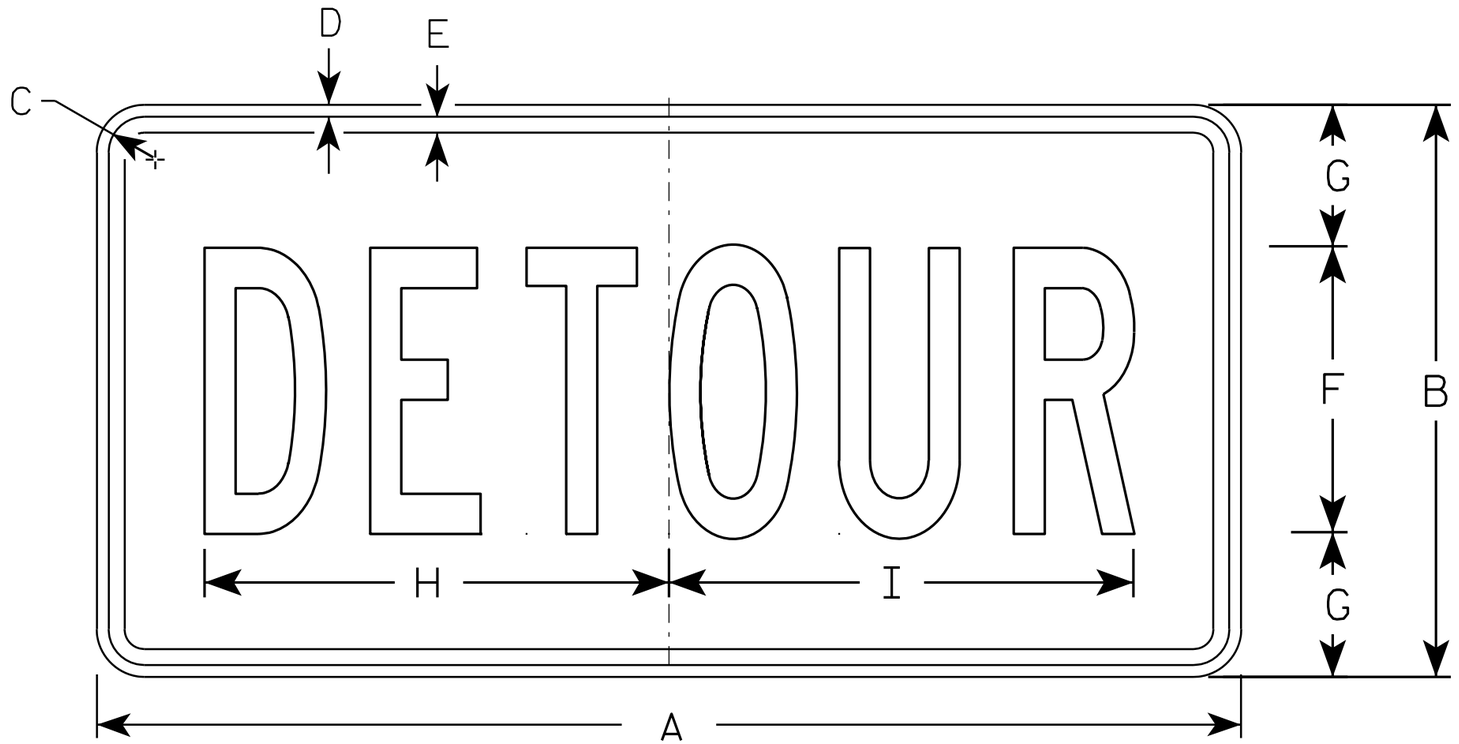

M4-8

NOTES

1. Sign is Type II - Type F Reflective - reference WIS DOT Standard Specification for HIGHWAY and STRUCTURE CONSTRUCTION latest edition.
2. Color:
   Background - Orange
   Message - Black
3. Message Series - B
4. Corners may be square or rounded when base material is plywood but borders shall be rounded as shown. When base material is metal, the corners and borders shall be rounded.

SIZE	A	B	C	D	E	F	G	H	I	J	K	L	M	N	O	P	Q	R	S	T	U	V	W	X	Y	Z	Area sq. ft.
1																											
2	24	12	1 1/8	3/8	3/8	6	3	10	10 1/4																		2.0
3	36	18	1 1/8	3/8	1/2	9	4 1/2	14 5/8	14 1/2																		4.5
4																											
5																											

STANDARD SIGN
M4-8

WISCONSIN DEPT OF TRANSPORTATION

APPROVED Matthew R Rauch
for State Traffic Engineer

DATE 11/10/10 PLATE NO. M4-8.2

PROJECT NO:	HWY:	COUNTY:		SHEET NO: 339	E

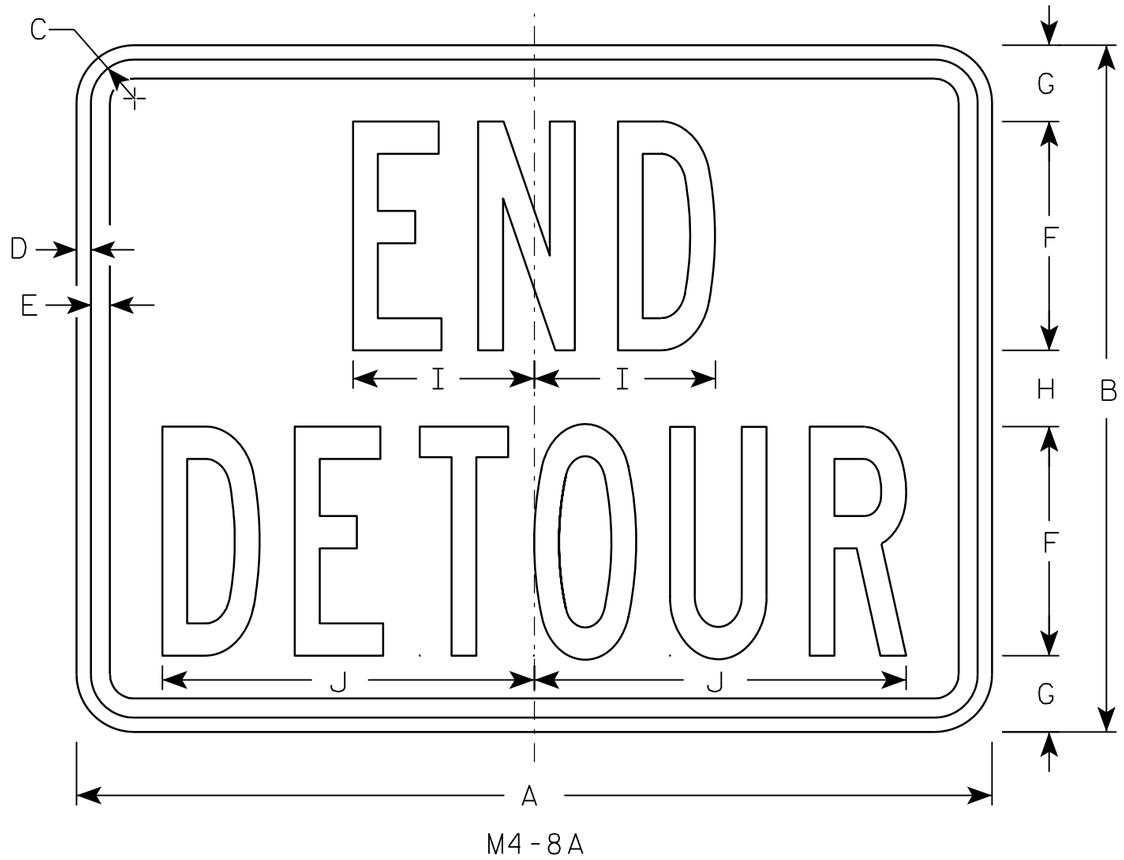

M4-8A

NOTES

1. Sign is Type II - Type F Reflective - reference WIS DOT Standard Specification for HIGHWAY and STRUCTURE CONSTRUCTION latest edition.
2. Color:
   Background - Orange
   Message - Black
3. Message Series - B
4. Corners may be square or rounded when base material is plywood but borders shall be rounded as shown. When base material is metal, the corners and borders shall be rounded.

SIZE	A	B	C	D	E	F	G	H	I	J	K	L	M	N	O	P	Q	R	S	T	U	V	W	X	Y	Z	Area sq. ft.
1																											
2	24	18	1 1/8	3/8	1/2	6	2	2	4 3/4	9 3/4																	3.0
3	30	24	1 1/8	3/8	1/2	8	2 1/2	3	6 3/4	13																	5.0
4																											
5																											

STANDARD SIGN
M4-8A

WISCONSIN DEPT OF TRANSPORTATION

APPROVED Matthew R Rauch
for State Traffic Engineer

DATE 3/9/11 PLATE NO. M4-8A.2

PROJECT NO:	HWY:	COUNTY:		SHEET NO: 340	E

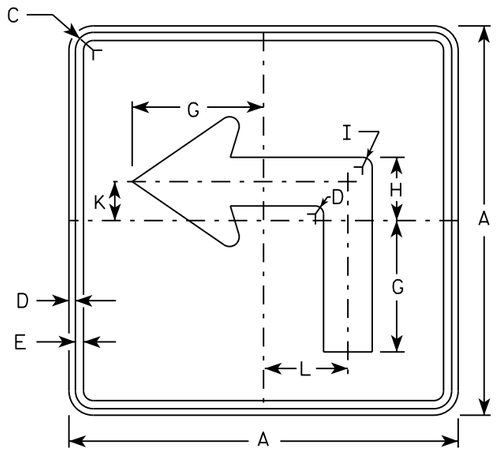

M5-1L
MM5-1L
MO5-1L
MP5-1L

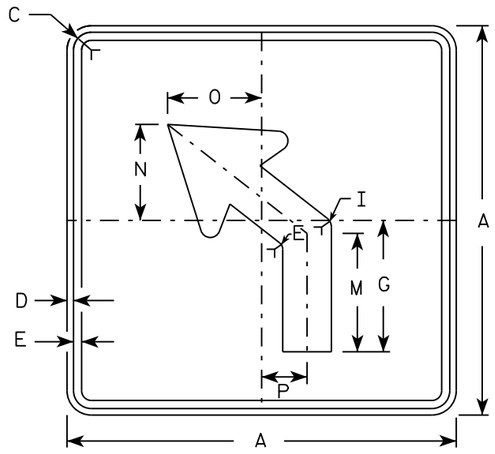

M5-2L
MM5-2L
MO5-2L
MP5-2L

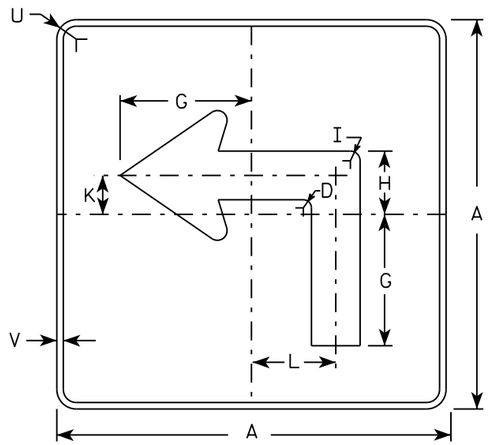

MB5-1L
MK5-1L
MN5-1L
MR5-1L

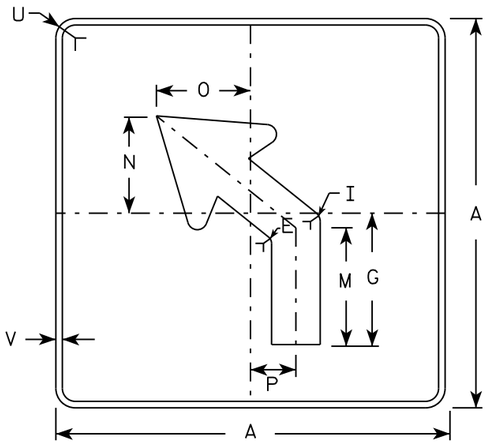

MB5-2L
MK5-2L
MN5-2L
MR5-2L

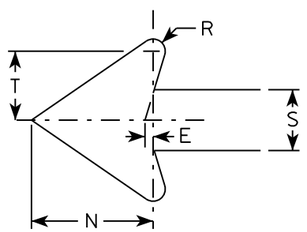

NOTES

1. Signs are Type II - Type H reflective except as shown
2. Color:
   Background - See note 4
   Message - See note 4
3. Corners may be square or rounded when base material is plywood but borders shall be rounded as shown. When base material is metal, the corners and borders shall be rounded.
4. M5-1 and M5-2 Background - White
   Message - Black
   MB5-1 and MB5-2 Background - Blue
   Message - White
   MK5-1 and MK5-2 Background - Green
   Message - White
   MM5-1 and MM5-2 Background - White
   Message - Green
   MN5-1 and MN5-2 Background - Brown
   Message - White
   MO5-1 and MO5-2 Background - Orange - Type F Reflective
   Message - Black
   MP5-1 and MP5-2 Background - White - Type H Reflective
   Message - Blue
   MR5-1 and MR5-2 Background - Brown
   Message - Yellow
5. M5-1R same as M5-1L except arrow points right.
6. M5-2R same as M5-2L except arrow tilts right.

SIZE	A	B	C	D	E	F	G	H	I	J	K	L	M	N	O	P	Q	R	S	T	U	V	W	X	Y	Z	Area sq. ft.
1																											
2	21		1 1/8	3/8	3/8		7	3 3/8	5/8		2 1/8	4 1/2	6 3/8	5 1/4	5	2 1/2		1/2	2 5/8	3	1 1/2	1/2					3.06
3	30		1 3/8	1/2	5/8		10 1/8	4 7/8	7/8		3	6 1/2	9 1/8	7 1/2	7 1/4	3 1/2		3/4	3 3/4	4 1/4	1 7/8	1/2					6.25
4	30		1 3/8	1/2	5/8		10 1/8	4 7/8	7/8		3	6 1/2	9 1/8	7 1/2	7 1/4	3 1/2		3/4	3 3/4	4 1/4	1 7/8	1/2					6.25
5	30		1 3/8	1/2	5/8		10 1/8	4 7/8	7/8		3	6 1/2	9 1/8	7 1/2	7 1/4	3 1/2		3/4	3 3/4	4 1/4	1 7/8	1/2					6.25

STANDARD SIGN
M5-1 & M5-2

WISCONSIN DEPT OF TRANSPORTATION

APPROVED Matthew R Rauch
for State Traffic Engineer

DATE 10/15/15 PLATE NO. M5-1.13

PROJECT NO: | HWY: | COUNTY: | SHEET NO: E

FILE NAME : C:\CAEfiles\Projects\tr_stdplate\M51.DGN PLOT DATE : 01-DEC-2015 18:07 PLOT BY : $$ plotuser $$ PLOT NAME : PLOT SCALE : 11.675051:1.000000

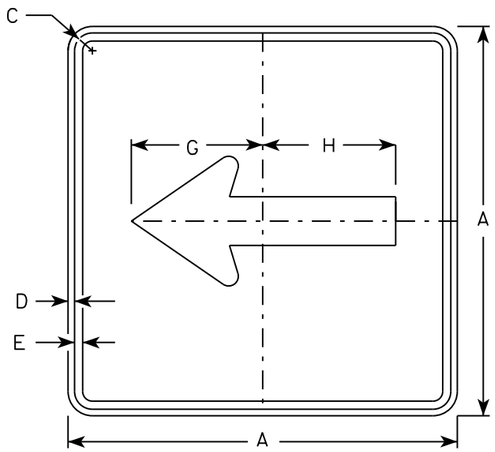

M6-1
MM6-1
MO6-1
MP6-1

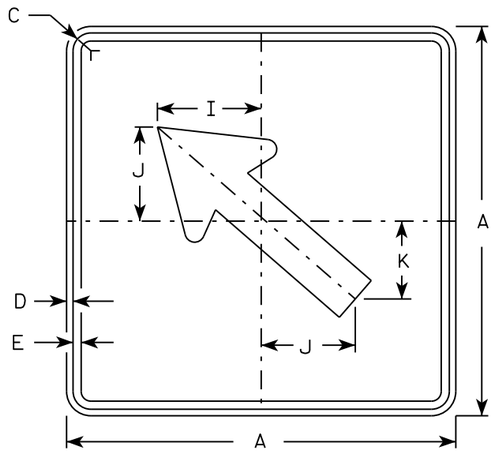

M6-2
MM6-2
MO6-2
MP6-2

NOTES

1. Signs are Type II - Type H except as Shown
2. Color:
   Background - See note 4
   Message - See note 4
3. Corners may be square or rounded when base material is plywood but borders shall be rounded as shown. When base material is metal, the corners and borders shall be rounded.
4. M6-1 and M6-2 Background - White
   Message - Black
   MB6-1 and MB6-2 Background - Blue
   Message - White
   MK6-1 and MK6-2 Background - Green
   Message - White
   MM6-1 and MM6-2 Background - White
   Message - Green
   MN6-1 and MN6-2 Background - Brown
   Message - White
   MO6-1 and MO6-2 Background - Orange - Type F Reflective
   Message - Black
   MP6-1 and MP6-2 Background - White
   Message - Blue
   MR6-1 and MR6-2 Background - Brown
   Message - Yellow

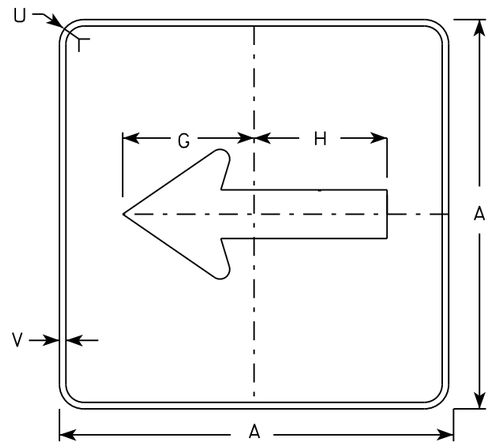

MB6-1
MK6-1
MN6-1
MR6-1

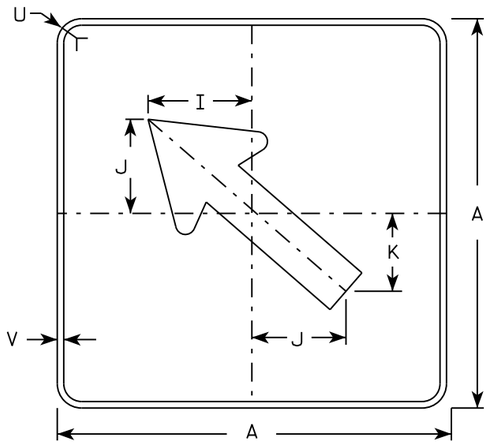

MB6-2
MK6-2
MN6-2
MR6-2

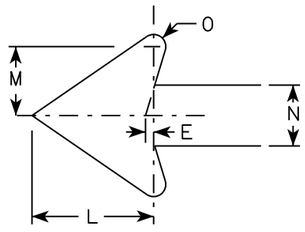

SIZE	A	B	C	D	E	F	G	H	I	J	K	L	M	N	O	P	Q	R	S	T	U	V	W	X	Y	Z	Area sq. ft.
1																											
2	21		1 1/8	3/8	3/8		7 1/2	7 1/8	5 5/8	5	4 1/4	5 1/4	3	2 5/8	1/2						1 1/2	1/2						3.06
3	30		1 3/8	1/2	5/8		10 3/4	10 1/4	8	7 1/4	6	7 1/2	4 1/4	3 3/4	3/4						1 7/8	1/2						6.25
4	30		1 3/8	1/2	5/8		10 3/4	10 1/4	8	7 1/4	6	7 1/2	4 1/4	3 3/4	3/4						1 7/8	1/2						6.25
5	30		1 3/8	1/2	5/8		10 3/4	10 1/4	8	7 1/4	6	7 1/2	4 1/4	3 3/4	3/4						1 7/8	1/2						6.25

STANDARD SIGN
M6-1 & M6-2
SERIES

WISCONSIN DEPT OF TRANSPORTATION

APPROVED Matthew R Rauch
for State Traffic Engineer

DATE 10/15/15 PLATE 342 M6-1.15

PROJECT NO:	HWY:	COUNTY:		SHEET NO:	E

FILE NAME : C:\CAEfiles\Projects\tr_stdplate\M61.DGN PLOT DATE : 01-DEC-2015 17:57 PLOT BY : $$ plotuser $$ PLOT NAME : PLOT SCALE : 11.675051:1.000000

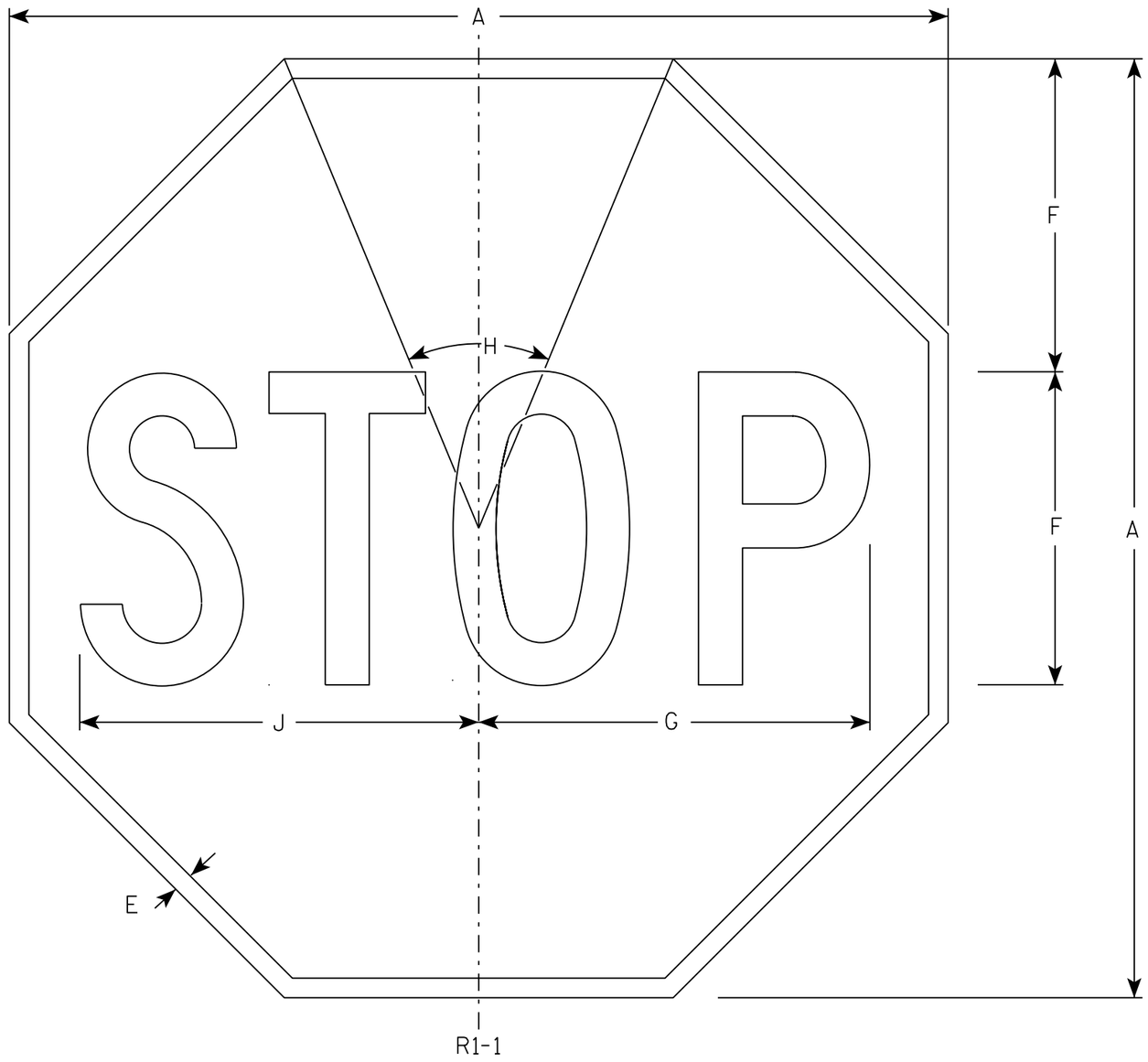

NOTES

1. Sign is Type II - Type H Reflective - reference WIS DOT Standard Specification for HIGHWAY and STRUCTURE CONSTRUCTION latest edition.
2. Color:
   Background - Red
   Message - White
3. Message Series - C

SIZE	A	B	C	D	E	F	G	H	I	J	K	L	M	N	O	P	Q	R	S	T	U	V	W	X	Y	Z	Area sq. ft.
1	30				5/8	10	12 1/2	45°		12 3/4																	5.18
2S	30				5/8	10	12 1/2	45°		12 3/4																	5.18
2M	36				3/4	12	15	45°		15 3/8																	7.46
3	36				3/4	12	15	45°		15 3/8																	7.46
4	48				1	16	20	45°		20 1/2																	13.25
5	48				1	16	20	45°		20 1/2																	13.25
6	18				3/8	6	7 3/4	45°		7 3/4																	1.86
7	12				1/4	4	5	45°		5 1/8																	0.78

STANDARD SIGN

R1-1

WISCONSIN DEPT OF TRANSPORTATION

APPROVED Matthew R Rauch

for State Traffic Engineer

DATE 11/12/15 PLATE NO. R1-1.13

PROJECT NO:	HWY:	COUNTY:		SHEET NO: 343	E

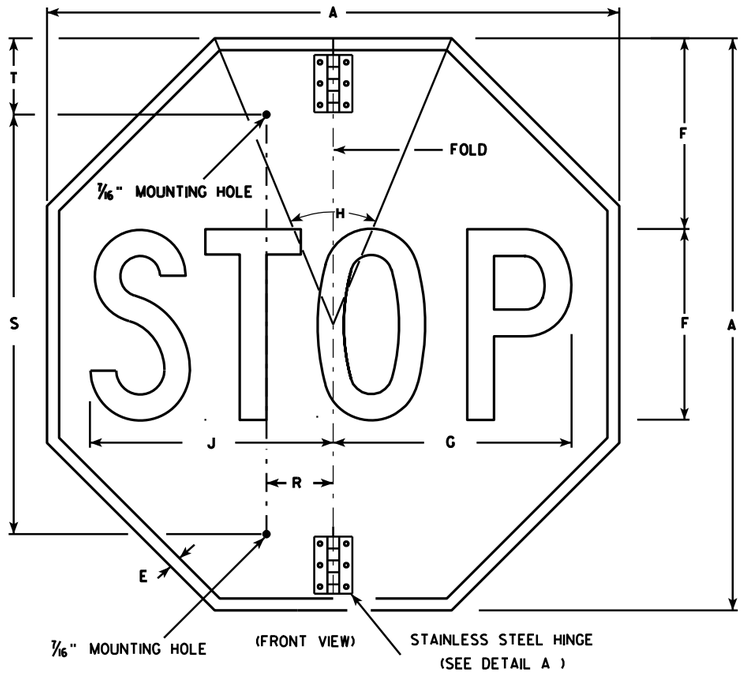

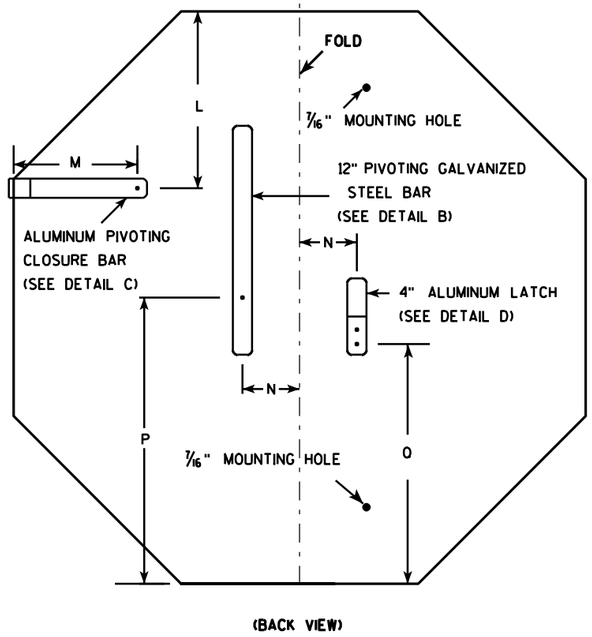

NOTES

1. Sign is Type II - Type H Reflective - reference WIS DOT Standard Specification for HIGHWAY and STRUCTURE CONSTRUCTION latest edition.
2. Color:
   Background - Red
   Message - White
3. Message Series - C
4. All hardware used on the folding STOP sign installation shall conform to 637.2.4 of the WIS DOT Standard Specification.

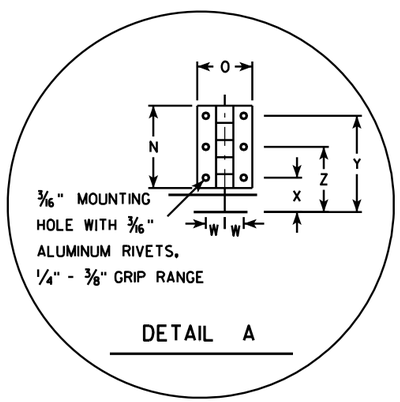

DETAIL A

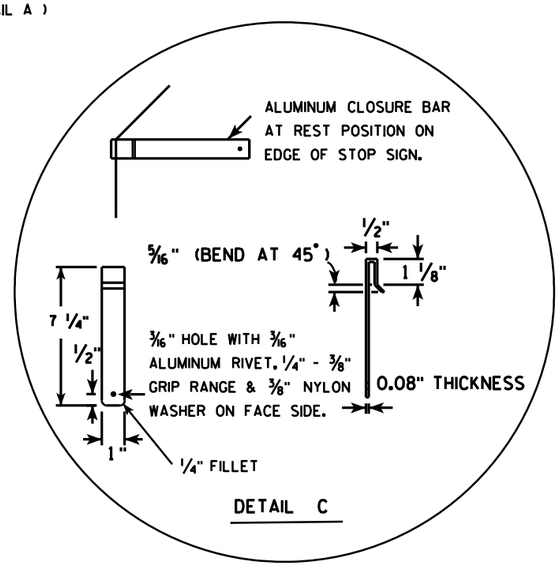

DETAIL C

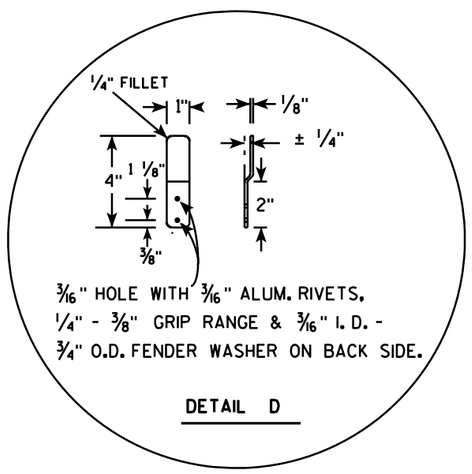

DETAIL D

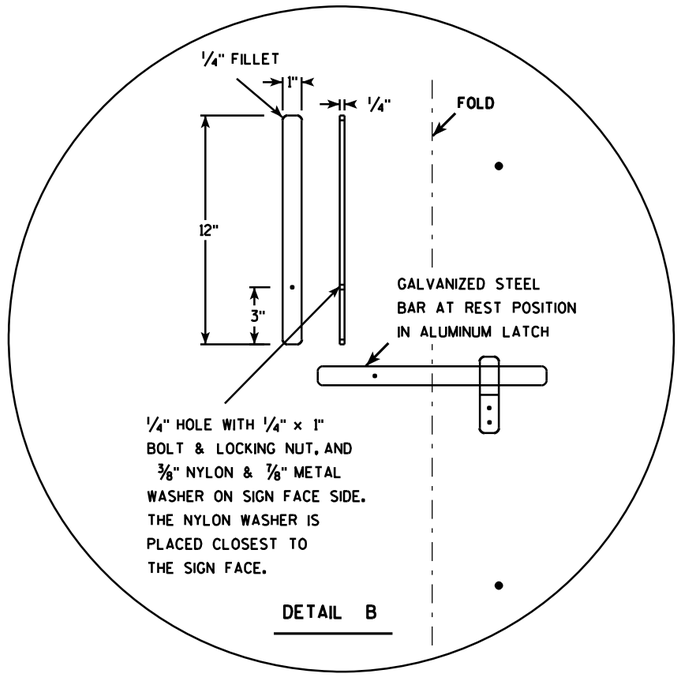

DETAIL B

SIZE	A	B	C	D	E	F	G	H	I	J	K	L	M	N	O	P	O	R	S	T	U	V	W	X	Y	Z	Area sq. ft.
1																											
2S	30				5/8	10	12 1/2	45		12 3/4		9 1/4	6 1/2	3	2	15	12 3/8	2 1/2	22	5			11/16	1 1/4	3 1/2	2 3/8	5.18
2M	36				3/4	12	15	45		15 3/8		11	6 1/2	3	2	18	15 3/8	2 1/2	26	5			11/16	1 1/4	3 1/2	2 3/8	7.46
3	36				3/4	12	15	45		15 3/8		11	6 1/2	3	2	18	15 3/8	2 1/2	26	5			11/16	1 1/4	3 1/2	2 3/8	7.46
4																											
5																											

STANDARD SIGN
R1-1F

WISCONSIN DEPT OF TRANSPORTATION

APPROVED Matthew R Rauch
for State Traffic Engineer

DATE 12/03/10 PLATE NO. R1-1F.3

PROJECT NO:	HWY:	COUNTY:		SHEET NO: 344	E

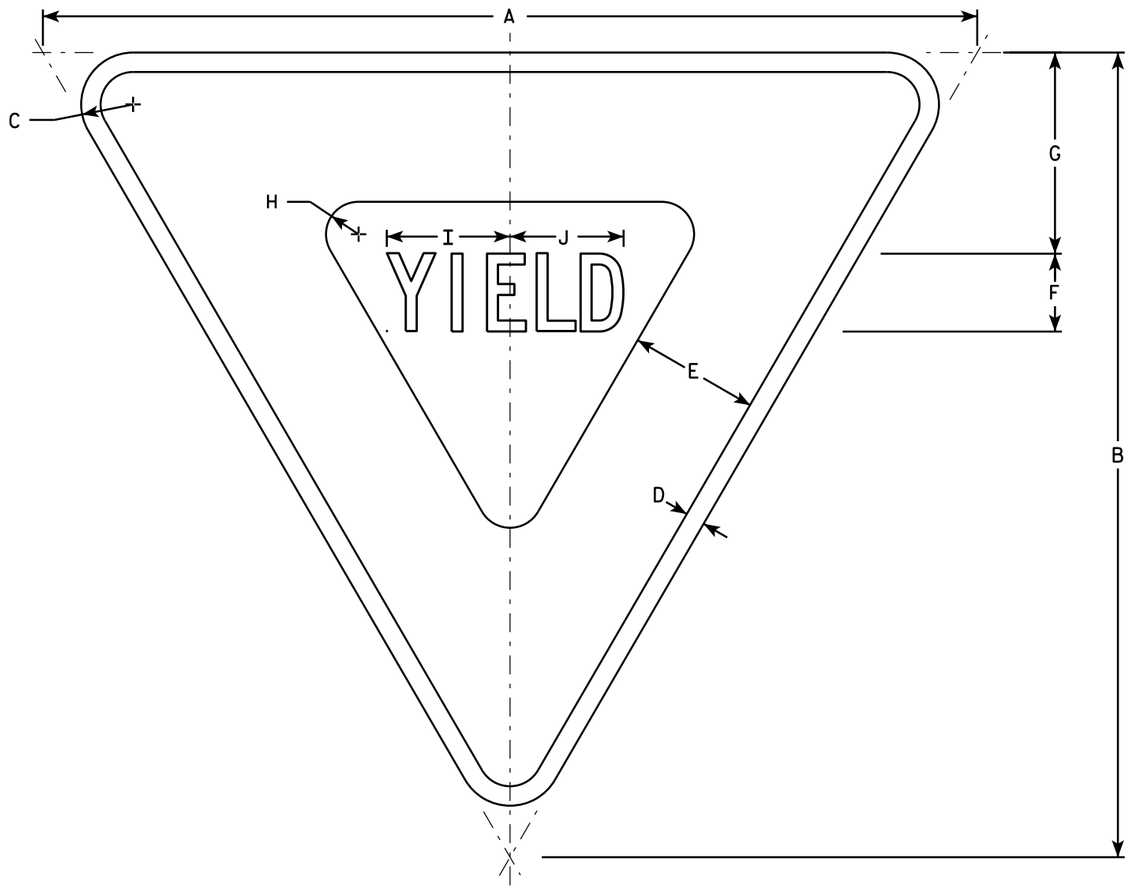

R1-2

NOTES

1. Sign is Type II - Type H Reflective - reference WIS DOT Standard Specification for HIGHWAY and STRUCTURE CONSTRUCTION latest edition.
2. Color:
   Background - White
   Message - See note 5
3. Message Series - C
4. Corners may be square or rounded when base material is plywood but borders shall be rounded as shown. When base material is metal, the corners and borders shall be rounded.
5. The border strip and word message are reflectorized red.

SIZE	A	B	C	D	E	F	G	H	I	J	K	L	M	N	O	P	Q	R	S	T	U	V	W	X	Y	Z	Area sq. ft.
1	30	26	1 1/2	5/8	4	2 1/2	6 3/8	7/8	4	3 5/8																	2.71
2S	36	31	2	3/4	5	3	7 3/4	1 1/4	4 3/4	4 3/8																	3.88
2M	48	42	3	1	6	4	9 3/4	2	6 1/4	5 7/8																	7.00
3	48	42	3	1	6	4	9 3/4	2	6 1/4	5 7/8																	7.00
4	48	42	3	1	6	4	9 3/4	2	6 1/4	5 7/8																	7.00
5	60	52	3	1 1/2	8	5	13	2 1/2	7 7/8	7 1/4																	10.83
6																											
7	18	15 1/2	1	3/8	2 1/2	1 1/2	3 7/8	5/8	2 3/8	2 1/4																	0.97

STANDARD SIGN
R1-2

WISCONSIN DEPT OF TRANSPORTATION

APPROVED Matthew R Rauch
for State Traffic Engineer

DATE 10/13/14 PLATE R1-2.12

PROJECT NO: | HWY: | COUNTY: | SHEET NO: E

FILE NAME : C:\CAEFiles\Projects\tr_stdplate\R12.DGN PLOT DATE : 13-OCT-2014 15:12 PLOT BY : mscsja PLOT NAME : PLOT SCALE : 5.837526:1.000000

WISDOT/CADDS SHEET 42

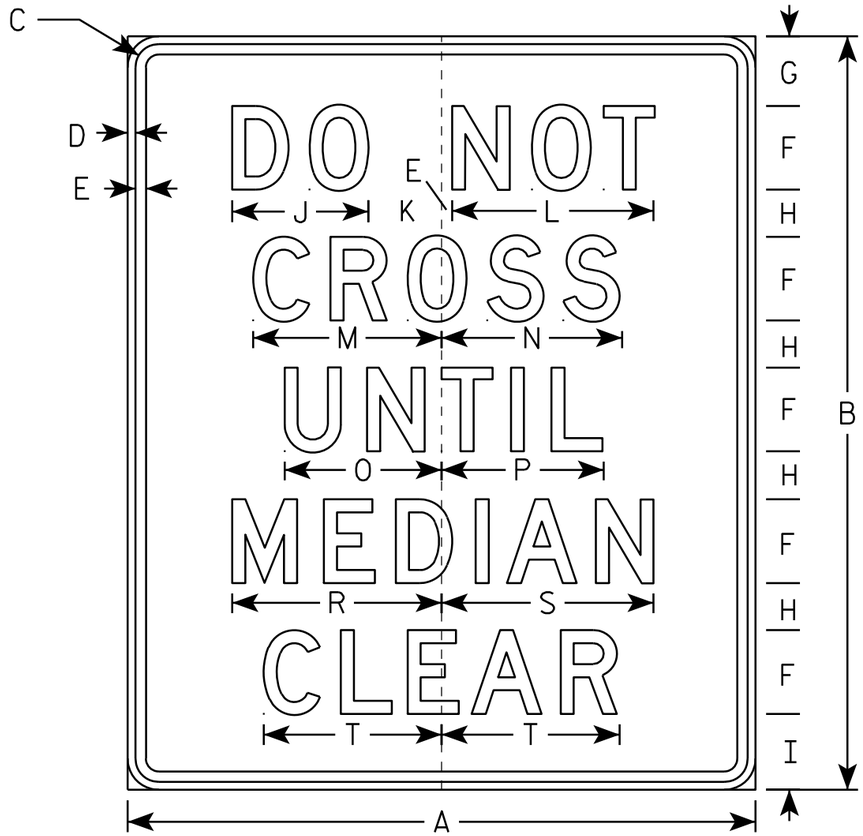

R1-55

NOTES

1. Sign is Type II - Type H Reflective - reference WIS DOT Standard Specification for HIGHWAY and STRUCTURE CONSTRUCTION latest edition.
2. Color:
   Background - White
   Message - Black
3. Message Series - D
4. Corners may be square or rounded when base material is plywood but borders shall be rounded as shown. When base material is metal, the corners and borders shall be rounded.

SIZE	A	B	C	D	E	F	G	H	I	J	K	L	M	N	O	P	Q	R	S	T	U	V	W	X	Y	Z	Area sq. ft.
1																											
2S	30	36	1 1/8	3/8	1/2	4	3 3/8	2 1/4	3 5/8	6 1/2	3 1/2	9 5/8	9	8 5/8	7 1/2	7 3/4		10	10 1/8	8 1/2							7.5
2M	30	36	1 1/8	3/8	1/2	4	3 3/8	2 1/4	3 5/8	6 1/2	3 1/2	9 5/8	9	8 5/8	7 1/2	7 3/4		10	10 1/8	8 1/2							7.5
3																											
4																											
5																											

STANDARD SIGN
R1-55

WISCONSIN DEPT OF TRANSPORTATION

APPROVED Matthew R Rauch
for State Traffic Engineer

DATE 12/03/10 PLATE NO. R1-55.2

PROJECT NO: | HWY: | COUNTY: | SHEET NO: 346 | E

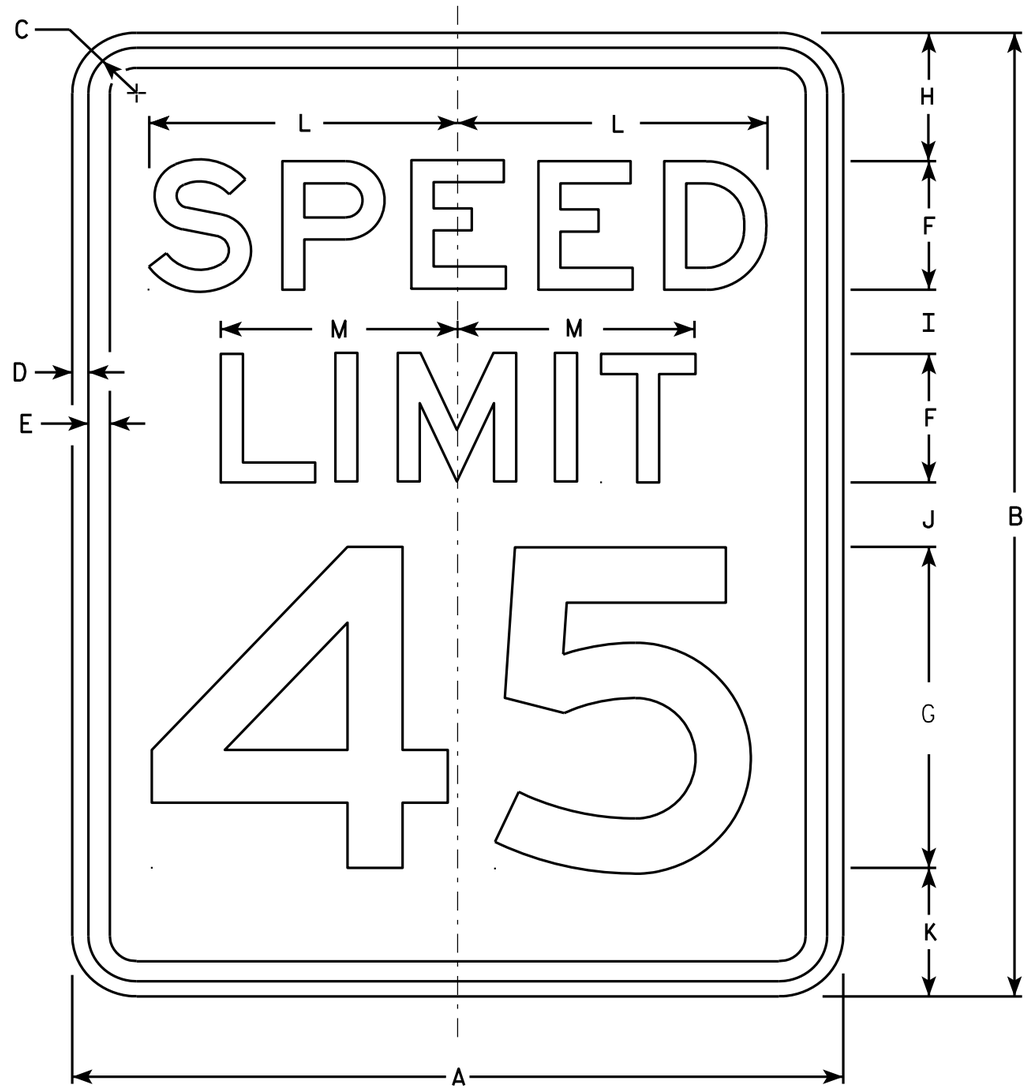

R2-1

NOTES

1. Sign is Type II - Type H Reflective - reference WIS DOT Standard Specification for HIGHWAY and STRUCTURE CONSTRUCTION latest edition.
2. Color:
   Background - White
   Message - Black
3. Message Series - E
4. Corners may be square or rounded when base material is plywood but borders shall be rounded as shown. When base material is metal, the corners and borders shall be rounded.
5. Substitute appropriate numerals and optically adjust spacing to achieve proper balance.

SIZE	A	B	C	D	E	F	G	H	I	J	K	L	M	N	O	P	Q	R	S	T	U	V	W	X	Y	Z	Area sq. ft.
1	18	24	1 1/8	3/8	1/2	3	8	3	2	2	3	7 1/4	5 1/2														3.0
2S	24	30	1 1/8	3/8	1/2	4	10	3	2 1/4	3 3/8	3 3/8	9 5/8	7 3/8														5.0
2M	30	36	1 3/8	1/2	5/8	5	12	5	2 1/2	2 1/2	4	12	9 1/4														7.5
3	36	48	1 3/8	1/2	5/8	6	14	6	5	5	6	14 3/8	11														12.0
4	36	48	1 3/8	1/2	5/8	6	14	6	5	5	6	14 3/8	11														12.0
5	48	60	2 1/4	3/4	1	8	20	6	4 1/2	6 3/4	6 3/4	19 1/4	14 5/8														20.0

STANDARD SIGN
R2-1

WISCONSIN DEPT OF TRANSPORTATION

APPROVED Matthew R Rauch
for State Traffic Engineer

DATE 5/26/10 PLATE NO. R2-1.13

PROJECT NO:	HWY:	COUNTY:		SHEET NO: 347	E

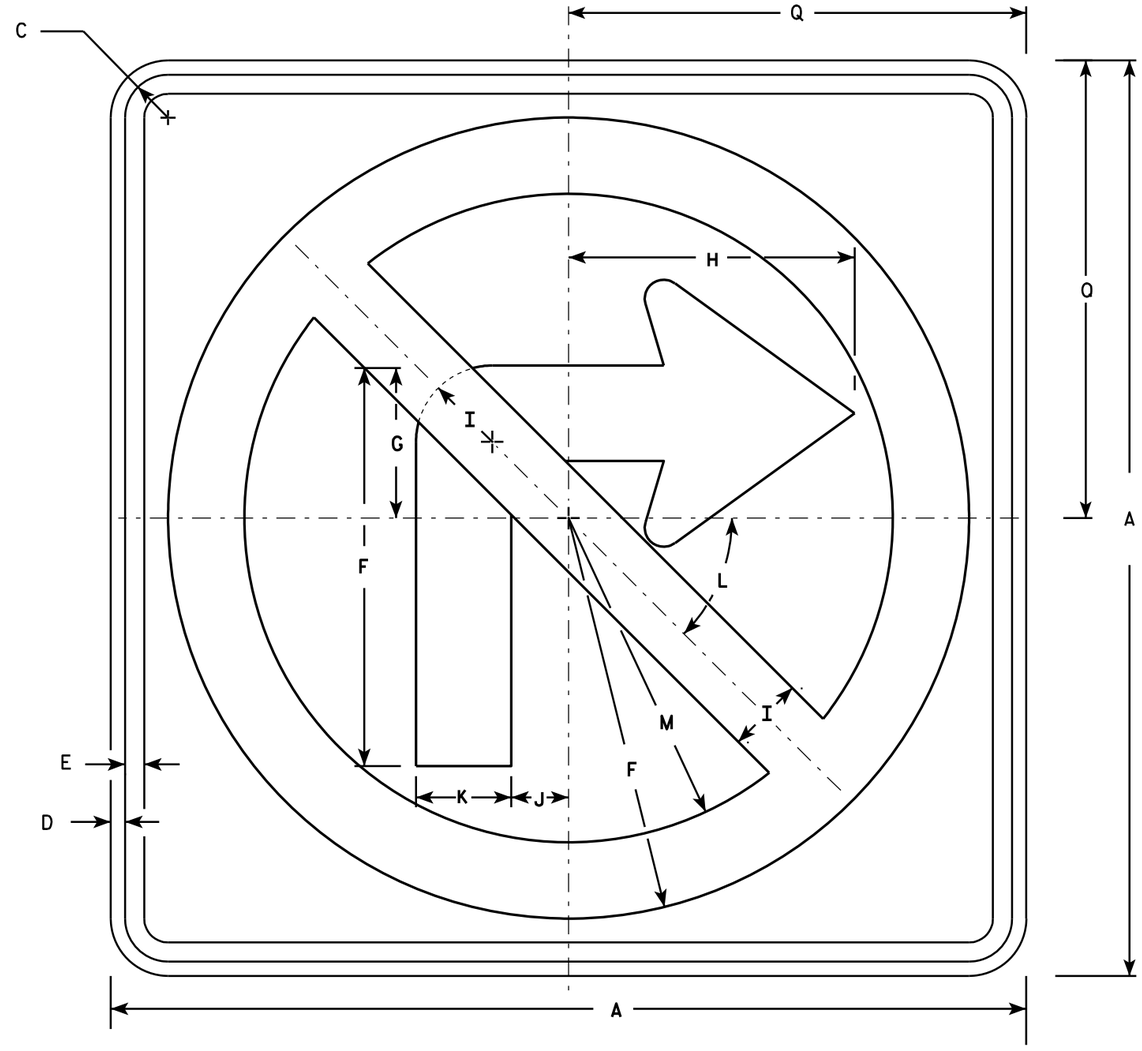

R3-1

NOTES

1. Sign is Type II - Type H Reflective - reference WIS DOT Standard Specification for HIGHWAY and STRUCTURE CONSTRUCTION latest edition.
2. Color:
   Background - White
   Message - See note 4
3. Corners may be square or rounded when base material is plywood but borders shall be rounded as shown. When base material is metal, the corners and borders shall be rounded.
4. Border & Arrow are non reflective black, the circle with diagonal bar is reflective red.

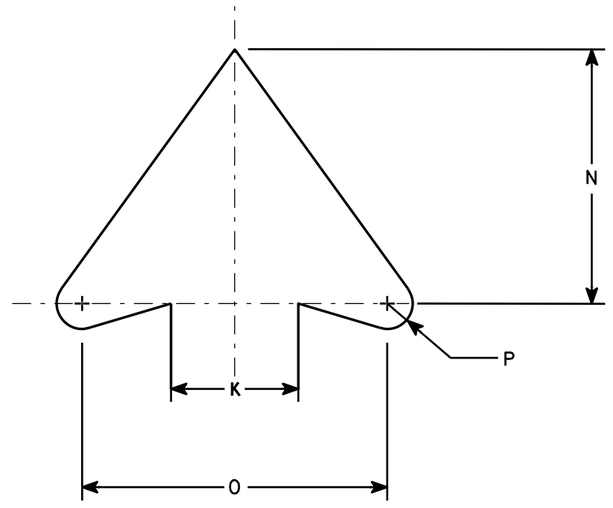

ARROW DETAIL

SIZE	A	B	C	D	E	F	G	H	I	J	K	L	M	N	O	P	Q	R	S	T	U	V	W	X	Y	Z	Area sq. ft.
1	24		1 1/8	3/8	1/2	10 1/2	4	7 1/2	2	1 1/2	2 1/2	45	8 1/2	5	6	1/2	12										4.0
2S	24		1 1/8	3/8	1/2	10 1/2	4	7 1/2	2	1 1/2	2 1/2	45°	8 1/2	5	6	1/2	12										4.0
2M	36		1 5/8	5/8	3/4	15 3/4	6	11 1/4	3	2 1/4	3 3/4	45	12 3/4	7 1/2	9	3/4	18										9.0
3	36		1 5/8	5/8	3/4	15 3/4	6	11 1/4	3	2 1/4	3 3/4	45	12 3/4	7 1/2	9	3/4	18										9.0
4	36		1 5/8	5/8	3/4	15 3/4	6	11 1/4	3	2 1/4	3 3/4	45°	12 3/4	7 1/2	9	3/4	18										9.0
5	48		2 1/4	3/4	1	21	8	15	4	3	5	45°	17	10	12	1	24										16.0

STANDARD SIGN
R3-1

WISCONSIN DEPT OF TRANSPORTATION

APPROVED Matthew R Rauch
for State Traffic Engineer

DATE 12/08/10 PLATE NO. R3-1.5

PROJECT NO: | HWY: | COUNTY: | SHEET NO: 348 | E

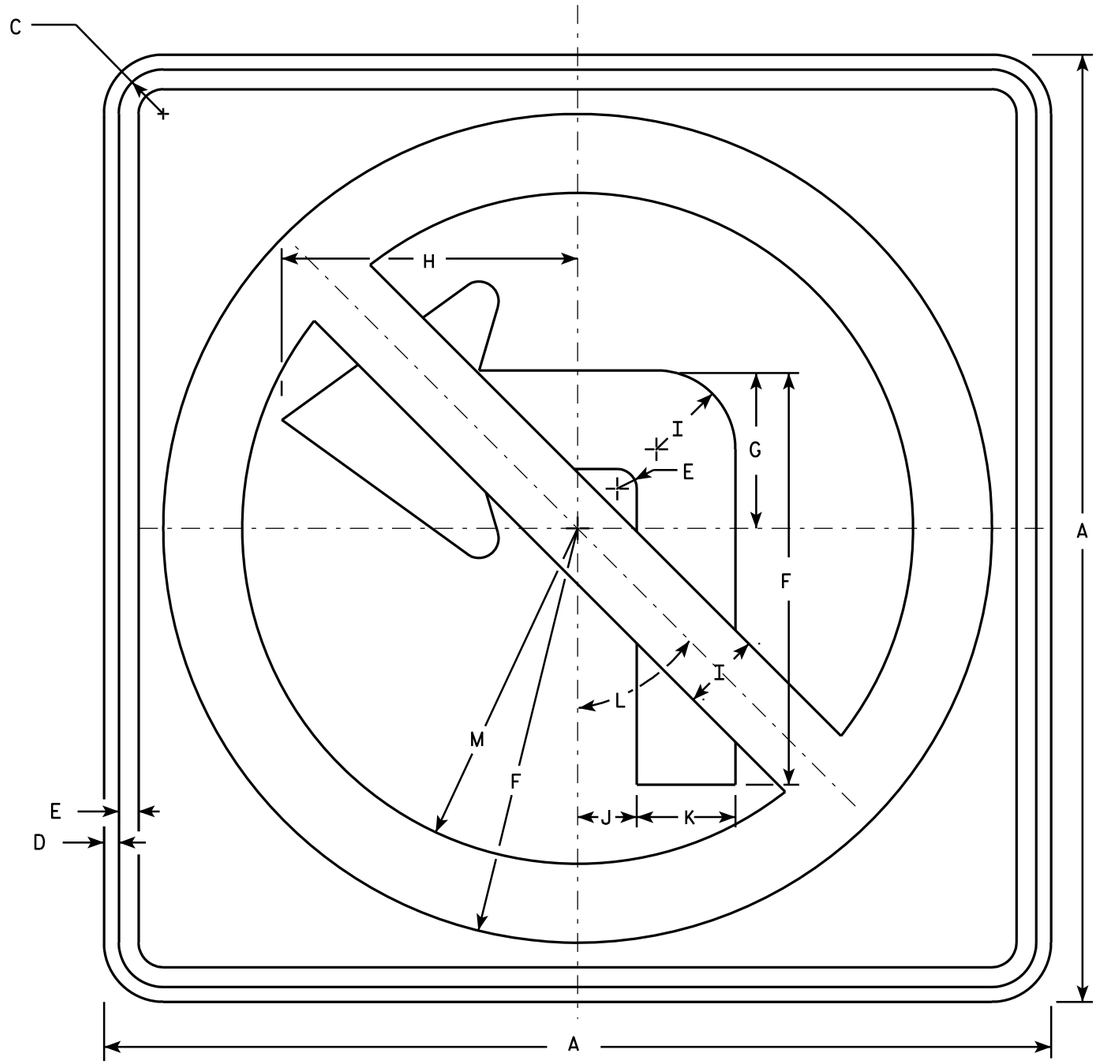

R3-2

NOTES

1. Sign is Type II - Type H Reflective - reference WIS DOT Standard Specification for HIGHWAY and STRUCTURE CONSTRUCTION latest edition.
2. Color:
   Background - White
   Message - See note 4
3. Corners may be square or rounded when base material is plywood but borders shall be rounded as shown. When base material is metal, the corners and borders shall be rounded.
4. Border & Arrow are non reflective black, the circle with diagonal bar is reflective red.

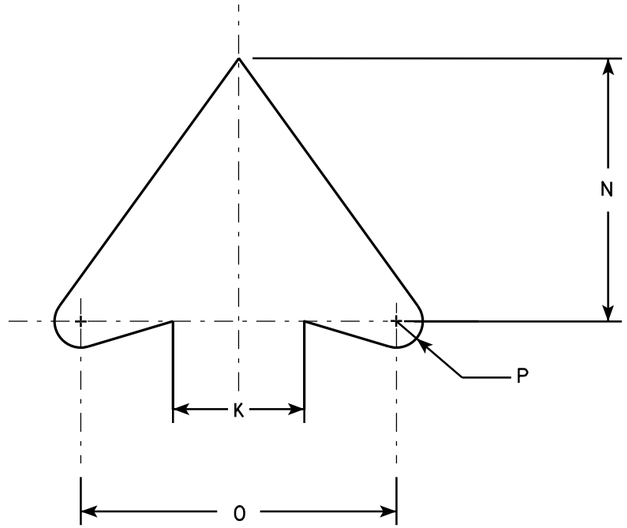

ARROW DETAIL

SIZE	A	B	C	D	E	F	G	H	I	J	K	L	M	N	O	P	Q	R	S	T	U	V	W	X	Y	Z	Area sq. ft.
1	24		1 1/8	3/8	1/2	10 1/2	4	7 1/2	2	1 1/2	2 1/2	45°	8 1/2	5	6	1/2											4.0
2S	24		1 1/8	3/8	1/2	10 1/2	4	7 1/2	2	1 1/2	2 1/2	45°	8 1/2	5	6	1/2											4.0
2M	36		1 5/8	5/8	3/4	15 3/4	6	11 1/4	3	2 1/4	3 3/4	45°	12 3/4	7 1/2	9	3/4											9.0
3	36		1 5/8	5/8	3/4	15 3/4	6	11 1/4	3	2 1/4	3 3/4	45°	12 3/4	7 1/2	9	3/4											9.0
4	36		1 5/8	5/8	3/4	15 3/4	6	11 1/4	3	2 1/4	3 3/4	45°	12 3/4	7 1/2	9	3/4											9.0
5	48		2 1/4	3/4	1	21	8	15	4	3	5	45°	17	10	12	1											16.0

STANDARD SIGN
R3-2

WISCONSIN DEPT OF TRANSPORTATION

APPROVED Matthew R Rauch
for State Traffic Engineer

DATE 12/08/10 PLATE NO. R3-2.10

PROJECT NO:	HWY:	COUNTY:		SHEET NO: 349	E

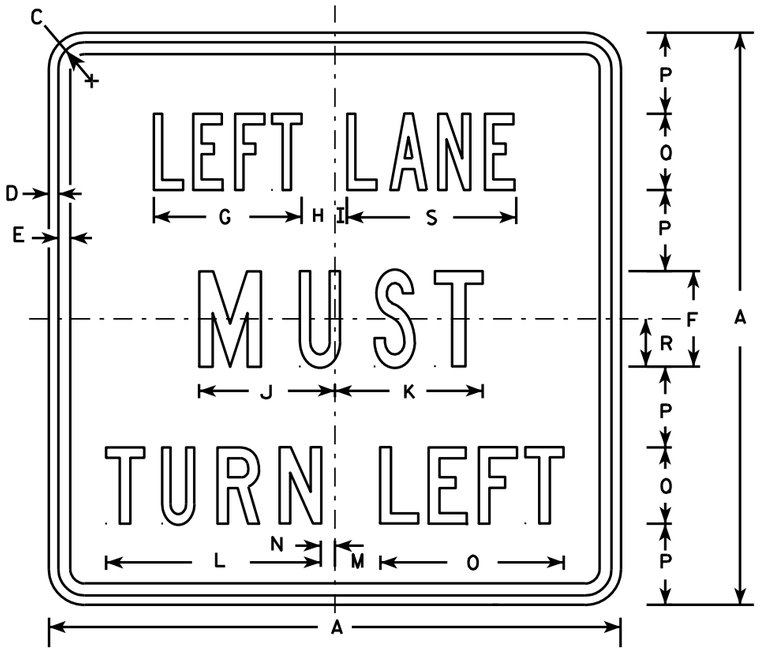

R3-7L

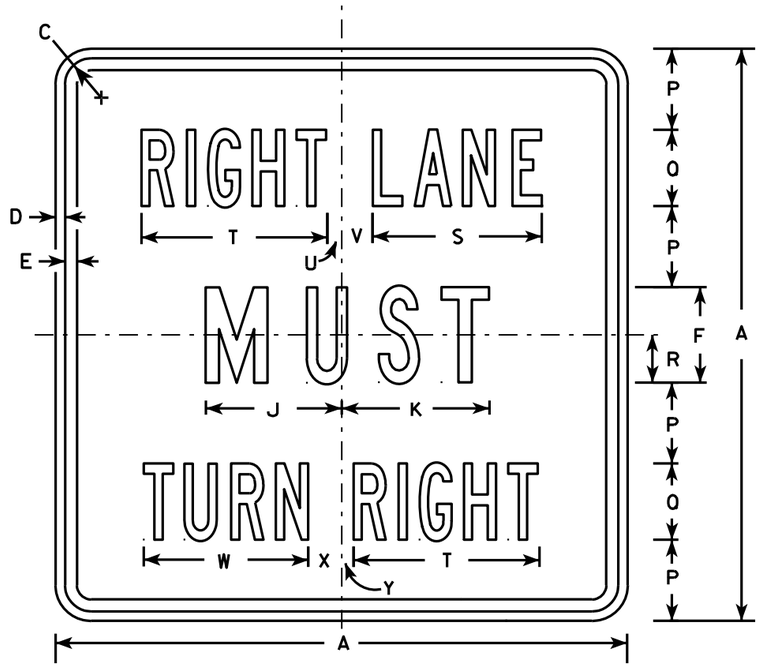

R3-7R

NOTES

1. Sign is Type II - Type H Reflective - reference WIS DOT Standard Specification for HIGHWAY and STRUCTURE CONSTRUCTION latest edition.
2. Color:
   Background - White
   Message - Black
3. Message Series - Line 1 is Series B.
   Line 2 is Series C.
   Line 3 on plate R3-7R is Series B and Series C on plate R3-7L.
4. Corners may be square or rounded when base material is plywood but borders shall be rounded as shown. When base material is metal, the corners and borders shall be rounded.

SIZE	A	B	C	D	E	F	G	H	I	J	K	L	M	N	O	P	Q	R	S	T	U	V	W	X	Y	Z	Area sq. ft.
1	30		1 3/8	1/2	5/8	5	7 3/4	1 3/4	5/8	7 1/8	7 3/4	11 1/4	2 3/8	3/4	9 5/8	4 1/4	4	2 1/2	8 7/8	9 3/4	3/4	1 5/8	8 5/8	1 5/8	5/8		6.25
2S	30		1 3/8	1/2	5/8	5	7 3/4	1 3/4	5/8	7 1/8	7 3/4	11 1/4	2 3/8	3/4	9 5/8	4 1/4	4	2 1/2	8 7/8	9 3/4	3/4	1 5/8	8 5/8	1 5/8	5/8		6.25
2M	30		1 3/8	1/2	5/8	5	7 3/4	1 3/4	5/8	7 1/8	7 3/4	11 1/4	2 3/8	3/4	9 5/8	4 1/4	4	2 1/2	8 7/8	9 3/4	3/4	1 5/8	8 5/8	1 5/8	5/8		6.25
3	36		1 5/8	5/8	3/4	6	9 5/8	2	1 1/8	8 3/4	9	13 1/2	3 7/8	1 1/2	12 1/2	5	5	3	10 5/8	12	7/8	2 1/4	10 5/8	2 1/8	1		9.00
4	48		2 1/4	3/4	1	8	13 1/2	2 3/8	1 1/2	11 1/2	11 7/8	17 3/4	3 5/8	2 1/2	16 3/8	6 1/2	7	4	14 3/8	16 7/8	5/8	3 1/4	15 1/8	2 3/4	1 1/8		16.00
5																											

STANDARD SIGN
R3-7L & R3-7R

WISCONSIN DEPT OF TRANSPORTATION

APPROVED Matthew R Rauch
for State Traffic Engineer

DATE 3/18/2011 PLATE NO. R3-7.3

PROJECT NO: | HWY: | COUNTY: | SHEET NO: 350 | E



(A)



(B)

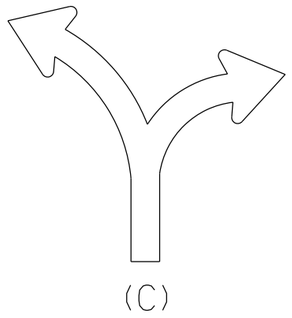
(C)

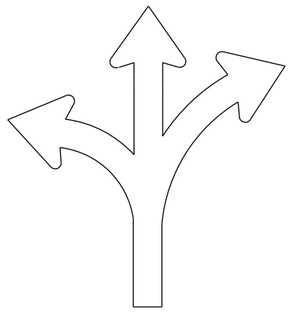
(D)

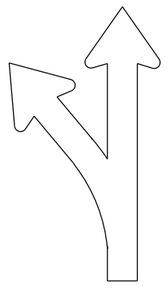
(E)

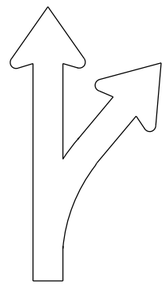
(F)

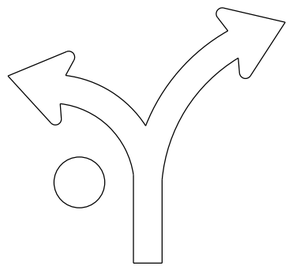
(G)

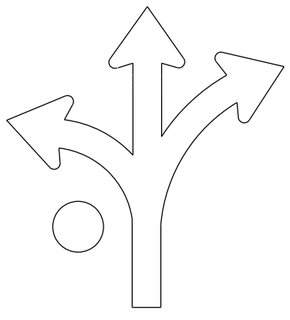
(H)

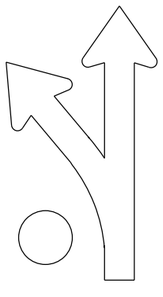
(I)

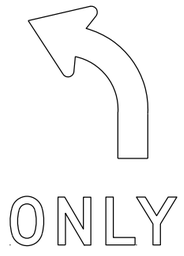

(L)

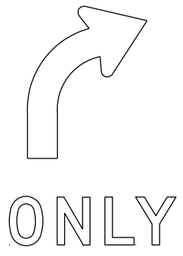

(R)

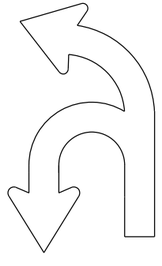
(U)

NOTES

1. Sigs are Type II - Type H Reflective
2. Color:
   Background - White
   Message - Black
3. Message Series - D
4. Use appropriate Letter for Sign Code
   Each letter added makes sign wider. Example R3-8EAR
5. Square footage of sign varies by letters

1	Letter =	3.75 sq ft for Size 2
		6.0 sq ft for Size 3
		10.0 sq ft for Size 4 or 5
2	Letters =	7.5 sq ft for Size 2
		12.0 sq ft for Size 3
		20.0 sq ft for Size 4 or 5
3	Letters =	11.25 sq ft for Size 2
		18.0 sq ft for Size 3
		30.0 sq ft for Size 4 or 5
4	Letters =	15.0 sq ft for Size 2
		24.0 sq ft for Size 3
		40.0 sq ft for Size 4 or 5
5	Letters =	18.75 sq ft for Size 2
		30.0 sq ft for Size 3
		50.0 sq ft for Size 4 or 5
6	Letters =	22.5 sq ft for Size 2
		36.0 sq ft for Size 3
		60.0 sq ft for Size 4 or 5

6. When letters C,D,G,H are used on the Left or Right end of the sign the Sq. Ft. changes.
   Add the amounts when these letters are used:
   1.25 sq ft for Size 2
   1.5 sq ft for Size 3
   2.0 sq ft for Size 4 or 5

STANDARD SIGN
R3-8 Series

WISCONSIN DEPT OF TRANSPORTATION

APPROVED Matthew R Rauch
For State Traffic Engineer

DATE 5/21/19 PLATE NO. R3-8.1

PROJECT NO:

SHEET NO: 351 E

7

FILE NAME : C:\CAEfiles\Projects\stdplate_R38.dgn PLOT DATE : 21-MAY 2019 4:37 PLOT BY : mscj9h PLOT NAME :
WISDOT/CADDS SHEET 42

NOTES

1. Sign is Type II - Type H Reflective
2. Color:
   Background - White
   Message - Black
3. Message Series - D

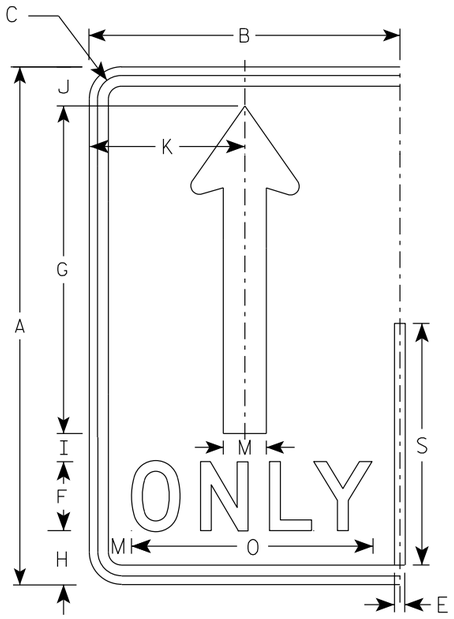

(A)

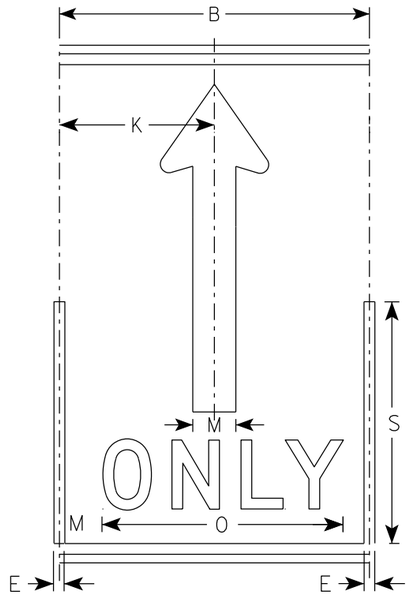

(A)

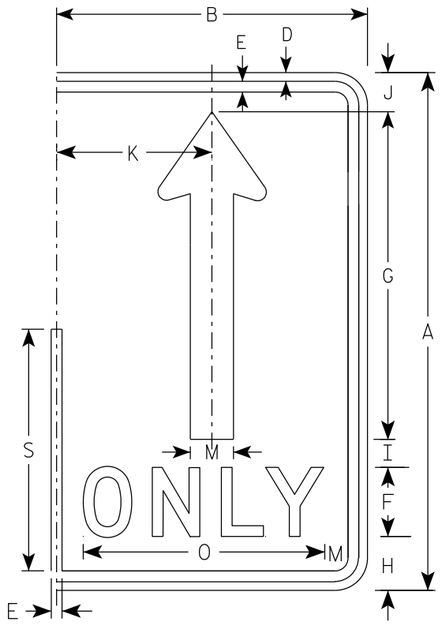

(A)

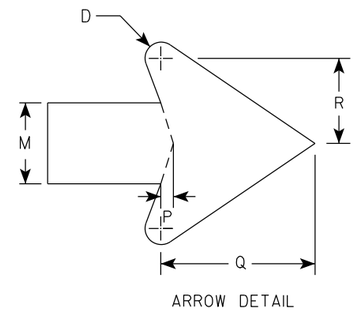

ARROW DETAIL

SIZE	A	B	C	D	E	F	G	H	I	J	K	L	M	N	O	P	Q	R	S	T	U	V	W	X	Y	Z	Area sq. ft.
1																											
2S	30	18	1 3/8	1/2	5/8	4	19	3 1/8	1 5/8	2 1/4	9		2 1/2		14	3/8	4 3/4	2 5/8	14								3.75
2M	30	18	1 3/8	1/2	5/8	4	19	3 1/8	1 5/8	2 1/4	9		2 1/2		14	3/8	4 3/4	2 5/8	14								3.75
3	36	24	1 3/8	1/2	5/8	5	22 3/4	3 3/4	1 3/4	2 3/4	12		3		17 5/8	1/2	5 3/4	3 1/8	16 3/4								6.0
4	48	30	2 1/4	3/4	1	6	30 3/8	5 1/8	2 7/8	3 5/8	15		4		21 3/4	5/8	7 5/8	4 1/4	22 3/8								10.0
5	48	30	2 1/4	3/4	1	6	30 3/8	5 1/8	2 7/8	3 5/8	15		4		21 3/4	5/8	7 5/8	4 1/4	22 3/8								10.0

STANDARD SIGN
R3-8 (A) Arrow

WISCONSIN DEPT OF TRANSPORTATION

APPROVED Matthew R Rauch
for State Traffic Engineer

DATE 5/21/19 PLATE NO. R3-8.1

PROJECT NO: | HWY: | COUNTY: | SHEET NO: 352 | E

NOTES

1. Sign is Type II - Type H Reflective
2. Color:
   Background - White
   Message - Black
   Message Series - D

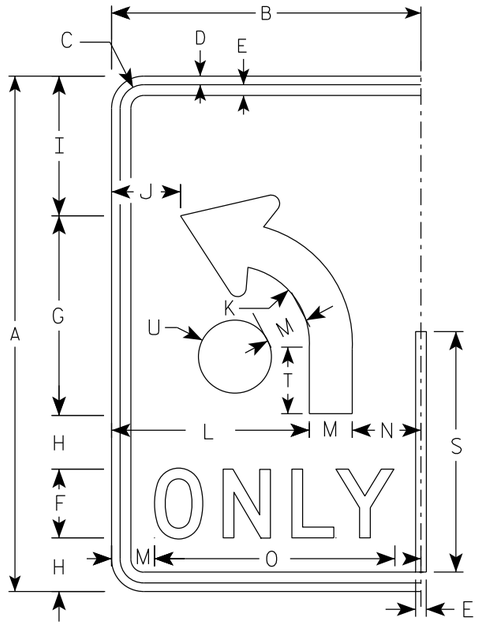

(B)

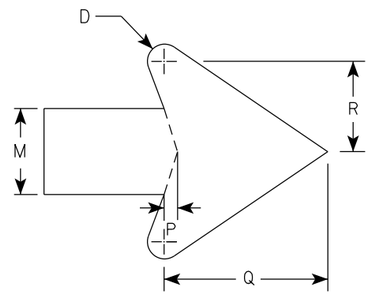

ARROW DETAIL

SIZE	A	B	C	D	E	F	G	H	I	J	K	L	M	N	O	P	Q	R	S	T	U	V	W	X	Y	Z	Area sq. ft.
1																											
2S	30	18	1 3/8	1/2	5/8	4	11 5/8	3 1/8	8 1/8	4	4 1/2	11 1/2	2 1/2	4	14	3/8	4 3/4	2 5/8	14	3 7/8	2 1/8						3.75
2M	30	18	1 3/8	1/2	5/8	4	11 5/8	3 1/8	8 1/8	4	4 1/2	11 1/2	2 1/2	4	14	3/8	4 3/4	2 5/8	14	3 7/8	2 1/8						3.75
3	36	24	1 3/8	1/2	5/8	5	14	3 1/2	9 3/4	6	5 3/8	15	3	6	17 5/8	1/2	5 3/4	3 1/8	16 3/4	4 5/8	2 1/2						6.0
4	48	30	2 1/4	3/4	1	6	18 5/8	5 1/8	13 1/8	6 1/8	7 1/4	18	4	8	21 3/4	5/8	7 5/8	4 1/4	22 3/8	6 1/4	3 3/8						10.0
5	48	30	2 1/4	3/4	1	6	18 5/8	5 1/8	13 1/8	6 1/8	7 1/4	18	4	8	21 3/4	5/8	7 5/8	4 1/4	22 3/8	6 1/4	3 3/8						10.0

STANDARD SIGN

R3-8 (B) Arrow

WISCONSIN DEPT OF TRANSPORTATION

APPROVED Matthew R Rauch

for State Traffic Engineer

DATE 5/21/19 PLATE NO. R3-8.1

PROJECT NO:

SHEET NO: 353 E

NOTES

1. Sign is Type II - Type H Reflective
2. Color:
   Background - White
   Message - Black
3. Message Series - None

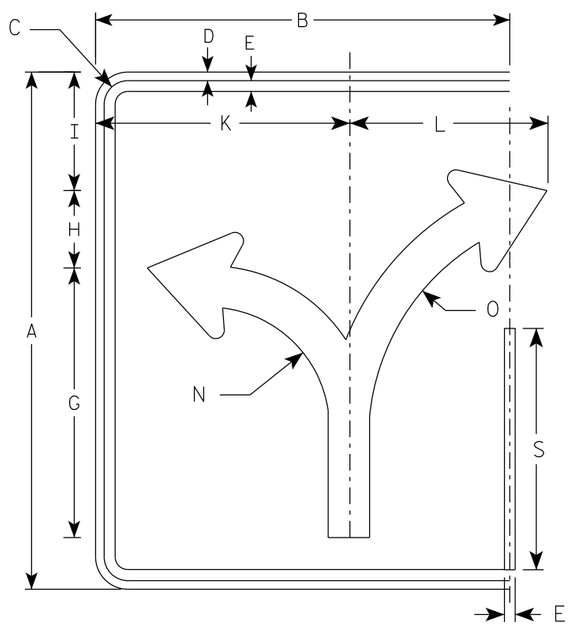

(C)

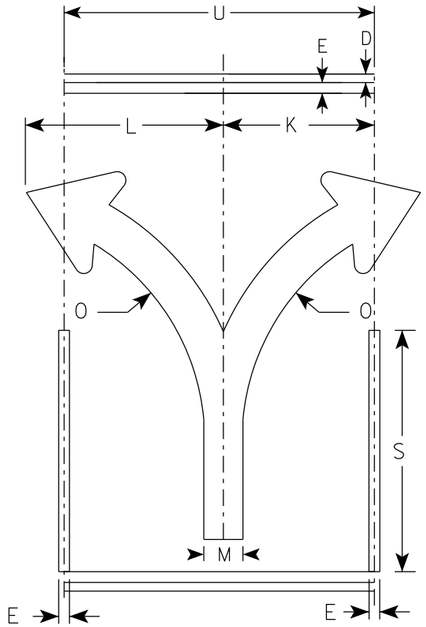

(C)

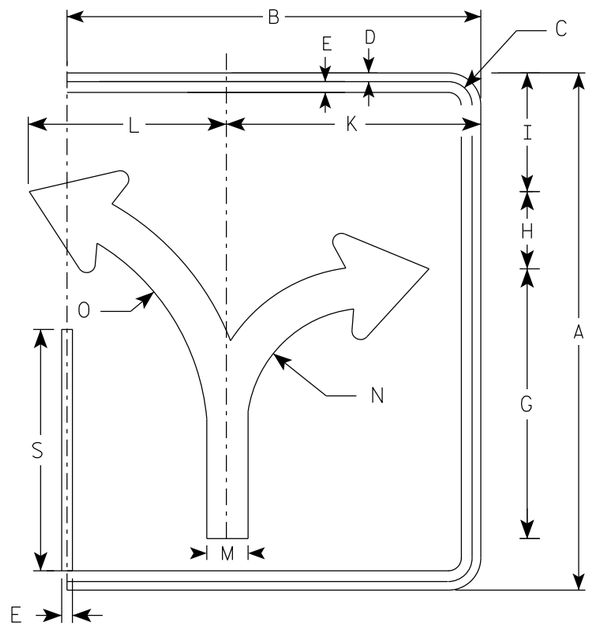

(C)

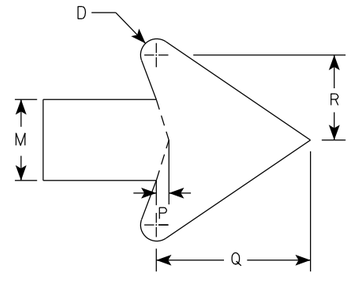

ARROW DETAIL

SIZE	A	B	C	D	E	F	G	H	I	J	K	L	M	N	O	P	Q	R	S	T	U	V	W	X	Y	Z	ENDS Area sq. ft.	MIDDLE Area sq. ft.
1																												
2S	30	24	1 3/8	1/2	5/8		15 5/8	4 1/2	6 7/8		14 3/4	11 1/2	2 3/8	7	13 1/4	3/8	4 1/2	2 1/2	14		18						5.0	3.75
2M	30	24	1 3/8	1/2	5/8		15 5/8	4 1/2	6 7/8		14 3/4	11 1/2	2 3/8	7	13 1/4	3/8	4 1/2	2 1/2	14		18						5.0	3.75
3	36	30	1 3/8	1/2	5/8		18 3/4	5 1/2	8 1/4		17 1/4	17 1/4	2 7/8	8 3/8	16	1/2	5 1/2	3	16 3/4		24						7.5	6.0
4	48	36	2 1/4	3/4	1		24 7/8	7 1/4	11		23 1/8	18	3 3/4	11 1/8	21 1/4	5/8	7 1/8	4	22 3/8		30						12.0	10.0
5	48	36	2 1/4	3/4	1		24 7/8	7 1/4	11		23 1/8	18	3 3/4	11 1/8	21 1/4	5/8	7 1/8	4	22 3/8		30						12.0	10.0

STANDARD SIGN
R3-8 (C) Arrow

WISCONSIN DEPT OF TRANSPORTATION

APPROVED Matthew R Rauch
for State Traffic Engineer

DATE 5/21/19 PLATE NO. R3-8.1

PROJECT NO: | HWY: | COUNTY: | SHEET NO: 354 | E

NOTES

1. Sign is Type II - Type H Reflective
2. Color:
   Background - White
   Message - Black
3. Message Series - None

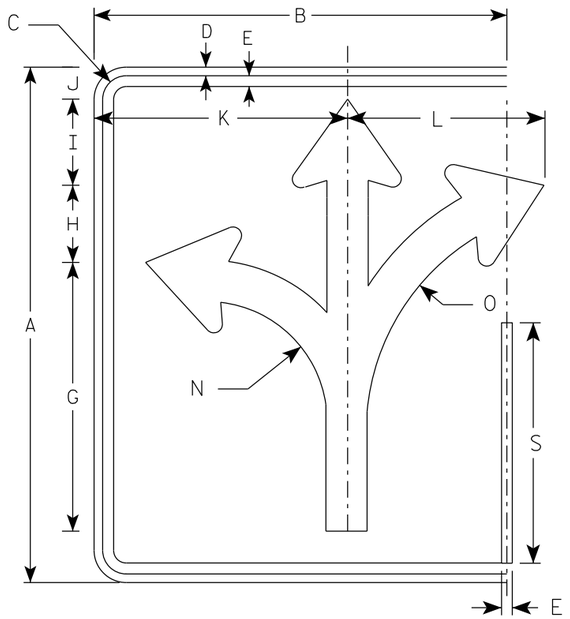

(D)

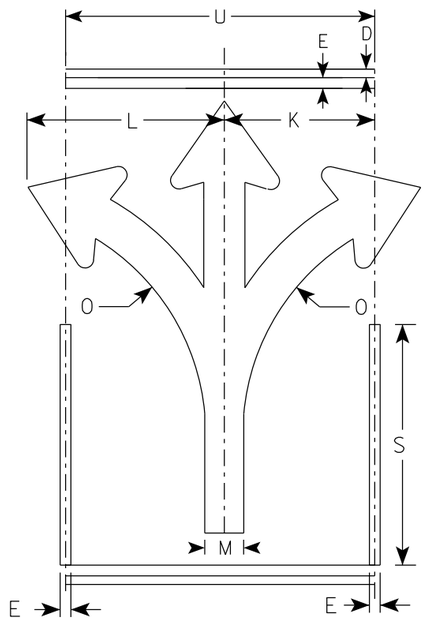

(D)

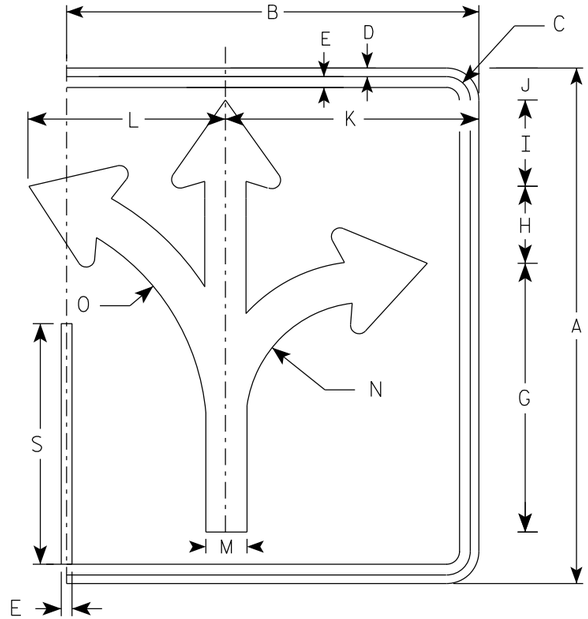

(D)

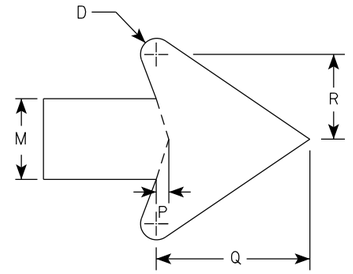

ARROW DETAIL

SIZE	A	B	C	D	E	F	G	H	I	J	K	L	M	N	O	P	Q	R	S	T	U	V	W	X	Y	Z	ENDS Area sq. ft.	MIDDLE Area sq. ft.
1																												
2S	30	24	1 3/8	1/2	5/8		15 5/8	4 1/2	5	1 7/8	14 3/4	11 1/2	2 3/8	7	13 1/4	3/8	4 1/2	2 1/2	14		18						5.0	3.75
2M	30	24	1 3/8	1/2	5/8		15 5/8	4 1/2	5	1 7/8	14 3/4	11 1/2	2 3/8	7	13 1/4	3/8	4 1/2	2 1/2	14		18						5.0	3.75
3	36	30	1 3/8	1/2	5/8		18 3/4	5 1/2	6	2 1/4	17 1/4	17 1/4	2 7/8	8 3/8	16	1/2	5 1/2	3	16 3/4		24						7.5	6.0
4	48	36	2 1/4	3/4	1		24 7/8	7 1/4	7 7/8	3 1/8	23 1/8	18	3 3/4	11 1/8	21 1/4	5/8	7 1/8	4	22 3/8		30						12.0	10.0
5	48	36	2 1/4	3/4	1		24 7/8	7 1/4	7 7/8	3 1/8	23 1/8	18	3 3/4	11 1/8	21 1/4	5/8	7 1/8	4	22 3/8		30						12.0	10.0

STANDARD SIGN
R3-8 (D) Arrow

WISCONSIN DEPT OF TRANSPORTATION

APPROVED Matthew R Rauch
for State Traffic Engineer

DATE 5/21/19 PLATE NO. R3-8.1

PROJECT NO: | HWY: | COUNTY: | SHEET NO: 355 | E

NOTES

1. Sign is Type II - Type H Reflective
2. Color:
   Background - White
   Message - Black
3. Message Series - None

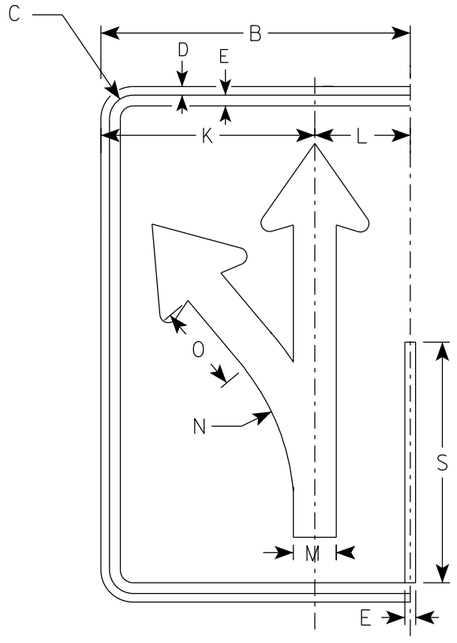

(E)

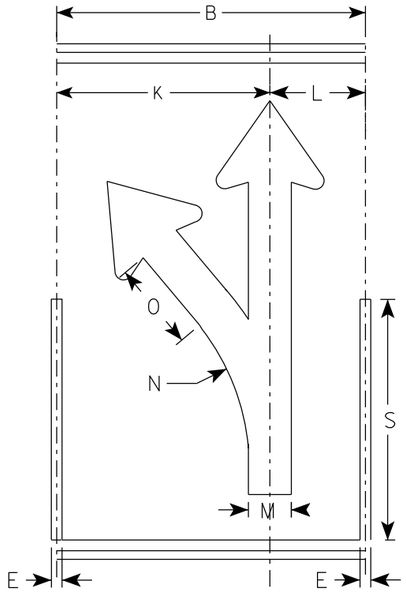

(E)

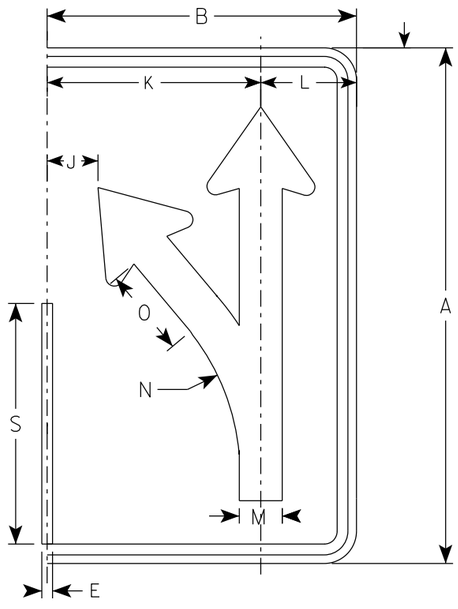

(E)

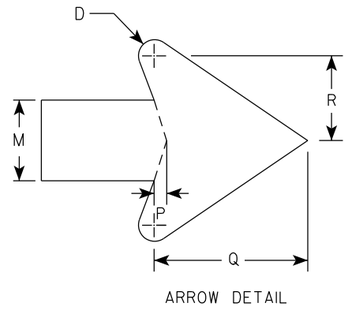

ARROW DETAIL

SIZE	A	B	C	D	E	F	G	H	I	J	K	L	M	N	O	P	Q	R	S	T	U	V	W	X	Y	Z	Area sq. ft.
1																											
2S	30	18	1 3/8	1/2	5/8		18 1/4	4 3/4	3 1/4	3	12 1/2	5 1/2	2 1/2	13 1/4	5 1/8	3/8	4 3/4	2 5/8	14								3.75
2M	30	18	1 3/8	1/2	5/8		18 1/4	4 3/4	3 1/4	3	12 1/2	5 1/2	2 1/2	13 1/4	5 1/8	3/8	4 3/4	2 5/8	14								3.75
3	36	24	1 3/8	1/2	5/8		21 7/8	5 5/8	4	4 7/8	16 1/8	7 3/4	3	15 7/8	6 1/8	1/2	5 3/4	3 1/8	16 3/4								6.0
4	48	30	2 1/4	3/4	1		29 1/8	7 1/2	5 1/4	5 3/8	20 1/2	9 1/2	4	21 1/4	8 1/4	5/8	7 5/8	4 1/4	22 3/8								10.0
5	48	30	2 1/4	3/4	1		29 1/8	7 1/2	5 1/4	5 3/8	20 1/2	9 1/2	4	21 1/4	8 1/4	5/8	7 5/8	4 1/4	22 3/8								10.0

STANDARD SIGN
R3-8 (E) Arrow

WISCONSIN DEPT OF TRANSPORTATION

APPROVED Matthew R Rauch
For State Traffic Engineer

DATE 5/21/19 PLATE NO. R3-8.1

PROJECT NO: | HWY: | COUNTY: | SHEET NO: 356 | E

NOTES

1. Sign is Type II - Type H Reflective
2. Color:
   Background - White
   Message - Black
3. Message Series - None

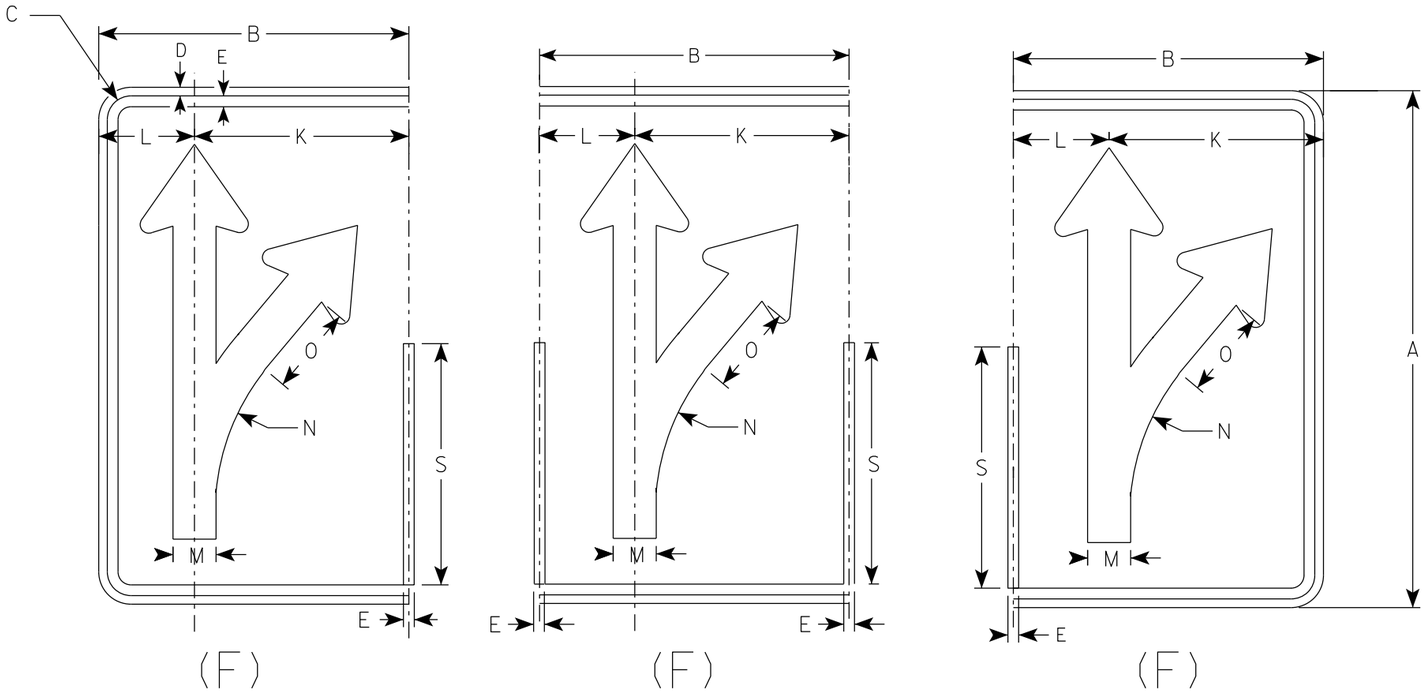

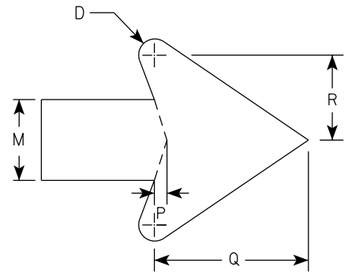

ARROW DETAIL

SIZE	A	B	C	D	E	F	G	H	I	J	K	L	M	N	O	P	Q	R	S	T	U	V	W	X	Y	Z	Area sq. ft.
1																											
2S	30	18	1 3/8	1/2	5/8		18 1/4	4 3/4	3 1/4	3	12 1/2	5 1/2	2 1/2	13 1/4	5 1/8	3/8	4 3/4	2 5/8	14								3.75
2M	30	18	1 3/8	1/2	5/8		18 1/4	4 3/4	3 1/4	3	12 1/2	5 1/2	2 1/2	13 1/4	5 1/8	3/8	4 3/4	2 5/8	14								3.75
3	36	24	1 3/8	1/2	5/8		21 7/8	5 5/8	4	4 7/8	16 1/8	7 3/4	3	15 7/8	6 1/8	1/2	5 3/4	3 1/8	16 3/4								6.0
4	48	30	2 1/4	3/4	1		29 1/8	7 1/2	5 1/4	5 3/8	20 1/2	9 1/2	4	21 1/4	8 1/4	5/8	7 5/8	4 1/4	22 3/8								10.0
5	48	30	2 1/4	3/4	1		29 1/8	7 1/2	5 1/4	5 3/8	20 1/2	9 1/2	4	21 1/4	8 1/4	5/8	7 5/8	4 1/4	22 3/8								10.0

STANDARD SIGN
R3-8 (F) Arrow

WISCONSIN DEPT OF TRANSPORTATION

APPROVED Matthew R Rauch
for State Traffic Engineer

DATE 5/21/19 PLATE NO. R3-8.1

PROJECT NO: | HWY: | COUNTY: | SHEET NO: 357 | E

NOTES

1. Sign is Type II - Type H Reflective
2. Color:
   Background - White
   Message - Black
3. Message Series - None

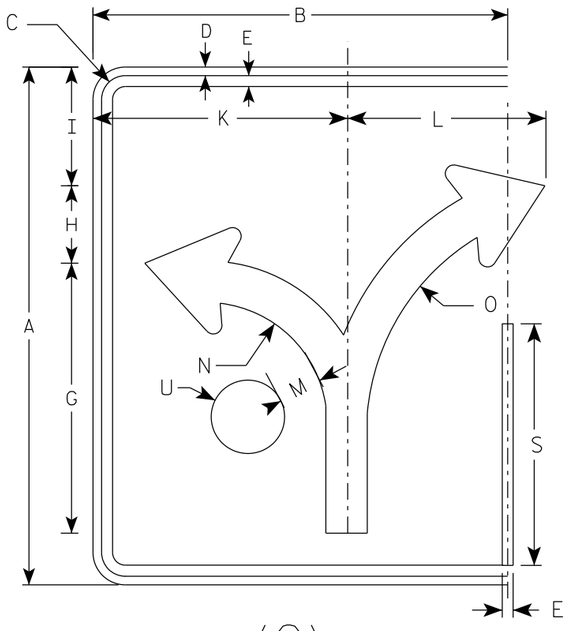

(G)

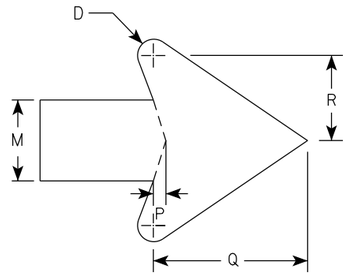

ARROW DETAIL

SIZE	A	B	C	D	E	F	G	H	I	J	K	L	M	N	O	P	Q	R	S	T	U	V	W	X	Y	Z	Area sq. ft.
1																											
2S	30	24	1 3/8	1/2	5/8		15 5/8	4 1/2	6 7/8		14 3/4	11 1/2	2 3/8	7	13 1/4	3/8	4 1/2	2 1/2	14		2 1/8						5.0
2M	30	24	1 3/8	1/2	5/8		15 5/8	4 1/2	6 7/8		14 3/4	11 1/2	2 3/8	7	13 1/4	3/8	4 1/2	2 1/2	14		2 1/8						5.0
3	36	30	1 3/8	1/2	5/8		18 3/4	5 1/2	8 1/4		17 1/4	17 1/4	2 7/8	8 3/8	16	1/2	5 1/2	3	16 3/4		2 1/2						7.5
4	48	36	2 1/4	3/4	1		24 7/8	7 1/4	11		23 1/8	18	3 3/4	11 1/8	21 1/4	5/8	7 1/8	4	22 3/8		3 3/8						12.0
5	48	36	2 1/4	3/4	1		24 7/8	7 1/4	11		23 1/8	18	3 3/4	11 1/8	21 1/4	5/8	7 1/8	4	22 3/8		3 3/8						12.0

STANDARD SIGN
R3-8 (G) Arrow

WISCONSIN DEPT OF TRANSPORTATION

APPROVED Matthew R Rauch
for State Traffic Engineer

DATE 5/21/19 PLATE NO. R3-8.1

PROJECT NO: | HWY: | COUNTY: | SHEET NO: 358 | E

NOTES

1. Sign is Type II - Type H Reflective
2. Color:
   Background - White
   Message - Black
3. Message Series - None

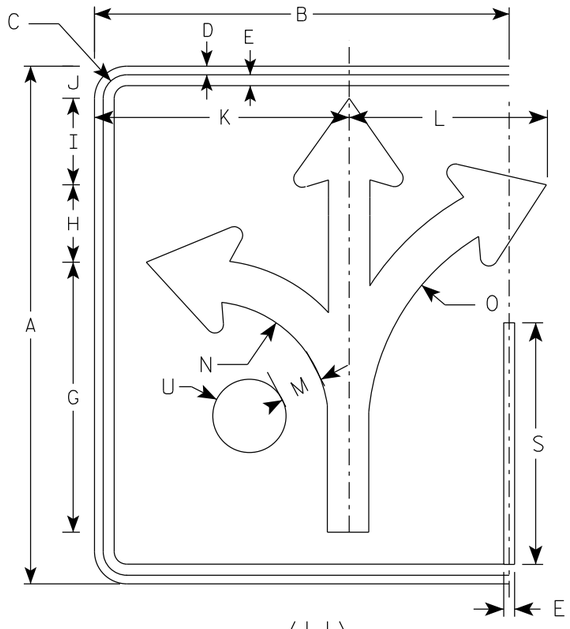

(H)

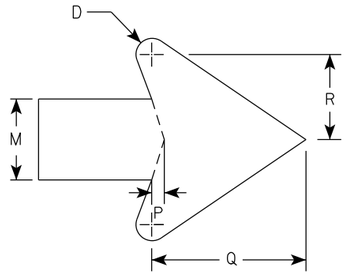

ARROW DETAIL

SIZE	A	B	C	D	E	F	G	H	I	J	K	L	M	N	O	P	Q	R	S	T	U	V	W	X	Y	Z	Area sq. ft.
1																											
2S	30	24	1 3/8	1/2	5/8		15 5/8	4 1/2	5	1 7/8	14 3/4	11 1/2	2 3/8	7	13 1/4	3/8	4 1/2	2 1/2	14		2 1/8						5.0
2M	30	24	1 3/8	1/2	5/8		15 5/8	4 1/2	5	1 7/8	14 3/4	11 1/2	2 3/8	7	13 1/4	3/8	4 1/2	2 1/2	14		2 1/8						5.0
3	36	30	1 3/8	1/2	5/8		18 3/4	5 1/2	6	3 1/8	17 1/4	17 1/4	2 7/8	8 3/8	16	1/2	5 1/2	3	16 3/4		2 1/2						7.5
4	48	36	2 1/4	3/4	1		24 7/8	7 1/4	7 7/8	3 1/8	23 1/8	18	3 3/4	11 1/8	21 1/4	5/8	7 1/8	4	22 3/8		3 3/8						12.0
5	48	36	2 1/4	3/4	1		24 7/8	7 1/4	7 7/8	3 1/8	23 1/8	18	3 3/4	11 1/8	21 1/4	5/8	7 1/8	4	22 3/8		3 3/8						12.0

STANDARD SIGN
R3-8 (H) Arrow

WISCONSIN DEPT OF TRANSPORTATION

APPROVED Matthew R Rauch
for State Traffic Engineer

DATE 5/21/19 PLATE NO. R3-8.1

PROJECT NO:	HWY:	COUNTY:		SHEET NO: 359	E

NOTES

1. Sign is Type II - Type H Reflective
2. Color:
   Background - White
   Message - Black
3. Message Series - None

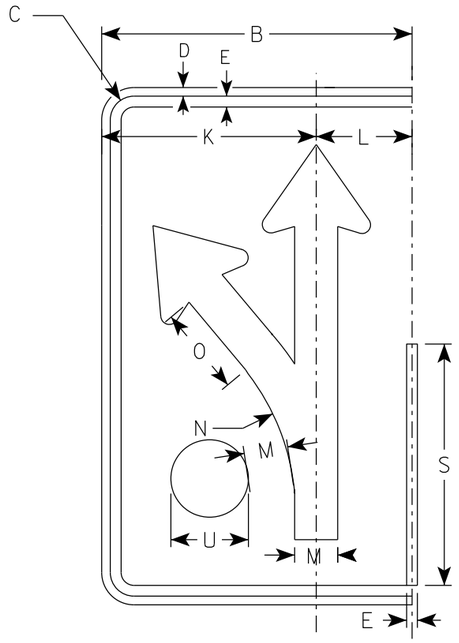

(I)

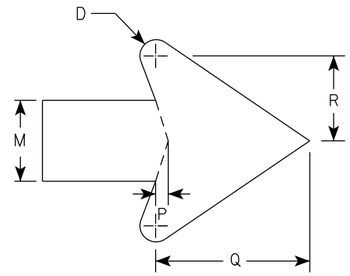

ARROW DETAIL

SIZE	A	B	C	D	E	F	G	H	I	J	K	L	M	N	O	P	Q	R	S	T	U	V	W	X	Y	Z	Area sq. ft.
1																											
2S	30	18	1 3/8	1/2	5/8		18 1/4	4 3/4	3 1/4	3	12 1/2	5 1/2	2 1/2	13 1/4	5 1/8	3/8	4 3/4	2 5/8	14		2 1/8						3.75
2M	30	18	1 3/8	1/2	5/8		18 1/4	4 3/4	3 1/4	3	12 1/2	5 1/2	2 1/2	13 1/4	5 1/8	3/8	4 3/4	2 5/8	14		2 1/8						3.75
3	36	24	1 3/8	1/2	5/8		21 7/8	5 5/8	4	4 7/8	16 1/8	7 3/4	3	15 7/8	6 1/8	1/2	5 3/4	3 1/8	16 3/4		2 1/2						6.0
4	48	30	2 1/4	3/4	1		29 1/8	7 1/2	5 1/4	5 3/8	20 1/2	9 1/2	4	21 1/4	8 1/4	5/8	7 5/8	4 1/4	22 3/8		3 3/8						10.0
5	48	30	2 1/4	3/4	1		29 1/8	7 1/2	5 1/4	5 3/8	20 1/2	9 1/2	4	21 1/4	8 1/4	5/8	7 5/8	4 1/4	22 3/8		3 3/8						10.0

STANDARD SIGN
R3-8 (I) Arrow

WISCONSIN DEPT OF TRANSPORTATION

APPROVED Matthew R Rauch
For State Traffic Engineer

DATE 5/21/19 PLATE NO. R3-8.1

PROJECT NO: | HWY: | COUNTY: | SHEET NO: 360 | E

NOTES

1. Sign is Type II - Type H Reflective
2. Color:
   Background - White
   Message - Black
3. Message Series - D

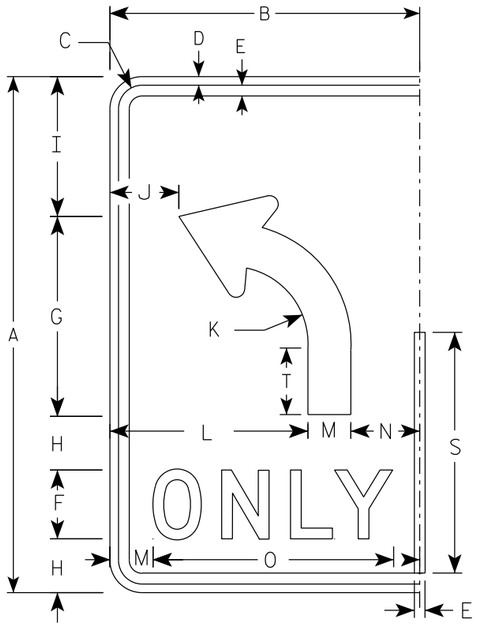

(L)

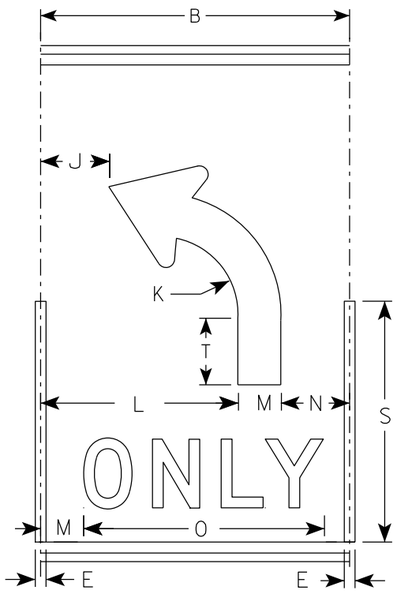

(L)

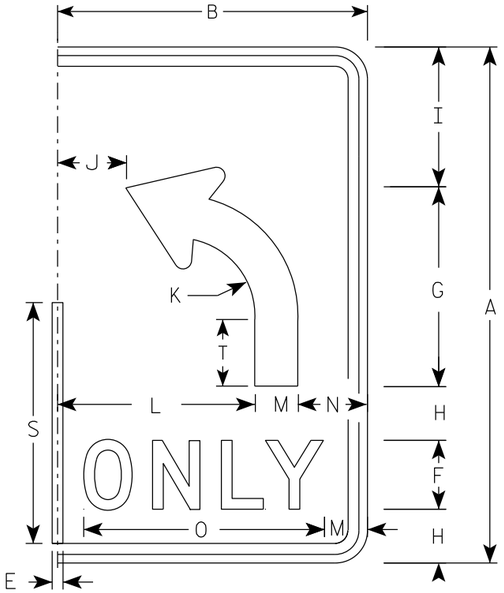

(L)

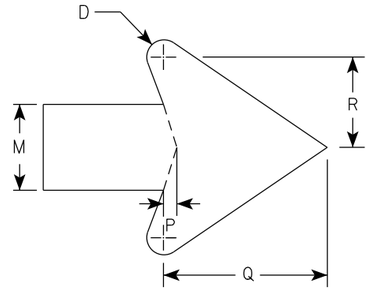

ARROW DETAIL

SIZE	A	B	C	D	E	F	G	H	I	J	K	L	M	N	O	P	Q	R	S	T	U	V	W	X	Y	Z	Area sq. ft.
1																											
2S	30	18	1 3/8	1/2	5/8	4	11 5/8	3 1/8	8 1/8	4	4 1/2	11 1/2	2 1/2	4	14	3/8	4 3/4	2 5/8	14	3 7/8							3.75
2M	30	18	1 3/8	1/2	5/8	4	11 5/8	3 1/8	8 1/8	4	4 1/2	11 1/2	2 1/2	4	14	3/8	4 3/4	2 5/8	14	3 7/8							3.75
3	36	24	1 3/8	1/2	5/8	5	14	3 1/2	9 3/4		5 3/8	15	3	6	17 5/8	1/2	5 3/4	3 1/8	16 3/4	4 5/8							6.0
4	48	30	2 1/4	3/4	1	6	18 5/8	5 1/8	13 1/8	6 1/8	7 1/4	18	4	8	21 3/4	5/8	7 5/8	4 1/4	22 3/8	6 1/4							10.0
5	48	30	2 1/4	3/4	1	6	18 5/8	5 1/8	13 1/8	6 1/8	7 1/4	18	4	8	21 3/4	5/8	7 5/8	4 1/4	22 3/8	6 1/4							10.0

STANDARD SIGN

R3-8 (L) Arrow

WISCONSIN DEPT OF TRANSPORTATION

APPROVED Matthew R Rauch
for State Traffic Engineer

DATE 5/21/19 PLATE NO. R3-8.1

PROJECT NO:

SHEET NO: 361 E

NOTES

1. Sign is Type II - Type H Reflective
2. Color:
   Background - White
   Message - Black
3. Message Series - D

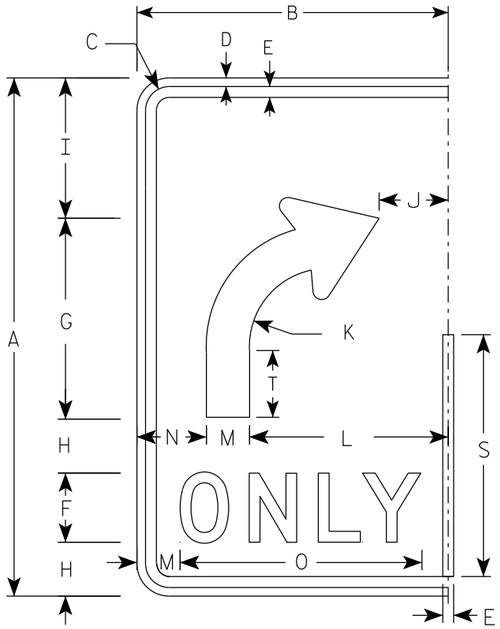

(R)

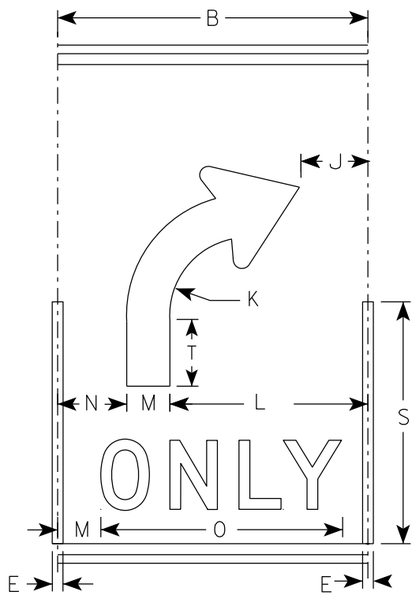

(R)

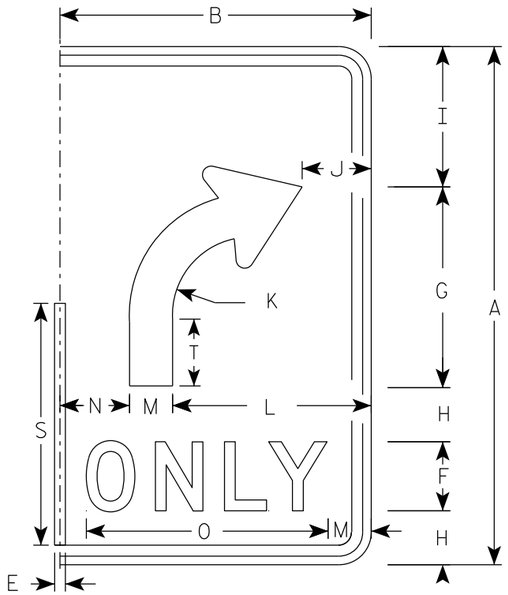

(R)

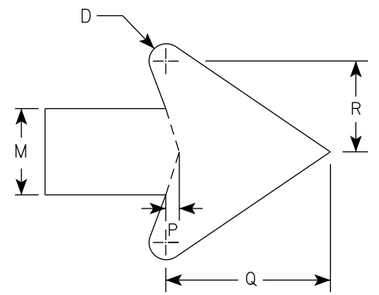

ARROW DETAIL

SIZE	A	B	C	D	E	F	G	H	I	J	K	L	M	N	O	P	Q	R	S	T	U	V	W	X	Y	Z	Area sq. ft.
1																											
2S	30	18	1 3/8	1/2	5/8	4	11 5/8	3 1/8	8 1/8	4	4 1/2	11 1/2	2 1/2	4	14	3/8	4 3/4	2 5/8	14	3 7/8							3.75
2M	30	18	1 3/8	1/2	5/8	4	11 5/8	3 1/8	8 1/8	4	4 1/2	11 1/2	2 1/2	4	14	3/8	4 3/4	2 5/8	14	3 7/8							3.75
3	36	24	1 3/8	1/2	5/8	5	14	3 1/2	9 3/4	6	5 3/8	15	3	6	17 5/8	1/2	5 3/4	3 1/8	16 3/4	4 5/8							6.0
4	48	30	2 1/4	3/4	1	6	18 5/8	5 1/8	13 1/8	6 1/8	7 1/4	18	4	8	21 3/4	5/8	7 5/8	4 1/4	22 3/8	6 1/4							10.0
5	48	30	2 1/4	3/4	1	6	18 5/8	5 1/8	13 1/8	6 1/8	7 1/4	18	4	8	21 3/4	5/8	7 5/8	4 1/4	22 3/8	6 1/4							10.0

STANDARD SIGN
R3-8 (R) Arrow

WISCONSIN DEPT OF TRANSPORTATION

APPROVED Matthew R Rauch
for State Traffic Engineer

DATE 5/21/19 PLATE NO. R3-8.1

PROJECT NO:

SHEET NO: 362 **E**

NOTES

1. Sign is Type II - Type H Reflective
2. Color:
   Background - White
   Message - Black
3. Message Series - None

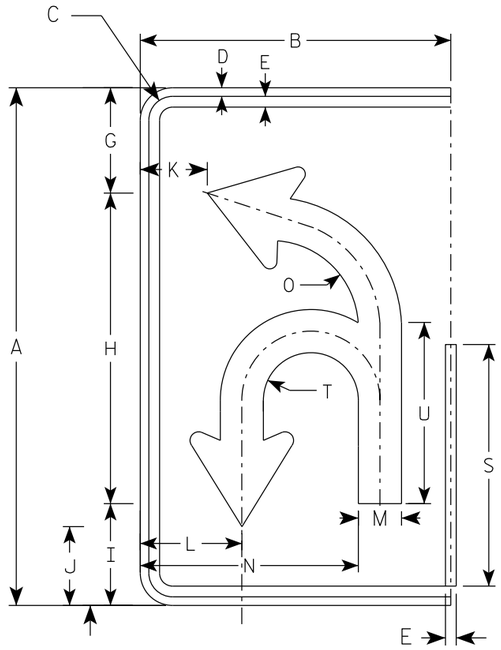

(U)

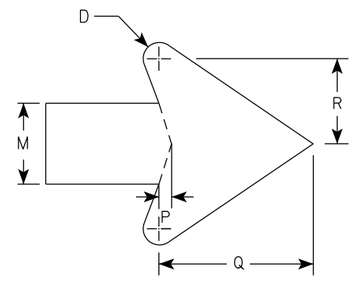

ARROW DETAIL

SIZE	A	B	C	D	E	F	G	H	I	J	K	L	M	N	O	P	Q	R	S	T	U	V	W	X	Y	Z	Area sq. ft.
1																											
2S	30	18	1 3/8	1/2	5/8		6 1/8	18	5 7/8	4 5/8	3 7/8	5 7/8	2 1/2	12 5/8	5 1/8	3/8	4 3/4	2 5/8	14	2 3/4	10 1/2						3.75
2M	30	18	1 3/8	1/2	5/8		6 1/8	18	5 7/8	4 5/8	3 7/8	5 7/8	2 1/2	12 5/8	5 1/8	3/8	4 3/4	2 5/8	14	2 3/4	10 1/2						3.75
3	36	24	1 3/8	1/2	5/8		21 7/8	21 5/8	7 1/8	5 1/2	5 7/8	8 1/4	3	16 3/8	6 1/8	1/2	5 3/4	3 1/8	16 3/4	3 1/4	12 5/8						6.0
4	48	30	2 1/4	3/4	1		29 1/8	28 3/4	9 3/8	7 1/4	6 7/8	10	4	20 7/8	8 1/8	5/8	7 5/8	4 1/4	22 3/8	4 3/8	16 3/4						10.0
5	48	30	2 1/4	3/4	1		29 1/8	28 3/4	9 3/8	7 1/4	6 7/8	10	4	20 7/8	8 1/8	5/8	7 5/8	4 1/4	22 3/8	4 3/8	16 3/4						10.0

STANDARD SIGN
R3-8 (U) Arrow

WISCONSIN DEPT OF TRANSPORTATION

APPROVED Matthew R Rauch
for State Traffic Engineer

DATE 5/21/19 PLATE NO. R3-8.1

PROJECT NO: | HWY: | COUNTY: | SHEET NO: 363 | E

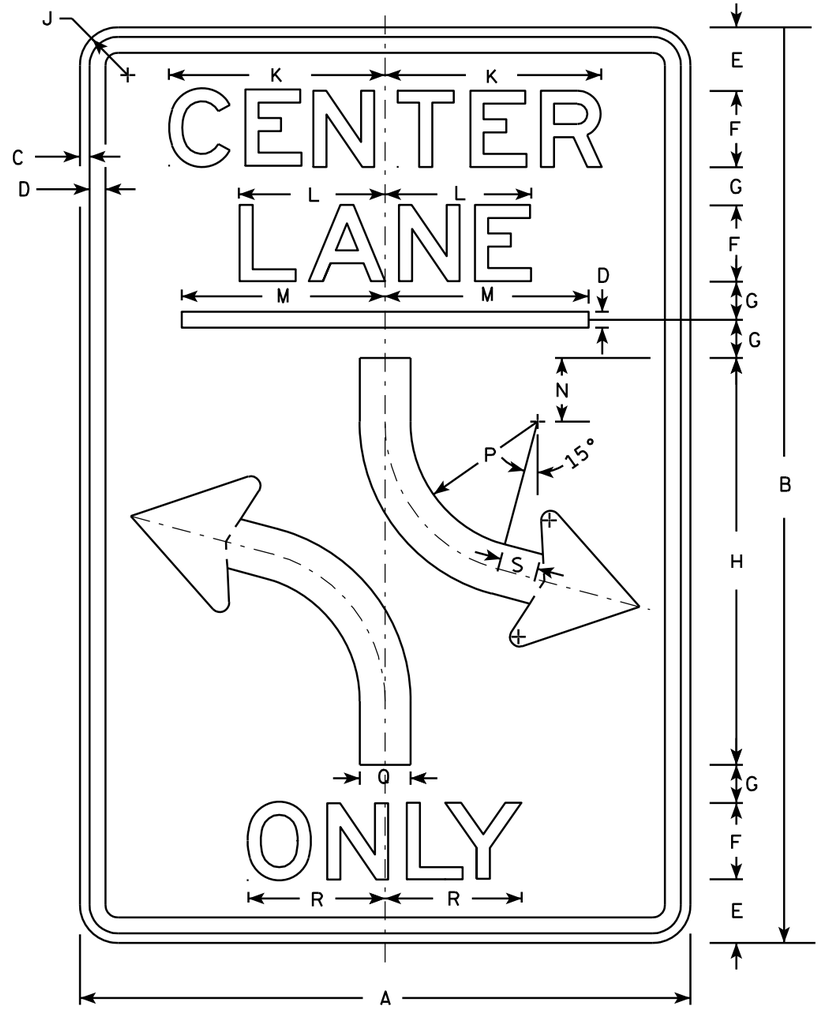

R3-9B

NOTES

1. Sign is Type II - Type H Reflective - reference WIS DOT Standard Specification for HIGHWAY and STRUCTURE CONSTRUCTION latest edition.
2. Color:
   Background - White
   Message - Black
3. Message Series - E
4. Corners may be square or rounded when base material is plywood but borders shall be rounded as shown. When base material is metal, the corners and borders shall be rounded.

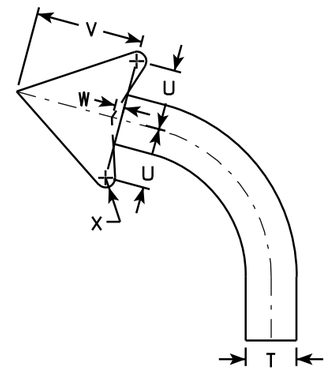

ARROW DETAIL

SIZE	A	B	C	D	E	F	G	H	I	J	K	L	M	N	O	P	Q	R	S	T	U	V	W	X	Y	Z	Area sq. ft.
1																											
2S	24	36	3/8	1/2	2 1/2	3	1 1/2	16		1 1/2	8 1/2	5 3/4	8	2 1/2		6	2	5 1/8	1 1/2		2 3/8	4 3/8	3/8				6.0
2M	24	36	3/8	1/2	2 1/2	3	1 1/2	16		1 1/2	8 1/2	5 3/4	8	2 1/2		6	2	5 1/8	1 1/2		2 3/8	4 3/8	3/8				6.0
3	36	48	5/8	7/8	3 1/2	5	1 1/2	20		2 1/4	14 1/8	9 1/2	12	3		4	3	9 7/8	2		3 1/2	6 1/8	1/2				12.0
4																											
5																											

STANDARD SIGN
R3-9B

WISCONSIN DEPT OF TRANSPORTATION

APPROVED Matthew R Rauch
for State Traffic Engineer

DATE 3/24/2011 PLATE NO. R3-9B.5

PROJECT NO: | HWY: | COUNTY: | SHEET NO: 364 | E

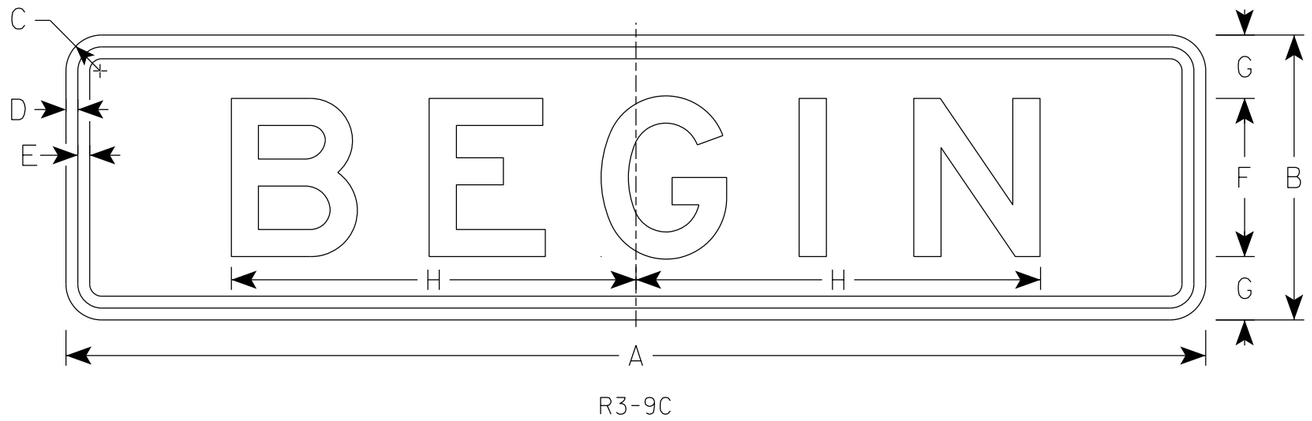

R3-9C

NOTES

1. Sign is Type II - Type H Reflective
2. Color:
   Background - White
   Message - Black
3. Message Series - E

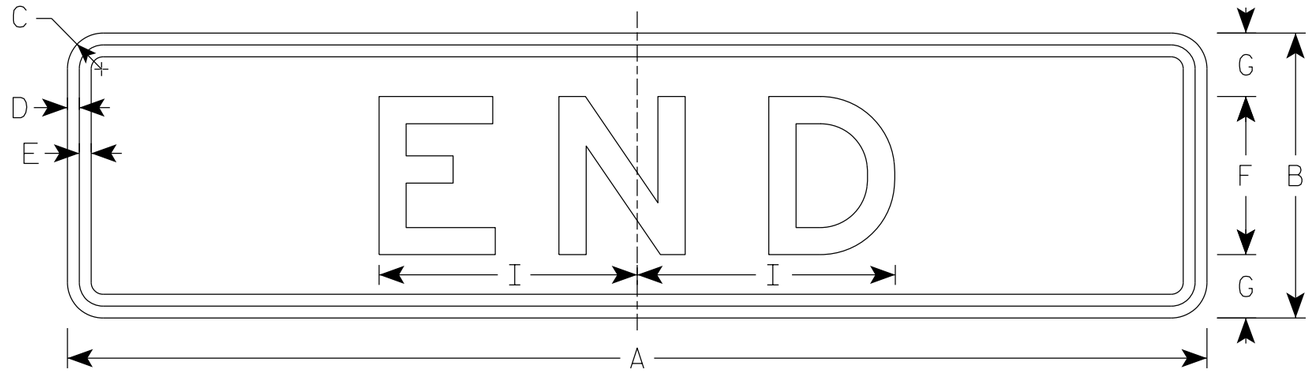

R3-9D

SIZE	A	B	C	D	E	F	G	H	I	J	K	L	M	N	O	P	Q	R	S	T	U	V	W	X	Y	Z	Area sq. ft.
1																											
2S	24	6	1 1/8	3/8	3/8	3	1 1/2	7 3/4	4 7/8																		1.0
2M	24	6	1 1/8	3/8	3/8	3	1 1/2	7 3/4	4 7/8																		1.0
3	36	9	1 1/8	3/8	3/8	5	2	12 3/4	8 1/8																		2.25
4																											
5																											

STANDARD SIGN
R3-9C & R3-9D

WISCONSIN DEPT OF TRANSPORTATION

APPROVED Matthew R Rauch
for State Traffic Engineer

DATE 3/31/2021 PLATE NO. R3-9C.3

PROJECT NO:	HWY:	COUNTY:		SHEET NO:	E

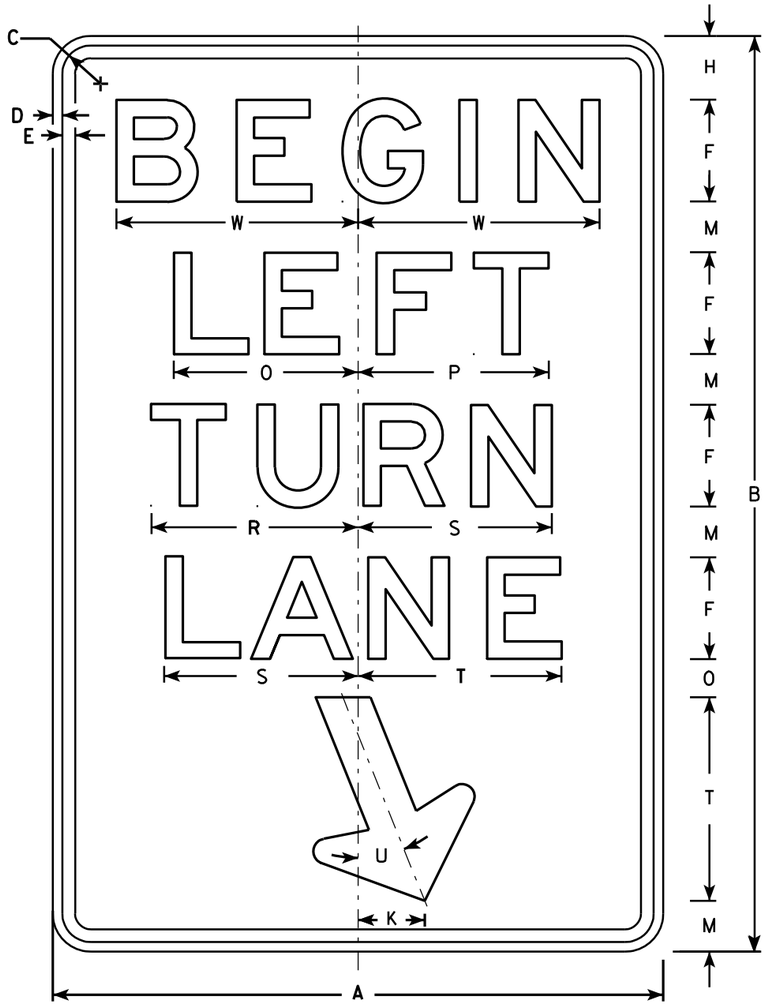

R3-20L

NOTES

1. Sign is Type II - Type H Reflective - reference WIS DOT Standard Specification for HIGHWAY and STRUCTURE CONSTRUCTION latest edition.
2. Color:
   Background - White
   Message - Black
3. Message Series - E
4. Corners may be square or rounded when base material is plywood but borders shall be rounded as shown. When base material is metal, the corners and borders shall be rounded.

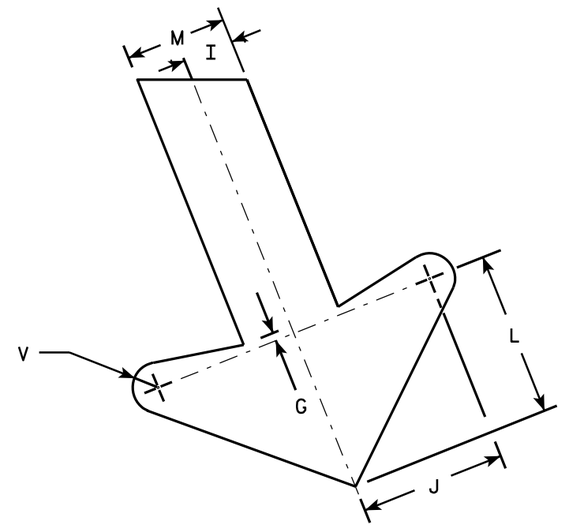

ARROW DETAIL

SIZE	A	B	C	D	E	F	G	H	I	J	K	L	M	N	O	P	Q	R	S	T	U	V	W	X	Y	Z	Area sq. ft.
1																											
2S	24	36	1 1/8	3/8	1/2	4	1/4	2 1/2	1	2 7/8	2 5/8	3 1/4	2	1 1/2	7 1/4	7 1/2		8 1/8	7 5/8	8	22°	1/2	9 1/2				6.0
2M	24	36	1 1/8	3/8	1/2	4	1/4	2 1/2	1	2 7/8	2 5/8	3 1/4	2	1 1/2	7 1/4	7 1/2		8 1/8	7 5/8	8	22°	1/2	9 1/2				6.0
3	36	54	1 3/4	1/2	5/8	6	3/8	3 3/4	1 1/2	4 1/4	4	4 7/8	3	2 1/4	10 7/8	11 1/4		12 1/4	11 1/2	12	22°	3/4	13 1/4				13.5
4																											
5																											

STANDARD SIGN
R3-20L

WISCONSIN DEPT OF TRANSPORTATION

APPROVED Matthew R Rauch
for State Traffic Engineer

DATE 10/18/10 PLATE NO. R3-20L.7

PROJECT NO:	HWY:	COUNTY:		SHEET NO: 366	E

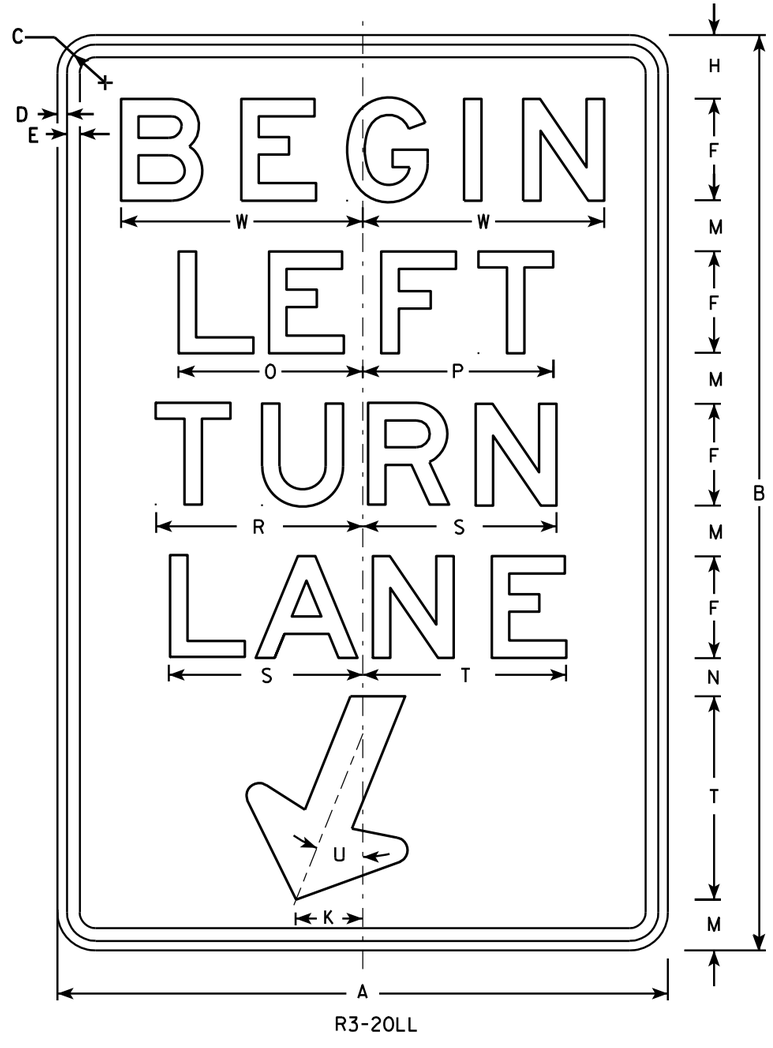

R3-20LL

NOTES

1. Sign is Type II - Type H Reflective - reference WIS DOT Standard Specification for HIGHWAY and STRUCTURE CONSTRUCTION latest edition.
2. Color:
   Background - White
   Message - Black
3. Message Series - E
4. Corners may be square or rounded when base material is plywood but borders shall be rounded as shown. When base material is metal, the corners and borders shall be rounded.

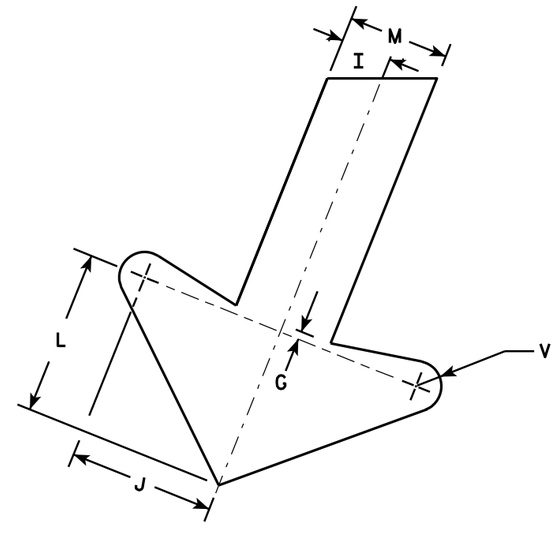

ARROW DETAIL

SIZE	A	B	C	D	E	F	G	H	I	J	K	L	M	N	O	P	Q	R	S	T	U	V	W	X	Y	Z	Area sq. ft.
1																											
2S	24	36	1 1/8	3/8	1/2	4	1/4	2 1/2	1	2 7/8	2 5/8	3 1/4	2	1 1/2	7 1/4	7 1/2		8 1/8	7 5/8	8	22°	1/2	9 1/2				6.0
2M	24	36	1 1/8	3/8	1/2	4	1/4	2 1/2	1	2 7/8	2 5/8	3 1/4	2	1 1/2	7 1/4	7 1/2		8 1/8	7 5/8	8	22°	1/2	9 1/2				6.0
3	36	54	1 3/4	1/2	5/8	6	3/8	3 3/4	1 1/2	4 1/4	4	4 7/8	3	2 1/4	10 7/8	11 1/4		12 1/4	11 1/2	12	22°	3/4	13 1/4				13.5
4																											
5																											

STANDARD SIGN
R3-20LL

WISCONSIN DEPT OF TRANSPORTATION

APPROVED Matthew R Rauch
for State Traffic Engineer

DATE 10/18/10 PLATE NO. R3-20LL.1

PROJECT NO: | HWY: | COUNTY: | SHEET NO: 367 | E

FILE NAME : C:\Users\PROJECTS\tr_stdplate\R320LL.DGN PLOT DATE : 15-OCT-2010 14:38 PLOT BY : dotsja PLOT NAME : PLOT SCALE : 5.959043:1.000000

WISDOT/CADDS SHEET 42

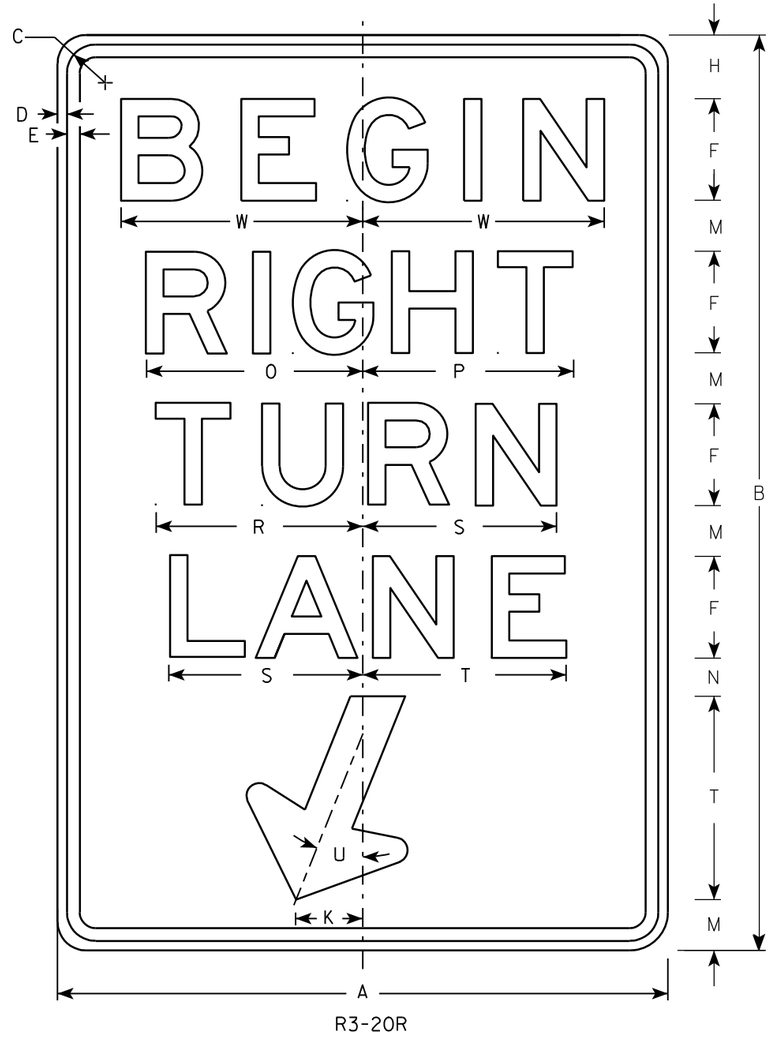

R3-20R

NOTES

1. Sign is Type II - Type H Reflective - reference WIS DOT Standard Specification for HIGHWAY and STRUCTURE CONSTRUCTION latest edition.
2. Color:
   Background - White
   Message - Black
3. Message Series - E
4. Corners may be square or rounded when base material is plywood but borders shall be rounded as shown. When base material is metal, the corners and borders shall be rounded.

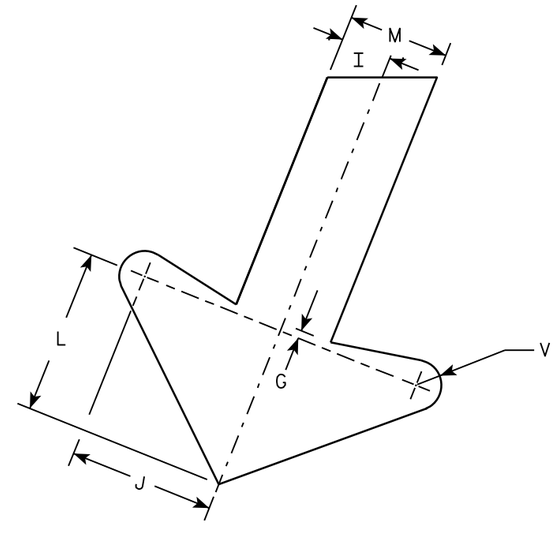

ARROW DETAIL

SIZE	A	B	C	D	E	F	G	H	I	J	K	L	M	N	O	P	Q	R	S	T	U	V	W	X	Y	Z	Area sq. ft.
1																											
2S	24	36	1 1/8	3/8	1/2	4	1/4	2 1/2	1	2 7/8	2 5/8	3 1/4	2	1 1/2	8 1/2	8 1/4		8 1/8	7 5/8	8	22°	1/2	9 1/2				6.0
2M	24	36	1 1/8	3/8	1/2	4	1/4	2 1/2	1	2 7/8	2 5/8	3 1/4	2	1 1/2	8 1/2	8 1/4		8 1/8	7 5/8	8	22°	1/2	9 1/2				6.0
3	36	54	1 3/4	1/2	5/8	6	3/8	3 3/4	1 1/2	4 1/4	4	4 7/8	3	2 1/4	12 3/4	12 1/2		12 1/4	11 1/2	12	22°	3/4	13 1/4				13.5
4																											
5																											

STANDARD SIGN
R3-20R

WISCONSIN DEPT OF TRANSPORTATION

APPROVED Matthew R Rauch
for State Traffic Engineer

DATE 10/18/10 PLATE NO. R3-20R.6

PROJECT NO: | HWY: | COUNTY: | SHEET NO: 368 | E

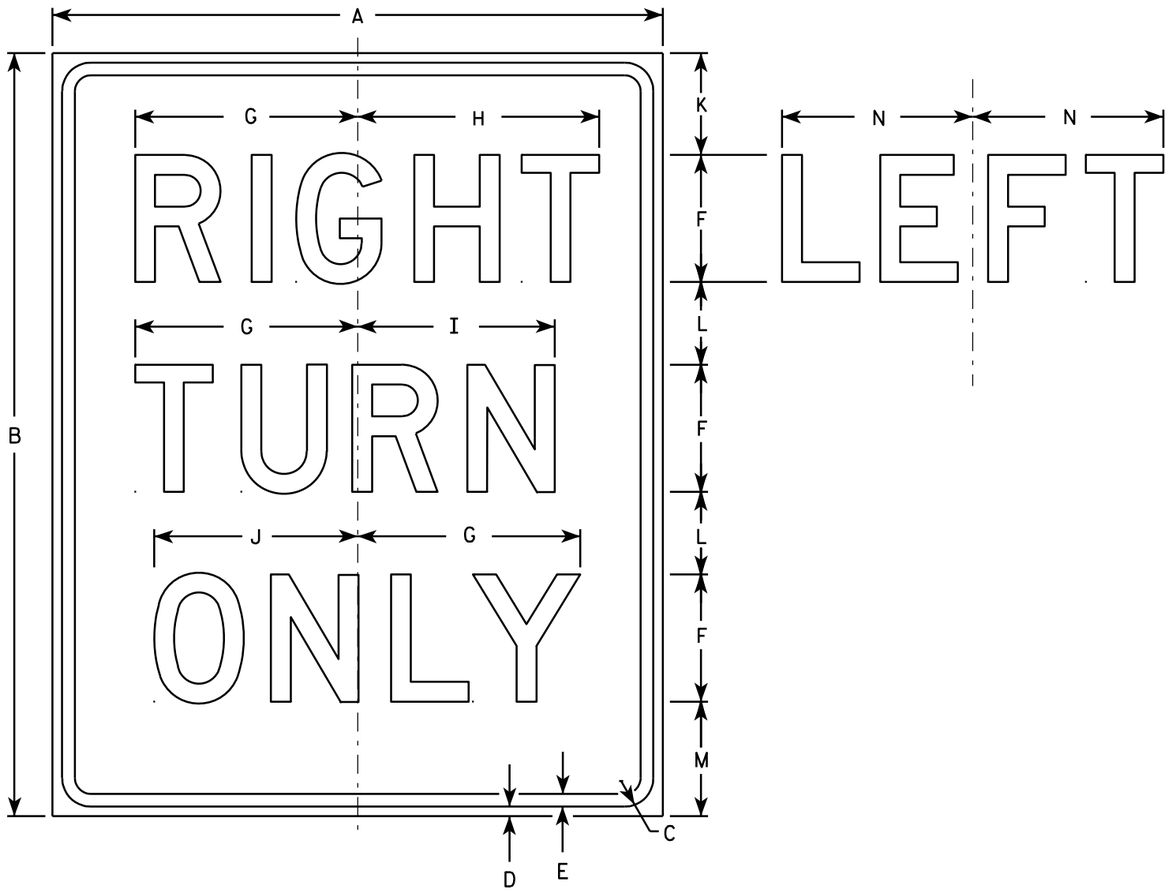

R3-53R

NOTES

1. Sign is Type II - Type H Reflective - reference WIS DOT Standard Specification for HIGHWAY and STRUCTURE CONSTRUCTION latest edition.
2. Color:
   Background - White
   Message - Black
3. Message Series - D
4. Corners may be square or rounded when base material is plywood but borders shall be rounded as shown. When base material is metal, the corners and borders shall be rounded.
5. R3-53L same as R3-53R except LEFT is substituted for RIGHT.

SIZE	A	B	C	D	E	F	G	H	I	J	K	L	M	N	O	P	Q	R	S	T	U	V	W	X	Y	Z	Area sq. ft.
1																											
2S	24	30	1 1/8	3/8	1/2	5	8 3/4	9 1/2	7 3/4	8	4	3 1/4	4 1/2	7 1/2													5.0
2M	24	30	1 1/8	3/8	1/2	5	8 3/4	9 1/2	7 3/4	8	4	3 1/4	4 1/2	7 1/2													5.0
3	24	30	1 1/8	3/8	1/2	5	8 3/4	9 1/2	7 3/4	8	4	3 1/4	4 1/2	7 1/2													5.0
4																											
5																											

STANDARD SIGN
R3-53

WISCONSIN DEPT OF TRANSPORTATION

APPROVED Matthew R Rauch
for State Traffic Engineer

DATE 3/24/2011 PLATE NO. R3-53.8

PROJECT NO:	HWY:	COUNTY:		SHEET NO: 369	E

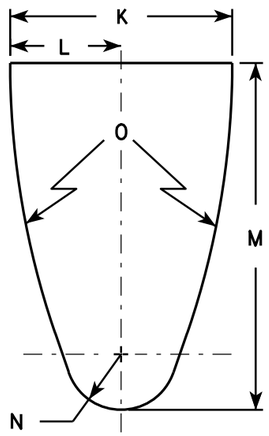

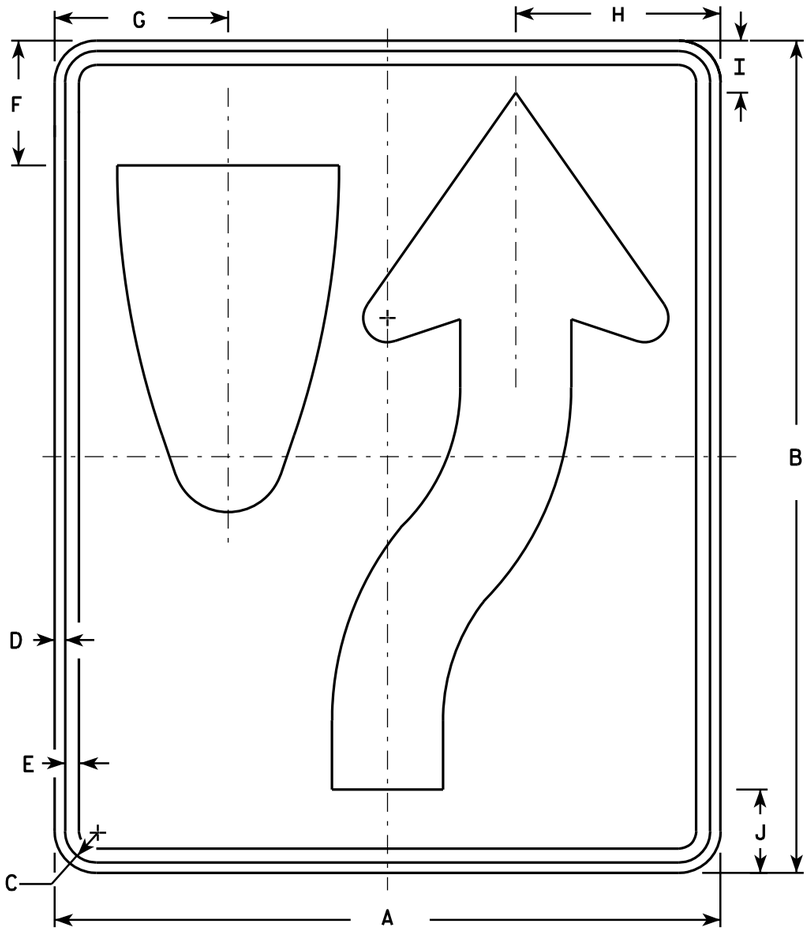

R4-7

NOTES

1. Sign is Type II - Type H Reflective - reference WIS DOT Standard Specification for HIGHWAY and STRUCTURE CONSTRUCTION latest edition. material is plywood but borders shall be rounded
2. Color:
   Background - White
   Message - Black
3. Corners may be square or rounded when base as shown. When base material is metal, the corners and borders shall be rounded.
4. R4-8 is the same as R4-7 except Legend is reversed.

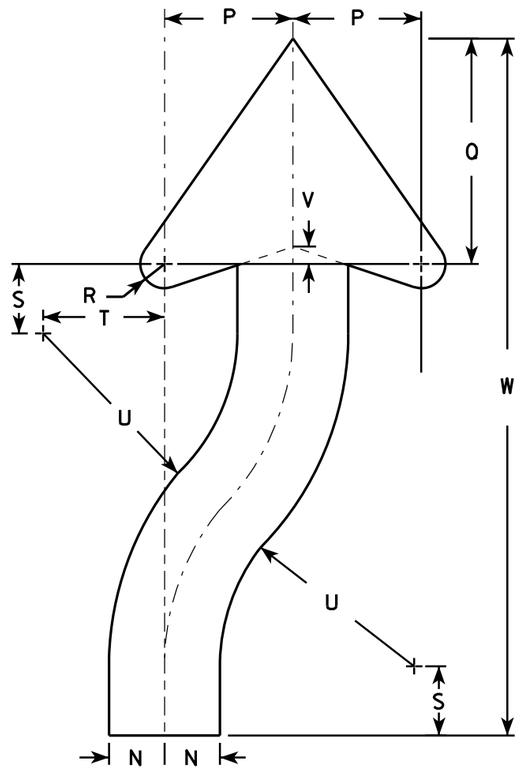

ARROW DETAIL

SIZE	A	B	C	D	E	F	G	H	I	J	K	L	M	N	O	P	Q	R	S	T	U	V	W	X	Y	Z	Area sq. ft.
1	18	24	1 1/8	3/8	1/2	3 3/8	4 3/4	5 1/2	1 3/8	2 1/4	6	3	9 3/8	1 1/2	22 1/2	3 1/2	6 1/8	5/8	1 7/8	3 1/4	6 3/4	1/2	20 3/8				3.0
2S	24	30	1 1/8	3/8	1/2	4 1/2	6 1/4	7 3/8	1 7/8	3	8	4	12 1/2	2	30	4 5/8	8 1/8	7/8	2 1/2	4 3/8	9	5/8	25 1/8				5.0
2M	24	30	1 1/8	3/8	1/2	4 1/2	6 1/4	7 3/8	1 7/8	3	8	4	12 1/2	2	30	4 5/8	8 1/8	7/8	2 1/2	4 3/8	9	5/8	25 1/8				5.0
3	36	48	1 3/4	1/2	5/8	6 3/4	9 3/8	11 1/8	2 7/8	4 1/2	12	6	18 3/4	3	45	6 7/8	12 1/4	1 1/4	3 3/4	6 5/8	13 1/2	1	40 3/4				12.0
4	36	48	1 3/4	1/2	5/8	6 3/4	9 3/8	11 1/8	2 7/8	4 1/2	12	6	18 3/4	3	45	6 7/8	12 1/4	1 1/4	3 3/4	6 5/8	13 1/2	1	40 3/4				12.0
5	48	60	2 1/4	3/4	1	9	12 1/2	14 3/4	3 3/4	6	16	8	25	4	60	9 1/4	16 1/4	1 5/8	5	8 3/4	18	1 1/4	50 1/4				20.0

STANDARD SIGN
R4-7 & R4-8

WISCONSIN DEPT OF TRANSPORTATION

APPROVED Matthew R Rauch for State Traffic Engineer

DATE 3/25/2011 PLATE NO. R4-7.8

PROJECT NO:	HWY:	COUNTY:		SHEET NO: 370	E

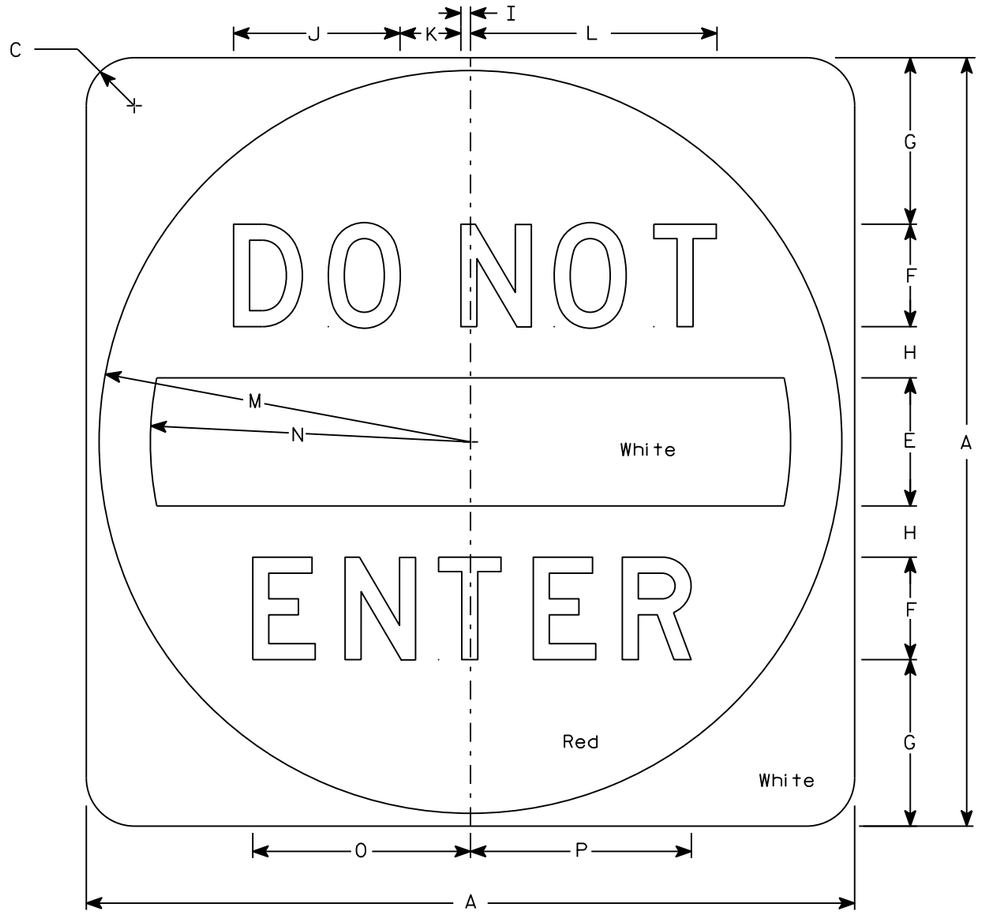

R5-1

NOTES

1. Sign is Type II - Type H Reflective
2. Color:
   Background - See detail
   Message - White
3. Message Series - D

SIZE	A	B	C	D	E	F	G	H	I	J	K	L	M	N	O	P	Q	R	S	T	U	V	W	X	Y	Z	Area sq. ft.
1																											
2S	30		1 7/8		5	4	6 1/2	2	3/8	6 1/2	2 3/8	9 5/8	14 1/2	12 1/2	8 1/2	8 5/8											6.25
2M	36		2 1/4		6	5	7 1/2	2 1/2	1/2	8 1/8	3	12 1/8	17 1/2	15	10 5/8	10 3/4											9.0
3	36		2 1/4		6	5	7 1/2	2 1/2	1/2	8 1/8	3	12 1/8	17 1/2	15	10 5/8	10 3/4											9.0
4	36		2 1/4		6	5	7 1/2	2 1/2	1/2	8 1/8	3	12 1/8	17 1/2	15	10 5/8	10 3/4											9.0
5	48		3		8	6	11	3	5/8	9 3/4	3 5/8	14 1/2	23 1/2	20	12 3/4	12 7/8											16.0

STANDARD SIGN
R5-1

WISCONSIN DEPT OF TRANSPORTATION

APPROVED Matthew R Rauch
for State Traffic Engineer

DATE 3/15/18 PLATE NO. R5-1.16

PROJECT NO: | HWY: | COUNTY: | SHEET NO: 371 | E

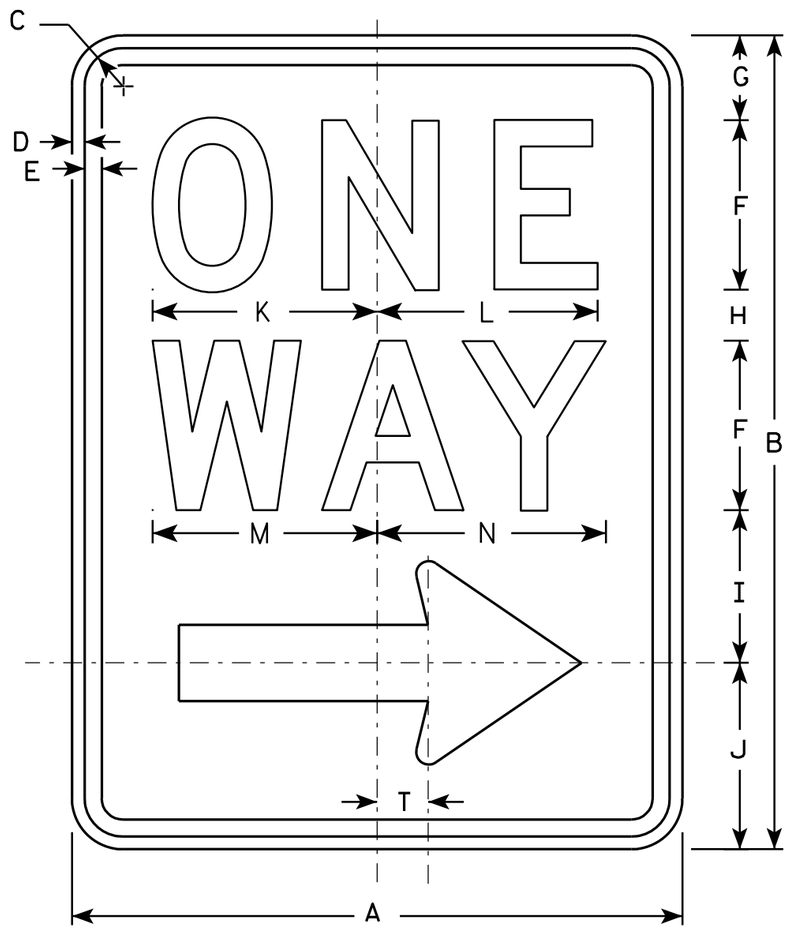

R6-2R

NOTES

1. Sign is Type II - Type H Reflective - reference WIS DOT Standard Specification for HIGHWAY and STRUCTURE CONSTRUCTION latest edition.
2. Color:
   Background - White
   Message - Black
3. Message Series - D
4. Corners may be square or rounded when base material is plywood but borders shall be rounded as shown. When base material is metal, the corners and borders shall be rounded.
5. R6-2L same as R6-2R except arrow points to the left.

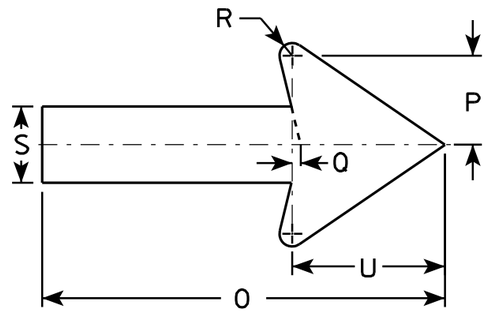

SIZE	A	B	C	D	E	F	G	H	I	J	K	L	M	N	O	P	Q	R	S	T	U	V	W	X	Y	Z
1	18	24	1 1/8	3/8	1/2	5	2 1/2	1 1/2	4 1/2	5 1/2	6 5/8	6 1/2	6 5/8	6 3/4	11 7/8	2 5/8	1/4	3/8	2 1/4	1 1/2	4 1/2					
2S	24	30	1 1/8	3/8	1/2	6	3	2 1/2	5 1/2	7	8 1/8	8 1/8	8 1/2	8 5/8	16	3 1/2	3/8	1/2	3	2	6					
2M	30	36	1 3/8	1/2	5/8	8	2 1/2	2 5/8	6 7/8	8	10 1/2	10 1/2	11 1/4	11 1/4	20	4 3/8	1/2	5/8	3 3/4	2 1/2	7 1/2					
3	36	48	1 7/8	1/2	5/8	10	5 1/4	3 1/4	9	10 1/2	12 3/4	12 3/4	13 1/4	13 1/2	24	5 5/8	1/2	3/4	4 3/4	3	9					
4	36	48	1 7/8	1/2	5/8	10	5 1/4	3 1/4	9	10 1/2	12 3/4	12 3/4	13 1/4	13 1/2	24	5 5/8	1/2	3/4	4 3/4	3	9					
5																										

STANDARD SIGN
R6-2 R&L

WISCONSIN DEPT OF TRANSPORTATION

APPROVED Matthew R Rauch
for State Traffic Engineer

DATE 11/2/10 PLATE NO. R6-2.8

PROJECT NO: | HWY: | COUNTY: | SHEET NO: 372 | E

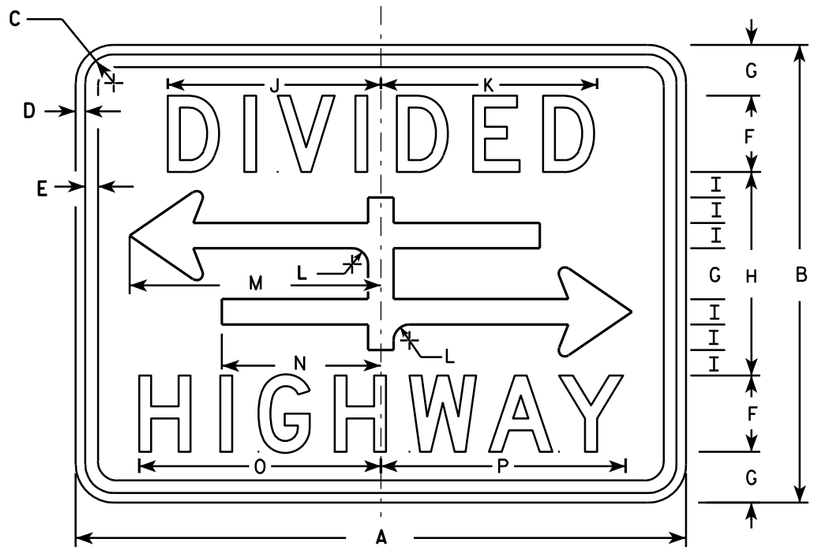

R6-3

NOTES

1. Sign is Type II - Type H Reflective - reference WIS DOT Standard Specification for HIGHWAY and STRUCTURE CONSTRUCTION latest edition.
2. Color:
   Background - White
   Message - Black
3. Message Series - D
4. Corners may be square or rounded when base material is plywood but borders shall be rounded as shown. When base material is metal, the corners and borders shall be rounded.

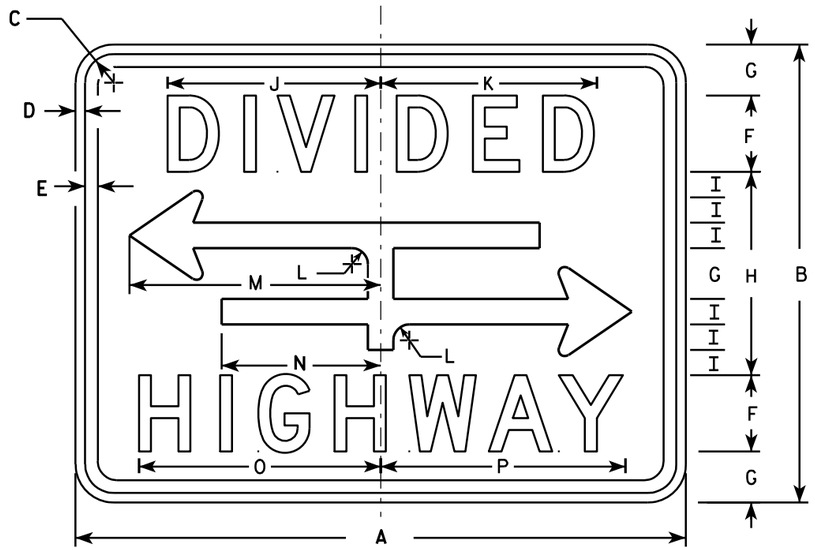

R6-3A

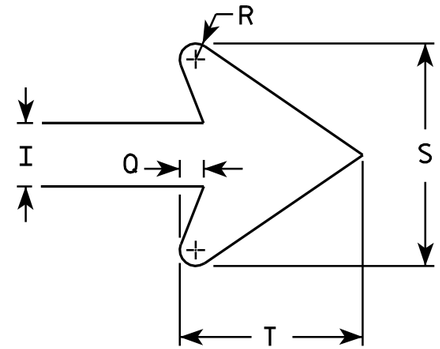

ARROW DETAIL

SIZE	A	B	C	D	E	F	G	H	I	J	K	L	M	N	O	P	Q	R	S	T	U	V	W	X	Y	Z	Area sq. ft.
1	24	18	1 1/8	3/8	3/8	3	2	8	1	8 3/8	8 1/2	5/8	9 7/8	6 1/4	9 1/2	9 5/8	3/8	1/4	3 1/2	2 3/4							3.0
2S	30	24	1 1/8	3/8	1/2	4	2 5/8	10 3/4	1 3/8	10 1/2	10 5/8	7/8	12 1/2	7 7/8	12 1/4	12 3/8	1/2	3/8	4 5/8	3 5/8							5.0
2M	30	24	1 1/8	3/8	1/2	4	2 5/8	10 3/4	1 3/8	10 1/2	10 5/8	7/8	12 1/2	7 7/8	12 1/4	12 3/8	1/2	3/8	4 5/8	3 5/8							5.0
3																											
4																											
5																											

STANDARD SIGN
R6-3 & R6-3A

WISCONSIN DEPT OF TRANSPORTATION

APPROVED Matthew R Rauch
for State Traffic Engineer

DATE 3/31/2011 PLATE NO. R6-3.5

PROJECT NO:

SHEET NO: 373 E

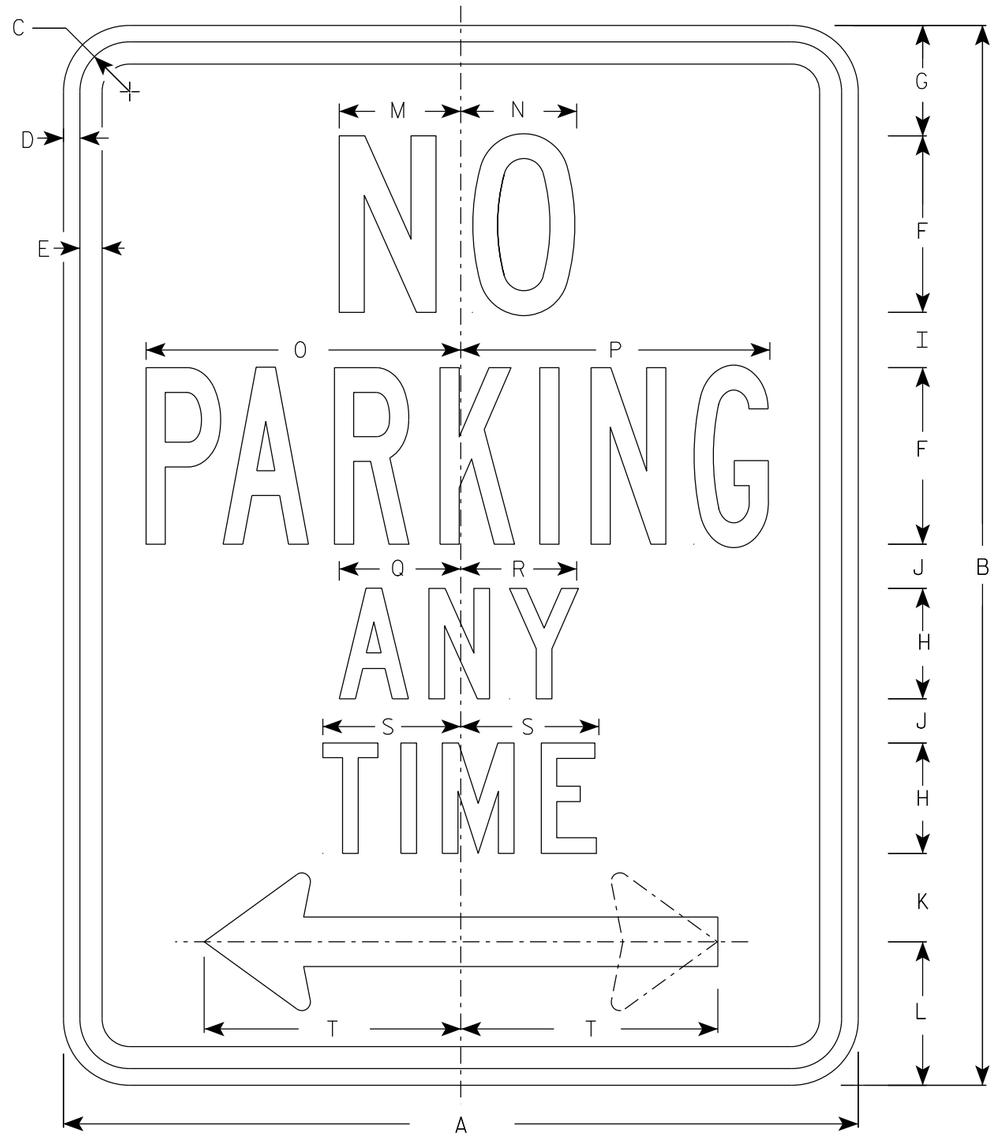

R7-1

NOTES

1. Sign is Type II - Type H Reflective
2. Color:
   Background - White
   Message - Red
3. Message Series - See Note 5
4. Lines 1, 3 and 4 are series C, line 2 is series B.
5. R7-1D (double arrow)
   R7-1L (left arrow)
   R7-1R (right arrow)

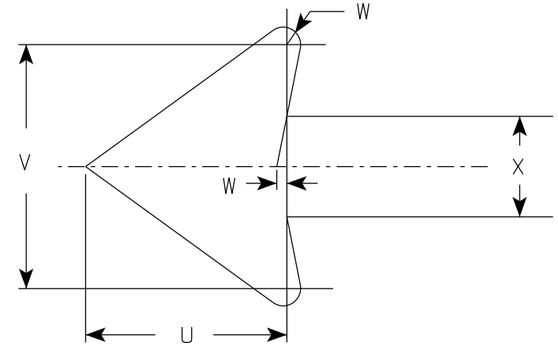

SIZE	A	B	C	D	E	F	G	H	I	J	K	L	M	N	O	P	Q	R	S	T	U	V	W	X	Y	Z	Area sq. ft.
1	12	18	1 1/8	3/8	3/8	3	1 7/8	2	7/8	5/8	1 1/2	2 1/2	2	2	4 7/8	4 7/8	2 1/4	2 1/8	2 1/2	3 7/8	1 1/2	1 3/4	1/8	3/4			1.5
2S	18	24	1 1/8	3/8	1/2	4	2 1/2	2 1/2	1 1/4	1	2	3 1/4	2 3/4	2 5/8	7 1/8	7	2 3/4	2 5/8	3 1/8	5 7/8	2 1/4	2 5/8	1/4	1 1/8			3.0
2M	24	30	1 1/8	3/8	1/2	5	3	3	2	1 1/4	2 1/2	4	3 1/4	3 3/8	9 1/4	9 1/4	3 1/4	3 1/4	3 3/4	7 3/4	3	3 1/2	1/4	1 1/2			5.0
3	24	30	1 1/8	3/8	1/2	5	3	3	2	1 1/4	2 1/2	4	3 1/4	3 3/8	9 1/4	9 1/4	3 1/4	3 1/4	3 3/4	7 3/4	3	3 1/2	1/4	1 1/2			5.0
4																											
5																											

STANDARD SIGN
R7-1

WISCONSIN DEPT OF TRANSPORTATION

APPROVED Matthew R Rauch
for State Traffic Engineer

DATE 3/31/2021 PLATE NO. R7-1.10

PROJECT NO: | HWY: | COUNTY: | SHEET NO: 374 E

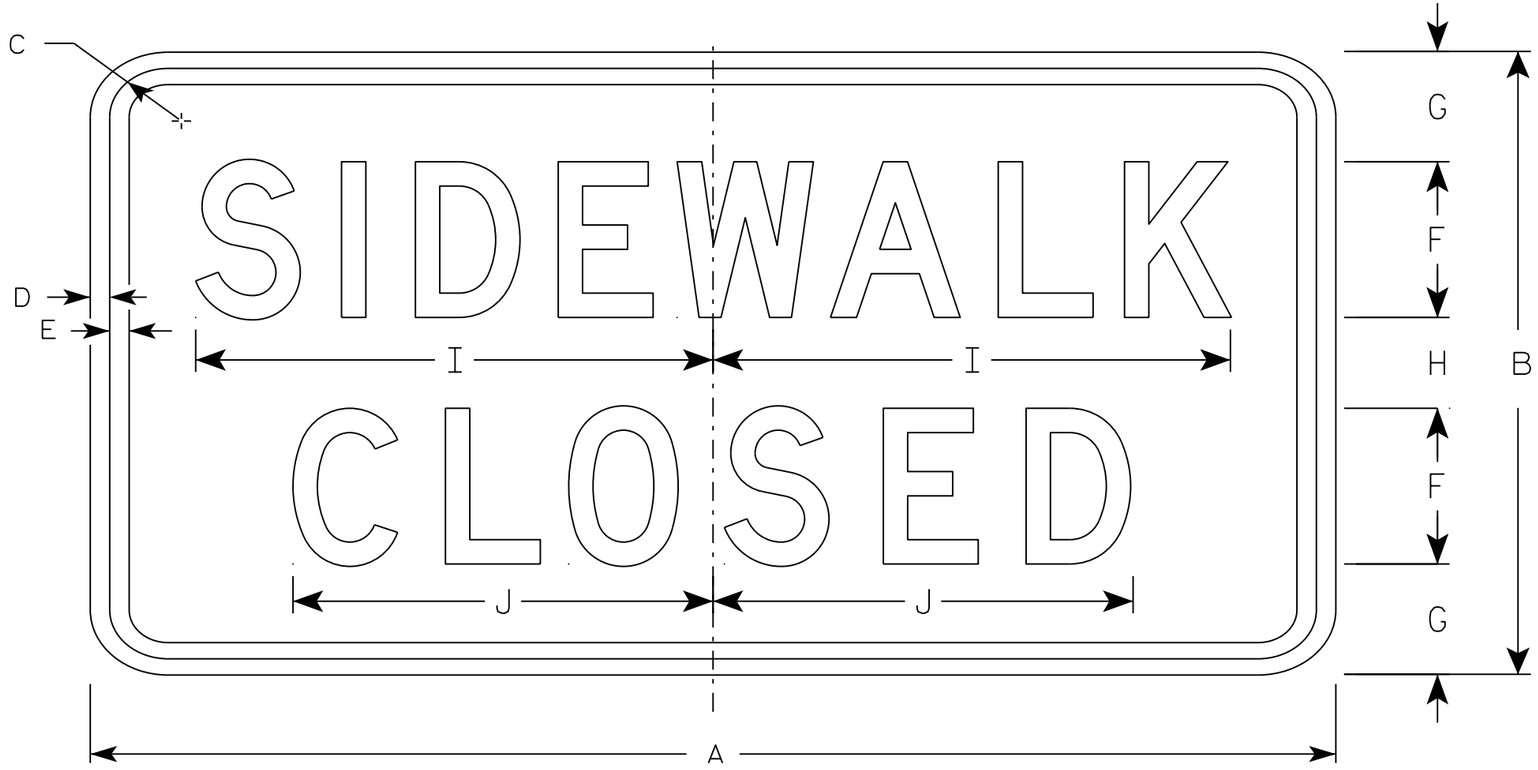

R9-9

NOTES

1. Sign is Type II - Type H Reflective - reference WIS DOT Standard Specification for HIGHWAY and STRUCTURE CONSTRUCTION latest edition.
2. Color:
   Background - White
   Message - Black
3. Message Series - C
4. Corners may be square or rounded when base material is plywood but borders shall be rounded as shown. When base material is metal, the corners and borders shall be rounded.
5. Use Size 2 for Sidewalks. Use Size 3 for Paths and Trails.

SIZE	A	B	C	D	E	F	G	H	I	J	K	L	M	N	O	P	Q	R	S	T	U	V	W	X	Y	Z	Area sq. ft.
1																											
2S	24	12	1 3/4	1/2	1/2	3	2 1/8	1 3/4	10	8 1/8																	2.0
2M	24	12	1 3/4	1/2	1/2	3	2 1/8	1 3/4	10	8 1/8																	2.0
3	30	18	1 3/4	1/2	1/2	4	3 1/2	3	12 1/2	10 1/4																	3.75
4																											
5																											

STANDARD SIGN
R9-9

WISCONSIN DEPT OF TRANSPORTATION

APPROVED Matthew R Rauch
for State Traffic Engineer

DATE 8/11/16 PLATE 375 R9-9.6

PROJECT NO: | HWY: | COUNTY: | SHEET NO: E

FILE NAME : C:\CAEfiles\Projects\tr_stdplate\R99.DGN PLOT DATE : 11-AUG-2016 11:33 PLOT BY : $$ plotuser $$ PLOT NAME : PLOT SCALE : 2.918761:1.000000

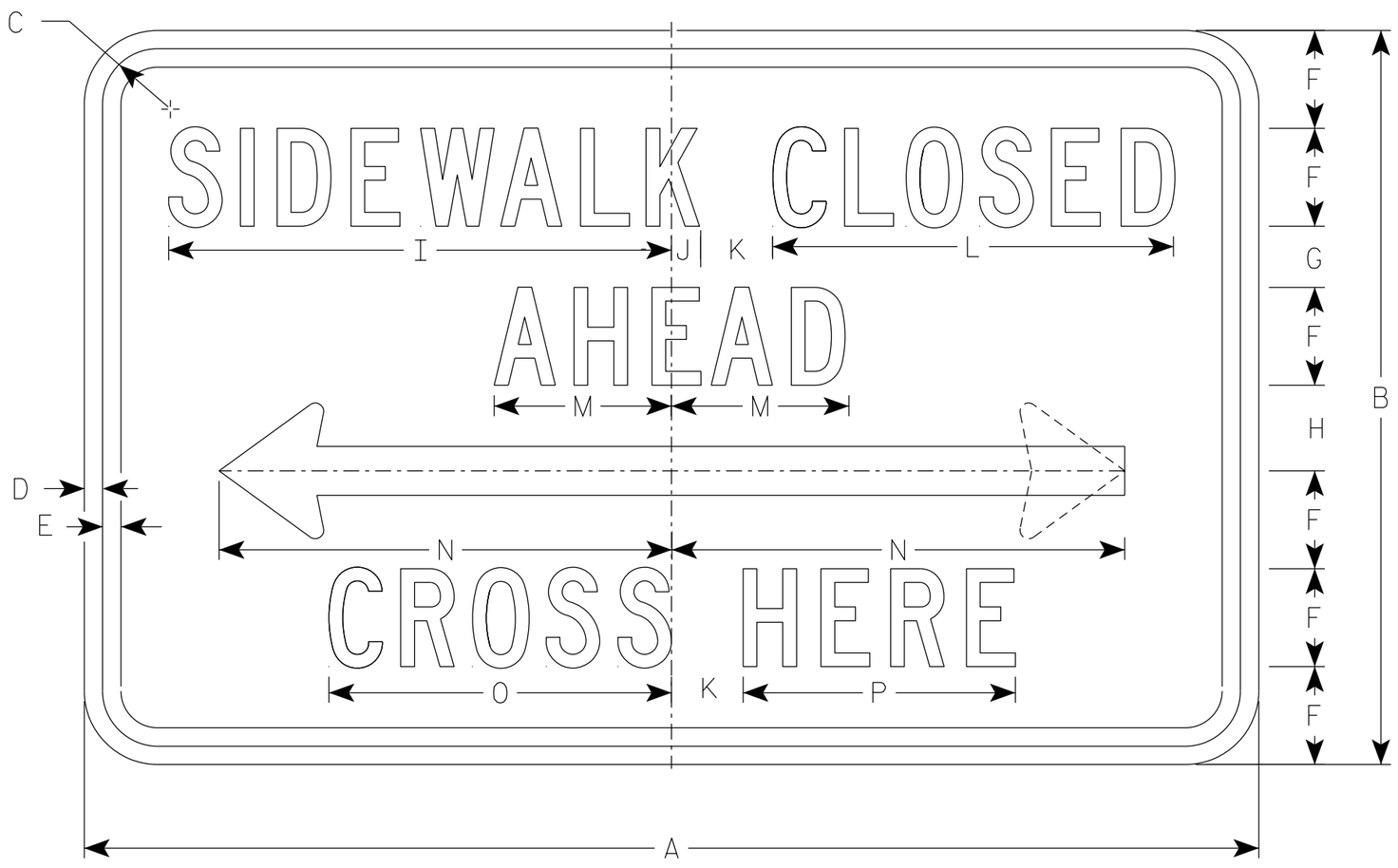

R9-11

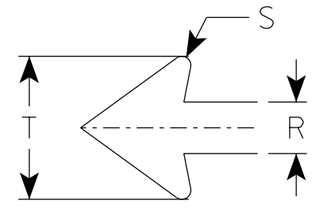

NOTES

1. Sign is Type II - Type H Reflective
2. Color:
   Background - White
   Message - Black
3. Message Series - C except Size 1 is Series D
4. Corners may be square or rounded when base material is plywood but borders shall be rounded as shown. When base material is metal, the corners and borders shall be rounded.
5. Use Size 2 for Sidewalks. Use Size 3 for Paths and Trails.
6. R9-11 D (double arrow)
   R9-11 L (left arrow)
   R9-11 R (right arrow)

SIZE	A	B	C	D	E	F	G	H	I	J	K	L	M	N	O	P	Q	R	S	T	U	V	W	X	Y	Z	Area sq. ft.
1																											
2S	24	12	1 1/8	3/8	3/8	1 1/2	1 1/2	1 1/2	9 3/4	5/8	1 1/2	7 5/8	3 1/2	9 1/4	6 5/8	5 1/8		1	1/8	2 3/4							2.0
2M	24	12	1 1/8	3/8	3/8	1 1/2	1 1/2	1 1/2	9 3/4	5/8	1 1/2	7 5/8	3 1/2	9 1/4	6 5/8	5 1/8		1	1/8	2 3/4							2.0
3	30	15	1 1/8	3/8	1/2	2	1 1/2	1 1/2	13	3/4	2	10 1/4	4 5/8	12 3/8	8 7/8	6 7/8		1 1/4	1/4	3 5/8							3.125
4																											
5																											

STANDARD SIGN
R9-11

WISCONSIN DEPT OF TRANSPORTATION

APPROVED Matthew R Rauch
For State Traffic Engineer

DATE 3/30/2021 PLATE NO. R9-11.4

PROJECT NO: | HWY: | COUNTY: | SHEET NO: 376 | E

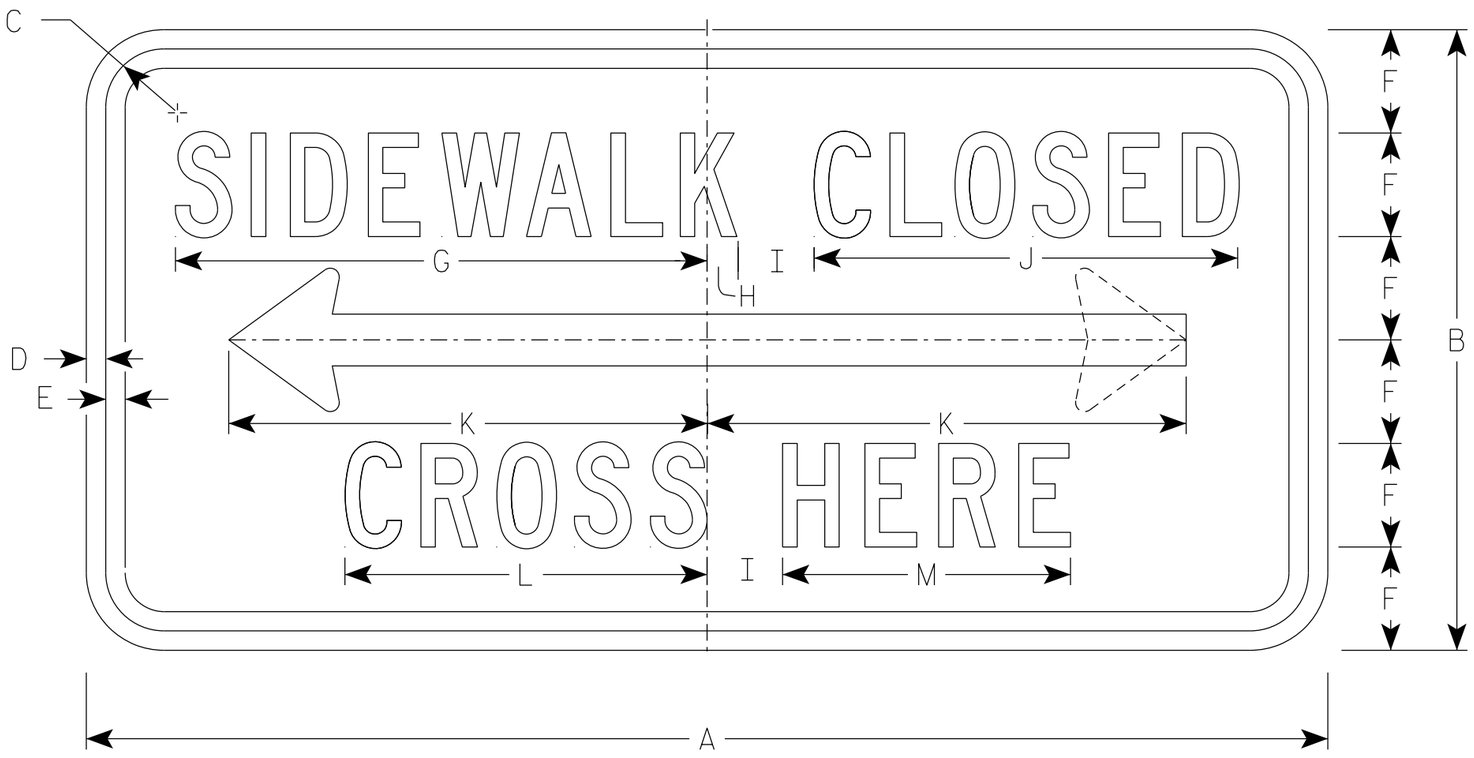

R9-11A

NOTES

1. Sign is Type II - Type H Reflective
2. Color:
   Background - White
   Message - Black
3. Message Series - C
4. Corners may be square or rounded when base material is plywood but borders shall be rounded as shown. When base material is metal, the corners and borders shall be rounded.
5. Use Size 2 for Sidewalks. Use Size 3 for paths and Trails.
6. R9-11AD (double arrow)
   R9-11AL (left arrow)
   R9-11AR (right arrow)

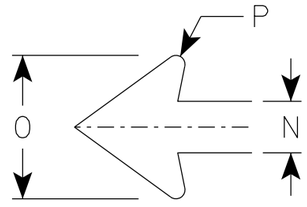

ARROW DETAIL

SIZE	A	B	C	D	E	F	G	H	I	J	K	L	M	N	O	P	Q	R	S	T	U	V	W	X	Y	Z	Area sq. ft.
1																											
2S	24	12	1 1/8	3/8	3/8	2	10 1/4	5/8	1 1/2	8 1/4	9 1/4	7	5 5/8	1	2 3/4	1/8											2.0
2M	24	12	1 1/8	3/8	3/8	2	10 1/4	5/8	1 1/2	8 1/4	9 1/4	7	5 5/8	1	2 3/4	1/8											2.0
3	30	15	1 1/8	3/8	1/2	2 1/2	12 3/4	1/2	2	10 1/4	12 3/8	8 5/8	6 3/4	1 1/4	3 5/8	1/4											3.125
4																											
5																											

STANDARD SIGN
R9-11A

WISCONSIN DEPT OF TRANSPORTATION

APPROVED Matthew R Rauch
for State Traffic Engineer

DATE 3/31/2021 PLATE NO. R9-11A.5

PROJECT NO: | HWY: | COUNTY: | SHEET NO: 377 | E

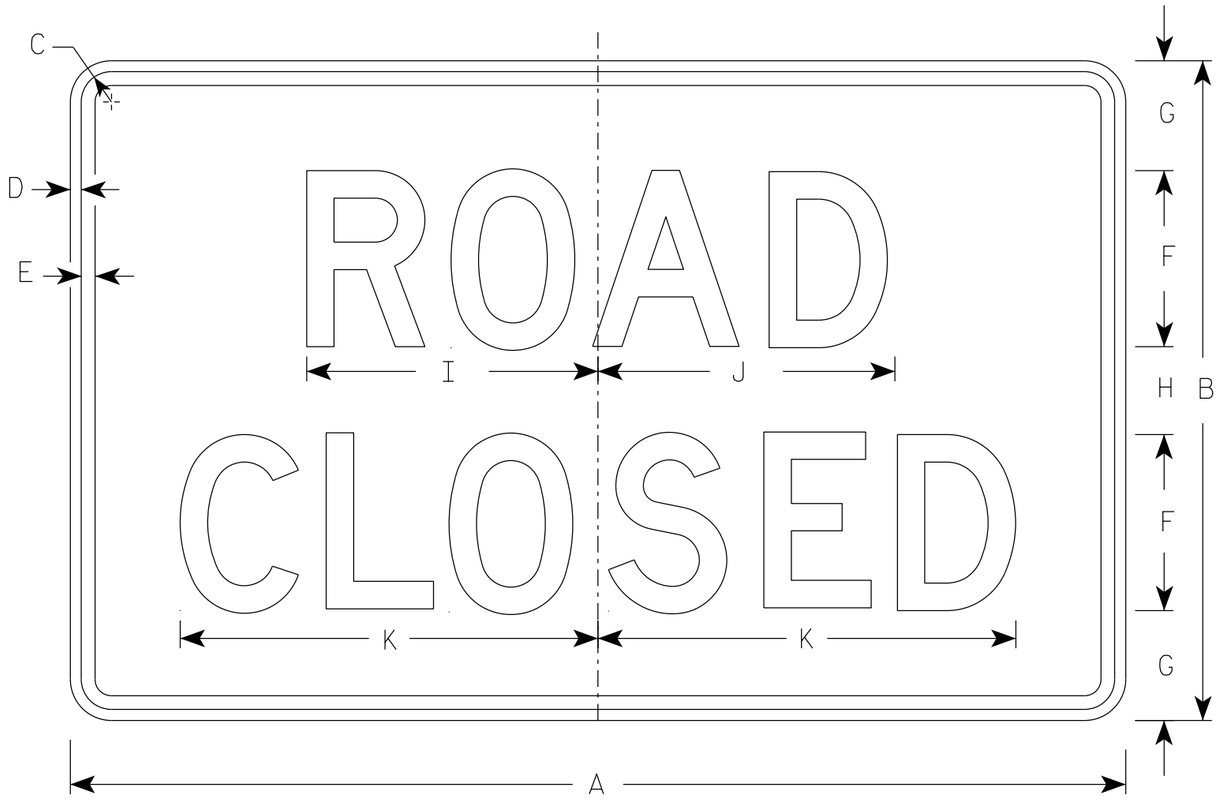

R11-2

NOTES

1. Sign is Type II - Type H Reflective
2. Color:
   Background - White
   Message - Black
3. Message Series - D
4. Corners may be square or rounded when base material is plywood but borders shall be rounded as shown. When base material is metal, the corners and borders shall be rounded.
5. Modify the message as required.

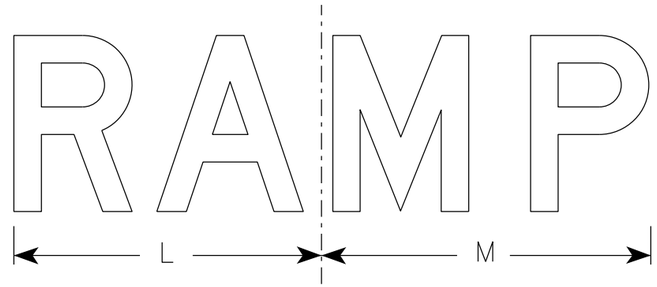

R11-2R

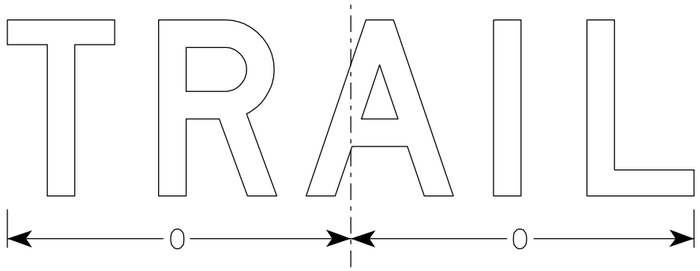

R11-2T

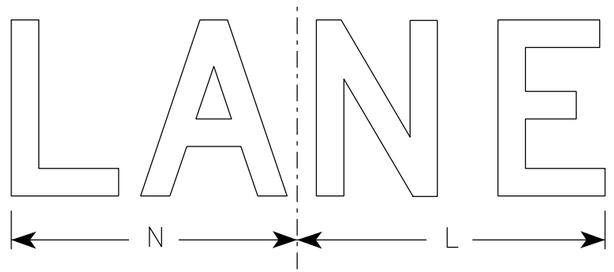

R11-2L

SIZE	A	B	C	D	E	F	G	H	I	J	K	L	M	N	O	P	Q	R	S	T	U	V	W	X	Y	Z	Area sq. ft.
1																											
2S	48	30	1 3/8	1/2	5/8	8	5	4	13 1/4	13 1/2	19	14	15	13	15 5/8												10.0
2M	48	30	1 3/8	1/2	5/8	8	5	4	13 1/4	13 1/2	19	14	15	13	15 5/8												10.0
3	48	30	1 3/8	1/2	5/8	8	5	4	13 1/4	13 1/2	19	14	15	13	15 5/8												10.0
4	48	30	1 3/8	1/2	5/8	8	5	4	13 1/4	13 1/2	19	14	15	13	15 5/8												10.0
5	48	30	1 3/8	1/2	5/8	8	5	4	13 1/4	13 1/2	19	14	15	13	15 5/8												10.0

STANDARD SIGN
R11-2

WISCONSIN DEPT OF TRANSPORTATION

APPROVED Matthew R Rauch
for State Traffic Engineer

DATE 3/29/2021 PLATE NO. R11-2.11

PROJECT NO: | HWY: | COUNTY: | SHEET NO: 378 E

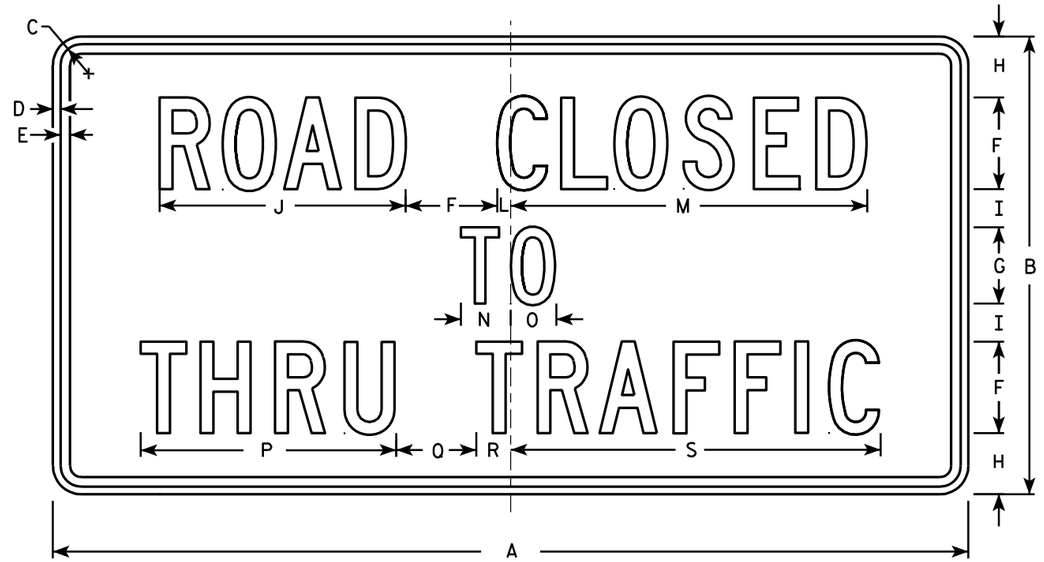

R11-4

NOTES

1. Sign is Type II - Type H Reflective - reference WIS DOT Standard Specification for HIGHWAY and STRUCTURE CONSTRUCTION latest edition.
2. Color:
   Background - White
   Message - Black
3. Message Series - C
4. Corners may be square or rounded when base material is plywood but borders shall be rounded as shown. When base material is metal, the corners and borders shall be rounded.

SIZE	A	B	C	D	E	F	G	H	I	J	K	L	M	N	O	P	Q	R	S	T	U	V	W	X	Y	Z	Area sq. ft.
1																											
2S	60	30	1 3/8	1/2	5/8	6	5	4	2 1/2	16 1/8		7/8	23 3/8	3 1/4	3	16 3/4	5 1/4	2 1/4	24 1/4								12.5
2M	60	30	1 3/8	1/2	5/8	6	5	4	2 1/2	16 1/8		7/8	23 3/8	3 1/4	3	16 3/4	5 1/4	2 1/4	24 1/4								12.5
3																											
4																											
5																											

STANDARD SIGN
R11 - 4

WISCONSIN DEPT OF TRANSPORTATION

APPROVED Matthew R Rauch for State Traffic Engineer

DATE 4/1/11 PLATE NO. R11-4.3

PROJECT NO:	HWY:	COUNTY:		SHEET NO: 379	E

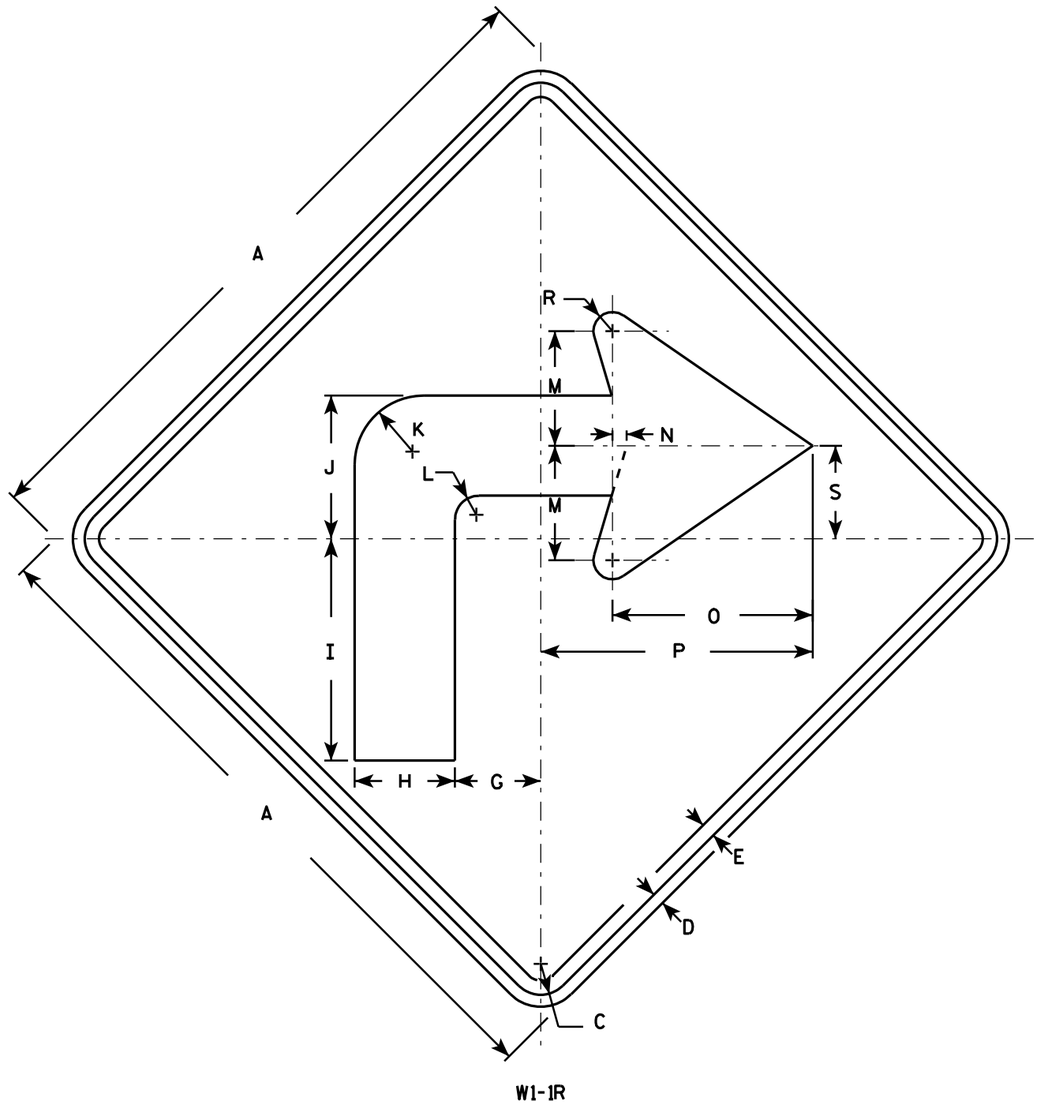

W1-1R

NOTES

1. Sign is Type II - Type F Reflective - reference WIS DOT Standard Specification for HIGHWAY and STRUCTURE CONSTRUCTION latest edition.
2. Color:
   Background - Yellow
   Message - Black
3. Corners may be square or rounded when base material is plywood but borders shall be rounded as shown. When base material is metal, the corners and borders shall be rounded.
4. W1-1L is the same as W1-1R except the arrow is reversed along the vertical centerline.

SIZE	A	B	C	D	E	F	G	H	I	J	K	L	M	N	O	P	Q	R	S	T	U	V	W	X	Y	Z	Area sq. ft.
1	24		1 1/8	3/8	1/2		3	3 1/2	7 3/4	5	2 1/2	7/8	4	1/2	7	9 1/2		5/8	3 1/4								4.0
2S	36		1 5/8	5/8	3/4		4 1/2	5 1/4	11 5/8	7 1/2	3 5/8	1 1/4	6	3/4	10 1/2	14 1/4		1	4 7/8								9.0
2M	36		1 5/8	5/8	3/4		4 1/2	5 1/4	11 5/8	7 1/2	3 5/8	1 1/4	6	3/4	10 1/2	14 1/4		1	4 7/8								9.0
3	36		1 5/8	5/8	3/4		4 1/2	5 1/4	11 5/8	7 1/2	3 5/8	1 1/4	6	3/4	10 1/2	14 1/4		1	4 7/8								9.0
4	48		2 1/4	3/4	1		6	7	15 1/2	10	4 7/8	1 5/8	8	1	14	19		1 1/4	6 1/2								16.0
5	48		2 1/4	3/4	1		6	7	15 1/2	10	4 7/8	1 5/8	8	1	14	19		1 1/4	6 1/2								16.0

STANDARD SIGN
W1-1

WISCONSIN DEPT OF TRANSPORTATION

APPROVED Matthew R Rauch
for State Traffic Engineer

DATE 5/15/12 PLATE NO. W1-1.11

PROJECT NO: | HWY: | COUNTY: | SHEET NO: 380 | E

7

FILE NAME : C:\CAEFiles\Projects\tr_stdplate\W11.DGN PLOT DATE : 15-MAY-2012 13:47 PLOT BY : mscsja PLOT NAME : PLOT SCALE : 7.939035:1.000000
WISDOT/CADDS SHEET 42

NOTES

1. Sign is Type II - Type F Reflective - reference WIS DOT Standard Specification for HIGHWAY and STRUCTURE CONSTRUCTION latest edition.
2. Color:
   Background - Yellow
   Message - Black
3. Corners may be square or rounded when base material is plywood but borders shall be rounded as shown. When base material is metal, the corners and borders shall be rounded.
4. W1-2L is the same as W1-2R except the arrow is reversed along the vertical centerline.

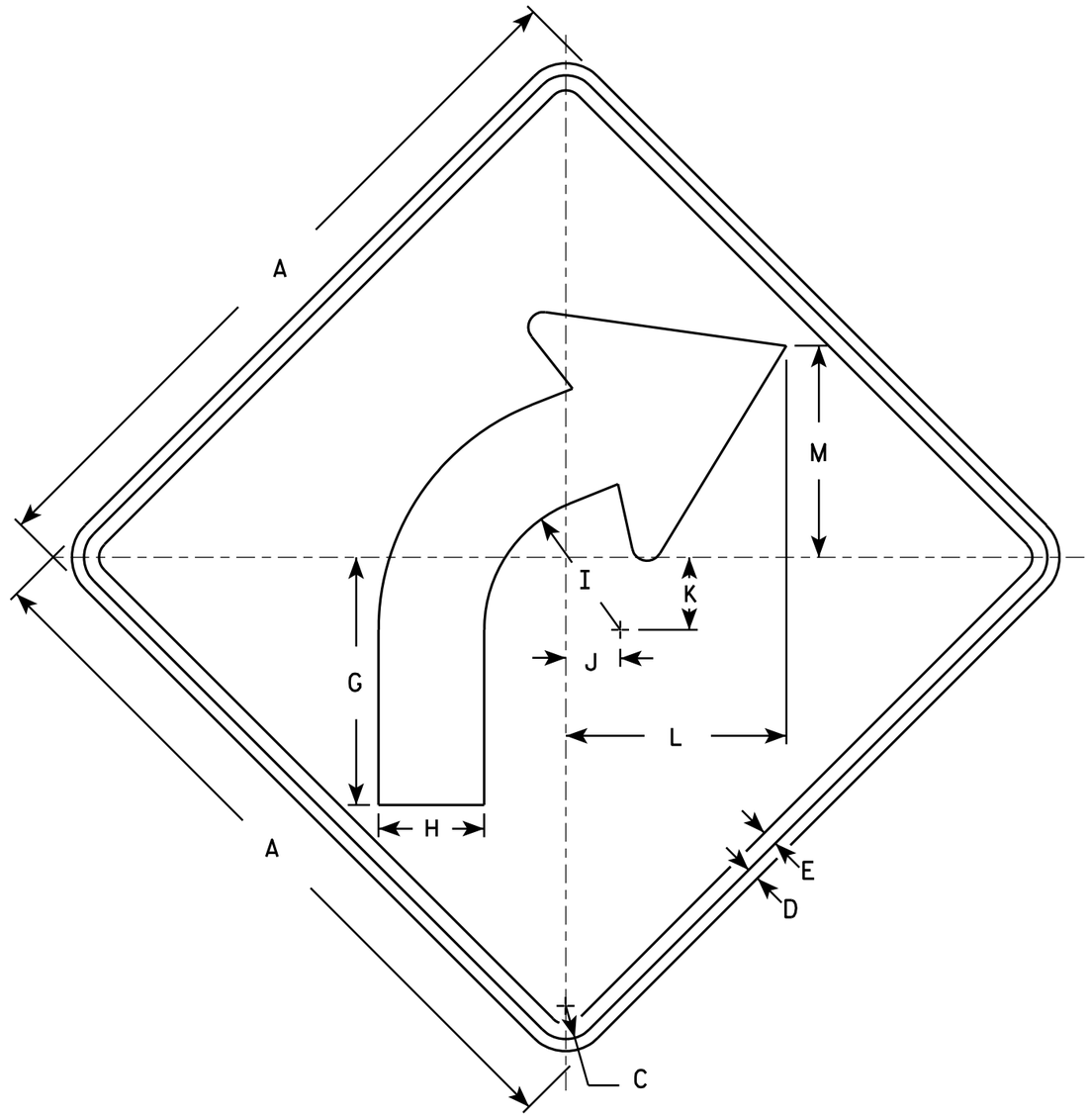

W1-2R

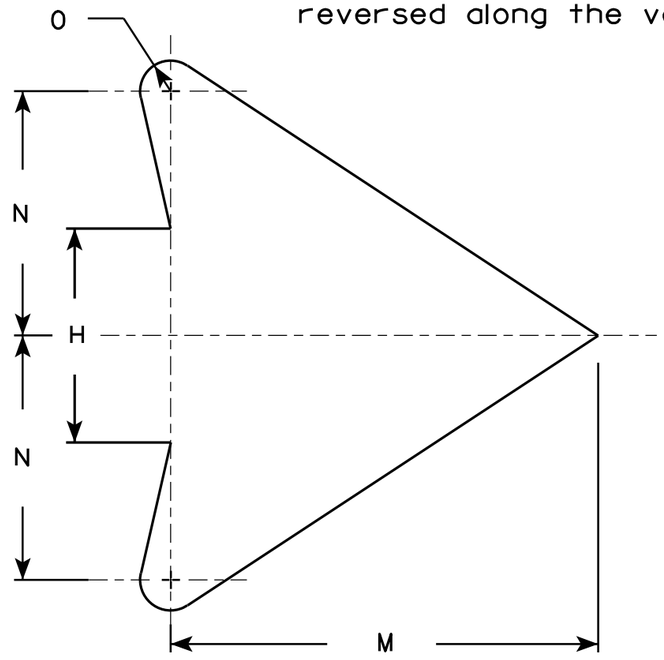

ARROW DETAIL

SIZE	A	B	C	D	E	F	G	H	I	J	K	L	M	N	O	P	Q	R	S	T	U	V	W	X	Y	Z	Area sq. ft.
1	24		1 1/8	3/8	1/2		8 1/4	3 1/2	4 1/2	1 3/4	2 3/8	7 1/4	7	4	1/2												4.0
2S	30		1 3/8	1/2	5/8		10 1/4	4 3/8	5 5/8	2 1/4	3	9 1/8	8 3/4	5	5/8												6.25
2M	36		1 5/8	5/8	3/4		12 3/8	5 1/4	6 3/4	2 5/8	3 1/2	10 7/8	10 1/2	6	3/4												9.0
3	36		1 5/8	5/8	3/4		12 3/8	5 1/4	6 3/4	2 5/8	3 1/2	10 7/8	10 1/2	6	3/4												9.0
4	36		1 5/8	5/8	3/4		12 3/8	5 1/4	6 3/4	2 5/8	3 1/2	10 7/8	10 1/2	6	3/4												9.0
5	48		2 1/4	3/4	1		16 1/2	7	9	3 1/2	4 5/8	14 1/2	14	8	1												16.0

STANDARD SIGN
W1-2

WISCONSIN DEPT OF TRANSPORTATION

APPROVED Matthew R Rauch
for State Traffic Engineer

DATE 5/15/12 PLATE NO. W1-2.10

PROJECT NO:	HWY:	COUNTY:		SHEET NO: 381	E

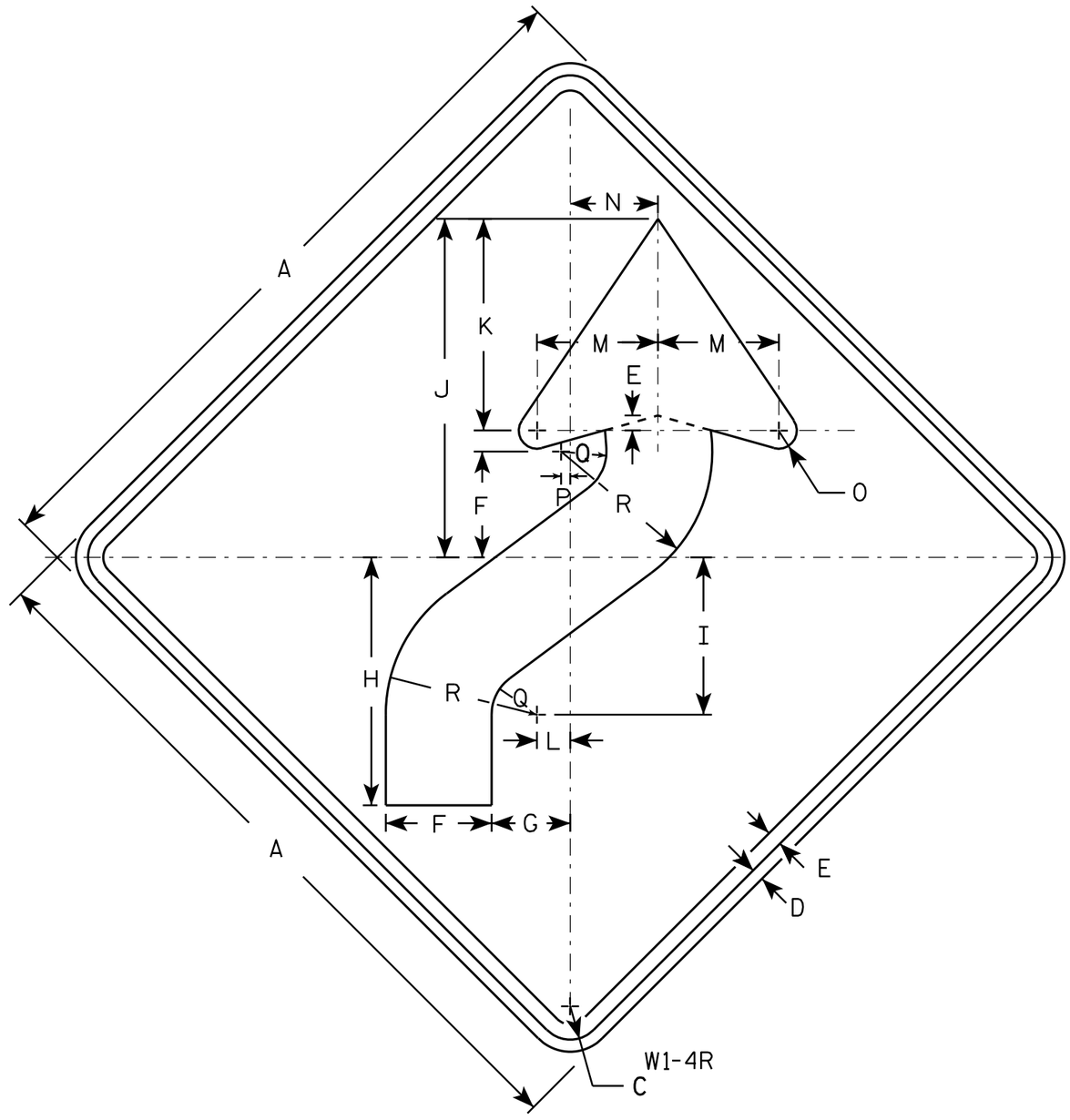

NOTES

1. Sign is Type II - Type F Reflective - reference WIS DOT Standard Specification for HIGHWAY and STRUCTURE CONSTRUCTION latest edition.
2. Color:
   Background - Yellow
   Message - Black
3. Corners may be square or rounded when base material is plywood but borders shall be rounded as shown. When base material is metal, the corners and borders shall be rounded.
4. W1-4L is the same as W1-4R except the arrow is reversed along the vertical centerline.

SIZE	A	B	C	D	E	F	G	H	I	J	K	L	M	N	O	P	Q	R	S	T	U	V	W	X	Y	Z	Area sq. ft.
1	24		1 1/8	3/8	1/2	3 1/2	2 5/8	8 1/4	5 1/4	11 1/4	7	1 1/8	4	3	5/8	1/4	1 1/2	5									4.0
2S	30		1 3/8	1/2	5/8	4 3/8	3 1/4	10 1/4	6 1/2	14	8 3/4	1 3/8	5	3 5/8	3/4	3/8	1 7/8	6 1/4									6.25
2M	36		1 5/8	5/8	3/4	5 1/4	4	12 3/8	7 7/8	16 7/8	10 1/2	1 5/8	6	4 1/2	1	1/2	2 1/4	7 1/2									9.0
3	36		1 5/8	5/8	3/4	5 1/4	4	12 3/8	7 7/8	16 7/8	10 1/2	1 5/8	6	4 1/2	1	1/2	2 1/4	7 1/2									9.0
4	36		1 5/8	5/8	3/4	5 1/4	4	12 3/8	7 7/8	16 7/8	10 1/2	1 5/8	6	4 1/2	1	1/2	2 1/4	7 1/2									9.0
5	48		2 1/4	3/4	1	7	5 1/4	16 1/2	10 1/2	22 1/2	14	2 1/4	8	6	1 1/4	5/8	3	10									16.0

STANDARD SIGN
W1-4

WISCONSIN DEPT OF TRANSPORTATION

APPROVED Matthew R Rauch
for State Traffic Engineer

DATE 5/17/12 PLATE NO. W1-4.11

PROJECT NO: | HWY: | COUNTY: | SHEET NO: 382 | E

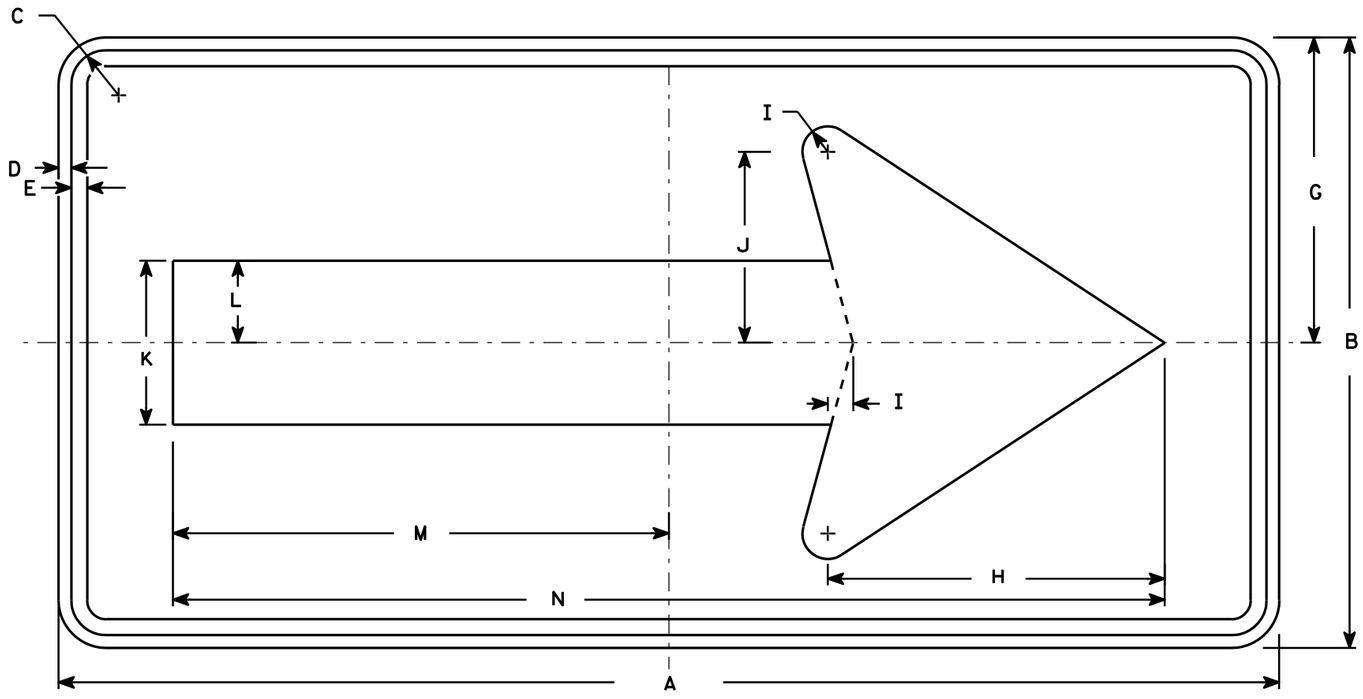

W1-6

NOTES

1. Sign is Type II - Type F Reflective - reference WIS DOT Standard Specification for HIGHWAY and STRUCTURE CONSTRUCTION latest edition.
2. Color:
   Background - Yellow
   Message - Black
3. Corners may be square or rounded when base material is plywood but borders shall be rounded as shown. When base material is metal, the corners and borders shall be rounded.

SIZE	A	B	C	D	E	F	G	H	I	J	K	L	M	N	O	P	Q	R	S	T	U	V	W	X	Y	Z	Area sq. ft.
1	36	18	1 1/8	3/8	3/8		9	10	3/4	5 5/8	4 3/4	2 3/8	14 5/8	29 1/4													4.5
2S	48	24	1 3/8	1/2	5/8		12	13 1/4	1	7 1/2	6 1/2	3 1/4	19 1/2	39													8.0
2M	48	24	1 3/8	1/2	5/8		12	13 1/4	1	7 1/2	6 1/2	3 1/4	19 1/2	39													8.0
3	60	30	1 3/8	1/2	5/8		15	16 1/4	1 1/4	9 1/4	8	4	24 3/8	48 3/4													12.5
4	60	30	1 3/8	1/2	5/8		15	16 1/4	1 1/4	9 1/4	8	4	24 3/8	48 3/4													12.5
5	96	48	2 1/4	3/4	1		24	26 1/2	2	15	13	6 1/2	39	78													32.0

STANDARD SIGN
W1-6

WISCONSIN DEPT OF TRANSPORTATION

APPROVED Matthew R Rauch
for State Traffic Engineer

DATE 6/7/10 PLATE NO. W1-6.8

PROJECT NO: | HWY: | COUNTY: | SHEET NO: 383

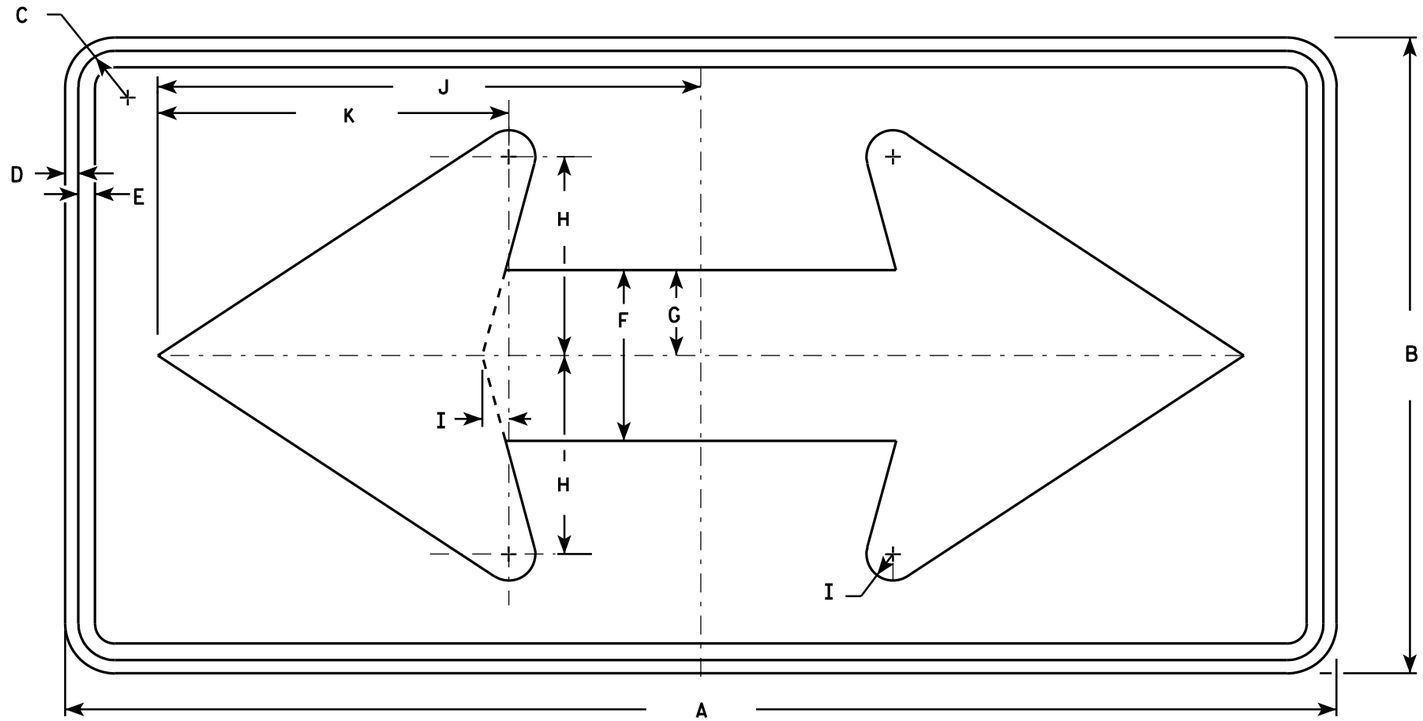

W1-7

NOTES

1. Sign is Type II - Type F Reflective - reference WIS DOT Standard Specification for HIGHWAY and STRUCTURE CONSTRUCTION latest edition.
2. Color:
   Background - Yellow
   Message - Black
3. Corners may be square or rounded when base material is plywood but borders shall be rounded as shown. When base material is metal, the corners and borders shall be rounded.

SIZE	A	B	C	D	E	F	G	H	I	J	K	L	M	N	O	P	Q	R	S	T	U	V	W	X	Y	Z	Area sq. ft.
1	36	18	1 1/8	3/8	1/2	5	2 1/2	5 3/4	3/4	15 5/8	10 1/8																4.5
2S	48	24	1 3/8	1/2	5/8	6 1/2	3 1/4	7 1/2	1	20 1/2	13 1/4																8.0
2M	48	24	1 3/8	1/2	5/8	6 1/2	3 1/4	7 1/2	1	20 1/2	13 1/4																8.0
3	60	30	1 3/8	1/2	5/8	8	4	9 1/4	1 1/4	25 3/8	16 1/4																12.5
4	60	30	1 3/8	1/2	5/8	8	4	9 1/4	1 1/4	25 3/8	16 1/4																12.5
5	96	48	2 1/4	3/4	1	13	6 1/2	15	2	41	26 1/2																32.0

STANDARD SIGN
W1-7

WISCONSIN DEPT OF TRANSPORTATION

APPROVED Matthew R Rauch
for State Traffic Engineer

DATE 6/7/10 PLATE NO. W1-7.7

PROJECT NO: | HWY: | COUNTY: | SHEET NO: 384 | E

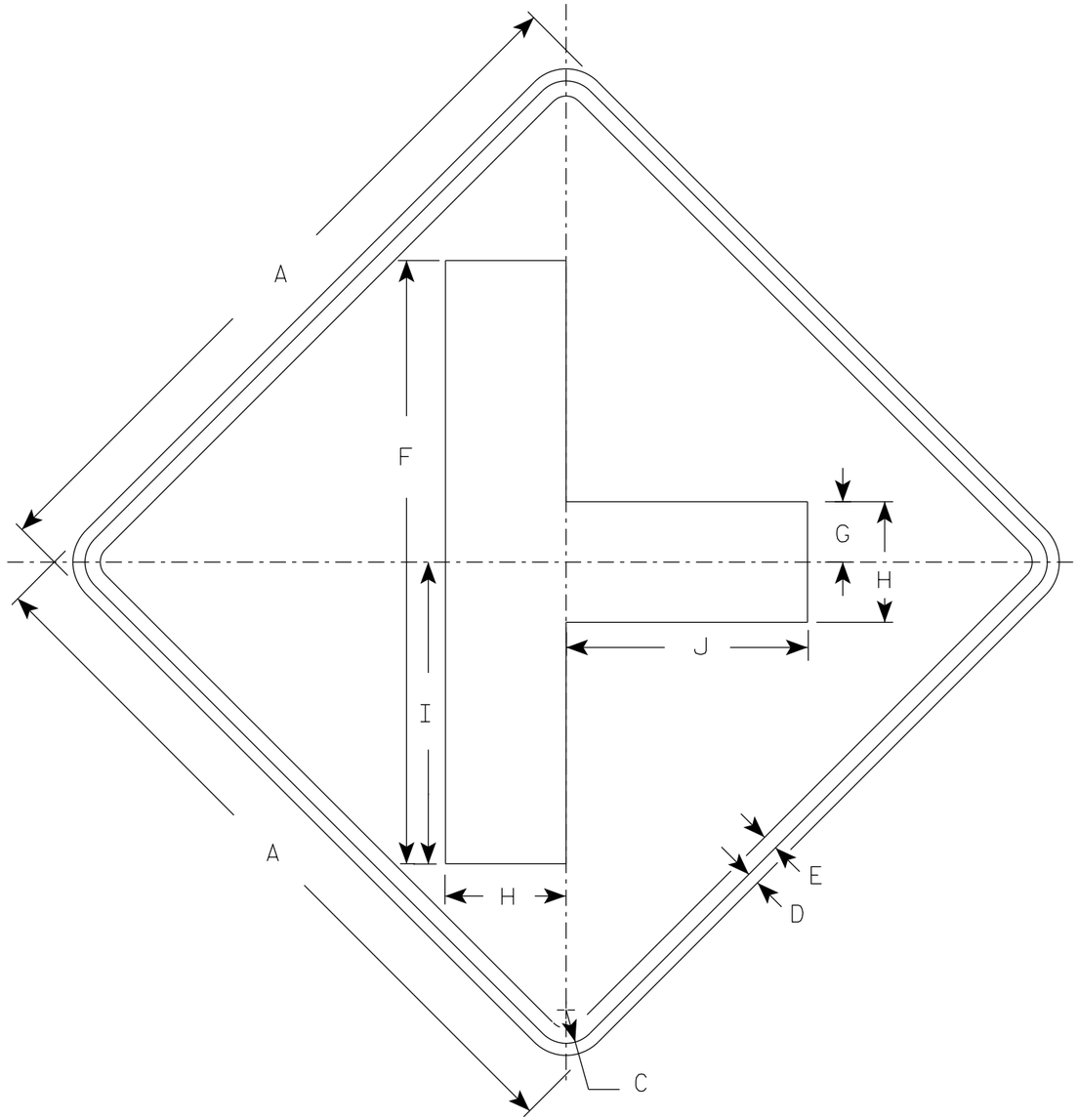

W2-2R

NOTES

1. Sign is Type II - Type F Reflective
2. Color:
   Background - Yellow
   Message - Black
3. W2-2L same as W2-2R but is rotated 180° when mounted.

SIZE	A	B	C	D	E	F	G	H	I	J	K	L	M	N	O	P	Q	R	S	T	U	V	W	X	Y	Z	Area sq. ft.
1	24		1 1/8	3/8	1/2	20	2	4	10	8																	4.0
2S	30		1 3/8	1/2	5/8	25	2 1/2	5	12 1/2	10																	6.25
2M	30		1 3/8	1/2	5/8	25	2 1/2	5	12 1/2	10																	6.25
3	36		1 5/8	5/8	3/4	30	3	6	15	12																	9.0
4	48		2 1/4	3/4	1	40	4	8	20	16																	16.0
5																											

STANDARD SIGN
W2-2 L&R

WISCONSIN DEPT OF TRANSPORTATION

APPROVED Matthew R Rauch
For State Traffic Engineer

DATE 11/18/2021 PLATE NO. W2-2.7

PROJECT NO: | HWY: | COUNTY: | SHEET NO: 385 | E

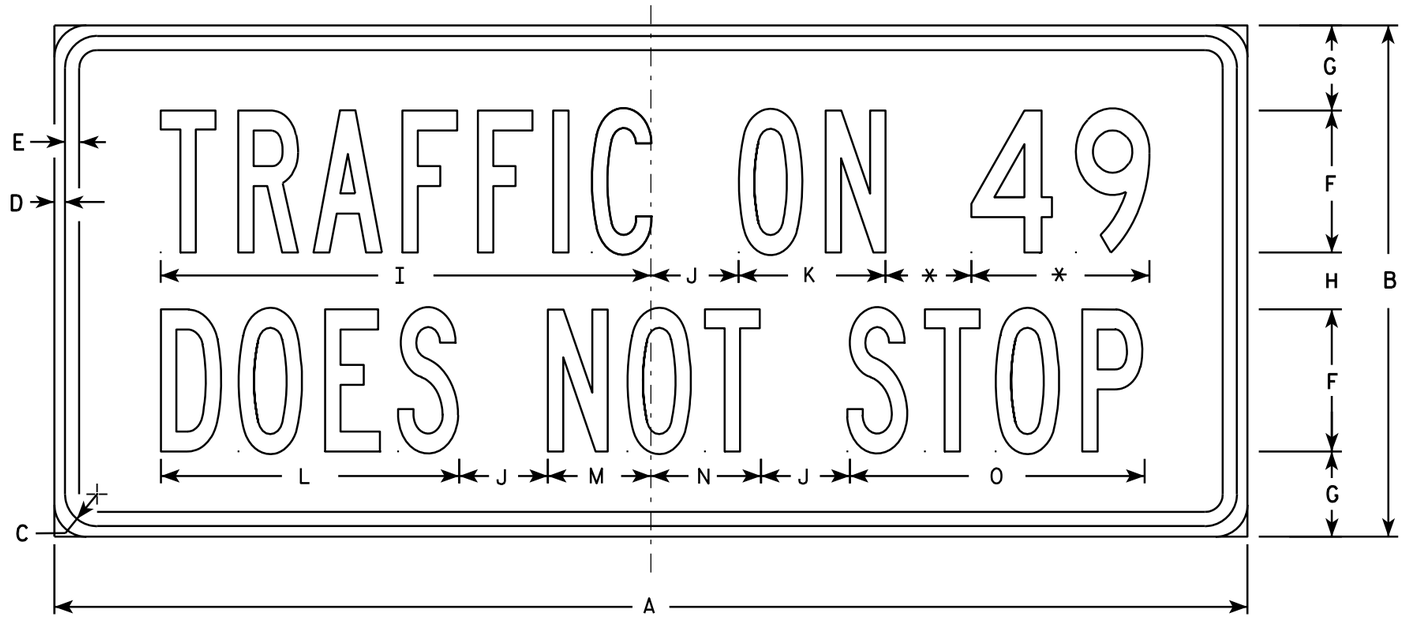

W4-4C

NOTES

1. Sign is Type II - Type F Reflective - reference WIS DOT Standard Specification for HIGHWAY and STRUCTURE CONSTRUCTION latest edition.
2. Color:
   Background - Yellow
   Message - Black
3. Message Series - B (See note 5)
4. Corners may be square or rounded when base material is plywood but borders shall be rounded as shown. When base material is metal, the corners and borders shall be rounded.
5. Highway Number usually Series D. Substitute appropriate numerals and optically adjust spacing to achieve proper balance.

* VARIES

SIZE	A	B	C	D	E	F	G	H	I	J	K	L	M	N	O	P	Q	R	S	T	U	V	W	X	Y	Z	Area sq. ft.
1																											
2S	24	12	1 1/8	3/8	3/8	3	2 1/4	1 1/2	10 3/8	1 1/2	3 1/8	6 1/4	2 1/4	2 1/4	6 1/4												2.0
2M	24	12	1 1/8	3/8	3/8	3	2 1/4	1 1/2	10 3/8	1 1/2	3 1/8	6 1/4	2 1/4	2 1/4	6 1/4												2.0
3	36	15	1 1/8	3/8	1/2	4	2 5/8	1 3/4	13 7/8	2 3/8	4 1/4	8 3/8	3 1/8	3 1/8	8 3/8												3.75
4	42	18	1 1/8	3/8	1/2	5	3	2	17 1/4	3 1/8	5 1/8	10 1/2	3 7/8	3 7/8	10 3/8												5.25
5																											

STANDARD SIGN
W4-4C

WISCONSIN DEPT OF TRANSPORTATION

APPROVED Matthew R Rauch
for State Traffic Engineer

DATE 03/12/13 PLATE NO. W4-4.2

PROJECT NO:	HWY:	COUNTY:		SHEET NO: 386	E

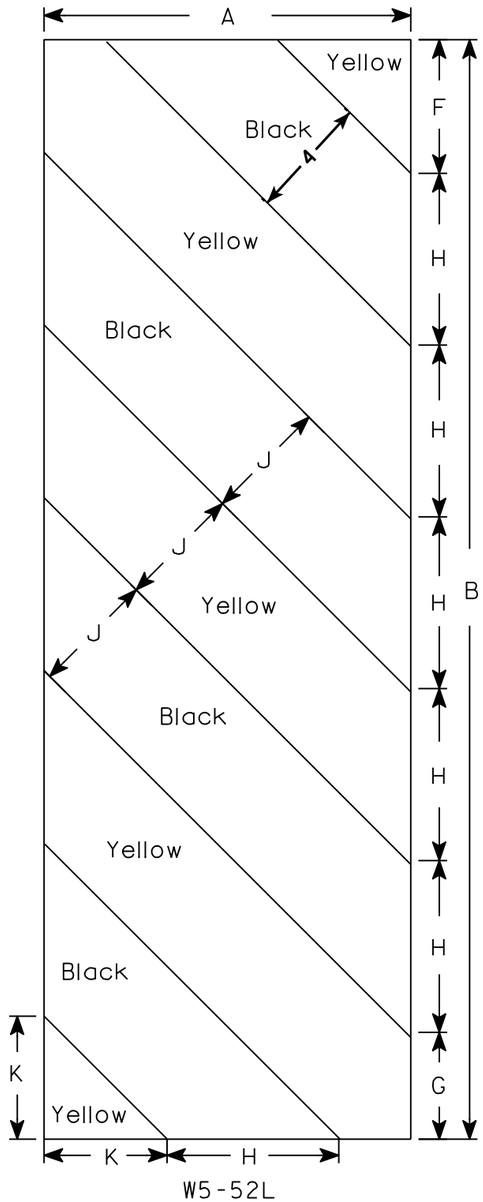

W5-52L

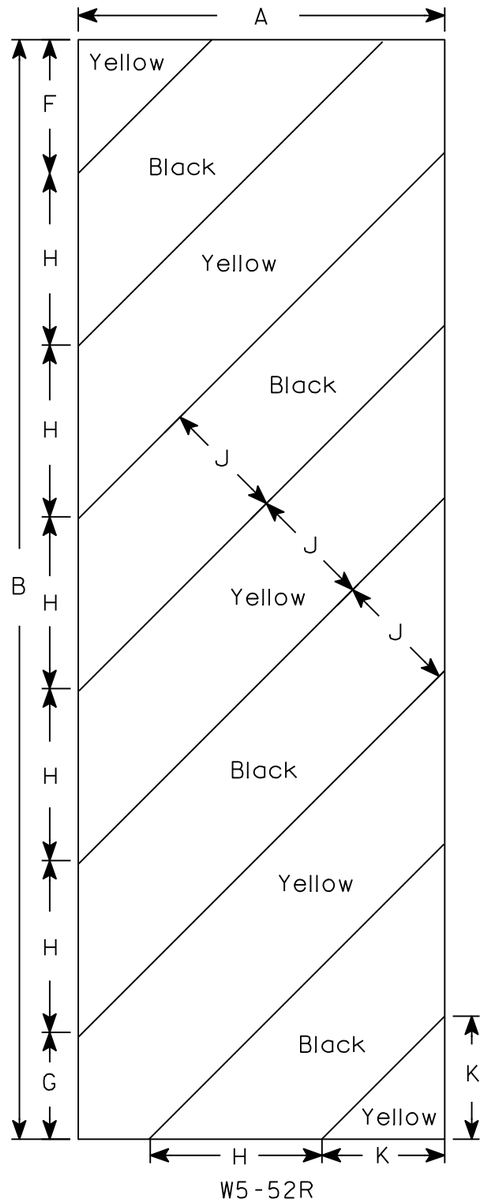

W5-52R

NOTES

1. Sign is Type II - Type F Reflective - reference WIS DOT Standard Specification for HIGHWAY and STRUCTURE CONSTRUCTION latest edition.
2. Color:
   Background - Yellow
   Message - Black
3. Corners may be square or rounded when base material is plywood but borders shall be rounded as shown. When base material is metal, the corners and borders shall be rounded.
4. Alternate colors of stripes as shown.

SIZE	A	B	C	D	E	F	G	H	I	J	K	L	M	N	O	P	Q	R	S	T	U	V	W	X	Y	Z	Area sq. ft.
1																											
2S	12	36				4 3/8	3 1/2	5 5/8	45°	4	4																3.0
2M	12	36				4 3/8	3 1/2	5 5/8	45°	4	4																3.0
3	18	54				6	5 1/2	8 1/2	45°	6	6 9/16																6.75
4																											
5																											

STANDARD SIGN

W5-52L & W5-52R

WISCONSIN DEPT OF TRANSPORTATION

APPROVED Matthew R Rauch
for State Traffic Engineer

DATE 5/29/12 PLATE NO. W5-52.9

PROJECT NO: | HWY: | COUNTY: | SHEET NO: 387 | E

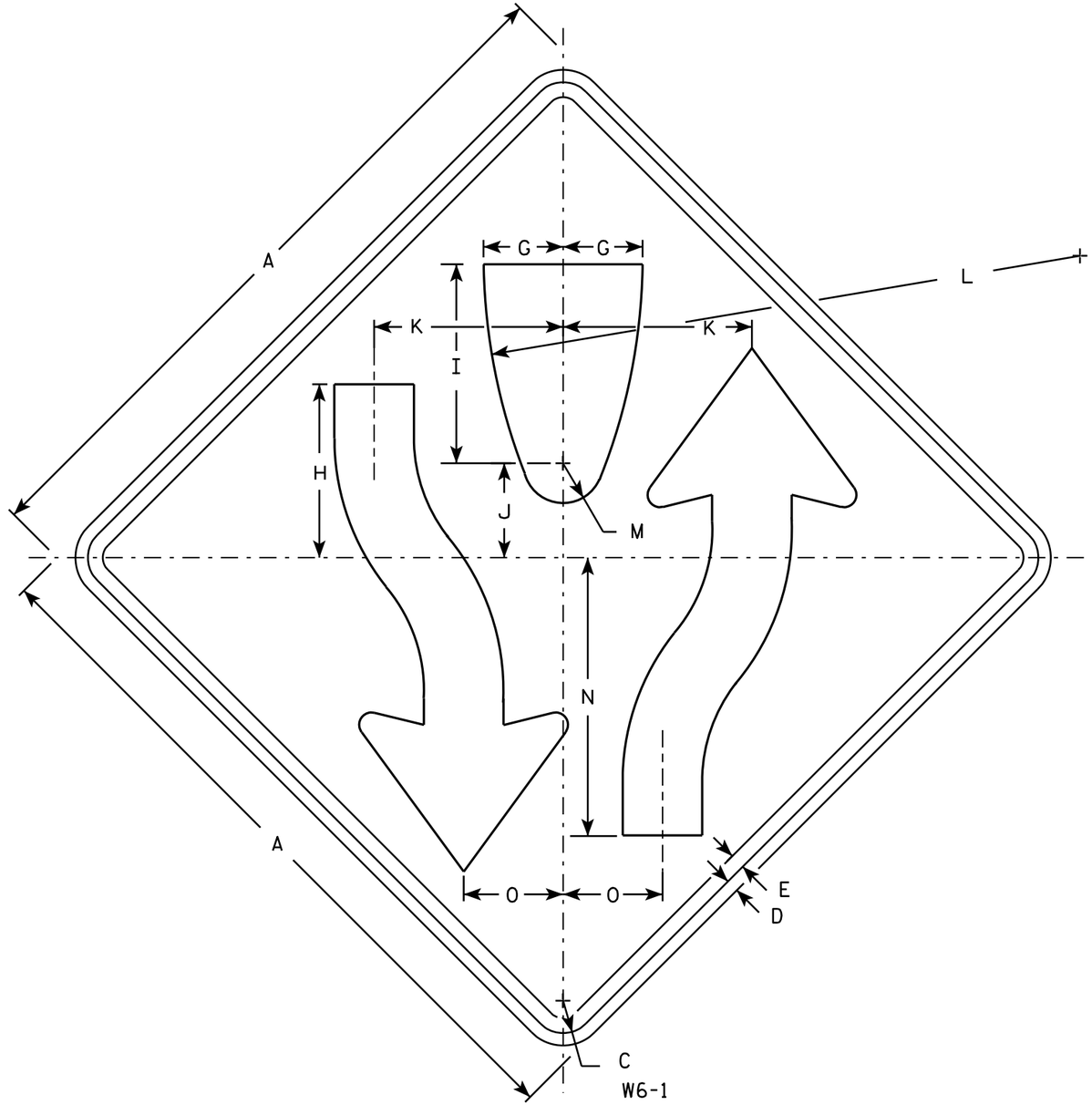

NOTES

1. Sign is Type II - Type F Reflective - reference WIS DOT Standard Specification for HIGHWAY and STRUCTURE CONSTRUCTION latest edition.
2. Color:
   Background - Yellow
   Message - Black
3. Corners may be square or rounded when base material is plywood but borders shall be rounded as shown. When base material is metal, the corners and borders shall be rounded.
4. W6-2 same as W6-1 but is rotated 180° when mounted.

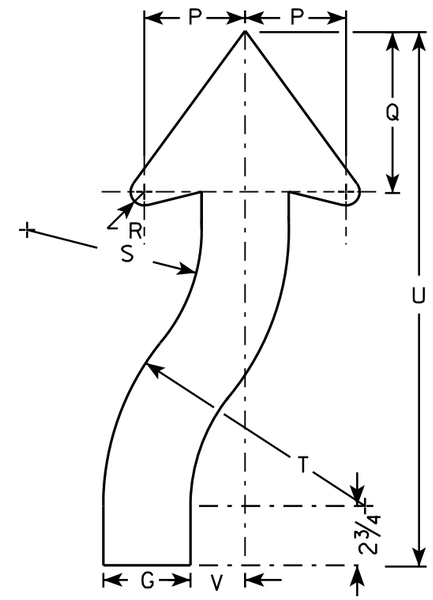

ARROW DETAIL

SIZE	A	B	C	D	E	F	G	H	I	J	K	L	M	N	O	P	Q	R	S	T	U	V	W	X	Y	Z	Area sq. ft.
1	30		1 3/8	1/2	5/8		3 1/4	8	8 1/4	4 1/8	7 7/8	25	1 3/4	11 5/8	4 1/8	3 7/8	6 3/4	5/8	6 5/8	9 7/8	21 5/8	2					6.25
2S	36		1 5/8	5/8	3/4		4	8 3/4	10	4 3/4	9 1/2	30	2	14	5	4 5/8	7 3/8	7/8	8	12	24 1/2	2 1/2					9.0
2M	36		1 5/8	5/8	3/4		4	8 3/4	10	4 3/4	9 1/2	30	2	14	5	4 5/8	7 3/8	7/8	8	12	24 1/2	2 1/2					9.0
3																											
4	48		2 1/4	3/4	1		5 3/8	11 5/8	13 3/8	6 3/8	12 5/8	40	2 5/8	18 5/8	6 5/8	6 1/4	9 7/8	1 1/4	10 5/8	16	32 5/8	3 3/8					16.0
5	48		2 1/4	3/4	1		5 3/8	11 5/8	13 3/8	6 3/8	12 5/8	40	2 5/8	18 5/8	6 5/8	6 1/4	9 7/8	1 1/4	10 5/8	16	32 5/8	3 3/8					16.0

STANDARD SIGN
W6-1 & W6-2

WISCONSIN DEPT OF TRANSPORTATION

APPROVED Matthew R Rauch
for State Traffic Engineer

DATE 03/12/13 PLATE NO. W6-1.14

PROJECT NO:	HWY:	COUNTY:		SHEET NO: 388	E

7

FILE NAME : C:\CAEFiles\Projects\tr_stdplate\W61.DGN PLOT DATE : 12-MAR-2013 14:02 PLOT BY : mscsja PLOT NAME : PLOT SCALE : 6.946657:1.000000
WISDOT/CADDS SHEET 42

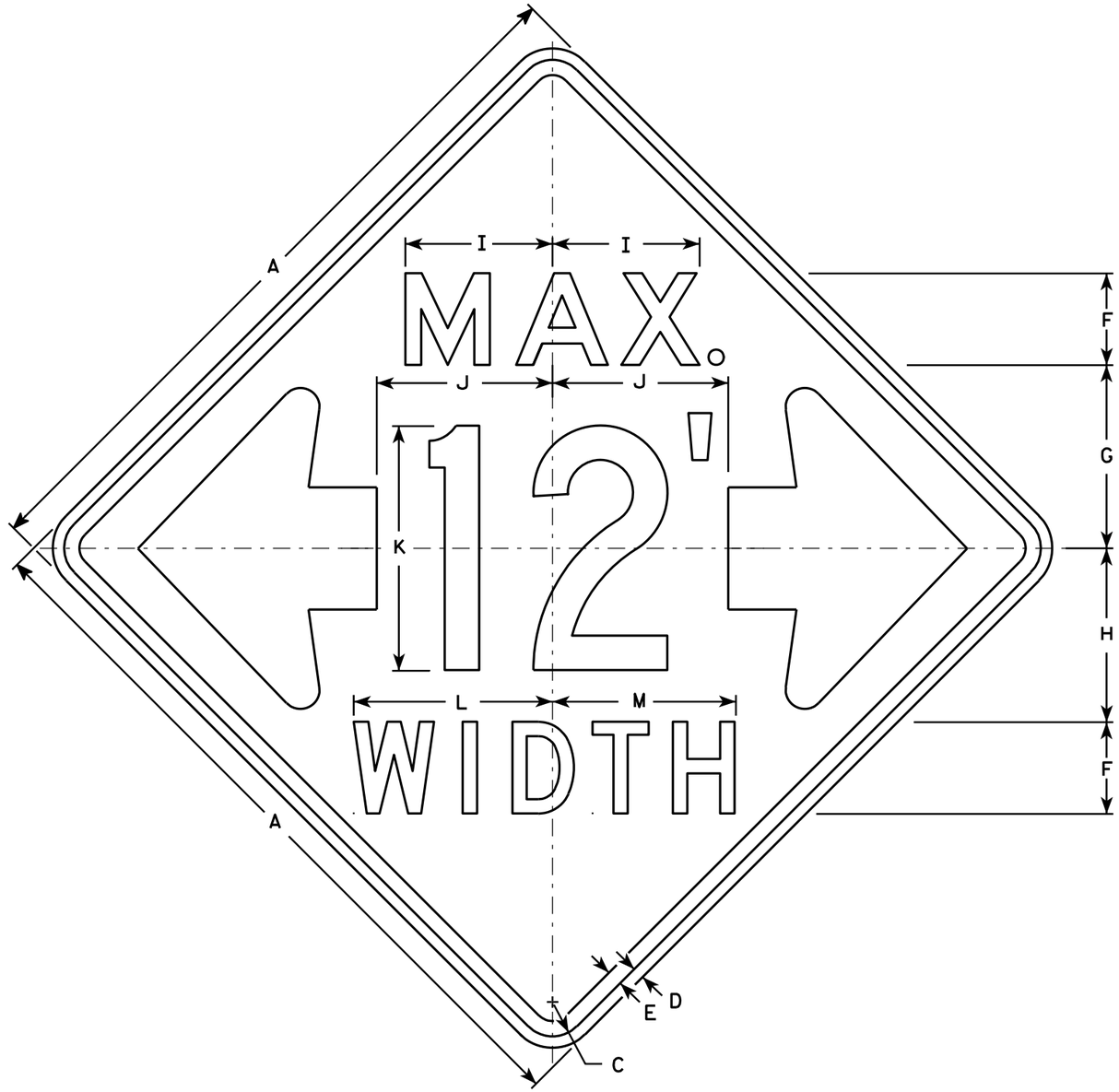

W12-52

NOTES

1. Sign is Type II - Type F Reflective - reference WIS DOT Standard Specification for HIGHWAY and STRUCTURE CONSTRUCTION latest edition.
2. Color:
   Background - Orange
   Message - Black
3. Message Series - See note 5
4. Corners may be square or rounded when base material is plywood but borders shall be rounded as shown. When base material is metal, the corners and borders shall be rounded.
5. The top line is series E, the numerals are series C, and the bottom line is series D.
6. Substitute appropriate numerals and adjust spacing as required.

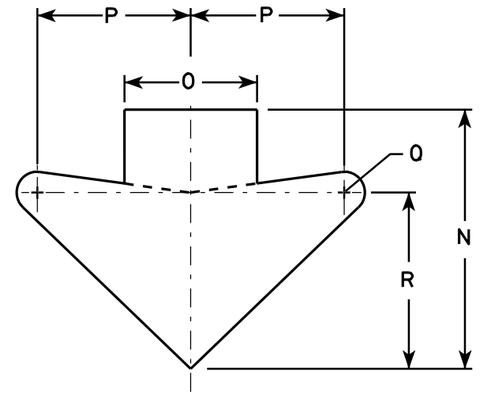

ARROW DETAIL

SIZE	A	B	C	D	E	F	G	H	I	J	K	L	M	N	O	P	Q	R	S	T	U	V	W	X	Y	Z	Area sq. ft.
1																											
2S	48		2 1/4	3/4	1	6	12	11 3/8	9 5/8	11 1/2	16	13	12	15 5/8	8	9 1/4	1 1/4	10 5/8									16.0
2M	48		2 1/4	3/4	1	6	12	11 3/8	9 5/8	11 1/2	16	13	12	15 5/8	8	9 1/4	1 1/4	10 5/8									16.0
3																											
4																											
5																											

STANDARD SIGN
W12-52

WISCONSIN DEPT OF TRANSPORTATION

APPROVED Matthew R Rauch
for State Traffic Engineer

DATE 3/16/11 PLATE NO. W12-52.7

PROJECT NO: | HWY: | COUNTY: | SHEET NO: 389 | E

FILE NAME : C:\Users\PROJECTS\tr_stdplate\W1252.DGN PLOT DATE : 16-MAR-2011 14:45 PLOT BY : mscj9h PLOT NAME : PLOT SCALE : 9.137199:1.000000
WISDOT/CADDS SHEET 42

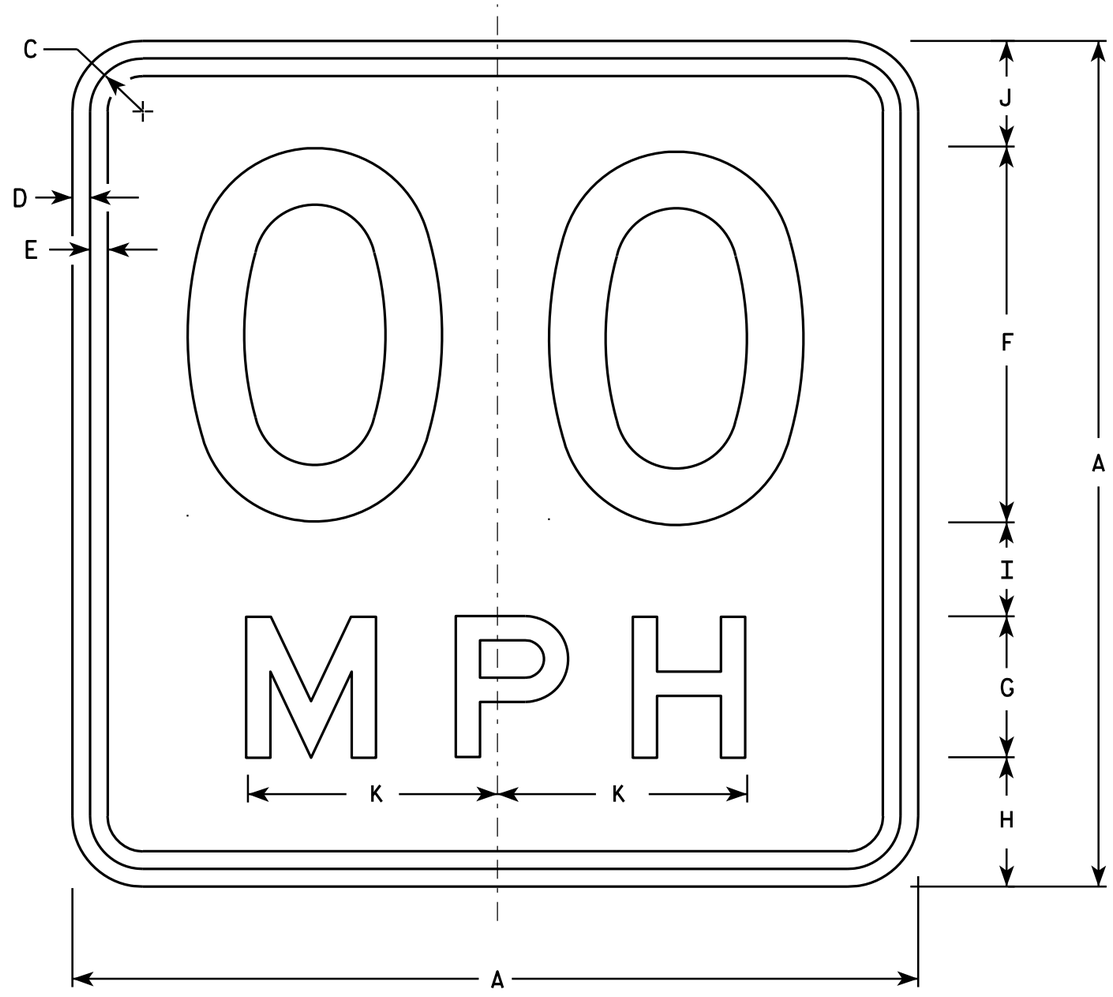

W13-1

* For 30" x 30" Warning Signs, use 18" x 18" W13-1 signs.
For 36" x 36" Warning Signs, use 24" x 24" W13-1 signs.

NOTES

1. Sign is Type II - Type F Reflective - reference WIS DOT Standard Specification for HIGHWAY and STRUCTURE CONSTRUCTION latest edition.
2. Color:
   Background - Yellow
   Message - Black
3. Message Series - See Note 6
4. Corners may be square or rounded when base material is plywood but borders shall be rounded as shown. When base material is metal, the corners and borders shall be rounded.
5. Substitute appropriate numerals and optically space about centerline to achieve proper balance.
6. Line 1 is Series D
   Line 2 is Series E

	SIZE	A	B	C	D	E	F	G	H	I	J	K	L	M	N	O	P	Q	R	S	T	U	V	W	X	Y	Z	Area sq. ft.
	1	18		1 1/8	3/8	3/8	8	3	2 3/4	2	2 1/4	5 3/8																2.25
*	2S	18		1 1/8	3/8	3/8	8	3	2 3/4	2	2 1/4	5 3/8																2.25
*	2M	18		1 1/8	3/8	3/8	8	3	2 3/4	2	2 1/4	5 3/8																2.25
	3	24		1 1/8	3/8	1/2	10	4	4	2 3/4	3 1/4	6 5/8																4.00
	4	36		1 5/8	5/8	3/4	16	6	5 1/2	4	4 1/2	10 5/8																9.00
	5	36		1 5/8	5/8	3/4	16	6	5 1/2	4	4 1/2	10 5/8																9.00

STANDARD SIGN
W13-1

WISCONSIN DEPT OF TRANSPORTATION

APPROVED Matthew R Rauch
For State Traffic Engineer

DATE 5/31/12 PLATE NO. W13-1.16

PROJECT NO: | HWY: | COUNTY: | SHEET NO: 390 | E

NOTES

1. Sign is Type II - Type F Reflective
2. Color:
   Background - Orange
   Message - Black
3. Message Series - C
4. Corners may be square or rounded when base material is plywood but borders shall be rounded as shown. When base material is metal, the corners and borders shall be rounded.

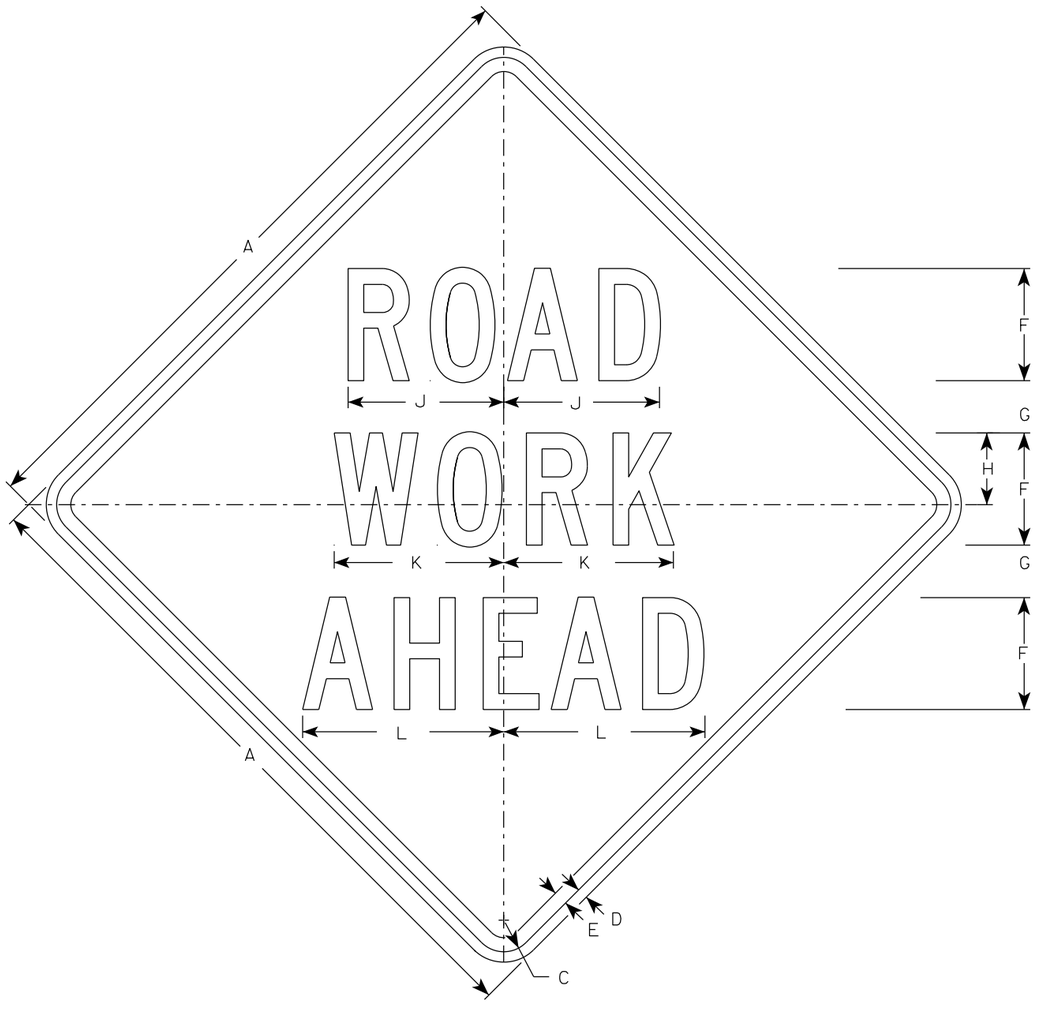

W20-1A

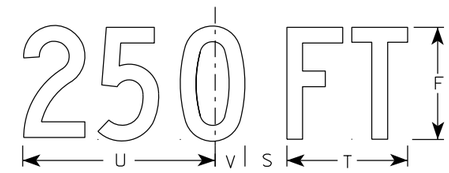

W20-1H

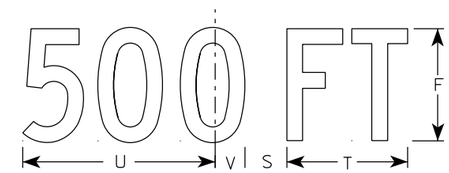

W20-1D

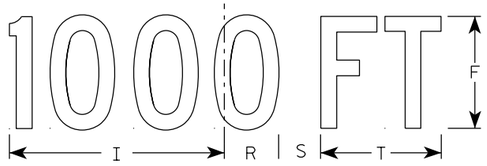

W20-1C

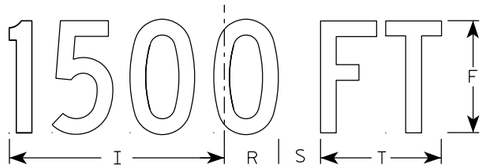

W20-1B

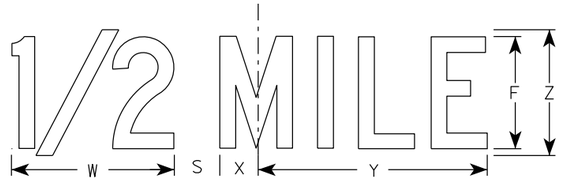

W20-1G

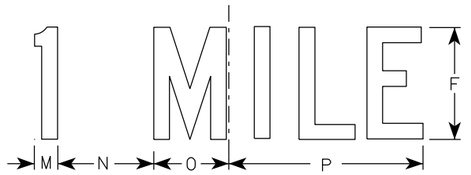

W20-1F

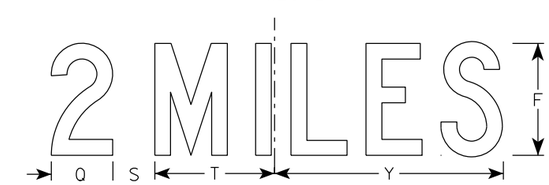

W20-1E

SIZE	A	B	C	D	E	F	G	H	I	J	K	L	M	N	O	P	Q	R	S	T	U	V	W	X	Y	Z	Area sq. ft.
1	36		1 5/8	5/8	3/4	5	2 5/8	3 1/4	10 1/8	7	7 5/8	8 7/8	1 1/8	4 1/2	3 1/2	9	3 1/4	2 1/2	2 1/4	5 5/8	9	1 3/8	8	1 3/4	10 3/4	6	9.0
2S	48		2 1/4	3/4	1	8	3 3/4	5 1/8	15 3/8	11 1/8	12 1/8	14 3/8	1 5/8	6 7/8	5 3/8	13 7/8	4 3/8	3 7/8	3	8 5/8	13 3/4	2 1/8	11 7/8	2 3/4	16 3/8	9	16.0
2M	48		2 1/4	3/4	1	8	3 3/4	5 1/8	15 3/8	11 1/8	12 1/8	14 3/8	1 5/8	6 7/8	5 3/8	13 7/8	4 3/8	3 7/8	3	8 5/8	13 3/4	2 1/8	11 7/8	2 3/4	16 3/8	9	16.0
3	48		2 1/4	3/4	1	8	3 3/4	5 1/8	15 3/8	11 1/8	12 1/8	14 3/8	1 5/8	6 7/8	5 3/8	13 7/8	4 3/8	3 7/8	3	8 5/8	13 3/4	2 1/8	11 7/8	2 3/4	16 3/8	9	16.0
4	48		2 1/4	3/4	1	8	3 3/4	5 1/8	15 3/8	11 1/8	12 1/8	14 3/8	1 5/8	6 7/8	5 3/8	13 7/8	4 3/8	3 7/8	3	8 5/8	13 3/4	2 1/8	11 7/8	2 3/4	16 3/8	9	16.0
5	48		2 1/4	3/4	1	8	3 3/4	5 1/8	15 3/8	11 1/8	12 1/8	14 3/8	1 5/8	6 7/8	5 3/8	13 7/8	4 3/8	3 7/8	3	8 5/8	13 3/4	2 1/8	11 7/8	2 3/4	16 3/8	9	16.0

STANDARD SIGN
W20-1A, B, C, D, E, F, G & H

WISCONSIN DEPT OF TRANSPORTATION

APPROVED Matthew R Rauch
for State Traffic Engineer

DATE 3/25/2020 PLATE NO. W20-1.11

PROJECT NO:

SHEET NO: 391 E

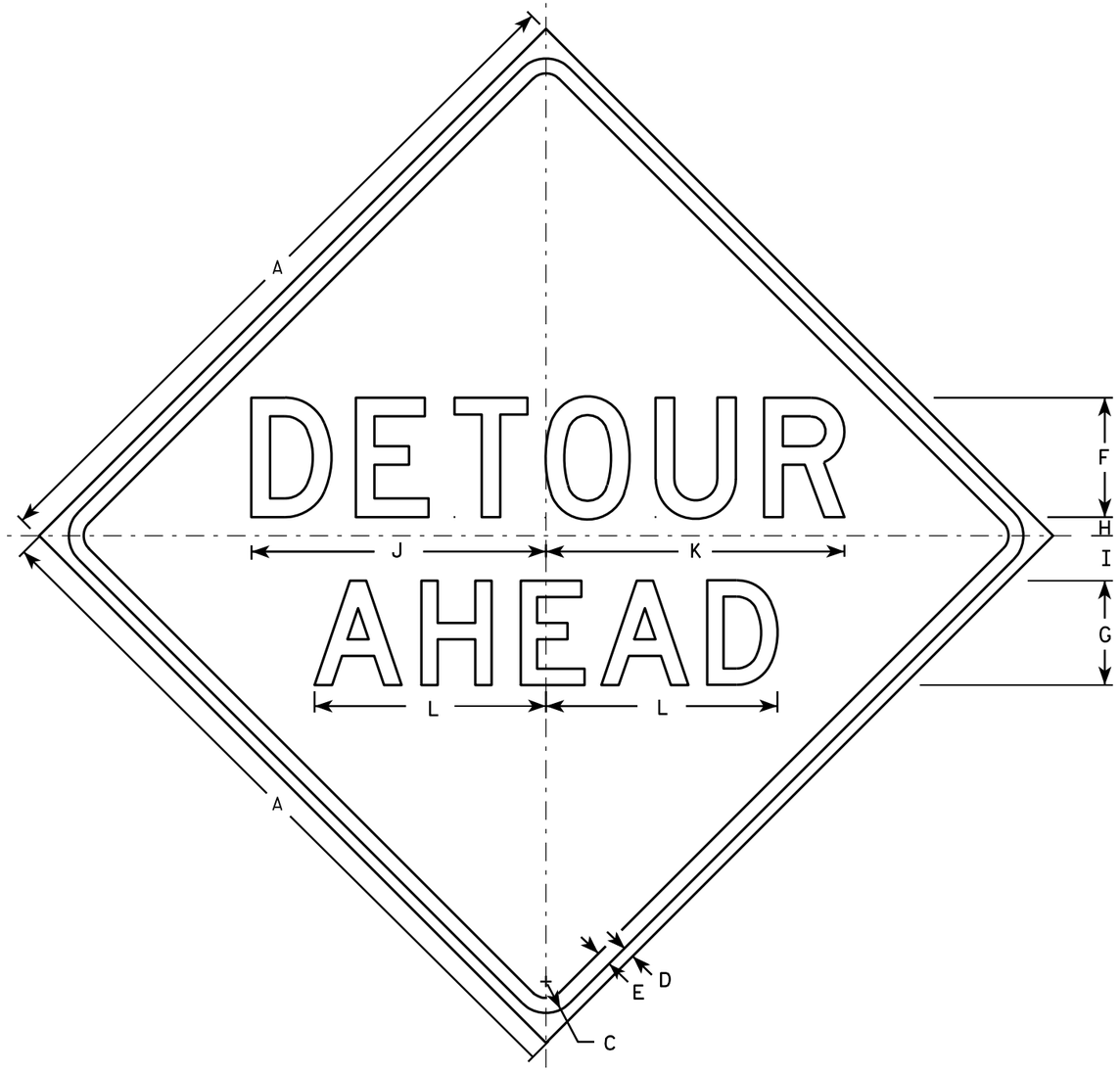

W20-2A

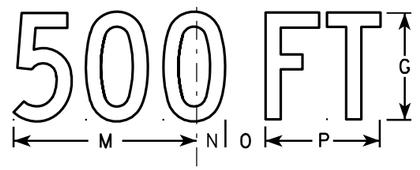

W20-2D

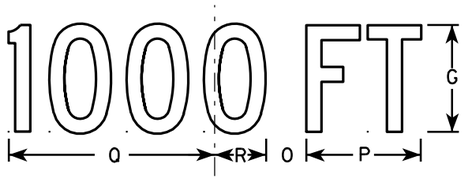

W20-2C

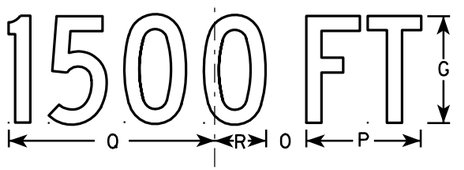

W20-2B

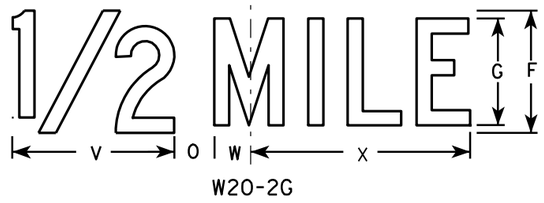

W20-2G



W20-2F

NOTES

1. Sign is Type II - Type F Reflective - reference WIS DOT Standard Specification for HIGHWAY and STRUCTURE CONSTRUCTION latest edition.
2. Color:
   Background - Orange
   Message - Black
3. Message Series - See note 5
4. Corners may be square or rounded when base material is plywood but borders shall be rounded as shown. When base material is metal, the corners and borders shall be rounded.
5. Line 1 is Series D.
   Line 2 is Series D for AHEAD and Series C for all other distances.

SIZE	A	B	C	D	E	F	G	H	I	J	K	L	M	N	O	P	Q	R	S	T	U	V	W	X	Y	Z	Area sq. ft.
1	36		1 5/8	5/8	3/4	6	5	1	2 1/4	14 3/4	15	11 5/8	9	1 3/8	1 7/8	5 5/8	10 1/8	2 1/2	1 1/8	4 1/2	3 1/2	8	1 3/4	10 3/4			9.0
2S	48		2 1/4	3/4	1	8	7	1 1/4	3	19 3/4	20	15 1/2	12	1 7/8	2 5/8	7 1/2	13 1/2	3 3/8	1 1/2	6	4 5/8	10 5/8	2 3/8	14 3/8			16.0
2M	48		2 1/4	3/4	1	8	7	1 1/4	3	19 3/4	20	15 1/2	12	1 7/8	2 5/8	7 1/2	13 1/2	3 3/8	1 1/2	6	4 5/8	10 5/8	2 3/8	14 3/8			16.0
3	48		2 1/4	3/4	1	8	7	1 1/4	3	19 3/4	20	15 1/2	12	1 7/8	2 5/8	7 1/2	13 1/2	3 3/8	1 1/2	6	4 5/8	10 5/8	2 3/8	14 3/8			16.0
4	48		2 1/4	3/4	1	8	7	1 1/4	3	19 3/4	20	15 1/2	12	1 7/8	2 5/8	7 1/2	13 1/2	3 3/8	1 1/2	6	4 5/8	10 5/8	2 3/8	14 3/8			16.0
5	48		2 1/4	3/4	1	8	7	1 1/4	3	19 3/4	20	15 1/2	12	1 7/8	2 5/8	7 1/2	13 1/2	3 3/8	1 1/2	6	4 5/8	10 5/8	2 3/8	14 3/8			16.0

STANDARD SIGN
W20-2A,B,C,D,F & G

WISCONSIN DEPT OF TRANSPORTATION

APPROVED Matthew R Rauch
for State Traffic Engineer

DATE 3/18/11 PLATE NO. W20-2.6

PROJECT NO:	HWY:	COUNTY:		SHEET NO: 392	E



W20-56A

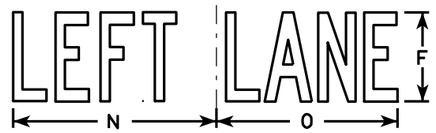

W20-55A

W20-5A

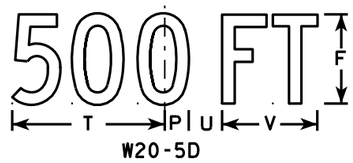

W20-5D

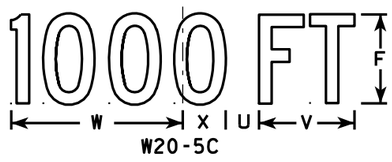

W20-5C

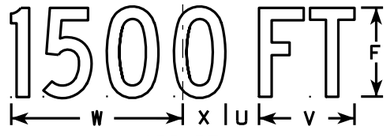

W20-5B



W20-5G



W20-5F

NOTES

1. Sign is Type II - Type F Reflective - reference WIS DOT Standard Specification for HIGHWAY and STRUCTURE CONSTRUCTION latest edition.
2. Color:
   Background - Orange
   Message - Black
3. Message Series - See Note 5
4. Corners may be square or rounded when base material is plywood but borders shall be rounded as shown. When base material is metal, the corners and borders shall be rounded.
5. " _____ LANE" is Series B.
   All other copy is Series C.

SIZE	A	B	C	D	E	F	G	H	I	J	K	L	M	N	O	P	Q	R	S	T	U	V	W	X	Y	Z	Area sq. ft.
1	36	6	1 5/8	5/8	3/4	5	1/8	2 1/2	13 1/8	10 3/4	9 1/2	14 1/4	13 5/8	12	12	1 3/8	1 1/8	4 1/2	3 1/2	9	1 1/8	5 5/8	10 1/8	2 1/2	1 3/4	8	9.0
2S	48	8	2 1/4	3/4	1	7	1 1/4	3 1/4	17 1/2	14 3/8	12 5/8	19	18 3/8	16	14 1/4	1 7/8	1 1/2	6	4 5/8	12	2 5/8	7 1/2	13 1/2	3 3/8	2 3/8	10 5/8	16.0
2M	48	8	2 1/4	3/4	1	7	1 1/4	3 1/4	17 1/2	14 3/8	12 5/8	19	18 3/8	16	14 1/4	1 7/8	1 1/2	6	4 5/8	12	2 5/8	7 1/2	13 1/2	3 3/8	2 3/8	10 5/8	16.0
3	48	8	2 1/4	3/4	1	7	1 1/4	3 1/4	17 1/2	14 3/8	12 5/8	19	18 3/8	16	14 1/4	1 7/8	1 1/2	6	4 5/8	12	2 5/8	7 1/2	13 1/2	3 3/8	2 3/8	10 5/8	16.0
4	48	8	2 1/4	3/4	1	7	1 1/4	3 1/4	17 1/2	14 3/8	12 5/8	19	18 3/8	16	14 1/4	1 7/8	1 1/2	6	4 5/8	12	2 5/8	7 1/2	13 1/2	3 3/8	2 3/8	10 5/8	16.0
5	48	8	2 1/4	3/4	1	7	1 1/4	3 1/4	17 1/2	14 3/8	12 5/8	19	18 3/8	16	14 1/4	1 7/8	1 1/2	6	4 5/8	12	2 5/8	7 1/2	13 1/2	3 3/8	2 3/8	10 5/8	16.0

STANDARD SIGN
W20-5A, B, C, D, F & G

WISCONSIN DEPT OF TRANSPORTATION

APPROVED Matthew R Rauch
for State Traffic Engineer

DATE 3/18/11 PLATE NO. W20-5.11

PROJECT NO: | HWY: | COUNTY: | SHEET NO: 393 | E

7

FILE NAME : C:\Users\PROJECTS\tr_stdplate\W205.DGN PLOT DATE : 18-MAR-2011 12:15 PLOT BY : mscj9h PLOT NAME : PLOT SCALE : 11.918087:1.000000
WISDOT/CADDS SHEET 42

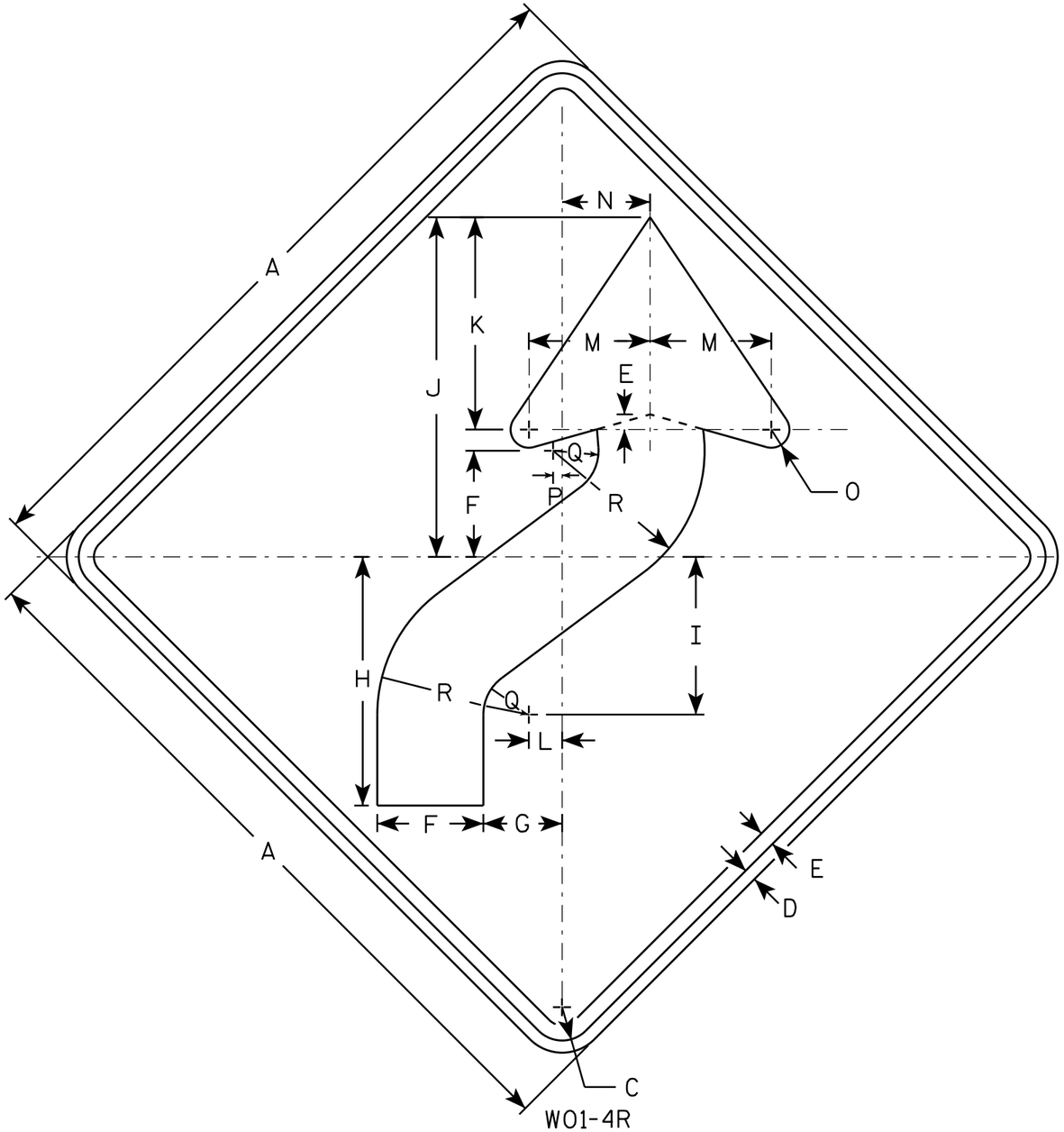

W01-4R

NOTES

1. Sign is Type II - Type F Reflective - reference WIS DOT Standard Specification for HIGHWAY and STRUCTURE CONSTRUCTION latest edition.
2. Color:
   Background - Orange
   Message - Black
3. Corners may be square or rounded when base material is plywood but borders shall be rounded as shown. When base material is metal, the corners and borders shall be rounded.
4. W01-4L is the same as W01-4R except the arrow is reversed along the vertical centerline.

SIZE	A	B	C	D	E	F	G	H	I	J	K	L	M	N	O	P	Q	R	S	T	U	V	W	X	Y	Z	Area sq. ft.
1	36		1 5/8	5/8	3/4	5 1/4	4	12 3/8	7 7/8	16 7/8	10 1/2	1 5/8	6	4 1/2	1	1/2	2 1/4	7 1/2									9.0
2S	48		2 1/4	3/4	1	7	5 1/4	16 1/2	10 1/2	22 1/2	14	2 1/4	8	6	1 1/4	5/8	3	10									16.0
2M	48		2 1/4	3/4	1	7	5 1/4	16 1/2	10 1/2	22 1/2	14	2 1/4	8	6	1 1/4	5/8	3	10									16.0
3	48		2 1/4	3/4	1	7	5 1/4	16 1/2	10 1/2	22 1/2	14	2 1/4	8	6	1 1/4	5/8	3	10									16.0
4	48		2 1/4	3/4	1	7	5 1/4	16 1/2	10 1/2	22 1/2	14	2 1/4	8	6	1 1/4	5/8	3	10									16.0
5	48		2 1/4	3/4	1	7	5 1/4	16 1/2	10 1/2	22 1/2	14	2 1/4	8	6	1 1/4	5/8	3	10									16.0

STANDARD SIGN
W01-4

WISCONSIN DEPT OF TRANSPORTATION

APPROVED Matthew R Rauch
for State Traffic Engineer

DATE 11/18/13 PLATE NO W01-4.1

PROJECT NO: | HWY: | COUNTY: | SHEET NO: E

FILE NAME : C:\CAEfiles\Projects\tr_stdplate\W014.DGN PLOT DATE : 28-FEB-2014 11:35 PLOT BY : mscj9h PLOT NAME : PLOT SCALE : 6.755110:1.000000
WISDOT/CADDS SHEET 42

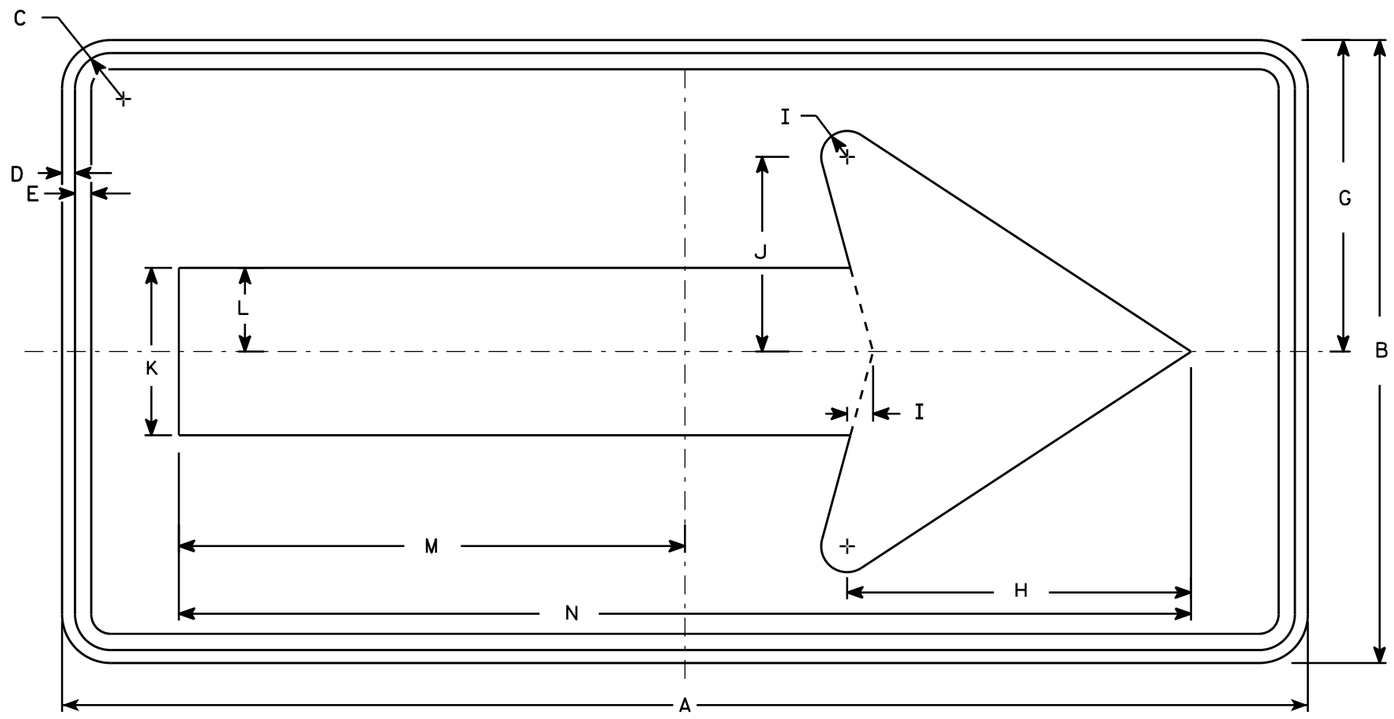

W01-6

NOTES

1. Sign is Type II - Type F Reflective - reference WIS DOT Standard Specification for HIGHWAY and STRUCTURE CONSTRUCTION latest edition.
2. Color:
   Background - Orange
   Message - Black
3. Corners may be square or rounded when base material is plywood but borders shall be rounded as shown. When base material is metal, the corners and borders shall be rounded.

SIZE	A	B	C	D	E	F	G	H	I	J	K	L	M	N	O	P	Q	R	S	T	U	V	W	X	Y	Z	Area sq. ft.
1																											
2S	48	24	1 3/8	1/2	5/8		12	13 1/4	1	7 1/2	6 1/2	3 1/4	19 1/2	39													8.0
2M	48	24	1 3/8	1/2	5/8		12	13 1/4	1	7 1/2	6 1/2	3 1/4	19 1/2	39													8.0
3	60	30	1 3/8	1/2	5/8		15	16 1/4	1 1/4	9 1/4	8	4	24 3/8	48 3/4													12.5
4	60	30	1 3/8	1/2	5/8		15	16 1/4	1 1/4	9 1/4	8	4	24 3/8	48 3/4													12.5
5	60	30	1 3/8	1/2	5/8		15	16 1/4	1 1/4	9 1/4	8	4	24 3/8	48 3/4													12.5

STANDARD SIGN
W01-6

WISCONSIN DEPT OF TRANSPORTATION

APPROVED Matthew R Rauch
for State Traffic Engineer

DATE 11/18/13 PLATE NO. W01-6.1

PROJECT NO: | HWY: | COUNTY: | SHEET NO: E

FILE NAME : C:\CAEfiles\Projects\tr_stdplate\W016.DGN PLOT DATE : 28-FEB-2014 11:37 PLOT BY : mscj9h PLOT NAME : PLOT SCALE : 5.837526:1.000000 WISDOT/CADDS SHEET 42

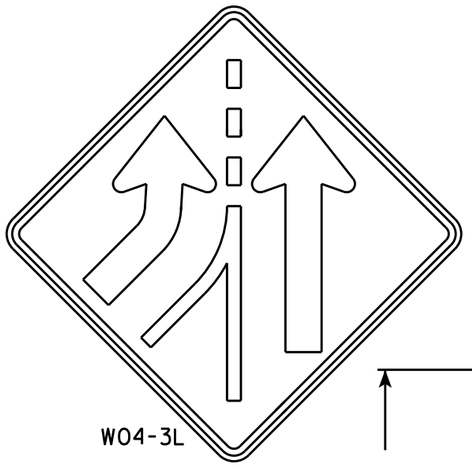

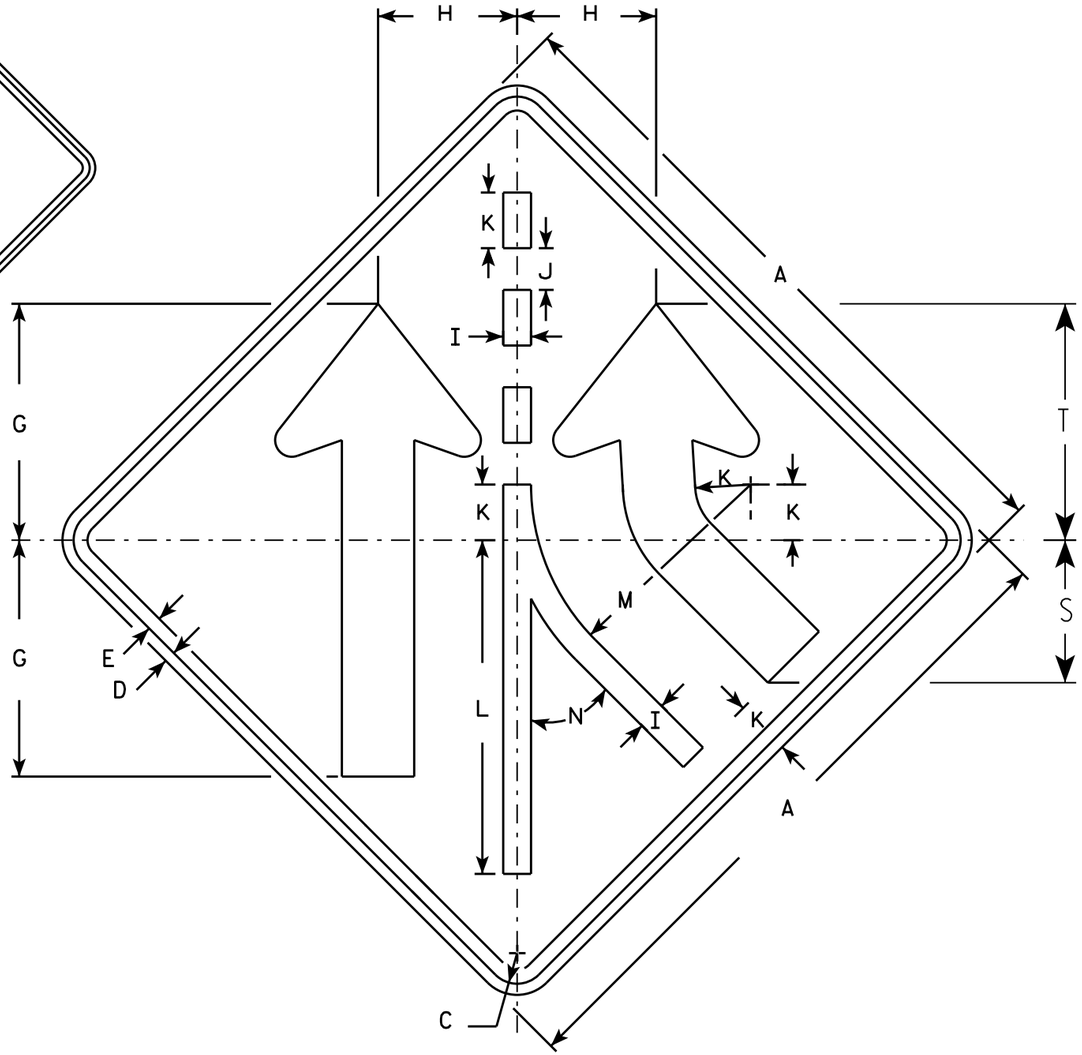

NOTES

1. Sign is Type II - Type F Reflective - reference WIS DOT Standard Specification for HIGHWAY and STRUCTURE CONSTRUCTION latest edition.
2. Color:
   Background - Orange
   Message - Black
3. Corners may be square or rounded when base material is plywood but borders shall be rounded as shown. When base material is metal, the corners and borders shall be rounded.
4. W04-3 L is the same as W04-3 R except the arrow is reversed along the vertical centerline.

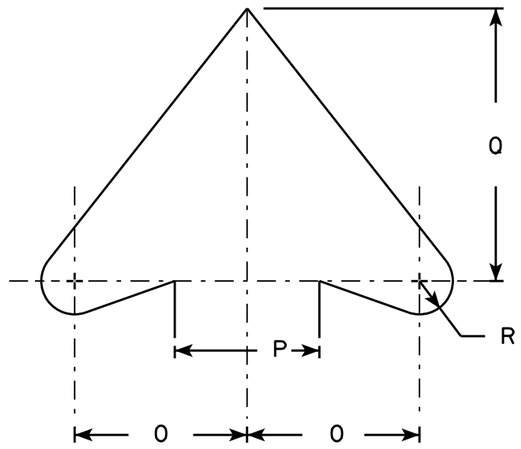

ARROW DETAIL

SIZE	A	B	C	D	E	F	G	H	I	J	K	L	M	N	O	P	Q	R	S	T	U	V	W	X	Y	Z	Area sq. ft.
1	36		1 5/8	5/8	3/4		12 3/4	7 1/2	1 1/2	2 1/4	3	18	11 7/8	45°	4 5/8	4	7 3/8	7/8	7 3/4	12 3/4							9.0
2S	48		2 1/4	3/4	1		17	10	2	3	4	24	15 3/4	45°	6 1/4	5 1/2	9 7/8	1 1/4	10 1/4	17							16.0
2M	48		2 1/4	3/4	1		17	10	2	3	4	24	15 3/4	45°	6 1/4	5 1/2	9 7/8	1 1/4	10 1/4	17							16.0
3	48		2 1/4	3/4	1		17	10	2	3	4	24	15 3/4	45°	6 1/4	5 1/2	9 7/8	1 1/4	10 1/4	17							16.0
4	48		2 1/4	3/4	1		17	10	2	3	4	24	15 3/4	45°	6 1/4	5 1/2	9 7/8	1 1/4	10 1/4	17							16.0
5	48		2 1/4	3/4	1		17	10	2	3	4	24	15 3/4	45°	6 1/4	5 1/2	9 7/8	1 1/4	10 1/4	17							16.0

STANDARD SIGN

W0433

WISCONSIN DEPT OF TRANSPORTATION

APPROVED Matthew R Rauch for State Traffic Engineer

DATE 11/20/13 PLATE W04-3.1

PROJECT NO:

SHEET NO: E

STATE PROJECT NUMBER

1032-10-75

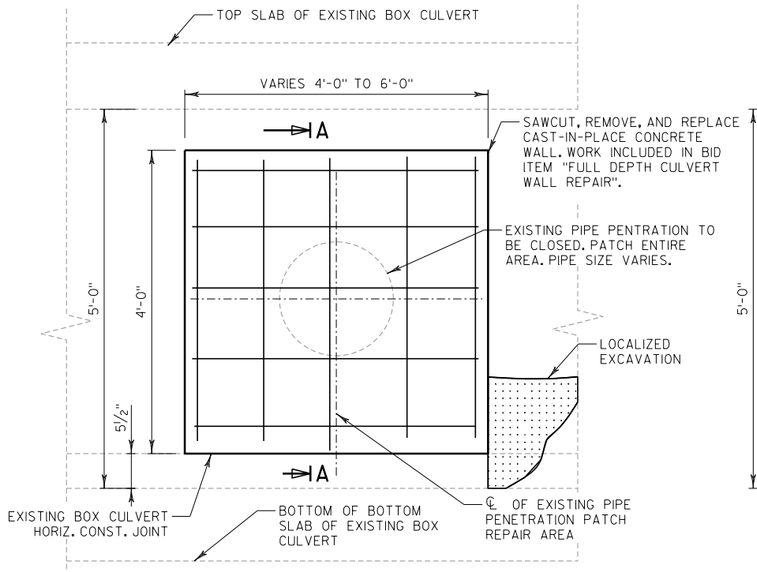

WALL ELEVATION

REPAIR AREA WITH EXISTING PIPE TO BE CLOSED.
AREAS IN BOTH NORTH & SOUTH WALLS
(4 LOCATIONS TOTAL)

LOCATION	APPROX. PATCH SIZE
①	6'-0" X 4'-0"
②	4'-0" X 4'-0"
③	4'-0" X 4'-0"
④	4'-0" X 4'-0"

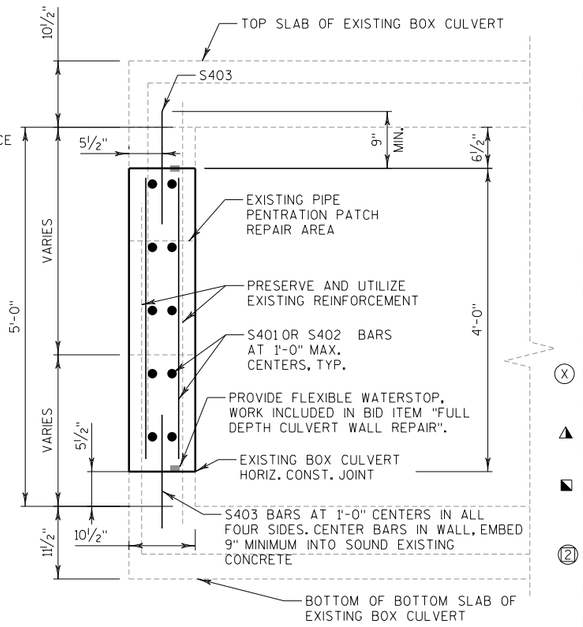

SECTION A-A

NOTES

DRAWINGS SHALL NOT BE SCALED.

BAR STEEL REINFORCEMENT SHALL BE EMBEDDED 2" CLEAR UNLESS NOTED OTHERWISE. THE FIRST DIGIT OF A THREE DIGIT BAR MARK SIGNIFIES THE BAR SIZE.

ALL DIMENSIONS ARE IN FEET AND INCHES UNLESS OTHERWISE NOTED. EXISTING BOX DIMENSIONS ARE BASED ON ORIGINAL STRUCTURE PLANS.

THE EXISTING STRUCTURE, C-30-2, IS A SINGLE CELL CONCRETE BOX CULVERT. IT HAS A CLEAR WIDTH OF 12'-0" AND A CLEAR HEIGHT OF 5'-0". THE FILL ON TOP OF THE BOX IS 2'-0" MAX.

THE CONTRACTOR MUST PROTECT THE EXISTING REINFORCEMENT STEEL THAT REMAINS DURING DEMOLITION. REPLACEMENT OF CULVERT COMPONENTS DAMAGED DURING THE REMOVAL OF THE EXISTING WALL WILL BE THE CONTRACTORS RESPONSIBILITY AND REPLACED AT NO ADDITIONAL COST TO THE OWNER. UTILIZE EXISTING BAR STEEL REINFORCEMENT WHERE SHOWN AND EXTEND 24 BAR DIAMETERS INTO NEW WORK, UNLESS SPECIFIED OTHERWISE.

ALL CONCRETE REMOVAL SHALL BE DEFINED BY A ½-INCH DEEP SAW CUT. THE COST FOR SAWCUTS ARE CONSIDERED INCLUDED IN BID ITEMS "CONCRETE SURFACE REPAIR" OR "FULL DEPTH CULVERT WALL REPAIR".

(X) REMOVAL, DISPOSAL, AND NEW CONCRETE PLACEMENT OF PIPE PENETRATION PATCH REPAIR AREA IS INCLUDED IN BID ITEM "FULL DEPTH CULVERT WALL REPAIR" WHERE EXISTING PIPES ARE TO BE CLOSED. USE BID ITEM "CONCRETE SURFACE REPAIR" WHERE EXISTING PIPES ARE TO REMAIN IN SERVICE. THE AREA OF EXISTING PIPES THAT REMAIN IN SERVICE IS INCLUDED IN THE QUANTITY FOR "CONCRETE SURFACE REPAIR".

◭ CONCRETE SURFACE REPAIR AREAS AND EPOXY INJECTION CRACK REPAIRS TO BE DETERMINED IN THE FIELD BY THE FIELD ENGINEER. QUANTITIES SHOWN ARE AN ESTIMATE ONLY AND WILL BE VERIFIED BY THE ENGINEER.

◥ REMOVE STEEL RAILING AT EAST END OF CULVERT. CUT BOLTS FLUSH AND COAT WITH EPOXY AND A ZINC RICH PRIMER. ALL WORK RELATED TO THE REMOVAL, DISPOSAL, AND COATING APPLICATION IS INCLUDED IN BID ITEM "REMOVING STEEL BARRIER". RAILING WILL BE REPLACED WITH LONG-SPAN GUARDRAIL SYSTEM. (SEE ROADWAY PLANS)

(2) INDICATES WING NUMBER

LOCALIZED EXCAVATION IS CONSIDERED INCIDENTAL TO BID ITEMS "CONCRETE SURFACE REPAIR" AND "FULL DEPTH CULVERT WALL REPAIR".

FILL LOCALIZED CAVITIES BEHIND THE "FULL DEPTH CULVERT WALL REPAIR" AREAS WITH "BACKFILL CONTROL LOW SLUMP". DECOMMISSION PIPES FOUND BEHIND REPAIR AREAS WITH BID ITEM "ABANDONING CULVERT PIPES". QUANTITIES SHOWN ARE AN ESTIMATE ONLY AND WILL BE DETERMINED IN THE FIELD BY THE ENGINEER.

TOTAL ESTIMATED QUANTITIES

BID ITEM NO.	BID ITEMS	UNIT	TOTAL
204.0270	ABANDONING CULVERT PIPES	EACH	1
204.9090.S	REMOVING STEEL BARRIER	LF	12
209.0200.S	BACKFILL CONTROLLED LOW STRENGTH	CY	2
502.4204	ADHESIVE ANCHORS NO. 4 BAR	EACH	120
505.0600	BAR STEEL REINFORCEMENT HS COATED STRUCTURES	LB	516
509.1500	CONCRETE SURFACE REPAIR	SF	146
509.9025.S	EPOXY INJECTION CRACK REPAIR	LF	24
509.9026.S	CORED HOLES 2-INCH DIAMETER	EACH	2
SPV.0165.0001	FULL DEPTH CULVERT WALL REPAIR	SF	73
	NON-BID ITEMS		
	FLEXIBLE WATERSTOP		

DESIGN DATA

LIVE LOAD:
DESIGN LOADING: HS-20

EARTH LOAD:
DESIGN FOR FILL MAX HEIGHT 2 FEET
LIVE LOAD SURCHARGE = 240 PSF
TOTAL UNIT WEIGHT OF SOIL (SATURATED) = 130 PCF
AT REST EARTH PRESSURE COEFFICIENT (Ko) = 0.5

MATERIAL PROPERTIES:
CONCRETE MASONRY _____ f'c = 3,500 psi

HIGH STRENGTH BAR STEEL _ fy = 60,000 psi
REINFORCEMENT (GRADE 60)

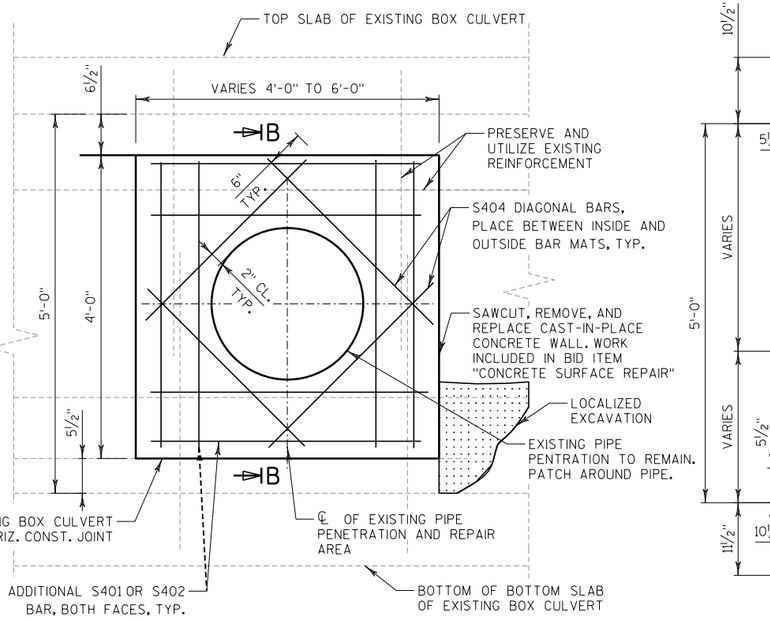

WALL ELEVATION

REPAIR AREA WITH EXISTING PIPE TO REMAIN.
AREAS IN BOTH NORTH & SOUTH WALLS
(3 LOCATIONS TOTAL)

LOCATION	EXISTING PIPE TO REMIAN IN SERVICE	APPROX. PATCH SIZE
⑤	24"	4'-0" X 4'-0"
⑥	24"	4'-0" X 4'-0"
⑦	48"	6'-0" X 4'-0"

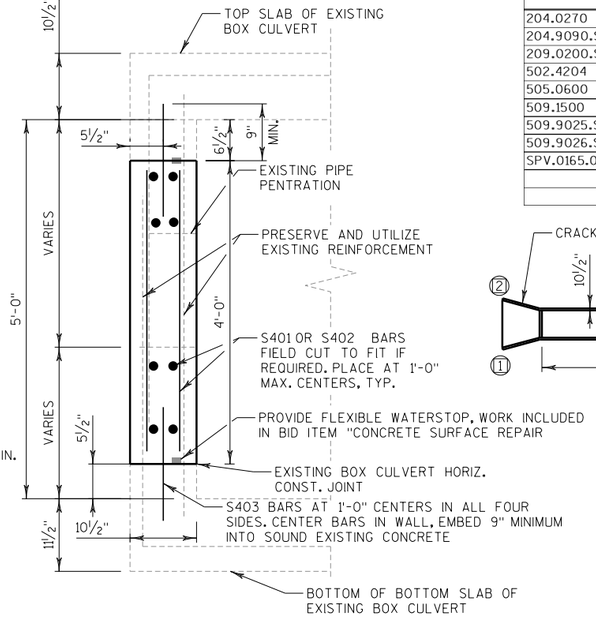

SECTION B-B

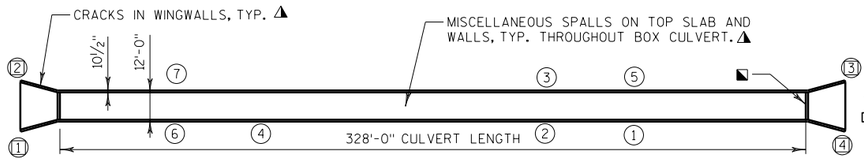

PLAN

TRAFFIC DATA

IH 41/94
ADT = 90,600 (2020)
ADT = 107,200 (2040)
RDS = 70 MPH

EAST FRONTAGE ROAD
ADT = 1,700 (2023)
ADT = 2,100 (2043)
RDS = 60 MPH

BAR CHART

BAR MARK	COAT	NO.	LENGTH	BENT	LOCATION
S401	X	114	3'-8"		HORIZ. AND VERT. BARS
S402	X	18	5'-8"		HORIZ. AND VERT. BARS
S403	X	120	1'-6"		WALL ANCHORS
S404	X	24	3'-0"		DIAGONAL BARS

WISCONSIN
MICHAEL D. RADTKE
E-40967
ELM GROVE, WI
PROFESSIONAL ENGINEER
7/19/2021

STRUCTURES DESIGN CONTACTS

BUREAU OF STRUCTURES:
AARON BONK (608) 261-0261

CONSULTANT:
MICHAEL RADTKE (414) 939-7039

NO.	DATE	REVISION	BY

emcs LLC
1300 W. Canal Street, Suite 200
Milwaukee, WI 53233
414.347.1607 Fax 414.347.1347

STATE OF WISCONSIN
DEPARTMENT OF TRANSPORTATION

ACCEPTED _____ SDR 12/21/21
CHIEF STRUCTURES DESIGN ENGINEER DATE

STRUCTURE C-30-2

IH 41/IH 94 & EAST FRONTAGE OVER DRAINAGE

COUNTY	KENOSHA	VILLAGE	PLEASANT PRAIRIE
DESIGN SPEC.	REHABILITATION N/A		

DESIGNED BY	JRM	DESIGN CK'D.	MDR	DRAWN BY	JRM	PLANS CK'D.	MDR

GENERAL PLAN & ELEVATION

SHEET 1 OF 1
397

8

8

EFR SOUTH OF STH 50

STATION	DISTANCE	AREA (SF) CUT	AREA (SF) FILL	INCREMENTAL VOLUME (CY) CUT	INCREMENTAL VOLUME (CY) FILL	CUMULATIVE VOLUME (CY) CUT 1.00	CUMULATIVE VOLUME (CY) EXPANDED FILL 1.25	MASS ORDINATE
5255+94 AH	0.00	9.42	0.38	0.00	0.00	0.00	0.00	0.00
5256+50	55.91	7.87	0.37	17.90	0.78	17.90	0.98	16.92
5256+67	17.00	4.21	0.39	3.80	0.24	21.70	1.28	20.42
5256+92	25.00	3.45	2.61	3.55	1.39	25.25	3.01	22.23
5257+00	8.00	4.16	3.88	1.13	0.96	26.37	4.21	22.16
5257+17	17.00	5.36	2.82	3.00	2.11	29.37	6.85	22.52
5257+50	33.00	1.15	7.15	3.98	6.09	33.35	14.46	18.89
5258+00	50.00	0.50	2.19	1.53	8.65	34.88	25.27	9.62
5258+50	50.00	0.45	0.08	0.88	2.10	35.76	27.90	7.86
5259+00	50.00	1.99	1.32	2.26	1.30	38.02	29.52	8.50
5259+50	50.00	1.34	1.76	3.08	2.85	41.10	33.07	8.02
5260+00	50.00	7.30	6.09	8.00	7.26	49.09	42.15	6.94
5260+13	13.00	6.02	4.22	3.21	2.48	52.30	45.25	7.05
5260+38	25.00	1.31	19.93	3.39	11.18	55.69	59.22	-3.53
5260+50	12.00	1.40	22.54	0.60	9.44	56.29	71.02	-14.73
5260+63	12.97	1.70	24.35	0.74	11.26	57.04	85.10	-28.07
5261+00	37.03	3.28	0.05	3.41	16.73	60.45	106.02	-45.57
5261+55 BK	54.53	0.09	0.09	3.39	0.15	63.84	106.20	-42.36
				63.84	84.96			

EFR BETWEEN CTH C & STH 50

STATION	DISTANCE	AREA (SF) CUT	AREA (SF) FILL	INCREMENTAL VOLUME (CY) CUT	INCREMENTAL VOLUME (CY) FILL	CUMULATIVE VOLUME (CY) CUT 1.00	CUMULATIVE VOLUME (CY) EXPANDED FILL 1.25	MASS ORDINATE
5241+69 AH	0.00	1.08	0.00	0.00	0.00	0.00	0.00	0.00
5242+00	31.06	1.51	0.00	1.49	0.00	1.49	0.00	1.49
5242+45	44.99	2.37	5.73	3.23	4.77	4.72	5.97	-1.24
5242+50	5.01	2.47	4.44	0.45	0.94	5.17	7.15	-1.97
5242+70	20.00	1.42	2.02	1.44	2.39	6.61	10.14	-3.52
5242+95	25.00	0.83	1.83	1.04	1.78	7.65	12.36	-4.71
5243+00	5.00	1.00	1.44	0.17	0.30	7.82	12.74	-4.92
5243+50	50.00	0.02	0.18	0.94	1.50	8.76	14.61	-5.85
5244+00	50.00	0.32	0.00	0.31	0.16	9.08	14.82	-5.74
5245+00	100.00	0.16	0.18	0.88	0.33	9.95	15.22	-5.27
5245+50	50.00	0.05	0.31	0.19	0.45	10.15	15.78	-5.64
5246+00	50.00	0.26	0.03	0.29	0.31	10.44	16.17	-5.73
5246+20	19.86	0.01	0.77	0.10	0.29	10.53	16.53	-6.00
5246+45	24.99	0.22	0.38	0.10	0.53	10.64	17.19	-6.56
5246+45	0.00	1.78	0.06	0.00	0.00	10.64	17.19	-6.56
5246+50	5.15	1.99	0.03	0.36	0.01	11.00	17.21	-6.21
5246+70	19.84	1.94	0.16	1.44	0.07	12.44	17.30	-4.86
5247+00	30.16	1.92	0.00	2.15	0.09	14.59	17.41	-2.82
5247+56 BK	56.24	1.41	0.00	3.47	0.00	18.06	17.41	0.65
				18.06	13.93			

EFR DES PLAINES R NE								
		AREA (SF)		INCREMENTAL VOLUME (CY)		CUMULATIVE VOLUME (CY)		
STATION	DISTANCE	CUT	FILL	CUT	FILL	CUT 1.00	EXPANDED FILL 1.25	MASS ORDINATE
5237+87.402 AH	0.00	3.56	9.77	0.00	0.00	0.00	0.00	0.00
5238+00	12.60	1.01	2.15	1.07	2.78	1.07	3.48	-2.41
5238+27	27.00	1.35	1.14	1.18	1.64	2.25	5.53	-3.28
5238+50	23.00	7.55	0.00	3.79	0.49	6.04	6.14	-0.10
5238+52	2.00	7.50	0.00	0.56	0.00	6.60	6.14	0.46
5238+77.599	25.60	5.54	0.01	6.18	0.00	12.78	6.14	6.63
5239+00	22.40	7.28	0.12	5.32	0.05	18.10	6.21	11.89
5239+50	50.00	10.27	0.21	16.25	0.30	34.35	6.59	27.76
5239+76.879 BK	26.88	8.00	0.68	9.10	0.44	43.45	7.14	36.31
				43.45	5.71			

EFR DES PLAINES R NW								
		AREA (SF)		INCREMENTAL VOLUME (CY)		CUMULATIVE VOLUME (CY)		
STATION	DISTANCE	CUT	FILL	CUT	FILL	CUT 1.00	EXPANDED FILL 1.25	MASS ORDINATE
5237+87.402 AH	0.00	2.27	4.31	0.00	0.00	0.00	0.00	0.00
5238+00	12.60	1.04	1.36	0.77	1.32	0.77	1.65	-0.88
5238+27	27.00	1.25	1.41	1.14	1.38	1.91	3.38	-1.47
5238+50	23.00	1.93	0.00	1.35	0.60	3.27	4.13	-0.86
5238+52	2.00	1.68	0.00	0.13	0.00	3.40	4.13	-0.73
5238+77.599	25.60	0.08	0.12	0.83	0.06	4.23	4.20	0.03
5239+00	22.40	0.08	0.01	0.07	0.05	4.30	4.27	0.03
5239+50	50.00	0.00	0.02	0.07	0.03	4.37	4.31	0.07
5239+76.879 BK	26.88	0.00	0.10	0.00	0.06	4.37	4.38	-0.01
				4.37	3.51			

EFR DES PLAINES R SE

STATION	DISTANCE	AREA (SF) CUT	AREA (SF) FILL	INCREMENTAL VOLUME (CY) CUT	INCREMENTAL VOLUME (CY) FILL	CUMULATIVE VOLUME (CY) CUT 1.00	CUMULATIVE VOLUME (CY) EXPANDED FILL 1.25	MASS ORDINATE
5234+18.814 AH	0.00	2.21	7.19	0.00	0.00	0.00	0.00	0.00
5234+50	31.19	8.72	0.60	6.31	4.50	6.31	5.62	0.69
5235+00	50.00	5.28	6.53	12.97	6.60	19.28	13.87	5.41
5235+22.462	22.46	1.09	10.37	2.65	7.03	21.93	22.66	-0.73
5235+47.69	25.23	2.41	5.96	1.63	7.63	23.56	32.19	-8.63
5235+50	2.31	2.25	6.26	0.20	0.52	23.76	32.85	-9.09
5235+72.67	22.67	0.99	2.53	1.36	3.69	25.12	37.46	-12.34
5236+00	27.33	0.78	3.04	0.89	2.82	26.02	40.98	-14.96
5236+11.199 BK	11.20	0.57	16.64	0.28	4.08	26.29	46.08	-19.78
				26.29	36.86			

EFR DES PLAINES R SW

STATION	DISTANCE	AREA (SF) CUT	AREA (SF) FILL	INCREMENTAL VOLUME (CY) CUT	INCREMENTAL VOLUME (CY) FILL	CUMULATIVE VOLUME (CY) CUT 1.00	CUMULATIVE VOLUME (CY) EXPANDED FILL 1.25	MASS ORDINATE
5234+18.814 AH	0.00	0.35	2.18	0.00	0.00	0.00	0.00	0.00
5234+50	31.19	1.13	2.35	0.86	2.61	0.86	3.27	-2.41
5235+00	50.00	0.66	1.96	1.66	3.99	2.52	8.25	-5.74
5235+22.462	22.46	1.48	2.50	0.89	1.86	3.41	10.57	-7.16
5235+47.69	25.23	5.39	0.39	3.21	1.35	6.61	12.26	-5.65
5235+50	2.31	4.82	0.65	0.44	0.04	7.05	12.32	-5.27
5235+72.67	22.67	1.35	1.82	2.59	1.04	9.64	13.62	-3.98
5236+00	27.33	1.04	1.91	1.21	1.89	10.85	15.98	-5.12
5236+11.199 BK	11.20	0.98	4.71	0.42	1.37	11.27	17.69	-6.42
				11.27	14.15			

EFR BETWEEN CTH 165 & STH C

STATION	DISTANCE	AREA (SF) CUT	AREA (SF) FILL	INCREMENTAL VOLUME (CY) CUT	INCREMENTAL VOLUME (CY) FILL	CUMULATIVE VOLUME (CY) CUT 1.00	CUMULATIVE VOLUME (CY) EXPANDED FILL 1.25	MASS ORDINATE
3163+75.54 AH	0.00	0.08	0.18	0.00	0.00	0.00	0.00	0.00
3164+00	24.46	0.24	1.24	0.14	0.64	0.14	0.81	-0.66
3164+50	50.00	2.97	3.61	2.97	4.50	3.12	6.42	-3.31
3164+94.147	44.15	10.17	5.23	10.75	7.23	13.87	15.46	-1.59
3165+00	5.85	9.30	4.93	2.11	1.10	15.98	16.83	-0.86
3165+19.145	19.15	6.88	3.90	5.74	3.13	21.72	20.75	0.97
3165+44.159	25.01	0.33	1.12	3.34	2.33	25.06	23.66	1.40
3165+50	5.84	0.40	0.92	0.08	0.22	25.14	23.93	1.20
3166+00	50.00	0.19	0.55	0.54	1.36	25.68	25.63	0.04
3166+50	50.00	0.01	2.60	0.18	2.91	25.86	29.27	-3.41
3167+00	50.00	0.02	2.63	0.02	4.84	25.88	35.32	-9.44
3167+50	50.00	0.03	2.41	0.04	4.66	25.92	41.15	-15.23
3168+00	50.00	0.01	1.93	0.04	4.02	25.96	46.17	-20.21
3168+50	50.00	0.01	0.64	0.01	2.38	25.97	49.15	-23.17
3169+00	50.00	0.02	0.47	0.02	1.03	26.00	50.43	-24.43
3169+50	50.00	0.02	0.52	0.03	0.92	26.03	51.58	-25.55
3170+00	50.00	0.04	0.58	0.05	1.03	26.08	52.86	-26.78
3170+50	50.00	0.00	1.21	0.04	1.66	26.12	54.94	-28.82
3171+00	50.00	0.04	0.74	0.04	1.80	26.16	57.19	-31.03
3171+50	50.00	0.13	1.25	0.16	1.84	26.32	59.49	-33.17
3172+00	50.00	0.11	0.86	0.23	1.96	26.55	61.94	-35.39
3172+50	50.00	0.15	1.14	0.24	1.85	26.79	64.26	-37.47
3173+00	50.00	0.01	4.17	0.15	4.92	26.94	70.41	-43.47
3173+50	50.00	0.07	1.10	0.08	4.88	27.01	76.51	-49.50
3174+00	50.00	0.49	0.14	0.52	1.15	27.54	77.95	-50.42
3174+50	50.00	1.29	0.00	1.65	0.13	29.18	78.12	-48.94
3174+82.383	32.38	0.66	0.03	1.16	0.02	30.35	78.14	-47.80
3175+00	17.62	0.42	0.19	0.35	0.07	30.69	78.23	-47.54
3175+50	50.00	0.00	3.34	0.38	3.27	31.08	82.32	-51.24
3176+00	50.00	0.00	1.25	0.00	4.25	31.08	87.63	-56.55
3176+04.955	4.96	0.00	1.61	0.00	0.26	31.08	87.96	-56.88
3176+54.964	25.00	0.00	3.92	0.00	2.56	31.08	91.16	-60.08
3176+50	20.04	0.95	0.00	0.35	1.46	31.43	92.98	-61.55
3176+54.964	4.96	0.73	0.00	0.15	0.00	31.59	92.98	-61.39
3177+00	45.04	0.31	0.00	0.87	0.00	32.45	92.98	-60.52
3177+50	50.00	0.40	0.00	0.66	0.00	33.12	92.98	-59.86
3177+60.826 BK	10.83	0.00	0.00	0.08	0.00	33.20	92.98	-59.78
				33.20	74.38			

EFR NORTH STH 165

STATION	DISTANCE	AREA (SF) CUT	AREA (SF) FILL	INCREMENTAL VOLUME (CY) CUT	INCREMENTAL VOLUME (CY) FILL	CUMULATIVE VOLUME (CY) CUT 1.00	CUMULATIVE VOLUME (CY) EXPANDED FILL 1.25	MASS ORDINATE
3163+75.54 AH	0.00	1.23	0.04	0.00	0.00	0.00	0.00	0.00
3147+00	34.95	0.00	0.98	0.80	0.66	0.80	0.83	-0.03
3147+42.728	42.73	3.56	1.32	2.82	1.82	3.61	3.10	0.51
3147+50	7.27	5.15	0.93	1.17	0.30	4.78	3.48	1.30
3147+67.73	17.73	7.56	0.21	4.17	0.37	8.96	3.95	5.01
3147+92.731	25.00	9.46	0.12	7.88	0.15	16.84	4.14	12.70
3148+00	7.27	8.04	0.08	2.36	0.03	19.20	4.17	15.02
3148+50	50.00	0.47	6.03	7.88	5.66	27.08	11.25	15.83
3149+00	50.00	0.03	5.96	0.46	11.09	27.54	25.11	2.42
3149+50	50.00	0.69	0.13	0.67	5.63	28.20	32.16	-3.95
3150+00	50.00	0.22	1.65	0.84	1.65	29.05	34.22	-5.17
3150+44.027	44.03	0.11	2.48	0.27	3.37	29.31	38.43	-9.12
3150+50	5.97	0.10	2.72	0.02	0.58	29.34	39.15	-9.81
3150+69.016	19.02	0.09	4.77	0.07	2.64	29.40	42.44	-13.04
3150+94.016	25.00	0.19	4.40	0.13	4.24	29.53	47.75	-18.22
3151+00	5.98	0.21	3.95	0.04	0.93	29.57	48.90	-19.33
3151+50	50.00	0.28	0.07	0.46	3.72	30.03	53.56	-23.53
3151+61.133 BK	11.13	0.15	0.15	0.09	0.05	30.12	53.61	-23.50
				30.12	42.89			

EFR NORTH OF CTH ML

STATION	DISTANCE	AREA (SF) CUT	AREA (SF) FILL	INCREMENTAL VOLUME (CY) CUT	INCREMENTAL VOLUME (CY) FILL	CUMULATIVE VOLUME (CY) CUT 1.00	CUMULATIVE VOLUME (CY) EXPANDED FILL 1.25	MASS ORDINATE
1942+23 AH	0.00	0.11	1.37	0.00	0.00	0.00	0.00	0.00
1942+50	26.87	0.16	3.12	0.14	2.23	0.14	2.79	-2.66
1943+00	50.00	7.80	0.00	7.38	2.89	7.51	6.41	1.11
1943+47	46.97	1.98	0.24	8.51	0.21	16.02	6.66	9.35
1943+50	3.03	1.62	0.64	0.20	0.05	16.22	6.72	9.50
1943+73	22.53	1.97	0.54	1.50	0.49	17.72	7.34	10.38
1943+98	25.50	2.75	0.60	2.23	0.54	19.95	8.01	11.94
1944+00	1.97	2.88	0.41	0.21	0.04	20.16	8.06	12.10
1944+50	50.00	4.27	0.00	6.62	0.38	26.78	8.54	18.25
1945+00	50.00	6.53	0.00	10.01	0.00	36.79	8.54	28.25
1945+50	50.00	1.19	0.63	7.15	0.58	43.94	9.26	34.68
1946+00	50.00	1.34	0.05	2.34	0.63	46.28	10.05	36.23
1946+00	0.04	1.34	0.05	0.00	0.00	46.28	10.05	36.24
1946+26	25.47	2.56	0.00	1.84	0.03	48.13	10.08	38.05
1946+50	24.49	1.32	0.17	1.76	0.08	49.89	10.18	39.71
1946+51	0.51	1.23	0.18	0.02	0.00	49.91	10.18	39.73
1947+00	49.48	0.54	0.33	1.62	0.46	51.53	10.75	40.78
1947+49 BK	49.03	0.27	0.41	0.74	0.67	52.27	11.59	40.68
				52.27	9.27			

EFR NB LEFT TURN LANE

STATION	DISTANCE	AREA (SF) CUT	AREA (SF) SALVAGED/ UNUSABLE PAVEMENT MATERIAL	AREA (SF) FILL	INCREMENTAL VOLUME (CY) (UNADJUSTED) CUT	INCREMENTAL VOLUME (CY) (UNADJUSTED) SALVAGED/ UNUSABLE PAVEMENT MATERIAL	INCREMENTAL VOLUME (CY) (UNADJUSTED) FILL	CUMULATIVE VOLUME (CY) CUT 1.00	CUMULATIVE VOLUME (CY) SALVAGED/ UNUSABLE PAVEMENT 1.00	CUMULATIVE VOLUME (CY) EXPANDED FILL 1.25	MASS ORDINATE
1994+13.11 AH	0.00	16.99	3.33	0.00	0.00	0.00	0.00	0.00	0.00	0.00	0.00
1994+25	11.89	18.26	3.33	0.00	7.76	1.47	0.00	7.76	1.47	0.00	6.29
1994+50	25.00	20.79	3.33	0.00	18.08	3.09	0.00	25.84	4.55	0.00	21.28
1994+75	25.00	23.85	3.33	0.00	20.66	3.09	0.00	46.50	7.64	0.00	38.86
1995+00	25.00	25.43	3.33	0.00	22.81	3.09	0.00	69.32	10.73	0.00	58.59
1995+25	25.00	28.22	3.33	0.00	24.84	3.09	0.00	94.16	13.81	0.00	80.34
1995+50	25.00	29.86	3.33	0.00	26.89	3.09	0.00	121.05	16.90	0.00	104.15
1995+75	25.00	25.68	13.00	0.00	25.71	7.56	0.00	146.76	24.46	0.00	122.30
1996+00	25.00	25.63	13.00	0.00	23.75	12.04	0.00	170.51	36.50	0.00	134.01
1996+25	25.00	25.19	13.00	0.00	23.53	12.04	0.00	194.04	48.54	0.00	145.51
1996+50	25.00	26.01	9.00	0.00	23.71	10.19	0.00	217.75	58.72	0.00	159.03
1996+75	25.00	26.29	9.67	0.00	24.22	8.64	0.00	241.97	67.36	0.00	174.61
1997+00	25.00	26.92	9.73	0.00	24.64	8.98	0.00	266.60	76.34	0.00	190.26
1997+25	25.00	27.62	10.00	0.00	25.25	9.14	0.00	291.85	85.48	0.00	206.37
1997+50	25.00	27.88	10.00	0.00	25.69	9.26	0.00	317.55	94.74	0.00	222.81
1997+75	25.00	27.69	10.00	0.00	25.72	9.26	0.00	343.27	104.00	0.00	239.27
1997+84.935 BK	9.94	27.09	10.00	0.00	10.08	3.68	0.00	353.35	107.68	0.00	245.67
					353.35	107.68	0.00				

STH 165 RIGHT TURN LANE AT EFR

STATION	DISTANCE	AREA (SF) CUT	AREA (SF) SALVAGED/ UNUSABLE PAVEMENT MATERIAL	AREA (SF) FILL	INCREMENTAL VOLUME (CY) (UNADJUSTED) CUT	INCREMENTAL VOLUME (CY) (UNADJUSTED) SALVAGED/ UNUSABLE PAVEMENT MATERIAL	INCREMENTAL VOLUME (CY) (UNADJUSTED) FILL	CUMULATIVE VOLUME (CY) CUT 1.00	CUMULATIVE VOLUME (CY) SALVAGED/ UNUSABLE PAVEMENT 1.00	CUMULATIVE VOLUME (CY) EXPANDED FILL 1.25	MASS ORDINATE
406+67.009 AH	0.00	28.07	9.67	3.66	0.00	0.00	0.00	0.00	0.00	0.00	0.00
406+75	7.99	28.93	8.80	10.52	8.43	2.73	2.10	8.43	2.73	2.62	3.08
407+00	25.00	27.90	6.75	17.10	26.31	7.20	12.79	34.75	9.93	18.60	6.21
407+25	25.00	27.24	4.62	19.90	25.53	5.26	17.13	60.28	15.19	40.01	5.07
407+50	25.00	25.62	2.58	19.67	24.47	3.33	18.32	84.75	18.53	62.92	3.31
407+75	25.00	24.41	2.17	20.10	23.16	2.20	18.41	107.91	20.73	85.93	1.25
408+00	25.00	24.59	2.08	18.22	22.68	1.97	17.74	130.59	22.69	108.11	-0.21
408+25	25.00	25.14	2.08	16.66	23.02	1.93	16.15	153.62	24.62	128.30	0.70
408+50	25.00	25.06	2.08	17.25	23.24	1.93	15.70	176.86	26.55	147.92	2.39
408+75	25.00	25.30	2.08	17.24	23.31	1.93	15.97	200.17	28.48	167.88	3.81
409+00	25.00	26.29	2.08	16.63	23.88	1.93	15.68	224.05	30.41	187.48	6.17
409+25	25.00	27.28	2.08	15.56	24.80	1.93	14.90	248.85	32.34	206.10	10.41
409+50	25.00	27.72	2.08	13.63	25.46	1.93	13.51	274.31	34.27	222.99	17.05
409+75	25.00	28.57	2.55	12.33	26.06	2.15	12.02	300.37	36.41	238.01	25.94
410+00	25.00	29.11	4.53	10.09	26.70	3.28	10.38	327.08	39.69	250.99	36.40
410+25	25.00	29.10	6.17	6.48	26.95	4.95	7.67	354.02	44.64	260.57	48.81
410+50	25.00	29.16	7.75	2.69	26.97	6.44	4.24	380.99	51.08	265.88	64.04
410+75	25.00	27.21	9.33	1.61	26.09	7.91	1.99	407.09	58.99	268.36	79.74
411+00	25.00	26.42	10.92	0.80	24.83	9.38	1.11	431.92	68.37	269.75	93.80
411+10.08 BK	10.08	25.50	11.67	0.33	9.69	4.22	0.21	441.61	72.58	270.02	99.01
					441.61	72.58	216.01				

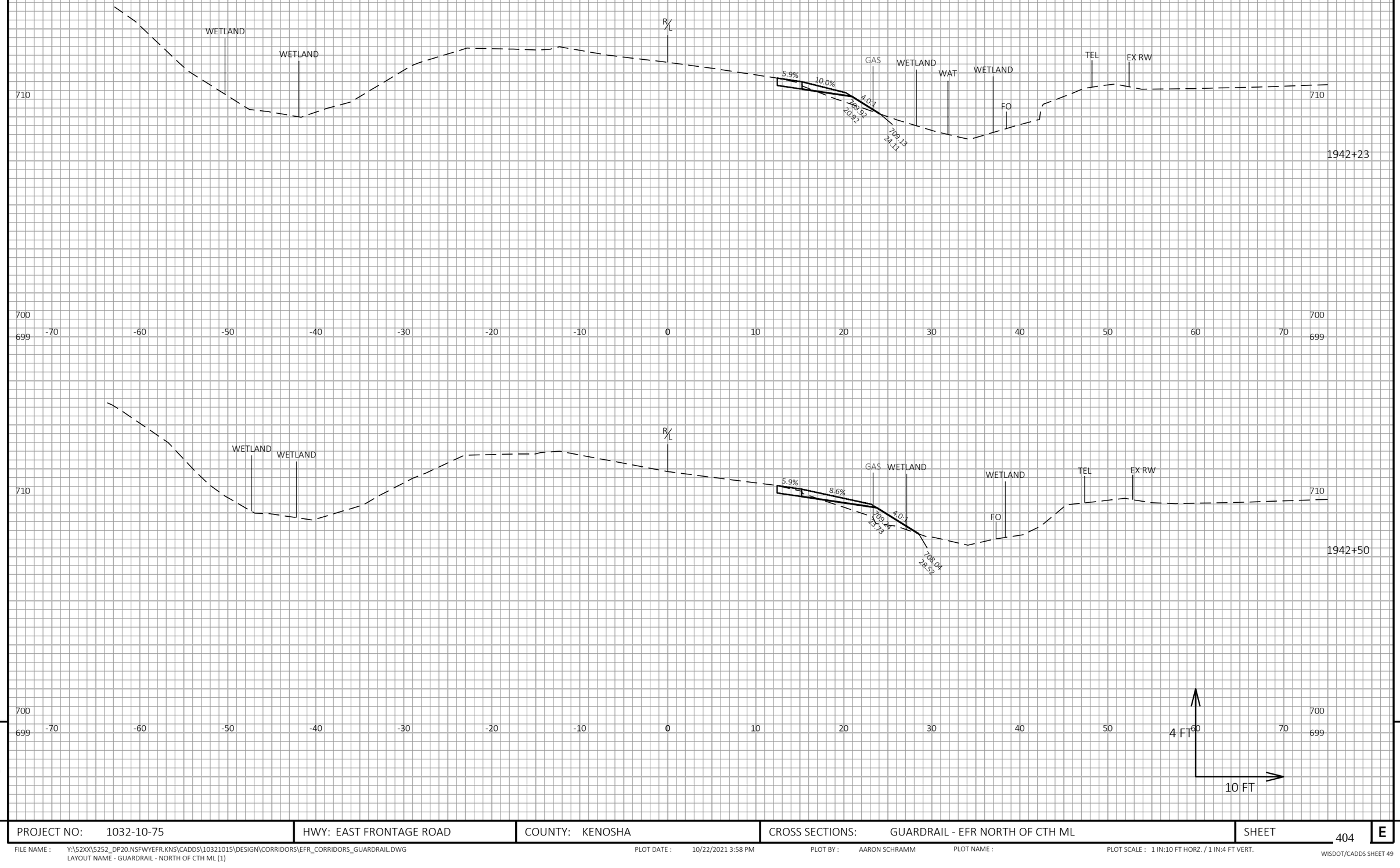

9

9

PROJECT NO: 1032-10-75	HWY: EAST FRONTAGE ROAD	COUNTY: KENOSHA	CROSS SECTIONS: GUARDRAIL - EFR NORTH OF CTH ML	SHEET 404	E

FILE NAME : Y:\52XX\5252_DP20.NSFWYEFR.KNS\CADDS\10321015\DESIGN\CORRIDORS\EFR_CORRIDORS_GUARDRAIL.DWG
LAYOUT NAME - GUARDRAIL - NORTH OF CTH ML (1)

PLOT DATE : 10/22/2021 3:58 PM PLOT BY : AARON SCHRAMM PLOT NAME : PLOT SCALE : 1 IN:10 FT HORZ. / 1 IN:4 FT VERT.

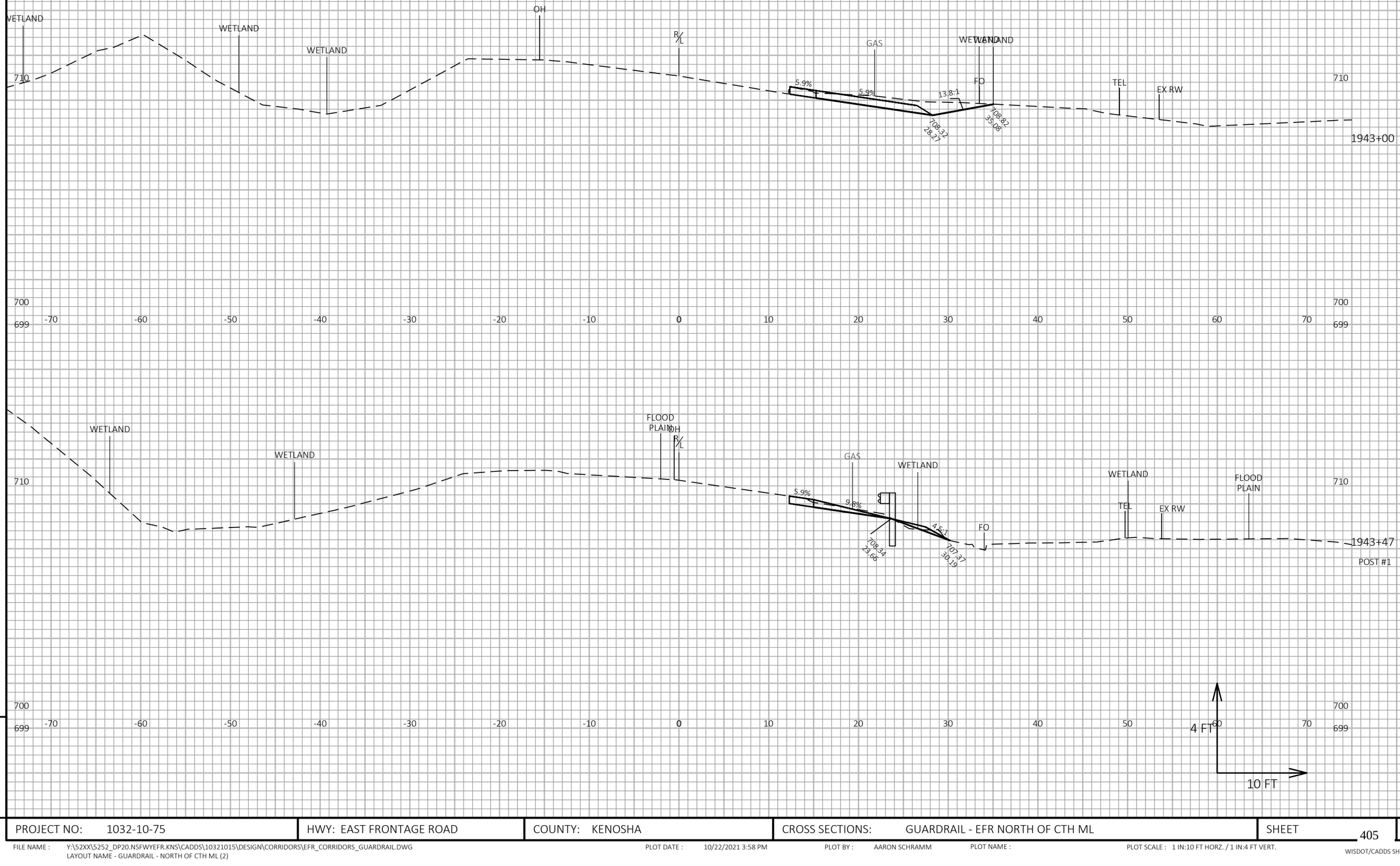

PROJECT NO: 1032-10-75	HWY: EAST FRONTAGE ROAD	COUNTY: KENOSHA	CROSS SECTIONS: GUARDRAIL - EFR NORTH OF CTH ML	SHEET 405	E

FILE NAME : Y:\52XX\5252_DP20.NSFWYEFR.KNS\CADDS\10321015\DESIGN\CORRIDORS\EFR_CORRIDORS_GUARDRAIL.DWG
LAYOUT NAME - GUARDRAIL - NORTH OF CTH ML (2)

PLOT DATE : 10/22/2021 3:58 PM PLOT BY : AARON SCHRAMM PLOT NAME : PLOT SCALE : 1 IN:10 FT HORZ. / 1 IN:4 FT VERT.

WISDOT/CADDS SHEET 49

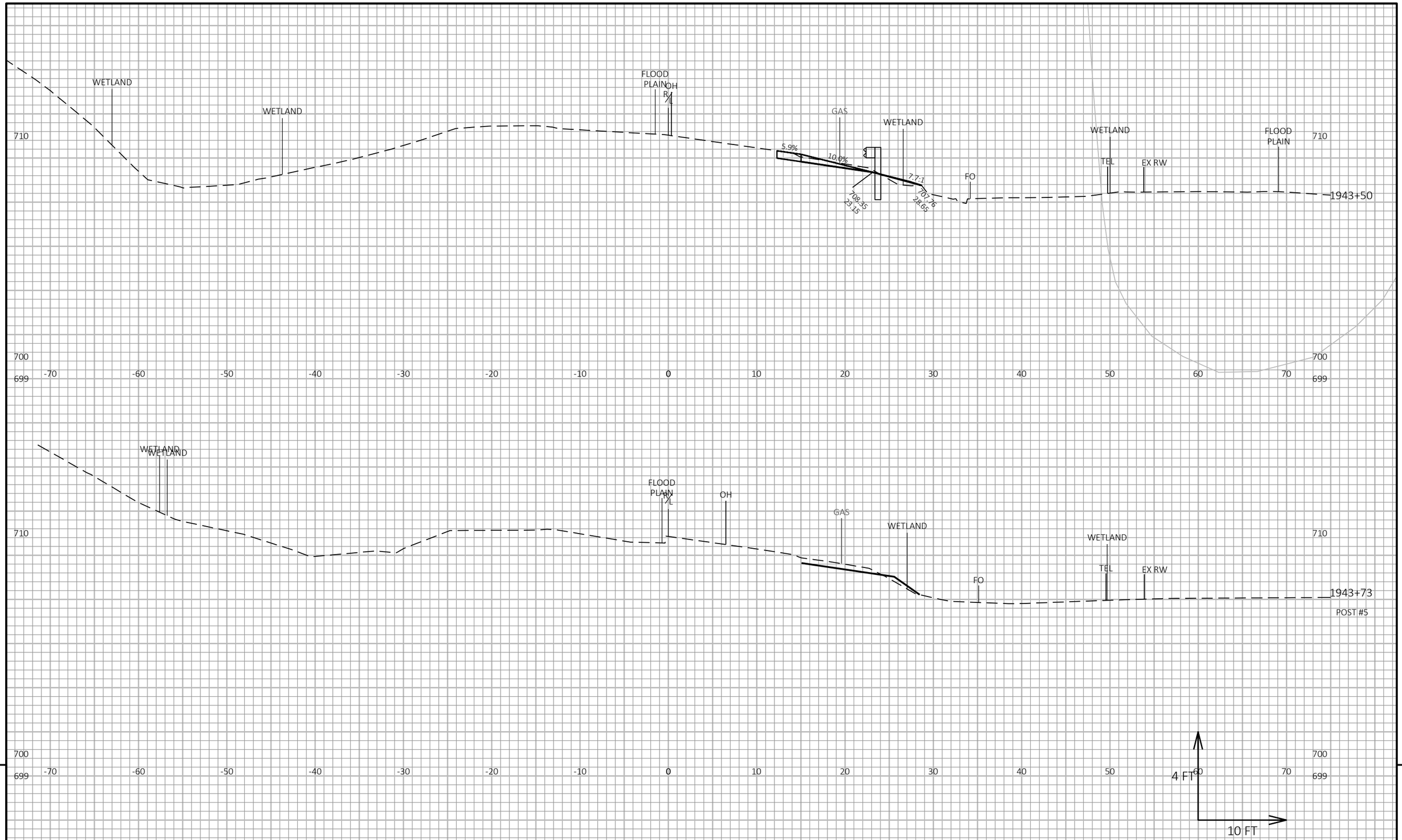

9

9

PROJECT NO: 1032-10-75	HWY: EAST FRONTAGE ROAD	COUNTY: KENOSHA	CROSS SECTIONS: GUARDRAIL - EFR NORTH OF CTH ML	SHEET 406	E

FILE NAME : Y:\52XX\5252_DP20.NSFWYEFR.KNS\CADDS\10321015\DESIGN\CORRIDORS\EFR_CORRIDORS_GUARDRAIL.DWG
LAYOUT NAME - GUARDRAIL - NORTH OF CTH ML (3)

PLOT DATE : 10/22/2021 3:58 PM PLOT BY : AARON SCHRAMM PLOT NAME : PLOT SCALE : 1 IN:10 FT HORZ. / 1 IN:4 FT VERT.

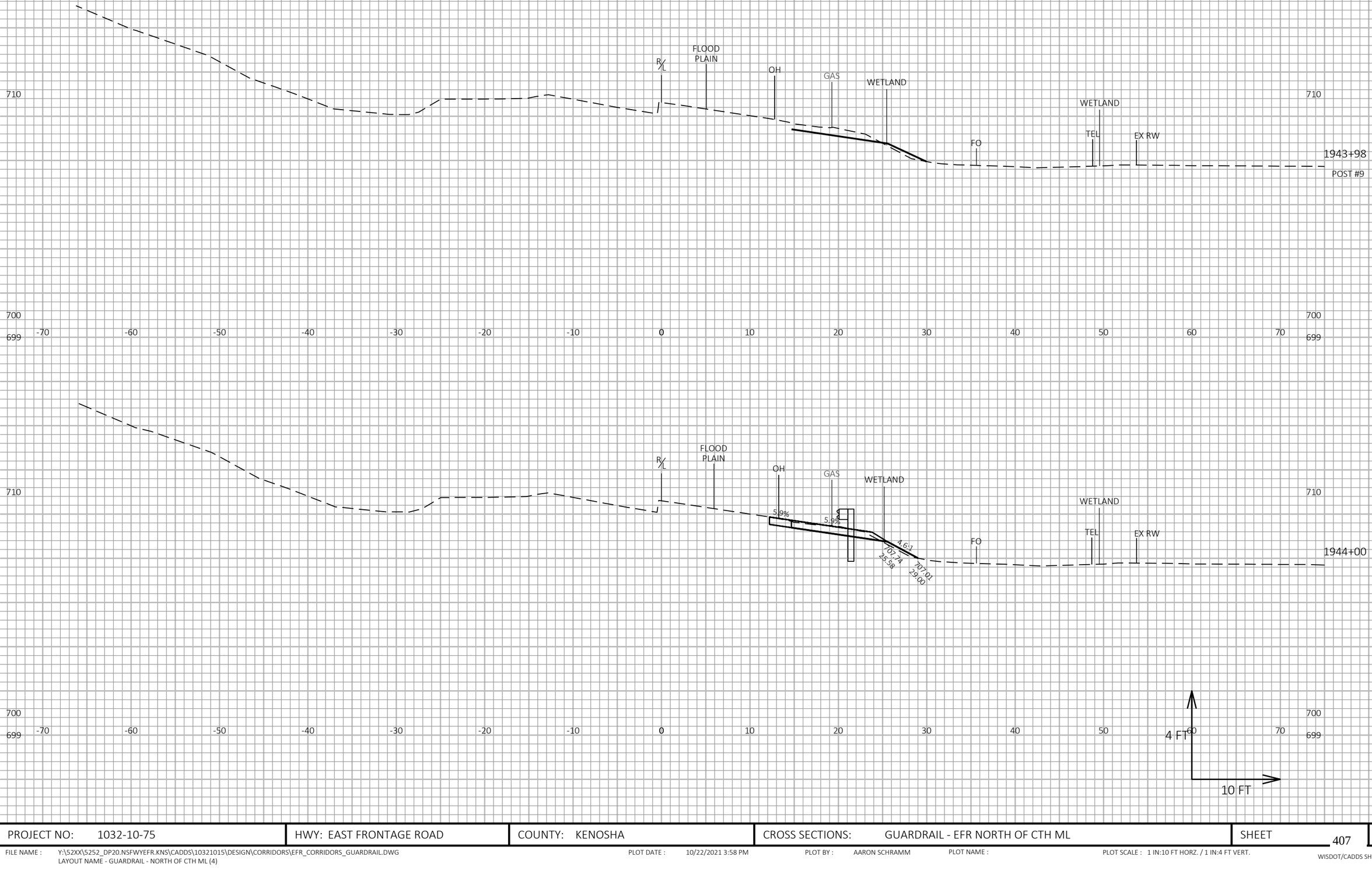

9

9

PROJECT NO: 1032-10-75	HWY: EAST FRONTAGE ROAD	COUNTY: KENOSHA	CROSS SECTIONS: GUARDRAIL - EFR NORTH OF CTH ML	SHEET 407	E

FILE NAME : Y:\52XX\5252_DP20.NSFWYEFR.KNS\CADDS\10321015\DESIGN\CORRIDORS\EFR_CORRIDORS_GUARDRAIL.DWG
LAYOUT NAME - GUARDRAIL - NORTH OF CTH ML (4)

PLOT DATE : 10/22/2021 3:58 PM PLOT BY : AARON SCHRAMM PLOT NAME : PLOT SCALE : 1 IN:10 FT HORZ. / 1 IN:4 FT VERT.

WISDOT/CADDS SHEET 49

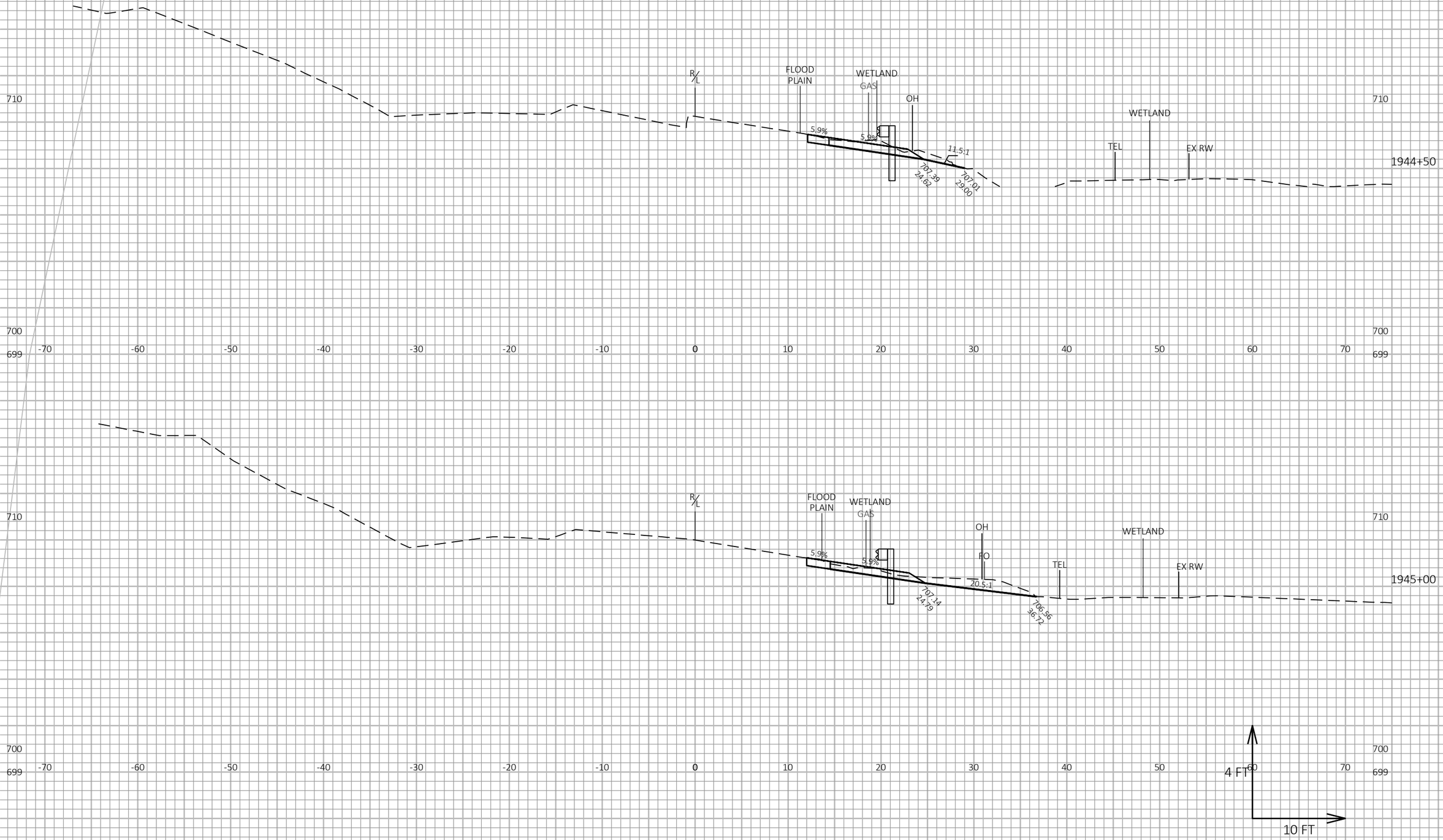

9

9

PROJECT NO: 1032-10-75	HWY: EAST FRONTAGE ROAD	COUNTY: KENOSHA	CROSS SECTIONS: GUARDRAIL - EFR NORTH OF CTH ML	SHEET 408	E

FILE NAME : Y:\52XX\5252_DP20.NSFWYEFR.KNS\CADDS\10321015\DESIGN\CORRIDORS\EFR_CORRIDORS_GUARDRAIL.DWG
LAYOUT NAME - GUARDRAIL - NORTH OF CTH ML (5)

PLOT DATE : 10/22/2021 3:58 PM PLOT BY : AARON SCHRAMM PLOT NAME : PLOT SCALE : 1 IN:10 FT HORZ. / 1 IN:4 FT VERT.

WISDOT/CADDS SHEET 49

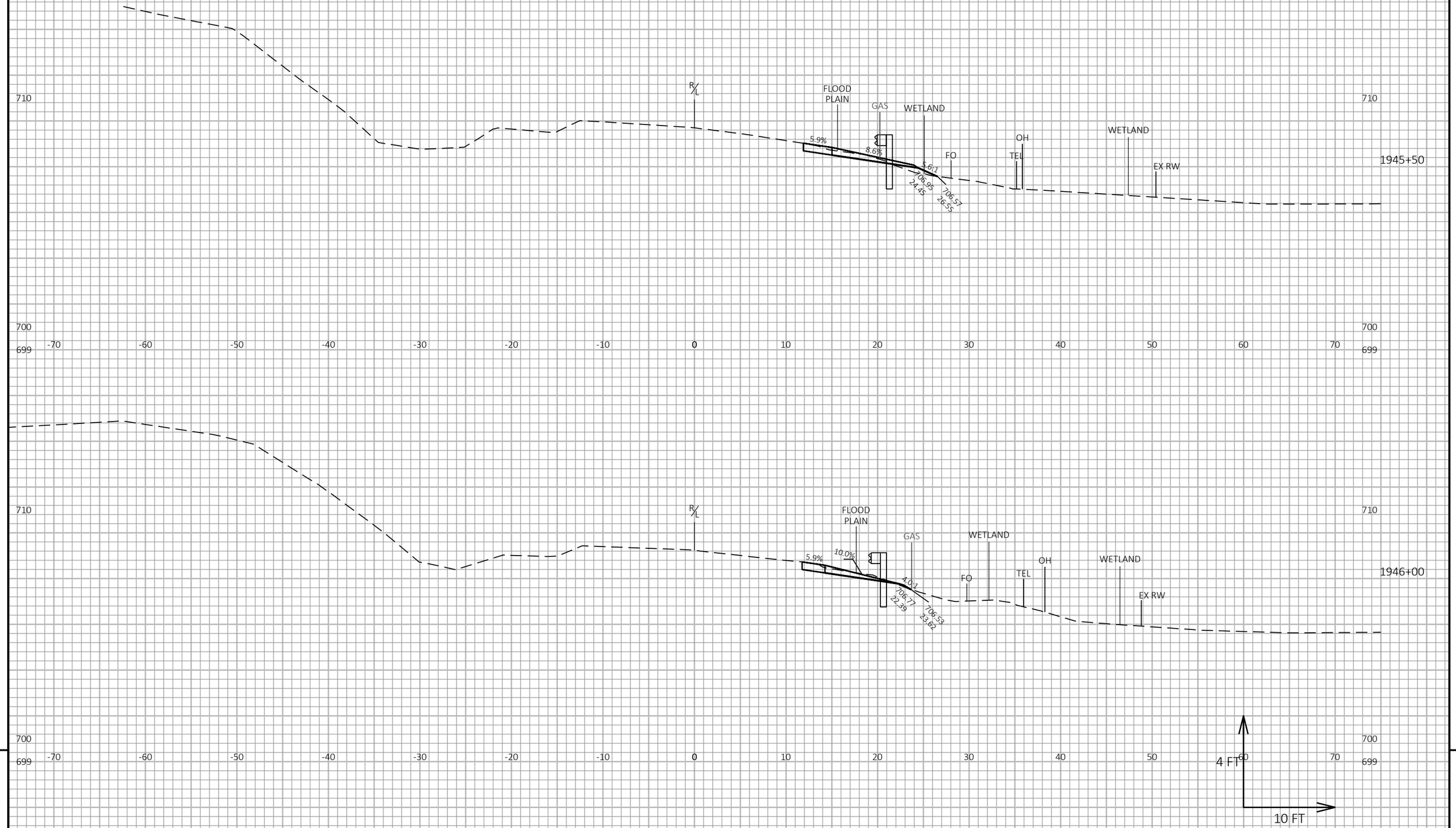

9

9

PROJECT NO: 1032-10-75	HWY: EAST FRONTAGE ROAD	COUNTY: KENOSHA	CROSS SECTIONS: GUARDRAIL - EFR NORTH OF CTH ML	SHEET 409	E

FILE NAME : Y:\52XX\5252_DP20.NSFWYEFR.KNS\CADDS\10321015\DESIGN\CORRIDORS\EFR_CORRIDORS_GUARDRAIL.DWG
LAYOUT NAME - GUARDRAIL - NORTH OF CTH ML (6)

PLOT DATE : 10/22/2021 3:59 PM PLOT BY : AARON SCHRAMM PLOT NAME : PLOT SCALE : 1 IN:10 FT HORZ. / 1 IN:4 FT VERT.

WISDOT/CADDS SHEET 49

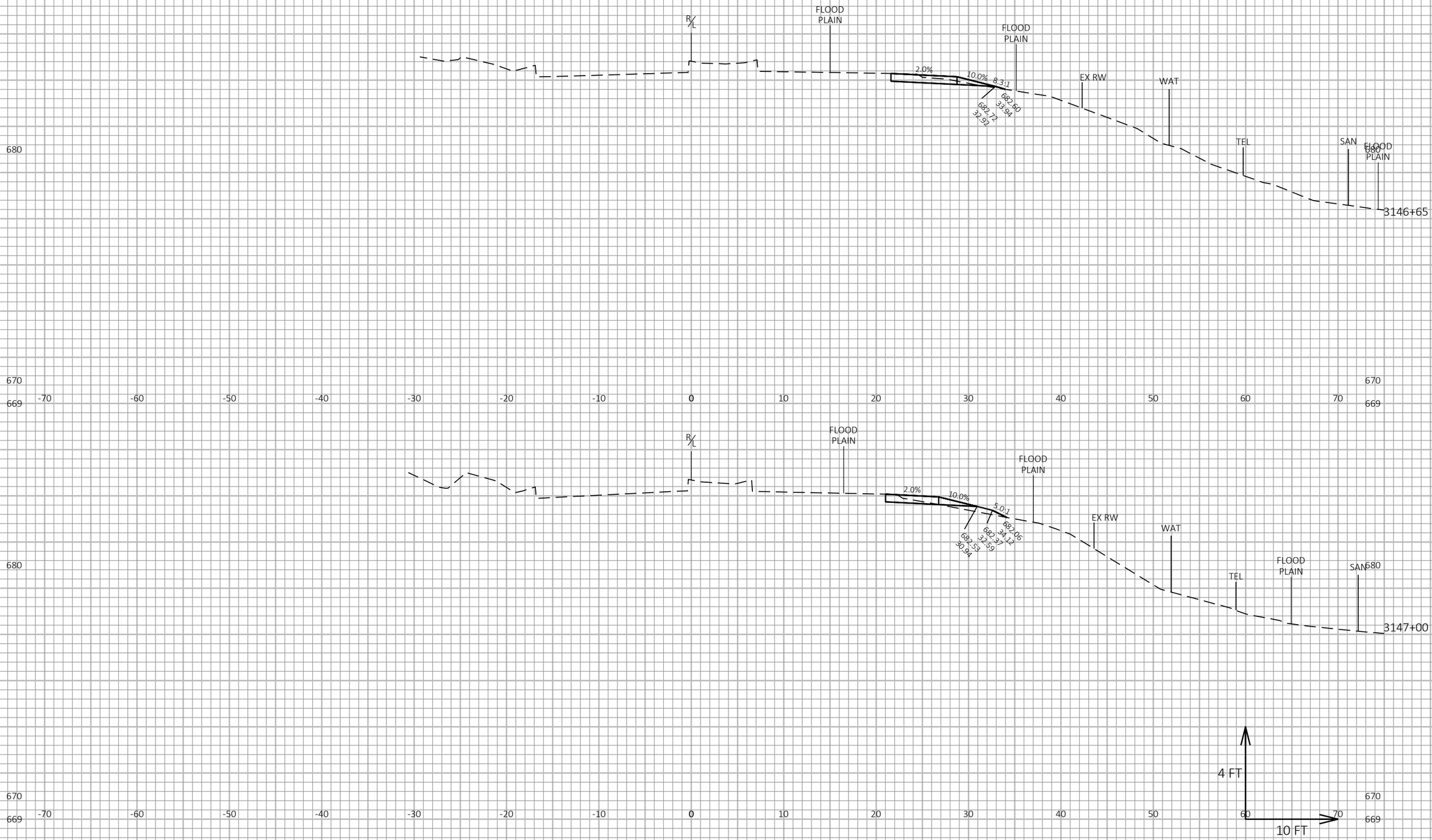

PROJECT NO: 1032-10-75	HWY: EAST FRONTAGE ROAD	COUNTY: KENOSHA	CROSS SECTIONS: GUARDRAIL - EFR NORTH OF STH 165	SHEET 410	E

FILE NAME : Y:\52XX\5252_DP20.NSFWYEFR.KNS\CADDS\10321015\DESIGN\CORRIDORS\EFR_CORRIDORS_GUARDRAIL.DWG
LAYOUT NAME - GUARDRAIL - NORTH OF STH 165 (1)

PLOT DATE : 10/22/2021 3:59 PM PLOT BY : AARON SCHRAMM PLOT NAME : PLOT SCALE : 1 IN:10 FT HORZ. / 1 IN:4 FT VERT.

WISDOT/CADDS SHEET 49

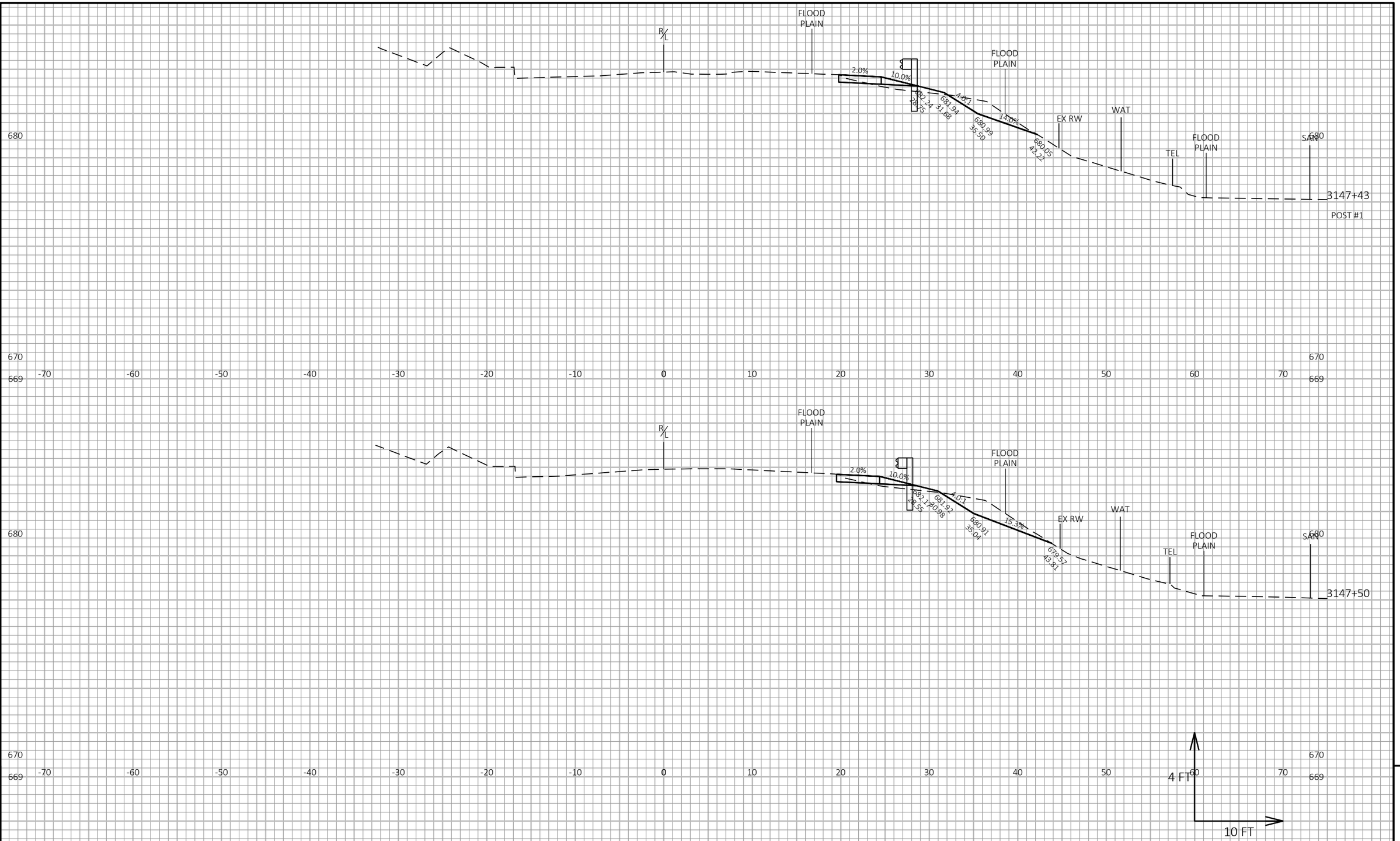

PROJECT NO: 1032-10-75	HWY: EAST FRONTAGE ROAD	COUNTY: KENOSHA	CROSS SECTIONS: GUARDRAIL - EFR NORTH OF STH 165	SHEET 411	E

FILE NAME : Y:\52XX\5252_DP20.NSFWYEFR.KNS\CADDS\10321015\DESIGN\CORRIDORS\EFR_CORRIDORS_GUARDRAIL.DWG
LAYOUT NAME - GUARDRAIL - NORTH OF STH 165 (2)

PLOT DATE : 10/22/2021 3:59 PM PLOT BY : AARON SCHRAMM PLOT NAME : PLOT SCALE : 1 IN:10 FT HORZ. / 1 IN:4 FT VERT.

WISDOT/CADDS SHEET 49

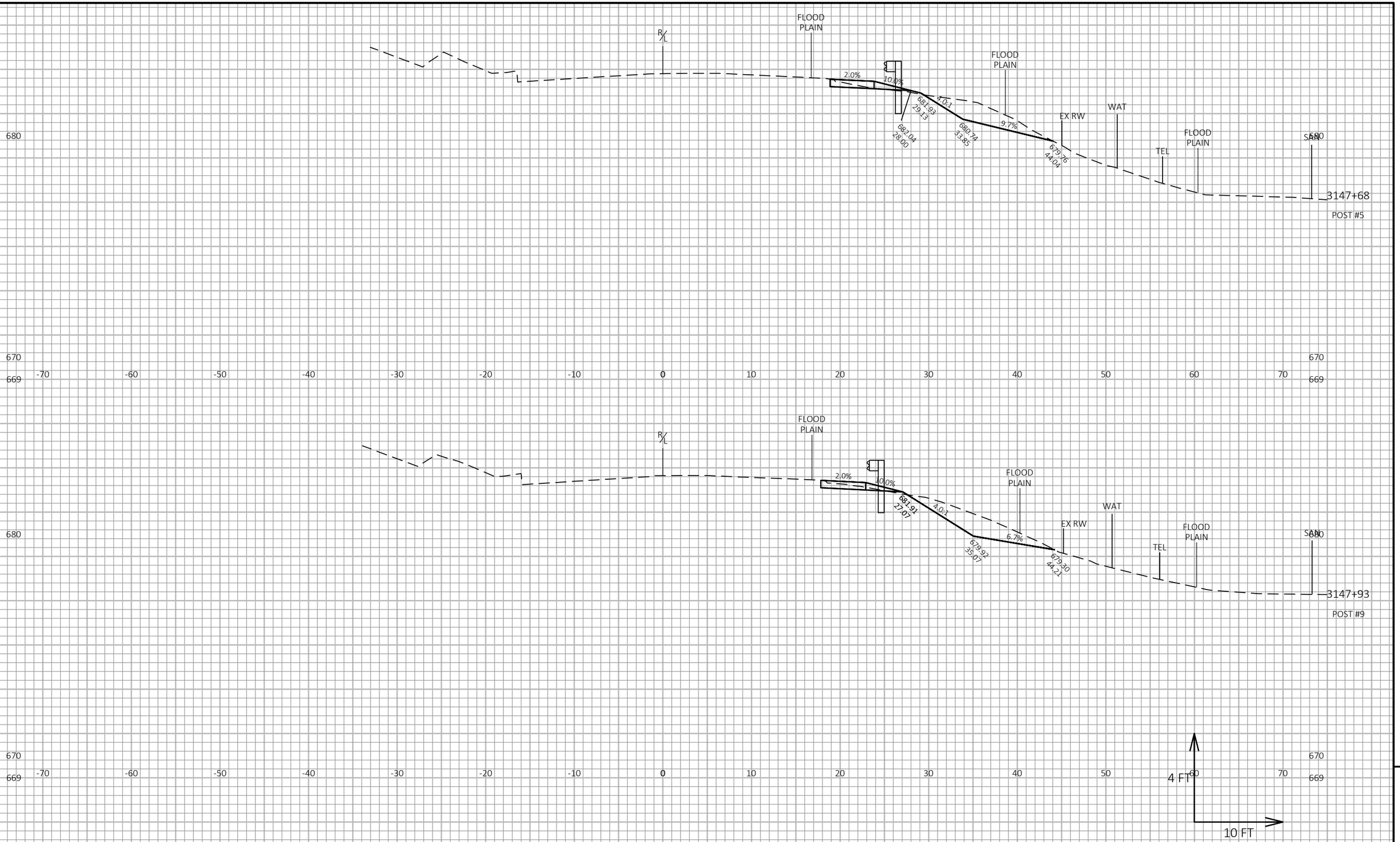

9

9

PROJECT NO: 1032-10-75	HWY: EAST FRONTAGE ROAD	COUNTY: KENOSHA	CROSS SECTIONS: GUARDRAIL - EFR NORTH OF STH 165	SHEET 412	E

FILE NAME : Y:\52XX\5252_DP20.NSFWYEFR.KNS\CADDS\10321015\DESIGN\CORRIDORS\EFR_CORRIDORS_GUARDRAIL.DWG
LAYOUT NAME - GUARDRAIL - NORTH OF STH 165 (3)

PLOT DATE : 10/22/2021 3:59 PM PLOT BY : AARON SCHRAMM PLOT NAME : PLOT SCALE : 1 IN:10 FT HORZ. / 1 IN:4 FT VERT.

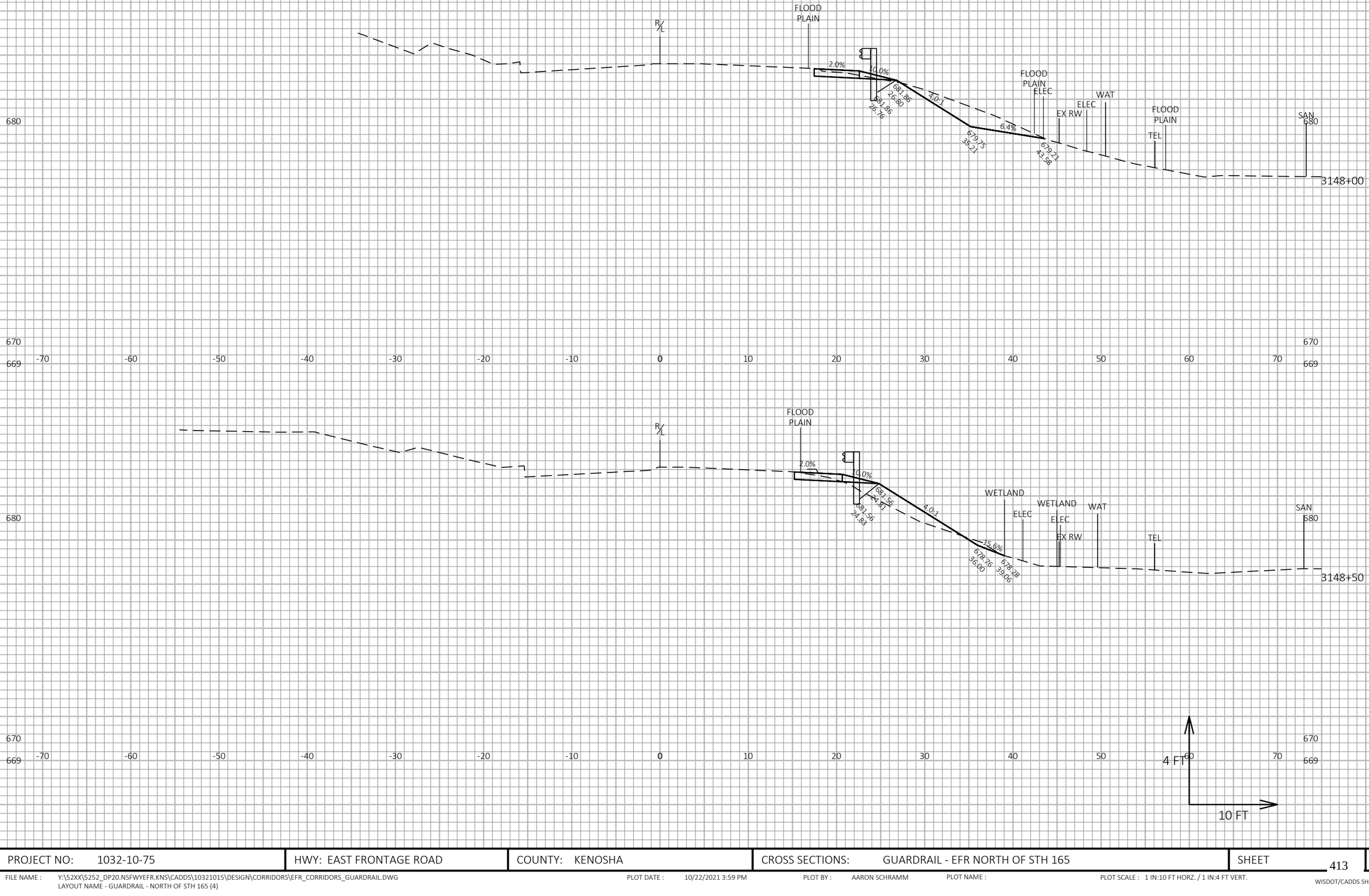

PROJECT NO: 1032-10-75	HWY: EAST FRONTAGE ROAD	COUNTY: KENOSHA	CROSS SECTIONS: GUARDRAIL - EFR NORTH OF STH 165	SHEET 413	E

FILE NAME : Y:\52XX\5252_DP20.NSFWYEFR.KNS\CADDS\10321015\DESIGN\CORRIDORS\EFR_CORRIDORS_GUARDRAIL.DWG
LAYOUT NAME - GUARDRAIL - NORTH OF STH 165 (4)

PLOT DATE : 10/22/2021 3:59 PM PLOT BY : AARON SCHRAMM PLOT NAME : PLOT SCALE : 1 IN:10 FT HORZ. / 1 IN:4 FT VERT.

WISDOT/CADDS SHEET 49

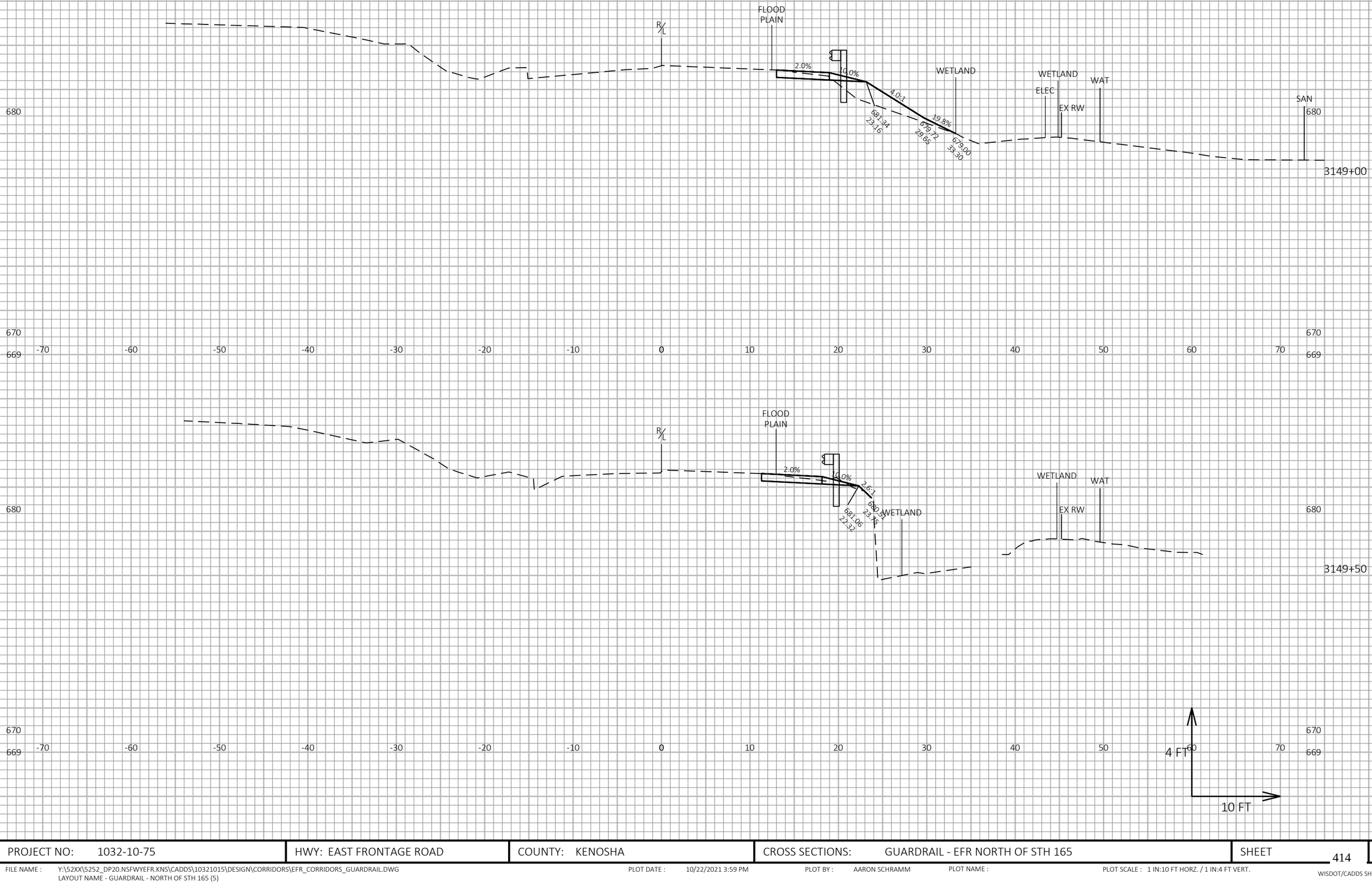

PROJECT NO: 1032-10-75	HWY: EAST FRONTAGE ROAD	COUNTY: KENOSHA	CROSS SECTIONS: GUARDRAIL - EFR NORTH OF STH 165	SHEET 414	E

FILE NAME : Y:\52XX\5252_DP20.NSFWYEFR.KNS\CADDS\10321015\DESIGN\CORRIDORS\EFR_CORRIDORS_GUARDRAIL.DWG
LAYOUT NAME - GUARDRAIL - NORTH OF STH 165 (5)

PLOT DATE : 10/22/2021 3:59 PM PLOT BY : AARON SCHRAMM PLOT NAME : PLOT SCALE : 1 IN:10 FT HORZ. / 1 IN:4 FT VERT.

9

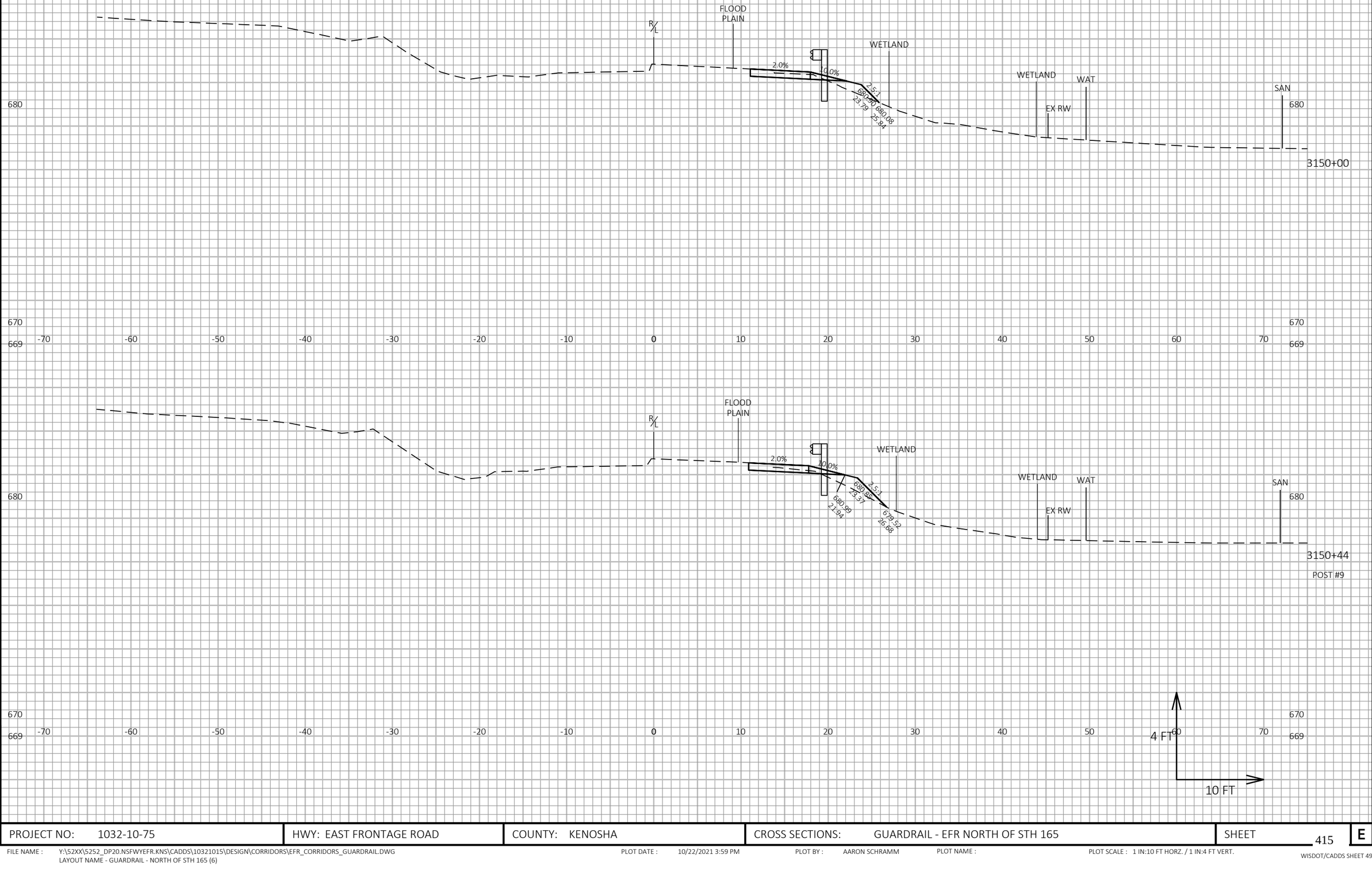

9

9

PROJECT NO: 1032-10-75	HWY: EAST FRONTAGE ROAD	COUNTY: KENOSHA	CROSS SECTIONS: GUARDRAIL - EFR NORTH OF STH 165	SHEET 415	E

FILE NAME : Y:\52XX\5252_DP20.NSFWYEFR.KNS\CADDS\10321015\DESIGN\CORRIDORS\EFR_CORRIDORS_GUARDRAIL.DWG
LAYOUT NAME - GUARDRAIL - NORTH OF STH 165 (6)

PLOT DATE : 10/22/2021 3:59 PM PLOT BY : AARON SCHRAMM PLOT NAME : PLOT SCALE : 1 IN:10 FT HORZ. / 1 IN:4 FT VERT.

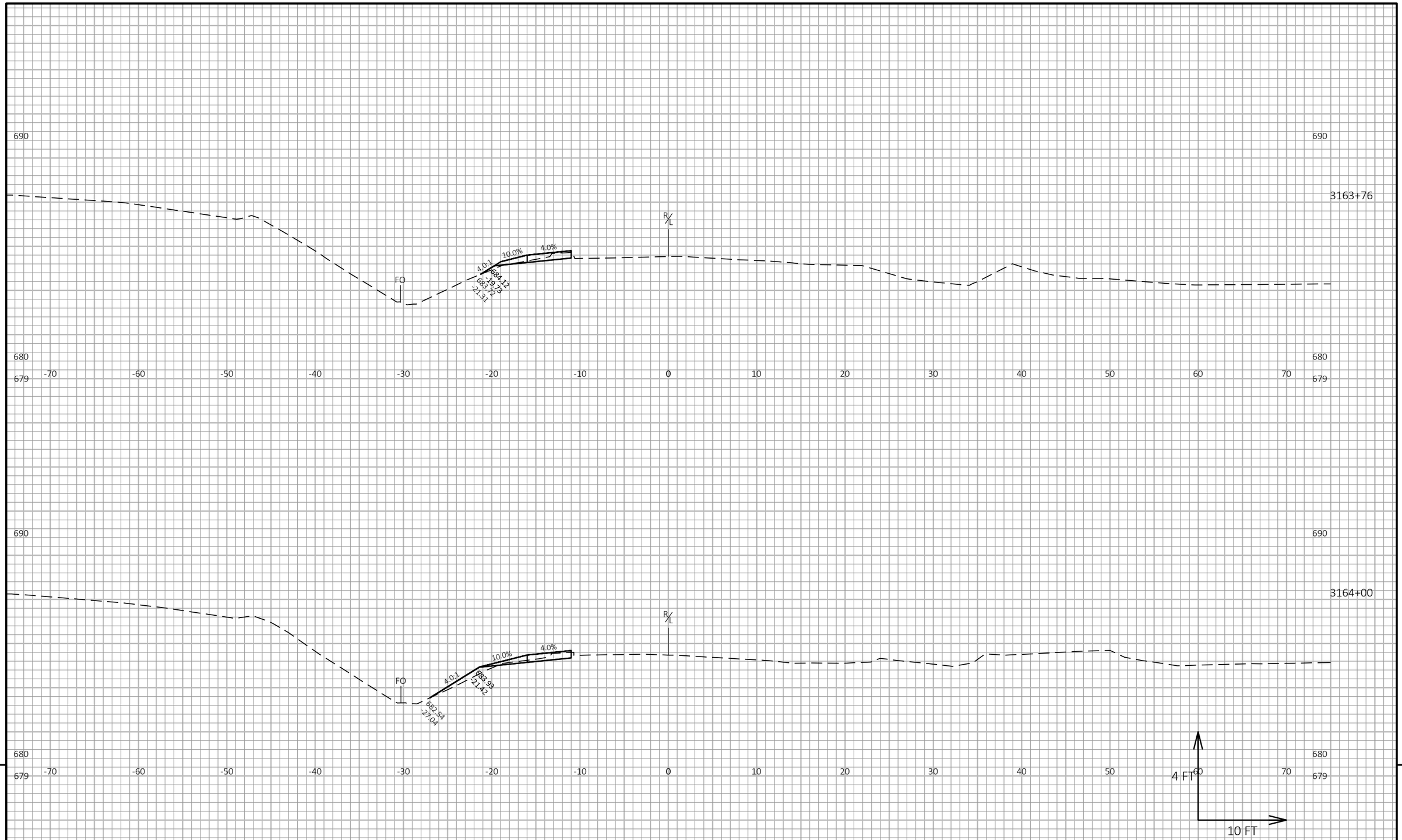

9

9

PROJECT NO: 1032-10-75	HWY: EAST FRONTAGE ROAD	COUNTY: KENOSHA	CROSS SECTIONS: GUARDRAIL - EFR BETWEEN STH 165 & CTH C	SHEET 416	E

FILE NAME : Y:\52XX\5252_DP20.NSFWYEFR.KNS\CADDS\10321015\DESIGN\CORRIDORS\EFR_CORRIDORS_GUARDRAIL.DWG
LAYOUT NAME - GUARDRAIL - BETWEEN STH 165 & CTH C (1)

PLOT DATE : 10/22/2021 4:00 PM PLOT BY : AARON SCHRAMM PLOT NAME : PLOT SCALE : 1 IN:10 FT HORZ. / 1 IN:4 FT VERT.

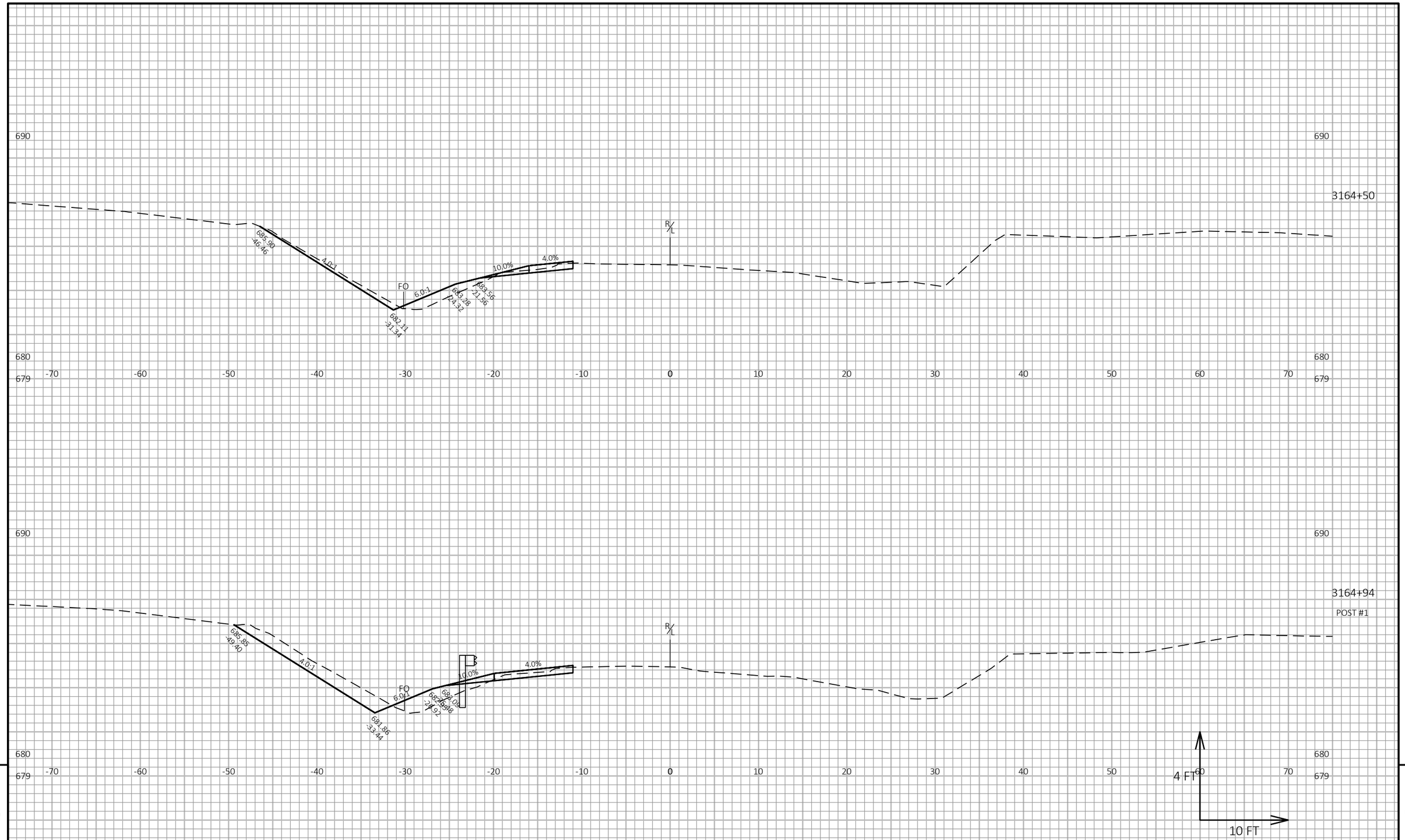

9

9

PROJECT NO: 1032-10-75	HWY: EAST FRONTAGE ROAD	COUNTY: KENOSHA	CROSS SECTIONS: GUARDRAIL - EFR BETWEEN STH 165 & CTH C	SHEET 417	E

FILE NAME : Y:\52XX\5252_DP20.NSFWYEFR.KNS\CADDS\10321015\DESIGN\CORRIDORS\EFR_CORRIDORS_GUARDRAIL.DWG
LAYOUT NAME - GUARDRAIL - BETWEEN STH 165 & CTH C (2)

PLOT DATE : 10/22/2021 4:00 PM PLOT BY : AARON SCHRAMM PLOT NAME : PLOT SCALE : 1 IN:10 FT HORZ. / 1 IN:4 FT VERT.

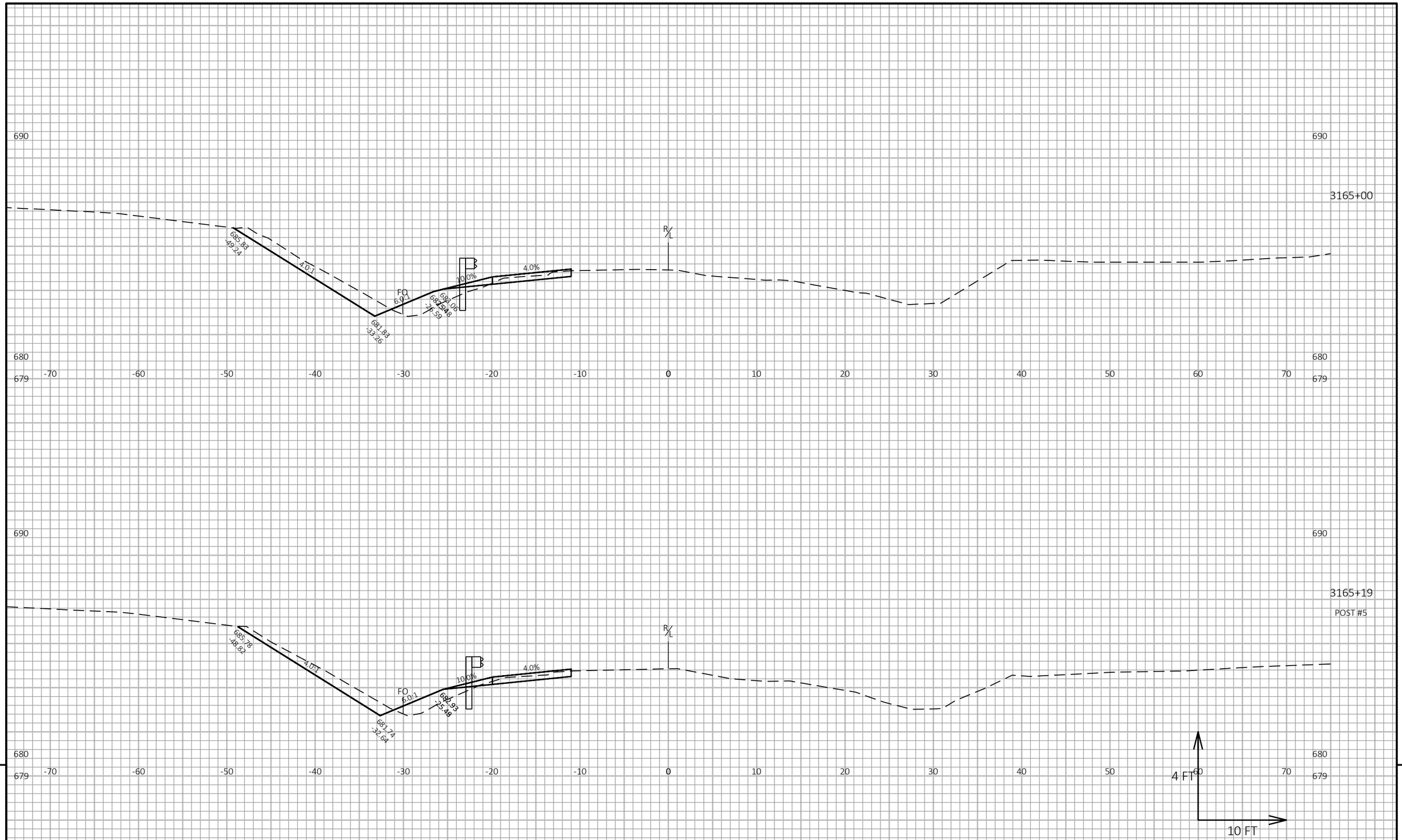

PROJECT NO: 1032-10-75	HWY: EAST FRONTAGE ROAD	COUNTY: KENOSHA	CROSS SECTIONS: GUARDRAIL - EFR BETWEEN STH 165 & CTH C	SHEET 418	E

FILE NAME : Y:\52XX\5252_DP20.NSFWYEFR.KNS\CADDS\10321015\DESIGN\CORRIDORS\EFR_CORRIDORS_GUARDRAIL.DWG
LAYOUT NAME - GUARDRAIL - BETWEEN STH 165 & CTH C (3)

PLOT DATE : 10/22/2021 4:00 PM PLOT BY : AARON SCHRAMM PLOT NAME : PLOT SCALE : 1 IN:10 FT HORZ. / 1 IN:4 FT VERT.

WISDOT/CADDS SHEET 49

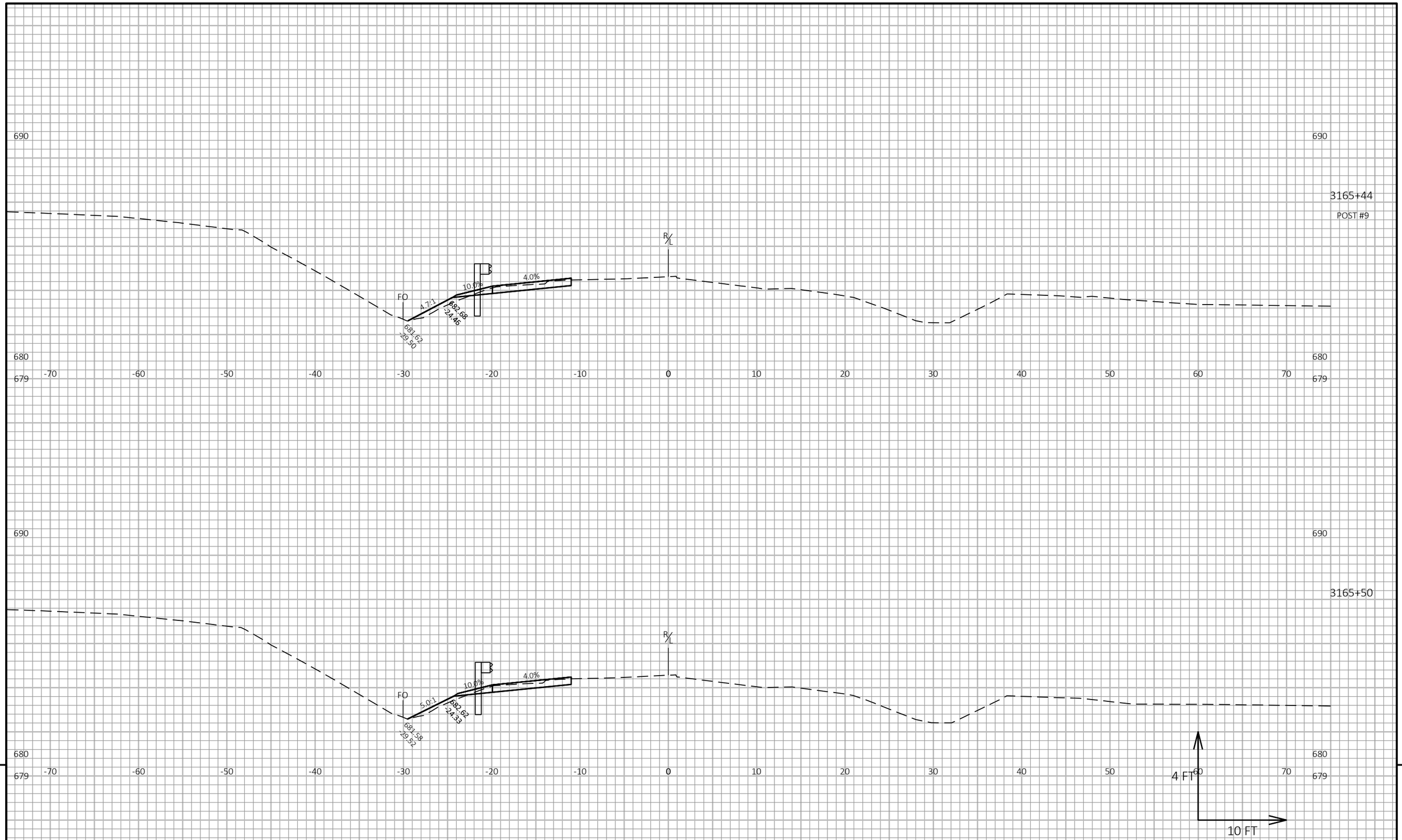

9

9

PROJECT NO: 1032-10-75	HWY: EAST FRONTAGE ROAD	COUNTY: KENOSHA	CROSS SECTIONS: GUARDRAIL - EFR BETWEEN STH 165 & CTH C	SHEET 419	E

FILE NAME : Y:\52XX\5252_DP20.NSFWYEFR.KNS\CADDS\10321015\DESIGN\CORRIDORS\EFR_CORRIDORS_GUARDRAIL.DWG
LAYOUT NAME - GUARDRAIL - BETWEEN STH 165 & CTH C (4)

PLOT DATE : 10/22/2021 4:00 PM PLOT BY : AARON SCHRAMM PLOT NAME : PLOT SCALE : 1 IN:10 FT HORZ. / 1 IN:4 FT VERT.

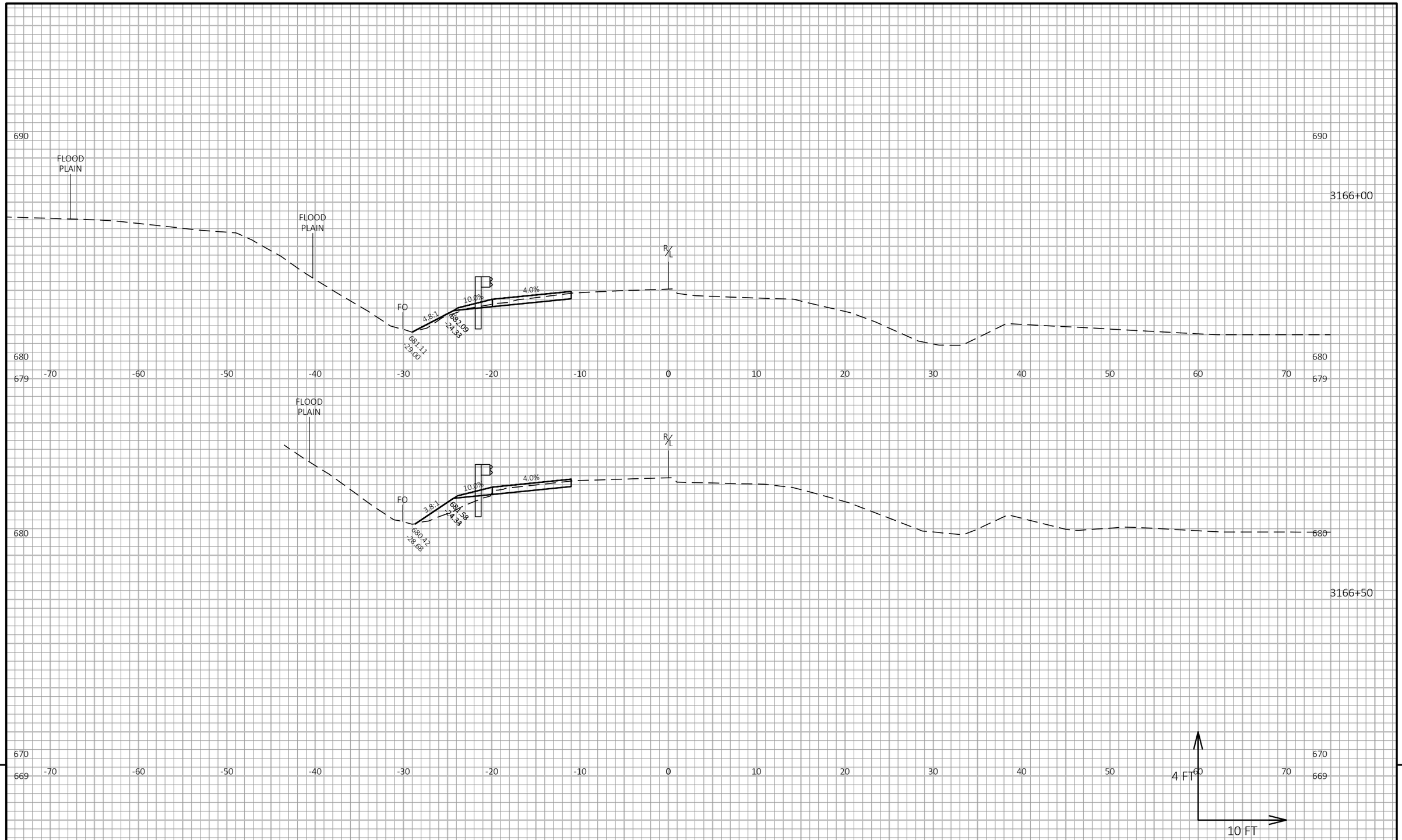

9

9

PROJECT NO: 1032-10-75	HWY: EAST FRONTAGE ROAD	COUNTY: KENOSHA	CROSS SECTIONS: GUARDRAIL - EFR BETWEEN STH 165 & CTH C	SHEET 420	E

FILE NAME : Y:\52XX\5252_DP20.NSFWYEFR.KNS\CADDS\10321015\DESIGN\CORRIDORS\EFR_CORRIDORS_GUARDRAIL.DWG
LAYOUT NAME - GUARDRAIL - BETWEEN STH 165 & CTH C (5)

PLOT DATE : 10/22/2021 4:00 PM PLOT BY : AARON SCHRAMM PLOT NAME : PLOT SCALE : 1 IN:10 FT HORZ. / 1 IN:4 FT VERT.

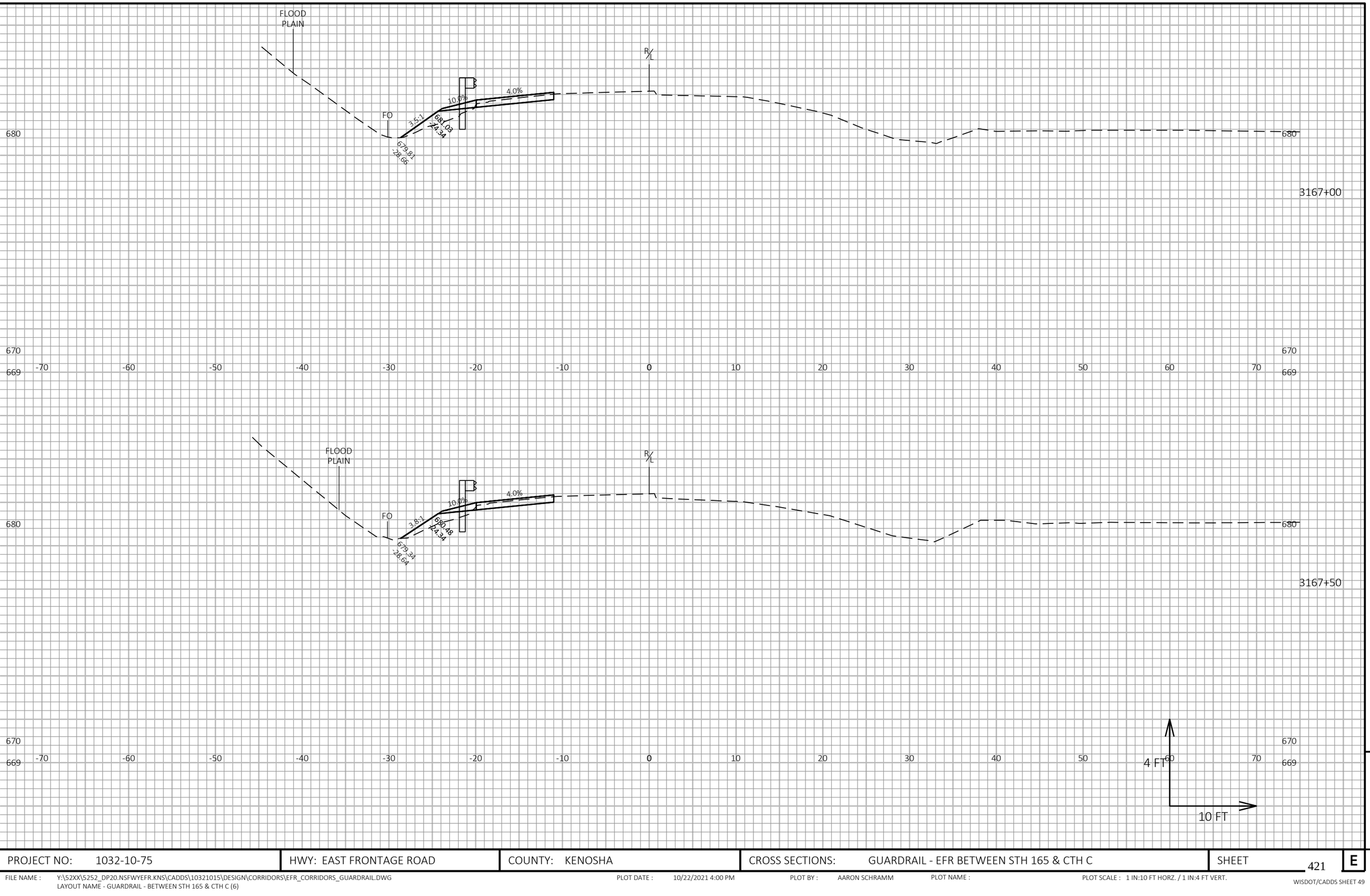

9

9

PROJECT NO: 1032-10-75	HWY: EAST FRONTAGE ROAD	COUNTY: KENOSHA	CROSS SECTIONS: GUARDRAIL - EFR BETWEEN STH 165 & CTH C	SHEET 421	E

FILE NAME : Y:\52XX\5252_DP20.NSFWYEFR.KNS\CADDS\10321015\DESIGN\CORRIDORS\EFR_CORRIDORS_GUARDRAIL.DWG
LAYOUT NAME - GUARDRAIL - BETWEEN STH 165 & CTH C (6)

PLOT DATE : 10/22/2021 4:00 PM PLOT BY : AARON SCHRAMM PLOT NAME : PLOT SCALE : 1 IN:10 FT HORZ. / 1 IN:4 FT VERT.

WISDOT/CADDS SHEET 49

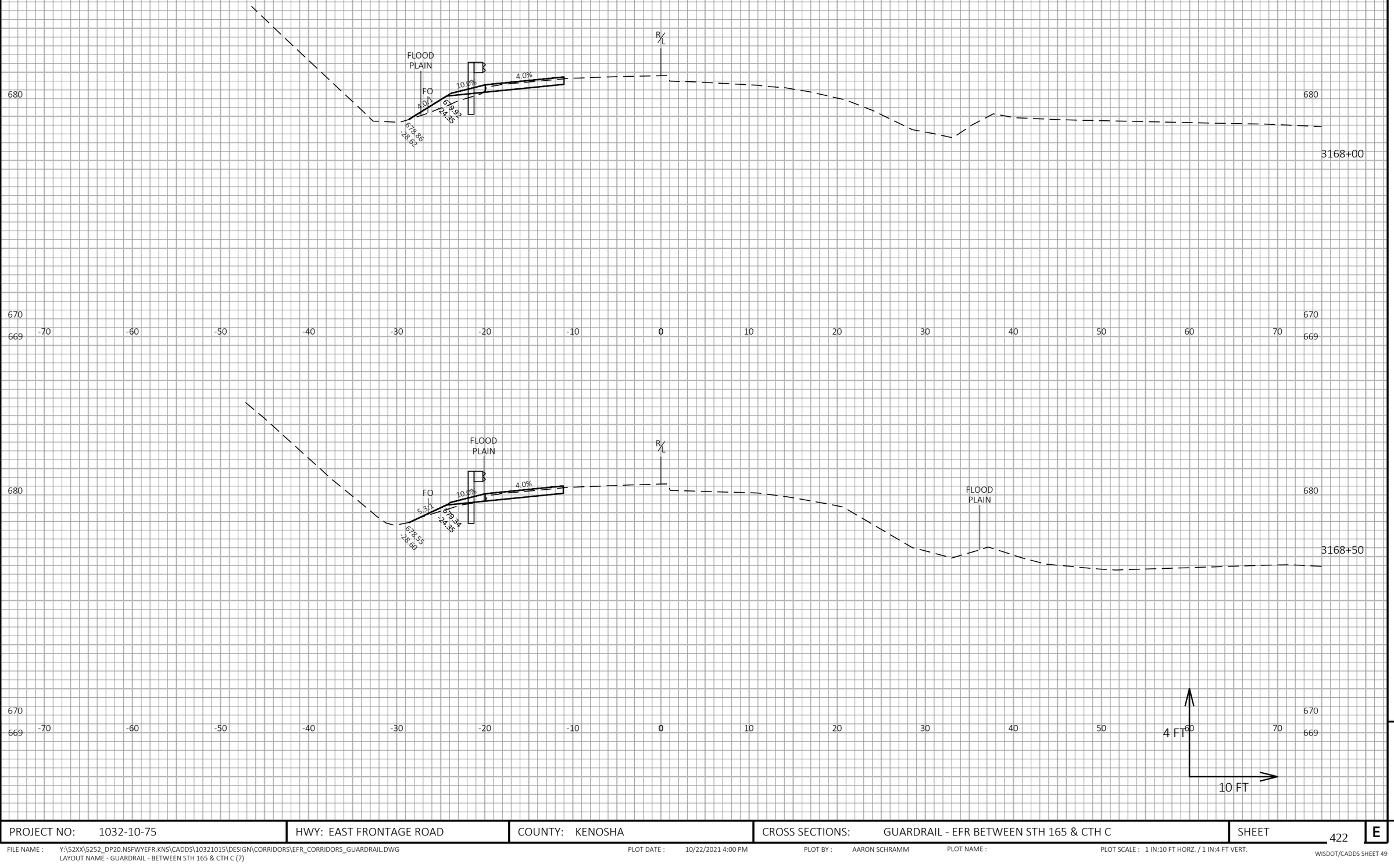

PROJECT NO: 1032-10-75	HWY: EAST FRONTAGE ROAD	COUNTY: KENOSHA	CROSS SECTIONS: GUARDRAIL - EFR BETWEEN STH 165 & CTH C	SHEET 422 E

FILE NAME : Y:\52XX\5252_DP20.NSFWYEFR.KNS\CADDS\10321015\DESIGN\CORRIDORS\EFR_CORRIDORS_GUARDRAIL.DWG
LAYOUT NAME - GUARDRAIL - BETWEEN STH 165 & CTH C (7)

PLOT DATE : 10/22/2021 4:00 PM PLOT BY : AARON SCHRAMM PLOT NAME : PLOT SCALE : 1 IN:10 FT HORZ. / 1 IN:4 FT VERT.

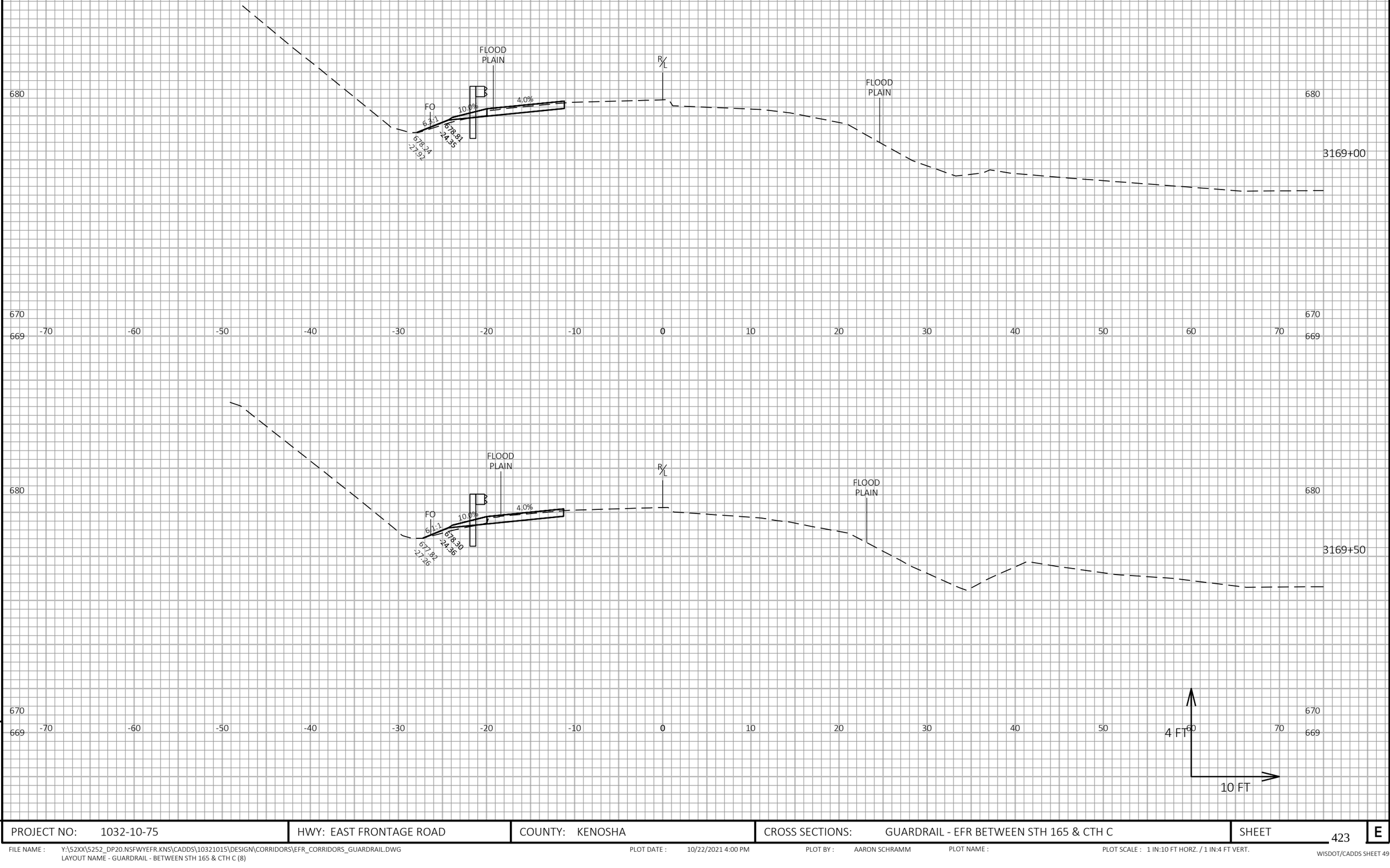

9

9

PROJECT NO: 1032-10-75	HWY: EAST FRONTAGE ROAD	COUNTY: KENOSHA	CROSS SECTIONS: GUARDRAIL - EFR BETWEEN STH 165 & CTH C	SHEET 423	E

FILE NAME : Y:\52XX\5252_DP20.NSFWYEFR.KNS\CADDS\10321015\DESIGN\CORRIDORS\EFR_CORRIDORS_GUARDRAIL.DWG
LAYOUT NAME - GUARDRAIL - BETWEEN STH 165 & CTH C (8)

PLOT DATE : 10/22/2021 4:00 PM PLOT BY : AARON SCHRAMM PLOT NAME : PLOT SCALE : 1 IN:10 FT HORZ. / 1 IN:4 FT VERT.

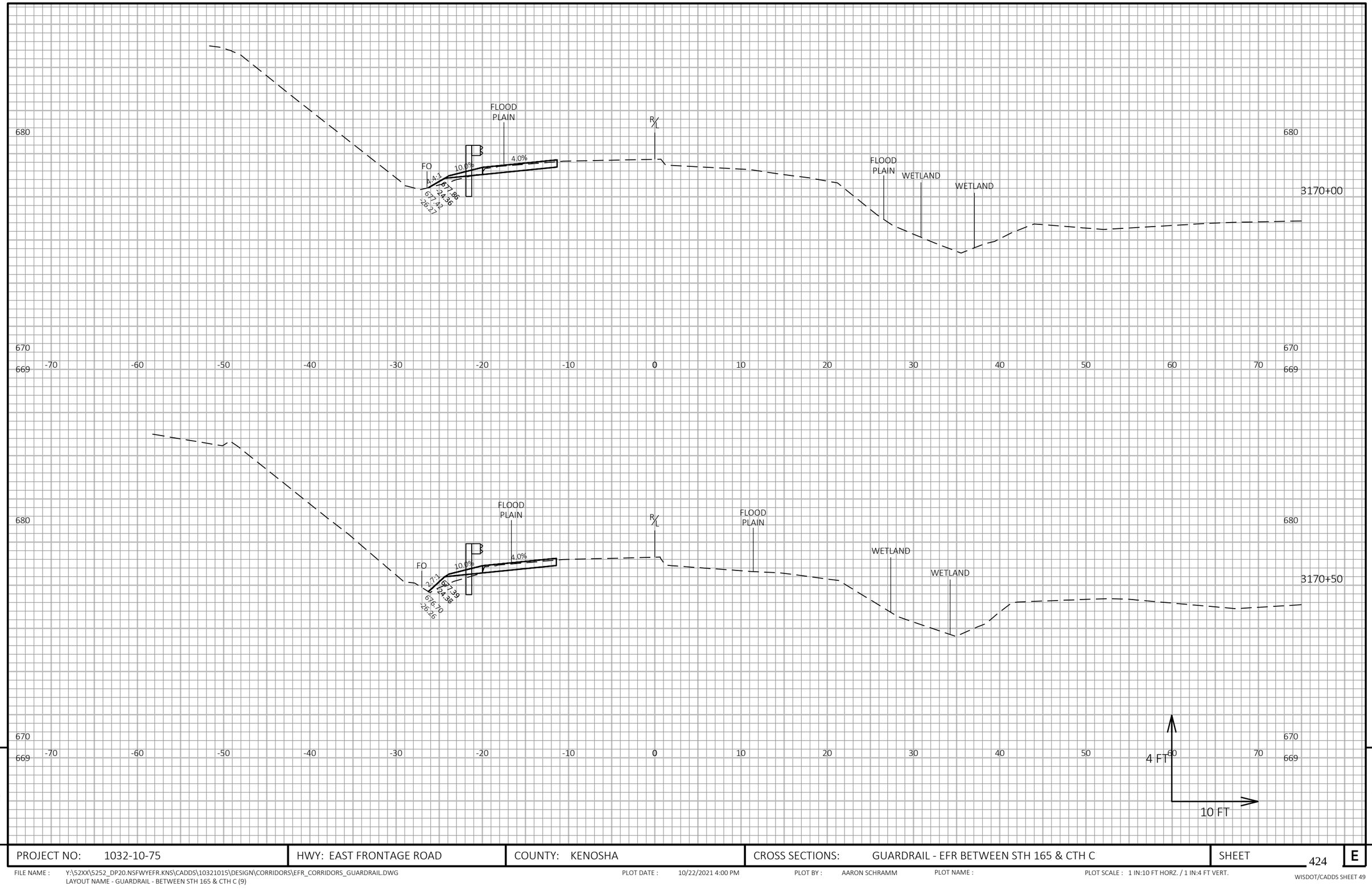

9

9

PROJECT NO: 1032-10-75	HWY: EAST FRONTAGE ROAD	COUNTY: KENOSHA	CROSS SECTIONS: GUARDRAIL - EFR BETWEEN STH 165 & CTH C	SHEET 424	E

FILE NAME : Y:\52XX\5252_DP20.NSFWYEFR.KNS\CADDS\10321015\DESIGN\CORRIDORS\EFR_CORRIDORS_GUARDRAIL.DWG
LAYOUT NAME - GUARDRAIL - BETWEEN STH 165 & CTH C (9)

PLOT DATE : 10/22/2021 4:00 PM PLOT BY : AARON SCHRAMM PLOT NAME : PLOT SCALE : 1 IN:10 FT HORZ. / 1 IN:4 FT VERT.

WISDOT/CADDS SHEET 49



9

9

PROJECT NO: 1032-10-75	HWY: EAST FRONTAGE ROAD	COUNTY: KENOSHA	CROSS SECTIONS: GUARDRAIL - EFR BETWEEN STH 165 & CTH C	SHEET 425	E

FILE NAME : Y:\52XX\5252_DP20.NSFWYEFR.KNS\CADDS\10321015\DESIGN\CORRIDORS\EFR_CORRIDORS_GUARDRAIL.DWG
LAYOUT NAME - GUARDRAIL - BETWEEN STH 165 & CTH C (10)

PLOT DATE : 10/22/2021 4:01 PM PLOT BY : AARON SCHRAMM PLOT NAME : PLOT SCALE : 1 IN:10 FT HORZ. / 1 IN:4 FT VERT.

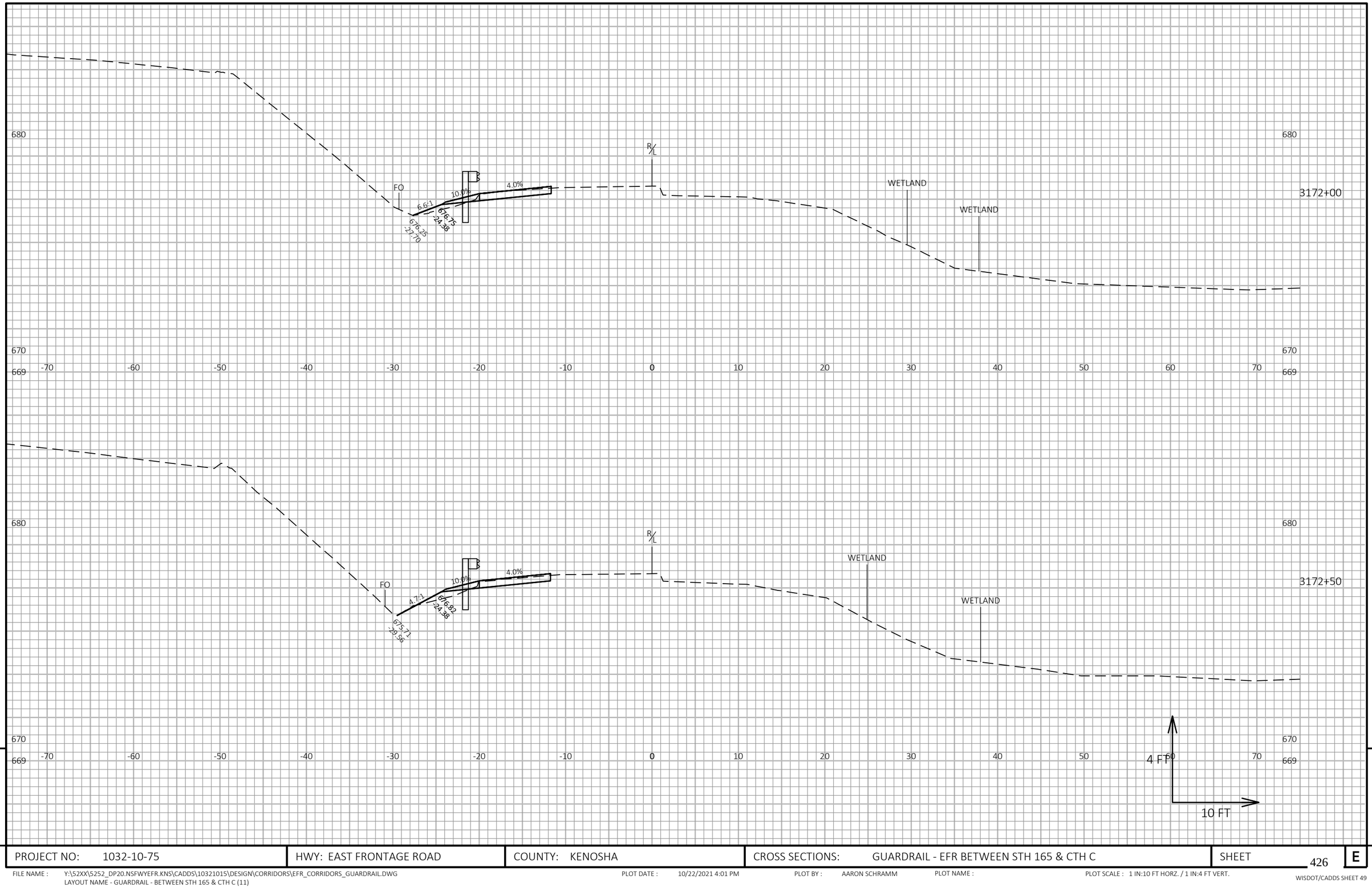

9

9

PROJECT NO: 1032-10-75	HWY: EAST FRONTAGE ROAD	COUNTY: KENOSHA	CROSS SECTIONS: GUARDRAIL - EFR BETWEEN STH 165 & CTH C	SHEET 426	E

FILE NAME : Y:\52XX\5252_DP20.NSFWYEFR.KNS\CADDS\10321015\DESIGN\CORRIDORS\EFR_CORRIDORS_GUARDRAIL.DWG
LAYOUT NAME - GUARDRAIL - BETWEEN STH 165 & CTH C (11)

PLOT DATE : 10/22/2021 4:01 PM PLOT BY : AARON SCHRAMM PLOT NAME : PLOT SCALE : 1 IN:10 FT HORZ. / 1 IN:4 FT VERT.

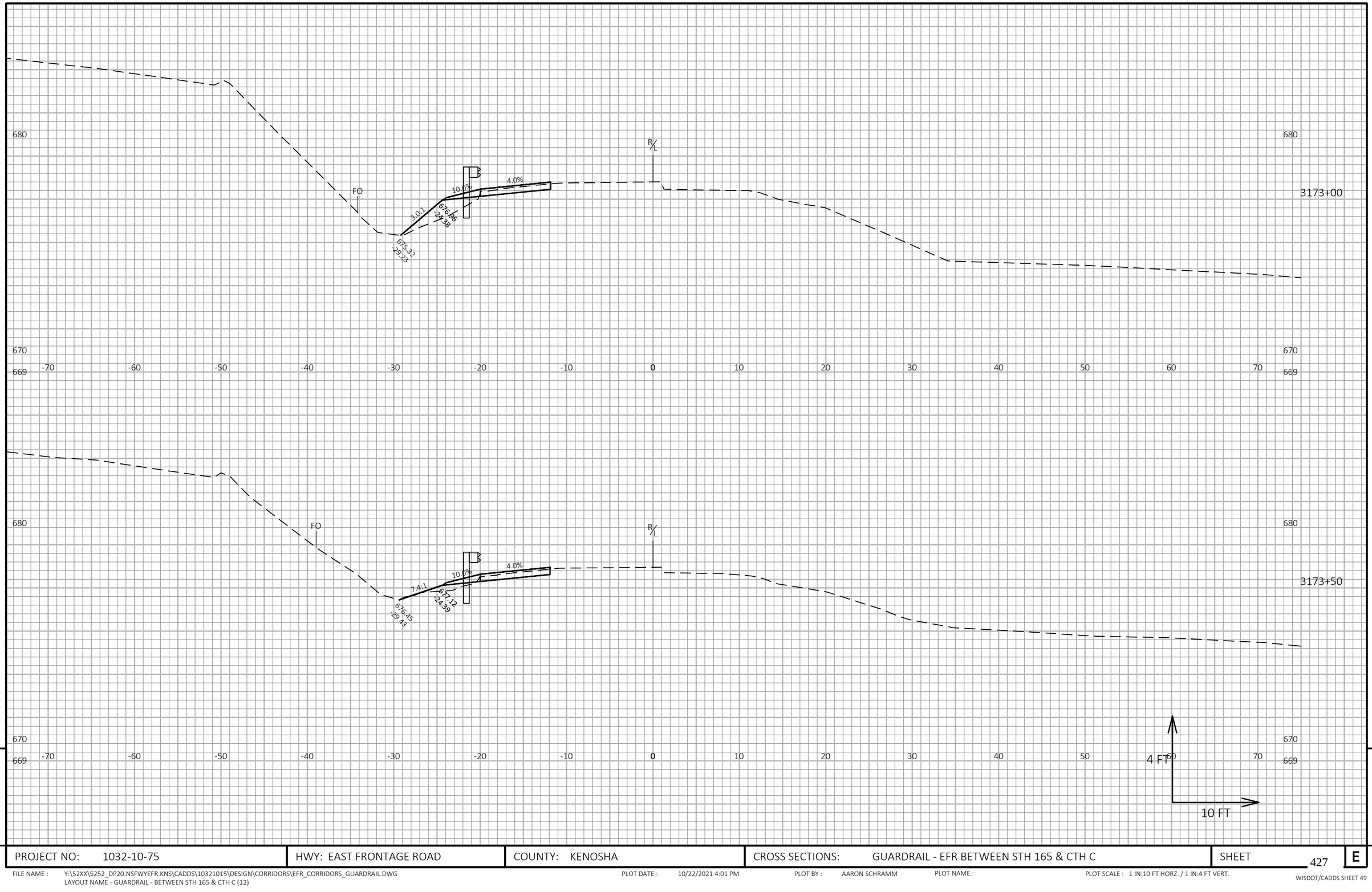

9

9

PROJECT NO: 1032-10-75	HWY: EAST FRONTAGE ROAD	COUNTY: KENOSHA	CROSS SECTIONS: GUARDRAIL - EFR BETWEEN STH 165 & CTH C	SHEET 427	E

FILE NAME : Y:\52XX\5252_DP20.NSFWYEFR.KNS\CADDS\10321015\DESIGN\CORRIDORS\EFR_CORRIDORS_GUARDRAIL.DWG
LAYOUT NAME - GUARDRAIL - BETWEEN STH 165 & CTH C (12)

PLOT DATE : 10/22/2021 4:01 PM PLOT BY : AARON SCHRAMM PLOT NAME : PLOT SCALE : 1 IN:10 FT HORZ. / 1 IN:4 FT VERT.

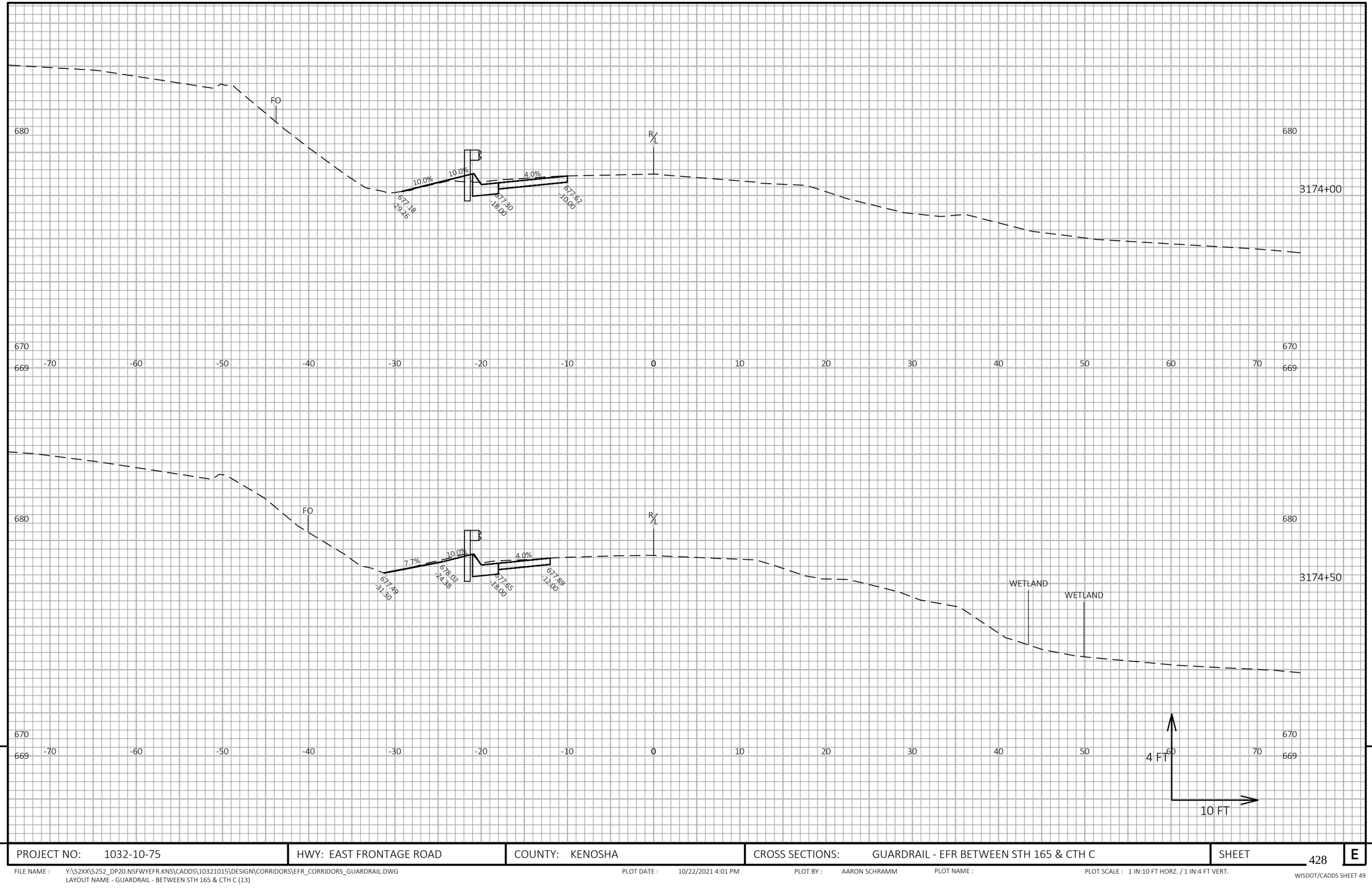

9

9

PROJECT NO: 1032-10-75	HWY: EAST FRONTAGE ROAD	COUNTY: KENOSHA	CROSS SECTIONS: GUARDRAIL - EFR BETWEEN STH 165 & CTH C	SHEET 428	E

FILE NAME : Y:\52XX\5252_DP20.NSFWYEFR.KNS\CADDS\10321015\DESIGN\CORRIDORS\EFR_CORRIDORS_GUARDRAIL.DWG
LAYOUT NAME - GUARDRAIL - BETWEEN STH 165 & CTH C (13)

PLOT DATE : 10/22/2021 4:01 PM PLOT BY : AARON SCHRAMM PLOT NAME : PLOT SCALE : 1 IN:10 FT HORZ. / 1 IN:4 FT VERT.

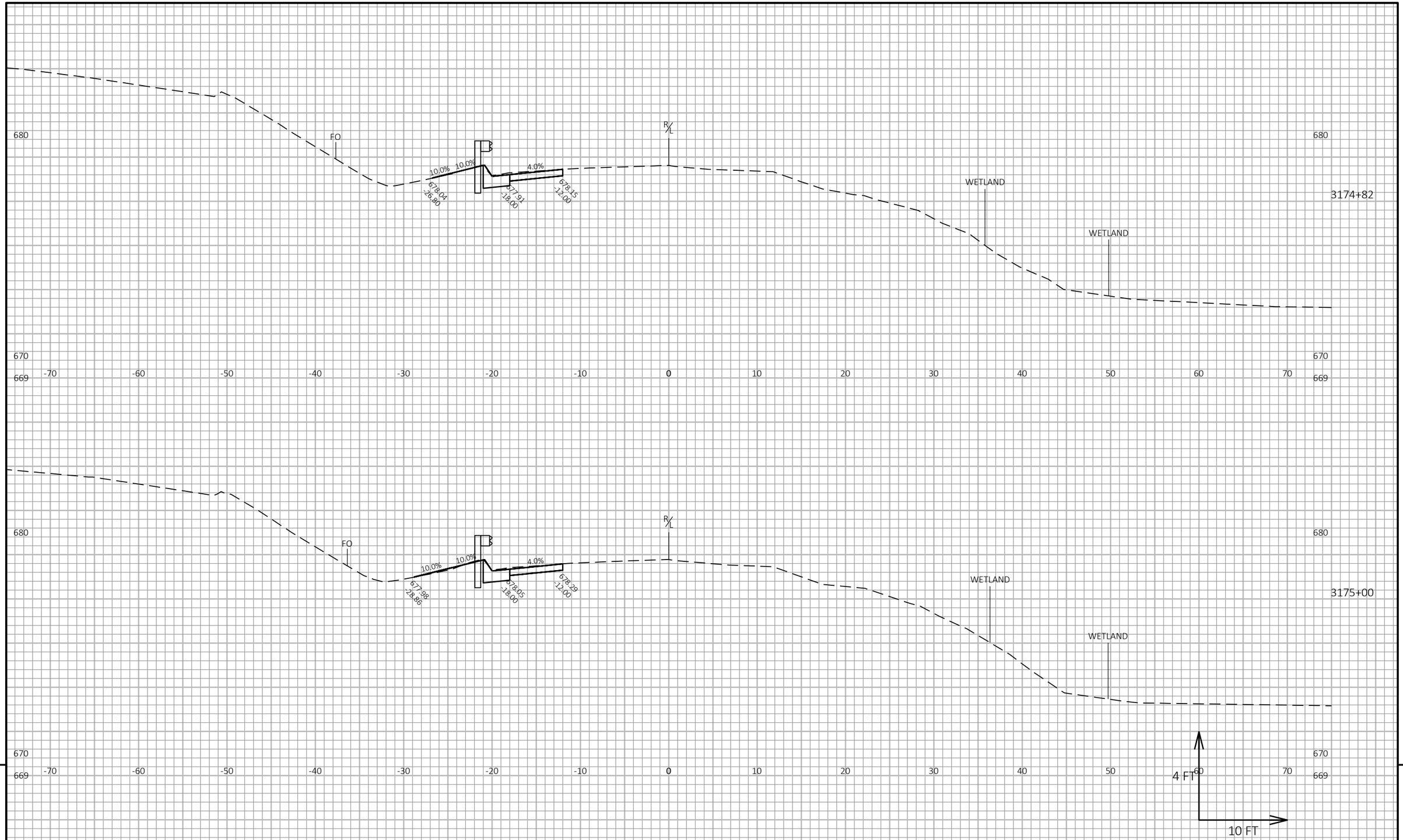

9

9

PROJECT NO: 1032-10-75	HWY: EAST FRONTAGE ROAD	COUNTY: KENOSHA	CROSS SECTIONS: GUARDRAIL - EFR BETWEEN STH 165 & CTH C	SHEET 429	E

FILE NAME : Y:\52XX\5252_DP20.NSFWYEFR.KNS\CADDS\10321015\DESIGN\CORRIDORS\EFR_CORRIDORS_GUARDRAIL.DWG
LAYOUT NAME - GUARDRAIL - BETWEEN STH 165 & CTH C (14)

PLOT DATE : 10/22/2021 4:01 PM PLOT BY : AARON SCHRAMM PLOT NAME : PLOT SCALE : 1 IN:10 FT HORZ. / 1 IN:4 FT VERT.

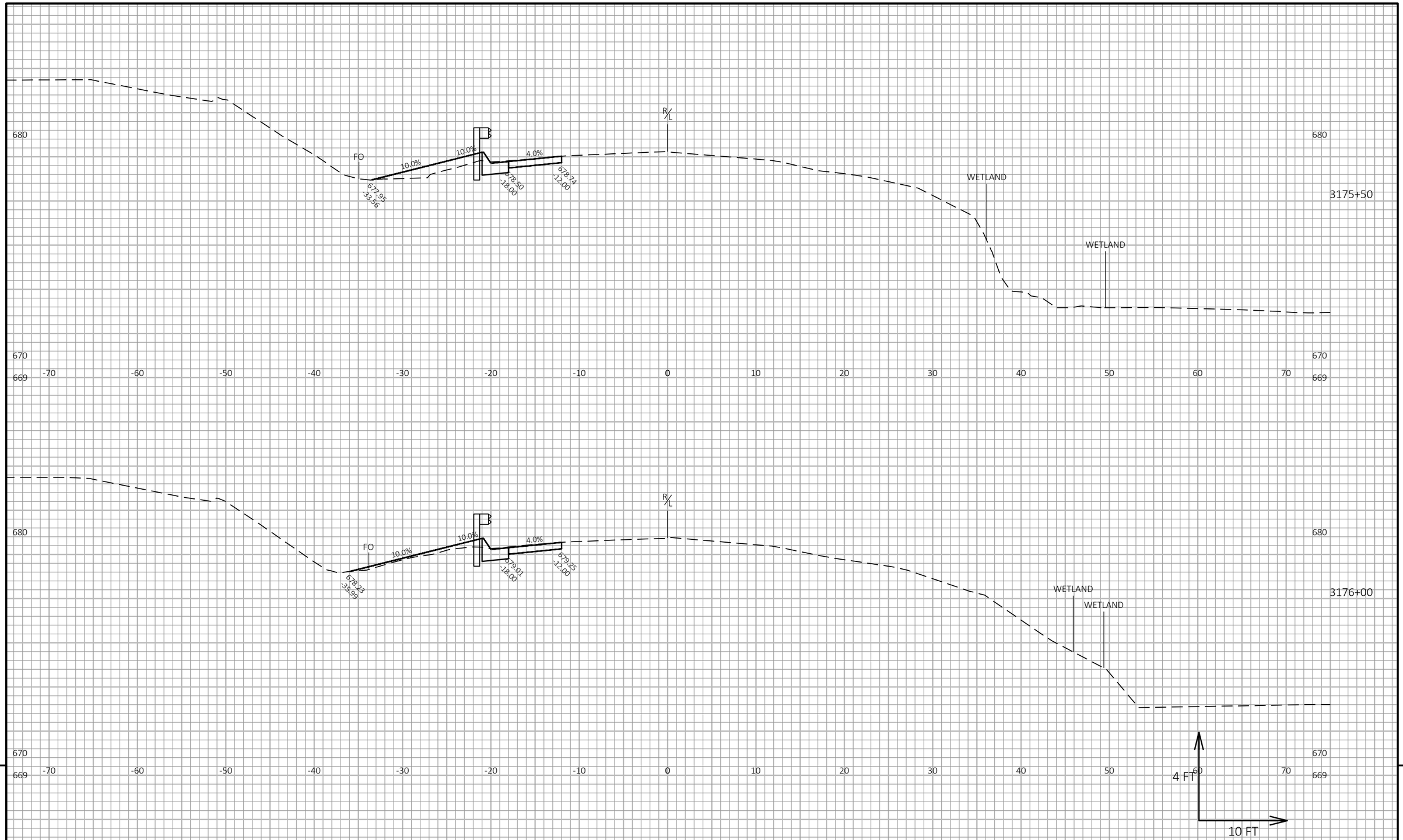

9

9

PROJECT NO: 1032-10-75	HWY: EAST FRONTAGE ROAD	COUNTY: KENOSHA	CROSS SECTIONS: GUARDRAIL - EFR BETWEEN STH 165 & CTH C	SHEET 430	E

FILE NAME : Y:\52XX\5252_DP20.NSFWYEFR.KNS\CADDS\10321015\DESIGN\CORRIDORS\EFR_CORRIDORS_GUARDRAIL.DWG
LAYOUT NAME - GUARDRAIL - BETWEEN STH 165 & CTH C (15)

PLOT DATE : 10/22/2021 4:01 PM PLOT BY : AARON SCHRAMM PLOT NAME : PLOT SCALE : 1 IN:10 FT HORZ. / 1 IN:4 FT VERT.

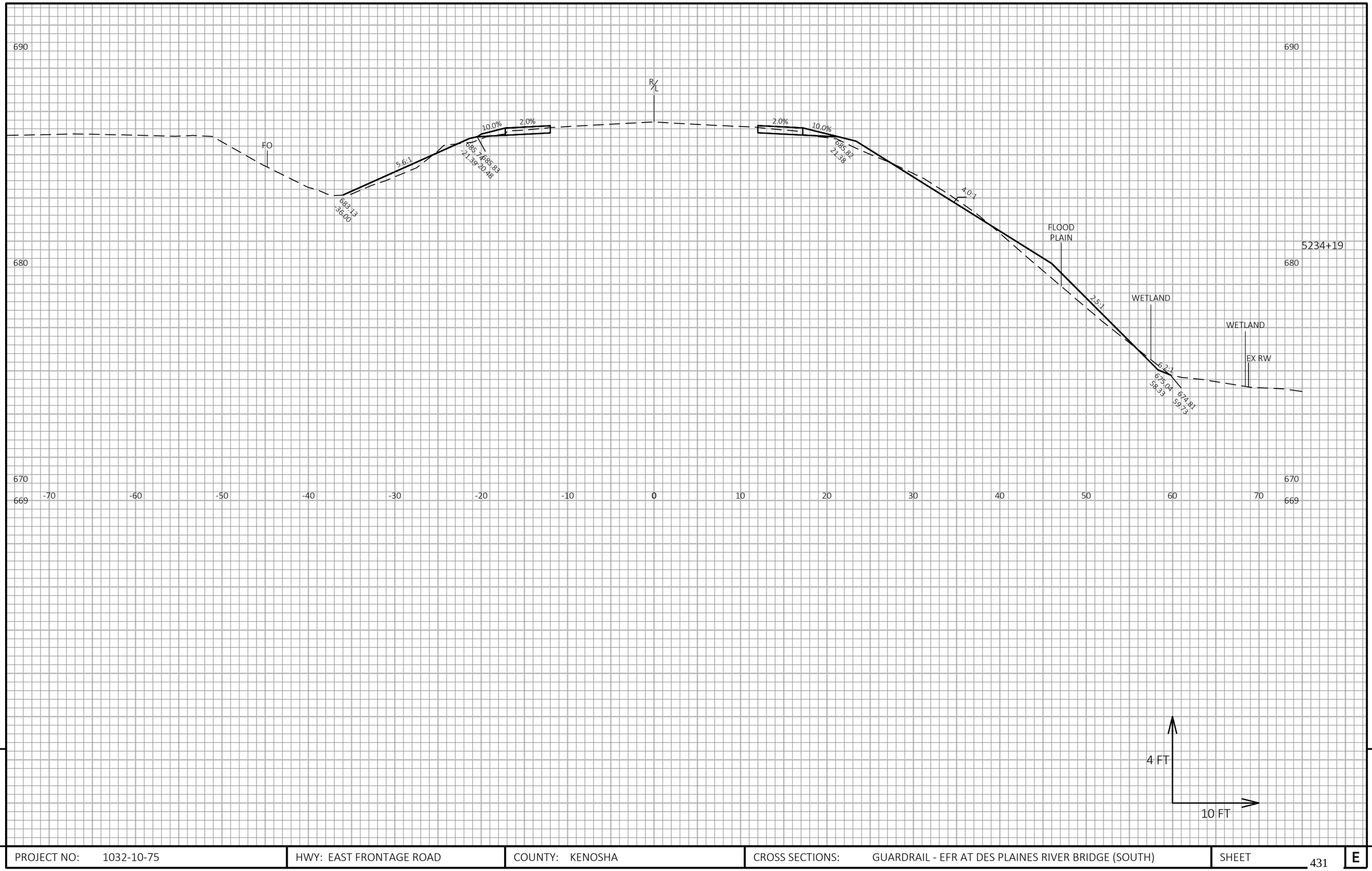

9

9

PROJECT NO: 1032-10-75	HWY: EAST FRONTAGE ROAD	COUNTY: KENOSHA	CROSS SECTIONS: GUARDRAIL - EFR AT DES PLAINES RIVER BRIDGE (SOUTH)	SHEET 431	E

FILE NAME : Y:\52XX\5252_DP20.NSFWYEFR.KNS\CADDS\10321015\DESIGN\CORRIDORS\EFR_CORRIDORS_GUARDRAIL.DWG
LAYOUT NAME - GUARDRAIL - DES PLAINES RIVER BRIDGE (SOUTH) (1)

PLOT DATE : 10/22/2021 4:01 PM PLOT BY : AARON SCHRAMM PLOT NAME : PLOT SCALE : 1 IN:10 FT HORZ. / 1 IN:4 FT VERT.

WISDOT/CADDS SHEET 49

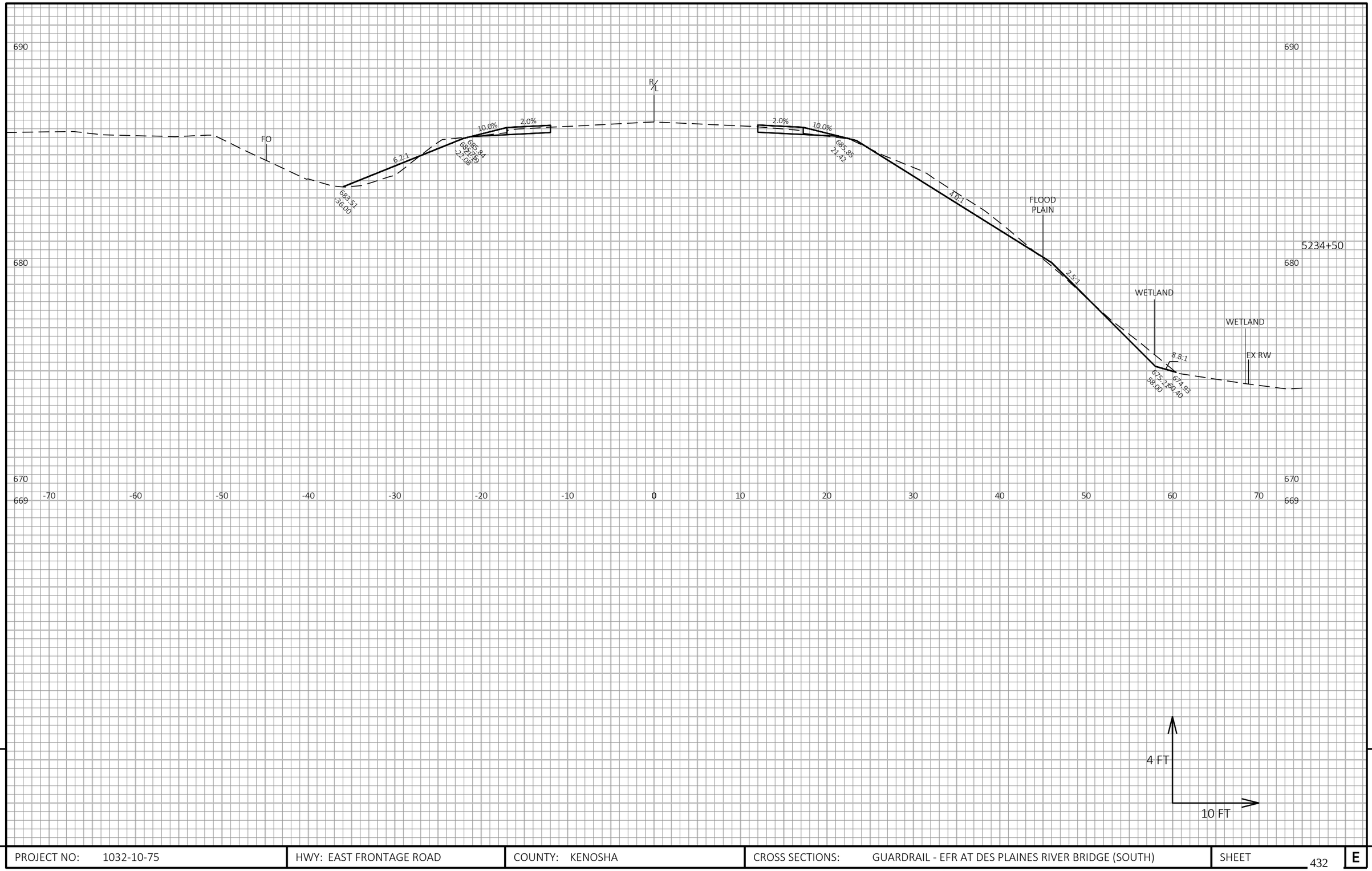

PROJECT NO: 1032-10-75	HWY: EAST FRONTAGE ROAD	COUNTY: KENOSHA	CROSS SECTIONS: GUARDRAIL - EFR AT DES PLAINES RIVER BRIDGE (SOUTH)	SHEET 432 E

FILE NAME : Y:\52XX\5252_DP20.NSFWYEFR.KNS\CADDS\10321015\DESIGN\CORRIDORS\EFR_CORRIDORS_GUARDRAIL.DWG
LAYOUT NAME - GUARDRAIL - DES PLAINES RIVER BRIDGE (SOUTH) (2)

PLOT DATE : 10/22/2021 4:01 PM PLOT BY : AARON SCHRAMM PLOT NAME : PLOT SCALE : 1 IN:10 FT HORZ. / 1 IN:4 FT VERT.

690

690

R/L

FO

10.0%

2.0%

2.0%

10.0%

5.3:1

683.76
36.00

683.85
23.22

4.0:1

FLOOD
PLAIN

5235+00

680

680

2.5:1

WETLAND

WETLAND

EX RW

7.8:1

674.58
61.95

674.76
60.50

670

669

-70 -60 -50 -40 -30 -20 -10 0 10 20 30 40 50 60 70

670

669

4 FT

10 FT

9

9

PROJECT NO: 1032-10-75	HWY: EAST FRONTAGE ROAD	COUNTY: KENOSHA	CROSS SECTIONS: GUARDRAIL - EFR AT DES PLAINES RIVER BRIDGE (SOUTH)	SHEET 433	E

FILE NAME : Y:\52XX\5252_DP20.NSFWYEFR.KNS\CADDS\10321015\DESIGN\CORRIDORS\EFR_CORRIDORS_GUARDRAIL.DWG
LAYOUT NAME - GUARDRAIL - DES PLAINES RIVER BRIDGE (SOUTH) (3)

PLOT DATE : 10/22/2021 4:01 PM PLOT BY : AARON SCHRAMM PLOT NAME : PLOT SCALE : 1 IN:10 FT HORZ. / 1 IN:4 FT VERT.

WISDOT/CADDS SHEET 49

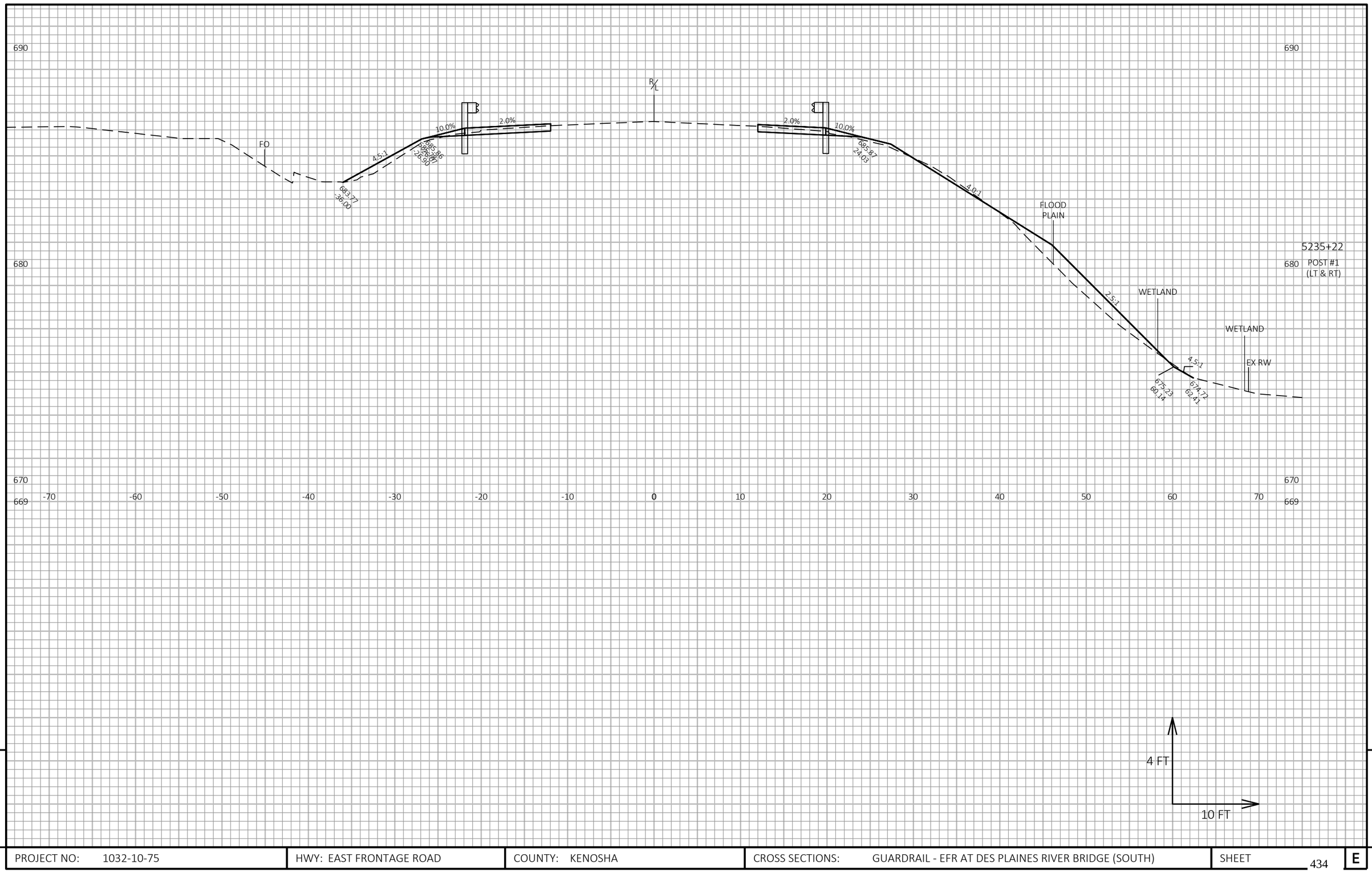
690
680
670
669
FO
R/L
4.5:1
10.0%
2.0%
683.77
36.00
685.86
685.87
685.87
685.87

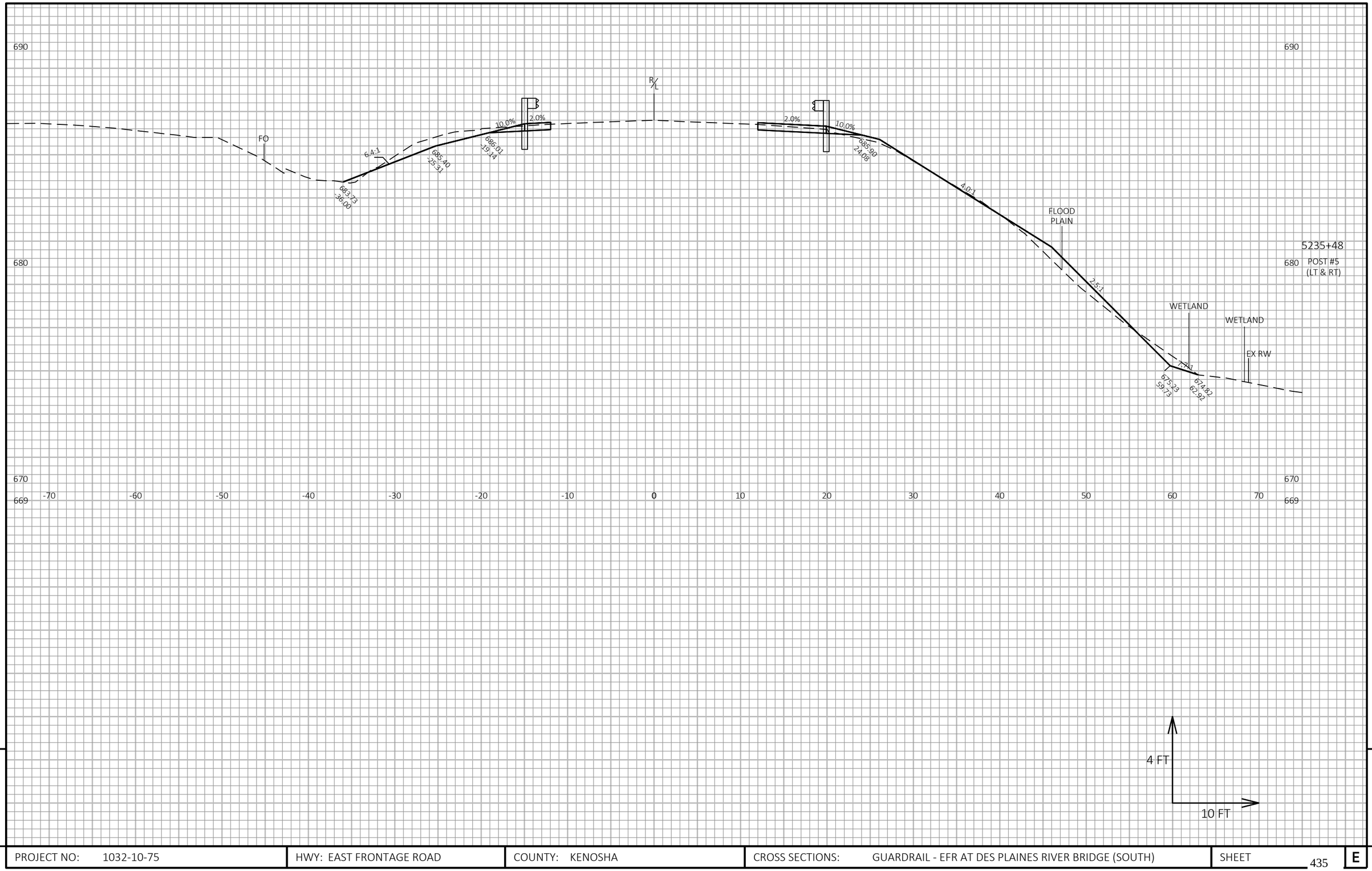

9	PROJECT NO: 1032-10-75	HWY: EAST FRONTAGE ROAD	COUNTY: KENOSHA	CROSS SECTIONS: GUARDRAIL - EFR AT DES PLAINES RIVER BRIDGE (SOUTH)	SHEET 435 E

FILE NAME : Y:\52XX\5252_DP20.NSFWYEFR.KNS\CADDS\10321015\DESIGN\CORRIDORS\EFR_CORRIDORS_GUARDRAIL.DWG
LAYOUT NAME - GUARDRAIL - DES PLAINES RIVER BRIDGE (SOUTH) (5)

PLOT DATE : 10/22/2021 4:02 PM PLOT BY : AARON SCHRAMM PLOT NAME : PLOT SCALE : 1 IN:10 FT HORZ. / 1 IN:4 FT VERT.

WISDOT/CADDS SHEET 49

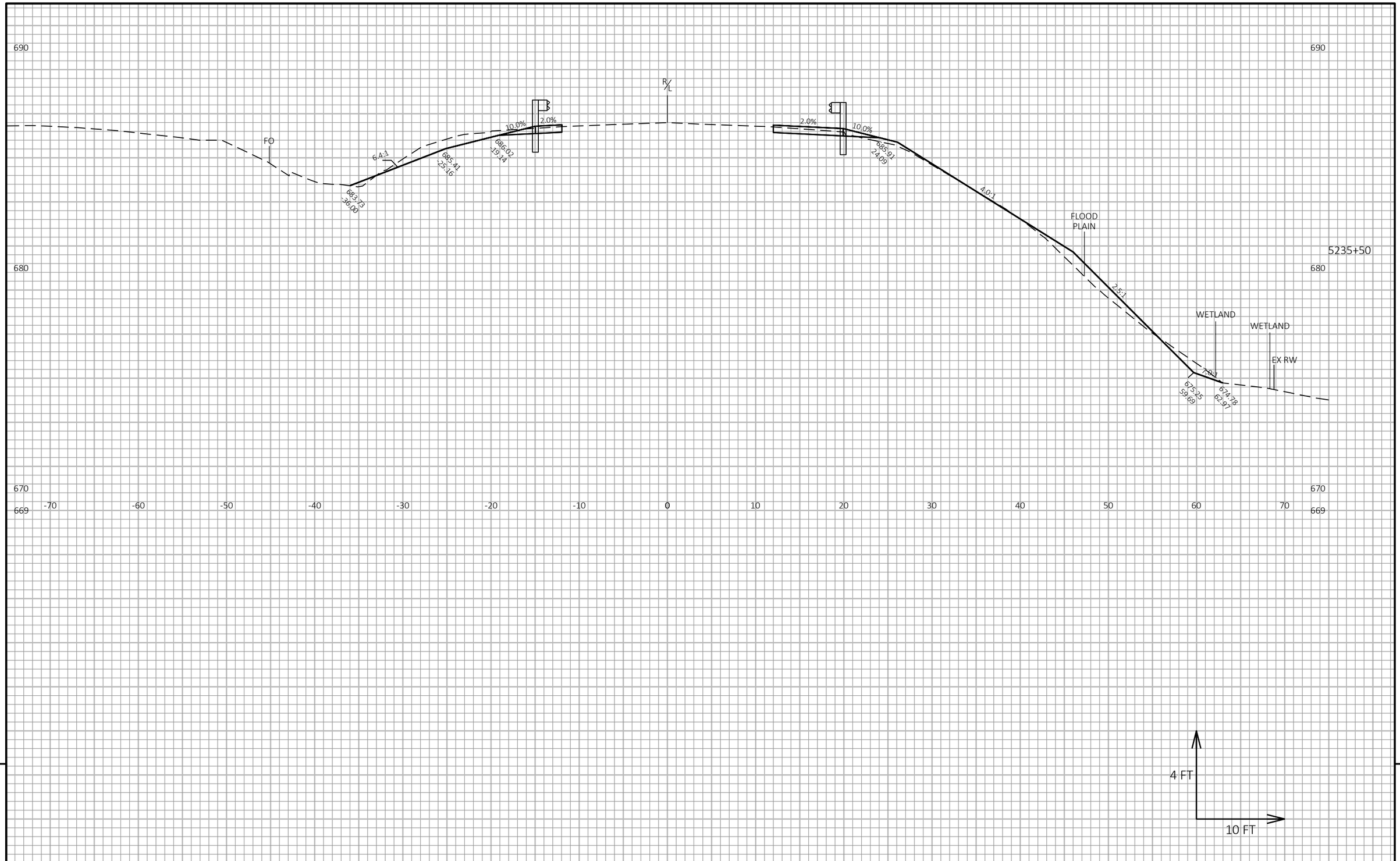

9

9

PROJECT NO: 1032-10-75	HWY: EAST FRONTAGE ROAD	COUNTY: KENOSHA	CROSS SECTIONS: GUARDRAIL - EFR AT DES PLAINES RIVER BRIDGE (SOUTH)	SHEET 436	E

FILE NAME : Y:\52XX\5252_DP20.NSFWYEFR.KNS\CADDS\10321015\DESIGN\CORRIDORS\EFR_CORRIDORS_GUARDRAIL.DWG
LAYOUT NAME - GUARDRAIL - DES PLAINES RIVER BRIDGE (SOUTH) (6)

PLOT DATE : 10/22/2021 4:02 PM PLOT BY : AARON SCHRAMM PLOT NAME : PLOT SCALE : 1 IN:10 FT HORZ. / 1 IN:4 FT VERT.

WISDOT/CADDS SHEET 49

690

690

680

680

670

669

-70 -60 -50 -40 -30 -20 -10 0 10 20 30 40 50 60 70

670

669

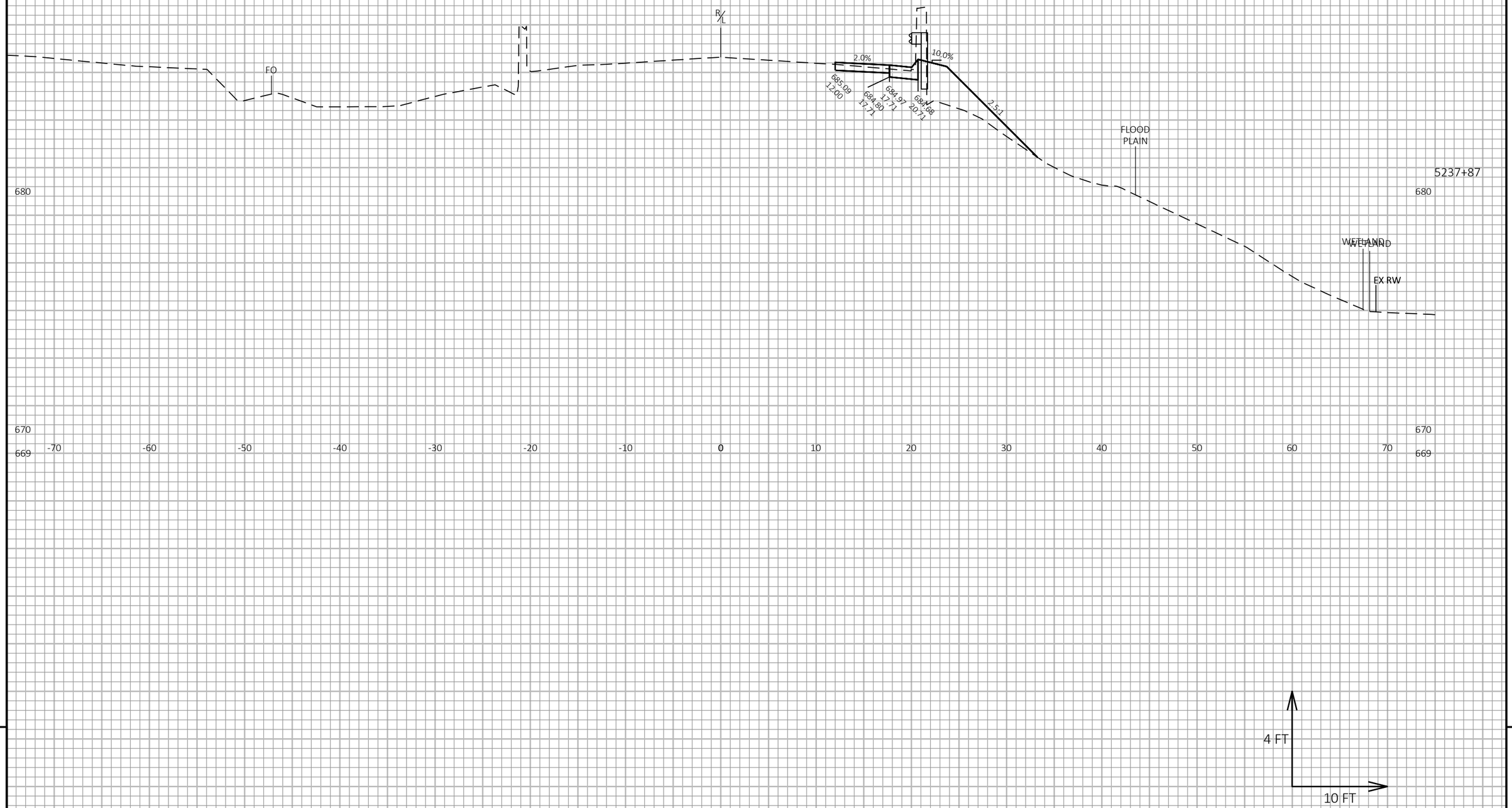

9

9

PROJECT NO: 1032-10-75	HWY: EAST FRONTAGE ROAD	COUNTY: KENOSHA	CROSS SECTIONS: GUARDRAIL - EFR AT DES PLAINES RIVER BRIDGE (NORTH)	SHEET 437	E

FILE NAME : Y:\52XX\5252_DP20.NSFWYEFR.KNS\CADDS\10321015\DESIGN\CORRIDORS\EFR_CORRIDORS_GUARDRAIL.DWG
LAYOUT NAME - GUARDRAIL - DES PLAINES RIVER BRIDGE (NORTH)1

PLOT DATE : 10/22/2021 4:02 PM PLOT BY : AARON SCHRAMM PLOT NAME : PLOT SCALE : 1 IN:10 FT HORZ. / 1 IN:4 FT VERT.

WISDOT/CADDS SHEET 49

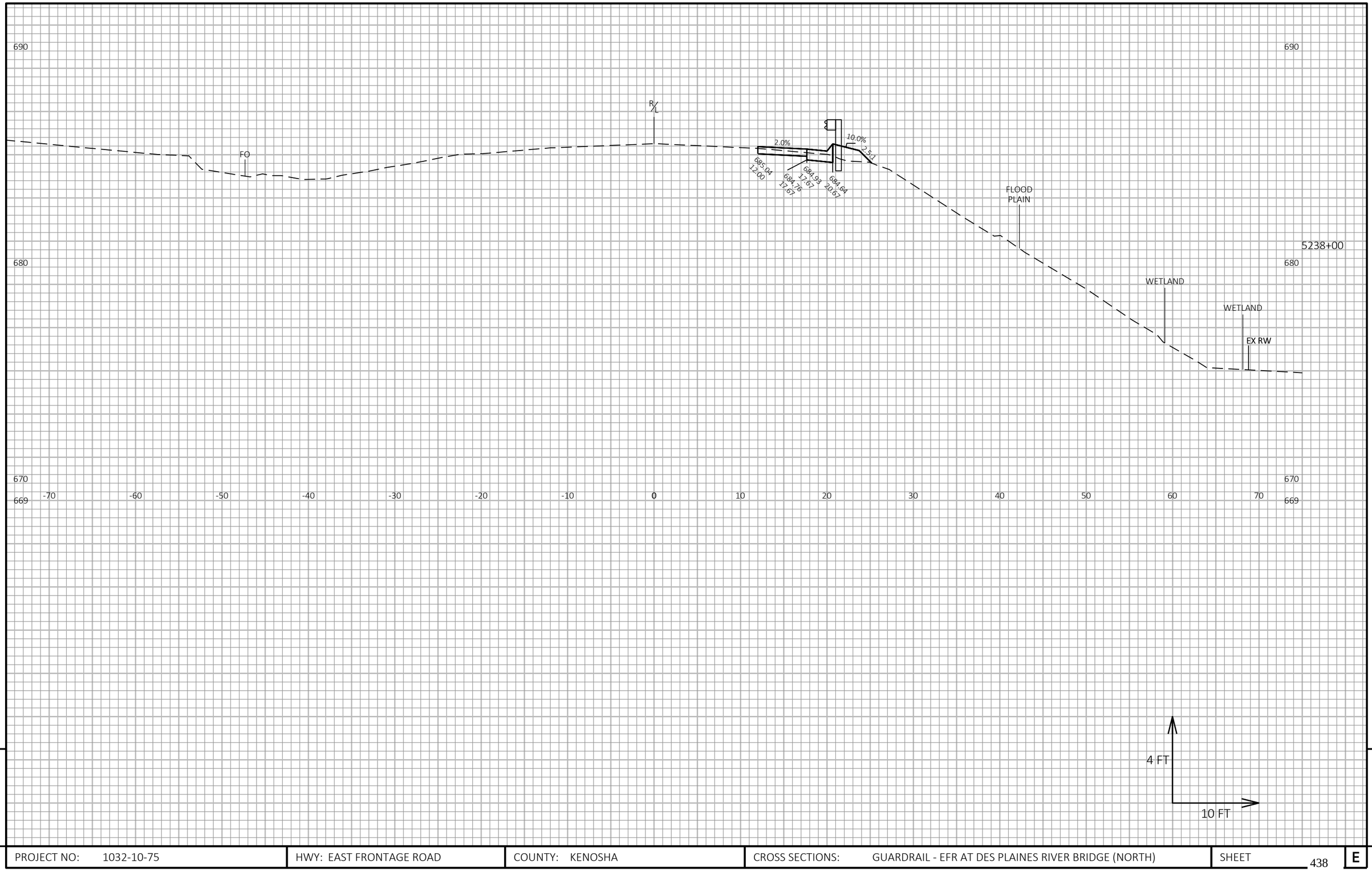

9

9

PROJECT NO: 1032-10-75	HWY: EAST FRONTAGE ROAD	COUNTY: KENOSHA	CROSS SECTIONS: GUARDRAIL - EFR AT DES PLAINES RIVER BRIDGE (NORTH)	SHEET 438	E

FILE NAME : Y:\52XX\5252_DP20.NSFWYEFR.KNS\CADDS\10321015\DESIGN\CORRIDORS\EFR_CORRIDORS_GUARDRAIL.DWG
LAYOUT NAME - GUARDRAIL - DES PLAINES RIVER BRIDGE (NORTH)2

PLOT DATE : 10/22/2021 4:02 PM PLOT BY : AARON SCHRAMM PLOT NAME : PLOT SCALE : 1 IN:10 FT HORZ. / 1 IN:4 FT VERT.

WISDOT/CADDS SHEET 49

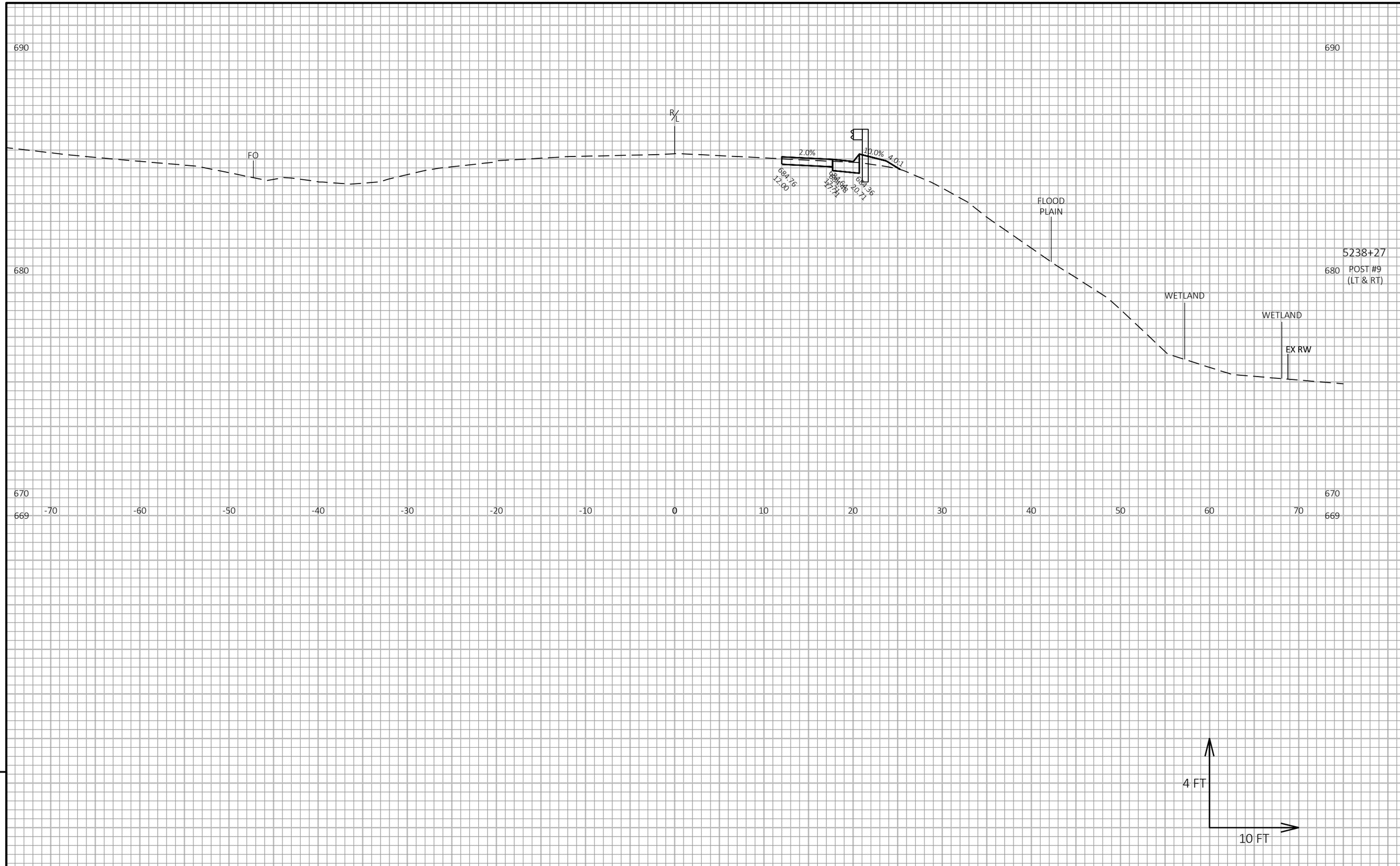

9

9

PROJECT NO: 1032-10-75	HWY: EAST FRONTAGE ROAD	COUNTY: KENOSHA	CROSS SECTIONS: GUARDRAIL - EFR AT DES PLAINES RIVER BRIDGE (NORTH)	SHEET 439	E

FILE NAME : Y:\52XX\5252_DP20.NSFWYEFR.KNS\CADDS\10321015\DESIGN\CORRIDORS\EFR_CORRIDORS_GUARDRAIL.DWG
LAYOUT NAME - GUARDRAIL - DES PLAINES RIVER BRIDGE (NORTH)3
PLOT DATE : 10/22/2021 4:02 PM
PLOT BY : AARON SCHRAMM
PLOT NAME :
PLOT SCALE : 1 IN:10 FT HORZ. / 1 IN:4 FT VERT.
WISDOT/CADDS SHEET 49

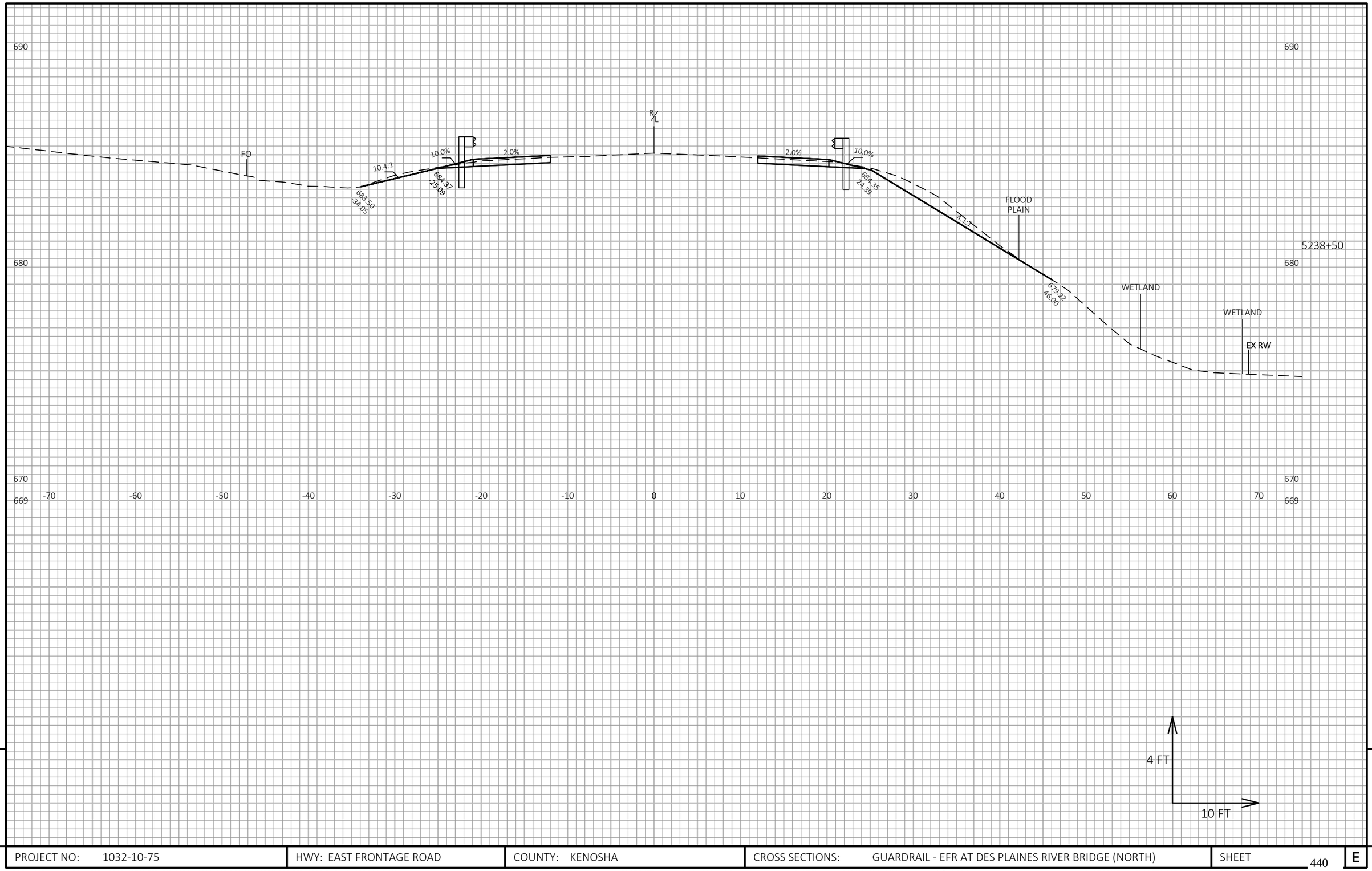

9

9

PROJECT NO: 1032-10-75	HWY: EAST FRONTAGE ROAD	COUNTY: KENOSHA	CROSS SECTIONS: GUARDRAIL - EFR AT DES PLAINES RIVER BRIDGE (NORTH)	SHEET 440	E

FILE NAME : Y:\52XX\5252_DP20.NSFWYEFR.KNS\CADDS\10321015\DESIGN\CORRIDORS\EFR_CORRIDORS_GUARDRAIL.DWG
LAYOUT NAME - GUARDRAIL - DES PLAINES RIVER BRIDGE (NORTH)4

PLOT DATE : 10/22/2021 4:02 PM PLOT BY : AARON SCHRAMM PLOT NAME : PLOT SCALE : 1 IN:10 FT HORZ. / 1 IN:4 FT VERT.

WISDOT/CADDS SHEET 49

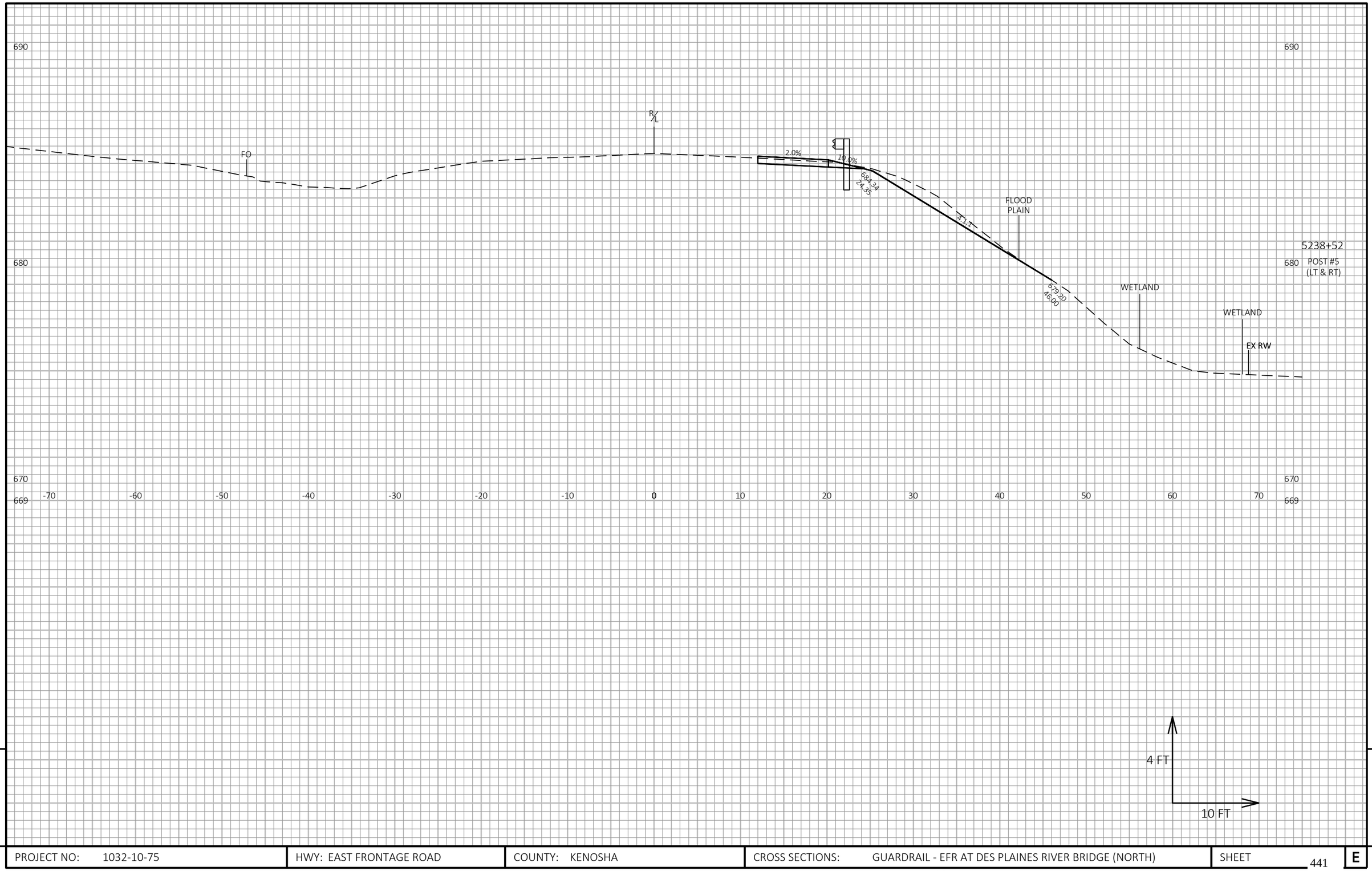

9

9

PROJECT NO: 1032-10-75	HWY: EAST FRONTAGE ROAD	COUNTY: KENOSHA	CROSS SECTIONS: GUARDRAIL - EFR AT DES PLAINES RIVER BRIDGE (NORTH)	SHEET 441	E

FILE NAME : Y:\52XX\5252_DP20.NSFWYEFR.KNS\CADDS\10321015\DESIGN\CORRIDORS\EFR_CORRIDORS_GUARDRAIL.DWG
LAYOUT NAME - GUARDRAIL - DES PLAINES RIVER BRIDGE (NORTH)5

PLOT DATE : 10/22/2021 4:02 PM PLOT BY : AARON SCHRAMM PLOT NAME : PLOT SCALE : 1 IN:10 FT HORZ. / 1 IN:4 FT VERT.

WISDOT/CADDS SHEET 49

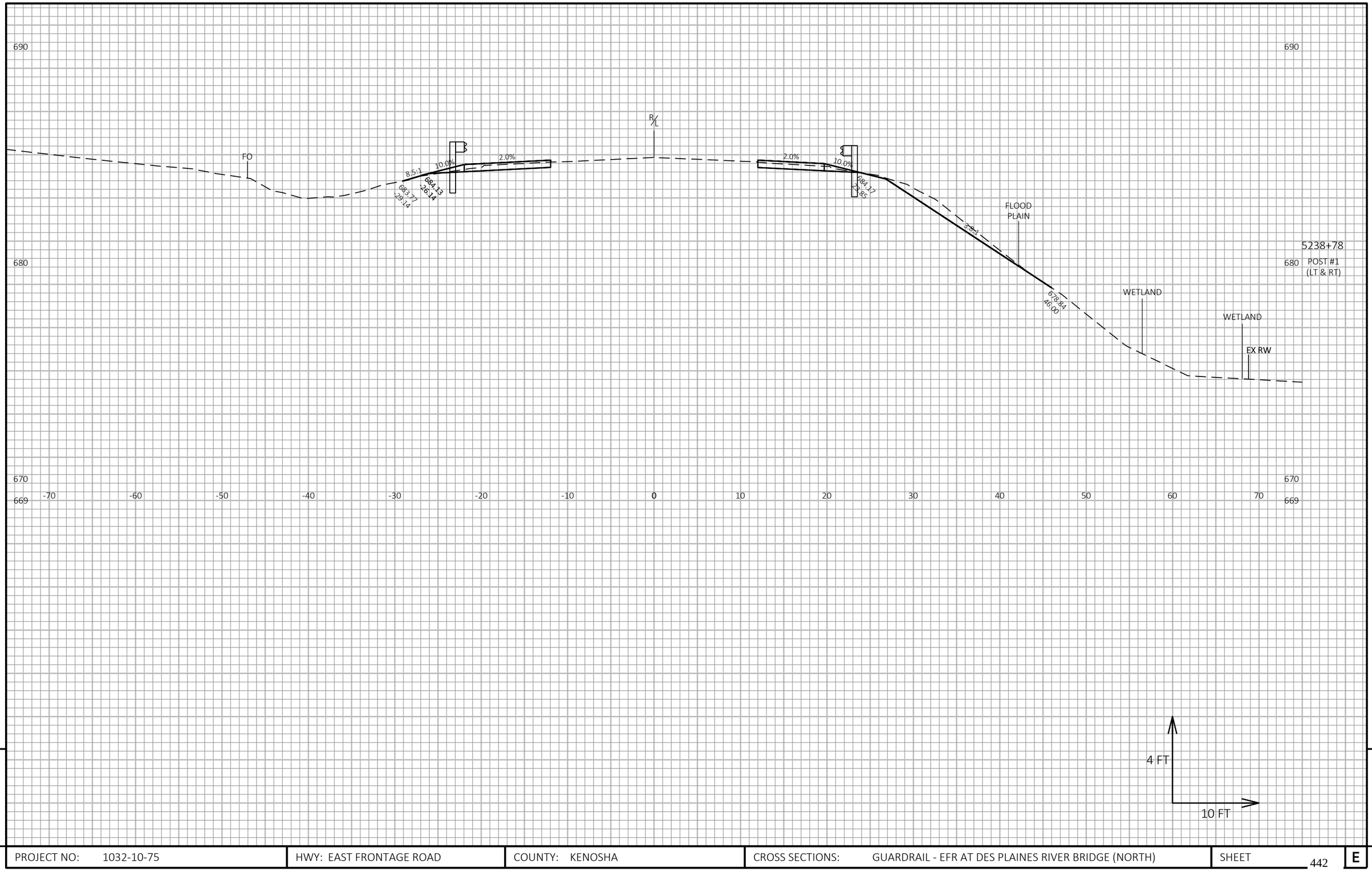

PROJECT NO: 1032-10-75	HWY: EAST FRONTAGE ROAD	COUNTY: KENOSHA	CROSS SECTIONS: GUARDRAIL - EFR AT DES PLAINES RIVER BRIDGE (NORTH)	SHEET 442 E

FILE NAME : Y:\52XX\5252_DP20.NSFWYEFR.KNS\CADDS\10321015\DESIGN\CORRIDORS\EFR_CORRIDORS_GUARDRAIL.DWG
LAYOUT NAME - GUARDRAIL - DES PLAINES RIVER BRIDGE (NORTH)6

PLOT DATE : 10/22/2021 4:02 PM PLOT BY : AARON SCHRAMM PLOT NAME : PLOT SCALE : 1 IN:10 FT HORZ. / 1 IN:4 FT VERT.

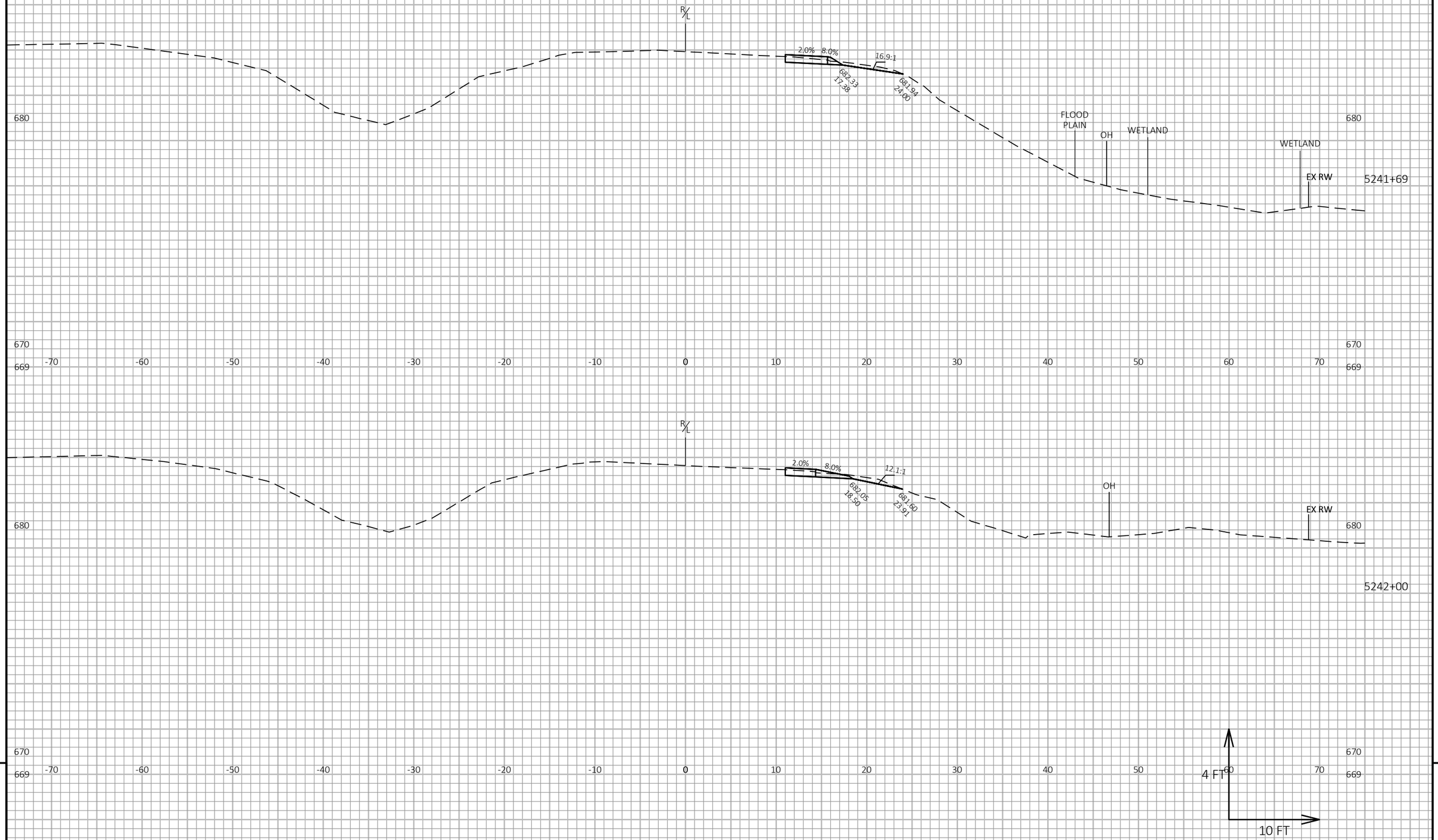

9

9

PROJECT NO: 1032-10-75	HWY: EAST FRONTAGE ROAD	COUNTY: KENOSHA	CROSS SECTIONS: GUARDRAIL - EFR BETWEEN CTH C & STH 50	SHEET 443	E

FILE NAME : Y:\52XX\5252_DP20.NSFWYEFR.KNS\CADDS\10321015\DESIGN\CORRIDORS\EFR_CORRIDORS_GUARDRAIL.DWG
LAYOUT NAME - GUARDRAIL - BETWEEN CTH C & STH 50

PLOT DATE : 10/22/2021 4:03 PM PLOT BY : AARON SCHRAMM PLOT NAME : PLOT SCALE : 1 IN:10 FT HORZ. / 1 IN:4 FT VERT.

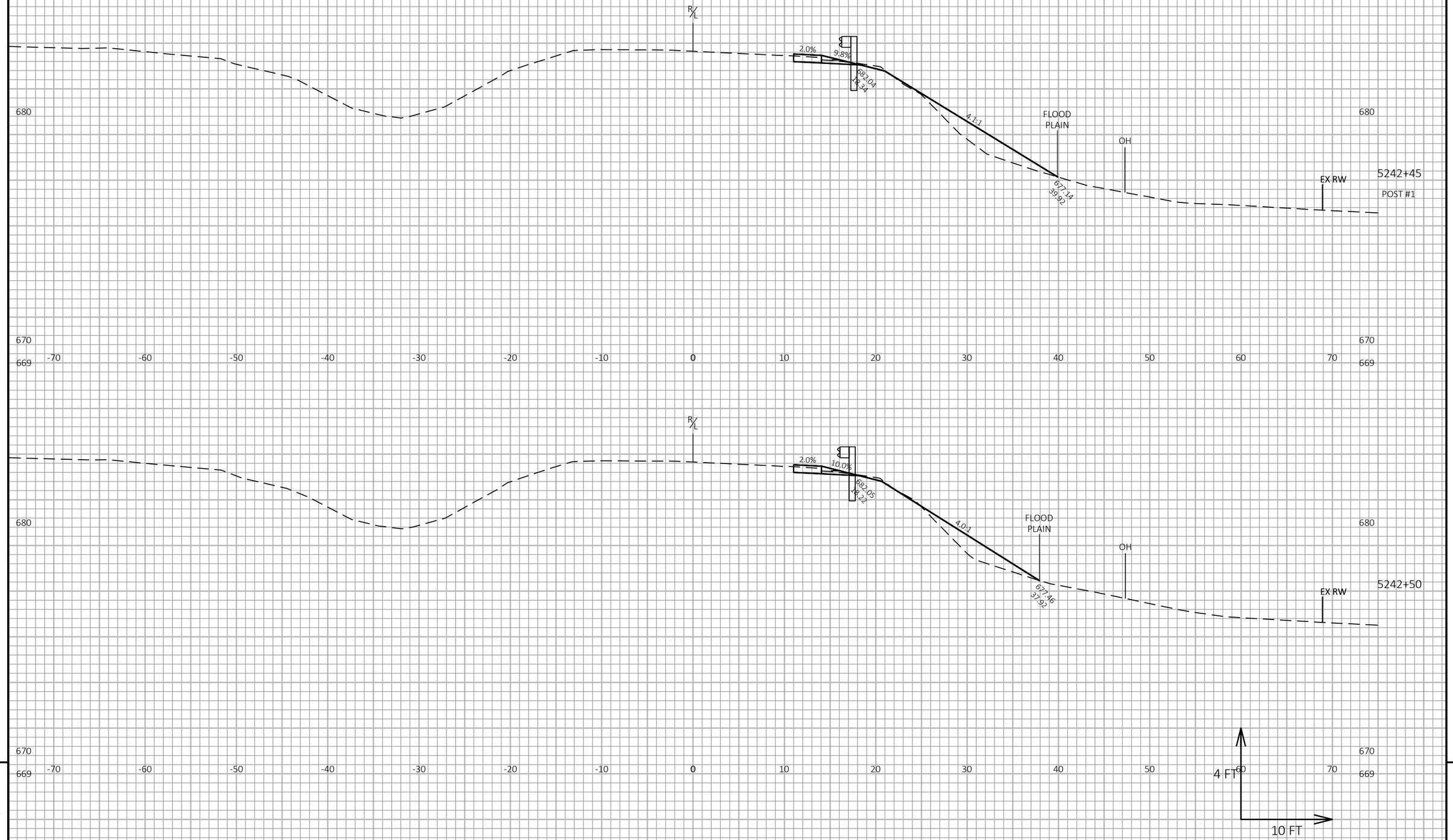

9

9

PROJECT NO: 1032-10-75	HWY: EAST FRONTAGE ROAD	COUNTY: KENOSHA	CROSS SECTIONS: GUARDRAIL - EFR BETWEEN CTH C & STH 50	SHEET 444	E

FILE NAME : Y:\52XX\5252_DP20.NSFWYEFR.KNS\CADDS\10321015\DESIGN\CORRIDORS\EFR_CORRIDORS_GUARDRAIL.DWG
LAYOUT NAME - GUARDRAIL - BETWEEN CTH C & STH 50 (1)

PLOT DATE : 10/22/2021 4:03 PM PLOT BY : AARON SCHRAMM PLOT NAME : PLOT SCALE : 1 IN:10 FT HORZ. / 1 IN:4 FT VERT.

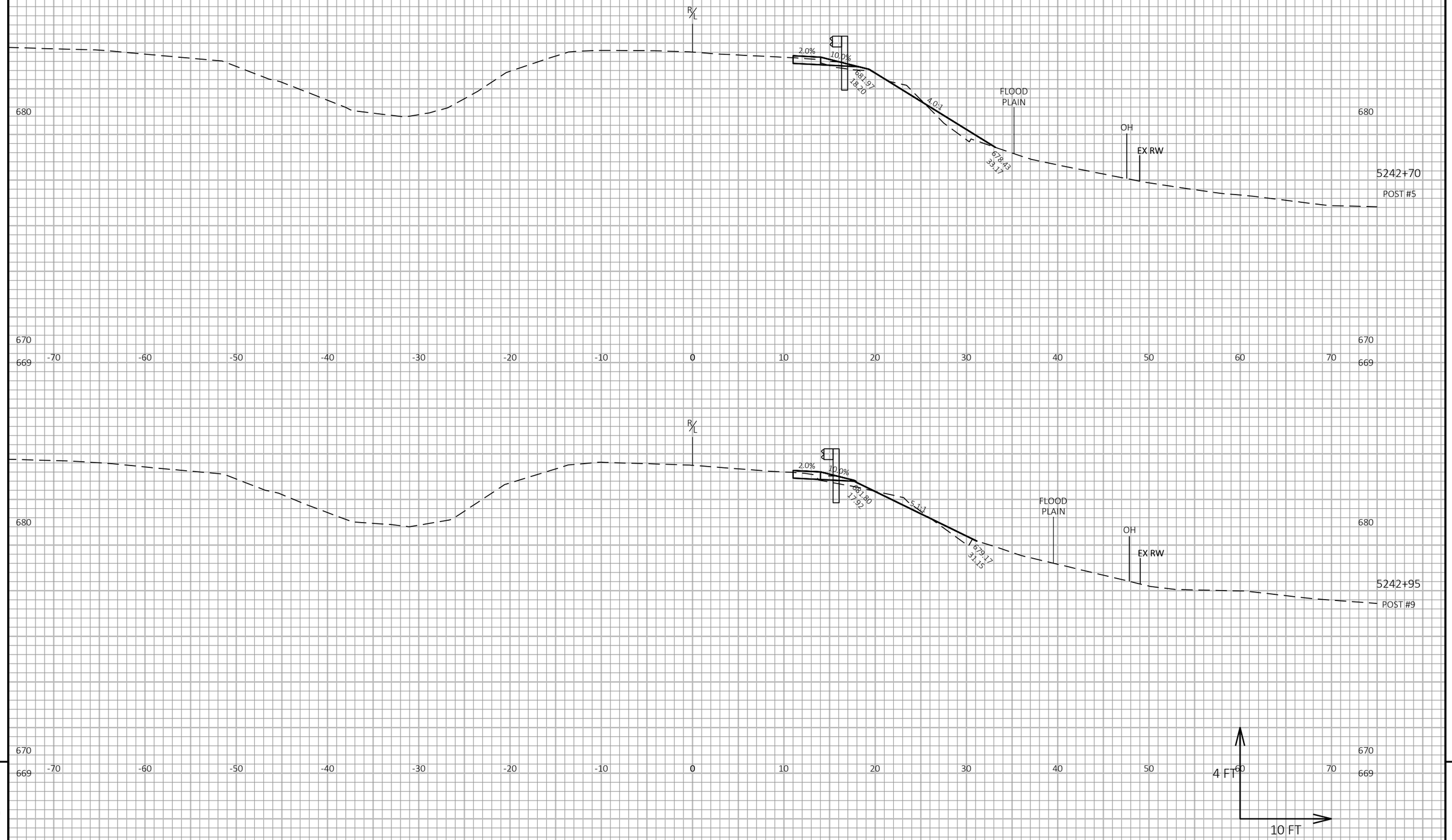

9

9

PROJECT NO: 1032-10-75	HWY: EAST FRONTAGE ROAD	COUNTY: KENOSHA	CROSS SECTIONS: GUARDRAIL - EFR BETWEEN CTH C & STH 50	SHEET 445	E

FILE NAME : Y:\52XX\5252_DP20.NSFWYEFR.KNS\CADDS\10321015\DESIGN\CORRIDORS\EFR_CORRIDORS_GUARDRAIL.DWG
LAYOUT NAME - GUARDRAIL - BETWEEN CTH C & STH 50 (2)

PLOT DATE : 10/22/2021 4:03 PM PLOT BY : AARON SCHRAMM PLOT NAME : PLOT SCALE : 1 IN:10 FT HORZ. / 1 IN:4 FT VERT.

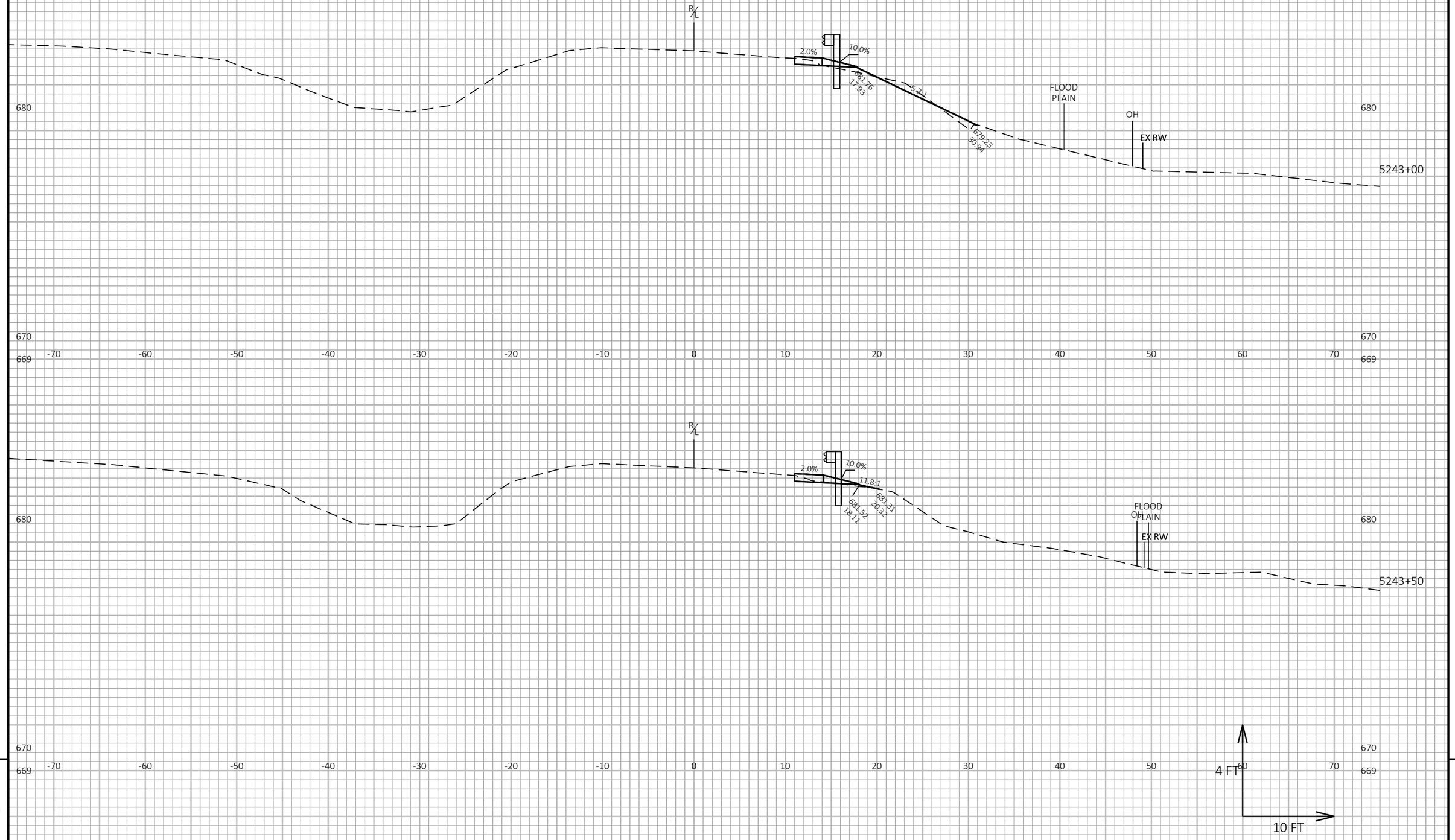

9

9

PROJECT NO: 1032-10-75	HWY: EAST FRONTAGE ROAD	COUNTY: KENOSHA	CROSS SECTIONS: GUARDRAIL - EFR BETWEEN CTH C & STH 50	SHEET 446	E

FILE NAME : Y:\52XX\5252_DP20.NSFWYEFR.KNS\CADDS\10321015\DESIGN\CORRIDORS\EFR_CORRIDORS_GUARDRAIL.DWG
LAYOUT NAME - GUARDRAIL - BETWEEN CTH C & STH 50 (3)

PLOT DATE : 10/22/2021 4:03 PM PLOT BY : AARON SCHRAMM PLOT NAME : PLOT SCALE : 1 IN:10 FT HORZ. / 1 IN:4 FT VERT.

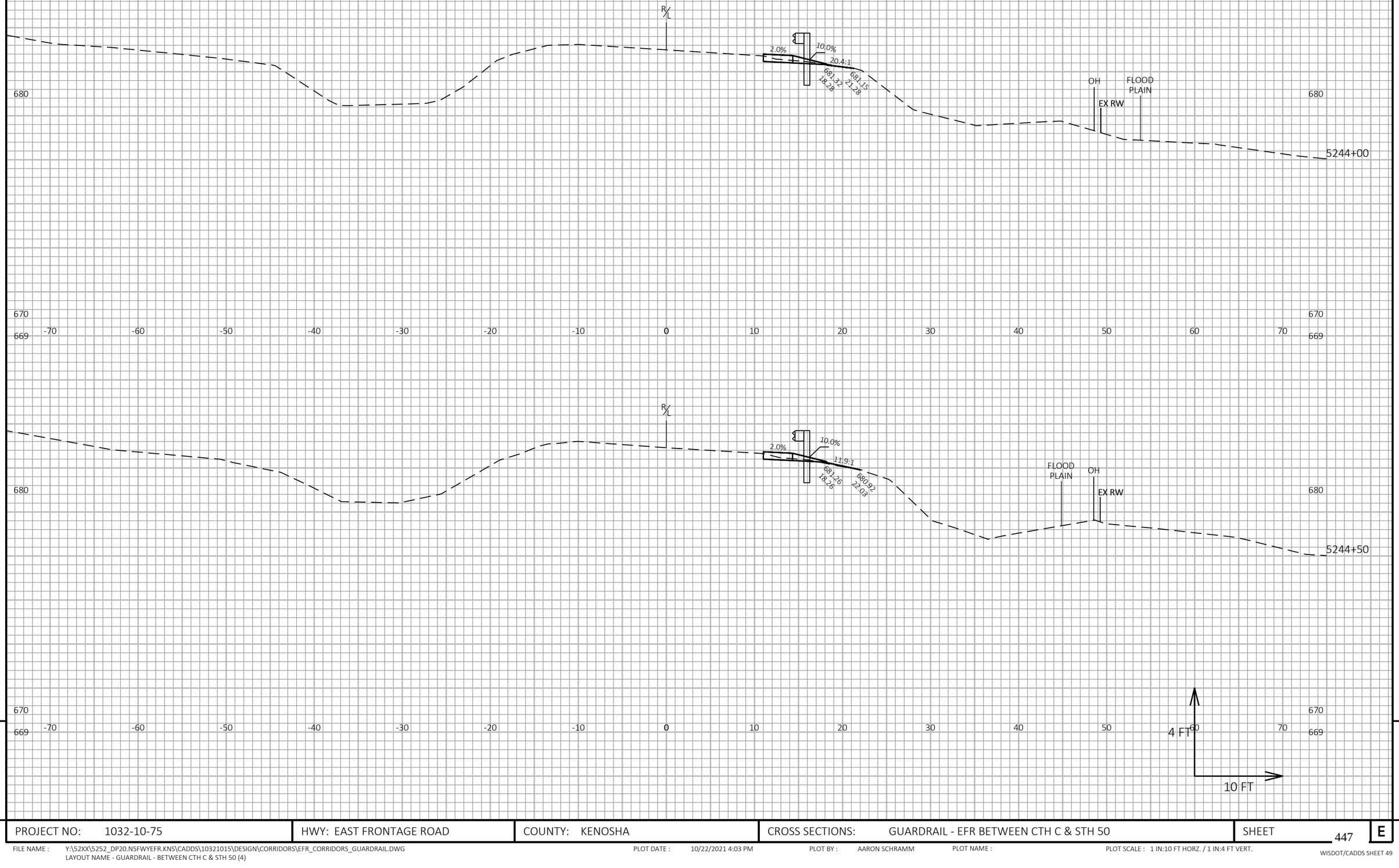

9

9

PROJECT NO: 1032-10-75	HWY: EAST FRONTAGE ROAD	COUNTY: KENOSHA	CROSS SECTIONS: GUARDRAIL - EFR BETWEEN CTH C & STH 50	SHEET 447	E

FILE NAME : Y:\52XX\5252_DP20.NSFWYEFR.KNS\CADDS\10321015\DESIGN\CORRIDORS\EFR_CORRIDORS_GUARDRAIL.DWG
LAYOUT NAME - GUARDRAIL - BETWEEN CTH C & STH 50 (4)

PLOT DATE : 10/22/2021 4:03 PM PLOT BY : AARON SCHRAMM PLOT NAME : PLOT SCALE : 1 IN:10 FT HORZ. / 1 IN:4 FT VERT.

WISDOT/CADDS SHEET 49

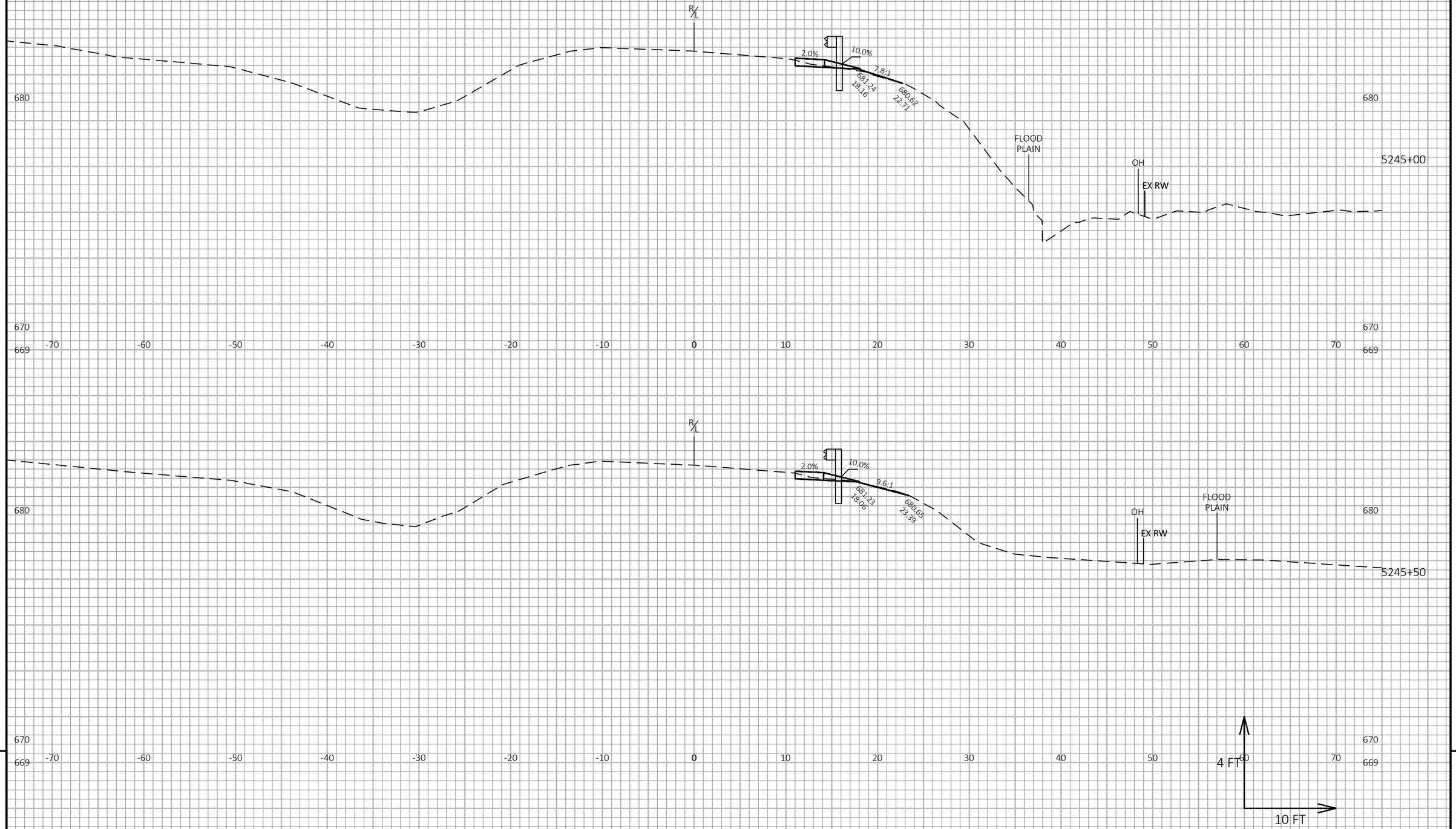

9

9

PROJECT NO: 1032-10-75	HWY: EAST FRONTAGE ROAD	COUNTY: KENOSHA	CROSS SECTIONS: GUARDRAIL - EFR BETWEEN CTH C & STH 50	SHEET 448	E

FILE NAME : Y:\52XX\5252_DP20.NSFWYEFR.KNS\CADDS\10321015\DESIGN\CORRIDORS\EFR_CORRIDORS_GUARDRAIL.DWG
LAYOUT NAME - GUARDRAIL - BETWEEN CTH C & STH 50 (5)

PLOT DATE : 10/22/2021 4:03 PM PLOT BY : AARON SCHRAMM PLOT NAME : PLOT SCALE : 1 IN:10 FT HORZ. / 1 IN:4 FT VERT.

WISDOT/CADDS SHEET 49

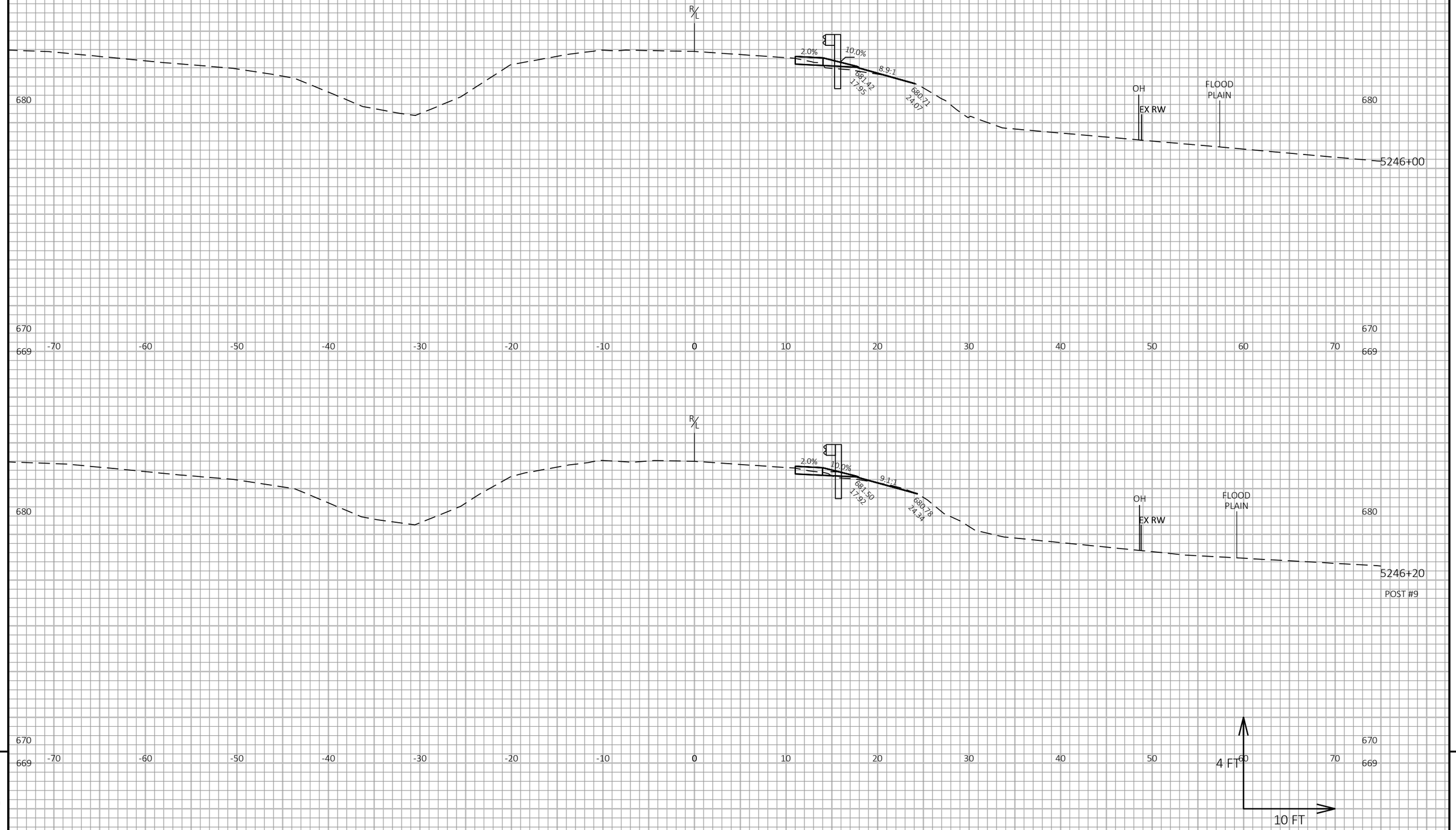

9

9

PROJECT NO: 1032-10-75	HWY: EAST FRONTAGE ROAD	COUNTY: KENOSHA	CROSS SECTIONS: GUARDRAIL - EFR BETWEEN CTH C & STH 50	SHEET 449	E

FILE NAME : Y:\52XX\5252_DP20.NSFWYEFR.KNS\CADDS\10321015\DESIGN\CORRIDORS\EFR_CORRIDORS_GUARDRAIL.DWG
LAYOUT NAME - GUARDRAIL - BETWEEN CTH C & STH 50 (6)

PLOT DATE : 10/22/2021 4:03 PM PLOT BY : AARON SCHRAMM PLOT NAME : PLOT SCALE : 1 IN:10 FT HORZ. / 1 IN:4 FT VERT.

WISDOT/CADDS SHEET 49

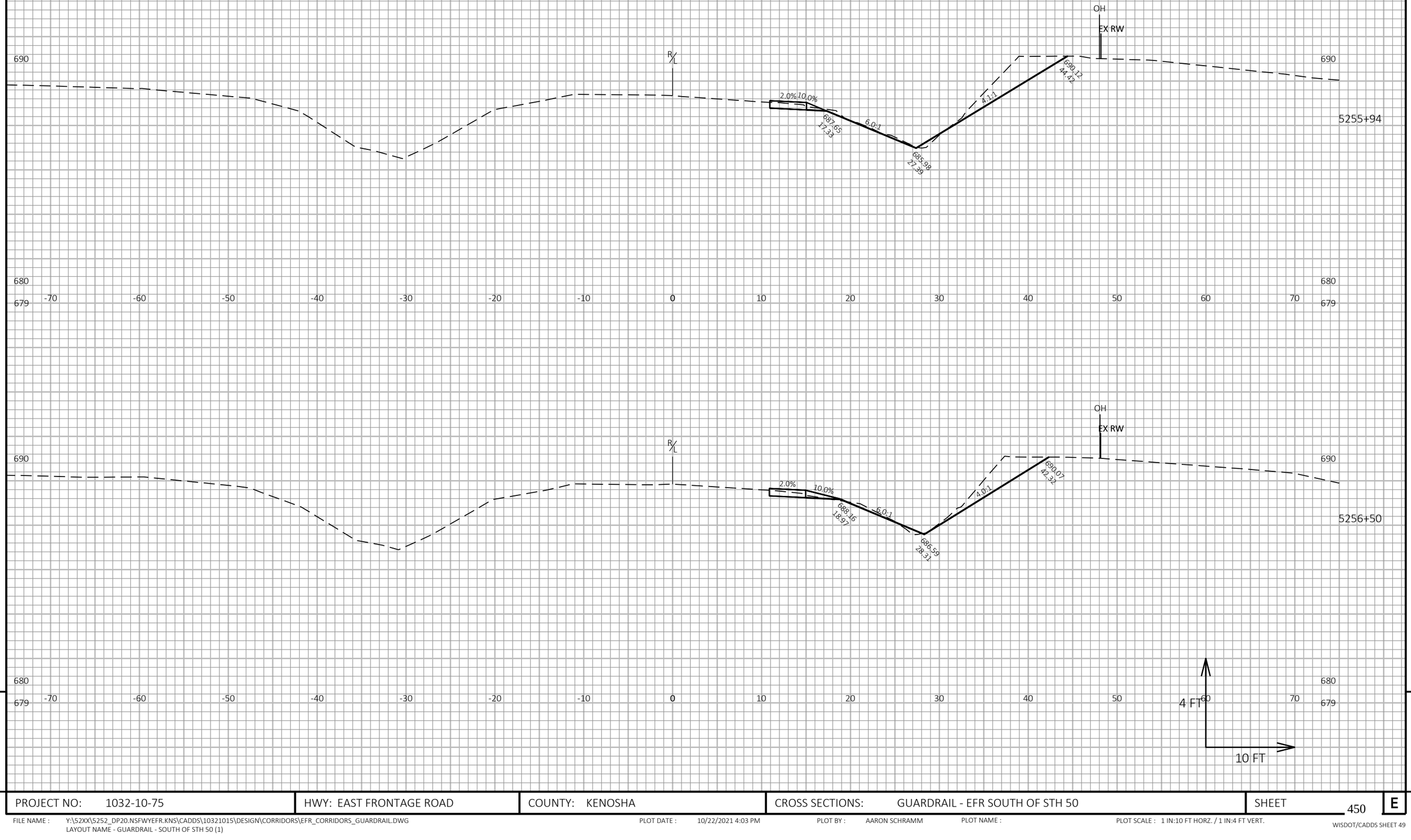

PROJECT NO: 1032-10-75	HWY: EAST FRONTAGE ROAD	COUNTY: KENOSHA	CROSS SECTIONS: GUARDRAIL - EFR SOUTH OF STH 50	SHEET 450	E

FILE NAME : Y:\52XX\5252_DP20.NSFWYEFR.KNS\CADDS\10321015\DESIGN\CORRIDORS\EFR_CORRIDORS_GUARDRAIL.DWG
LAYOUT NAME - GUARDRAIL - SOUTH OF STH 50 (1)

PLOT DATE : 10/22/2021 4:03 PM PLOT BY : AARON SCHRAMM PLOT NAME : PLOT SCALE : 1 IN:10 FT HORZ. / 1 IN:4 FT VERT.

WISDOT/CADDS SHEET 49

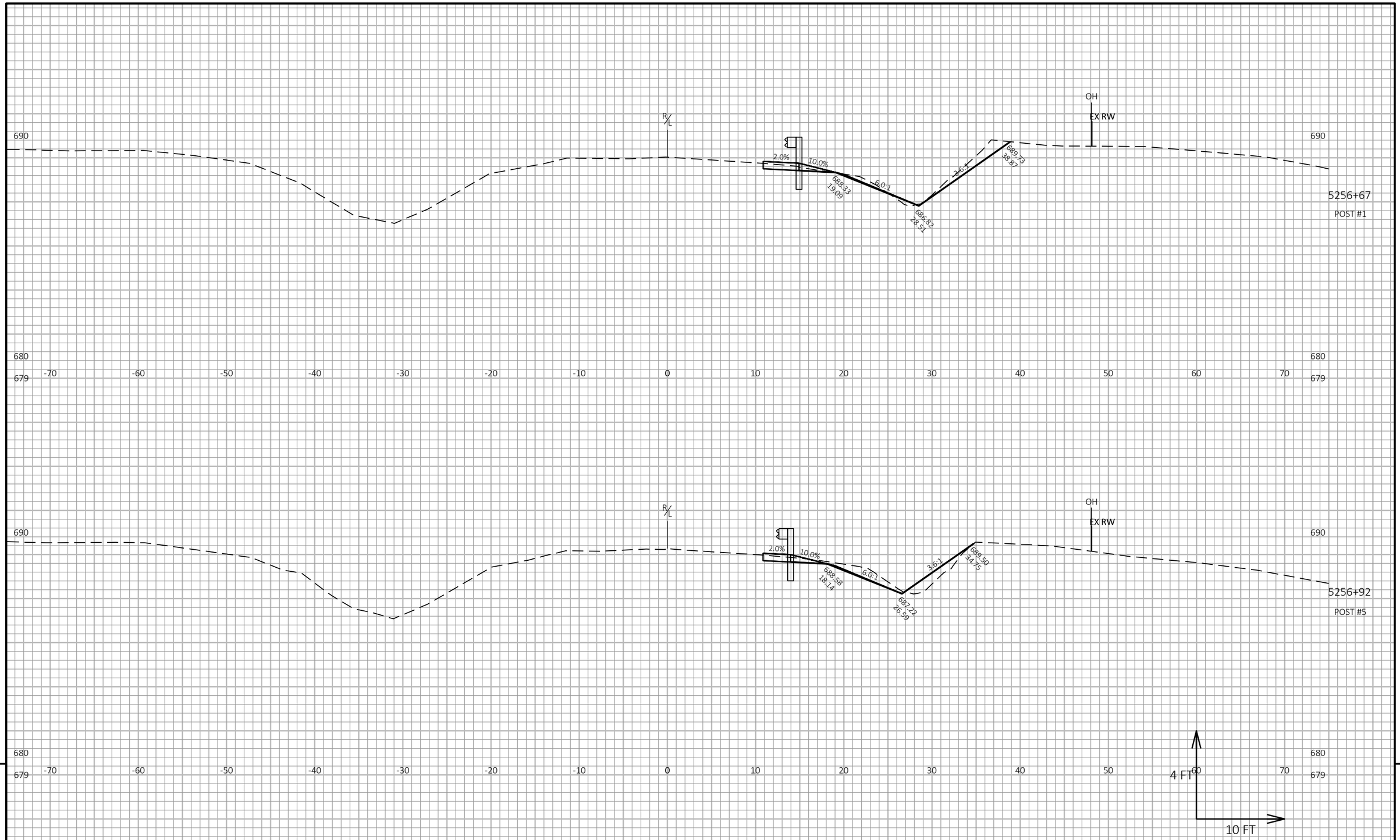

PROJECT NO: 1032-10-75	HWY: EAST FRONTAGE ROAD	COUNTY: KENOSHA	CROSS SECTIONS: GUARDRAIL - EFR SOUTH OF STH 50	SHEET 451	E

FILE NAME : Y:\52XX\5252_DP20.NSFWYEFR.KNS\CADDS\10321015\DESIGN\CORRIDORS\EFR_CORRIDORS_GUARDRAIL.DWG
LAYOUT NAME - GUARDRAIL - SOUTH OF STH 50 (2)

PLOT DATE : 10/22/2021 4:03 PM PLOT BY : AARON SCHRAMM PLOT NAME : PLOT SCALE : 1 IN:10 FT HORZ. / 1 IN:4 FT VERT.

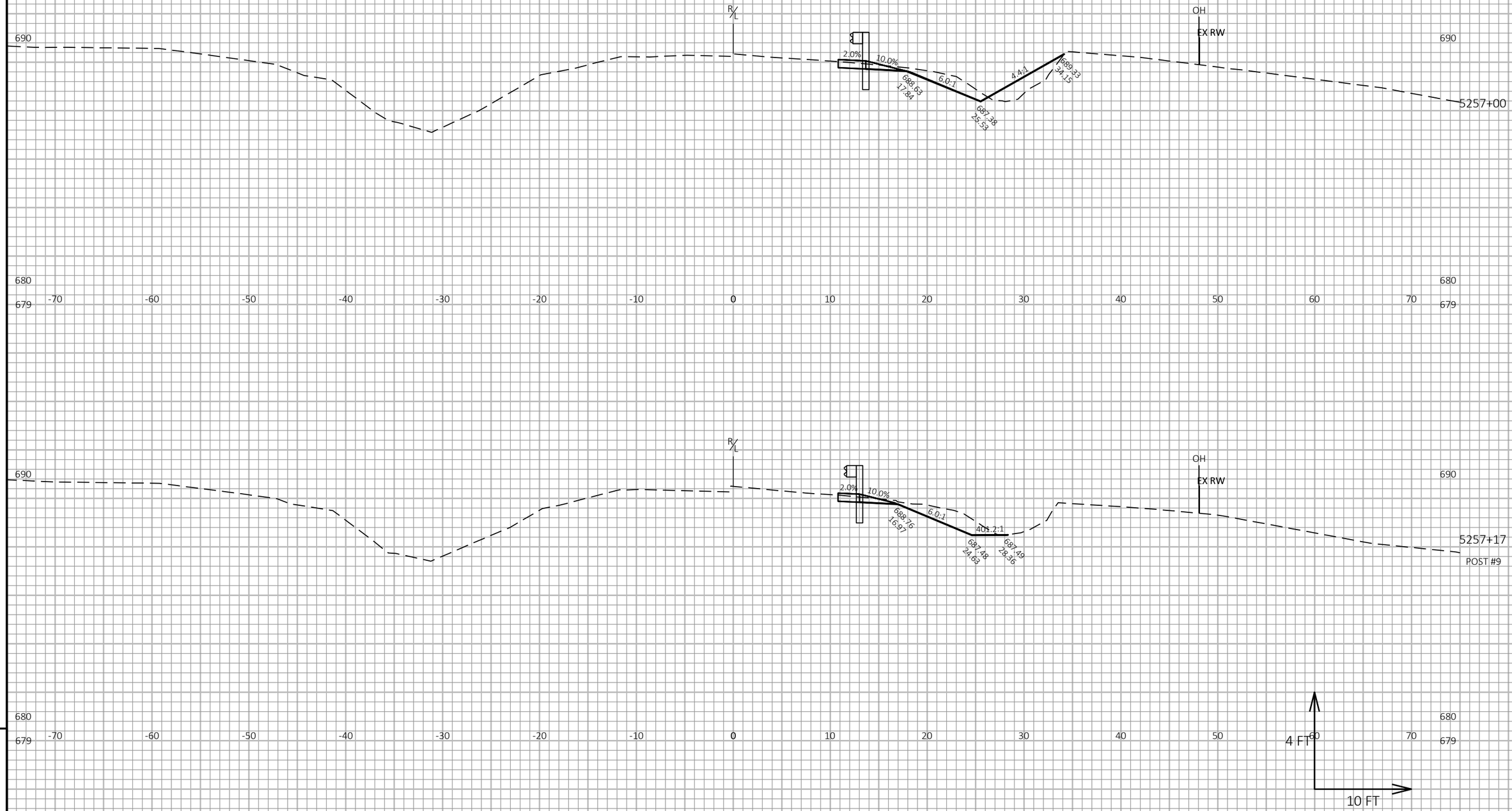

9

9

PROJECT NO: 1032-10-75	HWY: EAST FRONTAGE ROAD	COUNTY: KENOSHA	CROSS SECTIONS: GUARDRAIL - EFR SOUTH OF STH 50	SHEET 452	E

FILE NAME : Y:\52XX\5252_DP20.NSFWYEFR.KNS\CADDS\10321015\DESIGN\CORRIDORS\EFR_CORRIDORS_GUARDRAIL.DWG
LAYOUT NAME - GUARDRAIL - SOUTH OF STH 50 (3)

PLOT DATE : 10/22/2021 4:04 PM PLOT BY : AARON SCHRAMM PLOT NAME : PLOT SCALE : 1 IN:10 FT HORZ. / 1 IN:4 FT VERT.

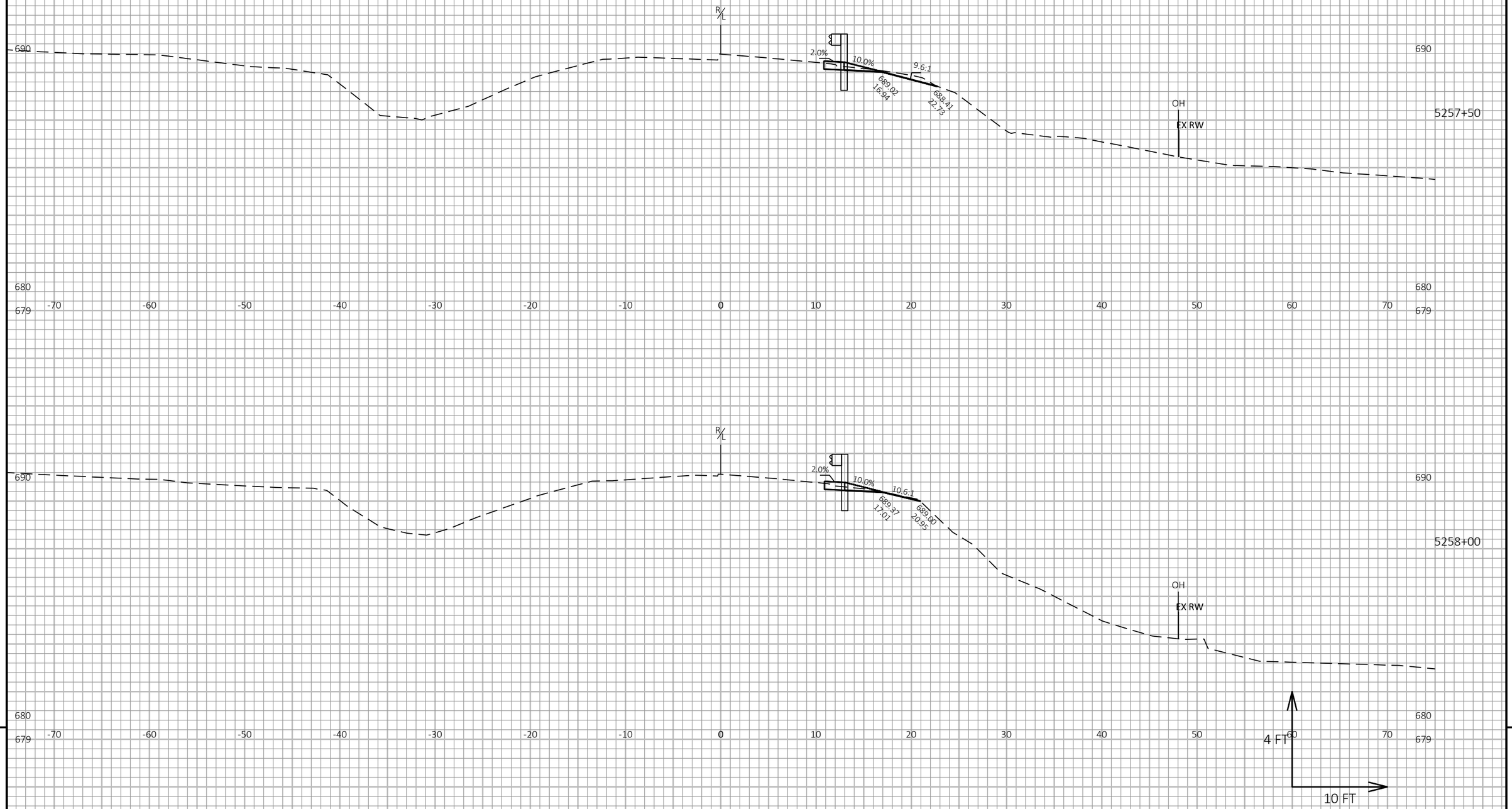

9

9

PROJECT NO: 1032-10-75	HWY: EAST FRONTAGE ROAD	COUNTY: KENOSHA	CROSS SECTIONS: GUARDRAIL - EFR SOUTH OF STH 50	SHEET 453	E

FILE NAME : Y:\52XX\5252_DP20.NSFWYEFR.KNS\CADDS\10321015\DESIGN\CORRIDORS\EFR_CORRIDORS_GUARDRAIL.DWG
LAYOUT NAME - GUARDRAIL - SOUTH OF STH 50 (4)

PLOT DATE : 10/22/2021 4:04 PM PLOT BY : AARON SCHRAMM PLOT NAME : PLOT SCALE : 1 IN:10 FT HORZ. / 1 IN:4 FT VERT.

WISDOT/CADDS SHEET 49

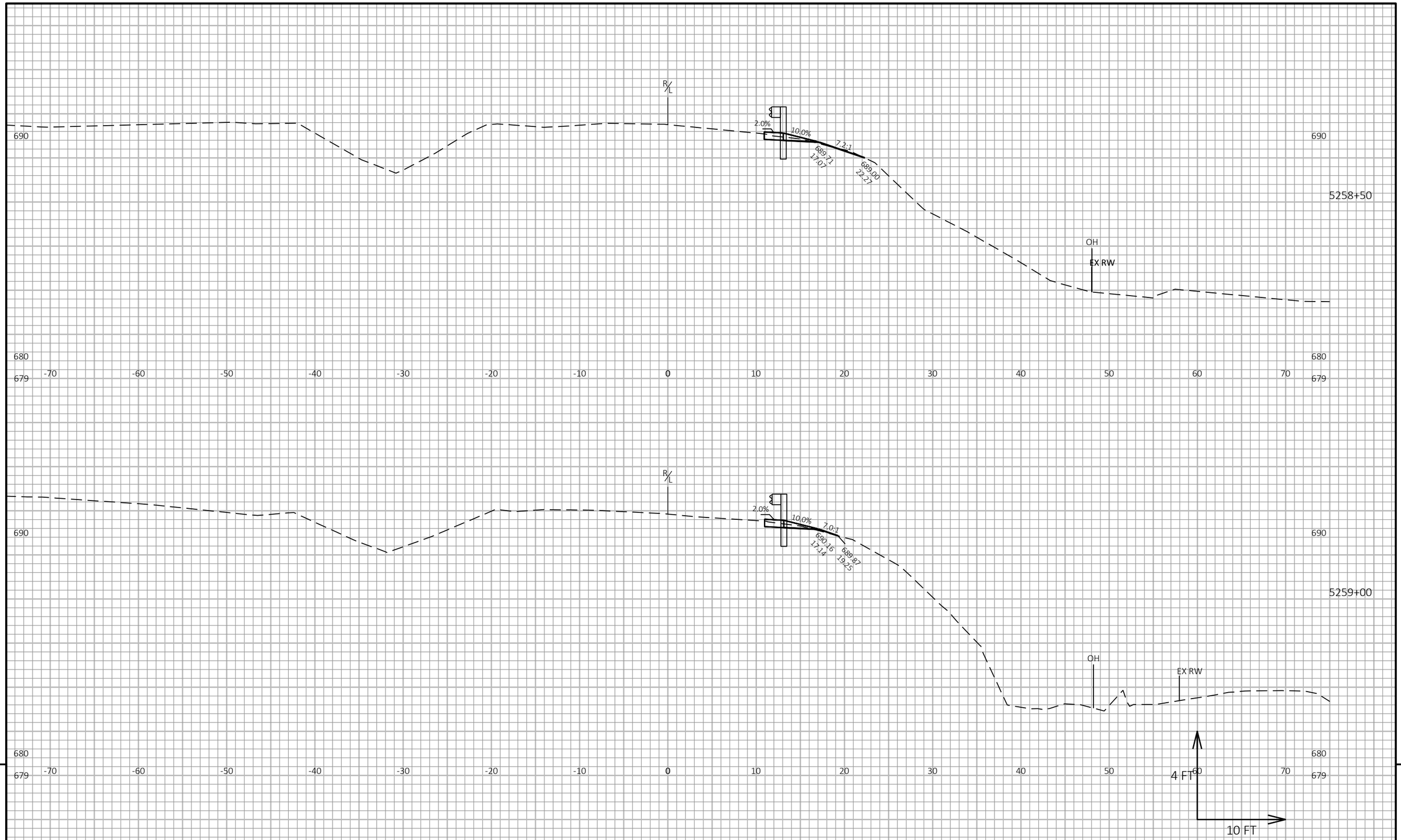

PROJECT NO: 1032-10-75	HWY: EAST FRONTAGE ROAD	COUNTY: KENOSHA	CROSS SECTIONS: GUARDRAIL - EFR SOUTH OF STH 50	SHEET 454	E

FILE NAME : Y:\52XX\5252_DP20.NSFWYEFR.KNS\CADDS\10321015\DESIGN\CORRIDORS\EFR_CORRIDORS_GUARDRAIL.DWG
LAYOUT NAME - GUARDRAIL - SOUTH OF STH 50 (5)

PLOT DATE : 10/22/2021 4:04 PM PLOT BY : AARON SCHRAMM PLOT NAME : PLOT SCALE : 1 IN:10 FT HORZ. / 1 IN:4 FT VERT.

WISDOT/CADDS SHEET 49

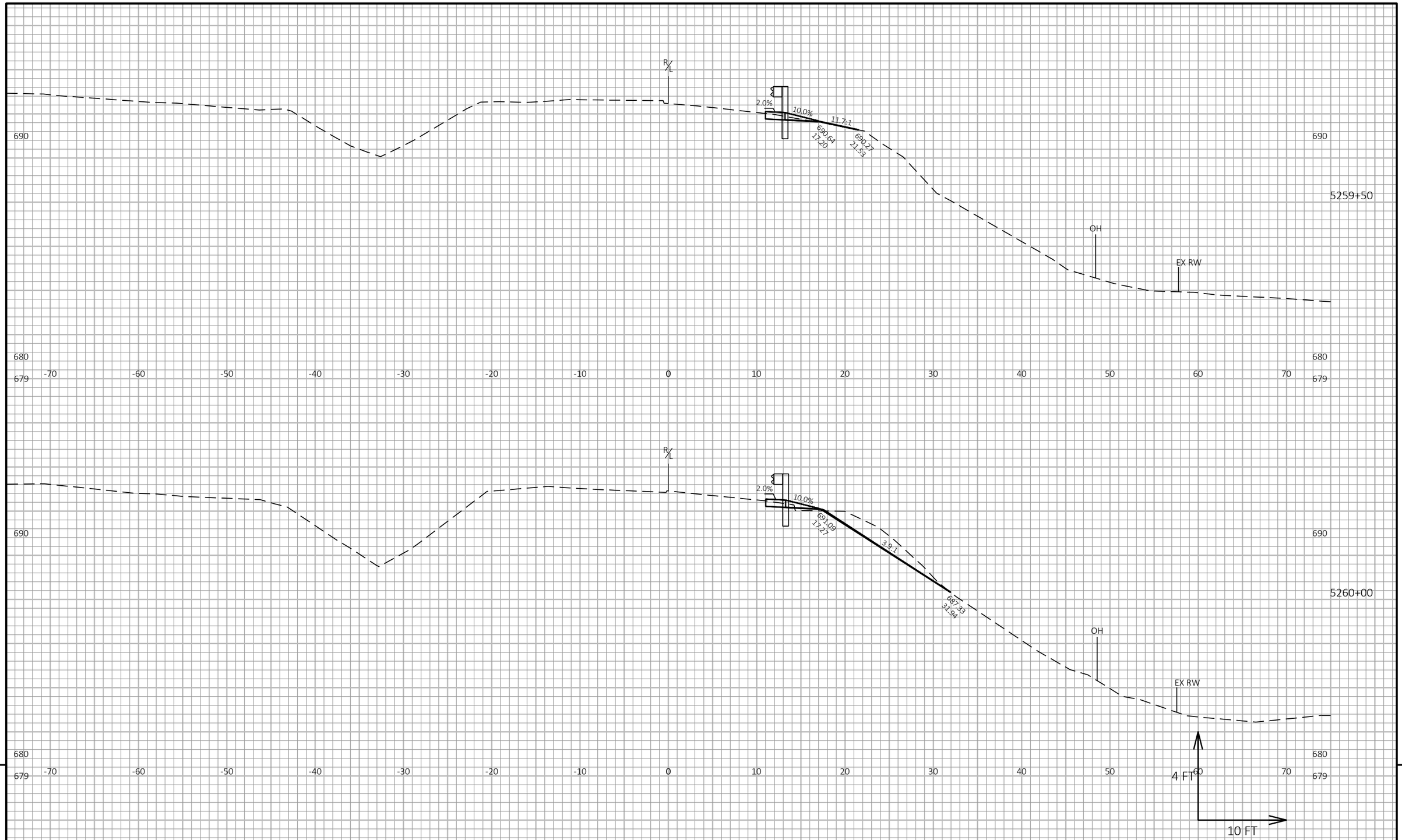

9

9

PROJECT NO: 1032-10-75	HWY: EAST FRONTAGE ROAD	COUNTY: KENOSHA	CROSS SECTIONS: GUARDRAIL - EFR SOUTH OF STH 50	SHEET 455	E

FILE NAME : Y:\52XX\5252_DP20.NSFWYEFR.KNS\CADDS\10321015\DESIGN\CORRIDORS\EFR_CORRIDORS_GUARDRAIL.DWG
LAYOUT NAME - GUARDRAIL - SOUTH OF STH 50 (6)

PLOT DATE : 10/22/2021 4:04 PM PLOT BY : AARON SCHRAMM PLOT NAME : PLOT SCALE : 1 IN:10 FT HORZ. / 1 IN:4 FT VERT.

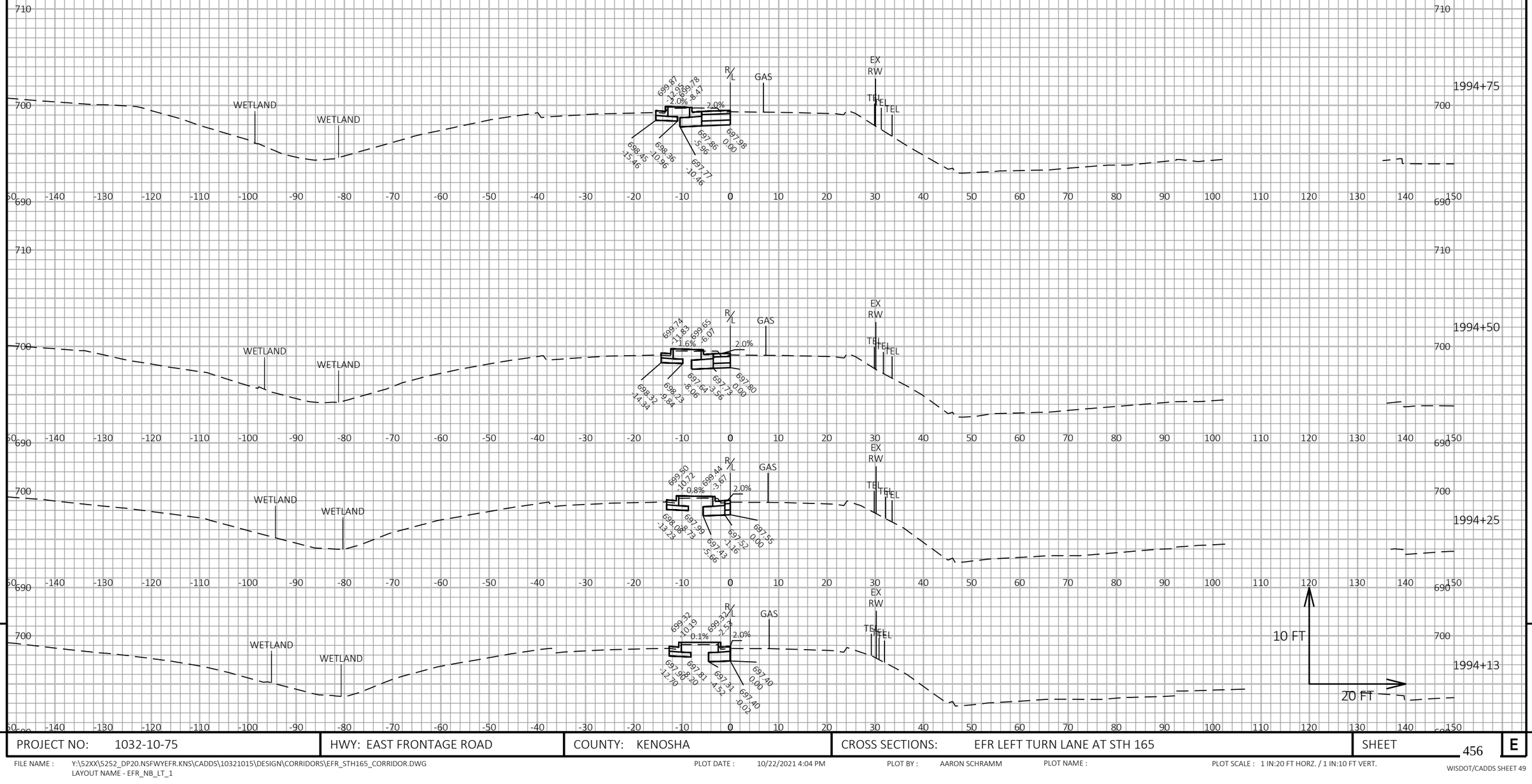

9

9

PROJECT NO: 1032-10-75	HWY: EAST FRONTAGE ROAD	COUNTY: KENOSHA	CROSS SECTIONS: EFR LEFT TURN LANE AT STH 165	SHEET 456	E

FILE NAME : Y:\52XX\5252_DP20.NSFWYEFR.KNS\CADDS\10321015\DESIGN\CORRIDORS\EFR_STH165_CORRIDOR.DWG
LAYOUT NAME - EFR_NB_LT_1

PLOT DATE : 10/22/2021 4:04 PM PLOT BY : AARON SCHRAMM PLOT NAME : PLOT SCALE : 1 IN:20 FT HORZ. / 1 IN:10 FT VERT.

WISDOT/CADDS SHEET 49

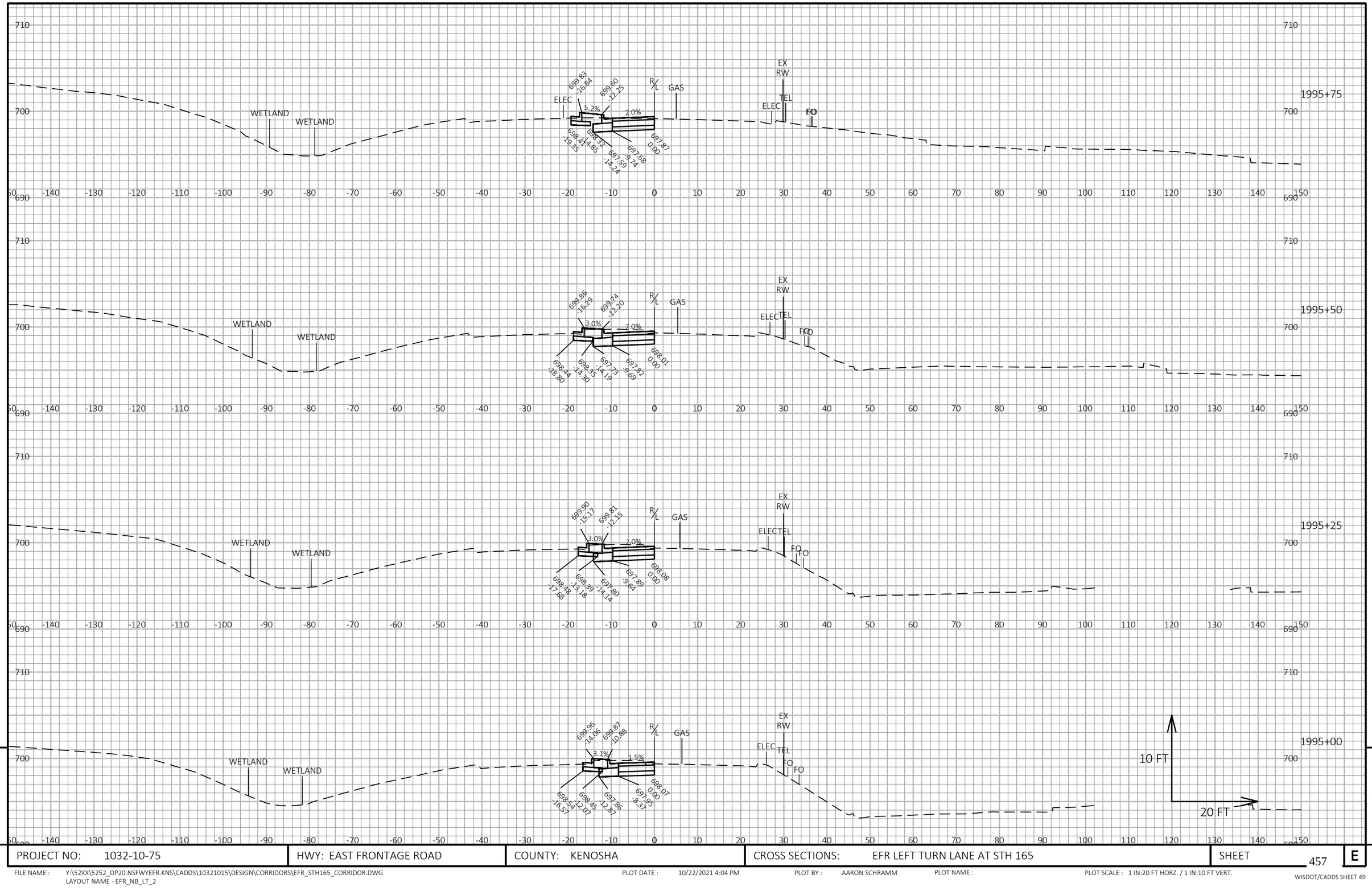

9

9

PROJECT NO: 1032-10-75	HWY: EAST FRONTAGE ROAD	COUNTY: KENOSHA	CROSS SECTIONS: EFR LEFT TURN LANE AT STH 165	SHEET 457	E

FILE NAME : Y:\52XX\5252_DP20.NSFWYEFR.KNS\CADDS\10321015\DESIGN\CORRIDORS\EFR_STH165_CORRIDOR.DWG
LAYOUT NAME - EFR_NB_LT_2

PLOT DATE : 10/22/2021 4:04 PM PLOT BY : AARON SCHRAMM PLOT NAME : PLOT SCALE : 1 IN:20 FT HORZ. / 1 IN:10 FT VERT.

WISDOT/CADDS SHEET 49

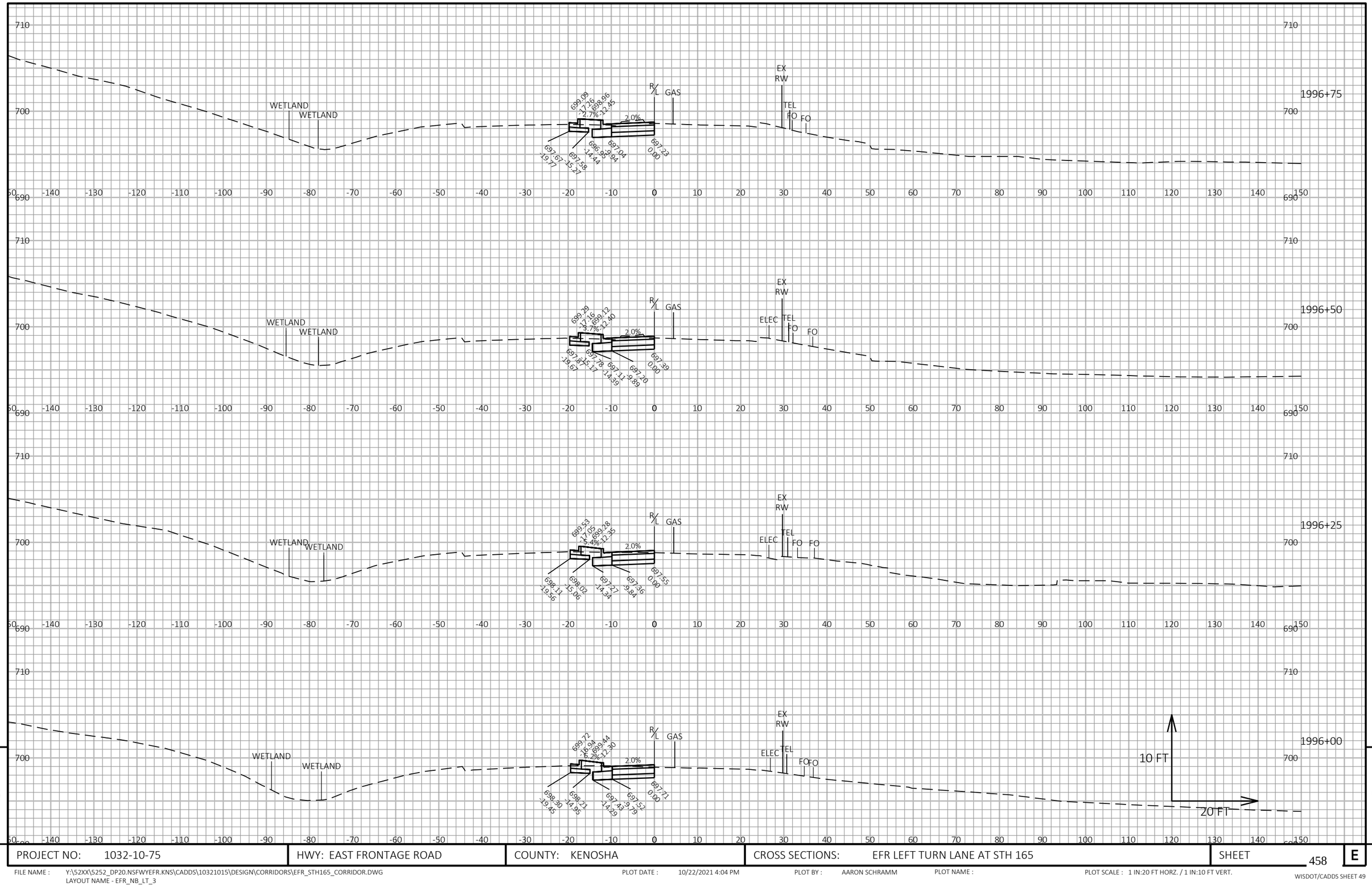

9

9

PROJECT NO: 1032-10-75	HWY: EAST FRONTAGE ROAD	COUNTY: KENOSHA	CROSS SECTIONS: EFR LEFT TURN LANE AT STH 165	SHEET 458	E

FILE NAME : Y:\52XX\5252_DP20.NSFWYEFR.KNS\CADDS\10321015\DESIGN\CORRIDORS\EFR_STH165_CORRIDOR.DWG
LAYOUT NAME - EFR_NB_LT_3

PLOT DATE : 10/22/2021 4:04 PM PLOT BY : AARON SCHRAMM PLOT NAME : PLOT SCALE : 1 IN:20 FT HORZ. / 1 IN:10 FT VERT.

WISDOT/CADDS SHEET 49

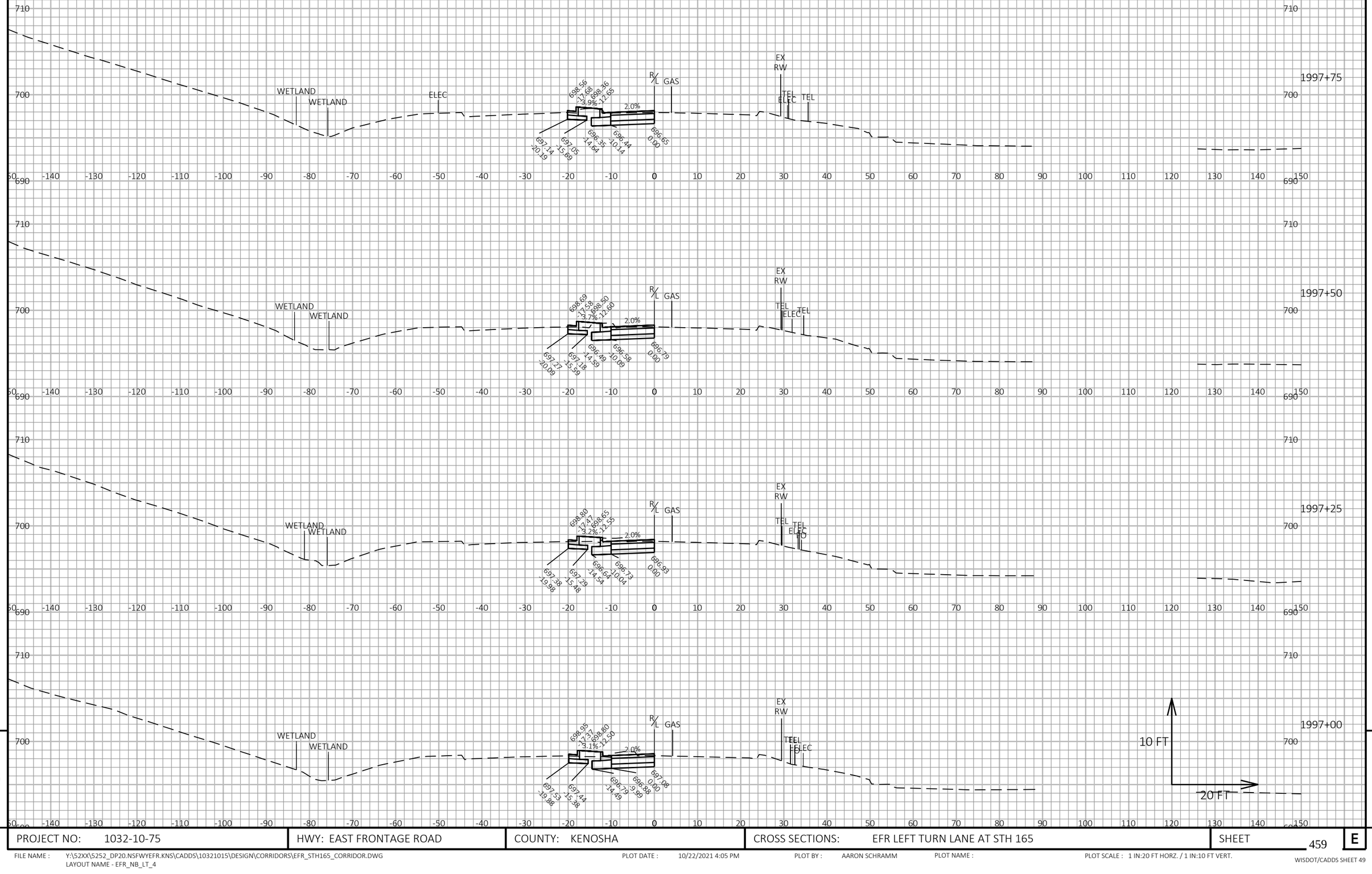

9

9

PROJECT NO: 1032-10-75	HWY: EAST FRONTAGE ROAD	COUNTY: KENOSHA	CROSS SECTIONS: EFR LEFT TURN LANE AT STH 165	SHEET 459	E

FILE NAME : Y:\52XX\5252_DP20.NSFWYEFR.KNS\CADDS\10321015\DESIGN\CORRIDORS\EFR_STH165_CORRIDOR.DWG
LAYOUT NAME - EFR_NB_LT_4

PLOT DATE : 10/22/2021 4:05 PM PLOT BY : AARON SCHRAMM PLOT NAME : PLOT SCALE : 1 IN:20 FT HORZ. / 1 IN:10 FT VERT.

WISDOT/CADDS SHEET 49

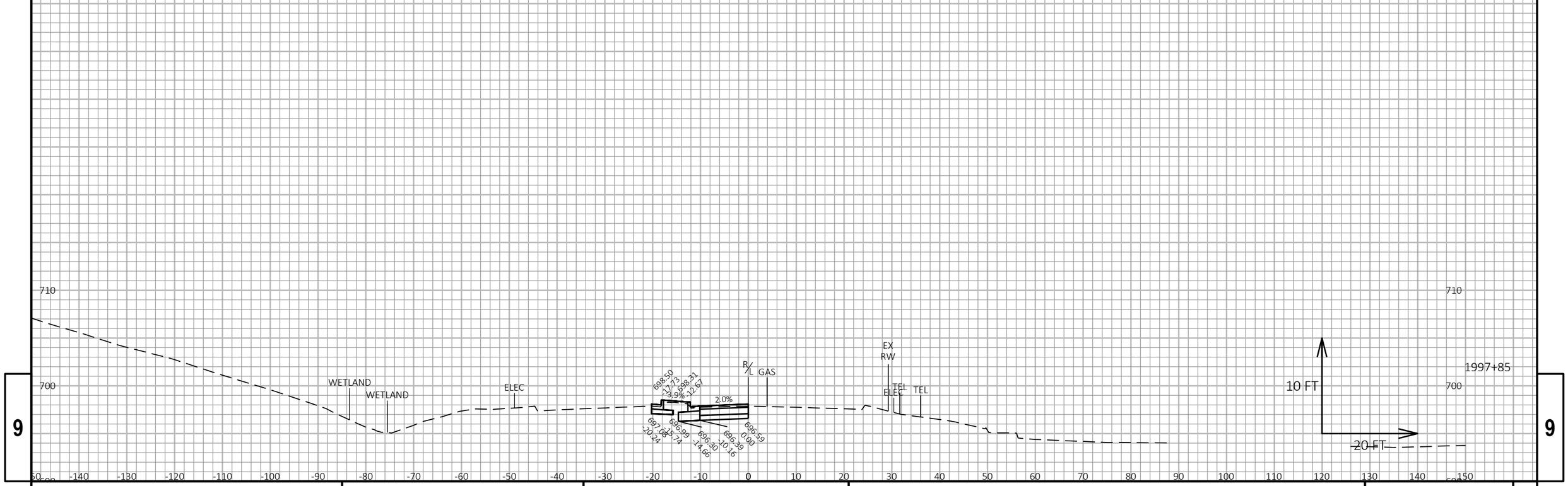

9

9

PROJECT NO: 1032-10-75	HWY: EAST FRONTAGE ROAD	COUNTY: KENOSHA	CROSS SECTIONS: EFR LEFT TURN LANE AT STH 165	SHEET 460	E

FILE NAME : Y:\52XX\5252_DP20.NSFWYEFR.KNS\CADDS\10321015\DESIGN\CORRIDORS\EFR_STH165_CORRIDOR.DWG
LAYOUT NAME - EFR_NB_LT_5

PLOT DATE : 10/22/2021 4:05 PM PLOT BY : AARON SCHRAMM PLOT NAME : PLOT SCALE : 1 IN:20 FT HORZ. / 1 IN:10 FT VERT.

WISDOT/CADDS SHEET 49

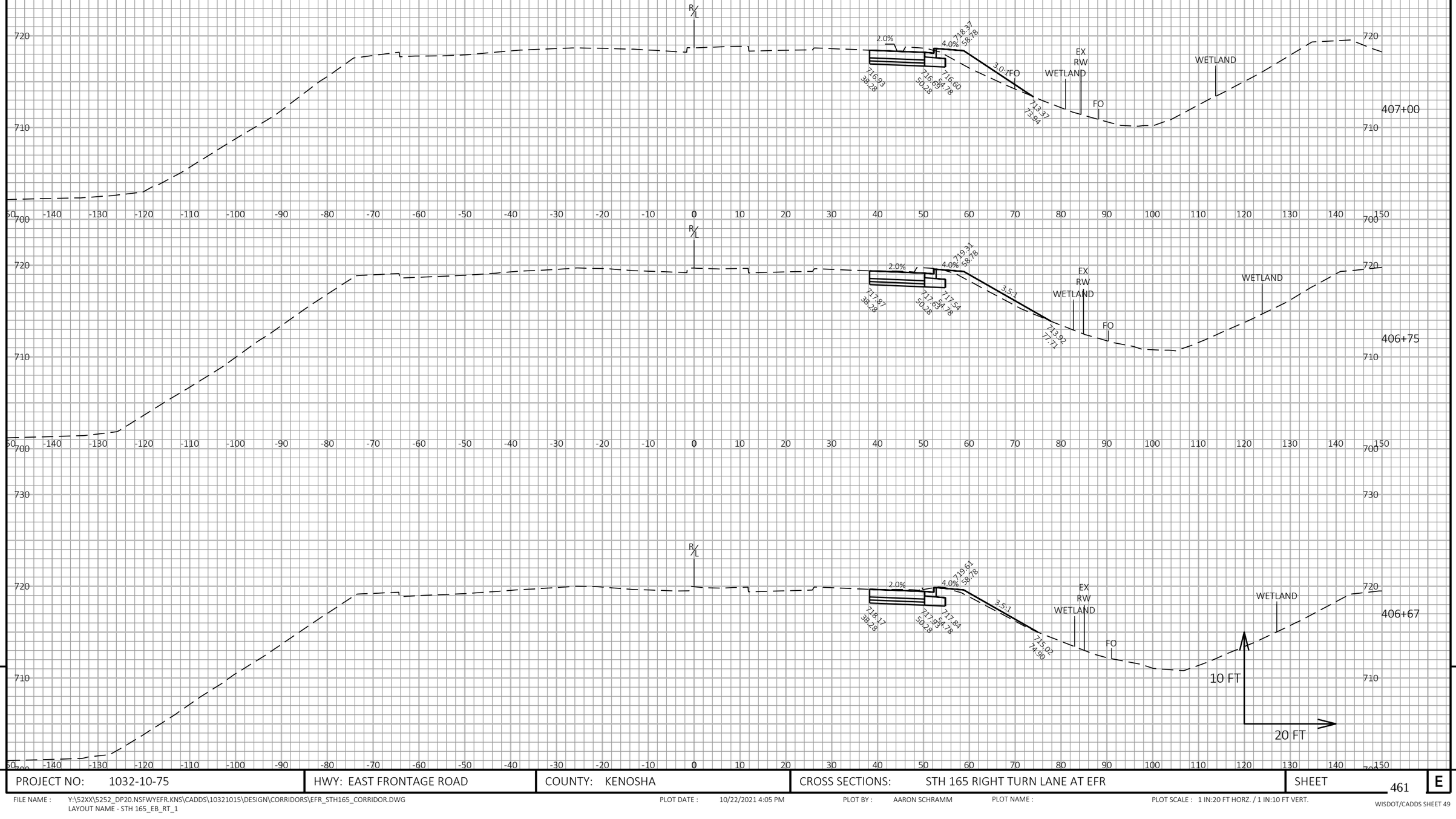

PROJECT NO: 1032-10-75	HWY: EAST FRONTAGE ROAD	COUNTY: KENOSHA	CROSS SECTIONS: STH 165 RIGHT TURN LANE AT EFR	SHEET 461 E

FILE NAME : Y:\52XX\5252_DP20.NSFWYEFR.KNS\CADDS\10321015\DESIGN\CORRIDORS\EFR_STH165_CORRIDOR.DWG
LAYOUT NAME - STH 165_EB_RT_1

PLOT DATE : 10/22/2021 4:05 PM PLOT BY : AARON SCHRAMM PLOT NAME : PLOT SCALE : 1 IN:20 FT HORZ. / 1 IN:10 FT VERT.

WISDOT/CADDS SHEET 49

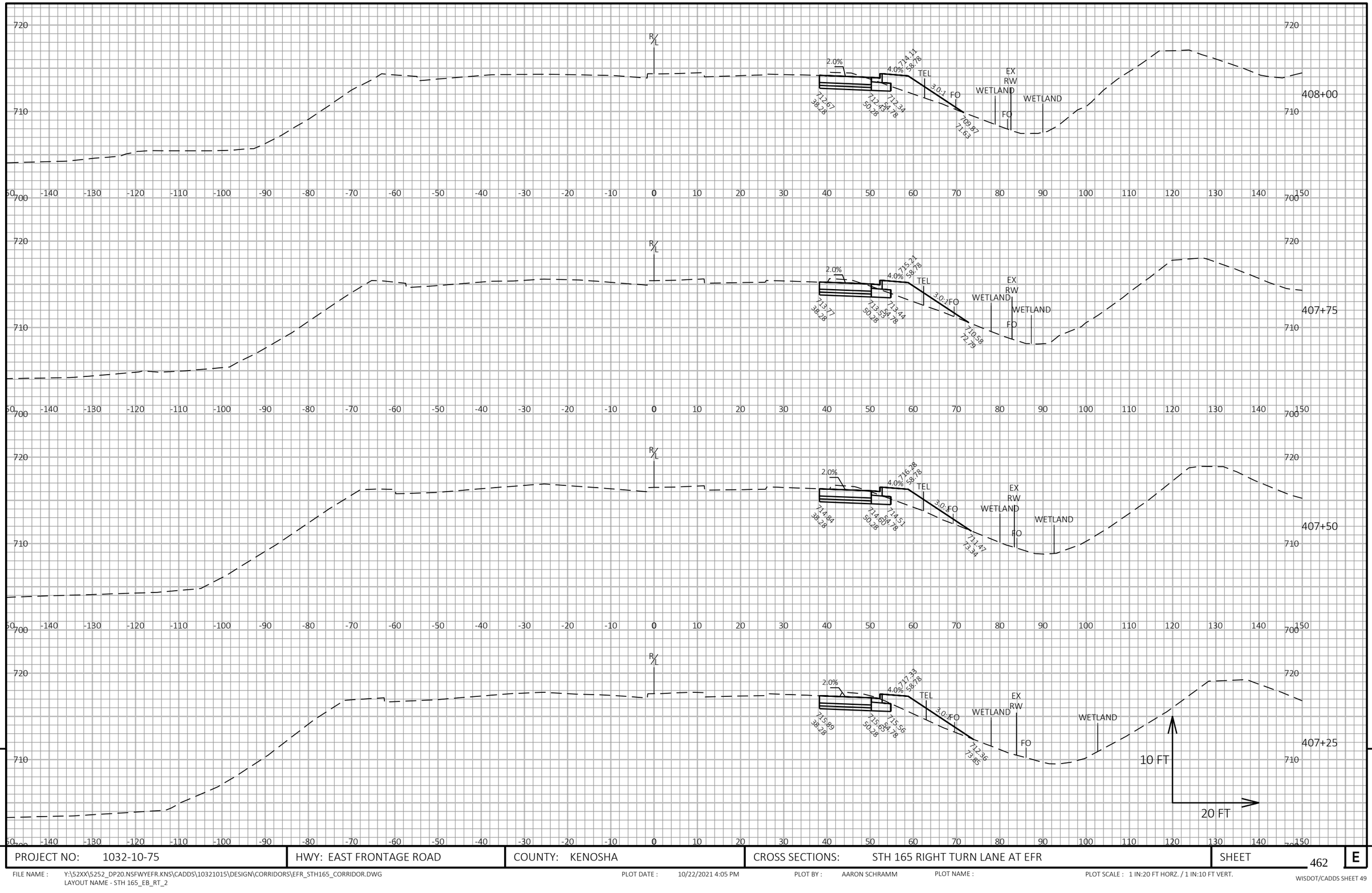

9

9

PROJECT NO: 1032-10-75	HWY: EAST FRONTAGE ROAD	COUNTY: KENOSHA	CROSS SECTIONS: STH 165 RIGHT TURN LANE AT EFR	SHEET 462	E

FILE NAME : Y:\52XX\5252_DP20.NSFWYEFR.KNS\CADDS\10321015\DESIGN\CORRIDORS\EFR_STH165_CORRIDOR.DWG
LAYOUT NAME - STH 165_EB_RT_2

PLOT DATE : 10/22/2021 4:05 PM PLOT BY : AARON SCHRAMM PLOT NAME : PLOT SCALE : 1 IN:20 FT HORZ. / 1 IN:10 FT VERT.

WISDOT/CADDS SHEET 49

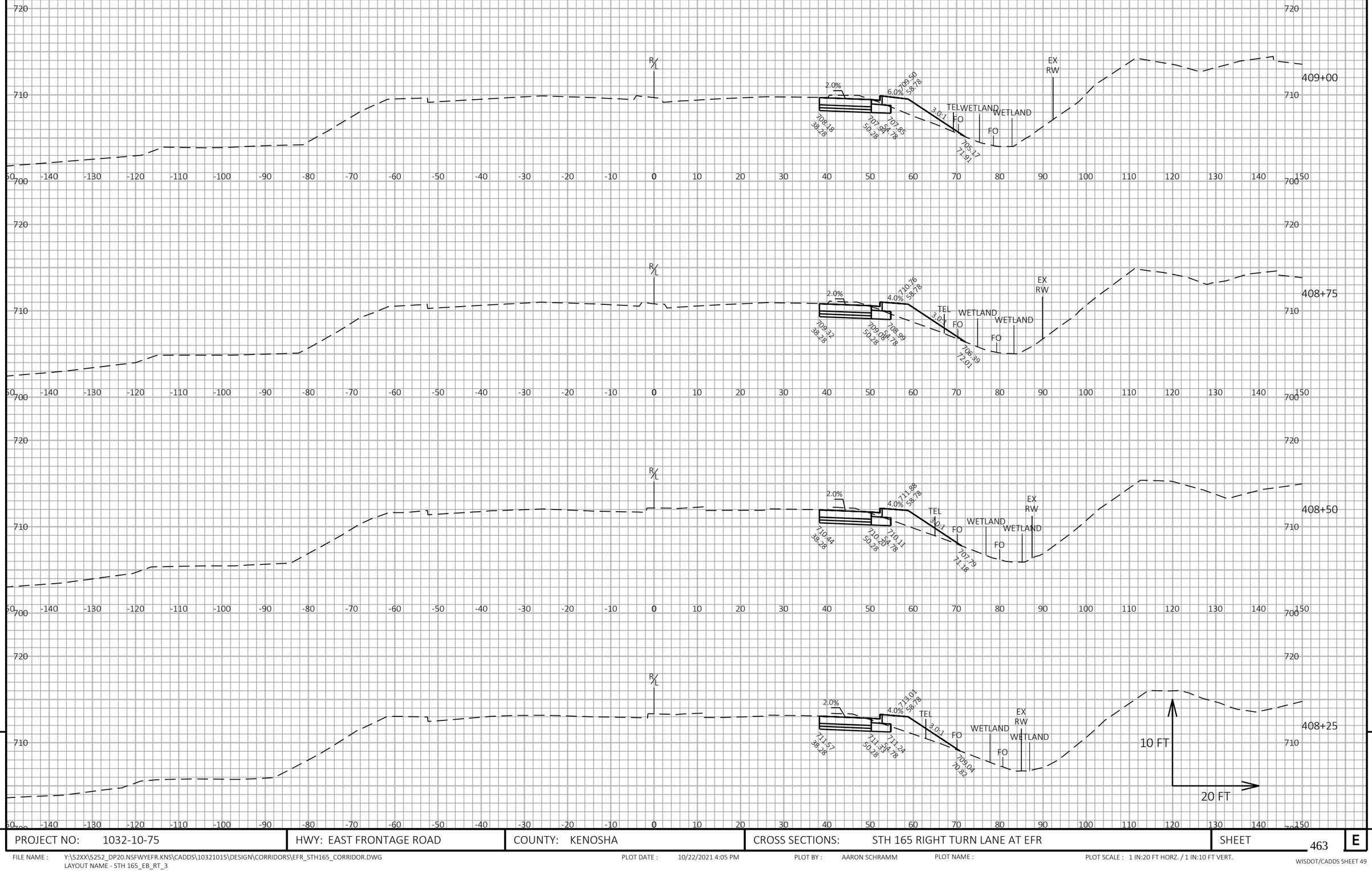

9

9

PROJECT NO: 1032-10-75	HWY: EAST FRONTAGE ROAD	COUNTY: KENOSHA	CROSS SECTIONS: STH 165 RIGHT TURN LANE AT EFR	SHEET 463	E

FILE NAME : Y:\52XX\5252_DP20.NSFWYEFR.KNS\CADDS\10321015\DESIGN\CORRIDORS\EFR_STH165_CORRIDOR.DWG
LAYOUT NAME - STH 165_EB_RT_3

PLOT DATE : 10/22/2021 4:05 PM PLOT BY : AARON SCHRAMM PLOT NAME : PLOT SCALE : 1 IN:20 FT HORZ. / 1 IN:10 FT VERT.

WISDOT/CADDS SHEET 49

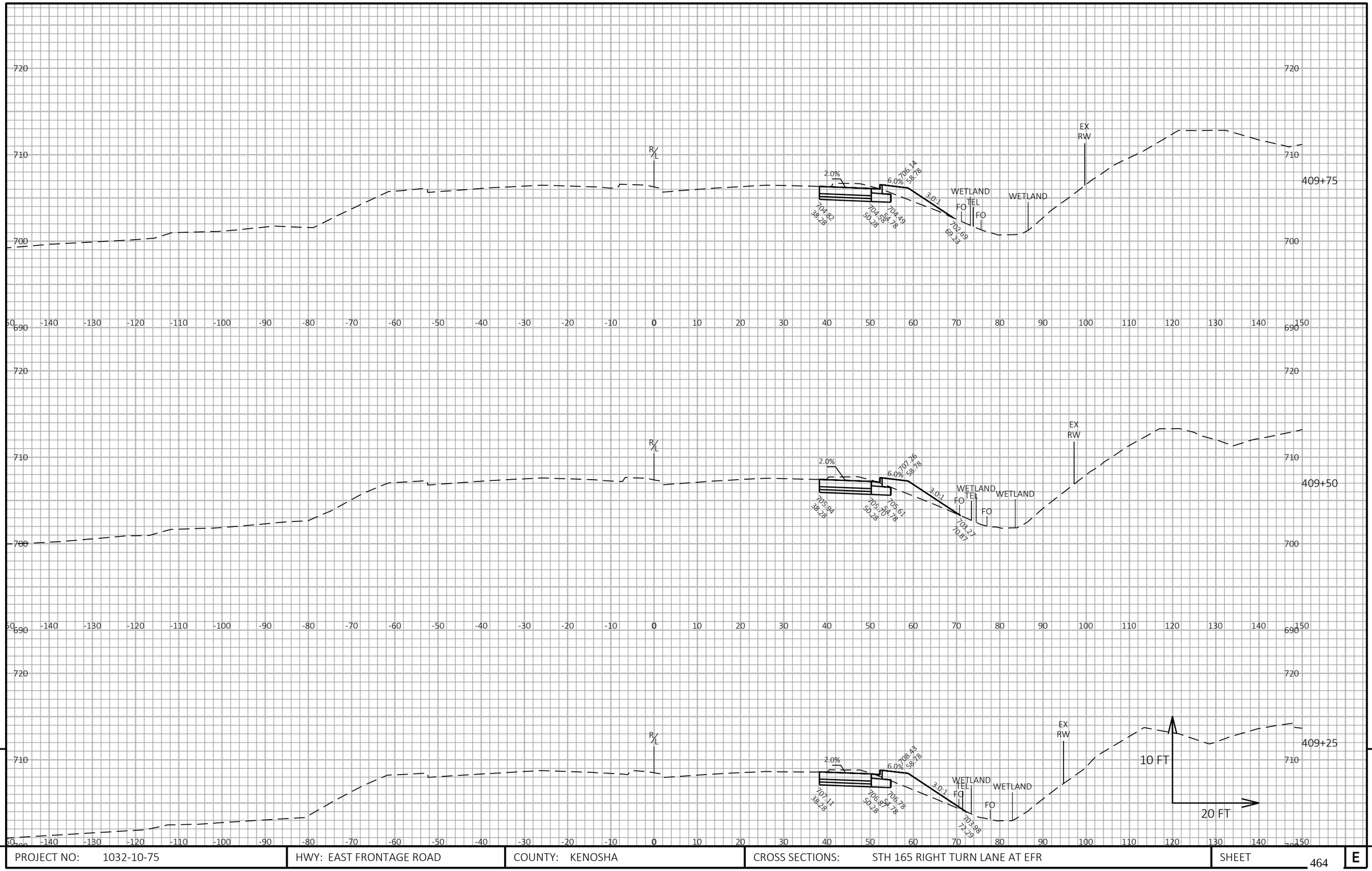

9

9

PROJECT NO: 1032-10-75	HWY: EAST FRONTAGE ROAD	COUNTY: KENOSHA	CROSS SECTIONS: STH 165 RIGHT TURN LANE AT EFR	SHEET 464	E

FILE NAME : Y:\52XX\5252_DP20.NSFWYEFR.KNS\CADDS\10321015\DESIGN\CORRIDORS\EFR_STH165_CORRIDOR.DWG
LAYOUT NAME - STH 165_EB_RT_4

PLOT DATE : 10/22/2021 4:05 PM PLOT BY : AARON SCHRAMM PLOT NAME : PLOT SCALE : 1 IN:20 FT HORZ. / 1 IN:10 FT VERT.

WISDOT/CADDS SHEET 49

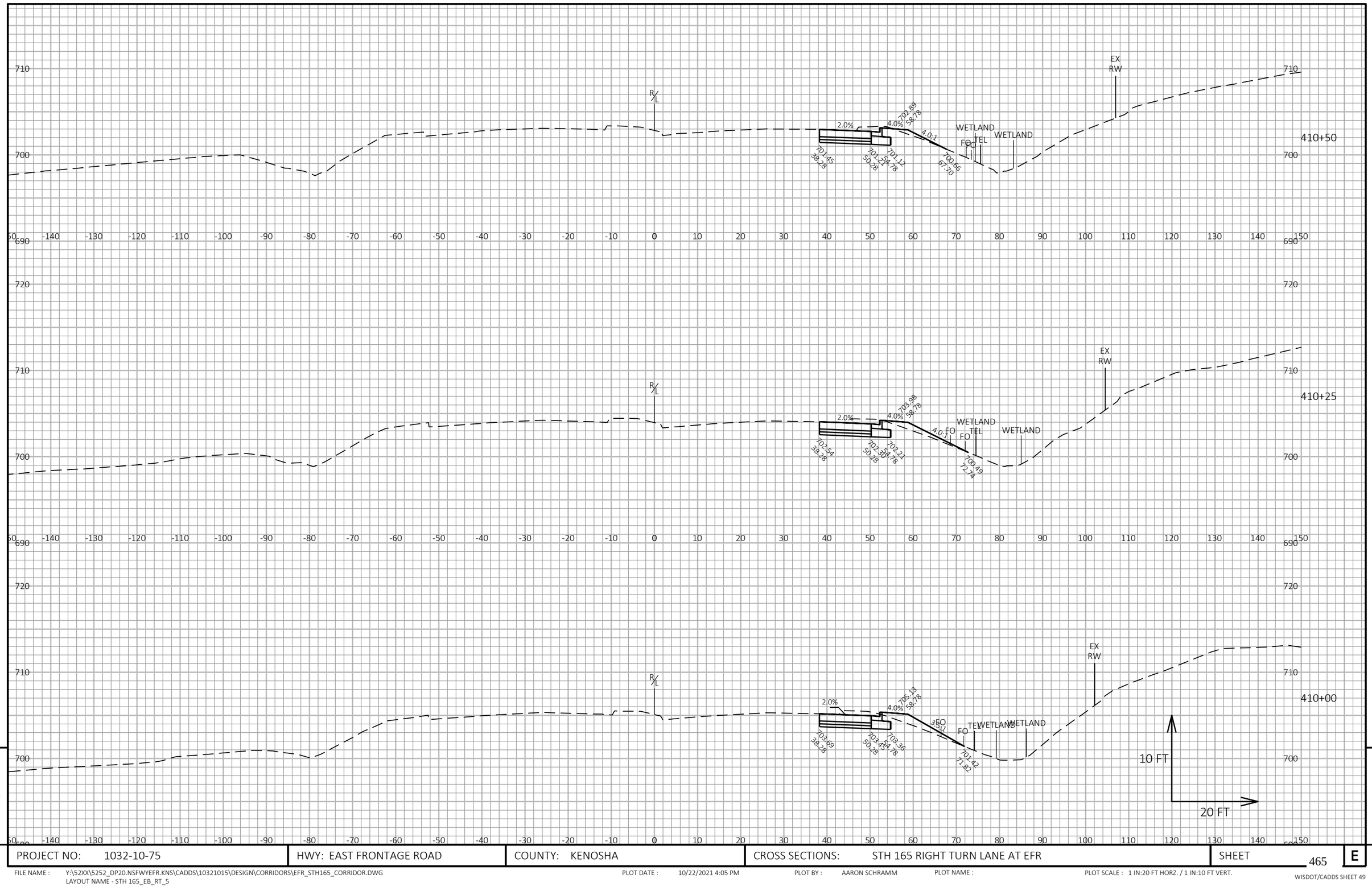

9

9

PROJECT NO: 1032-10-75	HWY: EAST FRONTAGE ROAD	COUNTY: KENOSHA	CROSS SECTIONS: STH 165 RIGHT TURN LANE AT EFR	SHEET 465	E

FILE NAME : Y:\52XX\5252_DP20.NSFWYEFR.KNS\CADDS\10321015\DESIGN\CORRIDORS\EFR_STH165_CORRIDOR.DWG
LAYOUT NAME - STH 165_EB_RT_5

PLOT DATE : 10/22/2021 4:05 PM PLOT BY : AARON SCHRAMM PLOT NAME : PLOT SCALE : 1 IN:20 FT HORZ. / 1 IN:10 FT VERT.

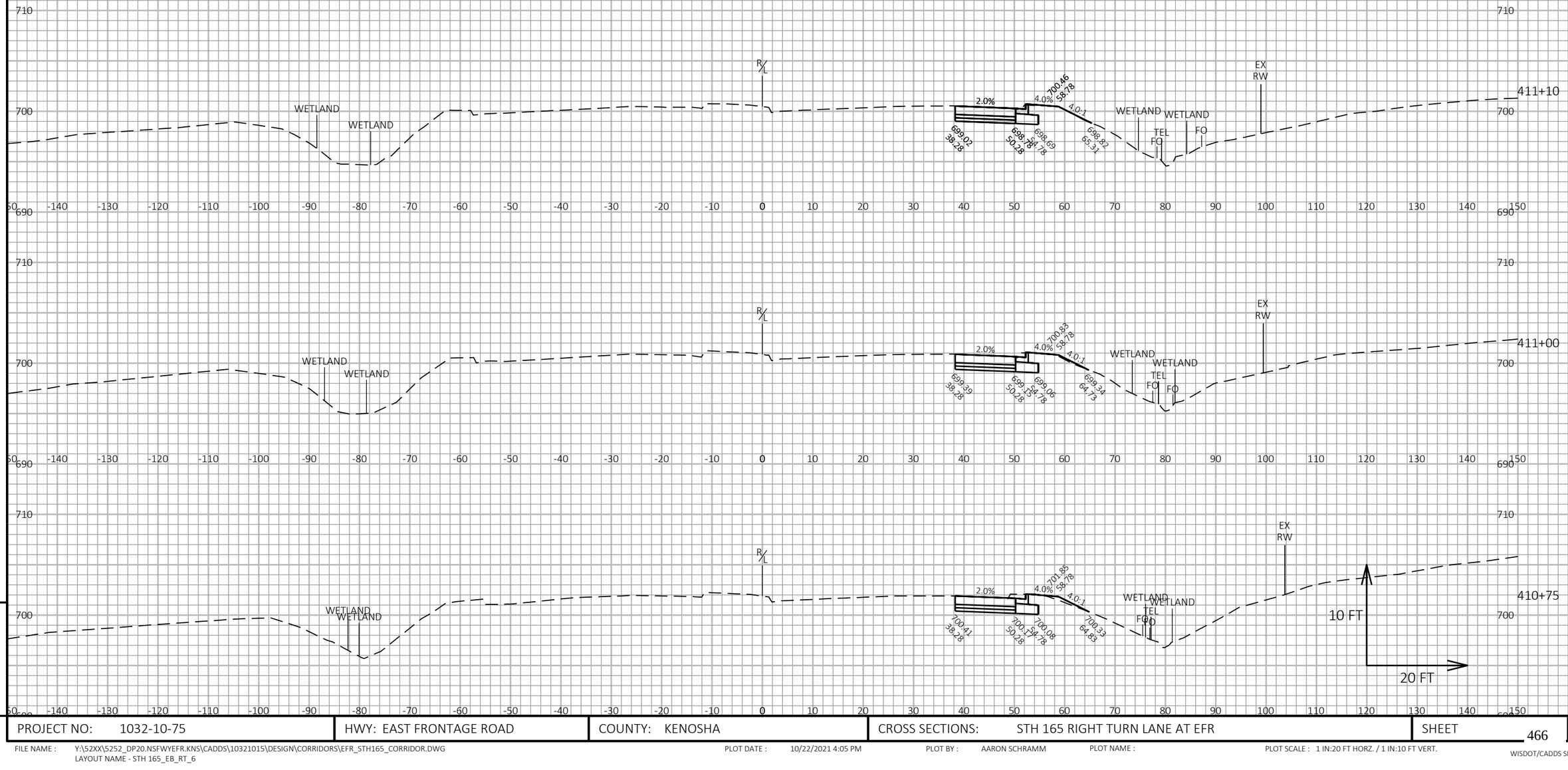

9

9

PROJECT NO: 1032-10-75	HWY: EAST FRONTAGE ROAD	COUNTY: KENOSHA	CROSS SECTIONS: STH 165 RIGHT TURN LANE AT EFR	SHEET 466	E

FILE NAME : Y:\52XX\5252_DP20.NSFWYEFR.KNS\CADDS\10321015\DESIGN\CORRIDORS\EFR_STH165_CORRIDOR.DWG
LAYOUT NAME - STH 165_EB_RT_6

PLOT DATE : 10/22/2021 4:05 PM PLOT BY : AARON SCHRAMM PLOT NAME : PLOT SCALE : 1 IN:20 FT HORZ. / 1 IN:10 FT VERT.

WISDOT/CADDS SHEET 49

Notes

Wisconsin Department of Transportation

Dedicated people creating transportation solutions
through innovation and exceptional service.

http://www.dot.wisconsin.gov