EAU

Jan 11, 2022

PROJECT ID: 7080-03-75

WITH: N/A

COUNTY: EAU CLAIRE

41

ORDER OF SHEETS

TOTAL SHEETS = 148

STATE PROJECT	FEDERAL PROJECT	
	PROJECT	CONTRACT
7080-03-75	WISC 2022137	1

STATE OF WISCONSIN
DEPARTMENT OF TRANSPORTATION

PLAN OF PROPOSED IMPROVEMENT

EAU CLAIRE - FAIRCHILD

CTH D TO S JCT OF CTH M

USH 12

EAU CLAIRE COUNTY

STATE PROJECT NUMBER
7080-03-75

PROJECT LOCATION

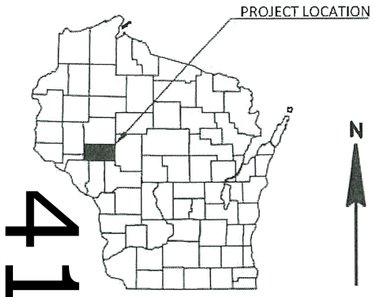

N

BEGIN PROJECT
STA 35+57.52
Y= 261080.980
X=398935.070

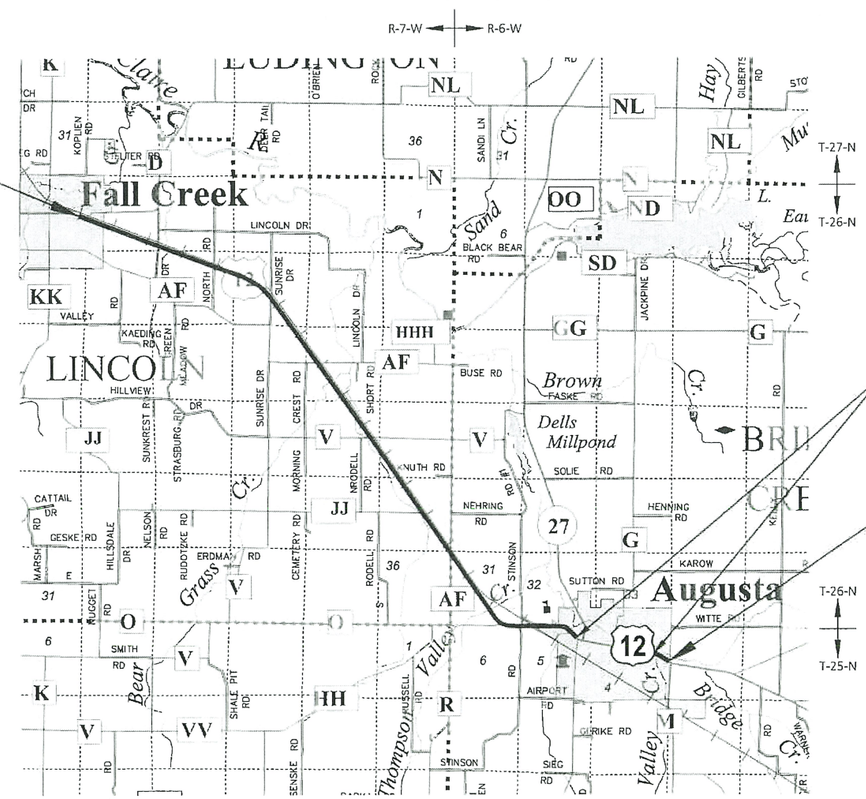

NET EXCEPTION TO CL LENGTH
STA 533+45 - STA 588+00

END PROJECT
STA 600+30

DESIGN DESIGNATION

A.A.D.T.	(2023)	=	3,100
A.A.D.T.	(2043)	=	3,700
D.H.V.		=	210
D.D.		=	60/40
T.		=	11.5%
DESIGN SPEED		=	55 MPH/40 MPH
ESALS		=	410,000

CONVENTIONAL SYMBOLS

PLAN

CORPORATE LIMITS
PROPERTY LINE
LOT LINE
LIMITED HIGHWAY EASEMENT
EXISTING RIGHT OF WAY
PROPOSED OR NEW R/W LINE
SLOPE INTERCEPT
REFERENCE LINE (300'EB')
EXISTING CULVERT
PROPOSED CULVERT (Box or Pipe)
COMBUSTIBLE FLUIDS (CAUTION)
MARSH AREA
WOODED OR SHRUB AREA

PROFILE

GRADE LINE
ORIGINAL GROUND
MARSH OR ROCK PROFILE (To be noted as such) (ROCK)
SPECIAL DITCH (LABEL)
GRADE ELEVATION (95.36)
CULVERT (Profile View)

UTILITIES

ELECTRIC — E
FIBER OPTIC — FO
GAS — G
OVERHEAD — OH
SANITARY SEWER — SAN
STORM SEWER — SS
TELEPHONE — T
WATER — W
UTILITY PEDESTAL
POWER POLE
TELEPHONE POLE

LAYOUT
SCALE 0 — 2 MI

TOTAL NET LENGTH OF CENTERLINE = 9.667 MI

HORIZONTAL POSITIONS SHOWN ON THIS PLAN ARE WISCONSIN COORDINATE REFERENCE SYSTEM (WISCRS), EAU CLAIRE COUNTY, NAD83 (2011), IN U.S. SURVEY FEET. POSITIONS SHOWN ARE GRID COORDINATES, GRID BEARINGS, AND GRID DISTANCES. GRID DISTANCES ARE THE SAME AS GROUND DISTANCES. ELEVATIONS ARE REFERENCED TO NAVD 88 (2012). GPS DERIVED ELEVATIONS ARE BASED ON GEOID 12A.

ORIGINAL PLANS PREPARED BY

CORRE ENGINEERING

WISCONSIN CHAD HALAMA E-33618 MENOMONEE WI PROFESSIONAL ENGINEER

DATE: 8-24-21 (Signature)

STATE OF WISCONSIN
DEPARTMENT OF TRANSPORTATION

PREPARED BY

Surveyor	CORRE INC.
Designer	CORRE, INC.
Project Manager	NATHAN ULNESS
Regional Examiner	TOU YANG
Regional Supervisor	JIM KOENIG

APPROVED FOR THE DEPARTMENT

DATE: 8-24-21 (Signature)

E

GENERAL NOTES

WHEN THE QUANTITY OF BASE AGGREGATE OR ASPHALTIC SURFACE IS MEASURED FOR PAYMENT BY THE TON OR CUBIC YARD, THE DEPTH OR THICKNESS OF THE LAYER SHOWN ON THE PLANS IS APPROXIMATE AND THE ACTUAL THICKNESS WILL DEPEND ON THE DISTRIBUTION OF THE MATERIAL AS DIRECTED BY THE ENGINEER.

THE LOCATION OF EXISTING AND PROPOSED UTILITY INSTALLATIONS AS SHOWN ON THE PLANS IS APPROXIMATE. THERE MAY BE OTHER UTILITY INSTALLATIONS WITHIN THE PROJECT AREA THAT ARE NOT SHOWN.

NO TREES OR SHRUBS ARE TO BE REMOVED WITHOUT THE APPROVAL OF THE ENGINEER.

CURVE DATA IS BASED ON THE ARC DEFINITION.

PRIOR TO CIR PLACEMENT, REMOVE EXISTING BASE COURSE AWAY FROM EDGE OF EXISTING HMA SHOULDER (SHAPING SHOULDERS), AS TO NOT INCORPORATE BASE COURSE SHOULDER INTO CIR. PREPARE WIDENED SHOULDER AREA FOR CIR (PREPARE FOUNDATION FOR ASPHALT PAVING ITEM).

HMA PAVEMENT (STA 35+57 TO 486+80) SHALL CONSIST OF 2.75-INCH HMA 5 MT 58-34 V AND SHALL BE PLACED WITH A 1.25-INCH LOWER LIFT AND A 1.5-INCH UPPER LIFT.

HMA PAVEMENT (STA 486+80 TO 600+30) SHALL CONSIST OF 3.25-INCH HMA 5 MT 58-34 V AND SHALL BE PLACED WITH A 1.5-INCH LOWER LIFT AND A 1.75-INCH UPPER LIFT.

HMA QUANTITIES ARE CALCULATED FROM 110 LB/SY/INCH.

PAVING LIMITS TO BE DETERMINED BY THE ENGINEER.

MATCH ALL EXISTING SUPERELEVATIONS OR AS DIRECTED BY THE ENGINEER.

TACK COAT SHALL BE APPLIED AT 0.07 GAL/SY.

ASPHALTIC SURFACE ITEM IS TO BE USED FOR LEVELING/WEDGING.

ASPHALTIC SURFACE PATCHING ITEM IS FOR REPAIR OF POTHOLES AND POP OUTS THAT OCCUR DURING CONSTRUCTION.

THE PROPOSED SHOULDER WIDTHS SHOWN IN THE TYPICAL SECTIONS ARE MINIMUM WIDTHS, PERPETUATE EXISTING SHOULDERS WITH BASE AGGREGATE DENSE 3/4-INCH.

PRIOR TO THE INSTALLATION OF MGS GUARDRAIL 3, SHOULDERS SHALL BE IN PLACE AND COMPACTED.

THE EXACT LOCATION OF THE EROSION CONTROL DEVICES SHALL BE DETERMINED IN THE FIELD.

DISTURBED AREAS WITHIN THE RIGHT-OF-WAY, EXCEPT THE AREAS WITHIN THE FINISHED SHOULDER POINTS, ARE TO BE 4-INCH SALVAGED TOPSOILED, FERTILIZED, SEEDED AND MULCHED AND EMAT.

ALL DRIVEWAY LIMITS WILL BE DETERMINED BY THE ENGINEER IN THE FIELD.

ALL CURB AND GUTTER RADII, PAVEMENT DIMENSIONS AND STATIONS ARE SHOWN TO THE EDGE OF PAVEMENT UNLESS NOTED OTHERWISE.

A VERTICAL SAWCUT SHALL BE MADE THROUGH EXISTING DRIVEWAYS AND PAVEMENTS AT REMOVAL LIMITS.

SILT FENCE IS TO BE PLACED AS SHOWN ON THE PLANS OR AS DIRECTED BY THE ENGINEER.

BEARINGS SHOWN ON THE PLAN ARE REFERENCED TO THE EXISTING ROADWAY CENTERLINE AND ARE ASSUMED.

UTILITIES ONLY IDENTIFIED IN AREAS OF GRADING AND PIPE REPLACEMENT.

ORDER OF SECTION 2 SHEETS

PROJECT OVERVIEW
TYPICAL SECTIONS
CONSTRUCTION DETAILS
INTERSECTION DETAILS
PLAN DETAILS
PAVEMENT MARKING
TRAFFIC CONTROL
DETOUR PLAN

UTILITY CONTACTS

LUMEN - COMMUNICATION LINE
BRAHIM GADDOUR
3225 INTERTECH DR
BROOKFIELD, WI 53045
PHONE: (414) 908-1027
EMAIL: BRAHIM.GADDOUR@LUMEN.COM

EAU CLAIRE ENERGY ELECTRIC COOP - ELECTRICITY
JOSH VANINGAN
8214 HWY 12, PO BOX 368
FALL CREEK, WI 54742-0368
PHONE: (715) 836-6473
EMAIL: JVANINGAN@ECEC.COM

FALL CREEK MUNICIPAL WATER UTILITY - WATER/SEWER
JARED MCKEE
PO BOX 156
FALL CREEK, WI 54742-0156
PHONE: (715) 877-2177
EMAIL: JARED.MCKEE@FALLCREEKWI.GOV

PACKERLAND BROADBAND - COMMUNICATION LINE
ANDREW HEIGL
105 KENT ST, PO BOX 190
IRON MOUNTAIN, MI 49801
PHONE: (906) 221-7536
EMAIL: ANDY.HEIGL@ASTREACONNECT.COM

WE ENERGIES - GAS/PETROLEUM
LARY KOCH
1921 8TH ST SOUTH
WISCONSIN RAPIDS, WI 54494
PHONE: (715) 421-9293
EMAIL: LARRY.KOCH@WE-ENERGIES.COM

XCEL ENERGY - ELECTRICITY-TRANSMISSION
MICHAEL DIENGER
414 NICOLLET MALL, 5TH FLOOR
MINNEAPOLIS, MN 55401
PHONE: (612) 321.3109
EMAIL: MICHAEL.A.DIENGER@XCELENERGY.COM

XCEL ENERGY - ELECTRICITY
JOHN KELSER
1414 W HAMILTON AVENUE, PO BOX 8
EAU CLAIRE, WI 54702-0008
PHONE: (715) 737-1431
EMAIL: JOHNKELSER@XCELENERGY.COM

CITY OF AUGUSTA - WATER/SEWER
DAN MARCHESKE
145 W LINCOLN ST
AUGUSTA, WI 54722
PHONE: (715) 286-2555
EMAIL: DMARCHESKE@CITYOFAUGUSTA.ORG

DIGGERS HOTLINE
Dial 811 or (800)242-8511
www.DiggersHotline.com

DNR CONTACT

LEAH NICOL
DNR WEST CENTRAL REGION HQ
1300 W CLAIREMONT AVE
EAU CLAIRE, WI 54701
EMAIL: LEAH.NICOL@WISCONSIN.GOV

CONSULTANT CONTACT

CORRE, INC.
1802 WARDEN STREET
EAU CLAIRE, WI 54703
KEVIN MEYER, P.E.
PHONE: (715) 299-1894
EMAIL: KMEYER@CORREINC.COM

RUNOFF COEFFICIENT TABLE

	HYDROLOGIC SOIL GROUP											
	A			B			C			D		
	SLOPE RANGE (PERCENT)			SLOPE RANGE (PERCENT)			SLOPE RANGE (PERCENT)			SLOPE RANGE (PERCENT)		
LAND USE:	0 - 2	2 - 6	6 & OVER	0 - 2	2 - 6	6 & OVER	0 - 2	2 - 6	6 & OVER	0 - 2	2 - 6	6 & OVER
ROW CROPS	.08 .22	.16 .30	.22 .38	.12 .26	.20 .34	.27 .44	.15 .30	.24 .37	.33 .50	.19 .34	.28 .41	.38 .56
MEDIAN STRIP-TURF	.19 .24	.20 .26	.24 .30	.19 .25	.22 .28	.26 .33	.20 .26	.23 .30	.30 .37	.20 .27	.25 .32	.30 .40
SIDE SLOPE-TURF			.25 .32			.27 .34			.28 .36			.30 .38
PAVEMENT:												
ASPHALT	.70 - .95											
CONCRETE	.80 - .95											
BRICK	.70 - .80											
DRIVES, WALKS	.75 - .85											
ROOFS	.75 - .95											
GRAVEL ROADS, SHOULDERS	.40 - .60											

TOTAL PROJECT AREA = 130.05 ACRES

TOTAL AREA EXPECTED TO BE DISTURBED BY CONSTRUCTION ACTIVITIES = 1.55 ACRES

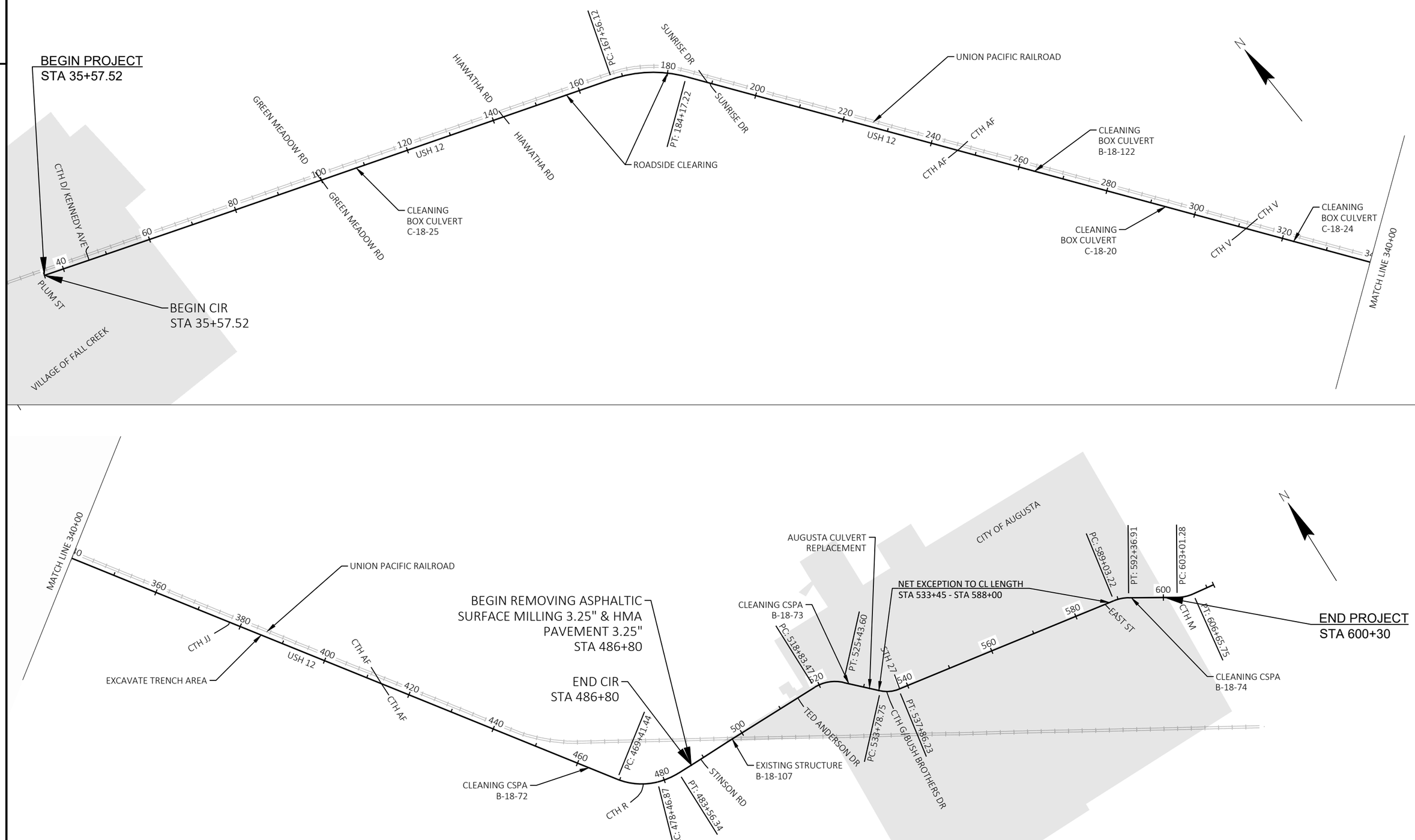

PROJECT NO: 7080-03-75	HWY: USH 12	COUNTY: EAU CLAIRE	PROJECT OVERVIEW	SHEET 3	E

FILE NAME : C:\OD\CORRE, INC\PROJECTS - DOCUMENTS\WI - NW REGION\7080-03-05_EAU CLAIRE CO_USH 12\500_CADD\501_C3D_2018\70800305\SHEETSPLAN\020201-PO.DWG
LAYOUT NAME - 1
PLOT DATE : 8/30/2021 4:45 PM PLOT BY : NICHOLAS WATHKE PLOT NAME : PLOT SCALE : 1 IN:2000 FT

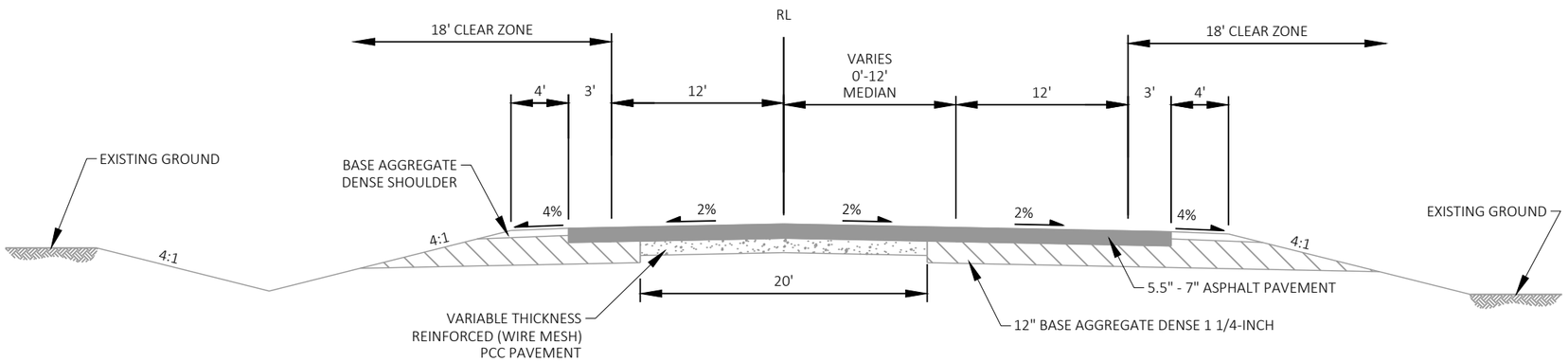

EXISTING TYPICAL SECTION

STA 35+57.52 TO 39+40

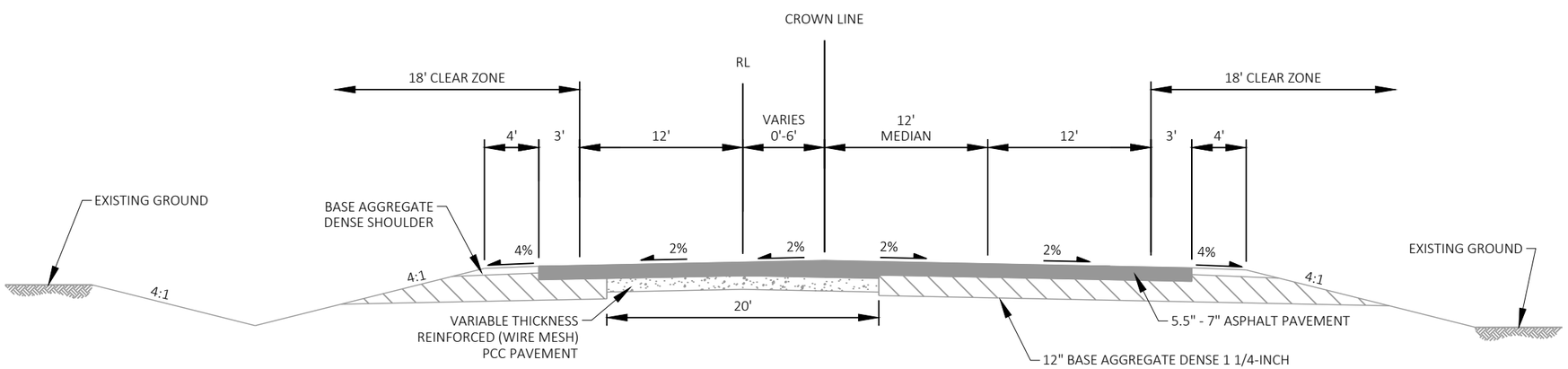

EXISTING TYPICAL SECTION

STA 39+40 TO 40+75

STA 49+50 TO 52+20

PAVEMENT CORE LOCATION

CORE	STATON	OFFSET	SIDE	ASPHALT THICKNESS (IN)	CONCRETE THICKNESS (IN)
B-01	51+05.53	14.57'	RT	6.75	--
B-02	66+02.64	3.83'	RT	7.5	10.25
B-03	81+64.62	3.70'	RT	7.5	13.5
B-04	96+26.30	4.06'	RT	6.75	11.5
B-05	111+25.45	3.20'	RT	8	11.5
B-06	126+42.53	3.18'	RT	5.5	15.5
B-07	141+47.71	3.46'	RT	6.25	14.75
B-08	156+52.83	3.55'	RT	6.5	9
B-09	171+68.44	3.40'	RT	7.25	14
B-10	186+86.65	3.02'	RT	5	14
B-11	201+63.29	5.42'	RT	7.25	12.75
B-12	217+01.01	4.79'	RT	7.5	14.25
B-13	232+24.70	4.59'	RT	7.75	9.25
B-14	247+24.99	4.91'	RT	7.25	14
B-15	262+29.99	5.57'	RT	6.5	--
B-16	277+34.73	6.20'	RT	7.75	13.5
B-17	292+52.49	4.81'	RT	7.5	--
B-18	307+62.44	6.52'	RT	7	14
B-19	322+17.37	6.13'	RT	7.75	--
B-20	337+89.79	5.87'	RT	5.25	12.75
B-21	353+01.66	5.06'	RT	5.5	8.25
B-22	368+13.89	6.12'	RT	6.75	14
B-23	383+24.46	4.84'	RT	6.75	14.5
B-24	398+34.14	5.97'	RT	8	13.5
B-25	413+67.92	6.46'	RT	7.5	--
B-26	428+38.09	5.24'	RT	6.5	--
B-27	443+51.65	6.52'	RT	7.5	13.5
B-28	458+66.53	5.30'	RT	6.75	12
B-29	473+69.82	3.60'	LT	7.25	--
B-30	488+79.70	6.48'	RT	6.5	--
B-31	504+04.61	4.25'	RT	5	--
B-32	518+99.32	5.85'	RT	9.5	6
B-33	594+21.79	5.48'	RT	5.5	7.5
B-34	600+41.66	5.65'	RT	5.5	6.25

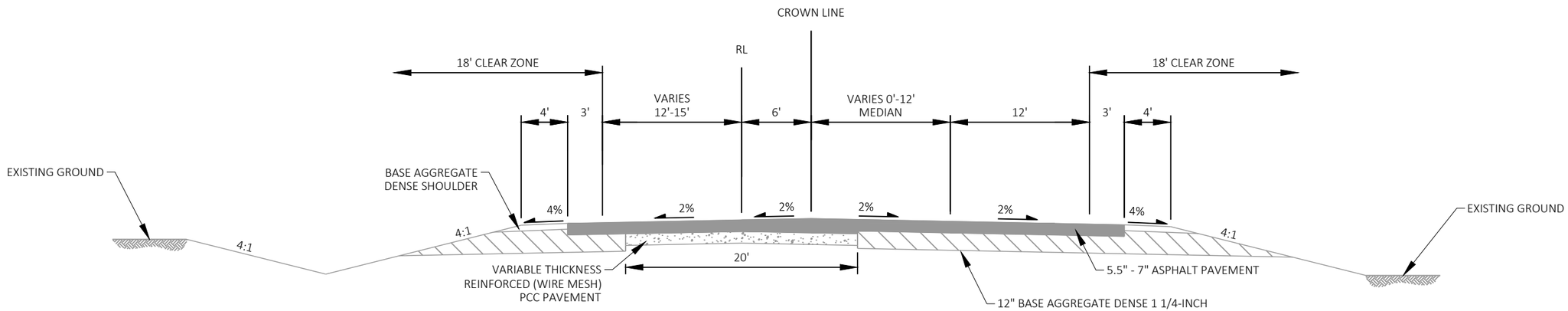

EXISTING TYPICAL SECTION

STA 40+75 TO 49+50

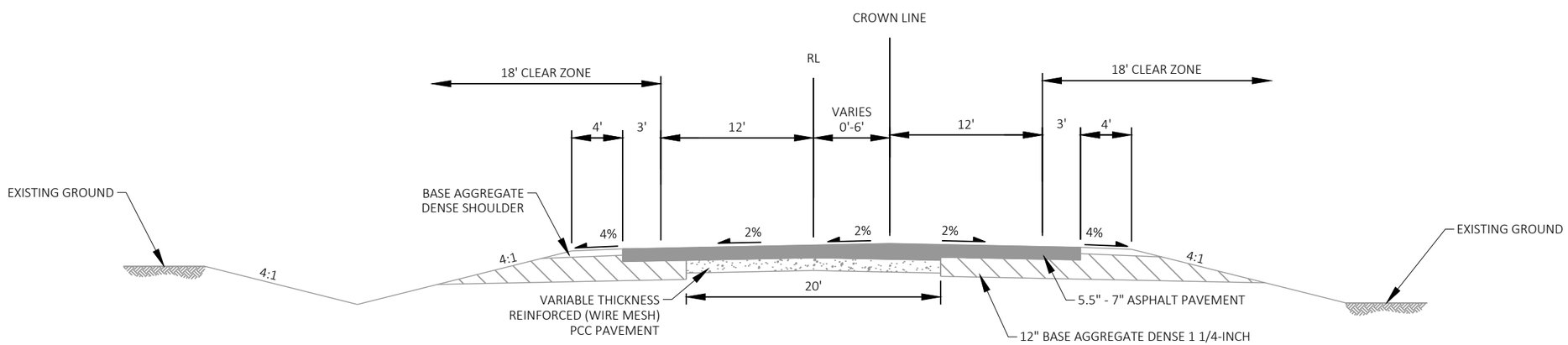

EXISTING TYPICAL SECTION

STA 52+20 TO 54+00

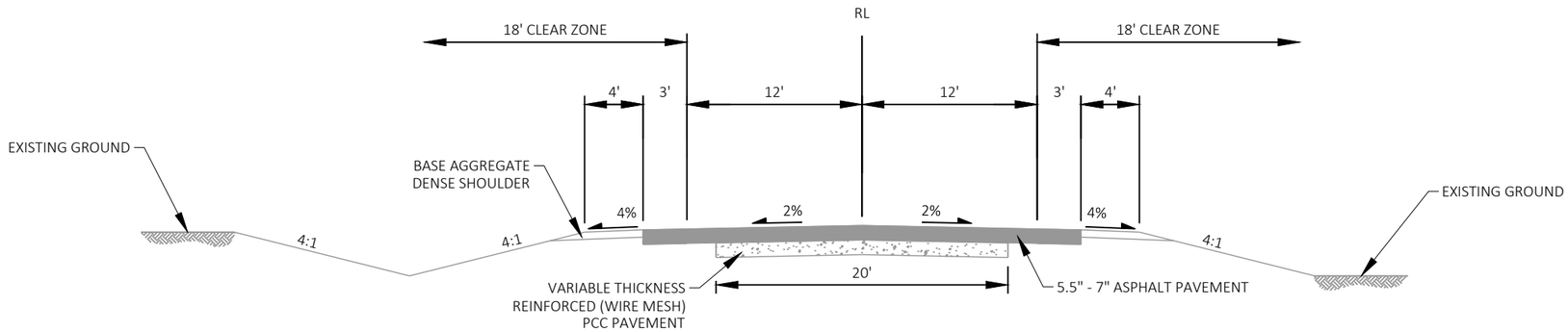

EXISTING TYPICAL SECTION

STA 54+00 TO 486+80
STA 506+35 TO 533+45
STA 588+00 TO 600+30

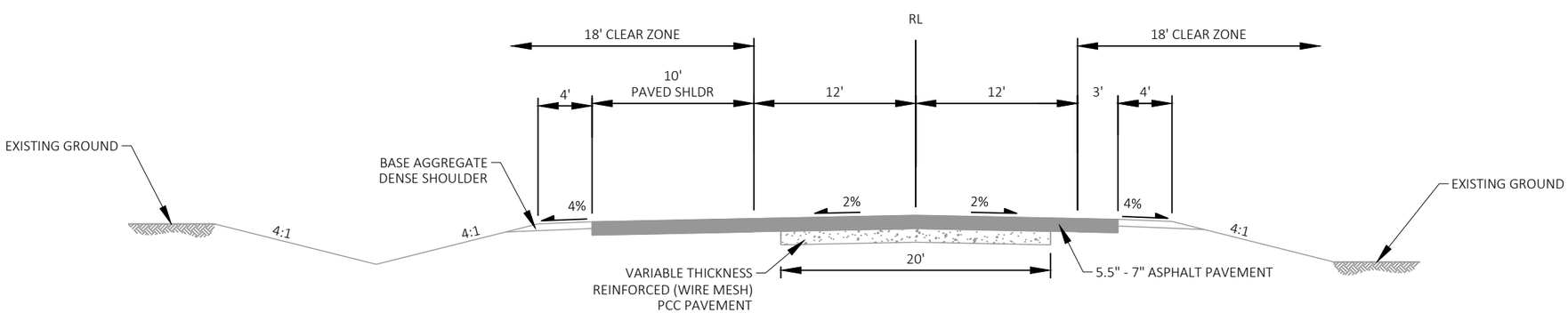

EXISTING TYPICAL SECTION

STA 486+80 TO 489+72

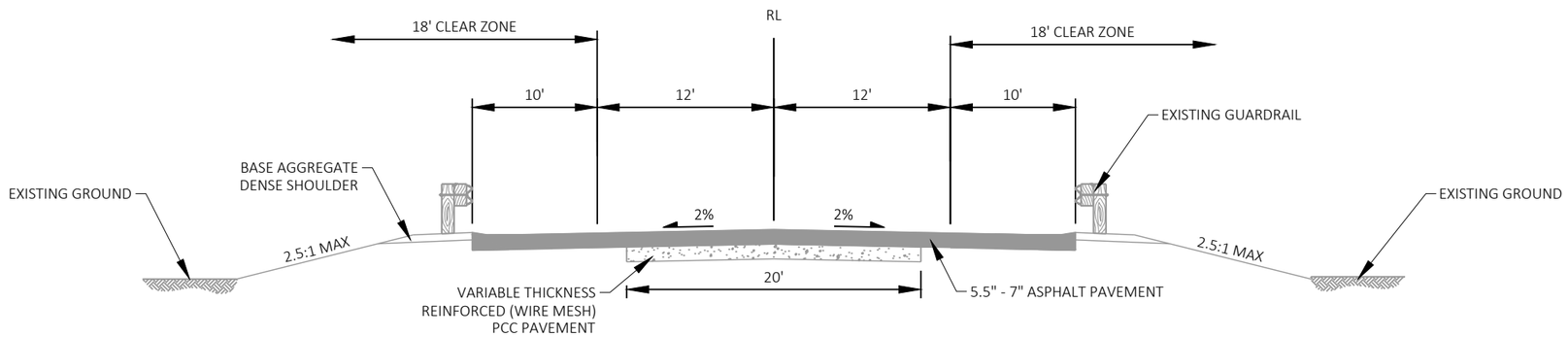

EXISTING TYPICAL SECTION

STA 486+80 TO 496+40
STA 498+82 TO 506+35

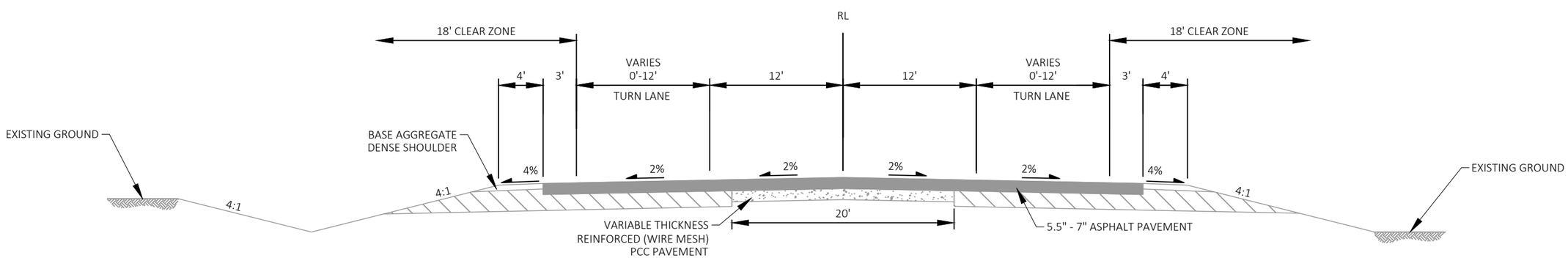

EXISTING TYPICAL SECTION

TURN LANES

PROJECT NO: 7080-03-75	HWY: USH 12	COUNTY: EAU CLAIRE	TYPICAL SECTIONS	SHEET 7	E

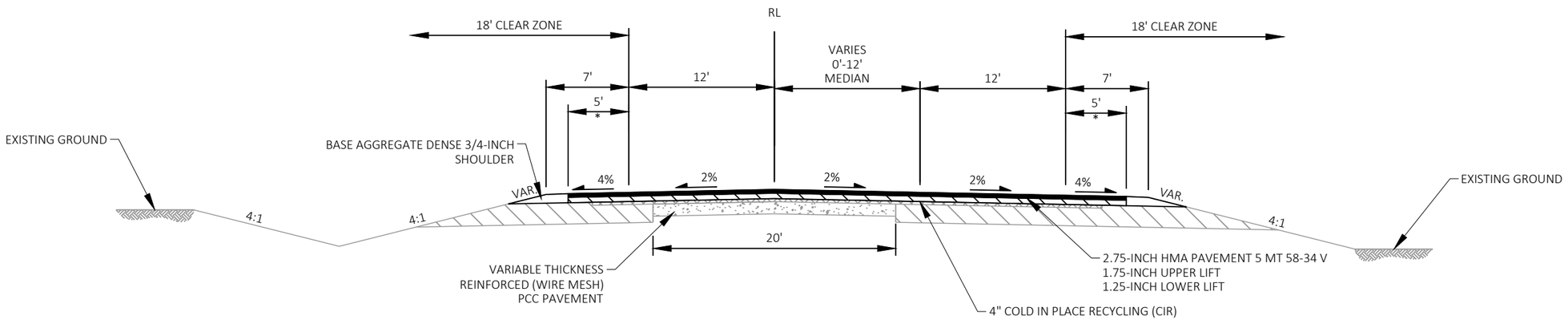

*OUTER 2' OF PAVED SHOULDER TO BE PAID
FOR UNDER CAT 0020

FINISHED TYPICAL SECTION

STA 35+57.52 TO 39+40

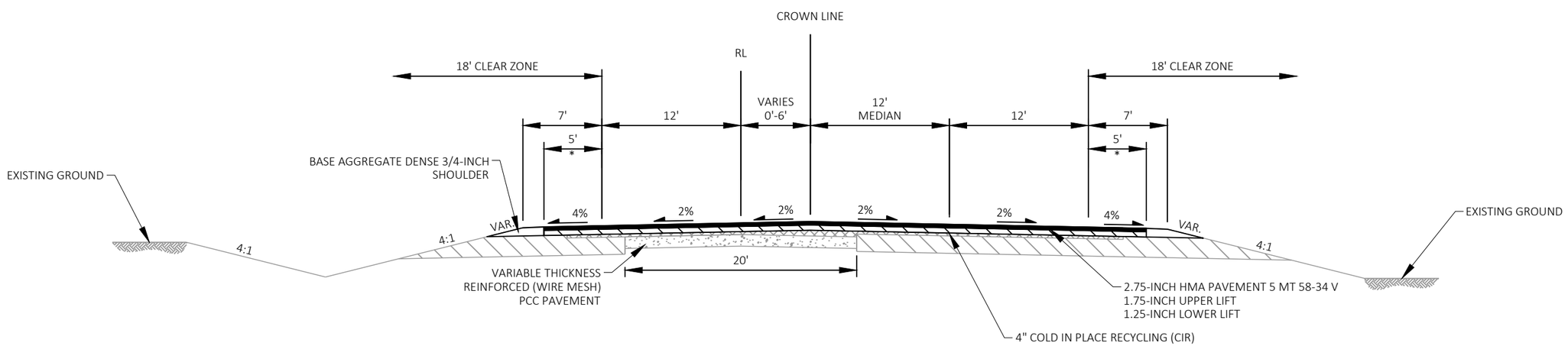

FINISHED TYPICAL SECTION

STA 39+40 TO 40+75
STA 49+50 TO 52+20

*OUTER 2' OF PAVED SHOULDER TO BE PAID
FOR UNDER CAT 0020

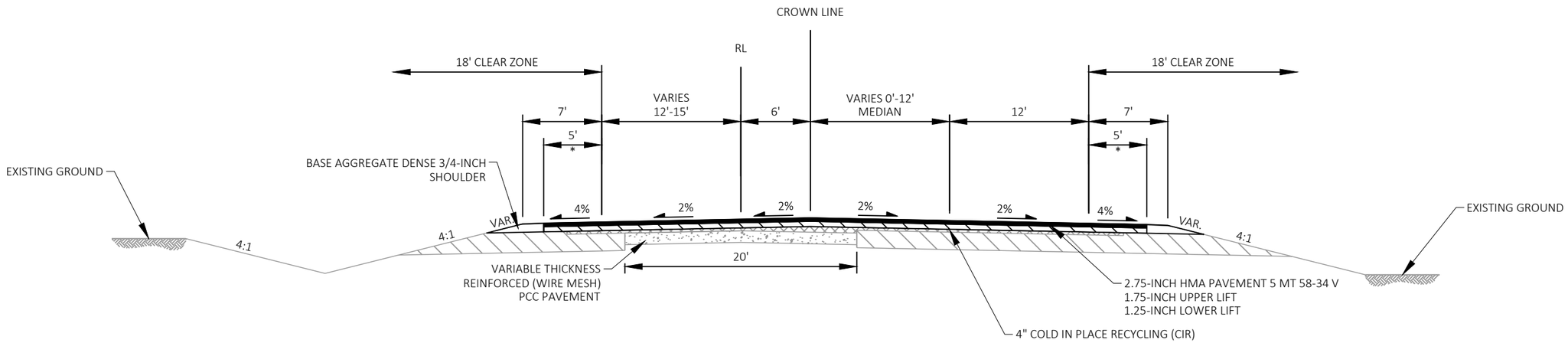

*OUTER 2' OF PAVED SHOULDER TO BE PAID
FOR UNDER CAT 0020

FINISHED TYPICAL SECTION

STA 40+75 TO 49+50

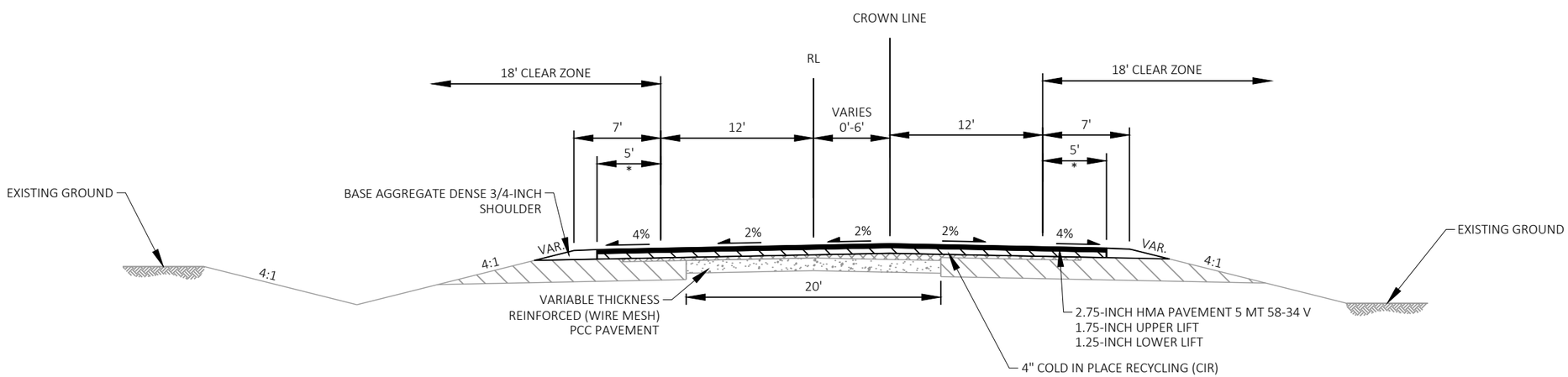

*OUTER 2' OF PAVED SHOULDER TO BE PAID
FOR UNDER CAT 0020

FINISHED TYPICAL SECTION

STA 52+20 TO 54+00

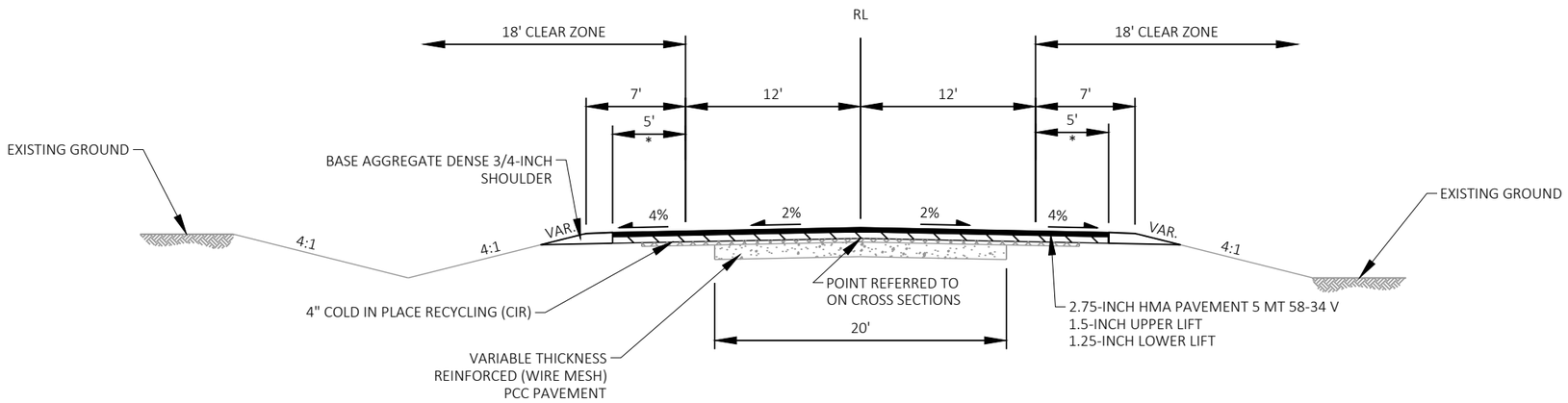

*OUTER 2' OF PAVED SHOULDER TO BE PAID
FOR UNDER CAT 0020

FINISHED TYPICAL SECTION

STA 54+00 TO 486+80

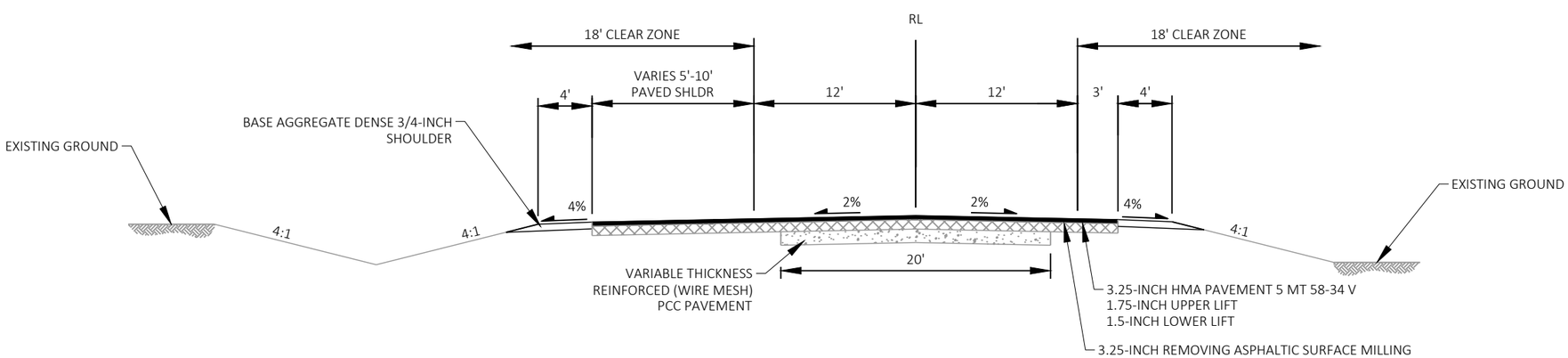

FINISHED TYPICAL SECTION

STA 486+80 TO 489+72

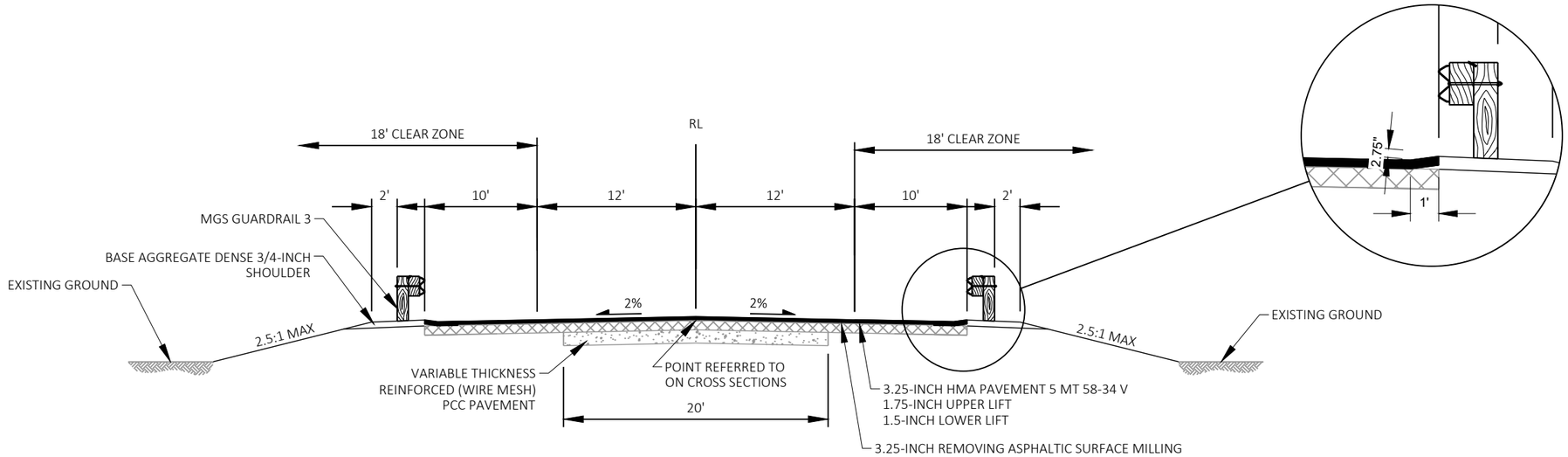

FINISHED TYPICAL SECTION

STA 489+72 TO 496+40
STA 498+82 TO 506+35

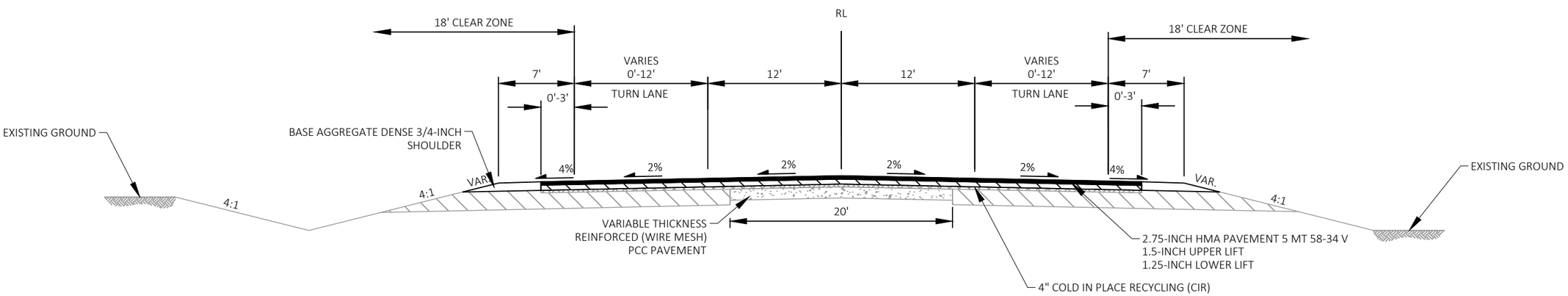

FINISHED TYPICAL SECTION

TURN LANES
STA 241+74 TO 244+86 RT
STA 247+08 TO 250+16 LT
STA 307+45 TO 310+55 RT
STA 312+78 TO 315+82 LT
STA 374+74 TO 376+77 RT
STA 410+34 TO 413+44 RT
STA 413+74 TO 416+60 LT
STA 470+90 TO 474+55 RT
STA 506+35 TO 512+83 LT
STA 506+35 TO 513+55 RT

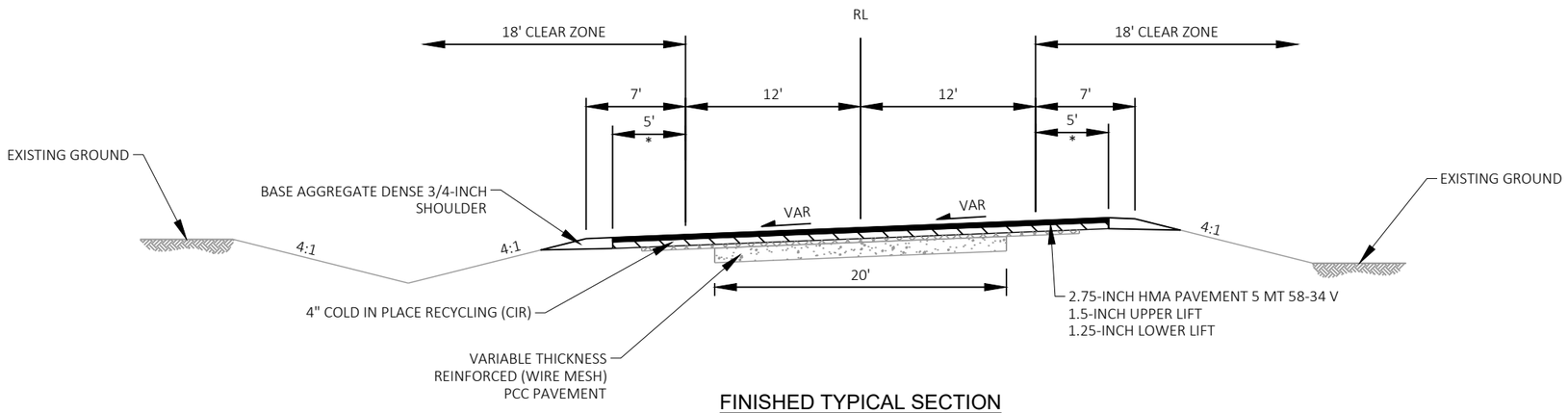

FINISHED TYPICAL SECTION

SUPERELEVATION
STA 167+56 TO 184+17
STA 469+41 TO 483+56
**STA 518+83 TO 525+44

*OUTER 2' OF PAVED SHOULDER TO BE PAID FOR UNDER CAT 0020

** 3' PAVED SHOULDER

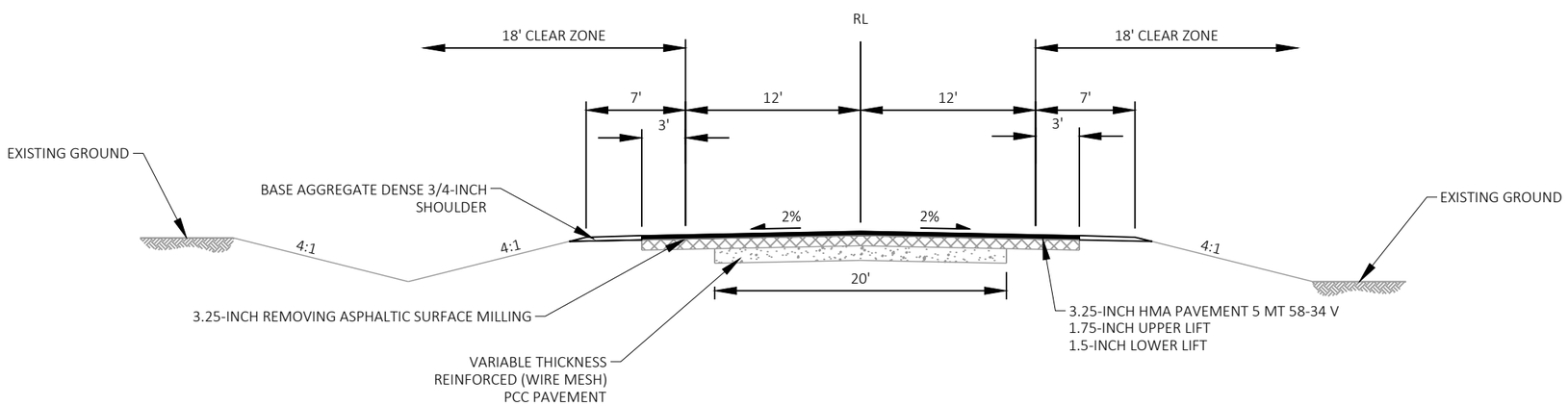

FINISHED TYPICAL SECTION

STA 506+35 TO 533+45
STA 588+00 TO 600+30

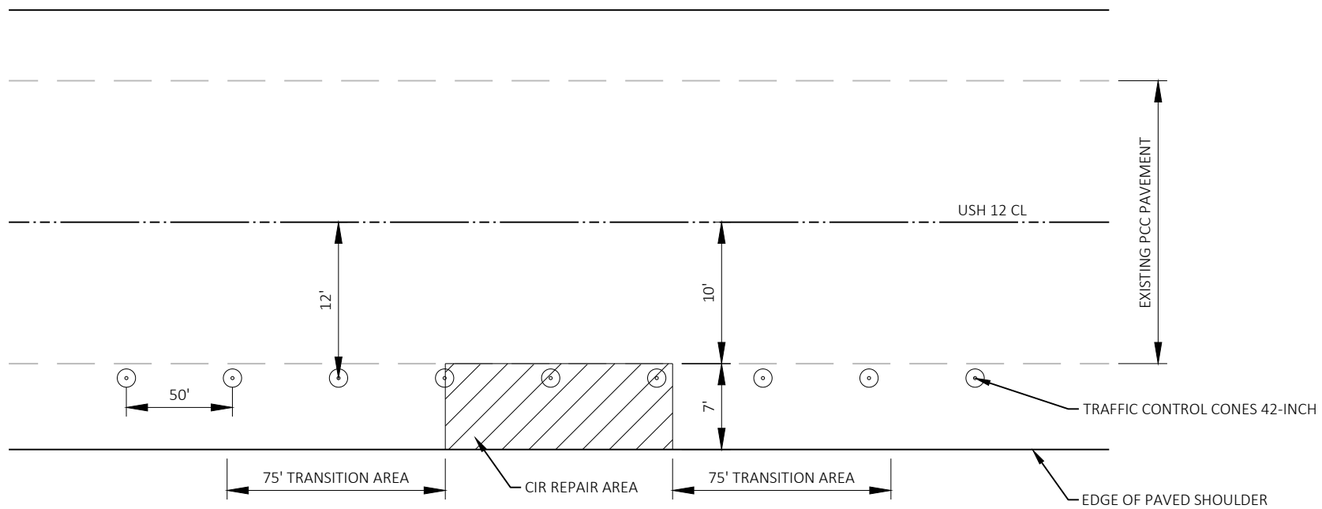

6-INCH CIR DISTRESSED AREAS DETAIL

CIR REPAIR AREA

6-INCH CIR DISTRESSED AREAS ARE INCIDENTAL TO THE 4-INCH CIR ASPHALT BASE LAYER AND STABILIZING AGENT ITEMS.

6-INCH CIR DISTRESSED AREAS SHALL BE CONSTRUCTED DURING THE 4-INCH CIR OPERATIONS.

EXCAVATION REQUIRED BEYOND THE LIMITS SHOWN SHALL BE PAID FOR UNDER THE BASE REPAIR FOR CIR ITEM.

REMOVE EXISTING BASE COURSE AWAY FROM EDGE OF EXISTING HMA SHOULDER (SHAPING SHOULDERS ITEM) AS TO NOT INCORPORATE BASE COURSE SHOULDER INTO CIR.

PREPARE AREA FOR 6-INCH CIR UNDER PREPARE FOUNDATION FOR ASPHALTIC SHOULDERS.

6-INCH CIR DISTRESSED AREAS REQUIRE CONTRACTOR TO FIND THE EXISTING UNDERLYING CONCRETE PAVEMENT EDGE. THE CONTRACTOR IS ALLOWED A 75-FOOT TRANSITION AREA MINIMUM BEFORE AND AFTER THE REPAIR AREA.

IF TRAPPED WATER IS ENCOUNTERED, CONTACT THE REGIONAL PAVEMENT ENGINEER DEVIN HARINGS AT (715) 836-3006.

6-INCH CIR REPAIR AREAS SHALL BE PERFORMED AT THE STATION RANGES SHOWN AND AS ADJUSTED BY THE ENGINEER IN THE FIELD.

PLACE TRAFFIC CONTROL CONES AT EDGE OF TRAFFIC LANE TO PREVENT TRAFFIC FROM TRAVELING ON SHOULDER REPAIR AREAS.

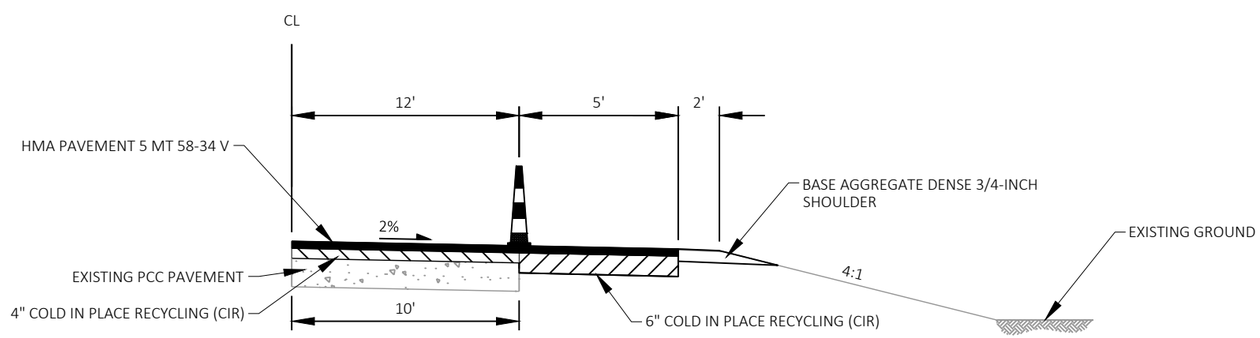

6-INCH CIR DISTRESSED AREAS TYPICAL SECTION

STA 54+75 TO 57+00 RT
STA 114+00 TO 117+00 RT
STA 126+00 TO 129+00 RT
STA 137+00 TO 140+00 LT
STA 156+00 158+00 LT
STA 335+00 TO 345+00 RT
STA 357+00 TO 360+00 RT

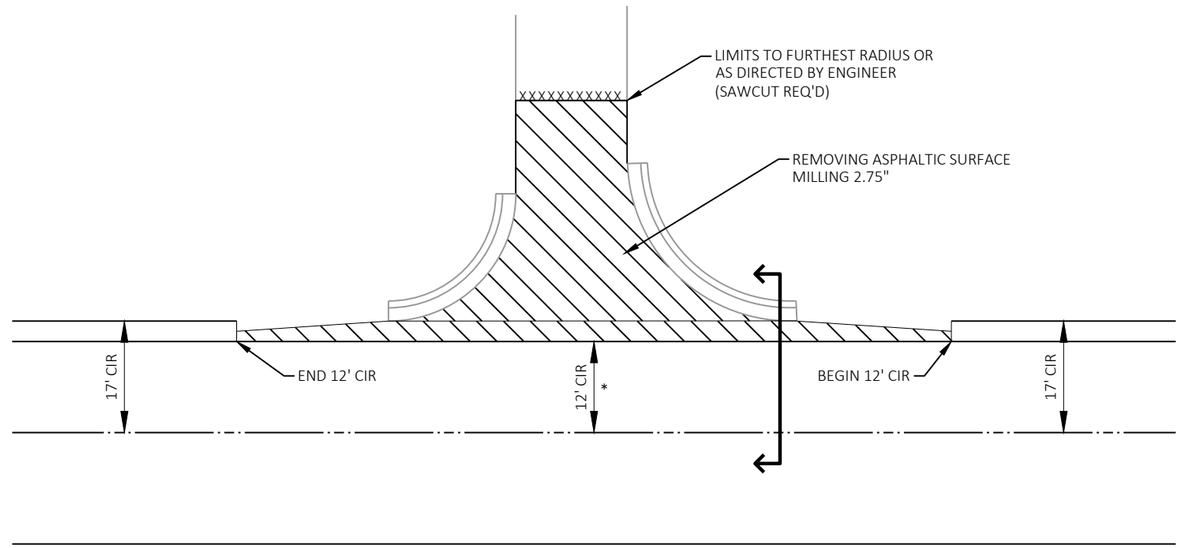

* 12' CIR THRU INTERSECTIONS AND TAPERS.

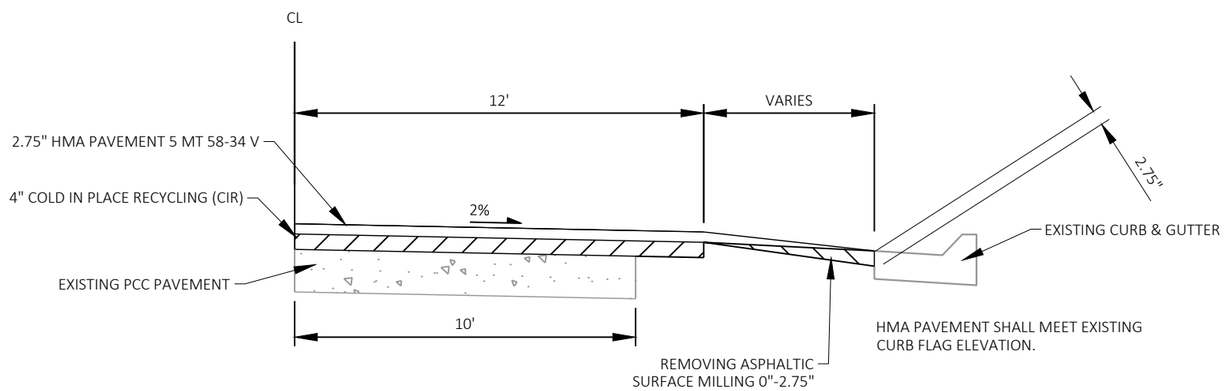

SIDE ROAD PAVING DETAIL

SUNRISE DRIVE

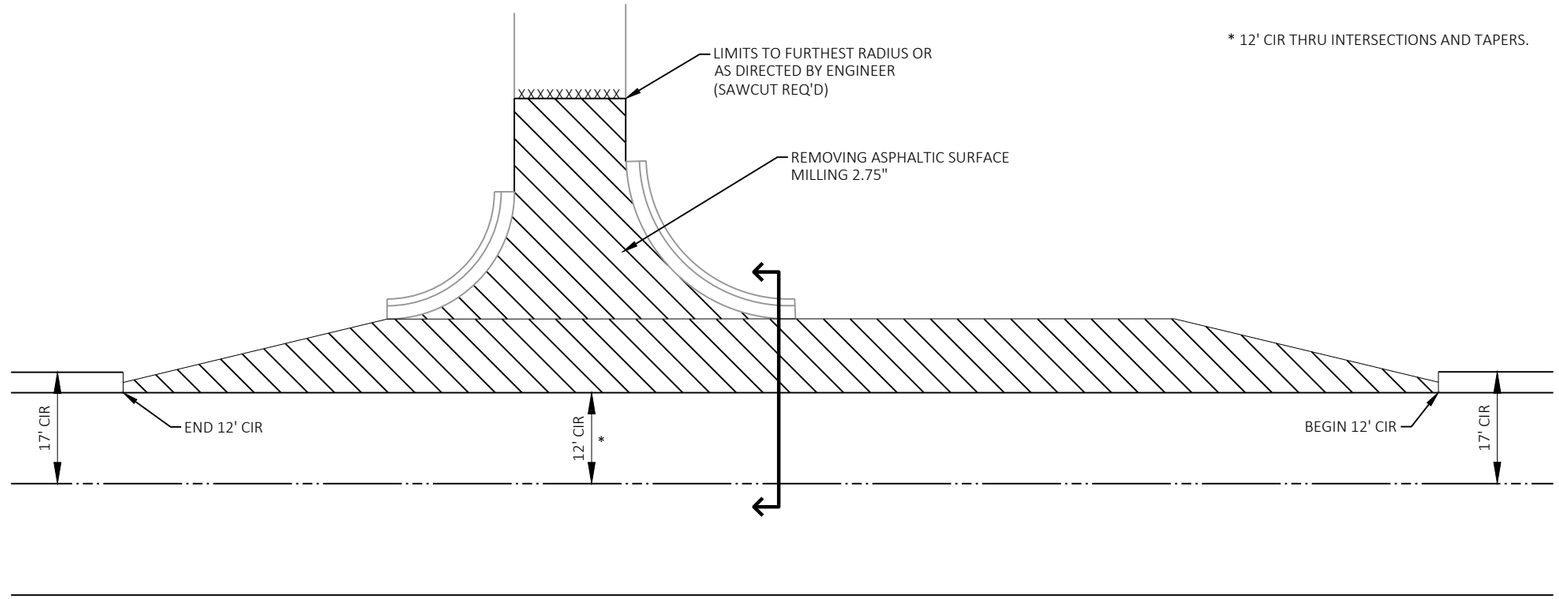

* 12' CIR THRU INTERSECTIONS AND TAPERS.

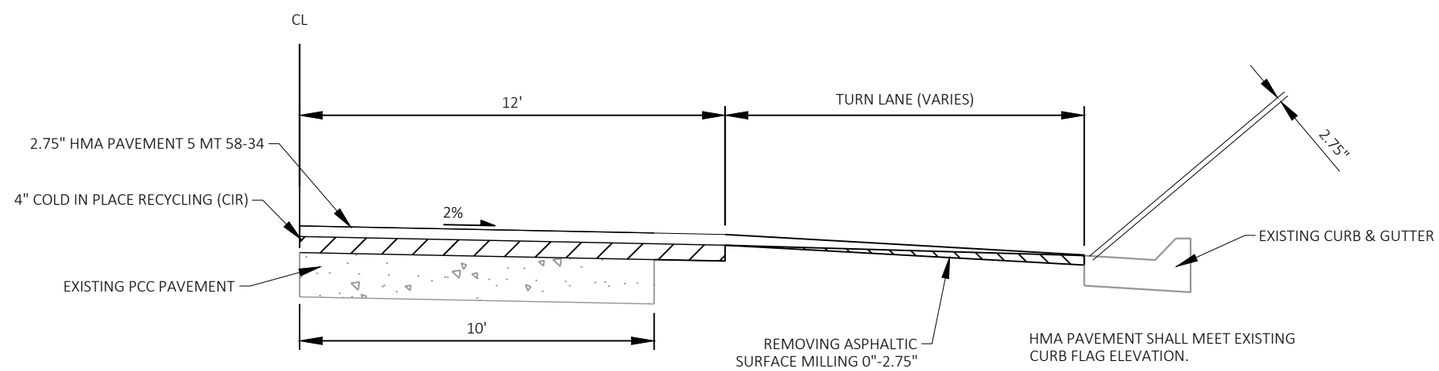

SIDE ROAD PAVING DETAIL W/ TURN LANE

CTH D/KENNEDY AVE
GREEN MEADOWS RD
CTH AF
CTH V
CTH JJ
CTH R

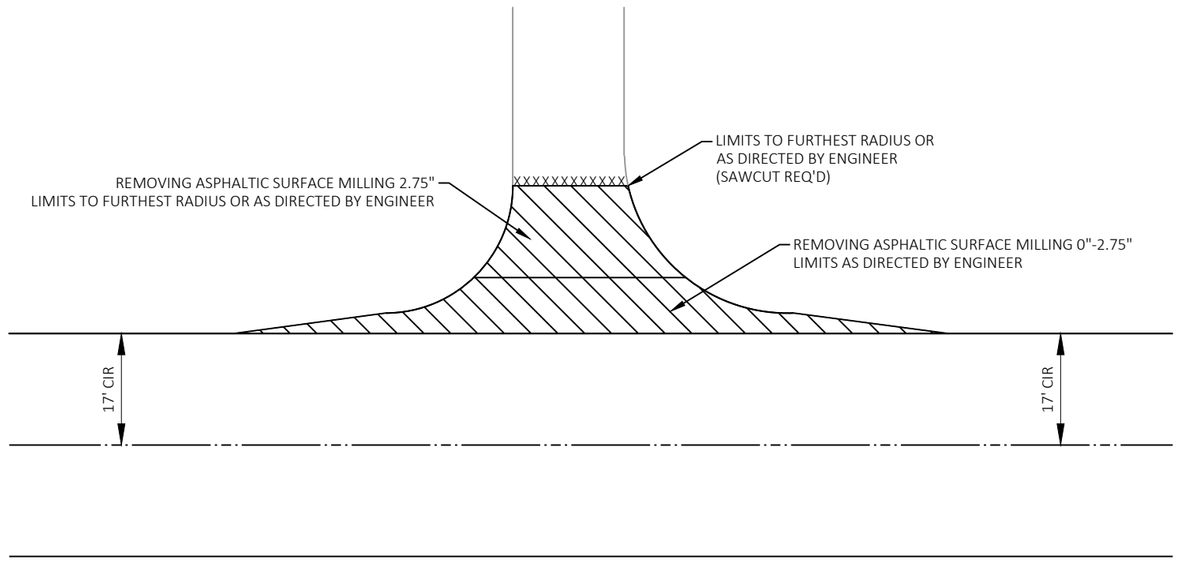

SIDE ROAD DETAIL

HIAWATHA RD

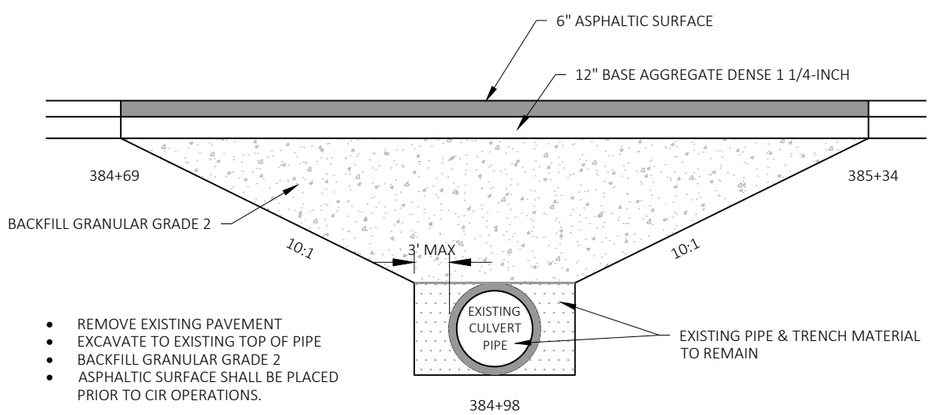

- REMOVE EXISTING PAVEMENT
- EXCAVATE TO EXISTING TOP OF PIPE
- BACKFILL GRANULAR GRADE 2
- ASPHALTIC SURFACE SHALL BE PLACED PRIOR TO CIR OPERATIONS.

PIPE BACKFILL DETAIL STA 384+98

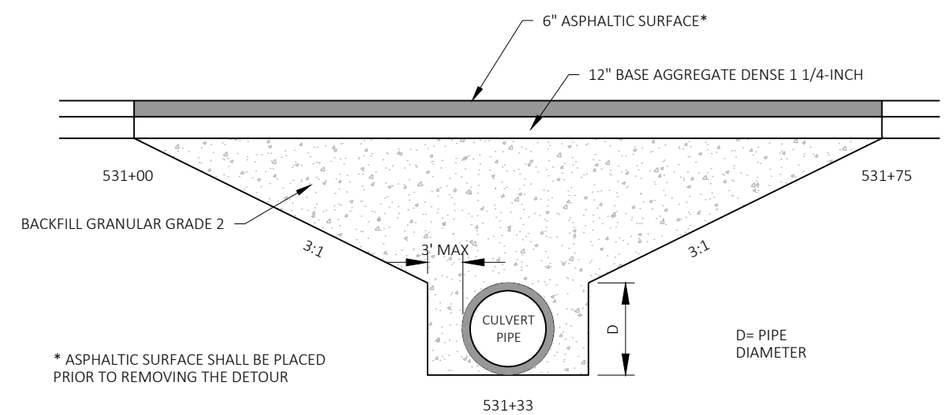

* ASPHALTIC SURFACE SHALL BE PLACED PRIOR TO REMOVING THE DETOUR

PIPE REPLACEMENT DETAIL STA 531+33

PROJECT NO: 7080-03-75	HWY: USH 12	COUNTY: EAU CLAIRE	CONSTRUCTION DETAILS	SHEET 16	E

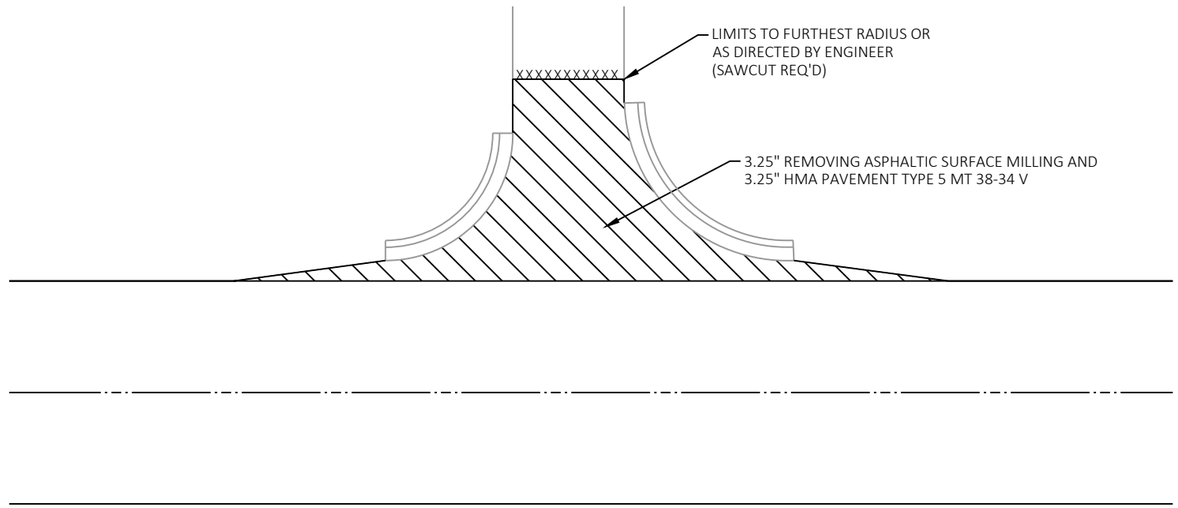

SIDE ROAD DETAIL

STINSON RD
INDUSTRIAL DR
TED ANDERSON DR
MONROE ST
MAIN ST

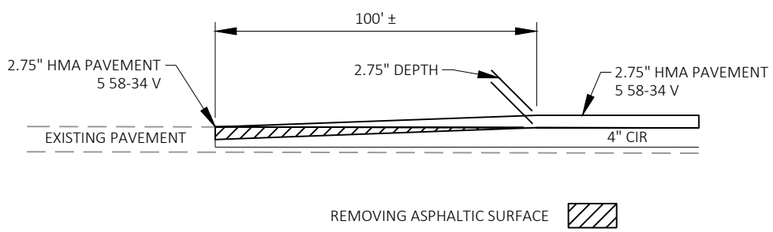

MAINLINE BUTT JOINT

BEGIN PROJECT - STA 35+57

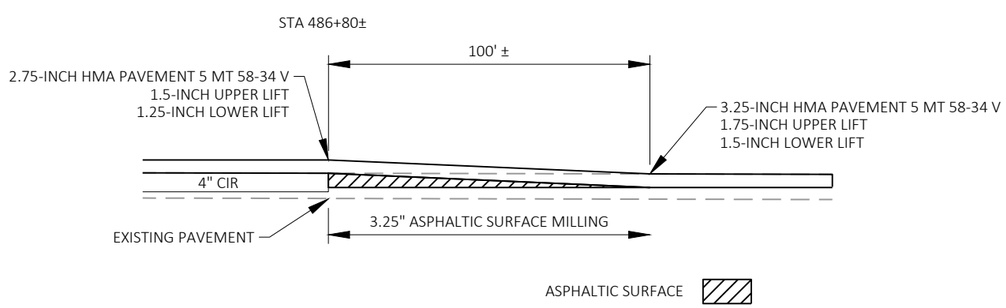

MAINLINE PAVING TRANSITION DETAIL

STA 486+80

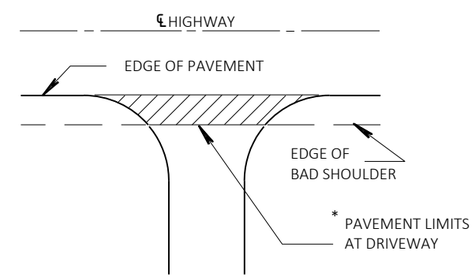

*WHERE DRIVEWAY IS PAVED, SAWCUT REQ'D, APPROACH PAVEMENT SHOULD BE EXTENDED TO MATCH DRIVEWAY PAVEMENT.

DRIVEWAY DETAIL

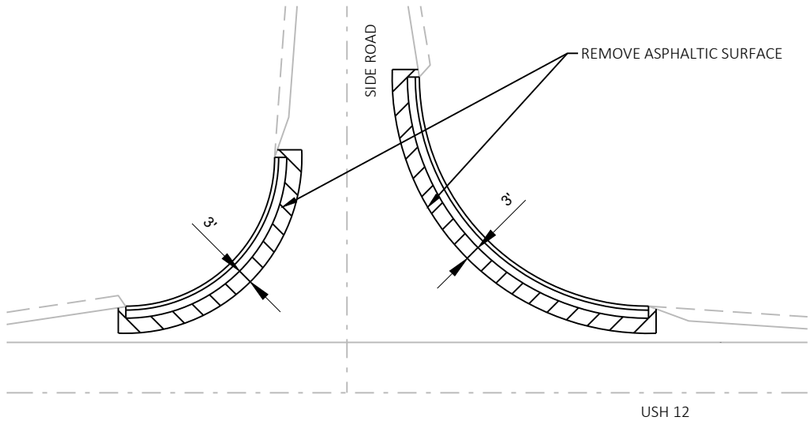

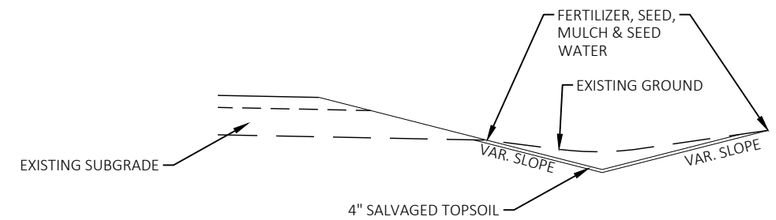

DITCH CLEANING DETAIL (TYP)

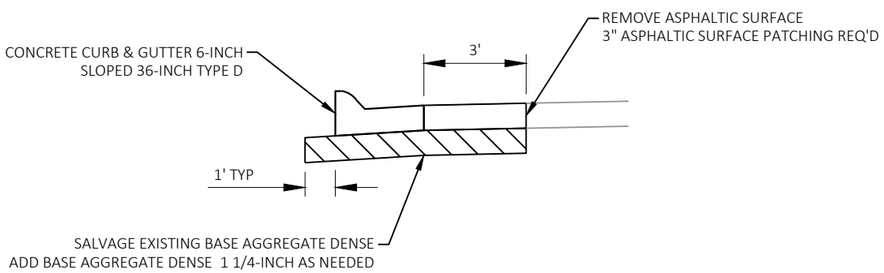

CURB REPLACEMENT DETAIL

GREEN MEADOW RD
CTH AF

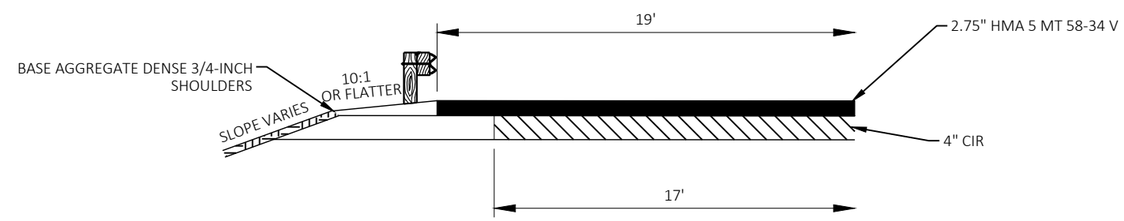

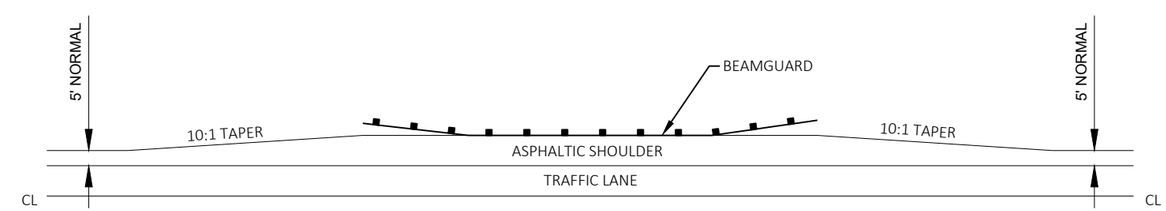

DETAIL FOR ASPHALTIC SHOULDER AT BEAMGUARD

STA 105+53 - 109+14
STA 261+49 - 265+59
STA 291+29 - 295+67
STA 320+47 - 324+80
STA 461+28 - 465+10

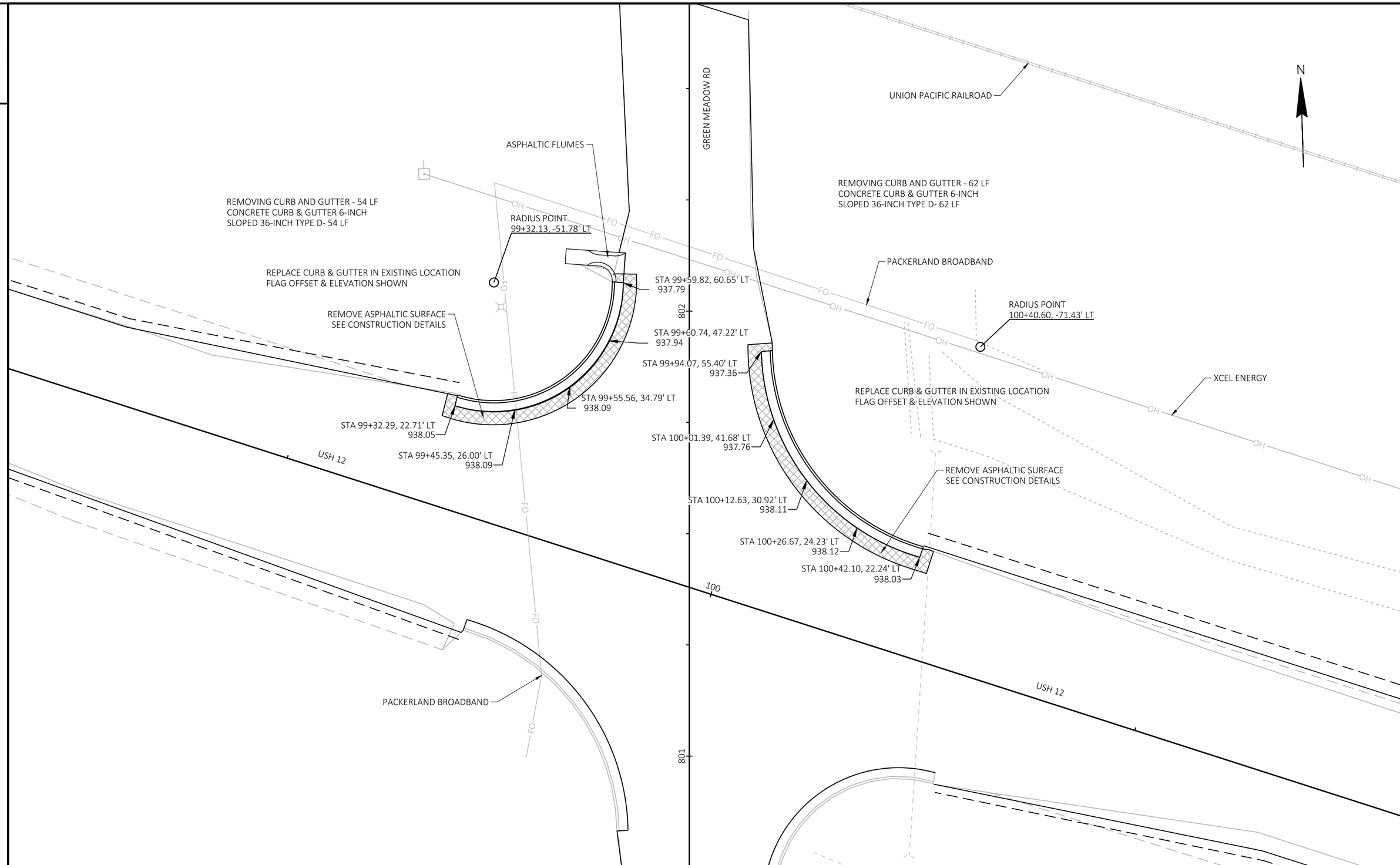

PROJECT NO: 7080-03-75	HWY: USH 12	COUNTY: EAU CLAIRE	INTERSECTION DETAILS	SHEET 19	E

FILE NAME : C:\OD\CORRE, INC\PROJECTS - DOCUMENTS\WI - NW REGION\7080-03-05_EAU CLAIRE CO_USH 12\500_CADD\501_C3D_2018\70800305\SHEETSPLAN\021101-ID.DWG
LAYOUT NAME - 1
PLOT DATE : 8/30/2021 4:47 PM PLOT BY : NICHOLAS WATHKE PLOT NAME : PLOT SCALE : 1 IN:20 FT

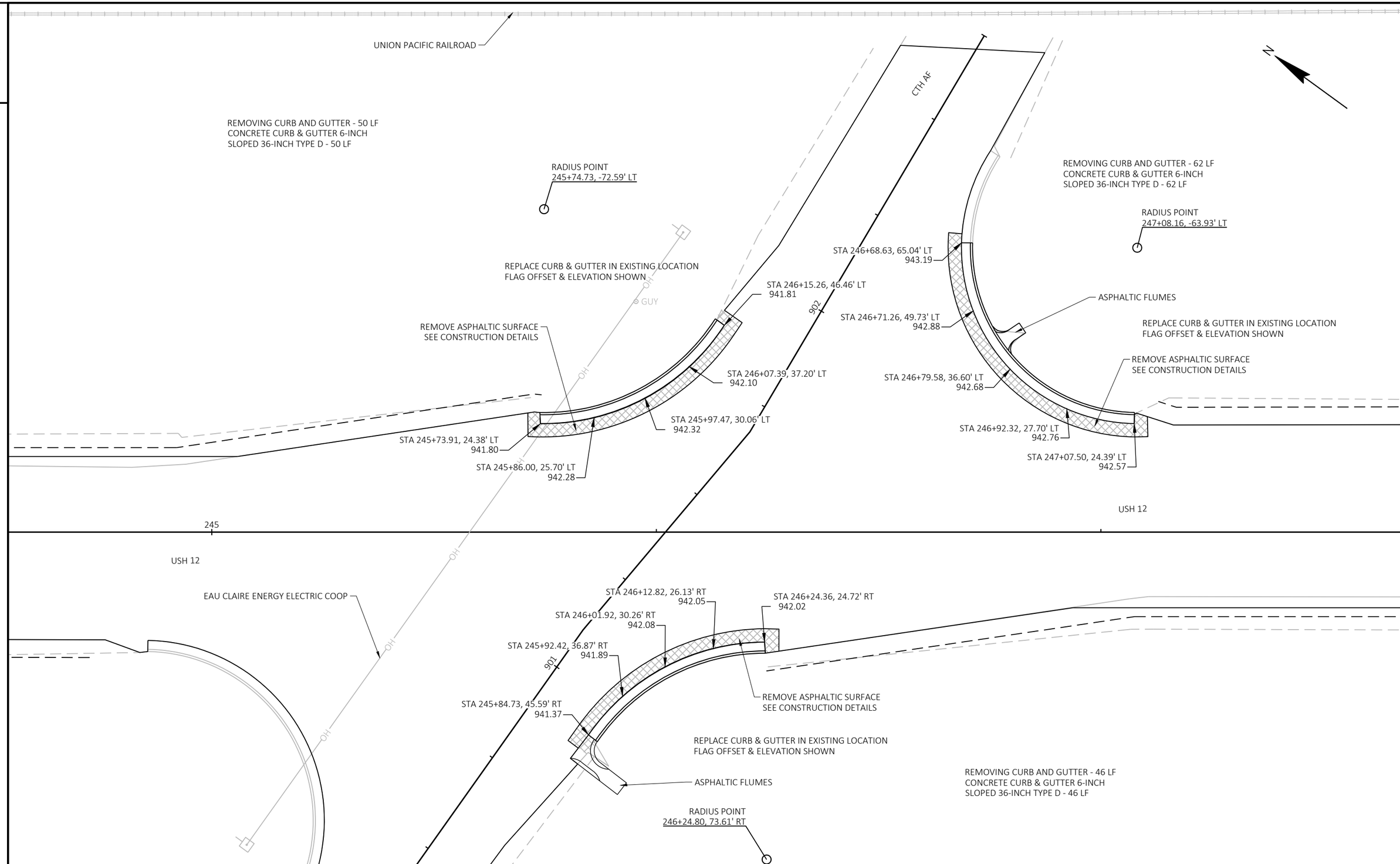

PROJECT NO: 7080-03-75	HWY: USH 12	COUNTY: EAU CLAIRE	INTERSECTION DETAILS	SHEET 20	E

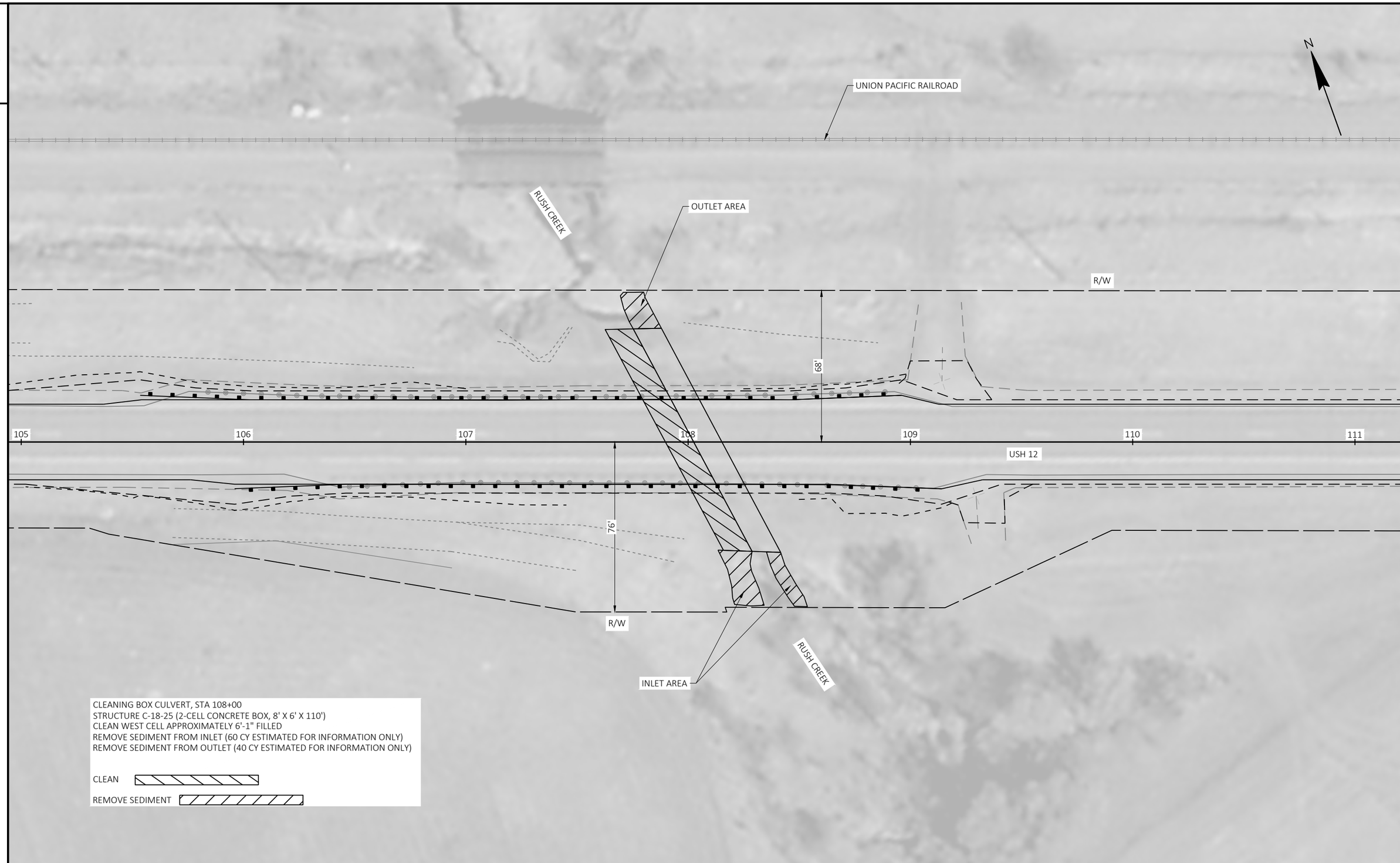
UNION PACIFIC RAILROAD
N
RUSH CREEK
OUTLET AREA
R/W
68'
105
106
107
108
109
110
111
USH 12
76'
R/W
RUSH CREEK
INLET AREA
CLEANING BOX CULVERT, STA 108+00
STRUCTURE C-18-25 (2-CELL CONCRETE BOX, 8' X 6' X 110')
CLEAN WEST CELL APPROXIMATELY 6'-1" FILLED
REMOVE SEDIMENT FROM INLET (60 CY ESTIMATED FOR INFORMATION ONLY)
REMOVE SEDIMENT FROM OUTLET (40 CY ESTIMATED FOR INFORMATION ONLY)
CLEAN
REMOVE SEDIMENT

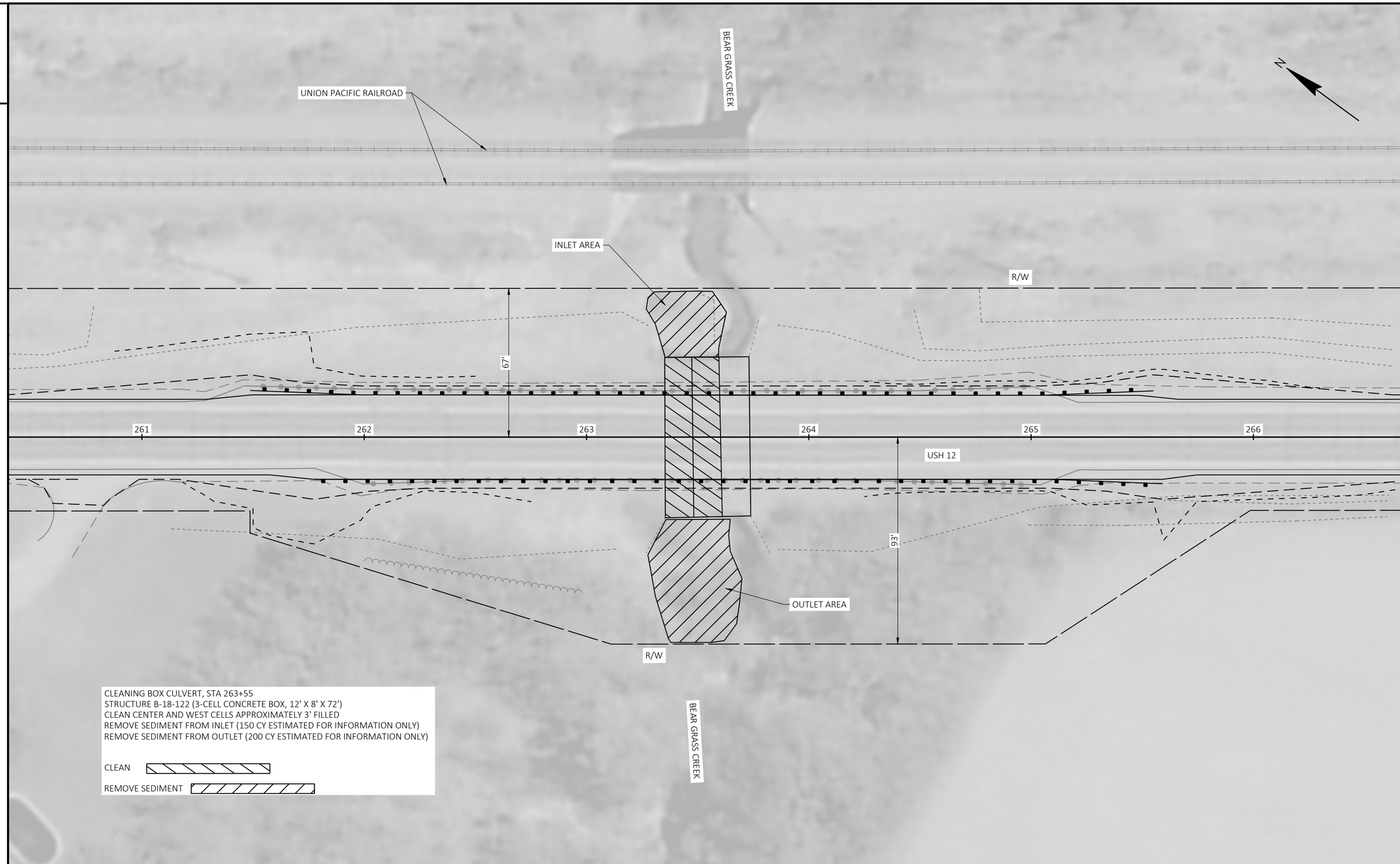
BEAR GRASS CREEK
N
UNION PACIFIC RAILROAD
INLET AREA
R/W
67'
261
262
263
264
265
266
USH 12
93'
OUTLET AREA
R/W
BEAR GRASS CREEK
CLEANING BOX CULVERT, STA 263+55
STRUCTURE B-18-122 (3-CELL CONCRETE BOX, 12' X 8' X 72')
CLEAN CENTER AND WEST CELLS APPROXIMATELY 3' FILLED
REMOVE SEDIMENT FROM INLET (150 CY ESTIMATED FOR INFORMATION ONLY)
REMOVE SEDIMENT FROM OUTLET (200 CY ESTIMATED FOR INFORMATION ONLY)
CLEAN
REMOVE SEDIMENT

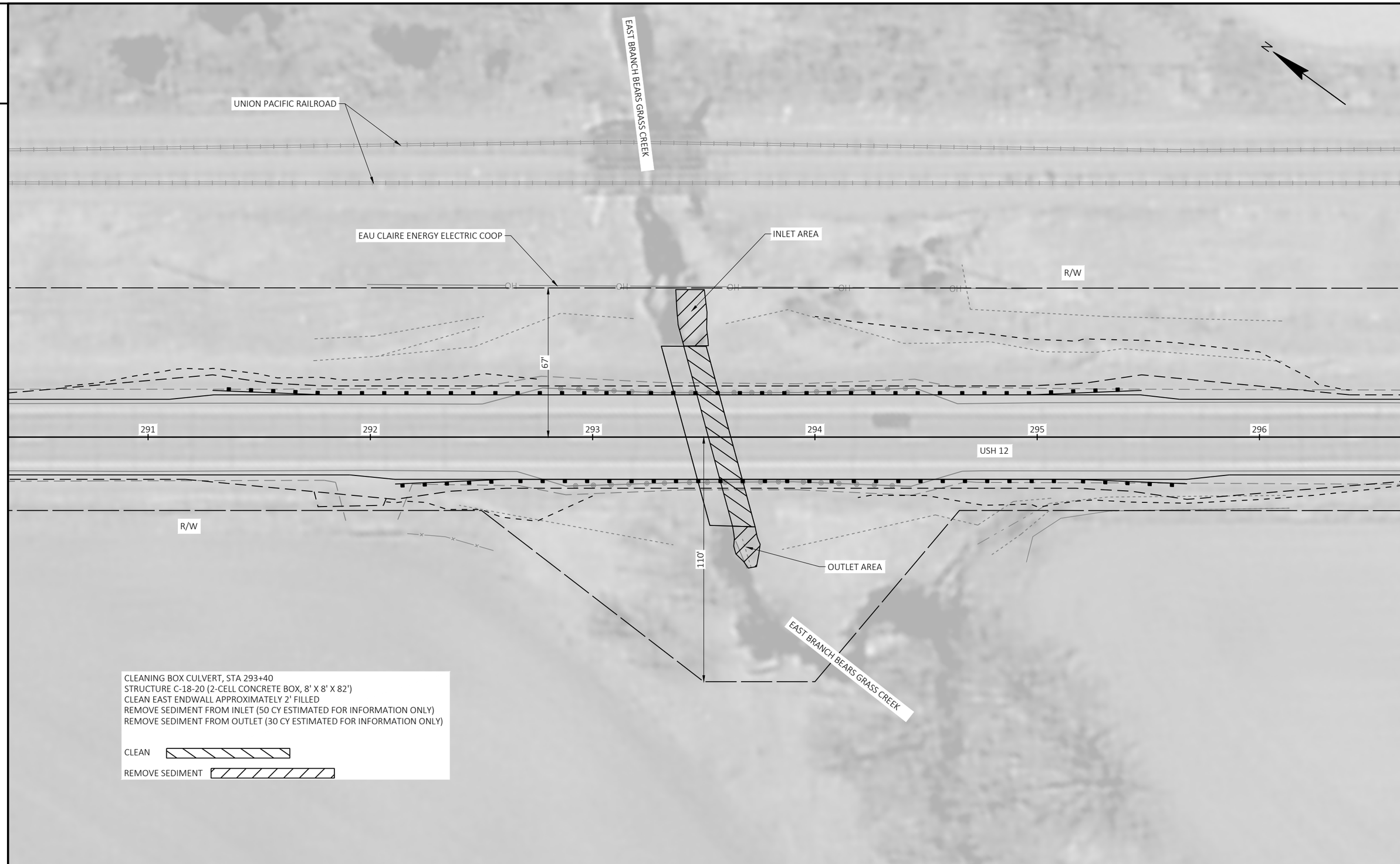

PROJECT NO: 7080-03-75	HWY: USH 12	COUNTY: EAU CLAIRE	PLAN DETAILS	SHEET 23	E

FILE NAME : C:\OD\CORRE, INC\PROJECTS - DOCUMENTS\WI - NW REGION\7080-03-05_EAU CLAIRE CO_USH 12\500_CADD\501_C3D_2018\70800305\SHEETSPLAN\021201-PD.DWG
LAYOUT NAME - 03
PLOT DATE : 8/30/2021 4:51 PM PLOT BY : NICHOLAS WATHKE PLOT NAME : PLOT SCALE : 1 IN:40 FT

WISDOT/CADDS SHEET 42


N
BR BEAR GRASS CREEK
LUMEN
INLET AREA
R/W
FO
FO
FO
66'
PI: 324+30.88
320
321
322
323
324
325
USH 12
64'
OUTLET AREA
R/W
BR BEAR GRASS CREEK
CLEANING BOX CULVERT, STA 322+66
STRUCTURE C-18-24 (SINGLE CELL, 8' X 6' X 58')
CLEAN BOX CELL APPROXIMATELY 1'-2' FILLED
REMOVE SEDIMENT FROM INLET (50 CY ESTIMATED FOR INFORMATION ONLY)
REMOVE SEDIMENT FROM OUTLET (30 CY ESTIMATED FOR INFORMATION ONLY)
CLEAN
REMOVE SEDIMENT

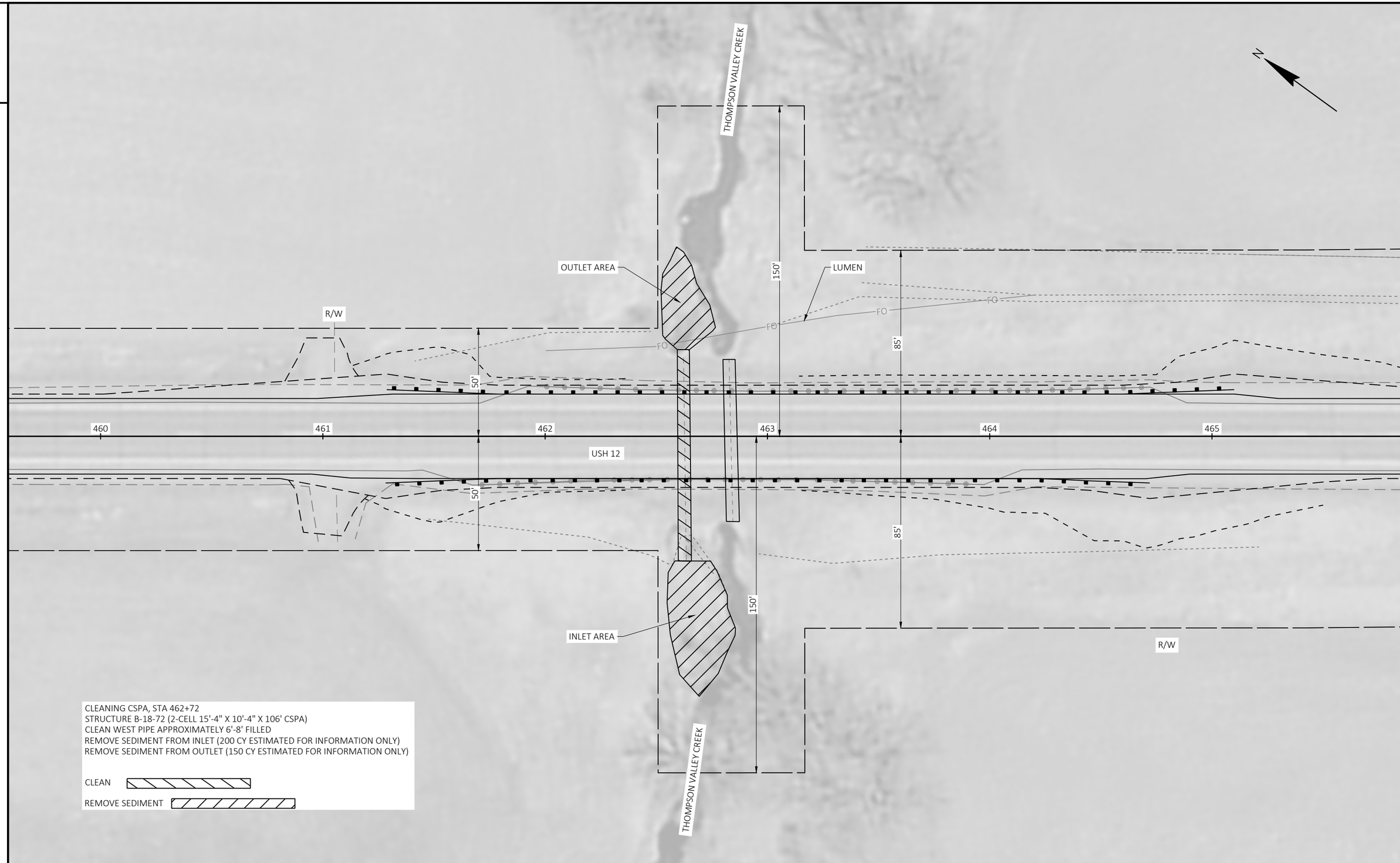
THOMPSON VALLEY CREEK
N
OUTLET AREA
LUMEN
150'
85'
R/W
FO
FO
FO
FO
50'
460
461
462
463
464
465
USH 12
50'
85'
150'
INLET AREA
R/W
THOMPSON VALLEY CREEK
CLEANING CSPA, STA 462+72
STRUCTURE B-18-72 (2-CELL 15'-4" X 10'-4" X 106' CSPA)
CLEAN WEST PIPE APPROXIMATELY 6'-8' FILLED
REMOVE SEDIMENT FROM INLET (200 CY ESTIMATED FOR INFORMATION ONLY)
REMOVE SEDIMENT FROM OUTLET (150 CY ESTIMATED FOR INFORMATION ONLY)
CLEAN
REMOVE SEDIMENT

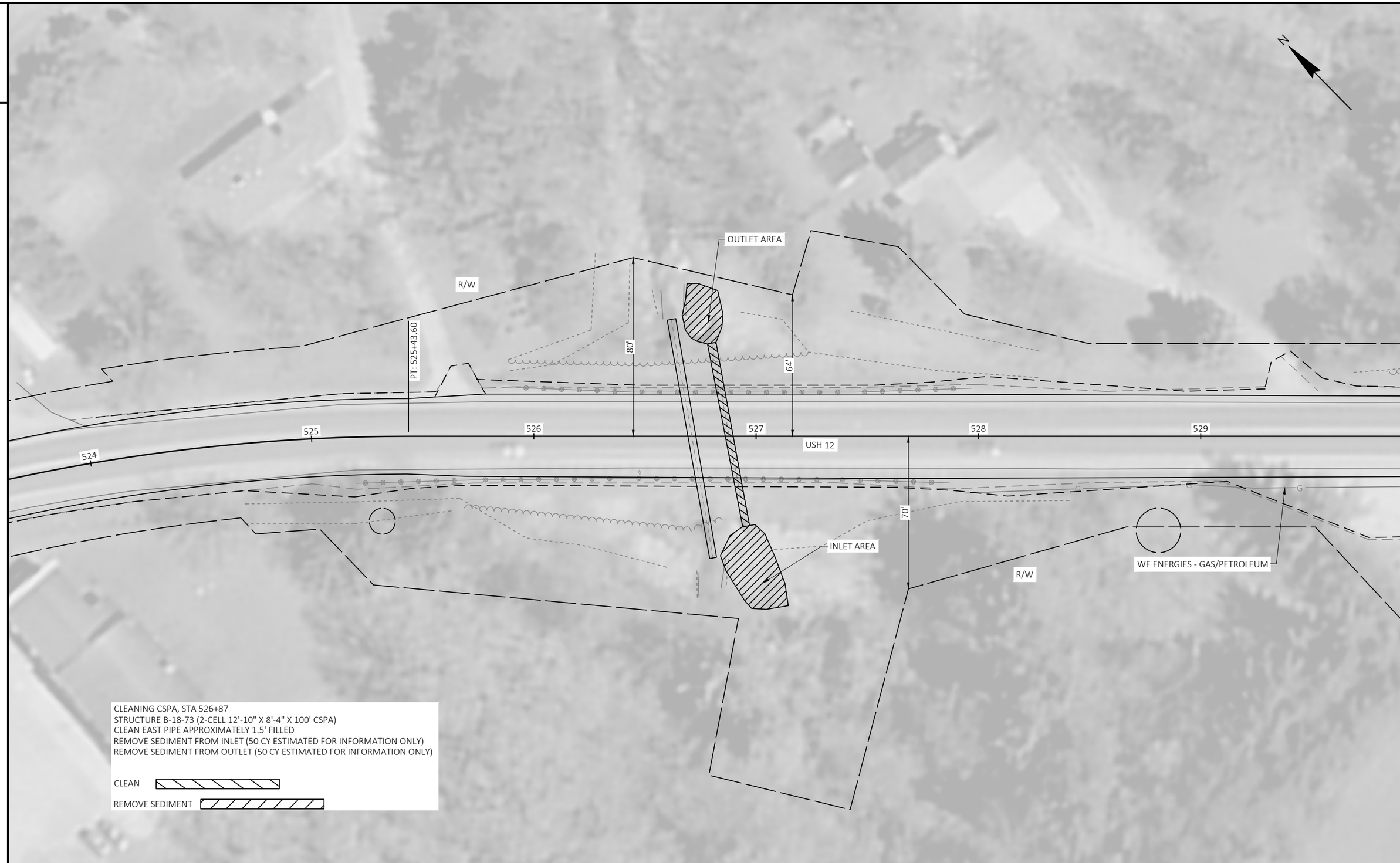

PROJECT NO: 7080-03-75	HWY: USH 12	COUNTY: EAU CLAIRE	PLAN DETAILS	SHEET 26	E

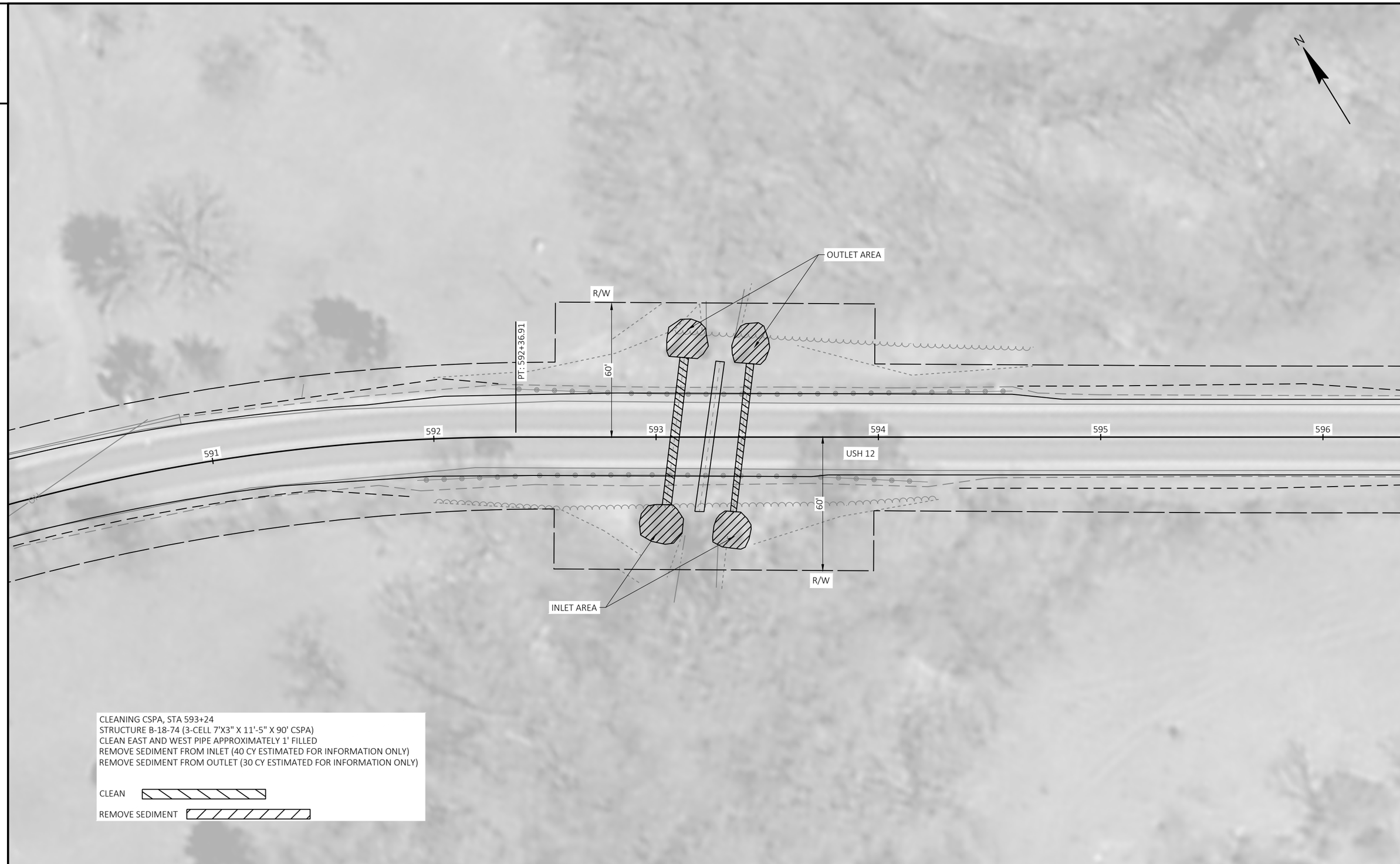
N
OUTLET AREA
R/W
PT: 592+36.91
60'
592
593
594
595
596
591
USH 12
60'
R/W
INLET AREA
CLEANING CSPA, STA 593+24
STRUCTURE B-18-74 (3-CELL 7'X3" X 11'-5" X 90' CSPA)
CLEAN EAST AND WEST PIPE APPROXIMATELY 1' FILLED
REMOVE SEDIMENT FROM INLET (40 CY ESTIMATED FOR INFORMATION ONLY)
REMOVE SEDIMENT FROM OUTLET (30 CY ESTIMATED FOR INFORMATION ONLY)
CLEAN
REMOVE SEDIMENT

2

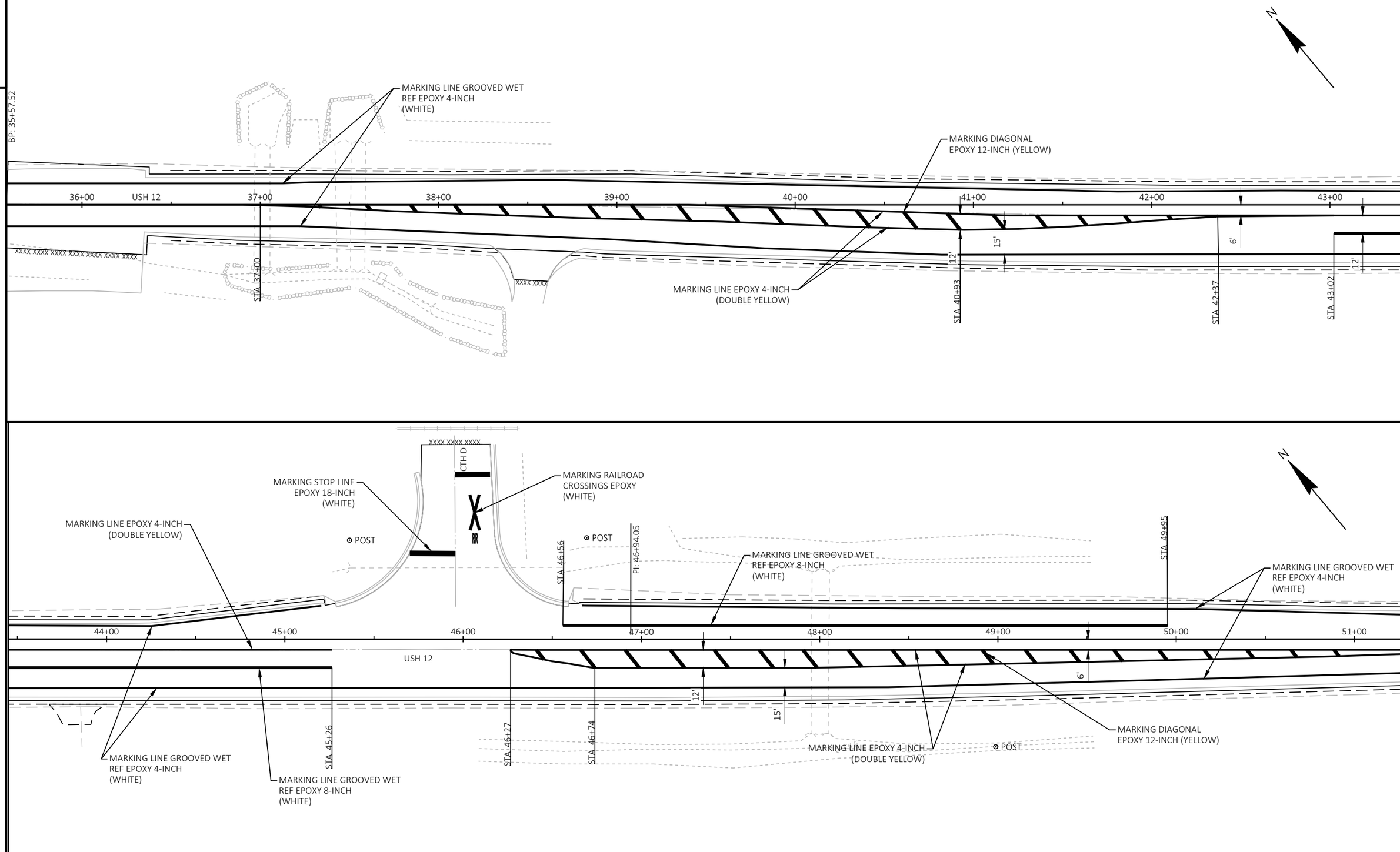

PROJECT NO: 7080-03-75	HWY: USH 12	COUNTY: EAU CLAIRE	PAVEMENT MARKING	SHEET 28	E

FILE NAME : C:\OD\CORRE, INC\PROJECTS - DOCUMENTS\WI - NW REGION\7080-03-05_EAU CLAIRE CO_USH 12\500_CADD\501_C3D_2018\70800305\SHEETSPLAN\024501-PM.DWG
LAYOUT NAME - 1
PLOT DATE : 8/30/2021 4:57 PM
PLOT BY : NICHOLAS WATHKE
PLOT NAME :
PLOT SCALE : 1 IN:50 FT

2

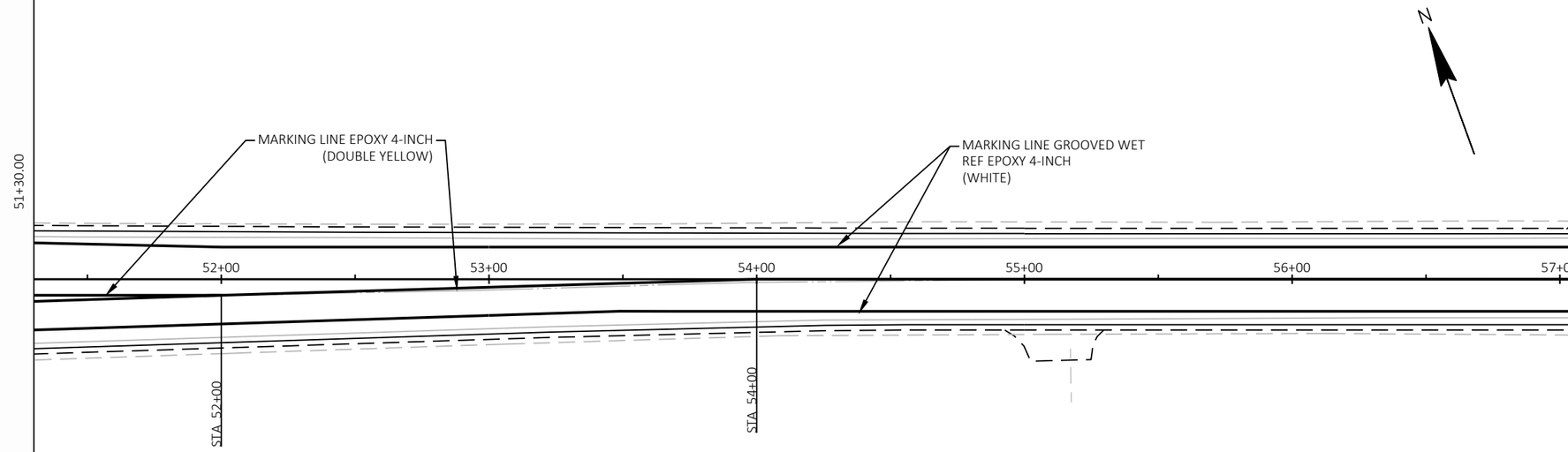

2

PROJECT NO: 7080-03-75	HWY: USH 12	COUNTY: EAU CLAIRE	PAVEMENT MARKING	SHEET 29	E

FILE NAME : C:\OD\CORRE, INC\PROJECTS - DOCUMENTS\WI - NW REGION\7080-03-05_EAU CLAIRE CO_USH 12\500_CADD\501_C3D_2018\70800305\SHEETSPLAN\024501-PM.DWG
LAYOUT NAME - 2
PLOT DATE : 8/30/2021 4:57 PM
PLOT BY : NICHOLAS WATHKE
PLOT NAME :
PLOT SCALE : 1 IN:50 FT
WISDOT/CADDS SHEET 44

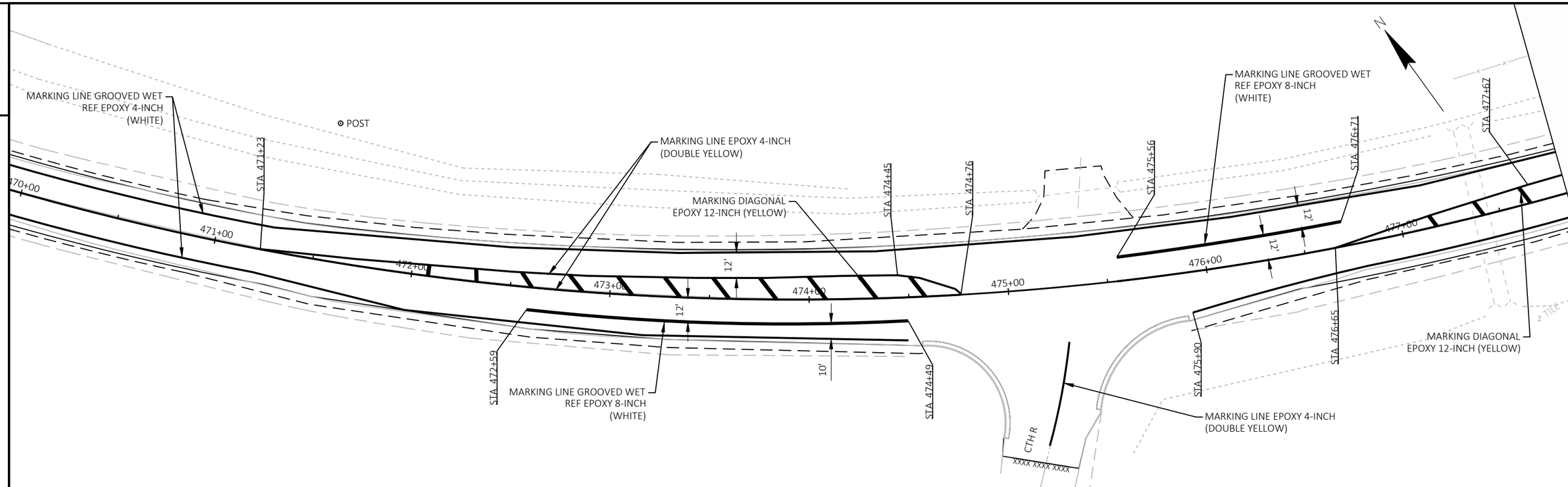

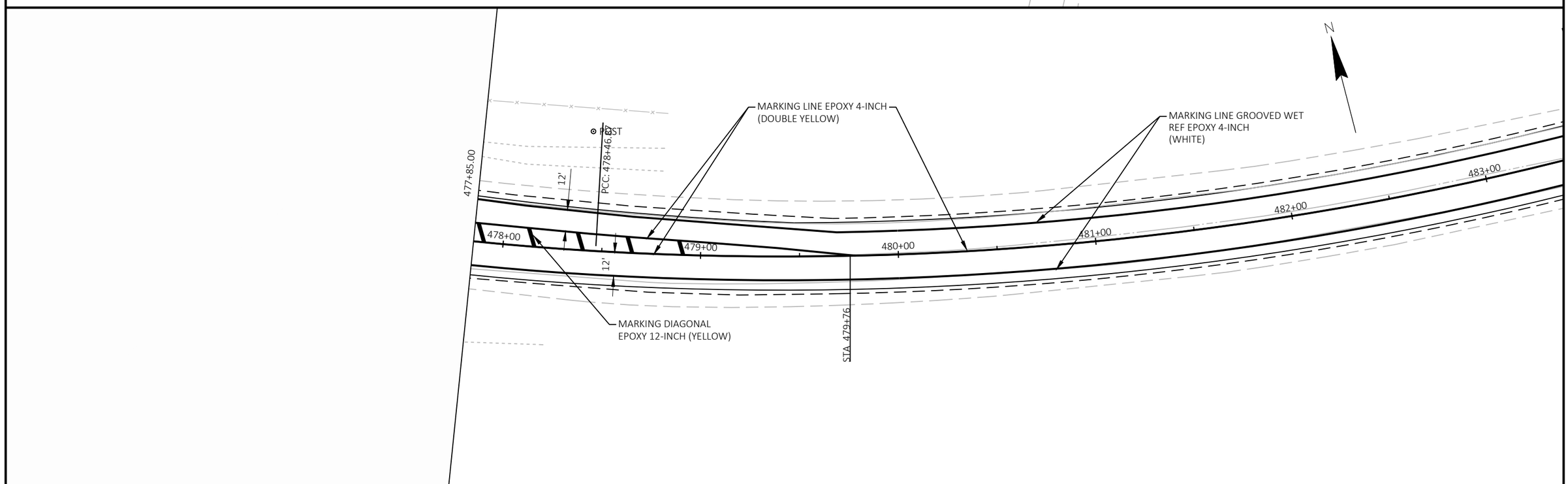

PROJECT NO: 7080-03-75	HWY: USH 12	COUNTY: EAU CLAIRE	PAVEMENT MARKING	SHEET 30	E

FILE NAME : C:\OD\CORRE, INC\PROJECTS - DOCUMENTS\WI - NW REGION\7080-03-05_EAU CLAIRE CO_USH 12\500_CADD\501_C3D_2018\70800305\SHEETSPLAN\024501-PM.DWG
LAYOUT NAME - 3
PLOT DATE : 8/30/2021 4:57 PM
PLOT BY : NICHOLAS WATHKE
PLOT NAME :
PLOT SCALE : 1 IN:50 FT
WISDOT/CADDS SHEET 44

GENERAL NOTES FOR TRAFFIC CONTROL

1. THE EXACT NUMBER, LOCATION, AND SPACING OF ALL SIGNS AND DEVICES SHALL BE ADJUSTED TO FIT FIELD CONDITIONS AS DIRECTED BY THE ENGINEER.
2. CONFLICTING TRAFFIC SIGNS SHALL BE COVERED OR REMOVED AS DIRECTED BY THE ENGINEER.
3. A FLAGGER MAY BE REQUIRED WHERE CONSTRUCTION VEHICLES ENTER OR LEAVE WORK AREAS IF WARRANTED BY CONDITIONS OR AS DIRECTED BY THE ENGINEER.

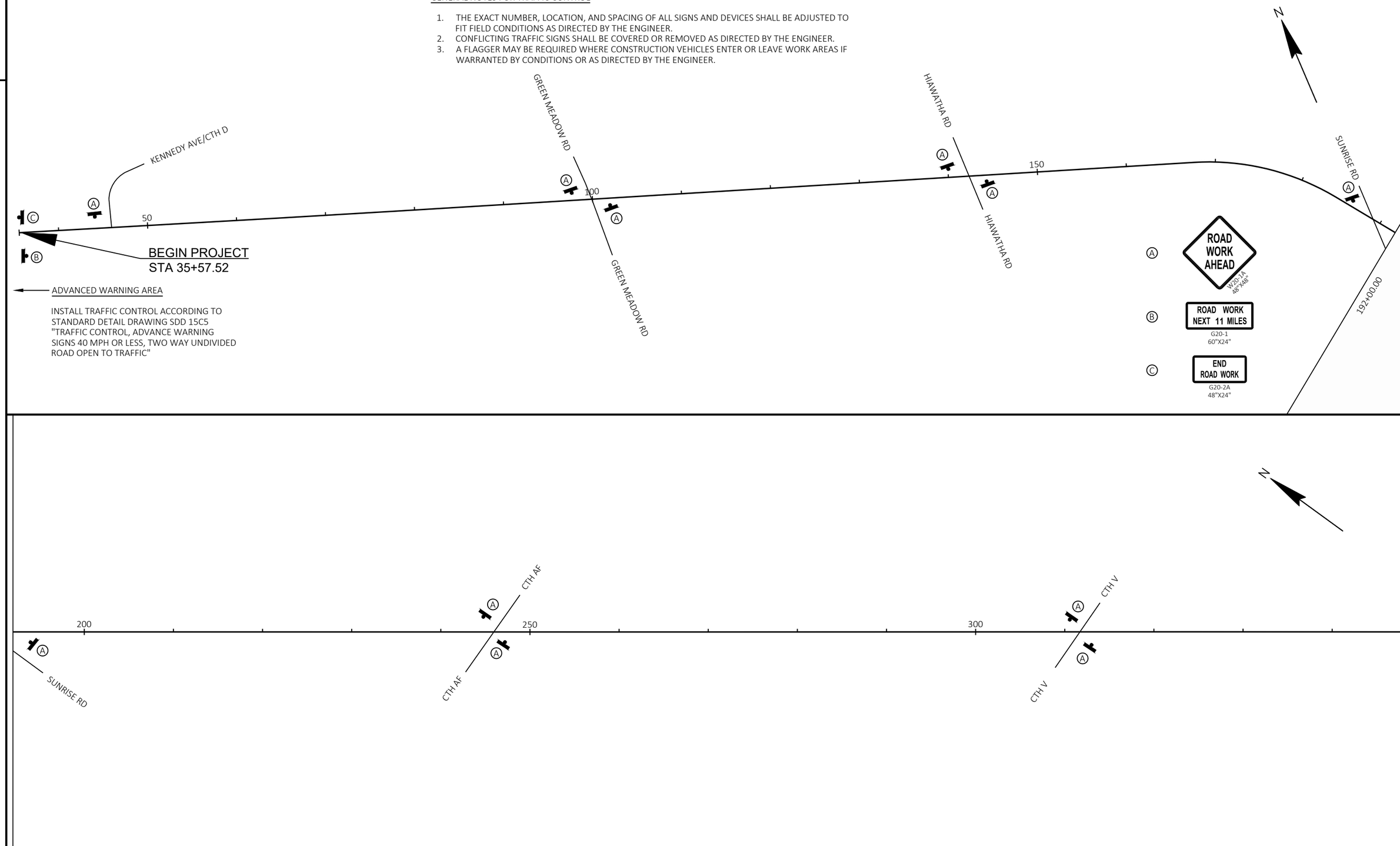

PROJECT NO: 7080-03-75	HWY: USH 12	COUNTY: EAU CLAIRE	TRAFFIC CONTROL	SHEET 31	E

GENERAL NOTES FOR TRAFFIC CONTROL

1. THE EXACT NUMBER, LOCATION, AND SPACING OF ALL SIGNS AND DEVICES SHALL BE ADJUSTED TO FIT FIELD CONDITIONS AS DIRECTED BY THE ENGINEER.
2. CONFLICTING TRAFFIC SIGNS SHALL BE COVERED OR REMOVED AS DIRECTED BY THE ENGINEER.
3. A FLAGGER MAY BE REQUIRED WHERE CONSTRUCTION VEHICLES ENTER OR LEAVE WORK AREAS IF WARRANTED BY CONDITIONS OR AS DIRECTED BY THE ENGINEER.

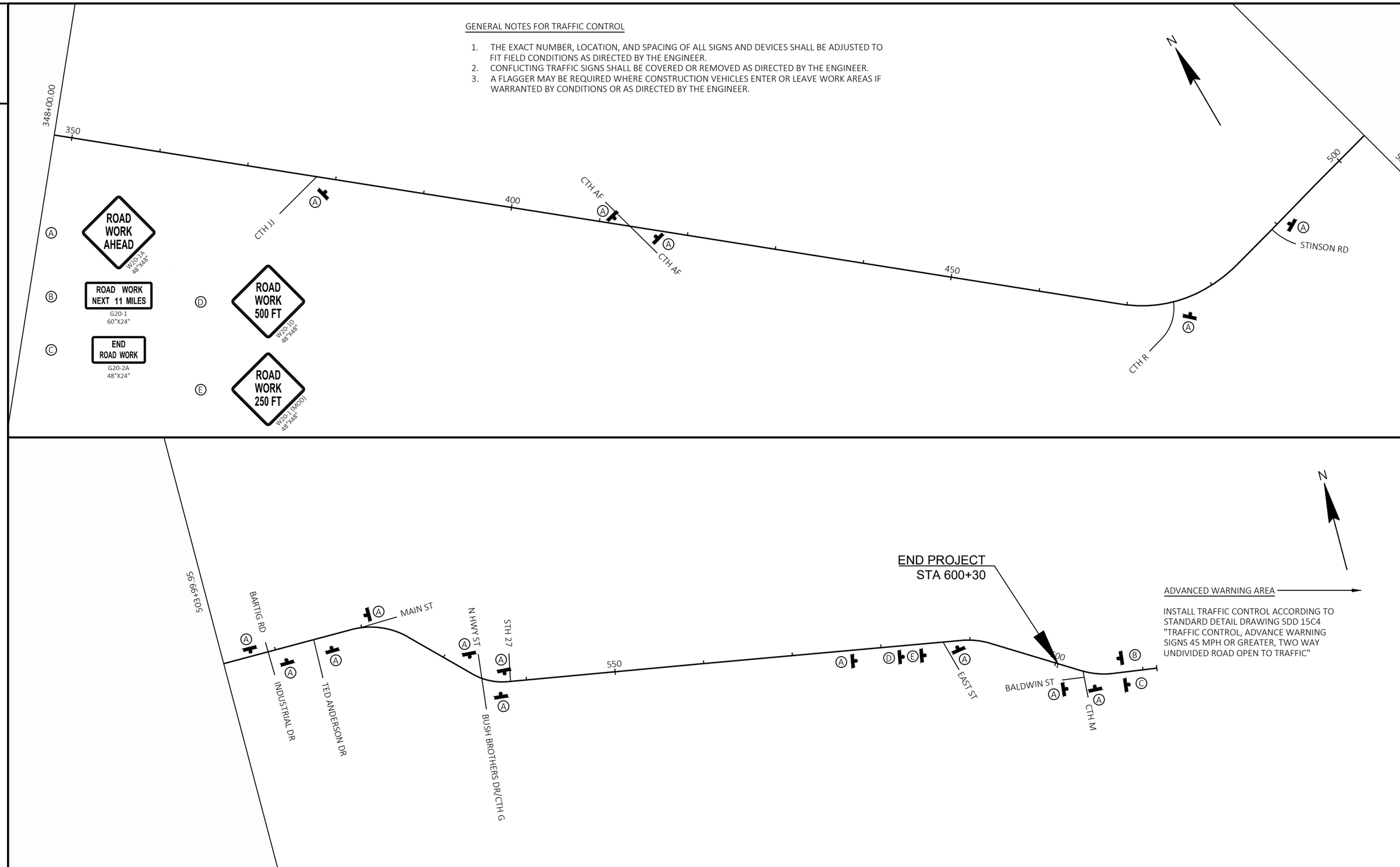

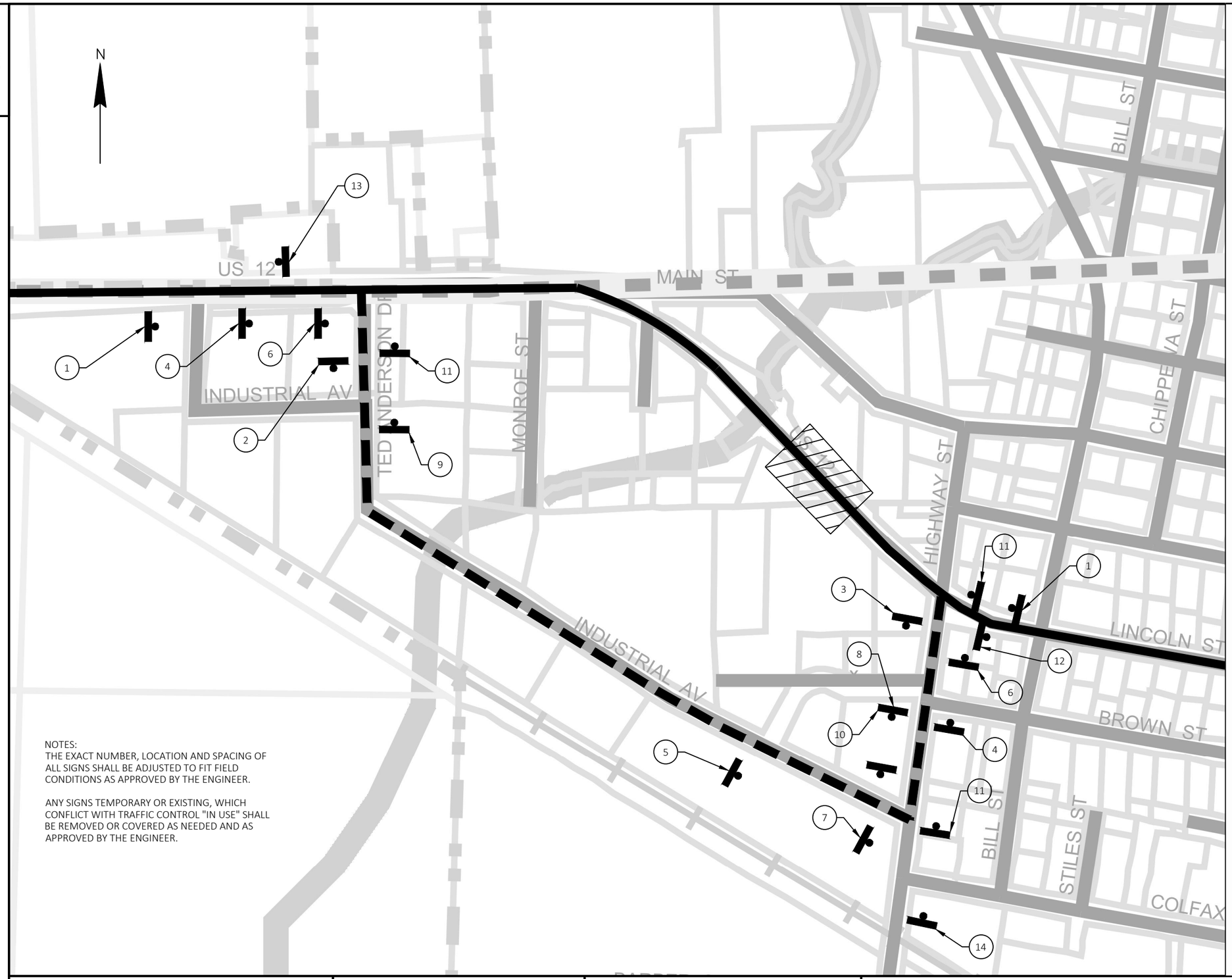

NOTES:
THE EXACT NUMBER, LOCATION AND SPACING OF ALL SIGNS SHALL BE ADJUSTED TO FIT FIELD CONDITIONS AS APPROVED BY THE ENGINEER.

ANY SIGNS TEMPORARY OR EXISTING, WHICH CONFLICT WITH TRAFFIC CONTROL "IN USE" SHALL BE REMOVED OR COVERED AS NEEDED AND AS APPROVED BY THE ENGINEER.

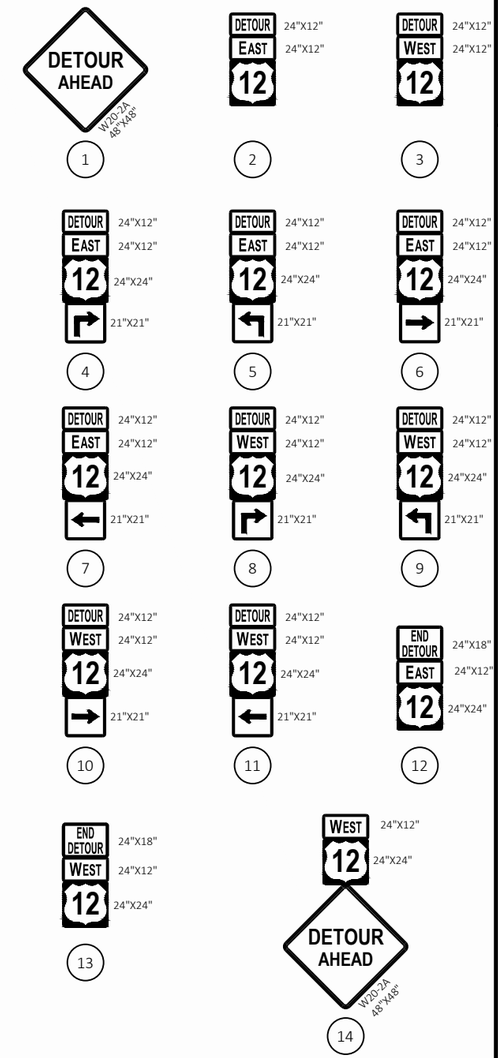

LEGEND

WORK AREA

DETOUR ROUTE

SIGN ON PERMANENT SUPPORT

7080-03-75

Line	Item	Item Description	Unit	Total	Qty
0002	201.0105	Clearing	STA	23.000	23.000
0004	203.0100	Removing Small Pipe Culverts	EACH	1.000	1.000
0006	204.0110	Removing Asphaltic Surface	SY	315.000	315.000
0008	204.0115	Removing Asphaltic Surface Butt Joints	SY	500.000	500.000
0010	204.0120	Removing Asphaltic Surface Milling	SY	31,476.000	31,476.000
0012	204.0130	Removing Curb	LF	2,290.000	2,290.000
0014	204.0150	Removing Curb & Gutter	LF	274.000	274.000
0016	204.0165	Removing Guardrail	LF	5,189.000	5,189.000
0018	204.0180	Removing Delineators and Markers	EACH	32.000	32.000
0020	205.0100	Excavation Common	CY	223.000	223.000
0022	208.0100	Borrow	CY	851.000	851.000
0024	209.2100	Backfill Granular Grade 2	CY	1,100.000	1,100.000
0026	211.0400	Prepare Foundation for Asphaltic Shoulders	STA	914.000	914.000
0028	211.0800.S	Base Repair for CIR Layer	CY	115.000	115.000
0030	213.0100	Finishing Roadway (project) 01. 7080-03-75	EACH	1.000	1.000
0032	305.0110	Base Aggregate Dense 3/4-Inch	TON	2,755.000	2,755.000
0034	305.0120	Base Aggregate Dense 1 1/4-Inch	TON	616.000	616.000
0036	305.0500	Shaping Shoulders	STA	1,016.000	1,016.000
0038	305.0504.S	Hauling Excess Shoulder Material	CY	3,000.000	3,000.000
0040	327.1000.S	CIR Asphaltic Base Layer	SY	176,900.000	176,900.000
0042	455.0605	Tack Coat	GAL	29,275.000	29,275.000
0044	455.0770.S	Asphalt Stabilizing Agent	TON	800.000	800.000
0046	460.0105.S	HMA Percent Within Limits (PWL) Test Strip Volumetrics	EACH	1.000	1.000
0048	460.0110.S	HMA Percent Within Limits (PWL) Test Strip Density	EACH	3.000	3.000
0050	460.2005	Incentive Density PWL HMA Pavement	DOL	20,910.000	20,910.000
0052	460.2007	Incentive Density HMA Pavement Longitudinal Joints	DOL	20,360.000	20,360.000
0054	460.2010	Incentive Air Voids HMA Pavement	DOL	32,315.000	32,315.000
0056	460.6645	HMA Pavement 5 MT 58-34 V	TON	32,315.000	32,315.000
0058	460.9000.S	Material Transfer Vehicle	EACH	1.000	1.000
0060	465.0105	Asphaltic Surface	TON	500.000	500.000
0062	465.0110	Asphaltic Surface Patching	TON	100.000	100.000
0064	465.0120	Asphaltic Surface Driveways and Field Entrances	TON	85.000	85.000
0066	465.0315	Asphaltic Flumes	SY	20.000	20.000
0068	465.0425	Asphaltic Shoulder Rumble Strips 2-Lane Rural	LF	77,320.000	77,320.000
0070	465.0475	Asphalt Centerline Rumble Strips 2-Lane Rural	LF	39,395.000	39,395.000
0072	520.8700	Cleaning Culvert Pipes	EACH	3.000	3.000
0074	520.9700.S	Culvert Pipe Liners (size) 01. 24-Inch	LF	212.000	212.000
0076	520.9750.S	Cleaning Culvert Pipes for Liner Verification	EACH	2.000	2.000
0078	521.1024	Apron Endwalls for Culvert Pipe Steel 24-Inch	EACH	2.000	2.000
0080	522.0136	Culvert Pipe Reinforced Concrete Class III 36-Inch	LF	102.000	102.000
0082	522.1036	Apron Endwalls for Culvert Pipe Reinforced Concrete 36-Inch	EACH	2.000	2.000
0084	601.0557	Concrete Curb & Gutter 6-Inch Sloped 36-Inch Type D	LF	274.000	274.000
0086	614.2300	MGS Guardrail 3	LF	4,950.000	4,950.000
0088	614.2500	MGS Thrie Beam Transition	LF	157.600	157.600
0090	614.2610	MGS Guardrail Terminal EAT	EACH	24.000	24.000
0092	618.0100	Maintenance And Repair of Haul Roads (project) 01. 7080-03-75	EACH	1.000	1.000
0094	619.1000	Mobilization	EACH	1.000	1.000
0096	621.0100	Landmark Reference Monuments	EACH	2.000	2.000
0098	625.0500	Salvaged Topsoil	SY	2,500.000	2,500.000

7080-03-75

Line	Item	Item Description	Unit	Total	Qty
0100	627.0200	Mulching	SY	1,000.000	1,000.000
0102	628.1504	Silt Fence	LF	1,500.000	1,500.000
0104	628.1520	Silt Fence Maintenance	LF	1,500.000	1,500.000
0106	628.1905	Mobilizations Erosion Control	EACH	3.000	3.000
0108	628.1910	Mobilizations Emergency Erosion Control	EACH	3.000	3.000
0110	628.2004	Erosion Mat Class I Type B	SY	1,500.000	1,500.000
0112	628.7504	Temporary Ditch Checks	LF	500.000	500.000
0114	628.7570	Rock Bags	EACH	51.000	51.000
0116	629.0210	Fertilizer Type B	CWT	2.000	2.000
0118	630.0120	Seeding Mixture No. 20	LB	300.000	300.000
0120	630.0500	Seed Water	MGAL	10.000	10.000
0122	633.5200	Markers Culvert End	EACH	32.000	32.000
0124	642.5001	Field Office Type B	EACH	1.000	1.000
0126	643.0300	Traffic Control Drums	DAY	5,800.000	5,800.000
0128	643.0420	Traffic Control Barricades Type III	DAY	1,210.000	1,210.000
0130	643.0705	Traffic Control Warning Lights Type A	DAY	1,460.000	1,460.000
0132	643.0900	Traffic Control Signs	DAY	5,315.000	5,315.000
0134	643.1070	Traffic Control Cones 42-Inch	DAY	2,500.000	2,500.000
0136	643.5000	Traffic Control	EACH	1.000	1.000
0138	646.1020	Marking Line Epoxy 4-Inch	LF	49,661.000	49,661.000
0140	646.1040	Marking Line Grooved Wet Ref Epoxy 4-Inch	LF	100,365.000	100,365.000
0142	646.3040	Marking Line Grooved Wet Ref Epoxy 8-Inch	LF	2,011.000	2,011.000
0144	646.5320	Marking Railroad Crossings Epoxy	EACH	4.000	4.000
0146	646.6120	Marking Stop Line Epoxy 18-Inch	LF	348.000	348.000
0148	646.7120	Marking Diagonal Epoxy 12-Inch	LF	680.000	680.000
0150	648.0100	Locating No-Passing Zones	MI	9.660	9.660
0152	649.0105	Temporary Marking Line Paint 4-Inch	LF	90,996.000	90,996.000
0154	649.0120	Temporary Marking Line Epoxy 4-Inch	LF	51,055.000	51,055.000
0156	650.5500	Construction Staking Curb Gutter and Curb & Gutter	LF	274.000	274.000
0158	650.6000	Construction Staking Pipe Culverts	EACH	1.000	1.000
0160	650.8000	Construction Staking Resurfacing Reference	LF	51,038.000	51,038.000
0162	650.9910	Construction Staking Supplemental Control (project) 01. 7080-03-75	LS	1.000	1.000
0164	690.0150	Sawing Asphalt	LF	1,256.000	1,256.000
0166	690.0250	Sawing Concrete	LF	40.000	40.000
0168	ASP.1T0A	On-the-Job Training Apprentice at $5.00/HR	HRS	2,000.000	2,000.000
0170	ASP.1T0G	On-the-Job Training Graduate at $5.00/HR	HRS	1,600.000	1,600.000
0172	SPV.0060	Special 01. Cleaning Concrete Box Culvert Station 108+00	EACH	1.000	1.000
0174	SPV.0060	Special 02. Cleaning Concrete Box Culvert Station 263+45	EACH	1.000	1.000
0176	SPV.0060	Special 03. Cleaning Concrete Box Culvert Station 293+20	EACH	1.000	1.000
0178	SPV.0060	Special 04. Cleaning Concrete Box Culvert Station 322+66	EACH	1.000	1.000
0180	SPV.0060	Special 05. Cleaning CSPA Station 462+72	EACH	1.000	1.000
0182	SPV.0060	Special 06. Cleaning CSPA Station 526+87	EACH	1.000	1.000
0184	SPV.0060	Special 07. Cleaning CSPA Station 593+24	EACH	1.000	1.000
0186	SPV.0090	Special 01. Ditch Cleaning	LF	1,204.000	1,204.000

3

CLEARING

CATEGORY	STATION	TO	STATION	LOCATION	201.0105 CLEARING STA
0010	157+00	-	180+00	USH 12 RT	23
				TOTAL 0010	23

REMOVING ASPHALTIC SURFACE

CATEGORY	STATION	TO	STATION	LOCATION	204.0110 REMOVING ASPHALTIC SURFACE SY	REMARKS
0010	99+32	-	99+60	LT	20	CURB AND GUTTER AREA
0010	99+94	-	100+42	LT	20	CURB AND GUTTER AREA
0010	245+73	-	246+15	LT	20	CURB AND GUTTER AREA
0010	245+83	-	246+24	RT	15	CURB AND GUTTER AREA
0010	246+83	-	247+07	LT	20	CURB AND GUTTER AREA
0010	384+69	-	385+34	CL	220	PIPE BACKFILL AREA
				TOTAL 0010	315	

REMOVING ASPHALTIC SURCE BUTT JOINTS

CATEGORY	STATION	TO	STATION	LOCATION	204.0115 REMOVING ASPHALTIC SURFACE BUTT JOINTS SY
0010	35+57	-	45+57	USH 12	500
				TOTAL 0010	500

REMOVING SMALL PIPE CULVERTS

CATEGORY	STATION	LOCATION	203.0100 REMOVING SMALL PIPE CULVERTS EACH
0010	531+33	AUGUSTA CULVERT	1
		TOTAL 0010	1

REMOVING CURB AND GUTTER

CATEGORY	STATION	LOCATION	204.0150 REMOVING CURB & GUTTER LF
0010	99+50	GREENWOOD AVE NW QUAD	54
0010	100+15	GREENWOOD AVE NE QUAD	62
0010	245+90	CTH AF NW QUAD	50
0010	246+05	CTH AF SE QUAD	46
0010	246+75	CTH AF NE QUAD	62
		TOTAL 0010	274

REMOVING GUARDRAIL

CATEGORY	STATION	TO	STATION	LOCATION	204.0165 REMOVING GUARDRAIL LF
0010	105+75	-	108+93	LT	318
0010	106+43	-	109+10	RT	267
0010	261+46	-	265+01	LT	355
0010	262+00	-	265+04	RT	304
0010	292+77	-	294+45	LT	168
0010	292+88	-	294+43	RT	155
0010	320+94	-	323+99	LT	305
0010	320+96	-	324+01	RT	305
0010	461+67	-	463+97	RT	230
0010	461+93	-	464+72	LT	279
0010	490+02	-	496+63	RT	661
0010	490+23	-	495+70	LT	547
0010	498+57	-	505+17	LT	660
0010	499+49	-	505+84	RT	635
				TOTAL 0010	5,189

REMOVING ASPHALTIC SURFACE MILLING

CATEGORY	STATION	TO	STATION	LOCATION	204.0120 REMOVING ASPHALTIC SURFACE MILLING SY
0010	45+95 LT			CTH D/KENNEDY AVE	317
0010	99+71 LT			GREEN MEADOW RD	251
0010	100+21 RT			GREEN MEADOW RD	267
0010	142+14 LT			HIAWATHA RD	315
0010	142+60 RT			HIAWATHA RD	273
0010	188+06 LT			SUNRISE DR	439
0010	190+33 RT			SUNRISE DR	438
0010	245+22 RT			CTH AF	493
0010	246+63 LT			CTH AF	412
0010	310+83 RT			CTH V	545
0010	312+32 LT			CTH V	433
0010	377+50 RT			CTH JJ	474
0010	412+90 LT			CTH AF	624
0010	414+42 RT			CTH AF	605
0010	436+74 LT			DRIVEWAY LT	107
0010	475+25 RT			CTH R	417
0010	487+20 LT			DRIVEWAY LT	213
0010	486+80	-	496+40	MAINLINE	4,700
0010	489+25 RT			STINSON RD	169
0010	498+82	-	533+45	MAINLINE	14,230
0010	509+25 LT			BARTIG RD	205
0010	509+25 RT			INDUSTRIAL DR	260
0010	514+45 LT			DRIVEWAY LT	59
0010	514+51 RT			TED ANDERSON DR	245
0010	515+47			DRIVEWAY RT	36
0010	515+54			DRIVEWAY LT	37
0010	516+87			DRIVEWAY RT	48
0010	517+11			DRIVEWAY LT	58
0010	519+20 RT			MONROE ST	97
0010	521+00 LT			MAIN ST	236
0010	522+29			DRIVEWAY LT	58
0010	522+66			DRIVEWAY RT	67
0010	523+67			DRIVEWAY LT	63
0010	598+95			DRIVEWAY RT	25
0010	588+00	-	600+30	MAINLINE	4,260
				TOTAL 0010	31,476

3

3

DIVISION	FROM/TO STATION	LOCATION	205.0100 COMMON EXCAVATION (1) CUT (2)	EBS EXCAVATION	SALVAGED/UNUSABLE PAVEMENT MATERIAL (3)	AVAILABLE MATERIAL (4)	UNEXPANDED FILL	EXPANDED FILL (5) FACTOR 1.25	MASS ORDINATE +/- (6)	208.0100 BORROW
DIVISION 1										
BEAMGUARD SECTIONS	105+00 TO 325+33	USH 12	4		0	4	642	803	-799	
PIPE BACKFILL	384+69 TO 385+34	USH 12	215		23	192	0	0	192	
BEAMGUARD SECTIONS	461+43 TO 506+35	USH 12	4		0	4	199	249	-245	
DIVISION 1 SUBTOTAL			223		23	200	841	1,051	-851	851
GRAND TOTAL			223	0	23	200	841	1,051	-851	851
TOTAL COMMON EXC			223							

NOTES:

(1) COMMON EXCAVATION IS THE SUM OF THE CUT AND EBS EXCAVATION COLUMNS. ITEM NUMBER 205.0100

(2) SALVAGED/UNSUABLE PAVEMENT MATERIAL IS INCLUDED IN CUT.

(3) SALVAGED/UNUSABLE PAVEMENT MATERIAL

(4) AVAILABLE MATERIAL = CUT - SALVAGED/UNUSUABLE PAVEMENT MATERIAL

(5) EXPANDED FILL FACTOR = 1.25

(6) THE MASS ORDINATE + OR - QTY CALCULATED FOR THE DIVISION. PLUS QUANTITY INDICATES AN EXCESS OF MATERIAL WITHIN THE DIVISION. MINUS INDICATES A SHORTAGE OF MATERIAL WITHIN THE DIVISION.

3

REMOVING DELINEATORS AND MARKERS

CATEGORY	STATION	LOCATION	204.0180 REMOVING DELINEATORS AND MARKERS EACH
0010	47+88	LT AND RT	2
0010	81+02	LT AND RT	2
0010	100+28	LT AND RT	2
0010	121+98	LT AND RT	2
0010	159+86	LT AND RT	2
0010	193+88	LT AND RT	2
0010	201+76	LT AND RT	2
0010	215+86	LT AND RT	2
0010	231+86	LT AND RT	2
0010	338+88	LT AND RT	2
0010	374+24	LT AND RT	2
0010	384+99	LT AND RT	2
0010	413+54	LT AND RT	2
0010	475+60	LT AND RT	4
0010	531+33	LT AND RT	2
		TOTAL 0010	32

BACKFILL GRANULAR GRADE 2

CATEGORY	STATION	TO	STATION	LOCATION	209.2100 BACKFILL GRANULAR GRADE 2 CY
0010	384+98	-	385+34	MAINLINE	200
0010	531+00	-	533+00	AUGUSTA CULVERT	900
				TOTAL 0010	1,100

BASE REPAIR FOR CIR LAYER

CATEGORY	STATION	TO	STATION	LOCATION	211.0800.S BASE REPAIR FOR CIR LAYER CY	REMARKS
0010	54+75	-	57+00	MAINLINE RT	25	6-INCH CIR AREA
0010	114+00	-	117+00	MAINLINE RT	25	6-INCH CIR AREA
0010	126+00	-	129+00	MAINLINE RT	25	6-INCH CIR AREA
0010	137+00	-	140+00	MAINLINE LT	10	6-INCH CIR AREA
0010	156+00	-	158+00	MAINLINE LT	10	6-INCH CIR AREA
0010	335+00	-	345+00	MAINLINE RT	10	6-INCH CIR AREA
0010	357+00	-	360+00	MAINLINE RT	10	6-INCH CIR AREA
				TOTAL 0010	115	

REMOVING CURB

CATEGORY	STATION	TO	STATION	LOCATION	204.0130 REMOVING CURB LF	REMARKS
0010	490+63	-	496+49	LT	586	Asphalt Curb
0010	490+83	-	495+56	RT	473	Asphalt Curb
0010	498+72	-	505+29	LT	657	Asphalt Curb
0010	499+55	-	505+29	RT	574	Asphalt Curb
		-				
				TOTAL 0010	2,290	

PREPARE FOUNDATION FOR ASPHALTIC SHOULDERS

CATEGORY	STATION	TO	STATION	LOCATION	211.0400 PREPARE FOUNDATION FOR ASPHALTIC SHOULDERS STA	REMARKS
0010	525+92	-	527+97	LT	3	BEAMGUARD SHDL AREA
0010	525+19	-	527+87	RT	3	BEAMGUARD SHDL AREA
0010	592+30		594+60	LT	3	BEAMGUARD SHDL AREA
0010	591+92		594+22	RT	3	BEAMGUARD SHDL AREA
				TOTAL 0010	12	
0020	35+57	-	486+80	LT AND RT	902	2-FOOT CIR SHLDR WIDEN, 6-INCH CIR AREAS
				TOTAL 0020	902	

FINISHING ROADWAY

CATEGORY	LOCATION	213.0100.01 FINISHING ROADWAY (PROJECT) 01. 7080-03-75 EACH
0010	PROJECT	1
	TOTAL 0010	1

BASE AGGREGATE DENSE 3/4-INCH

CATEGORY	STATION	TO	STATION	LOCATION	305.0110 BASE AGGREGATE DENSE 3/4-INCH TON	REMARKS
0010	35+57	-	100+00	SHOULDER RT	130	BEGIN PROJECT TO GREEN MEADOW RD
0010				SHOULDER LT	130	BEGIN PROJECT TO GREEN MEADOW RD
0010	100+00	-	142+20	SHOULDER RT	95	GREEN MEADOW RD TO HIAWATHA RD
0010				SHOULDER LT	95	GREEN MEADOW RD TO HIAWATHA RD
0010	142+20	-	189+90	SHOULDER RT	95	HIAWTHA RD TO SUNRISE DR
0010				SHOULDER LT	95	HIAWTHA RD TO SUNRISE DR
0010	189+80	-	246+00	SHOULDER RT	115	SUNRISE DR TO CTH AF
0010				SHOULDER LT	120	SUNRISE DR TO CTH AF
0010	246+00	-	311+75	SHOULDER RT	150	CTH AF TO CTH V
0010				SHOULDER LT	150	CTH AF TO CTH V
0010	311+75	-	413+50	SHOULDER RT	215	CTH V TO CTH AF
0010				SHOULDER LT	215	CTH V TO CTH AF
0010	413+50	-	496+40	SHOULDER RT	185	CTH AF TO B-18-107
0010				SHOULDER LT	190	CTH AF TO B-18-107
0010	498+80	-	533+45	SHOULDER RT	100	B-18-107 TO BEGIN NET EXCEPTION TO CL
0010				SHOULDER LT	95	B-18-107 TO BEGIN NET EXCEPTION TO CL
0010	588+00	-	600+30	SHOULDER RT	45	END NET EXCEPTION TO CL TO END PROJECT
0010				SHOULDER LT	35	END NET EXCEPTION TO CL TO END PROJECT
0010	DRIVEWAYS			LT AND RT	500	UNDISTRIBUTED
				TOTAL 0010	2,755	

3

3

BASE AGGREGATE DENSE 1-1/4-INCH

CATEGORY	STATION	TO	STATION	LOCATION	305.0120 BASE AGGREGATE DENSE 1 1/4-INCH TON
0010	99+50			GREENWOOD AVE NW QUAD	13
0010	100+15			GREENWOOD AVE NE QUAD	15
0010	245+90			CTH AF NW QUAD	12
0010	246+05			CTH AF SE QUAD	11
0010	246+75			CTH AF NE QUAD	15
0010	384+69	-	385+34	CULVERT BACKFILL AREA	200
0010	531+00	-	533+00	AUGUSTA CULVERT	350
				TOTAL 0010	616

HAULING EXCESS SHOULDER MATERIAL

CATEGORY	STATION	TO	STATION	LOCATION	305.0504.S HAULING EXCESS SHOULDER MATERIAL CY
0020	35+57	-	486+80	LT AND RT	3,000
				TOTAL 0020	3,000

SHAPING SHOULDERS

CATEGORY	STATION	TO	STATION	LOCATION	305.0500 SHAPING SHOULDERS STA
0010	35+57	-	486+80	LT AND RT	902
0010	486+80	-	496+40	LT AND RT	20
0010	498+80	-	533+45	LT AND RT	70
0010	588+00	-	600+30	LT AND RT	24
				TOTAL 0010	1,016

COLD IN PLACE RECYCLING (CIR)

CATEGORY	STATION	TO	STATION	LOCATION	327.1000.S CIR ASPHALTIC BASE LAYER SY	455.0770.S ASPHALT STABILIZING AGENT TON
0010	35+57	-	486+80	MAINLINE	176,900	800
				TOTAL 0010	176,900	800

HMA PAVEMENT

CATEGORY	STATION	TO	STATION	LOCATION	455.0605 TACK COAT GAL	460.6645 HMA PAVEMENT 5 MT 58-34 V TON	465.0120 ASPHALTIC SURFACE DRIVEWAYS AND FIELD ENTRANCES TON
0010	35+57	-	486+80	MAINLINE	21,960	23,730	--
0010	486+80	-	496+40	MAINLINE	660	850	--
0010	498+82	-	533+45	MAINLINE	2,070	2,640	--
0010	588+00	-	600+30	MAINLINE	650	820	--
0010	35+57	-	36+20	RT	--	--	20
0010	38+49			RT	--	--	5
0010	45+95			CTH D	75	80	--
0010	94+36			RT	--	--	20
0010	99+71			GREEN MEADOW	60	65	--
0010	100+21			GREEN MEADOW	35	40	--
0010	142+14			HIAWATHA	45	50	--
0010	142+60			HIAWATHA	40	40	--
0010	170+52			RT	--	--	5
0010	188+22			SUNRISE DR	60	65	--
0010	189+47			SUNRISE DR	60	65	--
0010	245+59			CTH AF	70	75	--
0010	246+50			CTH AF	65	70	--
0010	311+10			CTH V	75	80	--
0010	312+13			CTH V	75	80	--
0010	377+47			CTH JJ	65	70	--
0010	412+64			CTH AF	85	95	--
0010	414+50			CTH AF	85	90	--
0010	436+73			LT	--	--	5
0010	475+10			CTH R	60	65	--
0010	487+20			LT	--	--	30
0010	489+25			STINSON RD	25	30	--
0010	509+25			BARTIG RD	30	35	--
0010	509+25			INDUSTRIAL DR	35	45	--
0010	514+50			TED ANDERSON DR	35	40	--
0010	519+20			MONROE ST	10	15	--
0010	521+00			MAIN ST	35	45	--
				TOTAL 0010	26,465	29,280	85
0020	35+57		486+80	MAINLINE SHOULDER	2,810	3,035	--
				TOTAL 0020	2,810	3,035	0
				PROJECT TOTAL	29,275	32,315	85

3

3

HMA PERCENT WITHIN LIMITS (PWL)

CATEGORY	STATION	TO	STATION	LOCATION	460.0105.S HMA PERCENT WITHIN LIMITS (PWL) TEST STRIP VOLUMETRICS EACH	460.0110.S HMA PERCENT WITHIN LIMITS (PWL) TEST STRIP DENSITY EACH	460.2005 INCENTIVE DENSITY PWL HMA PAVEMENT DOL	460.2007 INCENTIVE DENSITY HMA PAVEMENT LONGITUDINAL JOINTS DOL	460.2010 INCENTIVE AIR VOIDS HMA PAVEMENT DOL	REMARKS
0010	35+57	-	486+80	MAINLINE	--	--	18,200	18,060	26,765	--
0010	486+80	-	496+40	MAINLINE	--	--	460	400	850	--
0010	498+82	-	533+45	MAINLINE	--	--	1,660	1,400	2,640	--
0010	588+00	-	600+30	MAINLINE	--	--	590	500	820	--
0010	INTERSECTIONS				--	--	--	--	1,240	--
0010	35+57	-	600+30	MAINLINE	1	--	--	--	--	LOWER LIFT
0010	35+57	-	486+80	MAINLINE	--	1	--	--	--	LOWER LIFT
0010	486+80	-	600+30	MAINLINE	--	2	--	--	--	LOWER AND UPPER LIFT
				TOTAL 0010	1	3	20,910	20,360	32,315	

LOCATION	STATION	MIXTURE USE:	UNDERLYING SURFACE	BID ITEM	TONS	THICKNESS	QUALITY MANAGEMENT PROGRAM TO BE USED: MIXTURE ACCEPTANCE	DENSITY ACCEPTANCE
12 FOOT DRIVING LANE	35+57 TO 486+80	UPPER LAYER	5 MT 58-34 V	5 MT 58-34 V	9930	1 1/2"	INCENTIVE AIR VOIDS HMA PAVEMENT 460.2010	INCENTIVE DENSITY PWL HMA PAVEMENT 460.2005
12 FOOT DRIVING LANE	35+57 TO 486+80	LOWER LAYER	COMPACTED CIR SURFACE	5 MT 58-34 V	8270	1 1/4"	INCENTIVE AIR VOIDS HMA PAVEMENT 460.2010	INCENTIVE DENSITY PWL HMA PAVEMENT 460.2005
5 FOOT SHOULDER	35+57 TO 486+80	UPPER LAYER	5 MT 58-34 V	5 MT 58-34 V	4140	1 1/2"	INCENTIVE AIR VOIDS HMA PAVEMENT 460.2010	ACCEPTANCE TESTING BY THE DEPARTMENT; NOT ELIGIBLE FOR INCENTIVE OR DISINCENTIVE
5 FOOT SHOULDER	35+57 TO 486+80	LOWER LAYER	COMPACTED CIR SURFACE	5 MT 58-34 V	3450	1 1/4"	INCENTIVE AIR VOIDS HMA PAVEMENT 460.2010	ACCEPTANCE TESTING BY THE DEPARTMENT; NOT ELIGIBLE FOR INCENTIVE OR DISINCENTIVE
TURN LANES	35+57 TO 486+80	UPPER LAYER	5 MT 58-34 V	5 MT 58-34 V	532	1 1/2"	INCENTIVE AIR VOIDS HMA PAVEMENT 460.2010	INCENTIVE DENSITY PWL HMA PAVEMENT 460.2005
TURN LANES	35+57 TO 486+80	LOWER LAYER	COMPACTED CIR SURFACE	5 MT 58-34 V	443	1 1/4"	INCENTIVE AIR VOIDS HMA PAVEMENT 460.2010	INCENTIVE DENSITY PWL HMA PAVEMENT 460.2005
VARIOUS	35+57 TO 486+80	INTERSECTIONS	MILLED EXISTING HMA SURFACE	5 MT 58-34 V	1030	2 3/4" TOTAL	INCENTIVE AIR VOIDS HMA PAVEMENT 460.2010	ACCEPTANCE TESTING BY THE DEPARTMENT; NOT ELIGIBLE FOR INCENTIVE OR DISINCENTIVE
12 FOOT DRIVING LANE	486+80 TO 600+30	UPPER LAYER	5 MT 58-34 V	5 MT 58-34 V	1451	1 3/4"	INCENTIVE AIR VOIDS HMA PAVEMENT 460.2010	INCENTIVE DENSITY PWL HMA PAVEMENT 460.2005
12 FOOT DRIVING LANE	486+80 TO 600+30	LOWER LAYER	MILLED EXISTING HMA SURFACE	5 MT 58-34 V	1244	1 1/2"	INCENTIVE AIR VOIDS HMA PAVEMENT 460.2010	INCENTIVE DENSITY PWL HMA PAVEMENT 460.2005
3 FOOT SHOULDER	486+80 TO 600+30	UPPER LAYER	5 MT 58-34 V	5 MT 58-34 V	360	1 3/4"	INCENTIVE AIR VOIDS HMA PAVEMENT 460.2010	ACCEPTANCE TESTING BY THE DEPARTMENT; NOT ELIGIBLE FOR INCENTIVE OR DISINCENTIVE
3 FOOT SHOULDER	486+80 TO 600+30	LOWER LAYER	MILLED EXISTING HMA SURFACE	5 MT 58-34 V	310	1 1/2"	INCENTIVE AIR VOIDS HMA PAVEMENT 460.2010	ACCEPTANCE TESTING BY THE DEPARTMENT; NOT ELIGIBLE FOR INCENTIVE OR DISINCENTIVE
TURN LANES	486+80 TO 600+30	UPPER LAYER	5 MT 58-34 V	5 MT 58-34 V	509	1 3/4"	INCENTIVE AIR VOIDS HMA PAVEMENT 460.2010	INCENTIVE DENSITY PWL HMA PAVEMENT 460.2005
TURN LANES	486+80 TO 600+30	LOWER LAYER	MILLED EXISTING HMA SURFACE	5 MT 58-34 V	436	1 1/2"	INCENTIVE AIR VOIDS HMA PAVEMENT 460.2010	INCENTIVE DENSITY PWL HMA PAVEMENT 460.2005
VARIOUS	486+80 TO 600+30	INTERSECTIONS	MILLED EXISTING HMA SURFACE	5 MT 58-34 V	210	3 1/4" TOTAL	INCENTIVE AIR VOIDS HMA PAVEMENT 460.2010	ACCEPTANCE TESTING BY THE DEPARTMENT; NOT ELIGIBLE FOR INCENTIVE OR DISINCENTIVE

3

MATERIAL TRANSFER MACHINE

CATEGORY	LOCATION	460.9000.S MATERIAL TRANSFER VEHICLE EACH
0010	USH 12	1
	TOTAL 0010	1

ASPHALTIC FLUMES

CATEGORY	STATION	LOCATION	465.0315 ASPHALTIC FLUMES SY
0010	99+55	GREEN MEADOWS RD	5
0010	245+10	CTH AF NW QUADRANT	5
0010	245+85	CTH AF SW QUADRANT	5
0010	246+80	CTH AF SE QUADRANT	5
		TOTAL 0010	20

ASPHALTIC SURFACE

CATEGORY	LOCATION	465.0105 ASPHALTIC SURFACE TON	465.0110 ASPHALTIC SURFACE PATCHING TON	REMARKS
0010	USH 12	500	-	UNDIST. WEDGING, LEVELING, LANE FAILURE AREAS
0010	USH 12	-	100	UNDIST. MINOR REPAIRS, POPOUTS, RAMPING AT JOINTS
0010				
	TOTAL 0010	500	100	

ASPHALTIC SHOULDER RUMBLE STRIPS

CATEGORY	STATION	TO	STATION	LOCATION	465.0425 ASPHALTIC SHOULDER RUMBLE STRIPS 2-LANE RURAL LF	REMARKS
0020	54+25	-	93+36	MAINLINE	7,612	CTH D TO WEAVER'S STORE
0020	95+36	-	98+00	MAINLINE	458	WEAVER'S STORE TO GREEN MEADOW RD
0020	102+00	-	140+20	MAINLINE	7,500	GREEN MEADOW RD TO HIAWATHA RD
0020	144+20	-	187+00	MAINLINE	8,490	HIAWATHA RD TO SUNRISE DR
0020	191+00	-	244+00	MAINLINE	10,460	SUNRISE DR TO CTH AF
0020	246+00	-	309+80	MAINLINE	12,620	CTH AF TO CTH V
0020	313+80	-	375+50	MAINLINE	12,060	CTH V TO CTH JJ
0020	379+50	-	411+20	MAINLINE	6,270	CTH JJ TO CTH AF
0020	415+20	-	469+25	MAINLINE	10,460	CTH AF TO CTH R
0020	480+25	-	487+20	MAINLINE	1,390	CTH R TO STINSON RD
				TOTAL 0020	77,320	

ASPHALT CENTERLINE RUMBLE STRIPS

CATEGORY	STATION	TO	STATION	LOCATION	465.0475 ASPHALT CENTERLINE RUMBLE STRIPS 2-LANE RURAL LF	REMARKS
0010	54+25	-	93+36	MAINLINE	3,911	CTH D TO WEAVER'S STORE
0010	95+36	-	98+00	MAINLINE	264	WEAVER'S STORE TO GREEN MEADOW RD
0010	102+00	-	140+20	MAINLINE	3,820	GREEN MEADOW RD TO HIAWATHA RD
0010	144+20	-	187+00	MAINLINE	4,280	HIAWATHA RD TO SUNRISE DR
0010	191+00	-	244+00	MAINLINE	5,300	SUNRISE DR TO CTH AF
0010	246+00	-	309+80	MAINLINE	6,380	CTH AF TO CTH V
0010	313+80	-	375+50	MAINLINE	6,170	CTH V TO CTH JJ
0010	379+50	-	411+20	MAINLINE	3,170	CTH JJ TO CTH AF
0010	415+20	-	469+25	MAINLINE	5,405	CTH AF TO CTH R
0010	480+25	-	487+20	MAINLINE	695	CTH R TO STINSON RD
				TOTAL 0010	39,395	

3

CULVERT PIPE

CATEGORY	STATION	LOCATION	520.8700 CLEANING CULVERT PIPES EACH	520.9700.S. CULVERT PIPE LINERS (SIZE) (24-INCH) LF	520.9750.S CLEANING CULVERT PIPES FOR LINER VERIFICATION EACH	521.1024 APRON ENDWALLS FOR CULVERT PIPE STEEL 24-INCH EACH	522.0136 CULVERT PIPE REINFORCED CONCRETE CLASS III 36-INCH LF	522.1036 APRON ENDWALLS FOR CULVERT PIPE REINFORCED CONCRETE 36-INCH EACH
0010	189+75	SUNRISE DR	1	--	--	--	--	--
0010	231+98	MAINLINE	--	66	1	--	--	--
0010	374+14	MAINLINE	1	--	--	--	--	--
0010	374+24	MAINLINE	1	--	--	--	--	--
0010	414+25	CTH AF	--	146	1	2	--	--
0010	531+33	AUGUSTA CULVERT	--	--	--	--	102	2
		TOTAL 0010	3	212	2	2	102	2

CONCRETE CURB AND GUTTER

CATEGORY	STATION	LOCATION	601.0557 CONCRETE CURB & GUTTER 6-INCH SLOPED 36-INCH TYPE D LF
0010	99+50	GREENWOOD AVE NW QUAD	54
0010	100+15	GREENWOOD AVE NE QUAD	62
0010	245+90	CTH AF NW QUAD	50
0010	246+05	CTH AF SE QUAD	46
0010	246+75	CTH AF NE QUAD	62
		TOTAL 0010	274

MAINTENANCE AND REPAIR OF HAUL ROADS

CATEGORY	LOCATION	618.0100.01 MAINTENANCE AND REPAIR OF HAUL ROADS (PROJECT) 7080-03-75 (01. TBD) EACH
0010	USH 12	1
	TOTAL 0010	1

MOBILIZATION

CATEGORY	LOCATION	619.1000 MOBILIZATION EACH
0010	USH 12	1
	TOTAL 0010	1

BEAMGUARD

CATEGORY	STATION	TO	STATION	LOCATION	614.2300 MGS GUARDRAIL 3 LF	614.2500 MGS THRIE BEAM TRANSITION LF	614.2610 MGS GUARDRAIL TERMINAL EAT EACH
0010	105+53	-	108+96	LT	237.5	--	2
0010	105+96	-	109+14	RT	212.5	--	2
0010	261+49	-	265+55	LT	300	--	2
0010	261+53	-	265+59	RT	300	--	2
0010	291+29	-	295+47	LT	312.5	--	2
0010	292+11	-	295+67	RT	250	--	2
0010	320+47	-	324+53	LT	300	--	2
0010	320+74	-	324+80	RT	300	--	2
0010	461+29	-	465+10	LT	275	--	2
0010	461+28	-	464+72	RT	237.5	--	2
0010	489+95	-	495+70	RT	575	39.4	1
0010	490+28	-	496+63	LT	450	39.4	1
0010	498+57	-	506+12	LT	662.5	39.4	1
0010	499+49	-	505+79	RT	537.5	39.4	1
				TOTAL 0010	4,950.0	157.6	24

SECTION CORNER ITEMS

CATEGORY	STATION	LOCATION	621.0100 LANDMARK REFERENCE MONUMENTS EACH
0010	491+09	LT	1
0010	517+49	LT	1
		TOTAL 0010	2

RESTORATION

CATEGORY	STATION	TO	STATION	LOCATION	625.0500 SALVAGED TOPSOIL SY	627.0200 MULCHING SY	628.2004 EROSION MAT CLASS I TYPE B SY	629.0210 FERTILIZER TYPE B CWT	630.0120 SEEDING MIXTURE NO. 20 LB	630.0500 SEED WATER MGAL
0010	UNDISTRIBUTED			USH 12	2,500	1,000	1,500	2	300	10
0010										
				TOTAL 0010	2,500	1,000	1,500	2	300	10

3

3

MOBILIZATIONS EROSION CONTROL

LOCATION	628.1905 MOBILIZATIONS EROSION CONTROL EACH	628.1910 MOBILIZATIONS EMERGENCY EROSION CONTROL EACH
	3	3
TOTAL 0010	3	3

SILT FENCE

CATEGORY	STATION TO STATION	LOCATION	628.1504 SILT FENCE LF	628.1520 SILT FENCE MAINTENANCE LF
0010	UNDISTRIBUTED	USH 12	1,500	1,500
		TOTAL 0010	1,500	1,500

3

CULVERT PIPE CHECKS

CATEGORY	STATION	LOCATION	628.7504 TEMPORARY DITCH CHECKS LF	628.7570 ROCK BAGS EACH
0010	48+00	MAINLINE	--	3
0010	81+27	MAINLINE	--	3
0010	100+42	MAINLINE	--	3
0010	107+74	MAINLINE	--	3
0010	142+20	MAINLINE	--	3
0010	159+98	MAINLINE	--	3
0010	188+50	MAINLINE	--	3
0010	194+00	MAINLINE	--	3
0010	201+90	MAINLINE	--	3
0010	215+98	MAINLINE	--	3
0010	231+98	MAINLINE	--	3
0010	338+70	MAINLINE	--	3
0010	374+14	MAINLINE	--	3
0010	384+96	MAINLINE	--	3
0010	415+10	MAINLINE	--	3
0010	476+80	MAINLINE	--	3
0010	593+08	MAINLINE	--	3
0010				
0010	UNDISTRIBUTED		500	
		TOTAL 0010	500	51

MARKERS CULVET END

CATEGORY	STATION	LOCATION	633.5200 MARKERS CULVERT END EACH
0010	47+88	LT AND RT	2
0010	81+02	LT AND RT	2
0010	100+28	LT AND RT	2
0010	121+98	LT AND RT	2
0010	159+86	LT AND RT	2
0010	193+88	LT AND RT	2
0010	201+76	LT AND RT	2
0010	215+86	LT AND RT	2
0010	231+86	LT AND RT	2
0010	338+88	LT AND RT	2
0010	374+24	LT AND RT	2
0010	384+99	LT AND RT	2
0010	413+54	LT AND RT	2
0010	475+60	LT AND RT	4
0010	531+33	LT AND RT	2
		TOTAL 0010	32

FIELD OFFICE

LOCATION	642.5001 FIELD OFFICE TYPE B EACH
	1
TOTAL 0010	1

TRAFFIC CONTROL

LOCATION	643.0300 TRAFFIC CONTROL DRUMS DAY	643.0420 TRAFFIC CONTROL BARRICADES TYPE III DAY	643.0705 TRAFFIC CONTROL WARNING LIGHTS TYPE A DAY	643.0900 TRAFFIC CONTROL SIGNS DAY	643.1070 TRAFFIC CONTROL CONES 42-INCH DAY	643.5000 TRAFFIC CONTROL EACH
TRAFFIC CONTROL	--	--	--	4,640	--	--
DETOUR	--	50	60	95	--	--
USH 12	5,800	1,160	1,400	580	2,500	1
TOTAL 0010	5,800	1,210	1,460	5,315	2,500	1

3

PAVEMENT MARKING

CATEGORY	STATION	TO	STATION	LOCATION	646.1020 MARKING LINE EPOXY 4-INCH (YELLOW) LF	646.1040 MARKING LINE GROOVED WET REF EPOXY 4-INCH (WHITE) LF	646.3040 MARKING LINE GROOVED WET REF EPOXY 8-INCH (WHITE) LF	646.5320 MARKING RAILROAD CROSSINGS EPOXY (WHITE) EACH	646.6120 MARKING STOP LINE EPOXY 18-INCH (WHITE) LF	646.7120 MARKING DIAGONAL EPOXY 12-INCH (YELLOW) LF	649.0120 TEMPORARY MARKING LINE EPOXY 4-INCH LF
0010	35+57	-	53+00	BEGIN PROJECT TO CTH D	5,318	3,538	340	1	26	480	5,597
0010	53+00	-	469+41	CTH D TO CTH R	30,420	81,520	--	-	--	--	30,699
0010		188+90		SUNRISE DR	--	--	--	-	94	--	--
0010		246+00		CTH AF	--	--	350	1	39	--	--
0010		311+55		CTH V	--	--	368	1	47	--	--
0010		377+50		CTH JJ	--	--	88	-	31	--	--
0010		413+50		CTH AF	--	--	360	1	111	--	--
0010	469+41	-	480+00	CTH R	2,623	1,977	300	-	--	200	2,902
0010		509+25		INDUSTRIAL DRIVE	--	--	205	-	--	--	--
0010	480+00	-	533+45	CTH R TO EXCEPTION TO CL	8,840	9,970	--	-	--	--	9,119
0010	588+00	-	600+30	EXCEPTION TO CL TO END PROJECT	2,460	3,360	--	-	--	--	2,739
				TOTAL 0010	49,661	100,365	2,011	4	348	680	51,055

TEMPORARY MARKING LINE PAINT 4-INCH

CATEGORY	STATION	TO	STATION	LOCATION	649.0105 TEMPORARY MARKING LINE PAINT 4-INCH LF	REMARKS
0010	35+57	-	486+80	CL	40,528	CIR SURFACE CL
0010	35+57	-	486+80	CL	40,528	1ST LIFT CL
0010	486+80	-	533+45	CL	7,480	1ST LIFT CL
0010	588+00	-	600+30	CL	2,460	1ST LIFT CL
		-				
				TOTAL 0010	90,996	

CONSTRUCTION STAKING PIPE CULVERTS

CATEGORY	STATION	LOCATION	650.6000 CONSTRUCTION STAKING PIPE CULVERTS EACH
0010	531+33	AUGUSTA CULVERT	1
		TOTAL 0010	1

CONSTRUCTION STAKING CURB AND GUTTER

CATEGORY	STATION	LOCATION	650.5500 CONSTRUCTION STAKING CURB GUTTER AND CURB & GUTTER LF
0010	99+50	GREENWOOD AVE NW QUAD	54
0010	100+15	GREENWOOD AVE NE QUAD	62
0010	245+90	CTH AF NW QUAD	50
0010	246+05	CTH AF SE QUAD	46
0010	246+75	CTH AF NE QUAD	62
		TOTAL 0010	274

LOCATING NO PASSING ZONE

CATEGORY	STATION	TO	STATION	LOCATION	648.0100 LOCATING NO-PASSING ZONES MI
0010	35+57	-	533+45	MAINLINE	9.43
0010	588+00	-	600+30	MAINLINE	0.23
				TOTAL 0010	9.66

3

CONSTRUCTION STAKING RESURFACE REFERENCE

CATEGORY	STATION	TO	STATION	LOCATION	650.8000 CONSTRUCTION STAKING RESURFACING REFERENCE LF
0010	35+37	-	533+45	MAINLINE	49,808
0010	588+00	-	600+30	MAINLINE	1,230
				TOTAL 0010	51,038

SAWING ASPHALT

CATEGORY	STATION	TO	STATION	LOCATION	690.0150 SAWING ASPHALT LF
0010	35+58	-	36+34	BEGIN PROJECT	122
0010	35+57	-	36+38	DRIVEWAY RT	81
0010	38+49			DRIVEWAY RT	19
0010	45+95 LT			CTH D	42
0010	99+71 LT			GREEN MEADOW RD	30
0010	100+21 RT			GREEN MEADOW RD	29
0010	142+14 LT			HIAWATHA RD	25
0010	142+60 RT			HIAWATHA RD	23
0010	188+06 LT			SUNRISE DR	27
0010	190+33 RT			SUNRISE DR	24
0010	245+22 RT			CTH AF	29
0010	246+63 LT			CTH AF	30
0010	310+83 RT			CTH V	26
0010	312+32 LT			CTH V	27
0010	377+50 RT			CTH JJ	28
0010	412+90 LT			CTH AF	26
0010	414+42 RT			CTH AF	27
0010	436+74			DRIVEWAY LT	19
0010	475+25 RT			CTH R	39
0010	487+20			DRIVEWAY LT	42
0010	489+25			STINSON RD	36
0010	509+25 LT			BARTIG RD	42
0010	509+25 RT			INDUSTRIAL DR	42
0010	514+45 LT			DRIVEWAY LT	36
0010	514+51 RT			TED ANDERSON DR	38
0010	515+47			DRIVEWAY RT	11
0010	515+54			DRIVEWAY LT	20
0010	516+87			DRIVEWAY RT	11
0010	517+11			DRIVEWAY LT	33
0010	519+20 RT			MONROE ST	30
0010	521+00 LT			MAIN ST	22
0010	522+29			DRIVEWAY LT	33
0010	522+66			DRIVEWAY RT	34
0010	523+67			DRIVEWAY LT	36
0010	533+45			BEGIN NET EXCEPTION TO CL	38
0010	588+00			END NET EXCEPTION TO CL	34
0010	598+95			DRIVEWAY RT	15
0010	600+30			END PROJECT	30
				TOTAL 0010	1,256

CONSTRUCTiON STAKING SUPPLEMENTAL CONTROL

LOCATION	650.9910.01 CONSTRUCTION STAKING SUPPLEMENTAL CONTROL (PROJECT) (01. 7080-03-75) LS	REMARKS
MAINLINE	1	
TOTAL 0010	1	

SAWING CONCRETE

CATEGORY	STATION	LOCATION	690.0250 SAWING CONCRETE LF
0010	384+69	MAINLINE	20
0010	385+34	MAINLINE	20
		TOTAL 0010	40

DITCH CLEANING

CATEGORY	STATION	TO	STATION	LOCATION	SPV.0090.01 SPECIAL (01. DITCH CLEANING) LF
0010	47+88	-	48+13	RT & LT	50
0010	81+02	-	81+52	RT	50
0010	81+22	-	81+32	LT	10
0010	100+28	-	100+58	LT	30
0010	100+50	-	100+80	RT	30
0010	107+59	-	107+89	LT	30
0010	141+93	-	142+18	RT	25
0010	143+00	-	143+25	RT	25
0010	159+86	-	160+11	LT	25
0010	189+36	-	189+61	LT	25
0010	189+21	-	189+46	LT	25
0010	193+88	-	194+20	LT	25
0010	193+95	-	194+05	RT	20
0010	201+76	-	202+01	RT & LT	50
0010	215+86	-	216+11	RT & LT	50
0010	231+86	-	232+11	LT	25
0010	231+93	-	232+03	RT	10
0010	338+63	-	338+88	LT	25
0010	338+70	-	338+80	RT	10
0010	374+02	-	374+32	RT & LT	60
0010	384+86	-	385+11	LT	25
0010	384+93	-	385+03	RT	10
0010	413+39	-	413+64	RT	25
0010	415+10	-	415+35	RT	25
0010	475+60	-	477+57	LT	197
0010	477+24	-	477+57	RT	197
0010	531+75	-	533+00	LT	125
				TOTAL 0010	1,204

CLEANING CONCRETE BOX CULVERTS AND PIPE ARCHES

CATEGORY	LOCATION	SPV.0060.01 SPECIAL (01. CLEANING CONCRETE BOX CULVERT STATION 108+00) EACH	SPV.0060.02 SPECIAL (02. CLEANING CONCRETE BOX CULVERT STATION 263+45) EACH	SPV.0060.03 SPECIAL (03. CLEANING CONCRETE BOX CULVERT STATION 293+20) EACH	SPV.0060.04 SPECIAL (04. CLEANING CONCRETE BOX CULVERT STATION 322+66) EACH	SPV.0060.05 SPECIAL (05. CLEANING CSPA STATION 462+72) EACH	SPV.0060.06 SPECIAL (06. CLEANING CSPA STATION 526+87) EACH	SPV.0060.07 SPECIAL (07. CLEANING CSPA STATION 593+24) EACH
0010	USH 12	1	1	1	1	1	1	1
	TOTAL 0010	1	1	1	1	1	1	1

3

TRANSPORTATION PROJECT PLAT NO: 7080-03-25 - 4.01

THAT PART OF OUTLOTS 31 & 32 OF ASSESSOR'S SUBDIVISION TO THE CITY OF AUGUSTA, LOTS 1 & 2 OF BLOCK 'A' OF E.S. BILL'S 2 ND ADDITION TO THE CITY OF AUGUSTA LOCATED IN THE NW 1/4 OF THE NE 1/4 OF SECTION 5, TOWNSHIP 25 NORTH, RANGE 6 WEST, CITY OF AUGUSTA, EAU CLAIRE COUNTY, WISCONSIN

RELOCATION ORDER EAU CLAIRE - FAIRCHILD, CTH D TO S JCT OF CTH M, USH 12, EAU CLAIRE COUNTY

TO PROPERLY ESTABLISH, LAY OUT, WIDEN, ENLARGE, EXTEND, CONSTRUCT, RECONSTRUCT, IMPROVE, OR MAINTAIN A PORTION OF THE HIGHWAY DESIGNATED ABOVE, THE STATE OF WISCONSIN DEPARTMENT OF TRANSPORTATION DEEMS IT NECESSARY TO RELOCATE OR CHANGE SAID HIGHWAY AND ACQUIRE CERTAIN LANDS AND INTERESTS OR RIGHTS IN LANDS FOR THE ABOVE PROJECT.

TO EFFECT THIS CHANGE, PURSUANT TO AUTHORITY GRANTED UNDER SECTION 84.02 (3), 84.09, AND 84.30, WISCONSIN STATUTES, THE DEPARTMENT OF TRANSPORTATION HEREBY ORDERS THAT:
1. THAT PORTION OF SAID HIGHWAY AS SHOWN ON THIS PLAT IS LAID OUT AND ESTABLISHED TO THE LINES AND WIDTHS AS SO SHOWN FOR THE ABOVE PROJECT.
2. THE LANDS OR INTERESTS OR RIGHTS IN LANDS AS SHOWN ON THIS PLAT ARE REQUIRED BY THE DEPARTMENT FOR THE ABOVE PROJECT AND SHALL BE ACQUIRED IN THE NAME OF THE STATE OF WISCONSIN, PURSUANT TO THE PROVISIONS OF SECTION 84.09 (1) OR (2), WISCONSIN STATUTES.

1196470

TINA K. POMMIER
EAU CLAIRE COUNTY WI
REGISTER OF DEEDS
RECORDED ON
08/18/2020 01:55 PM
REC FEE:
TRANS FEE:
EXEMPT #:
PAGES: 1
This document was electronically recorded and returned to submitter

RESERVED FOR REGISTER OF DEEDS
PROJECT NUMBER: 7080-03-25-4.01
AMENDMENT NO:___

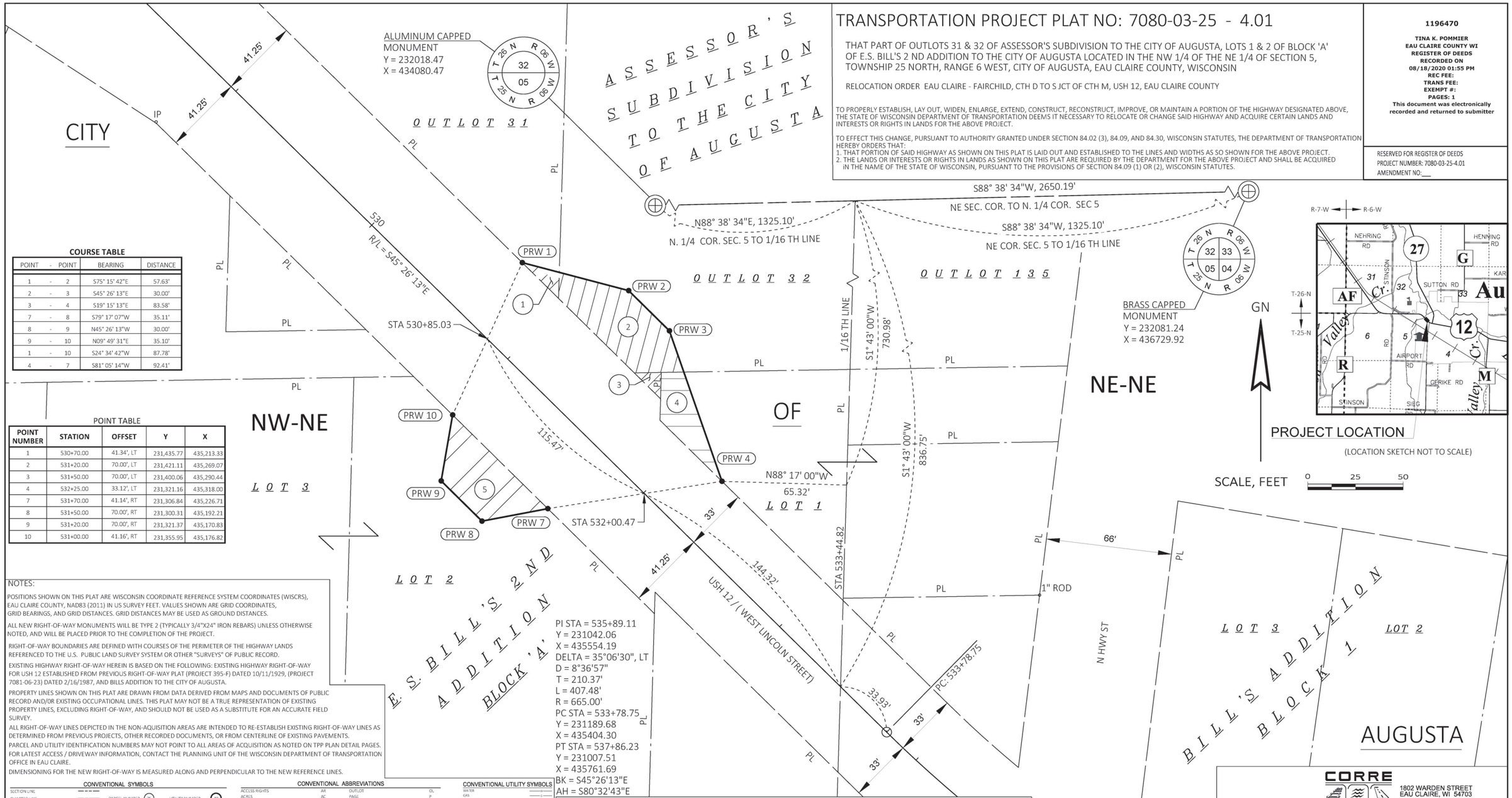

COURSE TABLE

POINT	-	POINT	BEARING	DISTANCE
1	-	2	S75° 15' 42"E	57.63'
2	-	3	S45° 26' 13"E	30.00'
3	-	4	S19° 15' 13"E	83.58'
7	-	8	S79° 17' 07"W	35.11'
8	-	9	N45° 26' 13"W	30.00'
9	-	10	N09° 49' 31"E	35.10'
1	-	10	S24° 34' 42"W	87.78'
4	-	7	S81° 05' 14"W	92.41'

POINT TABLE

POINT NUMBER	STATION	OFFSET	Y	X
1	530+70.00	41.34', LT	231,435.77	435,213.33
2	531+20.00	70.00', LT	231,421.11	435,269.07
3	531+50.00	70.00', LT	231,400.06	435,290.44
4	532+25.00	33.12', LT	231,321.16	435,318.00
7	531+70.00	41.14', RT	231,306.84	435,226.71
8	531+50.00	70.00', RT	231,300.31	435,192.21
9	531+20.00	70.00', RT	231,321.37	435,170.83
10	531+00.00	41.16', RT	231,355.95	435,176.82

NOTES:

POSITIONS SHOWN ON THIS PLAT ARE WISCONSIN COORDINATE REFERENCE SYSTEM COORDINATES (WISCRS), EAU CLAIRE COUNTY, NAD83 (2011) IN US SURVEY FEET. VALUES SHOWN ARE GRID COORDINATES, GRID BEARINGS, AND GRID DISTANCES. GRID DISTANCES MAY BE USED AS GROUND DISTANCES.

ALL NEW RIGHT-OF-WAY MONUMENTS WILL BE TYPE 2 (TYPICALLY 3/4"X24" IRON REBARS) UNLESS OTHERWISE NOTED, AND WILL BE PLACED PRIOR TO THE COMPLETION OF THE PROJECT.

RIGHT-OF-WAY BOUNDARIES ARE DEFINED WITH COURSES OF THE PERIMETER OF THE HIGHWAY LANDS REFERENCED TO THE U.S. PUBLIC LAND SURVEY SYSTEM OR OTHER "SURVEYS" OF PUBLIC RECORD.

EXISTING HIGHWAY RIGHT-OF-WAY HEREIN IS BASED ON THE FOLLOWING: EXISTING HIGHWAY RIGHT-OF-WAY FOR USH 12 ESTABLISHED FROM PREVIOUS RIGHT-OF-WAY PLAT (PROJECT 395-F) DATED 10/11/1929, (PROJECT 7081-06-23) DATED 2/16/1987, AND BILLS ADDITION TO THE CITY OF AUGUSTA.

PROPERTY LINES SHOWN ON THIS PLAT ARE DRAWN FROM DATA DERIVED FROM MAPS AND DOCUMENTS OF PUBLIC RECORD AND/OR EXISTING OCCUPATIONAL LINES. THIS PLAT MAY NOT BE A TRUE REPRESENTATION OF EXISTING PROPERTY LINES, EXCLUDING RIGHT-OF-WAY, AND SHOULD NOT BE USED AS A SUBSTITUTE FOR AN ACCURATE FIELD SURVEY.

ALL RIGHT-OF-WAY LINES DEPICTED IN THE NON-AQUISITION AREAS ARE INTENDED TO RE-ESTABLISH EXISTING RIGHT-OF-WAY LINES AS DETERMINED FROM PREVIOUS PROJECTS, OTHER RECORDED DOCUMENTS, OR FROM CENTERLINE OF EXISTING PAVEMENTS.

PARCEL AND UTILITY IDENTIFICATION NUMBERS MAY NOT POINT TO ALL AREAS OF ACQUISITION AS NOTED ON TPP PLAN DETAIL PAGES.

FOR LATEST ACCESS / DRIVEWAY INFORMATION, CONTACT THE PLANNING UNIT OF THE WISCONSIN DEPARTMENT OF TRANSPORTATION OFFICE IN EAU CLAIRE.

DIMENSIONING FOR THE NEW RIGHT-OF-WAY IS MEASURED ALONG AND PERPENDICULAR TO THE NEW REFERENCE LINES.

CONVENTIONAL SYMBOLS

SECTION LINE
QUARTER LINE
SIXTEENTH LINE
NEW REFERENCE LINE
NEW R/W LINE
EXISTING R/W LINE
PROPERTY LINE
LOT, TIE, AND OTHER MINOR LINES
SLOPE INTERCEPT
CORPORATE LIMITS
UNDERGROUND FACILITY (COMMUNICATIONS, ELECTRIC, ETC) (TYPE)
FEE ACQUISITION AREA (MATCHING VARIES BY OWNER)
TEMP. LIMITED EASEMENT AREA
EASEMENT AREA (HIGHWAY, PERMANENT LIMITED, OR RESTRICTED DEVELOPMENT)
TRANSMISSION STRUCTURES
BUILDING
BUILDING (TO BE REMOVED)
BRIDGE
PARCEL NUMBER (25)
SECTION CORNER
NOTATION FOR COMBUSTIBLE FLUIDS (GASOLINE)
NOTATION FOR HIGH VOLTAGE TRANSMISSION LINES (CAUTION)
UTILITY NUMBER (40)
R/W MONUMENT
NON-MONUMENTED R/W POINT
FOUND IRON PIN (IP)
VALVE (GAS, WATER, ETC.) (TYPE)
SIGN
OH-PREMISE SIGN (SIGN)
ACCESS CONTROLLED BY ACQUISITION
NO ACCESS (BY STATUTORY AUTHORITY)
ACCESS RESTRICTED (BY PREVIOUS PROJECT OR CONTROL)
NO ACCESS (NEW HIGHWAY)
NATIONAL GEODETIC SURVEY MONUMENT
SIXTEENTH CORNER MONUMENT
PARALLEL OFFSETS

CONVENTIONAL ABBREVIATIONS

ACCESS RIGHTS	AR	OUTLOT	OL
ACRES	AC	PAGE	P
AHEAD	AH	POINT OF TANGENCY	PT
ALUMINUM	ALUM	PROPERTY LINE	PL
AND OTHERS	ET AL	RECORDED AS	(100')
BACK	BK	REEL / IMAGE	R/I
BLOCK	BLK	REFERENCE LINE	R/L
CENTERLINE	C/L	PERMANENT LIMITED EASEMENT	PLE
CERTIFIED SURVEY MAP	CSM	POINT OF BEGINNING	POB
CONCRETE	CONC	POINT OF CURVATURE	PC
COUNTY	CO	POINT OF COMPOUND CURVE	PCC
COUNTY TRUNK HIGHWAY	CTH	POINT OF INTERSECTION	PI
DISTANCE	DIST	REMAINING	REM
CORNER	COR	RESTRICTIVE DEVELOPMENT EASEMENT	ROE
DOCUMENT NUMBER	DOC	RIGHT	RT
EASEMENT	EASE	RIGHT OF WAY	R/W
EXISTING	EX	SECTION	SEC
GAS VALVE	GV	SEPTIC VENT	SEPV
GRID NORTH	GN	SQUARE FEET	SF
HIGHWAY EASEMENT	HE	STATE TRUNK HIGHWAY	STH
IDENTIFICATION	ID	STATION	STA
LAND CONTRACT	LC	TELEPHONE PEDESTAL	TP
LEFT	LT	TEMPORARY LIMITED EASEMENT	TLE
MONUMENT	MON	TRANSPORTATION PROJECT PLAT	TPP
NATIONAL GEODETIC SURVEY NUMBER	NGS	UNITED STATES HIGHWAY	USH
	NO	VOLUME	V

CONVENTIONAL UTILITY SYMBOLS

WATER — W —
GAS — G —
TELEPHONE — T —
OVERHEAD TRANSMISSION LINES — OHTL —
ELECTRIC — E —
CABLE TELEVISION — TV —
FIBER OPTIC — FO —
SANITARY SEWER — SAN —
STORM SEWER — SS —
ELECTRIC TOWER

	NON-COMPENSABLE	COMPENSABLE
POWER POLE	●	●
TELEPHONE POLE	●	●
TELEPHONE PEDESTAL	✖	●

CURVE DATA ABBREVIATIONS

LONG CHORD	LCH
LONG CHORD BEARING	LCB
RADIUS	R
DEGREE OF CURVE	D
CENTRAL ANGLE	Δ/DELTA
LENGTH OF CURVE	L
TANGENT	T
DIRECTION AHEAD	DA
DIRECTION BACK	DB

SCHEDULE OF LANDS & INTERESTS REQUIRED

OWNERS NAMES ARE SHOWN FOR REFERENCE ONLY AND ARE SUBJECT TO CHANGE PRIOR TO THE TRANSFER OF LAND INTERESTS TO THE DEPARTMENT.

PARCEL NUMBER	OWNER	INTEREST REQUIRED	R/W REQUIRED NEW (SF)	R/W REQUIRED EXISTING (SF)	R/W REQUIRED TOTAL (SF)
1	FERNE E. OSBORN	FEE	133	0.00	133
2	KACY WARNER	FEE	1,759	0.00	1,759
3	CITY OF AUGUSTA	FEE	98	0.00	98
4	ANDREW PETTIS	FEE	758	0.00	758
5	COUNTRY ESTATE INVESTMENTS, LLC	FEE	1,443	0.00	1,443

CORRE ENGINEERING
1802 WARDEN STREET
EAU CLAIRE, WI 54703
(608)828-1011
www.correinc.com

I, BRYON J. MOTSZKO PROFESSIONAL LAND SURVEYOR, HEREBY CERTIFY THAT IN FULL COMPLIANCE WITH THE PROVISIONS OF SECTION 84.095 OF THE WISCONSIN STATUTES AND UNDER THE DIRECTION OF THE DEPARTMENT OF TRANSPORTATION, I HAVE SURVEYED AND MAPPED THIS TRANSPORTATION PROJECT PLAT AND SUCH PLAT CORRECTLY REPRESENTS ALL EXTERIOR BOUNDARIES OF THE SURVEYED LAND.

WISCONSIN BRYON MOTSZKO S-2846 MENOMONIE WI LAND SURVEYOR

SIGNATURE: Bryon J. Motszko DATE: 8/17/20
PRINT NAME: BRYON J. MOTSZKO
REGISTRATION NUMBER: S-2846

THIS PLAT AND RELOCATION ORDER ARE APPROVED FOR THE WISCONSIN DEPARTMENT OF TRANSPORTATION

SIGNATURE: Debra B. Stensland DATE: 8/17/2020
PRINT NAME: DEBRA B. STENSLAND

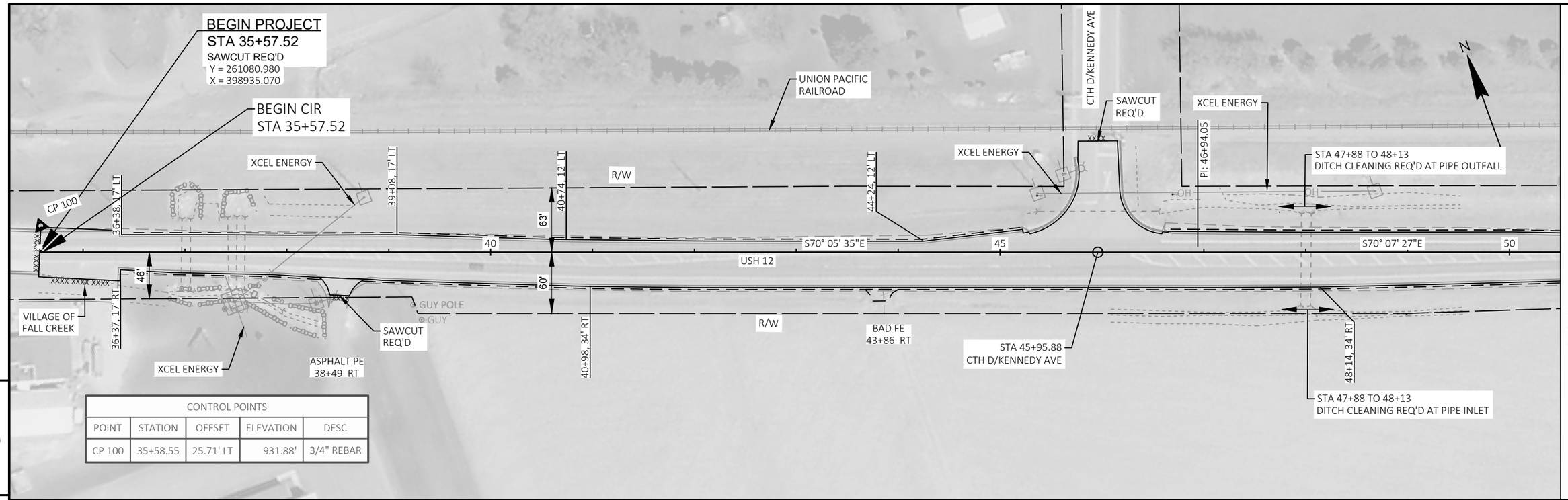

CONTROL POINTS				
POINT	STATION	OFFSET	ELEVATION	DESC
CP 100	35+58.55	25.71' LT	931.88'	3/4" REBAR

5

5

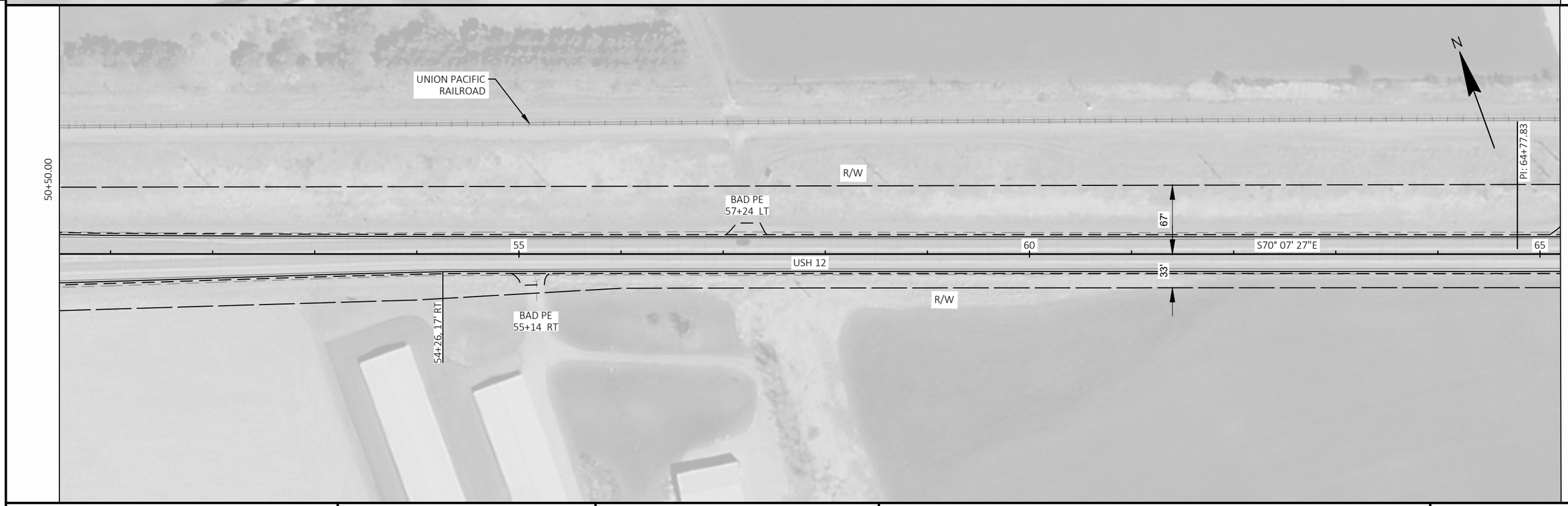

PROJECT NO: 7080-03-75	HWY: USH 12	COUNTY: EAU CLAIRE	PLAN SHEETS - USH 12	SHEET 47	E

FILE NAME : C:\OD\CORRE, INC\PROJECTS - DOCUMENTS\WI - NW REGION\7080-03-05_EAU CLAIRE CO_USH 12\500_CADD\501_C3D_2018\70800305\SHEETSPLAN\050201-PN.DWG
LAYOUT NAME - 1
PLOT DATE : 8/30/2021 5:11 PM
PLOT BY : NICHOLAS WATHKE
PLOT NAME :
PLOT SCALE : 1 IN:100 FT

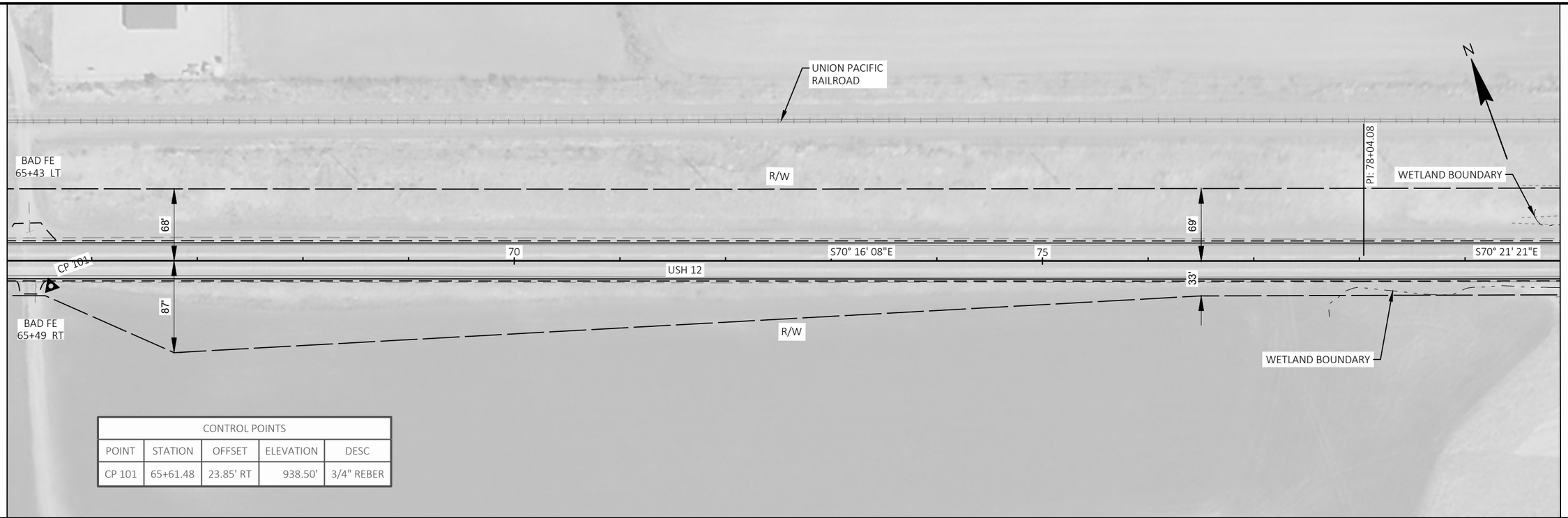

CONTROL POINTS				
POINT	STATION	OFFSET	ELEVATION	DESC
CP 101	65+61.48	23.85' RT	938.50'	3/4" REBER

5

5

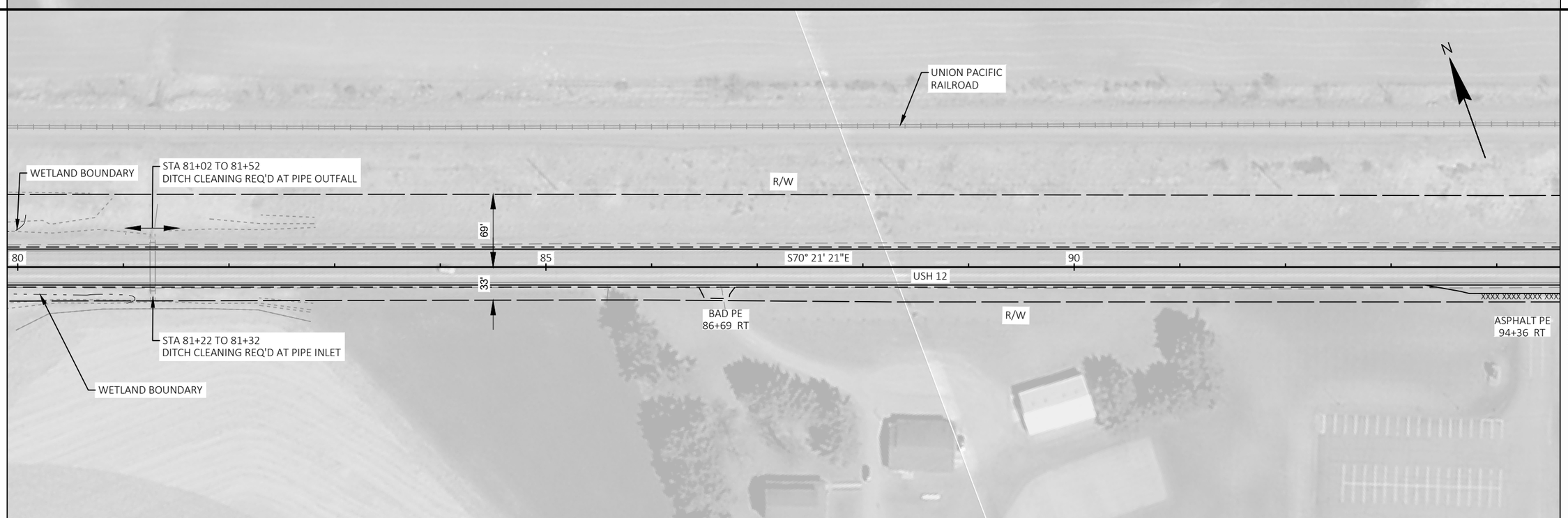

PROJECT NO: 7080-03-75	HWY: USH 12	COUNTY: EAU CLAIRE	PLAN SHEETS - USH 12	SHEET 48	E

FILE NAME : C:\OD\CORRE, INC\PROJECTS - DOCUMENTS\WI - NW REGION\7080-03-05_EAU CLAIRE CO_USH 12\500_CADD\501_C3D_2018\70800305\SHEETSPLAN\050201-PN.DWG
LAYOUT NAME - 2
PLOT DATE : 8/30/2021 5:11 PM PLOT BY : NICHOLAS WATHKE PLOT NAME : PLOT SCALE : 1 IN:100 FT

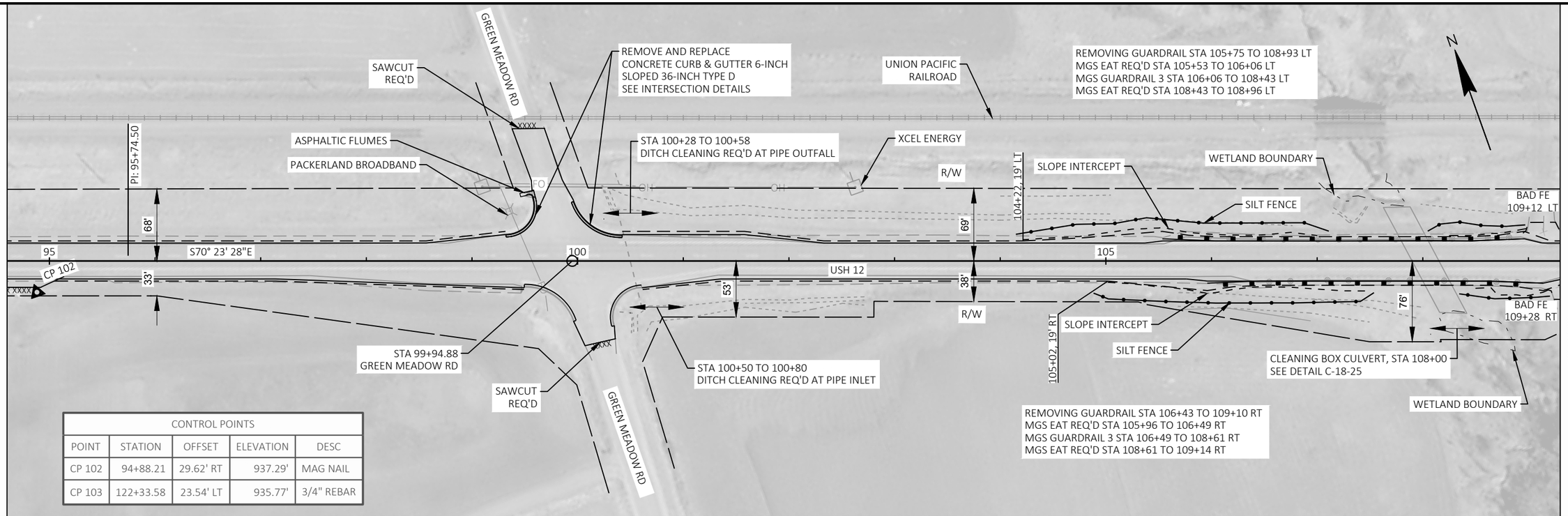

CONTROL POINTS				
POINT	STATION	OFFSET	ELEVATION	DESC
CP 102	94+88.21	29.62' RT	937.29'	MAG NAIL
CP 103	122+33.58	23.54' LT	935.77'	3/4" REBAR

5

5

PROJECT NO: 7080-03-75	HWY: USH 12	COUNTY: EAU CLAIRE	PLAN SHEETS - USH 12	SHEET 49	E

FILE NAME : C:\OD\CORRE, INC\PROJECTS - DOCUMENTS\WI - NW REGION\7080-03-05_EAU CLAIRE CO_USH 12\500_CADD\501_C3D_2018\70800305\SHEETSPLAN\050201-PN.DWG
LAYOUT NAME - 3
PLOT DATE : 8/30/2021 5:12 PM PLOT BY : NICHOLAS WATHKE PLOT NAME : PLOT SCALE : 1 IN:100 FT

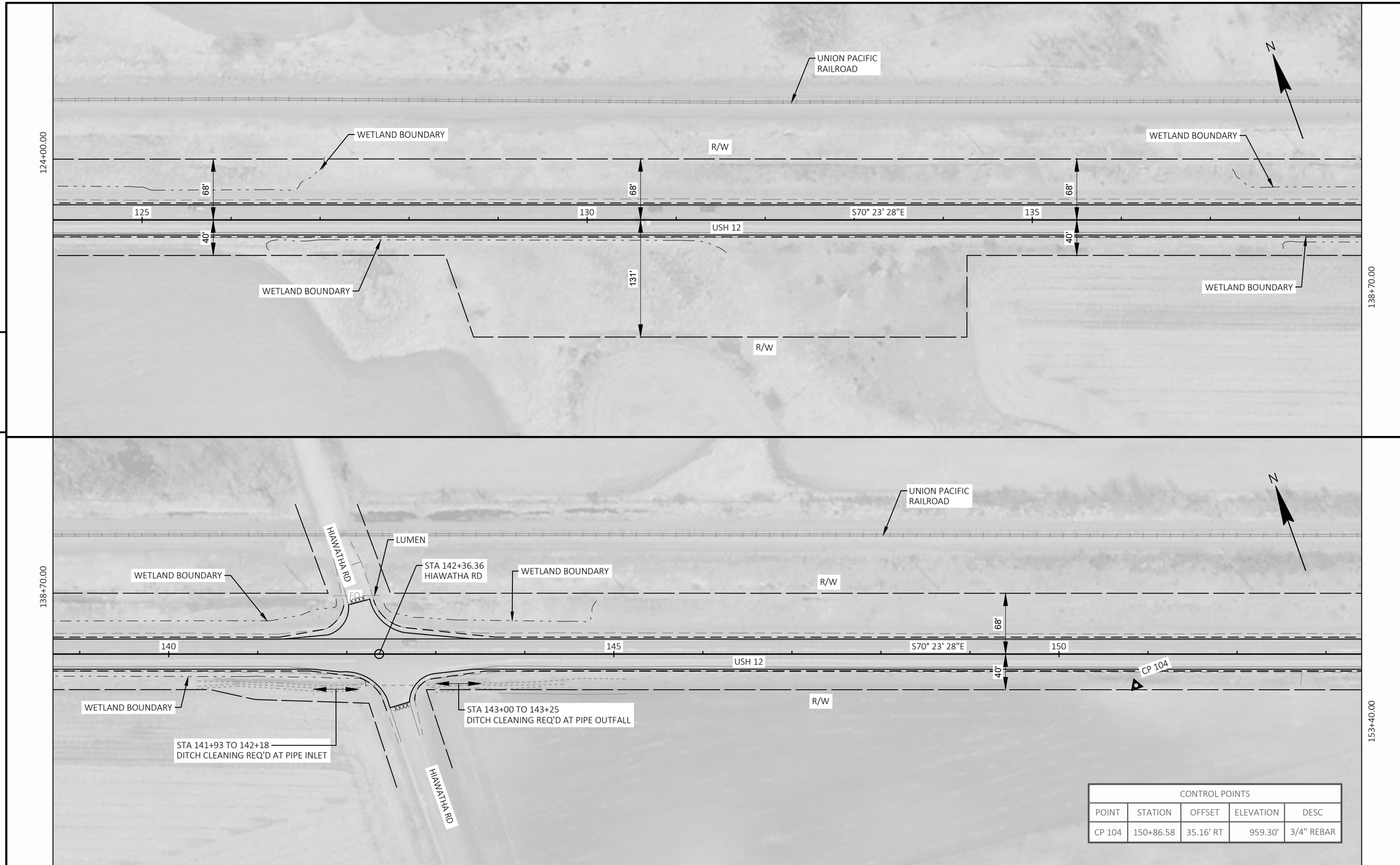

CONTROL POINTS				
POINT	STATION	OFFSET	ELEVATION	DESC
CP 104	150+86.58	35.16' RT	959.30'	3/4" REBAR

PROJECT NO: 7080-03-75	HWY: USH 12	COUNTY: EAU CLAIRE	PLAN SHEETS - USH 12	SHEET 50	E

FILE NAME : C:\OD\CORRE, INC\PROJECTS - DOCUMENTS\WI - NW REGION\7080-03-05_EAU CLAIRE CO_USH 12\500_CADD\501_C3D_2018\70800305\SHEETSPLAN\050201-PN.DWG
LAYOUT NAME - 4
PLOT DATE : 8/30/2021 5:12 PM PLOT BY : NICHOLAS WATHKE PLOT NAME : PLOT SCALE : 1 IN:100 FT

WISDOT/CADDS SHEET 44

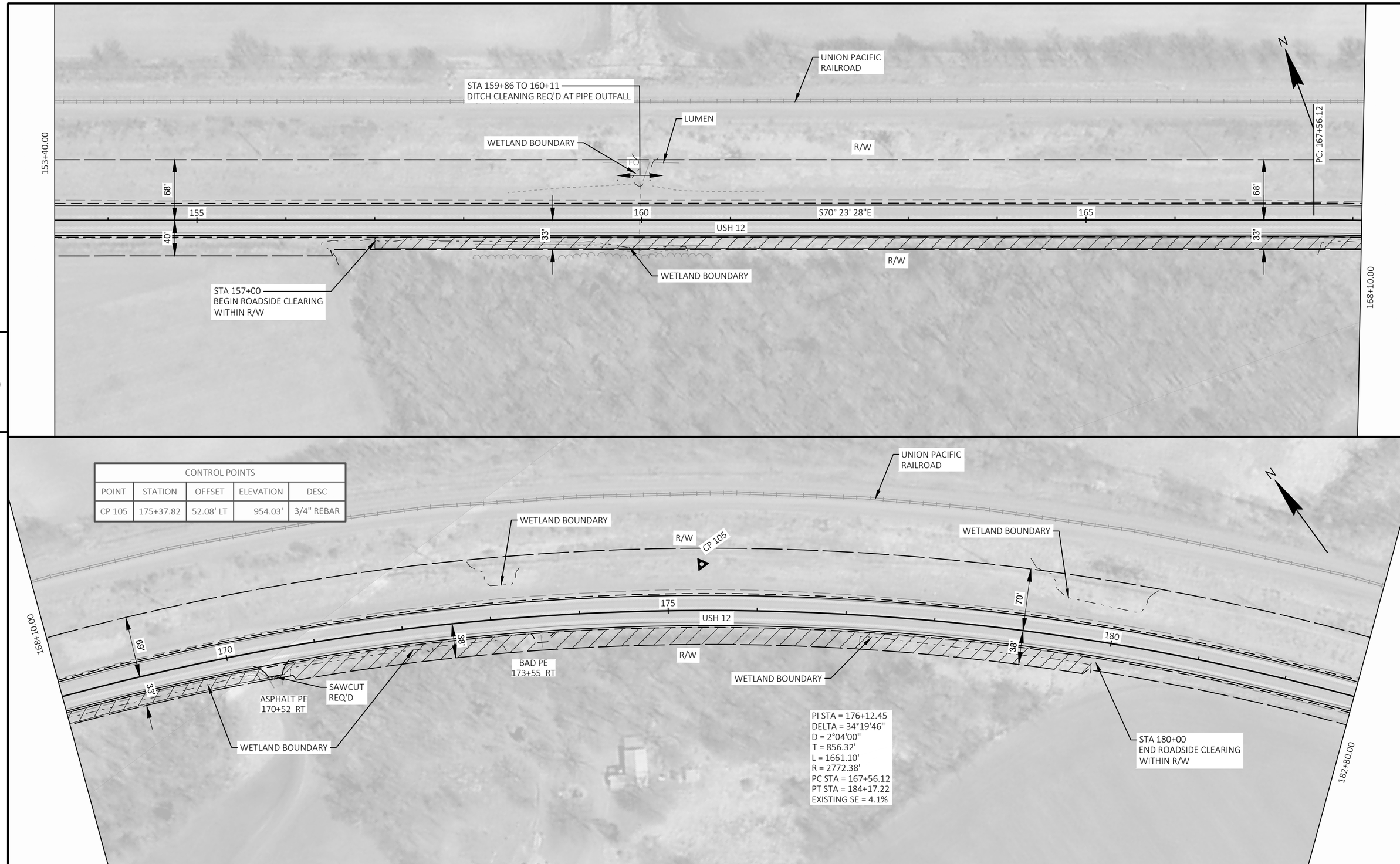

5

5

PROJECT NO: 7080-03-75	HWY: USH 12	COUNTY: EAU CLAIRE	PLAN SHEETS - USH 12	SHEET 51	E

FILE NAME : C:\OD\CORRE, INC\PROJECTS - DOCUMENTS\WI - NW REGION\7080-03-05_EAU CLAIRE CO_USH 12\500_CADD\501_C3D_2018\70800305\SHEETSPLAN\050201-PN.DWG
LAYOUT NAME - 5
PLOT DATE : 8/30/2021 5:12 PM PLOT BY : NICHOLAS WATHKE PLOT NAME : PLOT SCALE : 1 IN:100 FT

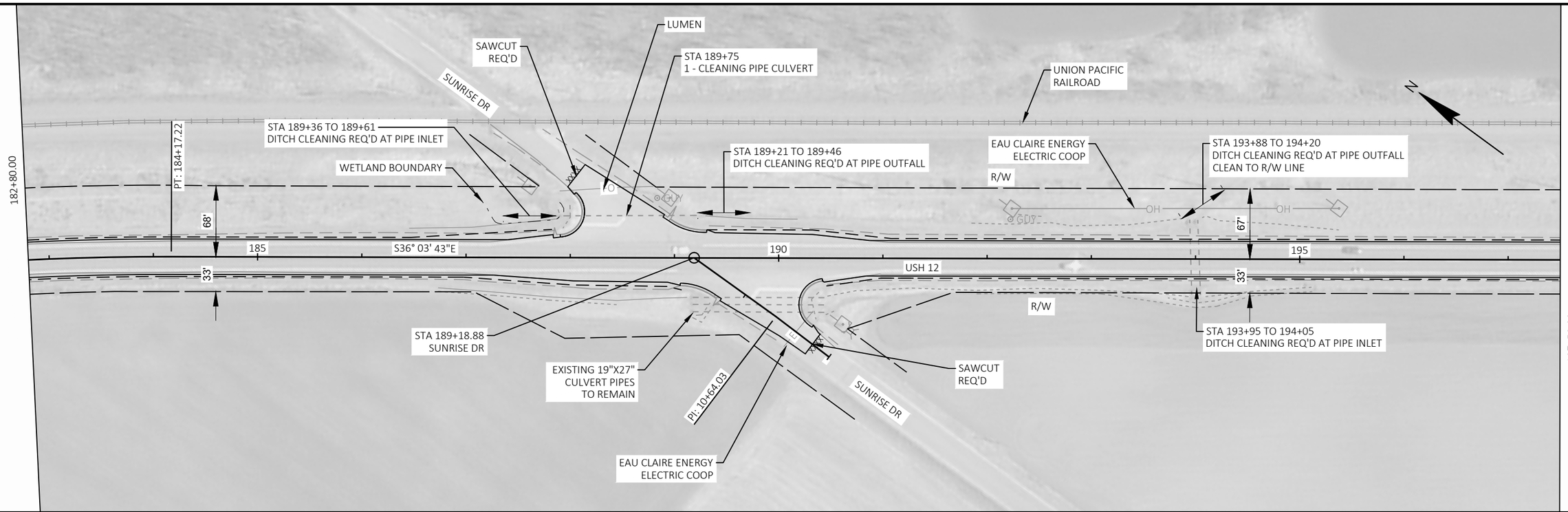

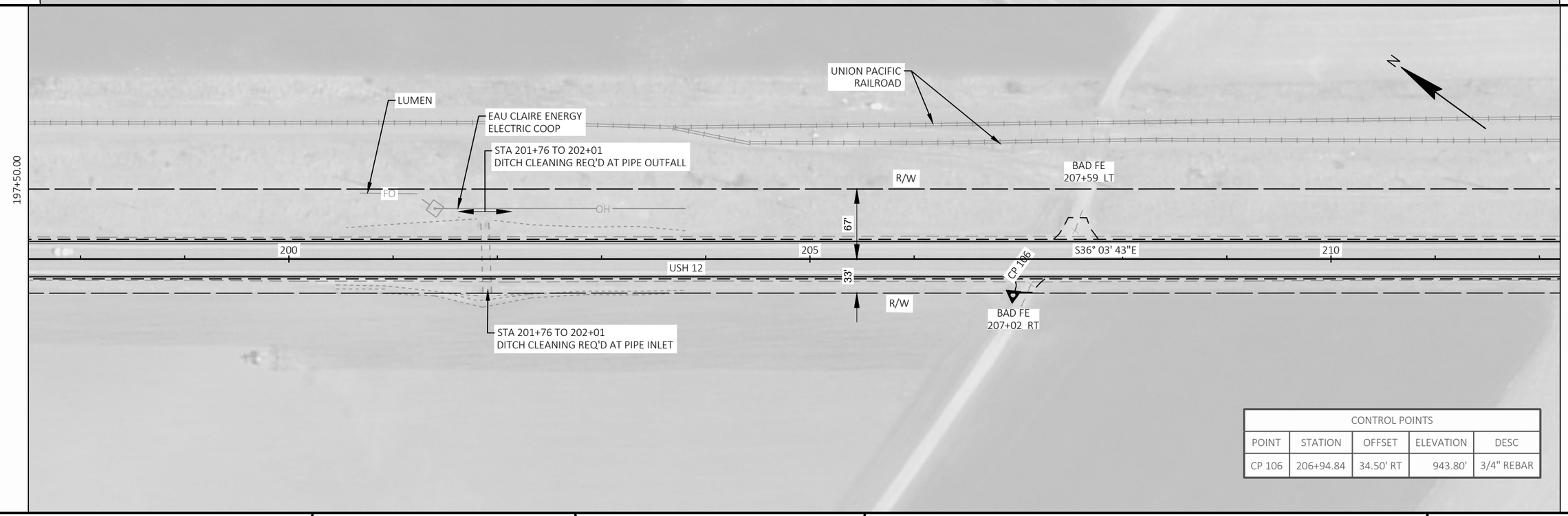

CONTROL POINTS				
POINT	STATION	OFFSET	ELEVATION	DESC
CP 106	206+94.84	34.50' RT	943.80'	3/4" REBAR

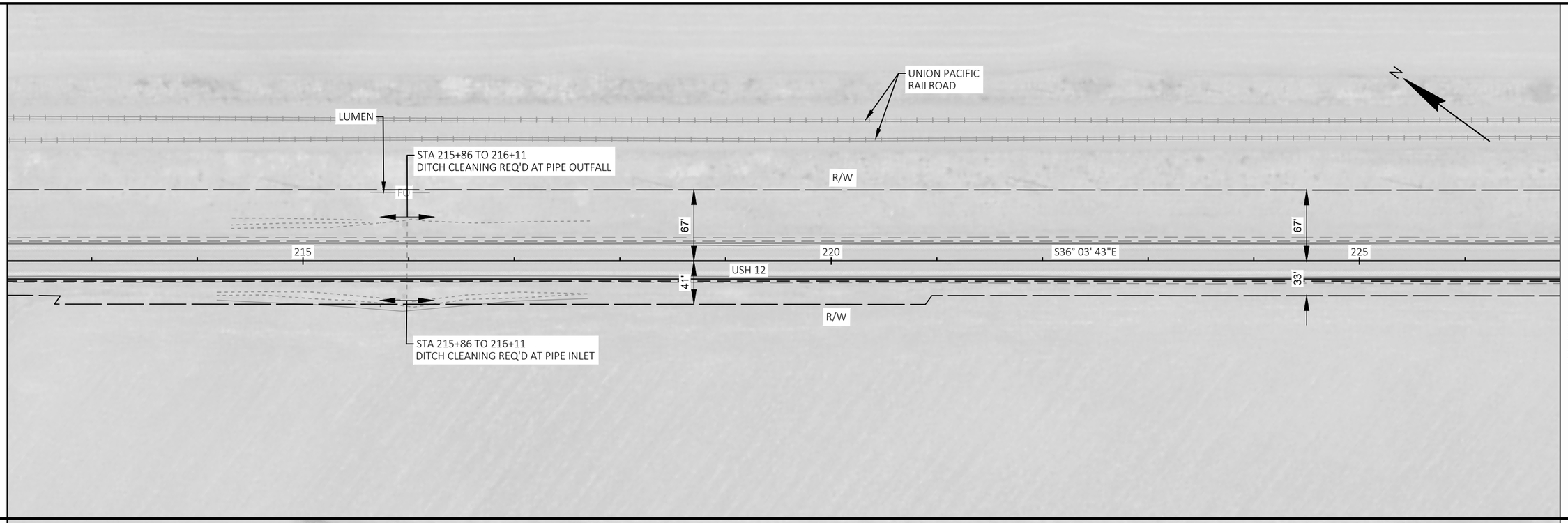

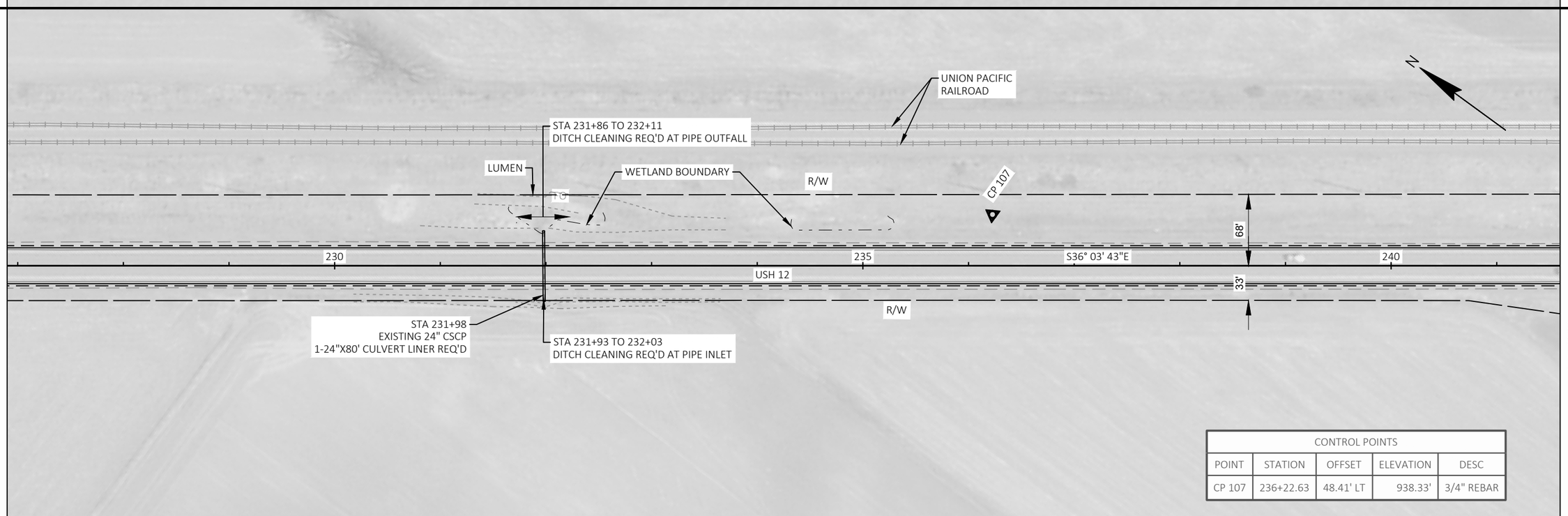

CONTROL POINTS				
POINT	STATION	OFFSET	ELEVATION	DESC
CP 107	236+22.63	48.41' LT	938.33'	3/4" REBAR

5

5

PROJECT NO: 7080-03-75	HWY: USH 12	COUNTY: EAU CLAIRE	PLAN SHEETS - USH 12	SHEET 53	E

FILE NAME : C:\OD\CORRE, INC\PROJECTS - DOCUMENTS\WI - NW REGION\7080-03-05_EAU CLAIRE CO_USH 12\500_CADD\501_C3D_2018\70800305\SHEETSPLAN\050201-PN.DWG
LAYOUT NAME - 7
PLOT DATE : 8/30/2021 5:12 PM PLOT BY : NICHOLAS WATHKE PLOT NAME : PLOT SCALE : 1 IN:100 FT

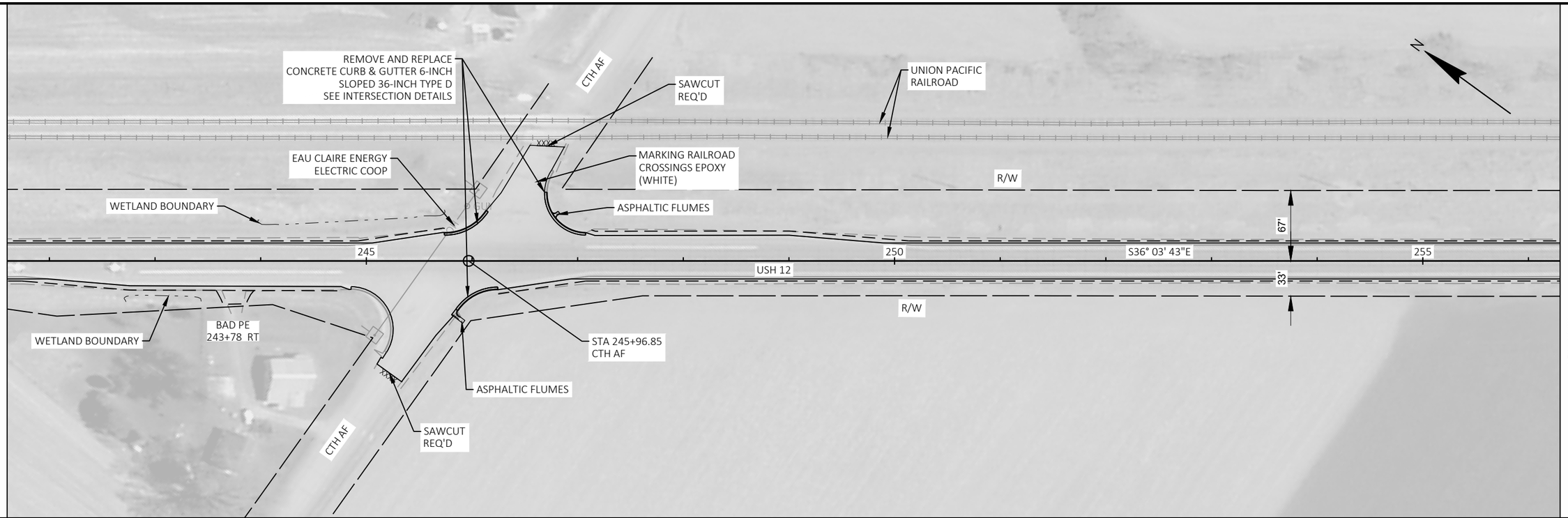

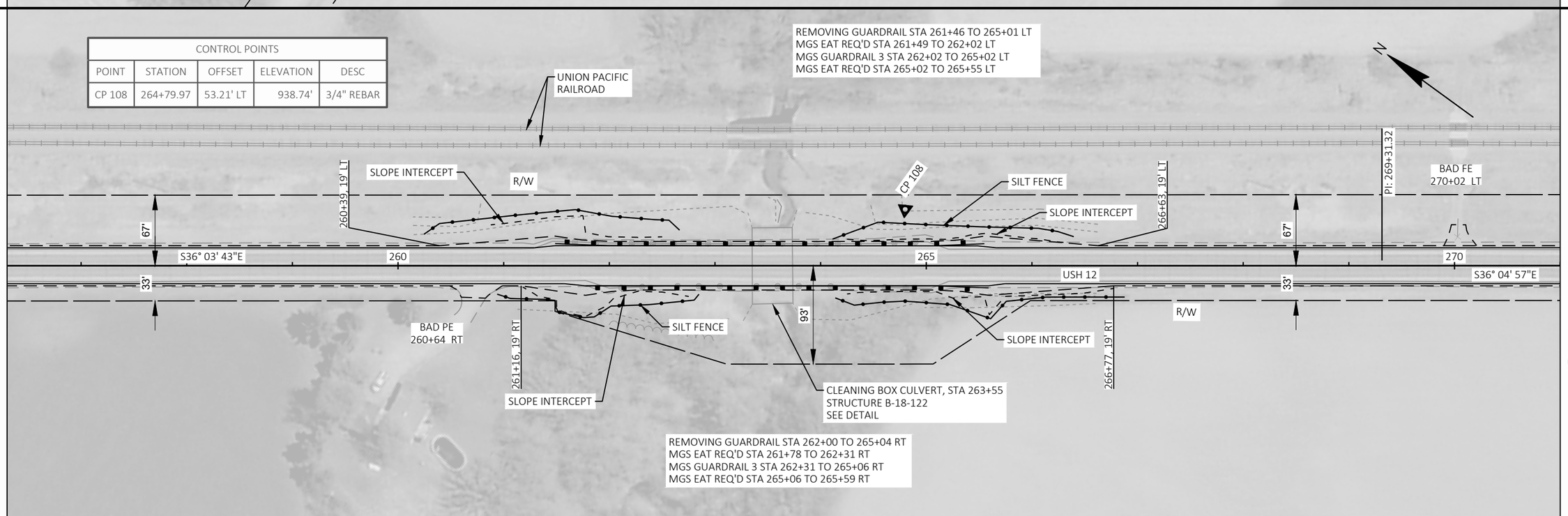

CONTROL POINTS				
POINT	STATION	OFFSET	ELEVATION	DESC
CP 108	264+79.97	53.21' LT	938.74'	3/4" REBAR

5

5

PROJECT NO: 7080-03-75	HWY: USH 12	COUNTY: EAU CLAIRE	PLAN SHEETS - USH 12	SHEET 54	E

FILE NAME : C:\OD\CORRE, INC\PROJECTS - DOCUMENTS\WI - NW REGION\7080-03-05_EAU CLAIRE CO_USH 12\500_CADD\501_C3D_2018\70800305\SHEETSPLAN\050201-PN.DWG
LAYOUT NAME - 8
PLOT DATE : 8/30/2021 5:12 PM PLOT BY : NICHOLAS WATHKE PLOT NAME : PLOT SCALE : 1 IN:100 FT

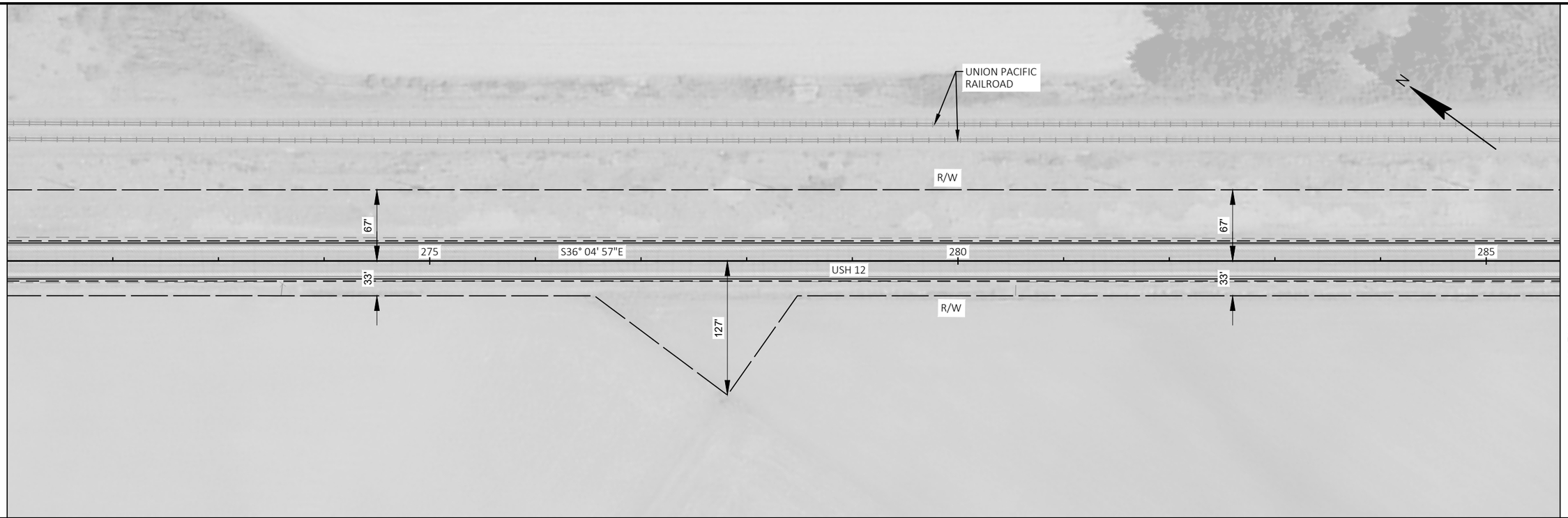

5

5

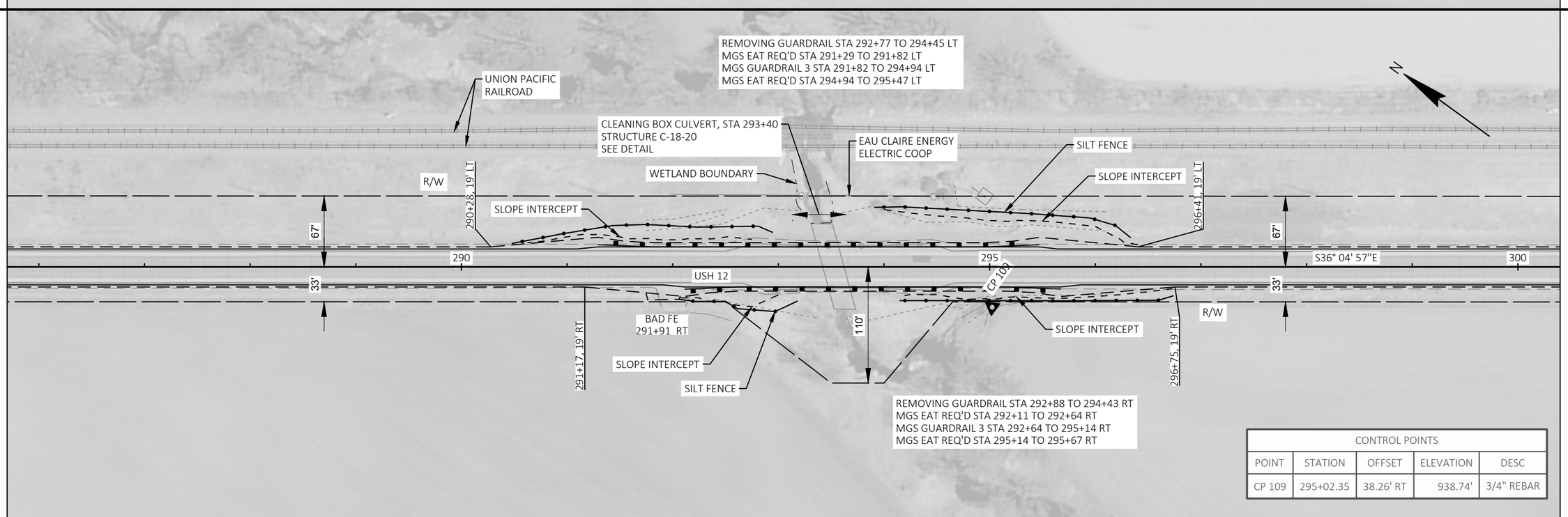

CONTROL POINTS				
POINT	STATION	OFFSET	ELEVATION	DESC
CP 109	295+02.35	38.26' RT	938.74'	3/4" REBAR

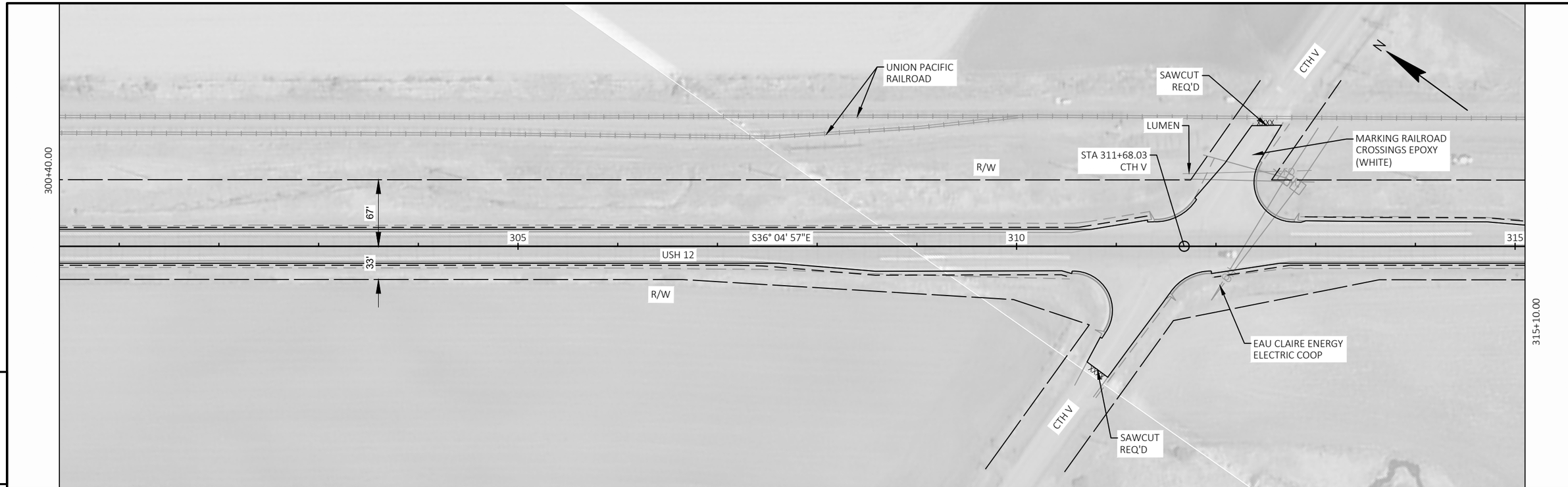

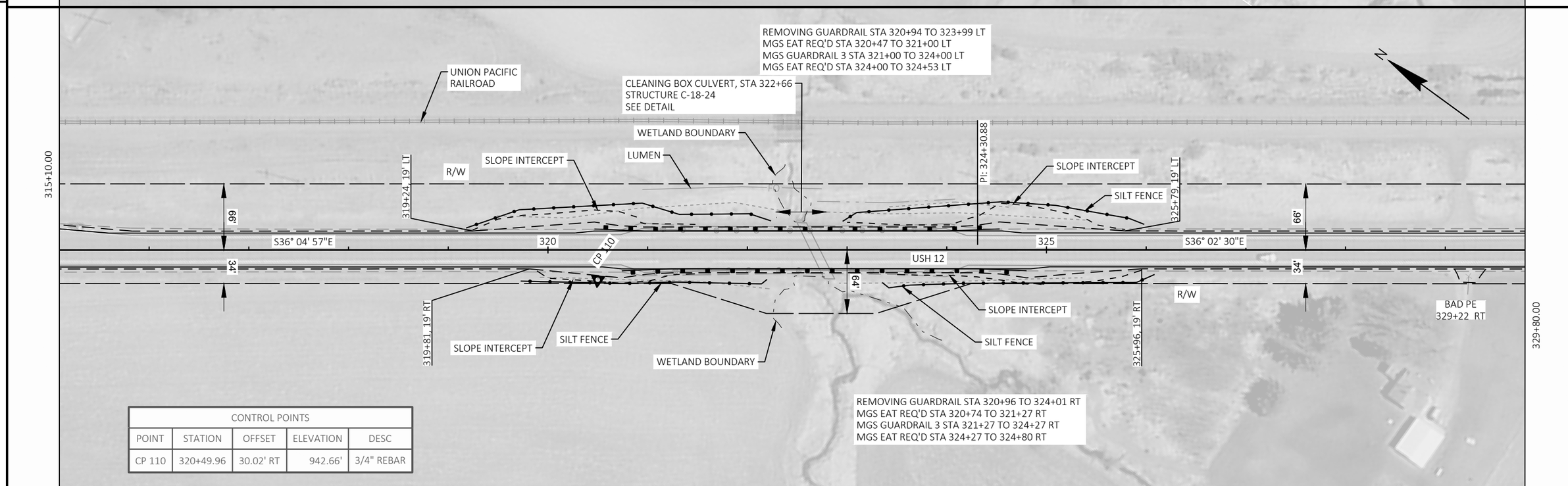

CONTROL POINTS				
POINT	STATION	OFFSET	ELEVATION	DESC
CP 110	320+49.96	30.02' RT	942.66'	3/4" REBAR

5

5

PROJECT NO: 7080-03-75	HWY: USH 12	COUNTY: EAU CLAIRE	PLAN SHEETS - USH 12	SHEET 56	E

FILE NAME : C:\OD\CORRE, INC\PROJECTS - DOCUMENTS\WI - NW REGION\7080-03-05_EAU CLAIRE CO_USH 12\500_CADD\501_C3D_2018\70800305\SHEETSPLAN\050201-PN.DWG
LAYOUT NAME - 10
PLOT DATE : 8/30/2021 5:12 PM PLOT BY : NICHOLAS WATHKE PLOT NAME : PLOT SCALE : 1 IN:100 FT

WISDOT/CADDS SHEET 44

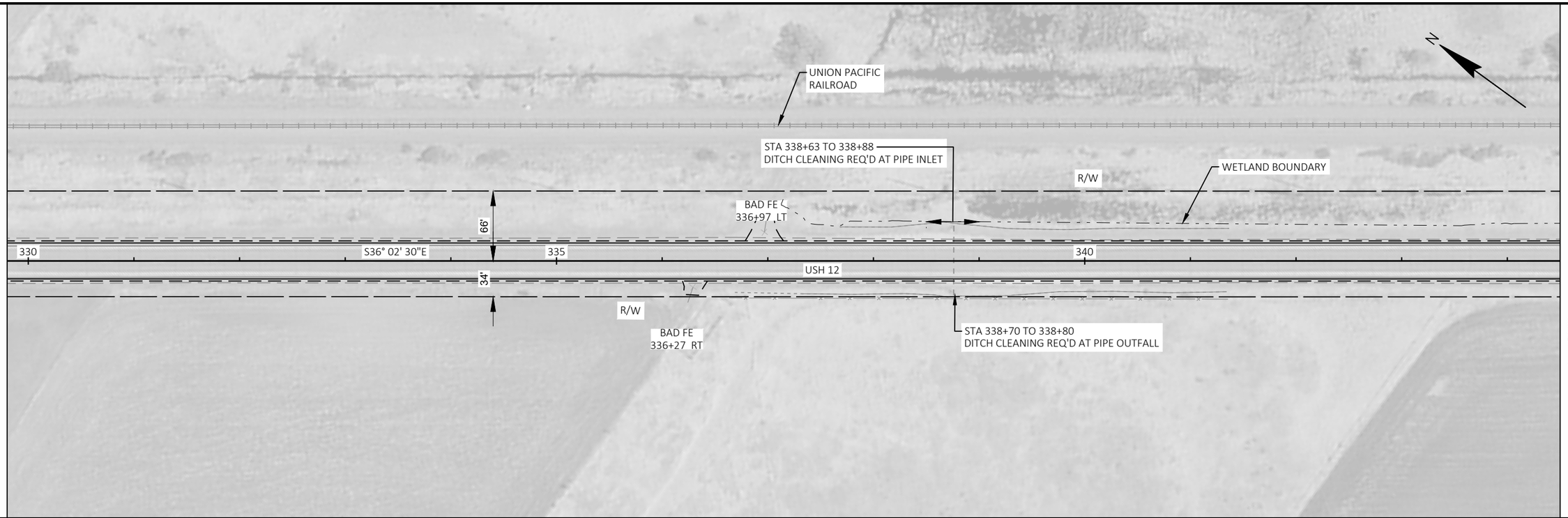

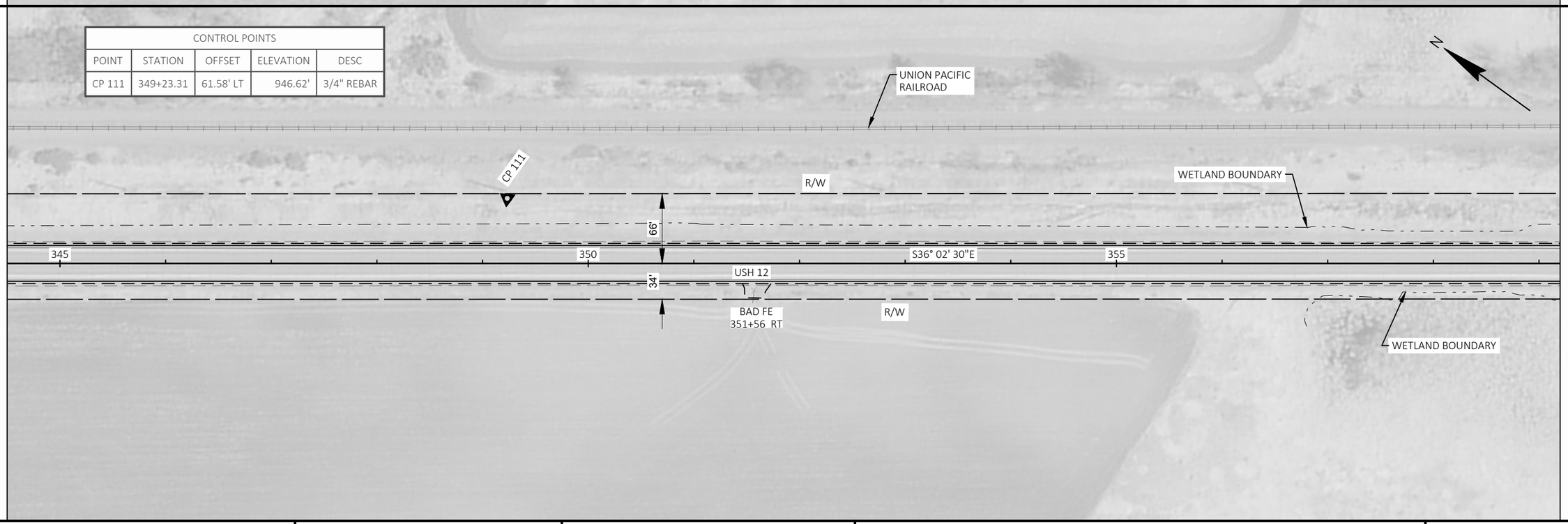

CONTROL POINTS

POINT	STATION	OFFSET	ELEVATION	DESC
CP 111	349+23.31	61.58' LT	946.62'	3/4" REBAR

5

5

PROJECT NO: 7080-03-75	HWY: USH 12	COUNTY: EAU CLAIRE	PLAN SHEETS - USH 12	SHEET 57	E

FILE NAME : C:\OD\CORRE, INC\PROJECTS - DOCUMENTS\WI - NW REGION\7080-03-05_EAU CLAIRE CO_USH 12\500_CADD\501_C3D_2018\70800305\SHEETSPLAN\050201-PN.DWG
LAYOUT NAME - 11
PLOT DATE : 8/30/2021 5:13 PM PLOT BY : NICHOLAS WATHKE PLOT NAME : PLOT SCALE : 1 IN:100 FT

WISDOT/CADDS SHEET 44

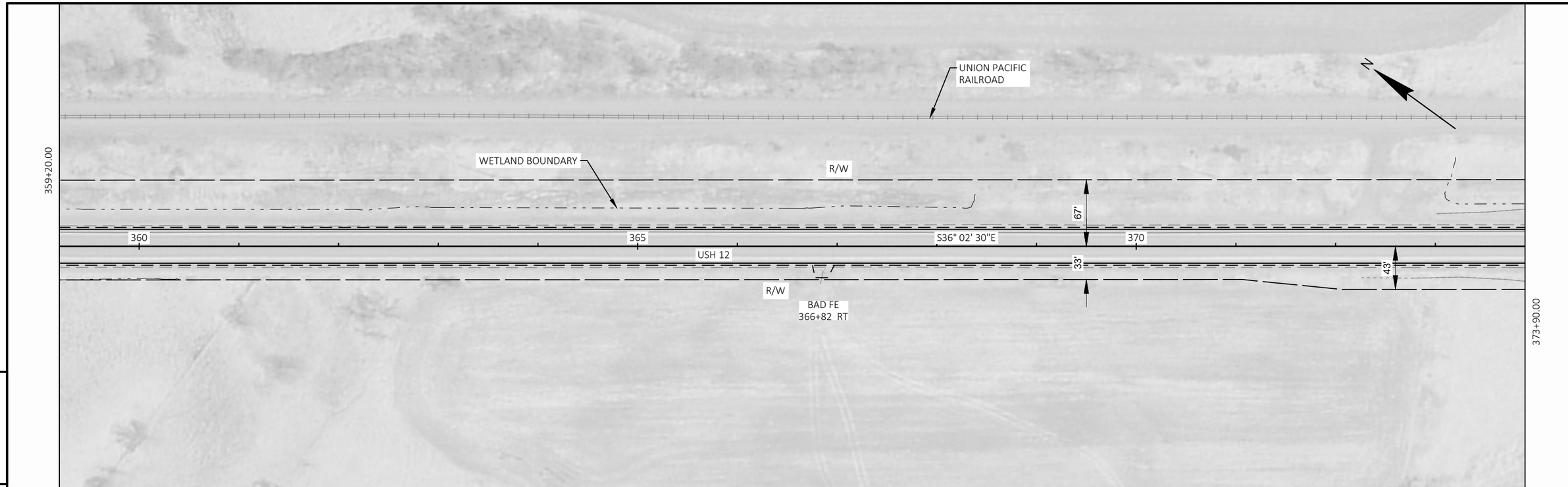

5

5

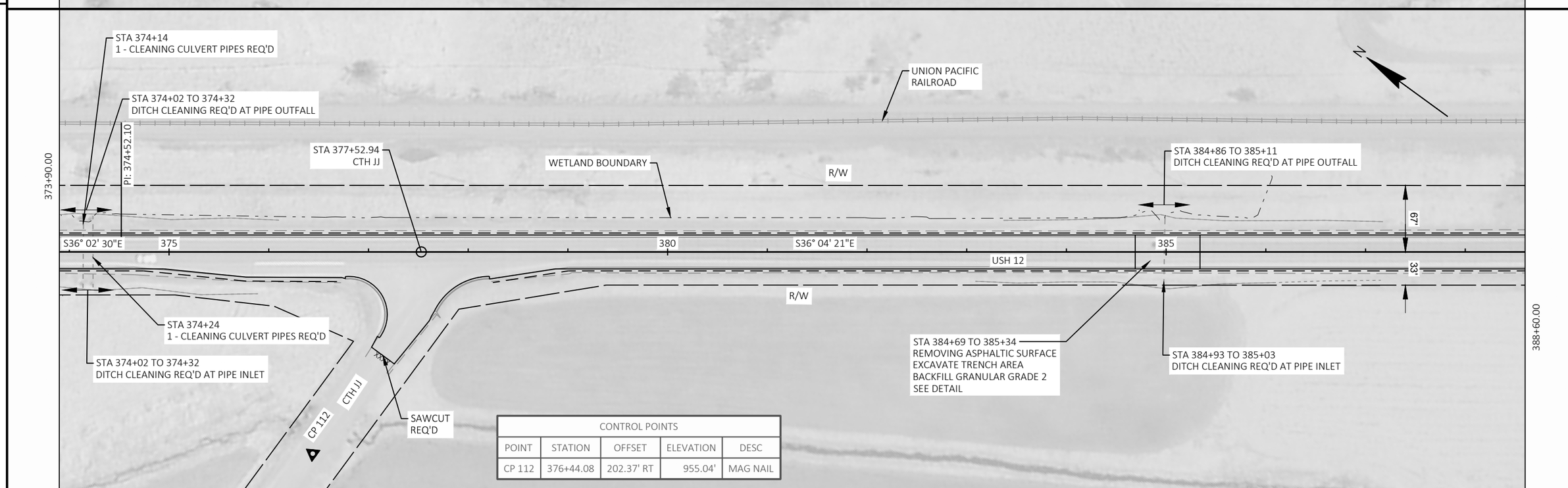

CONTROL POINTS				
POINT	STATION	OFFSET	ELEVATION	DESC
CP 112	376+44.08	202.37' RT	955.04'	MAG NAIL

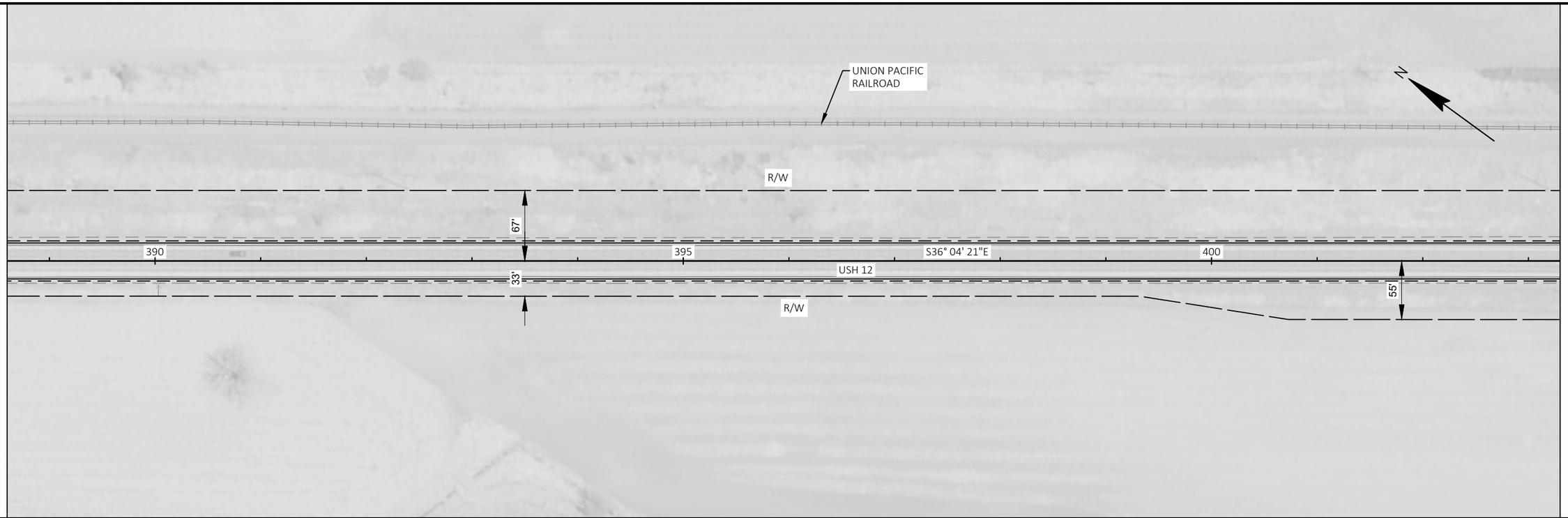

5

5

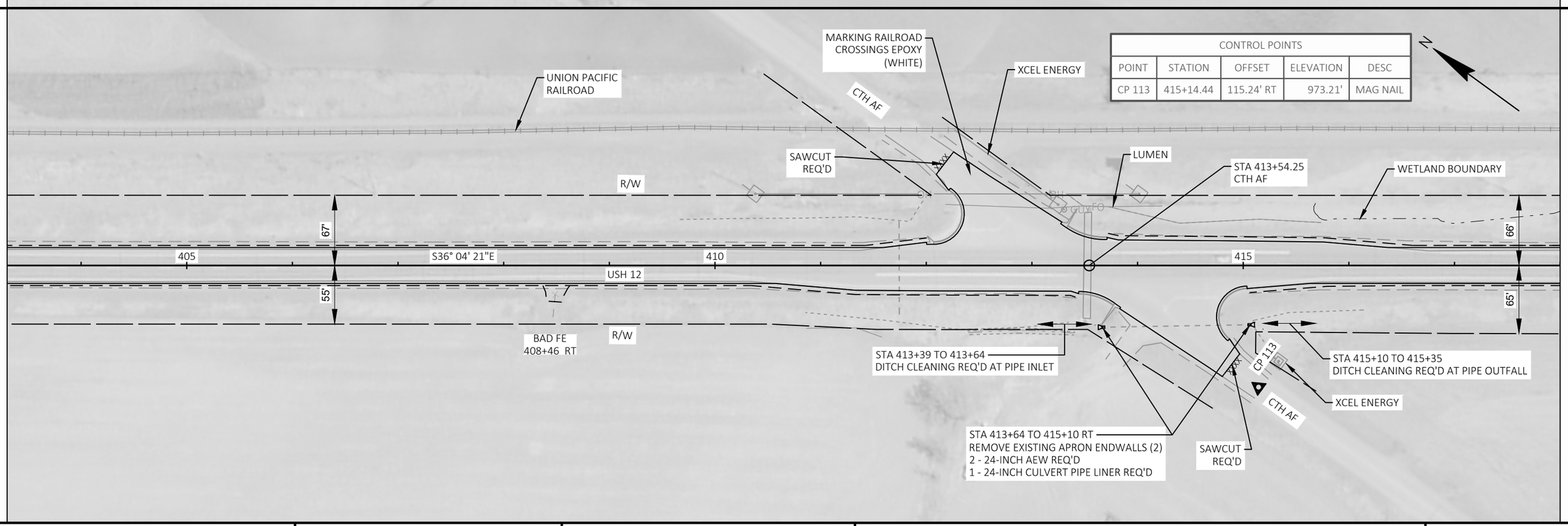

CONTROL POINTS				
POINT	STATION	OFFSET	ELEVATION	DESC
CP 113	415+14.44	115.24' RT	973.21'	MAG NAIL

PROJECT NO: 7080-03-75	HWY: USH 12	COUNTY: EAU CLAIRE	PLAN SHEETS - USH 12	SHEET 59	E

FILE NAME : C:\OD\CORRE, INC\PROJECTS - DOCUMENTS\WI - NW REGION\7080-03-05_EAU CLAIRE CO_USH 12\500_CADD\501_C3D_2018\70800305\SHEETSPLAN\050201-PN.DWG
LAYOUT NAME - 13
PLOT DATE : 8/30/2021 5:13 PM PLOT BY : NICHOLAS WATHKE PLOT NAME : PLOT SCALE : 1 IN:100 FT

WISDOT/CADDS SHEET 44

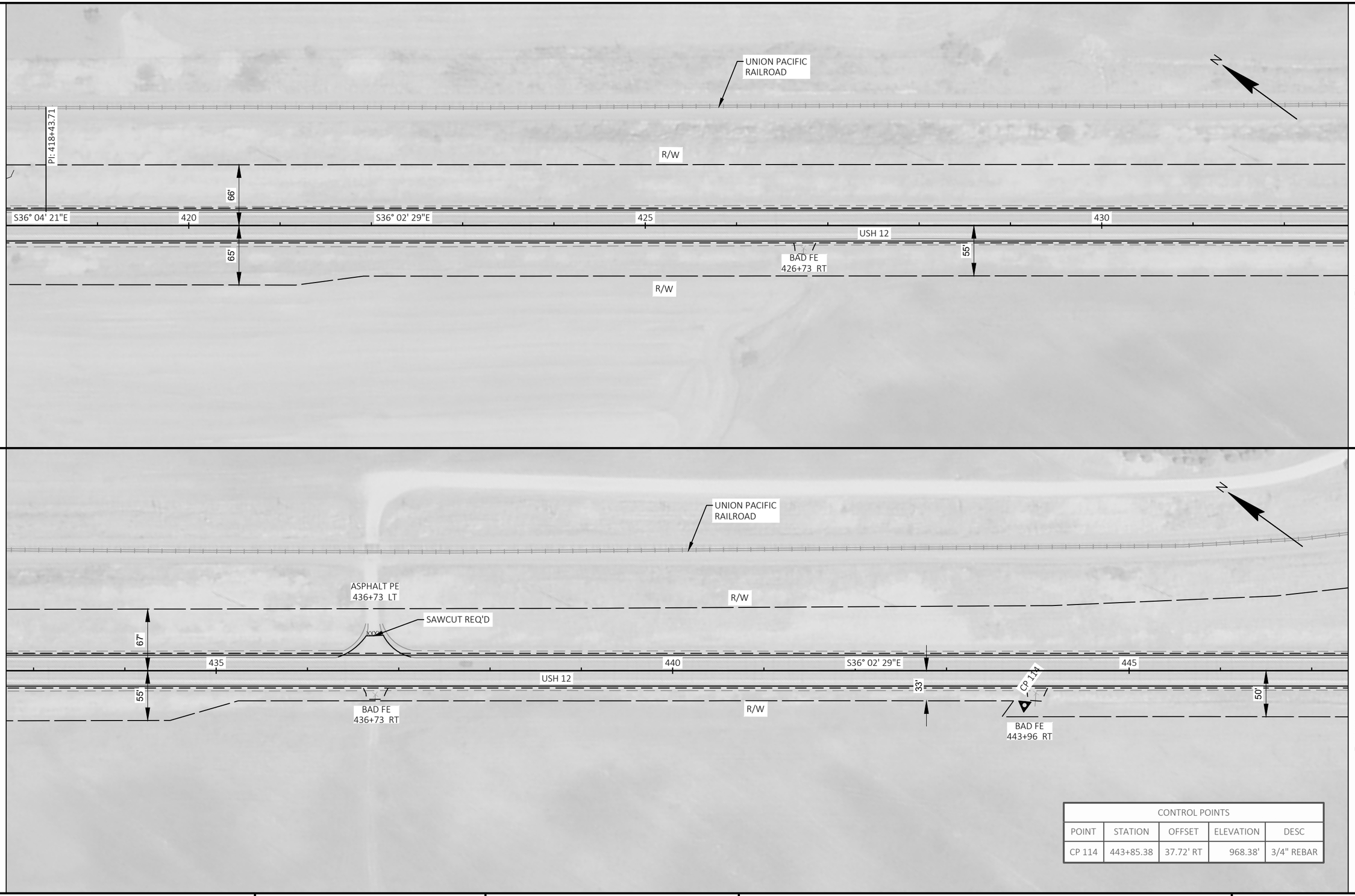

CONTROL POINTS				
POINT	STATION	OFFSET	ELEVATION	DESC
CP 114	443+85.38	37.72' RT	968.38'	3/4" REBAR

5

5

PROJECT NO: 7080-03-75	HWY: USH 12	COUNTY: EAU CLAIRE	PLAN SHEETS - USH 12	SHEET 60	E

FILE NAME : C:\OD\CORRE, INC\PROJECTS - DOCUMENTS\WI - NW REGION\7080-03-05_EAU CLAIRE CO_USH 12\500_CADD\501_C3D_2018\70800305\SHEETSPLAN\050201-PN.DWG PLOT DATE : 8/30/2021 5:13 PM PLOT BY : NICHOLAS WATHKE PLOT NAME : PLOT SCALE : 1 IN:100 FT
LAYOUT NAME - 14

WISDOT/CADDS SHEET 44

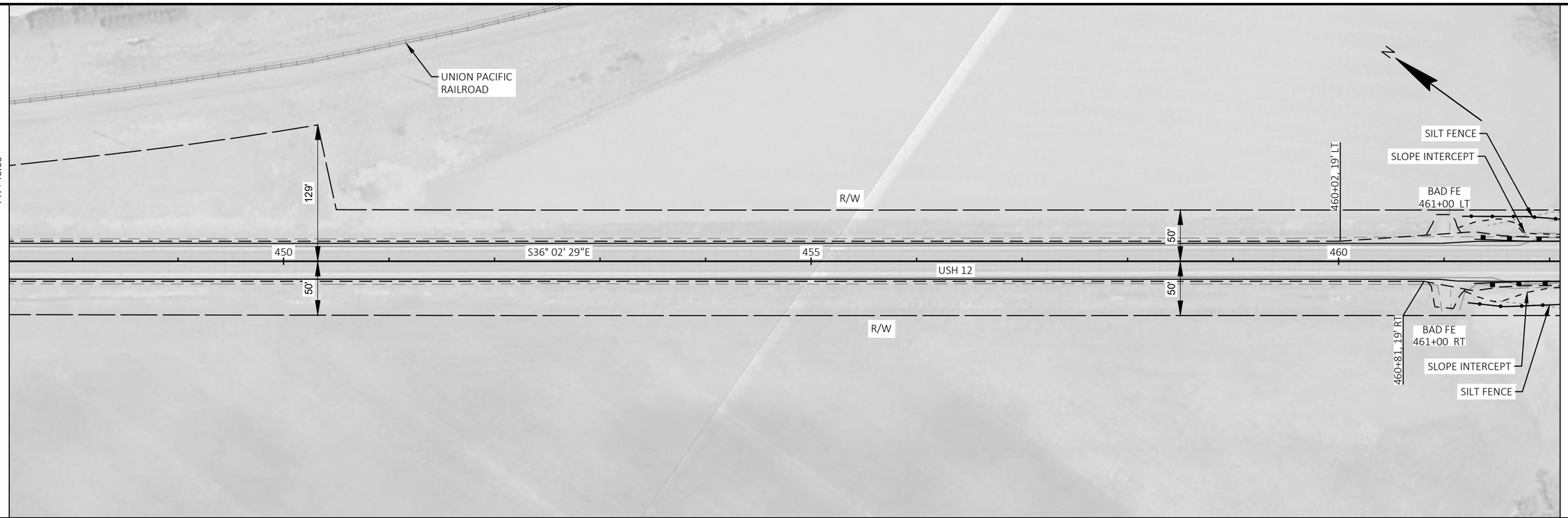

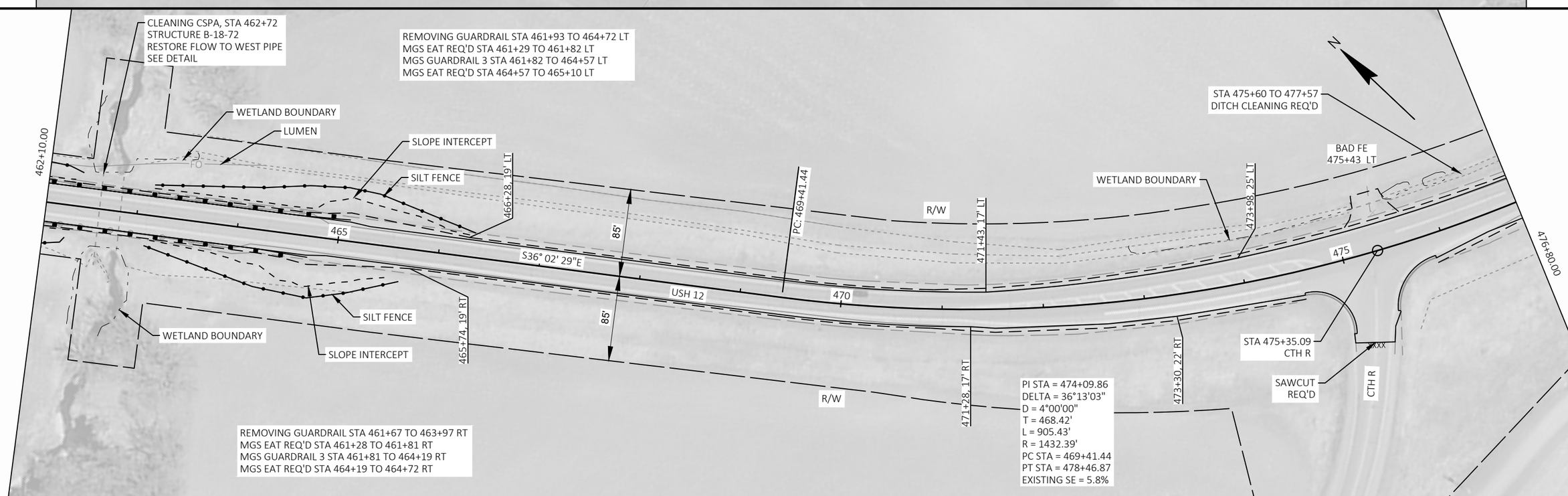

5

5

PROJECT NO: 7080-03-75	HWY: USH 12	COUNTY: EAU CLAIRE	PLAN SHEETS - USH 12	SHEET 61	E

FILE NAME : C:\OD\CORRE, INC\PROJECTS - DOCUMENTS\WI - NW REGION\7080-03-05_EAU CLAIRE CO_USH 12\500_CADD\501_C3D_2018\70800305\SHEETSPLAN\050201-PN.DWG
LAYOUT NAME - 15
PLOT DATE : 8/30/2021 5:13 PM
PLOT BY : NICHOLAS WATHKE
PLOT NAME :
PLOT SCALE : 1 IN:100 FT

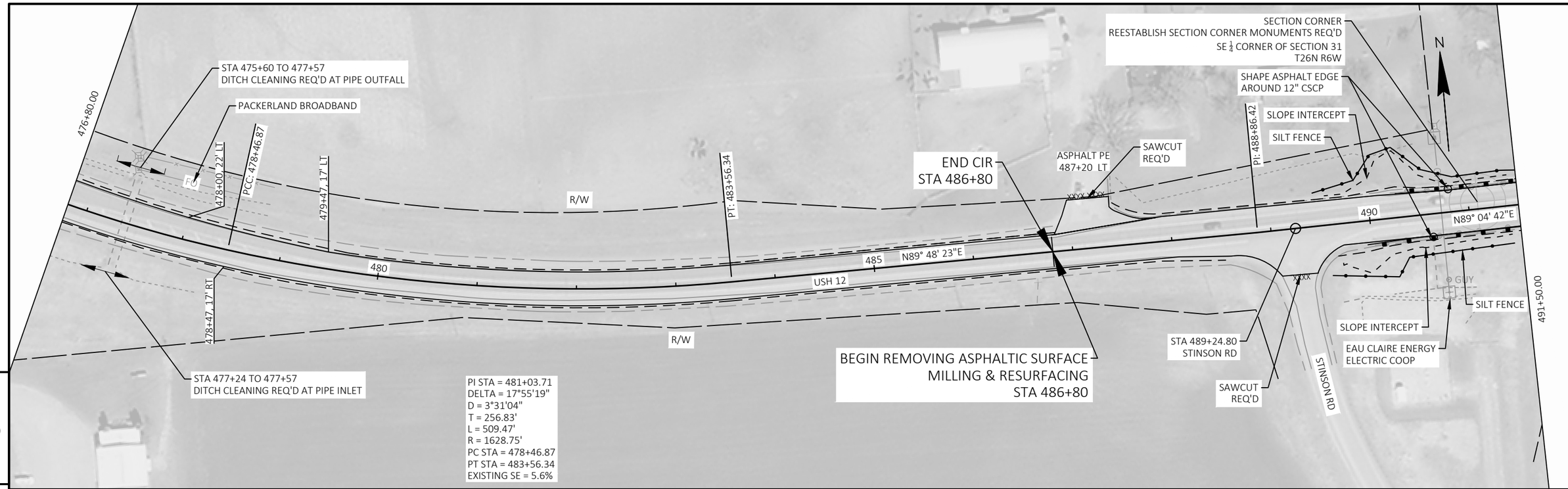

5

5

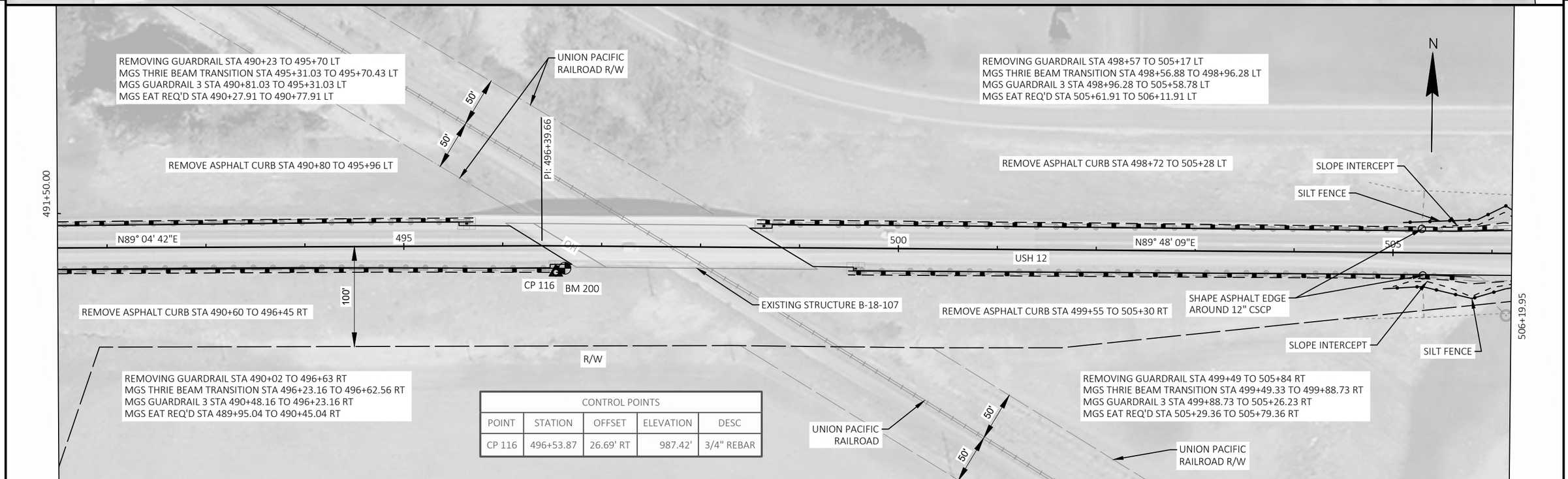

CONTROL POINTS				
POINT	STATION	OFFSET	ELEVATION	DESC
CP 116	496+53.87	26.69' RT	987.42'	3/4" REBAR

CONTROL POINTS				
POINT	STATION	OFFSET	ELEVATION	DESC
CP 117	509+43.80	126.95' RT	958.69'	MAG NAIL
CP 118	520+53.91	58.38' LT	956.80'	MAG NAIL

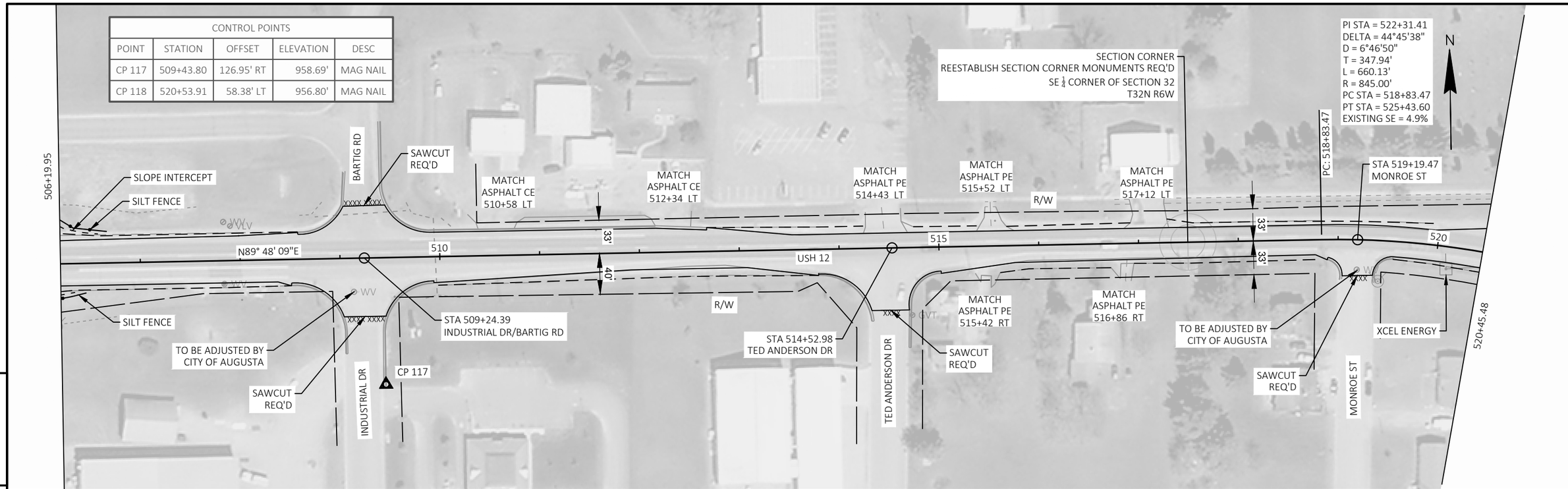

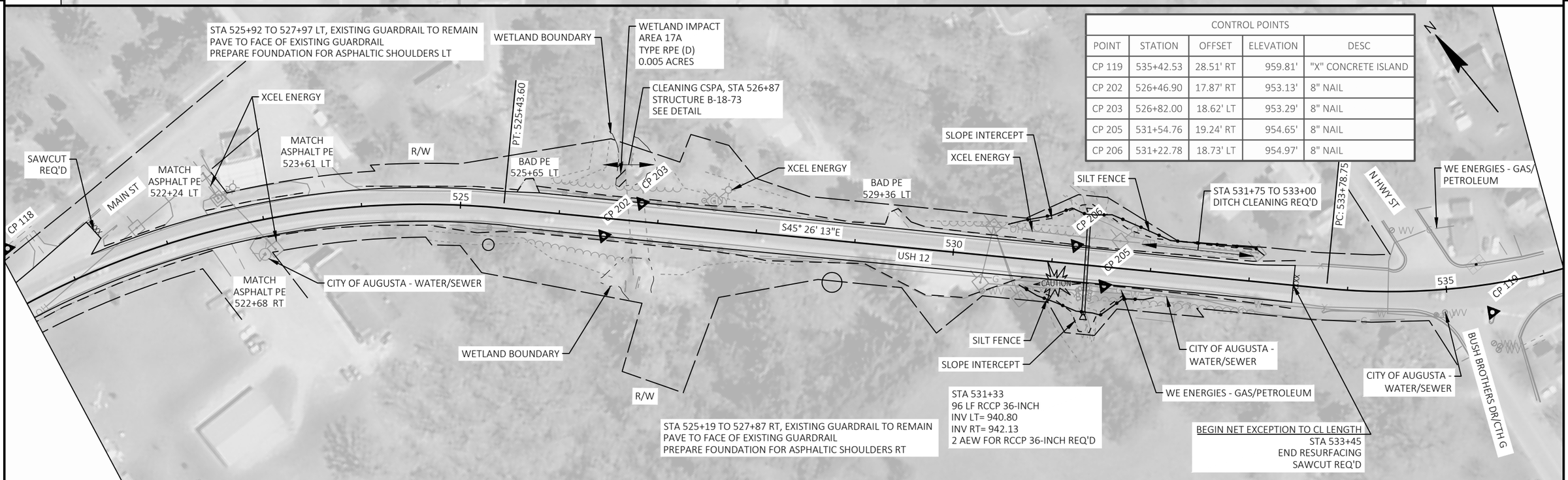

CONTROL POINTS				
POINT	STATION	OFFSET	ELEVATION	DESC
CP 119	535+42.53	28.51' RT	959.81'	"X" CONCRETE ISLAND
CP 202	526+46.90	17.87' RT	953.13'	8" NAIL
CP 203	526+82.00	18.62' LT	953.29'	8" NAIL
CP 205	531+54.76	19.24' RT	954.65'	8" NAIL
CP 206	531+22.78	18.73' LT	954.97'	8" NAIL

CONTROL POINTS				
POINT	STATION	OFFSET	ELEVATION	DESC
CP 120	589+73.75	36.46' LT	965.58'	TOP OF BOLT
CP 122	603+69.36	27.27' RT	966.88'	"X" CONCRETE ISLAND
CP 207	593+24.72	21.90' RT	962.56'	
CP 208	593+24.23	21.88' LT	963.01'	

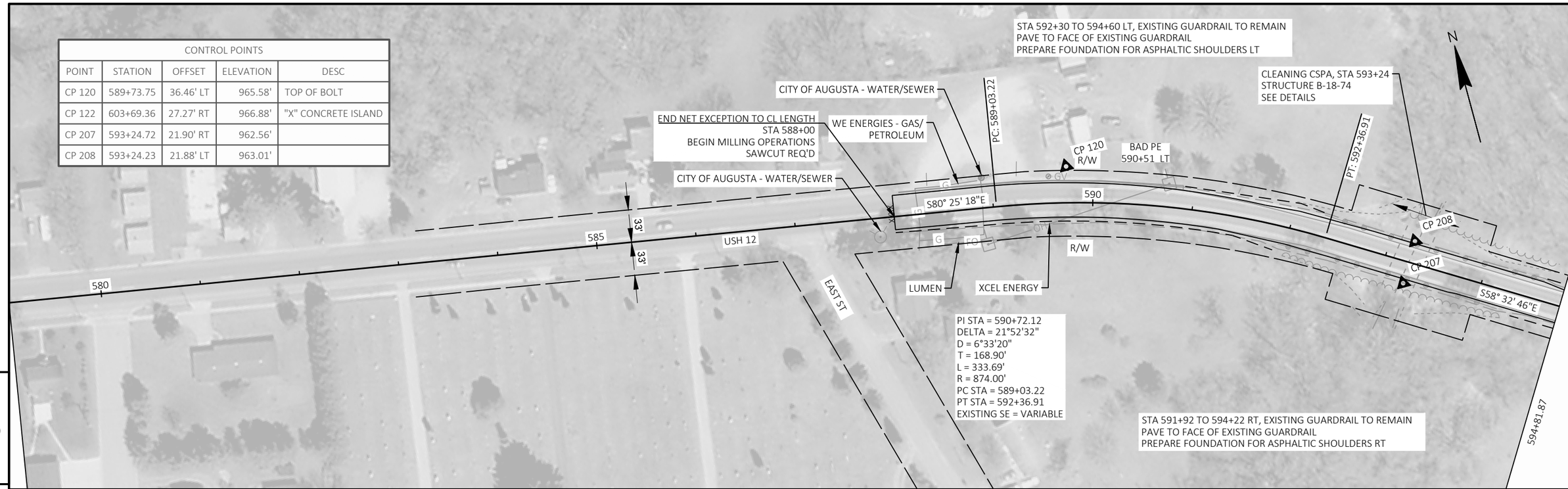

5

5

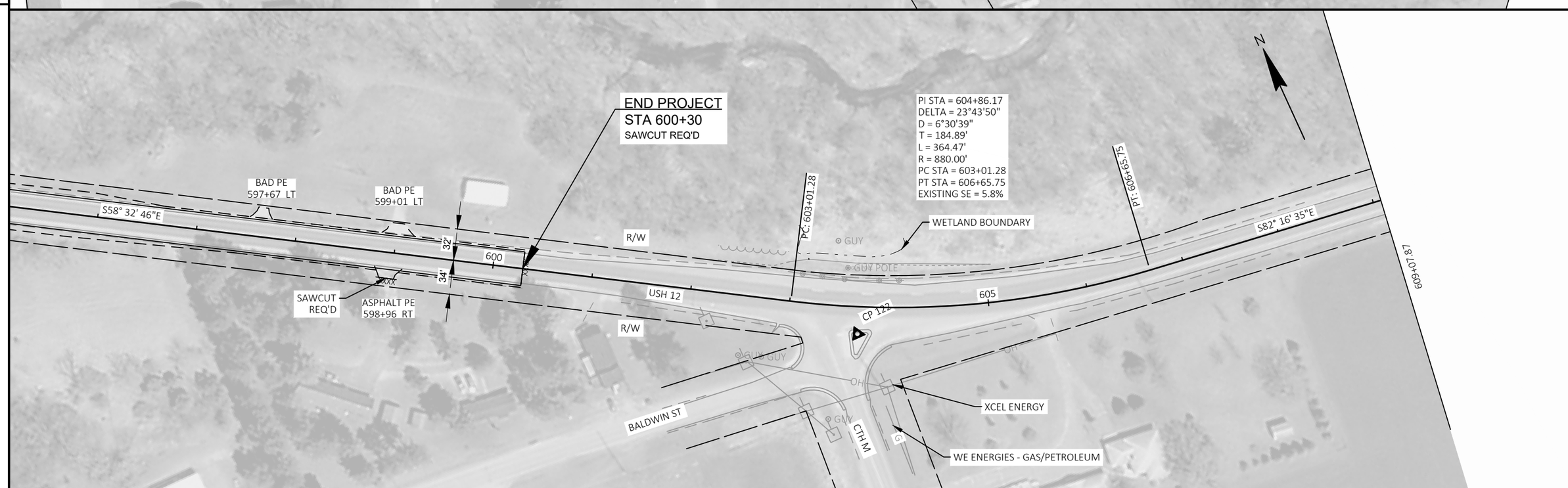

PROJECT NO: 7080-03-75	HWY: USH 12	COUNTY: EAU CLAIRE	PLAN SHEETS - USH 12	SHEET 64	E

FILE NAME : C:\OD\CORRE, INC\PROJECTS - DOCUMENTS\WI - NW REGION\7080-03-05_EAU CLAIRE CO_USH 12\500_CADD\501_C3D_2018\70800305\SHEETSPLAN\050201-PN.DWG PLOT DATE : 8/30/2021 5:13 PM PLOT BY : NICHOLAS WATHKE PLOT NAME : PLOT SCALE : ##########
LAYOUT NAME - 18

WISDOT/CADDS SHEET 44

Standard Detail Drawing List

08D01-22A	CONCRETE CURB & GUTTER
08D01-22B	CONCRETE CURB, TIES AND CURB AND GUTTER APPLICATIONS
08D04-05	CONCRETE SURFACE DRAINS & ASPHALTIC FLUMES
08E08-03	TYPICAL INSTALLATIONS OF EROSION BALES / TEMPORARY DITCH CHECKS
08E09-06	SILT FENCE
08F01-11	APRON ENDWALLS FOR CULVERT PIPE
08F04-07	JOINT TIES FOR CONCRETE PIPE AND CONCRETE COLLAR DETAIL
13A10-02A	2-LANE RURAL SHOULDER RUMBLE STRIP, MILLING
13A10-02B	2-LANE RURAL SHOULDER RUMBLE STRIP, MILLING
13A10-02C	2-LANE RURAL SHOULDER RUMBLE STRIP, MILLING
13A10-02D	2-LANE RURAL SHOULDER RUMBLE STRIP, MILLING
13A11-03A	2-LANE RURAL CENTER LINE RUMBLE STRIP, MILLING
13A11-03B	2-LANE RURAL CENTER LINE RUMBLE STRIP, MILLING
13C19-03	HMA LONGITUDINAL JOINTS
14B42-06A	MIDWEST GUARDRAIL SYSTEM (MGS) GUARDRAIL
14B42-06B	MIDWEST GUARDRAIL SYSTEM (MGS) GUARDRAIL
14B42-06C	MIDWEST GUARDRAIL SYSTEM (MGS) GUARDRAIL
14B42-06D	MIDWEST GUARDRAIL SYSTEM (MGS) GUARDRAIL
14B42-07A	MIDWEST GUARDRAIL SYSTEM (MGS) GUARDRAIL
14B42-07B	MIDWEST GUARDRAIL SYSTEM (MGS) GUARDRAIL
14B42-07C	MIDWEST GUARDRAIL SYSTEM (MGS) GUARDRAIL
14B42-07D	MIDWEST GUARDRAIL SYSTEM (MGS) GUARDRAIL
14B44-04A	MIDWEST GUARDRAIL SYSTEM ENERGY ABSORBING TERMINAL (MGS)
14B44-04B	MIDWEST GUARDRAIL SYSTEM ENERGY ABSORBING TERMINAL (MGS)
14B44-04C	MIDWEST GUARDRAIL SYSTEM ENERGY ABSORBING TERMINAL (MGS)
14B45-05A	MIDWEST GUARDRAIL SYSTEM THRIE BEAM TRANSITION (MGS)
14B45-05B	MIDWEST GUARDRAIL SYSTEM THRIE BEAM TRANSITION (MGS)
14B45-05C	MIDWEST GUARDRAIL SYSTEM THRIE BEAM TRANSITION (MGS)
14B45-05D	MIDWEST GUARDRAIL SYSTEM THRIE BEAM TRANSITION (MGS)
14B45-05E	MIDWEST GUARDRAIL SYSTEM THRIE BEAM TRANSITION (MGS)
14B45-05F	MIDWEST GUARDRAIL SYSTEM THRIE BEAM TRANSITION (MGS)
14B45-05G	MIDWEST GUARDRAIL SYSTEM THRIE BEAM TRANSITION (MGS)
14B45-05H	MIDWEST GUARDRAIL SYSTEM THRIE BEAM TRANSITION (MGS)
14B45-05I	MIDWEST GUARDRAIL SYSTEM THRIE BEAM TRANSITION (MGS)
14B45-05J	MIDWEST GUARDRAIL SYSTEM THRIE BEAM TRANSITION (MGS)
14B45-05K	MIDWEST GUARDRAIL SYSTEM THRIE BEAM TRANSITION (MGS)
14B45-05L	MIDWEST GUARDRAIL SYSTEM THRIE BEAM TRANSITION (MGS)
15A03-02A	FLEXIBLE MARKER POST FOR CULVERT END
15A03-02B	FLEXIBLE MARKER POST FOR CULVERT END
15C02-08A	BARRICADES AND SIGNS FOR MAINLINE CLOSURES
15C02-08B	BARRICADES AND SIGNS FOR VARIOUS CLOSURES
15C02-08C	DETOUR SIGNING FOR MAINLINE CLOSURES
15C04-05	TRAFFIC CONTROL, ADVANCE WARNING SIGNS 45 M.P.H. OR GREATER TWO-WAY UNDIVIDED ROAD OPEN TO TRAFFIC
15C05-05	TRAFFIC CONTROL, ADVANCE WARNING SIGNS 40 M.P.H. OR LESS
15C08-20A	LONGITUDINAL MARKING (MAINLINE)
15C08-20B	PAVEMENT MARKING (TURN LANES)
15C08-20C	PAVEMENT MARKING (TURN LANES)
15C09-12A	SIGNING AND PAVEMENT MARKING DETAILS FOR RAILROAD-HIGHWAY GRADE CROSSINGS
15C11-09B	CHANNELIZING DEVICES DRUMS, CONES, BARRICADES AND VERTICAL PANELS
15C12-07	TRAFFIC CONTROL FOR LANE CLOSURE WITH FLAGGING OPERATION
15C18-05A	MEDIAN ISLAND MARKING
15C19-06A	MOVING PAVEMENT MARKING OPERATION TWO-LANE TWO-WAY ROADWAY
15C33-04	STOP LINE AND CROSSWALK PAVEMENT MARKING
15D28-04	TRAFFIC CONTROL, WORK ON SHOULDER OR PARKING LANE, UNDIVIDED ROADWAY
15D51-01	TRAFFIC CONTROL, MOBILE OPERATIONS ON AN UNDIVIDED ROADWAY
16A01-07	LANDMARK REFERENCE MONUMENTS AND COVERS

6

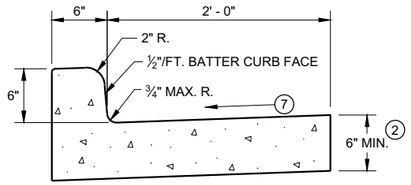

TYPES A[1] & D

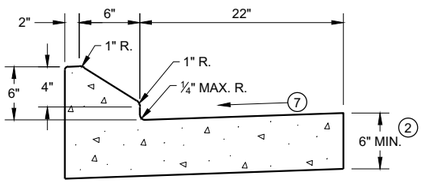

6" SLOPED CURB TYPES G[1] & J

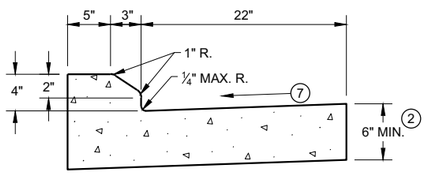

4" SLOPED CURB TYPES G[1] & J

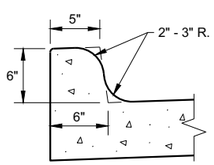

TYPES K[1] & L
(OPTIONAL CURB SHAPE)

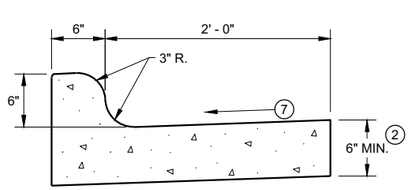

TYPES K[1] & L

CONCRETE CURB AND GUTTER 30"

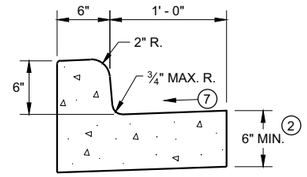

TYPES A[1] & D

CONCRETE CURB AND GUTTER 18"

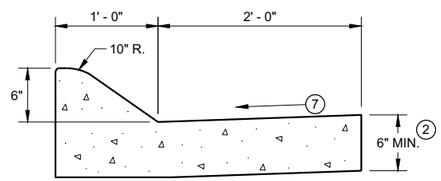

6" SLOPED CURB TYPES A[1] & D

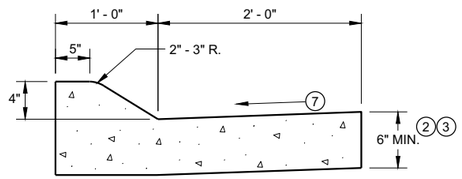

4" SLOPED CURB TYPES A[1] & D

CONCRETE CURB AND GUTTER 36"

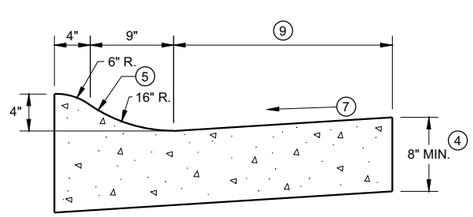

4" SLOPED CURB TYPES R[1] & T

TBT & TBTT	X
30"	22"
36"	28"

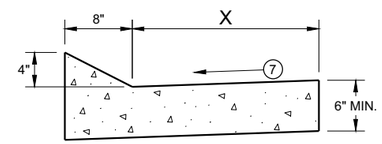

TYPES TBT & TBTT[1]

CONCRETE CURB AND GUTTER

PAVEMENT THICKNESS AND MAXIMUM CONCRETE PANEL WIDTH TABLE

PAVEMENT THICKNESS	MAXIMUM PANEL WIDTH
LESS THAN 10"	12'
10" & ABOVE	15'

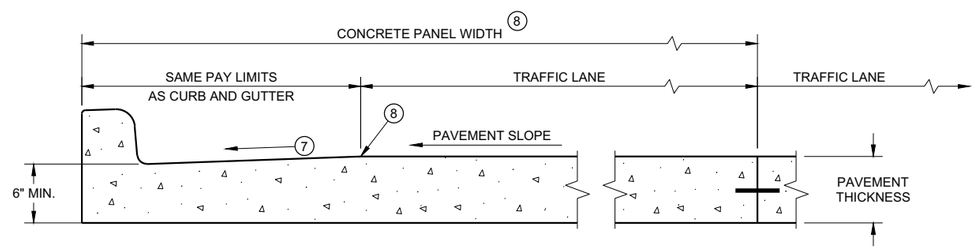

PARTIAL SECTION OF PAVEMENT *
WITH INTEGRAL CURB AND GUTTER

* BIKE LANE IS NOT SHOWN

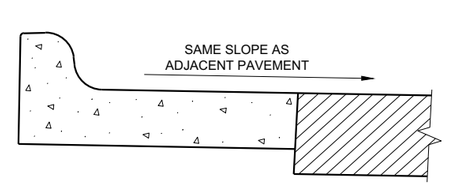

REVERSE SLOPE GUTTER[6]
(TYPICAL FOR ALL CURB & GUTTER TYPES)

GENERAL NOTES

DETAILS OF CONSTRUCTION AND WORKMANSHIP NOT SHOWN ON THIS DRAWING SHALL CONFORM TO THE PERTINENT REQUIREMENTS OF THE CONTRACT.

PAVEMENT TIES AND TIE BARS SHALL BE EPOXY COATED IN CONFORMANCE WITH SUBSECTION 505.2.6.2 OF THE STANDARD SPECIFICATIONS.

INTEGRAL CURB AND GUTTER SHALL CONFORM TO THE DETAILS SHOWN FOR CONCRETE CURB AND GUTTER INCLUDING THE TRANSVERSE GUTTER SLOPE.

UNLESS OTHERWISE SHOWN ON THE TYPICAL CROSS SECTIONS, THE BASE AGGREGATE AND COMMON EXCAVATION LIMITS ARE 2' - 0" BEHIND THE BACK OF CURBS.

1. TIE BARS ARE REQUIRED FOR CURB AND GUTTERS TYPES A, G, K, R, AND TBTT.
2. THE BOTTOM OF CURB AND GUTTER MAY BE CONSTRUCTED EITHER LEVEL OR PARALLEL TO THE SLOPE OF THE SUBGRADE OR BASE AGGREGATE PROVIDED A 6" MINIMUM GUTTER THICKNESS IS MAINTAINED.
3. USE 8" MINIMUM GUTTER THICKNESS WHEN USED WITH AN ADJACENT CONCRETE TRUCK APRON PLACED BEHIND BACK OF CURB.
4. THE BOTTOM OF CURB AND GUTTER MAY BE CONSTRUCTED EITHER LEVEL OR PARALLEL TO THE SLOPE OF THE SUBGRADE OR BASE AGGREGATE PROVIDED A 8" MINIMUM GUTTER THICKNESS IS MAINTAINED.
5. UNLESS OTHERWISE NOTED, FOR STAKING PURPOSES THE FACE OF CURB IS 6" FROM THE BACK OF CURB.
6. WHEN REVERSE SLOPE GUTTER IS REQUIRED, THE LOCATION(S) WILL BE SHOWN ELSEWHERE IN THE PLAN.
7. USE 4% GUTTER CROSS SLOPE UNLESS OTHERWISE NOTED IN THE PLANS.
8. INCLUDE LONGITUDINAL JOINT AND TIE BARS ALONG LANE EDGE WHEN CONCRETE PANEL WIDTH EXCEEDS THE MAXIMUM WIDTH PER TABLE BELOW. LONGITUDINAL JOINT(S) ARE NOT ALLOWED WITHIN TRAFFIC LANES AND BIKE LANES. LONGITUDINAL JOINT MAY BE SAWED.
9. CONCRETE CURB AND GUTTER 4-INCH SLOPED 30-INCH TYPE "R" AND "T" = 17 INCHES
   CONCRETE CURB AND GUTTER 4-INCH SLOPED 36-INCH TYPE "R" AND "T" = 23 INCHES

CONCRETE CURB AND GUTTER

STATE OF WISCONSIN
DEPARTMENT OF TRANSPORTATION

GENERAL NOTES

DETAILS OF CONSTRUCTION AND WORKMANSHIP NOT SHOWN ON THIS DRAWING SHALL CONFORM TO THE PERTINENT REQUIREMENTS OF THE CONTRACT.

PAVEMENT TIES AND TIE BARS SHALL BE EPOXY COATED IN CONFORMANCE WITH SUBSECTION 505.2.6.2 OF THE STANDARD SPECIFICATIONS.

UNLESS OTHERWISE SHOWN ON THE TYPICAL CROSS SECTIONS, THE BASE AGGREGATE AND COMMON EXCAVATION LIMITS ARE 2' - 0" BEHIND THE BACK OF CURBS.

(1) TIE BARS ARE REQUIRED FOR CURB AND GUTTERS TYPES A, G, K, R, AND TBTT.

(2) THE BOTTOM OF CURB AND GUTTER MAY BE CONSTRUCTED EITHER LEVEL OR PARALLEL TO THE SLOPE OF THE SUBGRADE OR BASE AGGREGATE PROVIDED A 6" MINIMUM GUTTER THICKNESS IS MAINTAINED.

(9) REFER TO SDD 08D18 AND 08D19 FOR ADDITIONAL DRIVEWAY ENTRANCE CURB DETAILS.

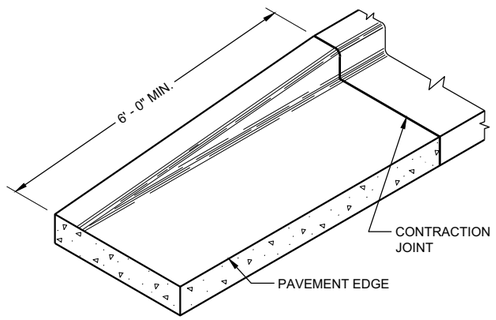

END SECTIONCURB AND GUTTER

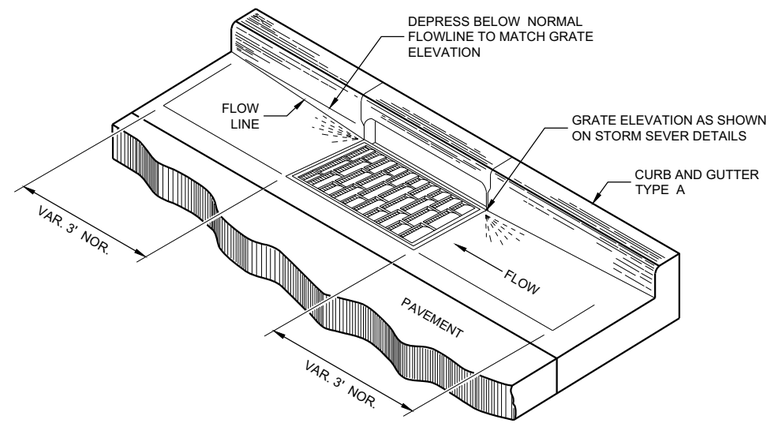

DETAIL OF CURB AND GUTTER AT INLETS
(TYPICAL H INLET COVER SHOWN)

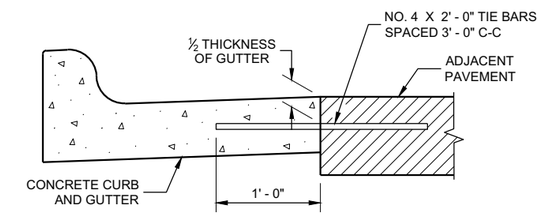

TYPICAL TIE BAR LOCATION (1)

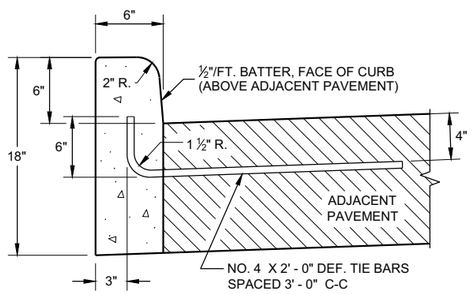

TYPES A (1) & D

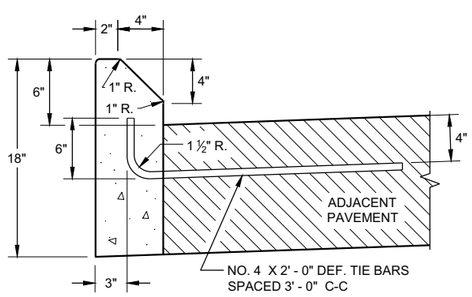

TYPES G (1) & J

CONCRETE CURB

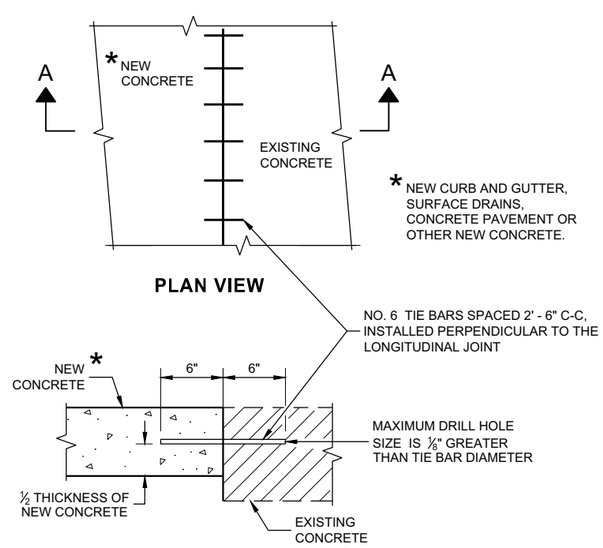

PLAN VIEW

SECTION A - A

TIE BARS DRILLED INTO EXISTING PAVEMENT

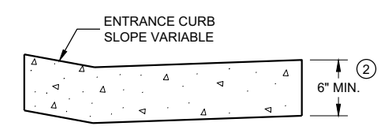

DRIVEWAY ENTRANCE CURB (9)
(WHEN DIRECTED BY THE ENGINEER)

CONCRETE CURB, TIES AND CURB AND GUTTER APPLICATIONS

STATE OF WISCONSIN
DEPARTMENT OF TRANSPORTATION

APPROVED
February 2021 — DATE
/S/ Rodnery Taylor — ROADWAY STANDARDS DEVE ENGINEER
FHWA

6

SDD 08D01 - 22b

GENERAL NOTES

DETAILS OF CONSTRUCTION, MATERIALS AND WORKMANSHIP NOT SHOWN ON THIS DRAWING SHALL CONFORM TO PERTINENT REQUIREMENTS OF THE STANDARD SPECIFICATIONS AND APPLICABLE SPECIAL PROVISIONS.

WELDED STEEL WIRE FABRIC SHALL BE IN ACCORDANCE WITH AASHTO SPECIFICATION M55.

① JOINTS SHALL BE 1/8 TO 1/4 INCH WIDE BY 1 1/2 INCHES DEEP AND SPACED AT UNIFORM INTERVALS OF APPROXIMATELY 4 FEET.

② GEOTEXTILE FABRIC TYPE "R" SHALL UNDERLAY THE FULL LENGTH AND WIDTH OF THE CONCRETE SURFACE DRAIN AND RIPRAP.

③ CONCRETE SURFACE DRAIN WITHOUT CURB AND GUTTER MAY BE USED ON BACKSLOPES WHEN SPECIFIED

ASPHALTIC FLUME

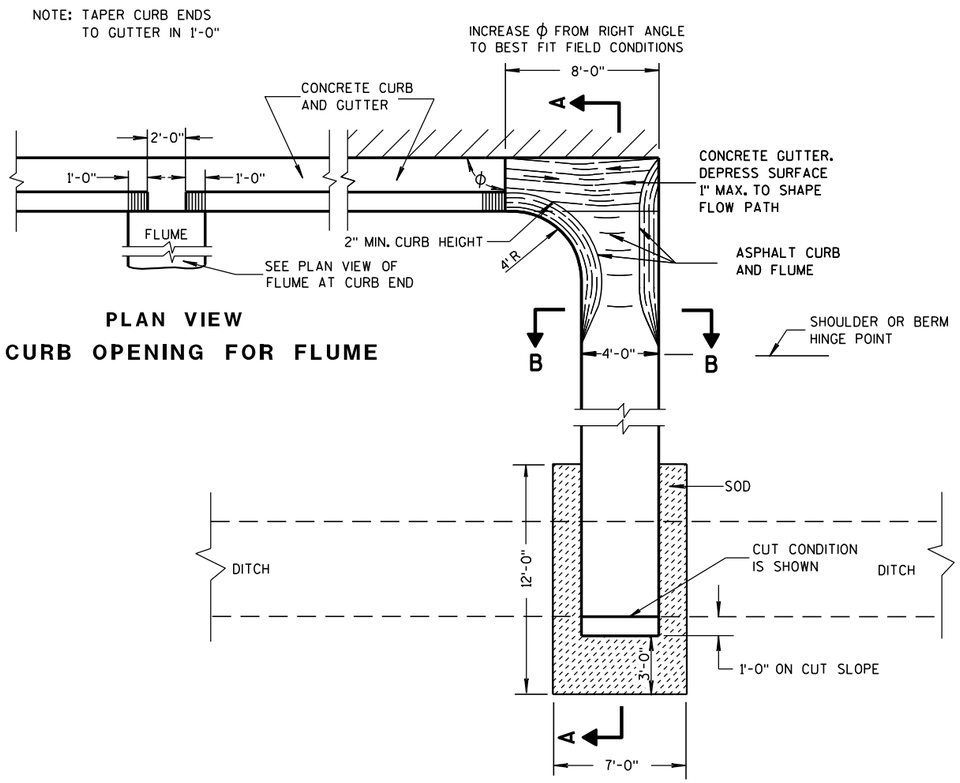

PLAN VIEW
CURB OPENING FOR FLUME

PLAN VIEW
FLUME AT CURB END

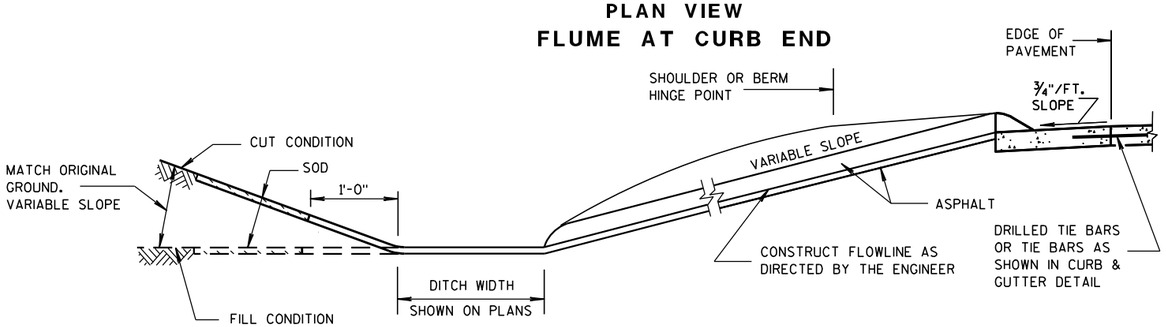

SECTION A-A

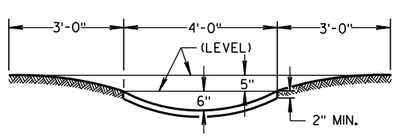

SECTION B-B

③ CONCRETE SURFACE DRAIN

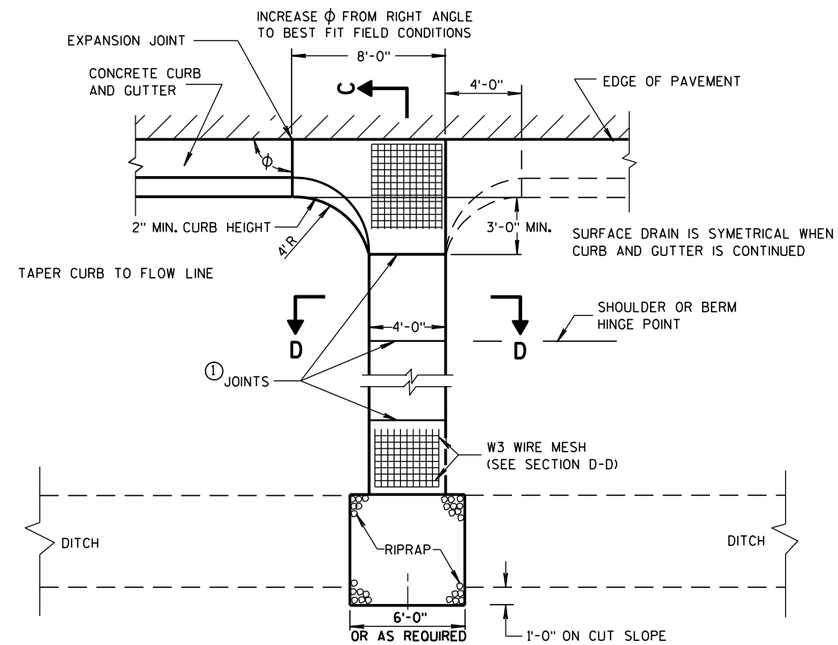

PLAN VIEW

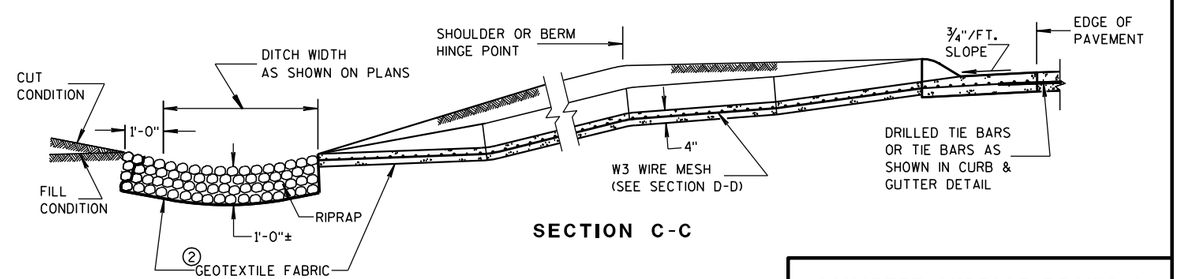

SECTION C-C

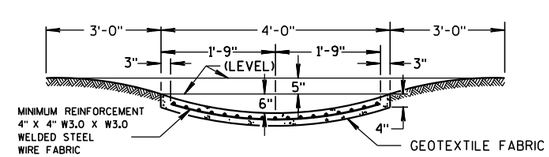

SECTION D-D

CONCRETE SURFACE DRAINS & ASPHALTIC FLUMES

STATE OF WISCONSIN
DEPARTMENT OF TRANSPORTATION

APPROVED
9-4-08 /S/ Jerry H. Zogg
DATE ROADWAY STANDARDS ENGINEER MENT
FHWA

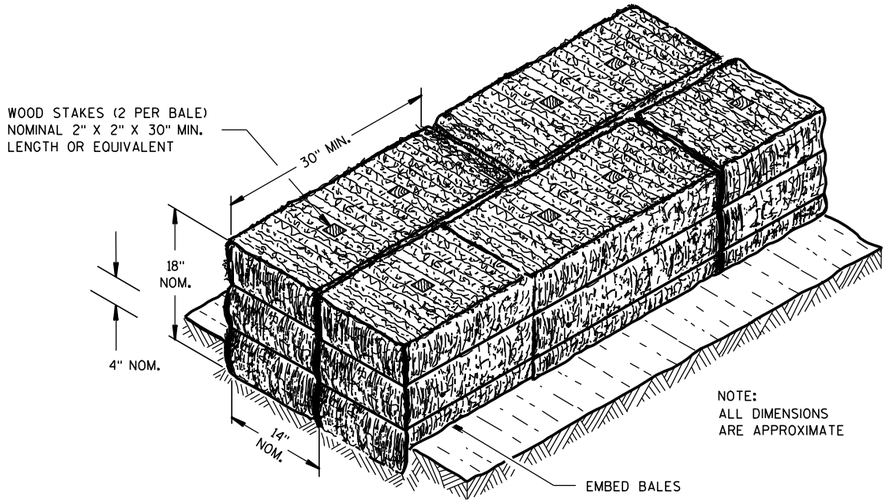

SECTION A-A

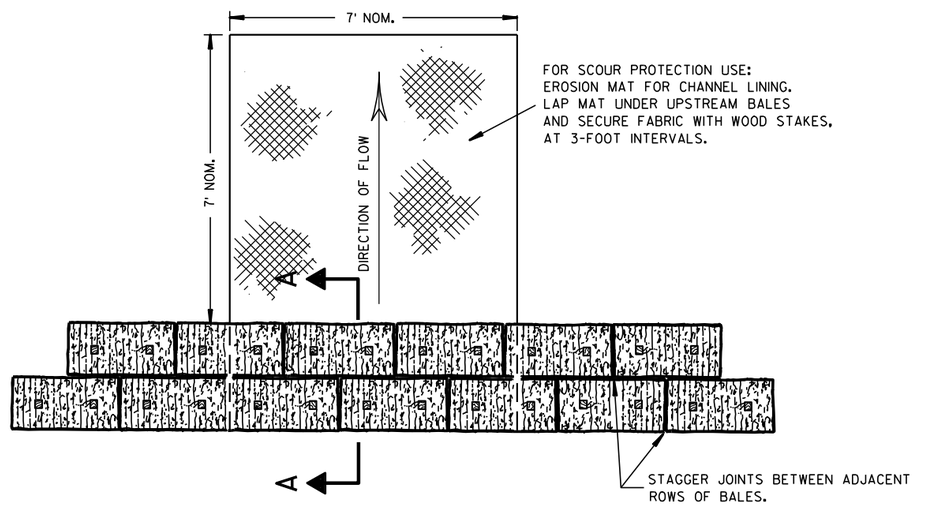

PLAN VIEW

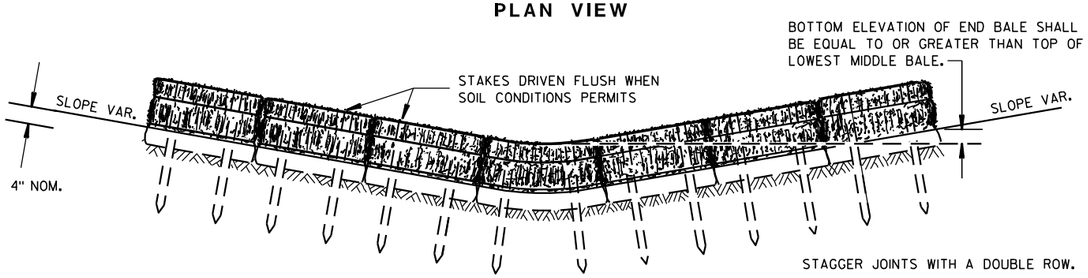

FRONT ELEVATION

TEMPORARY DITCH CHECK USING EROSION BALES ①

GENERAL NOTES

DETAILS OF CONSTRUCTION, MATERIALS AND WORKMANSHIP NOT SHOWN ON THIS DRAWING SHALL CONFORM TO THE PERTINENT REQUIREMENTS OF THE STANDARD SPECIFICATIONS AND THE APPLICABLE SPECIAL PROVISIONS.

① TEMPORARY DITCH CHECKS EITHER EROSION BALES OR MANUFACTURED SHALL BE PAID FOR UNDER THE BID ITEM OF TEMPORARY DITCH CHECK. THE DEPARTMENT WILL NOT PAY FOR TEMPORARY DITCH CHECKS CONSTRUCTED OF A SINGLE ROW OF EROSION BALES.

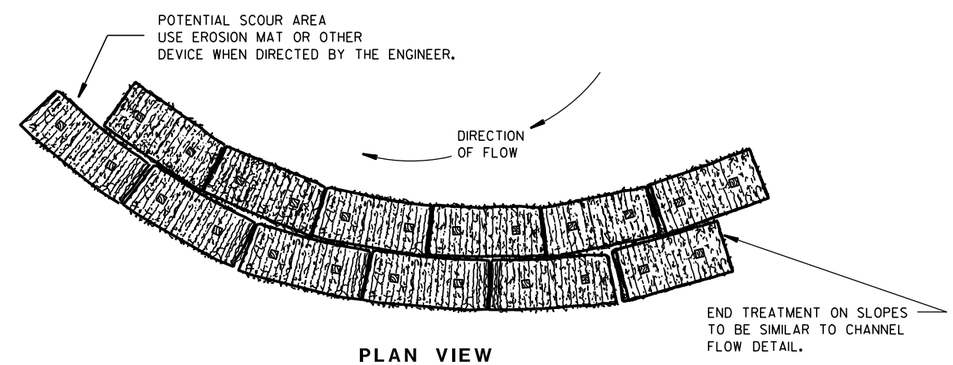

PLAN VIEW

WHEN ALTERING THE DIRECTION OF FLOW

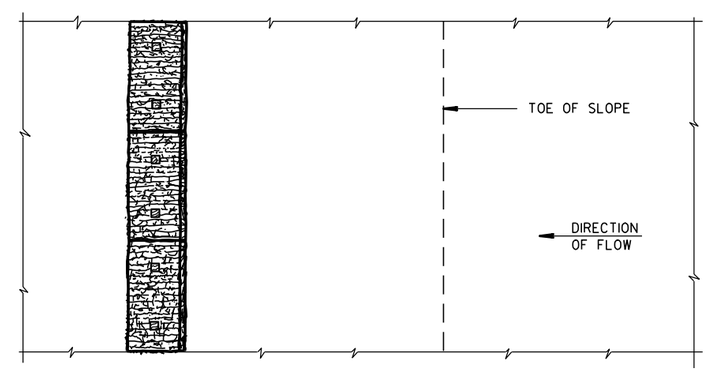

PLAN VIEW

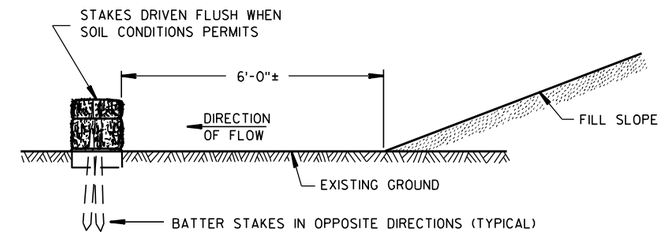

FRONT ELEVATION

WHEN EXISTING GROUND SLOPES AWAY FROM FILL SLOPE

EROSION BALES FOR SHEET FLOW

TYPICAL INSTALLATIONS OF EROSION BALES / TEMPORARY DITCH CHECKS

STATE OF WISCONSIN
DEPARTMENT OF TRANSPORTATION

APPROVED

6/04/02 — DATE

/S/ Beth Cann — CHIEF ROADWAY DEVELOPMENT ENGINEER

FHWA

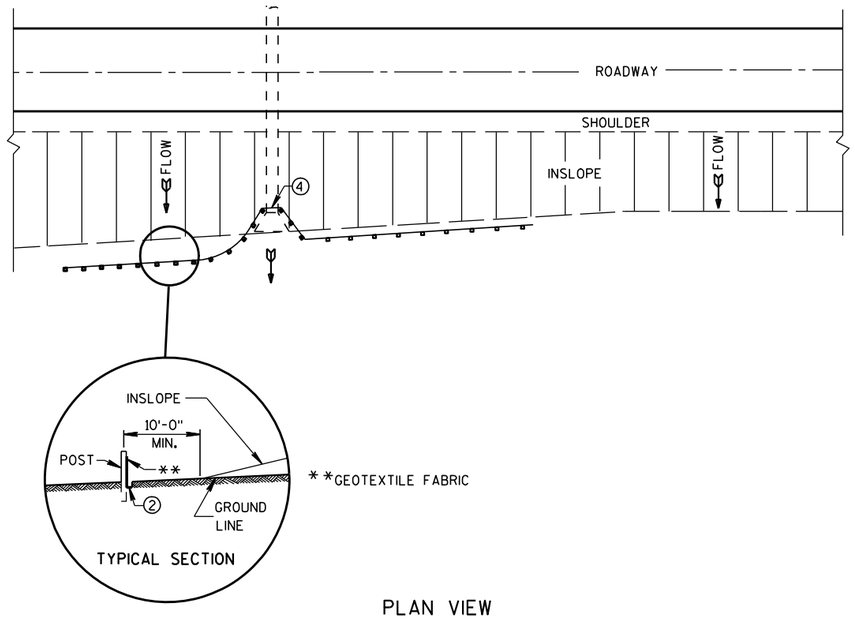

PLAN VIEW

TYPICAL APPLICATION OF SILT FENCE

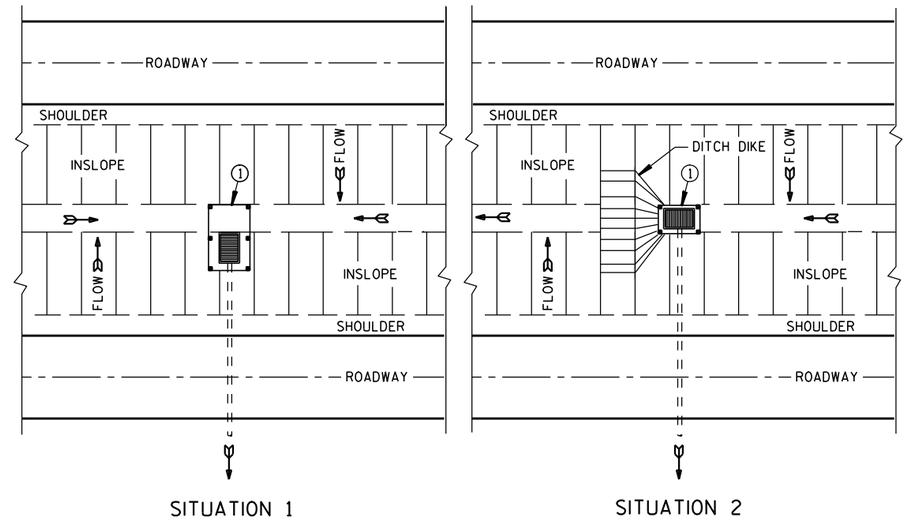

PLAN VIEW

SILT FENCE AT MEDIAN SURFACE DRAINS

GENERAL NOTES

DETAILS OF CONSTRUCTION NOT SHOWN ON THIS DRAWING SHALL CONFORM TO THE PERTINENT REQUIREMENTS OF THE STANDARD SPECIFICATIONS AND APPLICABLE SPECIAL PROVISIONS.

① HORIZONTAL BRACE REQUIRED WITH 2" X 4" WOODEN FRAME OR EQUIVALENT AT TOP OF POSTS.

② FOR MANUAL INSTALLATIONS THE TRENCH SHALL BE A MINIMUM OF 4" WIDE & 6" DEEP TO BURY AND ANCHOR THE GEOTEXTILE FABRIC. FOLD MATERIAL TO FIT TRENCH AND BACKFILL & COMPACT TRENCH WITH EXCAVATED SOIL.

③ WOOD POSTS SHALL BE A MINIMUM SIZE OF 1⅛" X 1⅛" OF OAK OR HICKORY.

④ SILT FENCE TO EXTEND ACROSS THE TOP OF THE PIPE.

⑤ CONSTRUCT SILT FENCE FROM A CONTINUOUS ROLL IF POSSIBLE BY CUTTING LENGTHS TO AVOID JOINTS. IF A JOINT IS NECESSARY USE ONE OF THE FOLLOWING TWO METHODS; A) OVERLAP THE END POSTS AND TWIST, OR ROTATE, AT LEAST 180 DEGREES. B) HOOK THE END OF EACH SILT FENCE LENGTH.

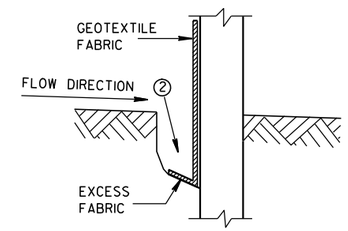

TRENCH DETAIL

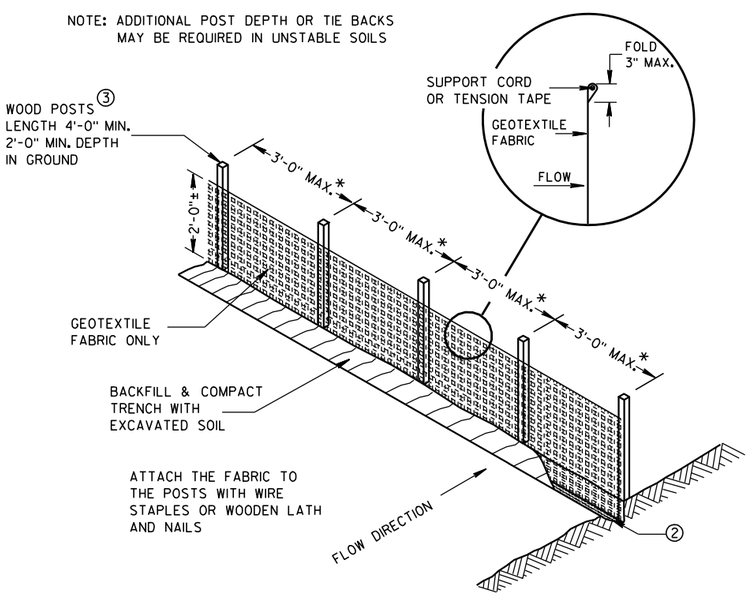

SILT FENCE

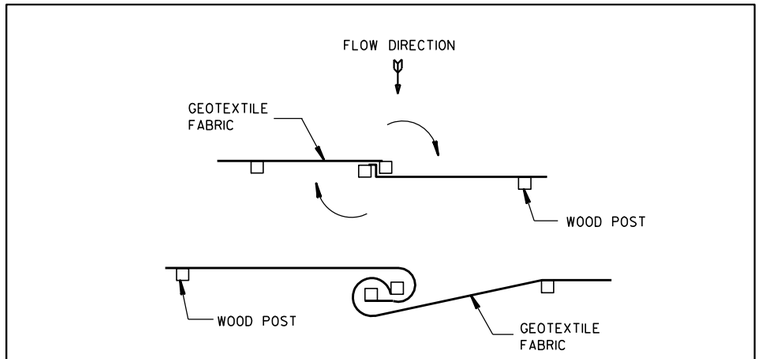

TWIST METHOD

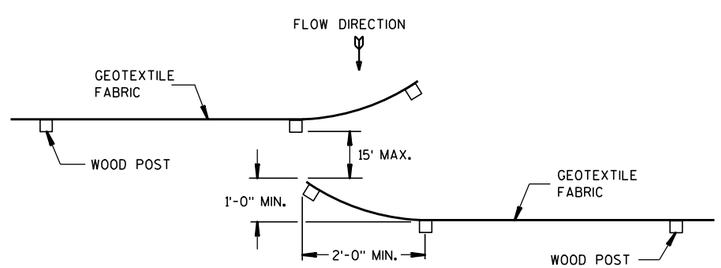

HOOK METHOD

JOINING TWO LENGTHS OF SILT FENCE ⑤

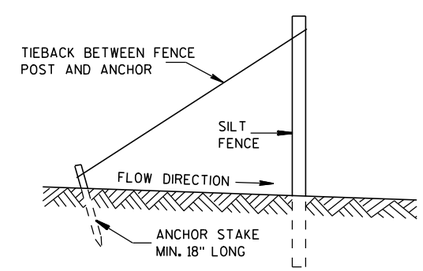

SILT FENCE TIE BACK

(WHEN REQUIRED BY THE ENGINEER)

SILT FENCE
STATE OF WISCONSIN DEPARTMENT OF TRANSPORTATION
APPROVED 4-29-05 /S/ Beth Cann----- DATE CHIEF ROADWAY DEVELOP ENGINEER FHWA

6

6

S.D.D. 8 E 9-6

S.D.D. 8 E 9-6

METAL APRON ENDWALLS

PIPE DIA. (IN.)	MIN. THICK. (Inches) STEEL	MIN. THICK. (Inches) ALUM.	DIMENSIONS (Inches) A (±1")	B (MAX.)	H (±1")	L (±1 1/2")	L1 ①	L2 ①	W (±2")	APPROX. SLOPE	BODY
12	.064	.060	6	6	6	21	12	17 1/2	24	2 1/2 to 1	1 Pc.
15	.064	.060	7	8	6	26	14	21 3/4	30	2 1/2 to 1	1 Pc.
18	.064	.060	8	10	6	31	15	28 1/4	36	2 1/2 to 1	1 Pc.
21	.064	.060	9	12	6	36	18	29 5/8	42	2 1/2 to 1	1 Pc.
24	.064	.075	10	13	6	41	18	37 1/4	48	2 1/2 to 1	1 Pc.
30	.079	.075	12	16	8	51	18	52 1/4	60	2 1/2 to 1	1 Pc.
36	.079	.105	14	19	9	60	24	59 3/4	72	2 1/2 to 1	2 Pc.
42	.109	.105	16	22	11	69	24	75 5/8	84	2 1/2 to 1	2 Pc.
48	.109	.105	18	27	12	78	24	81	90	2 1/4 to 1	3 Pc.
54	.109	.105	18	30	12	84	30	85 1/2	102	2 1/4 to 1	3 Pc.
60	.109×	.105×	18	33	12	87	—	—	114	2 to 1	3 Pc.
66	.109×	.105×	18	36	12	87	—	—	120	2 to 1	3 Pc.
72	.109×	.105×	18	39	12	87	—	—	126	2 to 1	3 Pc.
78	.109×	.105×	18	42	12	87	—	—	132	1 1/2 to 1	3 Pc.
84	.109×	.105×	18	45	12	87	—	—	138	1 1/2 to 1	3 Pc.
90	.109×	.105×	18	37	12	87	—	—	144	1 1/2 to 1	3 Pc.
96	.109×	.105×	18	35	12	87	—	—	150	1 1/2 to 1	3 Pc.

× EXCEPT CENTER PANEL
SEE GENERAL NOTES

REINFORCED CONCRETE APRON ENDWALLS

PIPE DIA. (IN.)	DIMENSIONS (Inches) T	A	B	C	D	E	G	APPROX. SLOPE
12	2	4	24	48 7/8	72 7/8	24	2	3 to 1
15	2 1/4	6	27	46	73	30	2 1/4	3 to 1
18	2 1/2	9	27	46	73	36	2 1/2	3 to 1
21	2 3/4	9	36	37 1/2	73 1/2	42	2 3/4	3 to 1
24	3	9 1/2	43 1/2	30	73 1/2	48	3	3 to 1
27	3 1/4	10 1/2	49 1/2	24	73 1/2	54	3 1/4	3 to 1
30	3 1/2	12	54	19 3/4	73 1/2	60	3 1/2	3 to 1
36	4	15	63	34 3/4	97 3/4	72	4	3 to 1
42	4 1/2	21	63	35	98	78	4 1/2	3 to 1
48	5	24	72	26	98	84	5	3 to 1
54	5 1/2	27	65	*33 1/4-**35	*98 1/4-**100	90	5 1/2	2 2/5 to 1
60	6	*30-**35	60	39	99	96	5	2 to 1
66	6 1/2	*24-**30	*72-**78	*21-**27	99	102	5 1/2	2 to 1
72	7	*24-**36	78	21	99	108	6	2 to 1
78	7 1/2	*24-**36	78	21	99	114	6 1/2	2 to 1
84	8	36	90 1/2	21	111 1/2	120	6 1/2	1 1/2 to 1
90	8 1/2	41	87 1/2	24	111 1/2	132	6 1/2	1 1/2 to 1

*MINIMUM
**MAXIMUM

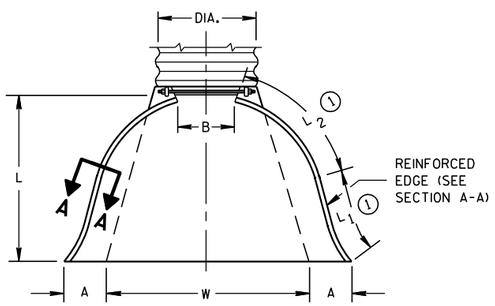

PLAN VIEW

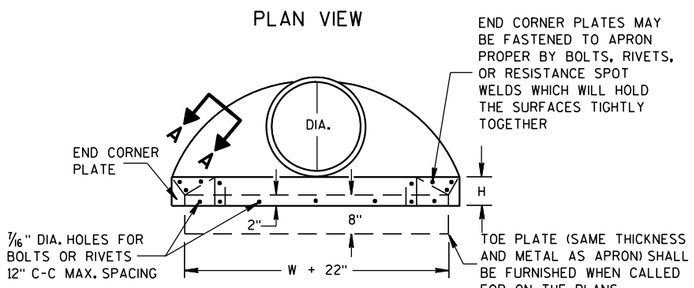

END VIEW

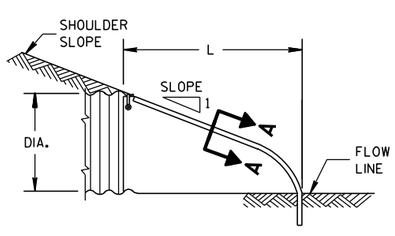

SIDE ELEVATION

METAL ENDWALLS

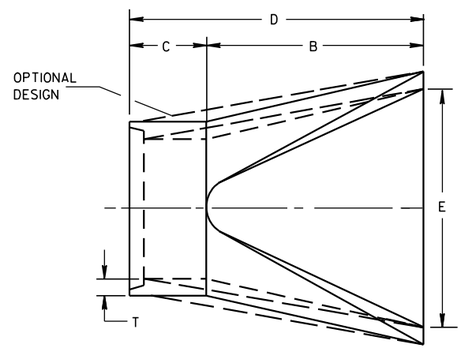

PLAN

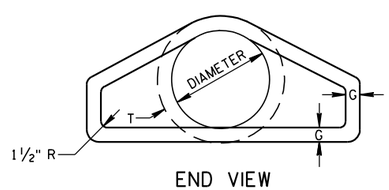

END VIEW

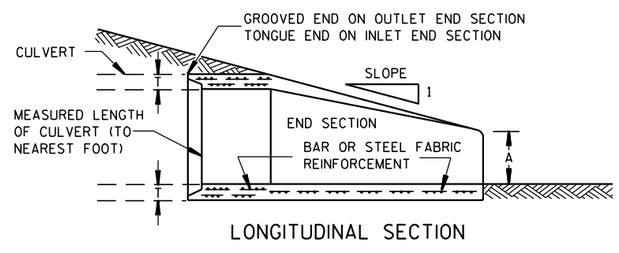

LONGITUDINAL SECTION

CONCRETE ENDWALLS

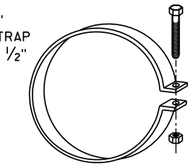

ALTERNATE FOR TYPE 1 CONNECTION

END SECTION CONNECTOR STRAP

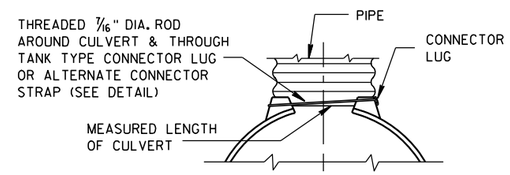

TYPE 1
FOR 12" THRU 24" CORR. PIPE

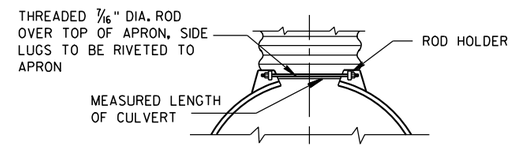

TYPE 2
FOR 30" THRU 96" CORR. PIPE

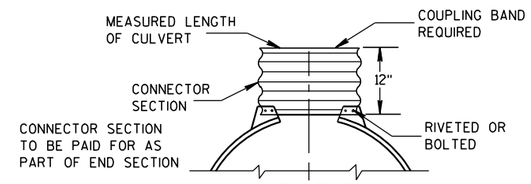

TYPE 3
FOR 42" THRU 96" CORR. PIPE

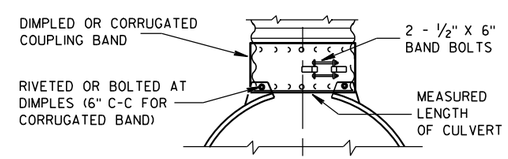

TYPE 5
ALTERNATE FOR:
ALL SIZES CORRUGATED CIRCULAR PIPE

NOTE: DIMPLED BAND FITS OVER OUTSIDE OF ENDWALL, AND CORRUGATED BAND FITS INSIDE ENDWALL. DIMPLED BAND MAY BE USED WITH HELICALLY CORRUGATED PIPE.

FOR CIRCUMFERENTIALLY CORRUGATED PIPE USE ENDWALL CONNECTION DETAILS 1, 2, 3 OR 5 AS APPLICABLE.

FOR HELICALLY CORRUGATED PIPE USE ENDWALL CONNECTION DETAILS 1, 2 OR 5.

FOR HELICALLY CORRUGATED PIPES WITH TWO CIRCUMFERENTIAL CORRUGATIONS AT EACH END USE ENDWALL CONNECTION DETAILS 1, 2 OR 3.

CONNECTION DETAILS

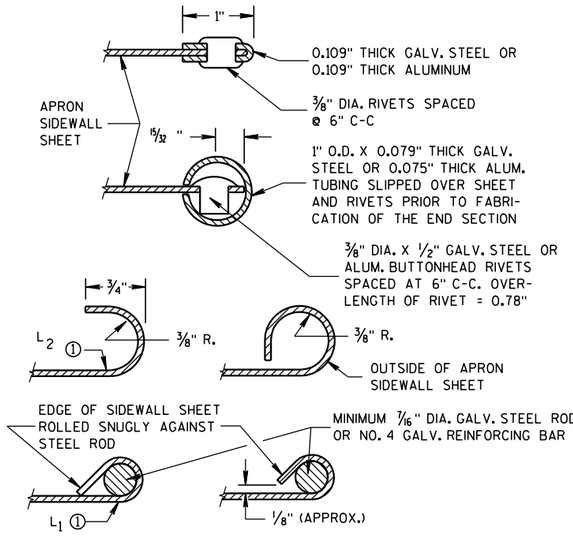

SECTION A-A

GENERAL NOTES

DETAILS OF CONSTRUCTION, MATERIALS AND WORKMANSHIP NOT SHOWN ON THIS DRAWING SHALL CONFORM TO THE PERTINENT REQUIREMENTS OF THE STANDARD SPECIFICATIONS AND THE APPLICABLE SPECIAL PROVISIONS.

CONCRETE CULVERT ENDWALLS MAY NOT BE USED WITH GALVANIZED STEEL OR ALUMINUM CULVERT PIPE OR VISE VERSA. GALVANIZED STEEL OR ALUMINUM ENDWALLS SHALL NORMALLY BE INSTALLED ON CULVERT PIPE OF THE SAME METAL.

ALL THREE PIECE STEEL APRON ENDWALLS FOR 60" DIAMETER PIPE AND LARGER SHALL HAVE 0.109" SIDES AND 0.138" CENTER PANELS. ALL THREE PIECE ALUMINUM APRON ENDWALLS FOR 60" DIAMETER PIPE AND LARGER SHALL HAVE 0.105" SIDES AND 0.134" CENTER PANELS. THE WIDTH OF CENTER PANELS SHALL BE GREATER THAN 20 PERCENT OF THE PIPE PERIMETER.

LAP SEAMS SHALL BE TIGHTLY JOINED BY GALVANIZED RIVETS OR BOLTS FOR STEEL UNITS AND ALUMINUM RIVETS AND BOLTS FOR ALUMINUM UNITS. FOR THE 60" THROUGH 96" DIAMETER APRON ENDWALL SIZES, THE REINFORCED EDGES AND CENTER PANEL SEAMS SHALL BE FURTHER REINFORCED WITH GALVANIZED STEEL OR ALUMINUM STIFFENER ANGLES. THE ANGLES SHALL BE ATTACHED BY GALVANIZED NUTS AND BOLTS FOR STEEL UNITS AND ALUMINUM NUTS AND BOLTS FOR ALUMINUM UNITS.

WHERE TWO OR MORE PIPES WITH APRON ENDWALLS ARE LAID ADJACENT TO EACH OTHER, THEY SHALL BE SEPARATED BY A DISTANCE SUFFICIENT TO PROVIDE A MINIMUM CLEARANCE OF 6 INCHES BETWEEN APRON ENDWALLS.

① FOR PIPE SIZES UP TO 60" DIAMETER, A 180° ROLLED EDGE MAY BE USED INSTEAD OF STEEL ROD REINFORCEMENT. SEE SECTION A-A.

APRON ENDWALLS FOR CULVERT PIPE

STATE OF WISCONSIN
DEPARTMENT OF TRANSPORTATION

APPROVED
11/30/94 — DATE
/S/ Rory L. Rhinesmith — CHIEF ROADWAY DEVELOPMENT ENGINEER
FHWA

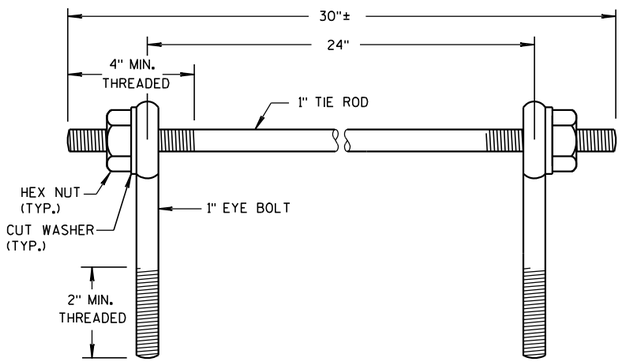

EYE BOLTS AND TIE ROD

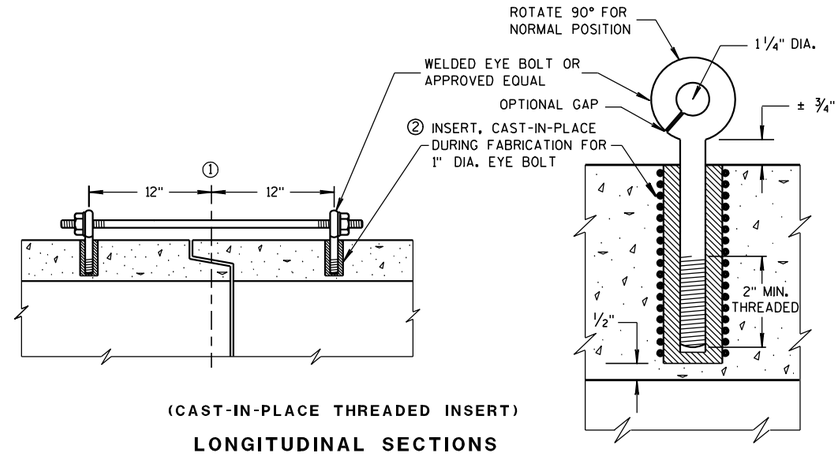

(CAST-IN-PLACE THREADED INSERT)

LONGITUDINAL SECTIONS

EYE BOLT AND TIE ROD ASSEMBLY (ALTERNATE NO. 1)

GENERAL NOTES

DETAILS OF CONSTRUCTION, MATERIALS, AND WORKMANSHIP NOT SHOWN ON THIS DRAWING SHALL CONFORM TO THE PERTINENT REQUIREMENTS OF THE STANDARD SPECIFICATIONS AND APPLICABLE SPECIAL PROVISIONS.

CONCRETE CULVERT AND STORM SEWER PIPE SHALL BE TIED TOGETHER IN THE MANNER ILLUSTRATED BY THIS DETAIL AT LOCATIONS DESIGNATED IN THE STANDARD SPECIFICATIONS AND THE PLAN. THE CONTRACTOR MAY USE EITHER ALTERNATE 1, 2 OR 3 FOR DRAINAGE STRUCTURES. ONLY ALTERNATE 1 AND 3 MAY BE USED FOR CATTLE PASSES, UNLESS OTHERWISE STATED IN THE CONTRACT. THE MATERIALS, FABRICATION AND WORK NECESSARY TO TIE THE PIPE BY THIS DETAIL WILL BE CONSIDERED INCIDENTAL TO THE PIPE AND APRON ENDWALLS IF REQUIRED.

DETAILED DRAWINGS FOR PROPOSED ALTERNATE DESIGNS FOR JOINT TIES SHALL BE SUBMITTED TO THE ENGINEER FOR APPROVAL.

JOINT TIES TO BE HOT-DIP GALVANIZED PER ASTM A 153.

① ℄ OF TONGUE AND GROOVE OR BELL AND SPIGOT JOINTS.

② THE INSIDE OF THE THREADED INSERTS SHALL BE CLEAN TO ALLOW THE INSERTION OF THREADED EYE BOLTS.

③ HOLES SHALL BE CAST-IN-PLACE OR DRILLED 12 INCHES FROM ℄ OF TONGUE AND GROOVE.

④ BOLT PROJECTION INSIDE OF PIPE SHALL NOT EXCEED 2 INCHES.

⑤ OPENING TO BE ROD DIAMETER PLUS 1 INCH.

⑥ LENGTH ADEQUATE TO EXTEND TO WITHIN 1/2 INCH OF THE INNER SURFACE OF THE PIPE.

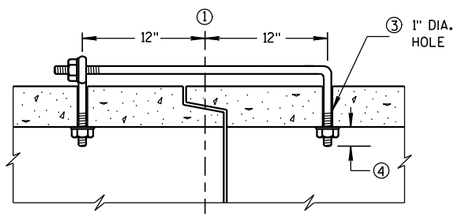

(TONGUE & GROOVE PIPE)

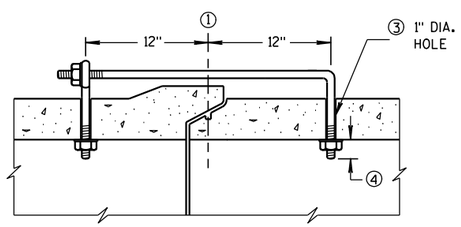

(MODIFIED BELL PIPE)

LONGITUDINAL SECTION

EYE BOLT DIMENSION TABLE

PIPE SIZE	L = LENGTH	
	TONGUE & GROOVE PIPE	MODIFIED BELL PIPE
18" TO 24"	4 1/2"	6 1/4"
30"	5"	7"
36"	5 1/2"	7"
42"	6"	
48"	6 1/2"	
60"	7 1/2"	
66"	8"	

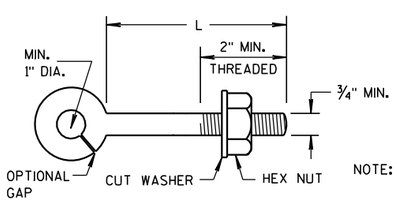

EYE BOLT

NOTE:

NOTE: TWO EYE BOLTS MAY BE USED WITH A 30" LONG THREADED ROD IN LIEU OF THE 90° BENT TIE ROD.

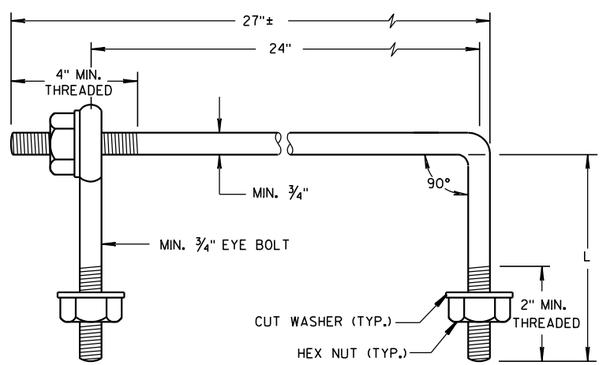

EYE BOLT AND TIE ROD

(JOINT TIES FOR 18" TO 66" DIA. CONCRETE PIPE)

EYE BOLT AND TIE ROD ASSEMBLY (ALTERNATE NO. 2)

ADJUSTABLE TIE ROD TABLE

PIPE DIAMETER	TIE ROD DIAMETER	D	L_1	N
12-60	5/8	5/8	5	1/2
66-84	3/4	3/4	5	1/2
90-108	1	1	7	1 7/16

DIMENSIONS SHOWN ARE IN INCHES

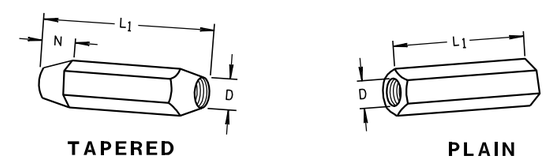

TAPERED PLAIN

RIGHT AND LEFT THREADS

SLEEVE NUTS

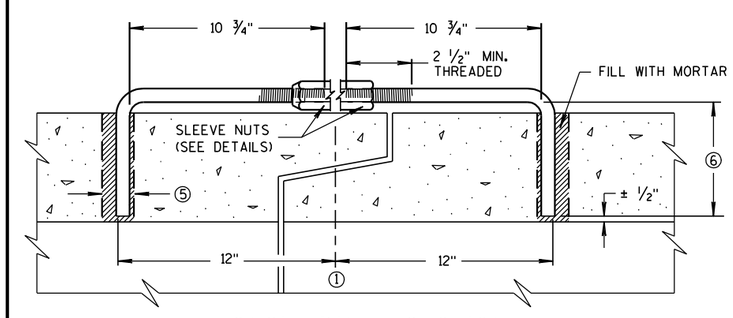

LONGITUDINAL SECTION

(JOINT TIES FOR 12" TO 108" DIA. CONCRETE PIPE)

ADJUSTABLE TIE ROD (ALTERNATE NO. 3)

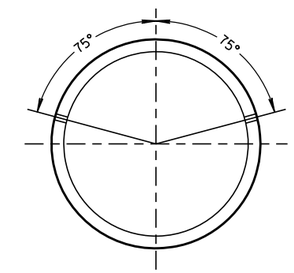

PLACEMENT OF (2) CAST-IN-PLACE INSERTS OR HOLES DURING FABRICATION FOR PIPE SECTIONS REQUIRING TIE RODS

TRANSVERSE SECTION

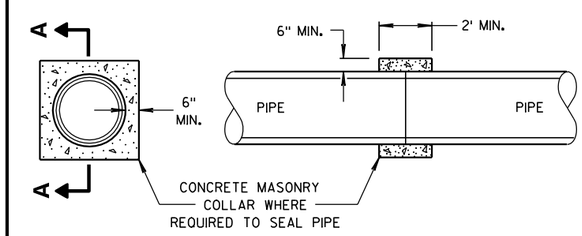

SECTION A-A

CONCRETE COLLAR DETAIL

JOINT TIES FOR CONCRETE PIPE AND CONCRETE COLLAR DETAIL

STATE OF WISCONSIN
DEPARTMENT OF TRANSPORTATION

APPROVED
6/5/2012 /S/ Jerry H. Zogg
DATE ROADWAY STANDARDS DEVELOPMENT ENGINEER
FHWA

6

6

S.D.D. 8 F 4-7

S.D.D. 8 F 4-7

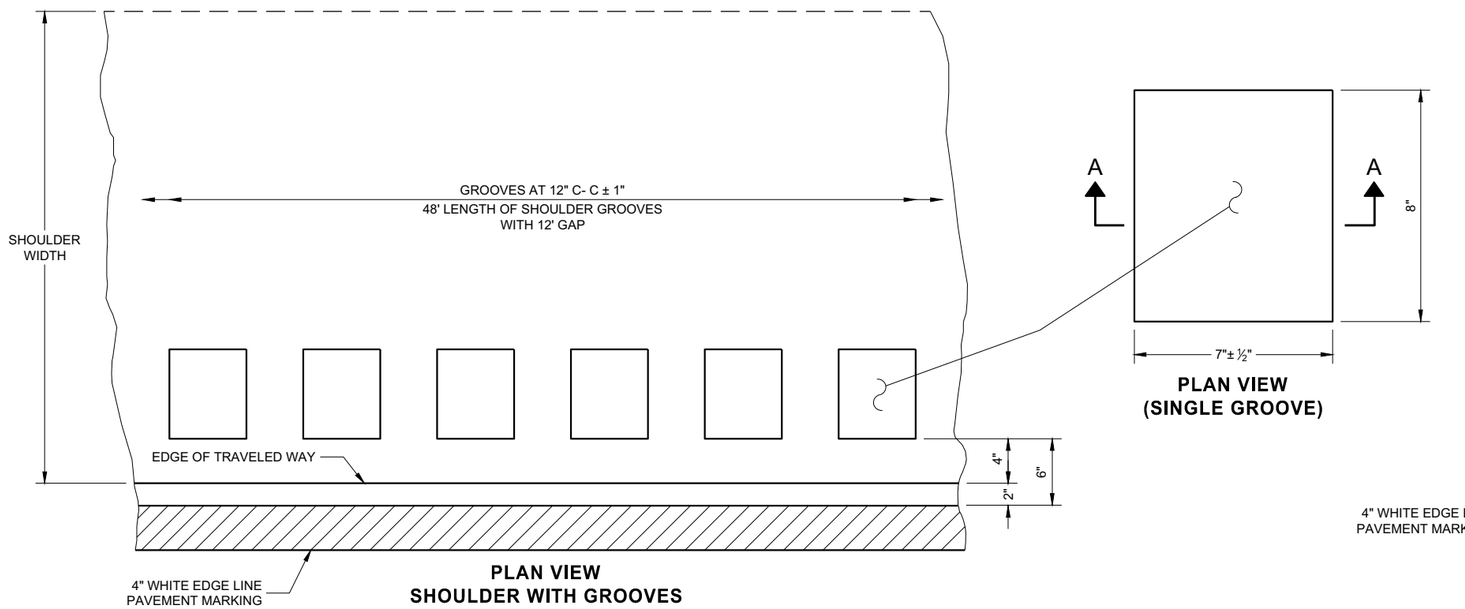

PLAN VIEW
(SINGLE GROOVE)

PLAN VIEW
SHOULDER WITH GROOVES

PLACEMENT DETAIL FOR TYPE 1 MILLED RUMBLE STRIP

GENERAL NOTES

DETAILS OF CONSTRUCTION NO SHOWN ON THIS DRAWING SHALL CONFORM TO THE PERTINENT REQUIREMENTS OF THE STANDARD SPECIFICATIONS AND APPLICABLE SPECIAL PROVISIONS.

DO NOT MILL SHOULDER GROOVES THROUGH ANY INTERSECTION, MARKED CROSSWALK, NON-MOTORIZED PATH CROSSING, OR SNOWMOBILE CROSSING.

(1) SHOULDER GROOVES MAY BE OMITTED IN AREAS WITH HIGH CONCENTRATIONS OF DRIVEWAYS. WHEN DIRECTED BY THE ENGINEER.

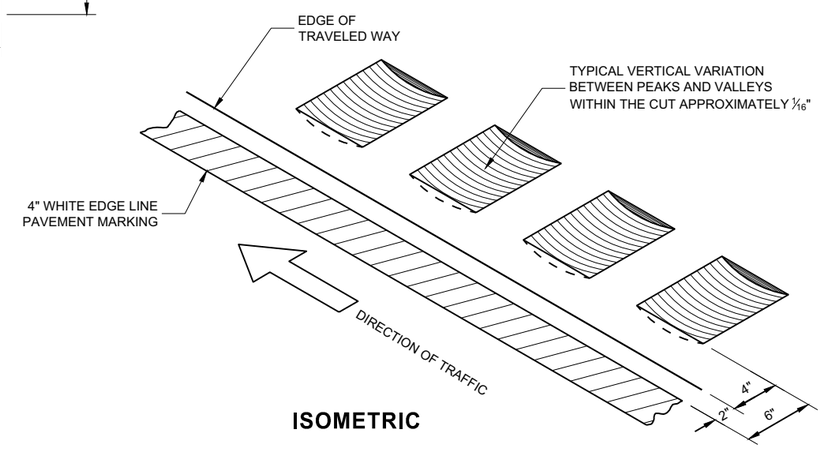

ISOMETRIC

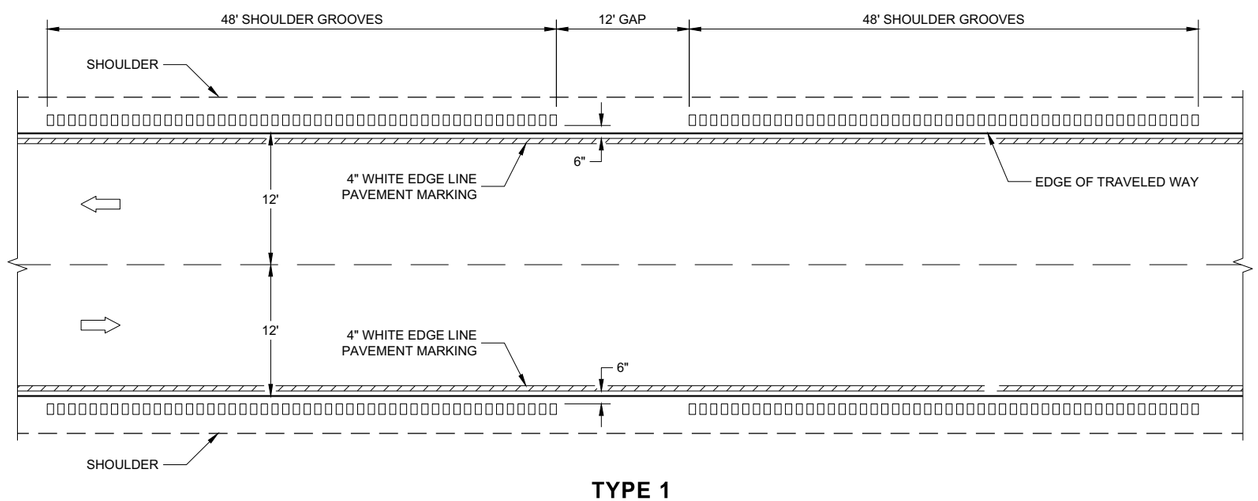

TYPE 1
2 - LANE SHOULDER RUMBLE STRIP

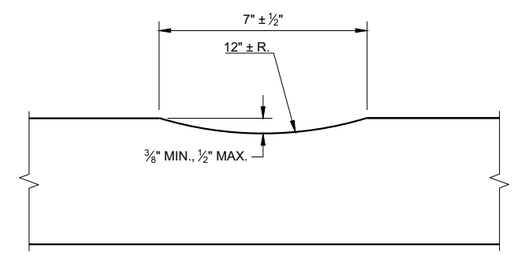

SECTION A - A

2-LANE RURAL SHOULDER RUMBLE STRIP, MILLING

STATE OF WISCONSIN
DEPARTMENT OF TRANSPORTATION

6

SDD 13A10 - 02a

6

SDD 13A10 - 02a

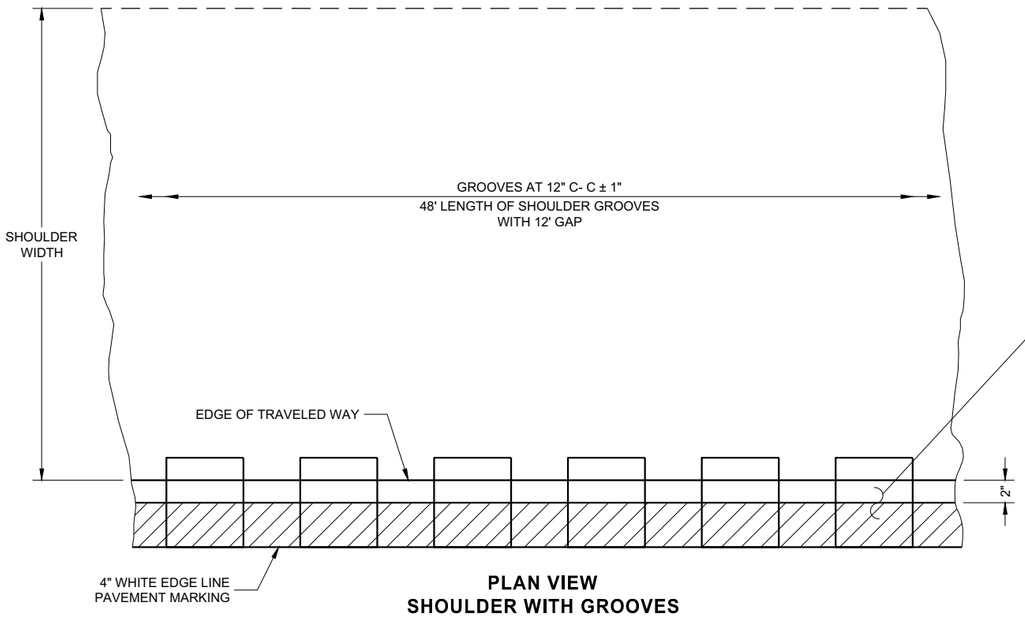

PLAN VIEW
SHOULDER WITH GROOVES

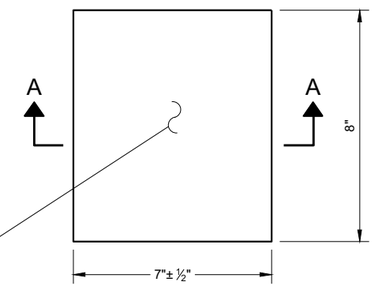

PLAN VIEW
(SINGLE GROOVE)

GENERAL NOTES

DETAILS OF CONSTRUCTION NO SHOWN ON THIS DRAWING SHALL CONFORM TO THE PERTINENT REQUIREMENTS OF THE STANDARD SPECIFICATIONS AND APPLICABLE SPECIAL PROVISIONS.

DO NOT MILL SHOULDER GROOVES THROUGH ANY INTERSECTION, MARKED CROSSWALK, NON-MOTORIZED PATH CROSSING, OR SNOWMOBILE CROSSING.

(1) SHOULDER GROOVES MAY BE OMITTED IN AREAS WITH HIGH CONCENTRATIONS OF DRIVEWAYS. WHEN DIRECTED BY THE ENGINEER.

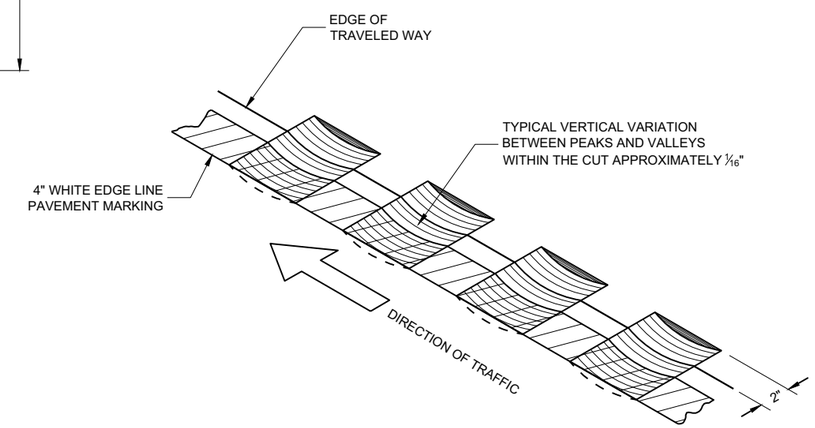

ISOMETRIC

PLACEMENT DETAIL FOR TYPE 2 MILLED RUMBLE STRIP

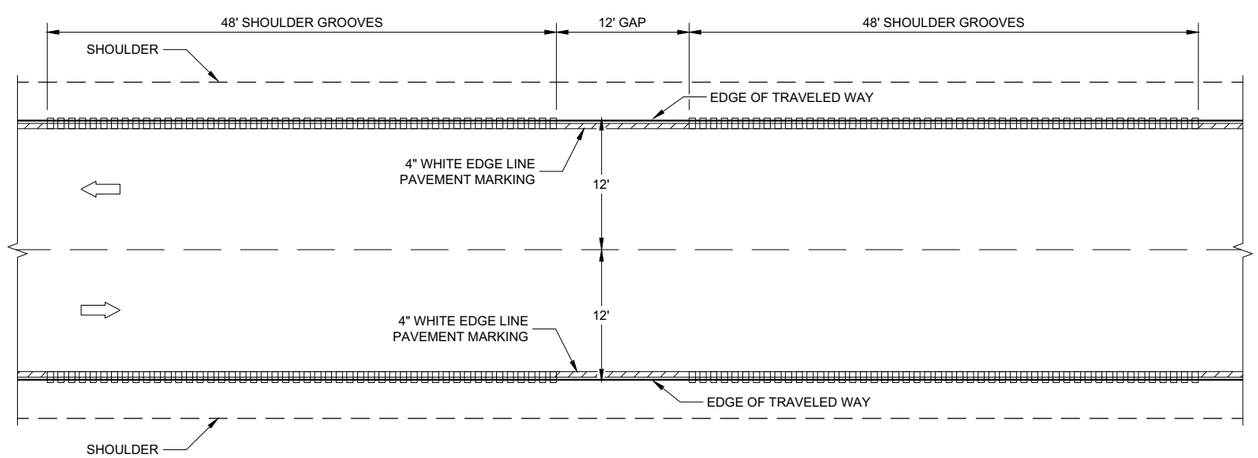

TYPE 2
2 - LANE SHOULDER RUMBLE STRIP

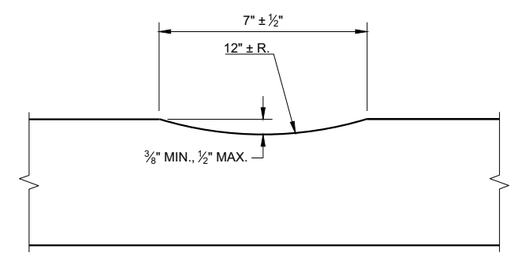

SECTION A - A

2-LANE RURAL SHOULDER RUMBLE STRIP, MILLING

STATE OF WISCONSIN
DEPARTMENT OF TRANSPORTATION

6

6

SDD 13A10 - 02b

SDD 13A10 - 02b

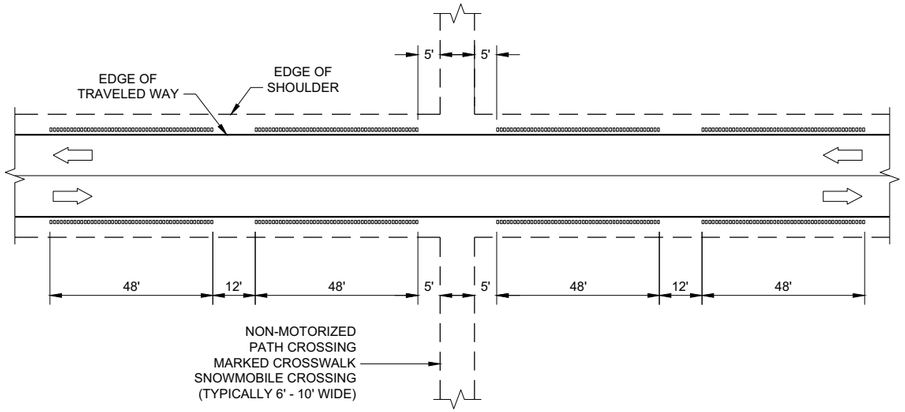

SHOULDER GROOVES AT MISCELLANEOUS CROSSINGS

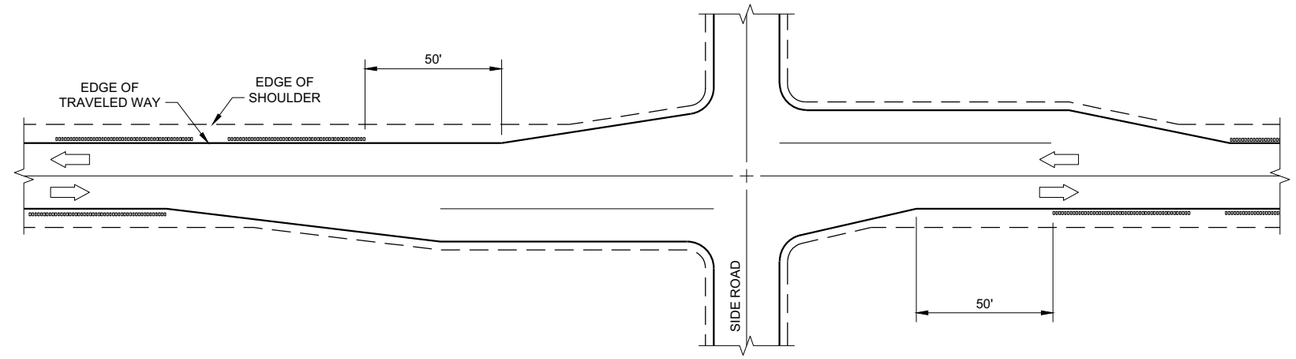

SHOULDER GROOVES AT RIGHT TURN LANE

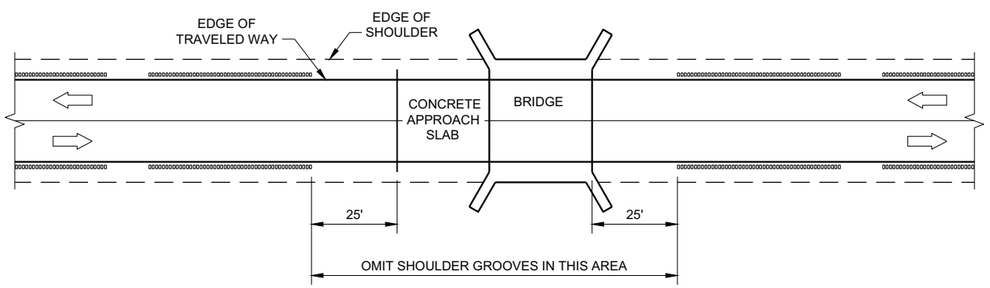

SHOULDER GROOVES AT BRIDGES

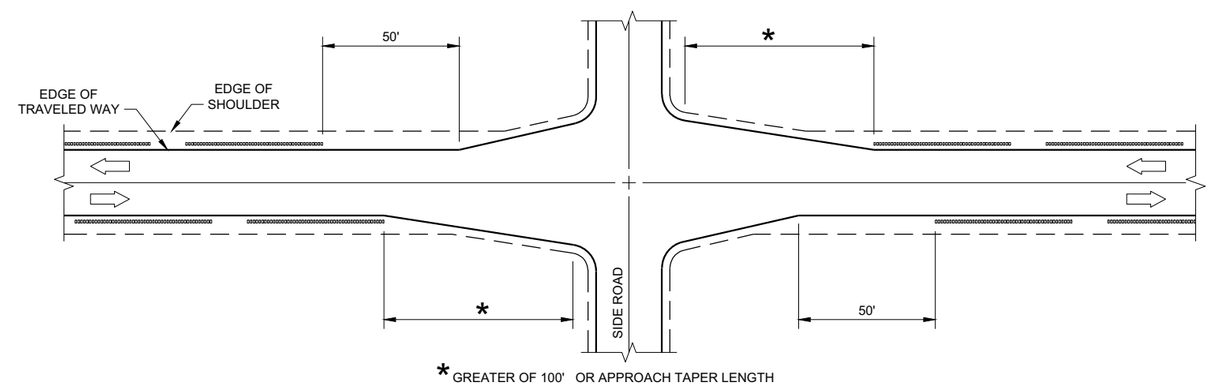

SHOULDER GROOVES AT INTERSECTIONS WITH APPROACH TAPER

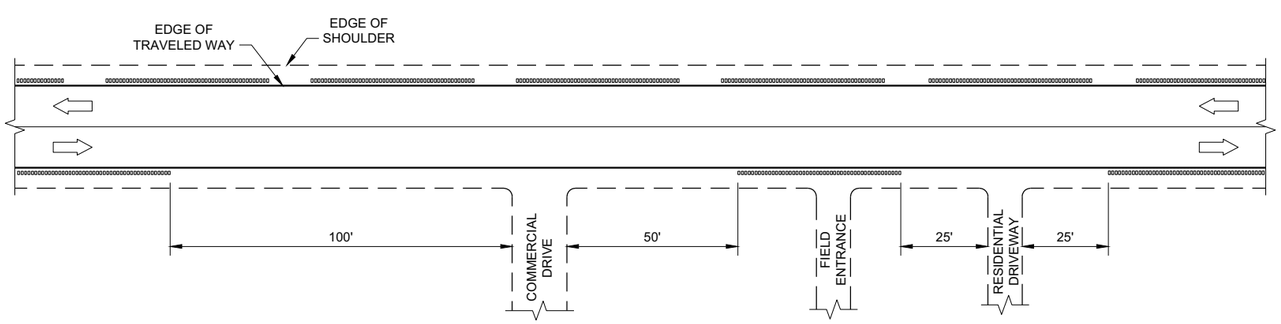

SHOULDER GROOVES AT DRIVEWAYS (1)

GENERAL NOTES

(1) SHOULDER GROOVES MAY BE OMITTED IN AREAS WITH HIGH CONCENTRATIONS OF DRIVEWAYS. WHEN DIRECTED BY THE ENGINEER.

2-LANE RURAL SHOULDER RUMBLE STRIP, MILLING

STATE OF WISCONSIN
DEPARTMENT OF TRANSPORTA

6

SDD 13A10 - 02c

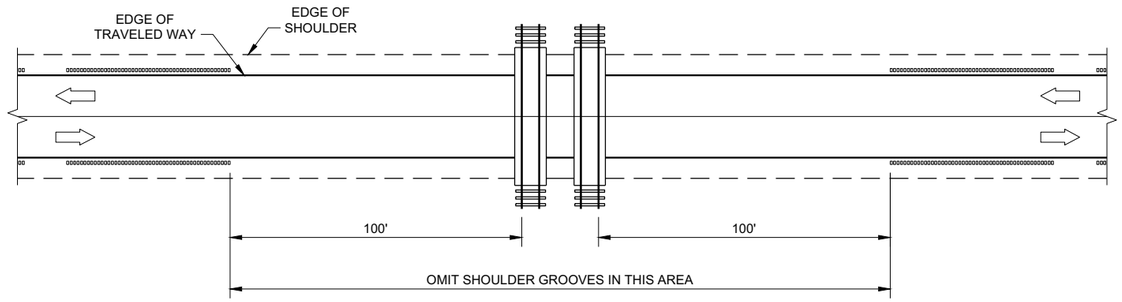

SHOULDER GROOVES AT RAILROADS

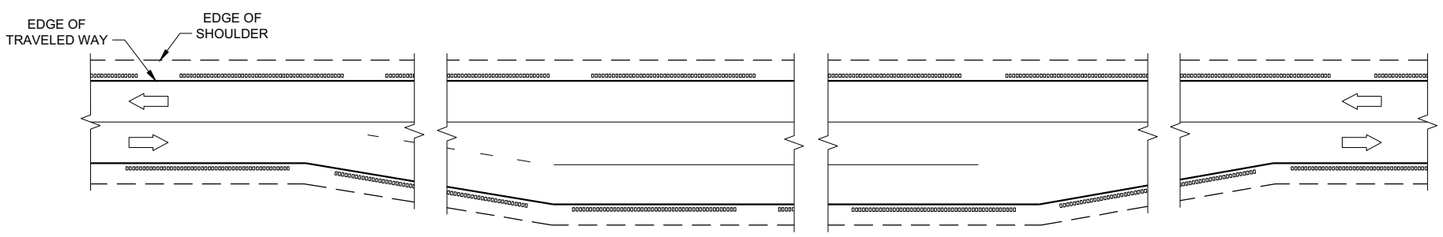

SHOULDER GROOVES AT PASSING AND CLIMBING LANES

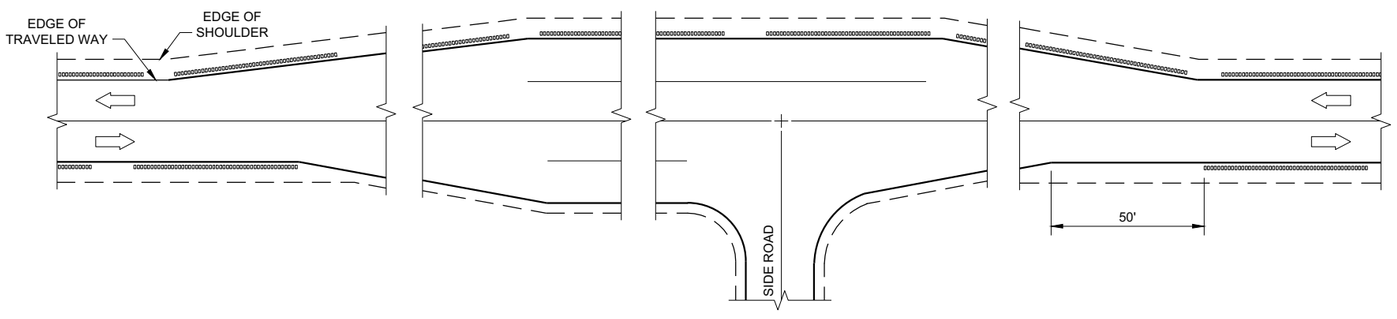

SHOULDER GROOVES AT BYPASS LANES

6

6

2-LANE RURAL SHOULDER RUMBLE STRIP, MILLING

STATE OF WISCONSIN
DEPARTMENT OF TRANSPORTATION

APPROVED
7/2018 — DATE
/S/ Rodney Taylor — ROADWAY STANDARDS DEVE ENGINEER

FHWA

SDD 13A10 - 02d

SDD 13A10 - 02d

GENERAL NOTES

DETAILS OF CONSTRUCTION NO SHOWN ON THIS DRAWING SHALL CONFORM TO THE PERTINENT REQUIREMENTS OF THE STANDARD SPECIFICATIONS AND APPLICABLE SPECIAL PROVISIONS.

DO NOT MILL CENTERLINE GROOVES THROUGH ANY INTERSECTION, MARKED CROSSWALK, NON-MOTORIZED PATH CROSSING, OR SNOWMOBILE CROSSING.

INSTALL PAVEMENT MARKING AFTER THE GROOVES ARE INSTALLED.

SEE SIGNING PLAN FOR SIGN REQUIREMENTS THAT MAY BE NEEDED.

(1) CENTERLINE GROOVES MAY BE OMITTED IN AREAS WITH HIGH CONCENTRATIONS OF DRIVEWAYS. WHEN DIRECTED BY THE ENGINEER.

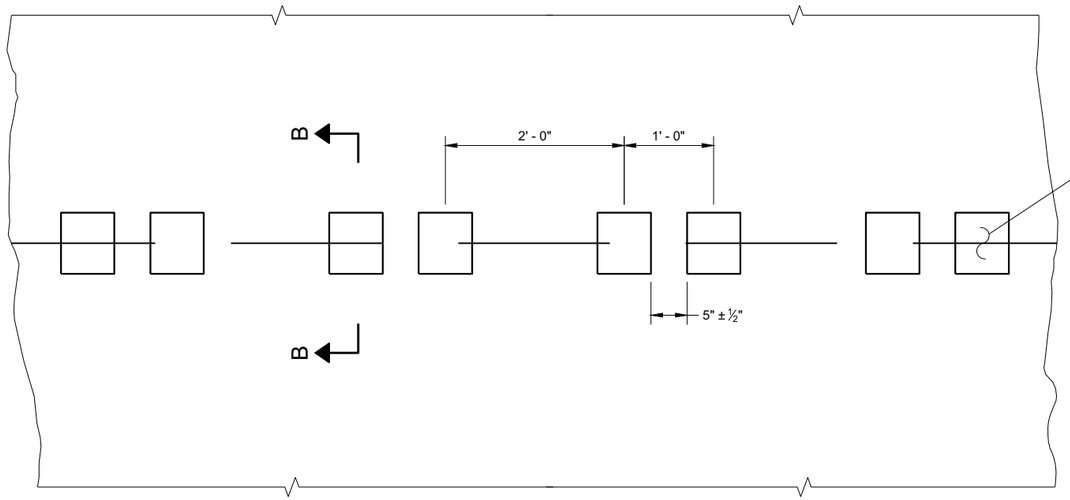

PLAN VIEW
SHOULDER WITH GROOVES

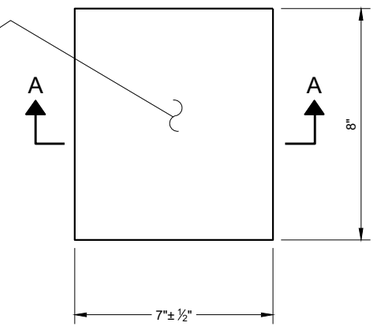

PLAN VIEW
(SINGLE GROOVE)

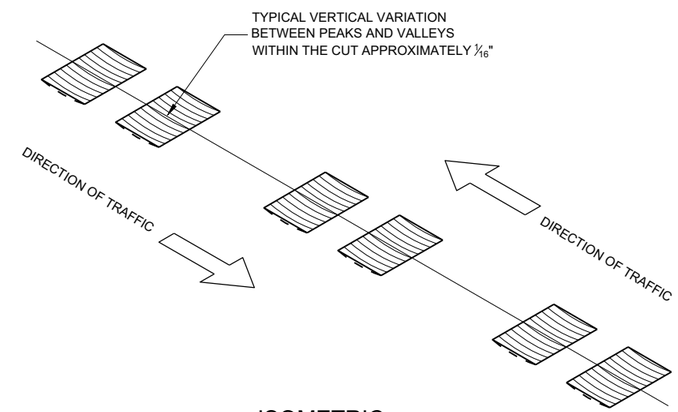

ISOMETRIC

PLACEMENT DETAIL FOR TYPE 1 MILLED RUMBLE STRIP

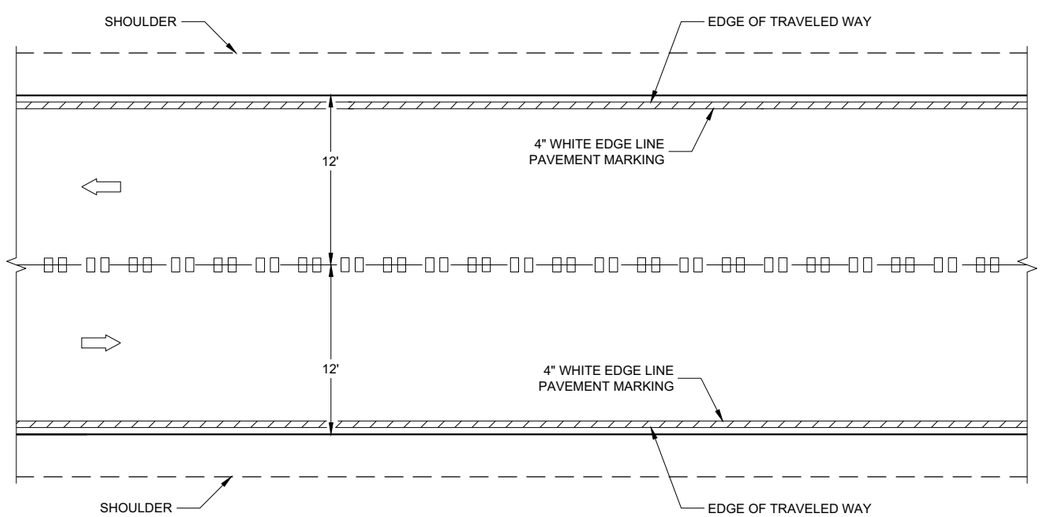

CENTERLINE GROOVES ON TWO-WAY ROADWAYS

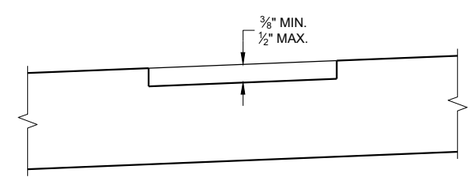

SECTION B - B
SUPERELEVATED ROADWAY

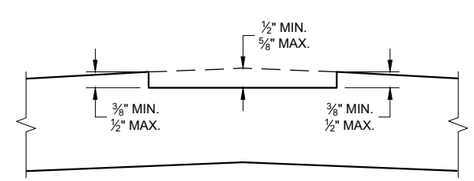

SECTION B - B
CROWNED ROADWAY

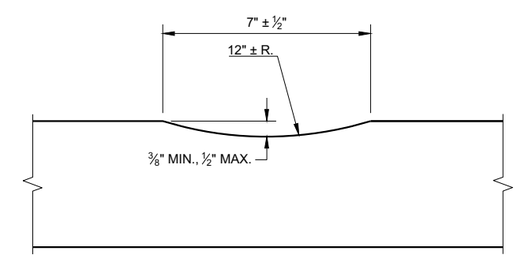

SECTION A - A

2-LANE RURAL
CENTER LINE RUMBLE STRIP, MILLING

STATE OF WISCONSIN
DEPARTMENT OF TRANSPORTAT

6

6

SDD 13A11 - 03a

SDD 13A11 - 03a

GENERAL NOTES

1. CENTERLINE GROOVES MAY BE OMITTED IN AREAS WITH HIGH CONCENTRATIONS OF DRIVEWAYS. WHEN DIRECTED BY THE ENGINEER.

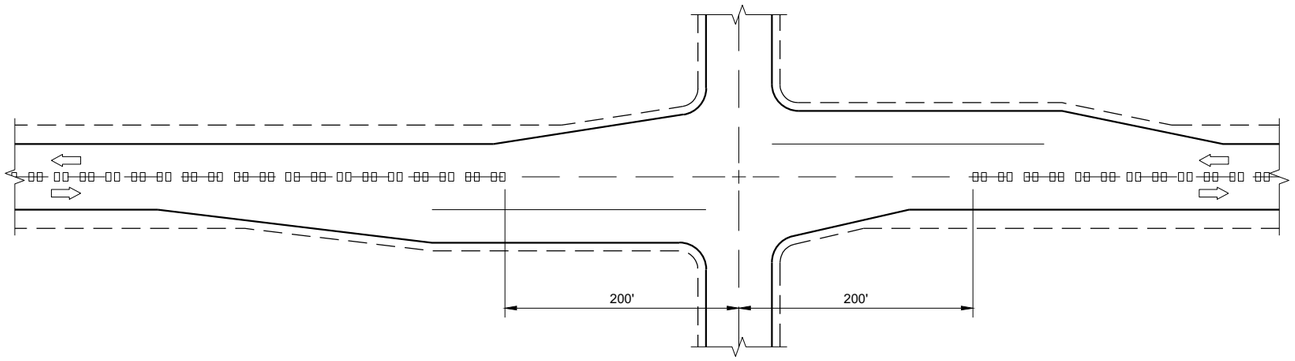

CENTERLINE GROOVES AT INTERSECTIONS

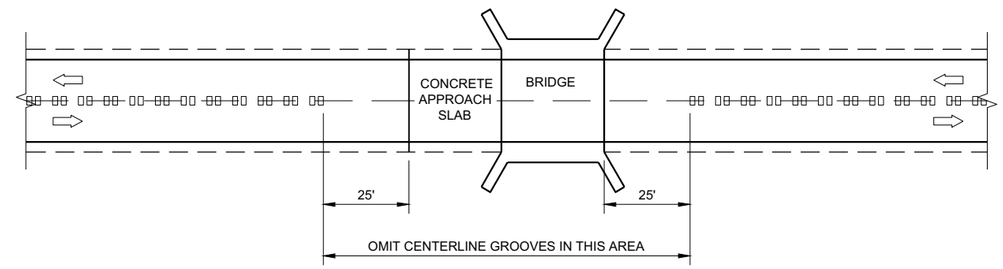

CENTERLINE GROOVES AT BRIDGES

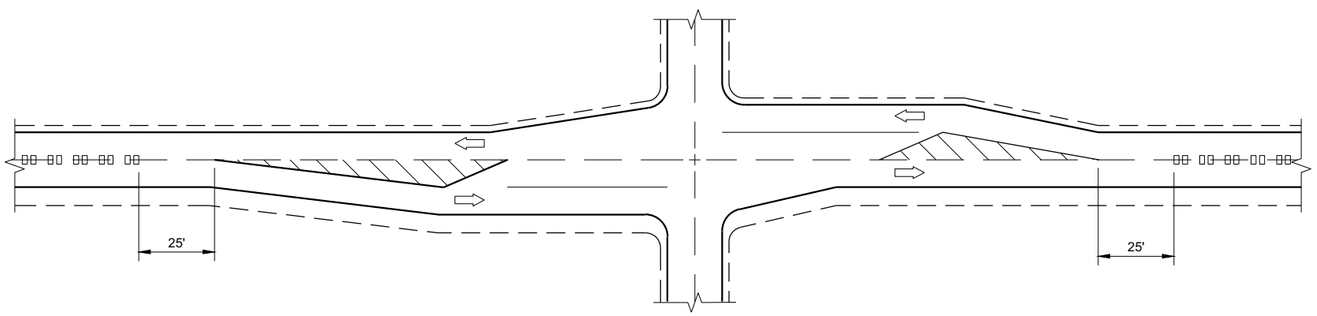

CENTERLINE GROOVES AT INTERSECTIONS (WITH LEFT TURN LANES)

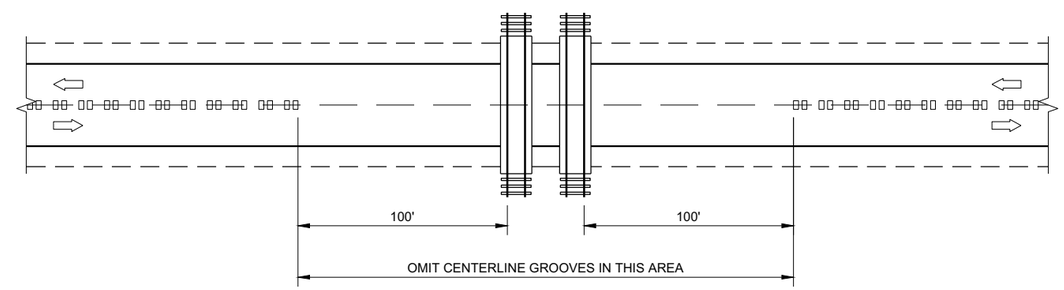

CENTERLINE GROOVES AT RAILROADS

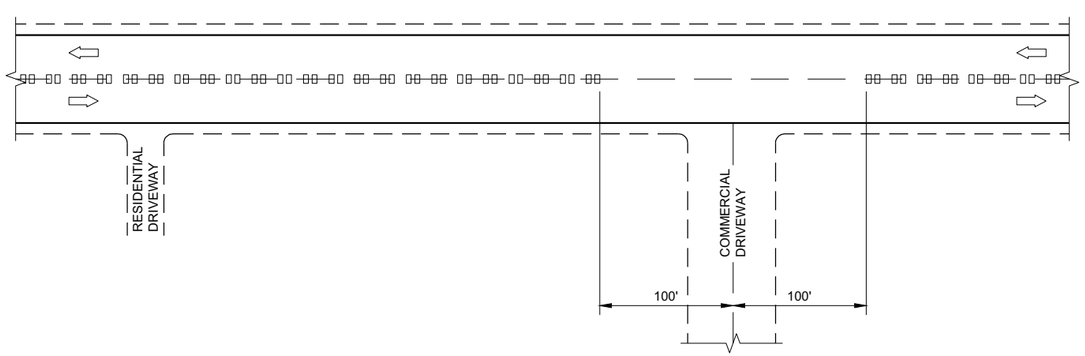

CENTERLINE GROOVES AT DRIVEWAYS (1)

2-LANE RURAL CENTERLINE RUMBLE STRIP, MILLING

STATE OF WISCONSIN
DEPARTMENT OF TRANSPORTATION

APPROVED
7/2018 — DATE
/S/ Rodney Taylor — ROADWAY STANDARDS DEVE ENGINEER
FHWA

6

SDD 13A11 - 03b

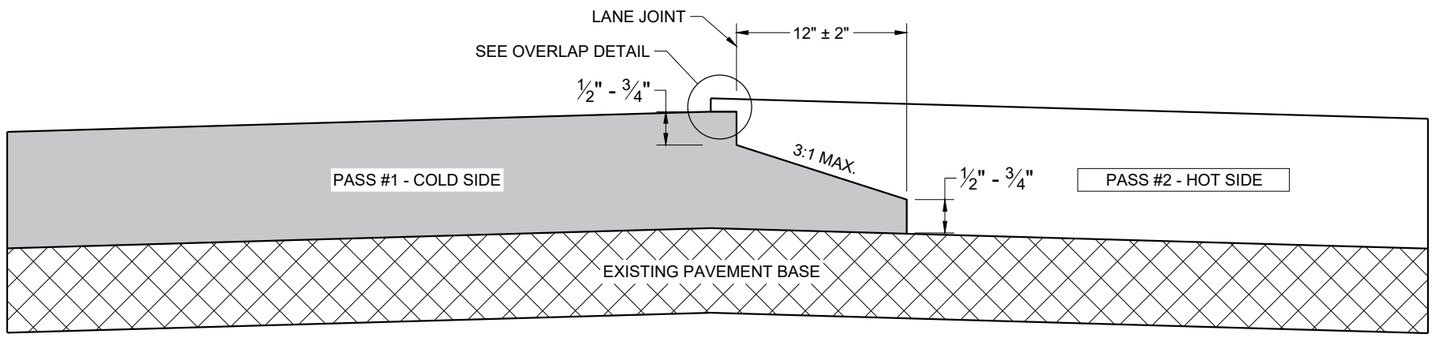

TYPICAL PAVEMENT CROSS SECTION
NOTCHED WEDGE JOINT

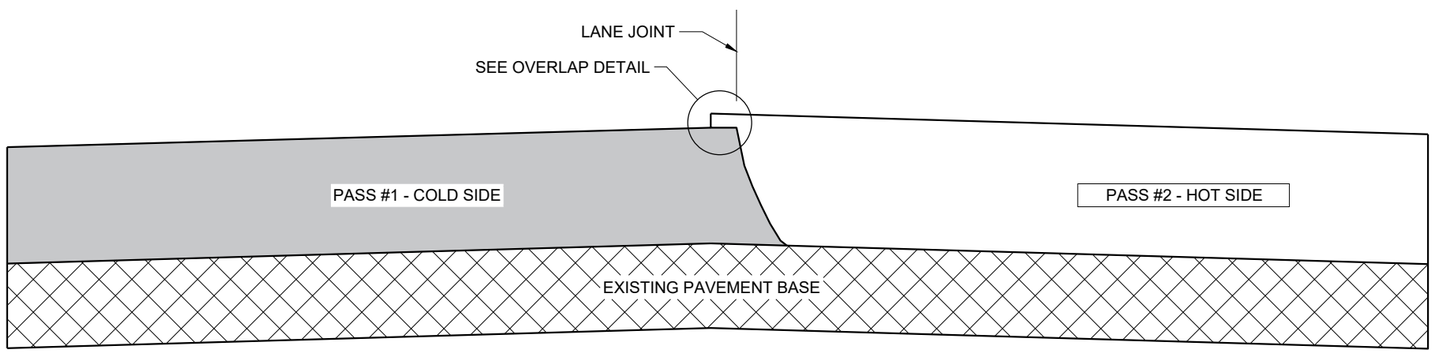

TYPICAL PAVEMENT CROSS SECTION
VERTICAL JOINT

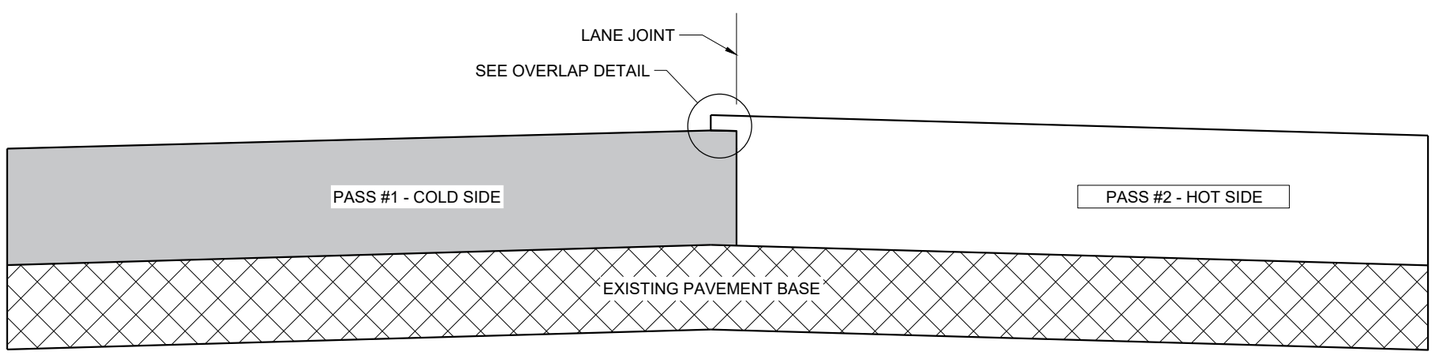

TYPICAL PAVEMENT CROSS SECTION
VERTICAL JOINT (MILLED)

GENERAL NOTES

IN ADDITION TO THE DETAILS PROVIDED IN THIS DRAWING, CONFORM TO STANDARD SPECIFICATION 450.3.2.8 FOR WHEN A NOTCHED WEDGE JOINT IS REQUIRED AND FOR GENERAL JOINT CONSTRUCTION REQUIREMENTS.

FOR ALL LONGITUDINAL JOINTS, ENSURE THE PAVER SCREED OVERLAPS THE PREVIOUSLY PLACED PAVEMENT BY 1" ± 0.5" AND THE HOT SIDE OF THE JOINT REMAINS HIGHER THAN THE COLD SIDE BY APPROXIMATELY 0.1" AFTER FINAL COMPACTION. (IT WILL BE FLUSH WHEN PAVING IN ECHELON.)

ONLY REMOVE THE LONGITUDINAL NOTCHED WEDGE JOINT FOR SMA PAVEMENT OR AS DIRECTED BY THE ENGINEER TO ADDRESS SPECIFIC LENGTHS OF JOINT DAMAGED BY TRAFFIC.

WHEN MILLING BACK OR REMOVING ANY LONGITUDINAL JOINT, LIMIT THE MATERIAL REMOVED TO 2" FROM THE TOP NOTCH OR FROM THE VERTICAL JOINT EDGE ON THE COLD SIDE OF THE JOINT.

USE LONGITUDINAL MILLED JOINT AS PLANS SHOW OR THE AS THE ENGINEER DIRECTS.

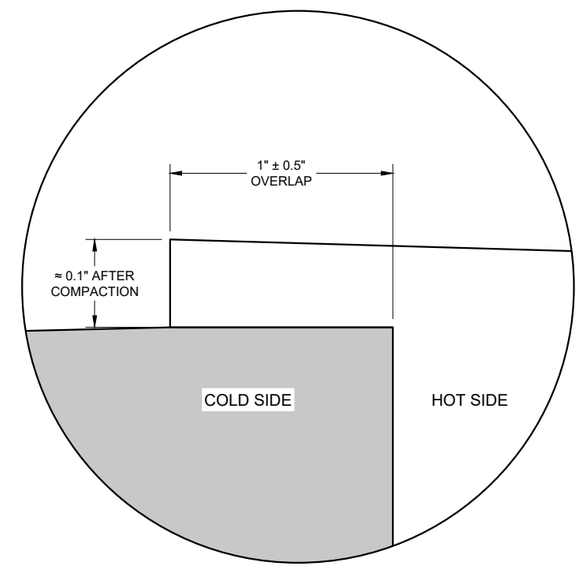

OVERLAP DETAIL (TYPICAL)

6

6

SDD 13C19 - 03

SDD 13C19 - 03

HMA LONGITUDINAL JOINTS

STATE OF WISCONSIN
DEPARTMENT OF TRANSPORTATION

APPROVED
November 2020 /S/ Steven Hefel
DATE HMA PAVEMENT ENGIN

FHWA

1. WOOD OR STEEL POSTS (w6X9 OR w6X8.5) MAY BE USED. DO NOT INTERMIX WOOD AND STEEL POSTS. INSTALL STEEL POSTS WITH HOLES ON APPROACHING TRAFFIC SIDE.
2. USE WOOD OR APPROVED PLASTIC BLOCKOUTS. WOOD BLOCKOUTS MAY BE CONSTRUCTED OUT OF TWO OR MORE WOOD BLOCKOUTS. SEE ALTERNATE WOOD BLOCKOUT DETAIL. DIMENSIONS OF APPROVED PLASTIC BLOCKOUTS MAY VARY.
3. IF ROCK IS ENCOUNTERED DURING EXCAVATION, PROVIDE A HOLE 12 INCHES IN DIAMETER EXTENDING 20 INCHES DEEP INTO THE ROCK. PLACE APPROXIMATELY 2 1/2" INCHES OF GRANULAR MATERIAL IN THE BOTTOM OF THE HOLE. CUT THE POSTS THE TO LENGTH AMD INSTALL. BACKFILL WITH EXCAVATED MATERIAL AND COMPACT. BACKFILL IS TO BE FREE OF LARGE ROCKS.
4. WHEN THE DISTANCE FROM BACK OF POST TO SHOULDER HINGE POINT IS LESS THAN 2 FEET INSTALL LONGER POST AT HALF POST SPACING (K).
5. FOR NEW MGS INSTALLATION TOP OF W-BEAM RAIL TOLERANCE IS +1". FOR EXISTING MGS INSTALLATION TOP OF W-BEAM IS BETWEEN 27 ¾" TO 32".
6. WHEN USING STEEL POST AND WOOD BLOCKOUTS INSTALL FOUR 16D GALVANIZED NAILS. INSTALL NAILS AT THE BACK CORNERS OF THE BLOCK AND BEND THE NAILS OVER THE FLANGE OF THE STEEL POST.
7. TOTAL POST LENGTH FOR TYPE K IS 7' - 0". TOTAL POST LENGTH FOR OTHER MGS TYPES IS 6' - 0".

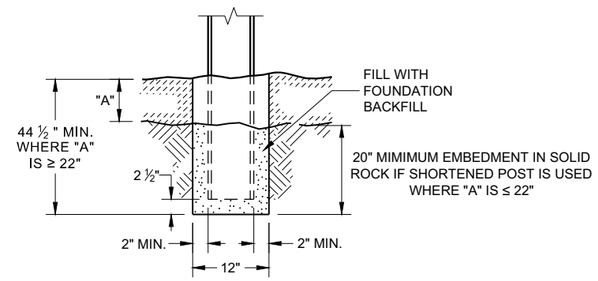

END VIEW
SETTING STEEL OR WOOD POST IN ROCK (3)

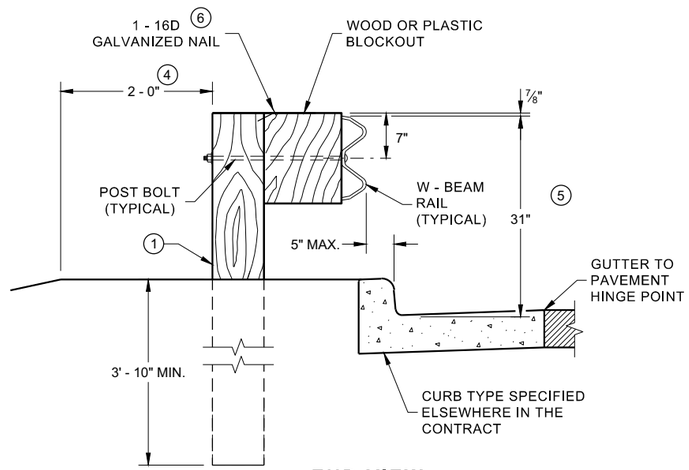

END VIEW
LOCATED ALONG A CURBED ROADWAY

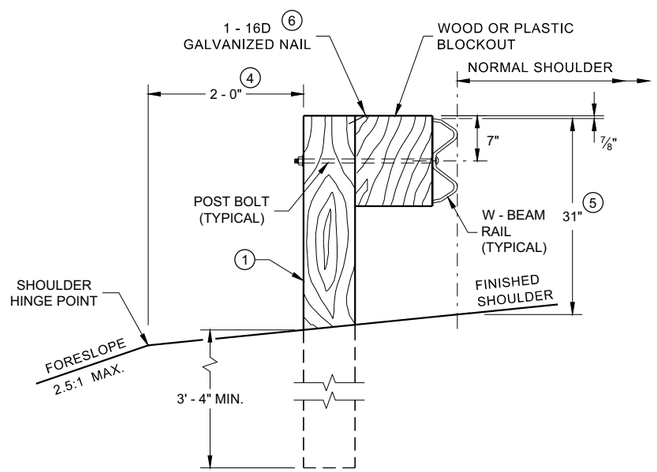

END VIEW
LOCATED ALONG A ROADWAY SHOULDER STANDARD INSTALLATION

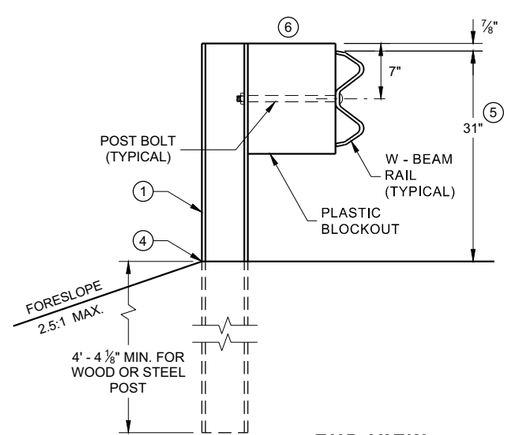

END VIEW
MGS LONGER POST AT HALFPOST SPACING W BEAM (K)

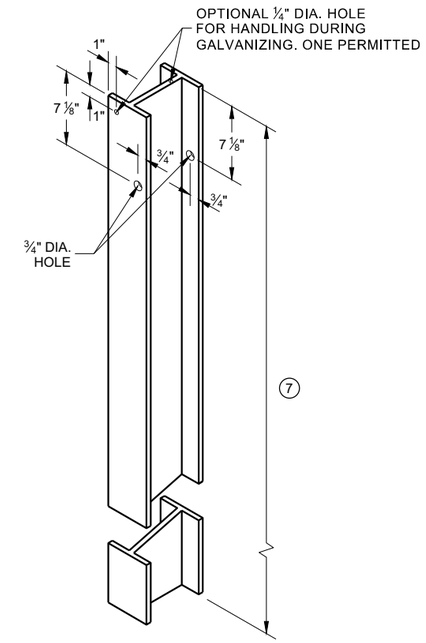

STEEL POST & HOLE PUNCHING DETAIL (W 6 X 9) (1)

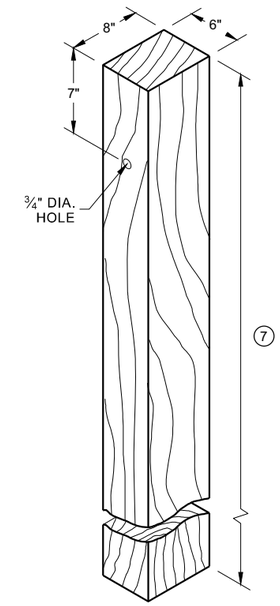

WOOD POST (6" X 8") NOMINAL (1)

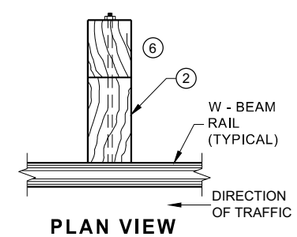

PLAN VIEW WOOD POST, BLOCKOUT & BEAM

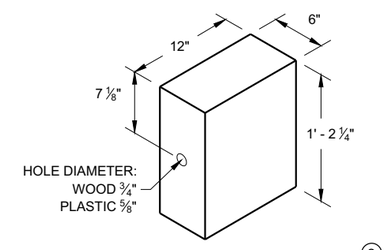

WOOD OR PLASTIC BLOCKOUT (2)

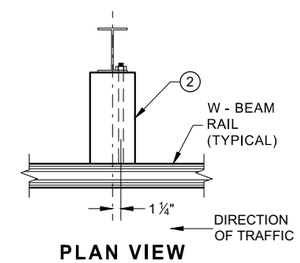

PLAN VIEW STEEL POST, PLASTIC BLOCKOUT & BEAM

MIDWEST GUARDRAIL SYSTEM (MGS) GUARDRAIL

STATE OF WISCONSIN
DEPARTMENT OF TRANSPORTA 80

6

SDD 14B42 - 06a

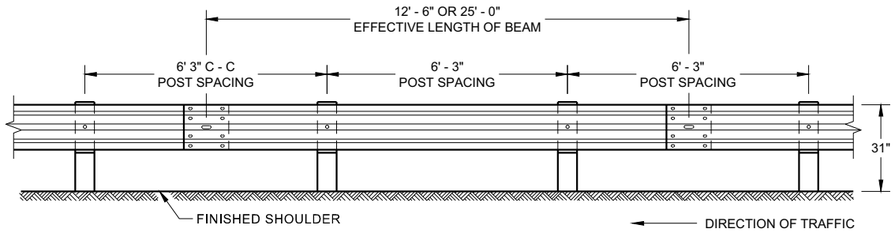

FRONT VIEW
POST SPACING STANDARD INSTALLATION

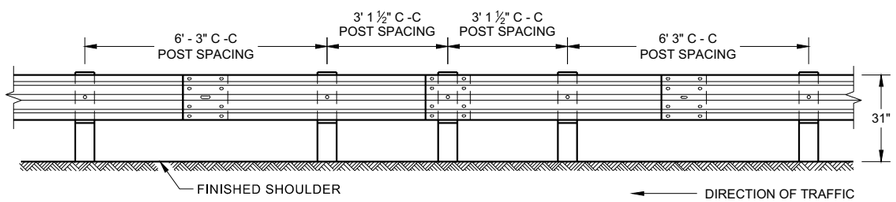

FRONT VIEW
HALF POST SPACING (HS) AND HALF POST SPACING WITH LONGER POSTS (K)

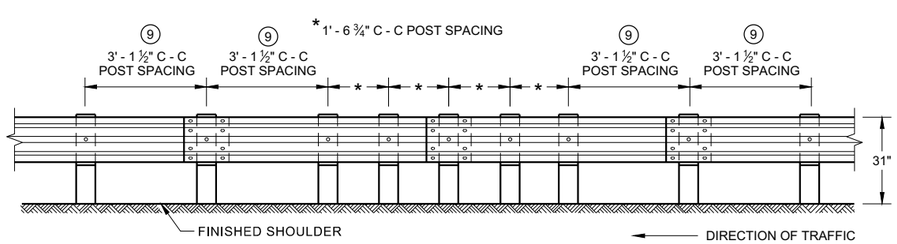

FRONT VIEW
QUARTER POST SPACING (QS)

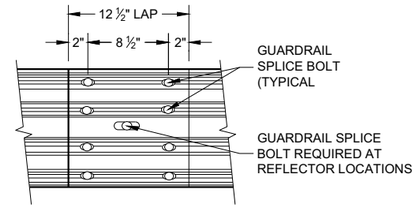

FRONT VIEW
MID-SPAN BEAM SPLICE

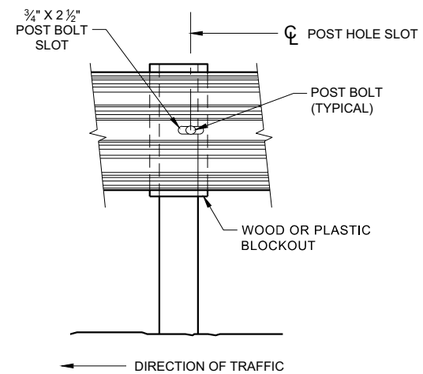

FRONT VIEW AT STEEL POST

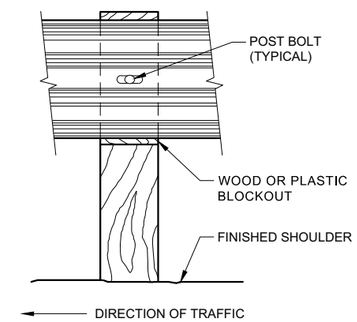

FRONT VIEW AT WOOD POST

GENERAL NOTES

8 DO NOT INSTALL REFLECTORS ON THE FIRST 50 FEET OF THE APPROACH END OF THE ENERGY ABSORBING TERMINAL.

9 25 FEET OF HALF POST SPACING IS REQUIRED ON APPROACH AND DEPARTURE ENDS OF QUARTER POST SPACING.

POST BOLTS ARE A ⅝" DIAMETER ASTM A307 GUARDRAIL BOLT. A POST BOLT REQUIRES ⅝" DIAMETER A563A DOUBLE RECESSED (DR) HEAVY HEX NUT AND ⅝" DIAMETER F844 FLAT WASHER. POST BOLTS MAY BE LONGER IF MULTIPLE BLOCKOUTS ARE BEING USED.

GUARD RAIL SPLICE BOLTS ARE A ⅝" DIAMETER ASTM A307 GUARDRAIL HEAD BOLT. A GUARDRAIL SPLICE BOLT REQUIRES ⅝" DIAMETER A563A DOUBLE RECESSED (DR) HEAVY HEX NUT.

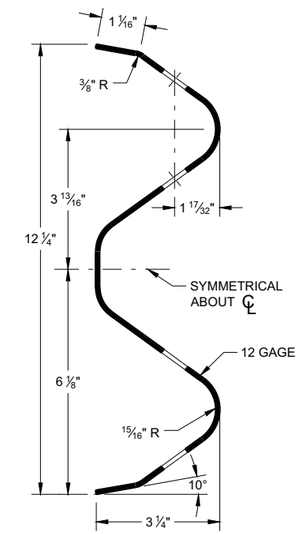

SECTION THRU W-BEAM RAIL

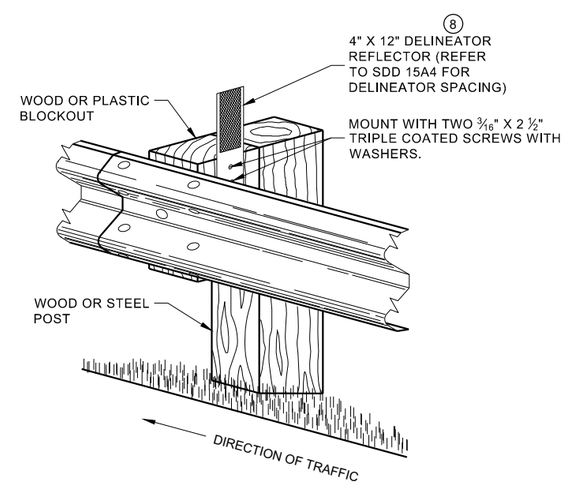

ONE SIDED REFLECTOR DETAIL AND TYPICAL INSTALLATION

MIDWEST GUARDRAIL SYSTEM (MGS) GUARDRAIL

STATE OF WISCONSIN
DEPARTMENT OF TRANSPORTA

6

SDD 14B42 - 06b

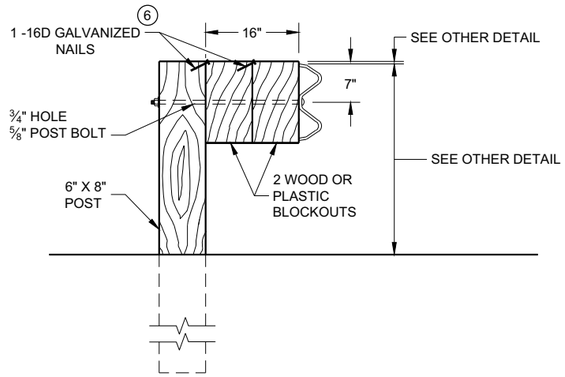

DETAIL FOR 16" BLOCKOUT DEPTH

IT IS ACCEPTABLE TO USE BLOCKOUTS UP TO 16" DEEP TO INCREASE THE POST OFFSET TO AVOID UNDERGROUND OBSTACLES. THERE IS NO LIMIT TO THE NUMBER OF POSTS THAT CAN HAVE ADDITIONAL BLOCKOUTS UP TO 16" DEEP.

NOTE:

1. ALL FILLETS SHALL HAVE A MINIMUM RADIUS OF 3/16".
2. IF THE BOLT EXTENDS MORE THAN ¼" FROM THE NUT THE BOLT SHOULD BE TRIMMED BACK.

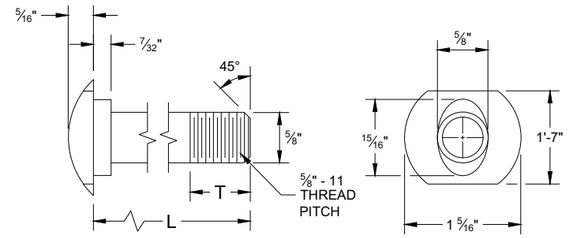

POST BOLT TABLE

L	T (MIN.)
1 ¼"	1 ⅛"
2"	1 ¾"
10"	4"
14"	4 1/16"
18"	4"
21"	4 1/16"
25"	4"

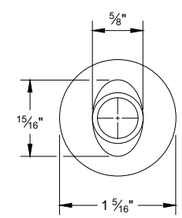

ALTERNATE BOLT HEAD

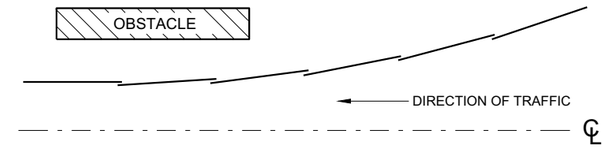

PLAN VIEW
BEAM LAPPING DETAIL

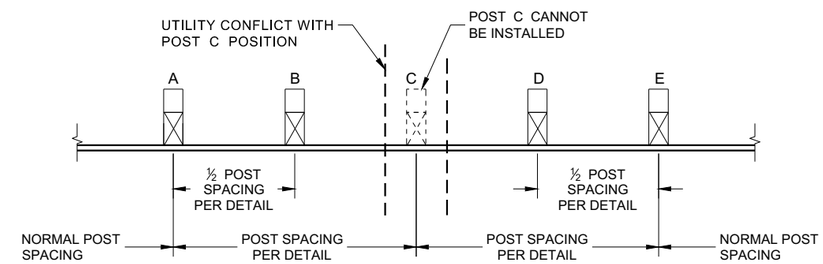

POST DRIVING FOR CONTINUOUS UNDERGROUND OBSTRUCTION

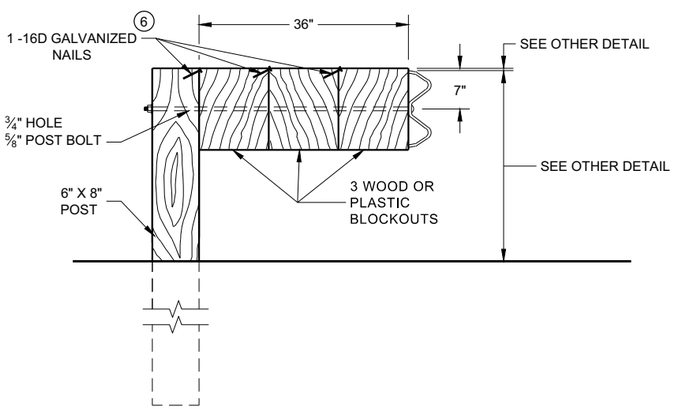

DETAIL FOR 36" BLOCKOUT DEPTH

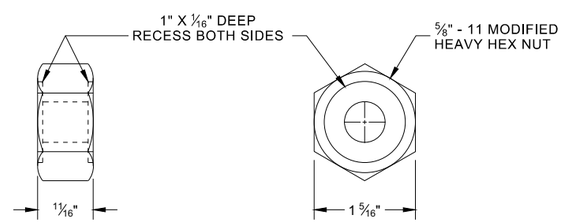

POST BOLT, SPLICE BOLT AND RECESS NUT

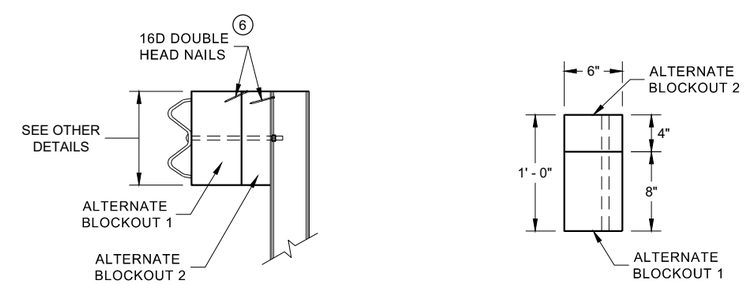

SIDE VIEW

PLAN VIEW

ALTERNATE WOOD BLOCKOUT DETAIL

NOTES: UNDER SPECIAL CIRCUMSTANCES, SUCH AS AVOIDING OBSTACLES THAT ARE NOT RELOCATED, IT IS ACCEPTABLE TO INSTALL ADDITIONAL BLOCKOUTS TO OBTAIN UP TO 36" DEPTH FOR ONE OR TWO POSTS IN A SECTION OF GUARDRAIL.

DO NOT USE 16" OR 36" BLOCKOUTS IF IT CAUSES THE POST TO BE DRIVEN BEYOND SHOULDER HINGE POINT OR CAUSES A FIXED OBJECT TO BE WITHIN THE DEFLECTION DISTANCE OF THE BARRIER.

(6) WHEN USING STEEL POST AD WOOD BLOCKOUTS, INSTALL FOUR 16D GALVANIZED NAILS. INSTALL NAILS AT THE BACK CORNERS OF THE BLOCK AND BEND THE NAILS OVER THE FLANGE OF THE STEEL POST.

MIDWEST GUARDRAIL SYSTEM (MGS) GUARDRAIL

STATE OF WISCONSIN
DEPARTMENT OF TRANSPORTA

6

SDD 14B42 - 06c

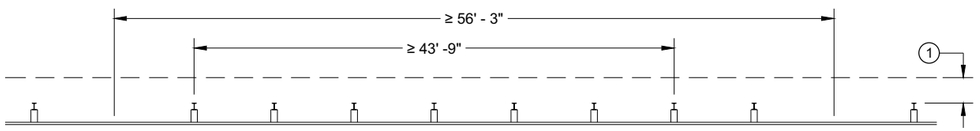

MISSING POST IN NORMAL BEAM GUARD RUN

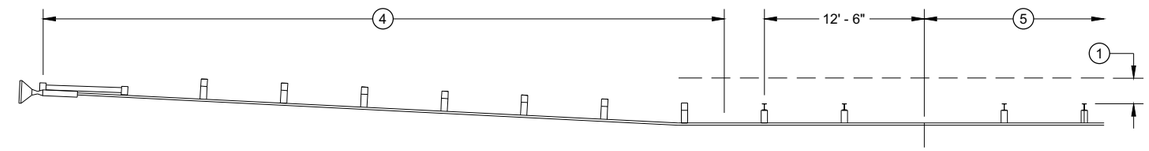

MISSING POST IN NORMAL BEAM GUARD RUN NEAR EAT

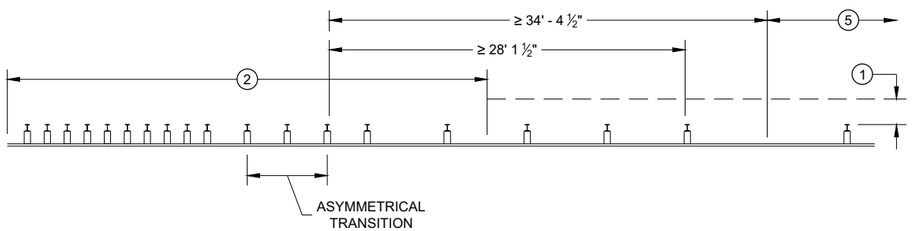

MISSING POST NEAR APPROACH THRIE BEAM TRANSITION

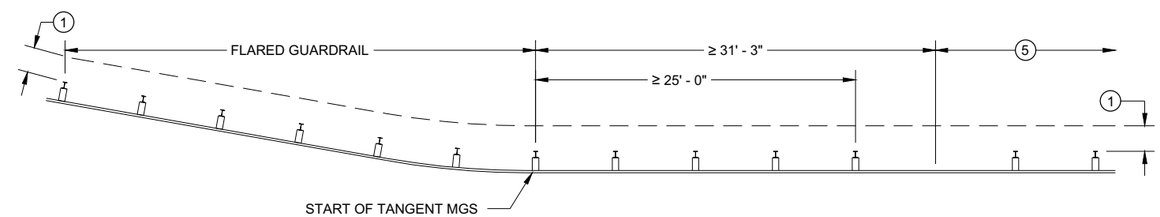

MISSING POST IN NORMAL BEAM GUARD RUN NEAR FLARED BEAM GUARD

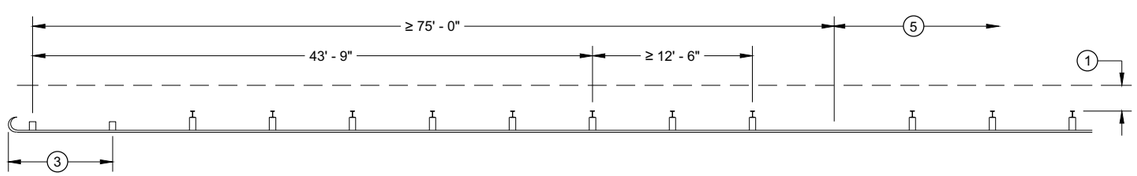

MISSING POST IN NORMAL BEAM GUARD RUN NEAR TYPE 2 TERMINAL

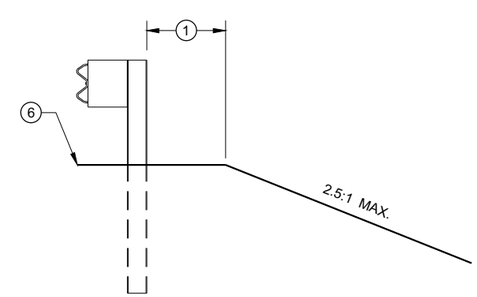

CROSS SECTION VIEW

1. MINIMUM OF 2 FEET OF GRADING BEHIND POST.
2. SEE SDD 14B45 FOR MORE DETAILS.
3. SEE SDD 14B47 FOR MORE DETAILS.
4. SEE SDD 14B44 FOR MORE DETAILS.
5. SEE MISSING POST IN NORMAL BEAM GUARD RUN FOR DISTANCE TO NEXT MISSING POST AND AREA FOR WELL DRAINED, COMPACTED SOILS.
6. SEE PLAN FOR SHOULDER DESIGN.

MIDWEST GUARDRAIL SYSTEM (MGS) GUARDRAIL

STATE OF WISCONSIN
DEPARTMENT OF TRANSPORTATION

APPROVED
7/2018 — DATE
/S/ Rodney Taylor — ROADWAY STANDARDS DEVE UNIT SUPERVISOR
FHWA

6

SDD 14B42 - 06d

1. WOOD OR STEEL POSTS (w6X9 OR w6X8.5) MAY BE USED. DO NOT INTERMIX WOOD AND STEEL POSTS. INSTALL STEEL POSTS WITH HOLES ON APPROACHING TRAFFIC SIDE.
2. USE WOOD OR APPROVED PLASTIC BLOCKOUTS. WOOD BLOCKOUTS MAY BE CONSTRUCTED OUT OF TWO OR MORE WOOD BLOCKOUTS. SEE ALTERNATE WOOD BLOCKOUT DETAIL. DIMENSIONS OF APPROVED PLASTIC BLOCKOUTS MAY VARY.
3. IF ROCK IS ENCOUNTERED DURING EXCAVATION, PROVIDE A HOLE 12 INCHES IN DIAMETER EXTENDING 20 INCHES DEEP INTO THE ROCK. PLACE APPROXIMATELY 2 1/2" INCHES OF GRANULAR MATERIAL IN THE BOTTOM OF THE HOLE. CUT THE POSTS THE TO LENGTH AMD INSTALL. BACKFILL WITH EXCAVATED MATERIAL AND COMPACT. BACKFILL IS TO BE FREE OF LARGE ROCKS.
4. WHEN THE DISTANCE FROM BACK OF POST TO SHOULDER HINGE POINT IS LESS THAN 2 FEET INSTALL LONGER POST AT HALF POST SPACING (K).
5. FOR NEW MGS INSTALLATION TOP OF W-BEAM RAIL TOLERANCE IS ±1". FOR EXISTING MGS INSTALLATION TOP OF W-BEAM IS BETWEEN 27 ¾" TO 32".
6. WHEN USING STEEL POST AND WOOD BLOCKOUTS INSTALL FOUR 16D GALVANIZED NAILS. INSTALL NAILS AT THE BACK CORNERS OF THE BLOCK AND BEND THE NAILS OVER THE FLANGE OF THE STEEL POST.
7. TOTAL POST LENGTH FOR TYPE K IS 7' - 0". TOTAL POST LENGTH FOR OTHER MGS TYPES IS 6' - 0".

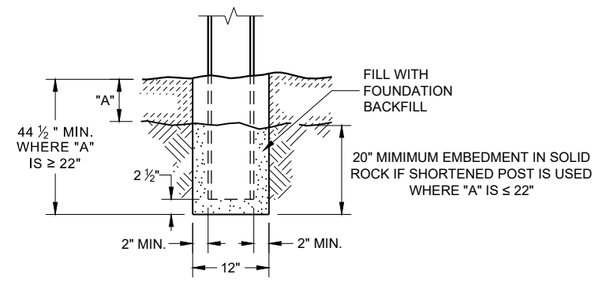

END VIEW
SETTING STEEL OR WOOD POST IN ROCK (3)

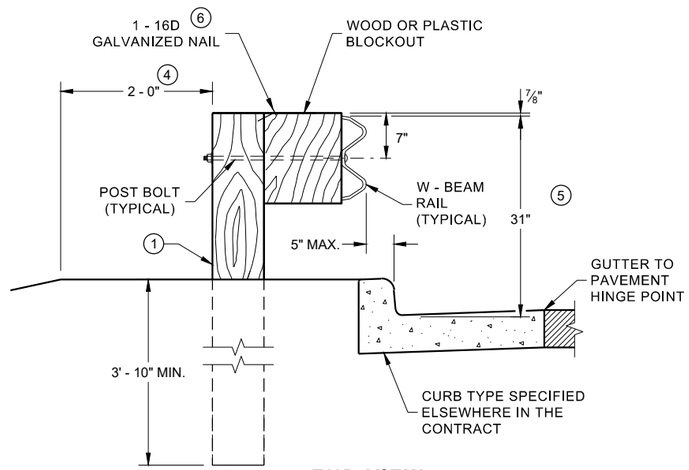

END VIEW
LOCATED ALONG A CURBED ROADWAY

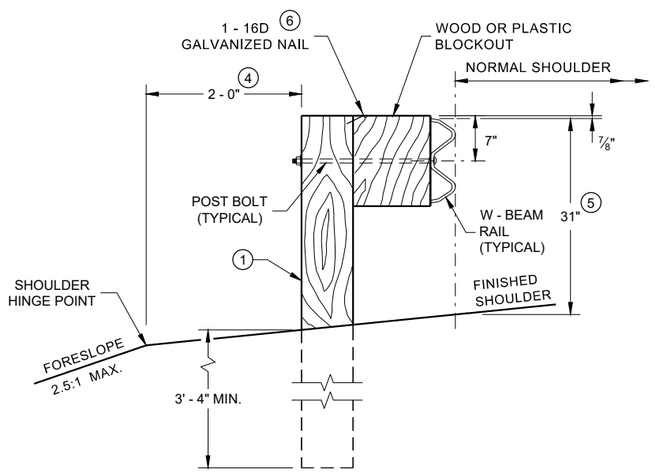

END VIEW
LOCATED ALONG A ROADWAY SHOULDER STANDARD INSTALLATION

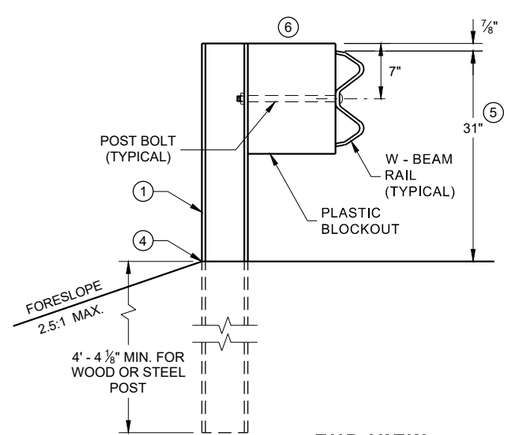

END VIEW
MGS LONGER POST AT HALFPOST SPACING W BEAM (K)

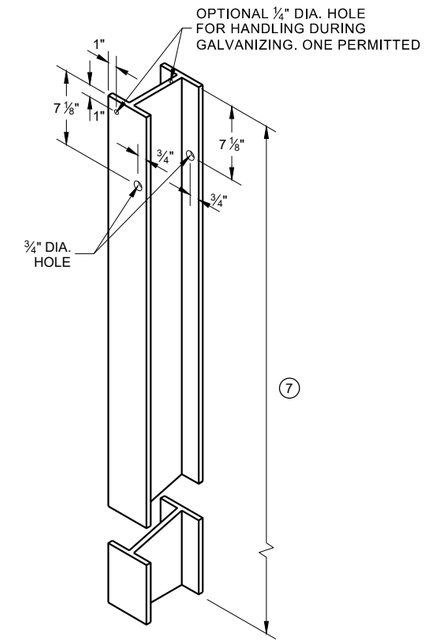

STEEL POST & HOLE PUNCHING DETAIL (W 6 X 9) (1)

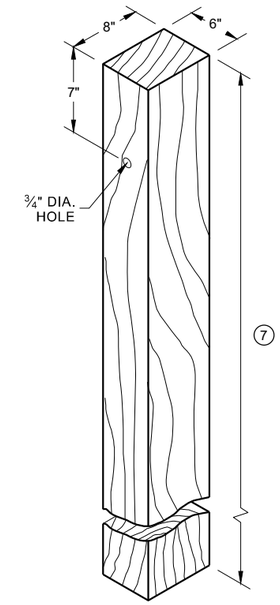

WOOD POST (6" X 8") NOMINAL (1)

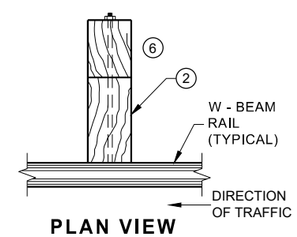

PLAN VIEW WOOD POST, BLOCKOUT & BEAM

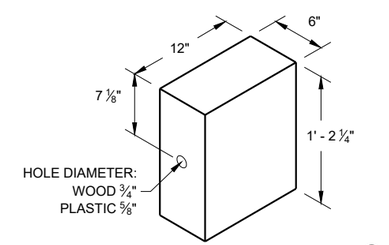

WOOD OR PLASTIC BLOCKOUT (2)

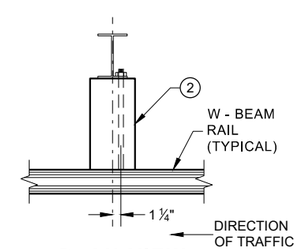

PLAN VIEW STEEL POST, PLASTIC BLOCKOUT & BEAM

MIDWEST GUARDRAIL SYSTEM (MGS) GUARDRAIL

STATE OF WISCONSIN
DEPARTMENT OF TRANSPORTA

6

SDD 14B42 - 07a

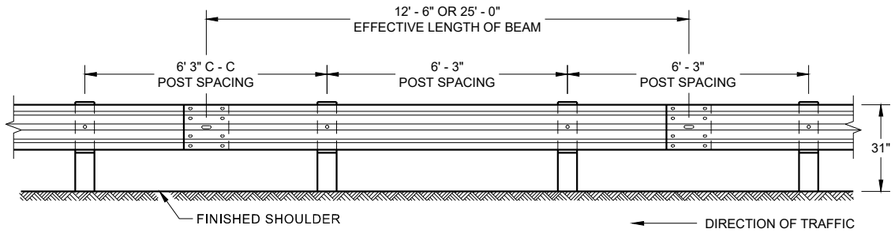

FRONT VIEW
POST SPACING STANDARD INSTALLATION

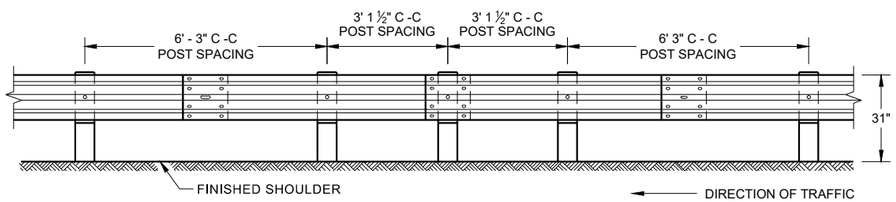

FRONT VIEW
HALF POST SPACING (HS) AND HALF POST SPACING WITH LONGER POSTS (K)

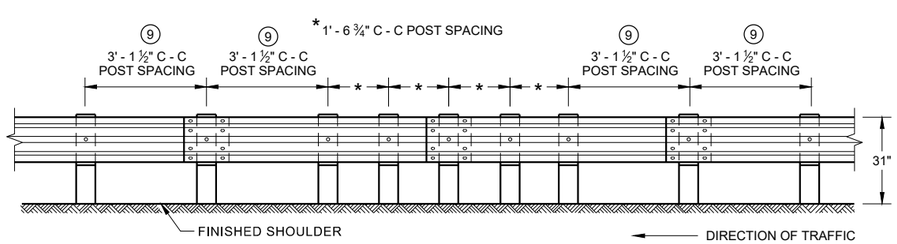

FRONT VIEW
QUARTER POST SPACING (QS)

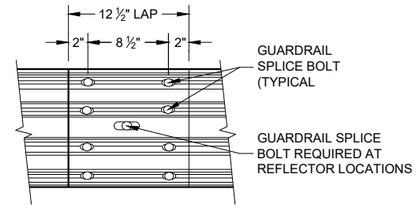

FRONT VIEW
MID-SPAN BEAM SPLICE

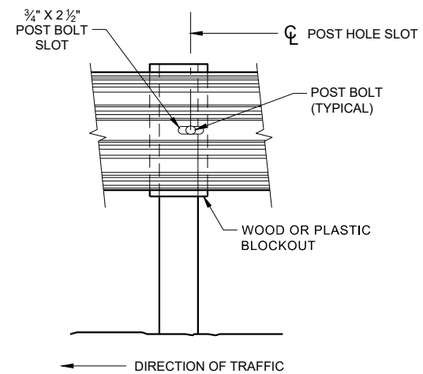

FRONT VIEW AT STEEL POST

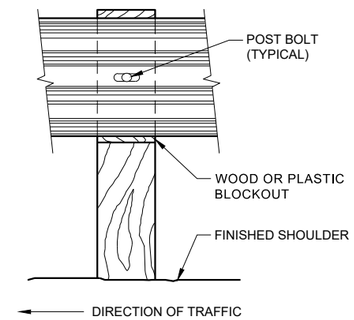

FRONT VIEW AT WOOD POST

GENERAL NOTES

8 DO NOT INSTALL REFLECTORS ON THE FIRST 50 FEET OF THE APPROACH END OF THE ENERGY ABSORBING TERMINAL.

9 25 FEET OF HALF POST SPACING IS REQUIRED ON APPROACH AND DEPARTURE ENDS OF QUARTER POST SPACING.

POST BOLTS ARE A ⅝" DIAMETER ASTM A307 GUARDRAIL BOLT. A POST BOLT REQUIRES ⅝" DIAMETER A563A DOUBLE RECESSED (DR) HEAVY HEX NUT AND ⅝" DIAMETER F844 FLAT WASHER. POST BOLTS MAY BE LONGER IF MULTIPLE BLOCKOUTS ARE BEING USED.

GUARD RAIL SPLICE BOLTS ARE A ⅝" DIAMETER ASTM A307 GUARDRAIL HEAD BOLT. A GUARDRAIL SPLICE BOLT REQUIRES ⅝" DIAMETER A563A DOUBLE RECESSED (DR) HEAVY HEX NUT.

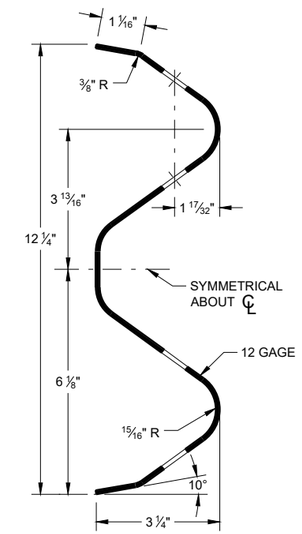

SECTION THRU W-BEAM RAIL

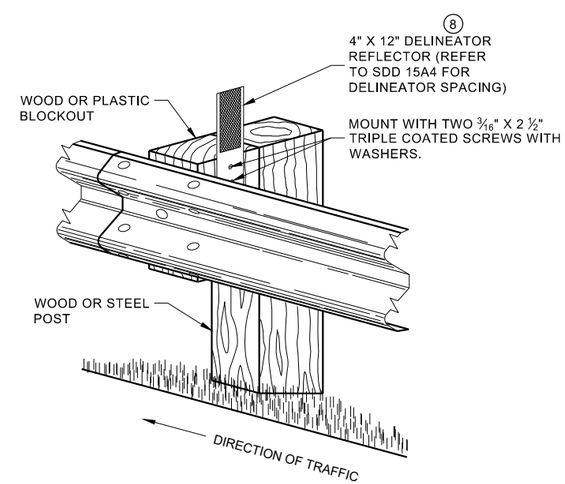

ONE SIDED REFLECTOR DETAIL AND TYPICAL INSTALLATION

MIDWEST GUARDRAIL SYSTEM (MGS) GUARDRAIL

STATE OF WISCONSIN
DEPARTMENT OF TRANSPORTAT

6

SDD 14B42 - 07b

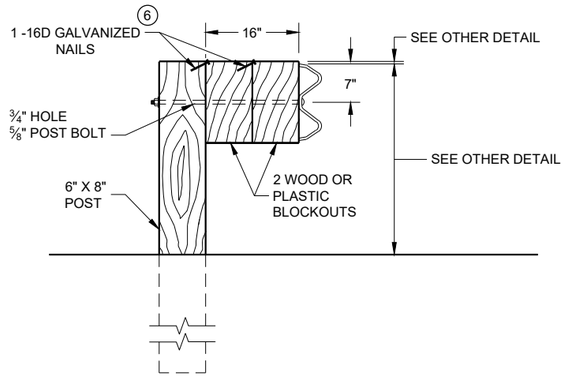

DETAIL FOR 16" BLOCKOUT DEPTH

IT IS ACCEPTABLE TO USE BLOCKOUTS UP TO 16" DEEP TO INCREASE THE POST OFFSET TO AVOID UNDERGROUND OBSTACLES. THERE IS NO LIMIT TO THE NUMBER OF POSTS THAT CAN HAVE ADDITIONAL BLOCKOUTS UP TO 16" DEEP.

NOTE:

1. ALL FILLETS SHALL HAVE A MINIMUM RADIUS OF 3/16".
2. IF THE BOLT EXTENDS MORE THAN ¼" FROM THE NUT THE BOLT SHOULD BE TRIMMED BACK.

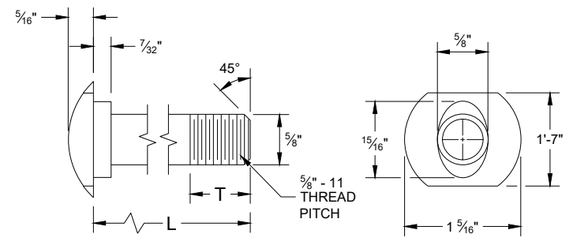

POST BOLT TABLE

L	T (MIN.)
1 ¼"	1 ⅛"
2"	1 ¾"
10"	4"
14"	4 1/16"
18"	4"
21"	4 1/16"
25"	4"

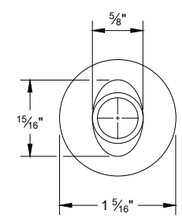

ALTERNATE BOLT HEAD

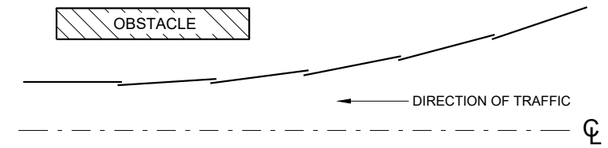

PLAN VIEW
BEAM LAPPING DETAIL

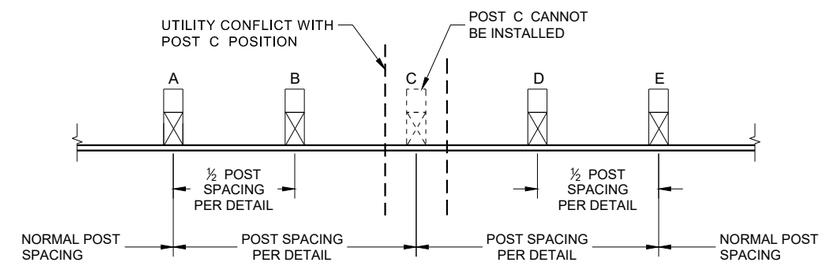

POST DRIVING FOR CONTINUOUS UNDERGROUND OBSTRUCTION

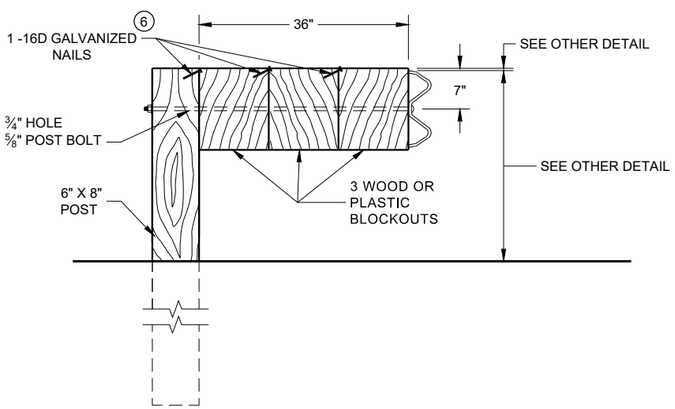

DETAIL FOR 36" BLOCKOUT DEPTH

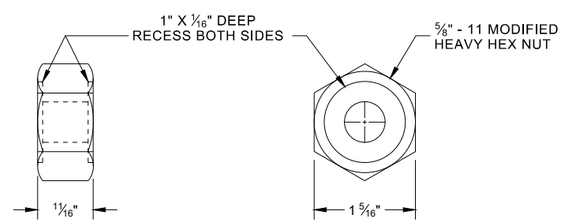

POST BOLT, SPLICE BOLT AND RECESS NUT

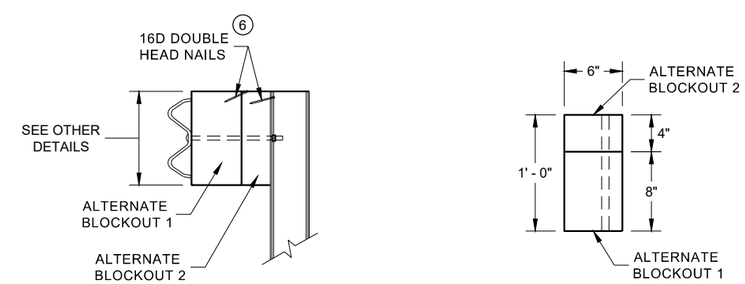

SIDE VIEW

PLAN VIEW

ALTERNATE WOOD BLOCKOUT DETAIL

NOTES: UNDER SPECIAL CIRCUMSTANCES, SUCH AS AVOIDING OBSTACLES THAT ARE NOT RELOCATED, IT IS ACCEPTABLE TO INSTALL ADDITIONAL BLOCKOUTS TO OBTAIN UP TO 36" DEPTH FOR ONE OR TWO POSTS IN A SECTION OF GUARDRAIL.

DO NOT USE 16" OR 36" BLOCKOUTS IF IT CAUSES THE POST TO BE DRIVEN BEYOND SHOULDER HINGE POINT OR CAUSES A FIXED OBJECT TO BE WITHIN THE DEFLECTION DISTANCE OF THE BARRIER.

(6) WHEN USING STEEL POST AD WOOD BLOCKOUTS, INSTALL FOUR 16D GALVANIZED NAILS. INSTALL NAILS AT THE BACK CORNERS OF THE BLOCK AND BEND THE NAILS OVER THE FLANGE OF THE STEEL POST.

MIDWEST GUARDRAIL SYSTEM (MGS) GUARDRAIL

STATE OF WISCONSIN
DEPARTMENT OF TRANSPORTA

6

SDD 14B42 - 07c

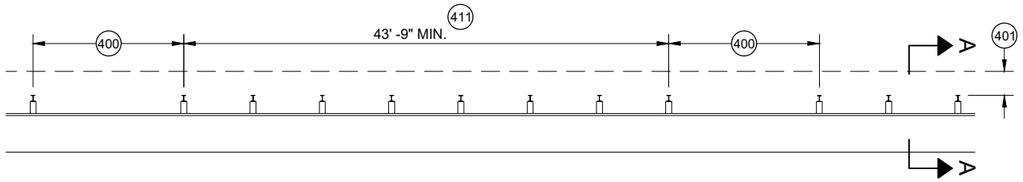

MISSING POST IN MGS GUARDRAIL

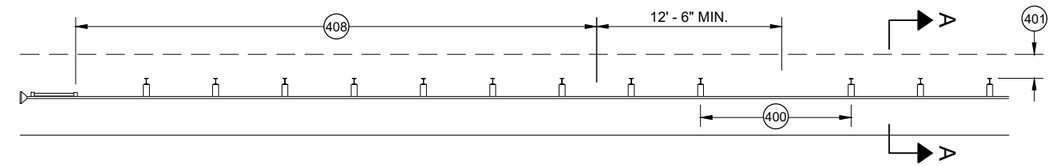

MISSING POST IN MGS GUARDRAIL NEAR EAT

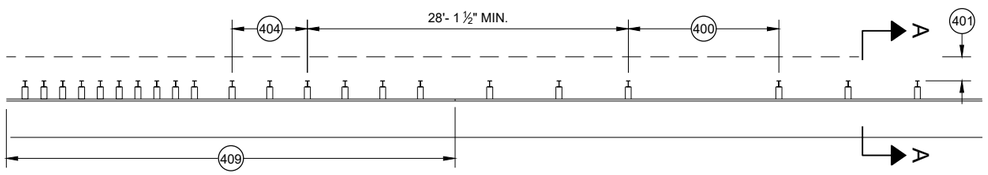

MISSING POST IN MGS GUARDRAIL NEAR AN APPROACH TRANSITION

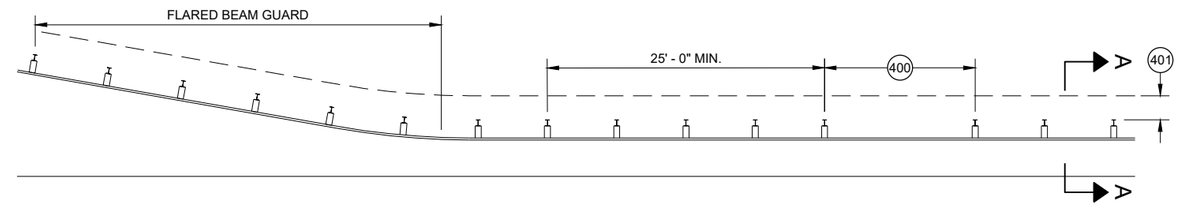

MISSING POST IN MGS GUARDRAIL NEAR FLARED BEAM GUARD

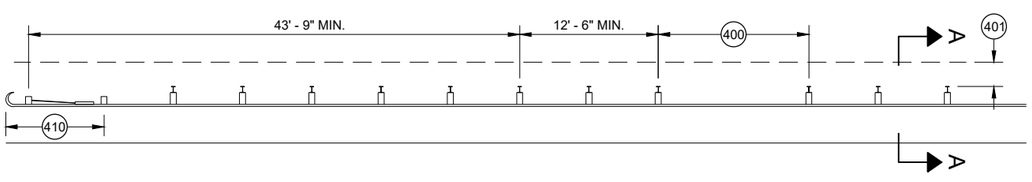

MISSING POST IN MGS GUARDRAIL NEAR A TYPE 2 END TERMINAL

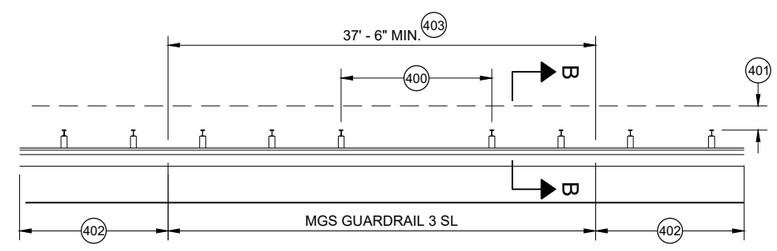

MISSING POST IN SHORT SPAN MGS GUARDRAIL NEAR CURB (SL) 407

400 MAX SPAN 12' - 6"
401 2' MIN.
402 MGS GUARDRAIL 3
403 NESTING BEAM GUARD
404 ASYMMETRIC TRANSITION
405 SOIL WELL DRAINED AND COMPACTED
406 SEE OTHER DRAWINGS IN THIS SDD
407 SEE OTHER DRAWINGS FOR MIN. SPACING BETWEEN SPANS
408 SEE SDD 14B44
409 SEE SDD 14B45
410 SEE SDD 14B47
411 MINIMUM DISTANCE BETWEEN MISSING POST SPANS.

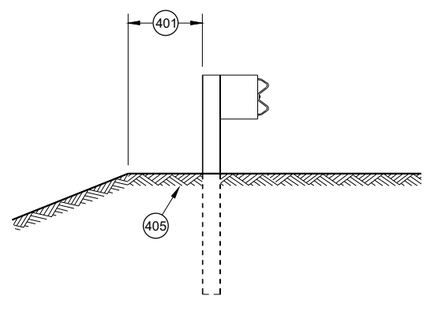

SECTION A - A 406

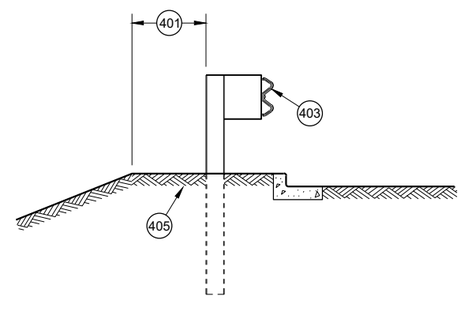

SECTION B - B 406

MIDWEST GUARDRAIL SYSTEM (MGS) GUARDRAIL

STATE OF WISCONSIN
DEPARTMENT OF TRANSPORTATION

APPROVED
May 2021 — DATE
/S/ Rodney Taylor — ROADWAY STANDARDS DEVE UNIT SUPERVISOR
FHWA

6

SDD 14B42 - 07d

GENERAL NOTES

(A) THE SLOPE IN THE AREA BOUNDED BY THE GRADELINE, THE HINGE POINT LINE (HPL) AND THE CLEAR ZONE LIMITS (CZL) SHALL BE 4:1 OR FLATTER.

(B) AFTER FINAL ASSEMBLY, RECHECK CABLE TO BE SURE IT IS TAUT AND HAS NOT RELAXED

(C) DIFFERENT MANUFACTURERS REQUIRE DIFFERENT PERFORATED W - BEAM RAIL END PANELS. SEE MANUFACTURER'S INFORMATION.

(D) ATTACH ALUMINUM SHEET TO E.A.T. HEAD USING 4 STAINLESS STEEL SELF - TAPPING SCREWS. ONE SCREW PER CORNER.

(E) HARDWARE MAY VARY BETWEEN MANUFACTURER. SEE MANUFACTURER'S DRAWING FOR INFORMATION.

DIMENSIONS MAY VARY, MANUFACTURER'S INFORMATION.

SEE SDD 14B42 FOR MORE INFORMATION.

* DO NOT ATTACH BLOCKOUTS TO POST 1 AND 2.

DO NOT INSTALL REFLECTORS ON THE FIRST 50 FEET OF THE APPROACH END OF THE ENERGY ABSORBING TERMINAL.

SEE MANUFACTURER'S DRAWING FOR SPLICE LOCATION, HARDWARE DIMENSIONS AND INSTALLATION INSTRUCTIONS.

THE CENTER OF THE UPPER 3 ½" DIAMETER HOLE ON POST NUMBER 3 THROUGH POST 9 IS TO BE FLUSH WITH THE GROUND LINE UP TO A MAXIMUM OF 2" ABOVE GROUND LINE. WOOD BLOCKS ON POSTS NUMBERED 3 THROUGH 9 MAY BE ADJUSTED UP TO 3" ABOVE THE TOP OF POST.

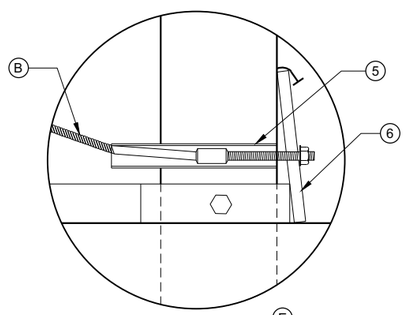

DETAIL "A" (E)

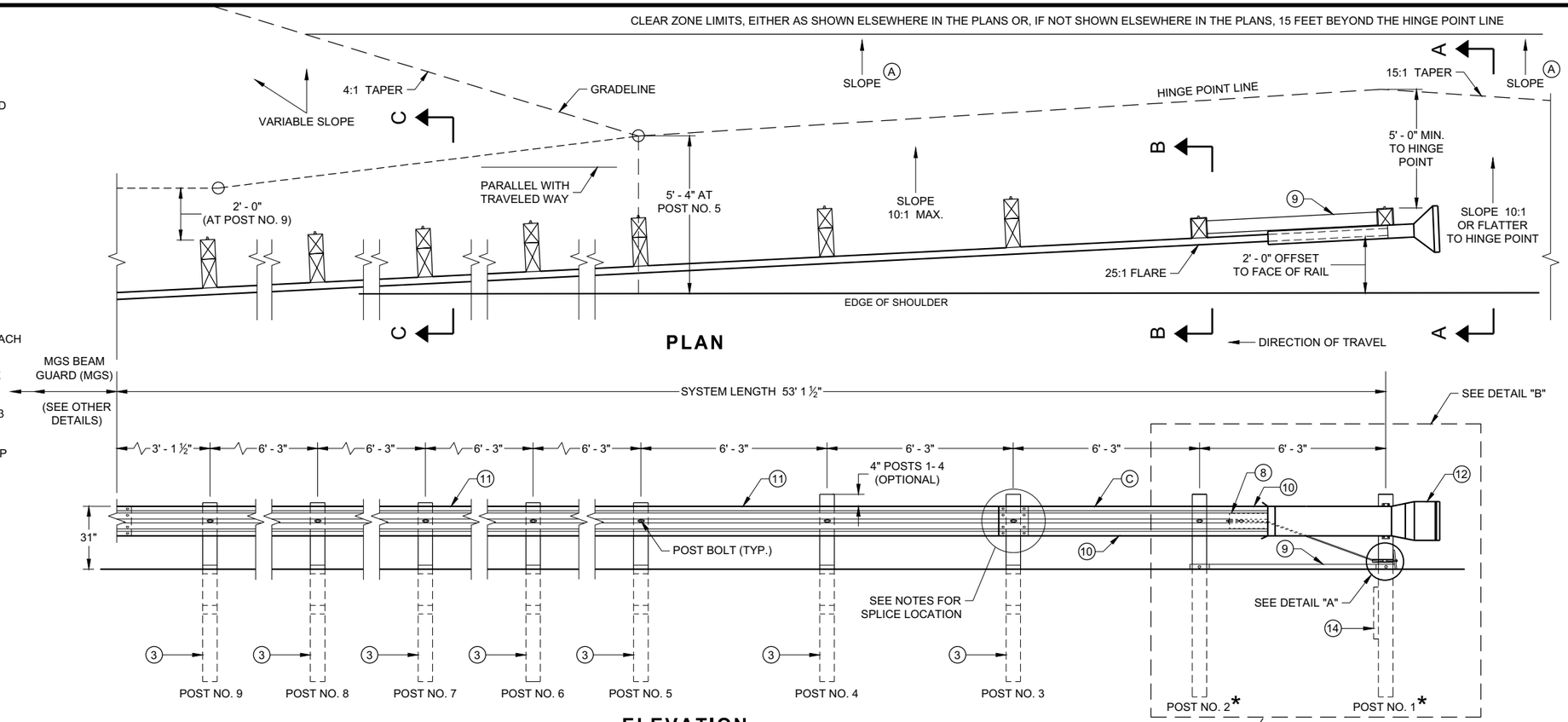

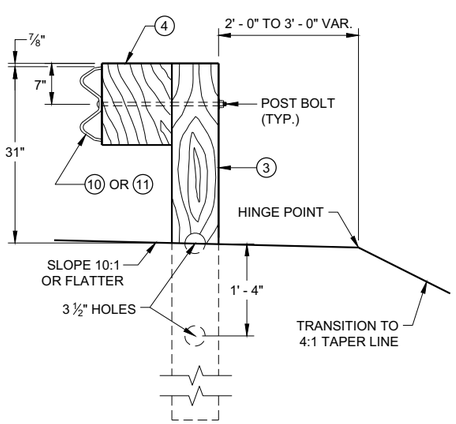

SECTION C - C
TYPICAL AT POST NOS. 3 - 9

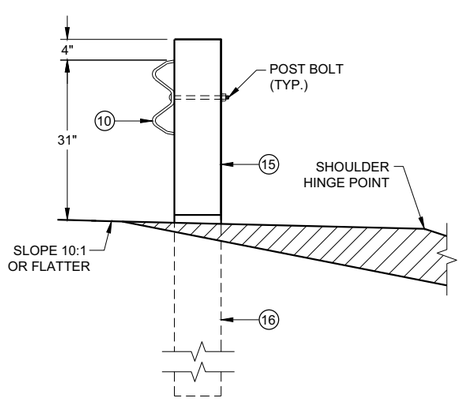

SECTION B - B
TYPICAL AT POST NO. 2*

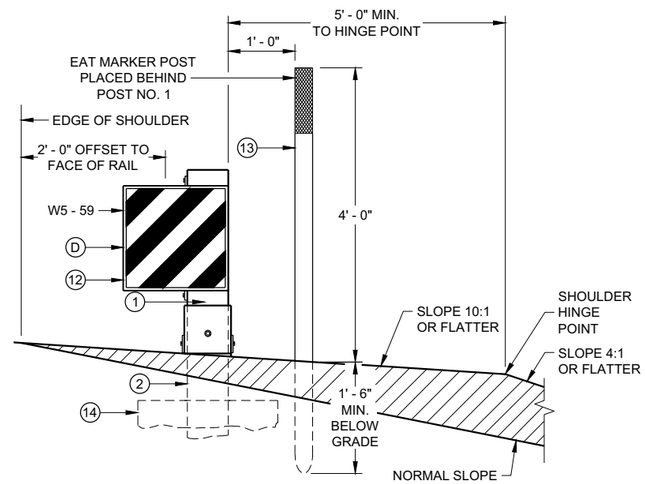

SECTION A - A
TYPICAL AT POST NO. 1*

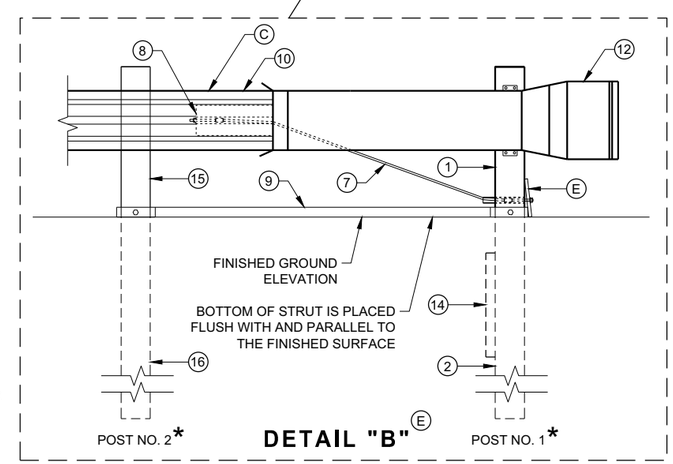

DETAIL "B" (E)

MIDWEST GUARDRAIL SYSTEM ENERGY ABSORBING TERMINAL (MGS)

STATE OF WISCONSIN
DEPARTMENT OF TRANSPORTATION

6

6

SDD 14B44 - 04a

SDD 14B44 - 04a

BILL OF MATERIALS

PART NO.	DESCRIPTION MATERIALS PROVIDED BY MGS EAT MANUFACTURER. SEE MANUGACTURER'S DETAILS FOR MORE INFORMATION.
1	UPPER POST NO. 1 6" X 6" TUBE
2	LOWER POST NO. 1
3	WOOD CRT
4	WOOD BLOCKOUT
5	PIPE SLEEVE
6	BEARING PLATE
7	BCT CABLE ASSEMBLY
8	ANCHOR CABLE BOX
9	GROUND STRUT
10	PERFORATED W-BEAM RAIL END PANEL, 12'-6" LONG.
11	STANDARD W-BEAM RAIL. MULTIPLE SECTIONS REQUIRED. SECTIONS VARY IN LENGTH.
12	IMPACT HEAD
13	EAT MARKER POST - YELLOW (SEE APPROVED PRODUCTS LIST)
14	SOIL PLATE
15	UPPER POST NO. 2
16	LOWER POST NO. 2

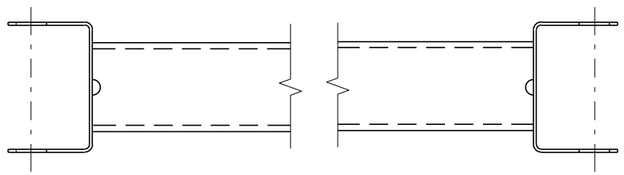

GENERIC GROUND STRUT 9 E

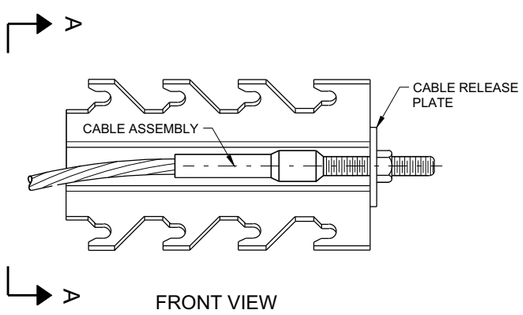

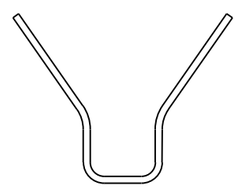

SECTION A - A

GENERIC ANCHOR CABLE BOX 9 E

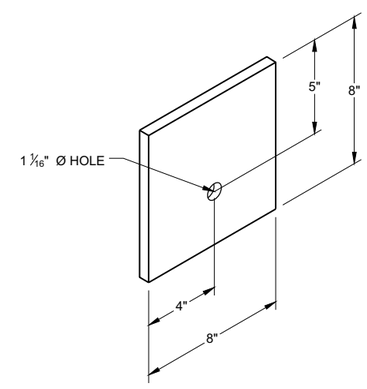

BEARING PLATE 6 E

MIDWEST GUARDRAIL SYSTEM ENERGY ABSORBING TERMINAL (MGS)

STATE OF WISCONSIN
DEPARTMENT OF TRANSPORTAT

6

SDD 14B44 - 04b

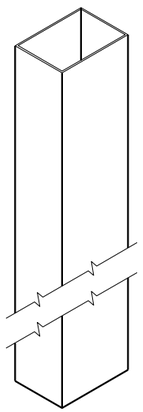

UPPER POST NO. 1 (1) (E)

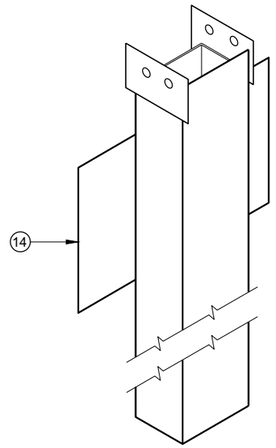

LOWER POST NO. 1 (2) (E)

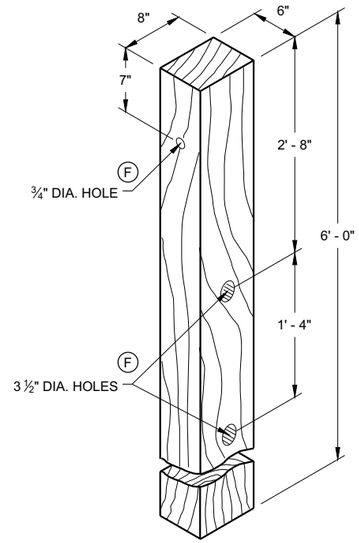

WOOD CRT POST (3) (E)

POSTS NUMBER 3-9

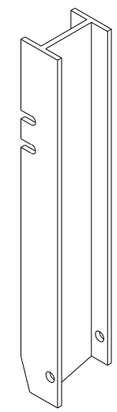

UPPER POST NO. 2 (15) (E)

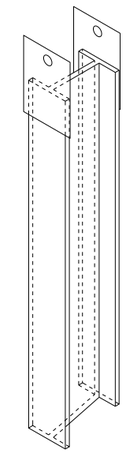

LOWER POST NO. 2 (16) (E)

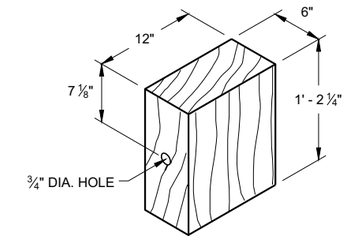

WOOD BLOCKOUT (4)

REQ'D. AT ALL POSTS EXCEPT POST NO'S 1 & 2

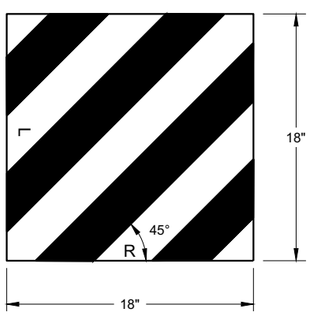

W5 - 59

REFLECTIVE SHEETING DETAIL (E)

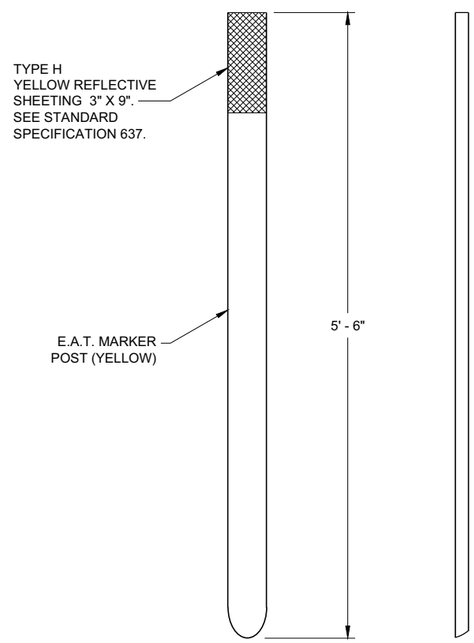

FRONT VIEW SIDE VIEW

E.A.T. MARKER POST (13)

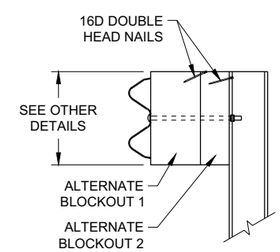

SIDE VIEW

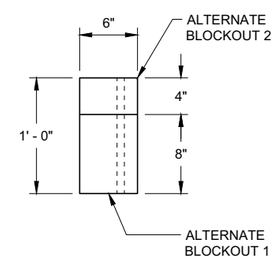

TOP VIEW

ALTERNATE WOOD BLOCKOUT DETAIL

MIDWEST GUARDRAIL SYSTEM ENERGY ABSORBING TERMINAL (MGS)

STATE OF WISCONSIN
DEPARTMENT OF TRANSPORTATION

APPROVED
7/2018 — DATE
/S/ Rodney Taylor — ROADWAY STANDARDS DEVE UNIT SUPERVISOR
FHWA

6

SDD 14B44 - 04c

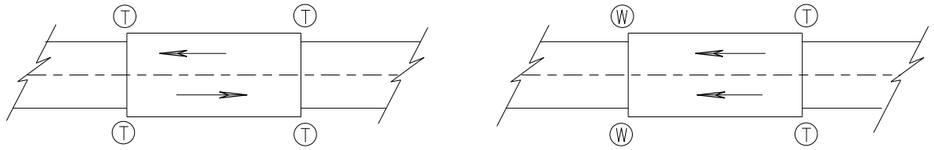

TWO WAY TRAFFIC **ONE WAY TRAFFIC**

(T) THRIE BEAM CONNECTION

(W) W-BEAM CONNECTION WHEN REQUIRED

TYPICAL LOCATIONS OF THRIE BEAM AND W-BEAM CONNECTIONS TO BRIDGE

GENERAL NOTES

IF ROCK IS ENCOUNTERED, REMOVE ROCK TO FULL DEPTH OF POST PLUS 2½", AND 12" DIAMETER AROUND POST. SEE 14B42 FOR MORE DETAILS.

TRANSITION USES STEEL POSTS ONLY.

SEE STANDARD DETAIL DRAWING 14 B 42 FOR MORE INFORMATION.

POST 2 THROUGH 17 USES STEEL POST ONLY

(1) BRIDGE RAILING TYPE "W" DOES NOT REQUIRE A TERMINAL CONNECTOR.

(2) OPTIONAL CURB AND GUTTER OR DRAINAGE FEATURE SEE PLAN FOR INFORMATION.

(13) STEEL OR WOOD POST IS ACCEPTABLE AT POST 1. SEE SDD14B42

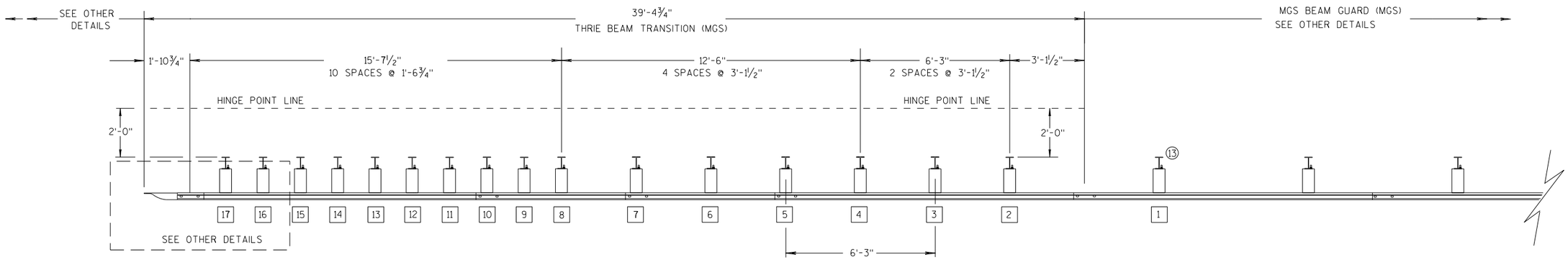

PLAN VIEW

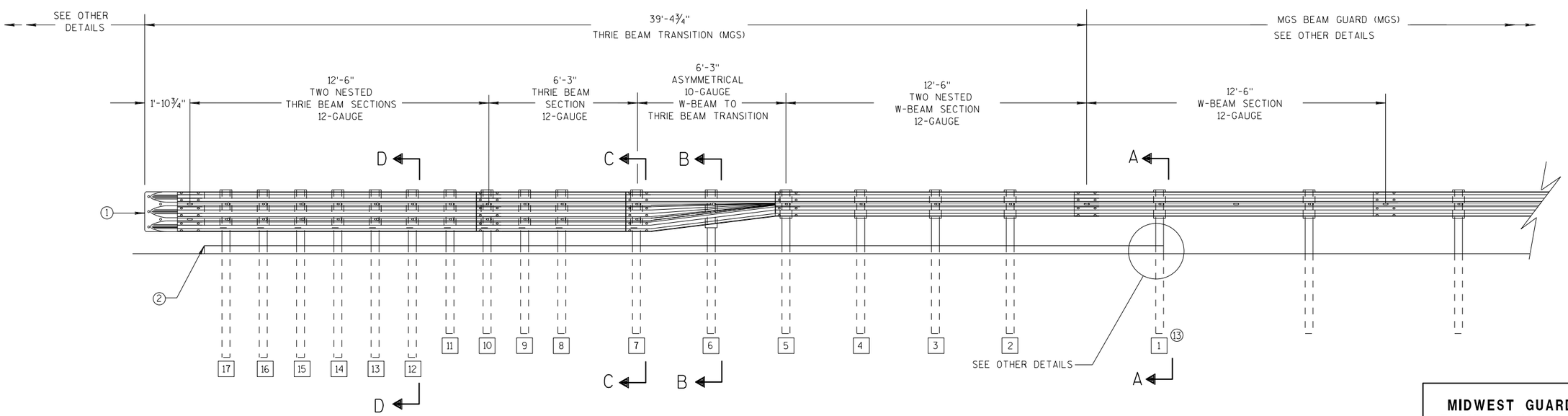

ELEVATION VIEW

MIDWEST GUARDRAIL SYSTEM THRIE BEAM TRANSITION

MIDWEST GUARDRAIL SYSTEM
THRIE BEAM TRANSITION (MGS)

STATE OF WISCONSIN
DEPARTMENT OF TRANSPOR

6

S.D.D. 14 B 45-5a

GENERAL NOTES

(2) OPTIONAL CURB AND GUTTER OR DRAINAGE FEATURE SEE PLAN FOR INFORMATION.

(3) WHEN USING STEEL POSTS AND WOOD BLOCKOUTS INSTALL FOUR 10D GALVANIZED NAILS. INSTALL NAILS AT THE BACK CORNERS OF THE BLOCK AND BEND THE NAILS OVER THE FLANGE OF THE STEEL POST.

(4) TOLERANCE FOR TOP OF W-BEAM RAIL IS ± 1".

(13) STEEL OR WOOD POST IS ACCEPTABLE AT POST 1. SEE SDD 14B42

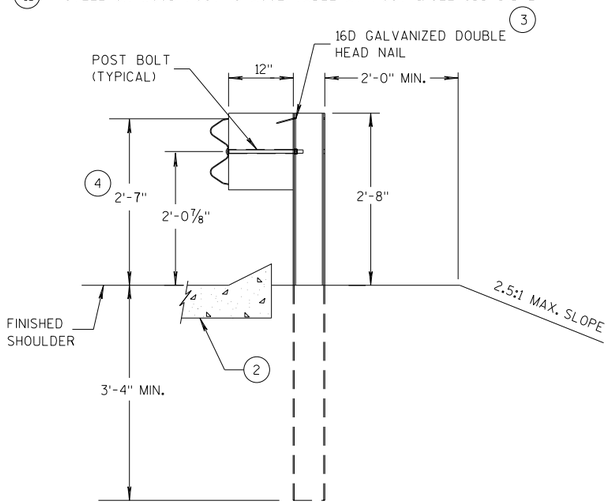

SECTION A-A (13)

POSTS 1-5

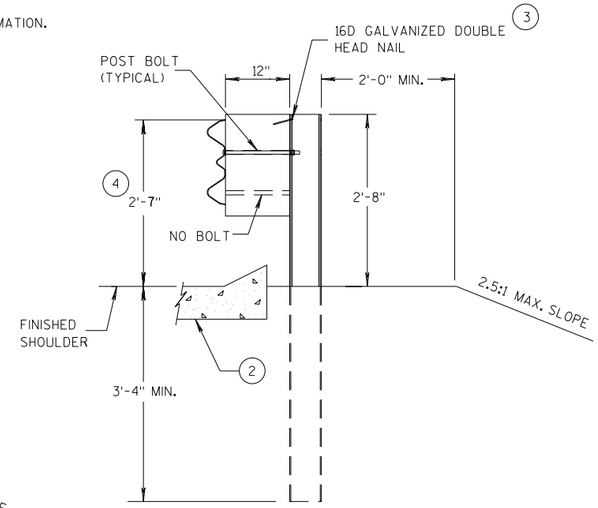

SECTION B-B

POST 6

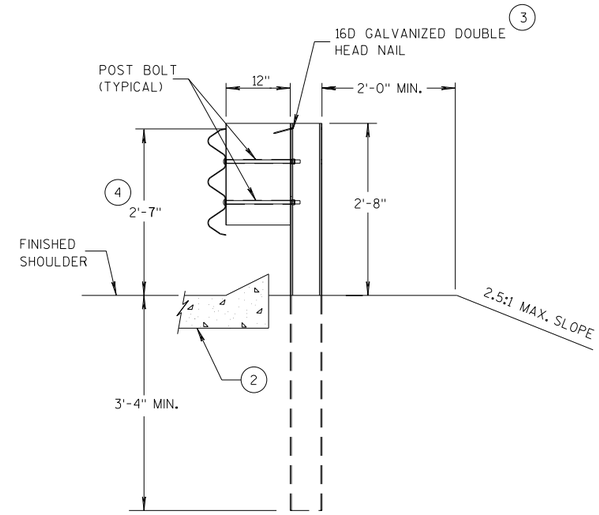

SECTION C-C

POSTS 7-11

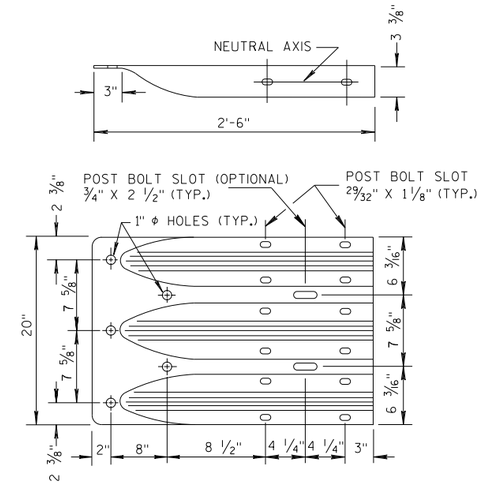

THRIE BEAM TERMINAL CONNECTOR

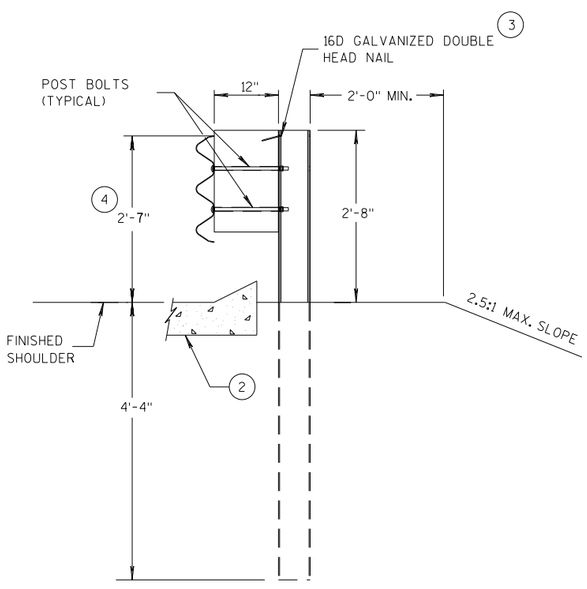

SECTION D-D

POSTS 12-17

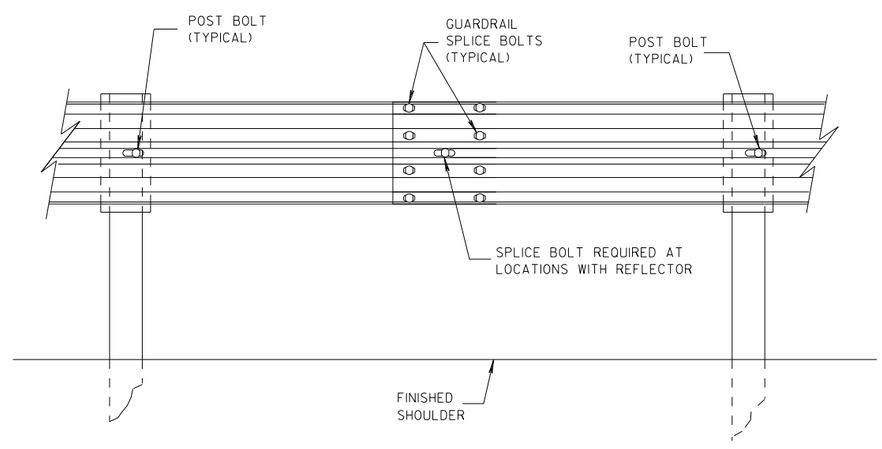

SPLICE DETAIL

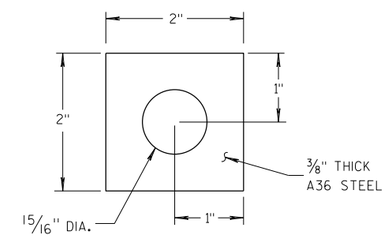

PLATE WASHER DETAIL

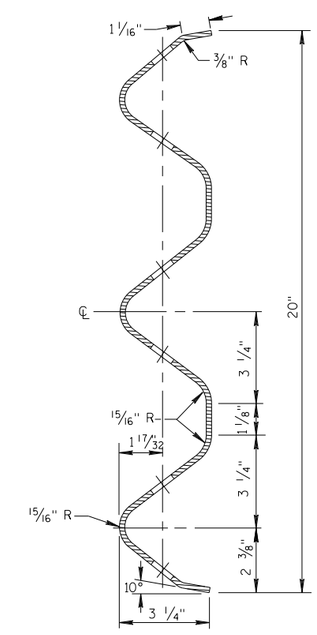

SECTION THRU THRIE BEAM RAIL ELEMENT

MIDWEST GUARDRAIL SYSTEM
THRIE BEAM TRANSITION (MGS)

STATE OF WISCONSIN
DEPARTMENT OF TRANSPORT

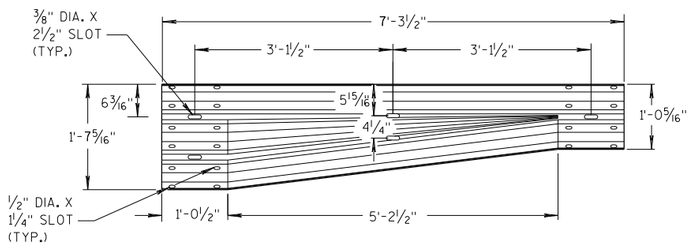

W-BEAM TO THRIE BEAM TRANSITION SECTION

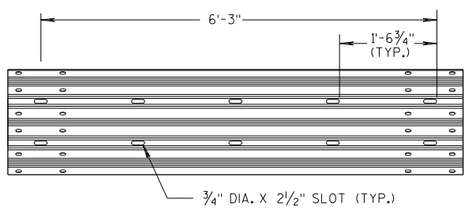

6'-3" THRIE BEAM SECTION

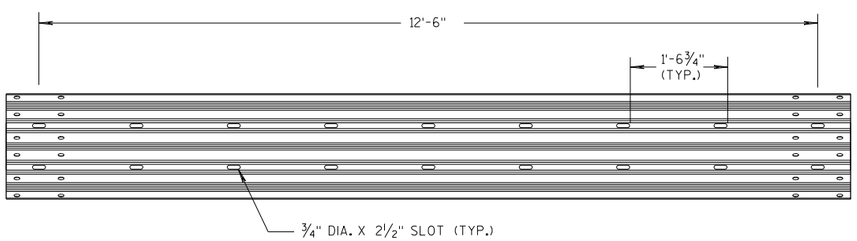

12'-6" THRIE BEAM SECTION

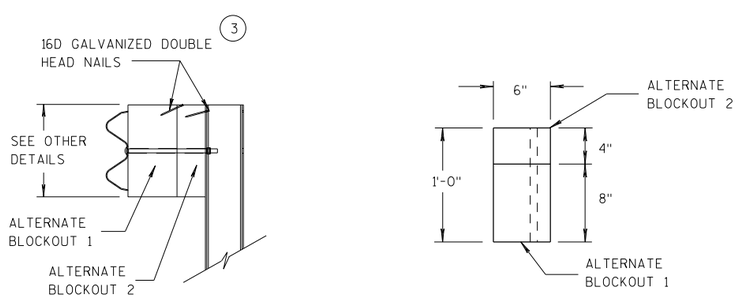

SIDE VIEW TOP VIEW

ALTERNATE WOOD BLOCKOUT DETAIL

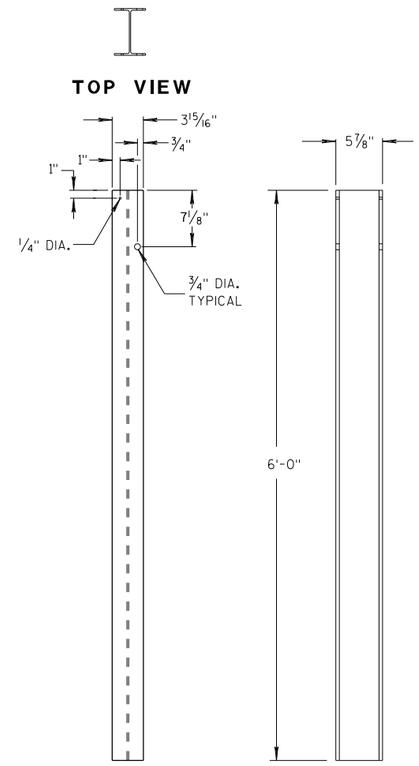

STEEL POSTS 1-5 (13)

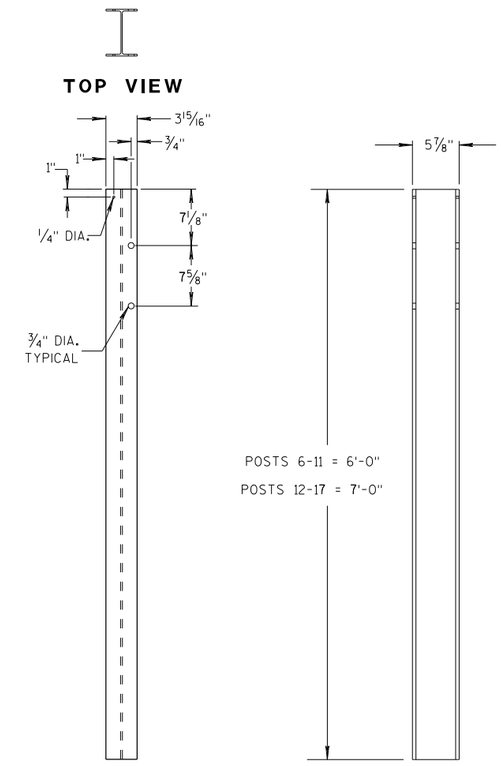

STEEL POSTS 6-17

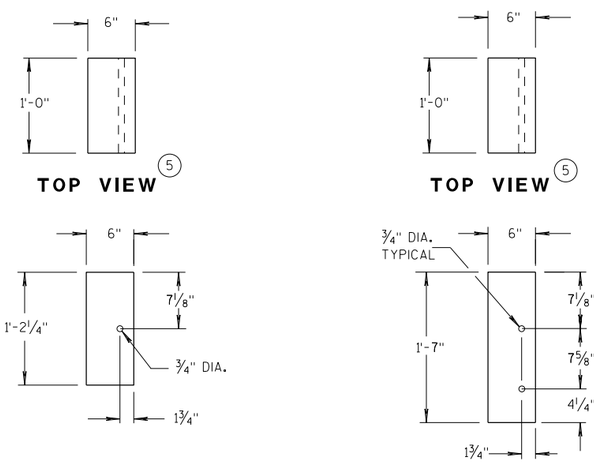

BLOCKOUT POSTS 1-5

BLOCKOUT POSTS 6-17

GENERAL NOTES

STEEL POSTS ARE W6X9 OR W6X8.5.

BOLT HOLES FOR POST ARE ON FRONT AND OF SIDE OF POST.

(3) WHEN USING STEEL POSTS AND WOOD BLOCKOUTS INSTALL FOUR 16D GALVANIZED NAILS. INSTALL NAILS AT THE BACK CORNERS OF THE BLOCK AND BEND THE NAILS OVER THE FLANGE OF THE STEEL POST.

(5) WOOD BLOCKS MAY BE CONSTRUCTED OUT OF 2 WOOD BLOCKS. SEE ALTERNATE WOOD BLOCK DETAIL.

(13) STEEL OR WOOD POST IS ACCEPTABLE AT POST 1. SEE SDD 14B42.

MIDWEST GUARDRAIL SYSTEM THRIE BEAM TRANSITION (MGS)

STATE OF WISCONSIN
DEPARTMENT OF TRANSPOR

6

S.D.D. 14 B 45-5c

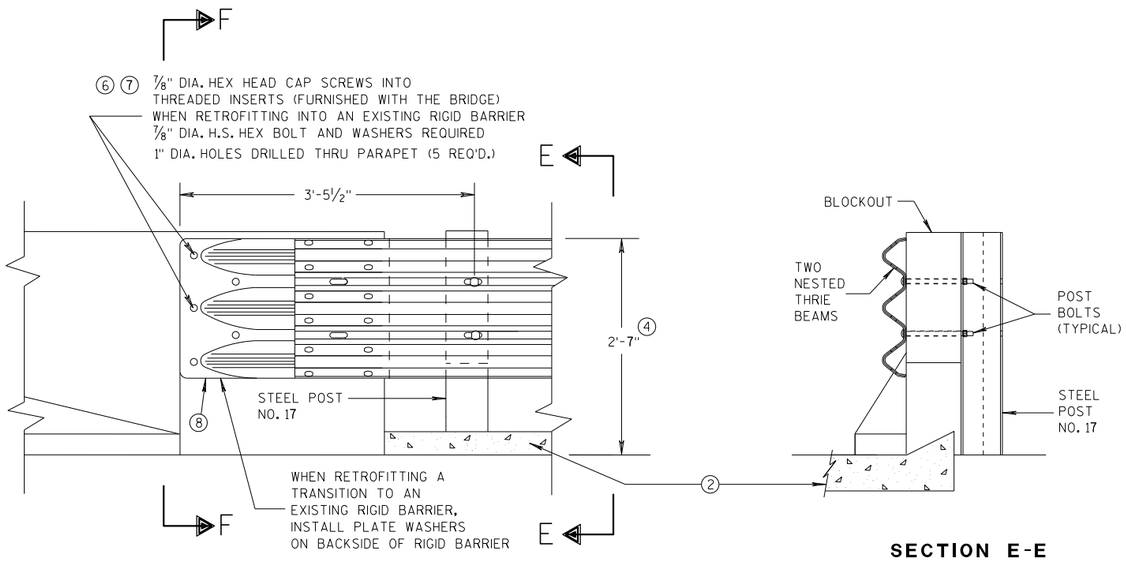

FRONT VIEW

SECTION E-E

THRIE BEAM CONNECTION TO BRIDGE PARAPET WITH SQUARE ENDS

GENERAL NOTES

THESE ARE TYPICAL CONNECTION DETAILS. ADJUST THE POSTION OF CONNECTIONS TO EXISTING BRIDGES TO FIT THE ACTUAL BRIDGE AND SITE DIMENSIONS.

② OPTIONAL CURB AND GUTTER OR DRAINAGE FEATURE SEE PLAN FOR INFORMATION.

④ TOLERANCE FOR TOP OF BEAM IS ± 1".

⑥ DRILLING BOLT HOLES THROUGH THE PARAPET, BOLTS, NUTS, WASHERS AND REPAIRING DAMAGED CONCRETE ARE INCIDENTAL TO THE CONTRACT.

⑦ BOLTS MAY BE A325 BOLTS OR A449 BOLTS. BOLT LENGTH AND THREADING LENGTH ARE TO ALLOW FOR A TIGHT CONNECTION BETWEEN RIGID BARRIER AND THRIE BEAM CONNECTION PLATE. CONTRACTOR IS TO FIELD VERIFY BOLT LENGTH AND THREAD LENGTH. ONE ROUND WASHER REQUIRED BETWEEN BOLT HEAD AND THRIE BEAM CONNECTOR PLATE. BOLTS THAT EXTEND THROUGH THE PARAPET AND OUT THE BACK FACE REQUIRE A HARDENED ROUND STEEL WASHER THAT IS 2" O.D. X 5/32" THICK AND ONE PLATE WASHER. REPAIR ANY DAMAGED CONCRETE FROM BOLT INSTALLATION.

⑧ THE RECESS FOR A W-BEAM CONNECTION, WHICH EXISTS ON SOME PARAPETS OF THIS TYPE, SHALL BE FILLED WITH A TREATED TIMBER BLOCKOUT. BLOCKOUT SIZE IS 1'-6" X 2'-0" X 3 1/2".

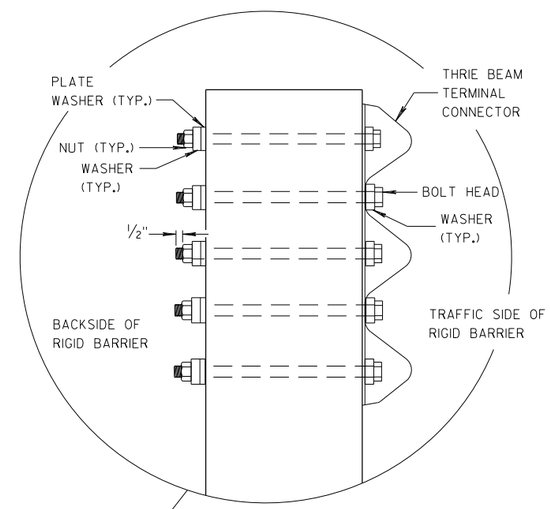

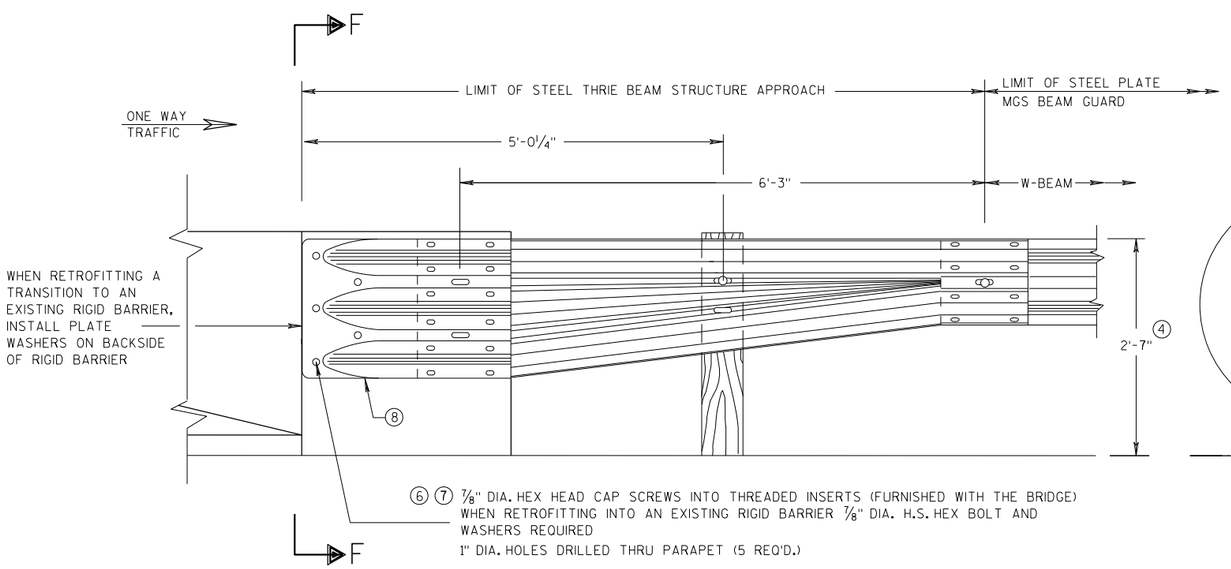

FRONT VIEW

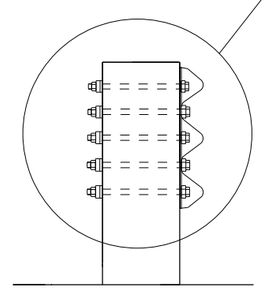

SECTION F-F

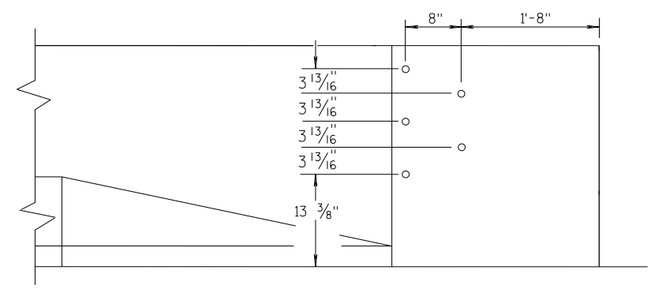

DRILL HOLE LOCATION

W BEAM TRANSITION AND CONNECTION TO BRIDGE PARAPETS WITH SQUARE ENDS

(USE ONLY ON THE TRAFFIC EXIT END OF ONE WAY BRIDGES)

MIDWEST GUARDRAIL SYSTEM THRIE BEAM TRANSITION (MGS)

STATE OF WISCONSIN
DEPARTMENT OF TRANSPORTATION

APPROVED
07/2018 — DATE
/S/ Rodney Taylor — ROADWAY STANDARDS DEVELOPMENT UNIT SUPERVISOR
FHWA

6

S.D.D. 14 B 45-5d

GENERAL NOTES

THESE ARE TYPICAL CONNECTION DETAILS. ADJUST THE POSTION OF CONNECTIONS TO EXISTING BRIDGES TO FIT THE ACTUAL BRIDGE AND SITE DIMENSIONS.

(2) OPTIONAL CURB AND GUTTER OR DRAINAGE FEATURE SEE PLAN FOR INFORMATION.

(4) TOLERANCE FOR TOP OF BEAM IS ± 1".

(6) DRILLING BOLT HOLES THROUGH THE PARAPET, BOLTS, NUTS, WASHERS AND REPAIRING DAMAGED CONCRETE ARE INCIDENTAL TO THE CONTRACT.

(7) BOLTS MAY BE A325 BOLTS OR A449 BOLTS. BOLT LENGTH AND THREADING LENGTH ARE TO ALLOW FOR A TIGHT CONNECTION BETWEEN RIGID BARRIER AND THRIE BEAM CONNECTION PLATE. CONTRACTOR IS TO FIELD VERIFY BOLT LENGTH AND THREAD LENGTH. ONE ROUND WASHER REQUIRED BETWEEN BOLT HEAD AND THRIE BEAM CONNECTOR PLATE. BOLTS THAT EXTEND THROUGH THE PARAPET AND OUT THE BACK FACE REQUIRE A HARDENED ROUND STEEL WASHER THAT IS 2" O.D. X 5/32" THICK AND ONE PLATE WASHER. REPAIR ANY DAMAGED CONCRETE FROM BOLT INSTALLATION.

(8) THE RECESS FOR A W-BEAM CONNECTION, WHICH EXISTS ON SOME PARAPETS OF THIS TYPE, SHALL BE FILLED WITH A TREATED TIMBER BLOCKOUT. BLOCKOUT SIZE IS 1'-6" X 2'-0" X 3 1/2".

(9) BOLT, NUT AND WASHERS NOT REQUIRED FOR THIS LOCATION WHEN RETROFITTING AN EXISTING PAPAPET AND THE HOLE IS EITHER ABOVE PARAPET OR WITHIN 4 INCHES OF THE EDGE OF PARAPET.

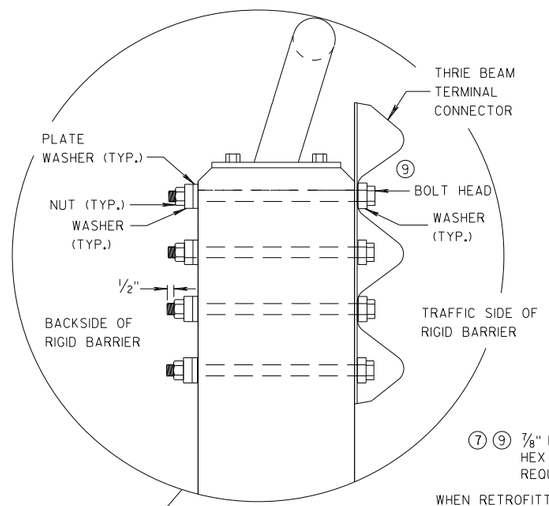

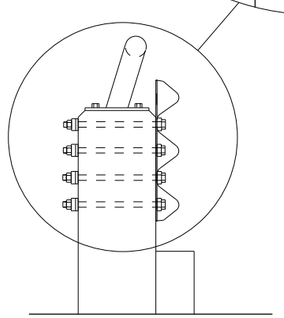

SECTION G-G

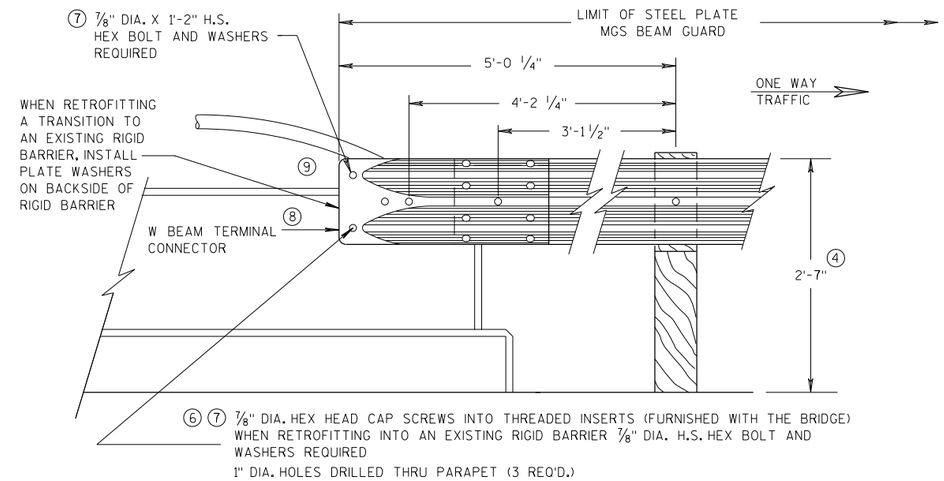

FRONT VIEW

W BEAM CONNECTION TO VERTICAL FACE PARAPET

(USE ONLY ON THE TRAFFIC EXIT END OF ONE WAY BRIDGES)

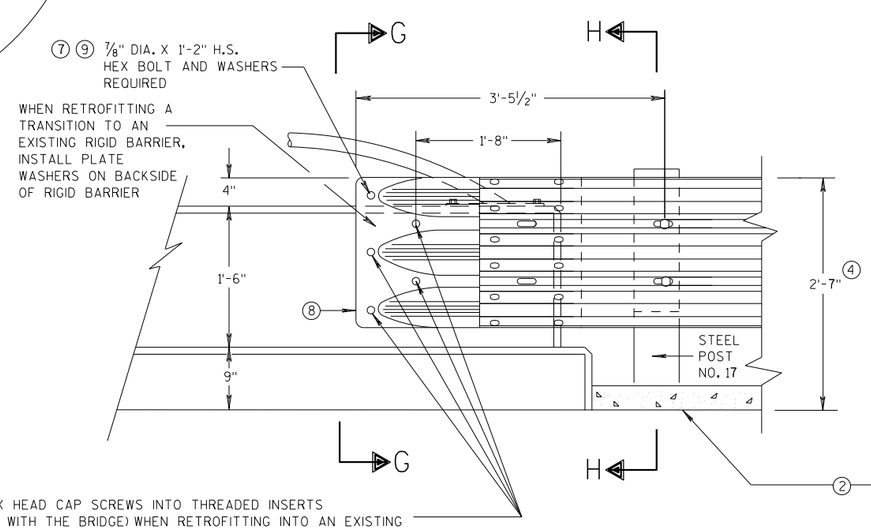

FRONT VIEW

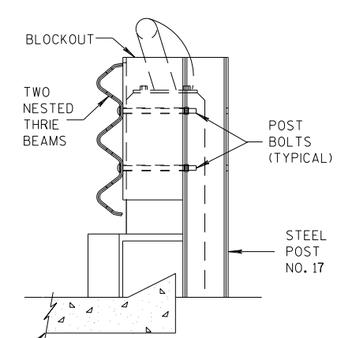

SECTION H-H

THRIE BEAM CONNECTION TO VERTICAL FACED PARAPETS

MIDWEST GUARDRAIL SYSTEM
THRIE BEAM TRANSITION (MGS)

STATE OF WISCONSIN
DEPARTMENT OF TRANSPORTATION

APPROVED
07/2018 — DATE
/S/ Rodney Taylor
ROADWAY STANDARDS D[illegible] UNIT SUPERVI[illegible]
FHWA

6

S.D.D. 14 B 45-5e

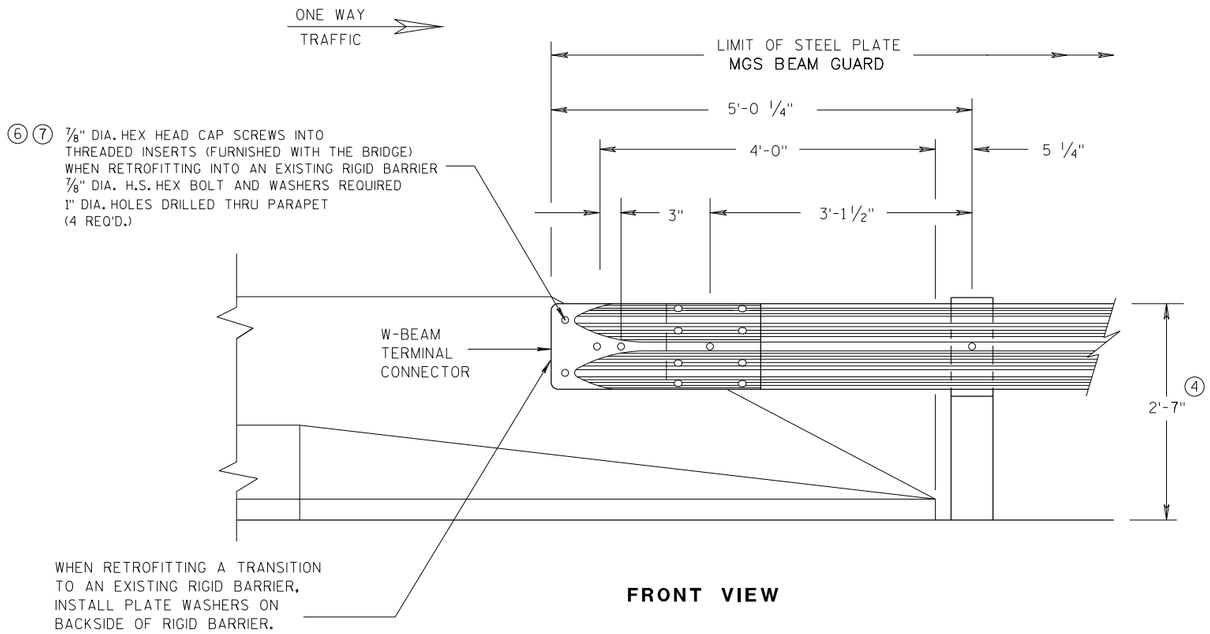

FRONT VIEW

W BEAM CONNECTION TO PARAPETS WITH SLOPED ENDS

(USE ONLY AT TRAFFIC EXIT END OF ONE WAY BRIDGE)

GENERAL NOTES

② OPTIONAL CURB AND GUTTER OR DRAINAGE FEATURE SEE PLAN FOR INFORMATION.

④ TOLERANCE FOR TOP OF BEAM IS ± 1".

⑥ DRILLING BOLT HOLES THROUGH THE PARAPET, BOLTS, NUTS, WASHERS AND REPAIRING DAMAGED CONCRETE ARE INCIDENTAL TO THE CONTRACT.

⑦ BOLTS MAY BE A325 BOLTS OR A449 BOLTS. BOLT LENGTH AND THREADING LENGTH ARE TO ALLOW FOR A TIGHT CONNECTION BETWEEN RIGID BARRIER AND THRIE BEAM CONNECTION PLATE. CONTRACTOR IS TO FIELD VERIFY BOLT LENGTH AND THREAD LENGTH. ONE ROUND WASHER REQUIRED BETWEEN BOLT HEAD AND THRIE BEAM CONNECTOR PLATE. BOLTS THAT EXTEND THROUGH THE PARAPET AND OUT THE BACK FACE REQUIRE A HARDENED ROUND STEEL WASHER THAT IS 2" O.D. X 5/32" THICK AND ONE PLATE WASHER. REPAIR ANY DAMAGED CONCRETE FROM BOLT INSTALLATION.

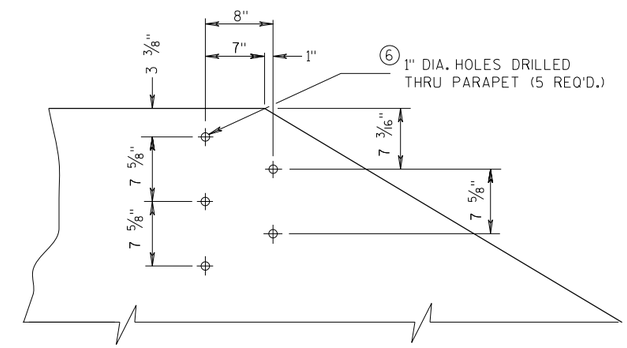

DRILL HOLE LOCATION AND PATTERN FOR THRIE BEAM CONNECTION

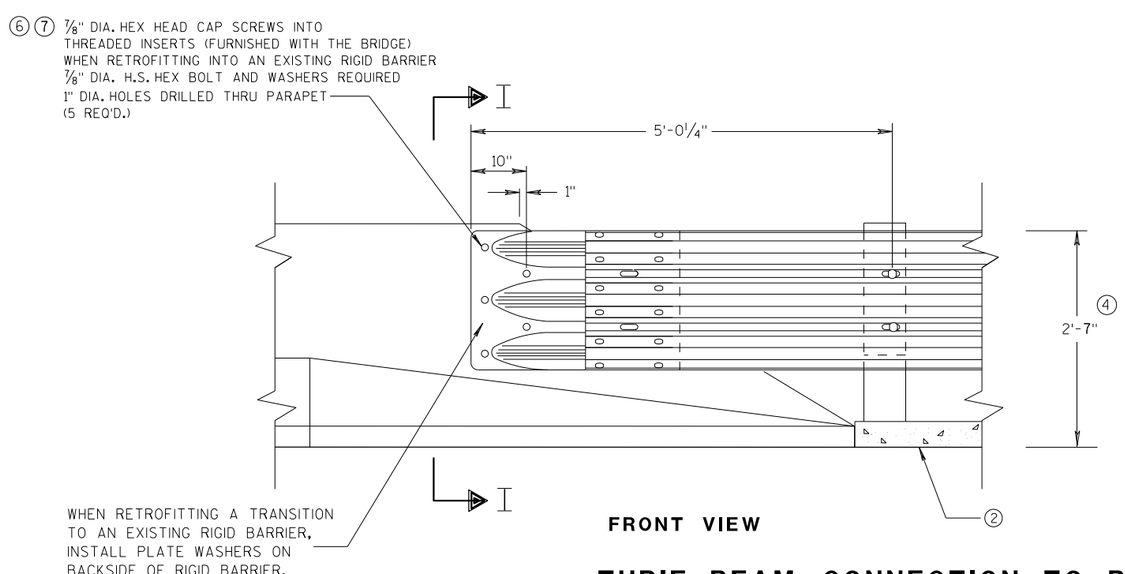

FRONT VIEW

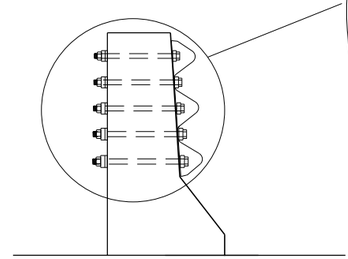

SECTION I-I

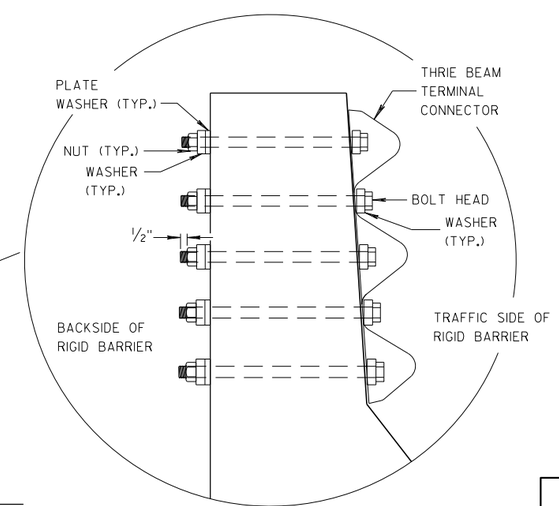

THRIE BEAM CONNECTION TO BRIDGE PARAPETS WITH SLOPED ENDS

MIDWEST GUARDRAIL SYSTEM THRIE BEAM TRANSITION (MGS)

STATE OF WISCONSIN
DEPARTMENT OF TRANSPORTATION

APPROVED
07/2018 — DATE
/S/ Rodney Taylor — ROADWAY STANDARDS DEVELOPMENT UNIT SUPERVISOR
FHWA

6

S.D.D. 14 B 45-5f

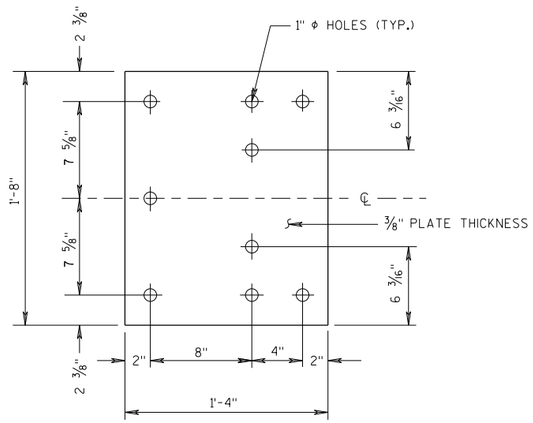

BACK-UP PLATE DETAIL

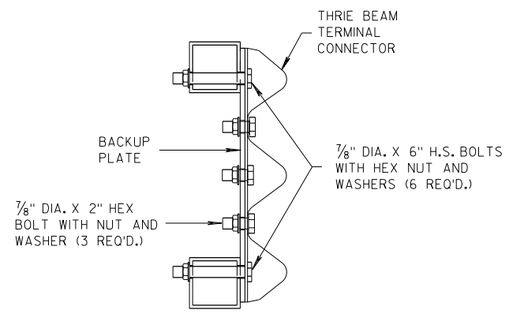

SECTION J-J

GENERAL NOTES

(4) TOLERANCE FOR TOP OF BEAM IS ± 1".

(6) DRILLING HOLES THROUGH THE PAPRPET, BOLTS, NUTS, WASHERS AND REPAIRING DAMAGED CONCRETE ARE INCIDENTAL TO THE CONTRACT.

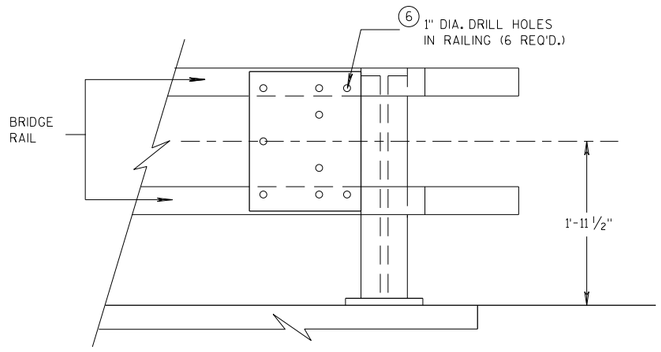

BACK-UP PLATE MOUNTING ONTO BRIDGE RAILING

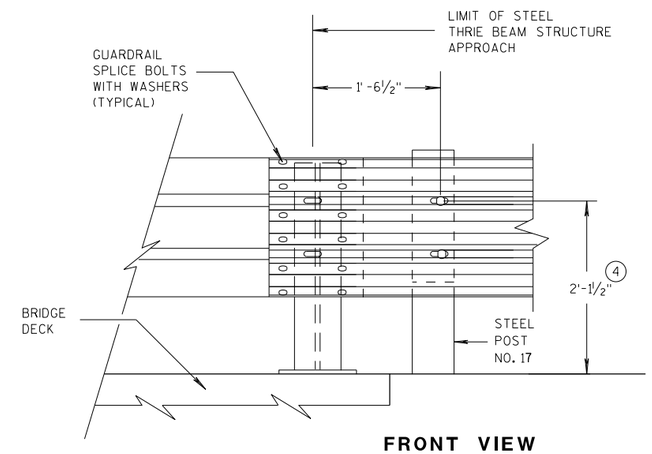

FRONT VIEW

THRIE BEAM CONNECTION TO STEEL RAILING TYPE "W"

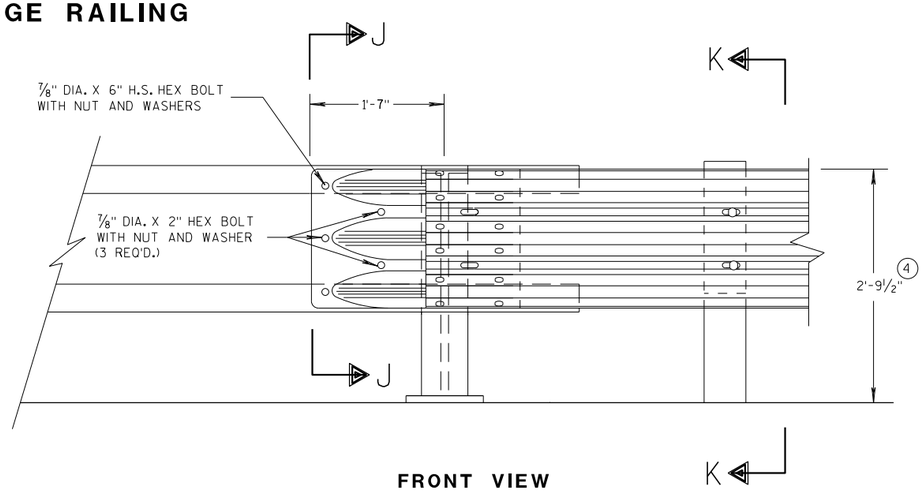

FRONT VIEW

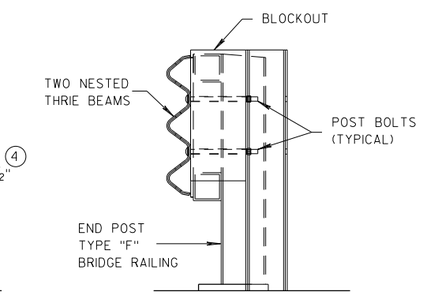

SECTION K-K

THRIE BEAM CONNECTION TO TUBULAR RAILING TYPE "F"

MIDWEST GUARDRAIL SYSTEM THRIE BEAM TRANSITION (MGS)

STATE OF WISCONSIN
DEPARTMENT OF TRANSPORTATION

APPROVED 07/2018 — DATE — FHWA

/S/ Rodney Taylor — ROADWAY STANDARDS DEVELOPMENT UNIT SUPERVISOR

GENERAL NOTES

(4) TOLERANCE FOR TOP OF W-BEAM RAIL IS ± 1".

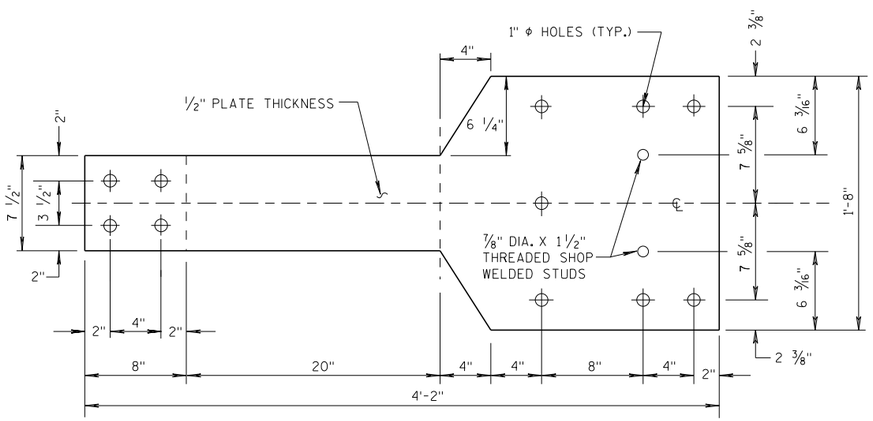

FRONT VIEW

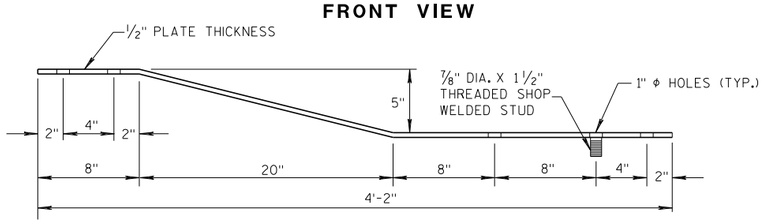

PLAN VIEW

BACK-UP PLATE DETAIL, TYPE "M"

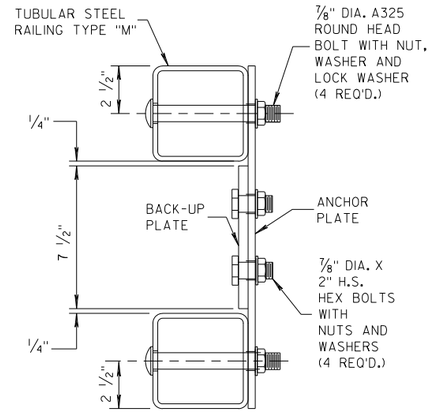

SECTION L-L

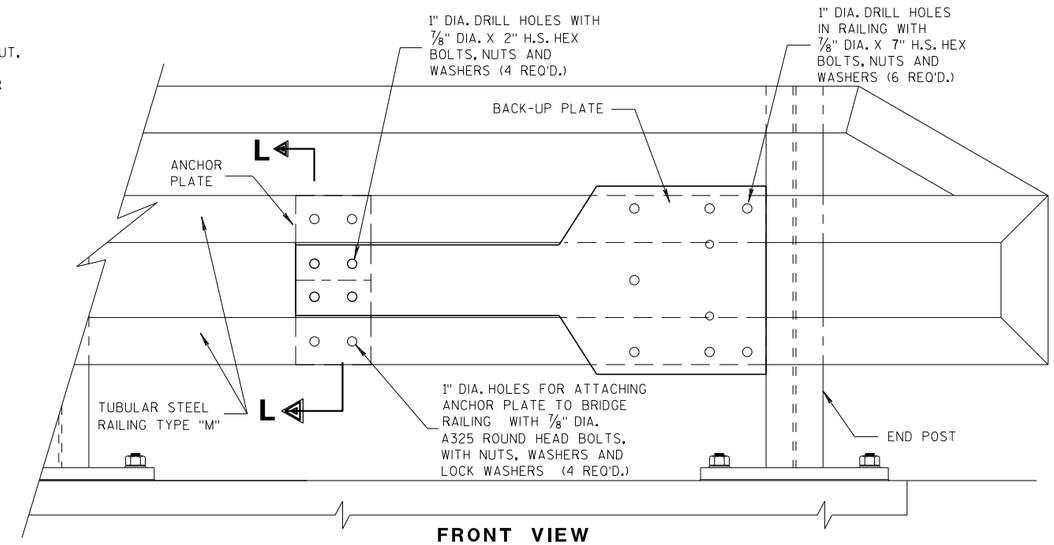

FRONT VIEW

ANCHOR AND BACK-UP PLATE MOUNTING TO BRIDGE RAILING, TYPE "M"

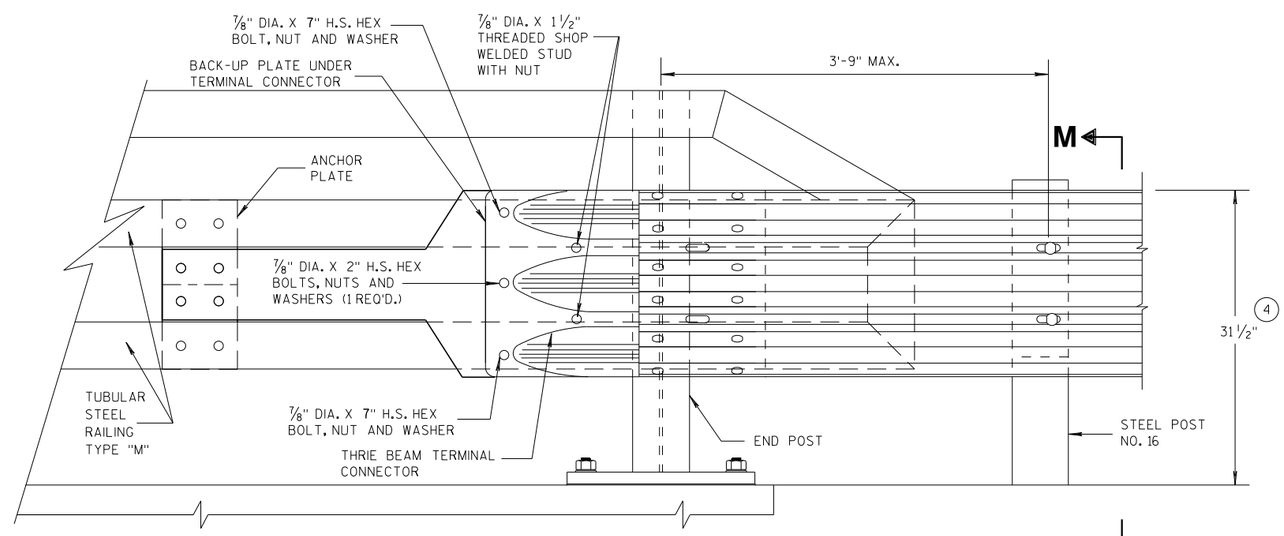

FRONT VIEW

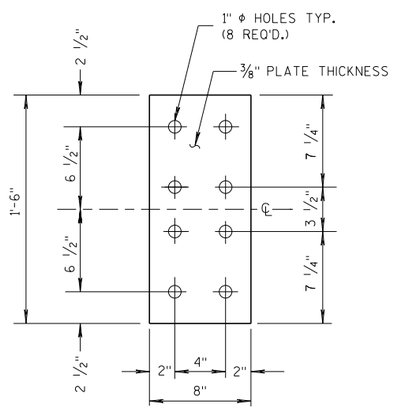

FRONT VIEW

ANCHOR PLATE DETAIL, TYPE "M"

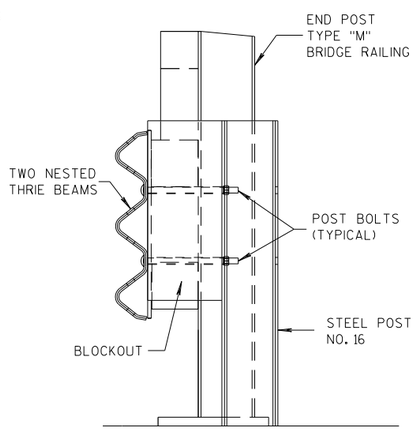

SECTION M-M

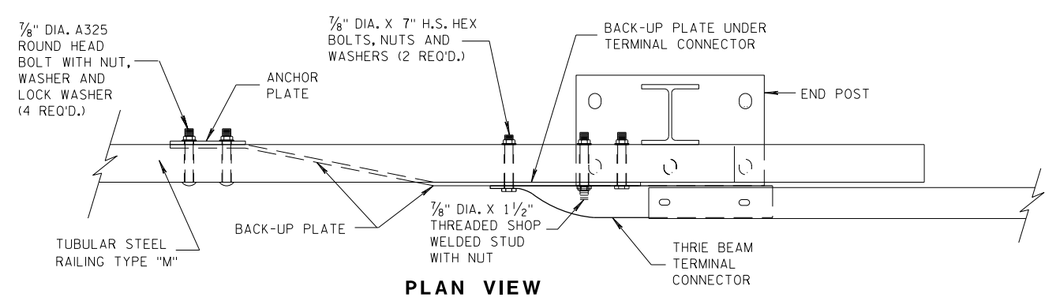

PLAN VIEW

THRIE BEAM CONNECTION TO TUBULAR RAILING, TYPE "M"

MIDWEST GUARDRAIL SYSTEM THRIE BEAM TRANSITION (MGS)

STATE OF WISCONSIN
DEPARTMENT OF TRANSPORTATION

APPROVED
07/2018 — DATE
/S/ Rodney Taylor — ROADWAY STANDARDS DEVELOPMENT UNIT SUPERVISOR
FHWA

GENERAL NOTES

COVER PLATE PANELS ARE 3/16" THICK.

ALL STIFFENERS ARE 1/4" THICK.

CONNECTOR PLATE SHALL BE FABRICATED FROM ASTM GRADE A36 STEEL AND GALVANIZED.

FOR GALVANIZED REQUIREMENTS, SEE SECTION 614 OF THE STANDARD SPECIFICATIONS.

ALL HOLE DIAMETERS SHALL BE 1".

FOR OPPOSITE SIDE INSTALLATION MIRROR DRAWINGS.

(10) STIFFENERS LOCATED AT THE OUTSIDE EDGES OF THE COVER PLATES SHALL BE WELDED AS FOLLOWS:
SINGLE BEVEL GROOVE WELD ON EXTERNAL SIDES AND 3/16" FILLET WELD BY 1" LONG SPACED AT 2" ON INTERNAL SIDES.

(11) STIFFENERS LOCATED ON THE INSIDE OF THE COVER PLATE SHALL BE WELDED AS FOLLOWS:
3/16" FILLET WELD BY 1" LONG SPACED AT 2".

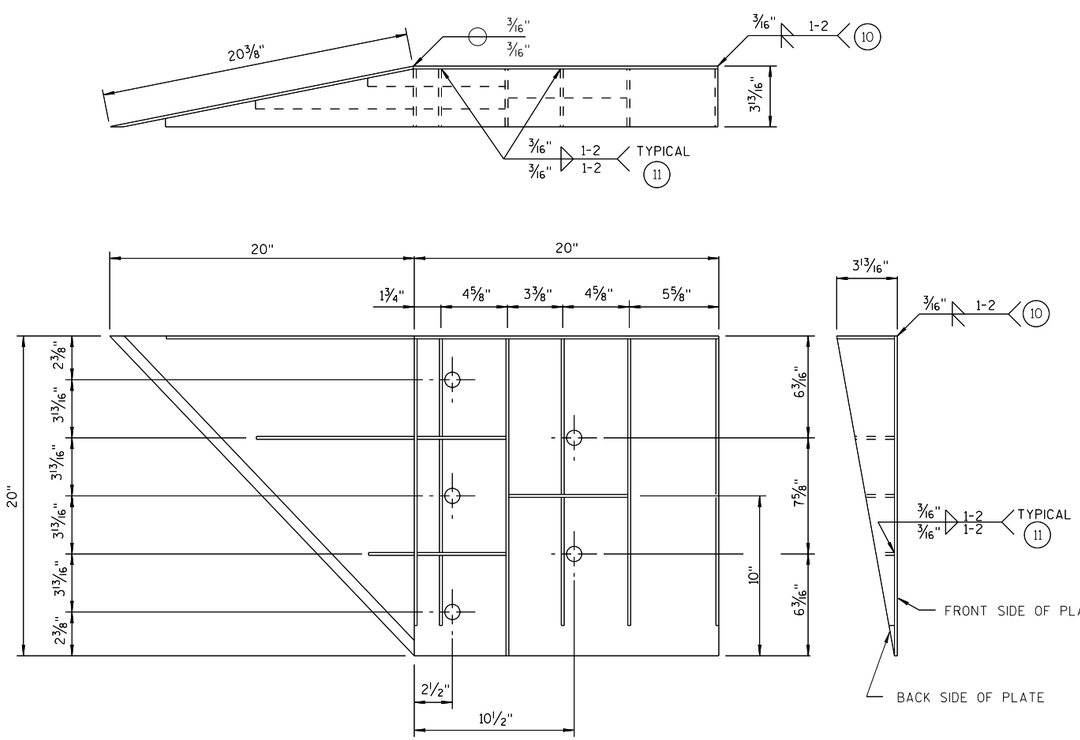

WELDING INSTRUCTION

(VIEWED FROM BACK SIDE OF PLATE)

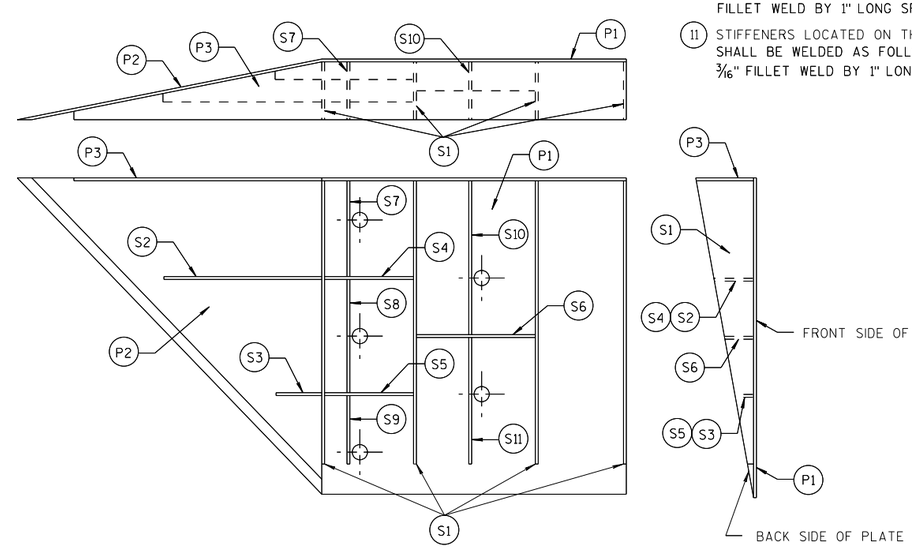

PLATE AND STIFFENER IDENTIFICATION

(VIEWED FROM BACK SIDE OF PLATE)

CONNECTOR PLATE DIMENSION (PER ASSEMBLY)				
PLATE	QUANTITY	SHAPE	SIZE (A x B x C x D)	THICKNESS
P1	1		20" x 20"	3/16"
P2	1		20" x 20" x 28 9/16"	3/16"
P3	1		39" x 3 5/8" x 20" x 19 5/16"	3/16"
S1	4		18 7/16" x 3 5/8" x 18 3/4"	1/4"
S2	1		10 1/4" x 2 7/16" x 10 3/8" x 1/2"	1/4"
S3	1		3" x 1 1/16" x 3 1/8" x 1/2"	1/4"
S4	1		6 1/8" x 2 7/16"	1/4"
S5	1		6 1/8" x 1 1/16"	1/4"
S6	1		7 3/4" x 1 3/4"	1/4"
S7	1		2 9/16" x 6" x 3 5/8" x 5 7/8"	1/4"
S8	1		1 5/32" x 7 1/2" x 2 1/2" x 7 3/8"	1/4"
S9	1		6 1/16" x 6 3/16" x 1 3/32"	1/4"
S10	1		1 7/8" x 9 7/8" x 3 5/8" x 9 11/16"	1/4"
S11	1		8 1/2" x 8 3/4" x 1 13/16"	1/4"

SINGLE SLOPE CONNECTION PLATE

MIDWEST GUARDRAIL SYSTEM THRIE BEAM TRANSITION (MGS)

STATE OF WISCONSIN
DEPARTMENT OF TRANSPORTATION

APPROVED
7/2018 /S/ Rodney Taylor
DATE ROADWAY STANDARDS DEVELOPMENT UNIT SUPERVISOR
FHWA

6

S.D.D. 14 B 45-5i

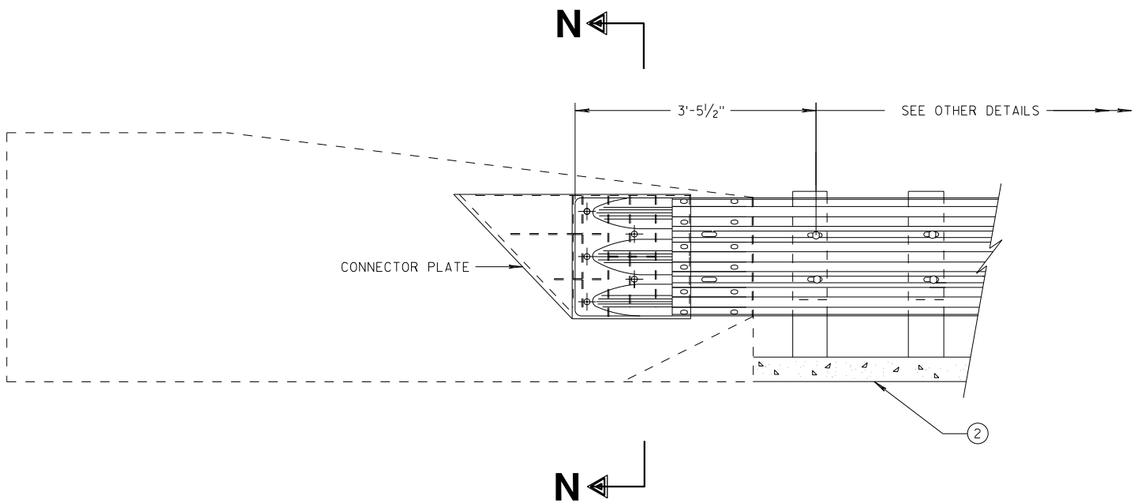

THRIE BEAM CONNECTION TO SINGLE SLOPE BARRIER

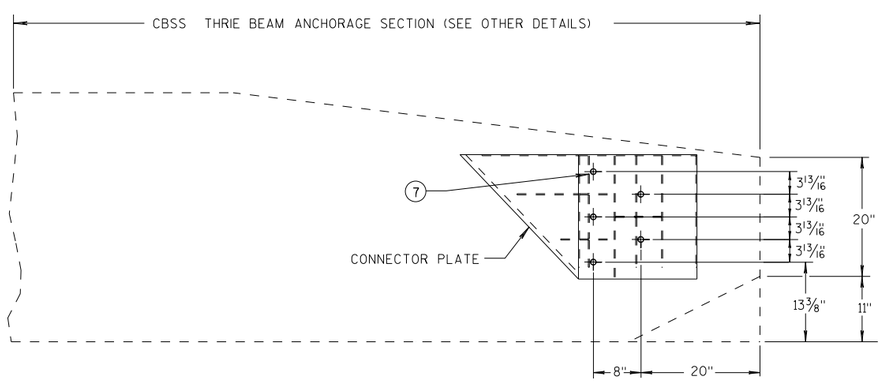

SINGLE SLOPE CONNECTION PLATE PLACEMENT

GENERAL NOTES

CONNECTOR PLATE, DRILLING BOLT HOLES THROUGH THE PARAPET, BOLTS, NUTS, WASHERS AND REPAIRING DAMAGED CONCRETE ARE INCIDENTAL TO THE CONTRACT.

(2) OPTIONAL CURB AND GUTTER OR DRAINAGE FEATURE SEE PLAN FOR INFORMATION.

(7) BOLTS MAY BE A325 BOLTS OR A449 BOLTS. BOLT LENGTH AND THREADING LENGTH ARE TO ALLOW FOR A TIGHT CONNECTION BETWEEN RIGID BARRIER AND THRIE BEAM CONNECTION PLATE. CONTRACTOR IS TO FIELD VERIFY BOLT LENGTH AND THREAD LENGTH. ONE ROUND WASHER REQUIRED BETWEEN BOLT HEAD AND THRIE BEAM CONNECTOR PLATE. BOLTS THAT EXTEND THROUGH THE PARAPET AND OUT THE BACK FACE REQUIRE A HARDENED ROUND STEEL WASHER THAT IS 2" O.D. X 5/32" THICK AND ONE PLATE WASHER. REPAIR ANY DAMAGED CONCRETE FROM BOLT INSTALLATION.

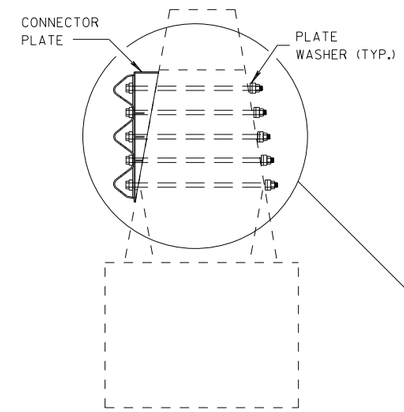

SECTION N-N

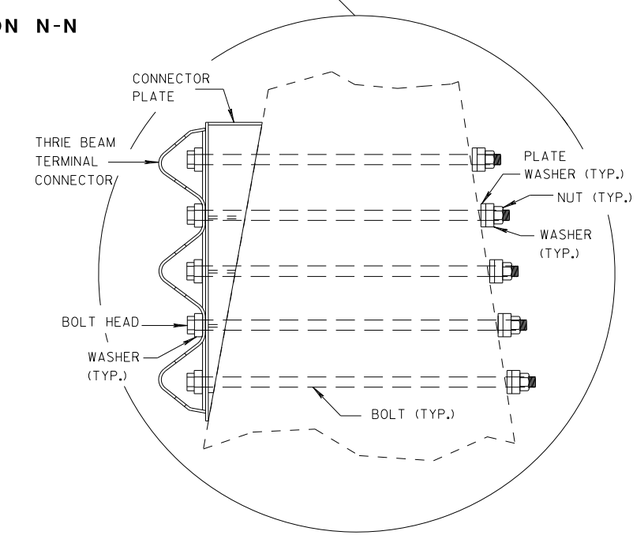

6

6

S.D.D. 14 B 45-5j

S.D.D. 14 B 45-5j

MIDWEST GUARDRAIL SYSTEM THRIE BEAM TRANSITION (MGS)

STATE OF WISCONSIN
DEPARTMENT OF TRANSPORTATION

APPROVED
7/2018
DATE
/S/ Rodney Taylor
ROADWAY STANDARDS DI NT
UNIT SUPERVIS
FHWA

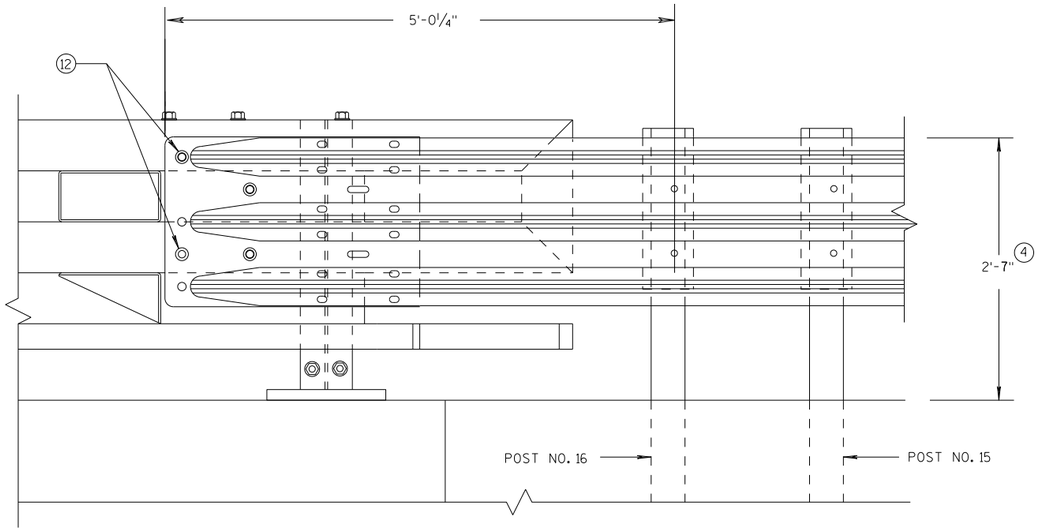

ELEVATION OF DETAIL AT NY3 END POST

THRIE BEAM RAIL ATTACHMENT

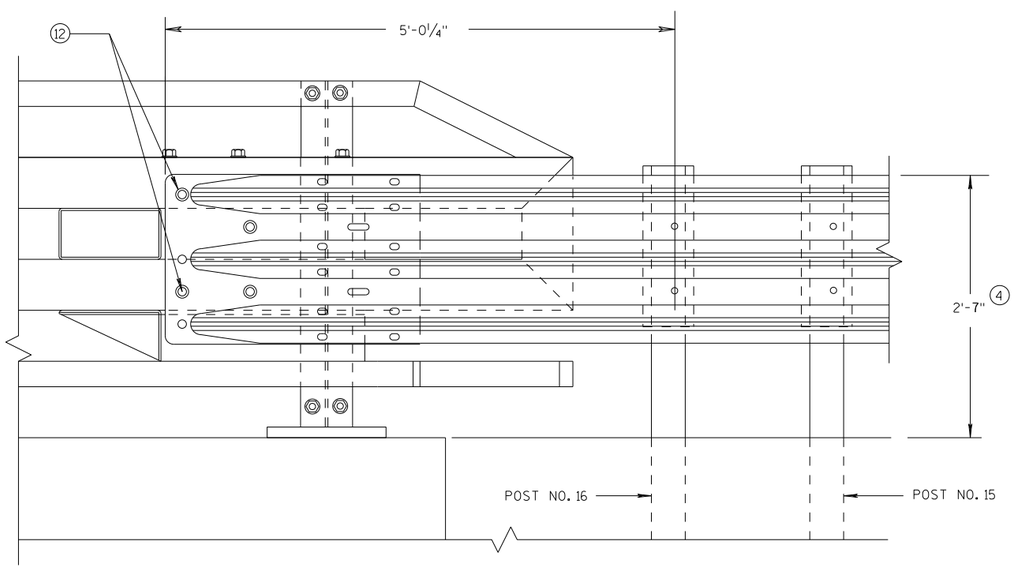

ELEVATION OF DETAIL AT NY4 END POST

THRIE BEAM RAIL ATTACHMENT

GENERAL NOTES

(4) TOLERANCE FOR TOP OF BEAM IS ± 1".

(12) BOLTS MAY BE A325 BOLTS OR A449 BOLTS. BOLT LENGTH AND THREADING LENGTH ARE TO ALLOW FOR A TIGHT CONNECTION BETWEEN RIGID BARRIER AND THRIE BEAM CONNECTION PLATE. CONTRACTOR IS TO FIELD VERIFY BOLT LENGTH AND THREAD LENGTH. ONE ROUND WASHER REQUIRED BETWEEN BOLT HEAD AND THRIE BEAM CONNECTOR PLATE. ON BACKSIDE OF PARAPET ONE ROUND WASHER, AND NUT REQUIRED. BOLT THREAD IS TO EXTEND ½-INCH BEYOND NUT.

MIDWEST GUARDRAIL SYSTEM
THRIE BEAM TRANSITION (MGS)

STATE OF WISCONSIN
DEPARTMENT OF TRANSPORTATION

APPROVED
7/2018
DATE
FHWA

/S/ Rodney Taylor
ROADWAY STANDARDS D
UNIT SUPERVIS

NT

6

S.D.D. 14 B 45-5k

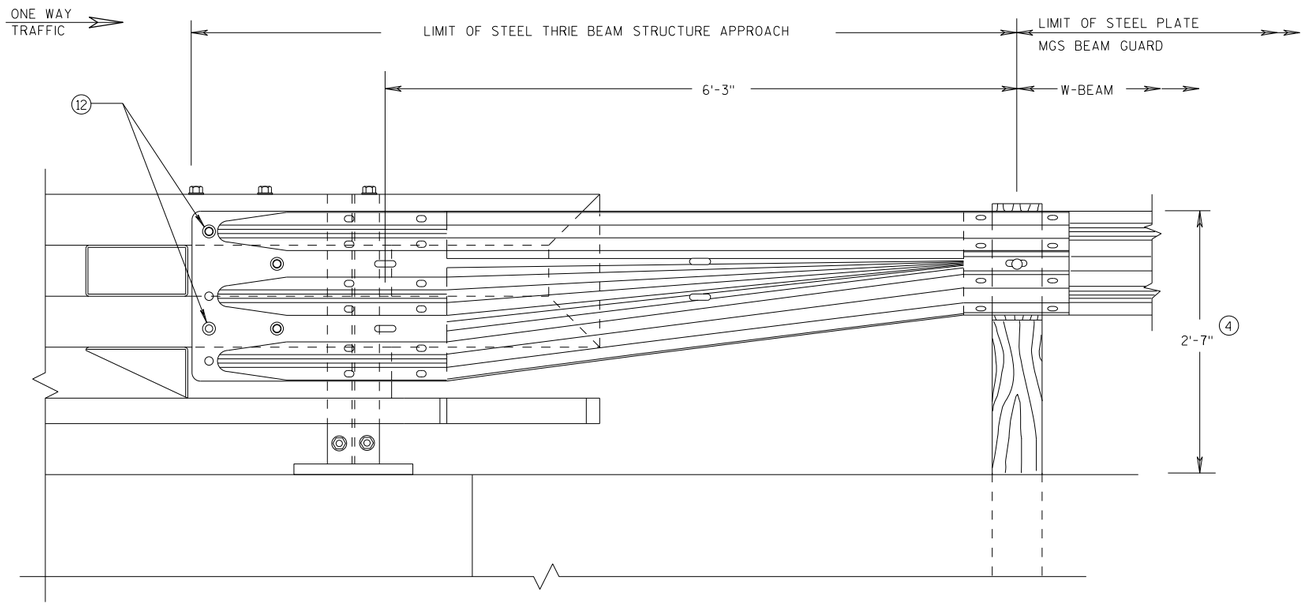

FRONT VIEW

W BEAM TRANSITION AND CONNECTION TO BRIDGE RAILING TYPE "NY3"

(USE ONLY ON THE TRAFFIC EXIT END OF ONE WAY BRIDGES)

GENERAL NOTES

(4) TOLERANCE FOR TOP OF BEAM IS ± 1".

(12) BOLTS MAY BE A325 BOLTS OR A449 BOLTS. BOLT LENGTH AND THREADING LENGTH ARE TO ALLOW FOR A TIGHT CONNECTION BETWEEN RIGID BARRIER AND THRIE BEAM CONNECTION PLATE. CONTRACTOR IS TO FIELD VERIFY BOLT LENGTH AND THREAD LENGTH. ONE ROUND WASHER REQUIRED BETWEEN BOLT HEAD AND THRIE BEAM CONNECTOR PLATE. ON BACKSIDE OF PARAPET ONE ROUND WASHER, AND NUT REQUIRED. BOLT THREAD IS TO EXTEND ½-INCH BEYOND NUT.

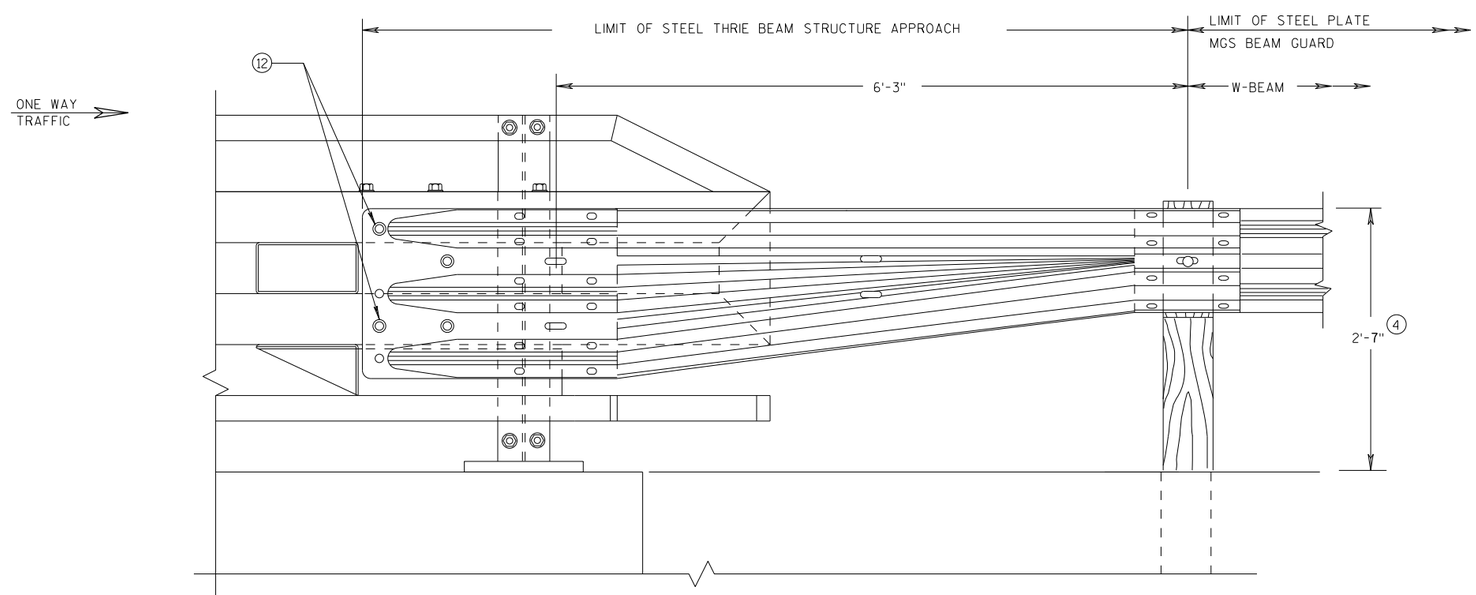

FRONT VIEW

W BEAM TRANSITION AND CONNECTION TO BRIDGE RAILING TYPE "NY4"

(USE ONLY ON THE TRAFFIC EXIT END OF ONE WAY BRIDGES)

MIDWEST GUARDRAIL SYSTEM THRIE BEAM TRANSITION (MGS)

STATE OF WISCONSIN
DEPARTMENT OF TRANSPORTATION

APPROVED
7/2018 — DATE
/S/ Rodney Taylor — ROADWAY STANDARDS DEVELOPMENT UNIT SUPERVISOR
FHWA

NT

6

S.D.D. 14 B 45-5L

GENERAL NOTES

DETAILS OF CONSTRUCTION, MATERIALS AND WORKMANSHIP NOT SHOWN ON THIS DRAWING SHALL CONFORM TO THE PERTINENT REQUIREMENTS OF THE STANDARD SPECIFICATIONS AND THE APPLICABLE SPECIAL PROVISIONS.

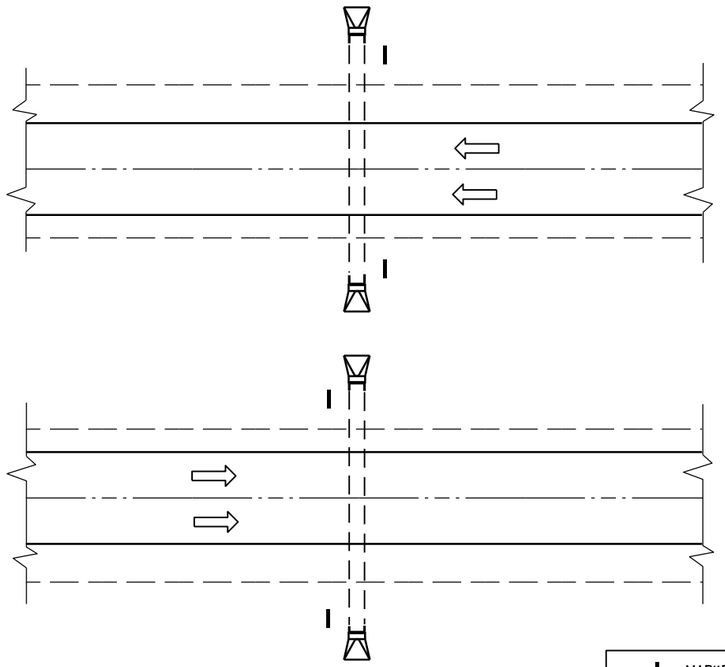

PLAN VIEW

DIVIDED HIGHWAY

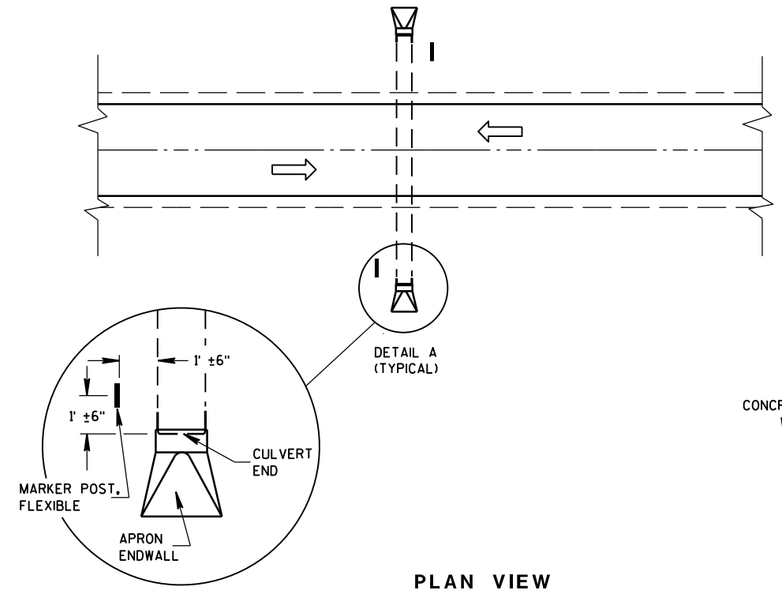

DETAIL A
(TYPICAL)

PLAN VIEW

UNDIVIDED HIGHWAY

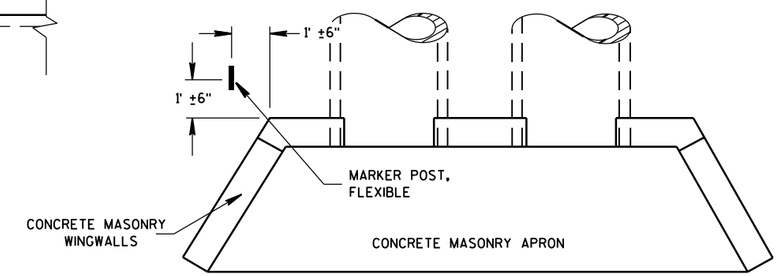

PLAN VIEW

CONCRETE MASONRY ENDWALLS FOR CULVERT PIPE AND PIPE ARCH

MARKER POST, FLEXIBLE

DIRECTION OF TRAFFIC FLOW

FLEXIBLE MARKER POST LOCATION

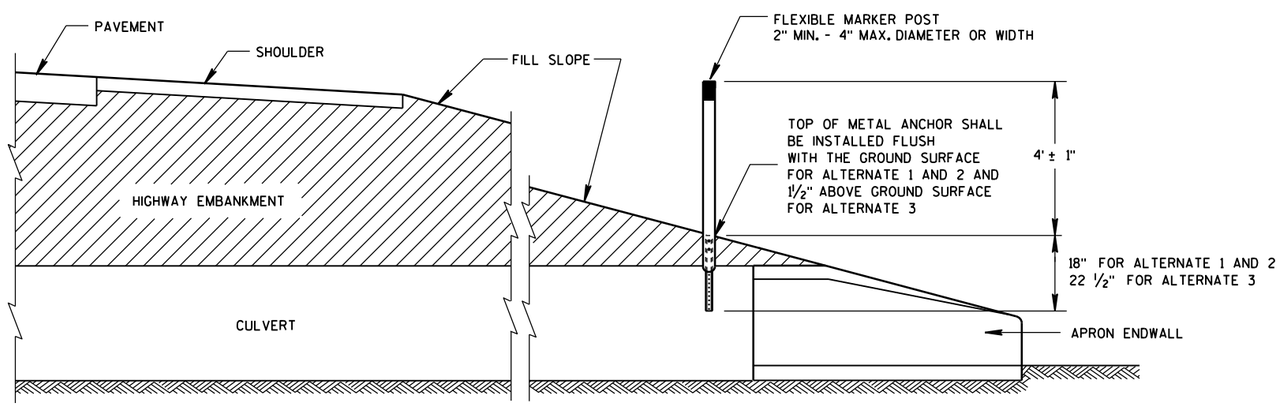

CROSS SECTION

FLEXIBLE MARKER POST

FLEXIBLE MARKER POST FOR CULVERT END

STATE OF WISCONSIN
DEPARTMENT OF TRANSPOR

6

6

S.D.D. 15 A 3-2a

S.D.D. 15 A 3-2a

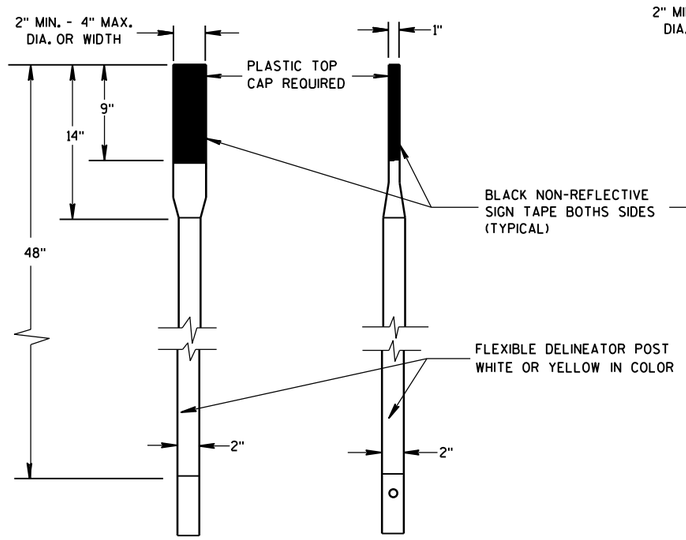

FRONT VIEW SIDE VIEW

ALTERNATE 1

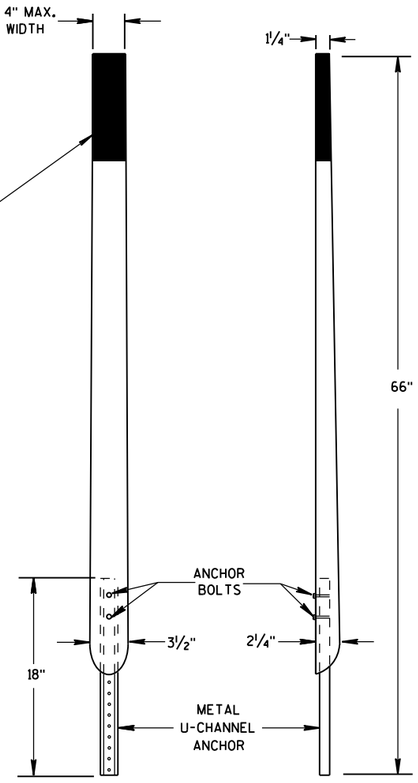

FRONT VIEW SIDE VIEW

ALTERNATE 2

FLEXIBLE MARKER POSTS

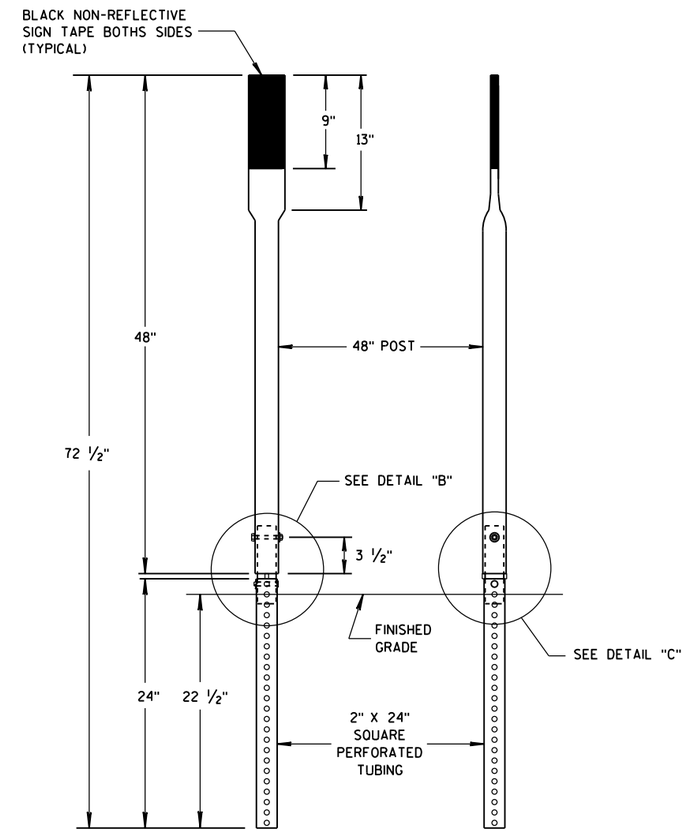

FRONT VIEW SIDE VIEW

ALTERNATE 3

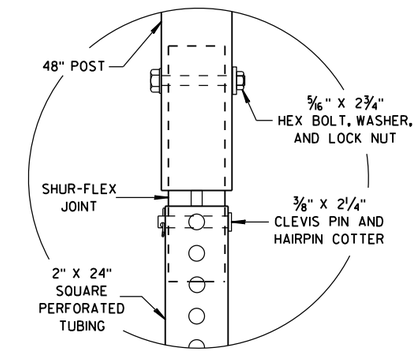

DETAIL B

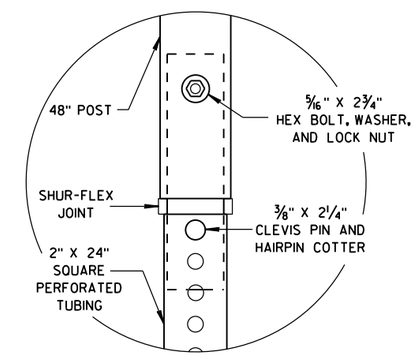

DETAIL C

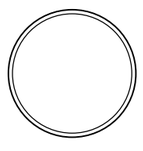

SECTION A-A

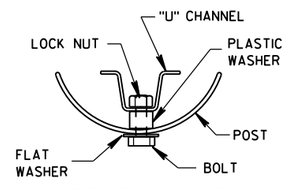

SECTION B-B

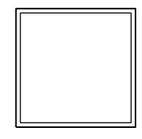

SECTION C-C

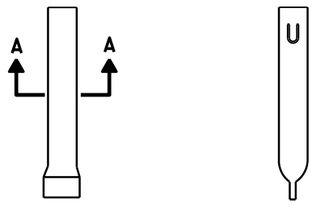

FRONT VIEW SIDE VIEW

ALTERNATE 1

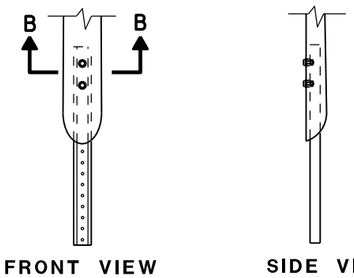

FRONT VIEW SIDE VIEW

ALTERNATE 2

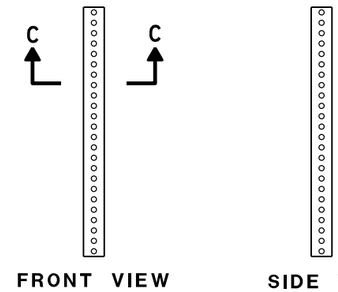

FRONT VIEW SIDE VIEW

ALTERNATE 3

FLEXIBLE MARKER POST ANCHORS

FLEXIBLE MARKER POST
FOR CULVERT END

STATE OF WISCONSIN
DEPARTMENT OF TRANSPORTATION

APPROVED
10/1/2012 /S/ Travis Feltes
DATE STATE TRAFFIC ENGINEER
FHWA

6

6

S.D.D. 15 A 3-2b

S.D.D. 15 A 3-2b

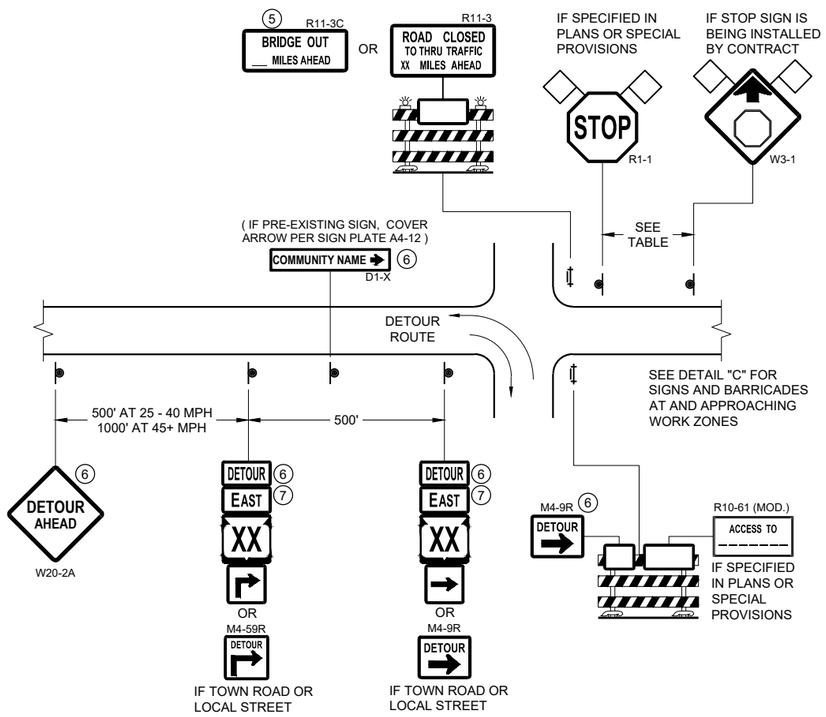

DETAIL A
MAINLINE CLOSURE WITH POSTED DETOUR

WORK ZONE GREATER THAN OR EQUAL TO ½ MILE FROM DETOUR ROUTE (1000 FEET IF URBAN)

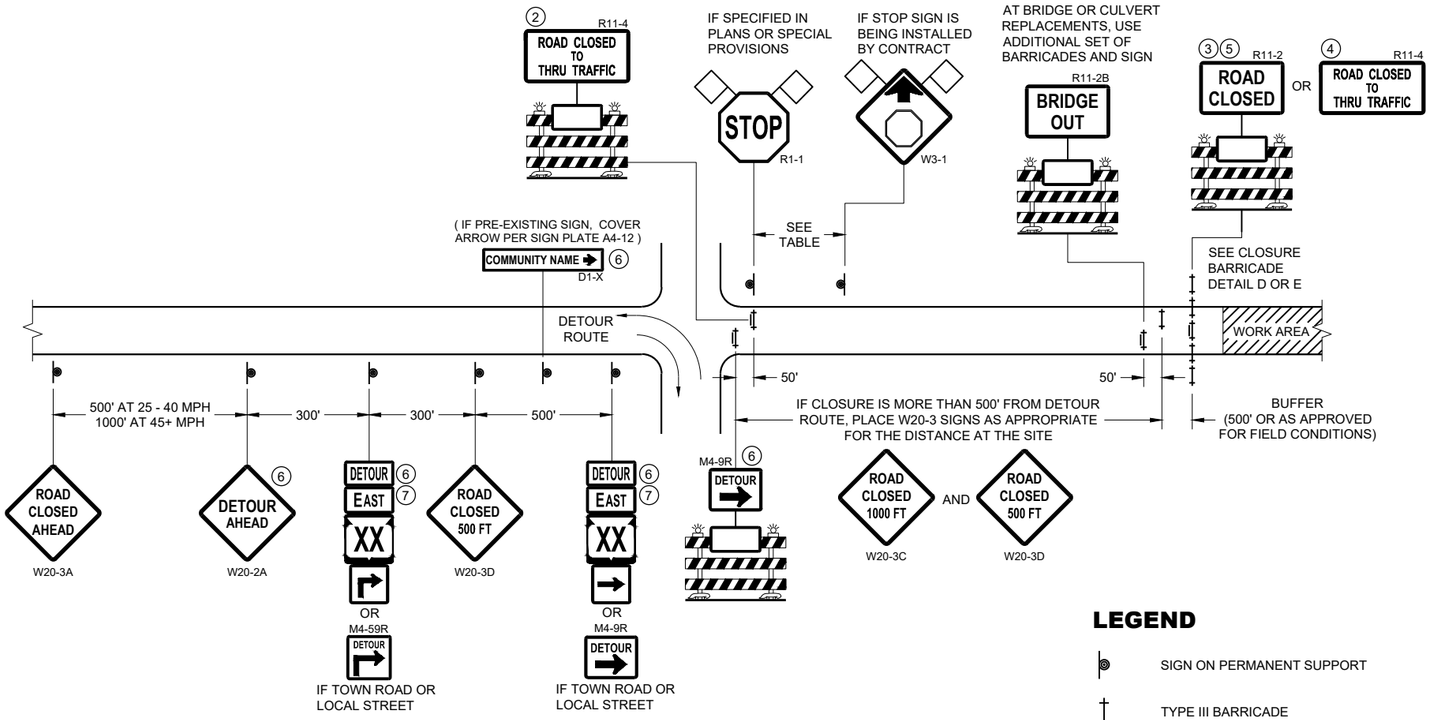

DETAIL B
MAINLINE CLOSURE WITH POSTED DETOUR

WORK ZONE LESS THAN ½ MILE FROM DETOUR ROUTE (1000 FEET IF URBAN)

LEGEND

- SIGN ON PERMANENT SUPPORT
- TYPE III BARRICADE
- TYPE III BARRICADE WITH ATTACHED SIGN
- TYPE "A" WARNING LIGHT (FLASHING)
- WORK AREA
- FLAGS, 16" X 16" MIN. (ORANGE)
- DETOUR M4 - 8
- EAST M3 - X
- XX (M1 - 4) OR XX (M1 - 6) OR COUNTY X (M1 - 5A)
- M05 - 1 OR M06 - 1

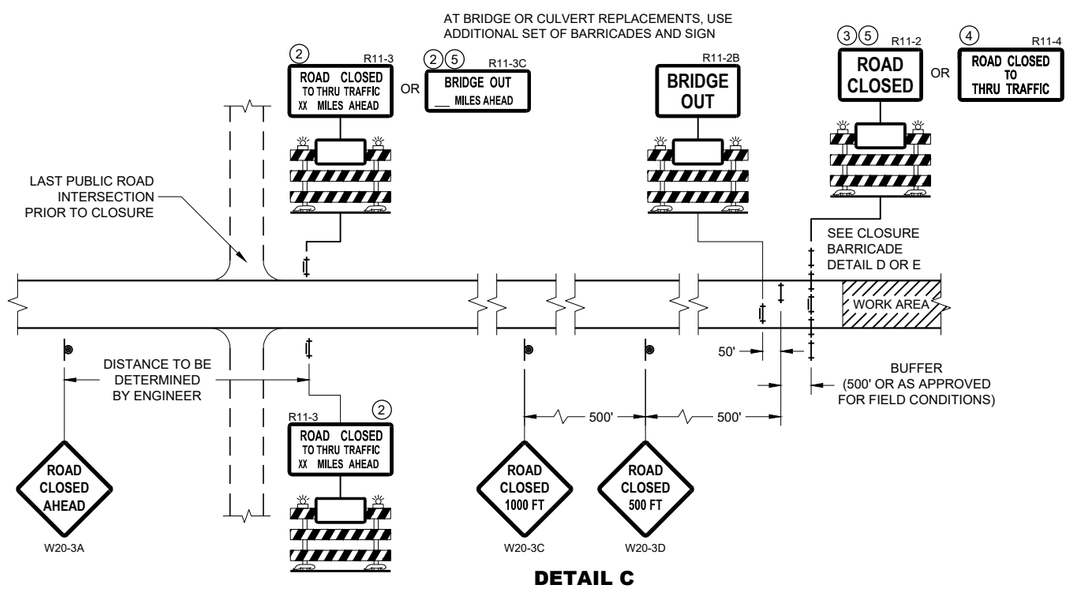

DETAIL C
MAINLINE CLOSURE, NO POSTED DETOUR

SPEED LIMIT (MPH)	"STOP AHEAD" ADVANCE WARNING DISTANCE (FT)
25	200
30	200
35	350
40	350
45	500
50	550
55	750

SEE SDD 15C2-SHEET "b" FOR GENERAL NOTES AND FOOTNOTES ① THROUGH ⑦

BARRICADES AND SIGNS FOR MAINLINE CLOSURES

STATE OF WISCONSIN
DEPARTMENT OF TRANSPORTATION

APPROVED
February 2020 /S/ Andrew Heidtke
DATE WORK ZONE ENGINEER
FHWA

6

SDD 15C02 - 08a

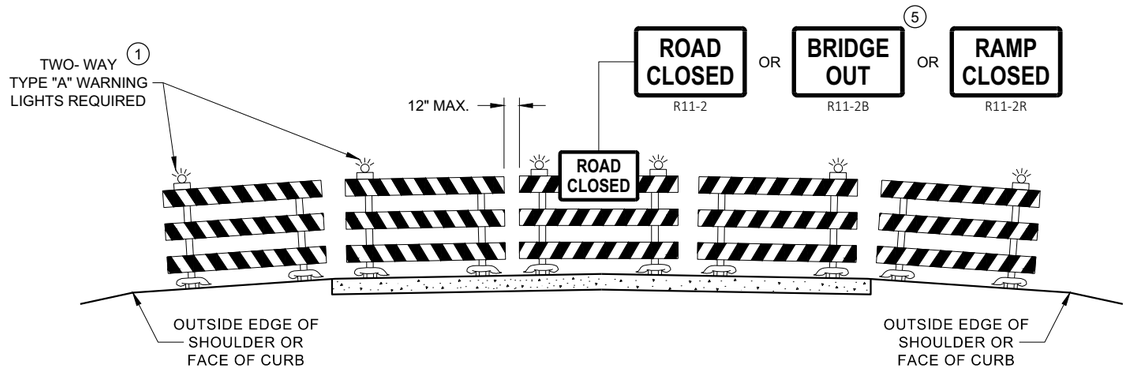

DETAIL D
ROAD CLOSURE BARRICADE DETAIL
APPROACH VIEW

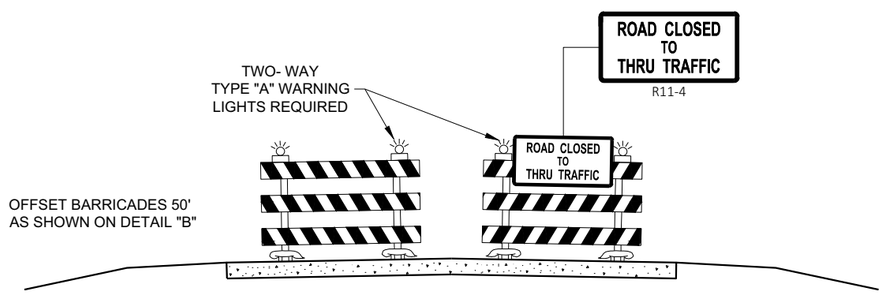

DETAIL E
LANE CLOSURE BARRICADE DETAIL
APPROACH VIEW

SEE SDD 15C2 - SHEET "a" FOR LEGEND

GENERAL NOTES

THE EXACT NUMBER, LOCATION, AND SPACING OF ALL SIGNS AND BARRICADES SHALL BE ADJUSTED TO FIT FIELD CONDITIONS AS APPROVED BY THE ENGINEER.

ANY SIGNS TEMPORARY OR EXISTING, WHICH CONFLICT WITH TRAFFIC CONTROL "IN USE", SHALL BE REMOVED OR COVERED AS NEEDED AND AS APPROVED BY THE ENGINEER.

THE SPACING BETWEEN TRAFFIC CONTROL SIGNS SHOULD BE ADJUSTED TO NOT CONFLICT WITH AND SHOULD PROVIDE A DESIRABLE MINIMUM OF 200 FEET CLEARANCE TO EXISTING SIGNS THAT WILL REMAIN IN PLACE.

BARRICADES THAT MUST BE MOVED FOR A WORK OPERATION SHALL BE IMMEDIATELY RE-ESTABLISHED UPON COMPLETION OF THE OPERATION, OR FOR CONTINUING OPERATIONS, AT THE END OF EACH WORKING DAY.

SIGNS THAT WILL BE IN PLACE LESS THAN 7 CONTINUOUS DAYS AND NIGHTS MAY BE MOUNTED ON PORTABLE SUPPORTS.

ALL TYPE III BARRICADES SHALL HAVE RAILS REFLECTORIZED ON BOTH FACES. STRIPES SHALL BE PROPERLY SLOPED DOWN TOWARD THE TRAFFIC SIDE OR AS SHOWN IN THE ROAD CLOSURE BARRICADE DETAIL "D" FOR FULL ROAD CLOSURES.

TYPE "A" LOW - INTENSITY FLASHING WARNING LIGHTS SHALL BE VISIBLE ON BOTH SIDES OF THE BARRICADE.

THE R11 - 2, R11 - 3, M4 - 9, R11 - 4, AND R10 - 61 SIGNS PLACED ON THE BARRICADES SHALL COVER NO MORE THAN THE TOP RAIL. THE SIGNS SHALL NOT COVER ANY PORTION OF THE MIDDLE RAIL OR BOTTOM RAILS.

"WO" AND "MO" SIGNS ARE THE SAME AS "W" AND "M" SIGNS EXCEPT THE BACKGROUND IS ORANGE.

ALL SIGNS SHALL BE 48" X 48" UNLESS OTHERWISE NOTED BELOW:
- R11 - 2 SHALL BE 48" X 30"
- R11 - 3 SHALL, R11 - 4 AND R10 - 61 SHALL BE 60 " X 30"
- M4 - 9 SHALL BE 30" X 24"
- M3 - X SHALL BE 24" X 12" (36" X 18" IF NEEDED TO MATCH EXISTING SIGNS)
- M4 - 8 SHALL BE 24" X 12" (36" X 18" IF NEEDED TO MATCH EXISTING SIGNS)
- M1 - 4, M1 - 5A AND M1 - 6 SHALL BE 24" X 24" (36" X 36" IF NEEDED TO MATCH EXISTING SIGNS)
- MO5 - 1 AND MO6 - 1 SHALL BE 21" X 21" (30" X 30" IF NEEDED TO MATCH EXISTING SIGNS)
- D1 - X SHALL BE AS SHOWN ON SPECIFIC PROJECT SIGNING DETAIL SHEETS.
- R1 - 1 SHALL BE 36" X 36"

1. TWO WARNING LIGHTS SHALL BE PROVIDED ON THE CENTER BARRICADE AND A MINIMUM OF ONE WARNING LIGHT SHALL BE PROVIDED ON EACH OF THE OTHER BARRICADES WITHIN THE ROADWAY LIMITS. SPACING OF THE WARNING LIGHTS SHALL BE UNIFORM TO THE EDGE OF ROADWAY AS SHOWN (APPROX. 8 FOOT LIGHT SPACING.
2. THESE SIGNS AND BARRICADES ARE NOT REQUIRED IF ROAD CLOSURE BEGINS AT AN INTERSECTION.
3. FOR ROAD CLOSURE WITHOUT LOCAL ACCESS TO PROJECT, SEE ROAD CLOSURE BARRICADE DETAIL "D".
4. FOR ROAD CLOSURE WITH LOCAL ACCESS TO PROJECT, SEE ROAD CLOSURE BARRICADE DETAIL "E".
5. FOR BRIDGE OR CULVERT REPLACEMENTS, SUBSTITUTE "BRIDGE OUT" INSTEAD OF "ROAD CLOSED" ON R11 - 2 AND R11 - 3 SIGNS.
6. INSTALL DETOUR AND COMMUNITY GUIDE SIGNS AND ARROWS ONLY IF SPECIFIED IN THE CONTRACT. IF THERE ARE EXISTING ROUTE MARKER ASSEMBLIES THAT WILL REMAIN IN PLACE, ADJUST THE LOCATION OF THE DETOUR ROUTE SIGNS TO CORRESPOND WITH THE EXISTING ASSEMBLIES. MODIFY EXISTING SIGNS WHERE POSSIBLE. SEE SPECIFIC PROJECT DETOUR SIGNING DETAIL SHEETS. IF DETOUR SIGNS ARE BEING INSTALLED BY OTHERS, PLACE THE CONTRACTED TRAFFIC CONTROL SIGNS TO ALLOW FOR PLACEMENT OF ALL WARNING, DETOUR AND GUIDE SIGNS AS SHOWN.
7. "EAST" CARDINAL DIRECTION MARKERS AND RIGHT TURN ARROWS ARE SHOWN. USE OTHER CARDINAL DIRECTIONS AND ARROWS AS APPROPRIATE.

BARRICADES AND SIGNS FOR VARIOUS CLOSURES

STATE OF WISCONSIN
DEPARTMENT OF TRANSPORTATION

APPROVED
February 2020 — DATE
/S/ Andrew Heidtke — WORK ZONE ENGINEE
FHWA

6

6

SDD 15C02 - 08b

SDD 15C02 - 08b

THIS DRAWING PROVIDES GENERAL GUIDANCE ON TYPICAL DETOUR SIGN LAYOUT AND SPACING. SEE PROJECT DETOUR SIGNING SHEETS FOR SPECIFIC DETAILS FOR EACH PROJECT.

LEGEND

- SIGN ON PERMANENT SUPPORT
- WORK AREA
- DETOUR — M4 - 8
- EAST — M3 - X
- XX — M1 - 4 OR XX — M1 - 6 OR COUNTY X — M1 - 5A
- M05 - 1 OR M06 - 1 OR M06 - 1

GENERAL NOTES

THE EXACT NUMBER, LOCATION AND SPACING OF ALL SIGNS SHALL BE ADJUSTED TO FIT FIELD CONDITIONS AS APPROVED BY THE ENGINEER.

IF THERE ARE EXISTING ROUTE MARKER ASSEMBLIES THAT WILL REMAIN IN PLACE, ADJUST THE LOCATION OF THE DETOUR ROUTE SIGNS TO CORRESPOND WITH THE EXISTING ASSEMBLIES. SEE SPECIFIC PROJECT DETOUR SIGNING DETAIL SHEETS. MODIFY EXISTING SIGNS WHERE POSSIBLE.

THE SPACING BETWEEN TRAFFIC CONTROL AND DETOUR SIGNS SHOULD BE ADJUSTED TO NOT CONFLICT WITH AND TO PROVIDE A DESIRABLE MINIMUM OF 200 FEET CLEARANCE TO EXISTING SIGNS THAT WILL REMAIN IN PLACE.

ANY SIGNS TEMPORARY OR EXISTING, WHICH CONFLICT WITH TRAFFIC CONTROL "IN USE" SHALL BE REMOVED OR COVERED AS NEEDED AND AS APPROVED BY THE ENGINEER.

SIGNS THAT WILL BE IN PLACE LESS THAN 7 CONTINUOUS DAYS AND NIGHTS MAY BE MOUNTED ON PORTABLE SUPPORTS.

"MO" SIGNS ARE THE SAME AS "M" SIGNS EXCEPT THE BACKGROUND IS ORANGE.

SIGN SIZES SHALL BE AS FOLLOWS:

M3-X SHALL BE 24" X 12" (36" X 18" IF NEEDED TO MATCH EXISTING SIGNS)
M4-8 SHALL BE 24" X 12" (36" X 18" IF NEEDED TO MATCH EXISTING SIGNS)
M1-4, M1-5A AND M1-6 SHALL BE 24" X 24" (36" X 36" IF NEEDED TO MATCH EXISTING SIGNS)
M05-1 AND M06-1 SHALL BE 21" X 21" (30" X 30" IF NEEDED TO MATCH EXISTING SIGNS)
M4-9 AND M4-59 SHALL BE 30" X 24"
M4-8a SHALL BE 24" X 18"
G20-51 SHALL BE 60" X 24"
W20-2A SHALL BE 48" X 48"
D1-X SHALL BE AS SHOWN ON SPECIFIC PROJECT SIGNING DETAIL SHEETS.

* OPTIONAL SIGNS. SEE SPECIFIC PROJECT DETOUR SIGNING DETAIL SHEETS.

** FOR A TOWN ROAD OR LOCAL STREET DETOURED ONTO A STATE TRUNK HIGHWAY, PLACE A ROAD NAME PLAQUE ABOVE THE M4-9 SIGN AS SPECIFIED IN THE CONTRACT.

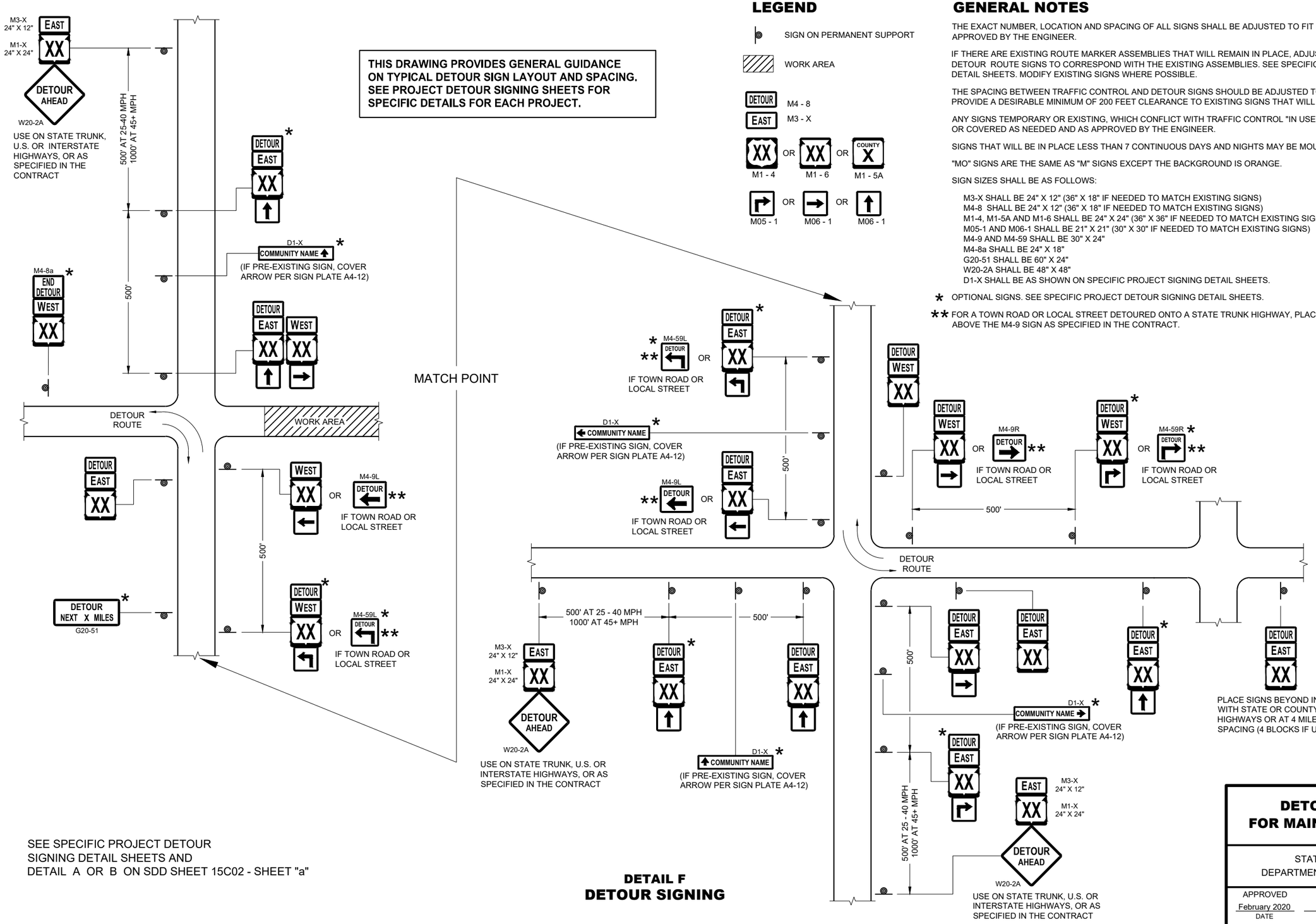

SEE SPECIFIC PROJECT DETOUR SIGNING DETAIL SHEETS AND DETAIL A OR B ON SDD SHEET 15C02 - SHEET "a"

DETAIL F
DETOUR SIGNING

DETOUR SIGNING FOR MAINLINE CLOSURES

STATE OF WISCONSIN
DEPARTMENT OF TRANSPORTATION

APPROVED
February 2020 — DATE
/S/ Andrew Heidtke — WORK ZONE ENGINEER
FHWA

GENERAL NOTES

THE EXACT NUMBER, LOCATION, AND SPACING OF ALL SIGNS AND DEVICES SHALL BE ADJUSTED TO FIT FIELD CONDITIONS.

THE SPACING BETWEEN TRAFFIC CONTROL SIGNS SHOULD BE ADJUSTED TO NOT CONFLICT WITH AND SHOULD PROVIDE A MINIMUM OF 200 FEET (500 FEET DESIRABLE) CLEARANCE TO EXISTING SIGNS THAT WILL REMAIN IN PLACE.

ALL SIGNS ARE 48" X 48" UNLESS OTHERWISE NOTED.

SIGNS THAT WILL BE IN PLACE LESS THAN SEVEN CONTINUOUS DAYS AND NIGHTS MAY BE MOUNTED ON PORTABLE SUPPORTS.

IF A "STOP" SIGN MUST BE REMOVED FOR A WORK OPERATION, A TEMPORARY "STOP" SIGN SHALL BE PLACED PRIOR TO THE SIGN REMOVAL, OR A FLAGGER SHALL BE PROVIDED UNTIL THE SIGN IS REESTABLISHED.

* OMIT G20-1 SIGNS IF LENGTH OF WORK AREA IS 2 MILES OR LESS

** PLACE AN ADDITIONAL W20-1A "ROAD WORK AHEAD" SIGN IF WORK AREA WITHIN THE PROJECT IS SEPARATED BY MORE THAN 2 MILES FROM PREVIOUS WORK AREA.

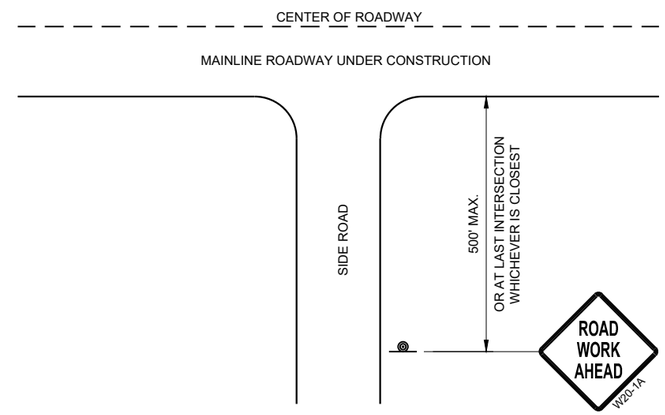

TYPICAL SIDE ROAD APPROACH WARNING SIGN DETAIL

LEGEND

- SIGN ON PERMANENT SUPPORT
- DIRECTION OF TRAFFIC
- WORK AREA

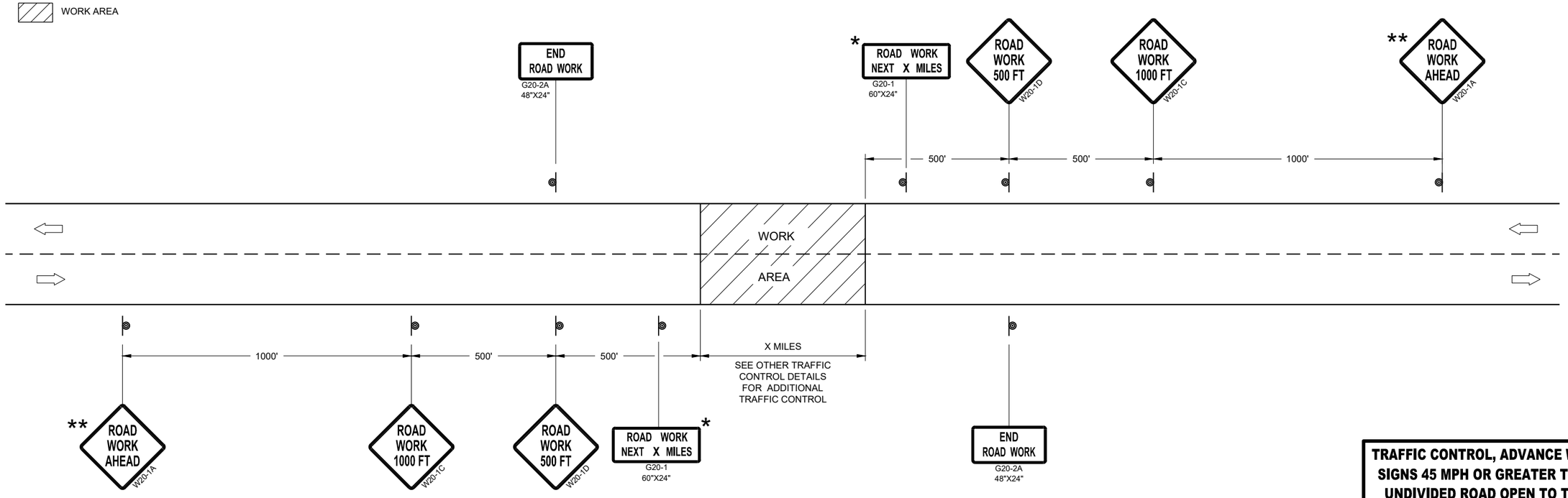

TRAFFIC CONTROL, ADVANCE WARNING SIGNS 45MPH OR GREATER

TRAFFIC CONTROL, ADVANCE WARNING SIGNS 45 MPH OR GREATER TWO-WAY UNDIVIDED ROAD OPEN TO TRAFFIC

STATE OF WISCONSIN
DEPARTMENT OF TRANSPORTATION

APPROVED
July 2018 — DATE
/S/ Andrew Heidtke — WORK ZONE ENGINEE
FHWA

6
SDD 15C04 - 05

GENERAL NOTES

THE EXACT NUMBER, LOCATION, AND SPACING OF ALL SIGNS AND DEVICES SHALL BE ADJUSTED TO FIT FIELD CONDITIONS.

THE SPACING BETWEEN TRAFFIC CONTROL SIGNS SHOULD BE ADJUSTED TO NOT CONFLICT WITH AND SHOULD PROVIDE A MINIMUM OF 200 FEET (500 FEET DESIRABLE) CLEARANCE TO EXISTING SIGNS THAT WILL REMAIN IN PLACE.

ALL SIGNS ARE 48" X 48" UNLESS OTHERWISE NOTED. IF NECESSARY DUE TO SPACE CONSTRAINTS, 36"X36" SIGNS MAY BE USED INSTEAD OF 48" X 48" SIGNS.

SIGNS THAT WILL BE IN PLACE LESS THAN SEVEN CONTINUOUS DAYS AND NIGHTS MAY BE MOUNTED ON PORTABLE SUPPORTS.

IF A "STOP" SIGN MUST BE REMOVED FOR A WORK OPERATION, A TEMPORARY "STOP" SIGN SHALL BE PLACED PRIOR TO THE SIGN REMOVAL, OR A FLAGGER SHALL BE PROVIDED UNTIL THE SIGN IS REESTABLISHED.

* THE THIRD W20-1 SIGN IS REQUIRED ONLY IF THERE IS AN INTERSECTION BETWEEN THE "ROAD WORK 500 FEET" SIGN AND THE WORK ZONE. ADJUST THE PLACEMENT OF THIS SIGN BASED ON INTERSECTION LOCATION AND OTHER FIELD CONDITIONS.

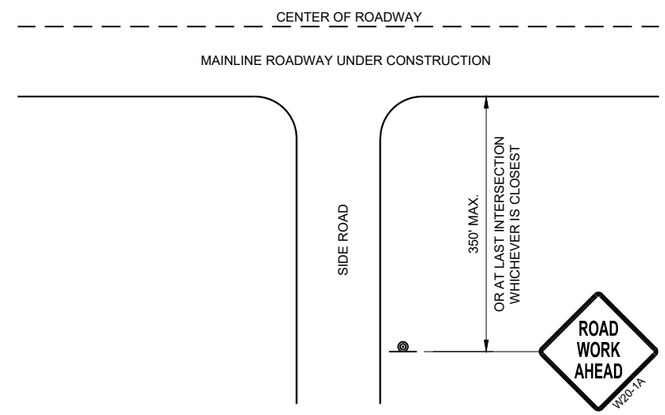

TYPICAL SIDE ROAD APPROACH WARNING SIGN DETAIL

LEGEND

- SIGN ON PERMANENT SUPPORT
- DIRECTION OF TRAFFIC
- WORK AREA

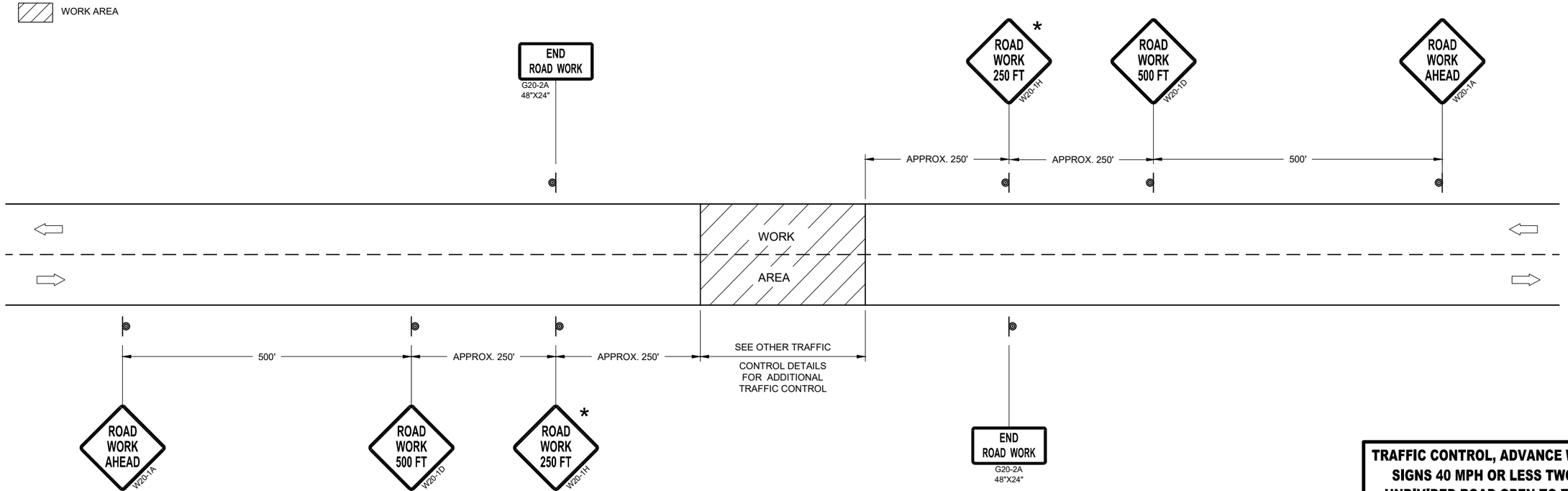

TRAFFIC CONTROL, ADVANCE WARNING SIGNS 40MPH OR LESS

TRAFFIC CONTROL, ADVANCE WARNING SIGNS 40 MPH OR LESS TWO-WAY UNDIVIDED ROAD OPEN TO TRAFFIC

STATE OF WISCONSIN
DEPARTMENT OF TRANSPORTATION

APPROVED
July 2018 — DATE
/S/ Andrew Heidtke — WORK ZONE ENGINEE
FHWA

6

SDD 15C05 - 05

6

SDD 15C05 - 05

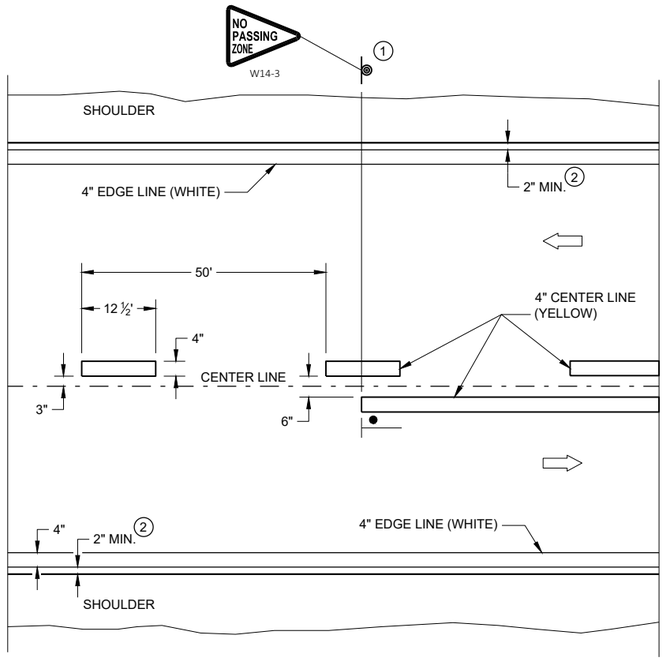

TWO WAY TRAFFIC

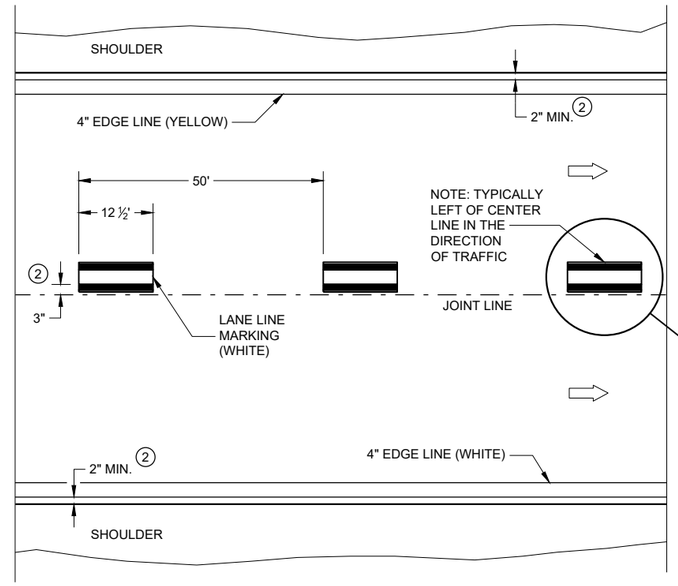

ONE WAY TRAFFIC

PERMANENT PAVEMENT MARKING

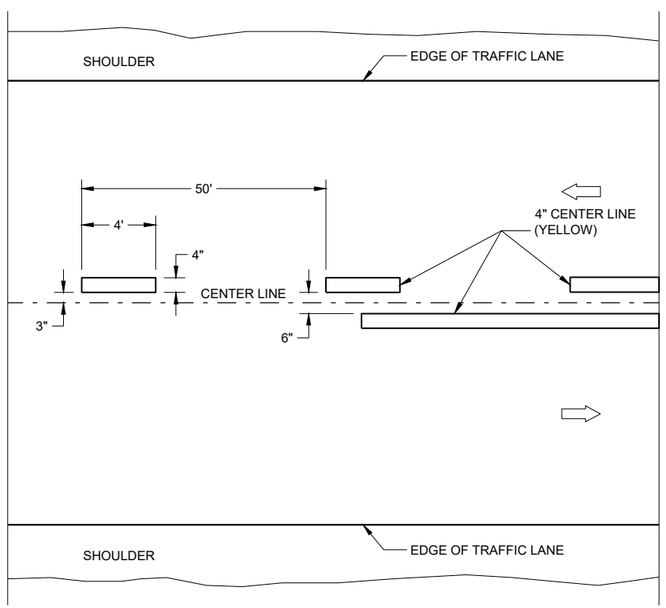

TWO WAY TRAFFIC

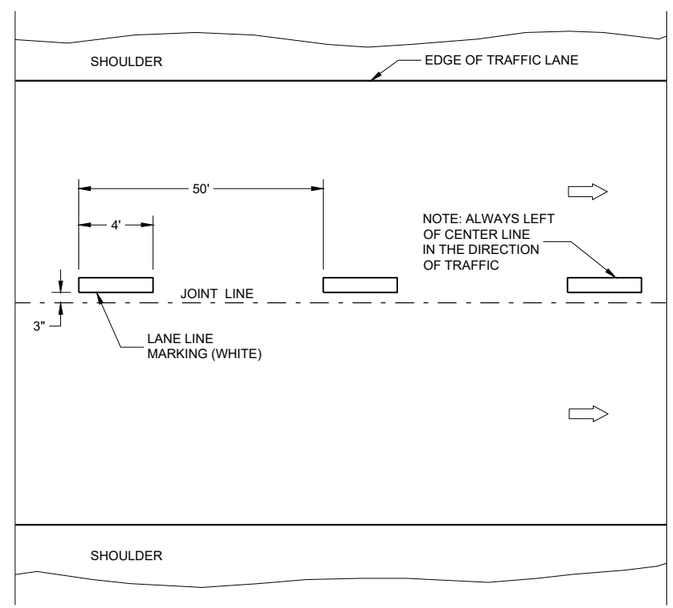

ONE WAY TRAFFIC

TEMPORARY PAVEMENT MARKING

GENERAL NOTES

DETAILS OF CONSTRUCTION NOT SHOWN ON THIS DRAWING SHALL CONFORM TO STANDARD SPECIFICATIONS AND SPECIAL PROVISIONS.

1. LOCATE THE NO PASSING ZONE W14-3 SIGN WITHIN 50 FEET OF THE "T" MARKING
2. MEASURE FROM EDGE OF MARKING TO JOINT LINE. THIS DOES NOT INCLUDE SPACE NEEDED FOR GROOVING OPERATIONS.

LEGEND

- "T" MARKING
- SIGN ON PERMANENT SUPPORT
- DIRECTION OF TRAFFIC

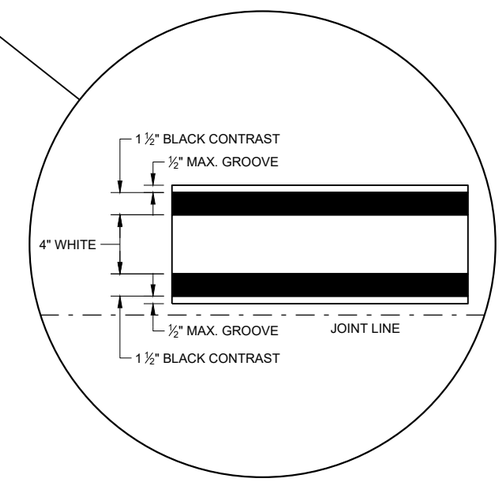

LONGITUDINAL MARKING (MAINLINE)

STATE OF WISCONSIN
DEPARTMENT OF TRANSPORTATION

APPROVED
February 2020 — DATE
/S/ Matthew Rauch — STATEWIDE SIGNING AND M ENGINEER
FHWA

6

SDD 15C08 - 20a

GENERAL NOTES

1. A SET OF ARROWS IS REQUIRED EVERY 400 FEET OR NEAR INTERSECTIONS OR DRIVEWAYS WITH TURNING TRAFFIC.
2. 8" WHITE
3. TURN BAY LENGTH OF LESS THAN 48' DOES NOT REQUIRE PAVEMENT ARROWS OR TEXT.

DIRECTION OF TRAFFIC

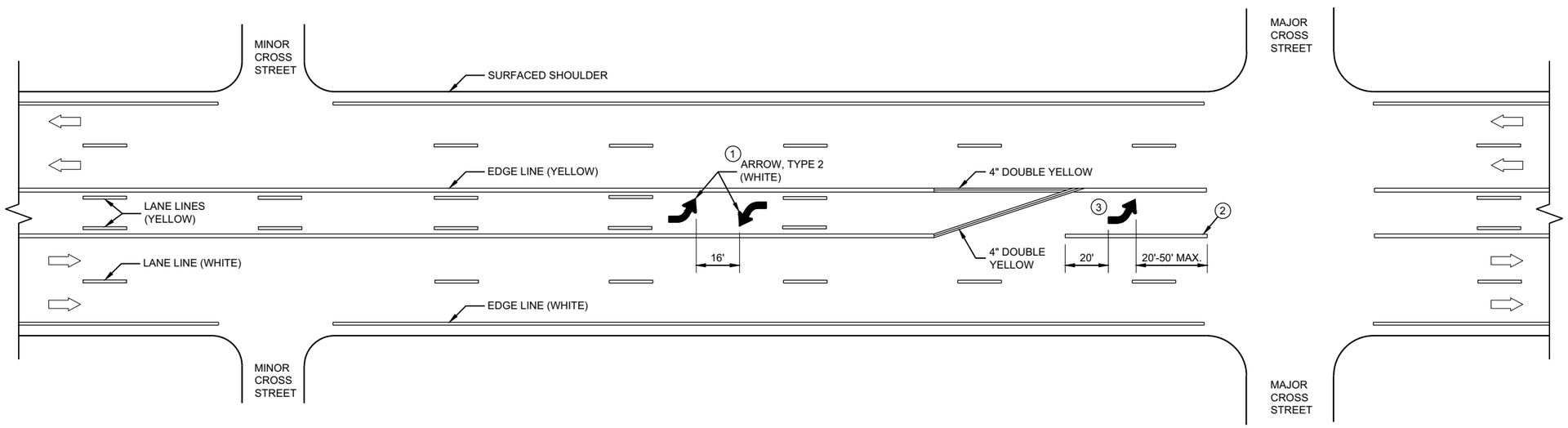

TWO WAY LEFT TURN LANE

6

6

SDD 15C08 - 20b

SDD 15C08 - 20b

PAVEMENT MARKING (TURN LANES)

STATE OF WISCONSIN
DEPARTMENT OF TRANSPORTAT

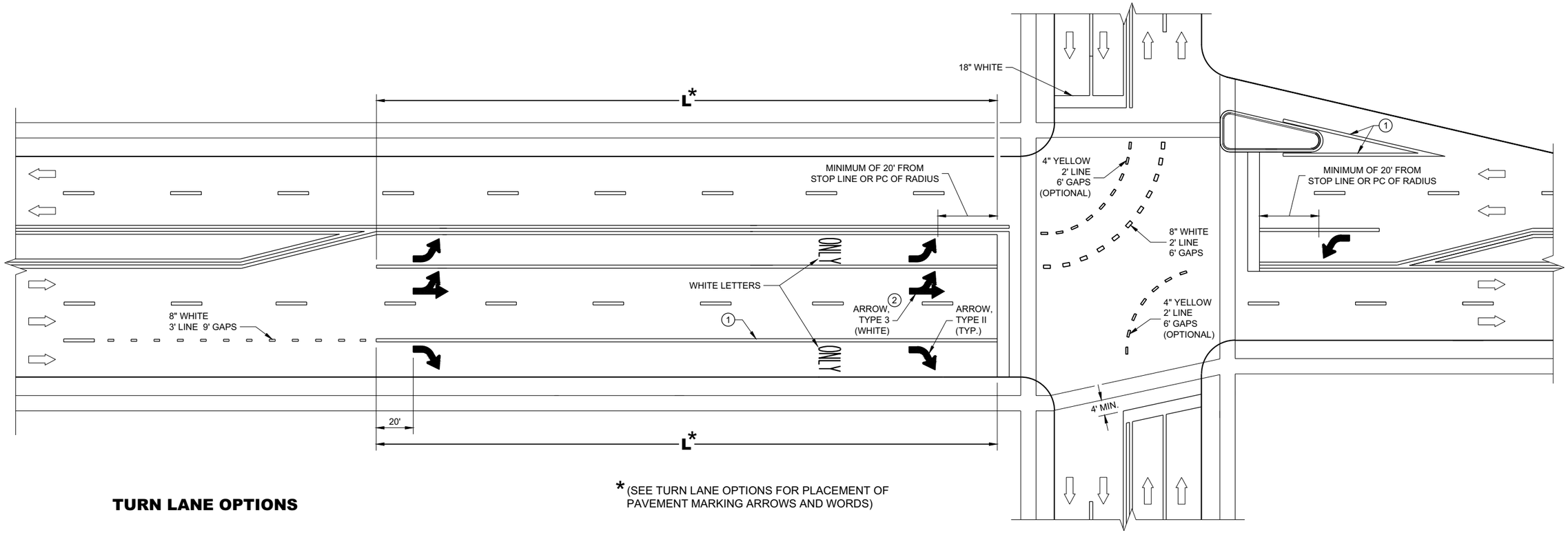

*(SEE TURN LANE OPTIONS FOR PLACEMENT OF PAVEMENT MARKING ARROWS AND WORDS)

TURN LANE OPTIONS

LENGTH OF TURN BAY (L) OF 0 - 47' DOES NOT REQUIRE PAVEMENT MARKING ARROWS OR WORDS

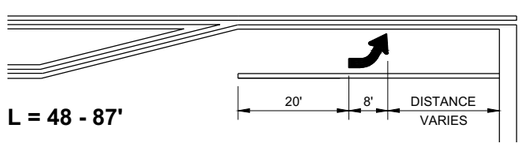

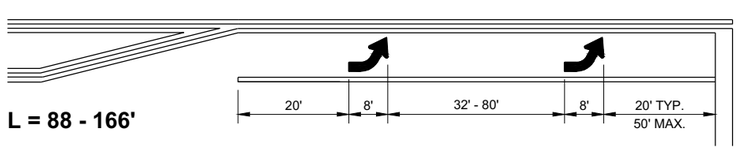

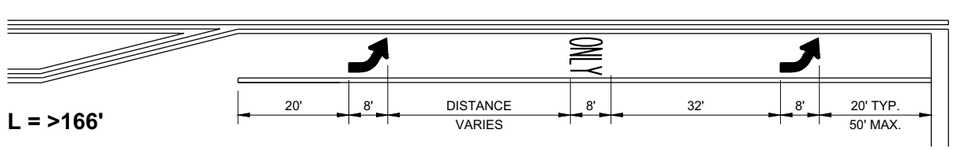

GENERAL NOTES

1. 8" WHITE
2. QUANTITY AND LOCATION OF TYPE 3 ARROWS ARE THE SAME AS THE TYPE II ARROWS IN THE ADJACENT TURN LANE. FOR TURN LANES WITH A PHYSICAL SEPARATION IN THE SAME DIRECTION OF TRAVEL, THE ARROWS AND "ONLY" MARKING MAY BE ELIMINATED.

⇨ DIRECTION OF TRAFFIC

L = LENGTH OF TURN BAY

PAVEMENT MARKING (TURN LANES)

STATE OF WISCONSIN
DEPARTMENT OF TRANSPORTA

6

SDD 15C08 - 20c

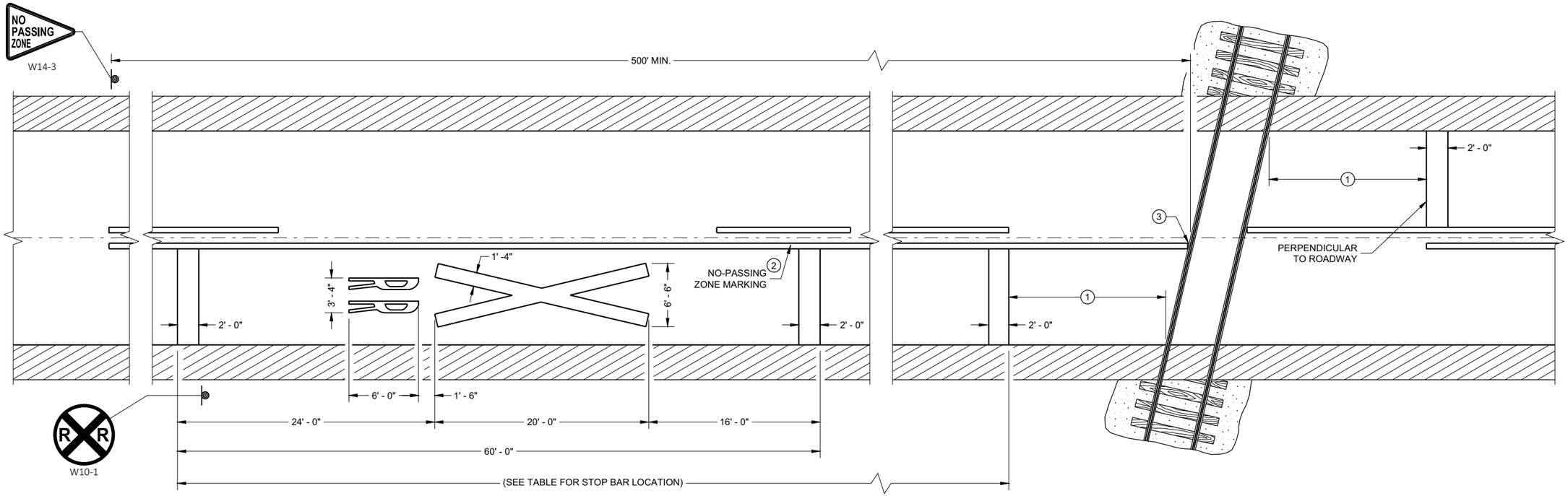

PAVEMENT MARKING

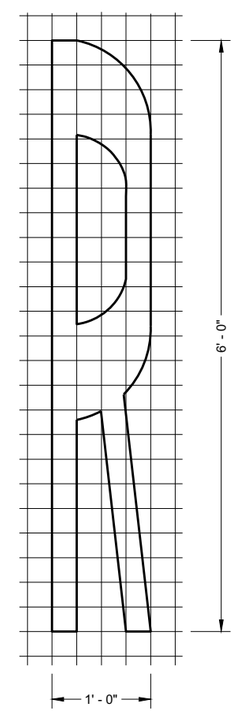

LEGEND

SIGN ON PERMANENT SUPPORT

GENERAL NOTES

DETAILS OF CONSTRUCTION, MATERIALS, AND WORKMANSHIP NOT SHOWN ON THIS DRAWING SHALL CONFORM TO THE PERTINENT REQUIREMENTS OF THE STANDARD SPECIFICATIONS AND THE APPLICABLE SPECIAL PROVISIONS.

ON MULTI-LANE ROADS THE TRANSVERSE BANDS SHOULD EXTEND ACROSS ALL APPROACH LANES, AND INDIVIDUAL R X R SYMBOLS SHOULD BE USED IN EACH APPROACH LANE.

CENTER OR LANE LINES AND NO-PASSING ZONE MARKINGS SHOWN ON THIS DRAWING ARE REQUIRED AND PAID FOR UNDER OTHER ITEMS IN THE CONTRACT.

TRACE EXISTING SYMBOL WHERE EXISTING SYMBOLS ARE PLACED.

1. MINIMUM 8' FROM ANY RAILROAD WARNING DEVICES (SIGNAL , GATES, ETC.) OR 25' FROM THE NEAREST RAIL, WHICHEVER DISTANCE IS GREATER.
2. 500' MINIMUM. MARKING LIMITS MAY BE EXTENDED AS DIRECTED BY THE ENGINEER TO MEET ADJACENT NO-PASSING ZONE MARKINGS.
3. FOR MULTIPLE TRACK CROSSINGS, THE BARRIER LINE SHALL EXTEND TO THE NEAR RAIL OF THE FURTHEST TRACK IN THE DIRECTION OF HIGHWAY TRAVEL.

DISTANCE TABLE

TABLE BASED UPON 2C-4 WISCONSIN SUPPLEMENT OF MANUAL ON UNIFORM TRAFFIC CONTROL DEVICES.

POSTED SPEED (M.P.H.)	DIMENSION RANGE (FEET)
25	150* - 250'
30	200* - 300'
35	250* - 450'
40	300* - 500'
45	400* - 650'
50	550* - 800'
55	750* - 1000'
60	1000* - 1250'
65	1000* - 1250'

* THE MINIMUM DISTANCES IN THE TABLE ARE DESIRABLE AND SHOULD BE USED. THE DISTANCES MAY BE INCREASED UP TO THE MAXIMUM TO ALLOW FOR FIELD CONDITIONS SUCH AS THE CLOSED PROXIMITY OF DRIVEWAYS, BRIDGES, SIDE ROADS OR OTHER FEATURES THAT WOULD PROHIBIT THE MINIMUM DISTANCES FROM BEING USED.

SIGNING AND PAVEMENT MARKING DETAILS FOR RAILROAD - HIGHWAY GRADE CROSSINGS

STATE OF WISCONSIN
DEPARTMENT OF TRANSPORTATION

APPROVED
February 2021 — DATE
/S/ Matthew R. Rauch — STATE SIGNING AND MAR ENGINEER
FHWA

6

SDD 15C09 - 12a

GENERAL NOTES

1. REFLECTIVE SHEETING SHALL FOLLOW THE REQUIREMENTS IN THE APPROVED PRODUCTS LISTING FOR SIGN SHEETING.
2. LOCATION OF WARNING LIGHTS WHEN SHOWN ON THE PLAN.

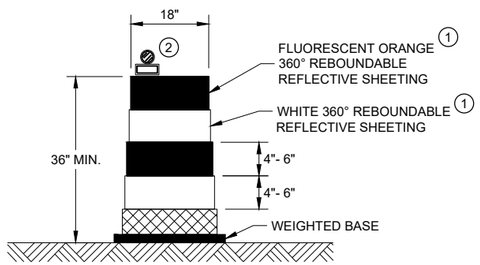

DRUM

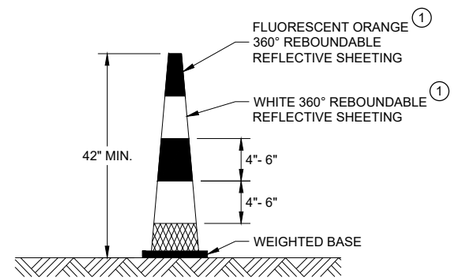

42" CONE

DO NOT USE IN TAPERS
½ SPACING OF DRUMS

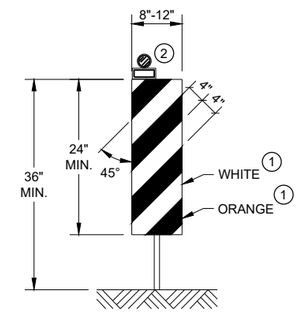

VERTICAL PANEL

THE STRIPES SHALL SLOPE DOWNWARD TO
THE TRAFFIC SIDE FOR CHANNELIZATION.

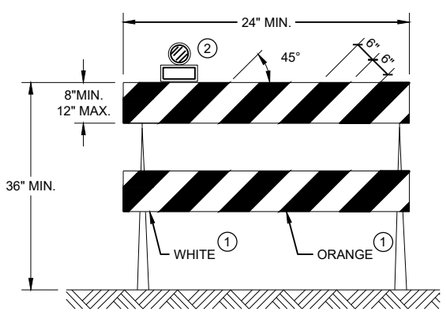

TYPE II BARRICADE

FOR RAILS LESS THAN 36" LONG, 4" WIDE STRIPES
MAY BE USED. ALL STRIPES SHALL SLOPE DOWNWARD
TO THE TRAFFIC SIDE FOR CHANNELIZATION.

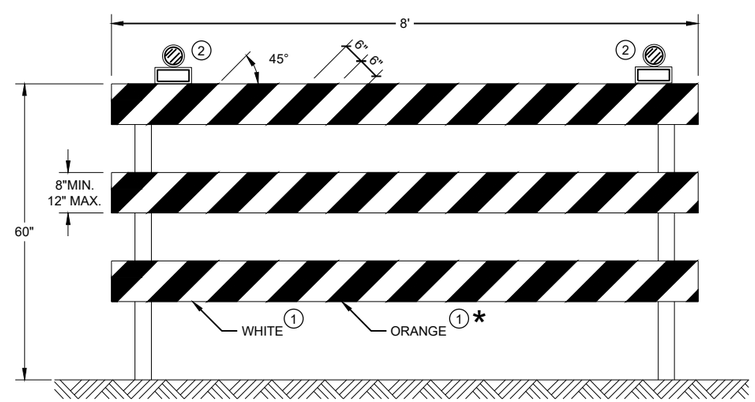

TYPE III BARRICADE

IF SIGN MOUNTED, DO NOT COVER MORE THAN 50% OF THE TOP
TWO RAILS OR 33% OF THE TOTAL AREA OF THE THREE RAILS.

* IF USED FOR A PERMANENT APPLICATION USE RED SHEETING.

CHANNELIZING DEVICES DRUMS, CONES, BARRICADES AND VERTICAL PANELS

STATE OF WISCONSIN
DEPARTMENT OF TRANSPORTATION

APPROVED
May 2021 — DATE
/S/ Andrew Heidtke — WORK ZONE ENGINEE
FHWA

6

SDD 15C11 - 09b

6

SDD 15C11 - 09b

LEGEND

SIGN ON PORTABLE OR PERMANENT SUPPORT

TEMPORARY PORTABLE RUMBLE STRIP ARRAY

DIRECTION OF TRAFFIC

WORK AREA

FLAGGER, EQUIPPED WITH STOP/SLOW PADDLE FASTENED ON SUPPORT STAFF

GENERAL NOTES

DETAILS OF TRAFFIC CONTROL DEVICES AND INSTALLATION NOT SHOWN ON THIS DRAWING SHALL CONFORM TO THE PERTINENT REQUIREMENTS OF THE STANDARD SPECIFICATIONS, THE SPECIAL PROVISIONS, AND THE MANUAL ON UNIFORM TRAFFIC CONTROL DEVICES.

ALL SIGNS ARE 48" X 48" UNLESS OTHERWISE NOTED.

"WO" SIGNS ARE THE SAME AS "W" SIGNS EXCEPT THE BACKGROUND IS ORANGE.

THE EXACT NUMBER, LOCATION AND SPACING OF ALL SIGNS, DEVICES, AND LOCATION OF ALL FLAGGERS SHALL BE ADJUSTED TO FIT FIELD CONDITIONS AS APPROVED BY THE ENGINEER.

THE FIRST ADVANCE WARNING SIGN SHOULD TYPICALLY BE LOCATED IN ADVANCE OF THE ANTICIPATED TRAFFIC BACKUP OR QUEUE.

WHEN A SIDE ROAD OR RAMP INTERSECTS THE FACILITY ON WHICH THE WORK IS BEING PERFORMED, ADDITIONAL TRAFFIC CONTROLS SHALL BE PROVIDED AS SPECIFIED IN THE PLANS AND/OR THE SPECIAL PROVISIONS OR AS APPROVED BY THE ENGINEER.

FLAGGING

FLAGGERS SHALL BE IN SIGHT OF EACH OTHER OR IN DIRECT COMMUNICATION AT ALL TIMES. THEY SHALL BE EQUIPPED WITH STOP/SLOW PADDLES FASTENED ON SUPPORT STAFFS. WHEN THE FLAGGING OPERATION IS NOT IN EFFECT REMOVE TEMPORARY PORTABLE RUMBLE STRIPS PRIOR TO COVERING OR REMOVING ALL ADVANCE SIGNING.

(1) FOR MOVING WORK OPERATIONS, POST ADDITIONAL W20-7A FLAGGER SIGNS AT APPROXIMATELY 3,500' INTERVALS IN THE MOVING WORK OPERATION OR AS APPROVED BY THE ENGINEER.

(2) SIGN NOT REQUIRED IF FLAGGING OPERATION OCCURS WITHIN A SIGNED ROAD WORK ZONE AREA.

WHEN THE DISTANCE BETWEEN FLAGGERS EXCEEDS 2 MILES, A PILOT CAR IS REQUIRED. WHEN CURVES REDUCE SIGHT DISTANCE BELOW 400', A PILOT CAR IS REQUIRED.

TEMPORARY PORTABLE RUMBLE STRIPS

UTILIZE TEMPORARY PORTABLE RUMBLE STRIPS ON ALL FLAGGING OPERATIONS.

(3) EACH TEMPORARY PORTABLE RUMBLE STRIP ARRAY CONSISTS OF THREE RUMBLE STRIPS SPACED ACCORDING TO MANUFACTURER'S RECOMMENDATION, PLACED TRANSVERSE ACROSS THE LANE AT LOCATIONS SHOWN.

ONLY USE TEMPORARY PORTABLE RUMBLE STRIPS FOR THE APPROVED PRODUCTS LIST.

INSTALL TEMPORARY RUMBLE STRIPS PER MANUFACTURER'S RECOMMENDATIONS.

PLACE ADVANCE SIGNING PRIOR TO INSTALLING TEMPORARY RUMBLE STRIPS.

DO NOT INSTALL TEMPORARY PORTABLE RUMBLE STRIPS ON GRAVEL, MILLED SURFACES, OR ASPHALT THAT HAS BEEN PAVED LESS THAN 12 HOURS.

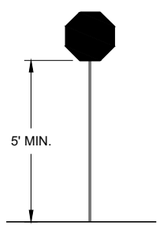

STOP/SLOW PADDLE ON SUPPORT STAFF

SIGN AND TEMPORARY RUMBLE STRIP ARRAY SPACING TABLE

SPEED LIMIT	SPACING "A"
25-30 MPH	200'
35-40 MPH	350'
45-55 MPH	500'

WO3-4

USE OF WO3-4 SIGN IS OPTIONAL. WHEN USED, THIS SIGN SHALL BE LOCATED BETWEEN THE W20-7A AND W20-4A SIGNS, USING SPACING "A".

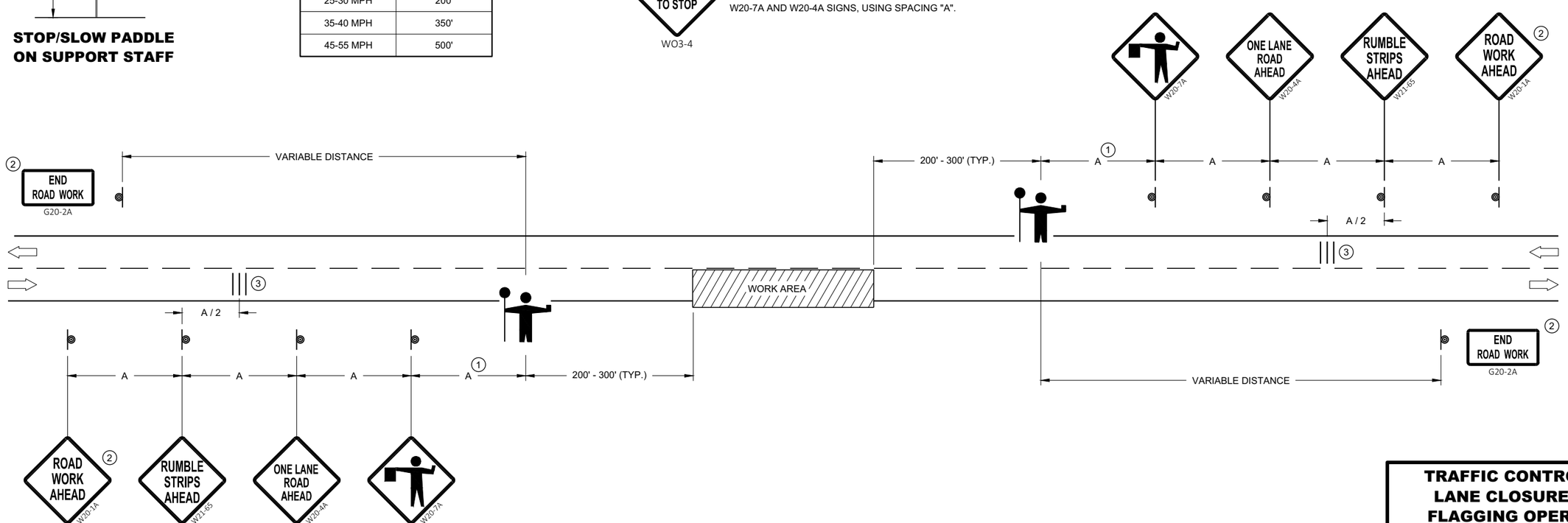

TRAFFIC CONTROL FOR LANE CLOSURE WITH FLAGGING OPERATION

TRAFFIC CONTROL FOR LANE CLOSURE WITH FLAGGING OPERATION

STATE OF WISCONSIN
DEPARTMENT OF TRANSPORTATION

APPROVED
May 2019 — DATE
/S/ Andrew Heidtke — WORK ZONE ENGINEE
FHWA

6

SDD 15C12 - 07

GENERAL NOTES

DIAGONALS ARE OPTIONAL WHEN PAINED ISLAND IS LESS THAN 6 FEET AT WIDEST POINT.

DIRECTION OF TRAVEL

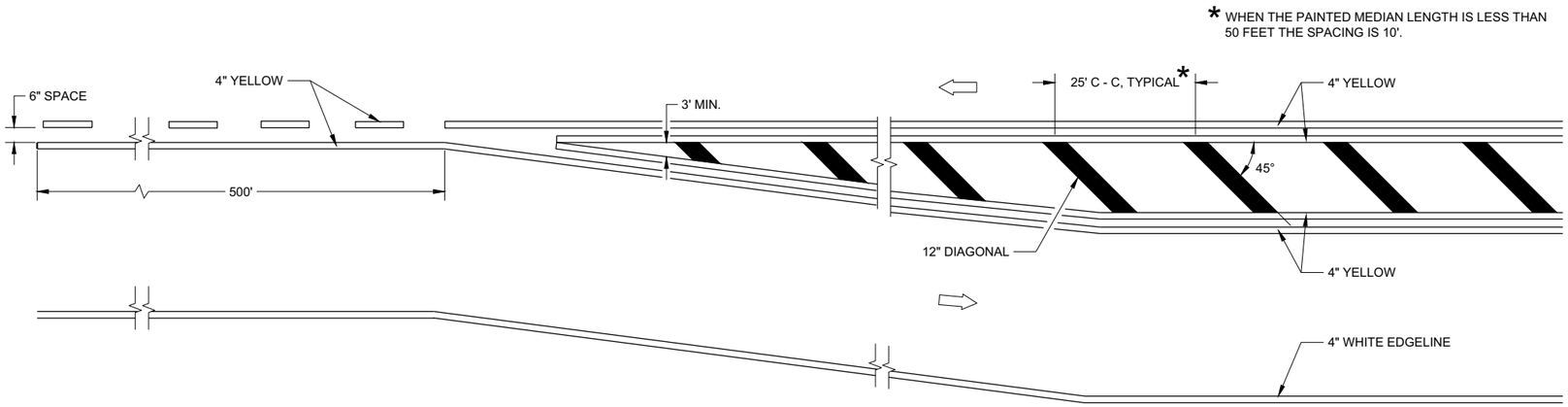

MEDIAN ISLAND DETAIL

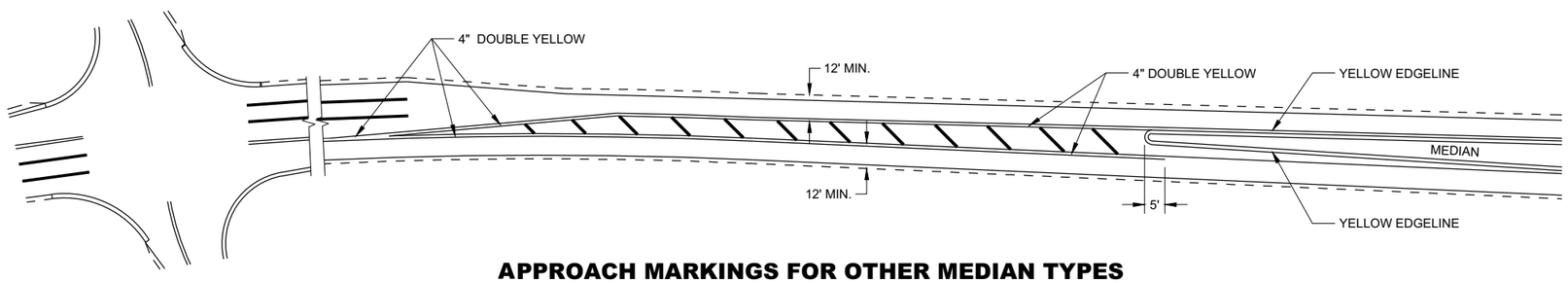

APPROACH MARKINGS FOR OTHER MEDIAN TYPES

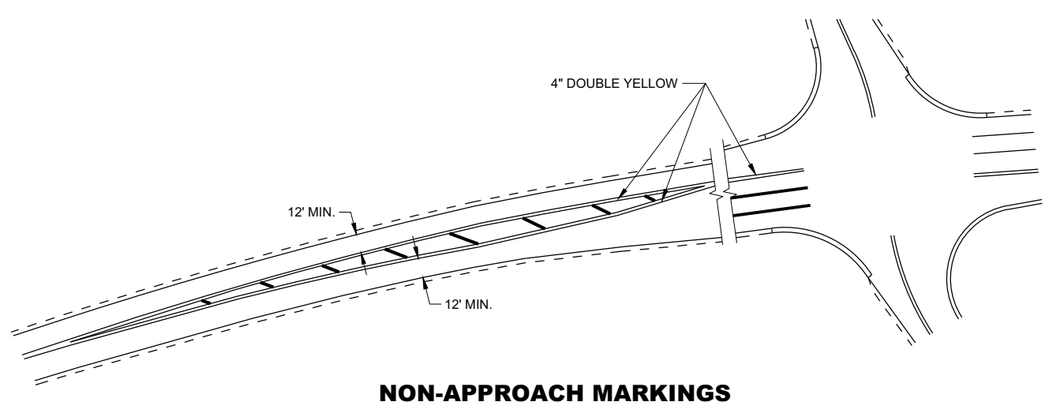

NON-APPROACH MARKINGS

6

6

SDD 15C18 - 05a

SDD 15C18 - 05a

MEDIAN ISLAND PAVEMENT MARKINGS

STATE OF WISCONSIN
DEPARTMENT OF TRANSPORTATION

APPROVED

February 2021 — DATE

/S/ Matthew R. Rauch — STATE SIGNING AND MAR ENGINEER

FHWA

LEGEND

V1 LEAD VEHICLE

V2 MARKING VEHICLE

V3 SHADOW VEHICLE

TRUCK MOUNTED ATTENUATOR (TMA)

SIGN ON TEMPORARY SUPPORT

DIRECTION OF TRAFFIC

FLASHING ARROW PANEL (CAUTION)

GENERAL NOTES

ALL VEHICLES SHALL BE EQUIPPED WITH TWO 360 DEGREE HIGH INTENSITY YELLOW FLASHING LIGHTS OR STROBE LIGHTS AND OPERATED WITH HEADLIGHTS TURNED ON.

ALL VEHICLES SHALL BE EQUIPPED WITH REAR FACING TYPE B OR C FLASHING ARROW PANEL OPERATING IN CAUTION MODE. SIGNS PLACED ON VEHICLES MUST NOT OBSCURE THE ARROW PANEL.

ALL SIGNS ARE 48" X 48" UNLESS OTHERWISE SPECIFIED.

DISTANCE BETWEEN VEHICLES MAY VARY ACCORDING TO TERRAIN, SIGHT DISTANCE, PAINT DRYING TIME, AND OTHER FACTORS. WHENEVER ADEQUATE STOPPING SIGHT DISTANCE EXISTS TO THE REAR, SHADOW VEHICLES SHOULD MAINTAIN THE MINIMUM DISTANCE FROM THE WORK VEHICLE AND PROCEED AT THE SAME SPEED AS THE WORK VEHICLE. SHADOW VEHICLES SHOULD SLOW DOWN IN ADVANCE OF VERTICAL AND HORIZONTAL CURVES THAT RESTRICT SIGHT DISTANCE.

THE WORK AND SHADOW VEHICLES SHOULD PULL OVER PERIODICALLY TO ALLOW TRAFFIC TO PASS.

WHEN NO WORK ACTIVITY IS TAKING PLACE, REMOVE OR LAY STATIONARY SIGNS AND SUPPORTS FLAT ON THE GRADE WITH UPRIGHTS ORIENTED PARALLEL TO AND DOWNSTREAM FROM TRAFFIC.

CONES SHOULD BE USED BETWEEN THE MARKING AND SHADOW VEHICLE AT 100 FOOT SPACING. CONES MAY BE OMITTED ON PAINTED LINE IF APPROVED BY THE ENGINEER. CONSIDER PAVEMENT MARKING DRY OR CURE TIMES AND TRAFFIC VOLUME.

CONES SHALL BE A MINIMUM OF 28" FOR WET PAVEMENT MARKING .

(1) SIGNS SHALL BE REPEATED APPROXIMATELY EVERY THREE MILES.

(2) IF CONSTRUCTION WORK ZONE SIGNS ARE IN PLACE, W20-1A OR W21-63 ARE NOT REQUIRED.

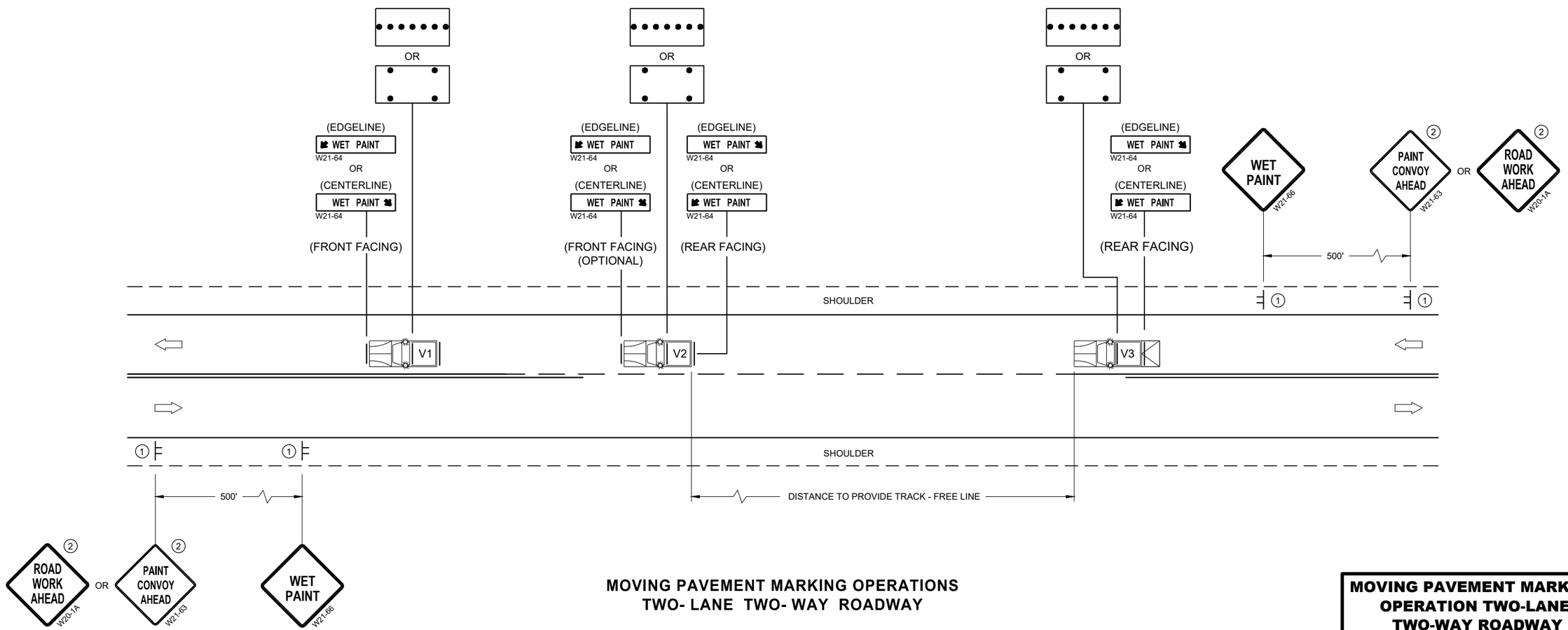

MOVING PAVEMENT MARKING OPERATIONS
TWO- LANE TWO- WAY ROADWAY

MOVING PAVEMENT MARKING OPERATION TWO-LANE TWO-WAY ROADWAY

STATE OF WISCONSIN
DEPARTMENT OF TRANSPORTATION

APPROVED
November 2019 /S/ Andrew Heidtke
DATE WORK ZONE ENGINEE
FHWA

6

SDD 15C19 - 06a

GENERAL NOTES

STOP SIGN SHALL BE PLACED A MINIMUM OF 6 FEET TO A MAXIMUM OF 50 FEET FROM THE EDGELINE LOCATION.

1. 18-INCH STOP LINES MAY BE DELETED OR ADDED BY THE REGION MARKING ENGINEER BASED ON VISIBILITY AND SIGHT LINES.
2. NO STOP LINE IS REQUIRED IF STOP SIGN IS LESS THAN OR EQUAL TO 40 FEET FROM THE EDGELINE.
3. NO STOP LINE IS REQUIRED IF STOP SIGN IS LESS THAN OR EQUAL TO 30 FEET FROM THE FLANGELINE EXTENSION.
4. MOVE CLOSER TO THE EDGE OF TRAVEL LINE AS NEEDED FOR VISIBILITY AND SIGHT LINES (NO CLOSER THAN 4 FEET).
5. LADDER BAR CROSSWALKS SHOULD ONLY BE USED FOR MID BLOCK CROSSINGS. USE 2 - 6" TRANSVERSE LINES INSTEAD.

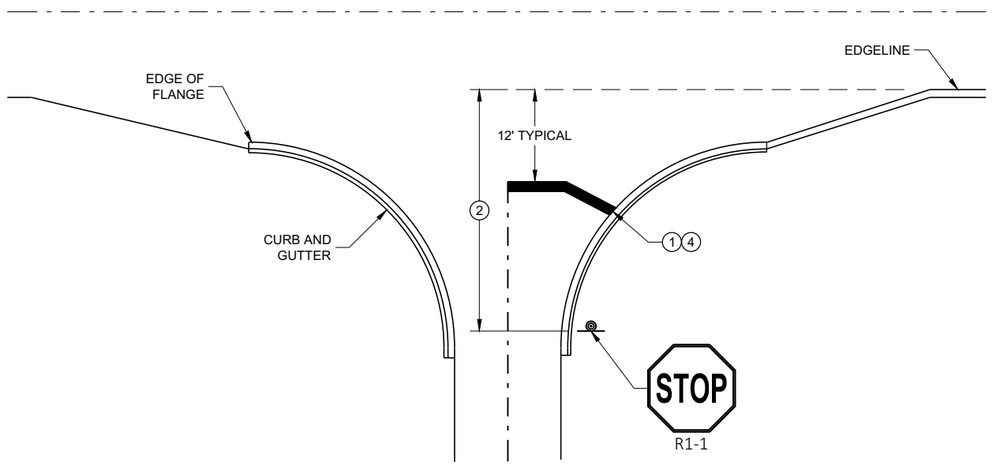

TYPICAL STOP LINE PAVEMENT MARKING WITH CURB AND GUTTER

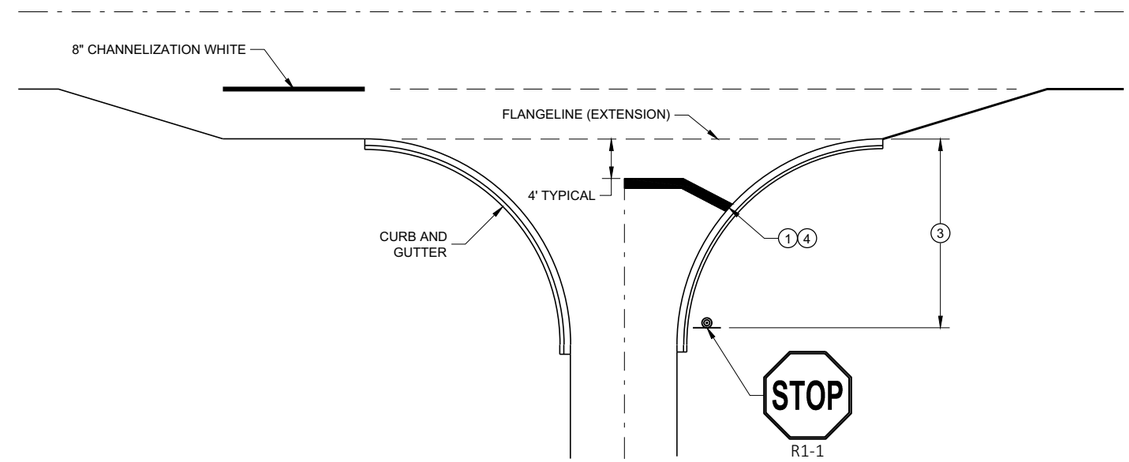

TYPICAL STOP LINE PAVEMENT MARKING FOR SIDEROADS WITH RIGHT TURN LANE

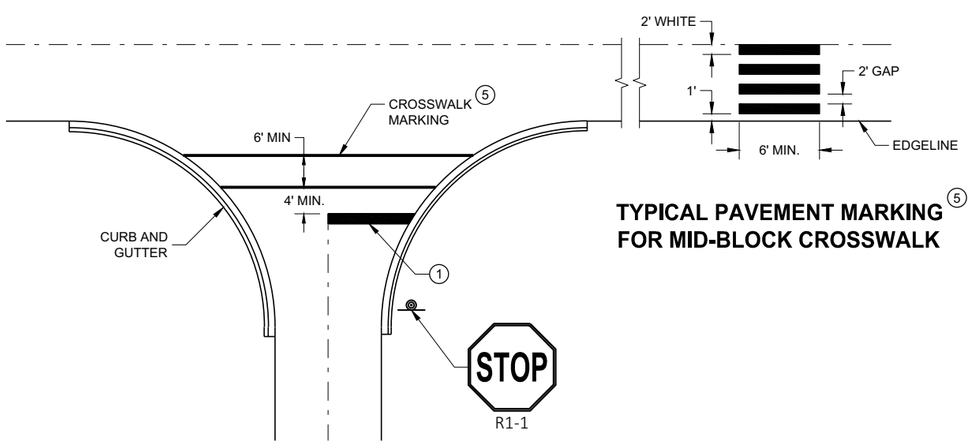

TYPICAL STOP LINE PAVEMENT MARKING FOR SIDEROADS WITH CROSSWALK MARKING

TYPICAL PAVEMENT MARKING 5 FOR MID-BLOCK CROSSWALK

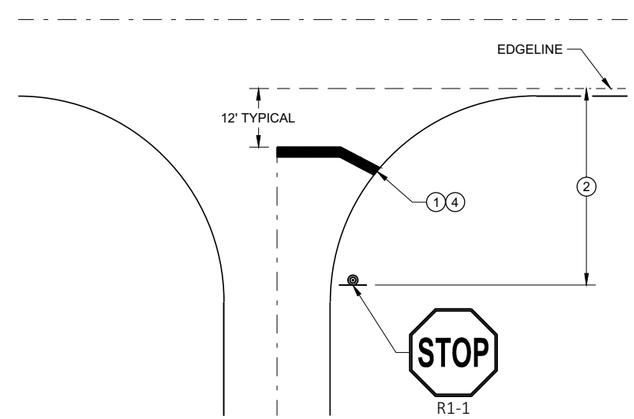

TYPICAL STOP LINE PAVEMENT MARKING WITHOUT CURB AND GUTTER

STOP LINE AND CROSSWALK PAVEMENT MARKING

STATE OF WISCONSIN
DEPARTMENT OF TRANSPORTATION

APPROVED
November 2019 — DATE
/S/ Matthew Rauch — STATE SIGNING AND MAR ENGINEER
FHWA

6

SDD 15C33 - 04

LEGEND

SIGN ON PERMANENT SUPPORT

TRAFFIC CONTROL DRUM

DIRECTION OF TRAFFIC

WORK ZONE

GENERAL NOTES

ALL SIGNS ARE 48"X48" UNLESS OTHERWISE NOTED. IF NECESSARY DUE TO SPACE CONSTRAINTS IN URBAN AREAS, 36" X 36" SIGNS MAY BE USED IF APPROVED BY THE REGIONAL TRAFFIC UNIT.

"WO" SIGN IS THE SAME AS "W" SIGN EXCEPT THE BACKGROUND IS ORANGE.

ANY SIGNS TEMPORARY OR EXISTING, WHICH CONFLICT WITH THE TRAFFIC CONTROL "IN USE" SHALL BE REMOVED OR COVERED AS NEEDED AND AS APPROVED BY THE ENGINEER.

THE EXACT NUMBER, LOCATION, AND SPACING OF ALL SIGNS AND DEVICES SHALL BE ADJUSTED TO FIT FIELD CONDITIONS AS APPROVED BY THE ENGINEER.

CHANNELIZING DEVICES PLACED ADJACENT TO WORK AREA SHALL BE PULLED BACK FROM THE TRAVEL LANE WHEN WORK IS NOT IN PROGRESS.

SIGNS THAT WILL BE IN PLACE LESS THAN 7 CONTINUOUS DAYS AND NIGHTS MAY BE MOUNTED ON PORTABLE SUPPORTS.

W20-1A AND G20-2A SIGNS ARE NOT REQUIRED IF THE WORK AREA IS WITHIN A LARGER WORK ZONE WHERE THESE SIGNS ARE ALREADY PRESENT. G20-2A SIGNS MAY ALSO BE OMITTED IF DURATION OF WORK IS LESS THAN 7 CONTINUOUS DAYS AND NIGHTS.

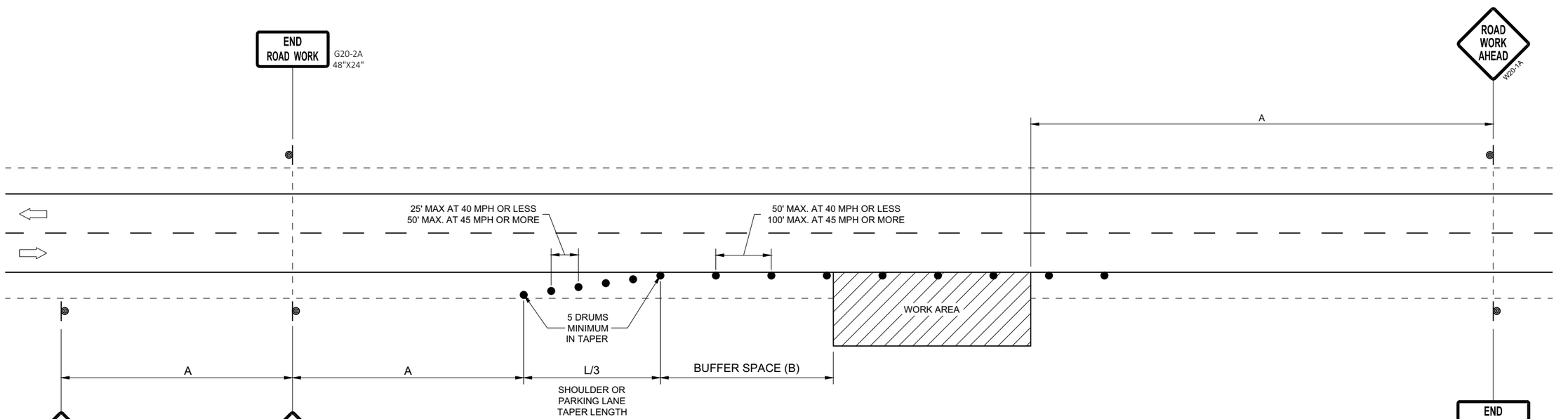

OR
IF TRAFFIC CONTROL DEVICES
ENCROACH ONTO TRAVELED WAY, USE

POSTED SPEED LIMIT PRIOR TO WORK STARTING (MPH)	ADVANCE WARNING SIGN SPACING (A) FEET	SHOULDER TAPER L / 3 W, LATERAL OFFSET (FT)						BUFFER SPACE (B) FEET
		3	4	5	6	7	8	
25	200'	10	14	17	21	24	28	55
30	200'	15	20	25	30	35	40	85
35	350'	20	27	34	40	47	54	120
40	350'	26	35	44	53	62	70	170
45	500'	45	59	74	89	104	119	220
50	500'	50	66	83	99	116	132	280
55	500'	54	73	91	109	127	145	335'

TRAFFIC CONTROL, WORK ON SHOULDER OR PARKING LANE, UNDIVIDED ROADWAY

STATE OF WISCONSIN
DEPARTMENT OF TRANSPORTATION

APPROVED
May 2020
DATE

/S/ Andrew Heidtke
STATEWIDE WORK ZONE T
SAFETY ENGINEER

FHWA

6

SDD 15D28 - 04

LEGEND

V1 WORK VEHICLE

V2 SHADOW VEHICLE

TRUCK MOUNTED ATTENUATOR (TMA)

FLASHING ARROW PANEL (CAUTION)

WORK AREA

DIRECTION OF TRAFFIC

POSTED SPEED PRIOR TO WORK STARTING (MPH)	DECISION SIGHT DISTANCE (D)
0 - 25	550'
30	550'
35	700'
40	700'
45	900'
50	900'
55	1200'

GENERAL NOTES

ALL SIGNS ARE 48"X48" UNLESS OTHERWISE NOTED.

MOBILE IS WORK THAT MOVES CONTINUOUSLY OR MOVES AT LEAST THE DECISION SIGHT DISTANCE EVERY 15 MINUTES.

ALL VEHICLES SHALL BE EQUIPPED WITH TWO 360 DEGREE HIGH INTENSITY YELLOW FLASHING LIGHTS OR STROBE LIGHTS AND OPERATED WITH HEADLIGHTS TURNED ON.

ALL ARROW PANELS SHALL BE REAR FACING, TYPE "B" OR "C", AND DISPLAYING THE FLASHING CAUTION MODE. SIGNS PLACED ON VEHICLES MUST NOT OBSCURE THE ARROW PANEL.

USE AN ATTENUATOR ON THE REARMOST VEHICLE THAT BLOCKS ALL OR PART OF THE TRAFFIC LANE.

1 DISTANCE BETWEEN VEHICLES MAY INCREASE FROM THE ATTENUATOR'S ROLL AHEAD BASED ON TERRAIN, SIGHT DISTANCE, AND OTHER FACTORS. WHENEVER ADEQUATE STOPPING SIGHT DISTANCE EXISTS TO THE REAR, SHADOW VEHICLES SHOULD MAINTAIN THE MINIMUM DISTANCE FROM THE WORK VEHICLE AND PROCEED AT THE SAME SPEED AS THE WORK VEHICLE. SHADOW VEHICLES SHOULD SLOW DOWN IN ADVANCE OF VERTICAL OR HORIZONTAL CURVES THAT RESTRICT SIGHT DISTANCE.

2 ALIGN LEFT SIDE OF SHADOW VEHICLE WITH EDGE OF WORK AREA.

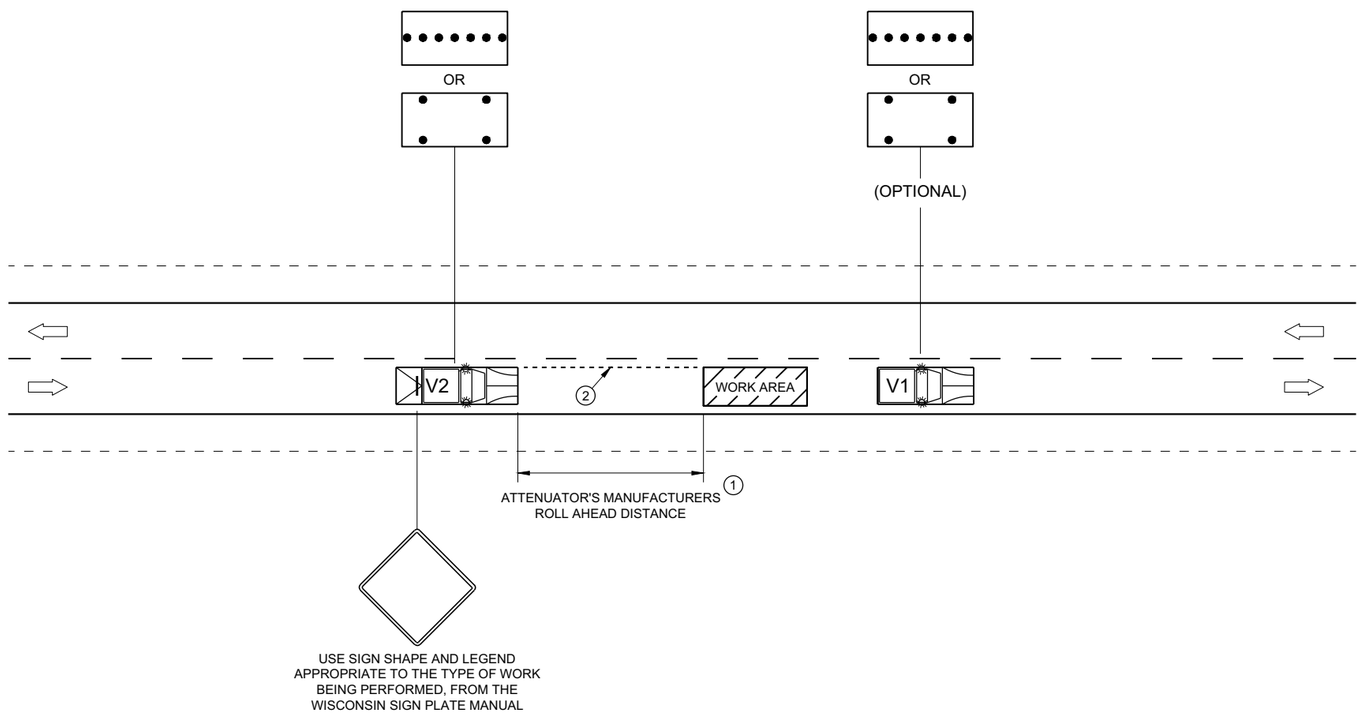

TRAFFIC CONTROL, MOBILE OPERATIONS ON AN UNDIVIDED ROADWAY

STATE OF WISCONSIN
DEPARTMENT OF TRANSPORTATION

APPROVED
February 2021 — DATE
/S/ Andrew Heidtke — STATEWIDE WORK ZONE T SAFETY ENGINEER
FHWA

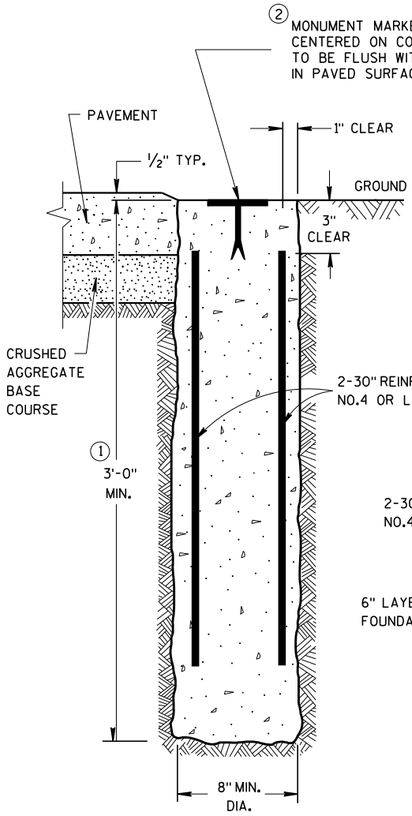

CAST-IN-PLACE

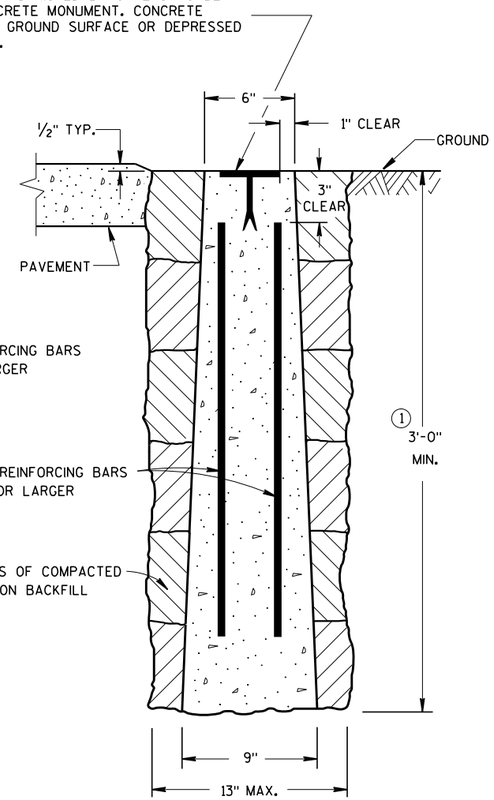

PRECAST

CONCRETE MONUMENTS

TYPE A

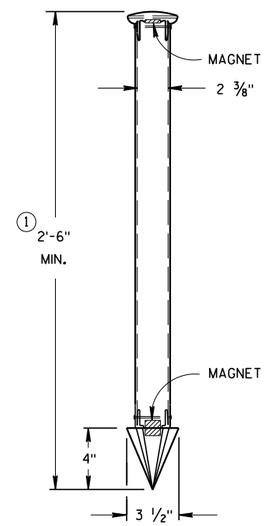

TYPE C

DRIVE-IN MONUMENT

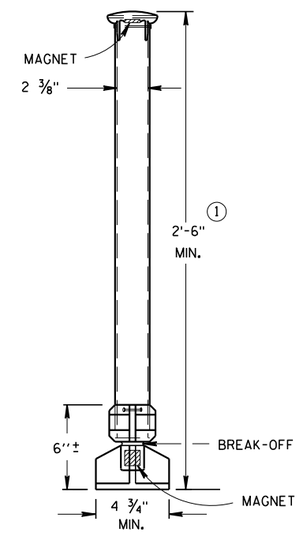

TYPE D
NON-DRIVEN
BREAK-OFF MONUMENT

ALUMINUM MONUMENTS

(INCLUDES MARKER)

GENERAL NOTES

DETAILS OF CONSTRUCTION, MATERIALS AND WORKMANSHIP NOT SHOWN ON THIS DRAWING SHALL CONFORM TO THE PERTINENT REQUIREMENTS OF THE STANDARD SPECIFICATIONS AND THE APPLICABLE SPECIAL PROVISIONS.

DETAILED DRAWINGS OF PROPOSED ALTERNATE DESIGNS FOR METAL MONUMENTS OR MONUMENT COVERS SHALL BE SUBMITTED TO THE ENGINEER FOR APPROVAL.

PERMANENT MAGNETS SHALL BE INSERTED NEAR THE TOP AND BOTTOM OF ALL ALUMINUM MONUMENTS SO THE MONUMENT CAN EASILY BE DETECTED BY A METAL DETECTOR.

THE CAST IRON MONUMENT COVER SHALL BE A "NON-ROCKING" TYPE. ADJUSTMENT OF THE COVER TO GRADE MAY BE ACCOMPLISHED BY THE USE OF MORTAR AND BRICK, OR BY EITHER PRECAST OR CAST-IN-PLACE REINFORCED CONCRETE GRADE RINGS.

MONUMENTS SHALL BE LOCATED AND PLACED AT THE DIRECTION OF THE ENGINEER.

ALUMINUM MONUMENTS AND MONUMENT COVERS SHALL BE MADE FROM AN ALUMINUM AND MAGNESIUM ALLOY AS DETERMINED BY THE MANUFACTURER.

THE MONUMENT COVERS DETAILED ON THIS DRAWING ARE NOT EQUAL ALTERNATES. MONUMENT COVERS SHALL BE CAST IRON UNLESS ALUMINUM IS SPECIFIED ELSEWHERE IN THE CONTRACT.

MONUMENT SHALL BE CAST-IN-PLACE CONCRETE UNLESS PRECAST CONCRETE OR ALUMINUM MONUMENTS ARE SPECIFIED IN THE CONTRACT OR PERMITTED BY THE ENGINEER

① MINIMUM LENGTH SHALL BE 4'-0" FOR MONUMENTS INSTALLED IN PAVED AREAS.

② AN OFFICIAL COUNTY MONUMENT MARKER SUPPLIED BY A COUNTY MAY BE REQUIRED FOR SOME SECTION CORNERS AND WITNESS MONUMENTS INSTEAD OF THIS WIS DOT MARKER.

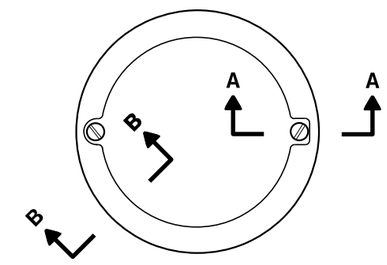

TOP VIEW

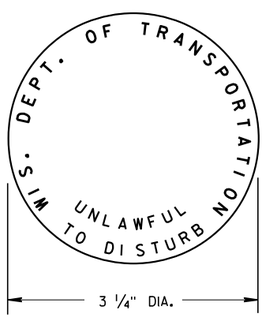

② **WIS DOT MONUMENT MARKER LOGO**

FOR TYPES "A", "C", & "D"

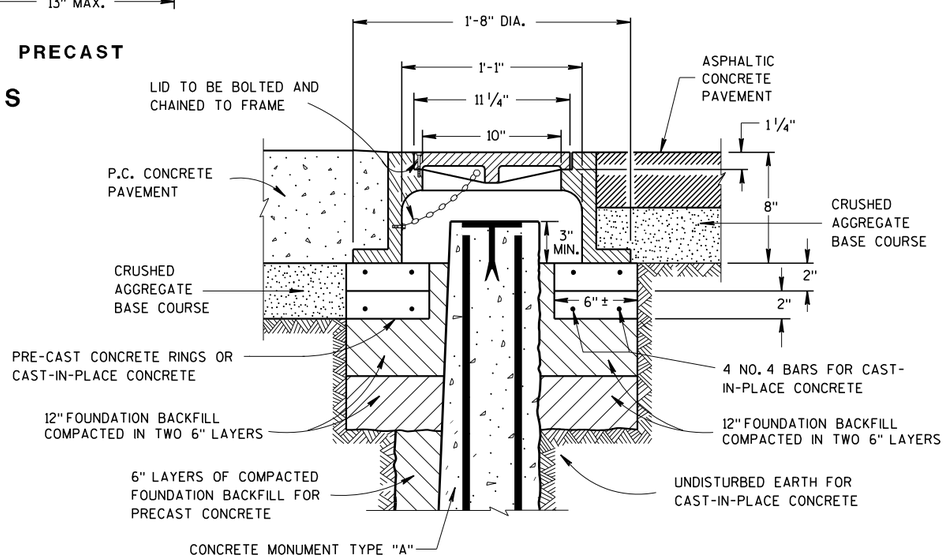

CAST IRON MONUMENT COVER

(APPROXIMATE WEIGHT 95 LBS)

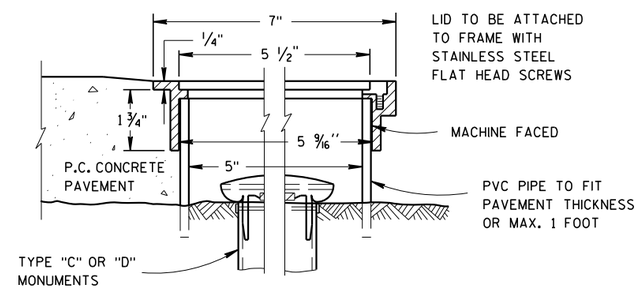

SECTION B-B SECTION A-A

ALUMINUM MONUMENT COVER

(APPROXIMATE WEIGHT 2 LBS)
(FOR CONCRETE PAVEMENT ONLY)

LANDMARK REFERENCE MONUMENTS AND COVERS

STATE OF WISCONSIN
DEPARTMENT OF TRANSPORTATION

APPROVED
March 2018 /S/ Raymond A. Kumanayl
DATE CHIEF SURVEYING AND M ENGINEER
FHWA

6

6

S.D.D. 16 A 1-7

S.D.D. 16 A 1-7

USH 12

STATION	REAL STATION	DISTANCE	AREA (SF)			INCREMENTAL VOL (CY) (UNADJUSTED)			CUMULATIVE VOL (CY)		
			CUT	SALVAGED/UNUSABLE PAVEMENT MATERIAL	FILL	CUT NOTE 1	SALVAGED/UNUSABLE PAVEMENT MATERIAL NOTE 2	FILL NOTE 3	CUT 1.00 NOTE 1	EXPANDED FILL 1.25	MASS ORDINATE
105+00	10500.00	0.00	0.00	0.00	0.52	0	0	0	0	0	0
105+50	10550.00	50.00	0.39	0.00	4.14	0	0	4	0	5	-5
106+00	10600.00	50.00	0.00	0.00	2.20	0	0	6	0	13	-13
106+50	10650.00	50.00	0.00	0.00	0.40	0	0	2	0	15	-15
		EXISTING CULVERT									
108+25	10825.00	0.00	0.00	0.00	1.14	0	0	0	0	15	-15
108+50	10850.00	25.00	0.00	0.00	1.47	0	0	1	0	16	-16
108+92.899	10892.90	42.90	0.00	0.00	3.17	0	0	4	0	21	-21
261+00	26100.00	0.00	0.00	0.00	24.54	0	0	0	0	21	-21
261+50	26150.00	50.00	0.00	0.00	44.12	0	0	64	0	101	-101
262+05.322	26205.32	55.32	0.00	0.00	2.70	0	0	48	0	161	-161
262+50	26250.00	44.68	0.00	0.00	1.04	0	0	3	0	165	-165
		EXISTING CULVERT									
264+25	26425.00	0.00	0.00	0.00	1.32	0	0	0	0	165	-165
264+50	26450.00	25.00	0.00	0.00	0.26	0	0	1	0	166	-166
265+00	26500.00	50.00	0.00	0.00	0.09	0	0	0	0	166	-166
265+50	26550.00	50.00	0.00	0.00	7.16	0	0	7	0	175	-175
265+94.01	26594.01	44.01	0.00	0.00	4.79	0	0	10	0	188	-188
290+90	29090.00	0.00	0.32	0.00	5.07	0	0	0	0	188	-188
291+00	29100.00	10.00	2.07	0.00	0.27	0	0	1	0	189	-189
291+50	29150.00	50.00	0.85	0.00	0.41	3	0	1	3	190	-187
292+00	29200.00	50.00	0.00	0.00	1.04	1	0	1	4	191	-187
292+50	29250.00	50.00	0.00	0.00	18.00	0	0	18	4	214	-210
293+00	29300.00	50.00	0.00	0.00	1.93	0	0	18	4	236	-232
		EXISTING CULVERT									
294+60	29460.00	0.00	0.00	0.00	39.57	0	0	0	4	236	-232
295+00	29500.00	40.00	0.00	0.00	58.41	0	0	73	4	328	-324
295+50	29550.00	50.00	0.00	0.00	66.23	0	0	115	4	471	-467
296+00	29600.00	50.00	0.00	0.00	34.46	0	0	93	4	588	-584
296+20	29620.00	20.00	0.00	0.00	5.54	0	0	15	4	606	-602
320+20	32020.00	0.00	0.00	0.00	27.04	0	0	0	4	606	-602
320+50	32050.00	30.00	0.00	0.00	26.21	0	0	30	4	644	-640
321+00	32100.00	50.00	0.00	0.00	5.24	0	0	29	4	680	-676
321+50	32150.00	50.00	0.00	0.00	1.26	0	0	6	4	688	-684
322+00	32200.00	50.00	0.00	0.00	2.00	0	0	3	4	691	-687
		EXISTING CULVERT									
323+50	32350.00	0.00	0.00	0.00	1.51	0	0	0	4	691	-687
324+00	32400.00	50.00	0.00	0.00	2.33	0	0	4	4	696	-692
324+50	32450.00	50.00	0.00	0.00	17.76	0	0	19	4	720	-716
325+00	32500.00	50.00	0.00	0.00	26.76	0	0	41	4	771	-767
325+32.876	32532.88	32.88	0.00	0.00	15.00	0	0	25	4	803	-799

Notes:	
1 - CUT	CUT INCLUDES SALVAGED/UNUSABLE PAVEMENT MATERIAL
2 - SALVAGED/UNUSABLE PAVEMENT MATERIAL	THIS DOES NOT SHOW UP IN CROSS SECTIONS
3 - FILL	DOES NOT INCLUDE UNUSABLE PAVEMENT EXC VOLUME

USH 12

STATION	REAL STATION	DISTANCE	AREA (SF)			INCREMENTAL VOL (CY) (UNADJUSTED)			CUMULATIVE VOL (CY)		
			CUT	SALVAGED/UNUSABLE PAVEMENT MATERIAL	FILL	CUT NOTE 1	SALVAGED/UNUSABLE PAVEMENT MATERIAL NOTE 2	FILL NOTE 3	CUT 1.00 NOTE 1	EXPANDED FILL 1.25	MASS ORDINATE
384+69	38469.00	0.00	0.00	0.00	0.00	0	0	0	4	803	-799
384+94	38494.00	25.00	157.58	17.50	0.00	73	8	0	77	803	-734
385+02	38502.00	8.00	160.17	17.50	0.00	47	5	0	124	803	-692
385+34	38534.00	32.00	0.00	0.00	0.00	95	10	0	219	803	-607
461+28.75	46128.75	0.00	0.00	0.00	18.55	0	0	0	219	803	-607
461+50	46150.00	21.25	0.00	0.00	29.68	0	0	19	219	826	-630
462+00	46200.00	50.00	0.00	0.00	1.69	0	0	29	219	863	-667
462+50	46250.00	50.00	0.00	0.00	1.47	0	0	3	219	866	-670
	EXISTING CULVERT										
463+90	46390.00	0.00	0.00	0.00	2.00	0	0	0	219	866	-670
464+00	46400.00	10.00	0.00	0.00	1.80	0	0	1	219	868	-672
464+50	46450.00	50.00	0.00	0.00	20.83	0	0	21	219	894	-698
465+00	46500.00	50.00	0.00	0.00	25.92	0	0	43	219	948	-752
465+25.842	46525.84	25.84	0.00	0.00	18.63	0	0	21	219	974	-778
490+00	49000.00	0.00	0.00	0.00	20.02	0	0	0	219	974	-778
490+25	49025.00	25.00	0.00	0.00	34.67	0	0	25	219	1,005	-809
490+50	49050.00	25.00	0.00	0.00	7.72	0	0	20	219	1,030	-834
490+75	49075.00	25.00	0.00	0.00	0.22	0	0	4	219	1,035	-839
	EXISTING BRIDGE										
504+72.472	50472.47	0.00	1.74	0.00	0.49	0	0	0	219	1,035	-839
505+00	50500.00	27.53	1.75	0.00	0.53	2	0	1	221	1,036	-838
505+50	50550.00	50.00	0.00	0.00	1.10	2	0	2	223	1,039	-839
506+00	50600.00	50.00	0.00	0.00	5.47	0	0	6	223	1,046	-846
506+34.34	50634.34	34.34	0.00	0.00	0.69	0	0	4	223	1,051	-851

Notes:	
1 - CUT	CUT INCLUDES SALVAGED/UNUSABLE PAVEMENT MATERIAL
2 - SALVAGED/UNUSABLE PAVEMENT MATERIAL	THIS DOES NOT SHOW UP IN CROSS SECTIONS
3 - FILL	DOES NOT INCLUDE UNUSABLE PAVEMENT EXC VOLUME

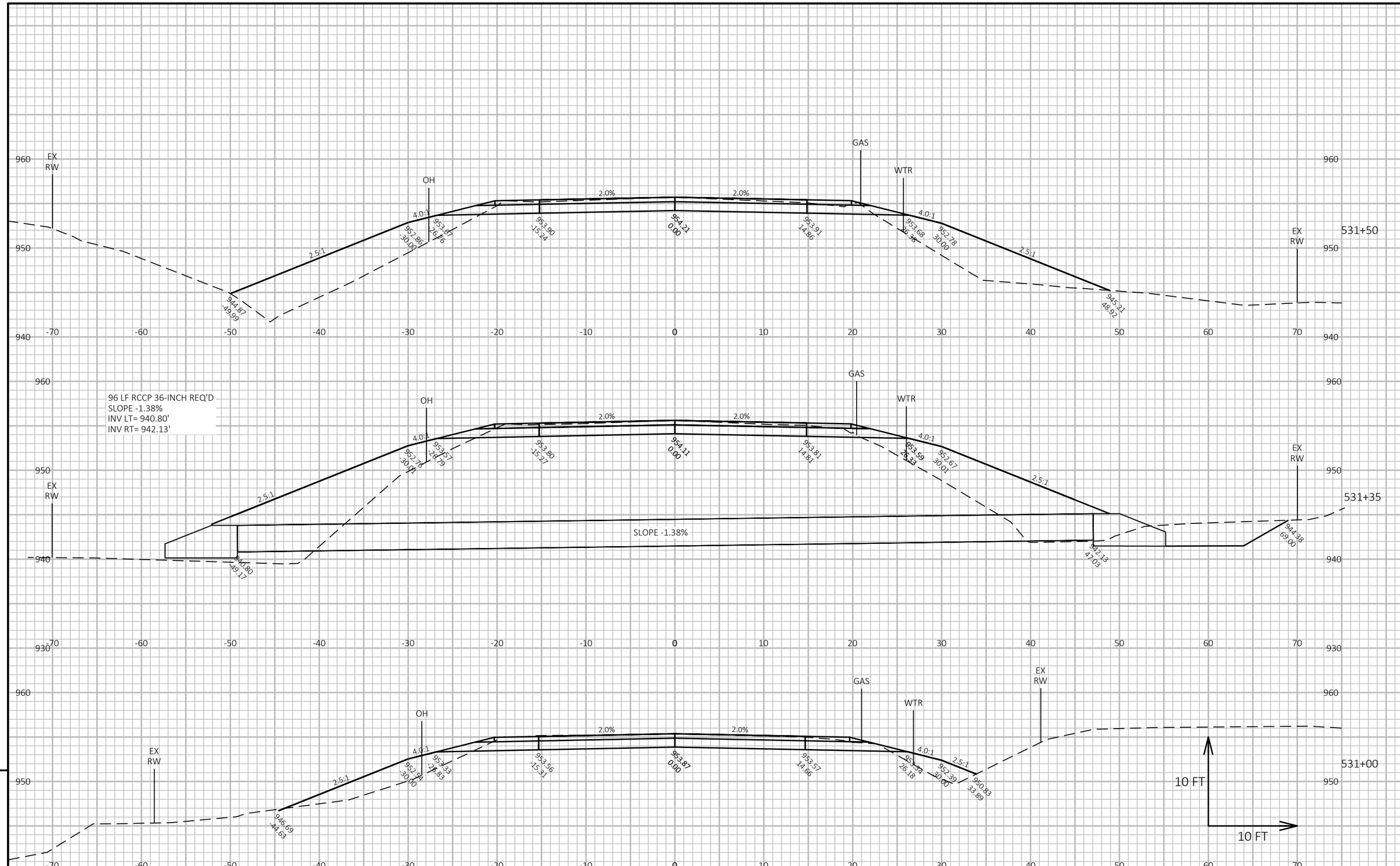

9

PROJECT NO: 7080-03-75	HWY: USH 12	COUNTY: EAU CLAIRE	CROSS SECTIONS: USH 12 AUGUSTA CULVERT	SHEET 124	E

FILE NAME : C:\OD\CORRE, INC\PROJECTS - DOCUMENTS\WI - NW REGION\7080-03-05_EAU CLAIRE CO_USH 12\500_CADD\501_C3D_2018\70800305\SHEETSPLAN\090201-XS.DWG
LAYOUT NAME - CV1
PLOT DATE : 8/30/2021 2:55 PM
PLOT BY : NICHOLAS WATHKE
PLOT NAME :
PLOT SCALE : 1 IN:10 FT HORZ. / 1 IN:10 FT VERT.
WISDOT/CADDS SHEET 49

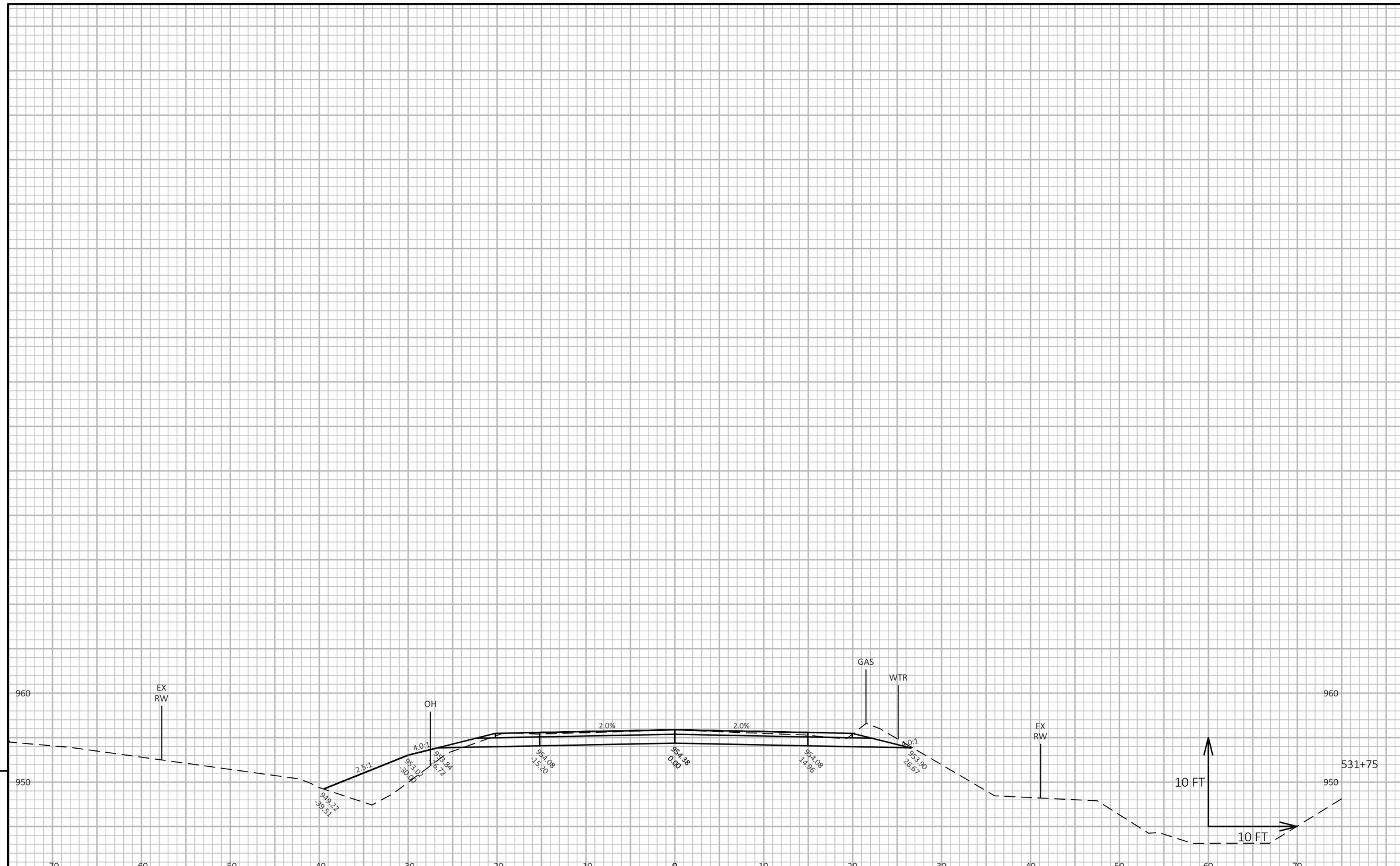

9

9

PROJECT NO: 7080-03-75	HWY: USH 12	COUNTY: EAU CLAIRE	CROSS SECTIONS: USH 12 AUGUSTA CULVERT	SHEET 125	E

FILE NAME : C:\OD\CORRE, INC\PROJECTS - DOCUMENTS\WI - NW REGION\7080-03-05_EAU CLAIRE CO_USH 12\500_CADD\501_C3D_2018\70800305\SHEETSPLAN\090201-XS.DWG
LAYOUT NAME - CV2
PLOT DATE : 8/30/2021 2:55 PM
PLOT BY : NICHOLAS WATHKE
PLOT NAME :
PLOT SCALE : 1 IN:10 FT HORZ. / 1 IN:10 FT VERT.
WISDOT/CADDS SHEET 49

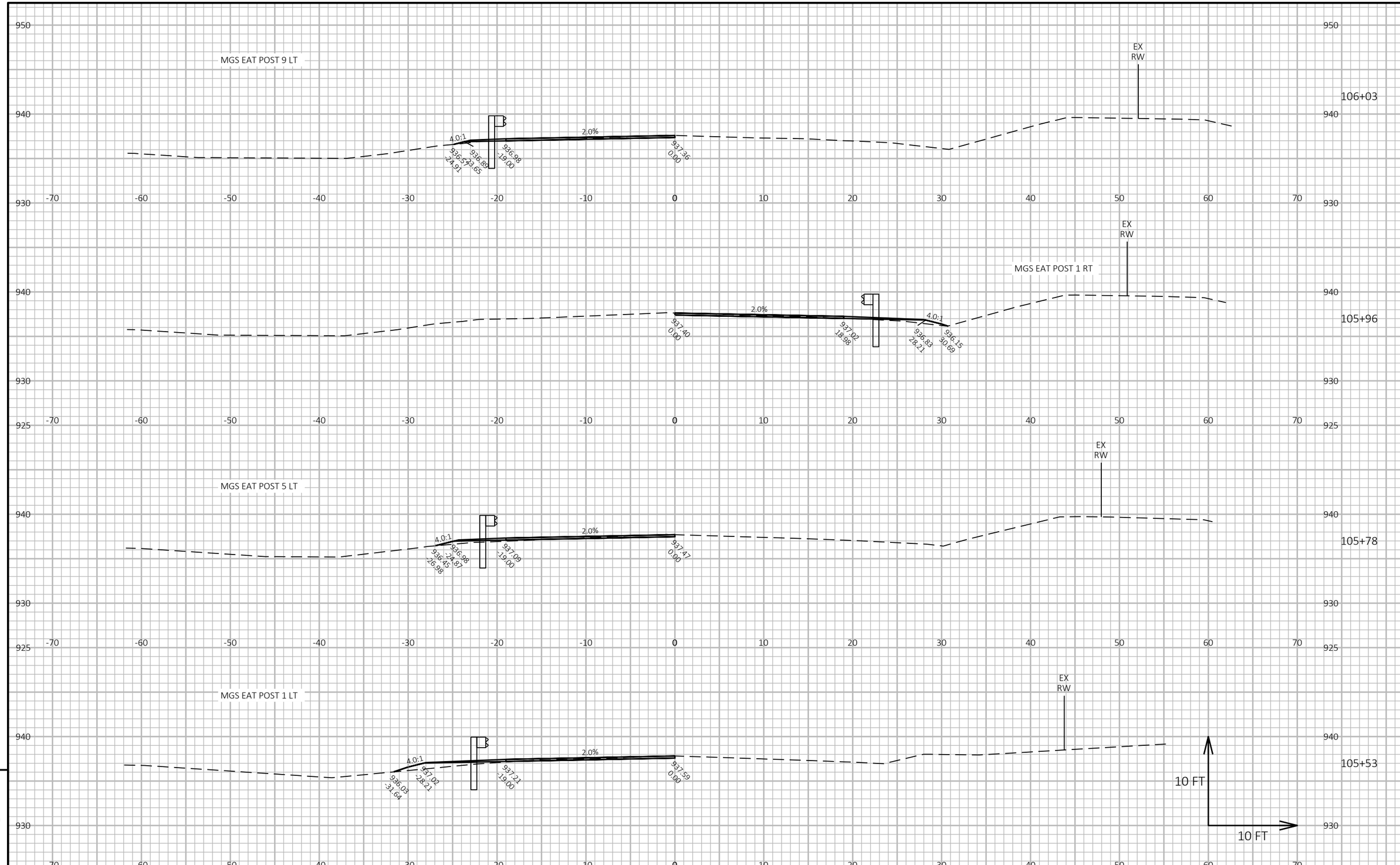

PROJECT NO: 7080-03-75	HWY: USH 12	COUNTY: EAU CLAIRE	CROSS SECTIONS: USH 12 - BEAMGUARD	SHEET 126	E

FILE NAME : C:\OD\CORRE, INC\PROJECTS - DOCUMENTS\WI - NW REGION\7080-03-05_EAU CLAIRE CO_USH 12\500_CADD\501_C3D_2018\70800305\SHEETSPLAN\090202-XS.DWG
LAYOUT NAME - 01
PLOT DATE : 8/30/2021 2:55 PM
PLOT BY : NICHOLAS WATHKE
PLOT NAME :
PLOT SCALE : 1 IN:10 FT HORZ. / 1 IN:10 FT VERT.
WISDOT/CADDS SHEET 49

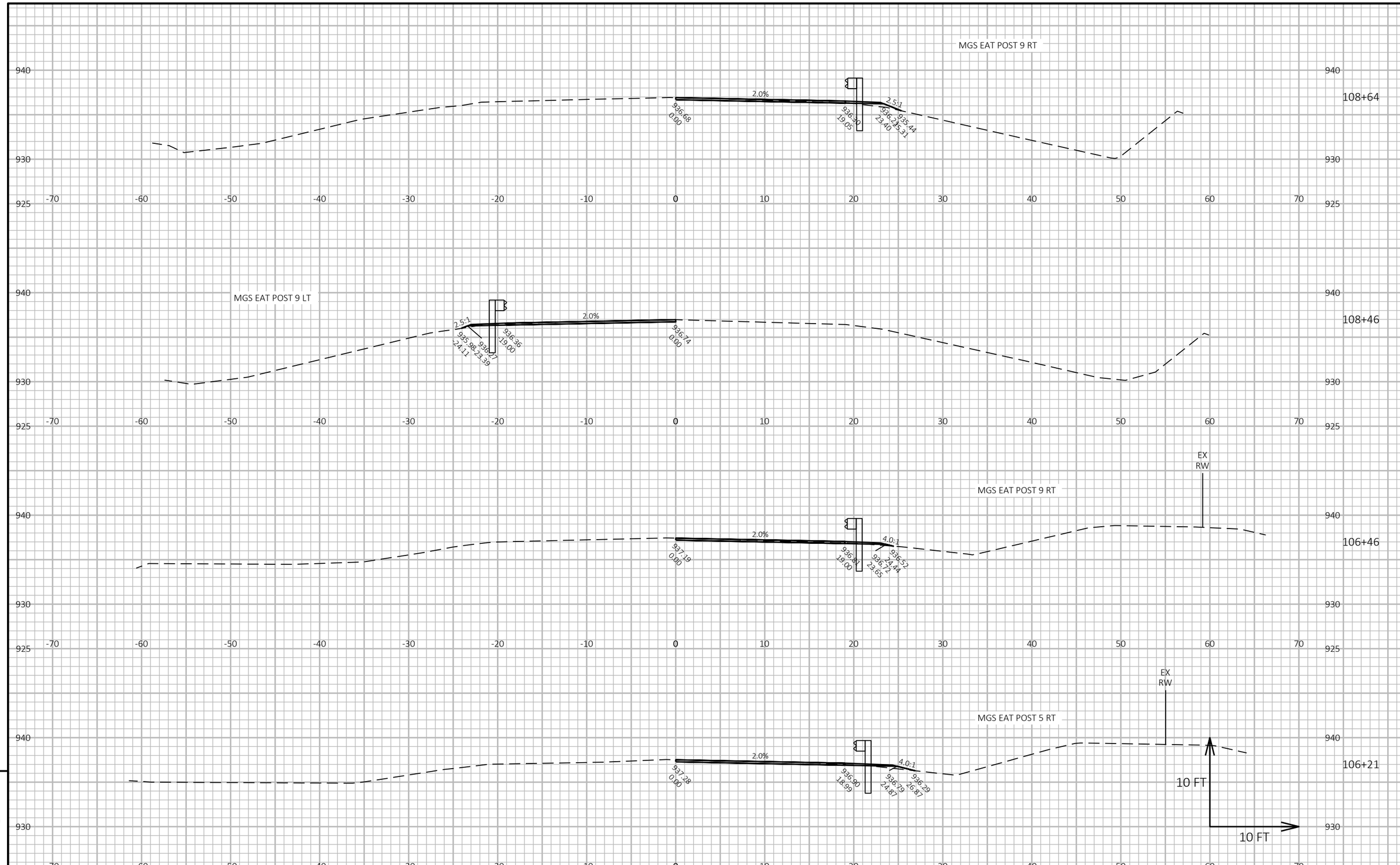

9

9

PROJECT NO: 7080-03-75	HWY: USH 12	COUNTY: EAU CLAIRE	CROSS SECTIONS: USH 12 - BEAMGUARD	SHEET 127	E

FILE NAME : C:\OD\CORRE, INC\PROJECTS - DOCUMENTS\WI - NW REGION\7080-03-05_EAU CLAIRE CO_USH 12\500_CADD\501_C3D_2018\70800305\SHEETSPLAN\090202-XS.DWG
LAYOUT NAME - 02
PLOT DATE : 8/30/2021 2:55 PM
PLOT BY : NICHOLAS WATHKE
PLOT NAME :
PLOT SCALE : 1 IN:10 FT HORZ. / 1 IN:10 FT VERT.
WISDOT/CADDS SHEET 49

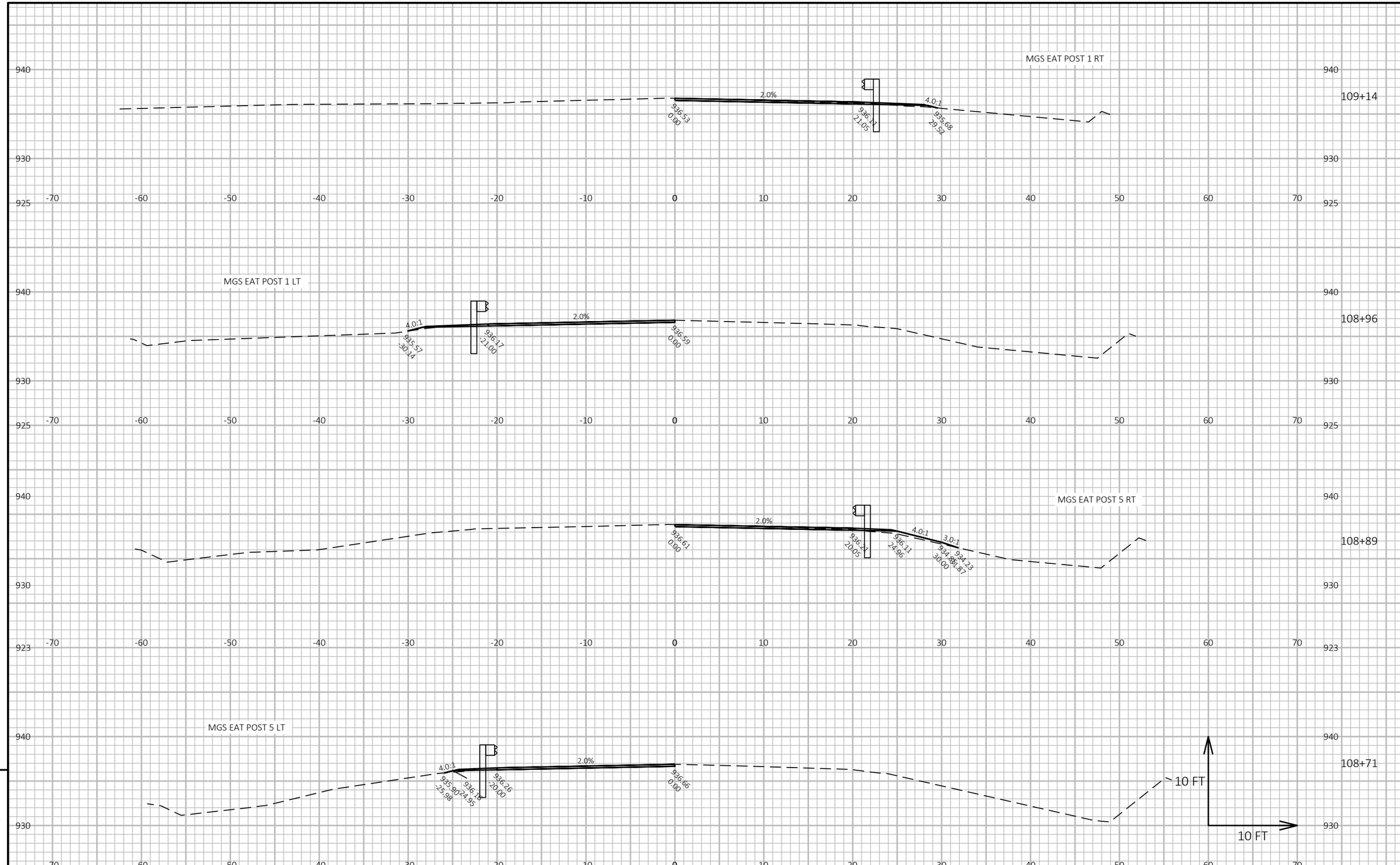

9

9

PROJECT NO: 7080-03-75	HWY: USH 12	COUNTY: EAU CLAIRE	CROSS SECTIONS: USH 12 - BEAMGUARD	SHEET 128	E

FILE NAME : C:\OD\CORRE, INC\PROJECTS - DOCUMENTS\WI - NW REGION\7080-03-05_EAU CLAIRE CO_USH 12\500_CADD\501_C3D_2018\70800305\SHEETSPLAN\090202-XS.DWG
LAYOUT NAME - 03
PLOT DATE : 8/30/2021 2:55 PM
PLOT BY : NICHOLAS WATHKE
PLOT NAME :
PLOT SCALE : 1 IN:10 FT HORZ. / 1 IN:10 FT VERT.
WISDOT/CADDS SHEET 49

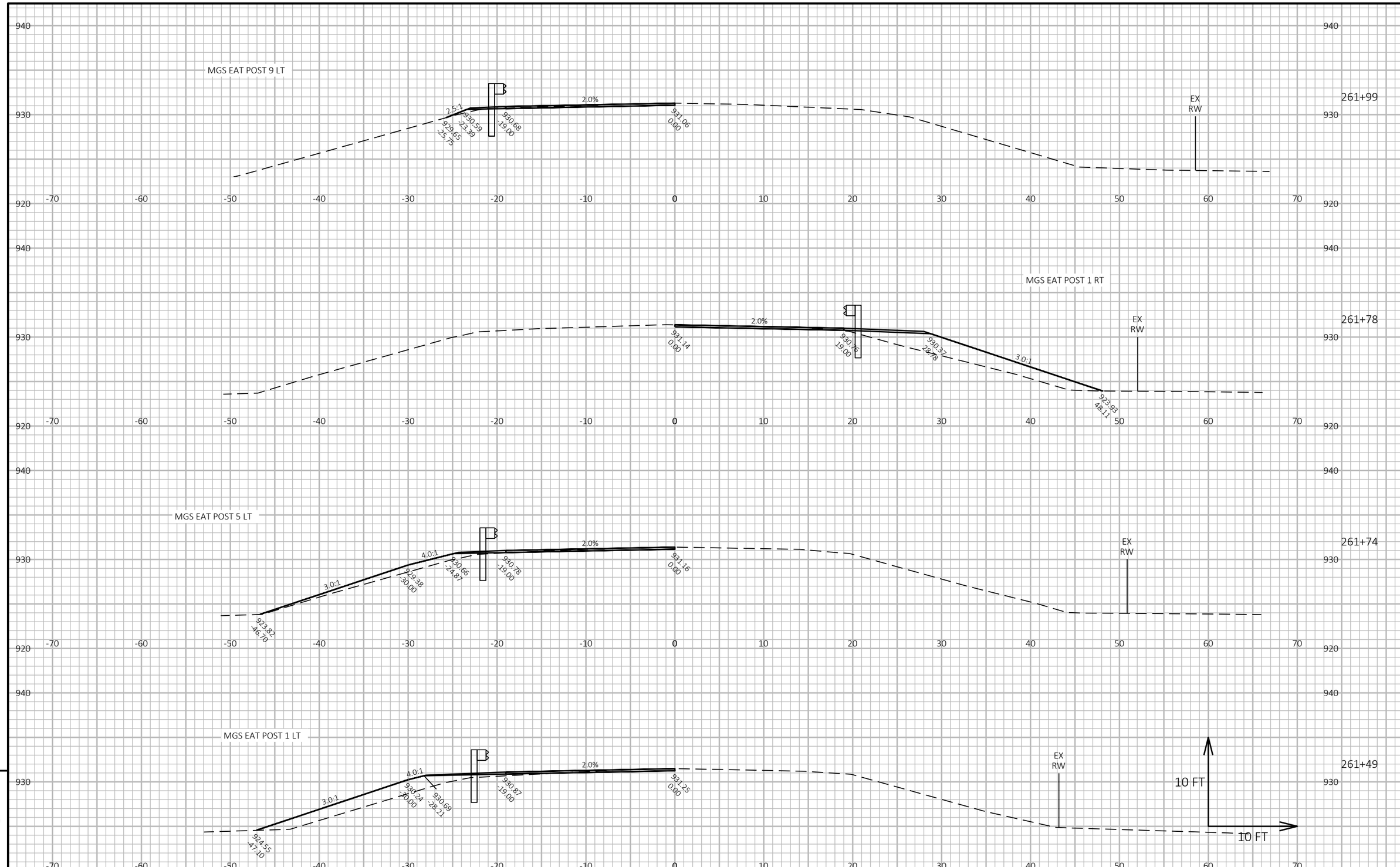

9

9

PROJECT NO: 7080-03-75	HWY: USH 12	COUNTY: EAU CLAIRE	CROSS SECTIONS: USH 12 - BEAMGUARD	SHEET 129	E

FILE NAME : C:\OD\CORRE, INC\PROJECTS - DOCUMENTS\WI - NW REGION\7080-03-05_EAU CLAIRE CO_USH 12\500_CADD\501_C3D_2018\70800305\SHEETSPLAN\090202-XS.DWG
LAYOUT NAME - 04
PLOT DATE : 8/30/2021 2:55 PM
PLOT BY : NICHOLAS WATHKE
PLOT NAME :
PLOT SCALE : 1 IN:10 FT HORZ. / 1 IN:10 FT VERT.
WISDOT/CADDS SHEET 49

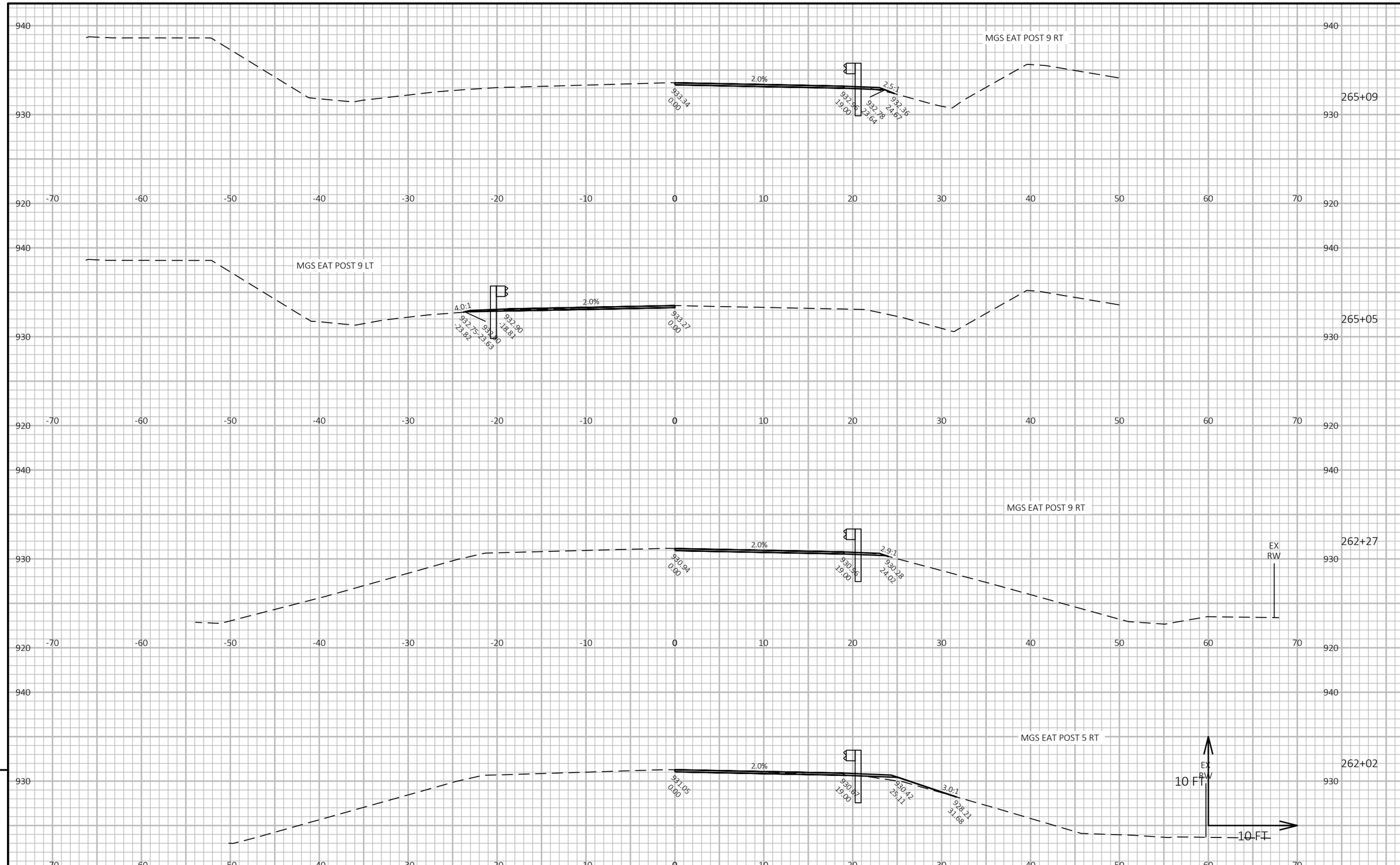

9

9

PROJECT NO: 7080-03-75	HWY: USH 12	COUNTY: EAU CLAIRE	CROSS SECTIONS: USH 12 - BEAMGUARD	SHEET 130	E

FILE NAME : C:\OD\CORRE, INC\PROJECTS - DOCUMENTS\WI - NW REGION\7080-03-05_EAU CLAIRE CO_USH 12\500_CADD\501_C3D_2018\70800305\SHEETSPLAN\090202-XS.DWG
LAYOUT NAME - 05
PLOT DATE : 8/30/2021 2:56 PM
PLOT BY : NICHOLAS WATHKE
PLOT NAME :
PLOT SCALE : 1 IN:10 FT HORZ. / 1 IN:10 FT VERT.
WISDOT/CADDS SHEET 49

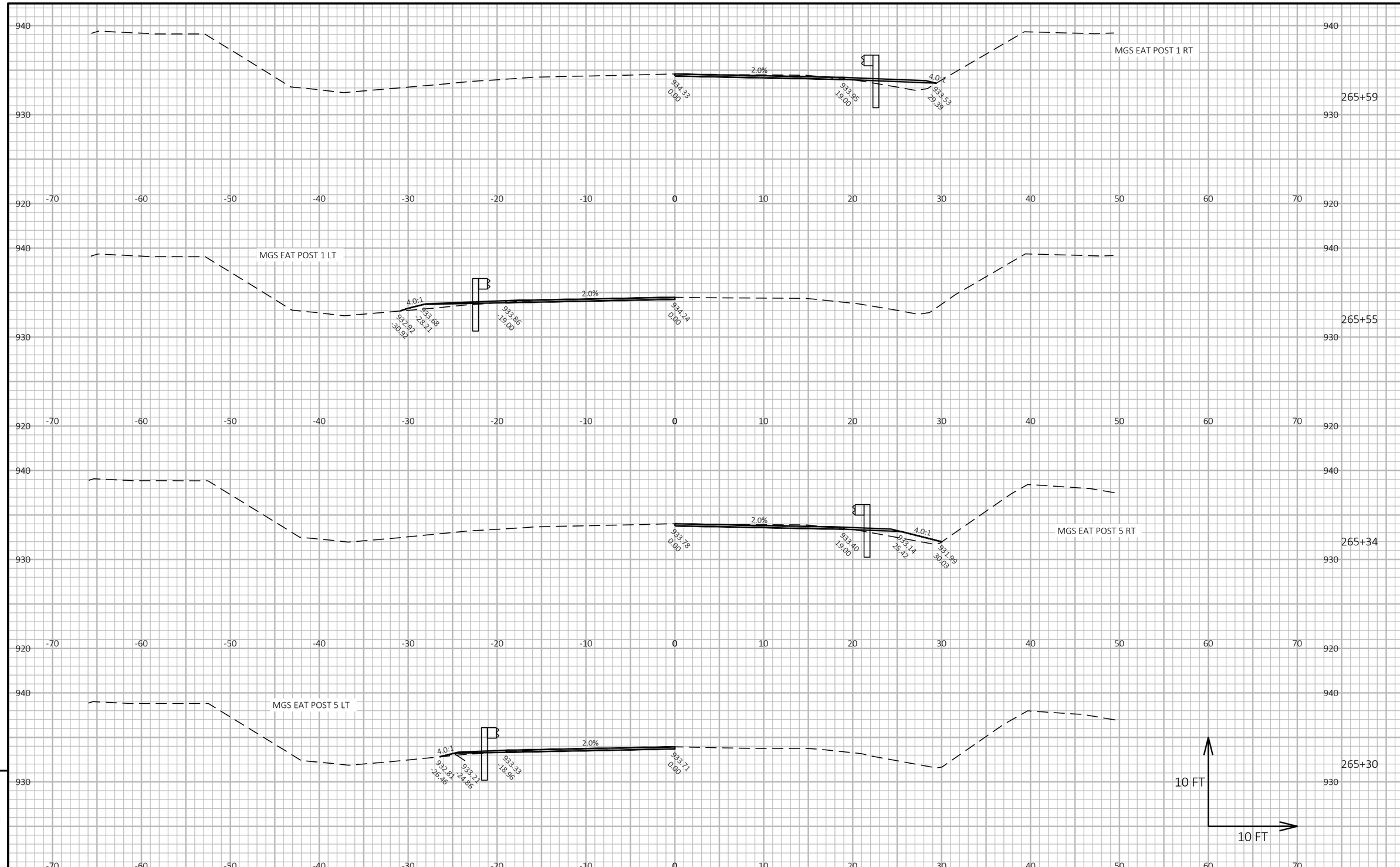

9

9

PROJECT NO: 7080-03-75	HWY: USH 12	COUNTY: EAU CLAIRE	CROSS SECTIONS: USH 12 - BEAMGUARD	SHEET 131	E

FILE NAME : C:\OD\CORRE, INC\PROJECTS - DOCUMENTS\WI - NW REGION\7080-03-05_EAU CLAIRE CO_USH 12\500_CADD\501_C3D_2018\70800305\SHEETSPLAN\090202-XS.DWG
LAYOUT NAME - 06
PLOT DATE : 8/30/2021 2:56 PM
PLOT BY : NICHOLAS WATHKE
PLOT NAME :
PLOT SCALE : 1 IN:10 FT HORZ. / 1 IN:10 FT VERT.
WISDOT/CADDS SHEET 49

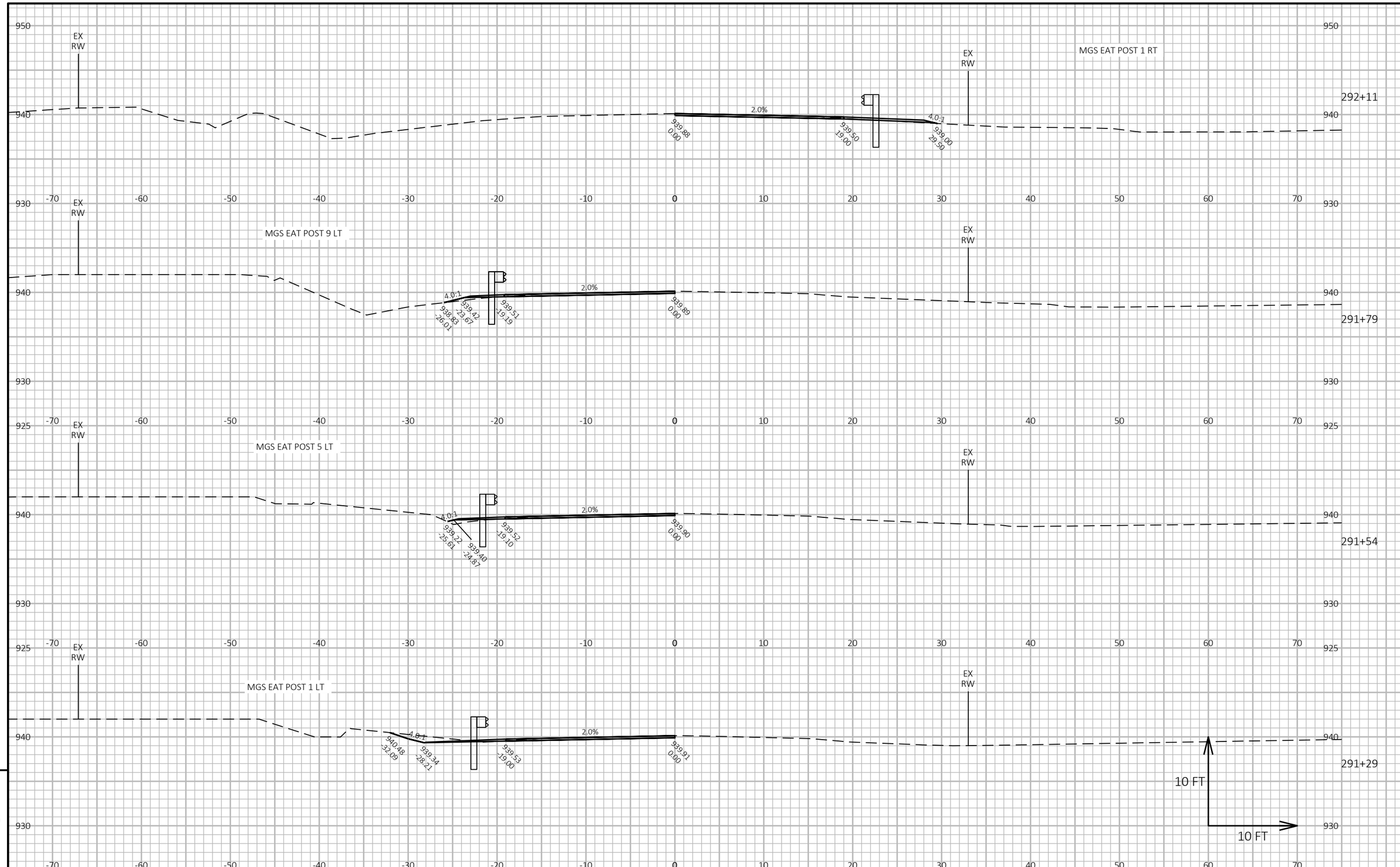

PROJECT NO: 7080-03-75	HWY: USH 12	COUNTY: EAU CLAIRE	CROSS SECTIONS: USH 12 - BEAMGUARD	SHEET 132	E

FILE NAME : C:\OD\CORRE, INC\PROJECTS - DOCUMENTS\WI - NW REGION\7080-03-05_EAU CLAIRE CO_USH 12\500_CADD\501_C3D_2018\70800305\SHEETSPLAN\090202-XS.DWG
LAYOUT NAME - 07
PLOT DATE : 8/30/2021 2:56 PM
PLOT BY : NICHOLAS WATHKE
PLOT NAME :
PLOT SCALE : 1 IN:10 FT HORZ. / 1 IN:10 FT VERT.
WISDOT/CADDS SHEET 49

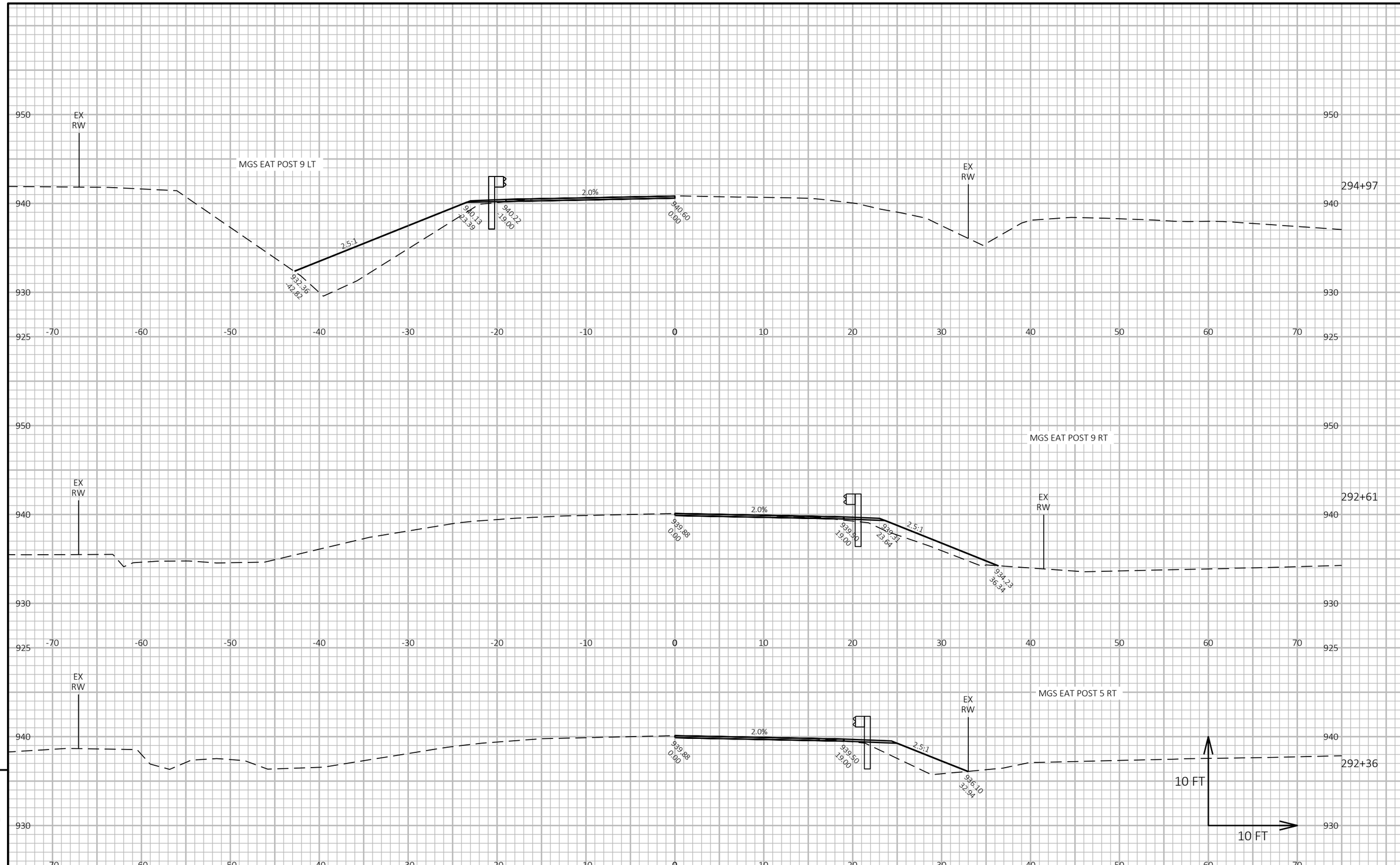

9

9

PROJECT NO: 7080-03-75	HWY: USH 12	COUNTY: EAU CLAIRE	CROSS SECTIONS: USH 12 - BEAMGUARD	SHEET 133	E

FILE NAME : C:\OD\CORRE, INC\PROJECTS - DOCUMENTS\WI - NW REGION\7080-03-05_EAU CLAIRE CO_USH 12\500_CADD\501_C3D_2018\70800305\SHEETSPLAN\090202-XS.DWG
LAYOUT NAME - 08
PLOT DATE : 8/30/2021 2:56 PM
PLOT BY : NICHOLAS WATHKE
PLOT NAME :
PLOT SCALE : 1 IN:10 FT HORZ. / 1 IN:10 FT VERT.
WISDOT/CADDS SHEET 49

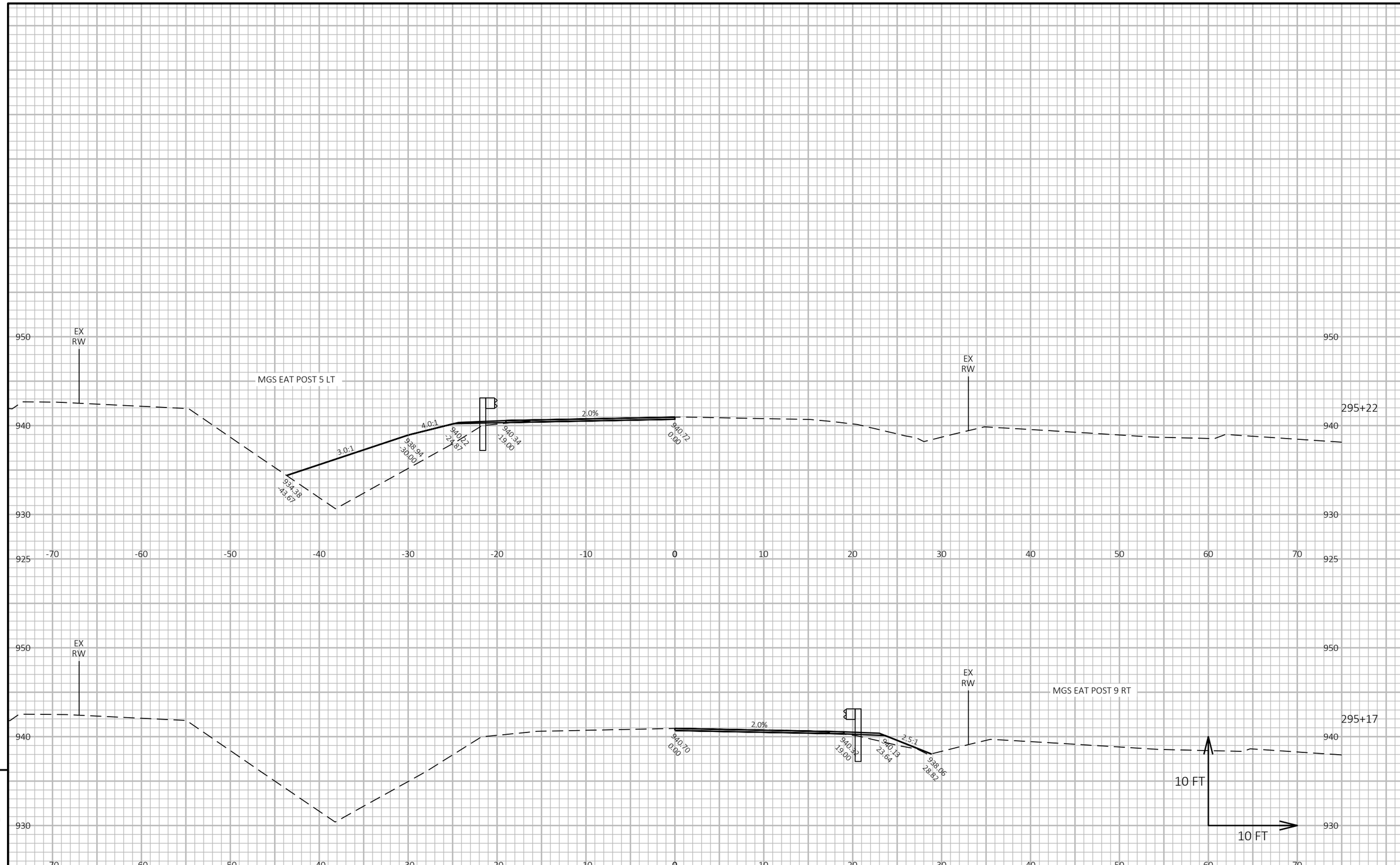

PROJECT NO: 7080-03-75	HWY: USH 12	COUNTY: EAU CLAIRE	CROSS SECTIONS: USH 12 - BEAMGUARD	SHEET 134	E

FILE NAME : C:\OD\CORRE, INC\PROJECTS - DOCUMENTS\WI - NW REGION\7080-03-05_EAU CLAIRE CO_USH 12\500_CADD\501_C3D_2018\70800305\SHEETSPLAN\090202-XS.DWG
LAYOUT NAME - 09
PLOT DATE : 8/30/2021 2:56 PM
PLOT BY : NICHOLAS WATHKE
PLOT NAME :
PLOT SCALE : 1 IN:10 FT HORZ. / 1 IN:10 FT VERT.
WISDOT/CADDS SHEET 49

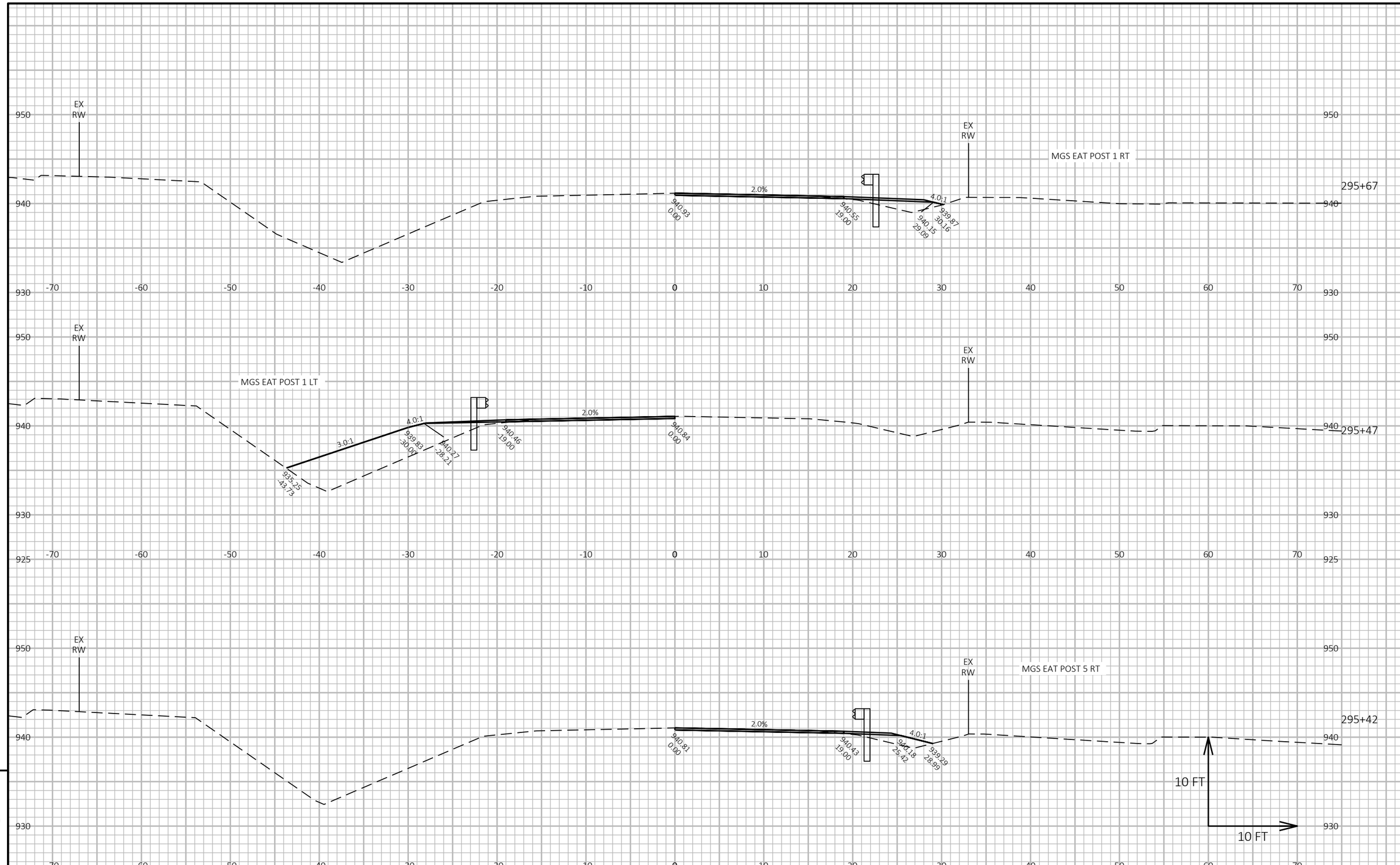

9

9

PROJECT NO: 7080-03-75	HWY: USH 12	COUNTY: EAU CLAIRE	CROSS SECTIONS: USH 12 - BEAMGUARD	SHEET 135	E

FILE NAME : C:\OD\CORRE, INC\PROJECTS - DOCUMENTS\WI - NW REGION\7080-03-05_EAU CLAIRE CO_USH 12\500_CADD\501_C3D_2018\70800305\SHEETSPLAN\090202-XS.DWG
LAYOUT NAME - 10
PLOT DATE : 8/30/2021 2:56 PM
PLOT BY : NICHOLAS WATHKE
PLOT NAME :
PLOT SCALE : 1 IN:10 FT HORZ. / 1 IN:10 FT VERT.
WISDOT/CADDS SHEET 49

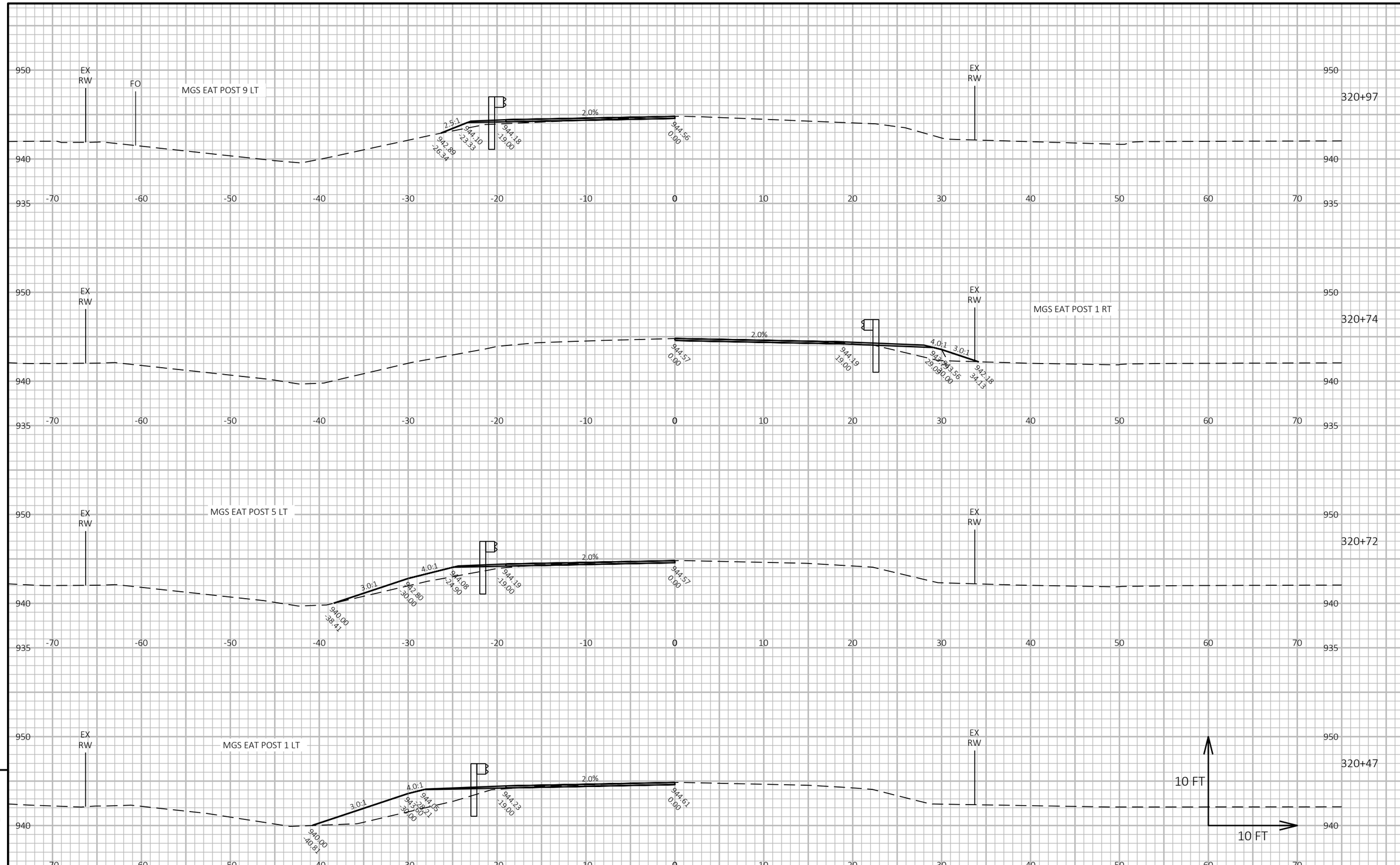

PROJECT NO: 7080-03-75	HWY: USH 12	COUNTY: EAU CLAIRE	CROSS SECTIONS: USH 12 - BEAMGUARD	SHEET 136	E

FILE NAME : C:\OD\CORRE, INC\PROJECTS - DOCUMENTS\WI - NW REGION\7080-03-05_EAU CLAIRE CO_USH 12\500_CADD\501_C3D_2018\70800305\SHEETSPLAN\090202-XS.DWG
LAYOUT NAME - 11
PLOT DATE : 8/30/2021 2:56 PM
PLOT BY : NICHOLAS WATHKE
PLOT NAME :
PLOT SCALE : 1 IN:10 FT HORZ. / 1 IN:10 FT VERT.
WISDOT/CADDS SHEET 49

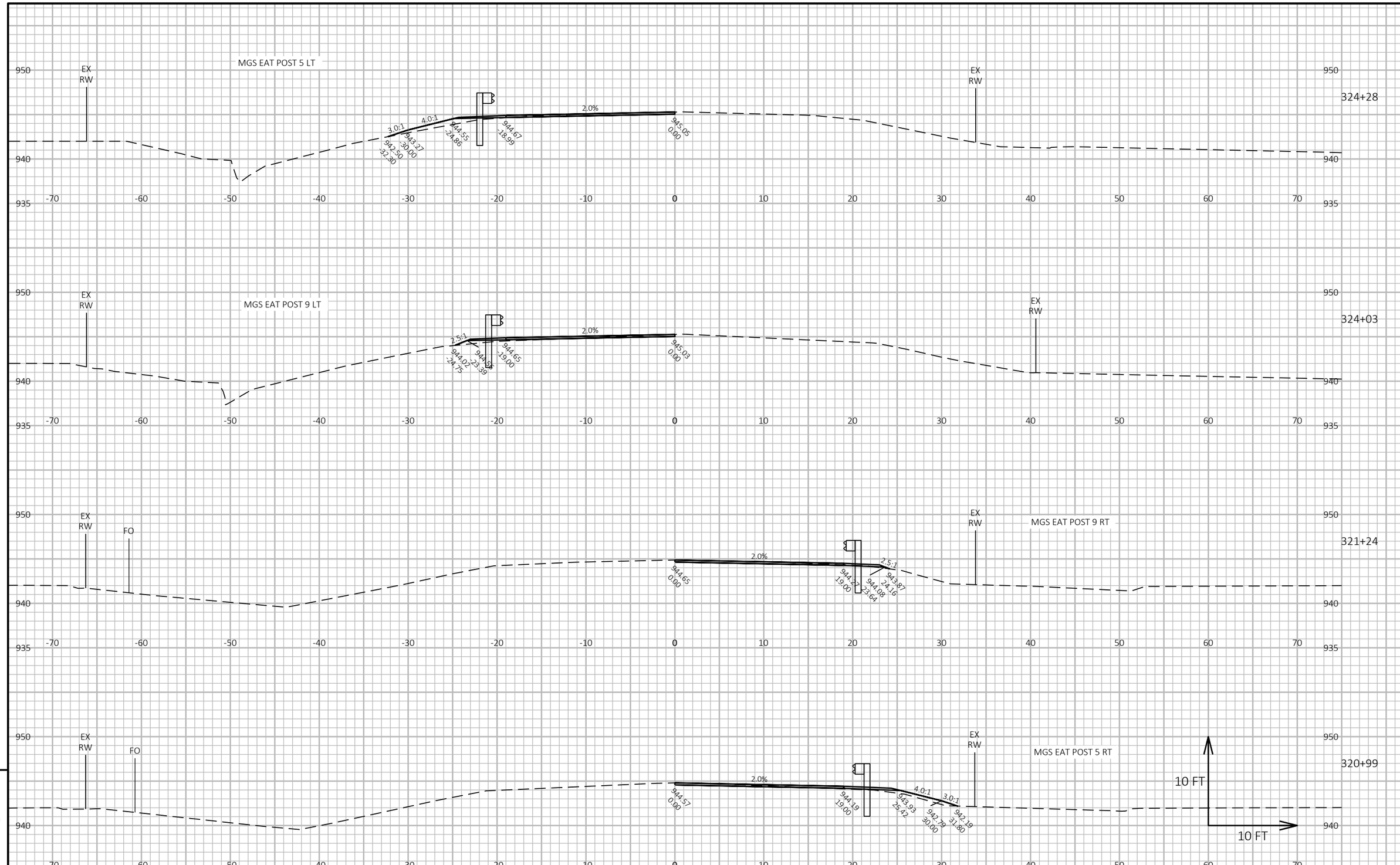

9

9

PROJECT NO: 7080-03-75	HWY: USH 12	COUNTY: EAU CLAIRE	CROSS SECTIONS: USH 12 - BEAMGUARD	SHEET 137	E

FILE NAME : C:\OD\CORRE, INC\PROJECTS - DOCUMENTS\WI - NW REGION\7080-03-05_EAU CLAIRE CO_USH 12\500_CADD\501_C3D_2018\70800305\SHEETSPLAN\090202-XS.DWG
LAYOUT NAME - 12
PLOT DATE : 8/30/2021 2:56 PM
PLOT BY : NICHOLAS WATHKE
PLOT NAME :
PLOT SCALE : 1 IN:10 FT HORZ. / 1 IN:10 FT VERT.

WISDOT/CADDS SHEET 49

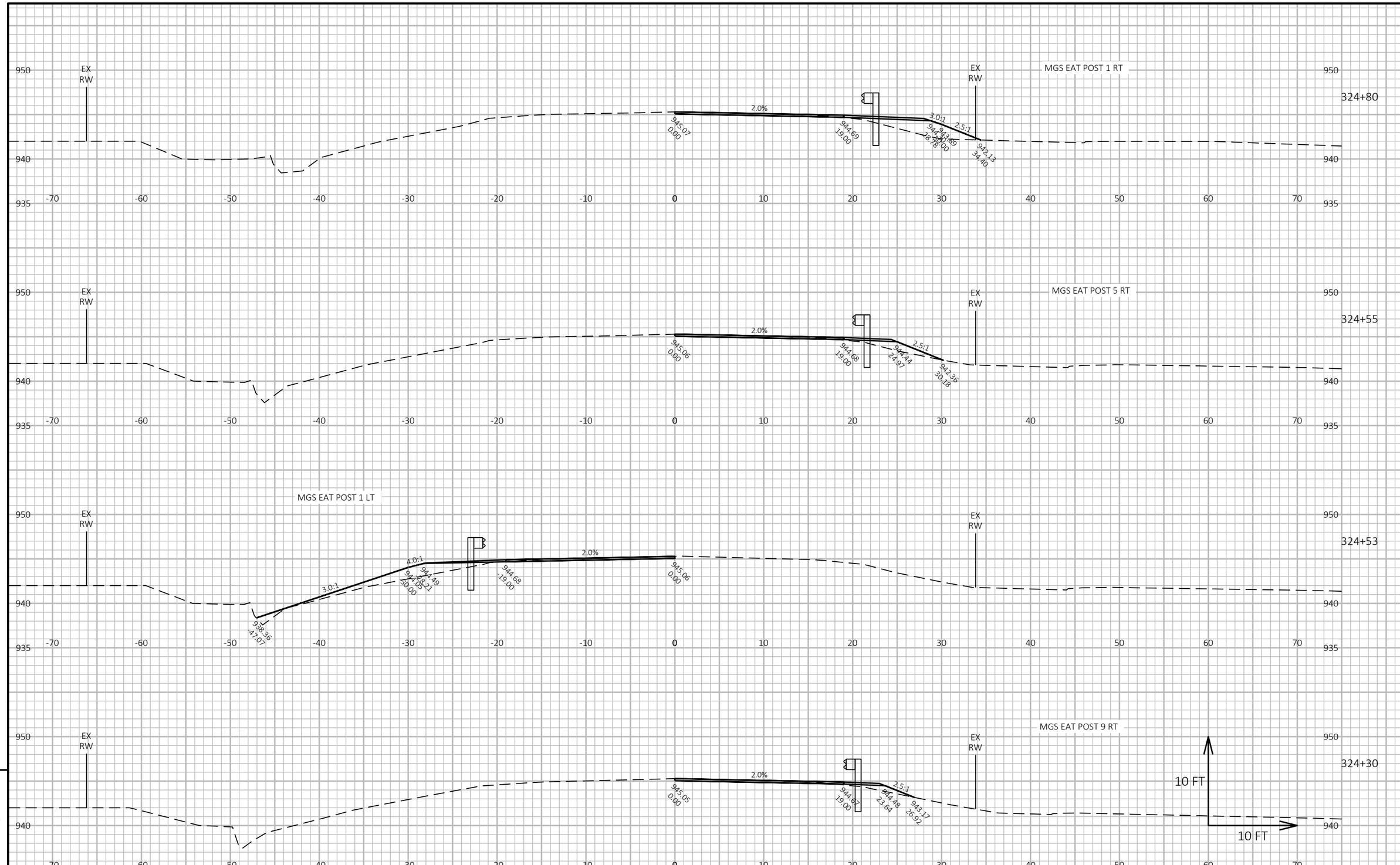

9

9

PROJECT NO: 7080-03-75	HWY: USH 12	COUNTY: EAU CLAIRE	CROSS SECTIONS: USH 12 - BEAMGUARD	SHEET 138	E

FILE NAME : C:\OD\CORRE, INC\PROJECTS - DOCUMENTS\WI - NW REGION\7080-03-05_EAU CLAIRE CO_USH 12\500_CADD\501_C3D_2018\70800305\SHEETSPLAN\090202-XS.DWG
LAYOUT NAME - 13
PLOT DATE : 8/30/2021 2:57 PM
PLOT BY : NICHOLAS WATHKE
PLOT NAME :
PLOT SCALE : 1 IN:10 FT HORZ. / 1 IN:10 FT VERT.
WISDOT/CADDS SHEET 49

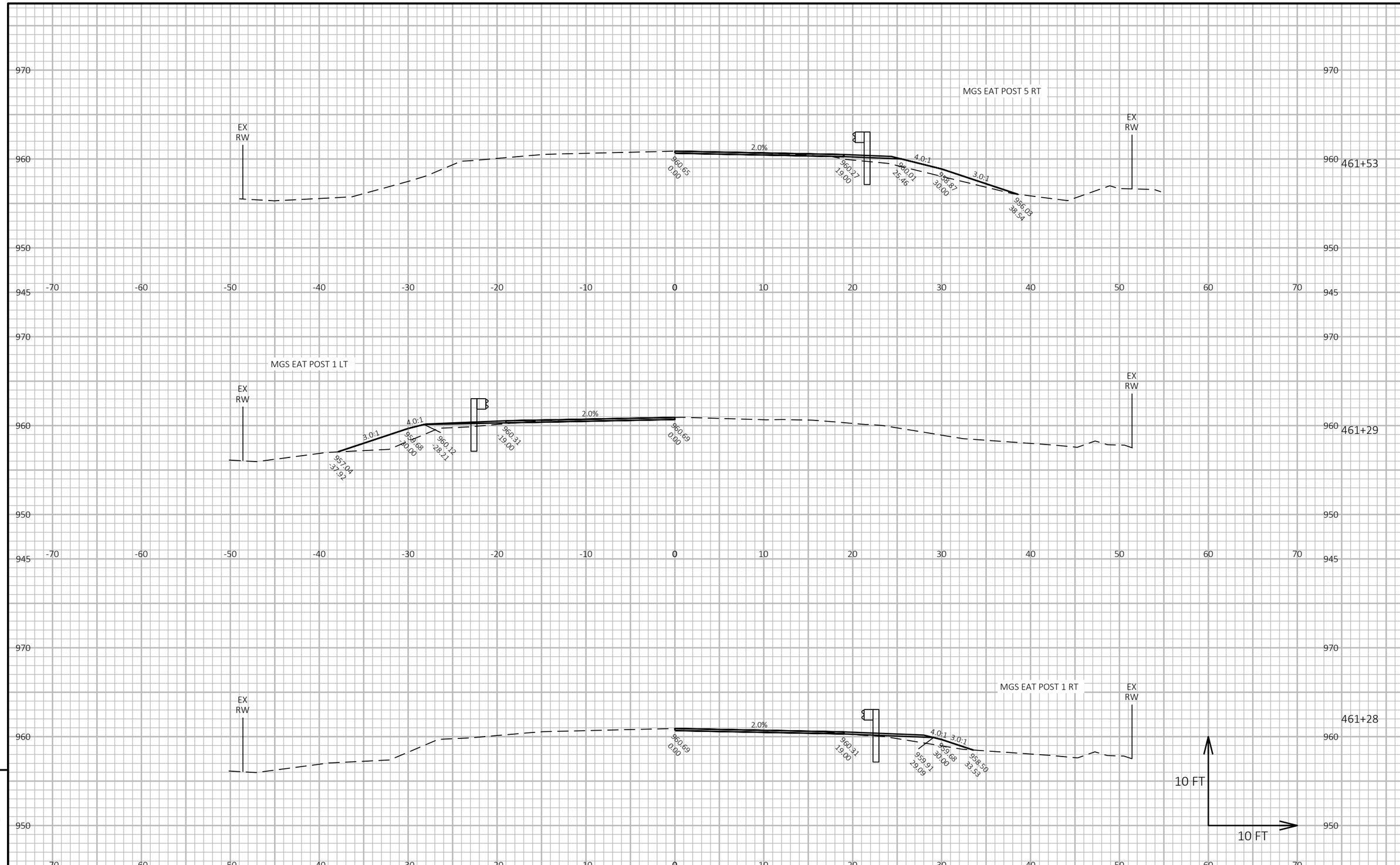

9

9

PROJECT NO: 7080-03-75	HWY: USH 12	COUNTY: EAU CLAIRE	CROSS SECTIONS: USH 12 - BEAMGUARD	SHEET 139	E

FILE NAME : C:\OD\CORRE, INC\PROJECTS - DOCUMENTS\WI - NW REGION\7080-03-05_EAU CLAIRE CO_USH 12\500_CADD\501_C3D_2018\70800305\SHEETSPLAN\090202-XS.DWG
LAYOUT NAME - 14
PLOT DATE : 8/30/2021 2:57 PM
PLOT BY : NICHOLAS WATHKE
PLOT NAME :
PLOT SCALE : 1 IN:10 FT HORZ. / 1 IN:10 FT VERT.
WISDOT/CADDS SHEET 49

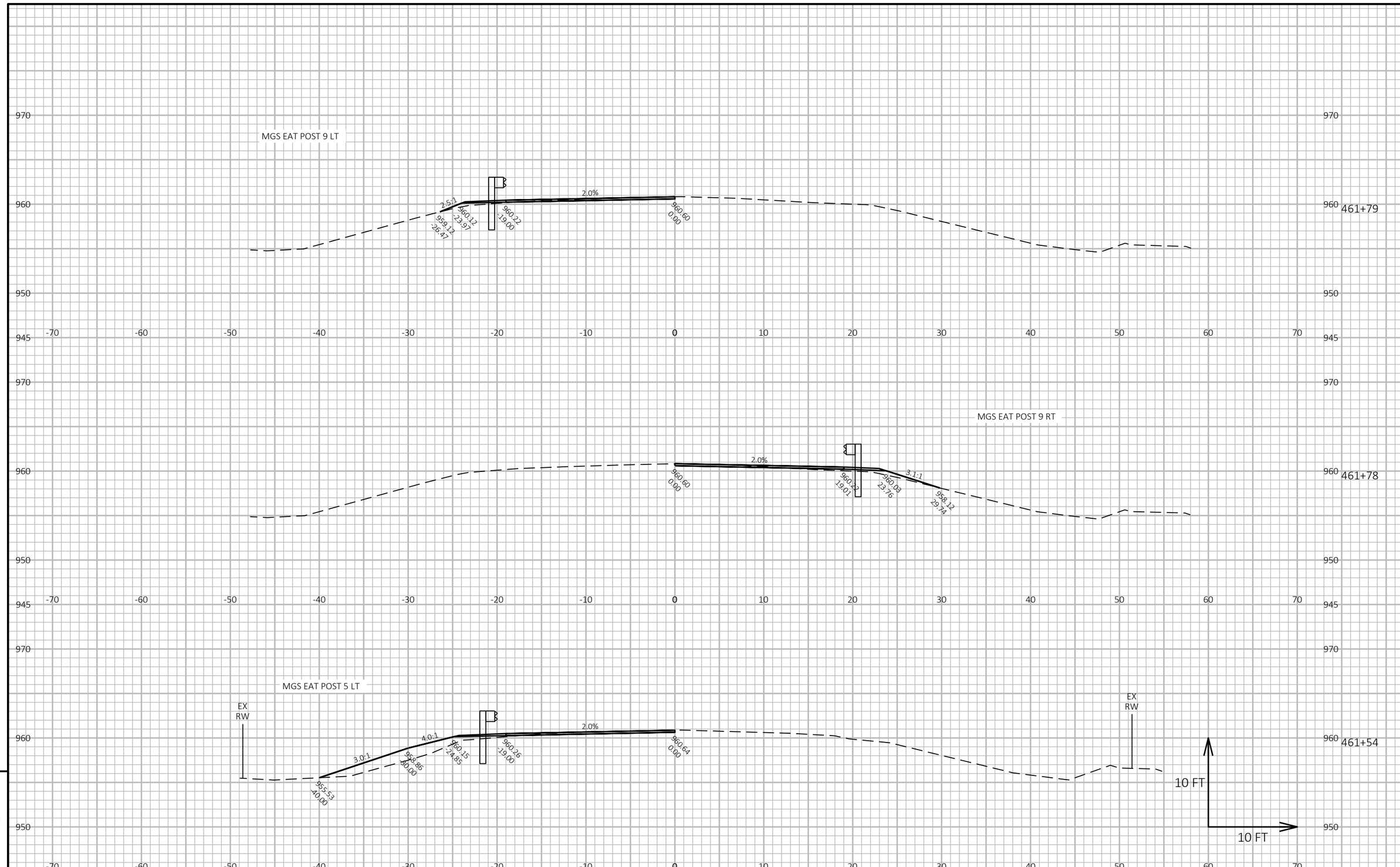

PROJECT NO: 7080-03-75	HWY: USH 12	COUNTY: EAU CLAIRE	CROSS SECTIONS: USH 12 - BEAMGUARD	SHEET 140	E

FILE NAME : C:\OD\CORRE, INC\PROJECTS - DOCUMENTS\WI - NW REGION\7080-03-05_EAU CLAIRE CO_USH 12\500_CADD\501_C3D_2018\70800305\SHEETSPLAN\090202-XS.DWG
LAYOUT NAME - 15
PLOT DATE : 8/30/2021 2:57 PM
PLOT BY : NICHOLAS WATHKE
PLOT NAME :
PLOT SCALE : 1 IN:10 FT HORZ. / 1 IN:10 FT VERT.

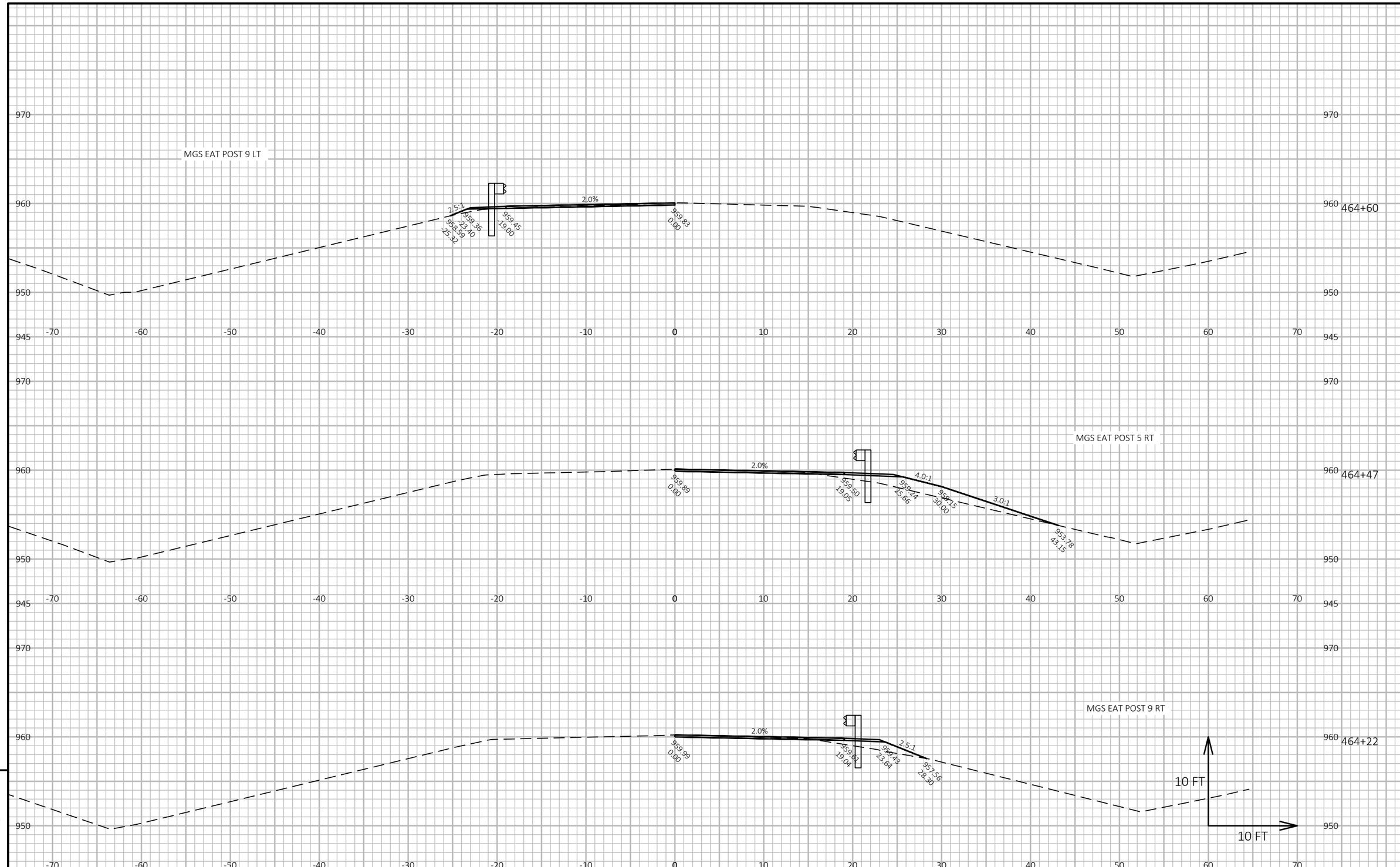

9

9

PROJECT NO: 7080-03-75	HWY: USH 12	COUNTY: EAU CLAIRE	CROSS SECTIONS: USH 12 - BEAMGUARD	SHEET 141	E

FILE NAME : C:\OD\CORRE, INC\PROJECTS - DOCUMENTS\WI - NW REGION\7080-03-05_EAU CLAIRE CO_USH 12\500_CADD\501_C3D_2018\70800305\SHEETSPLAN\090202-XS.DWG
LAYOUT NAME - 16
PLOT DATE : 8/30/2021 2:57 PM
PLOT BY : NICHOLAS WATHKE
PLOT NAME :
PLOT SCALE : 1 IN:10 FT HORZ. / 1 IN:10 FT VERT.
WISDOT/CADDS SHEET 49

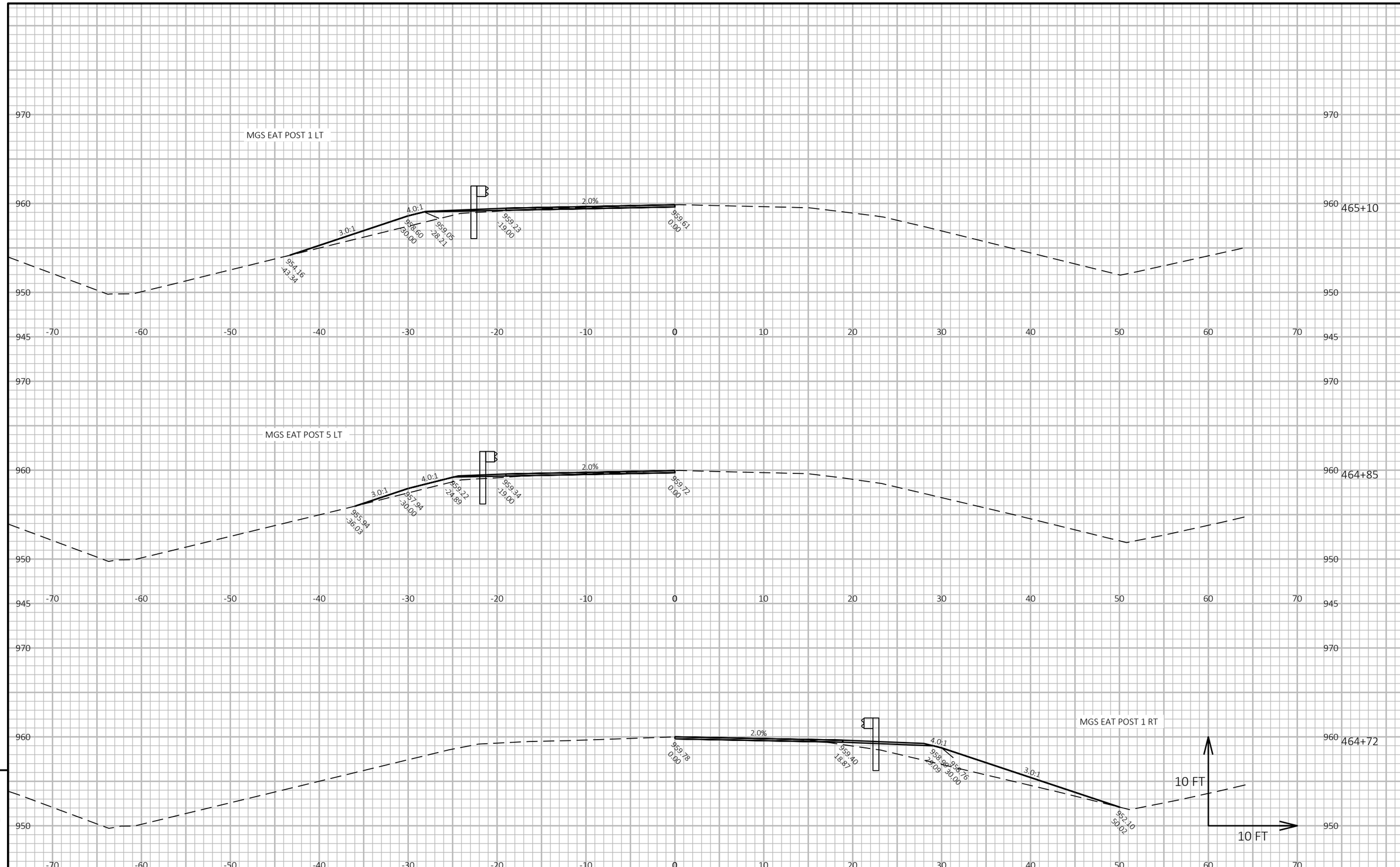

9

9

PROJECT NO: 7080-03-75	HWY: USH 12	COUNTY: EAU CLAIRE	CROSS SECTIONS: USH 12 - BEAMGUARD	SHEET 142	E

FILE NAME : C:\OD\CORRE, INC\PROJECTS - DOCUMENTS\WI - NW REGION\7080-03-05_EAU CLAIRE CO_USH 12\500_CADD\501_C3D_2018\70800305\SHEETSPLAN\090202-XS.DWG
LAYOUT NAME - 17
PLOT DATE : 8/30/2021 2:57 PM
PLOT BY : NICHOLAS WATHKE
PLOT NAME :
PLOT SCALE : 1 IN:10 FT HORZ. / 1 IN:10 FT VERT.
WISDOT/CADDS SHEET 49

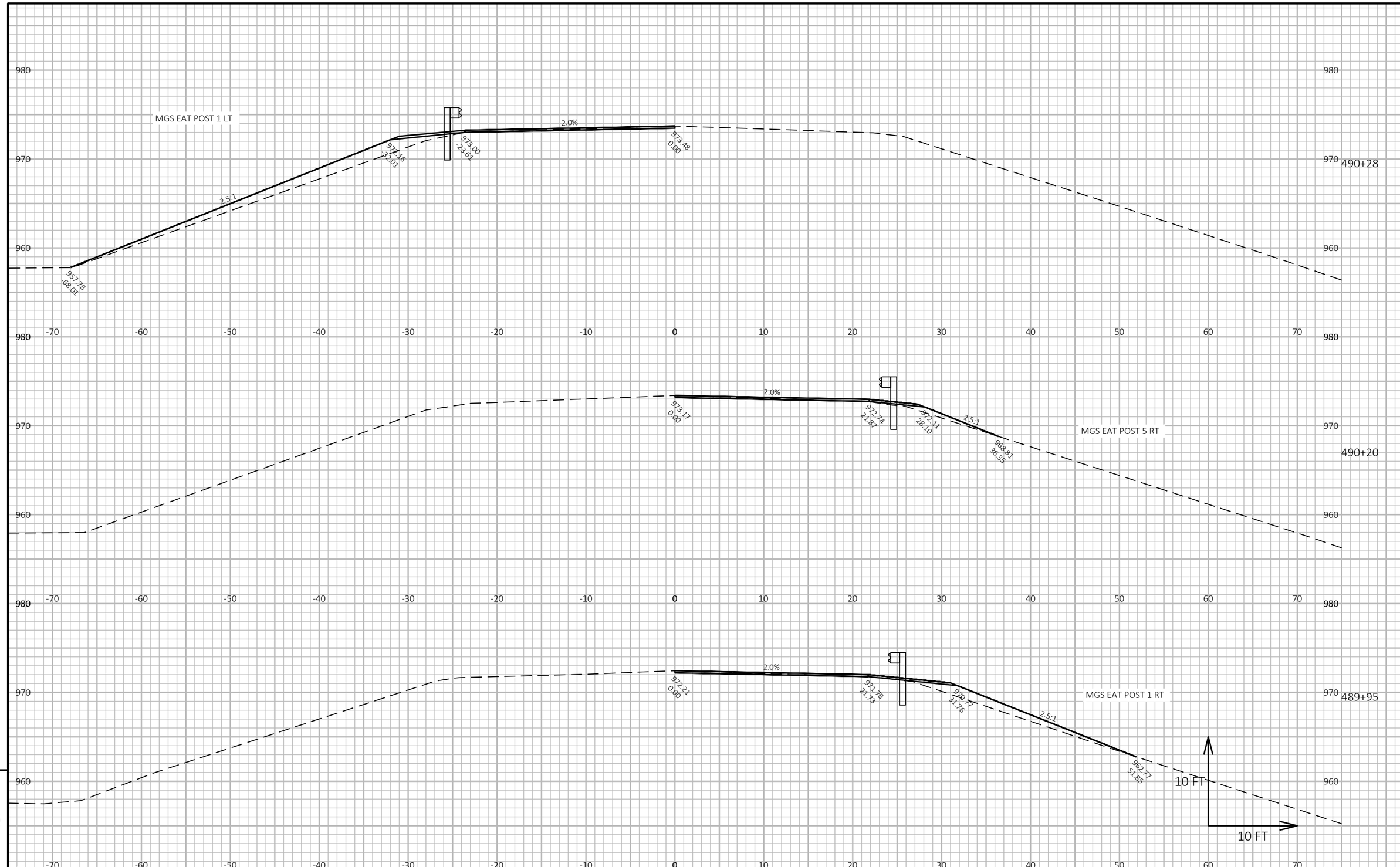

9

9

PROJECT NO: 7080-03-75	HWY: USH 12	COUNTY: EAU CLAIRE	CROSS SECTIONS: USH 12 - BEAMGUARD	SHEET 143	E

FILE NAME : C:\OD\CORRE, INC\PROJECTS - DOCUMENTS\WI - NW REGION\7080-03-05_EAU CLAIRE CO_USH 12\500_CADD\501_C3D_2018\70800305\SHEETSPLAN\090202-XS.DWG
LAYOUT NAME - 18
PLOT DATE : 8/30/2021 2:57 PM
PLOT BY : NICHOLAS WATHKE
PLOT NAME :
PLOT SCALE : 1 IN:10 FT HORZ. / 1 IN:10 FT VERT.
WISDOT/CADDS SHEET 49

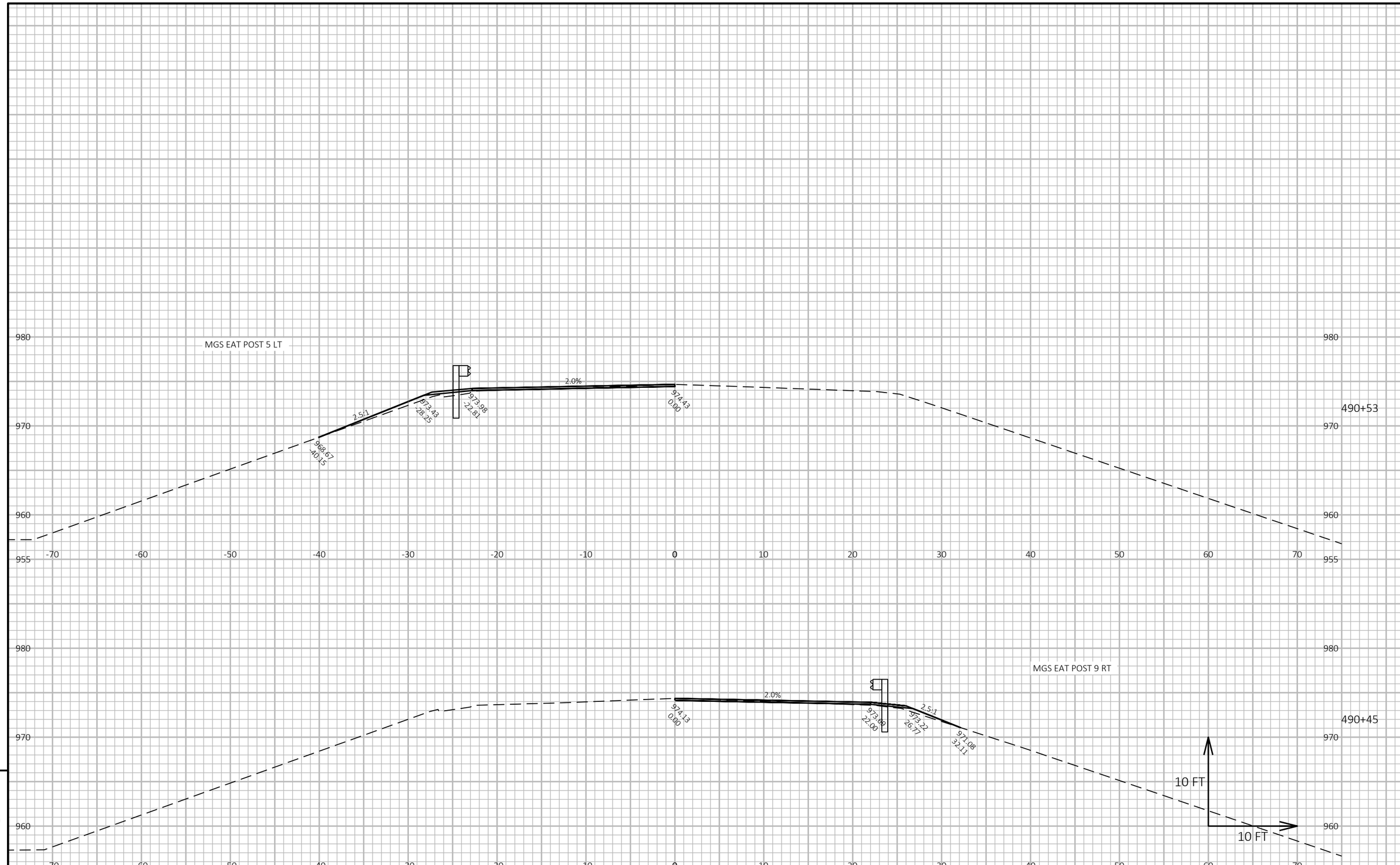

9

9

PROJECT NO: 7080-03-75	HWY: USH 12	COUNTY: EAU CLAIRE	CROSS SECTIONS: USH 12 - BEAMGUARD	SHEET 144	E

FILE NAME : C:\OD\CORRE, INC\PROJECTS - DOCUMENTS\WI - NW REGION\7080-03-05_EAU CLAIRE CO_USH 12\500_CADD\501_C3D_2018\70800305\SHEETSPLAN\090202-XS.DWG
LAYOUT NAME - 19
PLOT DATE : 8/30/2021 2:57 PM
PLOT BY : NICHOLAS WATHKE
PLOT NAME :
PLOT SCALE : 1 IN:10 FT HORZ. / 1 IN:10 FT VERT.
WISDOT/CADDS SHEET 49

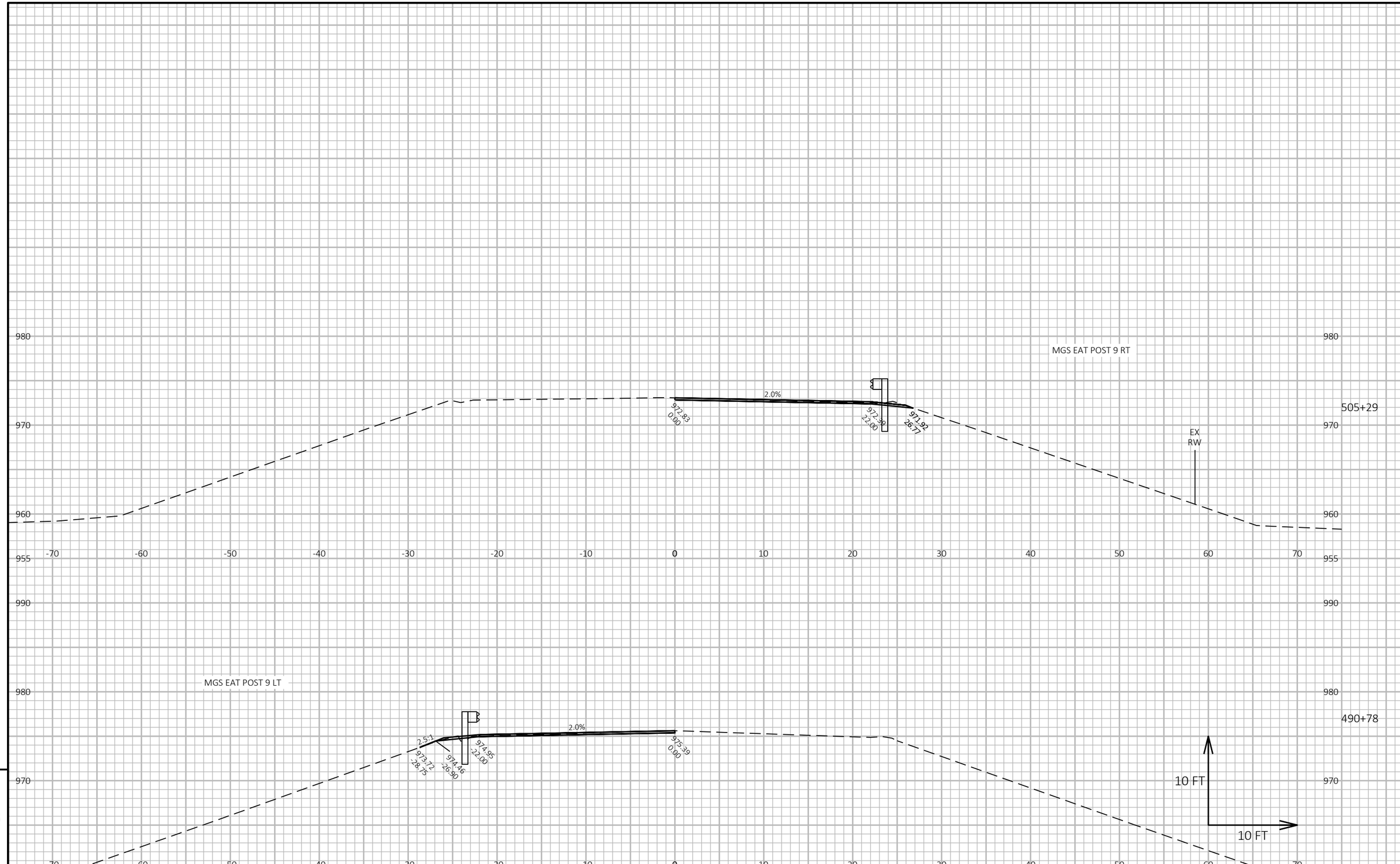

9

9

PROJECT NO: 7080-03-75	HWY: USH 12	COUNTY: EAU CLAIRE	CROSS SECTIONS: USH 12 - BEAMGUARD	SHEET 145	E

FILE NAME : C:\OD\CORRE, INC\PROJECTS - DOCUMENTS\WI - NW REGION\7080-03-05_EAU CLAIRE CO_USH 12\500_CADD\501_C3D_2018\70800305\SHEETSPLAN\090202-XS.DWG
LAYOUT NAME - 20
PLOT DATE : 8/30/2021 2:57 PM
PLOT BY : NICHOLAS WATHKE
PLOT NAME :
PLOT SCALE : 1 IN:10 FT HORZ. / 1 IN:10 FT VERT.
WISDOT/CADDS SHEET 49

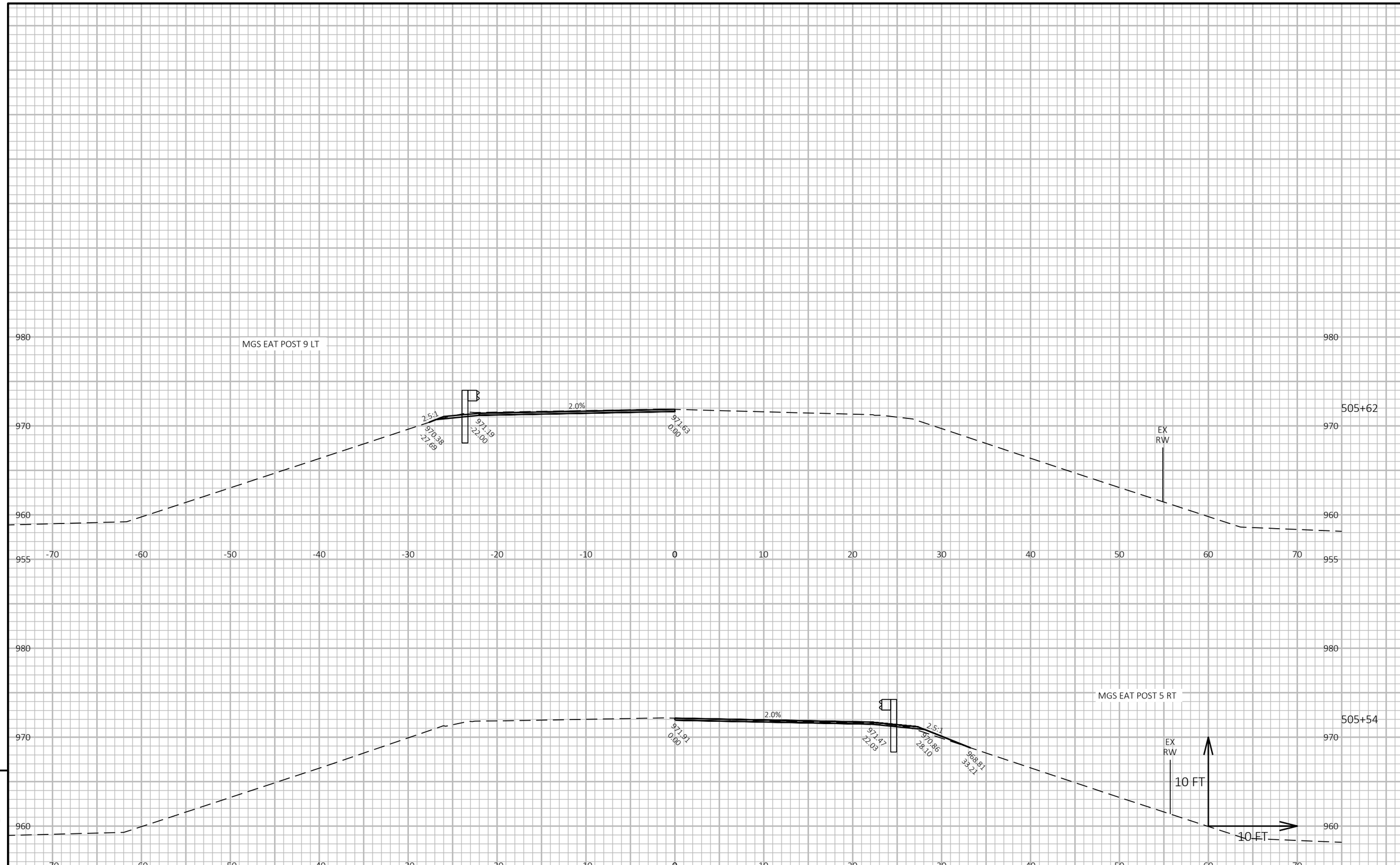

9

9

PROJECT NO: 7080-03-75	HWY: USH 12	COUNTY: EAU CLAIRE	CROSS SECTIONS: USH 12 - BEAMGUARD	SHEET 146	E

FILE NAME : C:\OD\CORRE, INC\PROJECTS - DOCUMENTS\WI - NW REGION\7080-03-05_EAU CLAIRE CO_USH 12\500_CADD\501_C3D_2018\70800305\SHEETSPLAN\090202-XS.DWG
LAYOUT NAME - 21
PLOT DATE : 8/30/2021 2:58 PM
PLOT BY : NICHOLAS WATHKE
PLOT NAME :
PLOT SCALE : 1 IN:10 FT HORZ. / 1 IN:10 FT VERT.
WISDOT/CADDS SHEET 49

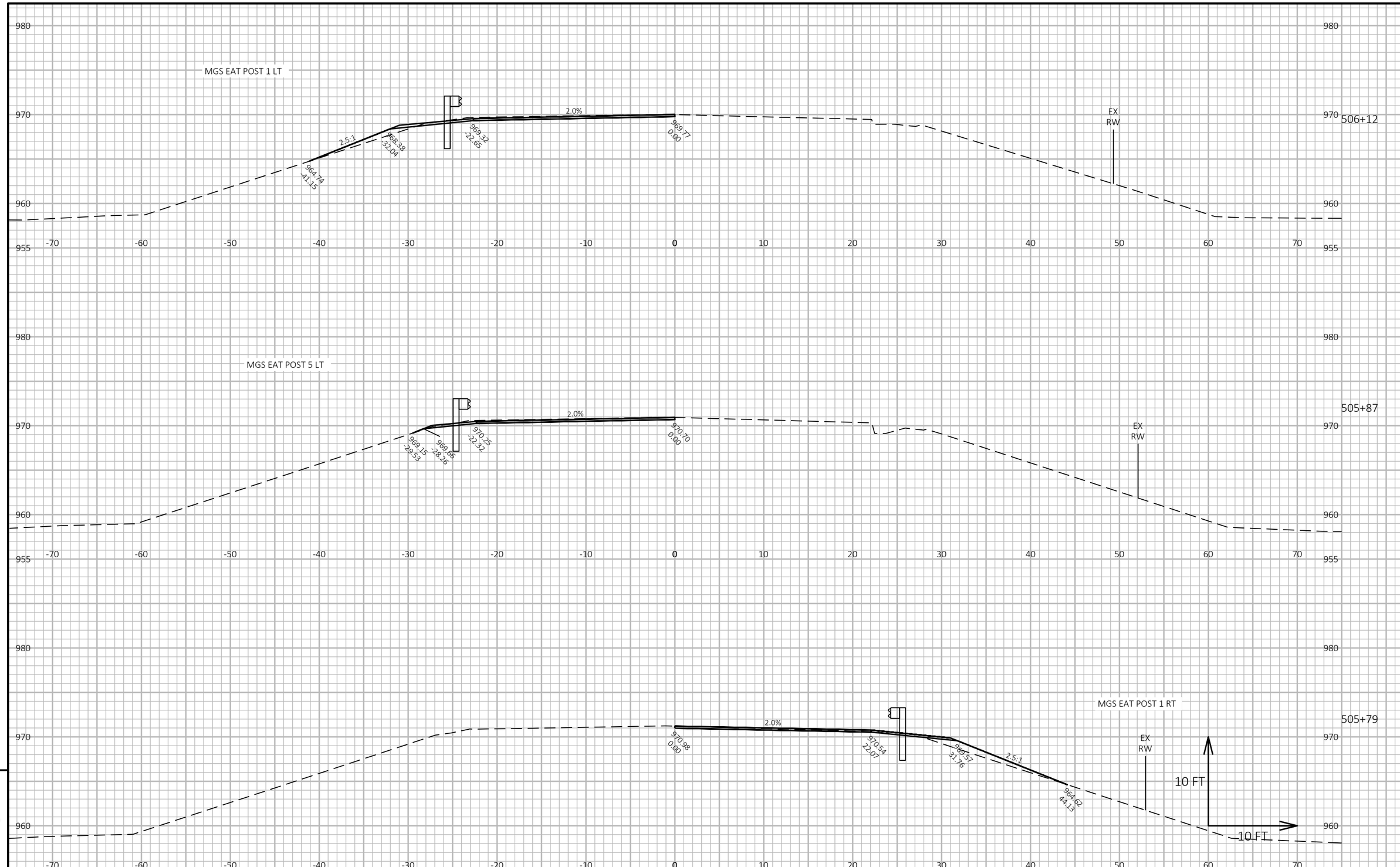

9

9

PROJECT NO: 7080-03-75	HWY: USH 12	COUNTY: EAU CLAIRE	CROSS SECTIONS: USH 12 - BEAMGUARD	SHEET 147	E

FILE NAME : C:\OD\CORRE, INC\PROJECTS - DOCUMENTS\WI - NW REGION\7080-03-05_EAU CLAIRE CO_USH 12\500_CADD\501_C3D_2018\70800305\SHEETSPLAN\090202-XS.DWG
LAYOUT NAME - 22
PLOT DATE : 8/30/2021 2:58 PM
PLOT BY : NICHOLAS WATHKE
PLOT NAME :
PLOT SCALE : 1 IN:10 FT HORZ. / 1 IN:10 FT VERT.
WISDOT/CADDS SHEET 49

Wisconsin Department of Transportation

Dedicated people creating transportation solutions through innovation and exceptional service.

http://www.dot.wisconsin.gov