EAU

PROJECT ID: 8110-01-76

WITH:

COUNTY: COUNTY

NOVEMBER 2021
ORDER OF SHEETS

TOTAL SHEETS = 146

STATE PROJECT	FEDERAL PROJECT	
	PROJECT	CONTRACT
8110-01-76	WISC 2022029	1

STATE OF WISCONSIN
DEPARTMENT OF TRANSPORTATION

PLAN OF PROPOSED IMPROVEMENT

C NEW RICHMOND, STH 64

STH 64 AND STH 65 INTERSECTION

STH 64
ST. CROIX COUNTY

STATE PROJECT NUMBER
8110-01-76

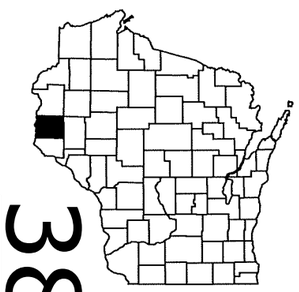

38

N

DESIGN DESIGNATION

A.A.D.T.	2018	=	7800
A.A.D.T.	2015	=	5500
D.H.V.		=	
D.D.		=	
T.		=	
DESIGN SPEED		=	45 MPH
ESALS		=	

BEGIN PROJECT
STA 955+35.32
N: 400807.5551
E: 568219.9214

END PROJECT
STA 964+76.57
N: 401153.5662
E: 569102.6060

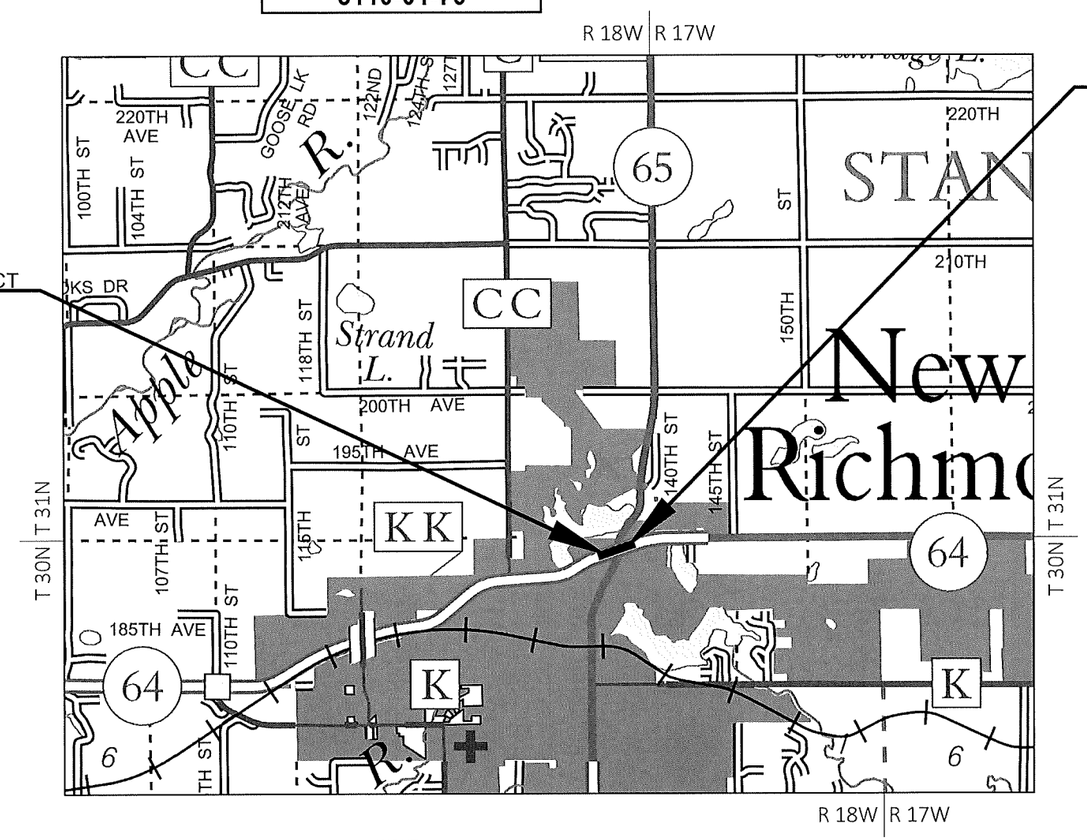

CONVENTIONAL SYMBOLS

PLAN
- CORPORATE LIMITS
- PROPERTY LINE
- LOT LINE
- LIMITED HIGHWAY EASEMENT
- EXISTING RIGHT OF WAY
- PROPOSED OR NEW R/W LINE
- SLOPE INTERCEPT
- REFERENCE LINE (300 EB)
- EXISTING CULVERT
- PROPOSED CULVERT (Box or Pipe)
- COMBUSTIBLE FLUIDS (CAUTION)
- MARSH AREA
- WOODED OR SHRUB AREA

PROFILE
- GRADE LINE
- ORIGINAL GROUND
- MARSH OR ROCK PROFILE (To be noted as such) (ROCK)
- SPECIAL DITCH (LABEL)
- GRADE ELEVATION (95.36)
- CULVERT (Profile View)

UTILITIES
- ELECTRIC (E)
- FIBER OPTIC (FO)
- GAS (G)
- SANITARY SEWER (SAN)
- STORM SEWER (SS)
- TELEPHONE (T)
- WATER (W)
- UTILITY PEDESTAL
- POWER POLE
- TELEPHONE POLE

LAYOUT
SCALE 0 — 1 MI

TOTAL NET LENGTH OF CENTERLINE = 0.177 MI

HORIZONTAL POSITIONS SHOWN ON THIS PLAN ARE WISCONSIN COORDINATE REFERENCE SYSTEM (WISCRS), ST. CROIX COUNTY, NAD83 (1991), IN U.S. SURVEY FEET. POSITIONS SHOWN ARE GRID COORDINATES, GRID BEARINGS, AND GRID DISTANCES. GRID DISTANCES ARE THE SAME AS GROUND DISTANCES. ELEVATIONS ARE REFERENCED TO NAVD 88 (1988). GPS DERIVED ELEVATIONS ARE BASED ON GEOID 12A.

STATE OF WISCONSIN
DEPARTMENT OF TRANSPORTATION

PREPARED BY

Surveyor	AECOM
Designer	ALLISSA MUNDEN
Project Manager	PAULA GROOM
Regional Examiner	TOU YANG
Regional Supervisor	JAMES KOENIG

APPROVED FOR THE DEPARTMENT
DATE: 7-27-21 (Signature)

E

2

LIST OF STANDARD ABBREVIATIONS

ABUT	ABUTMENT
AC	ACRE
AGG	AGGREGATE
AH	AHEAD
APPROX	APPROXIMATE
AEW	APRON ENDWALL
ASPH	ASPHALTIC
ADT	AVERAGE DAILY TRAFFIC
AVG	AVERAGE
AZ	AZIMUTH
BK	BACK
BEG	BEGIN
BM	BENCH MARK
CL	CENTER LINE
CONC	CONCRETE
CONST	CONSTRUCTION
CO	COUNTY
CTH	COUNTY TRUNK HIGHWAY
X-SEC	CROSS SECTION
CR	CRUSHED
CFS	CUBIC FEET/SECOND
CY OR CU YD	CUBIC YARD
CULV	CULVERT
CP	CULVERT PIPE
DOT	DEPARTMENT OF TRANSPORTATION
DHV	DESIGN HOUR VOLUME
DIA	DIAMETER
DD	DIRECTIONAL DISTRIBUTION
DISCH OR DIS	DISCHARGE
EA	EACH
ELECT	ELECTRIC
EL OR ELEV	ELEVATION
EMB	EMBANKMENT
EBS	EXCAVATION BELOW SUBGRADE
EXIST	EXISTING
FERT	FERTILIZE
FE	FIELD ENTRANCE
FIN	FINISHED
FT	FOOT
FL	FLOW LINE
GA	GAUGE
HORIZ	HORIZONTAL
CWT	HUNDREDWEIGHT
INL	INLET
LT	LEFT
LHF	LEFT-HAND FORWARD
LIN	LINEAR
LIN FT	LINEAR FOOT
LS	LUMP SUM
MAX	MAXIMUM
MI	MILE
MISC	MISCELLANEOUS
NE	NORTH EAST
NW	NORTH WEST
PAV'T	PAVEMENT
PC	POINT OF CURVATURE
PI	POINT OF INTERSECTION
PT	POINT OF TANGENCY
POT	POINT ON TANGENT
LB	POUND
PE	PRIVATE ENTRANCE
PROJ	PROJECT
R	RANGE
REQ'D	REQUIRED
RT	RIGHT
RHF	RIGHT-HAND FORWARD
RW	RIGHT OF WAY
RD	ROAD
SHR	SHRINKAGE
SL	SLOPE
SE	SOUTH EAST
SW	SOUTH WEST
STD	STANDARD
SDD	STANDARD DETAIL DRAWINGS
STH	STATE TRUNK HIGHWAY
STA	STATION
SPPA	STRUCTURAL PLATE PIPE ARCH
STRUCT	STRUCTURE
SURF	SURFACE
TEL	TELEPHONE
TN	TOWN
T	TRUCKS (PERCENT OF)
UNCL	UNCLASSIFIED
UG	UNDERGROUND
V	VELOCITY OR DESIGN SPEED
VC	VERTICAL CURVE

UTILITIES

COMMUNICATION
BALDWIN TELECOM INC.
930 MAPLE STREET
BALDWIN, WI 54002
PH: 715-688-1034
CELL: 715-760-0968
EMAIL: mknegendorf@lswi.net

FRONTIER COMMUNICATIONS OF WISCONSIN
CAL KLADE
1851 N 14TH AVE.
WAUSAU WI, 54401
PH: 715-847-1525
EMAIL: CALVIN.KLADE@FTR.COM

ELECTRICITY-DISTRIBUTION
CITY OF NEW RICHMOND
WESTON ARNDT
156 EAST 1ST STREET
NEW RICHMOND, WI 54017
PH: 715-243-0437
CELL: 715-829-5505
EMAIL: warndt@newrichmondwi.gov

ELECTRICITY-TRANSMISSION
XCEL ENERGY
MITCHELL DIENGER
414 NICOLLET MALL, 5TH FLOOR
MINNEAPOLIS MN, 55401
PH: 612-321-3109
CELL: 608-386-2233
EMAIL: Mitchell.a.dienger@xcelenergy.com

COPY ALL XCEL ENERGY CORRESPONDENCE TO:
CORISSA SEELY
1414 WEST HAMILTON AVENUE
PO BOX 0008
EAU CLAIRE, WI 54702-0008
PH: 715-737-4097
EMAIL: corissa.e.seely@xcelenergy.com

GAS/PETROLEUM
XCEL ENERGY
DARREN NORDSKOG
2001 OLD HIGHWAY 35 S.
HUDSON, WI 54016
PH: 715-386-4798
CELL: 715-410-3755
EMAIL: Darren.m.nordskog@XCELENERGY.COM

SEWER/WATER
CITY OF NEW RICHMOND
ERIK EVENSON
156 EAST 1ST STREET
NEW RICHMOND WI, 54017
PH: 715-243-0439
CELL: 715-977-1659
EMAIL: eevenson@newrichmondwi.gov

WISCONSIN DOT

DEPARTMENT OF TRANSPORTATION
NORTHWEST REGION
718 WEST CLAIREMONT AVE
EAU CLAIRE WI 54701
ATTN: PAULA GROOM
EMAIL:Paula.Groom@dot.wi.gov
PH:715-579-6776

WISCONSIN DNR - LIASON

DEPARTMENT OF NATURAL RESOURCES
WEST CENTRAL REGION
1300 W. CLAIREMONT AVE
EAU CLAIRE, WI 54701
ATTN: AMY LESIK
EMAIL: AmyL.Lesik@Wisconsin.gov
PH: 715-836-6571

ST. CROIX COUNTY HIGHWAY DEPT.

300 OAK RIDGE PKWY
BALDWIN, WI 54002
PH: (715) 245-4200
FAX:(715) 245-4199

DIGGERS HOTLINE
Dial 811 or (800)242-8511
www.DiggersHotline.com

GENERAL NOTES

EXCAVATION BELOW SUBGRADE (EBS) IS NOT USED TO BALANCE YARDAGE AND IS NOT SHOWN ON THE CROSS SECTIONS BUT IS MEASURED AND PAID FOR AS (COMMON, OR ROCK) EXCAVATION.

WHEN THE QUANTITY OF THE ITEMS OF BASE AGGREGATE IS MEASURED FOR PAYMENT BY THE TON, THE DEPTH OR THICKNESS OF THE LAYER SHOWN IN THE PLANS IS APPROXIMATE, THE ACTUAL THICKNESS WILL DEPEND ON THE DISTRIBUTION OF MATERIAL AS DIRECTED BY THE ENGINEER.

THE LOCATIONS OF EXISTING AND PROPOSED UTILITY INSTALLATIONS AS SHOWN ON THE PLAN ARE APPROXIMATE. THERE MAY BE OTHER UTILITY INSTALLATIONS WITHIN THE PROJECT AREA THAT ARE NOT SHOWN.

A SAWED JOINT WILL BE REQUIRED WHERE NEW PAVEMENT IS TO MEET AN EXISTING PAVED SURFACE.

DISTURBED AREAS WITHIN THE RIGHT OF WAY SHALL BE SALVAGE TOPSOILED, FERTILIZED, SEEDED, AND PROTECTED WITH EMAT AS DIRECTED BY THE ENGINEER.

2

2

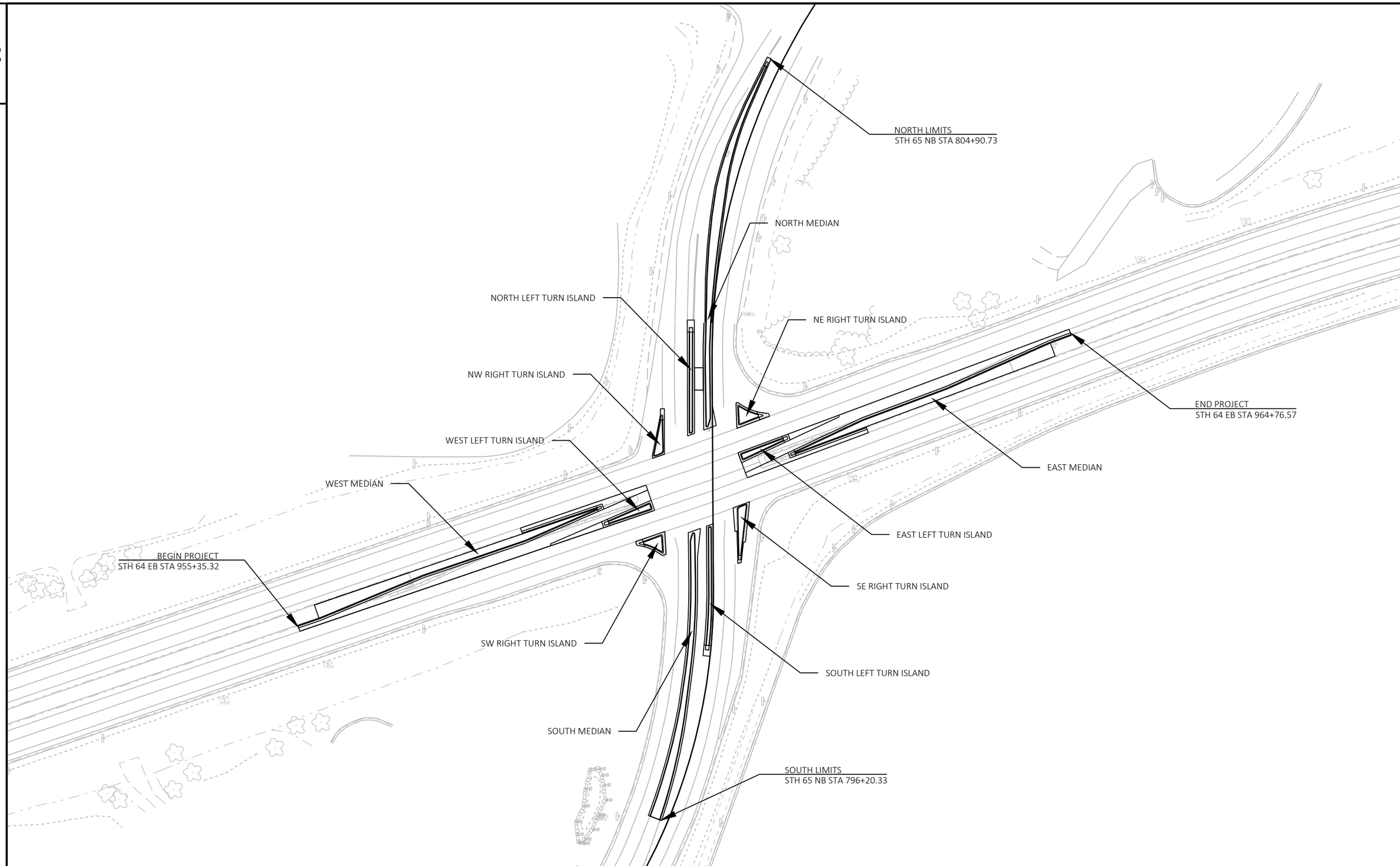

2

PROJECT NO:8110-01-76	HWY:STH 64	COUNTY:ST. CROIX	PROJECT OVERVIEW	SHEET 3	E

FILE NAME : D:\WORK\81100106 C3D\SHEETSPLAN\020201-PO.DWG
LAYOUT NAME - 020101-GN - XSECTIONS
PLOT DATE : 7/12/2021 11:21 AM PLOT BY : MUNDEN, ALLISSA L PLOT NAME : PLOT SCALE : 1IN = 10 FT

2

NOTES

EXISTING RIGHT TURN ISLANDS ARE PIN-ON AND DO NOT ACCOMMODATE FOR OSOW TRAFFIC. REMOVE EXISTING PIN ON ISLANDS AND BASE. REPLACE WITH CURB AND GUTTER AND CONCRETE SIDEWALK.

GUTTER WILL BEGIN AT THE EDGE OF EXISTING PIN ON ISLAND MAKING THE PROPOSED ISLANDS SMALLER THAN EXISTING.

SW AND NE ISLANDS ARE TO HAVE SLOPED CURB AND GUTTER TO ALLOW FOR OSOW TURN MOVEMENTS

* MATCH GUTTER SLOPE TO ROADWAY SLOPE

** CITY NO LONGER WANTS COLORED STAMPED CONCRETE. ALL MEDIANS AND ISLANDS WILL BE GRAY CONCRETE.

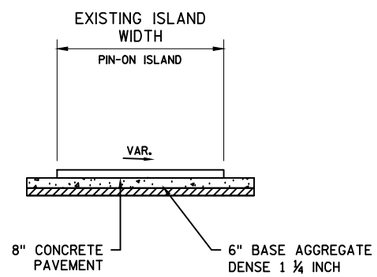

EXISTING TYPICAL SECTION

ALL RIGHT TURN ISLANDS

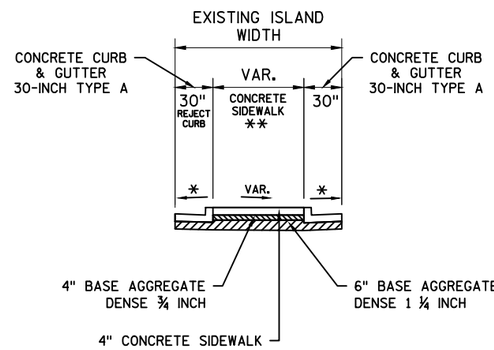

FINISHED TYPICAL SECTION

SE RIGHT TURN ISLAND
NW RIGHT TURN ISLAND

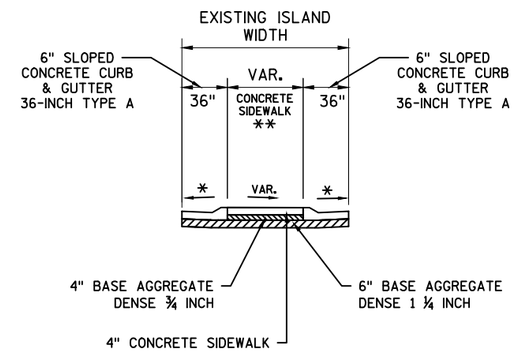

FINISHED TYPICAL SECTION

SW RIGHT TURN ISLAND
NE RIGHT TURN ISLAND

2

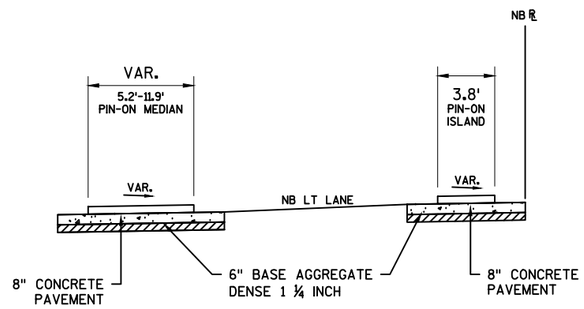

EXISTING TYPICAL SECTION
STH 65
NB STA 796+20.40 - 799+57.98

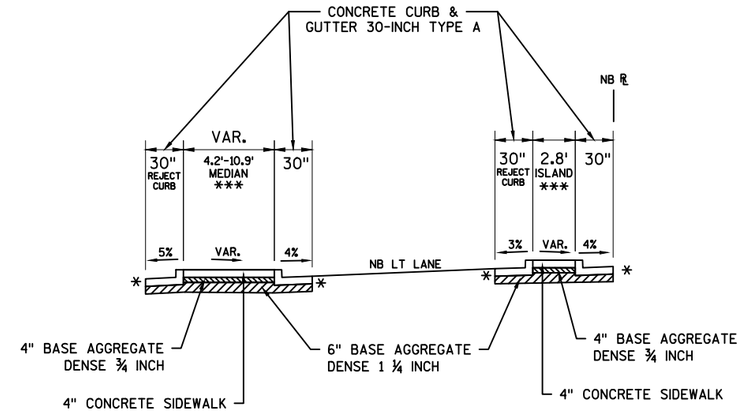

FINISHED TYPICAL SECTION
STH 65
NB STA 796+20.40 - 799+57.98

LEFT TURN ISLAND

NB STA 798+24.93 - 799+57.98

MEDIAN

NB STA 796+20.40 - 799+50

NOTES

* MATCH EDGE TO EXISTING PAVEMENT

TIE INTO CONCRETE NB STA 796+20.40 - 801+88.19
DRILLED TIE BARS REQUIRED

TIE INTO ASPHALT NB STA 801+88.19 - 804+80.76
NO DRILLED TIE BARS

** 30" CURB AND GUTTER TYPE A
NB STA 800+81.17 - 801+88.19

18" CURB AND GUTTER TYPE D
NB STA 801+88.19 - 804+80.75

*** CITY NO LONGER WANTS COLORED STAMPED CONCRETE,
ALL MEDIANS AND ISLANDS WILL BE GRAY CONCRETE.

2

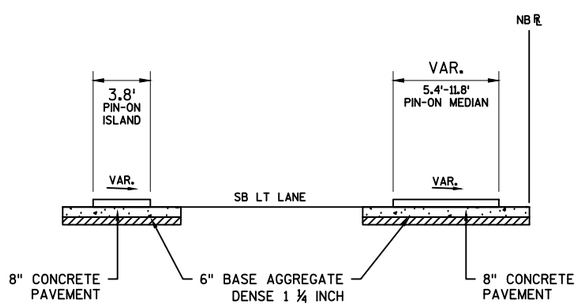

EXISTING TYPICAL SECTION
STH 65
NB STA 800+65.78 - STA 801+88.19

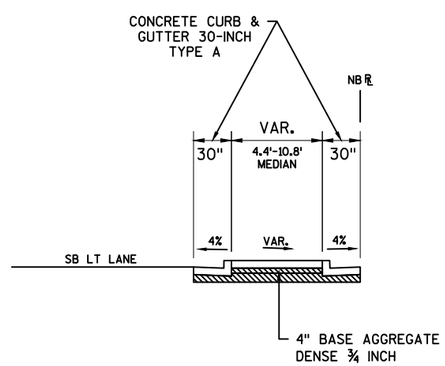

EXISTING TYPICAL SECTION
STH 65
NB STA 801+88.19 - STA 804+80.76

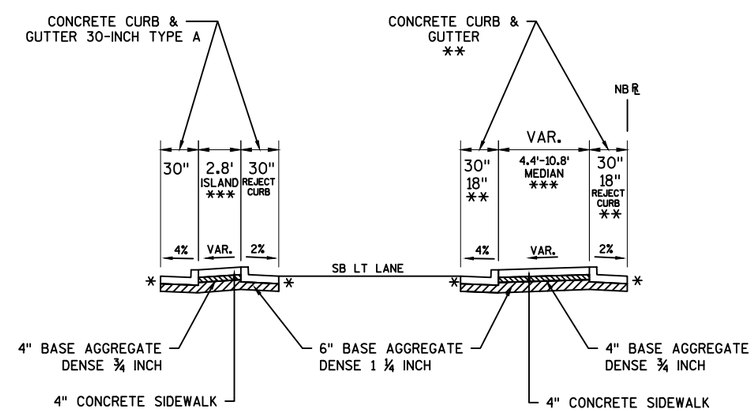

FINISHED TYPICAL SECTION
STH 65
NB STA 800+65.78 - STA 804+80.76

LT ISLAND

NB STA 800+65.78 - 801+76.98

MEDIAN

NB STA 800+81.17 - 804+80.76

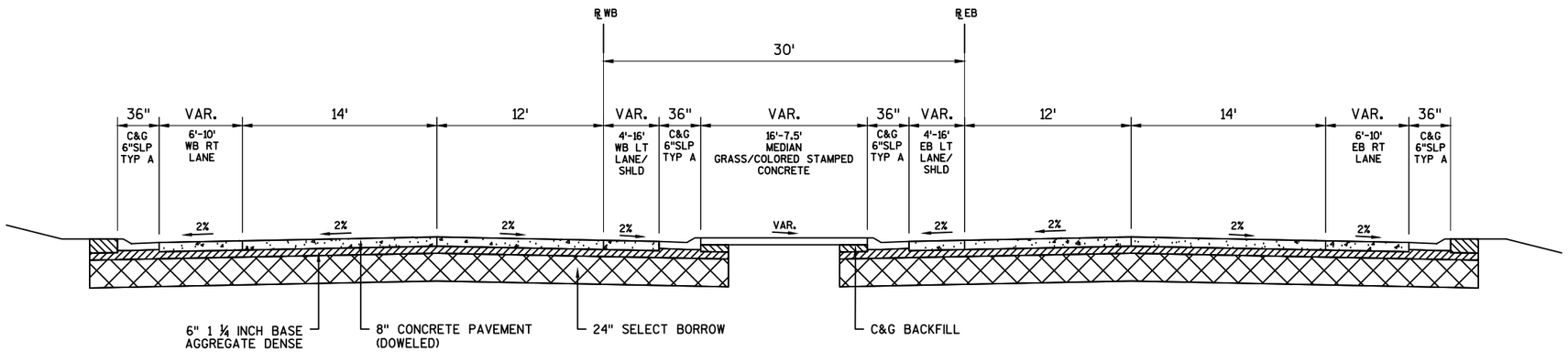

EXISTING TYPICAL SECTION
STH 64
EB STA 955+28.42 - STA 964+76.57

EB LT LANE/SHLD

4 FT: EB STA 955+28.42 - 956+65.59
TAPER: EB STA 956+65.59 - 957+57.64
16 FT: EB STA 957+57.64 - 959+30.85
INTERSECTION
4 FT: EB STA 960+78.25 - 964+76.57

WB LT LANE/SHLD

4 FT: WB STA 955+35.32 - 959+37.90
INTERSECTION
16 FT: WB STA 960+84.15 - 963+02.41
TAPER: WB STA 963+02.4 - 963+93.04
4FT: WB STA 963+93.04 - 964+82.61

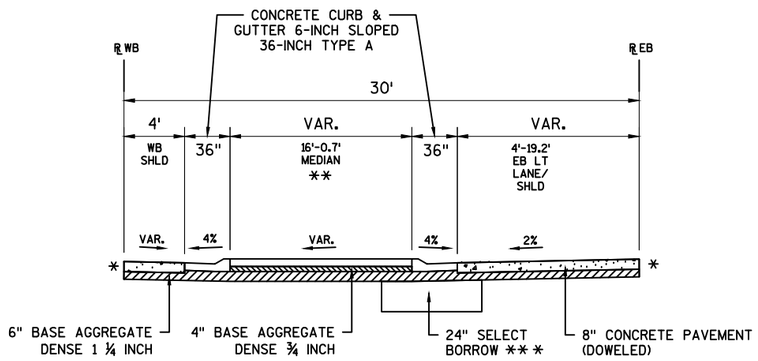

EB FINISHED TYPICAL SECTION
STH 64
EB STA 955+28.42 - STA 958+88.52

EB LT LANE/SHLD
4 FT: EB STA 955+28.42 - 955+53.42
TAPER: EB STA 955+53.42 - 956+79.13
12 FT: EB STA 956+79.13 - 958+00.08
TAPER: EB STA 958+00.08 - 958+88.52

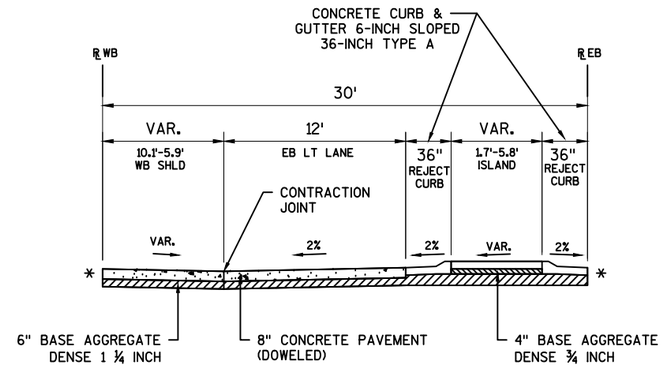

EB FINISHED TYPICAL SECTION
STH 64
EB STA 958+95.52 - STA 959+45.79

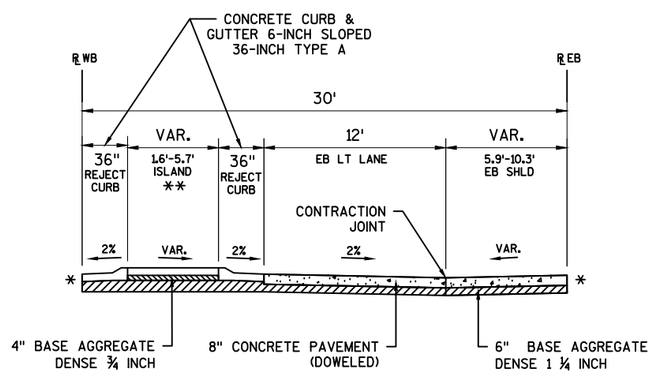

FINISHED TYPICAL SECTION
STH 64
EB STA 960+62.04 - 961+12.04

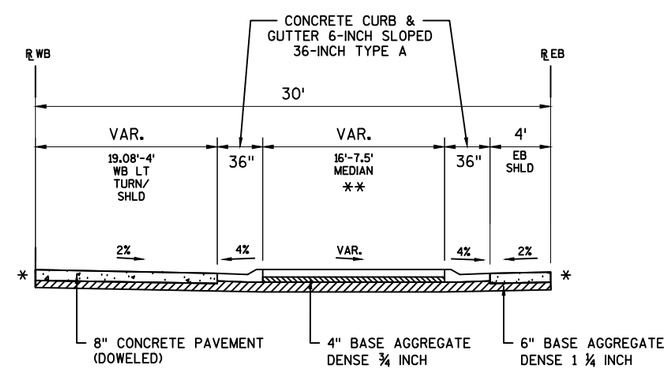

FINISHED TYPICAL SECTION
STH 64
EB STA 961+19.04 - STA 964+76.57

WB LT LANE/SHLD
TAPER: EB STA 961+19.04 - 962+04.04
12 FT: EB STA 962+04.04 - 963+05.72
TAPER: EB STA 963+05.72 - 964+30.44
4 FT: EB STA 964+30.44 - 964+55.44

NOTES

* MATCH EDGE TO EXISTING CONCRETE PAVEMENT OR CURB, DRILLED TIE BARS REQUIRED

** GRASS MEDIAN
EB STA 955+28.42 - 955+53.42
EB STA 964+30.44 - 964+55.44

4" CONCRETE SIDEWALK MEDIAN (WITH 4" BAD ¾ INCH)
EB STA 955+53.42 - 958+88.52
EB STA 961+19.04 - 964+30.44

CITY NO LONGER WANTS COLORED STAMPED CONCRETE. ALL MEDIANS AND ISLANDS WILL BE GRAY CONCRETE.

*** 24" SELECT BORROW STA 956+00 - 957+50
WIDTH VARIES - SEE CROSS SECTIONS

2

STATION & OFFSET TABLE					
POINT	STATION	OFFSET	Y COORDS	X COORDS	RADIUS
PT101	955+28.42	0.00	400807.555	568219.921	
PT102	955+28.42	-4.00 LT	400811.342	568218.633	
PT103	955+53.42	-4.00 LT	400819.396	568242.300	
PT104	955+53.42	-7.00 LT	400822.236	568241.334	
PT105	955+53.26	-22.69 LT	400837.041	568236.124	
PT106	956+79.13	-12.00 LT	400867.465	568358.728	
PT107	956+79.01	-15.00 LT	400870.267	568357.649	
PT108	958+00.00	-12.00 LT	400906.403	568473.154	
PT109	957+99.96	-15.00 LT	400909.229	568472.149	
PT110	957+99.96	-22.78 LT	400916.597	568469.642	
PT111	957+99.96	-29.78 LT	400923.224	568467.387	
PT112	958+26.13	-2.08 LT	400905.431	568501.087	
PT113	958+26.13	0.00	400903.460	568501.758	
PT114	958+88.52	-22.89 LT	400945.232	568553.443	
PT115	958+88.52	-22.21 LT	400944.586	568553.663	
PT116	958+95.52	-4.72 LT	400930.284	568565.924	
PT117	958+95.52	-3.00 LT	400928.653	568566.479	
PT118	959+48.79	0.00	400942.974	568617.875	
PT119	959+45.79	-3.00 LT	400944.847	568614.069	
PT120	959+45.79	-8.82 LT	400950.353	568612.195	
PT121	959+48.79	-12.07 LT	400954.401	568613.987	
PT122	959+48.79	-24.11 LT	400965.799	568610.108	
PT123	959+48.79	-29.97 LT	400971.347	568608.220	

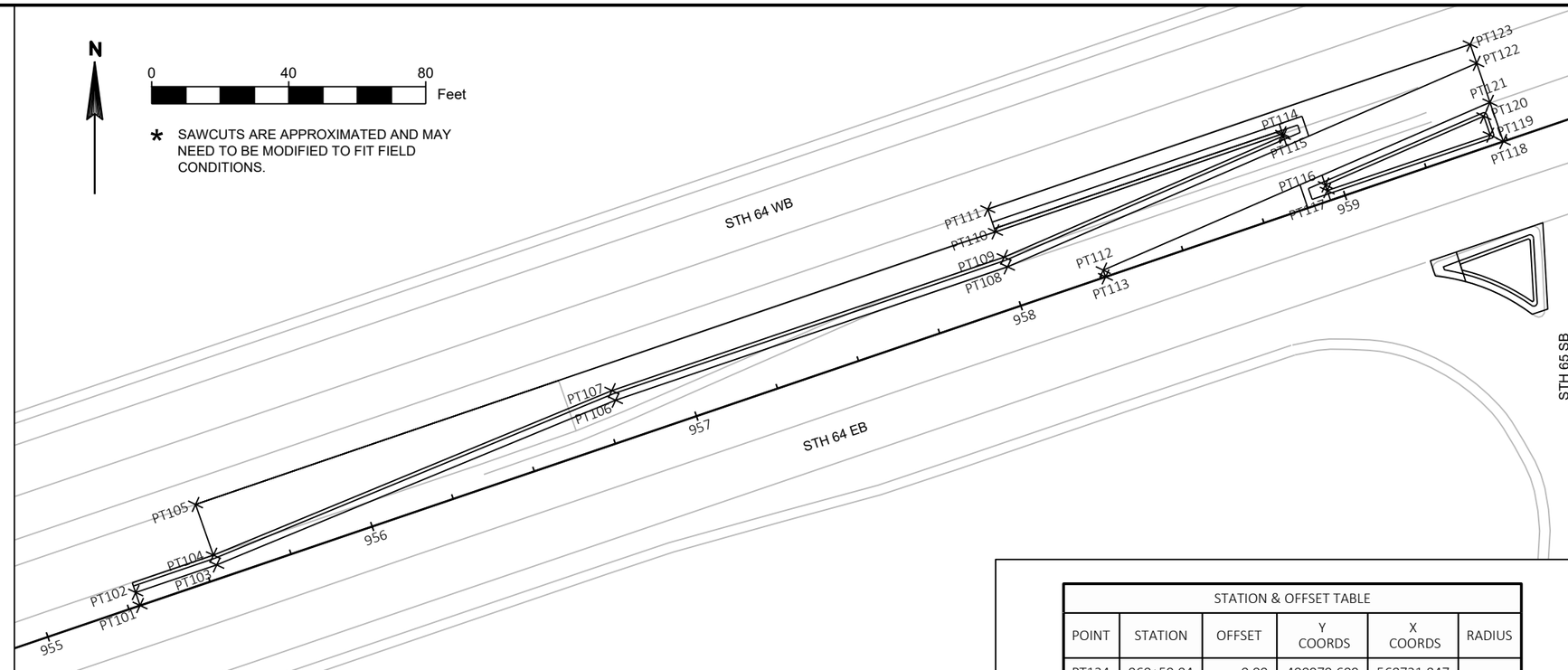

2

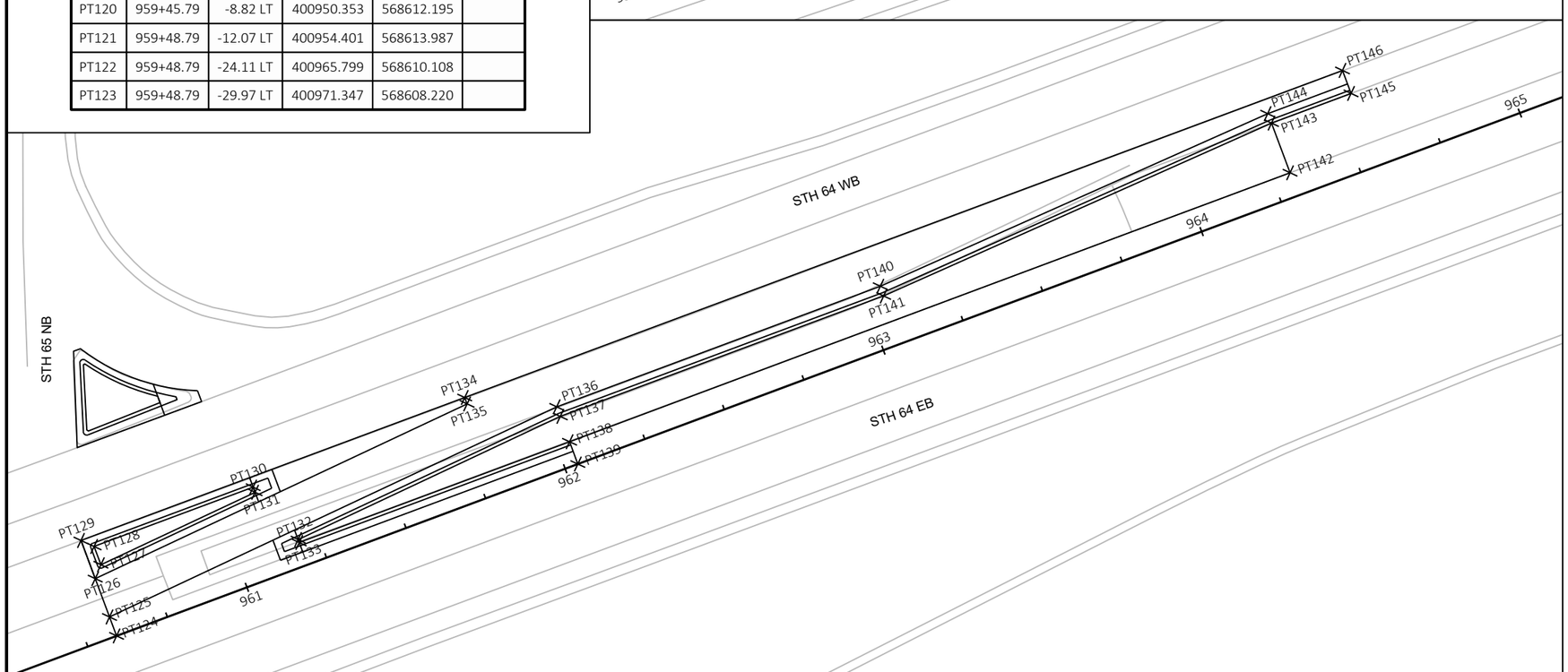

STATION & OFFSET TABLE					
POINT	STATION	OFFSET	Y COORDS	X COORDS	RADIUS
PT124	960+59.04	0.00	400979.609	568721.847	
PT125	960+59.04	-5.96 LT	400985.192	568719.766	
PT126	960+59.04	-18.00 LT	400996.475	568715.560	
PT127	960+62.04	-21.26 LT	401000.576	568717.233	
PT128	960+62.04	-27.00 LT	401005.956	568715.227	
PT129	960+59.04	-30.00 LT	401007.719	568711.368	
PT130	961+12.04	-27.00 LT	401023.421	568762.078	
PT131	961+12.04	-25.40 LT	401021.919	568762.638	
PT132	961+19.04	-7.91 LT	401007.983	568775.303	
PT133	961+19.04	-7.00 LT	401007.126	568775.623	
PT134	961+79.61	-30.00 LT	401049.838	568824.352	
PT135	961+79.61	-27.98 LT	401047.944	568825.058	
PT136	962+04.04	-17.96 LT	401047.085	568851.441	
PT137	962+04.04	-14.95 LT	401044.265	568852.492	
PT138	962+04.00	-7.00 LT	401036.803	568855.233	
PT139	962+03.97	0.00	401030.236	568857.656	
PT140	963+05.72	-17.96 LT	401082.605	568946.724	
PT141	963+05.65	-14.95 LT	401079.760	568947.710	
PT142	964+30.45	-7.15 LT	401116.042	569067.375	
PT143	964+30.44	-22.76 LT	401130.671	569061.908	
PT144	964+30.35	-25.76 LT	401133.449	569060.772	
PT145	964+55.44	-22.77 LT	401139.406	569085.332	
PT146	964+55.44	-30.00 LT	401146.185	569082.805	

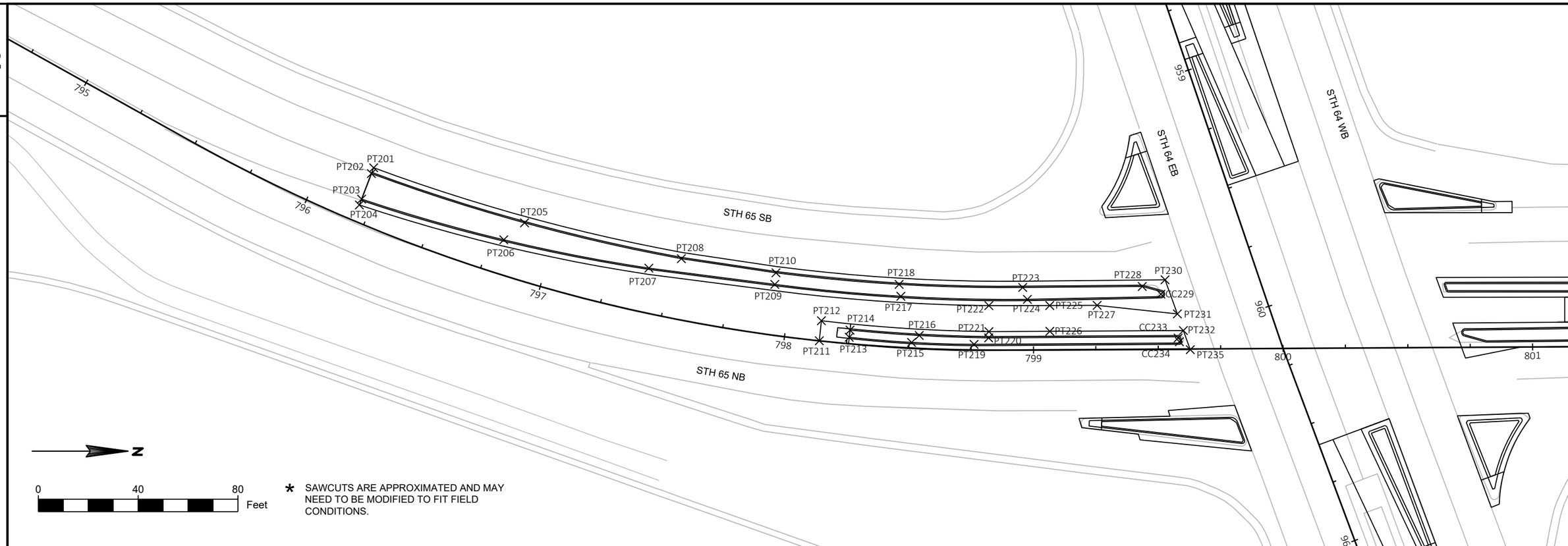

* SAWCUTS ARE APPROXIMATED AND MAY NEED TO BE MODIFIED TO FIT FIELD CONDITIONS.

STATION & OFFSET TABLE					
POINT	STATION	OFFSET	Y COORDS	X COORDS	RADIUS
CC229	959+81.47	39.33 RT	400916.267	568661.485	1
CC233	960+00.35	38.47 RT	400923.166	568679.078	0.5
CC234	960+01.94	38.44 RT	400923.706	568680.574	0.5
PT201	958+31.89	321.62 RT	400600.837	568610.820	
PT202	958+33.81	323.22 RT	400599.942	568613.154	
PT203	958+42.25	330.25 RT	400596.007	568623.411	
PT204	958+44.18	331.85 RT	400595.111	568625.748	
PT205	958+72.27	271.50 RT	400661.301	568632.897	
PT206	958+76.02	281.59 RT	400652.955	568639.704	
PT207	959+05.50	230.21 RT	400711.090	568651.054	
PT208	959+06.11	216.64 RT	400724.137	568647.261	
PT209	959+27.92	184.54 RT	400761.552	568657.564	

STATION & OFFSET TABLE					
POINT	STATION	OFFSET	Y COORDS	X COORDS	RADIUS
PT210	959+23.68	182.59 RT	400762.031	568652.924	
PT211	959+55.06	174.92 RT	400779.398	568680.169	
PT212	959+47.73	171.55 RT	400780.233	568672.143	
PT213	959+57.59	163.12 RT	400791.381	568678.759	
PT214	959+54.98	161.91 RT	400791.687	568675.897	
PT215	959+67.61	140.15 RT	400816.355	568680.843	
PT216	959+65.95	136.34 RT	400819.431	568678.046	
PT217	959+48.71	138.26 RT	400812.055	568662.343	
PT218	959+43.98	137.38 RT	400811.364	568657.580	
PT219	959+76.40	116.68 RT	400841.404	568681.601	
PT220	959+75.82	110.32 RT	400847.241	568679.005	
PT221	959+73.49	109.40 RT	400847.361	568676.504	

STATION & OFFSET TABLE					
POINT	STATION	OFFSET	Y COORDS	X COORDS	RADIUS
PT222	959+63.60	106.07 RT	400847.327	568666.074	
PT223	959+61.09	90.88 RT	400860.901	568658.801	
PT224	959+66.21	90.65 RT	400862.768	568663.571	
PT225	959+71.42	82.97 RT	400871.720	568666.034	
PT226	959+81.23	86.24 RT	400871.778	568676.369	
PT227	959+77.48	64.94 RT	400890.734	568665.956	
PT228	959+76.14	45.40 RT	400908.808	568658.395	
PT230	959+76.57	35.92 RT	400917.921	568655.748	
PT231	959+91.08	35.64 RT	400922.856	568669.398	
PT232	959+98.18	35.51 RT	400925.269	568676.072	
PT235	960+06.34	35.35 RT	400928.043	568683.747	

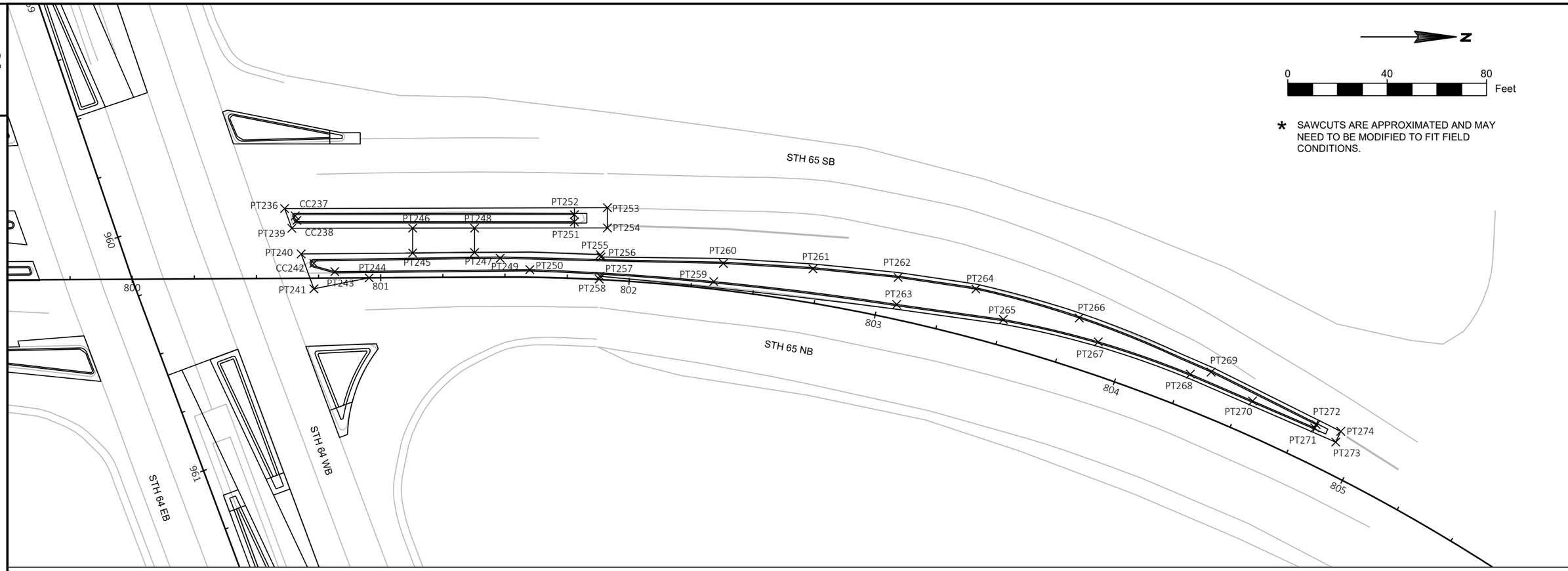

STATION & OFFSET TABLE					
POINT	STATION	OFFSET	Y COORDS	X COORDS	RADIUS
CC237	960+14.85	-70.31 LT	401030.813	568657.769	0.5
CC238	960+16.79	-70.35 LT	401031.484	568659.594	0.5
CC242	960+37.37	-70.72 LT	401038.307	568676.840	1
PT236	960+10.67	-67.21 LT	401026.540	568654.811	
PT239	960+21.05	-67.33 LT	401029.430	568662.738	
PT240	960+32.05	-67.25 LT	401033.200	568673.074	
PT241	960+46.97	-67.14 LT	401038.311	568687.090	
PT243	960+43.44	-77.43 LT	401046.717	568680.186	
PT244	960+50.59	-89.52 LT	401060.542	568682.667	
PT245	960+47.37	-109.41 LT	401078.053	568672.703	
PT246	960+38.00	-112.92 LT	401078.066	568662.691	
PT247	960+55.88	-132.82 LT	401102.957	568672.498	
PT248	960+46.67	-136.26 LT	401102.970	568662.667	

STATION & OFFSET TABLE					
POINT	STATION	OFFSET	Y COORDS	X COORDS	RADIUS
PT249	960+61.64	-141.67 LT	401113.259	568674.800	
PT250	960+70.08	-151.26 LT	401125.202	568679.364	
PT251	960+58.35	-174.78 LT	401143.140	568660.154	
PT252	960+55.63	-175.79 LT	401143.138	568657.256	
PT253	960+57.68	-189.22 LT	401156.436	568654.479	
PT254	960+65.30	-186.38 LT	401156.440	568662.615	
PT255	960+74.32	-179.90 LT	401153.522	568673.332	
PT256	960+77.45	-183.43 LT	401153.855	568674.293	
PT257	960+82.45	-176.78 LT	401153.433	568682.042	
PT258	960+83.39	-176.07 LT	401153.097	568683.167	
PT259	961+00.45	-218.93 LT	401199.218	568684.183	
PT260	960+94.95	-225.09 LT	401203.070	568676.879	
PT261	961+09.60	-258.12 LT	401239.132	568679.065	

STATION & OFFSET TABLE					
POINT	STATION	OFFSET	Y COORDS	X COORDS	RADIUS
PT262	961+24.80	-289.00 LT	401273.382	568682.522	
PT263	961+34.78	-284.68 LT	401272.818	568693.382	
PT264	961+40.07	-316.68 LT	401304.648	568687.161	
PT265	961+55.42	-322.77 LT	401315.715	568699.417	
PT266	961+65.53	-351.60 LT	401346.259	568698.821	
PT267	961+77.20	-355.42 LT	401353.922	568708.423	
PT268	962+02.30	-385.61 LT	401390.972	568721.388	
PT269	962+04.44	-393.72 LT	401399.320	568720.567	
PT270	962+21.17	-405.29 LT	401416.002	568732.201	
PT271	962+40.05	-424.96 LT	401441.031	568743.014	
PT272	962+39.03	-425.95 LT	401441.603	568741.717	
PT273	962+48.36	-430.87 LT	401449.471	568748.739	
PT274	962+45.00	-434.28 LT	401451.492	568744.399	

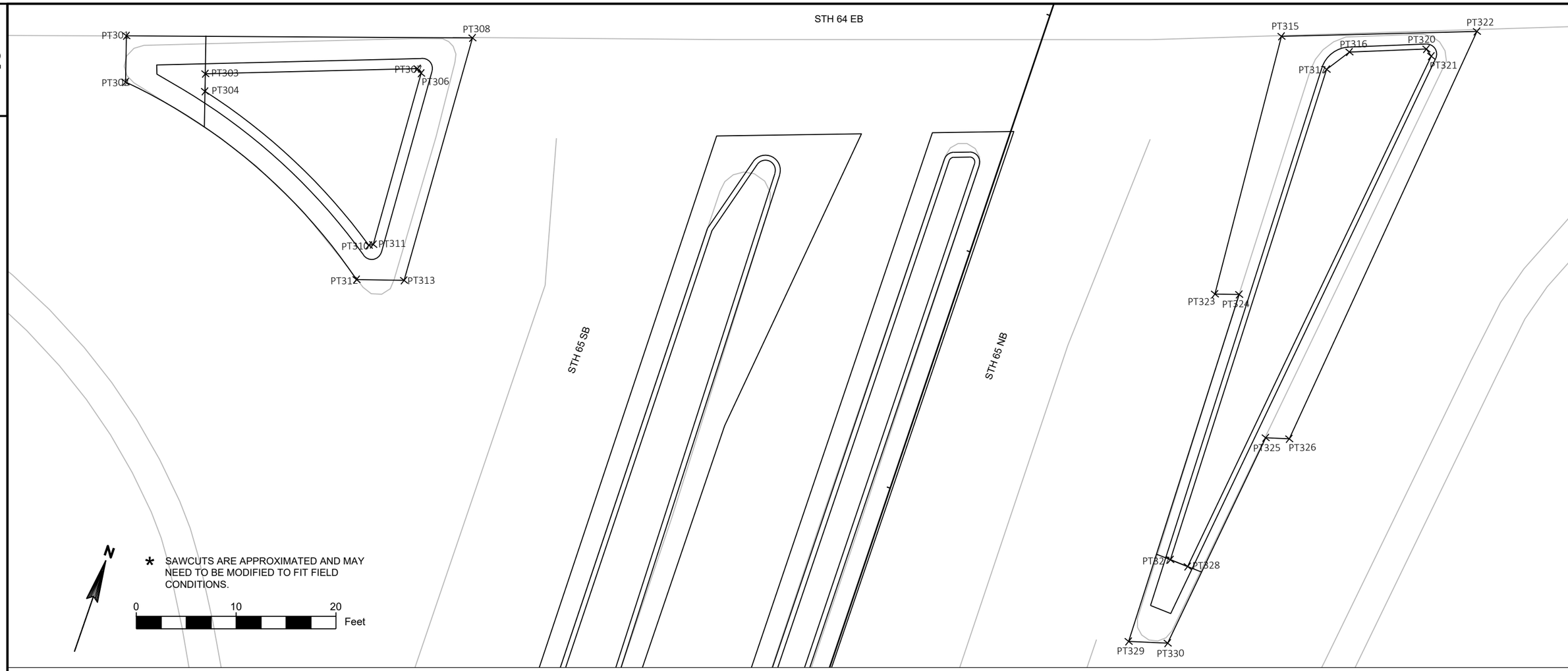

STATION & OFFSET TABLE							
POINT	STATION	OFFSET	STATION	OFFSET	Y COORDS	X COORDS	RADIUS
CC314	958+92.47	83.32 RT	798+80.19	-92.50 LT	400845.956	568591.399	61.24
PT301	959+17.41	26.09 RT	799+43.47	-86.99 LT	400908.166	568596.574	
PT302	959+17.34	30.72 RT	799+39.06	-85.59 LT	400903.762	568598.002	
PT303	959+25.33	29.86 RT	799+42.40	-78.28 LT	400907.144	568605.288	
PT304	959+25.30	31.63 RT	799+40.72	-77.75 LT	400905.467	568605.832	
PT306	959+46.94	29.74 RT	799+49.36	-57.82 LT	400914.228	568625.711	
PT307	959+46.58	29.27 RT	799+49.68	-58.31 LT	400914.549	568625.218	
PT308	959+52.08	26.18 RT	799+54.36	-54.08 LT	400919.250	568629.422	
PT310	959+41.77	47.00 RT	799+31.35	-57.26 LT	400896.221	568626.374	
PT311	959+42.21	46.91 RT	799+31.57	-56.87 LT	400896.441	568626.763	

STATION & OFFSET TABLE							
POINT	STATION	OFFSET	STATION	OFFSET	Y COORDS	X COORDS	RADIUS
PT312	959+40.55	50.44 RT	799+27.70	-57.34 LT	400892.573	568626.323	
PT313	959+45.31	50.50 RT	799+29.15	-52.80 LT	400894.047	568630.853	
PT315	960+32.36	26.16 RT	799+80.44	22.65 RT	400945.784	568705.993	
PT316	960+39.13	27.90 RT	799+81.13	29.60 RT	400946.514	568712.940	
PT317	960+36.80	29.58 RT	799+78.75	27.99 RT	400944.126	568711.347	
PT320	960+46.84	27.79 RT	799+83.88	36.81 RT	400949.311	568720.132	
PT321	960+47.31	28.53 RT	799+83.35	37.50 RT	400948.786	568720.827	
PT322	960+51.95	26.16 RT	799+87.17	41.04 RT	400952.621	568724.346	
PT323	960+25.05	51.81 RT	799+53.83	24.60 RT	400919.194	568708.098	
PT324	960+27.48	51.91 RT	799+54.57	26.91 RT	400919.946	568710.408	

STATION & OFFSET TABLE							
POINT	STATION	OFFSET	STATION	OFFSET	Y COORDS	X COORDS	RADIUS
PT325	960+29.77	66.33 RT	799+41.82	34.02 RT	400907.231	568717.597	
PT326	960+32.12	66.50 RT	799+42.47	36.29 RT	400907.899	568719.859	
PT327	960+19.92	78.31 RT	799+27.19	28.88 RT	400892.570	568712.545	
PT328	960+21.63	79.04 RT	799+27.09	30.74 RT	400892.485	568714.405	
PT329	0+00.00	0.00	799+18.09	27.54 RT	400883.466	568711.258	
PT330	960+19.43	86.66 RT	799+19.17	31.30 RT	400884.573	568715.012	

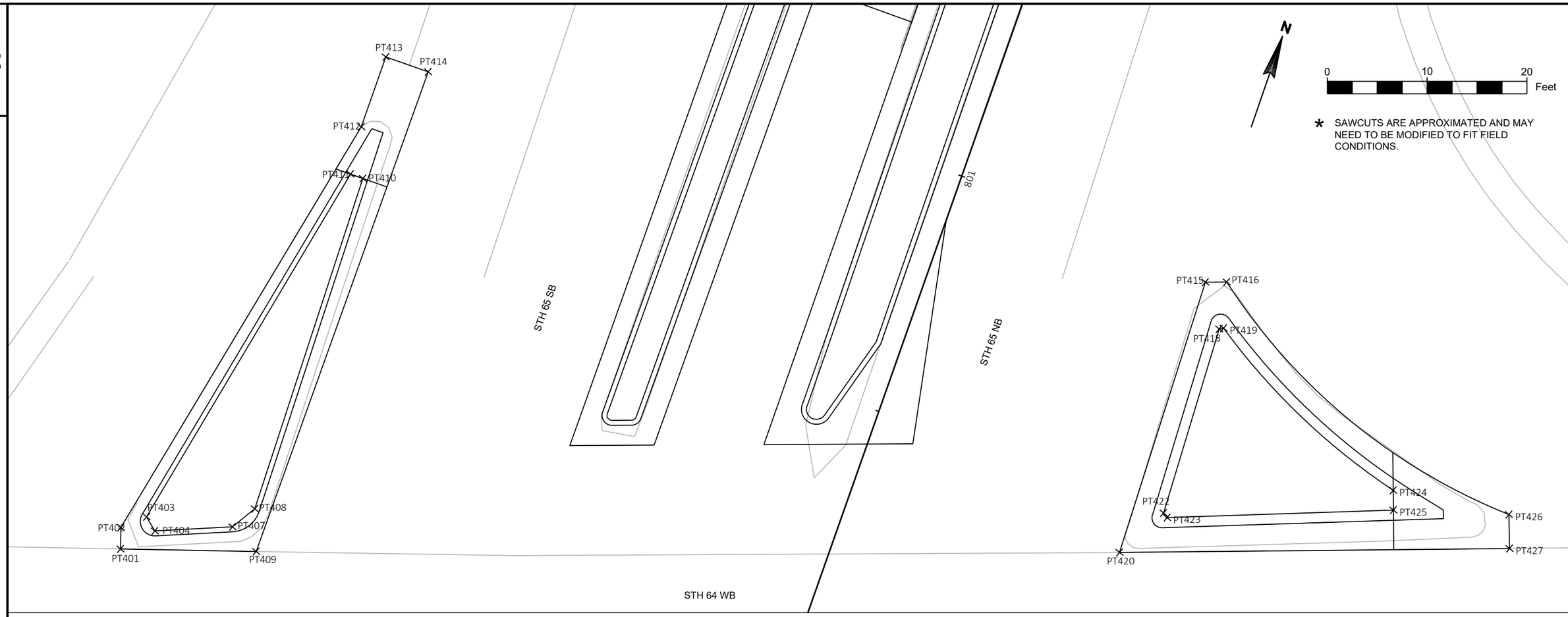

2

STATION & OFFSET TABLE							
POINT	STATION	OFFSET	STATION	OFFSET	Y COORDS	X COORDS	RADIUS
CC428	961+33.00	-117.47 LT	801+50.36	67.77 RT	401115.515	568750.124	67.30
PT401	959+65.84	-56.10 LT	800+36.76	-67.06 LT	401001.574	568615.949	
PT402	959+65.85	-58.26 LT	800+38.82	-67.74 LT	401003.627	568615.257	
PT403	959+68.40	-59.36 LT	800+40.67	-65.67 LT	401005.489	568617.318	
PT404	959+69.25	-57.96 LT	800+39.61	-64.42 LT	401004.437	568618.572	
PT407	959+77.02	-58.50 LT	800+42.58	-57.22 LT	401007.453	568625.758	
PT408	959+79.22	-60.35 LT	800+45.03	-55.72 LT	401009.906	568627.246	
PT409	959+79.43	-56.07 LT	800+41.04	-54.16 LT	401005.928	568628.825	
PT410	959+89.50	-93.62 LT	800+79.84	-56.50 LT	401044.720	568626.253	
PT411	959+88.26	-94.04 LT	800+79.84	-57.81 LT	401044.711	568624.946	

STATION & OFFSET TABLE							
POINT	STATION	OFFSET	STATION	OFFSET	Y COORDS	X COORDS	RADIUS
PT412	959+89.25	-98.80 LT	800+84.67	-58.37 LT	401049.539	568624.357	
PT413	959+91.59	-105.83 LT	800+92.09	-58.38 LT	401056.956	568624.306	
PT414	959+95.86	-104.41 LT	800+92.10	-53.88 LT	401056.987	568628.804	
PT415	960+76.47	-82.99 LT	800+98.09	26.55 RT	401063.459	568709.197	
PT416	960+78.61	-82.98 LT	800+98.82	28.56 RT	401064.199	568711.200	
PT418	960+77.80	-78.28 LT	800+94.13	29.41 RT	401059.516	568712.081	
PT419	960+78.24	-78.35 LT	800+94.35	29.80 RT	401059.734	568712.469	
PT420	960+67.54	-56.01 LT	800+69.69	27.44 RT	401035.065	568710.249	
PT422	960+72.00	-59.91 LT	800+74.88	30.28 RT	401040.273	568713.067	
PT423	960+72.35	-59.44 LT	800+74.56	30.77 RT	401039.957	568713.557	

STATION & OFFSET TABLE							
POINT	STATION	OFFSET	STATION	OFFSET	Y COORDS	X COORDS	RADIUS
PT424	960+95.03	-61.90 LT	800+84.67	51.23 RT	401050.186	568733.950	
PT425	960+95.02	-59.92 LT	800+82.81	51.90 RT	401048.330	568734.637	
PT426	961+06.59	-59.34 LT	800+86.24	62.96 RT	401051.821	568745.679	
PT427	961+06.61	-55.93 LT	800+83.04	64.15 RT	401048.631	568746.886	

2

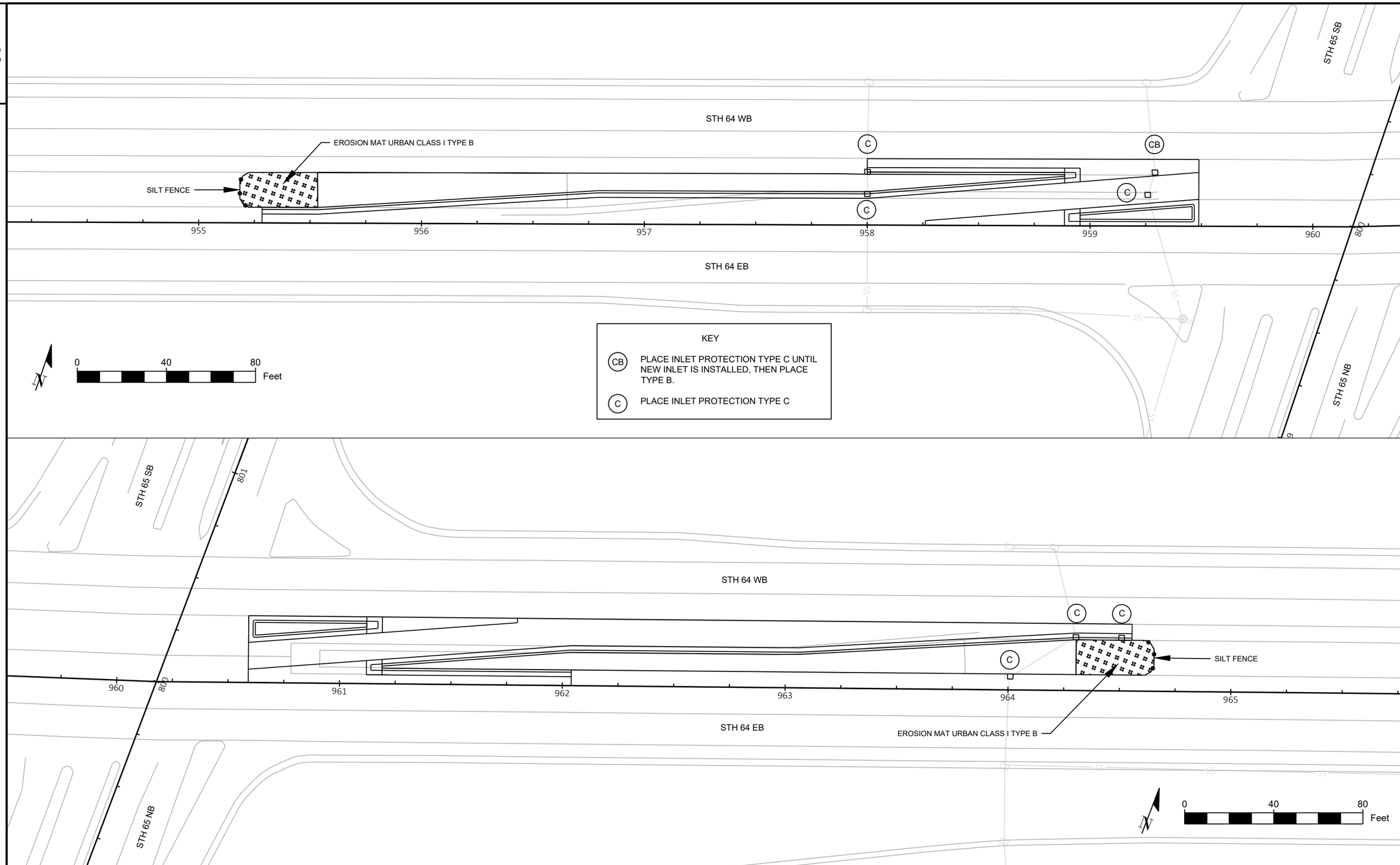

2

PROJECT NO:8110-01-76	HWY:STH 64	COUNTY:ST. CROIX	EROSION CONTROL - STH 64	SHEET 13	E

FILE NAME : D:\WORK\81100106 C3D\SHEETSPLAN\022001-EC.DWG
LAYOUT NAME - 03
PLOT DATE : 4/28/2021 3:31 PM PLOT BY : MUNDEN, ALLISSA L PLOT NAME : PLOT SCALE : 1IN = 10 FT

2

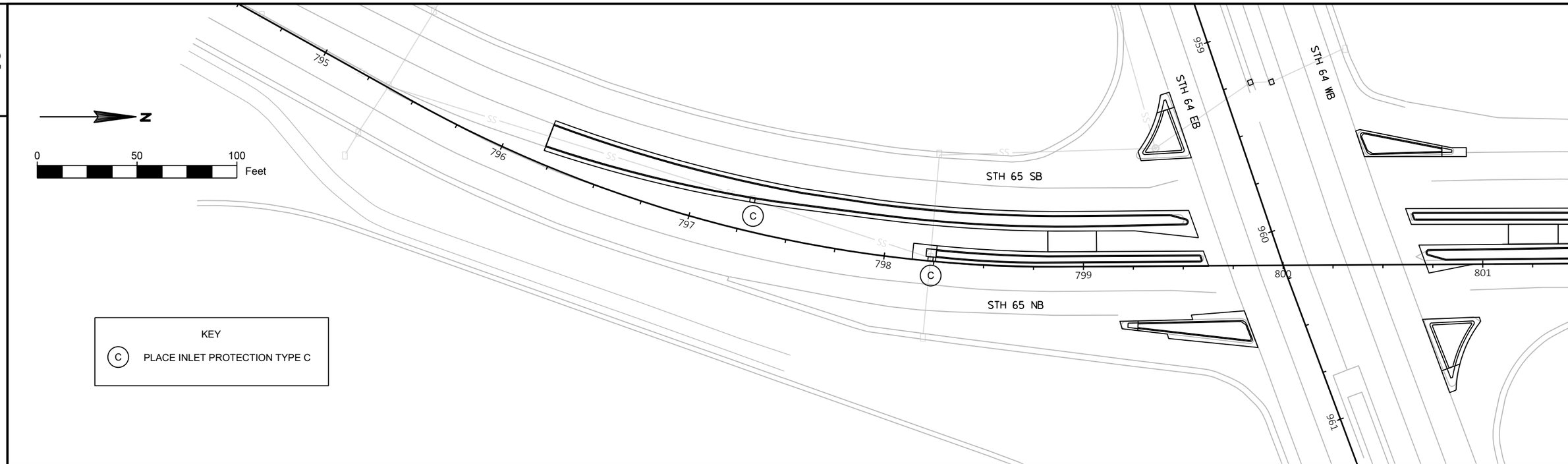

2

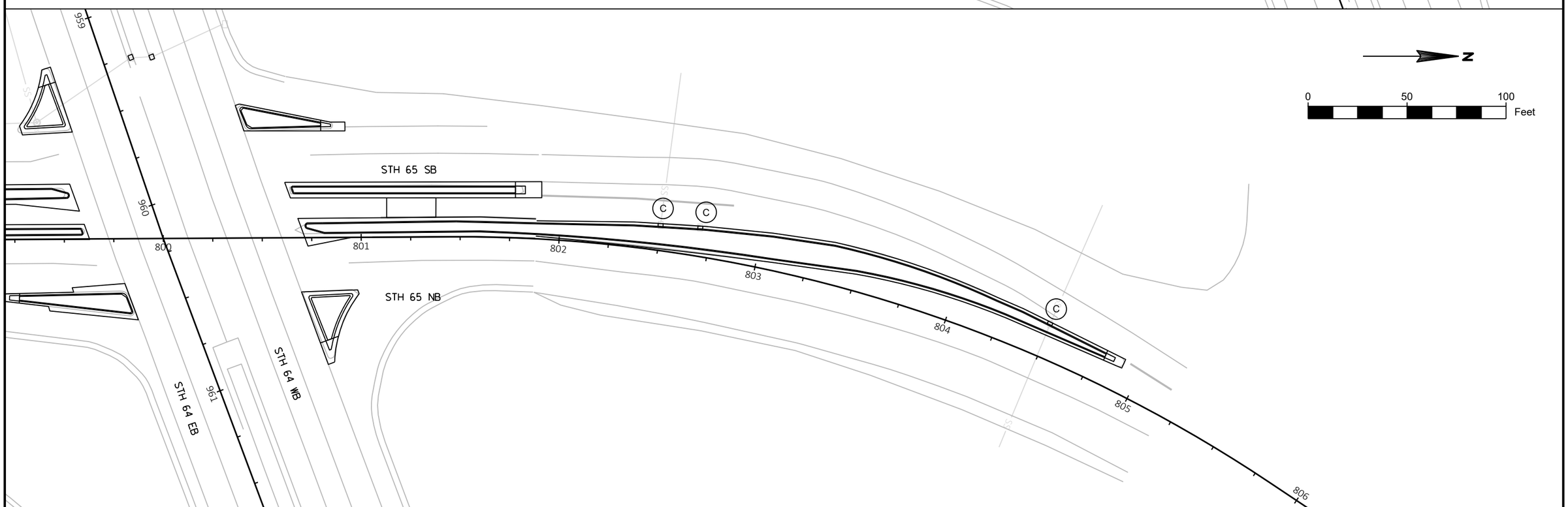

PROJECT NO: 8110-01-76	HWY: STH 64	COUNTY: ST. CROIX	EROSION CONTROL - STH 65	SHEET 14	E

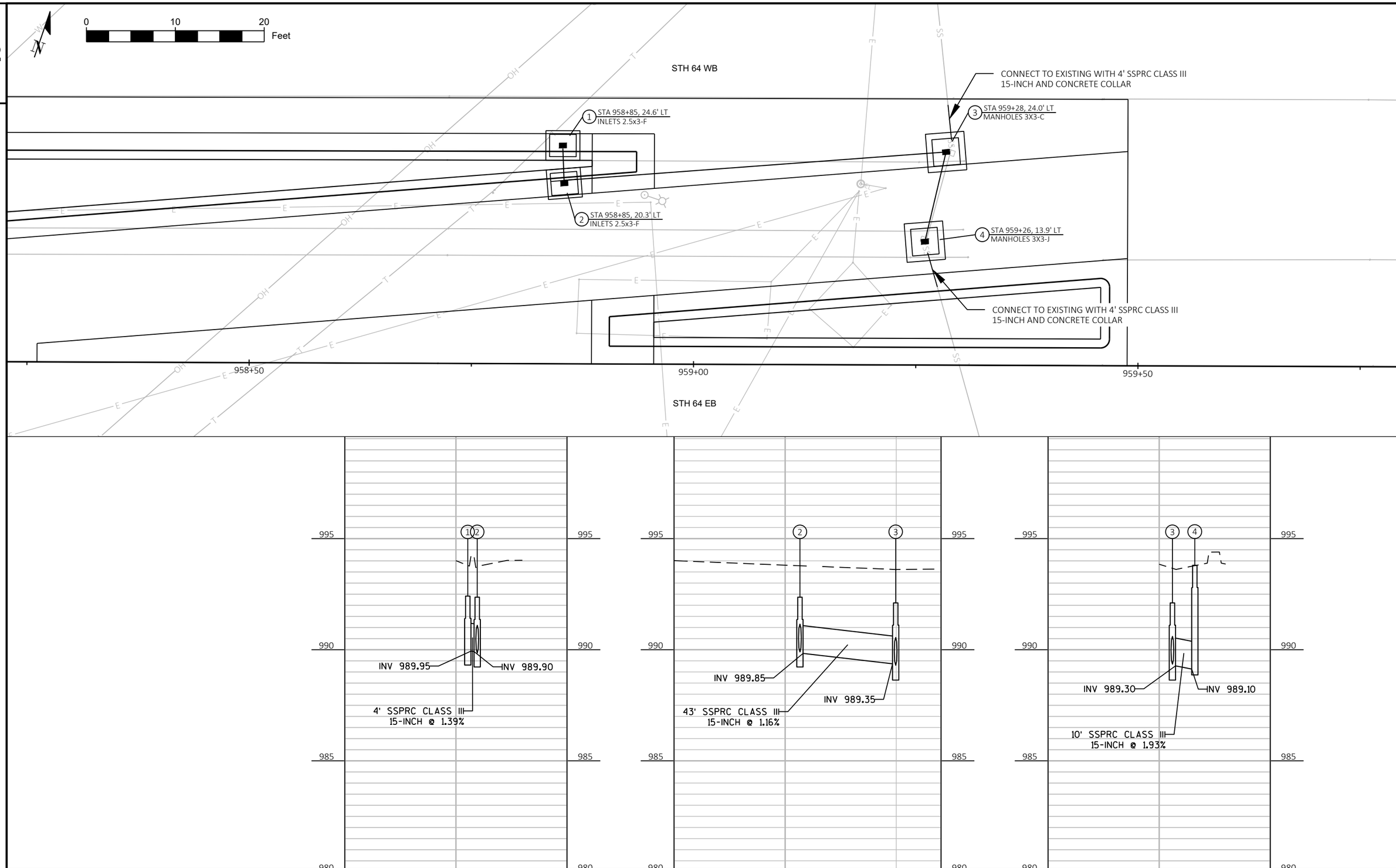

PROJECT NO:8110-01-76	HWY:STH 64	COUNTY:ST. CROIX	STORM SEWER	SHEET 15	E

FILE NAME : D:\WORK\81100106 C3D\SHEETSPLAN\022501-SS.DWG
LAYOUT NAME - 022501-SS - STORM SEWER

PLOT DATE : 9/7/2021 11:19 AM PLOT BY : MUNDEN, ALLISSA L PLOT NAME : PLOT SCALE : 1IN = 10 FT

WISDOT/CADDS SHEET 42

2

0 50 100 Feet

N

STH 64, 958+00, 22.8' LT
ADJUSTING INLET COVERS (5)

STH 64, 958+00, 14' LT
ADJUSTING INLET COVERS (6)

STH 65, 798+23, 0.25' RT
ADJUSTING INLET COVERS (8)

STH 65, 797+29, 14.7' LT
ADJUSTING INLET COVERS (7)

STH 64 WB

STH 64 EB

STH 65 SB

STH 65 NB

957+50 958+00 958+50 959+00 959+50 960+00 960+50

797+00 797+50 798+00 798+50 799+00 799+50 800+00 800+50 801+00 801+50

STH 65, 804+49, 16.5' LT
ADJUSTING INLET COVERS (11)

STH 65, 802+69, 13.7' LT
ADJUSTING INLET COVERS (10)

STH 65, 802+50, 11.5' LT
ADJUSTING INLET COVERS (9)

802+00 802+50 803+00 803+50 804+00 804+50 805+00

STH 64, 964+50, 22.8' LT
ADJUSTING INLET COVERS (13)

STH 65, 964+30, 22.8' LT
ADJUSTING INLET COVERS (12)

STH 64 WB

STH 64 EB

960+50 961+00 961+50 962+00 962+50 963+00 963+50 964+00 964+50

2

PROJECT NO:8110-01-76	HWY:STH 64	COUNTY:ST. CROIX	STORM SEWER - ADJUSTING INLETS	SHEET 16	E

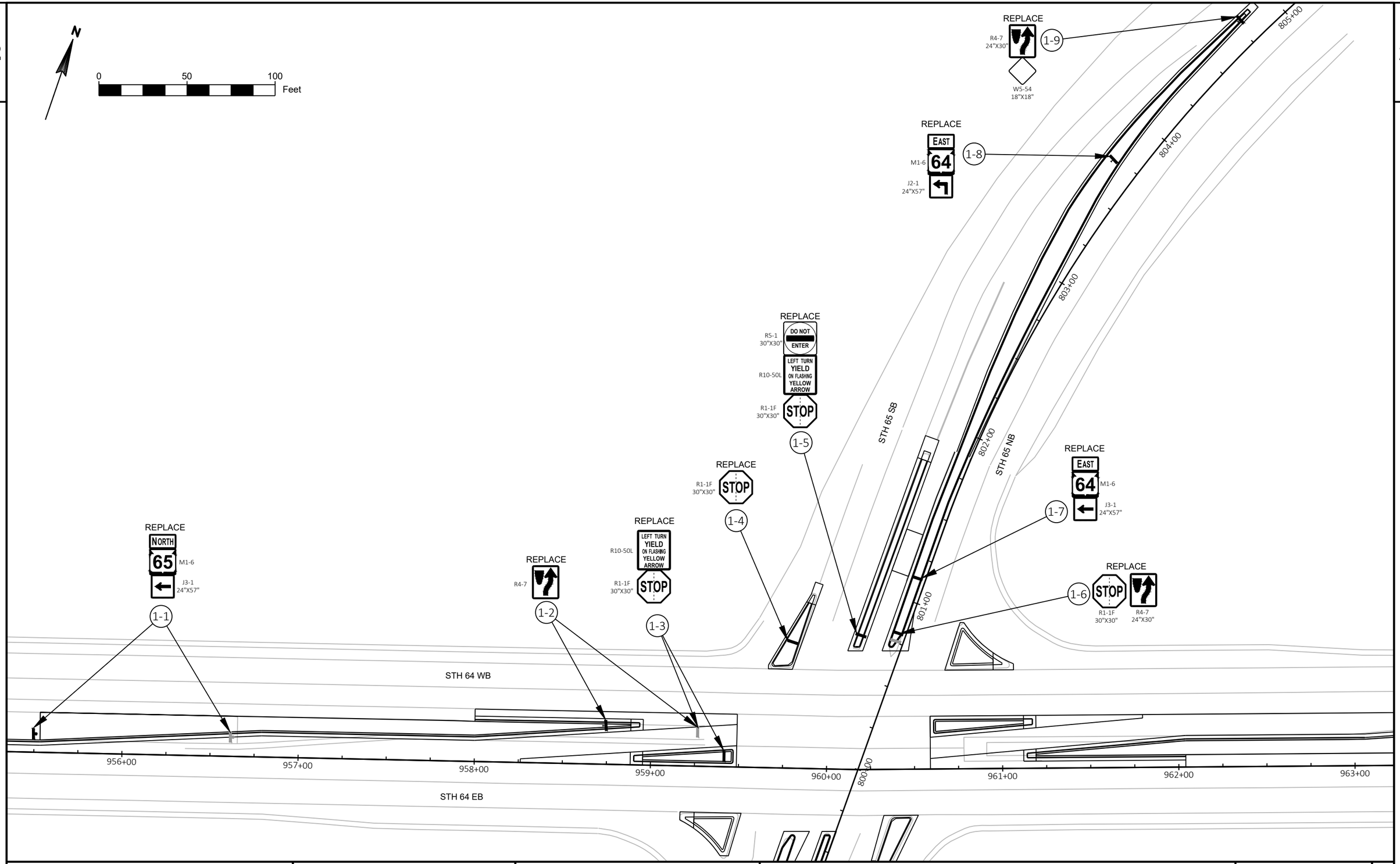

PROJECT NO:8110-01-76	HWY:STH 64	COUNTY:ST. CROIX	PERMANENT SIGNING	SHEET 17	E

FILE NAME : D:\WORK\81100106 C3D\SHEETSPLAN\023201-PS.DWG
LAYOUT NAME - 023201-PS - SIGNS

PLOT DATE : 7/14/2021 12:40 PM PLOT BY : MUNDEN, ALLISSA L PLOT NAME : PLOT SCALE : 1IN = 50 FT

WISDOT/CADDS SHEET 42

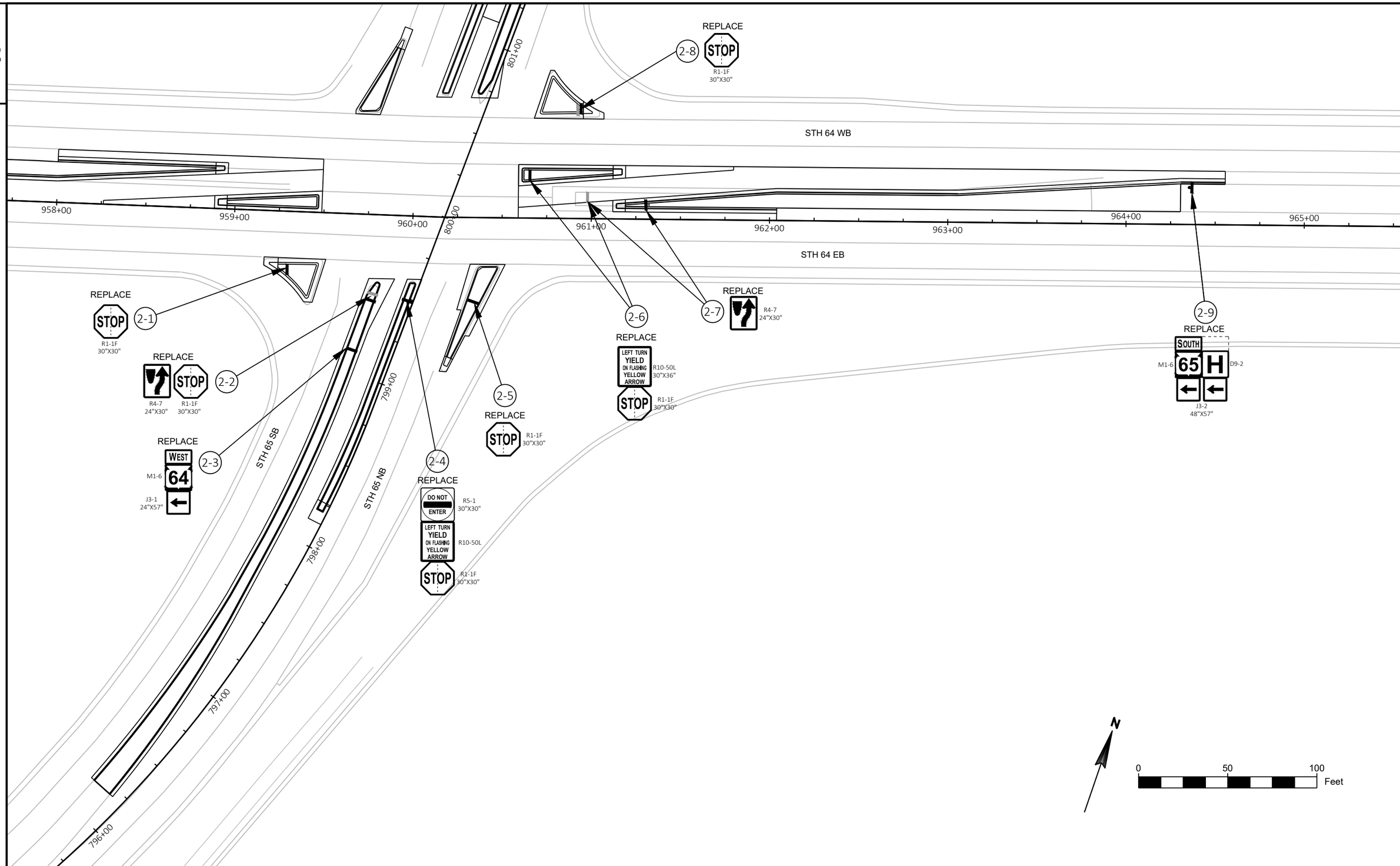

PROJECT NO:8110-01-76	HWY:STH 64	COUNTY:ST. CROIX	PERMANENT SIGNING	SHEET 18	E

2

LEGEND

- SPAN WIRE
- CLASS 4 WOOD POLE
- SIGNAL HEAD, OVERHEAD MOUNT
- LUMINAIRE
- X — SIGNAL HEAD NUMBER
- R — RED CIRCULAR INDICATOR
- Y — YELLOW CIRCULAR INDICATOR
- G — GREEN CIRCULAR INDICATOR
- RA — RED ARROW
- YA — YELLOW ARROW
- FYA — FLASHING YELLOW ARROW
- GA — GREEN ARROW
- LANE DESIGNATION FOR INFO ONLY
- XX R Y G — SIGNAL HEAD TO BE BAGGED
- WORK AREA
- NON-INTRUSIVE DETECTION AREA
- BARRICADE
- TRAFFIC CONTROL DRUM

NOTE: ALL LENSES ARE 12-INCH
GRAYSHADE REPRESENTS EXISTING

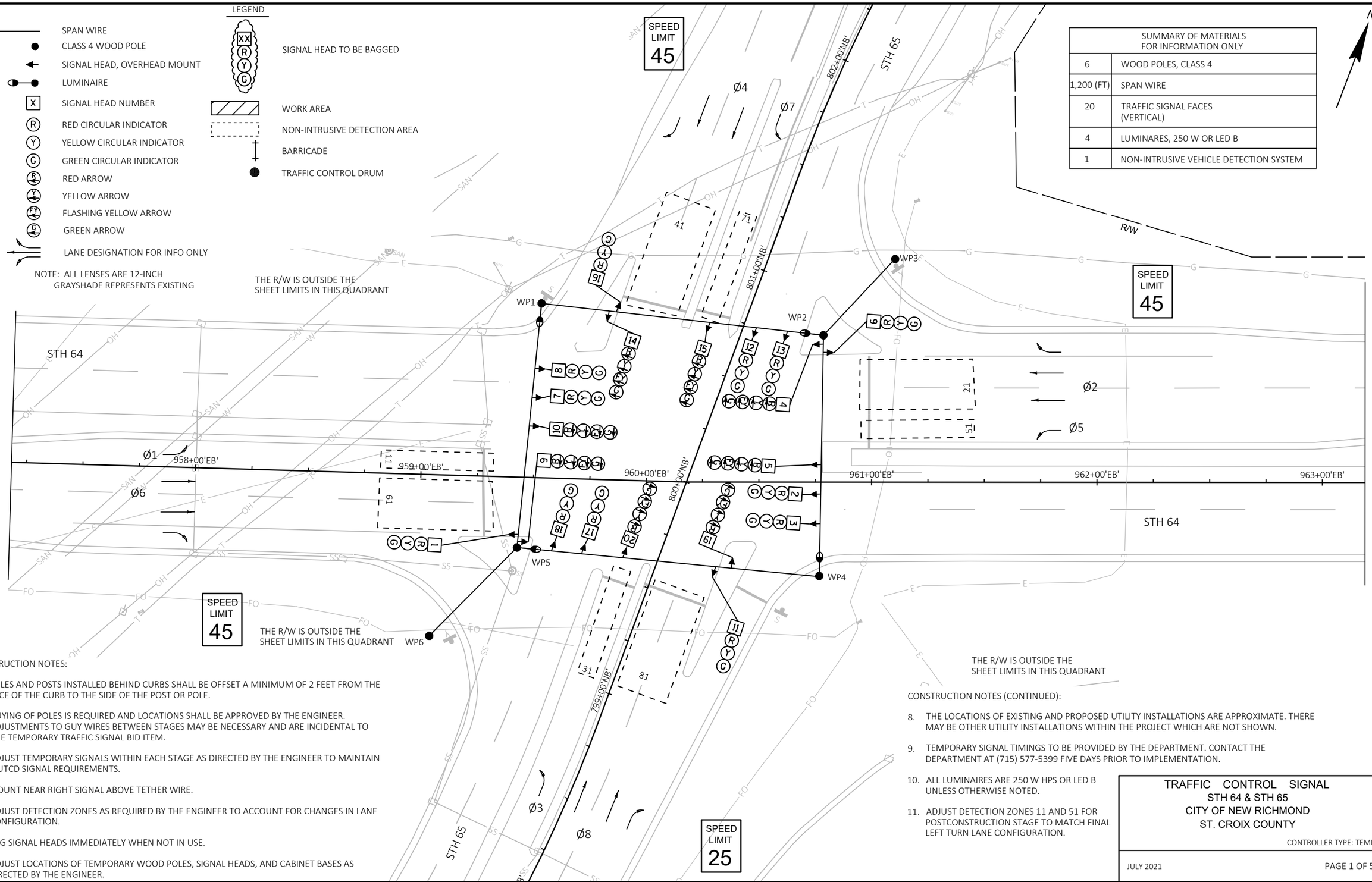

SUMMARY OF MATERIALS FOR INFORMATION ONLY	
6	WOOD POLES, CLASS 4
1,200 (FT)	SPAN WIRE
20	TRAFFIC SIGNAL FACES (VERTICAL)
4	LUMINARES, 250 W OR LED B
1	NON-INTRUSIVE VEHICLE DETECTION SYSTEM

CONSTRUCTION NOTES:

1. POLES AND POSTS INSTALLED BEHIND CURBS SHALL BE OFFSET A MINIMUM OF 2 FEET FROM THE FACE OF THE CURB TO THE SIDE OF THE POST OR POLE.
2. GUYING OF POLES IS REQUIRED AND LOCATIONS SHALL BE APPROVED BY THE ENGINEER. ADJUSTMENTS TO GUY WIRES BETWEEN STAGES MAY BE NECESSARY AND ARE INCIDENTAL TO THE TEMPORARY TRAFFIC SIGNAL BID ITEM.
3. ADJUST TEMPORARY SIGNALS WITHIN EACH STAGE AS DIRECTED BY THE ENGINEER TO MAINTAIN MUTCD SIGNAL REQUIREMENTS.
4. MOUNT NEAR RIGHT SIGNAL ABOVE TETHER WIRE.
5. ADJUST DETECTION ZONES AS REQUIRED BY THE ENGINEER TO ACCOUNT FOR CHANGES IN LANE CONFIGURATION.
6. BAG SIGNAL HEADS IMMEDIATELY WHEN NOT IN USE.
7. ADJUST LOCATIONS OF TEMPORARY WOOD POLES, SIGNAL HEADS, AND CABINET BASES AS DIRECTED BY THE ENGINEER.

CONSTRUCTION NOTES (CONTINUED):

8. THE LOCATIONS OF EXISTING AND PROPOSED UTILITY INSTALLATIONS ARE APPROXIMATE. THERE MAY BE OTHER UTILITY INSTALLATIONS WITHIN THE PROJECT WHICH ARE NOT SHOWN.
9. TEMPORARY SIGNAL TIMINGS TO BE PROVIDED BY THE DEPARTMENT. CONTACT THE DEPARTMENT AT (715) 577-5399 FIVE DAYS PRIOR TO IMPLEMENTATION.
10. ALL LUMINAIRES ARE 250 W HPS OR LED B UNLESS OTHERWISE NOTED.
11. ADJUST DETECTION ZONES 11 AND 51 FOR POSTCONSTRUCTION STAGE TO MATCH FINAL LEFT TURN LANE CONFIGURATION.

TRAFFIC CONTROL SIGNAL
STH 64 & STH 65
CITY OF NEW RICHMOND
ST. CROIX COUNTY

CONTROLLER TYPE: TEMP

JULY 2021 — PAGE 1 OF 5

PROJECT NO: 8110-01-76	HWY: STH 64	COUNTY: ST. CROIX	TEMPORARY TRAFFIC SIGNAL PLAN - PRECONSTRUCTION & POSTCONSTRUCTION	SHEET 19	E

FILE NAME : C:\ONEDRIVE\AECOM\60613980 - STH 64 & STH 65 SIGNAL DESIGN - GENERAL\900_CAD_GIS\910_CAD\SHEETS\024101-ST.DWG
LAYOUT NAME - Precon & Postcon
PLOT DATE : 7/26/2021 4:19 PM PLOT BY : SALOMONSEN, DEREK PLOT NAME : PLOT SCALE : 1IN:40FT
WISDOT/CADDS SHEET 42

2

LEGEND

- SPAN WIRE
- CLASS 4 WOOD POLE
- SIGNAL HEAD, OVERHEAD MOUNT
- LUMINAIRE
- X — SIGNAL HEAD NUMBER
- R — RED CIRCULAR INDICATOR
- Y — YELLOW CIRCULAR INDICATOR
- G — GREEN CIRCULAR INDICATOR
- R — RED ARROW
- Y — YELLOW ARROW
- FY — FLASHING YELLOW ARROW
- G — GREEN ARROW
- LANE DESIGNATION FOR INFO ONLY
- XX R Y G — SIGNAL HEAD TO BE BAGGED
- WORK AREA
- NON-INTRUSIVE DETECTION AREA
- BARRICADE
- TRAFFIC CONTROL DRUM

NOTE: ALL LENSES ARE 12-INCH
GRAYSHADE REPRESENTS EXISTING

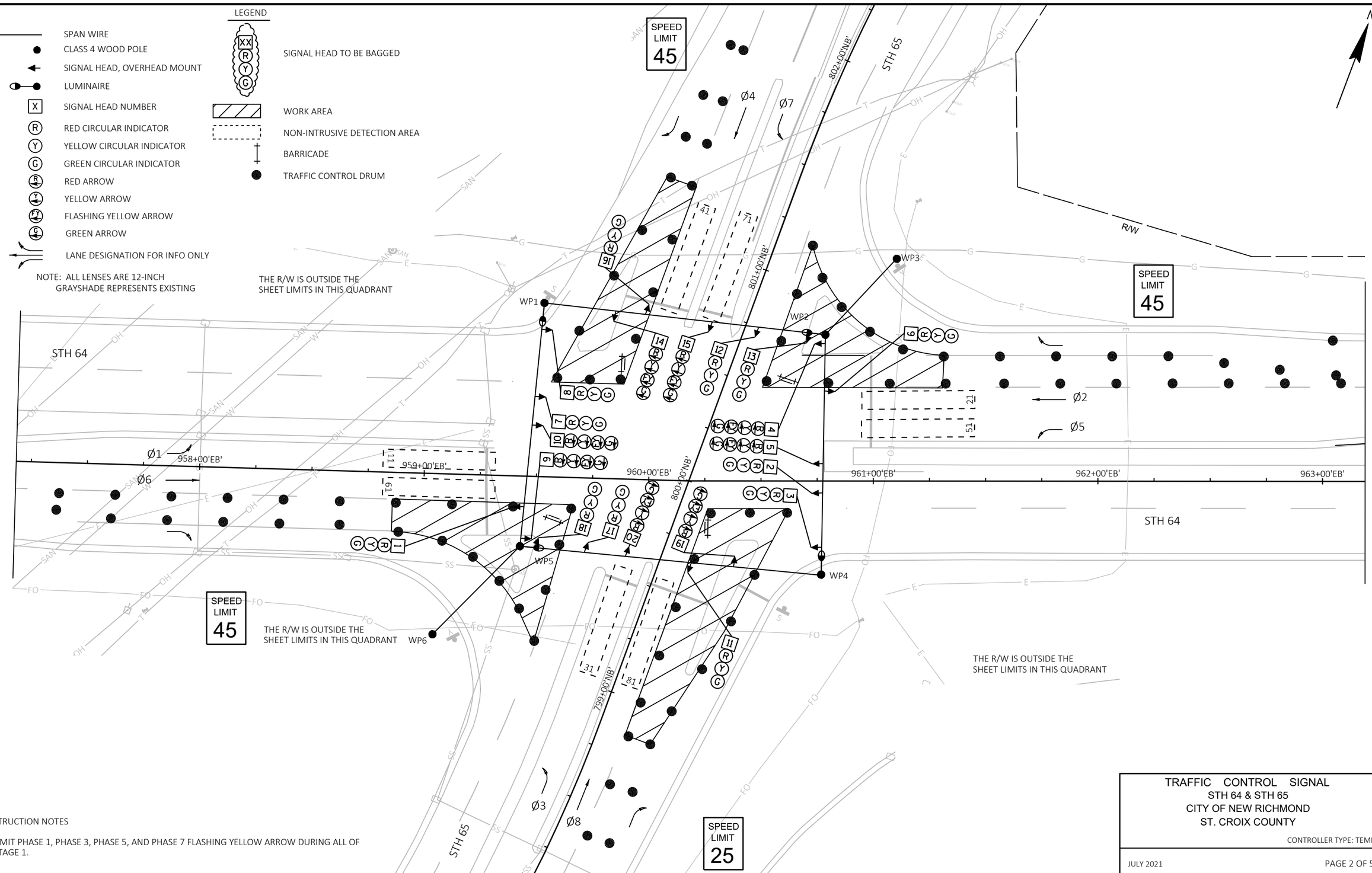

CONSTRUCTION NOTES

1. OMIT PHASE 1, PHASE 3, PHASE 5, AND PHASE 7 FLASHING YELLOW ARROW DURING ALL OF STAGE 1.

TRAFFIC CONTROL SIGNAL
STH 64 & STH 65
CITY OF NEW RICHMOND
ST. CROIX COUNTY

CONTROLLER TYPE: TEMP

JULY 2021

PAGE 2 OF 5

PROJECT NO: 8110-01-76	HWY: STH 64	COUNTY: ST. CROIX	TEMPORARY TRAFFIC SIGNAL PLAN - STAGE 1	SHEET 20	E

FILE NAME : C:\ONEDRIVE\AECOM\60613980 - STH 64 & STH 65 SIGNAL DESIGN - GENERAL\900_CAD_GIS\910_CAD\SHEETS\024101-ST.DWG
LAYOUT NAME - Stage 1
PLOT DATE : 7/26/2021 4:19 PM PLOT BY : SALOMONSEN, DEREK PLOT NAME : PLOT SCALE : 1IN:40FT

WISDOT/CADDS SHEET 42

2

LEGEND

- SPAN WIRE
- CLASS 4 WOOD POLE
- SIGNAL HEAD, OVERHEAD MOUNT
- LUMINAIRE
- X — SIGNAL HEAD NUMBER
- R — RED CIRCULAR INDICATOR
- Y — YELLOW CIRCULAR INDICATOR
- G — GREEN CIRCULAR INDICATOR
- RA — RED ARROW
- YA — YELLOW ARROW
- FYA — FLASHING YELLOW ARROW
- GA — GREEN ARROW
- LANE DESIGNATION FOR INFO ONLY
- XX R Y G — SIGNAL HEAD TO BE BAGGED
- WORK AREA
- NON-INTRUSIVE DETECTION AREA
- BARRICADE
- TRAFFIC CONTROL DRUM

NOTE: ALL LENSES ARE 12-INCH
GRAYSHADE REPRESENTS EXISTING

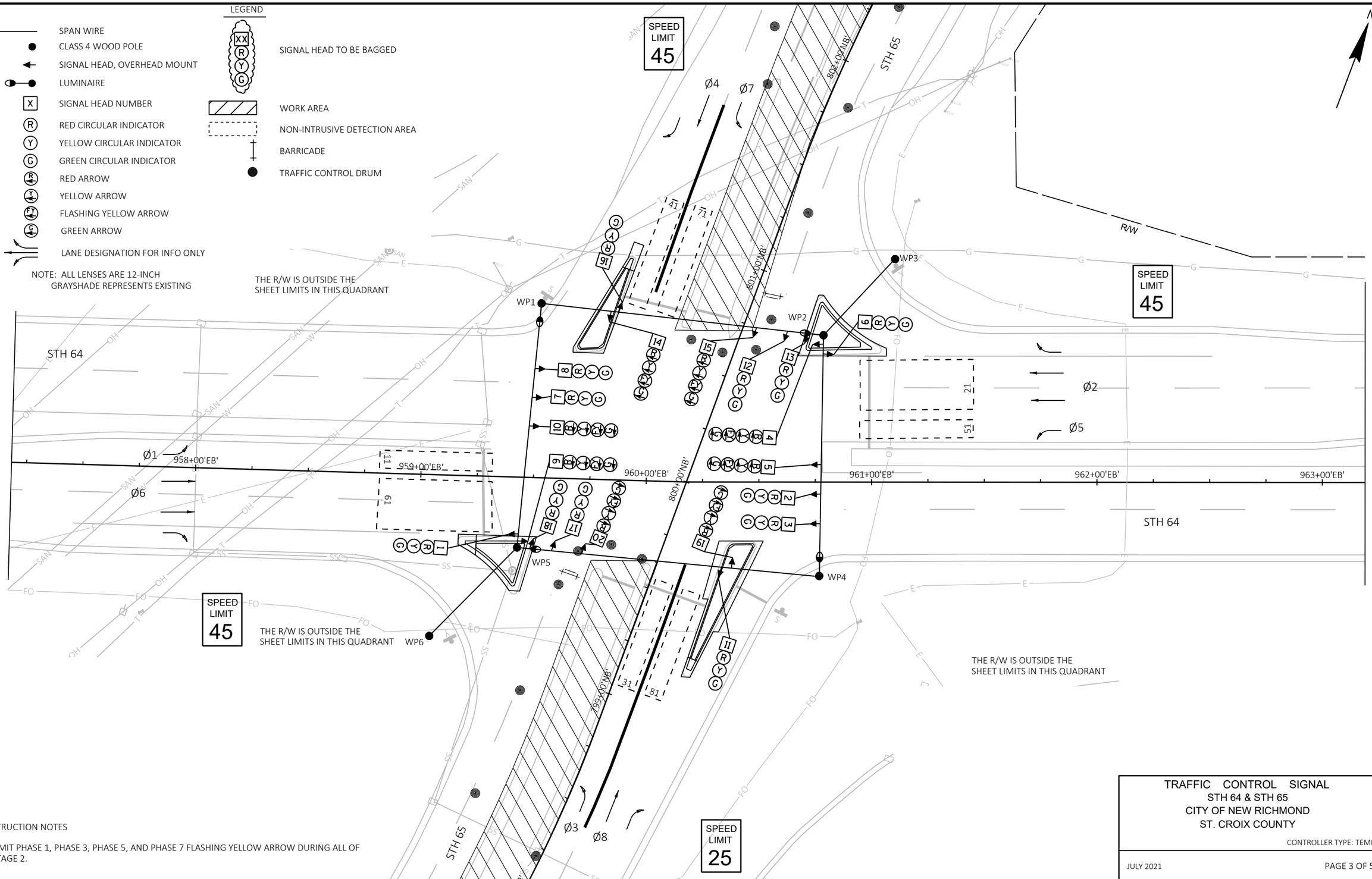

CONSTRUCTION NOTES

1. OMIT PHASE 1, PHASE 3, PHASE 5, AND PHASE 7 FLASHING YELLOW ARROW DURING ALL OF STAGE 2.

TRAFFIC CONTROL SIGNAL
STH 64 & STH 65
CITY OF NEW RICHMOND
ST. CROIX COUNTY

CONTROLLER TYPE: TEMP

JULY 2021 | PAGE 3 OF 5

PROJECT NO: 8110-01-76	HWY: STH 64	COUNTY: ST. CROIX	TEMPORARY TRAFFIC SIGNAL PLAN - STAGE 2	SHEET 21	E

FILE NAME : C:\ONEDRIVE\AECOM\60613980 - STH 64 & STH 65 SIGNAL DESIGN - GENERAL\900_CAD_GIS\910_CAD\SHEETS\024101-ST.DWG
LAYOUT NAME - Stage 2
PLOT DATE : 7/26/2021 4:19 PM PLOT BY : SALOMONSEN, DEREK PLOT NAME : PLOT SCALE : 1IN:40FT

WISDOT/CADDS SHEET 42

2

LEGEND

- SPAN WIRE
- CLASS 4 WOOD POLE
- SIGNAL HEAD, OVERHEAD MOUNT
- LUMINAIRE
- X — SIGNAL HEAD NUMBER
- R — RED CIRCULAR INDICATOR
- Y — YELLOW CIRCULAR INDICATOR
- G — GREEN CIRCULAR INDICATOR
- RA — RED ARROW
- YA — YELLOW ARROW
- FYA — FLASHING YELLOW ARROW
- GA — GREEN ARROW
- LANE DESIGNATION FOR INFO ONLY
- XX R Y G — SIGNAL HEAD TO BE BAGGED
- WORK AREA
- NON-INTRUSIVE DETECTION AREA
- BARRICADE
- TRAFFIC CONTROL DRUM

NOTE: ALL LENSES ARE 12-INCH
GRAYSHADE REPRESENTS EXISTING

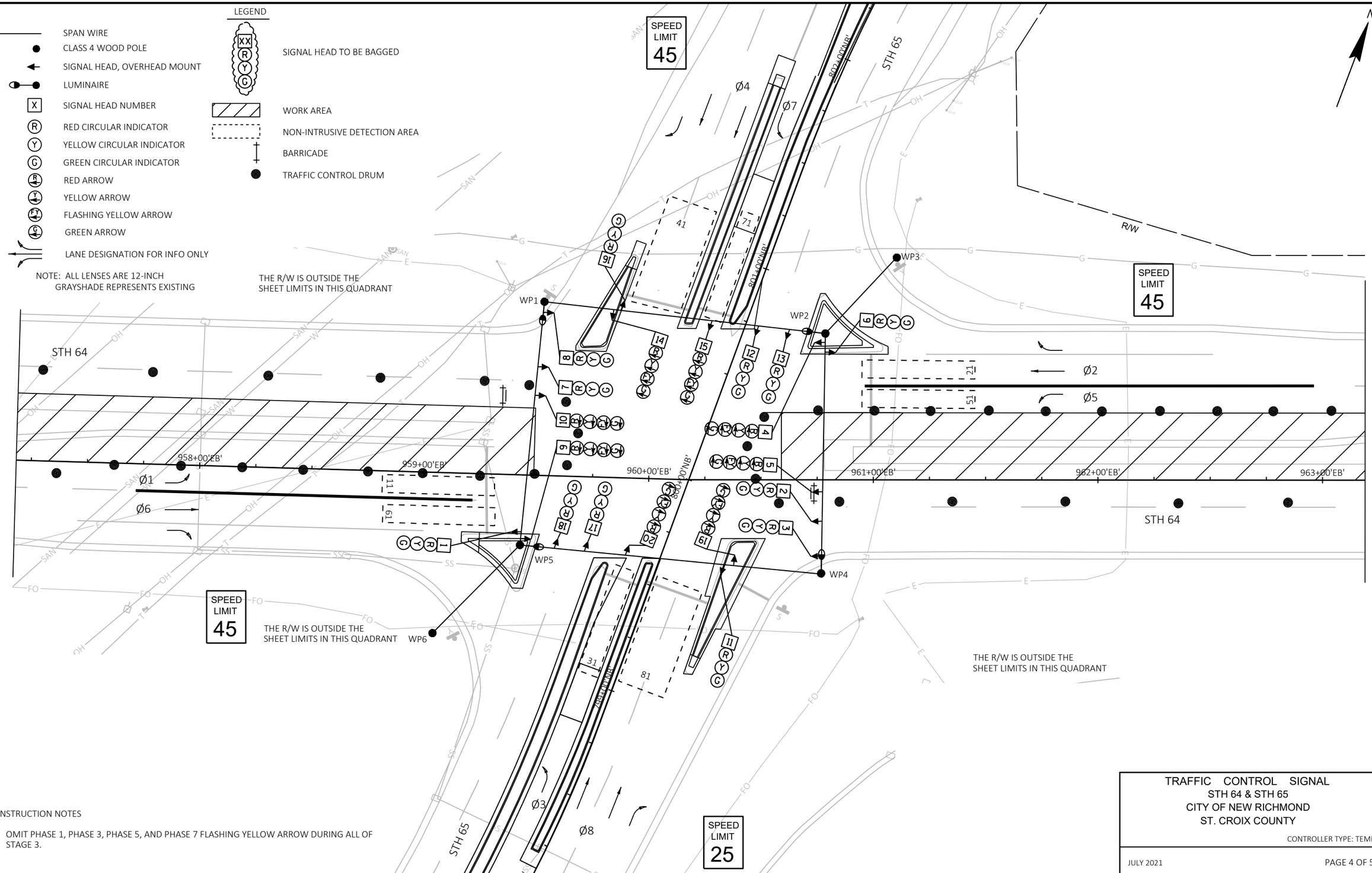

CONSTRUCTION NOTES

1. OMIT PHASE 1, PHASE 3, PHASE 5, AND PHASE 7 FLASHING YELLOW ARROW DURING ALL OF STAGE 3.

TRAFFIC CONTROL SIGNAL
STH 64 & STH 65
CITY OF NEW RICHMOND
ST. CROIX COUNTY

CONTROLLER TYPE: TEMP

JULY 2021

PAGE 4 OF 5

PROJECT NO: 8110-01-76	HWY: STH 64	COUNTY: ST. CROIX	TEMPORARY TRAFFIC SIGNAL PLAN - STAGE 3	SHEET 22	E

FILE NAME : C:\ONEDRIVE\AECOM\60613980 - STH 64 & STH 65 SIGNAL DESIGN - GENERAL\900_CAD_GIS\910_CAD\SHEETS\024101-ST.DWG
LAYOUT NAME - Stage 3
PLOT DATE : 7/26/2021 4:19 PM PLOT BY : SALOMONSEN, DEREK PLOT NAME : PLOT SCALE : 1IN:40FT

WISDOT/CADDS SHEET 42

	HEAD NUMBERS	FLASH
ϕ1	4,5	R
ϕ2	6,7,8	R
ϕ3	14,15	R
ϕ4	16,17,18	R
ϕ5	9,10	R
ϕ6	1,2,3	R
ϕ7	19,20	R
ϕ8	11,12,13	R
OL E	4,5	R
OL F	14,15	R
OL G	9,10	R
OL H	19,20	R

OL ASSIGNMENTS
1 + 2
3 + 4
5 + 6
7 + 8

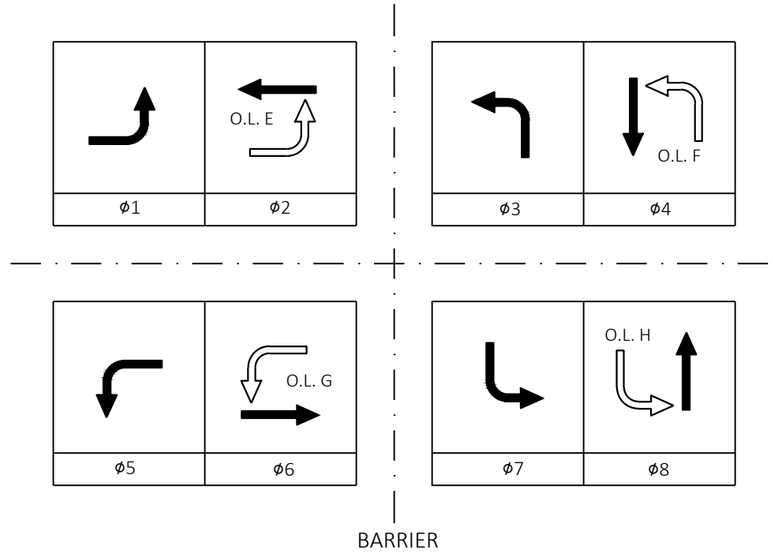

CONTROLLER LOGIC

PHASE NUMBER	PHASE LOCKING	DUAL ENTRY W / Ø	PHASE RECALL	PHASE ACTIVE
1		6		X
2	X	6	MIN.	X
3		8		X
4		8		X
5		2		X
6	X	2	MIN.	X
7		4		X
8		4		X

SPECIAL OVERLAPS

	PROTECTED	PERMISSIVE
O.L. "E" =	1	2
O.L. "F" =	3	4
O.L. "G" =	5	6
O.L. "H" =	7	8

TYPE OF LIGHTING	
BY OTHER AGENCY	
IN TRAFFIC SIGNAL CABINET	X
IN SEPARATE DOT LIGHTING CABINET	

TYPE OF INTERCONNECT COMMUNICATION	
NONE	X
CLOSED LOOP TWISTED PAIR	
FIBER OPTIC NETWORK	
INTERSECTION ONLY CELL MODEM*	
*LOCATION OF CELL MODEM	
CONTROLLER NO:	
SIGNAL SYSTEM : SS- -	

TYPE OF PRE-EMPT	
NONE	X
RAILROAD	
EMERGENCY VEHICLE	
GTT	
TOMAR	
HARDWIRE	
OTHER	
LIFT BRIDGE	
QUEUE DETECTOR	

NOTES:

1. OMIT LEFT TURN OVERLAP PHASES DURING STAGE 1, STAGE 2, AND STAGE 3 OF CONSTRUCTION.

DETECTOR LOGIC

DETECTOR NUMBER	DETECTOR INPUT	DETECTOR OPERATION			PHASE CALLED	PHASE EXTENDED	DETECTOR DISCONNECT PHASE	CALLING DELAY	EXTENSION STRETCH	LOOP SIZE	NUMBER OF TURNS
		CALLS AND EXTENDS	CALLS ONLY	EXTENDS ONLY							
11		X			1	1					
21		X			2	2					
31		X			3	3					
41		X			4	4					
51		X			5	5					
61		X			6	6					
71		X			7	7					
81		X			8	8					

TRAFFIC CONTROL SIGNAL
STH 64 & STH 65
CITY OF NEW RICHMOND
ST. CROIX COUNTY

CONTROLLER TYPE: TEMP

JULY 2021

PAGE 5 OF 5

STH 64 & STH 65

TEMPORARY SIGNAL TIMING PLAN

	Phase							
	1	2	3	4	5	6	7	8
	EBL	WBT	NBL	SBT	WBL	EBT	SBL	NBT
		O.L. E		O.L. F		O.L. G		O.L. H
MIN GREEN	8	15	8	12	8	15	8	12
PASSAGE	2	5	2	3	2	5	2	3
MAX GREEN	15	45	20	35	20	45	15	35
YELLOW CHANGE	3.5	4.3	3.5	4.3	3.5	4.3	3.5	4.3
RED CLEARANCE	1.0	2.8	1.0	3.0	1.0	2.8	1.0	3.0
DELAY?	NO	NO	NO	NO	NO	NO	NO	NO
DELAY DETECTOR NO.	-	-	-	-	-	-	-	-
DELAY TIME (S)	-	-	-	-	-	-	-	-
EXTENSION STRETCH?	NO	NO	NO	NO	NO	NO	NO	NO
EXTENSION STRETCH DETECTOR NO.	-	-	-	-	-	-	-	-
EXTEND TIME (S)	-	-	-	-	-	-	-	-
ADDED INITIAL	-	-	-	-	-	-	-	-
MAX INITIAL	-	-	-	-	-	-	-	-
TBR	-	-	-	-	-	-	-	-
TTR	-	-	-	-	-	-	-	-
MIN GAP	-	-	-	-	-	-	-	-
DYNAMIC MAX	-	-	-	-	-	-	-	-
DYNAMIC STEP	-	-	-	-	-	-	-	-
WALK	-	-	-	-	-	-	-	-
PED CLEAR	-	-	-	-	-	-	-	-
FLASHING WALK	-	-	-	-	-	-	-	-
EXTENDED PED CLEAR	-	-	-	-	-	-	-	-
ACT REST-IN-WALK	-	-	-	-	-	-	-	-
VEHICLE RECALL	NONE	MIN	NONE	NONE	NONE	MIN	NONE	NONE
PED RECALL	NONE	NONE	NONE	NONE	NONE	NONE	NONE	NONE
PHASE LOCKING	NON-LOCKING	NON-LOCKING	NON-LOCKING	NON-LOCKING	NON-LOCKING	NON-LOCKING	NON-LOCKING	NON-LOCKING

NOTES

- LEFT TURN OVERLAPS E (PHASE 2), F (PHASE 4), G (PHASE 6), AND H (PHASE 8) SHALL BE ELIMINATED FOR STAGE 1, STAGE 2, AND STAGE 3 OF CONSTRUCTION.
- STAGE 2: PHASE 1 AND PHASE 5 ARE TO HAVE LEAD-LAG OPERATIONS. PHASE 5 LEADING AND PHASE 1 LAGGING.
- STAGE 2: PHASE 3 AND PHASE 7 ARE TO HAVE LEAD-LAG OPERATIONS. PHASE 3 LEADING AND PHASE 7 LAGGING.
- STAGE 3: PHASE 1 AND PHASE 5 ARE TO HAVE LEAD-LAG OPERATIONS. PHASE 5 LEADING AND PHASE 1 LAGGING.

LEGEND

- CONTROL CABINET
- NONMETALLIC CONDUIT 2", UNLESS OTHERWISE NOTED
- CONDUIT SPECIAL 2"
- LUMINAIRE, UNDER PERMIT TO LOCAL MUNICIPALITY
- PULL BOX, 24" X 36"
- EXISTING LIGHTING PULL BOX

L-XX-(X,X)
LIGHTING CIRCUIT
LIGHT POLE NUMBER

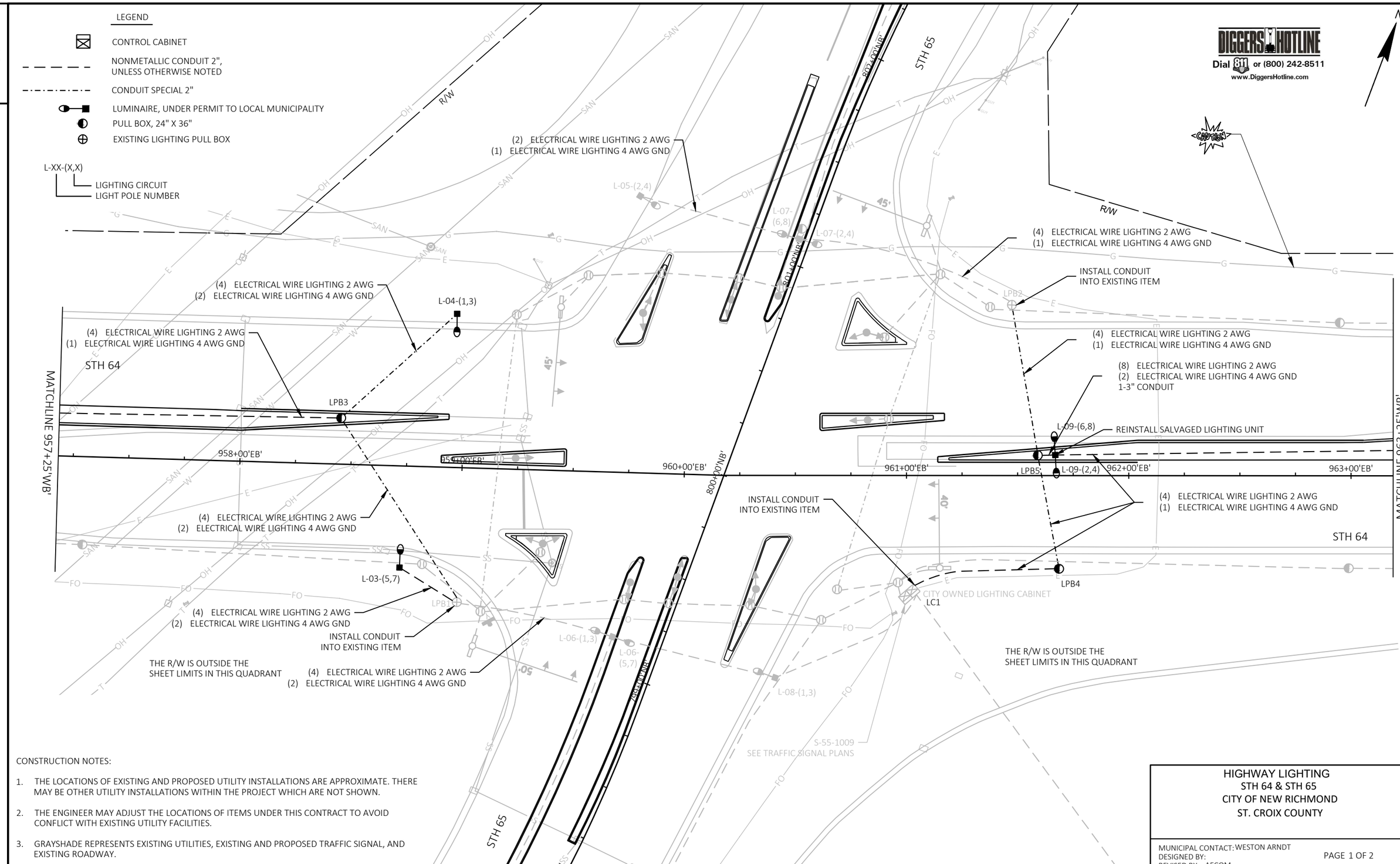

CONSTRUCTION NOTES:

1. THE LOCATIONS OF EXISTING AND PROPOSED UTILITY INSTALLATIONS ARE APPROXIMATE. THERE MAY BE OTHER UTILITY INSTALLATIONS WITHIN THE PROJECT WHICH ARE NOT SHOWN.
2. THE ENGINEER MAY ADJUST THE LOCATIONS OF ITEMS UNDER THIS CONTRACT TO AVOID CONFLICT WITH EXISTING UTILITY FACILITIES.
3. GRAYSHADE REPRESENTS EXISTING UTILITIES, EXISTING AND PROPOSED TRAFFIC SIGNAL, AND EXISTING ROADWAY.

HIGHWAY LIGHTING
STH 64 & STH 65
CITY OF NEW RICHMOND
ST. CROIX COUNTY

MUNICIPAL CONTACT: WESTON ARNDT
DESIGNED BY:
REVISED BY: AECOM

PAGE 1 OF 2

PROJECT NO: 8110-01-76	HWY: STH 64	COUNTY: ST. CROIX	LIGHTING PLAN	SHEET 25	E

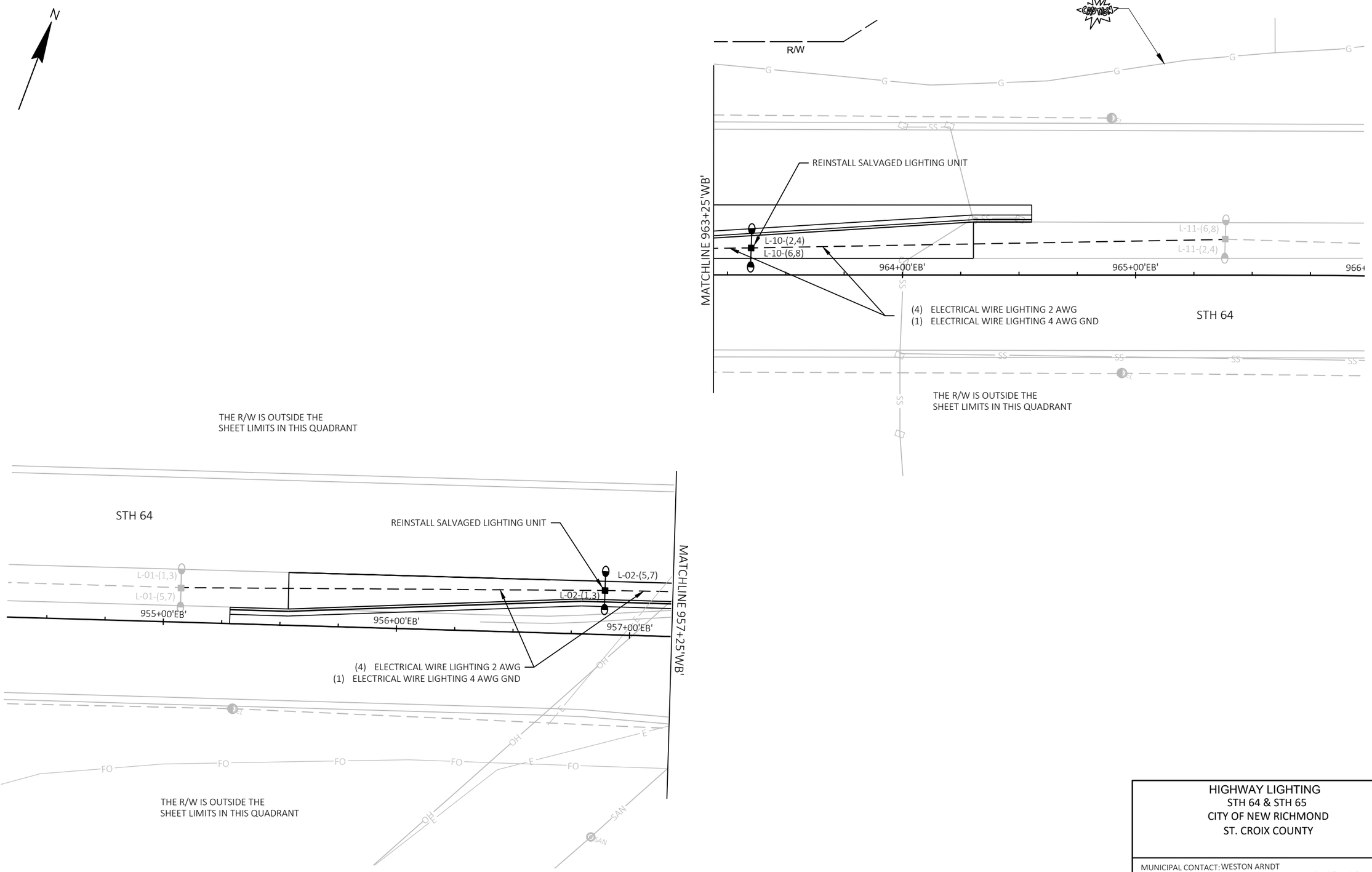

HIGHWAY LIGHTING
STH 64 & STH 65
CITY OF NEW RICHMOND
ST. CROIX COUNTY

MUNICIPAL CONTACT: WESTON ARNDT
DESIGNED BY:
REVISED BY: AECOM

PAGE 2 OF 2

PROJECT NO: 8110-01-76	HWY: STH 64	COUNTY: ST. CROIX	LIGHTING PLAN	SHEET 26	E

LEGEND

- CONTROL CABINET
- NONMETALLIC CONDUIT 2", UNLESS OTHERWISE NOTED
- SIGNAL HEAD, TRAFFIC SIGNAL STANDARD, PEDESTAL BASE
- XX MONOTUBE BASE, POLE, 35'-55' ARM
- LUMINAIRE, UNDER PERMIT TO LOCAL MUNICIPALITY
- PULL BOX, 24" X 36"
- EXISTING LIGHTING PULL BOX
- PULL BOX, 24" X 42"
- LOOP DETECTOR IN 1" NONMETALLIC CONDUIT
- X SIGNAL HEAD NUMBER
- R RED CIRCULAR INDICATOR
- Y YELLOW CIRCULAR INDICATOR
- G GREEN CIRCULAR INDICATOR
- R RED ARROW
- Y YELLOW ARROW
- FY FLASHING YELLOW ARROW
- G GREEN ARROW
- XX VIDEO CAMERA
- X EVP DESIGNATOR
- EVP DETECTOR HEAD
- Y YIELD SIGN
- S STOP SIGN
- XX R Y G SIGNAL HEAD WITH RETROREFLECTIVE BACKPLATE

NOTE: ALL LENSES ARE 12-INCH
GRAYSHADE REPRESENTS EXISTING
BOLD REPRESENTS ITEMS TO BE REMOVED

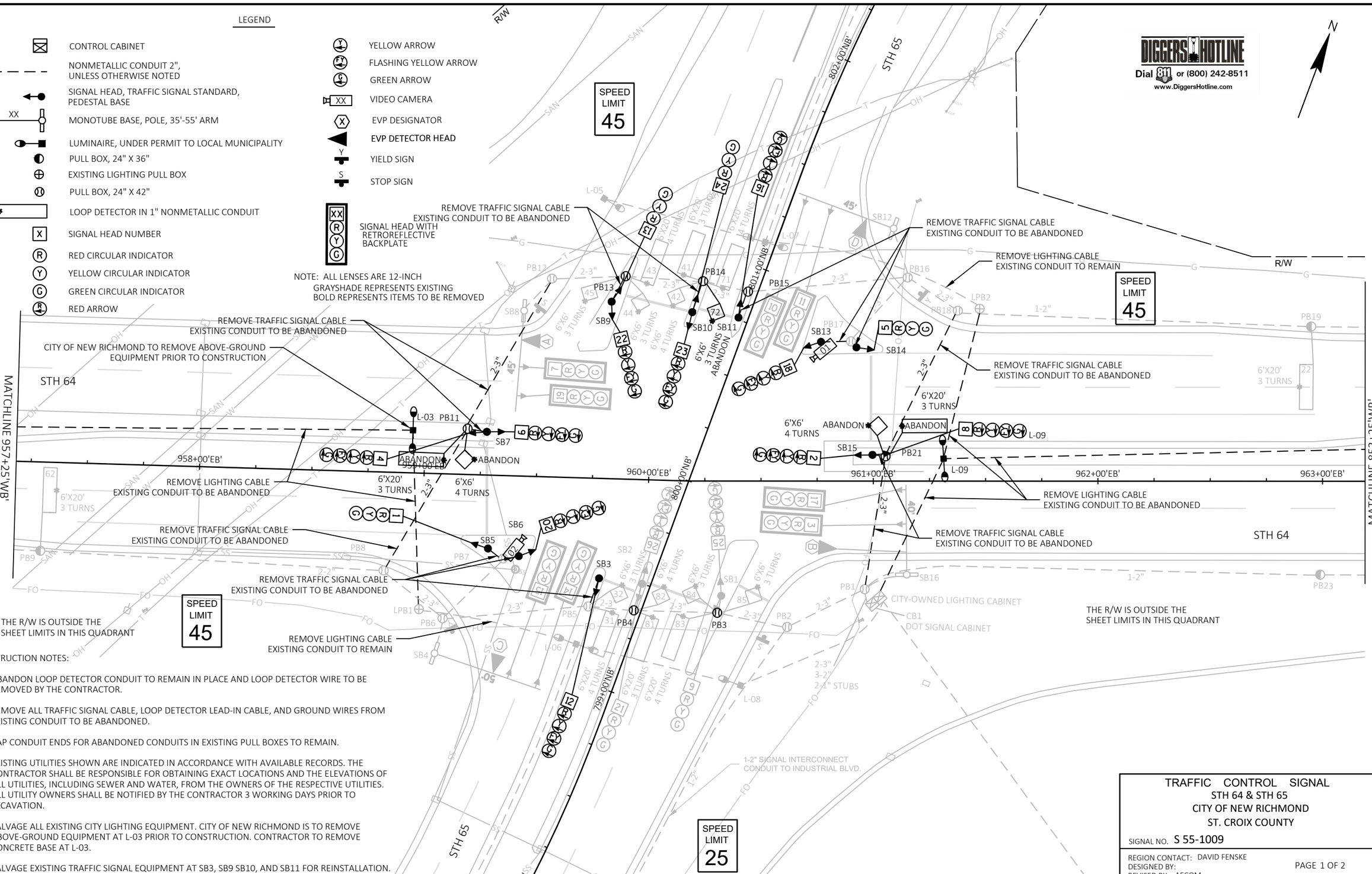

CONSTRUCTION NOTES:

1. ABANDON LOOP DETECTOR CONDUIT TO REMAIN IN PLACE AND LOOP DETECTOR WIRE TO BE REMOVED BY THE CONTRACTOR.
2. REMOVE ALL TRAFFIC SIGNAL CABLE, LOOP DETECTOR LEAD-IN CABLE, AND GROUND WIRES FROM EXISTING CONDUIT TO BE ABANDONED.
3. CAP CONDUIT ENDS FOR ABANDONED CONDUITS IN EXISTING PULL BOXES TO REMAIN.
4. EXISTING UTILITIES SHOWN ARE INDICATED IN ACCORDANCE WITH AVAILABLE RECORDS. THE CONTRACTOR SHALL BE RESPONSIBLE FOR OBTAINING EXACT LOCATIONS AND THE ELEVATIONS OF ALL UTILITIES, INCLUDING SEWER AND WATER, FROM THE OWNERS OF THE RESPECTIVE UTILITIES. ALL UTILITY OWNERS SHALL BE NOTIFIED BY THE CONTRACTOR 3 WORKING DAYS PRIOR TO EXCAVATION.
5. SALVAGE ALL EXISTING CITY LIGHTING EQUIPMENT. CITY OF NEW RICHMOND IS TO REMOVE ABOVE-GROUND EQUIPMENT AT L-03 PRIOR TO CONSTRUCTION. CONTRACTOR TO REMOVE CONCRETE BASE AT L-03.
6. SALVAGE EXISTING TRAFFIC SIGNAL EQUIPMENT AT SB3, SB9 SB10, AND SB11 FOR REINSTALLATION.

TRAFFIC CONTROL SIGNAL
STH 64 & STH 65
CITY OF NEW RICHMOND
ST. CROIX COUNTY

SIGNAL NO. S 55-1009

REGION CONTACT: DAVID FENSKE
DESIGNED BY:
REVISED BY: AECOM

PAGE 1 OF 2

PROJECT NO: 8110-01-76	HWY: STH 64	COUNTY: ST. CROIX	TRAFFIC SIGNAL AND LIGHTING REMOVAL PLAN	SHEET 27	E

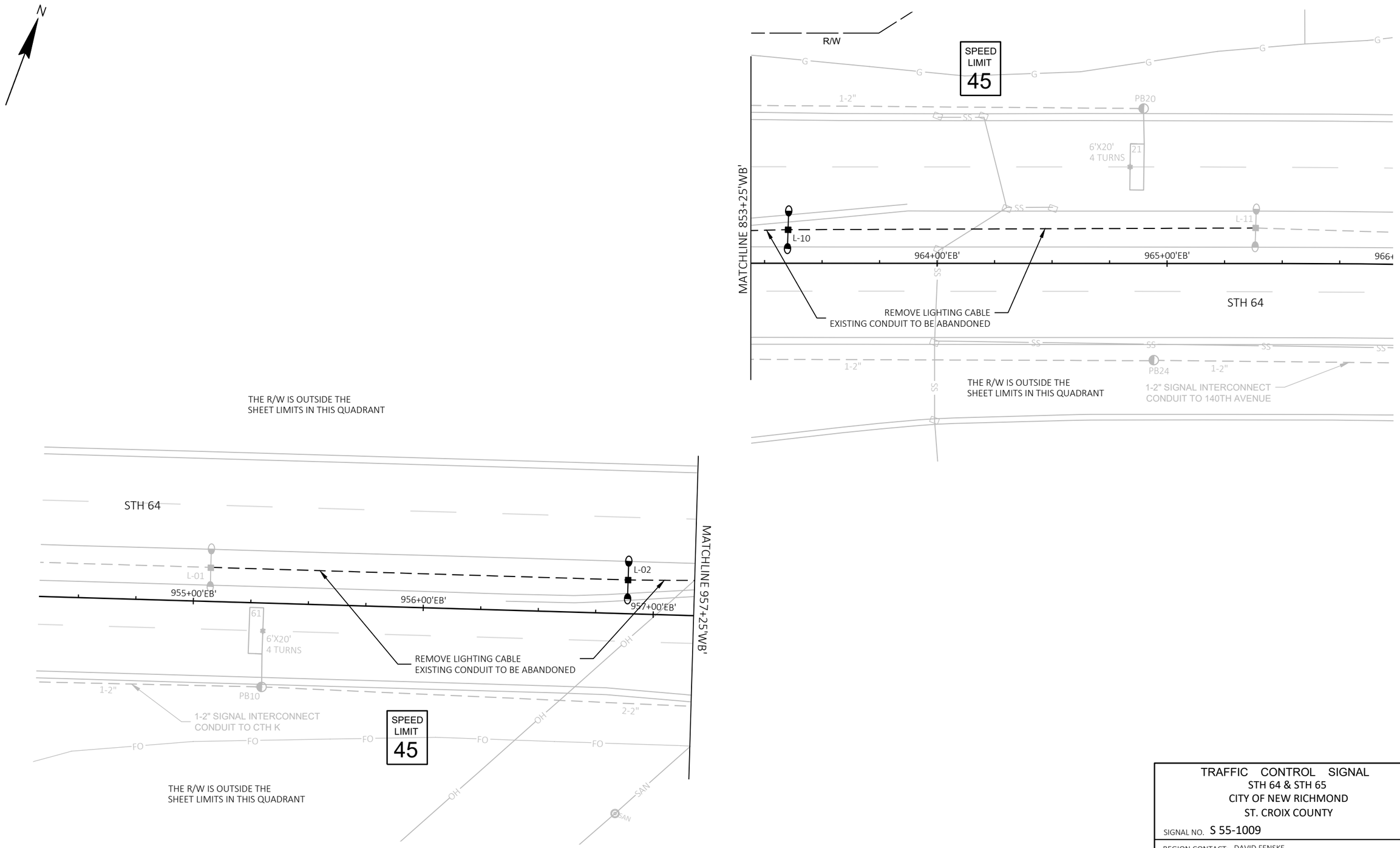

TRAFFIC CONTROL SIGNAL
STH 64 & STH 65
CITY OF NEW RICHMOND
ST. CROIX COUNTY

SIGNAL NO. S 55-1009

REGION CONTACT: DAVID FENSKE
DESIGNED BY:
REVISED BY: AECOM

PAGE 2 OF 2

PROJECT NO: 8110-01-76	HWY: STH 64	COUNTY: ST. CROIX	TRAFFIC SIGNAL AND LIGHTING REMOVAL PLAN	SHEET 28	E

FILE NAME : C:\ONEDRIVE\AECOM\60613980 - STH 64 & STH 65 SIGNAL DESIGN - GENERAL\900_CAD_GIS\910_CAD\SHEETS\024001-SR.DWG
LAYOUT NAME - 024002
PLOT DATE : 7/22/2021 3:50 PM PLOT BY : SALOMONSEN, DEREK PLOT NAME : PLOT SCALE : ##########

2

LEGEND

- CONTROL CABINET
- NONMETALLIC CONDUIT 2", UNLESS OTHERWISE NOTED
- CONDUIT SPECIAL 3"
- SIGNAL HEAD, TRAFFIC SIGNAL STANDARD, PEDESTAL BASE
- XX MONOTUBE BASE, POLE, 35'-55' ARM
- LUMINAIRE, UNDER PERMIT TO LOCAL MUNICIPALITY
- PULL BOX STEEL, 24" X 36"
- PULL BOX STEEL, 24" X 42"
- LOOP DETECTOR IN 1" NONMETALLIC CONDUIT
- X SIGNAL HEAD NUMBER
- R RED CIRCULAR INDICATOR
- Y YELLOW CIRCULAR INDICATOR
- G GREEN CIRCULAR INDICATOR
- RA RED ARROW
- YA YELLOW ARROW
- FYA FLASHING YELLOW ARROW
- GA GREEN ARROW
- XX VIDEO CAMERA
- X EVP DESIGNATOR
- EVP DETECTOR HEAD
- Y YIELD SIGN
- S STOP SIGN
- * XX R Y G SIGNAL HEAD WITH RETROREFLECTIVE BACKPLATE AND TUNNEL VISORS
- XX R Y G SIGNAL HEAD WITH RETROREFLECTIVE BACKPLATE

NOTE: ALL LENSES ARE 12-INCH
GRAYSHADE REPRESENTS EXISTING

LANE DESIGNATION FOR INFO ONLY

THE R/W IS OUTSIDE THE SHEET LIMITS IN THIS QUADRANT

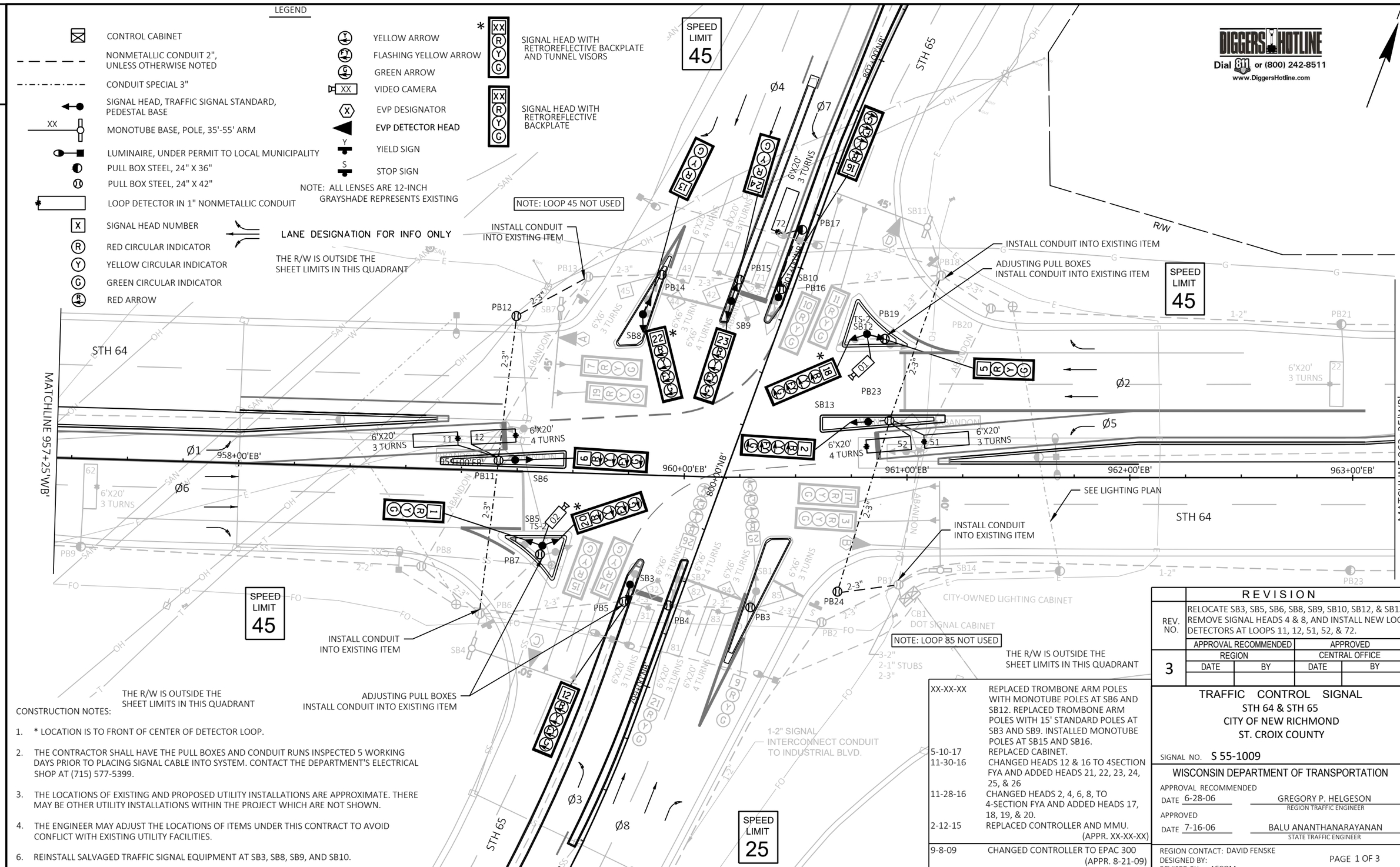

CONSTRUCTION NOTES:

1. * LOCATION IS TO FRONT OF CENTER OF DETECTOR LOOP.
2. THE CONTRACTOR SHALL HAVE THE PULL BOXES AND CONDUIT RUNS INSPECTED 5 WORKING DAYS PRIOR TO PLACING SIGNAL CABLE INTO SYSTEM. CONTACT THE DEPARTMENT'S ELECTRICAL SHOP AT (715) 577-5399.
3. THE LOCATIONS OF EXISTING AND PROPOSED UTILITY INSTALLATIONS ARE APPROXIMATE. THERE MAY BE OTHER UTILITY INSTALLATIONS WITHIN THE PROJECT WHICH ARE NOT SHOWN.
4. THE ENGINEER MAY ADJUST THE LOCATIONS OF ITEMS UNDER THIS CONTRACT TO AVOID CONFLICT WITH EXISTING UTILITY FACILITIES.
6. REINSTALL SALVAGED TRAFFIC SIGNAL EQUIPMENT AT SB3, SB8, SB9, AND SB10.

REVISION				
REV. NO.	RELOCATE SB3, SB5, SB6, SB8, SB9, SB10, SB12, & SB13, REMOVE SIGNAL HEADS 4 & 8, AND INSTALL NEW LOOP DETECTORS AT LOOPS 11, 12, 51, 52, & 72.			
	APPROVAL RECOMMENDED		APPROVED	
	REGION		CENTRAL OFFICE	
3	DATE	BY	DATE	BY

XX-XX-XX	REPLACED TROMBONE ARM POLES WITH MONOTUBE POLES AT SB6 AND SB12. REPLACED TROMBONE ARM POLES WITH 15' STANDARD POLES AT SB3 AND SB9. INSTALLED MONOTUBE POLES AT SB15 AND SB16.
5-10-17	REPLACED CABINET.
11-30-16	CHANGED HEADS 12 & 16 TO 4SECTION FYA AND ADDED HEADS 21, 22, 23, 24, 25, & 26
11-28-16	CHANGED HEADS 2, 4, 6, 8, TO 4-SECTION FYA AND ADDED HEADS 17, 18, 19, & 20.
2-12-15	REPLACED CONTROLLER AND MMU. (APPR. XX-XX-XX)
9-8-09	CHANGED CONTROLLER TO EPAC 300 (APPR. 8-21-09)

TRAFFIC CONTROL SIGNAL
STH 64 & STH 65
CITY OF NEW RICHMOND
ST. CROIX COUNTY

SIGNAL NO. S 55-1009

WISCONSIN DEPARTMENT OF TRANSPORTATION

APPROVAL RECOMMENDED
DATE 6-28-06 GREGORY P. HELGESON
REGION TRAFFIC ENGINEER

APPROVED
DATE 7-16-06 BALU ANANTHANARAYANAN
STATE TRAFFIC ENGINEER

REGION CONTACT: DAVID FENSKE
DESIGNED BY:
REVISED BY: AECOM

PAGE 1 OF 3

PROJECT NO: 8110-01-76	HWY: STH 64	COUNTY: ST. CROIX	TRAFFIC SIGNAL PLAN	SHEET 29	E

FILE NAME : C:\ONEDRIVE\AECOM\60613980 - STH 64 & STH 65 SIGNAL DESIGN - GENERAL\900_CAD_GIS\910_CAD\SHEETS\024201-SP.DWG
LAYOUT NAME - 024201
PLOT DATE : 7/22/2021 4:05 PM PLOT BY : SALOMONSEN, DEREK PLOT NAME : PLOT SCALE : 1IN:40FT

WISDOT/CADDS SHEET 42

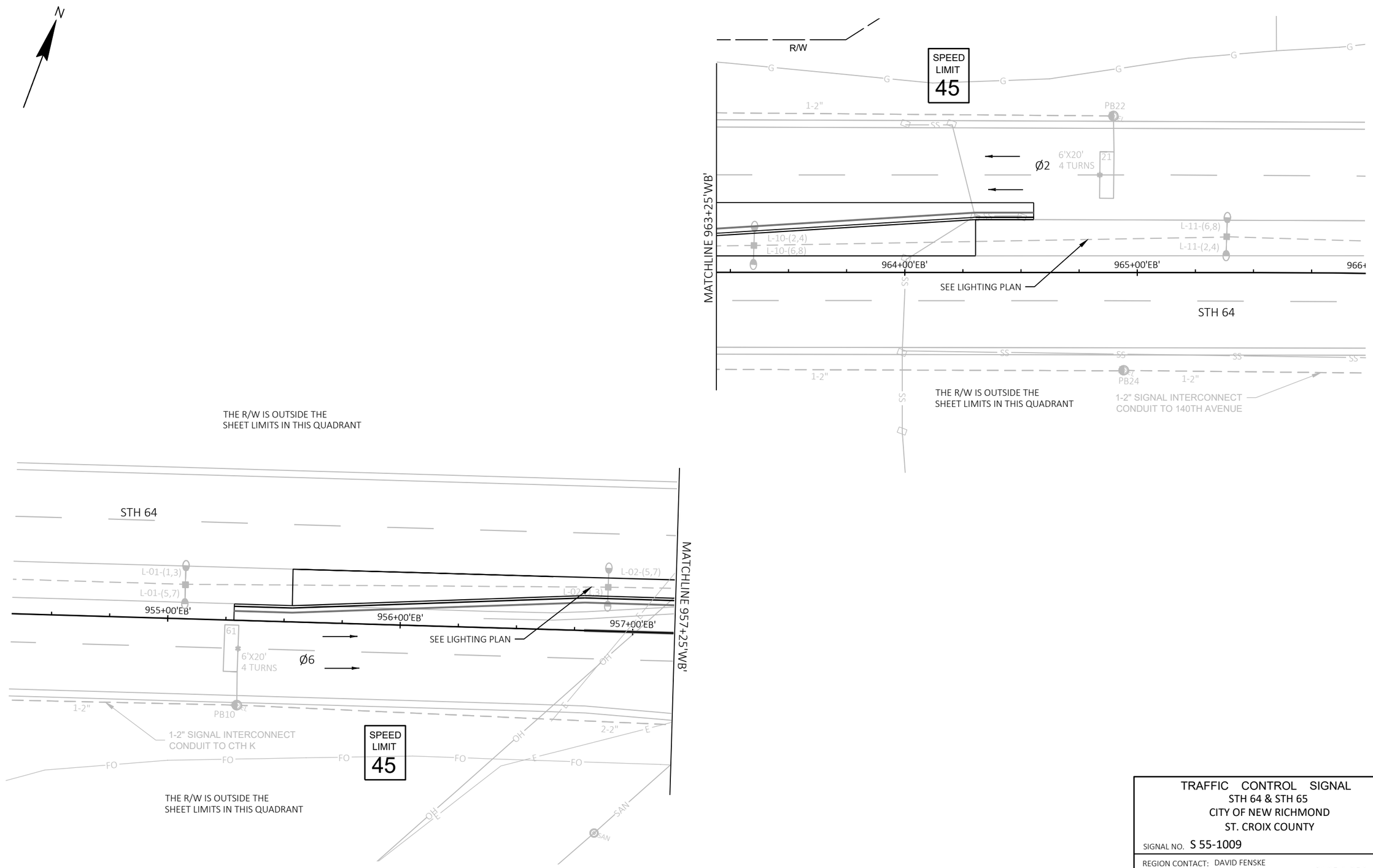

TRAFFIC CONTROL SIGNAL
STH 64 & STH 65
CITY OF NEW RICHMOND
ST. CROIX COUNTY

SIGNAL NO. S 55-1009

REGION CONTACT: DAVID FENSKE
DESIGNED BY:
REVISED BY: AECOM

PAGE 2 OF 3

PROJECT NO: 8110-01-76	HWY: STH 64	COUNTY: ST. CROIX	TRAFFIC SIGNAL PLAN	SHEET 30	E

	HEAD NUMBERS	FLASH
ϕ1	2,18	R
ϕ2	5,7,19	R
ϕ3	12,22,23	–
ϕ4	13,14,15,24	R
ϕ5	6,20	R
ϕ6	1,3,17	R
ϕ7	16,25,26	–
ϕ8	9,10,11,21	R
OL E	2,18	R
OL F	12,22,23	R
OL G	6,20	R
OL H	16,25,26	R

OL ASSIGNMENTS
1 + 2
3 + 4
5 + 6
7 + 8

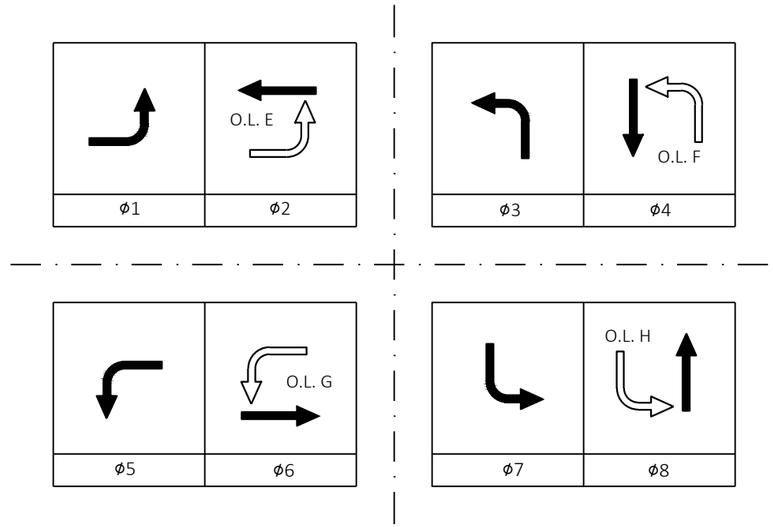

CONTROLLER LOGIC

PHASE NUMBER	PHASE LOCKING	DUAL ENTRY W / Ø	PHASE RECALL
1		6	
2	X	6	MIN.
3		8	
4		8	
5		2	
6	X	2	MIN.
7		4	
8		4	

TYPE OF LIGHTING	
BY OTHER AGENCY	X
IN TRAFFIC SIGNAL CABINET	
IN SEPARATE DOT LIGHTING CABINET	

TYPE OF INTERCONNECT COMMUNICATION	
NONE	
CLOSED LOOP TWISTED PAIR	
FIBER OPTIC NETWORK	
INTERSECTION ONLY CELL MODEM*	X
*LOCATION OF CELL MODEM	
CONTROLLER NO: S 55-1009	
SIGNAL SYSTEM : SS- -	

SPECIAL OVERLAPS

	PROTECTED	PERMISSIVE
O.L. "E" =	1	2
O.L. "F" =	3	4
O.L. "G" =	5	6
O.L. "H" =	7	8

TYPE OF PRE-EMPT	
NONE	
RAILROAD	
EMERGENCY VEHICLE	X
GTT	X
TOMAR	
HARDWIRE	
OTHER	
LIFT BRIDGE	
QUEUE DETECTOR	

OVERLAPS

O.L. "A" =
O.L. "B" =
O.L. "C" =
O.L. "D" =

GENERAL NOTES:

1. ANY ACTUATED PHASE FOR WHICH THERE IS NO CALL SHALL BE SKIPPED.
2. WHEN ONE PHASE IS ON ALONE, ANY NONCONFLICTING PHASE MAY START TIMING CONCURRENTLY WITHOUT A CLEARANCE INTERVAL.

DETECTOR LOGIC

DETECTOR INPUT	3	1	7	5	11	9	15	13
DETECTOR #(S)	11	21	31	41	43	45	52	62
PHASE CALLED	1	2	3	4	4	NOT	5	6
PHASE EXTENDED	1	2	3	4	4	USED	5	6
DISCONNECT TIME								
CALLING DELAY								
EXTENSION STRETCH								
LOOP FUNCTION								

19	17	23	21	27	25	31	29	DETECTOR INPUT
72	82	84						DETECTOR #(S)
7	8	8						PHASE CALLED
7	8	8						PHASE EXTENDED
								DISCONNECT TIME
								CALLING DELAY
								EXTENSION STRETCH
								LOOP FUNCTION

DETECTOR INPUT	4	2	8	6	12	10	16	14
DETECTOR #(S)	12	22	32	42	44	51	61	71
PHASE CALLED	1	2	3	4	4	5	6	7
PHASE EXTENDED	1	2	3	4	4	5	6	7
DISCONNECT TIME								
CALLING DELAY								
EXTENSION STRETCH								
LOOP FUNCTION								

20	18	24	22	28	26	32	30	DETECTOR INPUT
81	83	85						DETECTOR #(S)
8	8	NOT						PHASE CALLED
8	8	USED						PHASE EXTENDED
								DISCONNECT TIME
								CALLING DELAY
								EXTENSION STRETCH
								LOOP FUNCTION

EMERGENCY VEHICLE PREEMPTION ASSIGNMENT

EMERGENCY VEHICLE DETECTOR	A	B	C	D
PREEMPTION CHANNEL	3	4	5	6
MOVEMENT				
DIRECTION	WB	EB	SB	NB
PHASES	2+5	1+6	4+7	3+8

NOTES:
FULL CLEARANCE AND MINIMUM GREEN INTERVALS SHALL ALWAYS BE PROVIDED.

TRAFFIC CONTROL SIGNAL
STH 64 & STH 65
CITY OF NEW RICHMOND
ST. CROIX COUNTY

SIGNAL NO. S 55-1009 CONTROLLER TYPE: ASC/3 TS2

REGION CONTACT: DAVID FENSKE
DESIGNED BY:
REVISED BY: AECOM

PAGE 3 OF 3

2

PROJECT ID:	8110-01-76
INTERSECTION:	STH 64 & STH65

SIGNAL WIRE COLOR CODING	BLK-BLACK	RED-RED	GRN-GREEN
	WHT-WHITE	BLU-BLUE	ORG-ORANGE

DATE: Jul-21

2

CB1 TO	AWG 14 # OF COND.	HEAD NO.	SIGNAL INDICATION WIRE COLOR RED	YELLOW	GREEN	<RED>	<YELLOW>	<FLASH YEL>	<GREEN>	D/WALK	WALK	PED	OTHER
SB1	12	9	RED	ORG	GRN								
		25				RED/BLK	ORG/BLK	WHT/BLK	GRN/BLK				
SB2	12	21	RED	ORG	GRN								
		26				RED/BLK	ORG/BLK	WHT/BLK	GRN/BLK				
SB3	12	12				RED/BLK	ORG/BLK	WHT/BLK	GRN/BLK				
SB4	5	14	RED	ORG	GRN								
		15	RED	ORG	GRN								
SB5	12	1	RED	ORG	GRN								
		20				RED/BLK	ORG/BLK	WHT/BLK	GRN/BLK				
SB6	12	6				RED/BLK	ORG/BLK	WHT/BLK	GRN/BLK				
SB7	5	7	RED	ORG	GRN								
		19	RED	ORG	GRN								
SB8	12	13	RED	ORG	GRN								
		22				RED/BLK	ORG/BLK	WHT/BLK	GRN/BLK				
SB9	12	23				RED/BLK	ORG/BLK	WHT/BLK	GRN/BLK				
		24	RED	ORG	GRN								
SB10	12	16				RED/BLK	ORG/BLK	WHT/BLK	GRN/BLK				
SB11	5	10	RED	ORG	GRN								
		11	RED	ORG	GRN								
SB12	12	5	RED	ORG	GRN								
		18				RED/BLK	ORG/BLK	WHT/BLK	GRN/BLK				
SB13	12	2				RED/BLK	ORG/BLK	WHT/BLK	GRN/BLK				
SB14	5	3	RED	ORG	GRN								
		17	RED	ORG	GRN								

EQUIPMENT GROUNDING CONDUCTORS 10 AWG GRN	
FROM	TO
CB1	SB14
SB14	SB1
SB1	SB2
SB2	SB3
SB3	SB4
SB4	SB5
SB5	SB6
SB6	SB7
SB7	SB8
SB8	SB9
SB9	SB10
SB10	SB11
SB11	SB12
SB12	SB13
SB13	CB1

PULL BOX GROUNDING 10 AWG	
FROM	TO
PB1	SB14
PB2	SB1
PB3	SB1
PB4	SB2
PB5	SB3
PB6	SB4
PB7	SB5
PB8	SB4
PB11	SB6
PB12	SB7
PB13	SB7
PB14	SB8
PB15	SB9
PB16	SB10
PB17	SB10
PB18	SB11
PB19	SB12
PB20	SB11
PB23	SB13
PB24	SB14

CAT-5E CABLE VIDEO CAMERA	
FROM	TO
CB1	SB5
CB1	SB12

EMERGENCY VEHICLE PREEMPTION		
HEAD	FROM	TO
A	CB1	SB7
B	CB1	SB14
C	CB1	SB4
D	CB1	SB11

STH 64 & STH 65

CITY OF NEW RICHMOND
ST. CROIX COUNTY

CONTROLLER TYPE: ECONOLITE

SIGNAL NO: S 55-1009 CABINET TYPE: TS2

DATE: JULY 2021 PAGE NO. 1 OF 1

NOTES:
1. USE WHITE CONDUCTOR IN THE SIGNAL CABLE AS THE GROUNDED CONDUCTOR FOR ALL TRAFFIC SIGNAL INDICATIONS.
2. ENSURE THE GROUNDED CONDUCTOR IN THE FEEDER CABLE AND THE POLE CABLES ARE BOTH 18" LONGER THAN THE UNGROUNDED CONDUCTORS.

N

DRAWING NOT TO SCALE

KEY

WORK ZONE

TRAFFIC CONTROL SIGN

ARROW BOARD (END OF TAPER)

SEE TRAFFIC CONTROL SHEETS, SDD 15D20 TRAFFIC CONTROL, SINGLE LANE CLOSURE, NON FREEWAY/EXPRESSWAY AND SDD 15D21 TRAFFIC CONTROL, INTERSECTION WITHIN SINGLE LANE CLOSURE FOR ADDITIONAL TRAFFIC CONTROL DETAILS.

* MERGE SIGN AND RIGHT LANE CLOSED SIGNS ARE NOT INCLUDED ON THE NORTH LEG OF THE INTERSECTION BECAUSE STH 65 SOUTH IS A SINGLE LANE ROAD BEFORE HATFIELD PARK ENTRANCE.

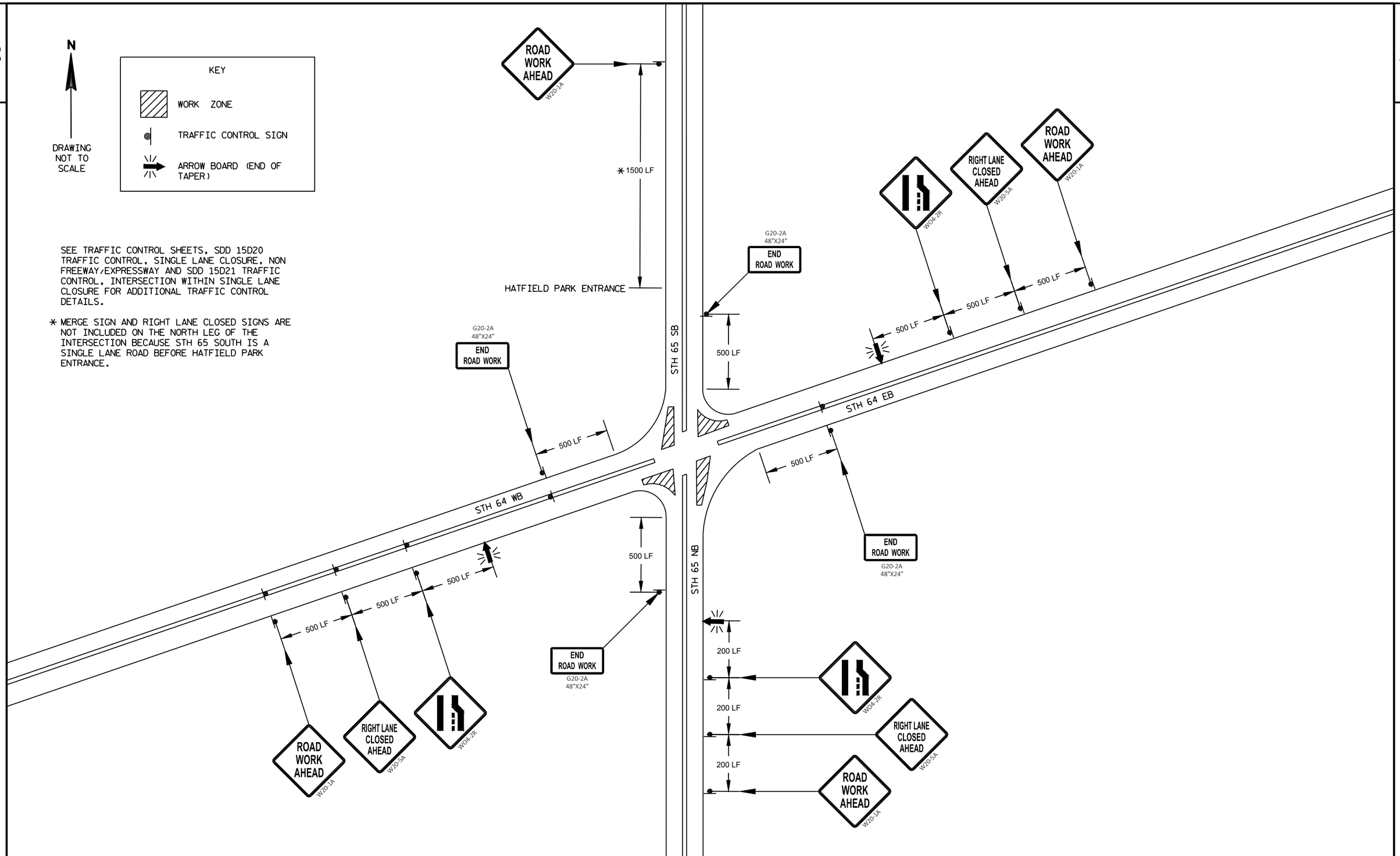

PROJECT NO:8110-01-76	HWY:STH 64	COUNTY:ST. CROIX	ADVANCED WARNING - STAGE 1	SHEET 33	E

2

N

DRAWING NOT TO SCALE

KEY

WORK ZONE

TRAFFIC CONTROL SIGN

ARROW BOARD (END OF TAPER)

SEE TRAFFIC CONTROL SHEETS, SDD 15D20 "TRAFFIC CONTROL, SINGLE LANE CLOSURE, NON FREEWAY/EXPRESSWAY", SDD 15D21 "TRAFFIC CONTROL, INTERSECTION WITHIN SINGLE LANE CLOSURE", AND SDD 15D40 "TRAFFIC CONTROL, FULL LANE SHIFT NON-FREEWAY/EXPRESSWAY OR MULTILANE DIVIDED 45 MPH AND UNDER", FOR ADDITIONAL TRAFFIC CONTROL DETAILS.

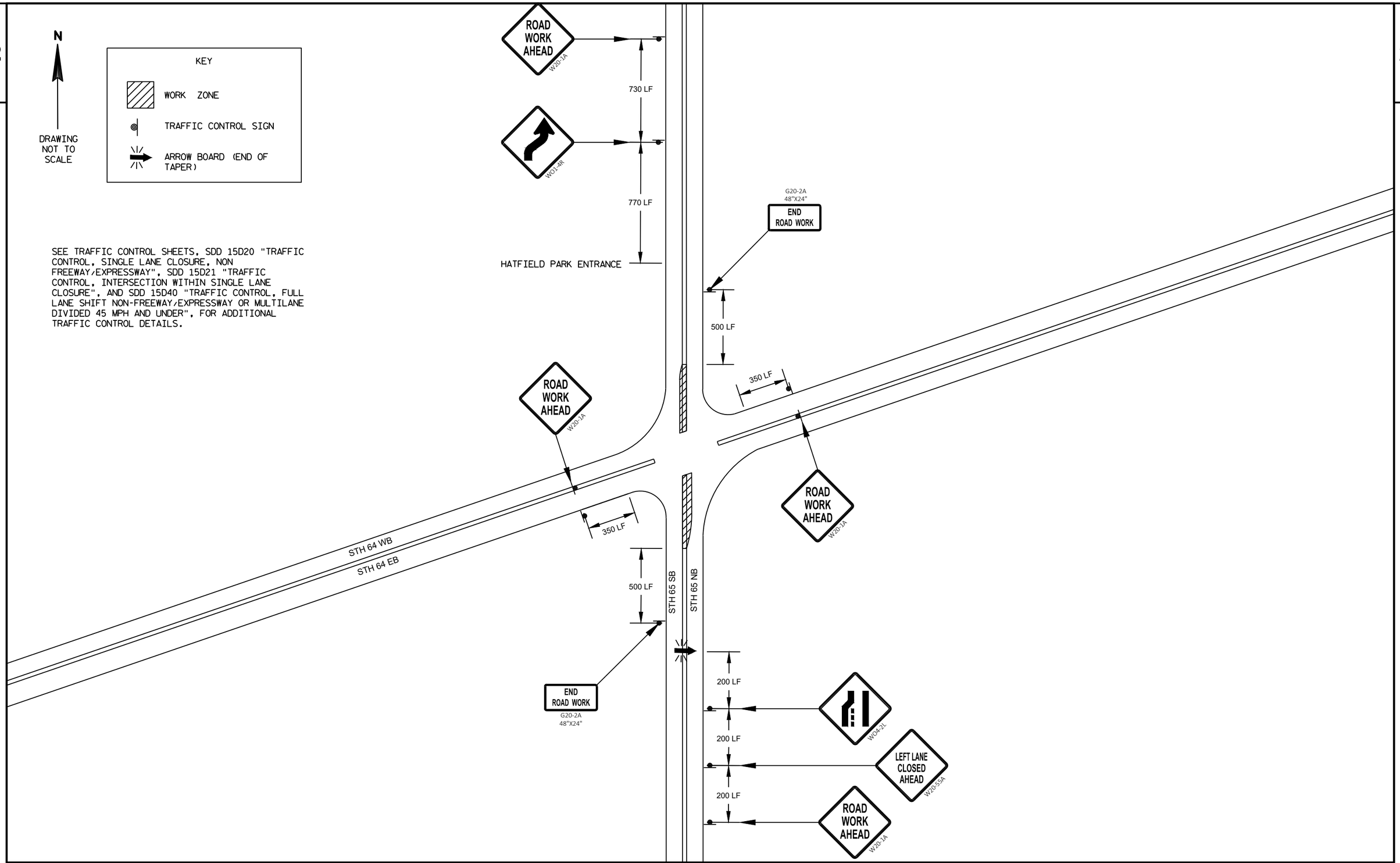

2

PROJECT NO:8110-01-76	HWY:STH 64	COUNTY:ST. CROIX	ADVANCED WARNING - STAGE 2	SHEET 34	E

N

DRAWING NOT TO SCALE

KEY

WORK ZONE

TRAFFIC CONTROL SIGN

ARROW BOARD (END OF TAPER)

SEE TRAFFIC CONTROL SHEETS, SDD 15D20 TRAFFIC CONTROL, SINGLE LANE CLOSURE, NON FREEWAY/EXPRESSWAY AND SDD 15D21 TRAFFIC CONTROL, INTERSECTION WITHIN SINGLE LANE CLOSURE FOR ADDITIONAL TRAFFIC CONTROL DETAILS.

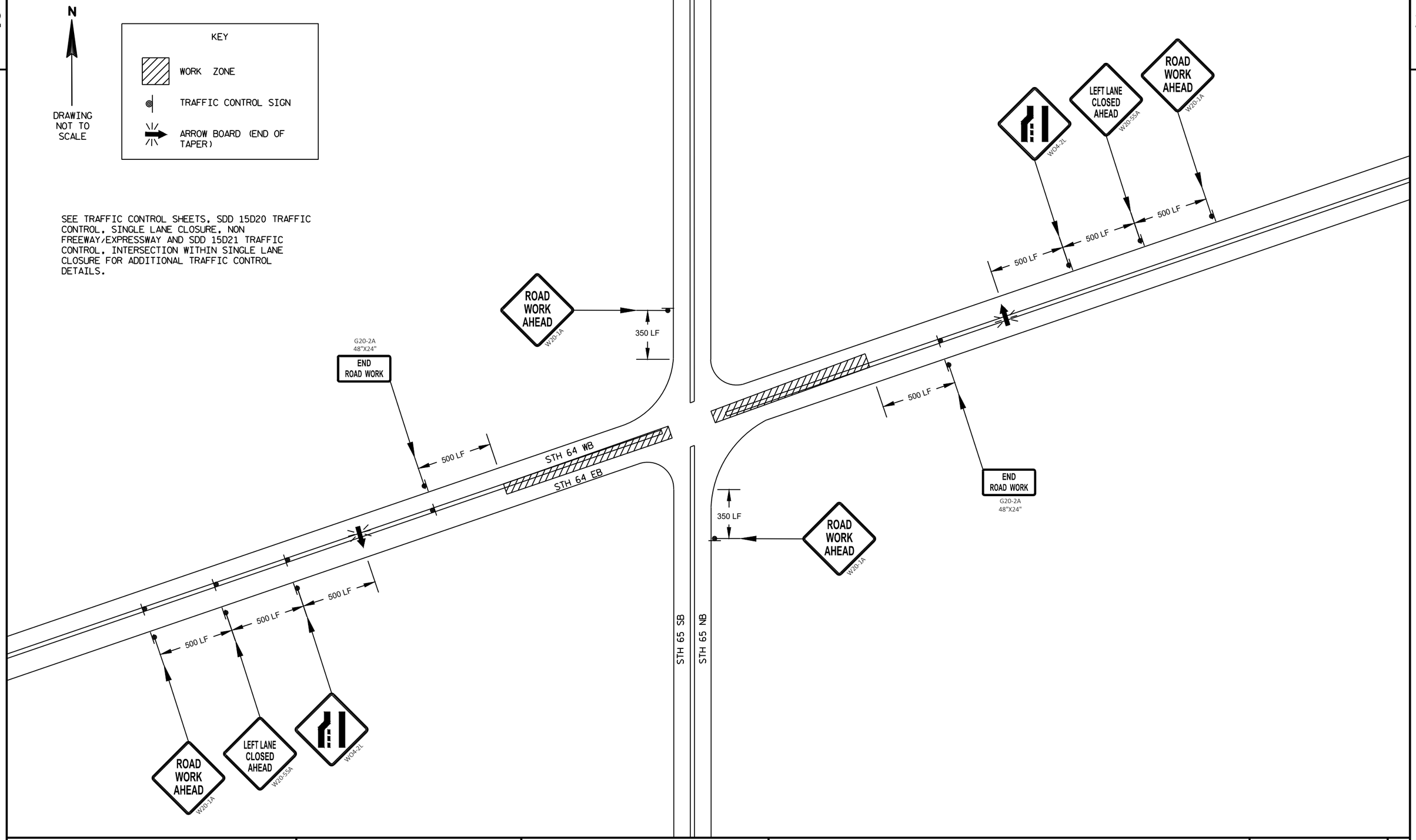

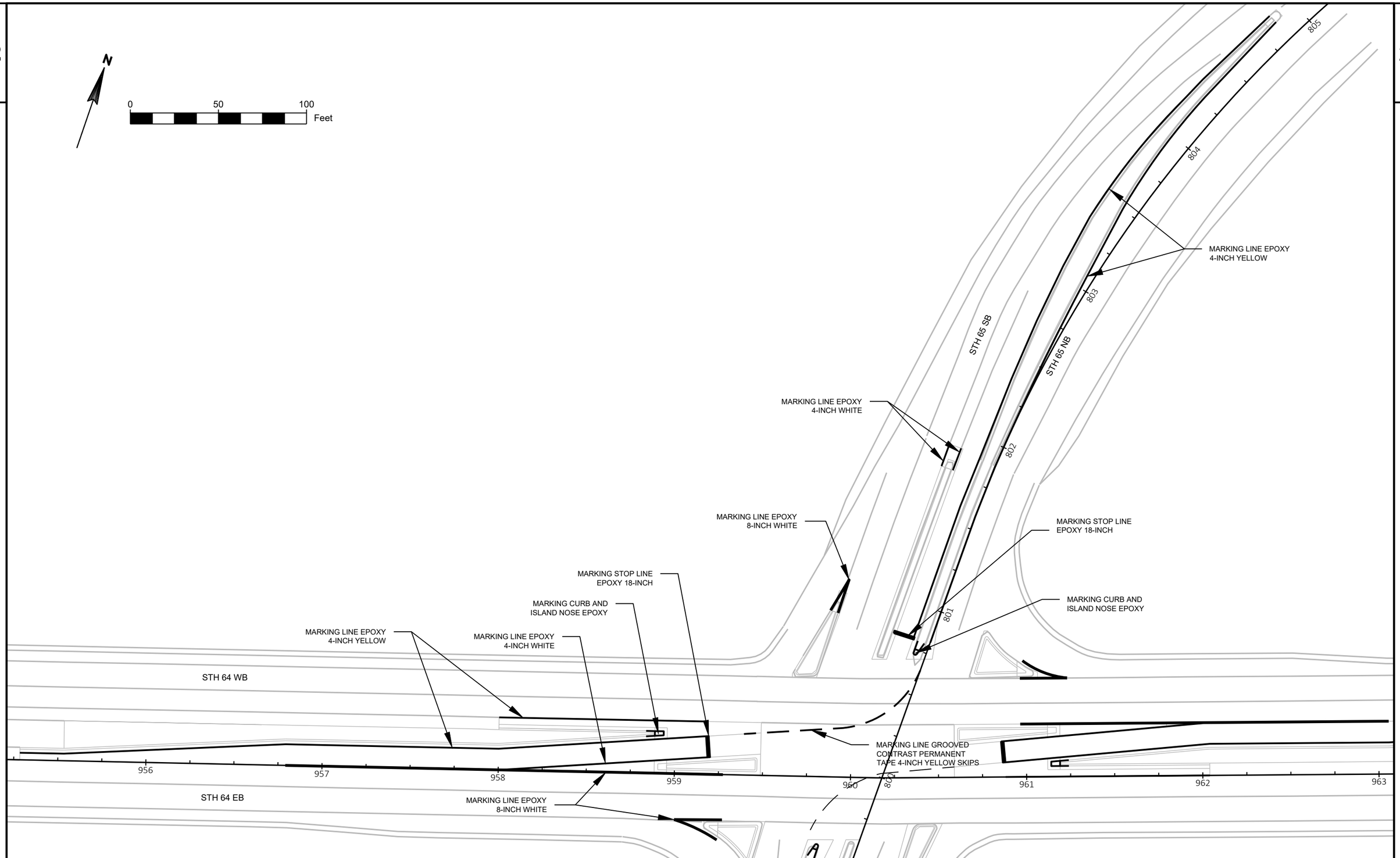

PROJECT NO:8110-01-76	HWY:STH 64	COUNTY:ST. CROIX	PAVEMENT MARKINGS	SHEET 36	E

FILE NAME : D:\WORK\81100106 C3D\SHEETSPLAN\024501-PM.DWG
LAYOUT NAME - 023201-PS - SIGNS
PLOT DATE : 4/1/2021 8:58 AM PLOT BY : MUNDEN, ALLISSA L PLOT NAME : PLOT SCALE : 1IN = 50 FT

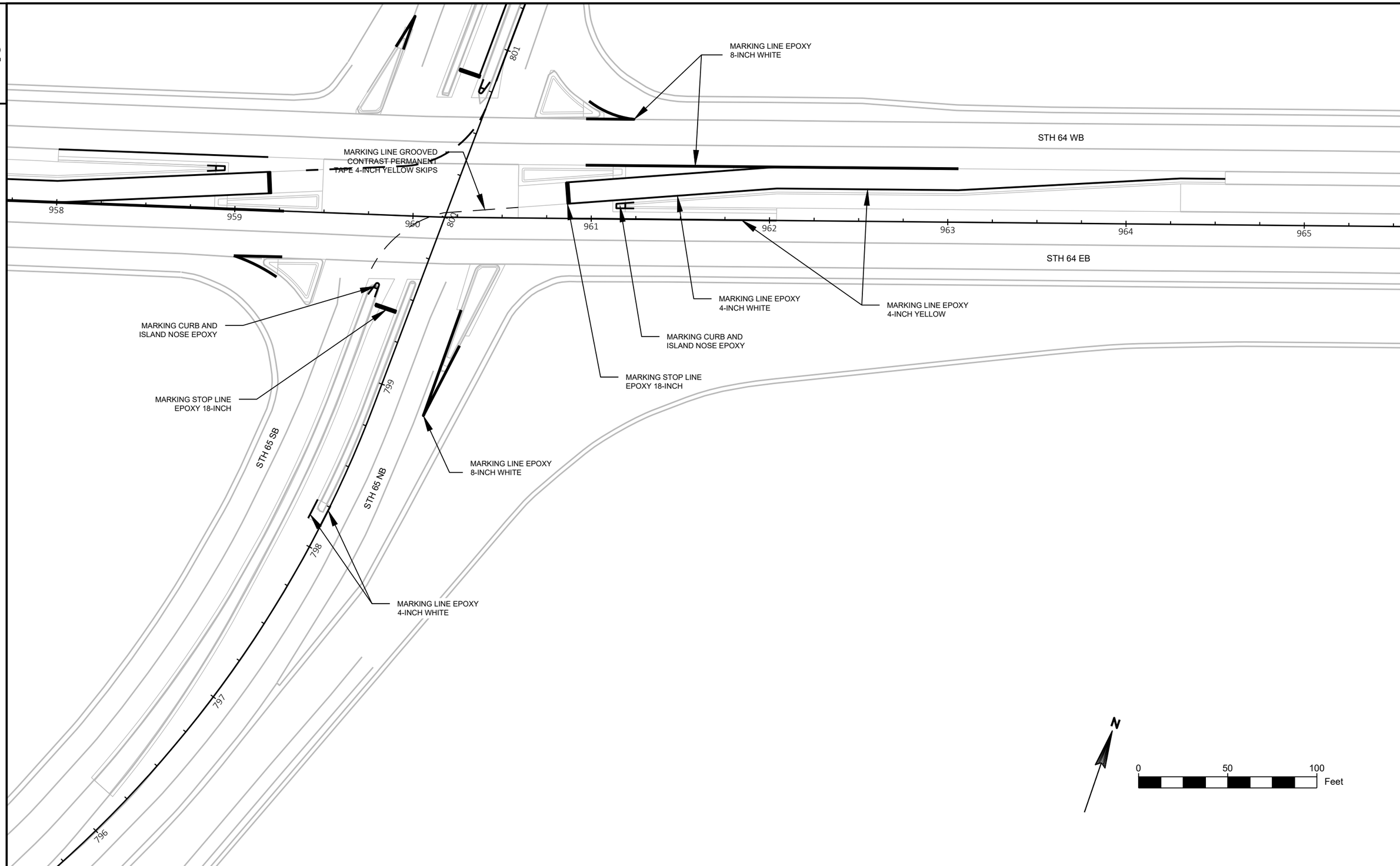

PROJECT NO:8110-01-76	HWY:STH 64	COUNTY:ST. CROIX	PAVEMENT MARKINGS	SHEET 37	E

2

AFTER STAGE 1 IS COMPLETE, REPLACE SKIPS WITH TEMPORARY TAPE 4-INCH UNTIL STAGE 3

STH 64 WB

540LF TAPER
*11 DRUMS @ 50' SPACING

** 650LF BUFFER
* 7 DRUMS @ 100' SPACING

952 953 954 955 956 957 958 959

STH 64 EB

WO1-6
48"X24"

TEMPORARY MARKING LINE
REMOVABLE TAPE 4-INCH WHITE

LANE CLOSED
R11-2L
48"X30"

BEGIN RIGHT TURN LANE
R3-20R
24"X36"

N

0 50 100 Feet

STH 65 SB

STH 65 NB

2

STH 65 SB

STH 65 NB

802

801

KEY

WORK ZONE

TRAFFIC CONTROL DRUM

TRAFFIC CONTROL DRUM WITH LIGHT

TRAFFIC FLOW

ARROW BOARD

TYPE III BARRICADE WITH SIGN

TRAFFIC CONTROL SIGN ON TEMPORARY SUPPORT

REMOVE SKIPS THROUGH TAPER

SEE SDD 15D20 TRAFFIC CONTROL, SINGLE LANE CLOSURE, NON FREEWAY/EXPRESSWAY AND SDD 15D21-a TRAFFIC CONTROL, INTERSECTION WITHIN SINGLE RIGHT LANE CLOSURE FOR DRUM SPACING AND ADDITIONAL TRAFFIC CONTROL NOTES

* SPACING AND NUMBER OF DRUMS SHOWN IN THE TAPER AND BUFFER ARE NOT TO SCALE

** EAST BOUND BUFFER LENGTH EXTENDED FROM SDD RECOMMENDATION TO ACCOMMODATE FOR STH 64 HORIZONTAL CURVE

N

TEMPORARY MARKING LINE
REMOVABLE TAPE 4-INCH WHITE

AFTER STAGE 1 IS COMPLETE, REPLACE SKIPS WITH TEMPORARY TAPE 4-INCH UNTIL STAGE 3

R3-20R
24"X36"

BEGIN RIGHT TURN LANE

LANE CLOSED
R11-2L
48"X30"

STH 64 WB

WO1-6
48"X24"

220LF
*3 DRUMS @ 100' SPACING

540LF TAPER
*11 DRUMS @ 50' SPACING

961 962 963 964 965 966 967 968

STH 64 EB

PROJECT NO: 8110-01-76	HWY: STH 64	COUNTY: ST. CROIX	TRAFFIC CONTROL - STAGE 1	SHEET 38	E

FILE NAME : D:\WORK\81100106 C3D\SHEETSPLAN\025100-TC-1.DWG
LAYOUT NAME - 025100-TC-1 - EW

PLOT DATE : 7/14/2021 12:43 PM PLOT BY : MUNDEN, ALLISSA L PLOT NAME : PLOT SCALE : 1IN = 50 FT

WISDOT/CADDS SHEET 42

2

KEY

- WORK ZONE
- TRAFFIC CONTROL DRUM
- TRAFFIC CONTROL DRUM WITH LIGHT
- ARROW BOARD
- TYPE III BARRICADE WITH SIGN
- TRAFFIC CONTROL SIGN ON TEMPORARY SUPPORT
- TRAFFIC DIRECTION
- REMOVE SKIPS THROUGH TAPER

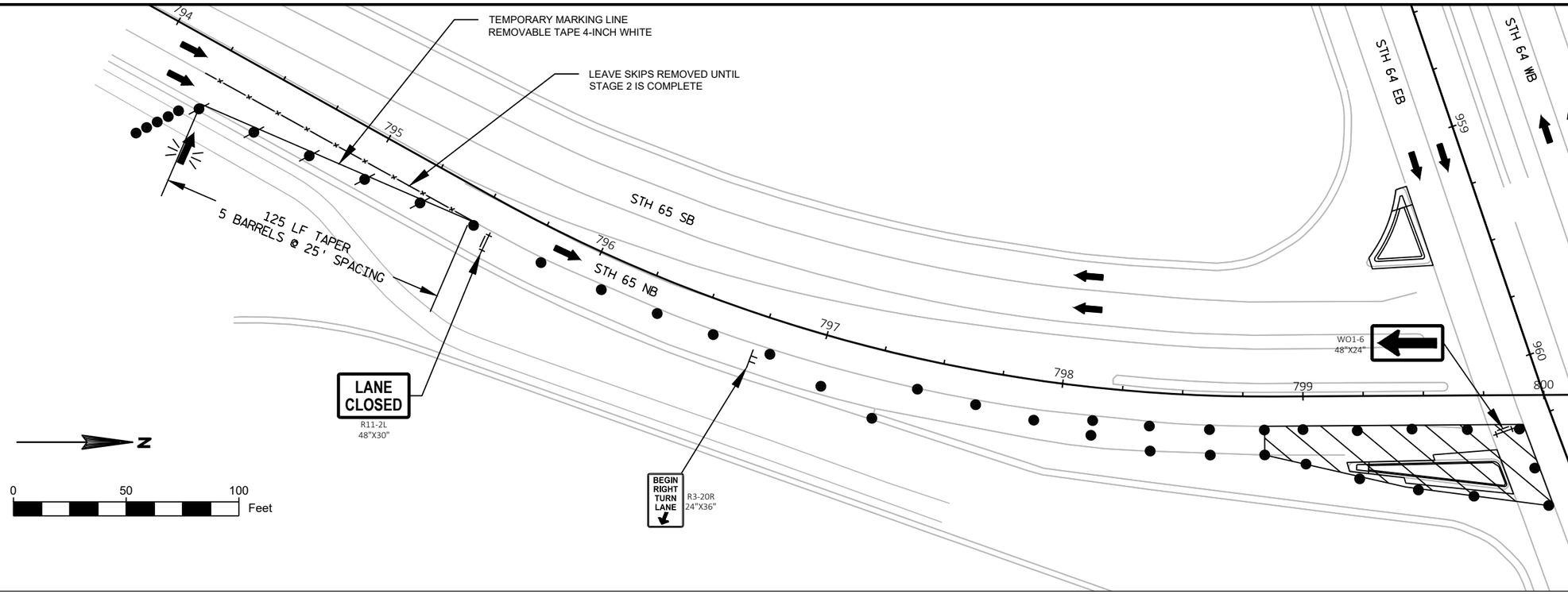

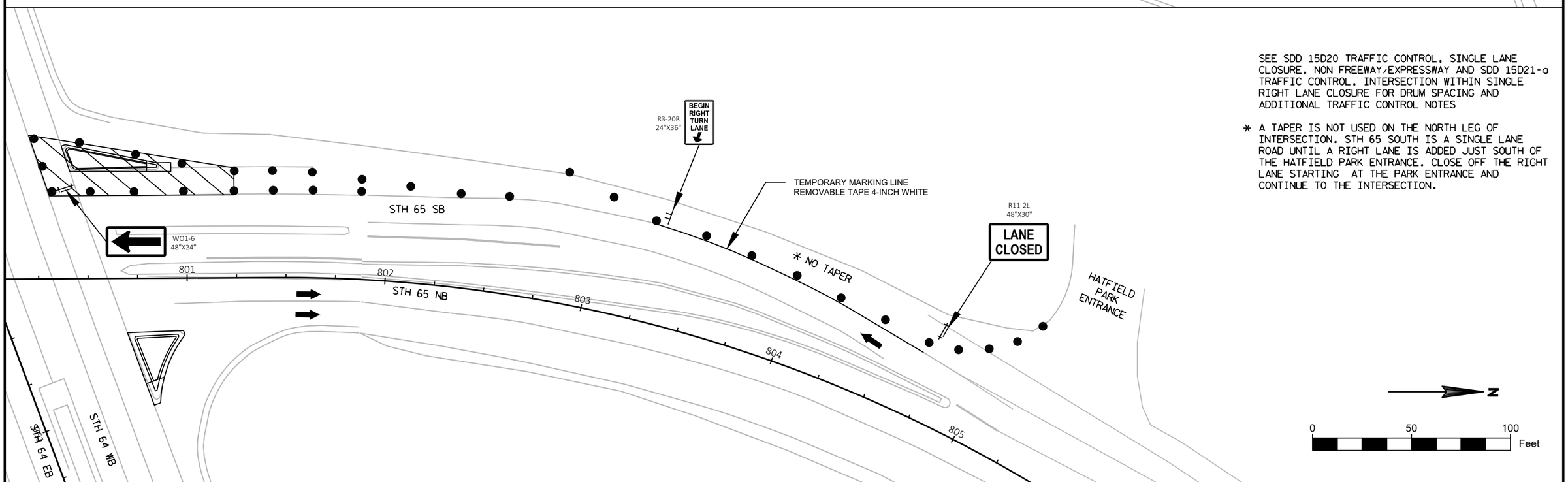

SEE SDD 15D20 TRAFFIC CONTROL, SINGLE LANE CLOSURE, NON FREEWAY/EXPRESSWAY AND SDD 15D21-a TRAFFIC CONTROL, INTERSECTION WITHIN SINGLE RIGHT LANE CLOSURE FOR DRUM SPACING AND ADDITIONAL TRAFFIC CONTROL NOTES

* A TAPER IS NOT USED ON THE NORTH LEG OF INTERSECTION. STH 65 SOUTH IS A SINGLE LANE ROAD UNTIL A RIGHT LANE IS ADDED JUST SOUTH OF THE HATFIELD PARK ENTRANCE. CLOSE OFF THE RIGHT LANE STARTING AT THE PARK ENTRANCE AND CONTINUE TO THE INTERSECTION.

PROJECT NO: 8110-01-76	HWY: STH 64	COUNTY: ST. CROIX	TRAFFIC CONTROL - STAGE 1	SHEET 39	E

2

KEY

- WORK ZONE
- TRAFFIC CONTROL DRUM
- TRAFFIC CONTROL DRUM WITH LIGHT
- ARROW BOARD
- TYPE III BARRICADE WITH SIGN
- TRAFFIC CONTROL SIGN ON TEMPORARY SUPPORT
- TRAFFIC DIRECTION
- REMOVE SKIPS THROUGH TAPER

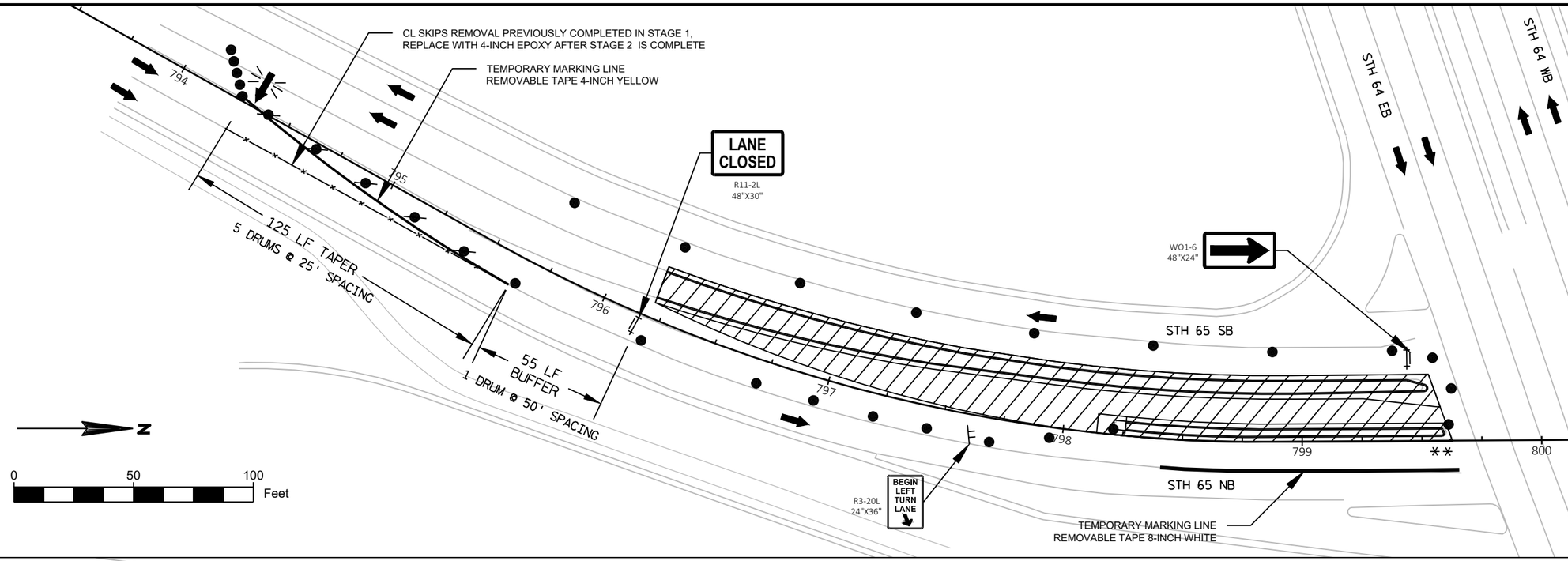

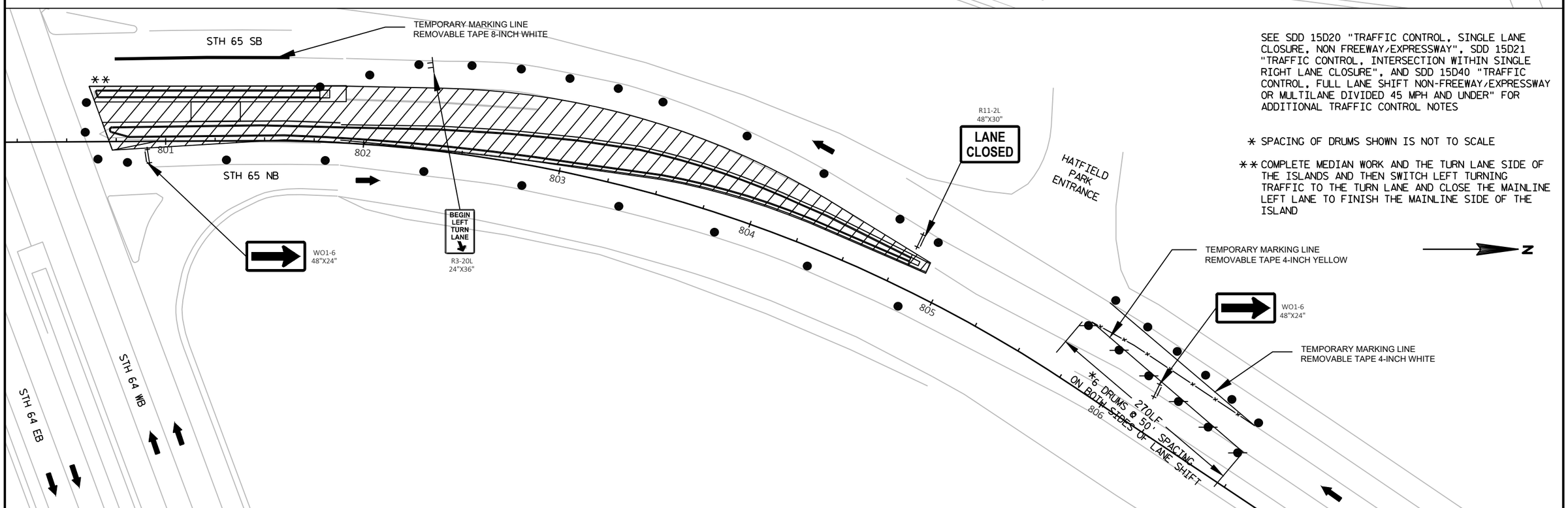

SEE SDD 15D20 "TRAFFIC CONTROL, SINGLE LANE CLOSURE, NON FREEWAY/EXPRESSWAY", SDD 15D21 "TRAFFIC CONTROL, INTERSECTION WITHIN SINGLE RIGHT LANE CLOSURE", AND SDD 15D40 "TRAFFIC CONTROL, FULL LANE SHIFT NON-FREEWAY/EXPRESSWAY OR MULTILANE DIVIDED 45 MPH AND UNDER" FOR ADDITIONAL TRAFFIC CONTROL NOTES

* SPACING OF DRUMS SHOWN IS NOT TO SCALE

** COMPLETE MEDIAN WORK AND THE TURN LANE SIDE OF THE ISLANDS AND THEN SWITCH LEFT TURNING TRAFFIC TO THE TURN LANE AND CLOSE THE MAINLINE LEFT LANE TO FINISH THE MAINLINE SIDE OF THE ISLAND

PROJECT NO: 8110-01-76	HWY: STH 64	COUNTY: ST. CROIX	TRAFFIC CONTROL - STAGE 2	SHEET 40	E

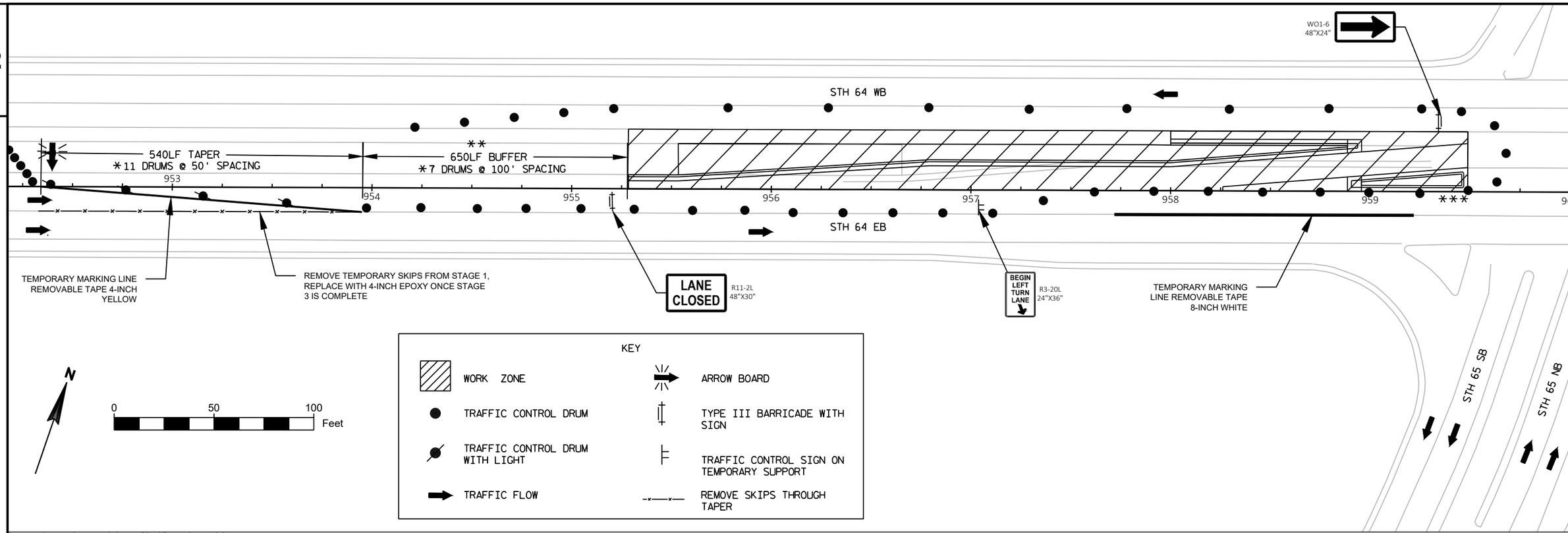

SEE SDD 15D20 TRAFFIC CONTROL, SINGLE LANE CLOSURE, NON FREEWAY/EXPRESSWAY AND SDD 15D21-a TRAFFIC CONTROL, INTERSECTION WITHIN SINGLE RIGHT LANE CLOSURE FOR DRUM SPACING AND ADDITIONAL TRAFFIC CONTROL NOTES

* SPACING AND NUMBER OF DRUMS SHOWN IN THE TAPER AND BUFFER SPACE ARE NOT TO SCALE.

** EAST BOUND BUFFER LENGTH EXTENDED FROM SDD RECOMMENDATION TO ACCOMMODATE FOR STH 64 HORIZONTAL CURVE

*** COMPLETE MEDIAN WORK AND THE TURN LANE SIDE OF THE ISLANDS AND THEN SWITCH LEFT TURNING TRAFFIC TO THE TURN LANE AND CLOSE THE MAINLINE LEFT LANE TO FINISH THE MAINLINE SIDE OF THE ISLAND

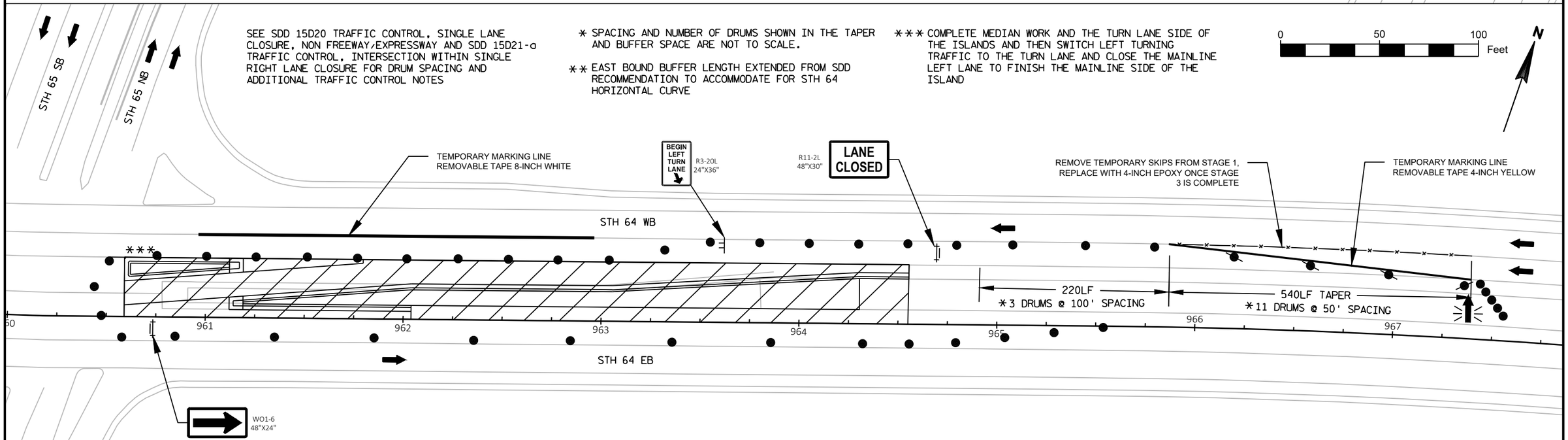

PROJECT NO:8110-01-76	HWY:STH 64	COUNTY:ST. CROIX	TRAFFIC CONTROL - STAGE 3	SHEET 41	E

2

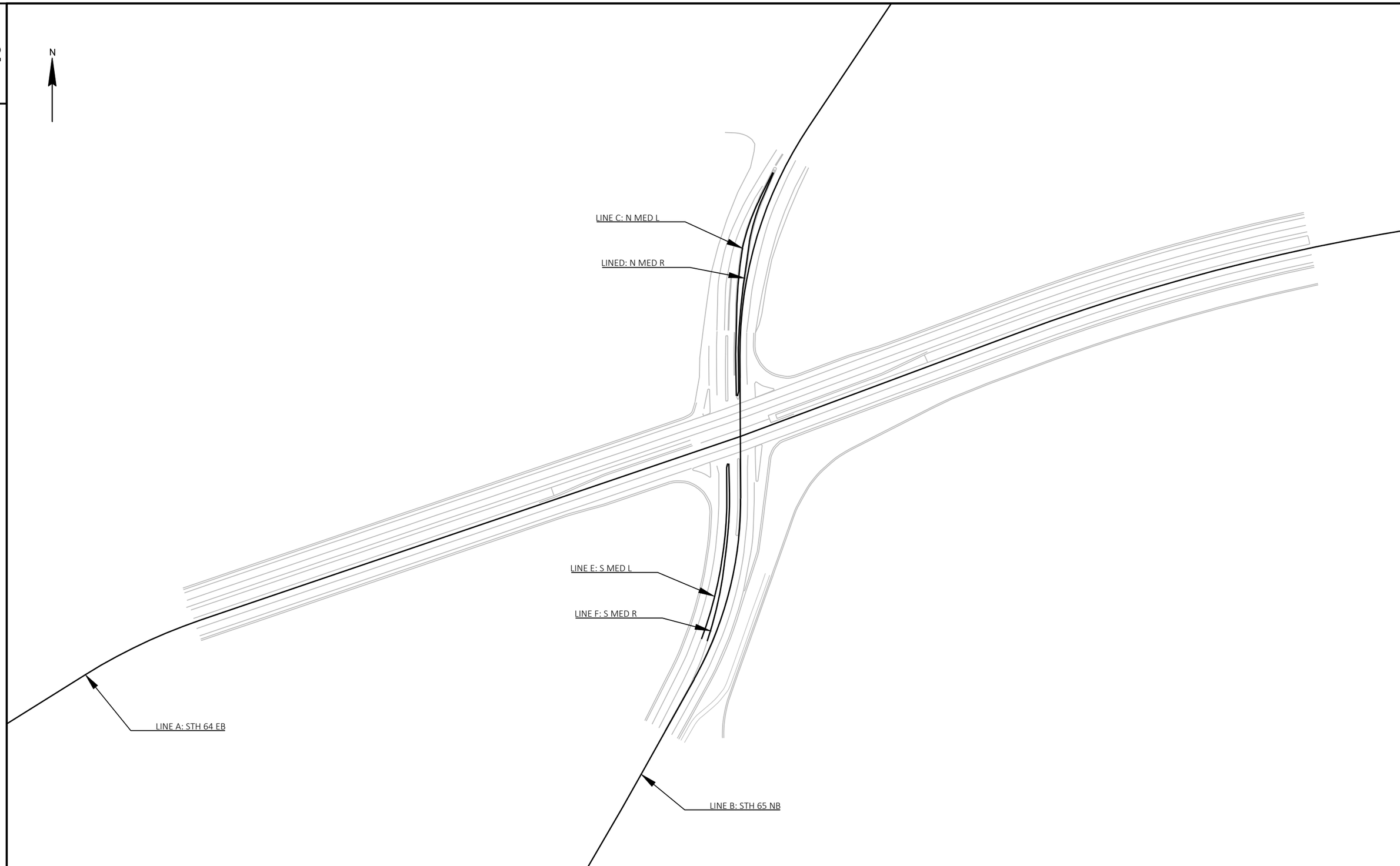

2

PROJECT NO:8110-01-06	HWY:STH 64	COUNTY:ST. CROIX	ALIGNMENT DETAILS - OVERVIEW	SHEET 42	E

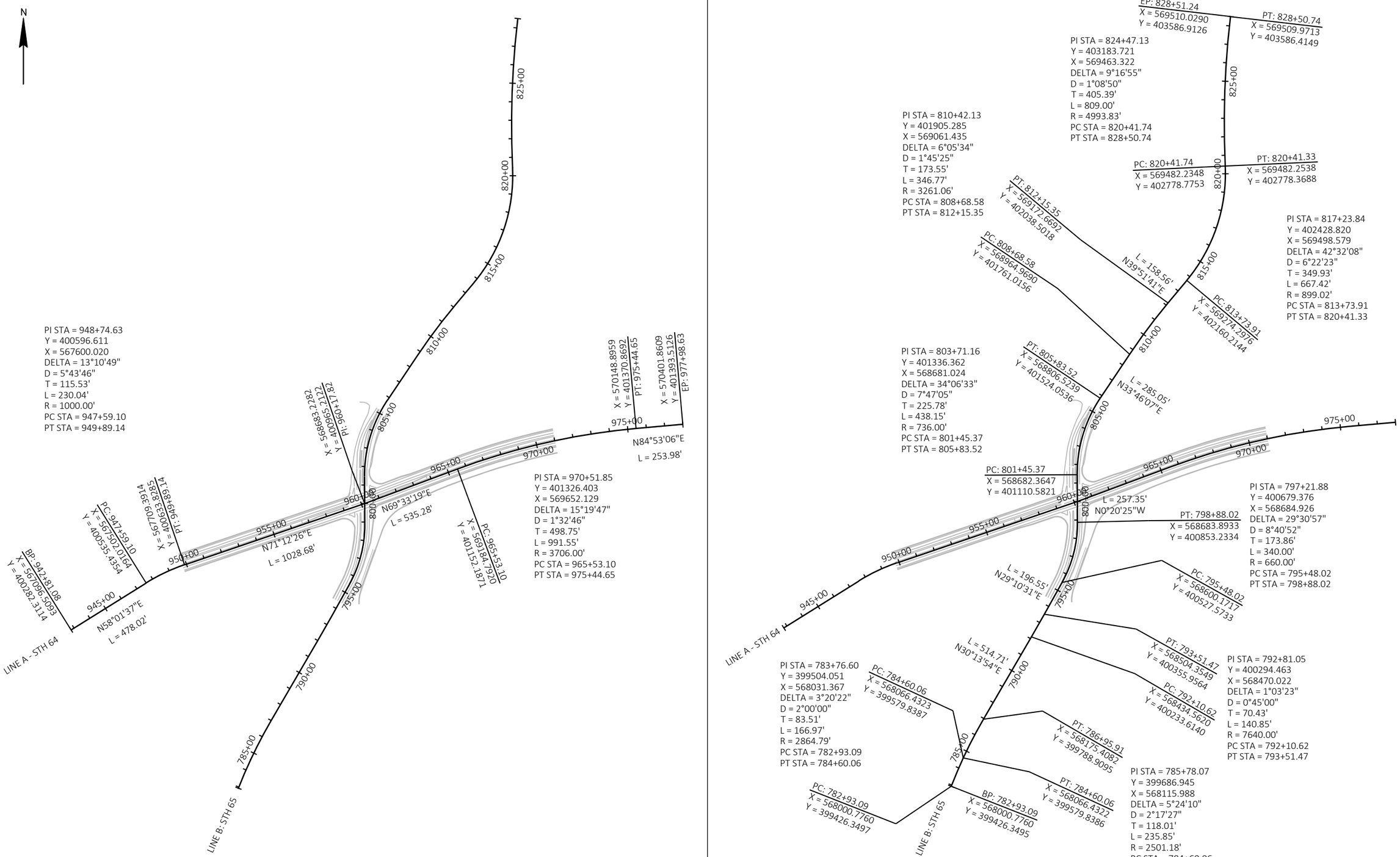
N
PI STA = 948+74.63
Y = 400596.611
X = 567600.020
DELTA = 13°10'49"
D = 5°43'46"
T = 115.53'
L = 230.04'
R = 1000.00'
PC STA = 947+59.10
PT STA = 949+89.14
BP: 942+81.08
X = 567096.5093
Y = 400282.3114
PC: 947+59.10
X = 567502.0164
Y = 400535.4354
PI: 949+89.14
X = 567709.3914
Y = 400633.8285
PI: 960+17.82
X = 568683.2282
Y = 400965.2122
PC: 965+53.10
X = 569184.7920
Y = 401152.1871
PT: 975+44.65
X = 570148.8959
Y = 401370.8692
EP: 977+98.63
X = 570401.8609
Y = 401393.5126
N71°12'26"E
L = 1028.68'
N58°01'37"E
L = 478.02'
N69°33'19"E
L = 535.28'
N84°53'06"E
L = 253.98'
PI STA = 970+51.85
Y = 401326.403
X = 569652.129
DELTA = 15°19'47"
D = 1°32'46"
T = 498.75'
L = 991.55'
R = 3706.00'
PC STA = 965+53.10
PT STA = 975+44.65
LINE A - STH 64
LINE B: STH 65
785+00
790+00
795+00
800+00
805+00
810+00
815+00
820+00
825+00
945+00
950+00
955+00
960+00
965+00
970+00
975+00
EP: 828+51.24
X = 569510.0290
Y = 403586.9126
PT: 828+50.74
X = 569509.9713
Y = 403586.4149
PI STA = 824+47.13
Y = 403183.721
X = 569463.322
DELTA = 9°16'55"
D = 1°08'50"
T = 405.39'
L = 809.00'
R = 4993.83'
PC STA = 820+41.74
PT STA = 828+50.74
PI STA = 810+42.13
Y = 401905.285
X = 569061.435
DELTA = 6°05'34"
D = 1°45'25"
T = 173.55'
L = 346.77'
R = 3261.06'
PC STA = 808+68.58
PT STA = 812+15.35
PC: 820+41.74
X = 569482.2348
Y = 402778.7753
PT: 820+41.33
X = 569482.2538
Y = 402778.3688
PT: 812+15.35
X = 569172.6692
Y = 402038.5018
PC: 808+68.58
X = 568964.9690
Y = 401761.0156
L = 158.56'
N39°51'41"E
PI STA = 817+23.84
Y = 402428.820
X = 569498.579
DELTA = 42°32'08"
D = 6°22'23"
T = 349.93'
L = 667.42'
R = 899.02'
PC STA = 813+73.91
PT STA = 820+41.33
PC: 813+73.91
X = 569274.4976
Y = 402160.2144
PI STA = 803+71.16
Y = 401336.362
X = 568681.024
DELTA = 34°06'33"
D = 7°47'05"
T = 225.78'
L = 438.15'
R = 736.00'
PC STA = 801+45.37
PT STA = 805+83.52
PT: 805+83.52
X = 568806.5239
Y = 401524.0536
L = 285.05'
N33°46'07"E
PC: 801+45.37
X = 568682.3647
Y = 401110.5821
L = 257.35'
N0°20'25"W
PT: 798+88.02
X = 568683.8933
Y = 400853.2334
PI STA = 797+21.88
Y = 400679.376
X = 568684.926
DELTA = 29°30'57"
D = 8°40'52"
T = 173.86'
L = 340.00'
R = 660.00'
PC STA = 795+48.02
PT STA = 798+88.02
PC: 795+48.02
X = 568600.1717
Y = 400527.5733
L = 196.55'
N29°10'31"E
L = 514.71'
N30°13'54"E
PI STA = 783+76.60
Y = 399504.051
X = 568031.367
DELTA = 3°20'22"
D = 2°00'00"
T = 83.51'
L = 166.97'
R = 2864.79'
PC STA = 782+93.09
PT STA = 784+60.06
PC: 784+60.06
X = 568066.4323
Y = 399579.8387
PT: 793+51.47
X = 568504.3549
Y = 400355.9564
PC: 792+10.62
X = 568434.5620
Y = 400233.6140
PI STA = 792+81.05
Y = 400294.463
X = 568470.022
DELTA = 1°03'23"
D = 0°45'00"
T = 70.43'
L = 140.85'
R = 7640.00'
PC STA = 792+10.62
PT STA = 793+51.47
PT: 786+95.91
X = 568175.4082
Y = 399788.9095
PI STA = 785+78.07
Y = 399686.945
X = 568115.988
DELTA = 5°24'10"
D = 2°17'27"
T = 118.01'
L = 235.85'
R = 2501.18'
PC STA = 784+60.06
PT STA = 786+95.91
PT: 784+60.06
X = 568066.4322
Y = 399579.8386
BP: 782+93.09
X = 568000.7760
Y = 399426.3495
PC: 782+93.09
X = 568000.7760
Y = 399426.3497
LINE A - STH 64
LINE B: STH 65

2

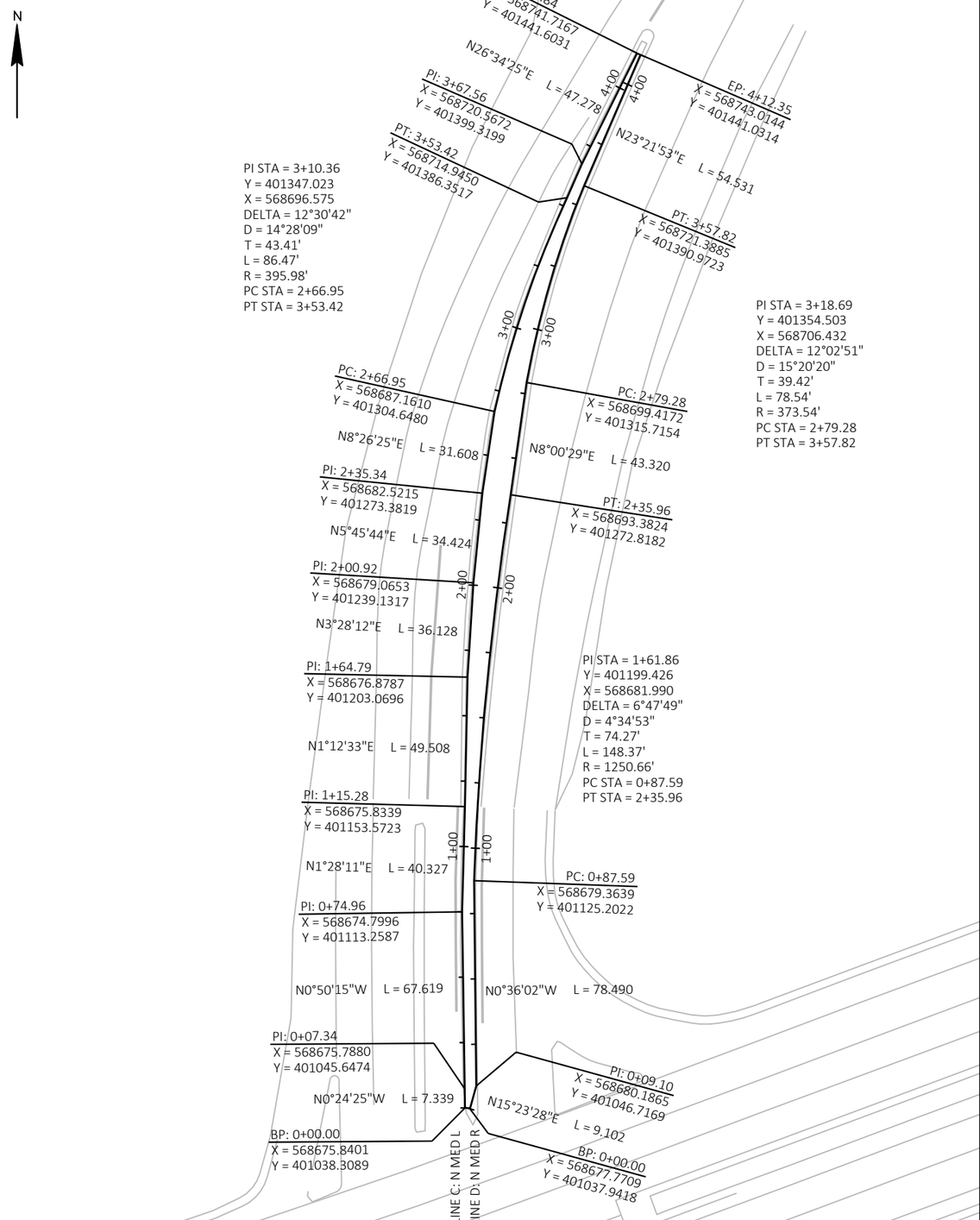

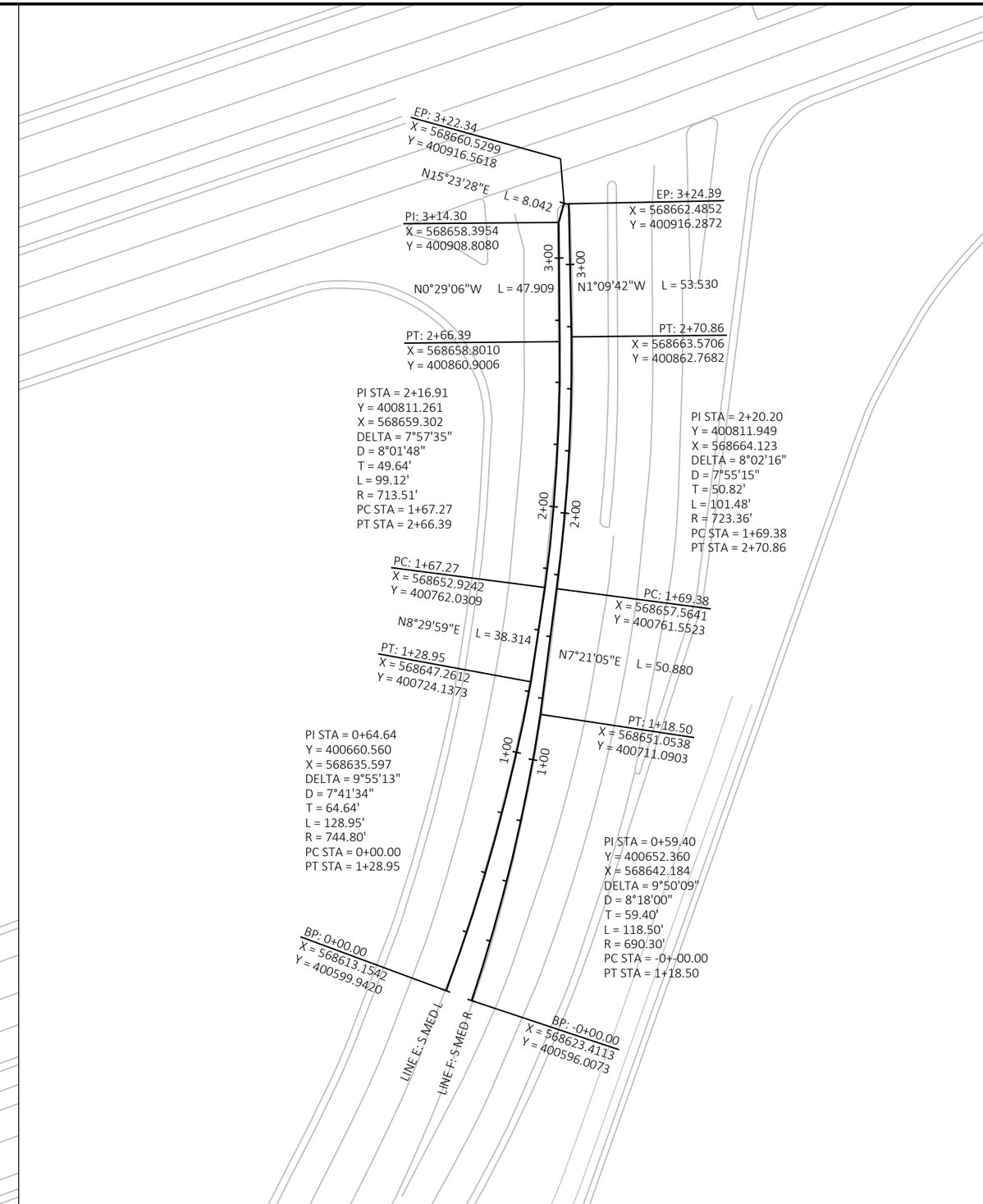

2

PROJECT NO:8110-01-06	HWY:STH 64	COUNTY:ST. CROIX	ALIGNMENT DETAILS - STH 65 MEDIANS	SHEET 44	E

8110-01-76

Line	Item	Item Description	Unit	Total	Qty
0002	204.0100	Removing Concrete Pavement	SY	2,095.000	2,095.000
0004	204.0150	Removing Curb & Gutter	LF	1,652.900	1,652.900
0006	204.0155	Removing Concrete Sidewalk	SY	781.900	781.900
0008	204.0195	Removing Concrete Bases	EACH	14.000	14.000
0010	204.0220	Removing Inlets	EACH	2.000	2.000
0012	204.0245	Removing Storm Sewer (size) 15-Inch	LF	18.000	18.000
0014	204.9060.S	Removing (item description) 01. Removing Traffic Signals	EACH	1.000	1.000
0016	205.0100	Excavation Common	CY	1,661.000	1,661.000
0018	208.1100	Select Borrow	CY	3.000	3.000
0020	211.0200	Prepare Foundation for Concrete Pavement (project) 01. 8110-01-76	LS	1.000	1.000
0022	211.0500	Prepare Foundation for Base Aggregate	STA	16.100	16.100
0024	213.0100	Finishing Roadway (project) 01. 8110-01-76	EACH	1.000	1.000
0026	305.0110	Base Aggregate Dense 3/4-Inch	TON	297.900	297.900
0028	305.0120	Base Aggregate Dense 1 1/4-Inch	TON	1,614.000	1,614.000
0030	415.0080	Concrete Pavement 8-Inch	SY	1,209.200	1,209.200
0032	416.0610	Drilled Tie Bars	EACH	1,010.000	1,010.000
0034	416.0620	Drilled Dowel Bars	EACH	110.000	110.000
0036	520.8000	Concrete Collars for Pipe	EACH	2.000	2.000
0038	601.0407	Concrete Curb & Gutter 18-Inch Type D	LF	608.600	608.600
0040	601.0409	Concrete Curb & Gutter 30-Inch Type A	LF	1,594.800	1,594.800
0042	601.0555	Concrete Curb & Gutter 6-Inch Sloped 36-Inch Type A	LF	1,220.600	1,220.600
0044	602.0405	Concrete Sidewalk 4-Inch	SF	8,852.300	8,852.300
0046	608.0315	Storm Sewer Pipe Reinforced Concrete Class III 15-Inch	LF	62.000	62.000
0048	611.0530	Manhole Covers Type J	EACH	1.000	1.000
0050	611.0612	Inlet Covers Type C	EACH	1.000	1.000
0052	611.0615	Inlet Covers Type F	EACH	2.000	2.000
0054	611.2033	Manholes 3x3-FT	EACH	2.000	2.000
0056	611.3253	Inlets 2.5x3-FT	EACH	2.000	2.000
0058	611.8115	Adjusting Inlet Covers	EACH	9.000	9.000
0060	618.0100	Maintenance And Repair of Haul Roads (project) 01. 8110-01-76	EACH	1.000	1.000
0062	619.1000	Mobilization	EACH	1.000	1.000
0064	620.0300	Concrete Median Sloped Nose	SF	670.700	670.700
0066	624.0100	Water	MGAL	21.000	21.000
0068	625.0500	Salvaged Topsoil	SY	118.700	118.700
0070	628.1504	Silt Fence	LF	40.000	40.000
0072	628.1520	Silt Fence Maintenance	LF	40.000	40.000
0074	628.1905	Mobilizations Erosion Control	EACH	2.000	2.000
0076	628.1910	Mobilizations Emergency Erosion Control	EACH	2.000	2.000
0078	628.2008	Erosion Mat Urban Class I Type B	SY	118.700	118.700
0080	628.7010	Inlet Protection Type B	EACH	1.000	1.000
0082	628.7015	Inlet Protection Type C	EACH	12.000	12.000
0084	629.0210	Fertilizer Type B	CWT	0.100	0.100
0086	630.0140	Seeding Mixture No. 40	LB	2.100	2.100
0088	630.0500	Seed Water	MGAL	2.000	2.000
0090	634.0616	Posts Wood 4x6-Inch X 16-FT	EACH	2.000	2.000
0092	634.0816	Posts Tubular Steel 2x2-Inch X 16-FT	EACH	4.000	4.000
0094	637.2210	Signs Type II Reflective H	SF	126.800	126.800
0096	637.2215	Signs Type II Reflective H Folding	SF	62.500	62.500
0098	638.2602	Removing Signs Type II	EACH	22.000	22.000

8110-01-76

Line	Item	Item Description	Unit	Total	Qty
0100	638.3000	Removing Small Sign Supports	EACH	4.000	4.000
0102	642.5001	Field Office Type B	EACH	1.000	1.000
0104	643.0300	Traffic Control Drums	DAY	8,582.000	8,582.000
0106	643.0420	Traffic Control Barricades Type III	DAY	396.000	396.000
0108	643.0705	Traffic Control Warning Lights Type A	DAY	792.000	792.000
0110	643.0715	Traffic Control Warning Lights Type C	DAY	1,510.000	1,510.000
0112	643.0800	Traffic Control Arrow Boards	DAY	146.000	146.000
0114	643.0900	Traffic Control Signs	DAY	1,705.000	1,705.000
0116	643.5000	Traffic Control	EACH	1.000	1.000
0118	646.1020	Marking Line Epoxy 4-Inch	LF	2,267.000	2,267.000
0120	646.1555	Marking Line Grooved Contrast Permanent Tape 4-Inch	LF	66.000	66.000
0122	646.3020	Marking Line Epoxy 8-Inch	LF	896.000	896.000
0124	646.6120	Marking Stop Line Epoxy 18-Inch	LF	48.000	48.000
0126	646.8120	Marking Curb Epoxy	LF	40.000	40.000
0128	646.8220	Marking Island Nose Epoxy	EACH	4.000	4.000
0130	646.9000	Marking Removal Line 4-Inch	LF	475.000	475.000
0132	649.0150	Temporary Marking Line Removable Tape 4-Inch	LF	3,326.000	3,326.000
0134	649.0250	Temporary Marking Line Removable Tape 8-Inch	LF	565.000	565.000
0136	650.4000	Construction Staking Storm Sewer	EACH	4.000	4.000
0138	650.4500	Construction Staking Subgrade	LF	150.000	150.000
0140	650.5000	Construction Staking Base	LF	964.000	964.000
0142	650.5500	Construction Staking Curb Gutter and Curb & Gutter	LF	2,341.000	2,341.000
0144	650.7000	Construction Staking Concrete Pavement	LF	846.800	846.800
0146	650.8500	Construction Staking Electrical Installations (project) 01. 8110-01-76	LS	1.000	1.000
0148	650.9910	Construction Staking Supplemental Control (project) 01. 8110-01-76	LS	1.000	1.000
0150	652.0225	Conduit Rigid Nonmetallic Schedule 40 2-Inch	LF	917.000	917.000
0152	652.0235	Conduit Rigid Nonmetallic Schedule 40 3-Inch	LF	130.000	130.000
0154	652.0605	Conduit Special 2-Inch	LF	289.000	289.000
0156	652.0615	Conduit Special 3-Inch	LF	566.000	566.000
0158	652.0700.S	Install Conduit into Existing Item	EACH	10.000	10.000
0160	652.0800	Conduit Loop Detector	LF	400.000	400.000
0162	653.0135	Pull Boxes Steel 24x36-Inch	EACH	4.000	4.000
0164	653.0140	Pull Boxes Steel 24x42-Inch	EACH	9.000	9.000
0166	653.0900	Adjusting Pull Boxes	EACH	3.000	3.000
0168	653.0905	Removing Pull Boxes	EACH	7.000	7.000
0170	654.0101	Concrete Bases Type 1	EACH	6.000	6.000
0172	654.0102	Concrete Bases Type 2	EACH	2.000	2.000
0174	654.0107	Concrete Bases Type 7	EACH	5.000	5.000
0176	655.0230	Cable Traffic Signal 5-14 AWG	LF	1,400.000	1,400.000
0178	655.0260	Cable Traffic Signal 12-14 AWG	LF	3,011.000	3,011.000
0180	655.0515	Electrical Wire Traffic Signals 10 AWG	LF	2,653.000	2,653.000
0182	655.0610	Electrical Wire Lighting 12 AWG	LF	1,176.000	1,176.000
0184	655.0630	Electrical Wire Lighting 4 AWG	LF	1,930.000	1,930.000
0186	655.0635	Electrical Wire Lighting 2 AWG	LF	6,280.000	6,280.000
0188	655.0700	Loop Detector Lead In Cable	LF	4,960.000	4,960.000
0190	655.0800	Loop Detector Wire	LF	1,396.000	1,396.000
0192	655.0900	Traffic Signal EVP Detector Cable	LF	1,320.000	1,320.000
0194	657.0100	Pedestal Bases	EACH	2.000	2.000
0196	657.0210	Transformer Bases Breakaway 15-17 Inch Bolt Circle	EACH	2.000	2.000

8110-01-76

Line	Item	Item Description	Unit	Total	Qty
0198	657.0255	Transformer Bases Breakaway 11 1/2-Inch Bolt Circle	EACH	2.000	2.000
0200	657.0310	Poles Type 3	EACH	2.000	2.000
0202	657.0337	Poles Type 17-Aluminum	EACH	2.000	2.000
0204	657.0425	Traffic Signal Standards Aluminum 15-FT	EACH	2.000	2.000
0206	657.0625	Luminaire Arms Single Member 6-Inch Clamp 6-FT	EACH	2.000	2.000
0208	657.0714	Luminaire Arms Truss Type 4-Inch Clamp 15-FT	EACH	2.000	2.000
0210	658.0173	Traffic Signal Face 3S 12-Inch	EACH	4.000	4.000
0212	658.0174	Traffic Signal Face 4S 12-Inch	EACH	8.000	8.000
0214	658.5069	Signal Mounting Hardware (location) STH 64 & STH 65	LS	1.000	1.000
0216	661.0200	Temporary Traffic Signals for Intersections (location) .01 STH 64 & STH 65	LS	1.000	1.000
0218	690.0250	Sawing Concrete	LF	3,224.400	3,224.400
0220	715.0720	Incentive Compressive Strength Concrete Pavement	DOL	500.000	500.000
0222	ASP.1T0A	On-the-Job Training Apprentice at $5.00/HR	HRS	300.000	300.000
0224	ASP.1T0G	On-the-Job Training Graduate at $5.00/HR	HRS	300.000	300.000
0226	SPV.0060	Special .01 Painting Lighting Unit	EACH	2.000	2.000
0228	SPV.0060	Special .02 Luminaires Utility LED C Special	EACH	2.000	2.000
0230	SPV.0060	Special .03 Salvage and Reinstall Lighting Unit	EACH	3.000	3.000
0232	SPV.0060	Special .04 Salvage and Reinstall Signal Equipment	EACH	4.000	4.000
0234	SPV.0090	Special .01 Install State Furnished CAT-5E Cable	LF	742.000	742.000

3

REMOVING PAVEMENT

CATEGORY	ALIGNMENT	STATION	TO	STATION	LOCATION	204.0100 SY
0010	STH 64	959+17	-	959+52	SW ISLAND	54.0
0010	STH 65	799+18	-	799+80	SE ISLAND	78.4
0010	STH 65	800+41	-	800+92	NW ISLAND	49.6
0010	STH 64	960+67	-	961+07	NE ISLAND	62.2
					STAGE 1 TOTAL	244.1
0010	STH 65	796+20	-	799+58	S MEDIAN	415.4
0010	STH 65	798+14	-	799+63	S LT ISLAND	127.0
0010	STH 65	800+68	-	801+88	N MEDIAN	135.7
0010	STH 65	801+13	-	801+38	N LT LANE	27.2
0010	STH 65	800+61		801+90	N LT ISLAND	114.7
					STAGE 2 TOTAL	819.9
0010	STH 64	955+28.4	-	959+48.8	EB LT LANE	490.2
0010	STH 64	960+59.0	-	964+55.4	WB LT LANE	540.7
					STAGE 3 TOTAL	1030.9
					TOTAL 0010	2095.0

REMOVING CONCRETE SIDEWALK

CATEGORY	ALIGNMENT	STATION	TO	STATION	LOCATION	204.0155 SY
0010	STH 65	801+87	-	804+81	N MEDIAN	232.9
					STAGE 2 TOTAL	232.9
0010	STH 64	956+65.3	-	959.30+7	W MEDIAN	274.3
0010	STH 64	960+91.0	-	963+80.72	E MEDIAN	274.7
					STAGE 3 TOTAL	549.0
					TOTAL 0010	781.9

REMOVING CONCRETE CURB & GUTTER

CATEGORY	ALIGNMENT	STATION	TO	STATION	204.0150 LOCATION	LF
0010	STH 65	801+87	-	804+81	N MEDIAN	618.9
					STAGE 2 TOTAL	618.9
0010	STH 64	955+28.4	-	959+31.4	W MEDIAN	544.7
0010	STH 64	960+90.0	-	964+55.4	E MEDIAN	489.3
					STAGE 3 TOTAL	1034.0
					TOTAL 0010	1652.9

REMOVING INLETS

CATEGORY	STATION	LOCATION	204.0220 EACH
0010	959+26.2	MEDIAN EB LT	1
0010	959+28.8	MEDIAN WB RT	1
		TOTAL 0010	2

REMOVING STORM SEWER (01. 15-INCH)

CATEGORY	STATION	TO	STATION	LOCATION	204.0245.01 LF
0010	959+26.0	-	959+28.5	MEDIAN	10
0010			959+28.5	TIE INTO EXISTING	4
0010			959+26.0	TIE INTO EXISTING	4
				TOTAL 0010	18

3

3

EARTHWORK

CATEGORY	LOCATION	COMMON 205.0100 CY	BORROW 208.1100 CY
0010	NW ISLAND	6.07	-
0010	NE ISLAND	8.7	-
001	SW ISLAND	5.51	-
0010	SE ISLAND	6.59	-
	STAGE 1 TOTAL	26.9	0.0
0010	STH 65 NB	239.71	-
0010	STH 65 SB LT LANE	4.54	-
0010	STH 65 SB	256.48	-
	STAGE 2 TOTAL	500.7	0.0
0010	STH 64 EB	658.33	2.7
0010	STH 64 WB	475.54	-
	STAGE 3 TOTAL	1133.9	2.7
	TOTAL 0010	1661.0	3.0

PREPARE FOUNDATION FOR CONCRETE PAVEMENT (8110-01-76)

CATEGORY	LOCATION	211.0200 LS
0010	STH 64	1
	TOTAL 0010	1

FINISHING ROADWAY (8110-01-76)

CATEGORY	LOCATION	213.0100 LS
0010	STH 64	1
	TOTAL 0010	1

PREPARE FOUNDATION FOR BASE AGGREGATE

CATEGORY	ALIGNMENT	STATION	TO	STATION	LOCATION	211.0500 STA
0010	STH 64	955+28	-	959+48	STH 64 EB	4.2
0010	STH 64	960+59	-	964+55	STH 64 WB	4.2
0010	STH 65	796+18	-	799+63	STH 65 NB	4.4
0010	STH 65	800+61	-	804+91	STH 65 SB	3.3
					TOTAL 0010	16.1

BASE AGGREGATE DENSE 3/4-INCH (2 TON/CY)

CATEGORY	ALIGNMENT	STATION	TO	STATION	LOCATION	305.0110 TON
0010	STH 64	959+16.3	-	959+52.1	SW ISLAND	4.8
0010	STH 65	799+18	-	799+87	SE ISLAND	7.7
0010	STH 65	960+66.1	-	961+04.54	NW ISLAND	5.3
0010	STH 64	800+37	-	800+92	NE ISLAND	5.5
					STAGE 1 TOTAL	23.2
0010	STH 65	800+61	-	801+90	N LT. ISLAND	7.9
0010	STH 65	800+68	-	804+91	N MEDIAN	64.4
0010	STH 65	796+20	-	799+58	S MEDIAN	49.4
0010	STH 65	798+14	-	799+63	S LT. ISLAND	8.8
					STAGE 2 TOTAL	130.5
0010	STH 64	955+28.4	-	958+95.5	W MEDIAN	69.5
0010	STH 64	958+88.5	-	959+48.8	W ISLAND	4.7
0010	STH 64	960+59.0	-	961+19.0	E ISLAND	4.5
0010	STH 64	961+12.0	-	964+55.4	E MEDIAN	65.5
					STAGE 3 TOTAL	144.2
					TOTAL 0010	297.9

3

3

BASE AGGREGATE DENSE 1 1/4-INCH (2 TON/CY)

CATEGORY	ALIGNMENT	STATION	TO	STATION	LOCATION	305.0120 TON
0010	STH 64	959+17.4	-	959+50.1	SW ISLAND	18.2
0010	STH 65	799+18.9	-	799+87.2	SE ISLAND	26.1
0010	STH 65	800+36.8	-	800+92.1	NW ISLAND	16.5
0010	STH 64	960+67.5	-	961+06.6	NE ISLAND	19.8
					STAGE 1 TOTAL	80.6
0010	STH 65	796+20.2	-	799+62.8	SOUTH LEG	243.9
0010	STH 65	800+61.5	-	804+90.7	NORTH LEG	264.4
0010	STH 65	801+12.9	-	801+37.8	N LT. LANE	9.1
					STAGE 2 TOTAL	517.5
0010	STH 64	955+28.4	-	959+48.8	WEST LEG	560.5
0010	STH 64	960+59.0	-	964+55.4	EAST LEG	455.4
					STAGE 3 TOTAL	1015.9
					TOTAL 0010	1614.0

CONCRETE PAVEMENT 8-INCH

CATEGORY	ALIGNMENT	STATION	TO	STATION	LOCATION	415.0080 SY
0010	STH 65	801+13	-	801+38	N LT LANE	27.45
					STAGE 2 TOTAL	27.5
0010	STH 64	955+28.4	-	959+48.8	EB LT LANE	607.84
0010	STH 64	960+59.0	-	964+55.4	WB LT LANE	573.94
					STAGE 3 TOTAL	1181.8
					TOTAL 0010	1209.2

CONCRETE COLLARS FOR PIPE

CATEGORY	ALIGNMENT	STATION	LOCATION	520.8000 EACH	REMARKS
0010	STH 65	959+28.5	TIE INTO EXISTING	1	STRUCTURE 3-EXIST
0010	STH 65	959+26.0	TIE INTO EXISTING	1	STRUCTURE 4-EXIST
			TOTAL 0010	2.0	

DRILLED BARS

CATEGORY	ALIGNMENT	STATION	TO	STATION	LOCATION	TIE BARS 416.0610 EACH	DOWELS 416.0620 EACH
0010	STH 64	959+17	-	959+52	SW ISLAND	33	
0010	STH 65	799+18	-	799+80	SE ISLAND	53	
0010	STH 65	800+41	-	800+92	NW ISLAND	41	
0010	STH 64	960+67	-	961+07	NE ISLAND	36	
					STAGE 1 TOTAL	163.0	0.0
0010	STH 65	796+18	-	79+58	S MEDIAN	223	16
0010	STH 65	798+14	-	799+63	S LT LANE ISLAND	100	8
0010	STH 65	800+68	-	801+88	N MEDIAN	80	
0010	STH 65	800+61	-	801+90	N LT LANE ISLAND	75	8
0010	STH 65	801+13	-	801+38	N LT LANE		19
					STAGE 2 TOTAL	478.0	51.0
0010	STH 64	955+28.4	-	959+48.8	EB LT SIDE	140	
0010	STH 64	958+00.0	-	959+48.8	WB RT SIDE	49	
0010	STH 64			959+48.8	MEDIAN		29
0010	STH 64			960+59.0	MEDIAN		30
0010	STH 64	960+59.0	-	962+04.0	EB LT SIDE	48	
0010	STH 64	960+59.0	-	964+55.4	WB RT SIDE	132	
					STAGE 3 TOTAL	369.0	59.0
					TOTAL 0010	1010	110

CONCRETE CURB & GUTTER 18-INCH TYPE D

CATEGORY	ALIGNMENT	STATION	TO	STATION	LOCATION	601.0407 LF	REMARKS
0010	STH 65	801+88	-	804+86	N MEDIAN	608.6	STAGE 2
					TOTAL 0010	608.6	

3

3

CONCRETE CURB & GUTTER 30-INCH TYPE A

CATEGORY	ALIGNMENT	STATION	TO	STATION	LOCATION	601.0409 LF
0010	STH 65	799+27	-	799+84	SE ISLAND	121.6
0010	STH 65	800+39	-	800+80	NW ISLAND	89.2
					STAGE 1 TOTAL	210.8
0010	STH 65	796+20	-	799+53	S MEDIAN	651.1
0010	STH 65	798+26	-	799+60	S LT ISLAND	268.7
0010	STH 65	800+65	-	801+77	N LT ISLAND	229.1
0010	STH 65	800+72	-	801+88	N MEDIAN	235.1
					STAGE 2 TOTAL	1384.0
					TOTAL 0010	1594.8

CONCRETE CURB & GUTTER 6-INCH SLOPED 36-INCH TYPE A

CATEGORY	ALIGNMENT	STATION	TO	STATION	LOCATION	601.0555 LF
0010	STH 64	959+21.5	-	959+47.8	SW ISLAND	66.4
0010	STH 64	960+70.9	-	960+99.0	NE ISLAND	70.6
					STAGE 1 TOTAL	137.0
0010	STH 64	955+28.4	-	958+88.5	W MEDIAN	360.6
0010	STH 64	958+00.0	-	958+88.5	W MEDIAN	88.6
0010	STH 64	958+95.5	-	959+45.8	W ISLAND	106.5
0010	STH 64	960+62.0	-	961+11.8	E ISLAND	105.9
0010	STH 64	961+19.0	-	962+04.0	E MEDIAN	85.0
0010	STH 64	961+19.0	-	964+55.4	E MEDIAN	336.9
					STAGE 3 TOTAL	1083.5
					TOTAL 0010	1220.6

STORM SEWER PIPE REINFORCED CONCRETE CLASS III 15-INCH

CATEGORY	STATION	TO	STATION	LOCATION	608.0315 LF	REMARKS
0010			958+85.3	W MEDIAN	3	STRUCTURE 1-2
0010	958+85.3	-	959+28.5	W LT LANE	42	STRUCTURE 2-3
0010	959+26.0	-	959+28.5	W LT LANE	9	STRUCTURE 4-3
0010		-	959+28.5	TIE INTO EXISTING	4	STRUCTURE 3-EXIST
0010		-	959+26.0	TIE INTO EXISTING	4	STRUCTURE 4-EXIST
				TOTAL 0010	62	

3

CONCRETE SIDEWALK 4-INCH

CATEGORY	ALIGNMENT	STATION	TO	STATION	LOCATION	602.0405 SF
0010	STH 64	959+25	-	959+47	SW ISLAND	193.5
0010	STH 65	799+27	-	799+84	SE ISLAND	310.3
0010	STH 65	800+39	-	800+80	NW ISLAND	215.2
0010	STH 64	960+72	-	960+95	NE ISLAND	221.9
					STAGE 1 TOTAL	940.9
0010	STH 65	796+20	-	799+52	S MEDIAN	660.5
0010	STH 65	798+25	-	799+59	S LT ISLAND	354.6
0010	STH 65	800+65	-	801+77	N LT ISLAND	230.4
0010	STH 65	800+72	-	804+81	N MEDIAN	831.4
					STAGE 2 TOTAL	2076.9
0010	STH 64	955+53.3	-	958+88.5	MEDIAN	2815.6
0010	STH 64	958+95.5	-	959+45.8	W ISLAND	189.5
0010	STH 64	960+62.0	-	961.12.0	E ISLAND	183.6
0010	STH 64	961+19.0	-	964+30.4	MEDIAN	2645.8
					STAGE 3 TOTAL	5834.6
					TOTAL 0010	8852.3

3

MANHOLES AND INLETS

CATEGORY	ALIGNMENT	STATION	LOCATION	MANHOLE COVERS TYPE J 611.0530 EACH	INLET COVERS TYPE C 611.0612 EACH	INLET COVERS TYPE F 611.0615 EACH	MANHOLES 3X3-FT 611.2033 EACH	INLETS 2.5X3-FT 611.3253 EACH	ADJUSTING INLET COVERS 611.8115 EACH	REMARKS
0010	STH 64	958+85	W MEDIAN			1		1		STRUCTURE 1
0010	STH 64	958+85	W MEDIAN			1		1		STRUCTURE 2
0010	STH 64	959+29	W LT LANE		1		1			STRUCTURE 3
0010	STH 64	959+26	W LT LANE	1			1			STRUCTURE 4
0010	STH 64	958+00	W MEDIAN						1	STRUCTURE 5
0010	STH 64	958+00	W MEDIAN						1	STRUCTURE 6
0010	STH 64	964+30	E MEDIAN						1	STRUCTURE 12
0010	STH 64	964+50	E MEDIAN						1	STRUCTURE 13
0010	STH 65	797+29	S MEDIAN						1	STRUCTURE 7
0010	STH 65	798+23	S LT ISLAND						1	STRUCTURE 8
0010	STH 65	802+50	N MEDIAN						1	STRUCTURE 9
0010	STH 65	802+69	N MEDIAN						1	STRUCTURE 10
0010	STH 65	804+49	N MEDIAN						1	STRUCTURE 11
		TOTAL 0010		1	1	2	2	2	9	

MAINTENANCE AND REPAIR OF HAUL ROADS (8110-01-76)

CATEGORY	LOCATION	618.0100 LS
0010	STH 64	1
	TOTAL 0010	1

MOBILIZATION

CATEGORY	LOCATION	619.1000 LS
0010	STH 64	1
	TOTAL 0010	1

WATER (15 GAL/TON AGG)

CATEGORY	LOCATION	AGG 624.0100 MGAL	SEED 630.0500 MGAL	REMARKS
0010	RIGHT TURN ISLANDS	2	-	STAGE 1
0010	STH 65 NB	5	-	STAGE 2
0010	STH 65 SB	5	-	STAGE 2
0010	STH 64 EB	5	1	STAGE 3
0010	STH 64 WB	5	1	STAGE 3
	TOTAL 0010	21	2	

LANDSCAPING

CATEGORY	STATION	TO	STATION	LOCATION	SALVAGED TOPSOIL 625.0500 SY	EMAT URBAN CLASS I TYPE B 628.2008 SY	FERTILIZER TYPE B 629.0210 CWT	SEEDING NO. 40 MIX 630.014 LB
0010	955+18.4	-	955+53.3	STH 64 EB	59.4	59.4	0.04	1.1
0010	964+30.5	-	964+65.4	STH 64 WB	59.4	59.4	0.04	1.1
				TOTAL 0010	118.7	118.7	0.1	2.1

3

CONCRETE MEDIAN SLOPED NOSE

CATEGORY	LOCATION	620.0300 SF
0010	SW ISLAND	55.3
0010	SE ISLAND	36.5
0010	NW ISLAND	57.0
0010	NE ISLAND	72.8
	STAGE 1 TOTAL	221.7
0010	S LT ISLAND	95.1
0010	N LT ISLAND	108.1
0010	N MEDIAN	51.1
	STAGE 2 TOTAL	254.3
0010	W MEDIAN	44.9
0010	W ISLAND	52.1
0010	E MEDIAN	46.4
0010	E ISLAND	51.3
	STAGE 3 TOTAL	194.7
	TOTAL 0010	670.7

628 - SILT FENCE

CATEGORY	STATION	LOCATION	SILT FENCE 628.1504 LF	MAINTENACE 628.1520 LF
0010	955+18.4	W MEDIAN	20.0	20.0
0010	964+65.4	E MEDIAN	20.0	20.0
		TOTAL 0100	40.0	40.0

628 - MOBILIZATIONS EROSION CONTROL

CATEGORY	LOCATION	628.1905 EACH	EMERGENCY 628.1910 EACH
0010	STH 64	2	2
	TOTAL 0010	2	2

3

FIELD OFFICE TYPE B

CATEGORY	LOCATION	642.5001 EACH
0010	STH 64	1
	TOTAL 0010	1

TRAFFIC CONTROL (8110-01-76)

CATEGORY	LOCATION	643.5000 EACH
0010	STH 64	1
	TOTAL 0010	1

INLET PROTECTION

CATEGORY	ALIGNMENT	STATION	LOCATION	TYPE B 628.7010 EACH	TYPE C 628.7015 EACH
0010	STH 64	958+00.0	W MEDIAN RT		1
0010	STH 64	958+00.0	W MEDIAN LT		1
0010	STH 64	959+26.1	W MEDIAN RT		1
0010	STH 64	959+29.0	W MEDIAN LT	1	1
0010	STH 64	964+00.5	E MEDIAN RT		1
0010	STH 64	964+30.4	E MEDIAN LT		1
0010	STH 64	964+50.3	E MEDIAN LT		1
0010	STH 65	797+28.8	S MEDIAN RT		1
0010	STH 65	798+23.4	S LT ISLAND RT		1
0010	STH 65	802+49.8	N MEDIAN LT		1
0010	STH 65	802+69.4	N MEDIAN LT		1
0010	STH 65	804+49.2	N MEDIAN LT		1
			TOTAL 0010	1	12

643 - TRAFFIC CONTROL

CATEGORY	STAGE	DRUMS 643.0300 DAY	BARRICADES TYPE III 643.0420 DAY	LIGHTS TYPE A 643.0705 DAY	LIGHTS TYPE C 643.0715 DAY	ARROW BOARDS 643.0800 DAY	SIGNS 643.0900 DAY
0010	STAGE 1	2928	128	256	432	48	496
0010	STAGE 2	1584	120	240	264	24	432
0010	STAGE 3	4070	148	296	814	74	777
	TOTAL 0010	8582	396	792	1510	146	1705

3

PERMANENT SIGNING

CATEGORY	SIGN #	ALIGNMENT	NEW STATION	SIGN CODE	DESCRIPTION	SIZE (WXH) INCHES	SIGNS TYPE II REFLECTIVE H 637.2210 SF	SIGNS TYPE II REFLECTIVE H FOLDING 637.2215 SF	POSTS WOOD 4x6-INCH x 16-FT 634.0616 EACH	STEEL POSTS 2x2 INCH 16FT 634.0816 EACH	REMOVING SIGNS TYPE II 638.2602 EACH	REMOVING SMALL SIGN SUPPORTS 638.3000 EACH
0010	1-1	STH 64	955+51	J3-1	DIR. ASSEMBLY-1 PANEL (N 65 LEFT)	24 X 57	9.50		1	-	1	1
0010	1-2	STH 64	959+41	R4-7	KEEP RIGHT	24 X 30	5.00		-	1	1	-
0010	1-3	STH 64	959+41	R10-50L	LEFT TURN YIELD ON FYA	30 X 36	7.50		-	-	1	-
0010				R1-1F	FOLDING STOP SIGN	30 X 30		6.25	-	-	-	-
0010	1-4	STH 64	959+80	R1-1F	FOLDING STOP SIGN	30 X 30		6.25	-	-	1	-
0010	1-5	STH 65	800+72	R5-1	DO NOT ENTER	30 X 30	6.25		-	-	1	-
0010				R1-1F	FOLDING STOP SIGN	30 X 30		6.25	-	-	1	-
0010				R10-50L	LEFT TURN YIELD ON FYA	30 X 36	7.50		-	-	-	-
0010	1-6	STH 65	800+80	R4-7	KEEP RIGHT	24 X 30	5.00		-	-	1	-
0010				R1-1F	FOLDING STOP SIGN	30 X 30		6.25	-	-	1	-
0010	1-7	STH 65	801+13	J3-1	DIR. ASSEMBLY-1 PANEL (E 64 LEFT)	24 X 57	9.50		-	-	1	-
0010				R1-1F	FOLDING STOP SIGN	30 X 30		6.25	-	-	1	-
0010	1-7	STH 65	801+13	J3-1	DIR. ASSEMBLY-1 PANEL (E 64 LEFT)	24 X 57	9.50		-	-	1	-
0010	1-8	STH 65	803+74	J2-1	DIR. ASSEMBLY-1 PANEL (E 64 LEFT)	24 X 57	9.50		-	1	1	1
0010	1-9	STH 65	804+79	R4-7	KEEP RIGHT	24 X 30	5.00		-	1	1	1
0010				W5-54	IN ROAD OBJECT MARKER	18 X 18	2.25		-	-	-	-
0010	2-1	STH 64	959+30	R1-1F	FOLDING STOP SIGN	30 X 30		6.25	-	-	1	-
0010	2-2	STH 65	799+41	R4-7	KEEP RIGHT	24 X 30	5.00		-	-	1	-
0010				R1-1F	FOLDING STOP	30 X 30		6.25	-	-	1	-
0010	2-3	STH 65	799+12	J3-1	DIR. ASSEMBLY-1 PANEL (W 64 LEFT)	24 X 57	9.50		-	-	1	-
0010	2-4	STH 65	799+48	R5-1	DO NOT ENTER	30 X 30	6.25		-	-	1	-
0010				R10-50L	LEFT TURN YIELD ON FYA	30 X 36	7.50		-	-	1	-
0010				R1-1F	FOLDING STOP SIGN	30 X 30		6.25	-	-	-	-
0010	2-5	STH 64	960+35	R1-1F	FOLDING STOP SIGN	30 X 30		6.25	-	-	1	-
0010	2-6	STH 64	960+67	R10-50L	LEFT TURN YIELD ON FYA	30 X 36	7.50		-	-	1	-
0010				R1-1F	FOLDING STOP SIGN	30 X 30		6.25	-	-	-	-
0010	2-7	STH 64	960+67	R4-7	KEEP RIGHT	24 X 30	5.00		-	1	1	-
0010	2-8	STH 64	960+94	R1-1F	FOLDING STOP SIGN	30 X 30		6.25	-	-	1	-
0010	2-9	STH 64	964+35	J3-2	DIR. ASSEMBLY-2 PANEL (S 65 & H LEFT)	48 X 57	19.00		1	-	1	1
						TOTAL 0100	126.8	62.5	2.0	4.0	22.0	4.0

3

3

MARKING LINE EPOXY 4-INCH

CATEGORY	ALIGNMENT	STATION	TO	STATION	LOCATION	646.1020 LF	COLOR
0010	STH 65	798+14	-	798+26	S LT ISLAND L	12	WHITE
0010	STH 65	798+14	-	798+26	S LT ISLAND R	12	WHITE
0010	STH 65	794+25	-	795+50	NB CL SKIPS	78	WHITE
0010	STH 65	800+82	-	804+86	N MEDIAN L	413	YELLOW
0010	STH 65	800+82	-	804+86	N MEDIAN R	407	YELLOW
0010	STH 65	801+77	-	801+91	N LT ISLAND R	14	WHITE
0010	STH 65	801+77	-	801+91	N LT ISLAND L	14	WHITE
0010	STH 65	805+72	-	808+42	SB CL SKIPS	39	WHITE
					STAGE 2 TOTAL	989	
0010	STH 64	943+38	-	948+78	EB CL SKIPS	143	WHITE
0010	STH 64	967+10	-	972+50	WB CL SKIPS	143	WHITE
0010	STH 64	955+28	-	959+18	EB LT LANE	390	YELLOW
0010	STH 64	960+88	-	962+04	EB L EDGELINE	116	YELLOW
0010	STH 64	960+88	-	964+55	WB LT LANE	368	YELLOW
0010	STH 64	958+00	-	959+18	WB L EDGELINE	118	YELLOW
					STAGE 3 TOTAL	1278	
					TOTAL 0010	2267.0	

MARKING LINE GROOVED CONTRAST PERMANENT TAPE 4-INCH

CATEGORY	LOCATION	646.1555 LF	REMARKS
0010	EB TO NB SKPS	33	STAGE 3
0010	WB TO SB SKIPS	33	STAGE 3
	TOTAL 0010	66.0	

3

MARKING STOP LINE EPOXY 18-INCH

CATEGORY	ALIGNMENT	STATION	LOCATION	646.6120 LF
0010	STH 65	799+40	NB LT LANE	12
0010	STH 65	800+81	SB LT LANE	12
			STAGE 2 TOTAL	24
0010	STH 64	959+18	EB LT LANE	12
0010	STH 64	960+86	WB LT LANE	12
			STAGE 3 TOTAL	24
			TOTAL 0010	48.0

MARKING LINE EPOXY 8-INCH

CATEGORY	ALINGMENT	STATION	TO	STATION	646.3020 LOCATION	LF	COLOR
0010	STH 64	959+00	-	959+27	SW ISLAND	54	WHITE
0010	STH 65	799+18	-	799+55	SE ISLAND	53	WHITE
0010	STH 65	800+80	-	801+00	NW ISLAND	40	WHITE
0010	STH 64	960+97	-	961+23	NE ISLAND	54	WHITE
					STAGE 1 TOTAL	201	
0010	STH 64	956+79	-	959+28	EB LT LANE	249	WHITE
0010	STH 64	958+00	-	959+19	EB LT LANE	119	WHITE
0010	STH 64	96+87	-	962+04	WB LT LANE	118	WHITE
0010	STH 64	960+96	-	963+06	WB LT LANE	209	WHITE
					STAGE 3 TOTAL	695	
					TOTAL 0010	896.0	

MARKING CURB EPOXY

CATEGORY	ALIGNMENT	STATION	TO	STATION	646.8120 LOCATION	LF
0010	STH 65	799+46	-	799+51	S ISLAND	10
0010	STH 65	800+73	-	800+78	N ISLAND	10
					STAGE 2 TOTAL	20
0010	STH 64	958+84	-	958+89	W ISLAND	10
0010	STH 64	961+19	-	961+24	E ISLAND	10
					STAGE 3 TOTAL	20
					TOTAL 0010	40.0

3

MARKING ISLAND NOSE EPOXY

CATEGORY	LOCATION	646.8220 EACH
0010	S ISLAND	1
0010	N ISLAND	1
	STAGE 2 TOTAL	2
0010	W ISLAND	1
0010	E ISLAND	1
	STAGE 3 TOTAL	2
	TOTAL 0010	4.0

TEMPORARY MARKING LINE REMOVABLE TAPE 4-INCH

CATEGORY	ALIGNMENT	STATION	TO	STATION	LOCATION	649.0150 LF	COLOR
0010	STH 64	943+38	-	948+78	EB TAPER	540	WHITE
0010	STH 64	967+10	-	972+50	WB TAPER	540	WHITE
0010	STH 65	794+25	-	765+50	NB TAPER	125	WHTE
0010	STH 65	803+25	-	804+76	SB TAPER	151	WHITE
					STAGE 1 TOTAL	1356	
0010	STH 65	805+72	-	808+42	SB LANE SHIFT	270	WHITE
0010	STH 65	805+72	-	808+42	SB LANE SHIFT	270	YELLOW
0010	STH 65	794+25	-	765+50	NB TAPER	350	YELLOW
					STAGE 2 TOTAL	890	
0010	STH 64	943+38	-	948+78	EB TAPER	540	YELLOW
0010	STH 64	967+10	-	972+50	WB TAPER	540	YELLOW
					STAGE 3 TOTAL	1080	
					TOTAL 0010	3326	

3

MARKING REMOVAL LINE 4-INCH

CATEGORY	ALIGNMENT	STATION	TO	STATION	646.9000 LOCATION	LF
0010	STH 64	943+38	-	948+78	EB CL SKIPS	143
0010	STH 64	967+10	-	972+50	WB CL SKIPS	143
0010	STH 65	794+25	-	765+50	NB CL SKIPS	39
					STAGE 1 TOTAL	325
0010	STH 65	805+72	-	808+42	SB CL SKIPS	78
0010	INTERSECTION				EB TO NB SKIPS	36
0010	INTERSECTION				WB TO SB SKIPS	36
					STAGE 2 TOTAL	150
					TOTAL 0010	475.0

TEMPORARY MARKING LINE REMOVABLE TAPE 8-INCH

CATEGORY	ALIGNMENT	STATION	TO	STATION	LOCATION	649.0250 LF
0010	STH 65	800+74	-	801+63	SB CHANNELIZE	89
0010	STH 65	798+40	-	799+66	NB CHANNELIZE	126
					STAGE 2 TOTAL	215
0010	STH 64	957+72	-	959+22	EB CHANNELIZE	150
0010	STH 64	960+96	-	962+96	WB CHANNELIZE	200
					STAGE 3 TOTAL	350
					TOTAL 0010	565.0

3

CONSTRUCTION STAKING STORM SEWER

CATEGORY	STATION	LOCATION	650.4000 EACH	REMARKS
0010	958+85.3	W MEDIAN	1	STRUCTURE 3
0010	958+85.3	W MEDIAN	1	STRUCTURE 4
0010	959+28.5	W LT LANE	1	STRUCTURE 5
0010	959+26.0	W LT LANE	1	STRUCTURE 6
		TOTAL 0010	4	

CONSTRUCTION STAKING

CATEGORY	LOCATION	SUBGRADE 650.4500 LF	BASE 650.5000 LF	C&G 650.55 LF	CONC. PVMT. 650.7000 LF
0010	STH 64 WEST LEG	150	-	-	450.4
0010	STH 64 EAST LEG	-	-	-	396.4
0010	STH 65 SOUTH LEG	-	341.1	919.9	-
0010	STH 65 NORTH LEG	-	427.8	1072.7	-
0010	RIGHT TURN ISLANDS	-	195.4	347.8	-
	TOTAL 0010	150	964	2341.0	846.8

3

SAWING CONCRETE

CATEGORY	ALIGNMENT	STATION	TO	STATION	LOCATION	690.0250 LF
0010	STH 64	959+16	-	959+52	SW ISLAND	100.1
0010	STH 65	799+18	-	799+87	SE ISLAND	159.2
0010	STH 65	800+37	-	800+92	NW ISLAND	125.5
0010	STH 64	960+67	-	961+07	NE ISLAND	110.3
					STAGE 1 TOTAL	495
0010	STH 65	796+18	-	799+58	S MEDIAN	685.1
0010	STH 65	798+14	-	799+63	S LT ISLAND	310.2
0010	STH 65	800+68	-	801+88	N MEDIAN	250.5
0010	STH 65	800+61	-	801+90	N LT ISLAND	273.5
0010	STH 65	801+13	-	801+38	N LT LANE	39.6
					STAGE 2 TOTAL	1559
0010	STH 64	955+28	-	959+49	EB LT SIDE	420.4
0010	STH 64	958+00	-	959+49	WB RT SIDE	148.8
0010	STH 64		-	959+49	MEDIAN	29.8
0010	STH 64		-	960+59	MEDIAN	30.0
0010	STH 64	960+59	-	962+04	EB LT SIDE	144.9
0010	STH 64	960+59	-	964+55	WB RT SIDE	396.4
					STAGE 3 TOTAL	1170
					TOTAL 0010	3224.4

CONSTRUCTION STAKING OTHER

CATEGORY	LOCATION	ELECTRICAL INSTALLATIONS 650.8500 LS	SUPPLEMENTAL CONTROL 650.9910 LS
0010	STH 64	1	1
	TOTAL 0010	1	1

3

REMOVE TRAFFIC SIGNALS

LOCATION	204.9060.S.01 REMOVING TRAFFIC SIGNALS EACH
STH 64 & STH 65	1
TOTAL	1

PULL BOXES

NO.	** STATION	653.0135 PULL BOXES STEEL 24x36-INCH EACH	653.0140 PULL BOXES STEEL 24x42-INCH EACH	653.0900 ADJUSTING PULL BOXES EACH
PB3	799+49 'NB', 31' RT	--	1	--
PB4	799+37 'NB', 04' LT	--	1	--
PB5	799+32 'NB', 22' LT	--	--	1
PB7	959+36 'EB', 37' RT	--	--	1
PB11	959+17 'EB', 05' LT	--	1	--
PB12	959+23 'EB', 70' LT	--	1	--
PB14	800+76 'NB', 57' LT	--	1	--
PB15	800+86 'NB', 24' LT	--	1	--
PB16	800+88 'NB', 05' LT	--	1	--
PB17	801+16 'NB', 05' LT	1	--	--
PB19	800+83 'NB', 46' RT	--	--	1
PB23	960+92 'EB', 25' LT	--	1	--
PB24	960+69 'EB', 51'RT	--	1	--
LPB3	958+45 'EB', 21' LT	1	--	--
LPB4	961+69 'EB', 42' RT	1	--	--
LPB5	961+59 'EB', 9' LT	1	--	--
	TOTAL	4	9	3

CONDUIT

LOC.	TO LOC.	652.0225 CONDUIT RIGID NONMETALLIC SCHEDULE 40 2-INCH L.F.	652.0235 CONDUIT RIGID NONMETALLIC SCHEDULE 40 3-INCH L.F.	652.0605 CONDUIT SPECIAL 2-INCH L.F.	652.0615 CONDUIT SPECIAL 3-INCH L.F.
PB5	SB3	8	--	--	--
PB7	SB5	4	--	--	--
PB6	PB11	--	--	--	138
PB11	SB6	8	--	--	--
PB11	PB12	--	--	--	130
PB12	PB13	--	74	--	--
PB14	SB8	20	--	--	--
PB15	SB9	10	--	--	--
PB16	SB10	4	--	--	--
PB16	PB17	30	--	--	--
PB19	SB12	8	--	--	--
PB18	PB23	--	--	--	138
PB23	SB13	10	--	--	--
PB23	PB24	--	--	--	160
PB24	PB1	--	56	--	--
L-01	L-02	182	--	--	--
L-02	LPB3	156	--	--	--
LPB3	L-04	--	--	70	--
LPB3	LPB1	--	--	98	--
LPB1	L-03	30	--	--	--
LC1	LPB4	67	--	--	--
LPB4	LPB5	--	--	52	--
LPB5	LPB2	--	--	69	--
LPB5	L-09	8	--	--	--
L-09	L-10	168	--	--	--
L-10	L-11	204	--	--	--
	TOTAL	917	130	289	566

3

REMOVING CONCRETE BASES

SIGNAL BASE NO.	STATION	204.0195 REMOVING CONCRETE BASES EACH
SB3	799+46 'NB', 23' LT	1
SB5	959+29 'EB', 33' RT	1
SB6	959+43 'EB', 36' RT	1
SB7	959+27 'EB', 19' LT	1
SB9	800+63 'NB', 60' LT	1
SB10	800+71 'NB', 24' LT	1
SB11	800+76 'NB', 04' LT	1
SB13	800+78 'NB', 34' RT	1
SB14	800+82 'NB', 50' RT	1
SB15	961+00 'EB', 12' LT	1
L-02	956+89 'EB', 15' LT	1
L-03	958+95 'EB', 19' LT	1
L-09	961+31 'EB', 10' LT	1
L-10	963+35 'EB', 15' LT	1
	TOTAL	14

REMOVING PULL BOXES

PULL BOX NO.	STATION	653.0905 REMOVING PULL BOXES EACH
PB3	799+49 'NB', 32' RT	1
PB4	799+37 'NB', 03' LT	1
PB11	959+19 'EB', 20' LT	1
PB13	800+76 'NB', 58' LT	1
PB14	800+86 'NB', 24' LT	1
PB15	800+88 'NB', 04' LT	1
PB21	961+05 EB, 11' LT	1
	TOTAL	7

TEMPORARY TRAFFIC SIGNALS

LOCATION	661.0200 TEMPORARY TRAFFIC SIGNALS FOR INTERSECTIONS L.S.
STH 64 & STH 65	1
TOTAL	1

LEGEND

** FINAL LOCATION TO BE DETERMINED BY THE ENGINEER IN THE FIELD

ALL ITEMS ON THIS SHEET ARE CATEGORY 0010

TRAFFIC SIGNALS & LIGHTING
STH 64 & STH 65

3

TRAFFIC SIGNAL CABLE AND ELECTRICAL WIRE

LOC.	TO LOC.	655.0230 CABLE TRAFFIC SIGNAL 5-14 AWG L.F.	655.0260 CABLE TRAFFIC SIGNAL 12-14 AWG L.F.	655.0515 ELECTRICAL WIRE TRAFFIC SIGNALS 10 AWG L.F.	655.0610 ELECTRICAL WIRE LIGHTING 12 AWG L.F.	655.0630 ELECTRICAL WIRE LIGHTING 4 AWG L.F.	655.0635 ELECTRICAL WIRE LIGHTING 2 AWG L.F.	655.0900 TRAFFIC SIGNAL EVP DETECTOR CABLE L.F.	SPV.0090.01 INSTALL STATE FURNISHED CAT-5E CABLE L.F.
CB1	SB1	--	143	--	--	--	--	--	--
CB1	SB2	--	200	--	--	--	--	--	--
CB1	SB3	--	229	--	--	--	--	--	--
CB1	SB4	319	--	--	--	--	--	362	--
CB2	SB5	--	360	--	--	--	--	--	386
CB1	SB6	--	395	--	--	--	--	--	--
CB1	SB7	495	--	--	--	--	--	538	--
CB1	SB8	--	448	--	--	--	--	--	--
CB1	SB9	--	388	--	--	--	--	--	--
CB1	SB10	--	348	--	--	--	--	--	--
CB1	SB11	280	--	--	--	--	--	323	--
CB1	SB12	--	318	--	--	--	--	--	356
CB1	SB13	--	182	182	--	--	--	--	--
CB1	SB14	54	--	54	--	--	--	97	--
SB1	SB2	--	--	97	--	--	--	--	--
SB2	SB3	--	--	81	--	--	--	--	--
SB3	SB4	--	--	129	--	--	--	--	--
SB4	SB5	--	--	98	--	--	--	--	--
SB5	SB6	--	--	174	--	--	--	--	--
SB6	SB7	--	--	184	--	--	--	--	--
SB7	SB8	--	--	112	--	--	--	--	--
SB8	SB9	--	--	105	--	--	--	--	--
SB9	SB10	--	--	75	--	--	--	--	--
SB10	SB11	--	--	136	--	--	--	--	--
SB11	SB12	--	--	109	--	--	--	--	--
SB12	SB13	--	--	181	--	--	--	--	--
SB14	SB1	--	--	154	--	--	--	--	--
PB1	SB16	--	--	38	--	--	--	--	--
PB2	SB1	--	--	58	--	--	--	--	--
PB3	SB1	--	--	24	--	--	--	--	--
PB4	SB2	--	--	28	--	--	--	--	--
PB5	SB3	--	--	24	--	--	--	--	--
PB6	SB4	--	--	32	--	--	--	--	--
PB7	SB5	--	--	20	--	--	--	--	--
PB8	SB4	--	--	68	--	--	--	--	--
PB11	SB6	--	--	24	--	--	--	--	--
PB12	SB7	--	--	74	--	--	--	--	--
PB13	SB7	--	--	35	--	--	--	--	--
PB14	SB8	--	--	36	--	--	--	--	--
PB15	SB9	--	--	27	--	--	--	--	--

(CONTINUED ON NEXT SHEET)

3

CONCRETE BASES

SIGNAL BASE NO.	** STATION	654.0101 CONCRETE BASES TYPE 1 EACH	654.0102 CONCRETE BASES TYPE 2 EACH	654.0107 CONCRETE BASES TYPE 7 EACH
SB3	799+40 'NB', 23' LT	1	--	--
SB5	959+37 'EB', 33' RT	--	1	--
SB6	959+24 'EB', 05' LT	1	--	--
SB8	800+56 'NB', 59' LT	1	--	--
SB9	800+75 'NB', 24' LT	1	--	--
SB10	800+84 'NB', 05' LT	1	--	--
SB12	800+82 'NB', 38' RT	--	1	--
SB13	960+83 'EB', 25' LT	1	--	--
L-02	956+89 'EB', 19' LT	--	--	1
L-03	958+73 'EB', 46' RT	--	--	1
L-04	958+96 'EB', 69' LT	--	--	1
L-09	961+67 'EB', 09' LT	--	--	1
L-10	963+35 'EB, 12' LT	--	--	1
	TOTAL	6	2	5

LEGEND

** FINAL LOCATION TO BE DETERMINED BY THE ENGINEER IN THE FIELD

ALL ITEMS ON THIS SHEET ARE CATEGORY 0010

TRAFFIC SIGNALS & LIGHTING
STH 64 & STH 65

3

TRAFFIC SIGNAL CABLE AND ELECTRICAL WIRE (CONTINUED)

LOC.	TO LOC.	655.0230 CABLE TRAFFIC SIGNAL 5-14 AWG L.F.	655.0260 CABLE TRAFFIC SIGNAL 12-14 AWG L.F.	655.0515 ELECTRICAL WIRE TRAFFIC SIGNALS 10 AWG L.F.	655.0610 ELECTRICAL WIRE LIGHTING 12 AWG L.F.	655.0630 ELECTRICAL WIRE LIGHTING 4 AWG L.F.	655.0635 ELECTRICAL WIRE LIGHTING 2 AWG L.F.	655.0900 TRAFFIC SIGNAL EVP DETECTOR CABLE L.F.	SPV.0090.01 INSTALL STATE FURNISHED CAT-5E CABLE L.F.
PB16	SB10	--	--	20	--	--	--	--	--
PB17	SB10	--	--	50	--	--	--	--	--
PB18	SB11	--	--	39	--	--	--	--	--
PB19	SB12	--	--	24	--	--	--	--	--
PB20	SB11	--	--	68	--	--	--	--	--
PB23	SB13	--	--	25	--	--	--	--	--
PB24	SB14	--	--	68	--	--	--	--	--
L-01	L-02	--	--	--	--	192	768	--	--
L-02	LPB3	--	--	--	--	176	704	--	--
LPB3	L-04	--	--	--	--	180	360	--	--
LPB3	LPB1	--	--	--	--	256	512	--	--
LPB1	L-03	--	--	--	--	100	200	--	--
LPB1	L-06	--	--	--	--	184	368	--	--
LC1	LPB4	--	--	--	--	90	360	--	--
LPB4	LPB5	--	--	--	--	82	328	--	--
LPB5	LPB2	--	--	--	--	99	396	--	--
LPB2	L-07	--	--	--	--	123	492	--	--
LPB5	L-09	--	--	--	--	56	224	--	--
L-09	L-10	--	--	--	--	178	712	--	--
L-10	L-11	--	--	--	--	214	856	--	--
SB3	HEAD 12	22	--	--	--	--	--	--	--
SB5	HEAD 1	19	--	--	--	--	--	--	--
SB5	HEAD 20	22	--	--	--	--	--	--	--
SB6	HEAD 6	22	--	--	--	--	--	--	--
SB8	HEAD 13	19	--	--	--	--	--	--	--
SB8	HEAD 22	22	--	--	--	--	--	--	--
SB9	HEAD 23	22	--	--	--	--	--	--	--
SB9	HEAD 24	19	--	--	--	--	--	--	--
SB10	HEAD 16	22	--	--	--	--	--	--	--
SB12	HEAD 5	19	--	--	--	--	--	--	--
SB12	HEAD 18	22	--	--	--	--	--	--	--
SB13	HEAD 2	22	--	--	--	--	--	--	--
L-02	LUMINAIRE	--	--	--	294	--	--	--	--
L-03	LUMINAIRE	--	--	--	147	--	--	--	--
L-04	LUMINAIRE	--	--	--	147	--	--	--	--
L-09	LUMINAIRE	--	--	--	294	--	--	--	--
L-10	LUMINAIRE	--	--	--	294	--	--	--	--
	TOTAL	1400	3011	2653	1176	1930	6280	1320	742

3

INSTALL CONDUIT INTO EXISTING ITEM

LOC.	STATION	652.0700.S INSTALL CONDUIT INTO EXISTING ITEM EACH
PB1	960+96 'EB', 48' RT	1
PB5	799+32 'NB', 23' LT	1
PB6	959+10 'EB', 64' RT	1
PB7	959+36 'EB', 37' RT	1
PB13	800+64 'NB', 88' LT	1
PB18	801+19 'NB', 60' RT	1
PB19	800+83 'NB', 46' RT	1
LPB1	958+99 'EB', 61' RT	1
LPB2	801+17 'NB', 95' RT	1
LC1	961+03 'EB', 51' RT	1
	TOTAL	10

ALL ITEMS ON THIS SHEET ARE CATEGORY 0010

TRAFFIC SIGNALS & LIGHTING
STH 64 & STH 65

3

TRAFFIC DETECTOR LOOPS

LOOP NO.	HOME RUN PB	** LOCATION	SIZE (FT)	X	(FT)	NO. OF TURNS	PAVEMENT TYPE	SDD INSTALLATION REFERENCE	652.0800 CONDUIT LOOP DETECTOR L.F.	655.0700 LOOP DETECTOR LEAD IN CABLE L.F.	655.0800 LOOP DETECTOR WIRE L.F.
11	PB11	958+98 'EB', 14' LT	6	X	20	3	CONCRETE	LOOP DETECTOR INSTALLED IN BASE COURSE WITH PULL (SPLICE) BOX OFF ROADWAY (OPTION 2)	92	284	284
12	PB11	959+24 'EB', 16' LT	6	X	20	4	CONCRETE	LOOP DETECTOR INSTALLED IN BASE COURSE WITH PULL (SPLICE) BOX OFF ROADWAY (OPTION 2)	80	284	328
21	PB22							EXISTING	--	358	--
22	PB21							EXISTING	--	552	--
31	PB5							EXISTING	--	149	--
32	PB5							EXISTING	--	149	--
41	PB15							EXISTING	--	266	--
42	PB15							EXISTING	--	266	--
43	PB14							EXISTING	--	301	--
44	PB14							EXISTING	--	301	--
45	PB14							EXISTING	--	301	--
51	PB23	961+08 'EB', 16' LT	6	X	20	3	CONCRETE	LOOP DETECTOR INSTALLED IN BASE COURSE WITH PULL (SPLICE) BOX OFF ROADWAY (OPTION 2)	88	104	272
52	PB23	960+82 'EB', 14' LT	6	X	20	4	CONCRETE	LOOP DETECTOR INSTALLED IN BASE COURSE WITH PULL (SPLICE) BOX OFF ROADWAY (OPTION 2)	76	104	312
61	PB10							EXISTING	--	601	--
62	PB9							EXISTING	--	402	--
71	PB15							EXISTING	--	266	--
72	PB17	801+12 'NB', 15' LT	6	X	20	3	CONCRETE	LOOP DETECTOR INSTALLED IN BASE COURSE WITH PULL (SPLICE) BOX OFF ROADWAY (OPTION 2)	64	272	200
81	PB4							EXISTING	--	129	--
82	PB4							EXISTING	--	129	--
83	PB3							EXISTING	--	93	--
84	PB3							EXISTING	--	93	--
85	PB3							EXISTING	--	93	--
								TOTAL	400	4960	1396

3

SIGNAL MOUNTING HARDWARE

LOCATION	658.5069.01 SIGNAL MOUNTING HARDWARE L.S.
STH 64 & STH 65	1
TOTAL	1

LEGEND

** FINAL LOCATION TO BE DETERMINED BY THE ENGINEER IN THE FIELD

ALL ITEMS ON THIS SHEET ARE CATEGORY 0010

TRAFFIC SIGNALS & LIGHTING
STH 64 & STH 65

3

SALVAGE AND REINSTALL SIGNAL AND LIGHTING EQUIPMENT (FOR INFORMATION ONLY)

REMOVE BASE NO.	INSTALL BASE NO.	PEDESTAL BASES EACH	TRANSFORMER BASES BREAKAWAY EACH	POLES ALUMINUM EACH	TRAFFIC SIGNAL STANDARDS ALUMINUM 15-FT EACH	TWIN LUMINAIRE ARM EACH	LUMINAIRE UTILITY LED EACH
SB3	SB3	1	--	--	1	--	--
SB9	SB8	1	--	--	1	--	--
SB10	SB9	1	--	--	1	--	--
SB11	SB10	1	--	--	1	--	--
L-02	L-02	--	1	1	--	1	2
L-09	L-09	--	1	1	--	1	2
L-10	L-10	--	1	1	--	1	2
	TOTAL	4	3	3	4	3	6

SALVAGE AND REINSTALL SIGNAL AND LIGHTING EQUIPMENT

REMOVE BASE NO.	INSTALL BASE NO.	SPV.0060.03 SALVAGE AND REINSTALL LIGHTING UNIT EACH	SPV.0060.04 SALVAGE AND REINSTALL SIGNAL EQUIPMENT EACH
SB3	SB3	--	1
SB9	SB8	--	1
SB10	SB9	--	1
SB11	SB10	--	1
L-02	L-02	1	--
L-09	L-09	1	--
L-10	L-10	1	--
	TOTAL	3	4

3

TRAFFIC SIGNAL AND LIGHTING EQUIPMENT

SIG. BASE NO.	657.0100 PEDESTAL BASES EACH	657.0210 TRANSFORMER BASES BREAKAWAY 15-17 INCH BOLT CIRCLE EACH	657.0255 TRANSFORMER BASES BREAKAWAY 11 1/2-INCH BOLT CIRCLE EACH	657.0310 POLES TYPE 3 EACH	657.0337 POLES TYPE 17-ALUMINUM EACH	657.0425 TRAFFIC SIGNAL STANDARDS ALUMINUM 15-FT EACH	657.0625 LUMINAIRE ARMS SINGLE MEMBER 6-INCH CLAMP 6-FT EACH	657.0714 LUMINAIRE ARMS TRUSS TYPE 4-INCH CLAMP 15-FT EACH	SPV.0060.01 PAINTING LIGHTING UNIT EACH	SPV.0060.02 LUMINAIRE UTILITY LED C SPECIAL EACH
SB5	--	--	1	1	--	--	--	1	--	--
SB6	1	--	--	--	--	1	--	--	--	--
SB12	--	--	1	1	--	--	--	1	--	--
SB13	1	--	--	--	--	1	--	--	--	--
L-03	--	1	--	--	1	--	1	--	1	1
L-04	--	1	--	--	1	--	1	--	1	1
TOTAL	2	2	2	2	2	2	2	2	2	2

TRAFFIC SIGNAL FACES

SIG. HEAD NO.	SIG. BASE NO.	658.0173 TRAFFIC SIGNAL FACE 3S 12-INCH EACH	658.0174 TRAFFIC SIGNAL FACE 4S 12-INCH EACH
1	SB5	*1	--
2	SB13	--	*1
5	SB12	*1	--
6	SB6	--	*1
12	SB3	--	*1
13	SB8	*1	--
16	SB10	--	*1
18	SB12	--	**1
20	SB5	--	**1
22	SB8	--	**1
23	SB9	--	*1
24	SB9	*1	--
TOTAL		4	8

*RETROREFLECTIVE BACKPLATE REQUIRED.

**RETROREFLECTIVE BACKPLATE AND TUNNEL VISORS REQUIRED.

ALL ITEMS ON THIS SHEET ARE CATEGORY 0010

TRAFFIC SIGNALS & LIGHTING
STH 64 & STH 65

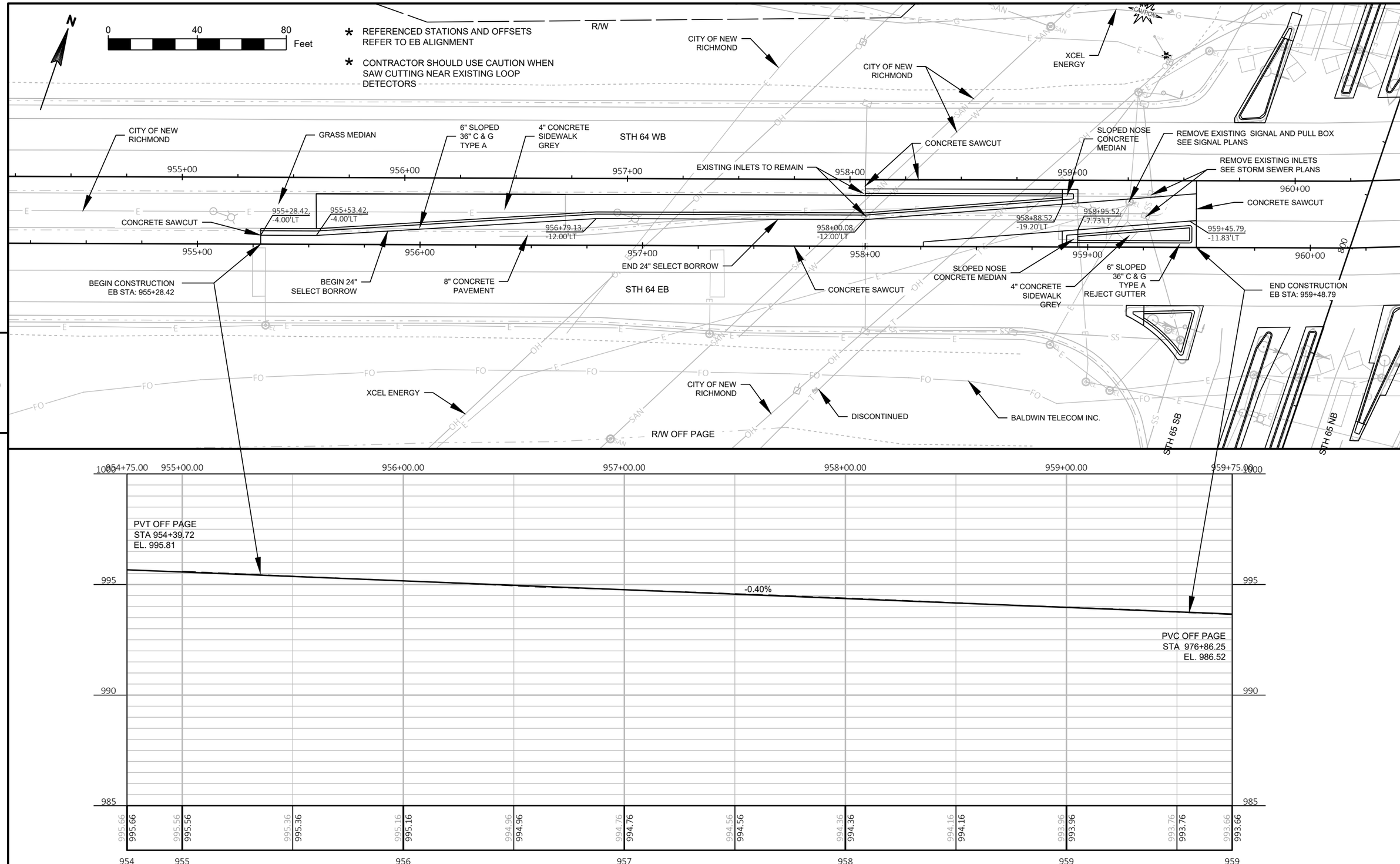

PROJECT NO: 8110-01-76	HWY: STH 64	COUNTY: ST. CROIX	PLAN AND PROFILE: STH 64 EASTBOUND	SHEET 63	E

FILE NAME : D:\WORK\81100106 C3D\SHEETSPLAN\050301-PP.DWG
LAYOUT NAME - 64 EB
PLOT DATE : 9/8/2021 1:14 PM
PLOT BY : MUNDEN, ALLISSA L
PLOT NAME :
PLOT SCALE : Custom
WISDOT/CADDS SHEET 44

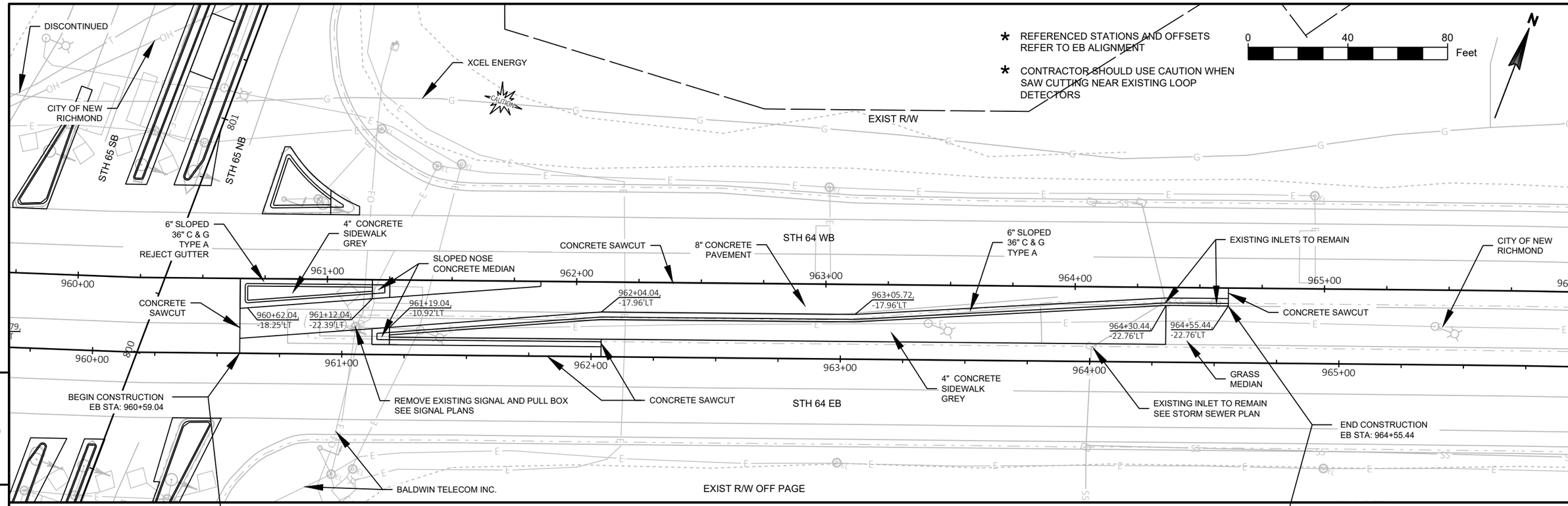

PROJECT NO: 8110-01-76	HWY: STH 64	COUNTY: ST. CROIX	PLAN AND PROFILE: STH 64 WESTBOUND	SHEET 64	E

FILE NAME : D:\WORK\81100106 C3D\SHEETSPLAN\050301-PP.DWG
LAYOUT NAME - 64 WB
PLOT DATE : 9/8/2021 1:15 PM
PLOT BY : MUNDEN, ALLISSA L
PLOT NAME :
PLOT SCALE : 1 IN:40 FT

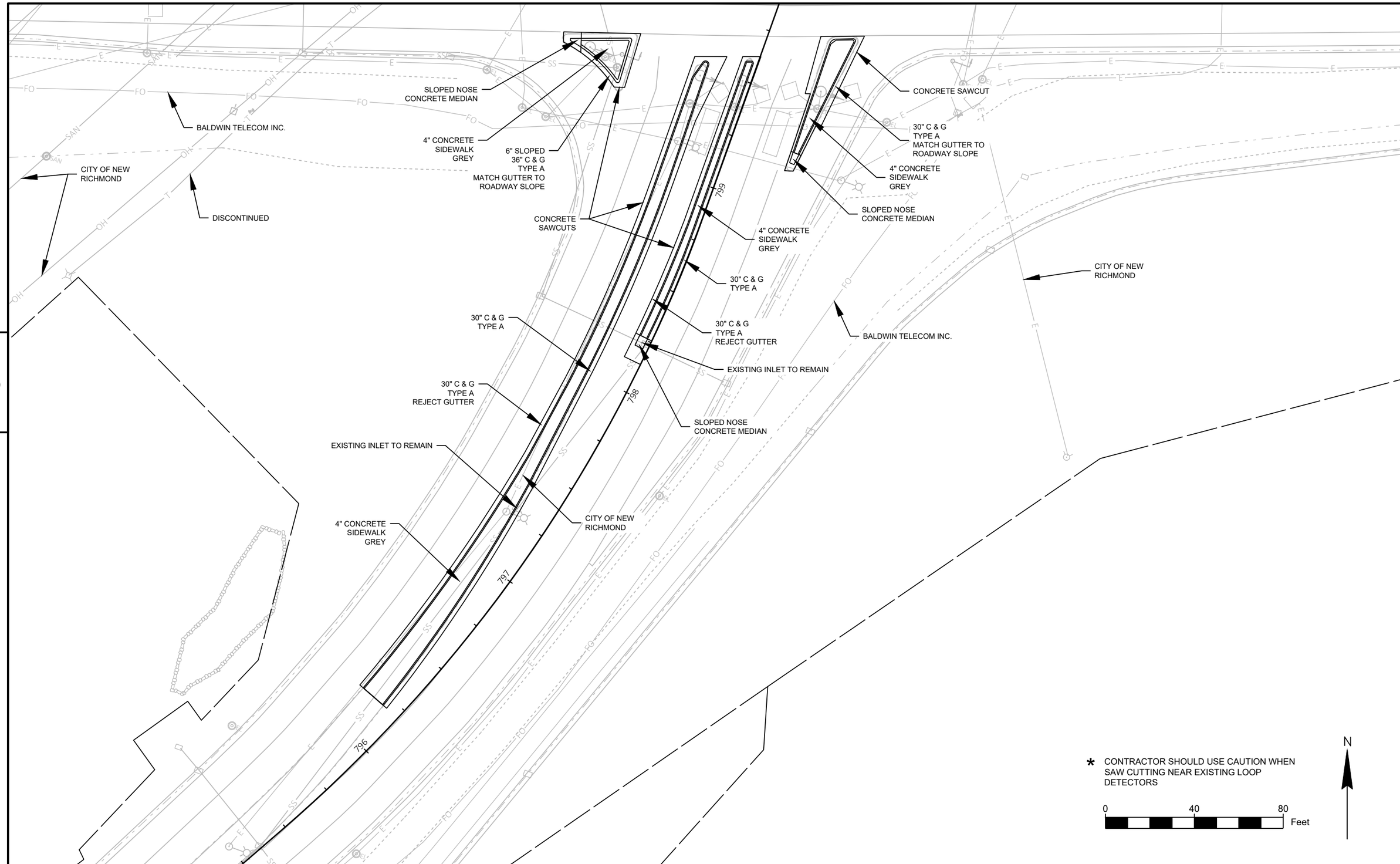

PROJECT NO: 8110-01-76	HWY: STH 65	COUNTY: ST. CROIX	PLAN: STH 65 SOUTH LEG	SHEET 65	E

FILE NAME : D:\WORK\81100106 C3D\SHEETSPLAN\050301-PP.DWG
LAYOUT NAME - 65 S
PLOT DATE : 9/8/2021 1:15 PM
PLOT BY : MUNDEN, ALLISSA L
PLOT NAME :
PLOT SCALE : 1 IN:40 FT
WISDOT/CADDS SHEET 44

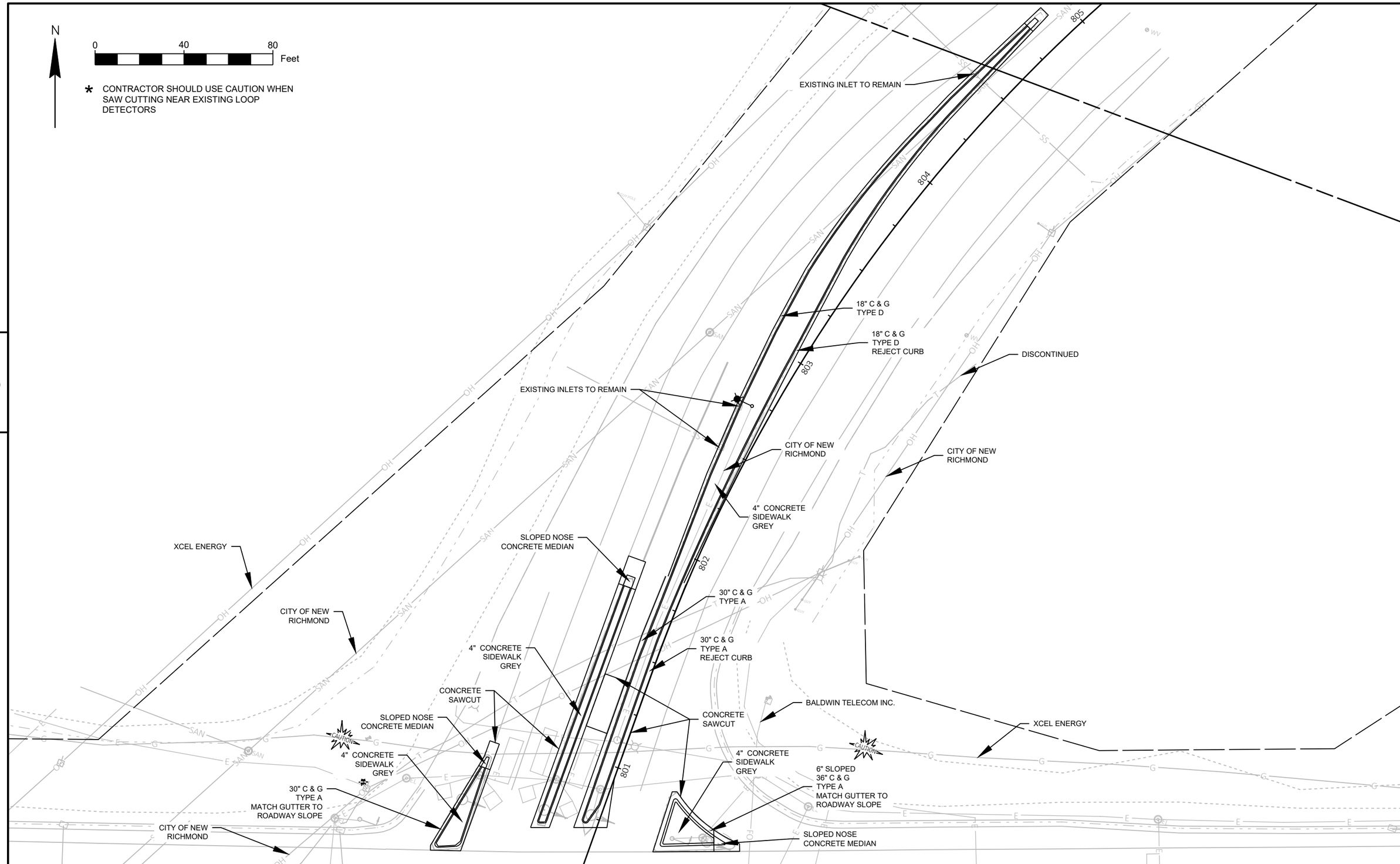

5

5

PROJECT NO: 8110-01-76	HWY: STH 65	COUNTY: ST. CROIX	PLAN: STH 65 NORTH LEG	SHEET 66	E

FILE NAME : D:\WORK\81100106 C3D\SHEETSPLAN\050301-PP.DWG
LAYOUT NAME - 65 N
PLOT DATE : 9/8/2021 1:15 PM
PLOT BY : MUNDEN, ALLISSA L
PLOT NAME :
PLOT SCALE : 1 IN:40 FT
WISDOT/CADDS SHEET 44

Standard Detail Drawing List

08A05-19B	INLET COVERS TYPE B, B-A, C, MS, MS-A, & WM
08A05-19C	INLET COVERS TYPE F, HM, HM-S, S, T, V, HM-GJ, & HM-GJ-S
08A05-19D	INLET COVER TYPE BW, MANHOLE COVERS, TYPE K, J, J-S, L & M
08B10-02	MANHOLES 3X3-FT, 4X4-FT, 5X5-FT AND 6X6-FT
08C07-02	INLETS 2X2-FT, 2X2.5-FT, 2X3-FT AND 2.5X3-FT
08D01-22A	CONCRETE CURB & GUTTER
08D01-22B	CONCRETE CURB, TIES AND CURB AND GUTTER APPLICATIONS
08E09-06	SILT FENCE
08E10-02	INLET PROTECTION TYPE A, B, C AND D
09B02-10	CONDUIT
09B04-11	PULL BOX
09C02-09	CONCRETE BASES, TYPES 1, 2, 5, & 6
09C03-04	TRANSFORMER/PEDESTAL BASES
09C08-05	CONCRETE BASE, TYPE 7
09E01-15B	POLE MOUNTINGS FOR TRAFFIC SIGNALS AND LIGHTING UNITS, TYPE 3 (HEAVY DUTY)
09E01-15F	POLE MOUNTINGS FOR LIGHTING UNITS, TYPE 17 (40 FEET)
09E01-15G	HARDWARE DETAILS FOR POLE MOUNTINGS
09E03-06	NON-FREEWAY LIGHTING UNIT POLE WIRING
09E06-05	TRAFFIC SIGNAL STANDARD POLY BRACKET MOUNTINGS (TYPICAL) 13 FT. OR 15 FT.
09F15-04B	LOOP DETECTOR INSTALLED IN BASE COURSE WITH PULL (SPLICE) BOX OFF ROADWAY (OPTION 2)
09G01-04A	SPAN WIRE TEMPORARY TRAFFIC SIGNAL
09G01-04B	SPAN WIRE TEMPORARY TRAFFIC SIGNAL
09G01-04C	SPAN WIRE TEMPORARY TRAFFIC SIGNAL
09G01-04D	SPAN WIRE TEMPORARY TRAFFIC SIGNAL
09G01-04E	SPAN WIRE TEMPORARY TRAFFIC SIGNAL
09G01-04F	SPAN WIRE TEMPORARY TRAFFIC SIGNAL
09G01-04G	SPAN WIRE TEMPORARY TRAFFIC SIGNAL
11B02-02	CONCRETE MEDIAN NOSE
13C01-19	CONCRETE PAVEMENT LONGITUDINAL JOINTS AND TIES
13C18-07A	CONCRETE PAVEMENT JOINTING
13C18-07B	CONCRETE PAVEMENT STEEL REINFORCEMENT
13C18-07C	CONCRETE PAVEMENT JOINT TYPES
13C18-07D	CONCRETE PAVEMENT JOINT TYPES AT UTILITY FIXTURES
15C08-20A	LONGITUDINAL MARKING (MAINLINE)
15C08-20B	PAVEMENT MARKING (TURN LANES)
15C08-20C	PAVEMENT MARKING (TURN LANES)
15C11-09B	CHANNELIZING DEVICES DRUMS, CONES, BARRICADES AND VERTICAL PANELS
15C18-05A	MEDIAN ISLAND MARKING PAVEMENT MARKINGS
15C18-05B	MEDIAN ISLAND MARKING MEDIAN ISLAND NOSE
15C18-05C	MEDIAN PAVEMENT MARKINGS DOUBLE ARROW WARNING SIGN PLACEMENT
15C33-04	STOP LINE AND CROSSWALK PAVEMENT MARKING
15C35-04A	PAVEMENT MARKING (INTERSECTIONS)
15D20-05A	TRAFFIC CONTROL, SINGLE LANE CLOSURE, NON-FREEWAY/EXPRESSWAY
15D21-07A	TRAFFIC CONTROL, INTERSECTION WITHIN SINGLE LANE CLOSURE
15D21-07B	TRAFFIC CONTROL, INTERSECTION WITHIN SINGLE LANE CLOSURE
15D38-02A	TEMPORARY TRAFFIC CONTROL SIGN MOUNTING
15D38-02B	ATTACHMENT OF SIGNS TO POSTS
15D40-02A	TRAFFIC CONTROL, FULL LANE SHIFT NON-FREEWAY OR MULTILANE DIVIDED 45 MPH AND UNDER

6

6

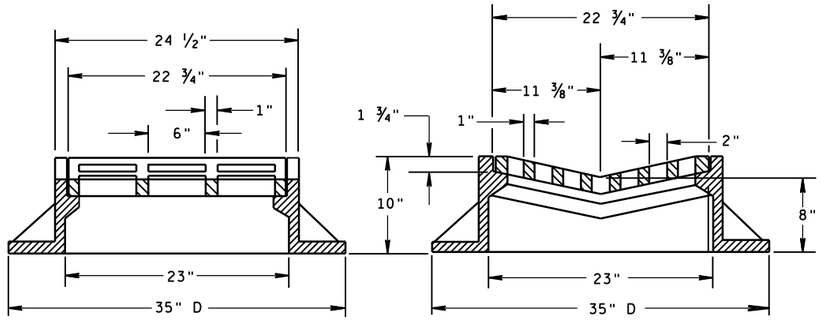

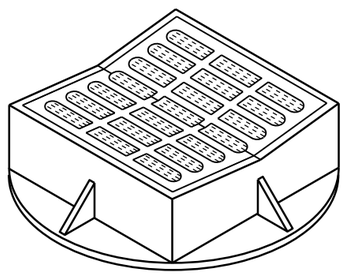

TYPE "B"

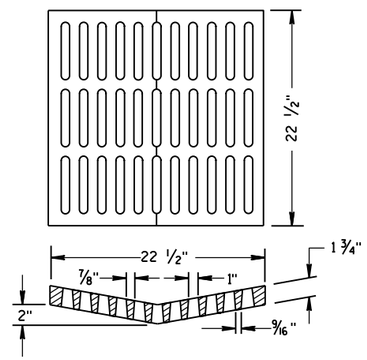

ALTERNATIVE GRATE FOR TYPE "B" COVER

USE WHERE PEDESTRIAN OR BICYCLE TRAFFIC IS POSSIBLE.

NOTED AS TYPE B-A ON THE DRAINAGE TABLE

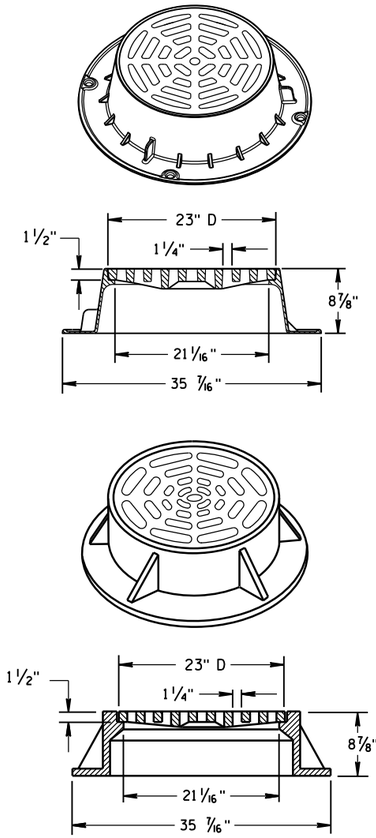

TYPE "C"

NOTE: EITHER CASTING IS ACCEPTABLE

GENERAL NOTES

DETAILS OF CONSTRUCTION, MATERIALS AND WORKMANSHIP NOT SHOWN ON THIS DRAWING SHALL CONFORM TO THE PERTINENT REQUIREMENTS OF THE STANDARD SPECIFICATIONS AND THE APPLICABLE SPECIAL PROVISIONS.

DETAIL DRAWINGS FOR PROPOSED ALTERNATE DESIGNS FOR CATCH BASIN, MANHOLE AND INLET COVERS SHALL BE SUBMITTED TO THE ENGINEER FOR APPROVAL PROVIDING THAT SUCH ALTERNATE DESIGNS MAKE PROVISION FOR EQUIVALENT CAPACITY AND STRENGTH.

ROUND FRAMES AND COVERS SHALL HAVE CONTINUOUSLY MACHINED BEARING SURFACES TO PREVENT ROCKING AND RATTLING.

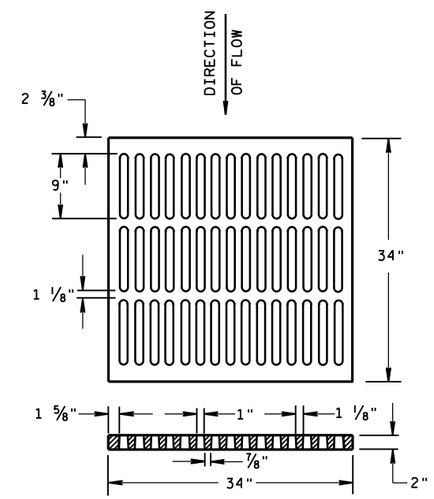

ALTERNATIVE TYPE "MS"

USE WHERE PEDESTRIAN OR BICYCLE TRAFFIC IS PERMITTED

NOTED AS TYPE MS-A ON THE DRAINAGE TABLE

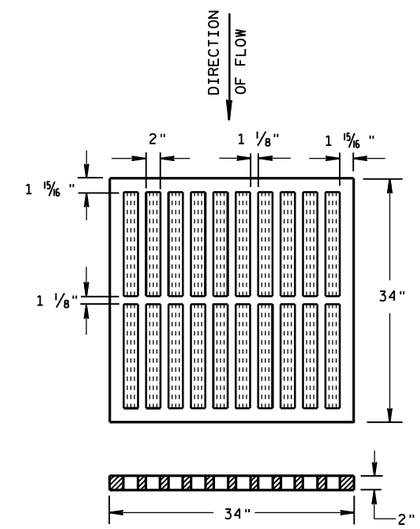

TYPE "MS"

USE ON FREEWAYS AND EXPRESSWAYS

NOTED AS TYPE MS ON DRAINAGE TABLE

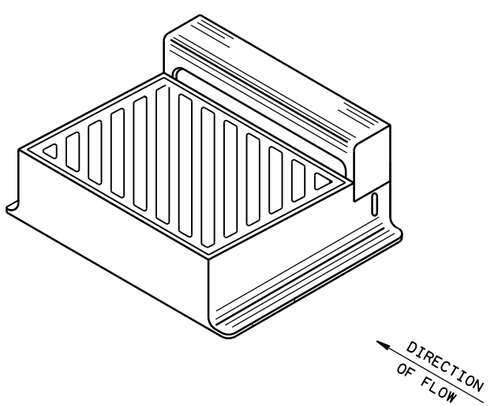

DIAGONAL SLOTS, SHALL BE ORIENTED TO THE DIRECTION OF FLOW AS ILLUSTRATED. GRATES ARE MANUFACTURED TO BE REVERSIBLE.

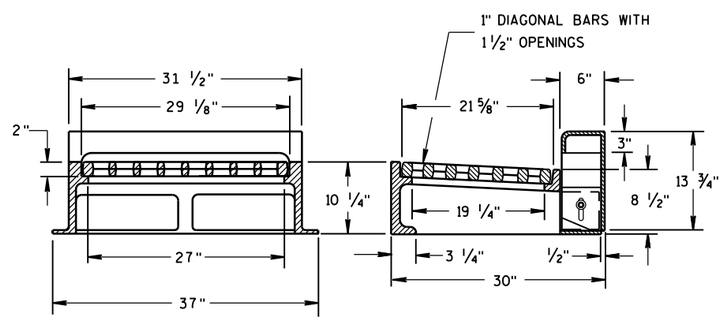

NOTE: CURB BOX HEIGHT ADJUSTABLE 6" TO 9"

TYPE "WM"

6

6

S.D.D. 8 A 5-19b

S.D.D. 8 A 5-19b

INLET COVERS
TYPE B, B-A, C,
MS, MS-A, & WM

STATE OF WISCONSIN
DEPARTMENT OF TRANSPORTATION

APPROVED

11/27/2013 — DATE

/S/ Jerry H. Zogg — ROADWAY STANDARDS DEVELOPMENT ENGINEER

FHWA

GENERAL NOTES

DETAILS OF CONSTRUCTION, MATERIALS AND WORKMANSHIP NOT SHOWN ON THIS DRAWING SHALL CONFORM TO THE PERTINENT REQUIREMENTS OF THE STANDARD SPECIFICATIONS AND THE APPLICABLE SPECIAL PROVISIONS.

DETAIL DRAWINGS FOR PROPOSED ALTERNATE DESIGNS FOR INLET COVERS SHALL BE SUBMITTED TO THE ENGINEER FOR APPROVAL PROVIDING THAT SUCH ALTERNATE DESIGNS MAKE PROVISION FOR EQUIVALENT CAPACITY AND STRENGTH.

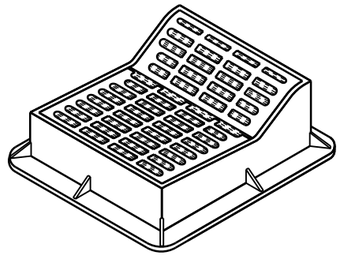

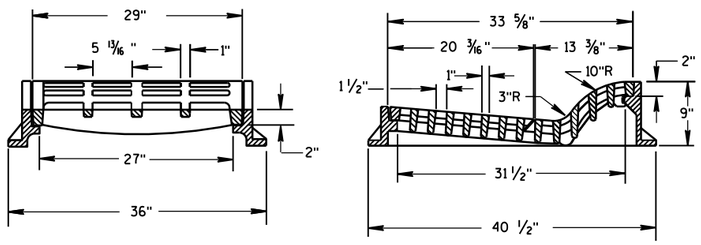

TYPE "F"

USE WITH TYPES A & D CONCRETE CURB & GUTTER, 36 INCH.

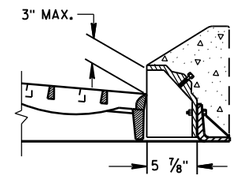

ALTERNATIVE CURB BOX FOR TYPE "HM" COVER

USE WITH TYPES G & J CONCRETE CURB & GUTTER, 30 INCH
NOTED AS TYPE HM-GJ ON DRAINAGE TABLE

NOTE:
SPECIAL GRATE FOR THE
TYPE "H" COVER MAY ALSO BE
USED FOR THE TYPE "HM-GJ" COVER
NOTED AS TYPE HM-GJ-S ON DRAINAGE TABLE

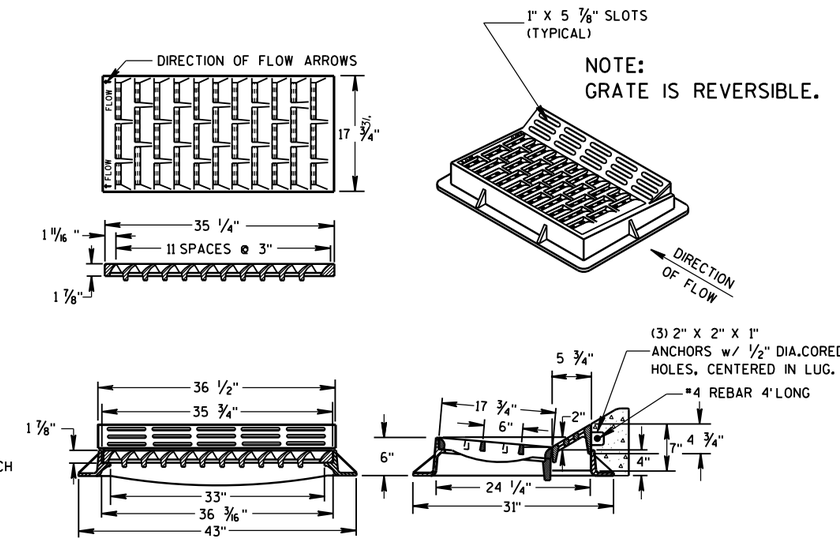

TYPE "HM"

USE WITH TYPES A & D CONCRETE CURB & GUTTER, 36 INCH.

NOTE:
SPECIAL GRATE FOR THE
TYPE "H" COVER MAY ALSO BE
USED FOR THE TYPE "HM" COVER
NOTED AS TYPE HM-S ON DRAINAGE TABLE

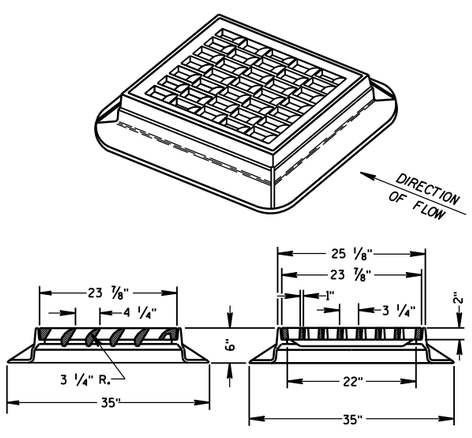

TYPE "S"

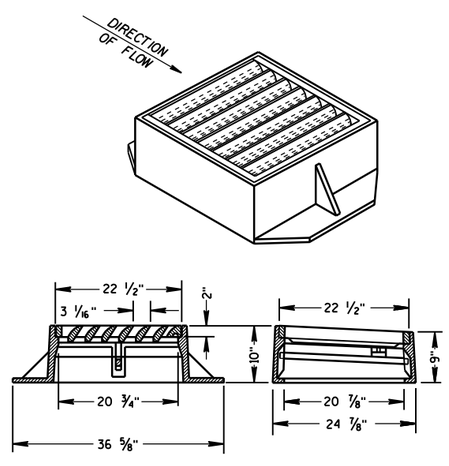

TYPE "V"

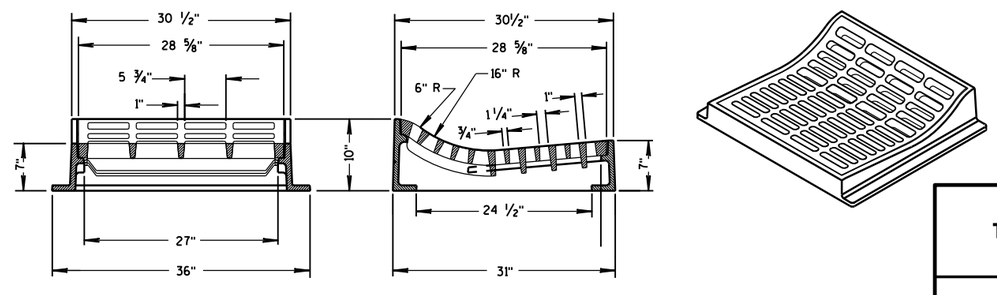

TYPE "T"

USE WITH TYPES R & T CONCRETE CURB & GUTTER, 36 INCH.

INLET COVERS
TYPE F, HM, HM-S, S, T, V, HM-GJ, & HM-GJ-S

STATE OF WISCONSIN
DEPARTMENT OF TRANSPORTATION

APPROVED
11/27/2013 — DATE
/S/ Jerry H. Zogg — ROADWAY STANDARDS DEVELOPMENT ENGINEER
FHWA

6

S.D.D. 8 A 5-19c

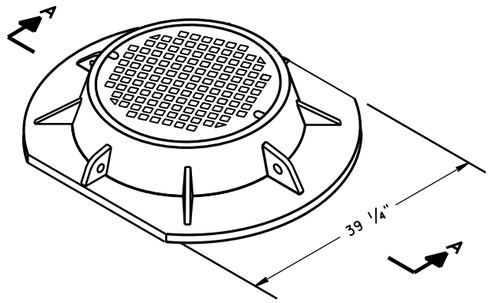

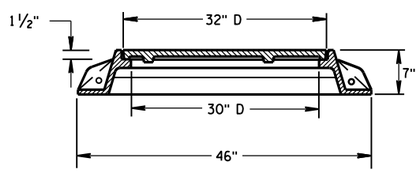

SECTION A-A
TYPE "K"

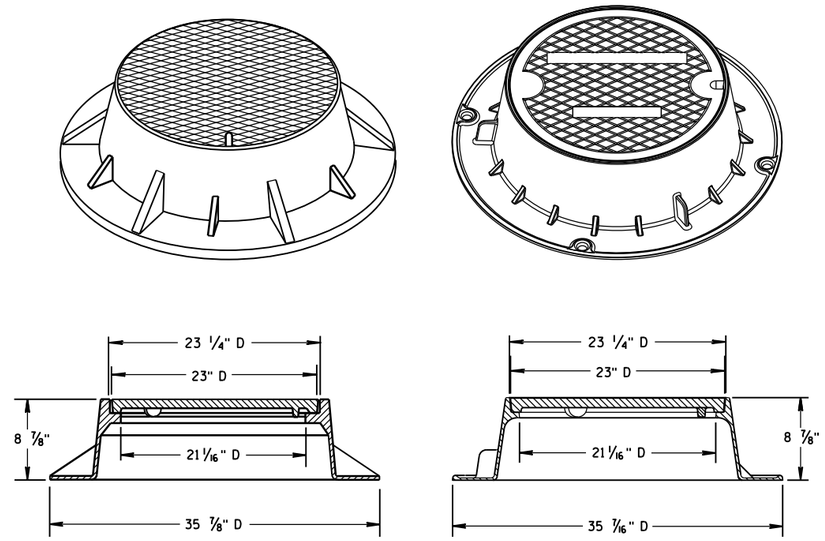

TYPE "J"
NOTE: EITHER CASTING IS ACCEPTABLE

GENERAL NOTES

DETAILS OF CONSTRUCTION, MATERIALS AND WORKMANSHIP NOT SHOWN ON THIS DRAWING SHALL CONFORM TO THE PERTINENT REQUIREMENTS OF THE STANDARD SPECIFICATIONS AND THE APPLICABLE SPECIAL PROVISIONS.

DETAIL DRAWINGS FOR PROPOSED ALTERNATE DESIGNS FOR MANHOLE COVERS SHALL BE SUBMITTED TO THE ENGINEER FOR APPROVAL PROVIDING THAT SUCH ALTERNATE DESIGNS MAKE PROVISION FOR EQUIVALENT CAPACITY AND STRENGTH.

ROUND FRAMES AND COVERS SHALL HAVE CONTINUOUSLY MACHINED BEARING SURFACES TO PREVENT ROCKING AND RATTLING.

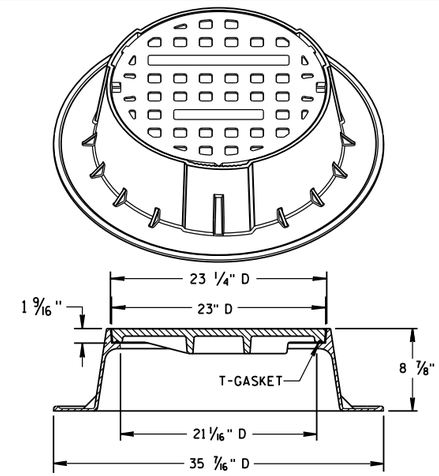

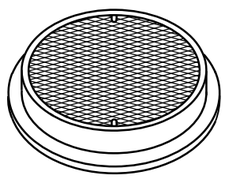

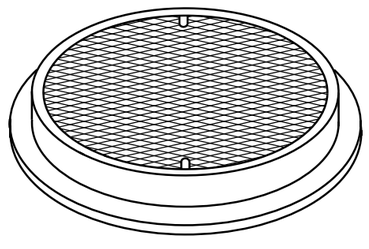

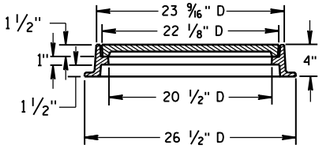

TYPE "L"

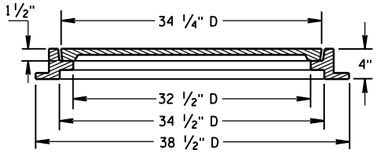

TYPE "M"

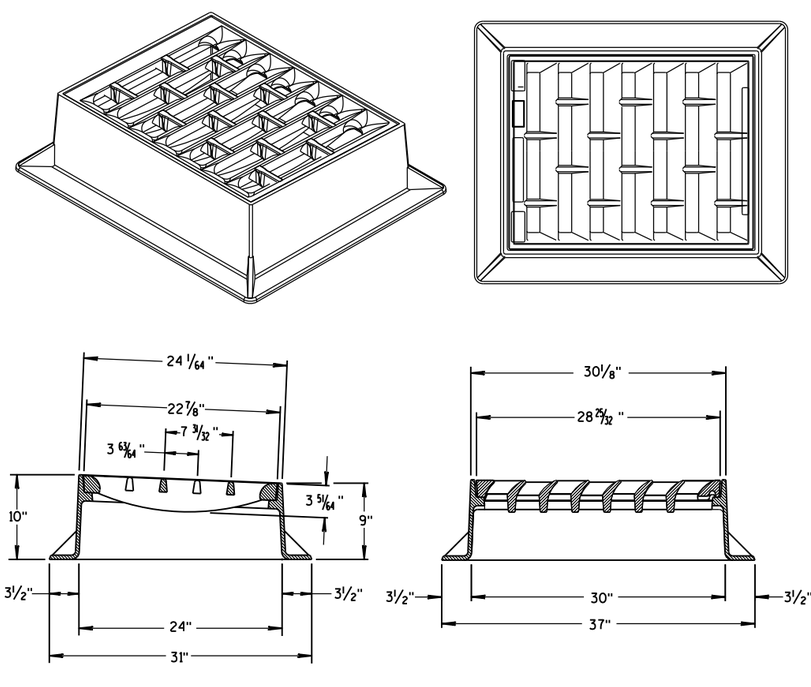

INLET COVER TYPE "BW"

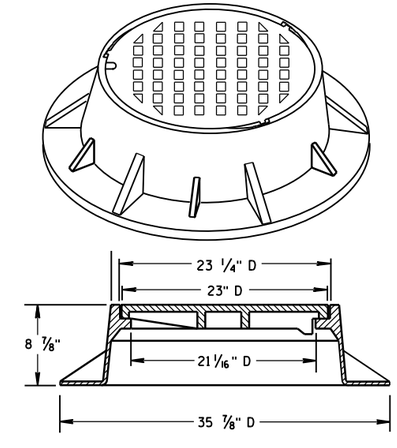

TYPE "J" SPECIAL
TYPE "B" NON-ROCKING SELF-SEAL LID
(NOTED AS TYPE J-S ON THE DRAINAGE TABLE)
NOTE: EITHER CASTING IS ACCEPTABLE

INLET COVER TYPE BW MANHOLE COVERS, TYPE K, J, J-S, L & M	
STATE OF WISCONSIN DEPARTMENT OF TRANSPORTATION	
APPROVED 11/27/2013 DATE FHWA	/S/ Jerry H. Zogg ROADWAY STANDARDS DEVELOPMENT ENGINEER

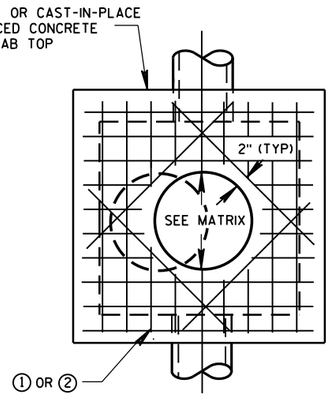

PLAN VIEW
CIRCULAR OPENING

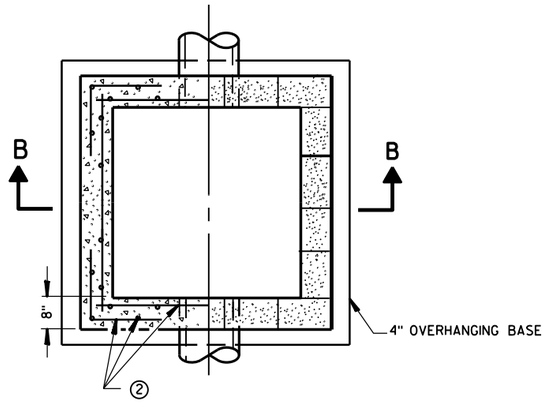

SECTION A-A
PLAN VIEW

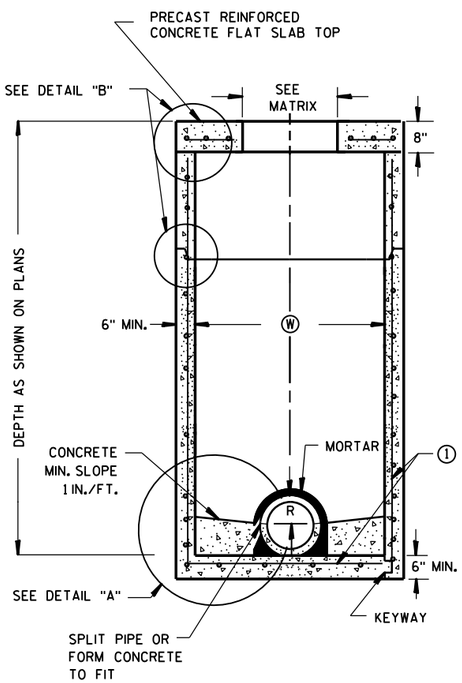

PRECAST REINFORCED CONCRETE WITH MONOLITHIC BASE

PRECAST REINFORCED CONCRETE WITH INTEGRAL BASE

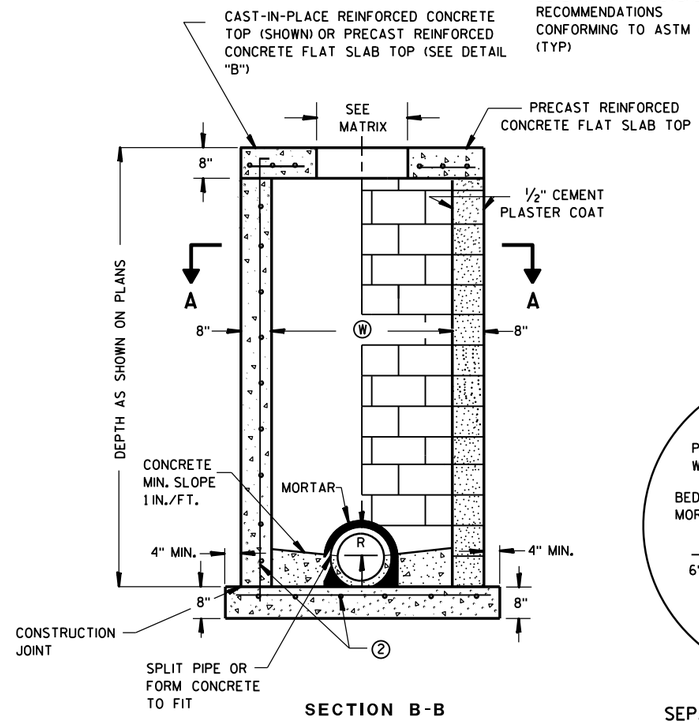

SECTION B-B

CAST-IN-PLACE REINFORCED CONCRETE

CONCRETE BLOCK WITH CAST-IN-PLACE OR PRECAST REINFORCED CONCRETE BASE

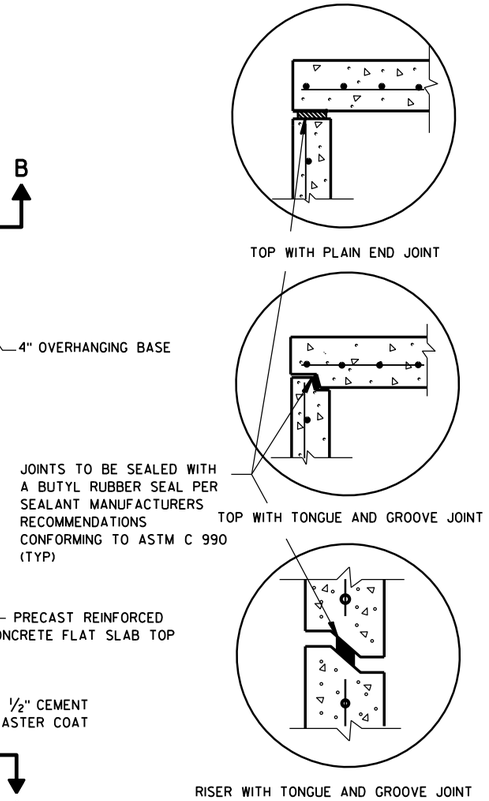

DETAIL "B"

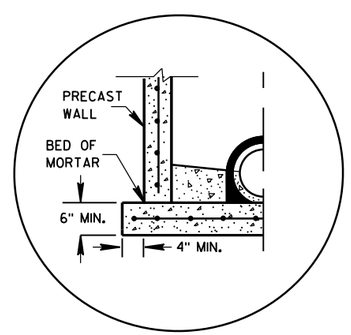

SEPARATE PRECAST REINFORCED CONCRETE BASE OPTION

DETAIL "A"

GENERAL NOTES

DETAILS OF CONSTRUCTION, MATERIALS AND WORKMANSHIP NOT SHOWN ON THIS DRAWING SHALL CONFORM TO THE PERTINENT REQUIREMENTS OF THE STANDARD SPECIFICATIONS AND THE APPLICABLE SPECIAL PROVISIONS.

UNLESS OTHERWISE AUTHORIZED IN WRITING BY THE ENGINEER, THE CONTRACTOR SHALL NOT ORDER AND DELIVER PRECAST MANHOLE UNITS REQUIRED FOR THE PROJECT UNTIL A LIST OF SIZES IS FURNISHED BY THE ENGINEER.

DETAILED DRAWINGS FOR PROPOSED ALTERNATE DESIGNS FOR UNDERGROUND DRAINAGE STRUCTURES SHALL BE SUBMITTED TO THE ENGINEER FOR APPROVAL PROVIDING THAT SUCH ALTERNATE DESIGNS MAKE PROVISION FOR EQUIVALENT CAPACITY AND STRENGTH.

ALL DRAINAGE STRUCTURES ARE DESIGNATED ON THE PLANS AS "MANHOLES 3X3-L", "CATCH BASINS 4-B", "INLETS 2X3-H", ETC. THE FIRST NUMBERS DESIGNATE THE SIZE OF THE STRUCTURE, AND THE FOLLOWING LETTER DESIGNATES THE TYPE OF COVER TO BE USED TO COMPRISE THE COMPLETE UNIT.

BASES SHALL BE PLACED ON A BED OF MATERIAL AT LEAST 6 INCHES IN DEPTH, WHICH MEETS THE REQUIREMENTS OF FOUNDATION BACKFILL. THIS BEDDING SHALL BE COMPACTED AND PROVIDE UNIFORM SUPPORT FOR THE ENTIRE AREA OF THE BASE.

PRECAST REINFORCED FLAT SLAB TOPS MAY BE USED ON CONCRETE BLOCK STRUCTURES.

STEPS MEETING AASHTO M199 AND THE FOLLOWING REQUIREMENTS SHALL BE INSTALLED IN ALL STRUCTURES OVER 5 FEET IN DEPTH: 16 INCH C-C MAXIMUM SPACING; PROJECT A MINIMUM CLEAR DISTANCE OF 4 INCHES FROM THE WALL AT THE POINT OF EMBEDMENT; MINIMUM LENGTH OF 10 INCHES; MINIMUM WALL EMBEDMENT OF 3 INCHES. FERROUS METAL STEPS NOT PAINTED OR TREATED TO RESIST CORROSION SHALL HAVE A MINIMUM CROSS SECTIONAL DIMENSION OF 1 INCH.

STEPS OF APPROVED POLYPROPYLENE PLASTIC COATED REINFORCEMENT BAR ARE ACCEPTABLE. REINFORCING BAR MUST BE A MINIMUM OF ½ INCH AND MEET THE REQUIREMENTS OF ASTM A615.

CERTIFICATION SHALL BE PROVIDED THAT INSTALLED STEPS WHEN TESTED IN ACCORDANCE WITH SECTION 10 OF AASHTO T280 CAN WITHSTAND A VERTICAL LOAD OF 800 LBS. AND A HORIZONTAL LOAD OF 400 LBS.

ALL BAR STEEL REINFORCEMENT SHALL BE EMBEDDED 2 INCHES CLEAR UNLESS OTHERWISE SHOWN OR NOTED.

CONCRETE BLOCK WILL NOT BE PERMITED FOR STRUCTURES GREATER THAN 4 FEET IN WIDTH.

PRECAST REINFORCED RISERS SHALL HAVE A TONGUE AND GROOVE JOINT WITH TONGUE UP OR DOWN.

ALL PRECAST MANHOLE UNITS SHALL CONFORM TO THE PERTINENT REQUIREMENTS OF ASTM C 913.

4" OVERHANGING BASES ARE REQUIRED FOR ALL CONCRETE BLOCK INSTALLATIONS. 4" OVERHANG IS REQUIRED WHEN SEPARATE PRECAST BASE IS PROVIDED. OVERHANG IS NOT REQUIRED ON PRECAST STRUCTURES WITH AN INTEGRAL OR MONOLITHIC BASE.

MAXIMUM PIPE DIAMETER DETERMINED BY 3 INCH CLEARANCE ON EACH SIDE OF THE OUTSIDE WALL OF THE PIPE. SEE DETAIL "C". ASSUMES PIPE ENTERS PERPENDICULAR TO THE STRUCTURE.

① FOR PRECAST MANHOLES PROVIDE REINFORCING STEEL IN ACCORDANCE TO ASTM C 913.

② CONTRACTOR TO PROVIDE DRAWING(S) STAMPED BY A PROFESSIONAL ENGINEER FOR STEEL REINFORCING DESIGN FOR CAST-IN-PLACE STRUCTURES.

MANHOLE COVER OPENING MATRIX

MANHOLE COVER TYPE	C	ALL J'S	K	L	M
OPENING SIZE (FT)					
2 DIA.	X	X		X	
3 DIA.			X		X

PIPE MATRIX

MANHOLE SIZE	MAXIMUM INSIDE PIPE DIAMETER	
	WIDTH (W) (IN)	LENGTH (L) (IN)
3X3-FT	24	24
4X4-FT	30	30
5X5-FT	42	42
6X6-FT	54	54

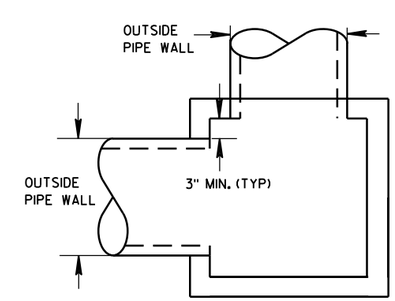

DETAIL "C"

SQUARE MANHOLES W/ FLAT TOP

MANHOLES 3X3-FT, 4X4-FT, 5X5-FT AND 6X6-FT

MANHOLES 3X3-FT, 4X4-FT
5X5-FT AND 6X6-FT

STATE OF WISCONSIN
DEPARTMENT OF TRANSPORTATION

APPROVED
Sept., 2016 — /S/ Rodney Taylor
DATE — ROADWAY STANDARDS DEVELOPMENT UNIT SUPERV
FHWA

6

S.D.D. 8 B 10-2

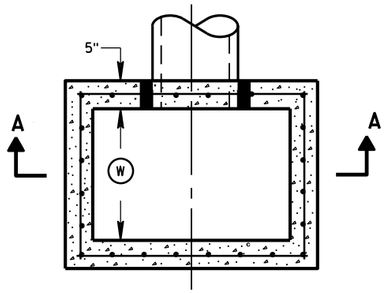

PLAN VIEW

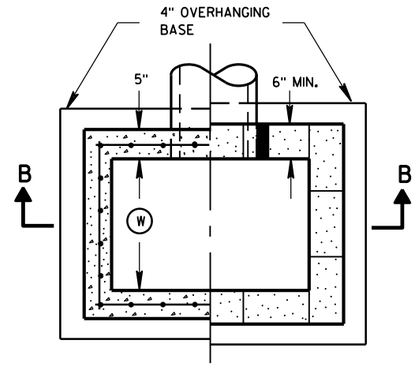

PLAN VIEW

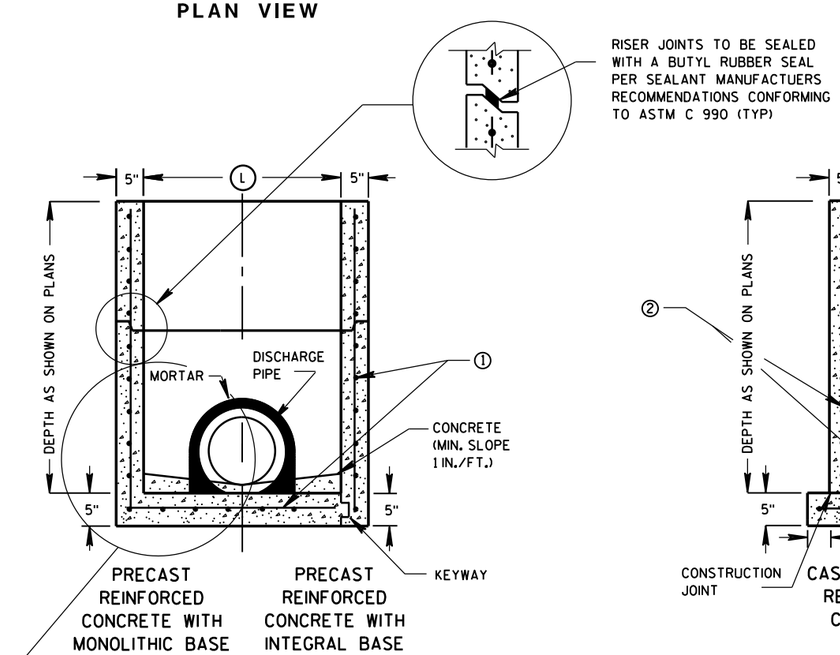

SECTION A-A

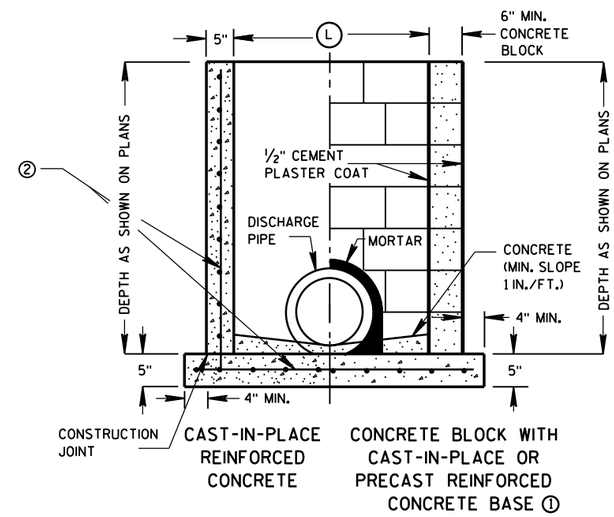

SECTION B-B

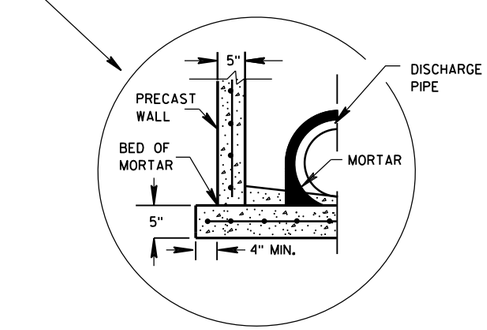

SEPARATE PRECAST REINFORCED CONCRETE BASE OPTION

GENERAL NOTES

DETAILS OF CONSTRUCTION, MATERIALS AND WORKMANSHIP NOT SHOWN ON THIS DRAWING SHALL CONFORM TO THE PERTINENT REQUIREMENTS OF THE STANDARD SPECIFICATIONS AND THE APPLICABLE SPECIAL PROVISIONS.

UNLESS OTHERWISE AUTHORIZED IN WRITING BY THE ENGINEER, THE CONTRACTOR SHALL NOT ORDER AND DELIVER PRECAST INLET UNITS REQUIRED FOR THE PROJECT UNTIL A LIST OF SIZES IS FURNISHED BY THE ENGINEER.

DETAILED DRAWINGS FOR PROPOSED ALTERNATE DESIGNS FOR UNDERGROUND DRAINAGE STRUCTURES SHALL BE SUBMITTED TO THE ENGINEER FOR APPROVAL PROVIDING THAT SUCH ALTERNATE DESIGNS MAKE PROVISION FOR EQUIVALENT CAPACITY AND STRENGTH.

ALL PRECAST INLET UNITS SHALL CONFORM TO THE PERTINENT REQUIREMENTS OF ASTM C 913.

ALL DRAINAGE STRUCTURES ARE DESIGNATED ON THE PLANS AS "MANHOLES 3X3-L", "CATCH BASINS 4-B", "INLETS 2X3-H", ETC. THE FIRST NUMBERS DESIGNATES THE SIZE OF THE STRUCTURE, AND THE FOLLOWING LETTER DESIGNATES THE TYPE OF COVER TO BE USED TO COMPRISE THE COMPLETE UNIT.

BASES SHALL BE PLACED ON A BED OF MATERIAL AT LEAST 6 INCHES IN DEPTH, WHICH MEETS THE REQUIREMENTS OF FOUNDATION BACKFILL. THIS BEDDING SHALL BE COMPACTED AND PROVIDE UNIFORM SUPPORT FOR THE ENTIRE AREA OF THE BASE.

ALL BAR STEEL REINFORCEMENT SHALL BE EMBEDDED 2 INCHES CLEAR UNLESS OTHERWISE SHOWN OR NOTED.

PRECAST REINFORCED RISERS SHALL HAVE A TONGUE AND GROOVE JOINT WITH TONGUE UP OR DOWN.

4" OVERHANGING BASES ARE REQUIRED FOR CAST-IN-PLACE REINFORCED CONCRETE AND CONCRETE BLOCK INSTALLATIONS.
4" OVERHANG IS REQUIRED WHEN SEPARATE PRECAST BASE IS PROVIDED.
OVERHANG IS NOT REQUIRED ON PRECAST STRUCTURES WITH AN INTEGRAL OR MONOLITHIC BASE.

MAXIMUM INSIDE PIPE DIAMETER DETERMINED BY 3 INCH CLEARANCE ON EACH SIDE OF THE OUTSIDE WALL OF THE PIPE. SEE DETAIL "A". ASSUMES PIPE ENTERS PERPENDICULAR TO THE STRUCTURE.

① FOR PRECAST INLETS PROVIDE REINFORCING STEEL IN ACCORDANCE TO ASTM C 913.

② CONTRACTOR TO PROVIDE DRAWING(S) STAMPED BY A PROFESSIONAL ENGINEER FOR STEEL REINFORCING DESIGN FOR CAST-IN-PLACE STRUCTURES.

INLET COVER MATRIX

INLET SIZE		INLET COVER TYPE	ALL A'S	ALL B'S	BW	F	ALL H'S	S	T	V	WM
	WIDTH Ⓦ (FT)	LENGTH Ⓛ (FT)									
2X2-FT	2	2	X	X				X		X	
2X2.5-FT	2	2.5			X			X	X	X	X
2X3-FT	2	3					X				
2.5X3-FT	2.5	3				X					

PIPE MATRIX

INLET SIZE	MAXIMUM INSIDE PIPE DIAMETER	
	WIDTH (IN)	LENGTH (IN)
2X2-FT	12	12
2X2.5-FT	12	18
2X3-FT	12	24
2.5X3-FT	18	24

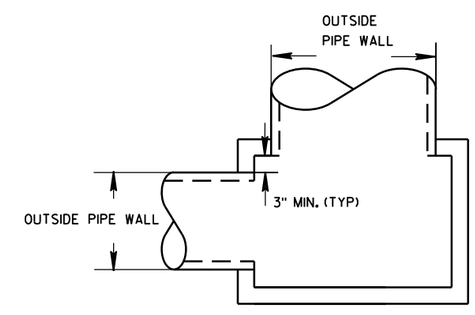

DETAIL "A"

INLETS 2X2-FT, 2X2.5-FT, 2X3-FT AND 2.5X3-FT

INLETS 2X2-FT, 2X2.5-FT, 2X3-FT AND 2.5X3-FT

STATE OF WISCONSIN
DEPARTMENT OF TRANSPORTATION

APPROVED
Sept., 2016 — DATE
/S/ Rodney Taylor
ROADWAY STANDARDS D IT
UNIT SUPERVIS
FHWA

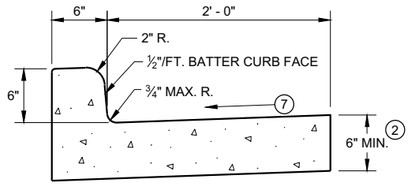

TYPES A[1] & D

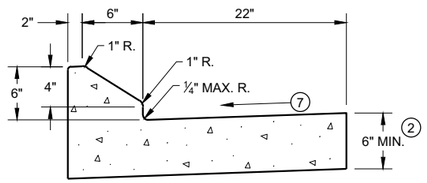

6" SLOPED CURB TYPES G[1] & J

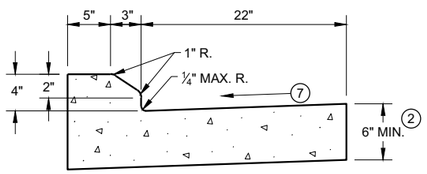

4" SLOPED CURB TYPES G[1] & J

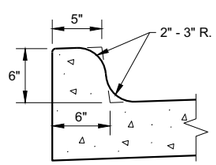

TYPES K[1] & L
(OPTIONAL CURB SHAPE)

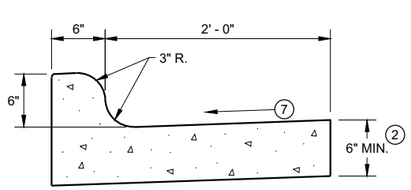

TYPES K[1] & L

CONCRETE CURB AND GUTTER 30"

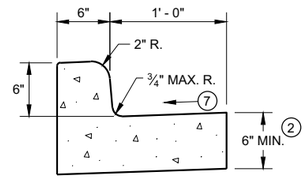

TYPES A[1] & D

CONCRETE CURB AND GUTTER 18"

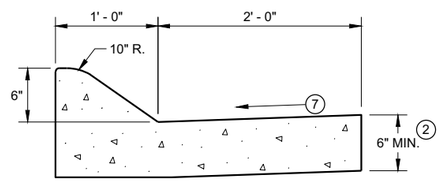

6" SLOPED CURB TYPES A[1] & D

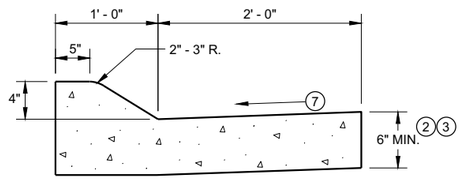

4" SLOPED CURB TYPES A[1] & D

CONCRETE CURB AND GUTTER 36"

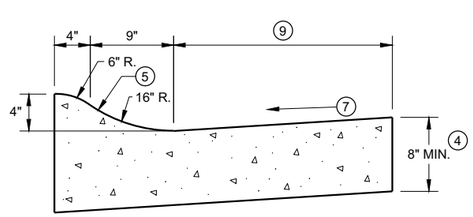

4" SLOPED CURB TYPES R[1] & T

TBT & TBTT	X
30"	22"
36"	28"

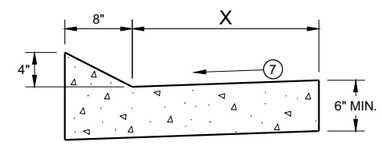

TYPES TBT & TBTT[1]

CONCRETE CURB AND GUTTER

PAVEMENT THICKNESS AND MAXIMUM CONCRETE PANEL WIDTH TABLE

PAVEMENT THICKNESS	MAXIMUM PANEL WIDTH
LESS THAN 10"	12'
10" & ABOVE	15'

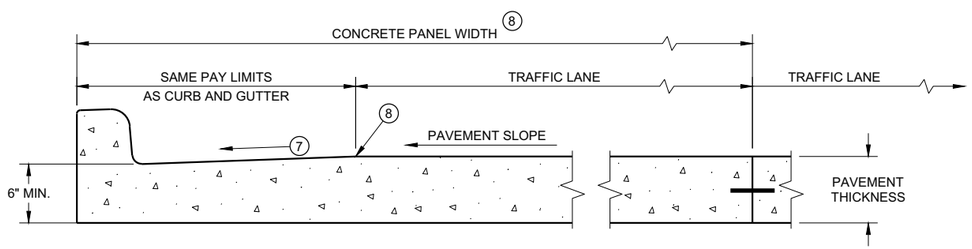

PARTIAL SECTION OF PAVEMENT *
WITH INTEGRAL CURB AND GUTTER

* BIKE LANE IS NOT SHOWN

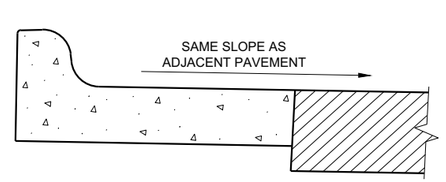

REVERSE SLOPE GUTTER[6]
(TYPICAL FOR ALL CURB & GUTTER TYPES)

GENERAL NOTES

DETAILS OF CONSTRUCTION AND WORKMANSHIP NOT SHOWN ON THIS DRAWING SHALL CONFORM TO THE PERTINENT REQUIREMENTS OF THE CONTRACT.

PAVEMENT TIES AND TIE BARS SHALL BE EPOXY COATED IN CONFORMANCE WITH SUBSECTION 505.2.6.2 OF THE STANDARD SPECIFICATIONS.

INTEGRAL CURB AND GUTTER SHALL CONFORM TO THE DETAILS SHOWN FOR CONCRETE CURB AND GUTTER INCLUDING THE TRANSVERSE GUTTER SLOPE.

UNLESS OTHERWISE SHOWN ON THE TYPICAL CROSS SECTIONS, THE BASE AGGREGATE AND COMMON EXCAVATION LIMITS ARE 2' - 0" BEHIND THE BACK OF CURBS.

1. TIE BARS ARE REQUIRED FOR CURB AND GUTTERS TYPES A, G, K, R, AND TBTT.
2. THE BOTTOM OF CURB AND GUTTER MAY BE CONSTRUCTED EITHER LEVEL OR PARALLEL TO THE SLOPE OF THE SUBGRADE OR BASE AGGREGATE PROVIDED A 6" MINIMUM GUTTER THICKNESS IS MAINTAINED.
3. USE 8" MINIMUM GUTTER THICKNESS WHEN USED WITH AN ADJACENT CONCRETE TRUCK APRON PLACED BEHIND BACK OF CURB.
4. THE BOTTOM OF CURB AND GUTTER MAY BE CONSTRUCTED EITHER LEVEL OR PARALLEL TO THE SLOPE OF THE SUBGRADE OR BASE AGGREGATE PROVIDED A 8" MINIMUM GUTTER THICKNESS IS MAINTAINED.
5. UNLESS OTHERWISE NOTED, FOR STAKING PURPOSES THE FACE OF CURB IS 6" FROM THE BACK OF CURB.
6. WHEN REVERSE SLOPE GUTTER IS REQUIRED, THE LOCATION(S) WILL BE SHOWN ELSEWHERE IN THE PLAN.
7. USE 4% GUTTER CROSS SLOPE UNLESS OTHERWISE NOTED IN THE PLANS.
8. INCLUDE LONGITUDINAL JOINT AND TIE BARS ALONG LANE EDGE WHEN CONCRETE PANEL WIDTH EXCEEDS THE MAXIMUM WIDTH PER TABLE BELOW. LONGITUDINAL JOINT(S) ARE NOT ALLOWED WITHIN TRAFFIC LANES AND BIKE LANES. LONGITUDINAL JOINT MAY BE SAWED.
9. CONCRETE CURB AND GUTTER 4-INCH SLOPED 30-INCH TYPE "R" AND "T" = 17 INCHES
   CONCRETE CURB AND GUTTER 4-INCH SLOPED 36-INCH TYPE "R" AND "T" = 23 INCHES

CONCRETE CURB AND GUTTER

STATE OF WISCONSIN
DEPARTMENT OF TRANSPORTATION

GENERAL NOTES

DETAILS OF CONSTRUCTION AND WORKMANSHIP NOT SHOWN ON THIS DRAWING SHALL CONFORM TO THE PERTINENT REQUIREMENTS OF THE CONTRACT.

PAVEMENT TIES AND TIE BARS SHALL BE EPOXY COATED IN CONFORMANCE WITH SUBSECTION 505.2.6.2 OF THE STANDARD SPECIFICATIONS.

UNLESS OTHERWISE SHOWN ON THE TYPICAL CROSS SECTIONS, THE BASE AGGREGATE AND COMMON EXCAVATION LIMITS ARE 2' - 0" BEHIND THE BACK OF CURBS.

(1) TIE BARS ARE REQUIRED FOR CURB AND GUTTERS TYPES A, G, K, R, AND TBTT.

(2) THE BOTTOM OF CURB AND GUTTER MAY BE CONSTRUCTED EITHER LEVEL OR PARALLEL TO THE SLOPE OF THE SUBGRADE OR BASE AGGREGATE PROVIDED A 6" MINIMUM GUTTER THICKNESS IS MAINTAINED.

(9) REFER TO SDD 08D18 AND 08D19 FOR ADDITIONAL DRIVEWAY ENTRANCE CURB DETAILS.

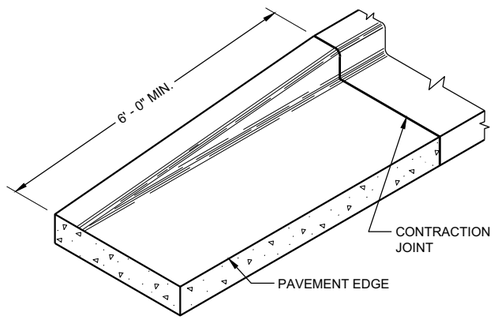

END SECTIONCURB AND GUTTER

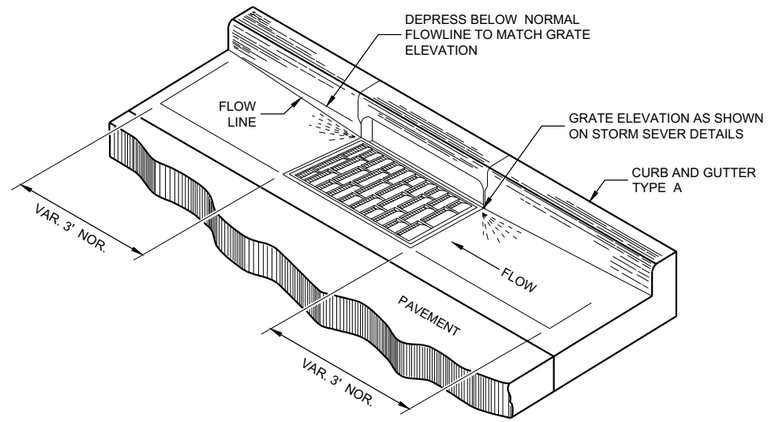

DETAIL OF CURB AND GUTTER AT INLETS
(TYPICAL H INLET COVER SHOWN)

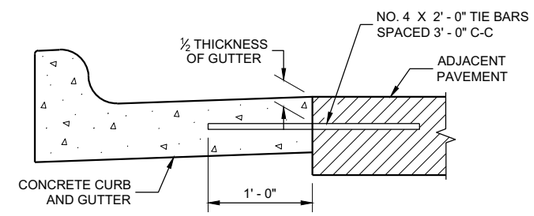

TYPICAL TIE BAR LOCATION (1)

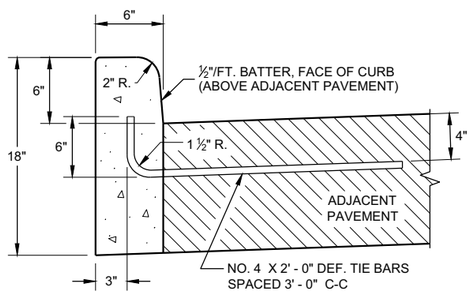

TYPES A (1) & D

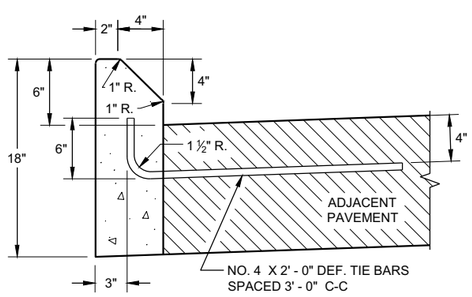

TYPES G (1) & J

CONCRETE CURB

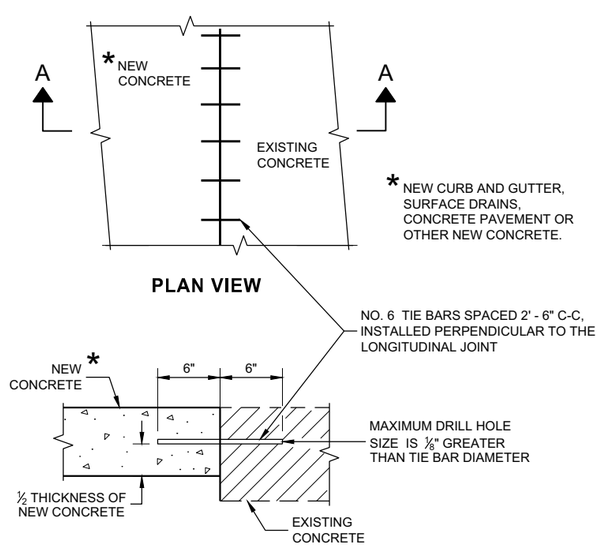

PLAN VIEW

SECTION A - A

TIE BARS DRILLED INTO EXISTING PAVEMENT

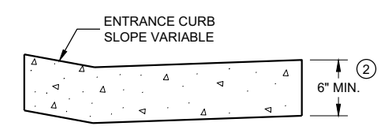

DRIVEWAY ENTRANCE CURB (9)
(WHEN DIRECTED BY THE ENGINEER)

CONCRETE CURB, TIES AND CURB AND GUTTER APPLICATIONS

STATE OF WISCONSIN
DEPARTMENT OF TRANSPORTATION

APPROVED
February 2021 — DATE
/S/ Rodnery Taylor — ROADWAY STANDARDS DEVE ENGINEER
FHWA

6
SDD 08D01 - 22b

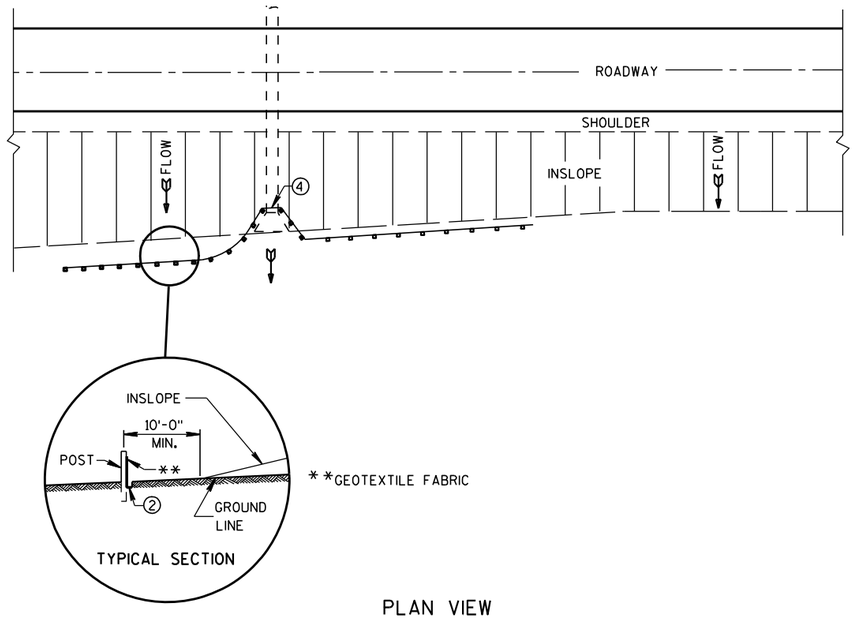

PLAN VIEW

TYPICAL APPLICATION OF SILT FENCE

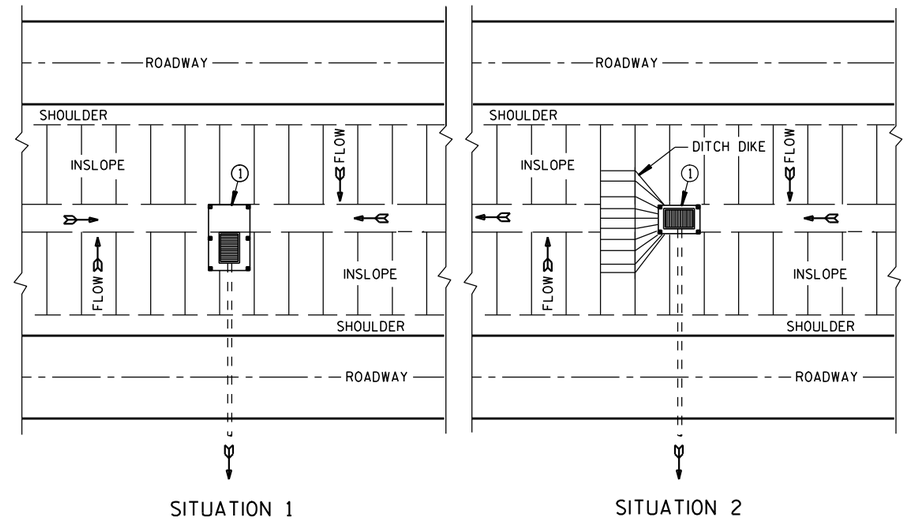

PLAN VIEW

SILT FENCE AT MEDIAN SURFACE DRAINS

GENERAL NOTES

DETAILS OF CONSTRUCTION NOT SHOWN ON THIS DRAWING SHALL CONFORM TO THE PERTINENT REQUIREMENTS OF THE STANDARD SPECIFICATIONS AND APPLICABLE SPECIAL PROVISIONS.

① HORIZONTAL BRACE REQUIRED WITH 2" X 4" WOODEN FRAME OR EQUIVALENT AT TOP OF POSTS.

② FOR MANUAL INSTALLATIONS THE TRENCH SHALL BE A MINIMUM OF 4" WIDE & 6" DEEP TO BURY AND ANCHOR THE GEOTEXTILE FABRIC. FOLD MATERIAL TO FIT TRENCH AND BACKFILL & COMPACT TRENCH WITH EXCAVATED SOIL.

③ WOOD POSTS SHALL BE A MINIMUM SIZE OF 1⅛" X 1⅛" OF OAK OR HICKORY.

④ SILT FENCE TO EXTEND ACROSS THE TOP OF THE PIPE.

⑤ CONSTRUCT SILT FENCE FROM A CONTINUOUS ROLL IF POSSIBLE BY CUTTING LENGTHS TO AVOID JOINTS. IF A JOINT IS NECESSARY USE ONE OF THE FOLLOWING TWO METHODS; A) OVERLAP THE END POSTS AND TWIST, OR ROTATE, AT LEAST 180 DEGREES. B) HOOK THE END OF EACH SILT FENCE LENGTH.

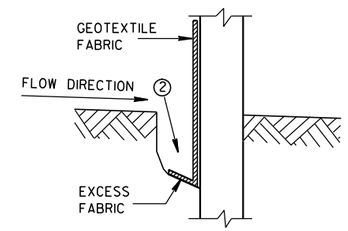

TRENCH DETAIL

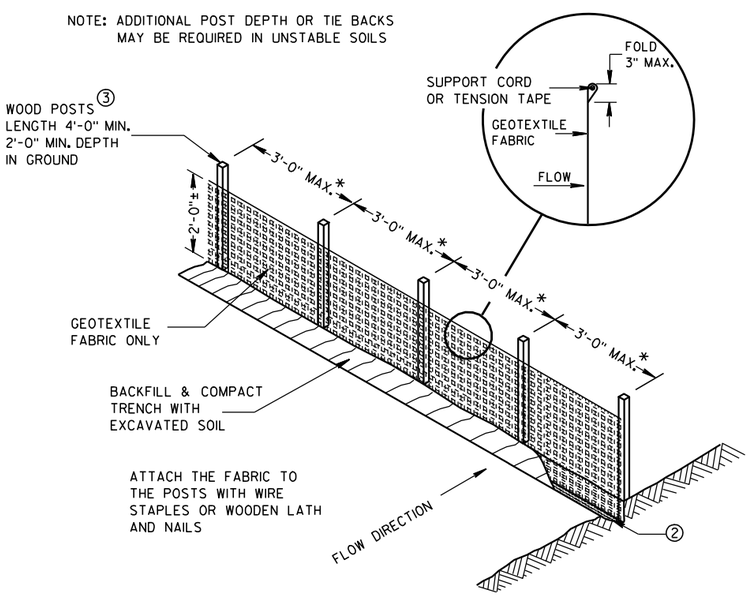

*NOTE: 8'-0" POST SPACING ALLOWED IF A WOVEN GEOTEXTILE FABRIC IS USED.

SILT FENCE

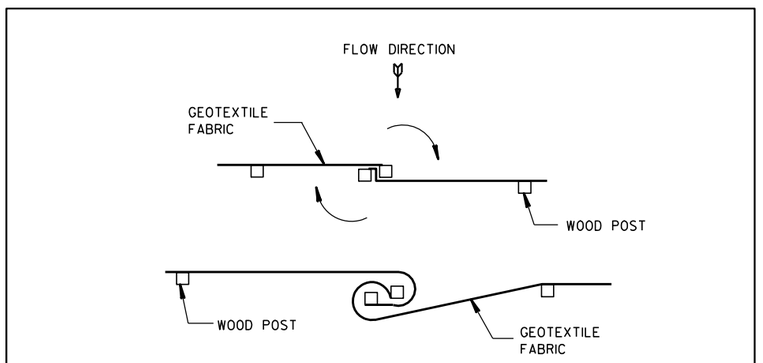

TWIST METHOD

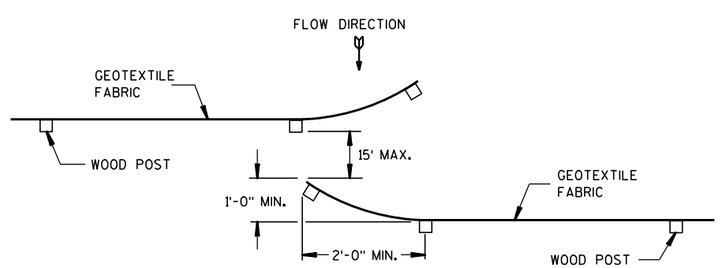

HOOK METHOD

JOINING TWO LENGTHS OF SILT FENCE ⑤

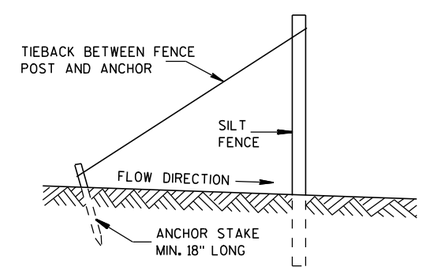

SILT FENCE TIE BACK

(WHEN REQUIRED BY THE ENGINEER)

SILT FENCE
STATE OF WISCONSIN DEPARTMENT OF TRANSPORTATION
APPROVED 4-29-05 /S/ Beth Cann----- DATE CHIEF ROADWAY DEVELOP ENGINEER FHWA

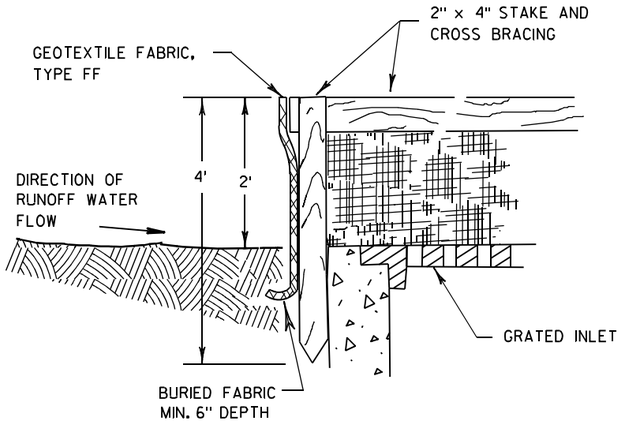

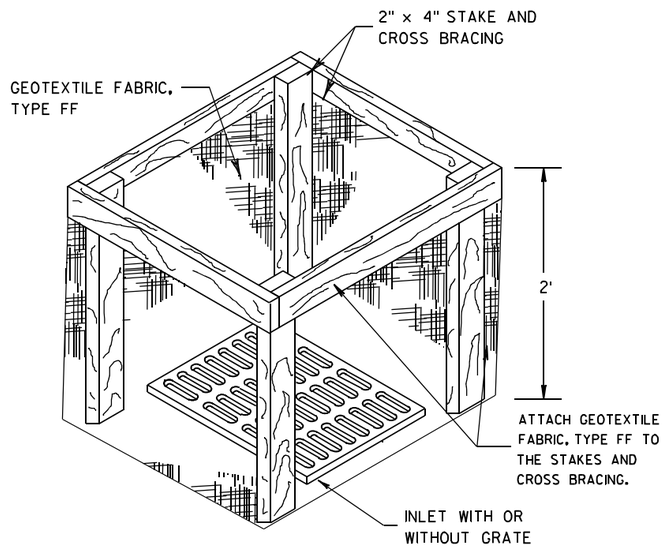

INLET PROTECTION, TYPE A

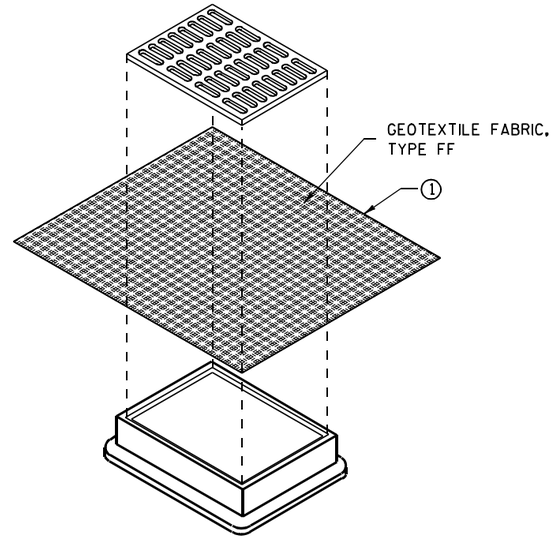

INLET PROTECTION, TYPE B (WITHOUT CURB BOX)

(CAN BE INSTALLED IN ANY INLET WITHOUT A CURB BOX)

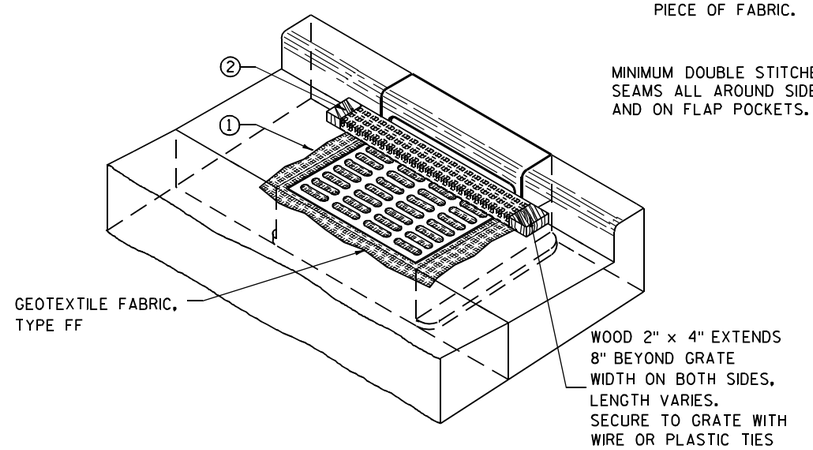

INLET PROTECTION, TYPE C (WITH CURB BOX)

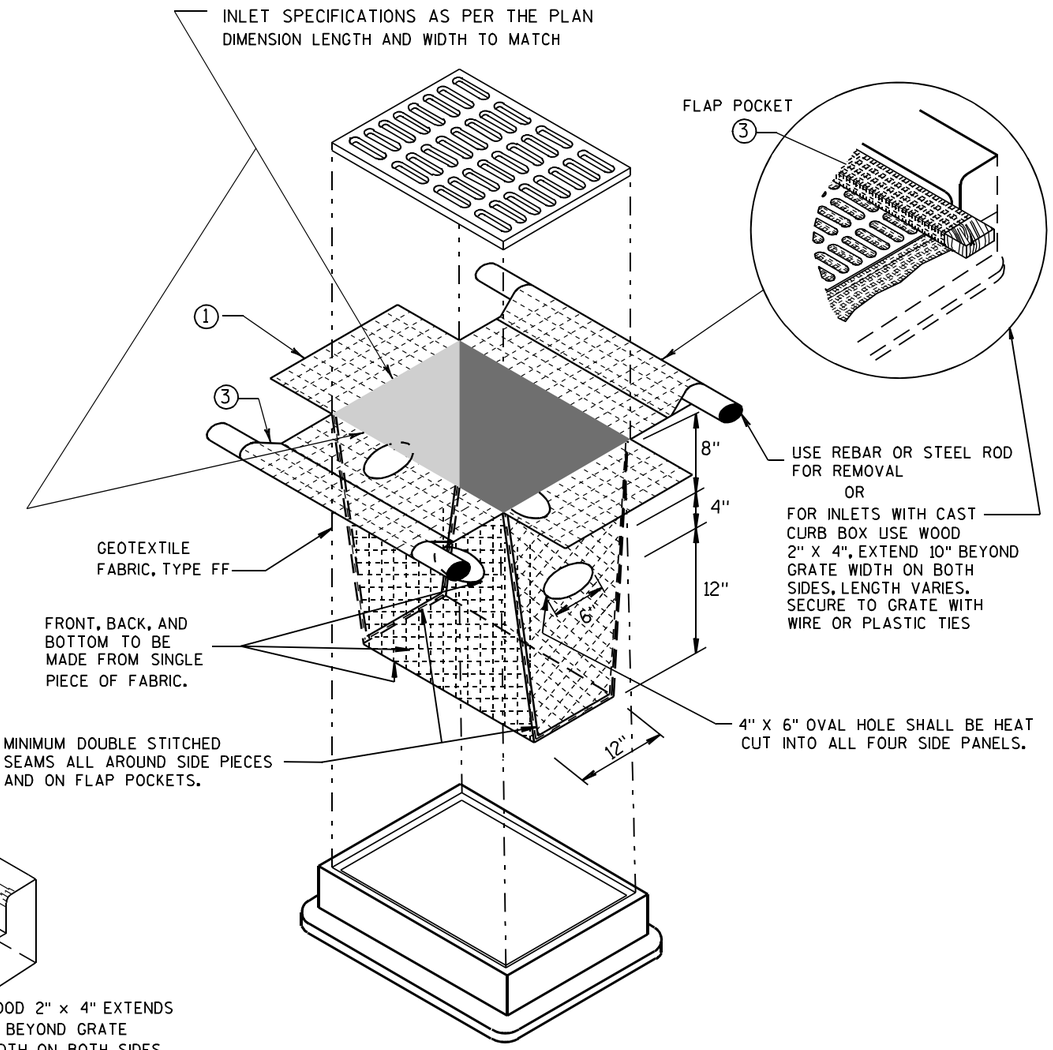

INLET PROTECTION, TYPE D

(CAN BE INSTALLED IN ANY INLET TYPE WITH OR WITHOUT A CURB BOX AS PER NOTE 2)

GENERAL NOTES

INLET PROTECTION DEVICES SHALL BE MAINTAINED OR REPLACED AT THE DIRECTION OF THE ENGINEER.

MANUFACTURED ALTERNATIVES APPROVED AND LISTED ON THE DEPARTMENT'S EROSION CONTROL PRODUCT ACCEPTABILITY LIST MAY BE SUBSTITUTED.

WHEN REMOVING OR MAINTAINING INLET PROTECTION, CARE SHALL BE TAKEN SO THAT THE SEDIMENT TRAPPED ON THE GEOTEXTILE FABRIC DOES NOT FALL INTO THE INLET. ANY MATERIAL FALLING INTO THE INLET SHALL BE REMOVED IMMEDIATELY.

1. FINISHED SIZE, INCLUDING FLAP POCKETS WHERE REQUIRED, SHALL EXTEND A MINIMUM OF 10" AROUND THE PERIMETER TO FACILITATE MAINTENANCE OR REMOVAL.
2. FOR INLET PROTECTION, TYPE C (WITH CURB BOX), AN ADDITIONAL 18" OF FABRIC IS WRAPPED AROUND THE WOOD AND SECURED WITH STAPLES. THE WOOD SHALL NOT BLOCK THE ENTIRE HEIGHT OF THE CURB BOX OPENING.
3. FLAP POCKETS SHALL BE LARGE ENOUGH TO ACCEPT WOOD 2X4.

INSTALLATION NOTES

TYPE B & C

TRIM EXCESS FABRIC IN THE FLOW LINE TO WITHIN 3" OF THE GRATE.

THE CONTRACTOR SHALL DEMONSTRATE A METHOD OF MAINTENANCE, USING A SEWN FLAP, HAND HOLDS OR OTHER METHOD TO PREVENT ACCUMULATED SEDIMENT FROM ENTERING THE INLET.

TYPE D

DO NOT INSTALL INLET PROTECTION TYPE D IN INLETS SHALLOWER THAN 30", MEASURED FROM THE BOTTOM OF THE INLET TO THE TOP OF THE GRATE.

TRIM EXCESS FABRIC IN THE FLOW LINE TO WITHIN 3" OF THE GRATE.

THE INSTALLED BAG SHALL HAVE A MINIMUM SIDE CLEARANCE, BETWEEN THE INLET WALLS AND THE BAG, MEASURED AT THE BOTTOM OF THE OVERFLOW HOLES, OF 3". WHERE NECESSARY THE CONTRACTOR SHALL CINCH THE BAG, USING PLASTIC ZIP TIES, TO ACHIEVE THE 3" CLEARANCE. THE TIES SHALL BE PLACED AT A MAXIMUM OF 4" FROM THE BOTTOM OF THE BAG.

INLET PROTECTION TYPE A, B, C, AND D

STATE OF WISCONSIN
DEPARTMENT OF TRANSPORTATION

APPROVED
10/16/02 — DATE
/S/ Beth Cannestra — CHIEF ROADWAY DEVELOPMENT ENGINEER
FHWA

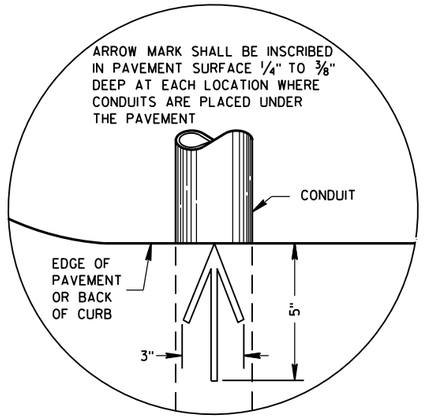

PLAN VIEW

ARROW MARK

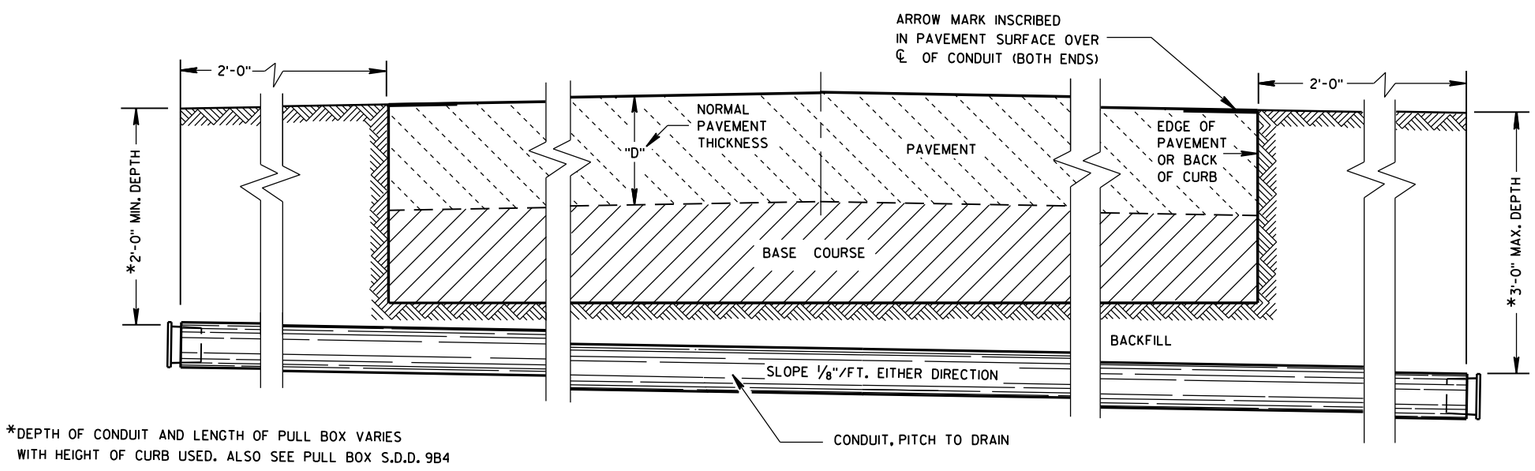

*DEPTH OF CONDUIT AND LENGTH OF PULL BOX VARIES WITH HEIGHT OF CURB USED. ALSO SEE PULL BOX S.D.D. 9B4

SIDE ELEVATION

DETAIL FOR CONDUIT UNDER PAVED HIGHWAYS

GENERAL NOTES

DETAILS OF CONSTRUCTION, MATERIALS AND WORKMANSHIP NOT SHOWN ON THIS DRAWING SHALL CONFORM TO THE PERTINENT REQUIREMENTS OF THE CONTRACT.

METALLIC (STANDARD SPECIFICATION 652.2.2) OR NONMETALLIC (STANDARD SPECIFICATION 652.2.3) CONDUIT SHALL BE FURNISHED AND PLACED AS SHOWN.

DEPTH OF CONDUIT INSTALLED BELOW THE TRAVELED WAY SHALL BE 24 INCHES MINIMUM AND 36 INCHES MAXIMUM.

DEPTH OF CONDUIT INSTALLED THAT IS NOT BELOW THE TRAVELED WAY SHALL BE 18 INCHES MINIMUM AND 36 INCHES MAXIMUM.

ANY EXCEPTION TO THE MAXIMUM DEPTH SHALL BE ONLY WITH THE WRITTEN APPROVAL OF THE ENGINEER.

THE TRENCH SHALL NOT BE BACKFILLED PRIOR TO INSPECTION OF THE CONDUIT.

ALL METALLIC CONDUIT RACEWAY ENDS SHALL BE REAMED AND THREADED.

ALL METALLIC CONDUIT IN WHICH WIRE OR CABLE IS TO BE INSTALLED SHALL BE BUSHED WITH APPROVED THREADED BUSHINGS BEFORE INSTALLATION OF THE WIRE OR CABLE.

ALL METALLIC CONDUITS IN WHICH WIRE OR CABLE IS NOT TO BE INSTALLED SHALL BE CAPPED WITH THREADED PROTECTIVE CAPS, AS APPROVED BY THE ENGINEER.

ALL NONMETALLIC CONDUIT SHALL BE CAPPED OR PLUGGED IMMEDIATELY AFTER INSTALLATION AND SHALL REMAIN CAPPED OR PLUGGED UNTIL WIRE/CABLES ARE INSTALLED.

NONMETALLIC CONDUITS IN WHICH WIRE OR CABLE IS NOT BEING INSTALLED SHALL REMAIN CAPPED OR PLUGGED.

BENDING OF PVC ELECTRICAL CONDUIT SHALL BE ACCOMPLISHED BY USING A BLANKET OR EMERSION TYPE TANK DESIGNED FOR THE PURPOSE OF BENDING PVC ELECTRICAL CONDUIT.

ALL CUT ENDS SHALL BE TRIMMED INSIDE AND OUTSIDE TO REMOVE ALL ROUGH EDGES ON NONMETALLIC CONDUIT. (SEE NEC 347.5)

WHEN REQUIRED TO CONNECT NONMETALLIC CONDUIT TO METALLIC CONDUIT, ONLY U.L. LISTED ADAPTER FITTINGS SHALL BE USED.

PRIOR TO CONDUIT ACCEPTANCE, CONDUIT CAPS OR PLUGS SHALL BE REMOVED, AND THE CAPS, PLUGS AND CONDUIT ENDS SHALL BE THOROUGHLY CLEANED AND THEN THE CAPS OR PLUGS REINSTALLED TO ENSURE THAT THE CAPS OR PLUGS CAN BE EASILY REMOVED IN THE FUTURE.

ALL CONDUIT BEING FURNISHED AND INSTALLED SHALL HAVE THE U.L. LABEL FIRMLY ATTACHED.

CONDUIT RUNS SHALL BE THE SAME SIZE OF CONDUIT FROM ONE END TO THE OTHER (FROM PULL BOX TO PULL BOX-OR-JUNCTION BOX TO JUNCTION BOX-OR-BASE TO BASE, ETC.).

TRACER WIRE SHALL BE INSTALLED AS STATED IN THE STANDARD SPECIFICATION, ITEM 652.3.1.1.

ALL CONDUIT RUNS SHALL BE STRAIGHT (WITHOUT BENDS) FROM PULL BOX TO PULL BOX, PULL BOX TO BASE AND BASE TO BASE AS SHOWN ON THE PLANS.

CONDUIT	
STATE OF WISCONSIN DEPARTMENT OF TRANSPORTATION	
APPROVED March, 2017 DATE	/S/ Ahmet Demirbilek STATE ELECTRICAL 77
FHWA	

6
S.D.D. 9 B 2-10

TABLE OF NOMINAL DIMENSIONS AND WEIGHTS

DIMENSION IN INCHES		CORRUGATED STEEL PIPE								
PIPE DIAMETER (INSIDE)	A	12	12	12	18	18	18	24	24	24
PIPE LENGTH **	B	24	30	36	24	30	36	36	42	48
WALL THICKNESS	C	0.064	0.064	0.064	0.064	0.064	0.064	0.064	0.064	0.064
COVER	D	10 1/4	10 1/4	10 1/4	16 1/4	16 1/4	16 1/4	22 1/4	22 1/4	22 1/4
FRAME	E	14 1/2	14 1/2	14 1/2	20 1/2	20 1/2	20 1/2	26 1/2	26 1/2	26 1/2
FRAME	F	8 1/2	8 1/2	8 1/2	14 1/2	14 1/2	14 1/2	20 1/2	20 1/2	20 1/2
FRAME	G	11 1/2	11 1/2	11 1/2	17 1/2	17 1/2	17 1/2	23 1/2	23 1/2	23 1/2
WEIGHT IN POUNDS *										
FRAME AND COVER		60	60	60	110	110	110	155	155	155

* THE ACTUAL WEIGHT OF THE MANHOLE FRAME AND COVER MAY VARY WITHIN 5 PERCENT PLUS OR MINUS OF THE WEIGHTS SHOWN.

** NORMALLY USED LENGTHS. THE PROJECT ENGINEER SHALL DETERMINE IF PIPE LENGTHS, OTHER THAN THOSE SPECIFIED, SHALL BE USED, TO A MAXIMUM OF 48" (CONTINUOUS LENGTH, NON-SPLICED). THE ADDITIONAL LENGTH SHALL BE INCIDENTAL TO THE PULL BOX BID PRICE.

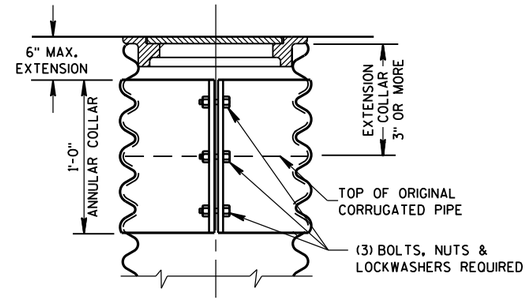

CORRUGATED PIPE EXTENDER

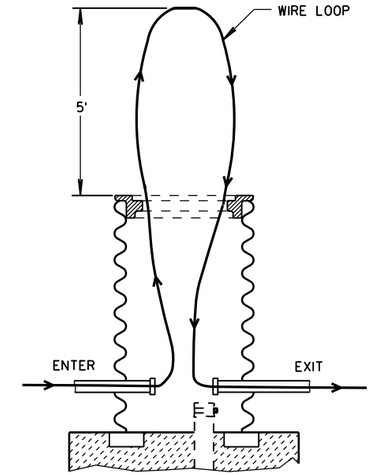

MEASUREMENT DETAIL FOR WIRE/CABLE IN THE PULL BOX

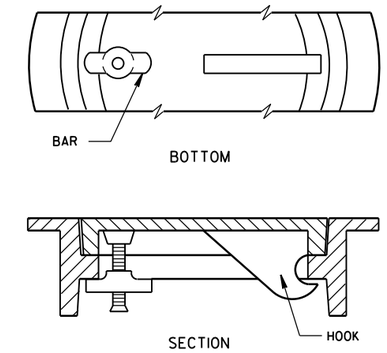

ALTERNATE COVER (LOCKING)

TIGHTENING BAR TYPE

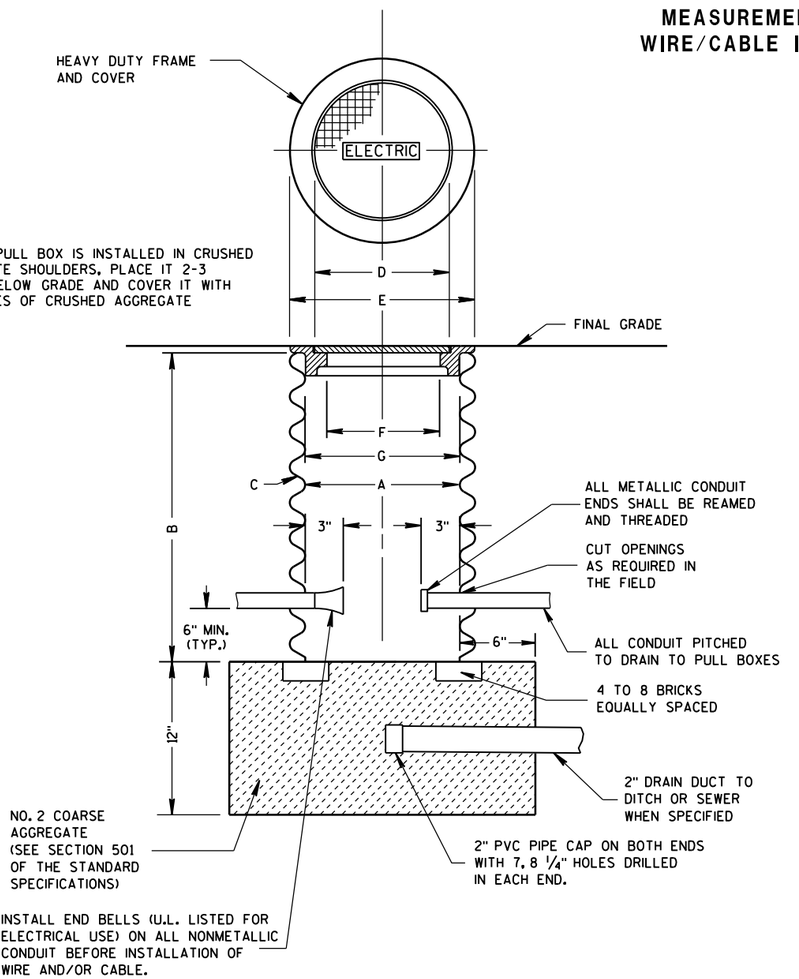

PULL BOX

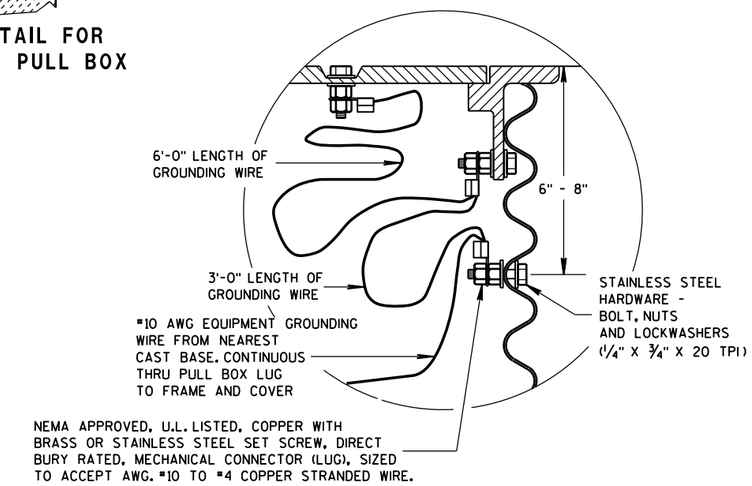

EQUIPMENT GROUNDING LUG AND LOCATION IN STEEL PULL BOXES

GENERAL NOTES

DETAILS OF CONSTRUCTION, MATERIALS AND WORKMANSHIP NOT SHOWN ON THIS DRAWING SHALL CONFORM TO THE PERTINENT REQUIREMENTS OF THE CONTRACT.

ALL FRAMES AND COVERS SHALL BE HEAVY DUTY TYPE, SUITABLE FOR VEHICULAR TRAFFIC LOADS.

PULL BOXES LOCATED IN THE ROADWAYS SHALL HAVE LOCKING COVERS.

ENTRANCE HOLES INTO PULL BOXES SHALL BE CUT WITH A CIRCULAR HOLE SAW OR HYDRAULIC CONDUIT PUNCH. HOLE SIZE SHALL BE THE OUTSIDE DIAMETER OF THE CONDUIT THAT IS TO FIT IN THE OPENING PLUS NO MORE THAN 1/4".

THE CONTRACTOR SHALL NOT INSTALL WIRE IN ANY PULL BOX UNTIL ITS INSTALLATION HAS BEEN INSPECTED AND ACCEPTED BY THE ENGINEER.

GROUNDING LUGS (MECHANICAL CONNECTORS) SHALL BE U.L. LISTED AND APPROVED FOR USE WITH COPPER WIRE.

ALL METALLIC CONDUIT IN WHICH WIRE AND/OR CABLE IS TO BE INSTALLED, SHALL BE BUSHED BEFORE INSTALLATION OF THE WIRE AND/OR CABLE.

WHEN PULL BOXES ARE INSTALLED FOR FUTURE USE, DO NOT INSTALL THE EQUIPMENT GROUNDING LUG. THE EQUIPMENT GROUNDING LUG, THE EQUIPMENT GROUNDING ELECTRODE AND THE EQUIPMENT GROUNDING CONDUCTOR SHALL BE REQUIRED AND INSTALLED UNDER A FUTURE WIRING CONTRACT.

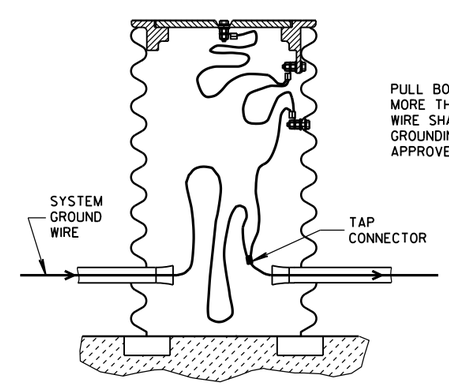

EQUIPMENT GROUNDING LUG AND LOCATION IN STEEL PULL BOXES

PULL BOX

STATE OF WISCONSIN
DEPARTMENT OF TRANSPORTATION

APPROVED
Sept. 2014 — DATE
/S/ Ahmet Demirbilek — STATE ELECTRICAL
FHWA

FORM DEPTH SHALL BE NO MORE THAN 6" BELOW GRADE ON THE LOWER SIDE OF BASE

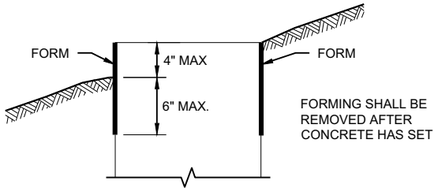

FORMING DETAIL

QUANTITY REQUIREMENTS	CONCRETE BASE TYPE		
	1	2	5 & 6
APPROX. CUBIC YARDS OF CONCRETE	0.40	0.57	0.40
LBS. OF HOOP BAR STEEL	NONE	23	16
LBS. OF VERTICAL BAR STEEL	NONE	60	18

GENERAL NOTES

DETAILS OF CONSTRUCTION, MATERIALS AND WORKMANSHIP NOT SHOWN ON THIS DRAWINGSHALL CONFORM TO THE PERTINENT REQUIREMENTS OF THE CONTRACT.

BASES SHALL BE EXCAVATED BY USE OF A CIRCULAR AUGER.

TOP SURFACES OF CONCRETE BASES SHALL BE TROWEL FINISHED SMOOTH AND LEVEL.

CONDUIT SIZES AND LOCATIONS SHALL BE SHOWN ON THE PLANS

THE FINAL OR TERMINATING CONCRETE BASE IN A CONDUIT RUN SHALL HAVE A 6" EXIT STUB INSTALLED FOR FUTURE CABLING USE. THE EXIT STUB SHALL BE SIZED AS USED THROUGHOUT THE CONDUIT RUN AS SHOWN A THE ENTRANCE OF THE BASE.

ENDS OF CONDUIT INSTALLED BELOW GRADE FRO FUTURE USE SHALL BE CAPPED IF METALLIC OR PLUGGED IF NON-METALLIC.

MINIMUM BENDING RADIUS OF CONDUIT IS EQUAL TO 6X THE DIAMETER.

CONDUIT HEIGHT ABOVE CONCRETE BASES SHALL BE 1 INCH. ALL METALLIC CONDUIT ENDS SHALL BE REAMED AND THREADED.

ALL CONDUIT ENDS AT THE TOP OF CONCRETE BASES SHALL BE CAPPED IF METALLIC OR PLUGGED IF NON-METALLIC IMMEDIATELY AFTER PLACEMENT AND BEFORE CONCRETE IS POURED. CONDUITS IN WHICH WIRE OR CABLE IS NOT INSTALLED SHALL REMAIN CAPPED OR PLUGGED.

BELL ENDS SHALL BE INSTALLED ON ALL PVC CONDUIT EXPOSED AT THE TOP OF CONCRETE BASES BEFORE INSTALLATION.

WHEN REQUIRED TO CONNECT NON-METALLIC CONDUIT TO METALLIC CONDUIT, ONLY ADAPTER FITTINGS, U.L. LISTED FOR ELECTRICAL USE, SHALL BE USED.

IF A BASE REQUIRES A DEEP FORM BECAUSE OF LOOSE DIRT OR FILL, THE FORM SHALL BE REMOVED BEFORE BACKFILLING AROUND THE BASE. BACKFILL SHALL BE TAMPED TIGHT AGAINST THE BARE CONCRETE BASE IN LAYERS OF 1 FOOT OR LESS.

A NO. 4 AWG STRANDED COPPER EQUIPMENT GROUNDING CONDUCTOR SHALL BE EXOTHERMICALLY WELDED TO THE EQUIPMENT GROUNDING ELECTRODE (GROUND ROD) FOR TYPE 2, TYPE 5 AND TYPE 6 BASES.

THE EQUIPMENT GROUNDING CONDUCTOR SHALL BE FURNISHED AND INSTALLED TO ENTER ALL BASE TYPES THROUGH A 1 INCH CONDUIT INSTALLED FOR GROUNDING PURPOSES, LEAVING A 4 FOOT COIL OF WIRE ABOVE THE CONCRETE BASE. THE EQUIPMENT GROUNDING CONDUCTOR SHALL BE NEATLY COILED AND THE COILS TIED TOGETHER.

ANCHOR RODS SHALL BE THREADED 12" IN LENGTH ON EACH END OF THE ROD. ANCHOR RODS SHALL BE MANUFACTURED IN ACCORDANCE WITH SECTION 654.2.1 OF THE STANDARD SPECIFICATIONS.

WASHERS AND LOCK WASHERS ARE REQUIRED ON ALL ANCHOR RODS.

WHEN ANCHOR RODS USING THE ALTERNATE "L" BEND ARE FURNISHED, THE 4 INCH"L" BEND SHALL BE IN ADDITION TO THE SPECIFIED ANCHOR ROD BAR LENGTH. THE "L" BEND SHALL NOT BE THREADED.

ANCHOR RODS SHALL BE INSTALLED WITH MISALIGNMENTS OF LESS THAN 1:40 FROM VERTICAL.

WELDING OF THE ANCHOR RODS TO THE CAGE IS UNACCEPTABLE. TIE WIRES SHALL BE USED.

BAR STEEL REINFORCEMENT SHALL BE COATED WITH POWDERED EPOXY RESIN IN ACCORDANCE WITH SECTION 505 OF THE STANDARD SPECIFICATIONS (LATEST EDITION).

(1) THE MINIMUM DEPTH OF CONDUIT EXITING THE CONCRETE BASE AND INSTALLED BELOW THE TRAVELED WAY SHALL BE 24 INCHES. THE MINIMUM DEPTH OF CONDUIT EXITING THE CONCRETE BASE THAT IS NOT INSTALLED BELOW THE TRAVELED WAY SHALL BE 18 INCHES. THE MAXIMUM DEPTH OF ALL CONDUIT SHALL BE 36 INCHES EXCEPT WITH WRITTEN APPROVAL OF THE ENGINEER.

(2) (4) 1" DIA. X 3' - 6" ANCHOR RODS.

(3) (4) 1" DIA. X 5' - 0" ANCHOR RODS.

(4) (6) NO. 6 X 6' - 8" BAR STEEL REINFORCEMENT.

(5) (7) NO. 4 X 5' - 1" BAR STEEL REINFORCEMENT @ 1' - 0" C - C.

(6) (4) 1" DIA. X 3' - 6" ANCHOR RODS.

(7) (6) NO. 4 X 4' - 8" BAR STEEL REINFORCEMENT.

(8) (5) NO. 4 X 5' - 1" BAR STELL REINFORCEMENT @ 1' - 0" C -C.

(9) EXOTHERMIC CONNECTION TO EUIPMENT GROUNDING CONDUCTOR

(10) ⅝" DIA. X 8' -0" COPPERCLAD EQUIPMENT GROUNDING ELECTRODE REQUIRED

(11) ANY ANCHOR ROD PROJECTION SHORTER THAN 2 ¾" OR LONGER THAN 3 ¼" SHALL REQUIRE THE BASE TO BE REMOVED AND REPLACED AT THE CONTRACTORS EXPENSE.

(12) FOR NON - BREAKAWAY INSTALLATIONS, 4 ½" ± ANCHOR ROD PROJECTION WITH THE USE OF LEVELING NUTS. RODENT SCREEN REQUIRED.

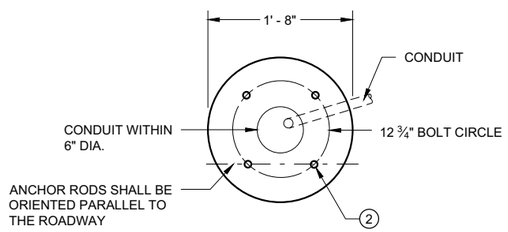

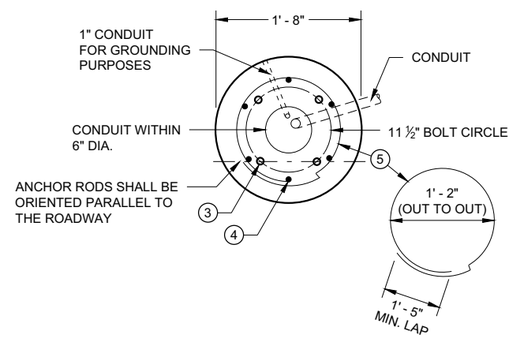

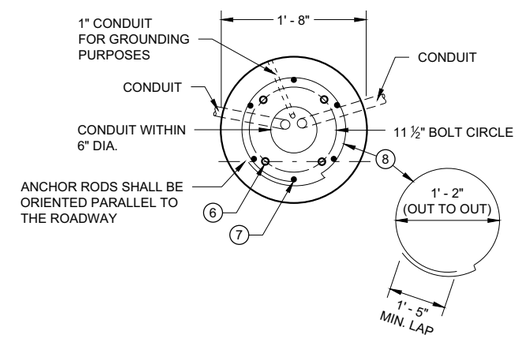

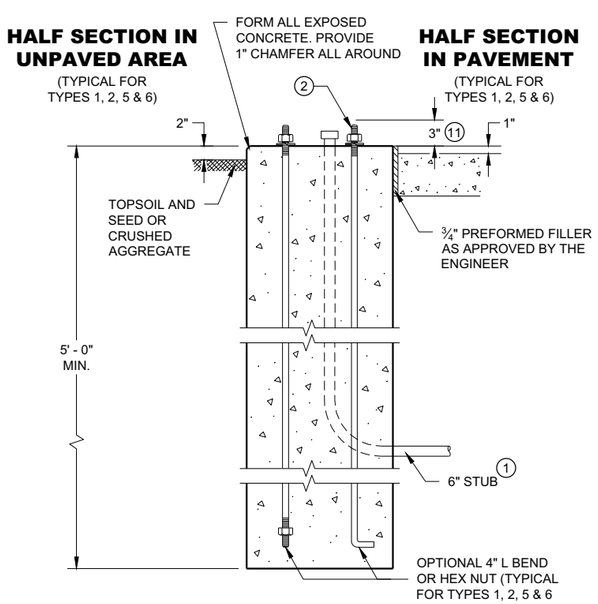

TYPE 1

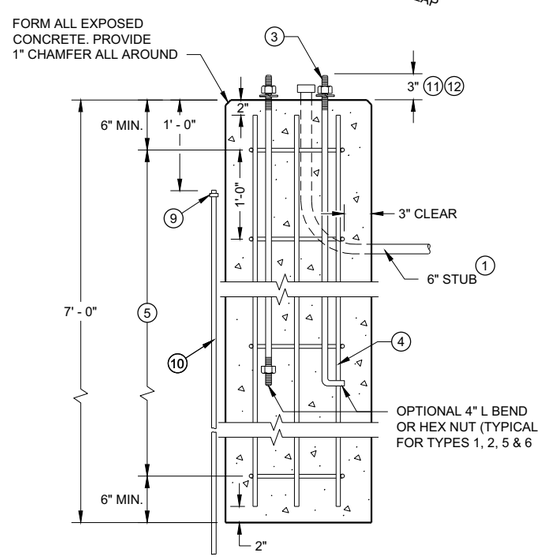

TYPE 2

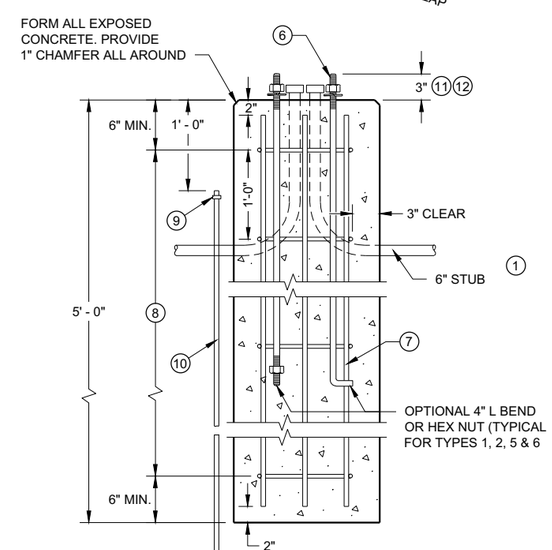

TYPE 5 & 6

CONCRETE BASES

CONCRETE BASES
TYPES 1, 2, 5, & 6

STATE OF WISCONSIN
DEPARTMENT OF TRANSPORTATION

APPROVED
May 2019 — DATE
/S/ Ahmet Demirbilek — STATE ELECTRICAL ENGI
FHWA

6

SDD 09C02 - 09

GENERAL NOTES

DETAILS OF CONSTRUCTION, MATERIALS AND WORKMANSHIP NOT SHOWN ON THIS DRAWING SHALL CONFORM TO THE PERTINENT REQUIREMENTS OF THE CONTRACT.

FOUR (4) BOLTS SHALL BE FURNISHED WITH EACH TRANSFORMER BASE. BOLTS SHALL BE 1" DIAMETER, 4" IN LENGTH, WITH WASHERS, LOCK WASHERS AND NUTS. BOLTS, NUTS AND WASHERS SHALL BE MANUFACTURED IN ACCORDANCE WITH SECTION 531.2.2 OF THE STANDARD SPECIFICATIONS.

LEVELING SHIMS, IF NEEDED, SHALL BE DESIGNED FOR THE PURPOSE AND USED UNDER CAST BASES WHEN PLUMBING POLES OR STANDARDS DURING INSTALLATION. THE USE OF WASHERS IN LIEU OF PROPER LEVELING SHIMS IS NOT ACCEPTABLE.

SHIM LENGTH SHALL BE LONG ENOUGH TO COMPLETELY COVER THE AREA UNDER THE LENGTH AND WIDTH OF THE BASE MOUNTING FLANGE.

DOUBLE NUTTING IS NOT ACCEPTABLE FOR LEVELING OR MOUNTING PURPOSES.

A NEMA APPROVED, U.L. LISTED, COPPER WITH BRASS OR STAINLESS STEEL SET SCREW, DIRECT BURY RATED, MECHANICAL CONNECTOR (LUG), SIZED TO ACCEPT AWG. #10 TO #4 COPPER STRANDED WIRE SHALL BE FURNISHED AND INSTALLED IN THE PEDESTAL AND TRANSFORMER BASES.

THE MECHANICAL CONNECTOR SHALL BE INSTALLED USING A 1/4" - 20 (TPI) STAINLESS STEEL HEX HEAD BOLT OF SUFFICIENT LENGTH TO FIRMLY ATTACH THE LUG TO THE BASE.

SHOULD THE MANNER OF ATTACHMENT OF THE LUG REQUIRE WASHERS, HEX NUTS, LOCK WASHER - THEY SHALL BE STAINLESS STEEL AS IS THE BOLT. THE MANNER OF ATTACHMENT SHALL NOT BLOCK ACCESSIBILITY TO WIRE PLACEMENT IN THE CONNECTOR.

PEDESTAL BASE COLLAR THREADING SHALL BE TAPERED AND IN ACCORDANCE WITH NATIONAL PIPE THREADING DIMENSIONS.

BASE COLLAR THREADING SHALL EXTEND INTO THE BASE COLLAR WITH SUFFICIENT DEPTH TO ACCEPT THE INSTALLATION OF TRAFFIC SIGNAL STANDARDS TO A DEPTH OF 1 1/2", THEN TIGHTENING TO A POINT OF BEING IMMOVABLE.

THE ACCESS DOOR SHALL BE OF THE SAME MATERIAL AS THE BASE.

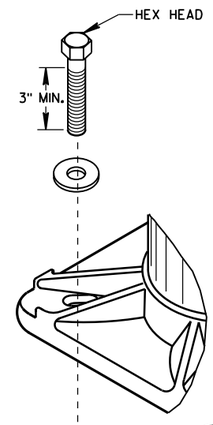

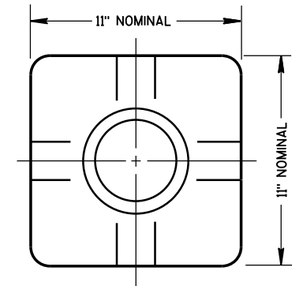

TOP VIEW
(PEDESTAL BASE)

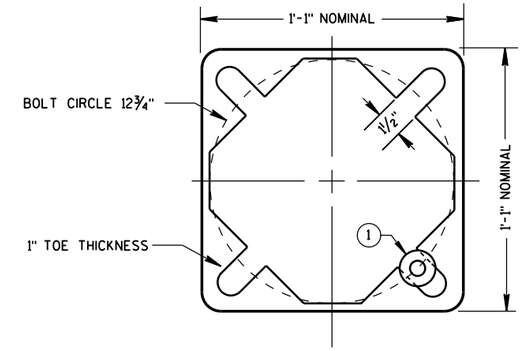

BOTTOM VIEW
(PEDESTAL BASE)

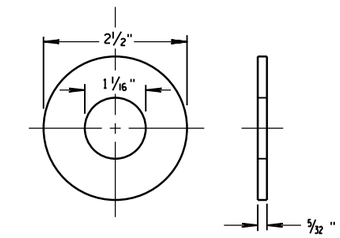

ZINC COATED STEEL WASHER
TO BE PROVIDED BY THE CONTRACTOR

PEDESTAL BASE WASHER (1)

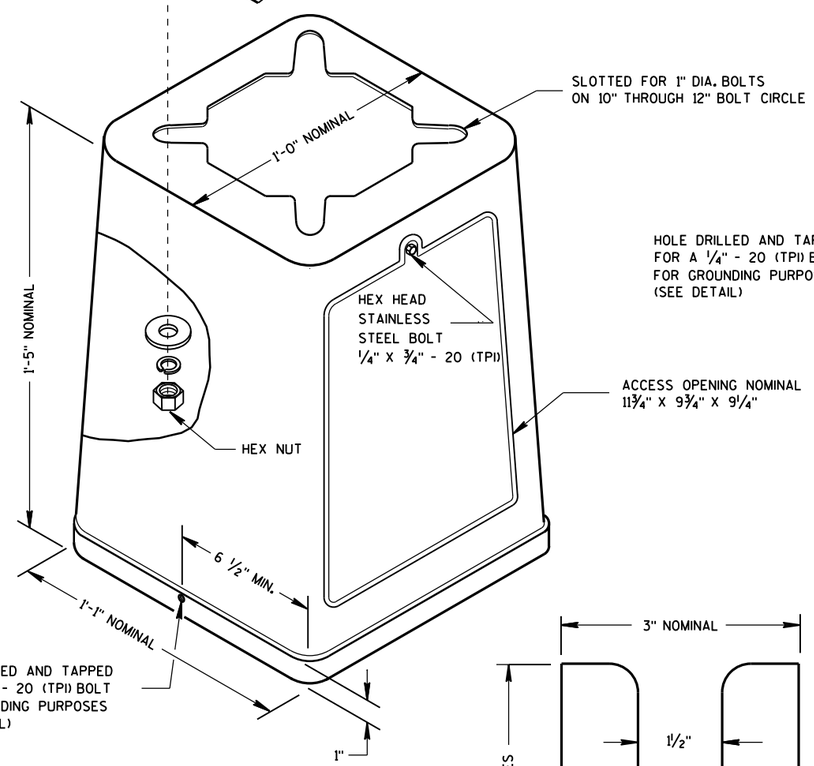

ISOMETRIC VIEW

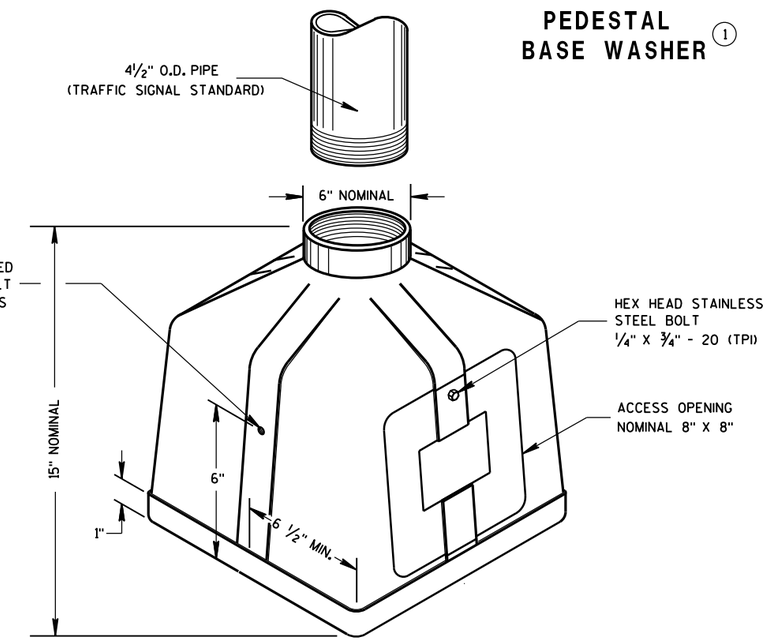

ISOMETRIC VIEW
PEDESTAL BASE

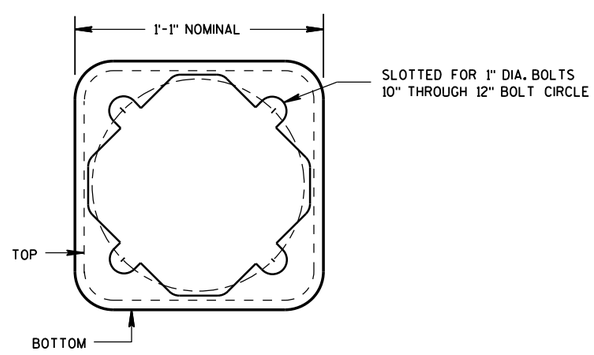

BOTTOM VIEW
(TRANSFORMER BASE)

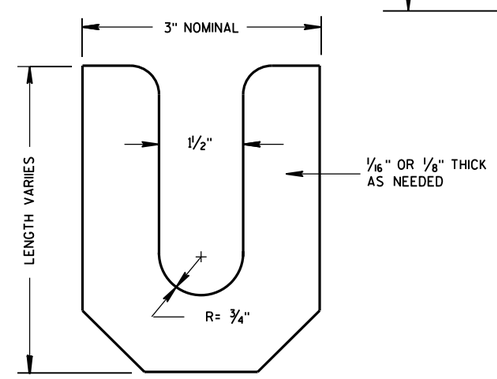

LEVELING SHIM

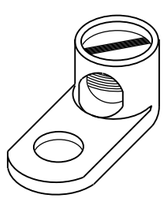

TYPICAL MECHANICAL CONNECTOR LUG

TO BE FURNISHED WITH EACH BASE

TRANSFORMER BASE

INTENDED FOR USE WITH TYPE 2, 3, 4, 5 & 6 POLES

TRANSFORMER/PEDESTAL BASES	
STATE OF WISCONSIN DEPARTMENT OF TRANSPORTATION	
APPROVED Sept. 2014 DATE FHWA	/S/ Ahmet Demirbilek STATE ELECTRICAL

GENERAL NOTES

DETAILS OF CONSTRUCTION, MATERIALS AND WORKMANSHIP NOT SHOWN ON THIS DRAWING SHALL CONFORM TO THE PERTINENT REQUIREMENTS OF THE CONTRACT.

BASES SHALL BE EXCAVATED BY USE OF A CIRCULAR AUGER.

TOP SURFACES OF CONCRETE BASES SHALL BE TROWEL FINISHED SMOOTH AND LEVEL.

CONDUIT SIZES AND LOCATIONS SHALL BE AS SHOWN ON THE PLANS.

THE FINAL OR TERMINATING CONCRETE BASE IN A CONDUIT RUN SHALL HAVE A 6" EXIT STUB INSTALLED FOR FUTURE CABLING USE. THE EXIT STUB SHALL BE SIZED AS USED THROUGHOUT THE CONDUIT RUN AS SHOWN AT THE ENTRANCE OF THE BASE.

MINIMUM BENDING RADIUS OF CONDUIT IS EQUAL TO 6 X THE DIAMETER.

CONDUIT HEIGHT ABOVE CONCRETE BASES SHALL BE 1 INCH. ALL METALLIC CONDUIT ENDS SHALL BE REAMED AND THREADED.

ALL CONDUIT ENDS AT THE TOP OF CONCRETE BASES SHALL BE CAPPED IF METALLIC OR PLUGGED IF NONMETALLIC IMMEDIATELY AFTER PLACEMENT AND BEFORE CONCRETE IS POURED. CONDUITS IN WHICH WIRE OR CABLE IS NOT INSTALLED SHALL REMAIN CAPPED OR PLUGGED.

BELL ENDS SHALL BE INSTALLED ON ALL PVC CONDUIT EXPOSED AT THE TOP OF CONCRETE BASES BEFORE INSTALLATION OF CABLE OR WIRE.

ENDS OF CONDUIT INSTALLED BELOW GRADE FOR FUTURE USE SHALL BE CAPPED IF METALLIC OR PLUGGED IF NONMETALLIC.

WHEN REQUIRED TO CONNECT NONMETALLIC CONDUIT TO METALLIC CONDUIT, ONLY ADAPTER FITTINGS, U.L. LISTED FOR ELECTRICAL USE, SHALL BE USED.

IF A BASE REQUIRES A DEEP FORM BECAUSE OF LOOSE DIRT OR FILL, THE FORM SHALL BE REMOVED BEFORE BACKFILLING AROUND THE BASE. BACKFILL SHALL BE TAMPED TIGHT AGAINST THE BARE CONCRETE BASE IN LAYERS OF 1 FOOT OR LESS.

A NO. 4 AWG, STRANDED COPPER EQUIPMENT GROUNDING CONDUCTOR SHALL BE EXOTHERMICALLY WELDED TO THE EQUIPMENT GROUNDING ELECTRODE (GROUND ROD).

THE EQUIPMENT GROUNDING CONDUCTOR SHALL ENTER THE BASE THROUGH A 1 INCH CONDUIT INSTALLED FOR GROUNDING PURPOSES, LEAVING A 4 FOOT COIL OF WIRE ABOVE THE CONCRETE BASE. THE EQUIPMENT GROUNDING CONDUCTOR SHALL BE NEATLY COILED AND THE COILS TIED TOGETHER.

ANCHOR RODS SHALL BE 1" X 60".

ANCHOR RODS SHALL BE THREADED 12" IN LENGTH ON EACH END OF THE ROD. ANCHOR RODS SHALL BE MANUFACTURED IN ACCORDANCE WITH SECTION 654.2.1 OF THE STANDARD SPECIFICATIONS.

WHEN ANCHOR RODS USING THE ALTERNATE "L" BEND ARE FURNISHED, THE 4" "L" BEND SHALL BE IN ADDITION TO THE SPECIFIED ANCHOR ROD BAR LENGTH. THE "L" BEND END SHALL NOT BE THREADED.

WELDING OF THE ANCHOR RODS TO THE CAGE IS UNACCEPTABLE. TIE WIRES SHALL BE USED.

ANCHOR RODS SHALL BE INSTALLED WITH MISALIGNMENTS OF LESS THAN 1:40 FROM VERTICAL.

BAR STEEL REINFORCEMENT SHALL BE COATED WITH POWDERED EPOXY RESIN IN ACCORDANCE WITH SECTION 505 OF THE STANDARD SPECIFICATIONS (LATEST EDITION).

(1) THE MINIMUM DEPTH OF CONDUIT EXITING THE CONCRETE BASE AND INSTALLED BELOW THE TRAVELED WAY SHALL BE 24 INCHES. THE MINIMUM DEPTH OF CONDUIT EXITING THE CONCRETE BASE THAT IS NOT INSTALLED BELOW THE TRAVELED WAY SHALL BE 18 INCHES. THE MAXIMUM DEPTH OF ALL CONDUIT SHALL BE 36 INCHES EXCEPT WITH WRITTEN APPROVAL BY THE ENGINEER.

(2) (4) 1" DIA. X 5'-0" ANCHOR RODS.

(3) (6) NO. 6 X 6'-8" BAR STEEL REINFORCEMENT.

(4) (7) NO. 4 X 6'-2" BAR STEEL REINFORCEMENT @ 1'-0" C-C.

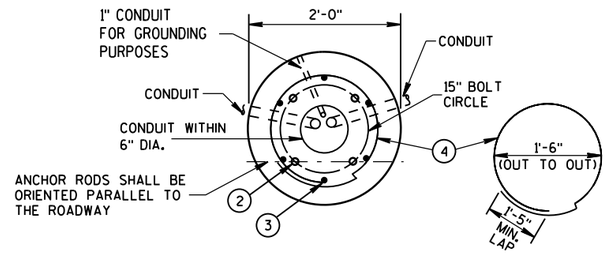

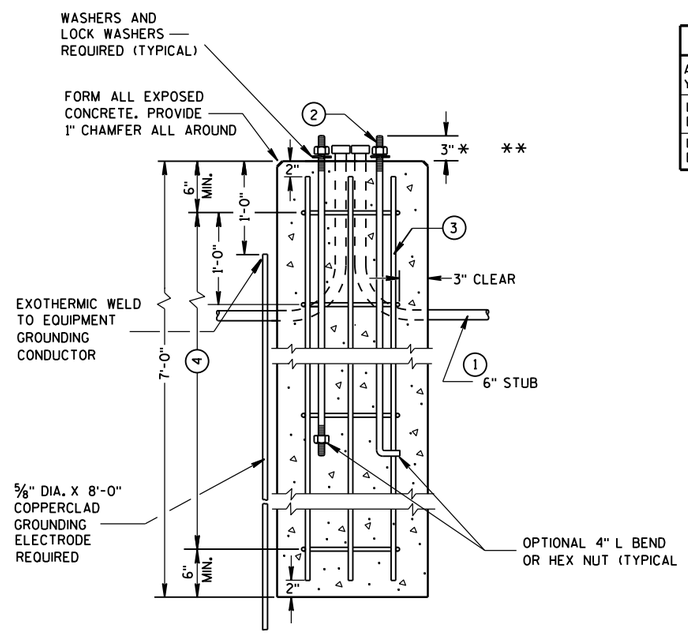

CONCRETE BASE, TYPE 7 (FOR 40' LIGHT POLES)

* ANY ANCHOR ROD PROJECTION SHORTER THAN 2¾" OR LONGER THAN 3¼" SHALL REQUIRE THE BASE TO BE REMOVED AND REPLACED AT THE CONTRACTORS EXPENSE.

** FOR NONBREAKAWY INSTALLATIONS, 4½" ± ANCHOR ROD PROJECTION WITH THE USE OF LEVELING NUTS. RODENT SCREEN REQUIRED.

FORM DEPTH SHALL BE NO MORE THAN 6" BELOW GRADE ON THE LOWER SIDE OF BASE

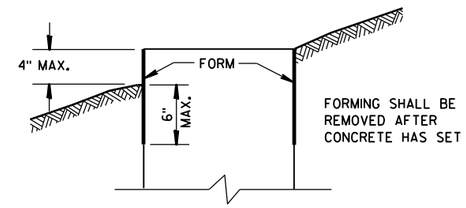

FORMING DETAIL

QUANTITY REQUIREMENTS	
APPROX. CUBIC YARDS OF CONCRETE	0.8
LBS. OF HOOP BAR STEEL	29
LBS. OF VERTICAL BAR STEEL	60

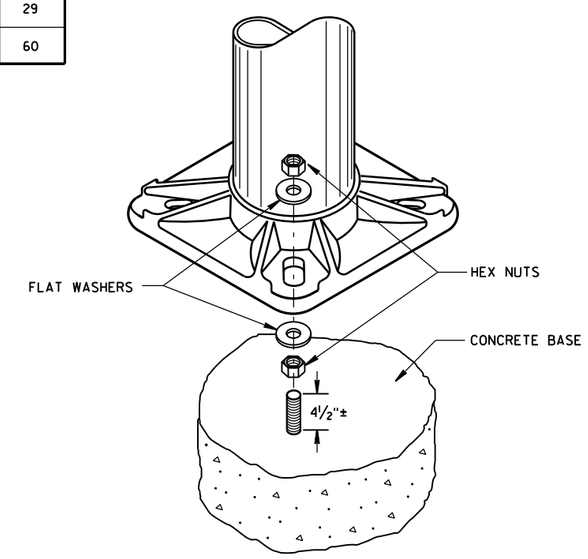

NON-BREAKAWAY INSTALLATION (LEVELING NUT)

CONCRETE BASE, TYPE 7

STATE OF WISCONSIN
DEPARTMENT OF TRANSPORTATION

APPROVED
Sept. 2014 — DATE
/S/ Ahmet Demirbilek — STATE ELECTRICAL
FHWA

6

S.D.D. 9 C 8-5

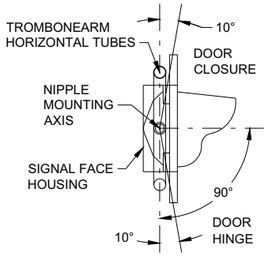

SECTION A-A

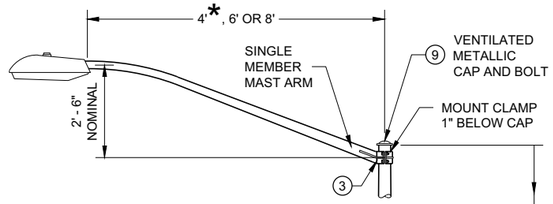

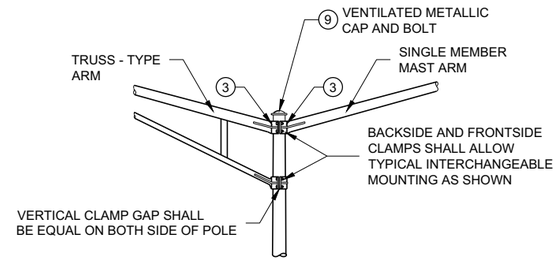

INTERCHANGEABLE MOUNTING DETAIL

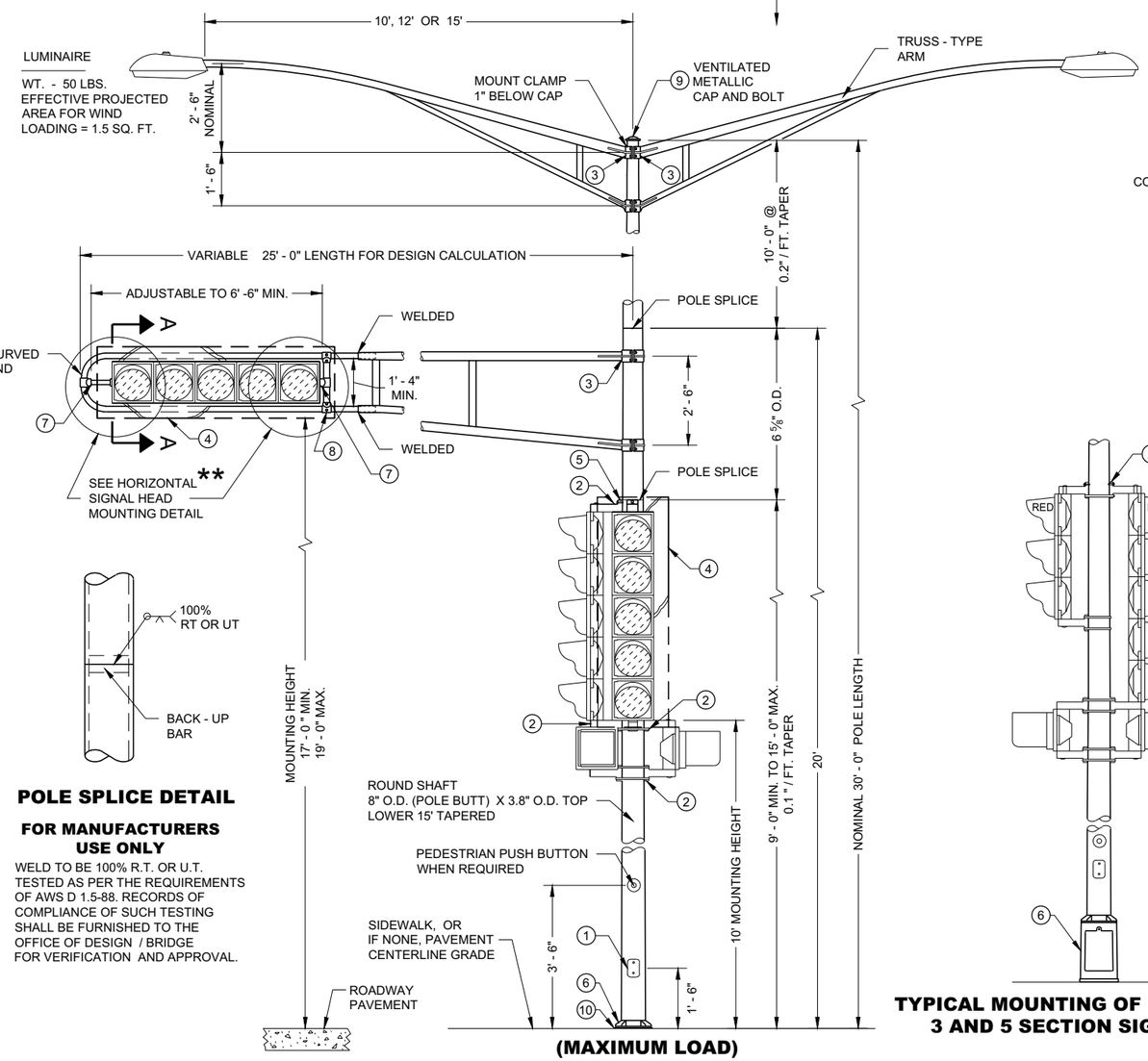

POLE SPLICE DETAIL

FOR MANUFACTURERS USE ONLY

WELD TO BE 100% R.T. OR U.T. TESTED AS PER THE REQUIREMENTS OF AWS D 1.5-88. RECORDS OF COMPLIANCE OF SUCH TESTING SHALL BE FURNISHED TO THE OFFICE OF DESIGN / BRIDGE FOR VERIFICATION AND APPROVAL.

(MAXIMUM LOAD)

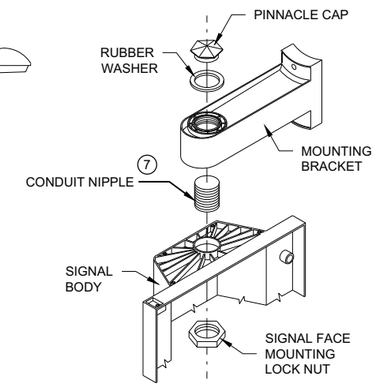

SIGNAL FACE MOUNTING DETAIL

(BANDED)

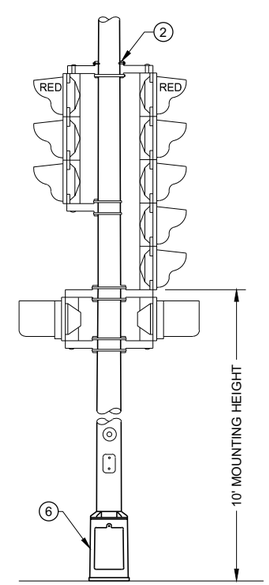

TYPICAL MOUNTING OF BACK TO BACK 3 AND 5 SECTION SIGNAL FACES

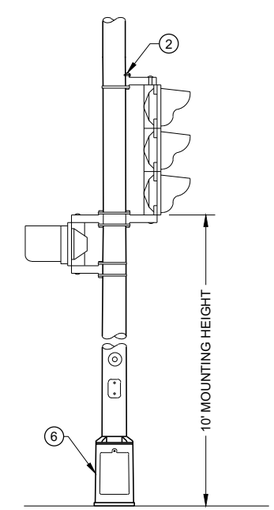

TYPICAL MOUNTING OF 3 SECTION SIGNAL FACE

GENERAL NOTES

DETAILS OF CONSTRUCTION, MATERIALS AND WORKMANSHIP NOT SHOWN ON THIS DRAWING SHALL CONFORM TO THE PERTINENT REQUIREMENTS OF THE CONTRACT.

ALL TYPE 3 POLE MOUNTINGS SHALL BE DESIGNED TO INCLUDE TWIN 15' ARMS WITH LUMINAIRES.

POLES SHALL BE GALVANIZED STEEL.

SECTION 657, POLES, OF THE STANDARD SPECIFICATIONS SHALL APPLY TO THIS DRAWING.

A PULL WIRE / ROPE SHALL BE INSTALLED IN EACH TROMBONE ARM RACEWAY DURING THE MANUFACTURING PROCESS.

THE SLIPFITTER END OF THE LUMINAIRE MAST ARM SHALL BE A NOMINAL 2 ⅜ INCHES IN OUTSIDE DIAMETER. THE STRAIGHT PORTION OF THE SLIPFITTER END OF THE LUMINAIRE MAST ARM SHALL BE A NOMINAL 12 INCHES IN LENGTH.

WHEN TRANSFORMER BASES ARE USED, WIRE CONNECTIONS SHALL BE MADE IN THE TRANSFORMER BASE.

1. 4" X 6" REINFORCED HANDHOLE AND COVER ASSEMBLY WITH TWO (2) ¼" X ¾" - 20 TPI , STAINLESS STEEL, HEX HEAD BOLTS.
2. SIGNAL FACE MOUNTING BRACKETS. MOUNT WITH CAP SCREWS AND BANDING.
3. GROMMETS. 1" CHASE NIPPLES OR 1" CLOSE CONDUIT NIPPLES WITH BUSHINGS SHALL BE PROVIDED FOR 1 ⅜" HOLE IN POLE SHAFT FOR WIRING.
4. SECURELY MOUNT DULL BLACK POLYCARBONATE BACKPLATES, PROJECTING 5" BEYOND ALL SIDES OF THE SIGNAL FACE HOUSING, PER MANUFACTURER'S RECOMMENDATIONS.
5. POLE MOUNTED SIGNAL FACES SHALL REQUIRE ONE OR MORE MOUNTING SPACERS UNDER THE TOP MOUNTING BRACKET(S) AS REQUIRED, TO PLUMB THE SIGNAL FACE.
6. CAST ALUMINUM TRANSFORMER BASE, WHEN REQUIRED. UNDER MAX LOADING, TYPE 3 POLE SHALL BE MOUNTED DIRECTLY TO ITS CONCRETE BASE.
7. USE 1 ½" ID NIPPLES ZINC-COATED RIGID METAL CONDUIT, LONG ENOUGH TO ACCOMMODATE FULL DEPTH THREADING INTO THE HEAD MOUNTING LOCK NUT IN ORDER TO TIGHTEN THE FACE, BUT THAT DO NOT INTERFERE WITH REFLECTOR CLOSURE. THREAD THE NIPPLE INTO THE MOUNTING BRACKET/ELBOW UNTIL TIGHT. USE APPROVED PINNACLE TYPE HARDWARE FROM A DEPARTMENT APPROVED MANUFACTURER TO CLOSE THE UNUSED 1 ½" OPENING IN SIGNAL FACES AND BRACKET ENDS.
8. VERTICAL STRUT (ADJUSTABLE). ONE (1) SET SCREW (¼" X ¾" - 20 TPI STAINLESS STEEL, HEX HEAD) INTO EACH ARM MEMBER IF STRUT IS THE SLIDING TYPE.
9. FURNISH AND INSTALL VENTILATED, CAST METALLIC (ALUMINUM ALLOY) CAPS. FASTEN CAPS WITH ONE (1) ¼" X ¾" - 20 TPI STAINLESS STEEL, HEX HEAD BOLT.
10. SHIMMING, IF NEEDED, SHALL BE LOCATED BETWEEN THE CONCRETE FOUNDATION AND POLE.
11. USE SERRATED LOCK WASHERS WITH NOTCHES BETWEEN END TEE AND SIGNAL HEAD.

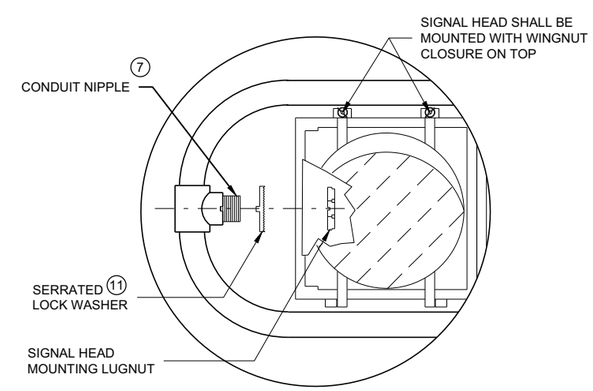

HORIZONTAL SIGNAL HEAD **
MOUNTING DETAIL

** SIGNAL HEAD ATTACHMENT ALSO APPLIES TO MOUNTING AT CROSS BAR

TYPE 3 POLE MOUNTING CONFIGURATION

POLE MOUNTINGS FOR TRAFFIC SIGNALS AND LIGHTING UNITS TYPE 3 (HEAVY DUTY)

STATE OF WISCONSIN
DEPARTMENT OF TRANSPORTATION

6

6

SDD 09E01 - 15b

SDD 09E01 - 15b

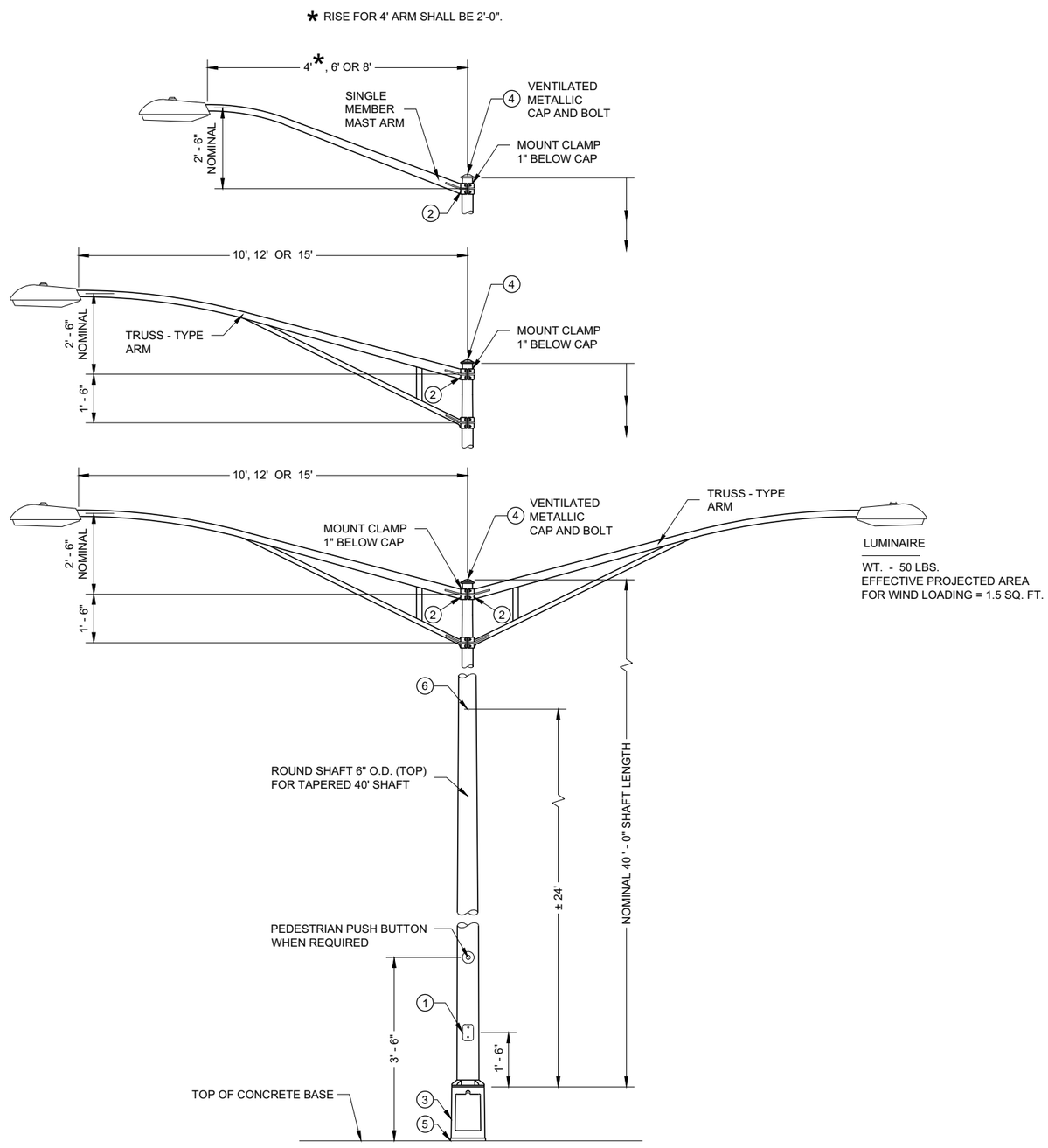

TYPE 17 POLE MOUNTING CONFIGURATION

(MAXIMUM LOAD)

LIGHTING ONLY

GENERAL NOTES

DETAILS OF CONSTRUCTION, MATERIALS AND WORKMANSHIP NOT SHOWN ON THIS DRAWING SHALL CONFORM TO THE PERTINENT REQUIREMENTS OF THE CONTRACT.

SECTION 657, POLES, OF THE STANDARD SPECIFICATIONS SHALL APPLY TO THIS DRAWING.

ALL LUMINAIRE POLE MOUNTINGS SHALL BE DESIGNED TO INCLUDE TWIN 15' ARMS WITH LUMINAIRES.

POLES SHALL BE GALVANIZED STEEL OR ALUMINUM, AS CALLED FOR IN THE CONTRACT.

TYPE 17 ALUMINUM POLES SHALL BE CONSTRUCTED OF 6063 - T6 ALUMINUM ALLOY. SLEEVING INSIDE THE POLE IS NOT ACCEPTABLE.

TYPE 17 STEEL POLES SHALL HAVE A MINIMUM WALL THICKNESS OF U.S. STANDARD 11 GAGE (0.1196").

THE SHOE BASE SHALL BE SLOTTED TO ACCEPT A 15" BOLT CIRCLE (14" X 16" SLOT) USING 1" ANCHOR RODS.

THE SLIPFITTER END OF THE LUMINAIRE MAST ARM SHALL BE A NOMINAL 2 ⅜ INCHES IN OUTSIDE DIAMETER. THE STRAIGHT PORTION OF THE SLIPFITTER END OF THE LUMINAIRE MAST ARM SHALL BE A NOMINAL 12 INCHES IN LENGTH.

WHEN TRANSFORMER BASES ARE USED, WIRE CONNECTIONS SHALL BE MADE IN THE TRANSFORMER BASE.

1. 4" X 6" REINFORCED HANDHOLE AND COVER ASSEMBLY WITH TWO (2) ½" X ¾" - 20 TPI , STAINLESS STEEL, HEX HEAD BOLTS.
2. GROMMETS. 1" CHASE NIPPLES OR 1" CLOSE CONDUIT NIPPLES WITH BUSHINGS SHALL BE PROVIDED FOR 1 ⅜" HOLE IN POLE SHAFT FOR WIRING.
3. CAST ALUMINUM FHWA APPROVED TRANSFORMER BASE WHEN REQUIRED, SHALL HAVE AN ULTIMATE STATIC LOAD STRENGTH OF AT LEAST 40,000 FT. - LBS.
4. FURNISH AND INSTALL VENTILATED, CAST METALLIC (ALUMINUM ALLOY) CAPS. FASTEN CAPS WITH ONE (1) ¼" X ¾" - 20 TPI STAINLESS STEEL, HEX HEAD BOLT.
5. SHIMMING, IF NEEDED, SHALL BE LOCATED BETWEEN THE CONCRETE FOUNDATION AND POLE.
6. INTERNAL DUMBELL - TYPE VIBRATION DAMPER.

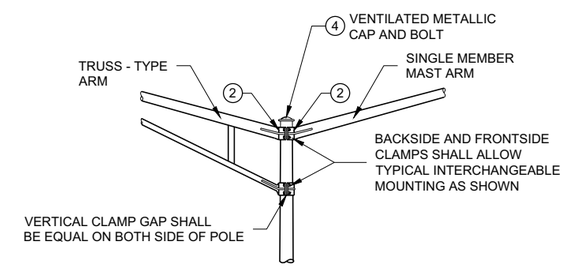

INTERCHANGEABLE MOUNTING DETAIL

POLE MOUNTINGS FOR LIGHTING UNITS, TYPE 17 (40 FEET)

STATE OF WISCONSIN
DEPARTMENT OF TRANSPORTATION

6

6

SDD 09E01 - 15f

SDD 09E01 - 15f

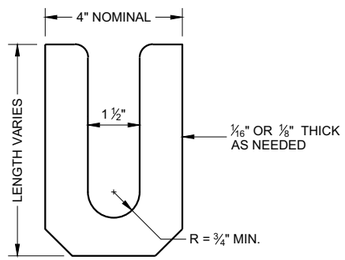

LEVELING SHIM (1)
SHALL BE ALUMINUM

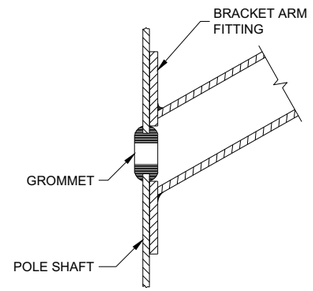

TYPICAL APPLICATION OF GROMMET IN POLE SHAFT

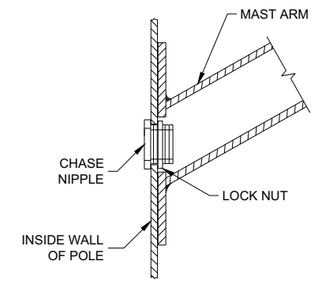

TYPICAL APPLICATION OF CHASE NIPPLE IN POLE SHAFT

GENERAL NOTES

CLAMP BOLT-NUT TIGHTENING TORQUE SHALL BE INDICATED BY INDENT STAMPING (1/2 INCH NUMERALS AND LETTERS) OR WEATHERPROOF PRINTING ON THE INSIDE OF THE CLAMP THAT IS WELDED TO THE ARM MEMBER.

(1) 4.5" I.D. FOR LUMINAIRE MAST ARM CLAMP. 6.625" I.D. FOR TROMBONE MAST ARM CLAMP.

(2) INDIVIDUAL BASE PLATE ANCHOR ROD COVERS. (4 REQUIRED)

(3) BASE PLATE SLOTTED TO ACCEPT 11" THROUGH 12" BOLT CIRCLE USING 1" DIAMETER ANCHOR RODS.

(4) LEVELING SHIMS, DESIGNED FOR THE PURPOSE, SHALL BE USED WHEN PLUMBING POLES. THE USE OF WASHERS IN LIEU OF PROPER LEVELING SHIMS IS NOT ACCEPTABLE. LEVELING SHIMS SHALL BE USED ONLY BETWEEN THE TOP OF THE CONCRETE BASE AND A METALLIC BASE PLATE.

SHIMS SHALL BE LONG ENOUGH AND WIDE ENOUGH TO COMPLETELY COVER THE AREA UNDER THE LENGTH AND WIDTH OF THE BASE MOUNTING FLANGE.

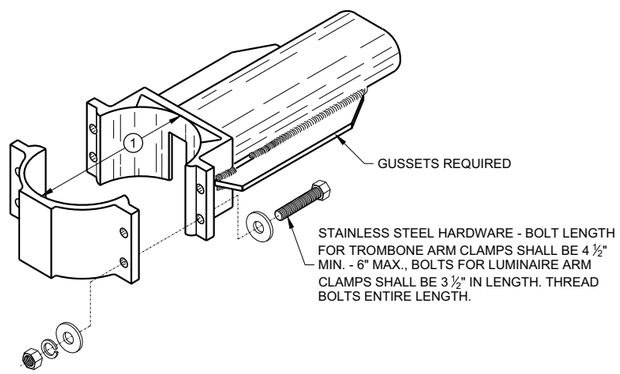

TYPICAL TROMBONE MAST ARM AND SINGLE LUMINAIRE MAST ARM MOUNTING CLAMP

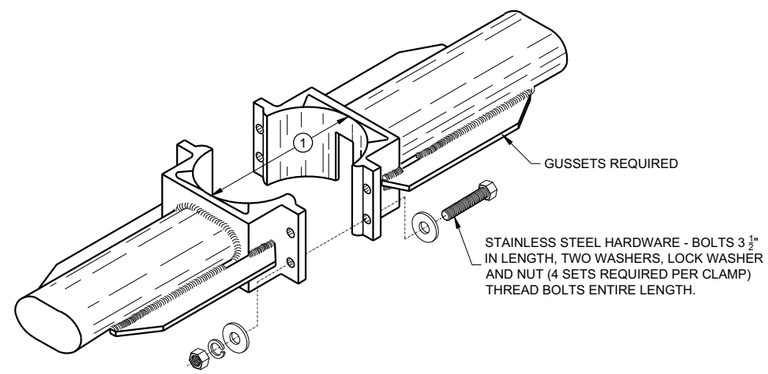

TYPICAL LUMINAIRE MAST ARM (DOUBLE) MOUNTING BRACKETS

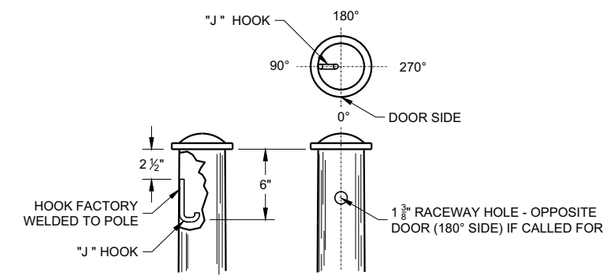

TYPICAL "J" HOOK LOCATION

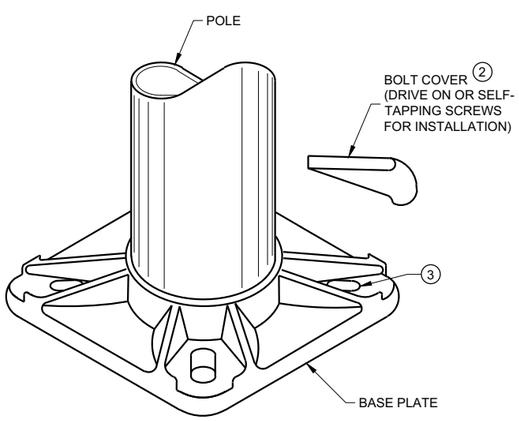

BASE PLATE

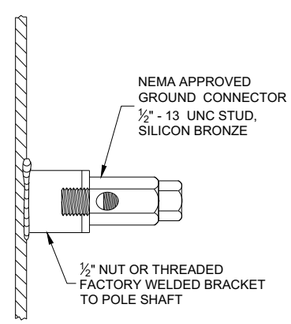

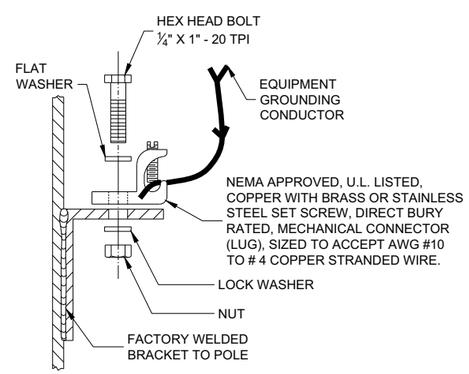

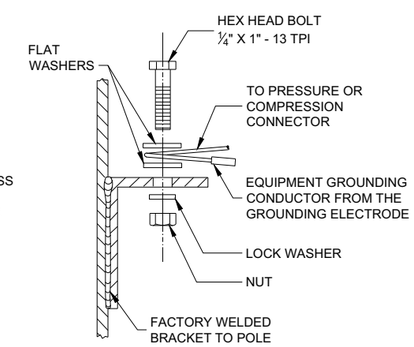

TYPICAL GROUNDING CONNECTIONS
NUT, BOLT AND WASHERS SHALL BE STAINLESS STEEL

HARDWARE DETAILS FOR POLE MOUNTING

STATE OF WISCONSIN
DEPARTMENT OF TRANSPORTATION

APPROVED
November 2018 /S/ Ahmet Demirbilek
DATE STATE ELECTRICAL ENGI

FHWA

GENERAL NOTES

DETAILS OF CONSTRUCTION, MATERIALS AND WORKMANSHIP NOT SHOWN ON THIS DRAWING SHALL CONFORM TO THE PERTINENT REQUIREMENTS OF THE CONTRACT.

THE EQUIPMENT GROUND CONNECTOR SHALL BE TAPED WITH 3 WRAPS (MINIMUM) OF APPROVED RUBBER TAPE AND 3 WRAPS (MINIMUM) OF APPROVED VINYL TAPE TO COVER SHARP WIRE ENDS AFTER THE CONNECTION IS COMPLETED.

WHEN TRANSFORMER BASES ARE USED, ALL WIRING CONNECTIONS SHALL OCCUR WITHIN THE TRANSFORMER BASES.

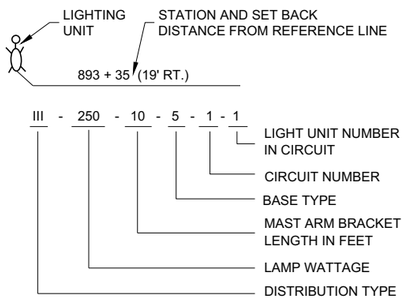

LIGHTING UNIT CODE
(TYPICAL)

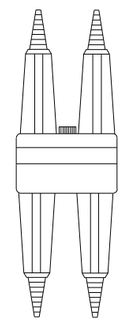

DETAIL "A"
BREAKAWAY DOUBLE POLE WITH WATERPROOF INSULATING BOOT

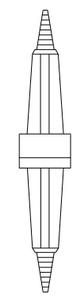

DETAIL "B"
BREAKAWAY SINGLE POLE WITH WATERPROOF INSULATING BOOT

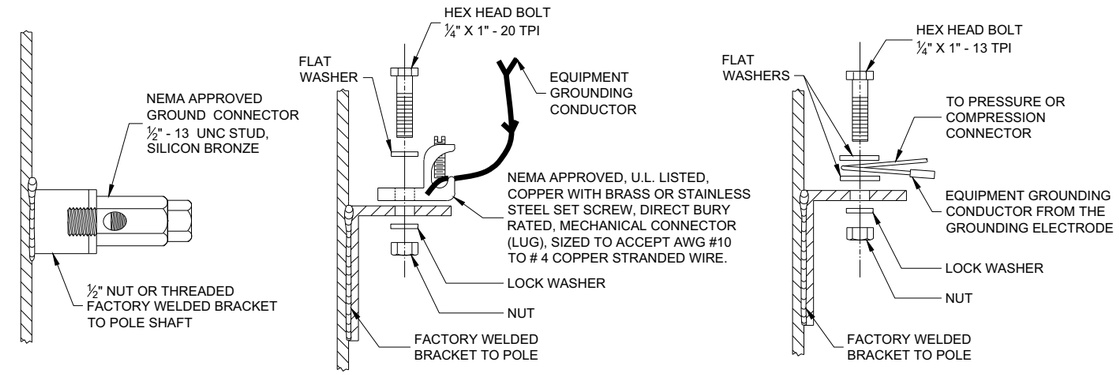

TYPICAL GROUNDING CONNECTIONS
NUT, BOLT AND WASHERS SHALL BE STAINLESS STEEL

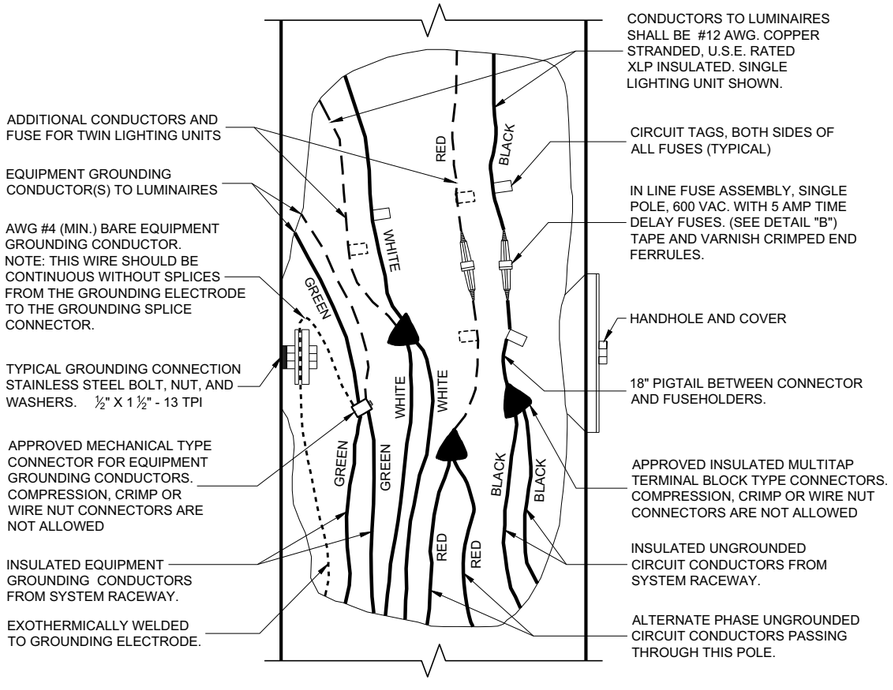

3 WIRE - 120, 240 OR 480 VAC (UNGROUNDED CONDUCTORS) WITH GROUNDING CONDUCTOR AND EQUIPMENT GROUNDING CONDUCTOR

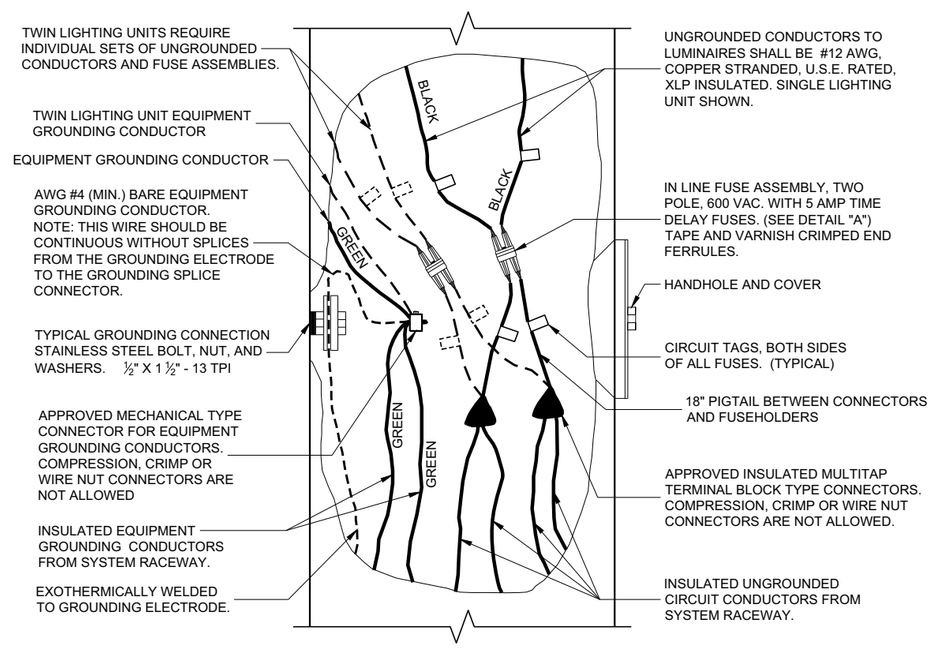

2 WIRE - 240 OR 480 VAC (UNGROUNDED CONDUCTORS) WITH EQUIPMENT GROUNDING CONDUCTOR

NON - FREEWAY LIGHTING UNIT POLE WIRING

STATE OF WISCONSIN
DEPARTMENT OF TRANSPORTATION

APPROVED
November 2018 /S/ Ahmet Demirbilek
DATE STATE ELECTRICAL ENGI
FHWA

6

SDD 09E03 - 06

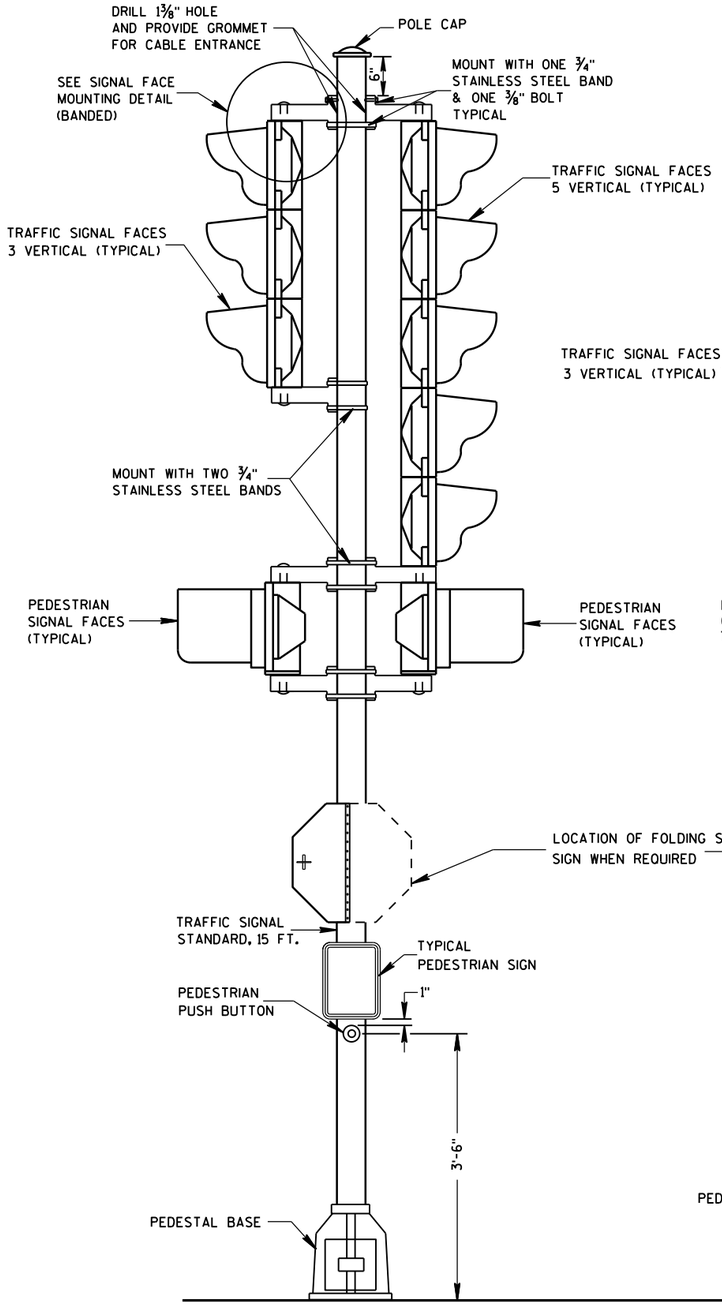

TRAFFIC SIGNAL STANDARD-15 FT.

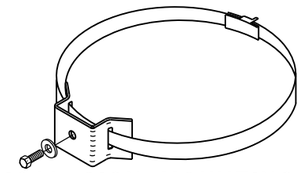

TYPICAL SIGN MOUNTING BAND

(TOP AND BOTTOM OF SIGN)

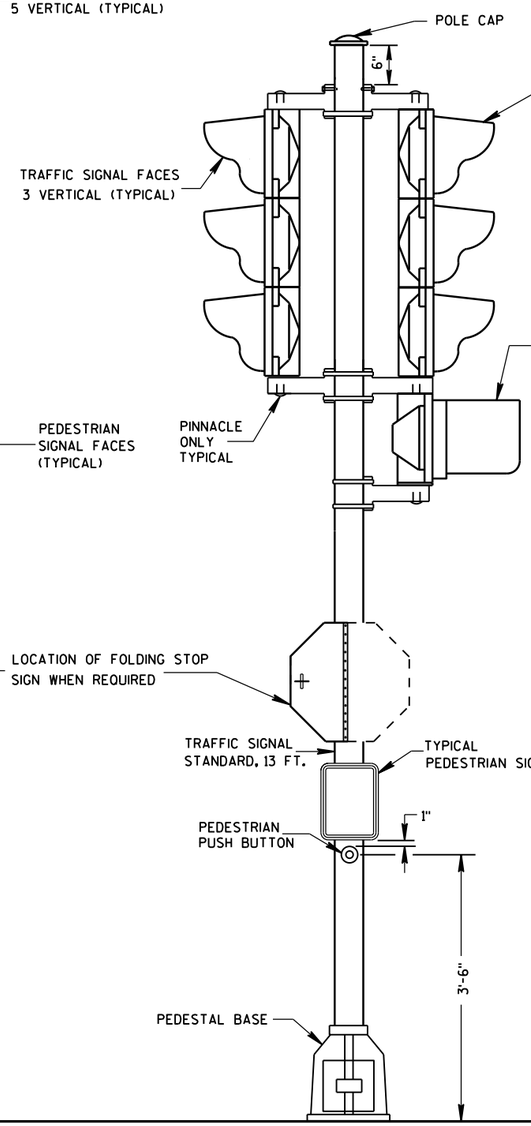

TRAFFIC SIGNAL STANDARD-13 FT.

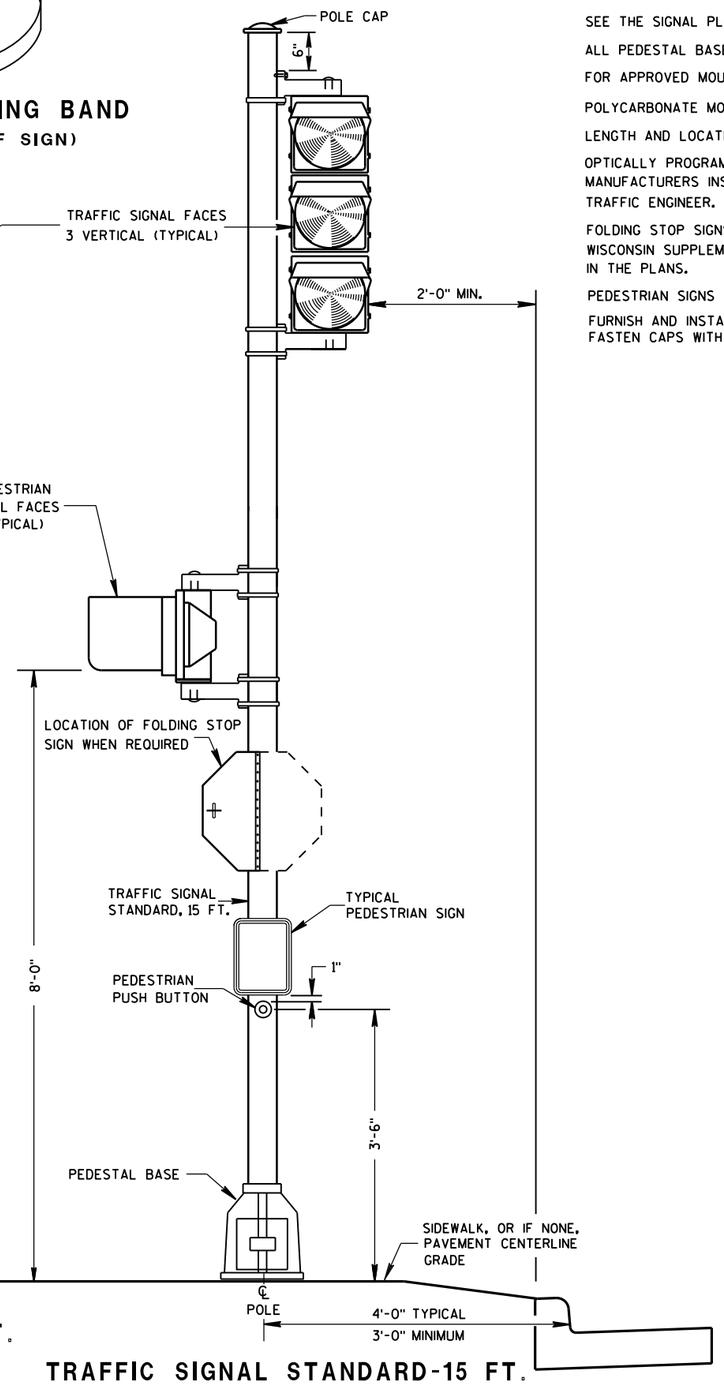

TRAFFIC SIGNAL STANDARD-15 FT.

3M MOUNTING (TYPICAL)

GENERAL NOTES

DETAILS OF CONSTRUCTION, MATERIALS AND WORKMANSHIP NOT SHOWN ON THIS DRAWING SHALL CONFORM TO THE PERTINENT REQUIREMENTS OF THE CONTRACT.

SEE THE SIGNAL PLAN FOR REQUIRED SIGNAL FACE SIZES.

ALL PEDESTAL BASES SHALL BE MOUNTED ON CONCRETE BASE - TYPE 1.

FOR APPROVED MOUNTING HARDWARE, SEE THE CONTRACT SPECIAL PROVISIONS.

POLYCARBONATE MOUNTING BRACKETS SHALL BE USED.

LENGTH AND LOCATION OF TRAFFIC SIGNAL STANDARDS SHALL BE AS SHOWN ON THE PLANS.

OPTICALLY PROGRAMMED SIGNAL FACES SHALL BE MASKED IN ACCORDANCE WITH MANUFACTURERS INSTRUCTIONS, AND UNDER THE DIRECTIONS OF THE REGION TRAFFIC ENGINEER.

FOLDING STOP SIGNS SHALL BE IN ACCORDANCE WITH THE MUTCD AND/OR THE LATEST WISCONSIN SUPPLEMENT. THE SIGNS SHALL BE SIZED AND LOCATED AS CALLED FOR IN IN THE PLANS.

PEDESTRIAN SIGNS SHALL BE AS DESIGNATED IN THE PLANS.

FURNISH AND INSTALL VENTILATED, CAST, METALLIC (ALUMINUM ALLOY) CAPS. FASTEN CAPS WITH ONE (1) ¼" X ¾" - 20 TPI STAINLESS STEEL, HEX HEAD BOLT.

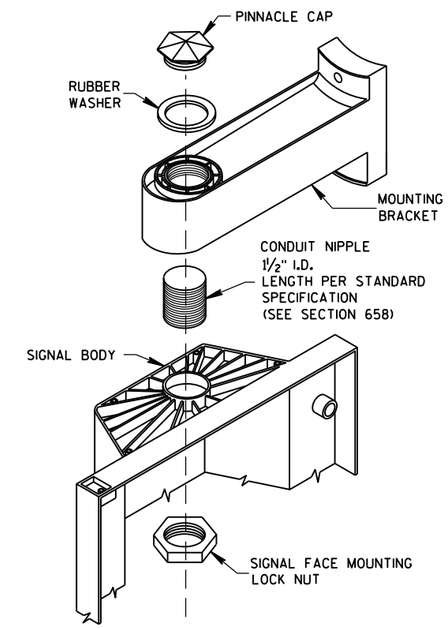

SIGNAL FACE MOUNTING DETAIL

(BANDED)

TRAFFIC SIGNAL STANDARD POLY BRACKET MOUNTINGS (TYPICAL) 13 FT. OR 15 FT.	
STATE OF WISCONSIN DEPARTMENT OF TRANSPORTATION	
APPROVED 2/28/2013 DATE	/S/ Ahmet Demirbilek STATE ELECTRICAL
FHWA	

6

6

S.D.D. 9 E 6-5

S.D.D. 9 E 6-5

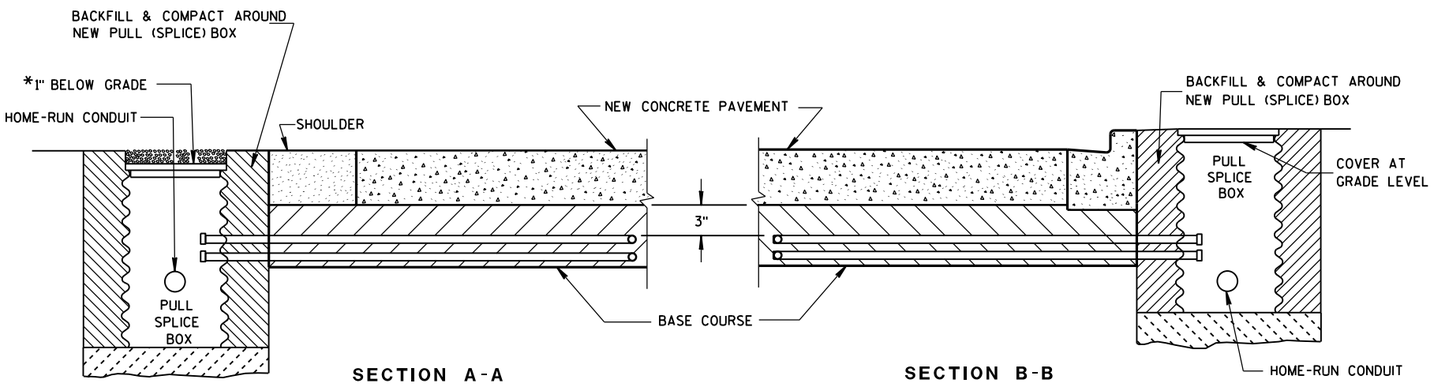

SECTION A-A
NO CURB & GUTTER

SECTION B-B
CURB & GUTTER

*RECESS PULL (SPLICE) BOX SO THAT THE COVER IS 3" BELOW GRADE IN SHOULDER AREAS OF CRUSHED AGGREGATE. BACKFILL OVER COVER WITH THE CRUSHED AGGREGATE TO BRING THE AREA TO GRADE LEVEL.

LOOP DETECTOR INSTALLATION DETAIL

GENERAL NOTES

DETAILS OF CONSTRUCTION, MATERIALS AND WORKMANSHIP NOT SHOWN ON THIS DRAWING SHALL CONFORM TO THE PERTINENT REQUIREMENTS OF THE CONTRACT.

LOOP SIZE, CONFIGURATION LOCATION, NUMBER OF TURNS OF WIRE AND ASSOCIATED SIGNAL PHASE SHALL BE AS SHOWN ON THE PLANS.

PITCH LEAD OUT CONDUIT TO DRAIN TO ROADSIDE PULL (SPLICE) BOX.

SPLICES SHALL BE INSTALLED BY USING CAST IN PLACE SPLICE KITS LISTED ON THE DEPARTMENTS APPROVED PRODUCTS LIST OR AN ENGINEER APPROVED EQUAL. NON-INSULATED BUTT SPLICES TO FIT #12 AWG STRANDED WIRE SHALL BE USED. SPLICES SHALL BE SOLDERED AND INSULATED FROM EACH OTHER AS PER INSTRUCTIONS INCLUDED IN THE SPLICE KIT.

MEASURE GROUND RESISTANCE USING A MEGGER. REPLACE LOOP WIRE NOT ATTAINING A READING OF INFINITY TO GROUND.

AFTER SPLICING THE LOOP WIRE TO THE LOOP LEAD-IN CABLE, THE CONTRACTOR SHALL MEASURE INDUCTANCE, GROUND RESISTANCE AND WIRE RESISTANCE AT THE CABINET END OF THE LEAD-IN CABLE AND FURNISH A COPY OF THE READINGS TO THE PROJECT ENGINEER FOR EVALUATION.

LOOP DETECTOR LEADS SHALL BE IDENTIFIED WITH THEIR ASSOCIATED LOOP BY USE OF WATERPROOF TAGS AT BOTH ENDS OF THE CABLE. A LISTING OF THE CABLE IDENTIFICATION PER INDIVIDUAL LOOP LEAD-IN SHALL BE PLACED IN THE CABINET.

THE #12 AWG. LOOP WIRE IN THE PULL (SPLICE) BOX SHALL BE HAND TWISTED AT LEAST 3 TWISTS PER FOOT BEFORE BEING SPLICED TO THE LOOP LEAD-IN CABLE.

SPLICES OF LOOP WIRE TO LEAD-IN CABLE SHALL BE MADE ONLY IN PULL (SPLICE) BOXES AT THE SIDE OF THE ROAD.

THE #12 AWG LOOP WIRE SHALL BE INSTALLED FROM THE ROADSIDE PULL (SPLICE) BOX, THROUGH THE LOOP CONDUIT, BACK TO THE ROADSIDE PULL (SPLICE) BOX, AND BE INSTALLED IN ONE, NON-SPLICED CONTINUOUS LENGTH.

PROTECTION OF THE CONDUITS IN THE BASE COURSE SHALL BE REQUIRED AFTER INSTALLATION AND BEFORE NEW PAVEMENT IS INSTALLED.

SHOULD INSTALLATION REPAIR BE REQUIRED, IT SHALL BE DONE UNDER THE DIRECTION OF THE PROJECT ENGINEER.

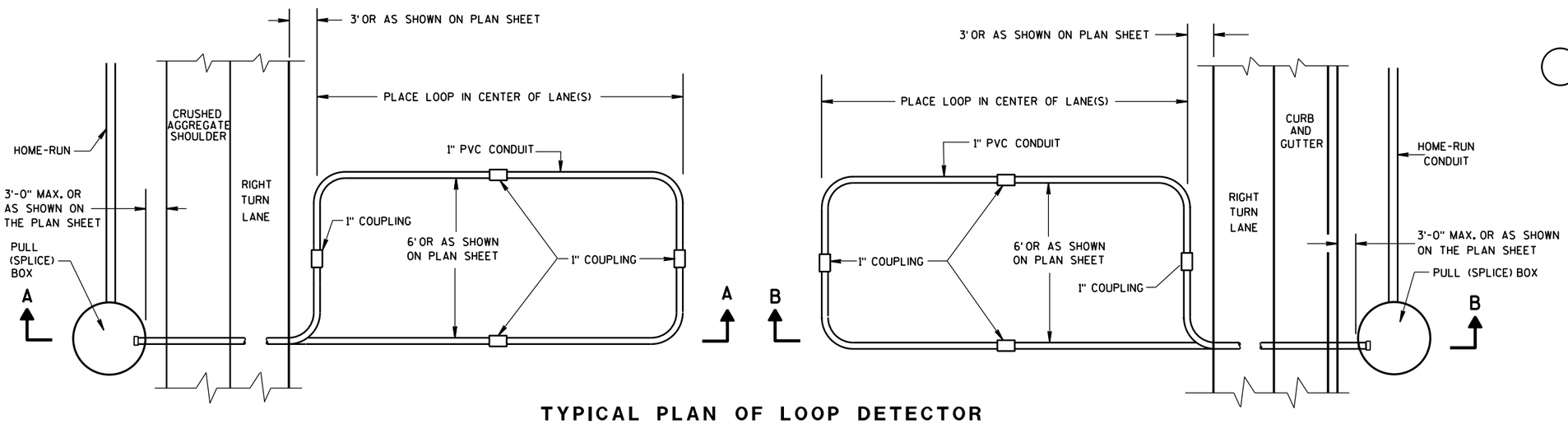

TYPICAL PLAN OF LOOP DETECTOR WITH 24" PULL (SPLICE) BOX

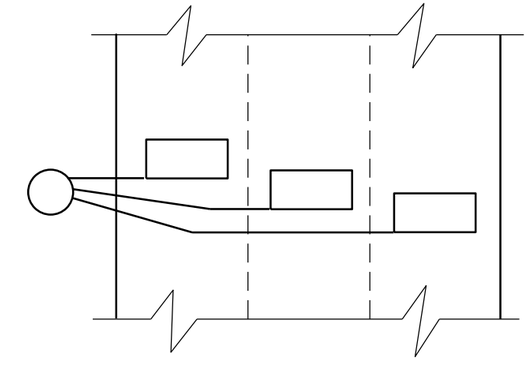

MULTI-LANE INSTALLATION

LOOP DETECTOR INSTALLED IN BASE COURSE WITH PULL (SPLICE) BOX OFF ROADWAY (OPTION 2)
STATE OF WISCONSIN DEPARTMENT OF TRANSPORTATION
APPROVED Sept. 2014 DATE — /S/ Ahmet Demirbilek STATE ELECTRICAL — FHWA

6

6

S.D.D. 9 F 15-4b

S.D.D. 9 F 15-4b

MINIMUM POLE LENGTHS	POLE BURIAL DEPTHS
25'	5'
30'	6'
35'	7'
40'	8'
45'	9'

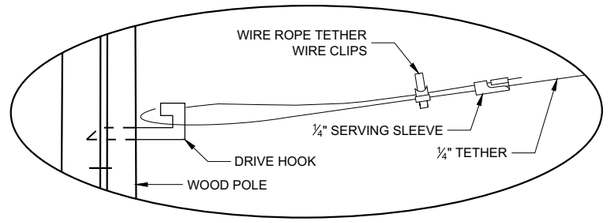

DETAIL "A"

GENERAL NOTES

DETAILS OF CONSTRUCTION, MATERIALS AND WORKMANSHIP NOT SHOWN ON THIS DRAWING SHALL CONFORM TO THE PERTINENT REQUIREMENTS OF THE CONTRACT.

1. WOOD POLES SHALL BE CLASS 4. LENGTH DETERMINED BY SIGNAL PLAN.
2. SIGNAL FACES:
   - A. ALL SECTIONS SHALL BE 12" AND POLYCARBONATE.
   - B. EACH SHALL CONTAIN A 5" WIDE DULL BLACK POLYCARBONATE BACKPLATE.
   - C. EACH SHALL BE WIRED FROM THE TOP SIGNAL MOUNTING BRACKET.
   - D. NEAR RIGHT SIGNAL FACE SUSPENDED ON THE TETHER (NO BACKPLATE) SHALL NOT BE OVER THE TRAVELED WAY. IF THE POLE IS WITHIN 5 FEET OF THE TRAVELED WAY MOUNT THE SIGNAL FACE ON THE WOOD POLE WITH BACKPLATE.
3. SPAN WIRE:
   - A. EACH SPAN WIRE SHALL BE INDIVIDUALLY DOWN GUYED
   - B. SIGNAL AND LIGHTING CABLES SHALL ONLY BE ATTACHED TO THE UPPER SPAN WIRE.
   - C. THE SIGNAL ASSEMBLY SHALL HAVE A 17' MIN. HEIGHT ABOVE THE ROADWAY. THIS SHALL BE MEASURED AFTER THE SPAN WIRE INSTALLATION IS COMPLETED WITH ALL CABLES AND SIGNAL FACES IN PLACE. MAINTAIN MINIMUM AND MAXIMUM HEIGHTS AS ROADWAY WORK PROGRESSES.

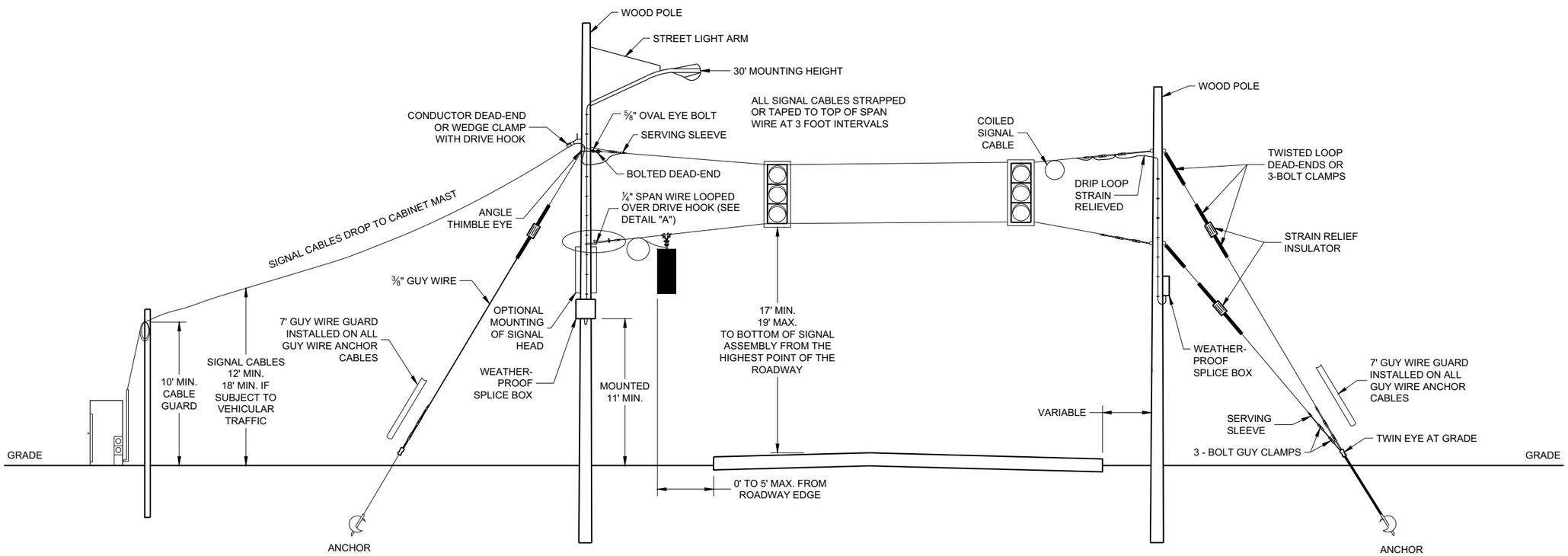

SPAN WIRE
TEMPORARY SIGNALS

6

6

SDD 09G01 - 04a

SDD 09G01 - 04a

SPAN WIRE TEMPORARY TRAFFIC SIGNAL

STATE OF WISCONSIN
DEPARTMENT OF TRANSPORTATION

APPROVED
June 2015 — DATE
/S/ Ahmet Demerbilek — STATE ELECTRICAL ENGI

FHWA

MINIMUM POLE LENGTHS	CLASS	POLE BURIAL DEPTHS
25'	V	5'
30'	V	6'
35'	IV	7'
40'	IV	8'
45'	IV	9'

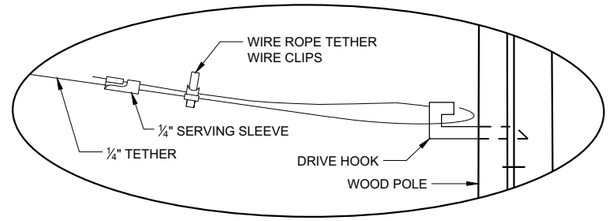

DETAIL "A"

GENERAL NOTES

DETAILS OF CONSTRUCTION, MATERIALS AND WORKMANSHIP NOT SHOWN ON THIS DRAWING SHALL CONFORM TO THE PERTINENT REQUIREMENTS OF THE CONTRACT.

1. WOOD POLES SHALL BE CLASS 4. LENGTH DETERMINED BY SIGNAL PLAN.

2. SIGNAL FACES:
   - A. ALL SECTIONS SHALL BE 12" AND POLYCARBONATE.
   - B. EACH SHALL CONTAIN A 5" WIDE DULL BLACK POLYCARBONATE BACKPLATE.
   - C. EACH SHALL BE WIRED FROM THE TOP SIGNAL MOUNTING BRACKET.
   - D. NEAR RIGHT SIGNAL FACE SUSPENDED ON THE TETHER (NO BACKPLATE) SHALL NOT BE OVER THE TRAVELED WAY. IF THE POLE IS WITHIN 5 FEET OF THE TRAVELED WAY MOUNT THE SIGNAL FACE ON THE WOOD POLE WITH BACKPLATE.
   - E. FAR INDICATION SHALL BE MAINTAINED OVER CENTER OF TRAFFIC LANE.

3. SPAN WIRE:
   - A. EACH SPAN WIRE SHALL BE INDIVIDUALLY DOWN GUYED
   - B. SIGNAL AND LIGHTING CABLES SHALL ONLY BE ATTACHED TO THE UPPER SPAN WIRE.
   - C. THE SIGNAL ASSEMBLY SHALL HAVE A 17' MIN. HEIGHT ABOVE THE ROADWAY. THIS SHALL BE MEASURED AFTER THE SPAN WIRE INSTALLATION IS COMPLETED WITH ALL CABLES AND SIGNAL FACES IN PLACE. MAINTAIN MINIMUM AND MAXIMUM HEIGHTS AS ROADWAY WORK PROGRESSES.

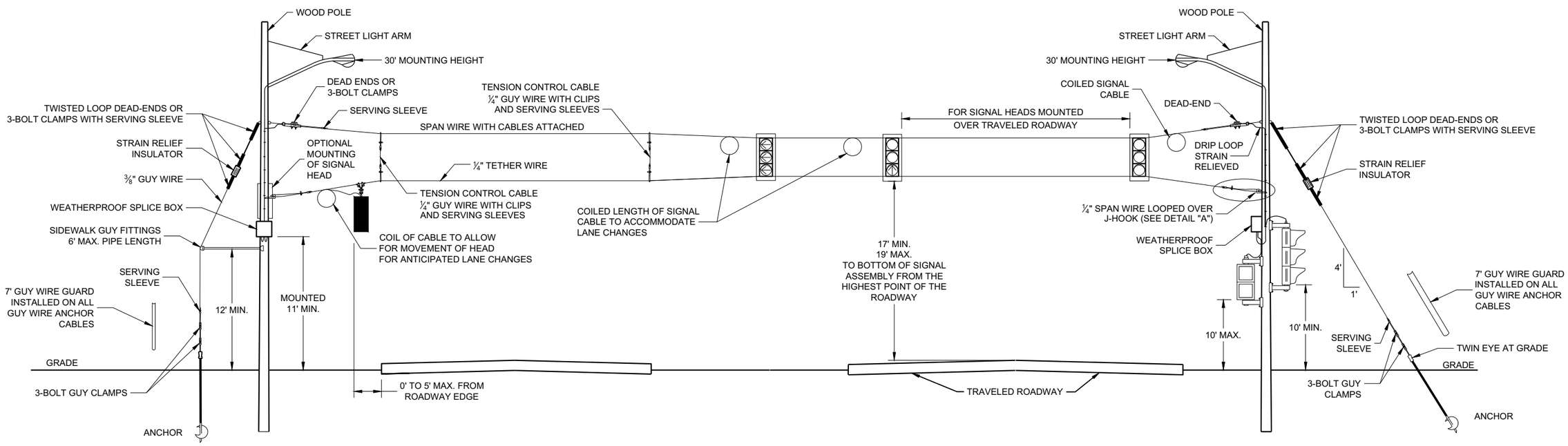

SPAN WIRE
TEMPORARY SIGNALS
4 LANE ROADWAYS

SPAN WIRE TEMPORARY TRAFFIC SIGNAL

STATE OF WISCONSIN
DEPARTMENT OF TRANSPORTATION

APPROVED
June 2015 — DATE
/S/ Ahmet Demerbilek — STATE ELECTRICAL ENGI
FHWA

6

SDD09G01 - 04b

6

SDD09G01 - 04b

MINIMUM POLE LENGTHS	CLASS	POLE BURIAL DEPTHS
25'	V	5'
30'	V	6'
35'	IV	7'
40'	IV	8'
45'	IV	9'

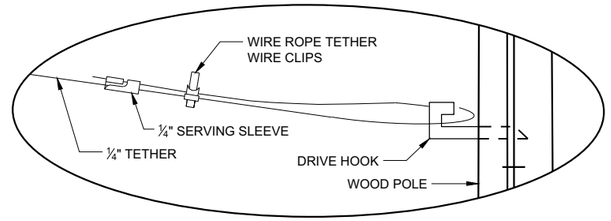

DETAIL "A"

GENERAL NOTES

DETAILS OF CONSTRUCTION, MATERIALS AND WORKMANSHIP NOT SHOWN ON THIS DRAWING SHALL CONFORM TO THE PERTINENT REQUIREMENTS OF THE CONTRACT.

1. WOOD POLES SHALL BE CLASS 4. LENGTH DETERMINED BY SIGNAL PLAN.

2. SIGNAL FACES:
   - A. ALL SECTIONS SHALL BE 12" AND POLYCARBONATE.
   - B. EACH SHALL CONTAIN A 5" WIDE DULL BLACK POLYCARBONATE BACKPLATE.
   - C. EACH SHALL BE WIRED FROM THE TOP SIGNAL MOUNTING BRACKET.
   - D. NEAR RIGHT SIGNAL FACE SUSPENDED ON THE TETHER (NO BACKPLATE) SHALL NOT BE OVER THE TRAVELED WAY. IF THE POLE IS WITHIN 5 FEET OF THE TRAVELED WAY MOUNT THE SIGNAL FACE ON THE WOOD POLE WITH BACKPLATE.
   - E. FAR INDICATION SHALL BE MAINTAINED OVER CENTER OF TRAFFIC LANE.

3. SPAN WIRE:
   - A. EACH SPAN WIRE SHALL BE INDIVIDUALLY DOWN GUYED
   - B. SIGNAL AND LIGHTING CABLES SHALL ONLY BE ATTACHED TO THE UPPER SPAN WIRE.
   - C. THE SIGNAL ASSEMBLY SHALL HAVE A 17' MIN. HEIGHT ABOVE THE ROADWAY. THIS SHALL BE MEASURED AFTER THE SPAN WIRE INSTALLATION IS COMPLETED WITH ALL CABLES AND SIGNAL FACES IN PLACE. MAINTAIN MINIMUM AND MAXIMUM HEIGHTS AS ROADWAY WORK PROGRESSES.

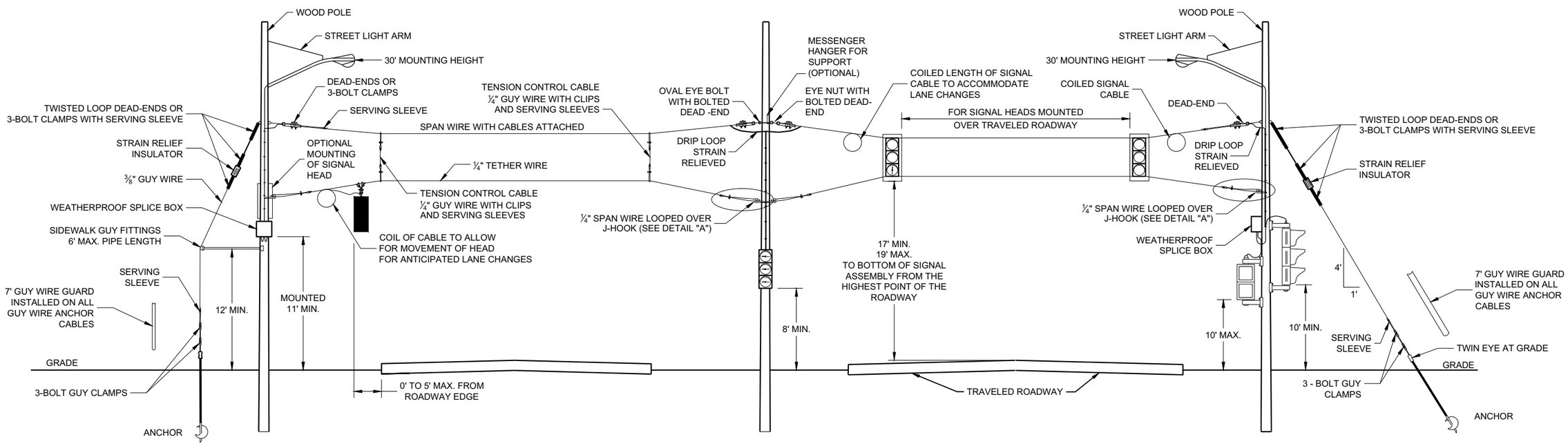

SPAN WIRE
TEMPORARY SIGNALS
4 LANE ROADWAYS

6

6

SDD09G01 - 04c

SDD09G01 - 04c

SPAN WIRE TEMPORARY TRAFFIC SIGNAL

STATE OF WISCONSIN
DEPARTMENT OF TRANSPORTATION

APPROVED
June 2015 — DATE
/S/ Ahmet Demerbilek — STATE ELECTRICAL ENGI
FHWA

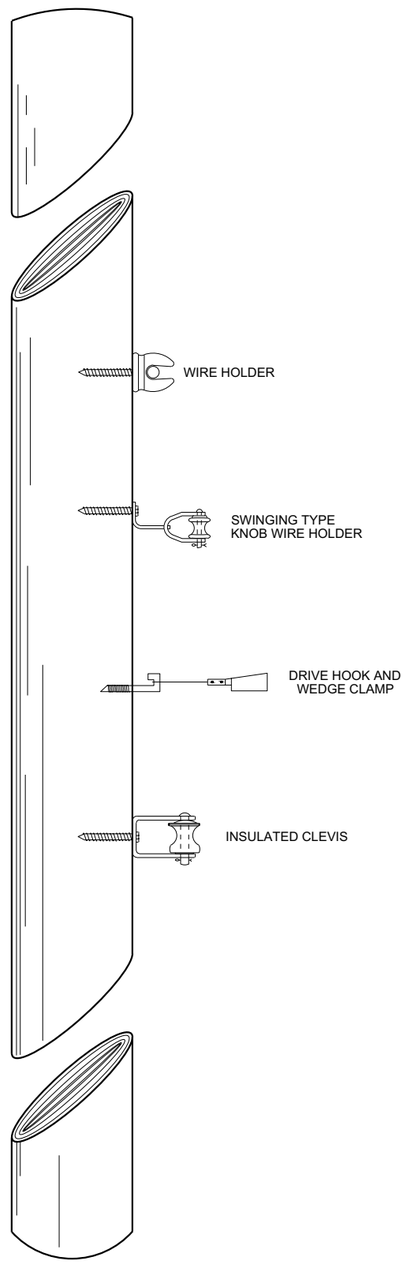

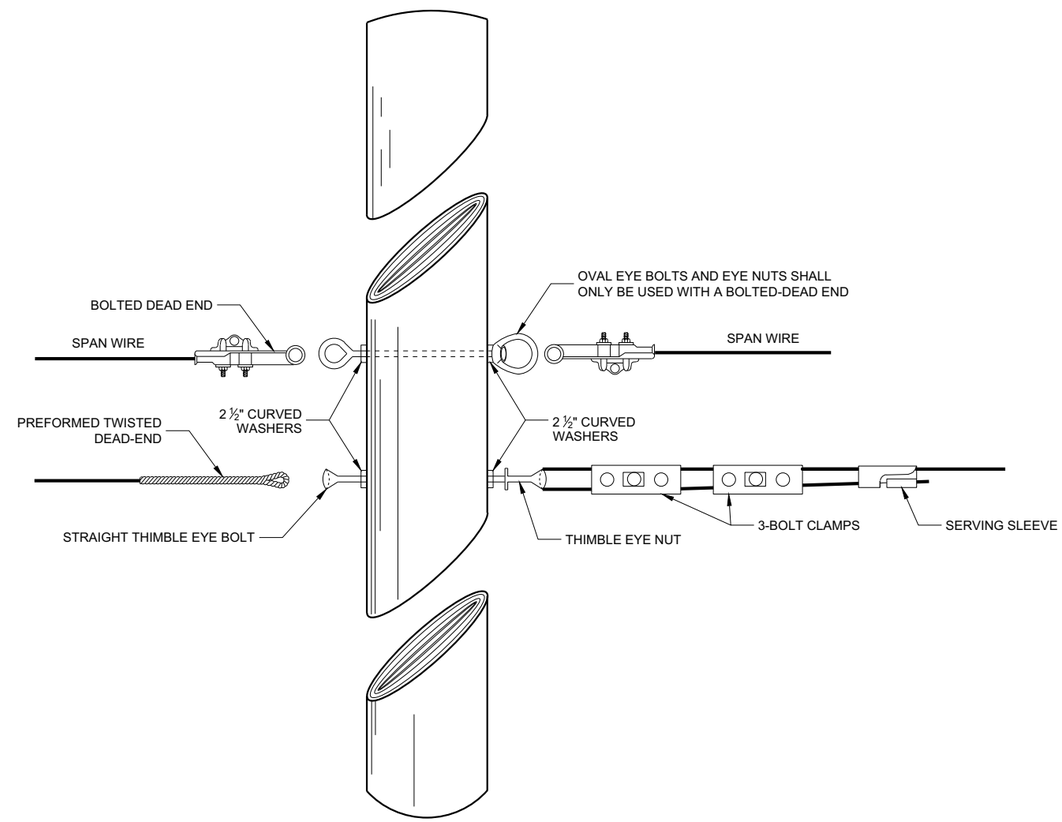

6

6

SPAN WIRE TEMPORARY TRAFFIC SIGNAL

STATE OF WISCONSIN
DEPARTMENT OF TRANSPORTATION

APPROVED

June 2015
DATE

/S/ Ahmet Demerbilek
ROADWAY STANDARDS DEVE ENGINEER

FHWA

SDD 09G01 - 4d

SDD 09G01 - 4d

GENERAL NOTES

1. USE ¾" DRILL IN WOOD POLE TO PROVIDE FOR ⅝" BOLTS.
2. SAFETY LOOP REQUIRED ON EACH END OF ALL SPAN WIRES.

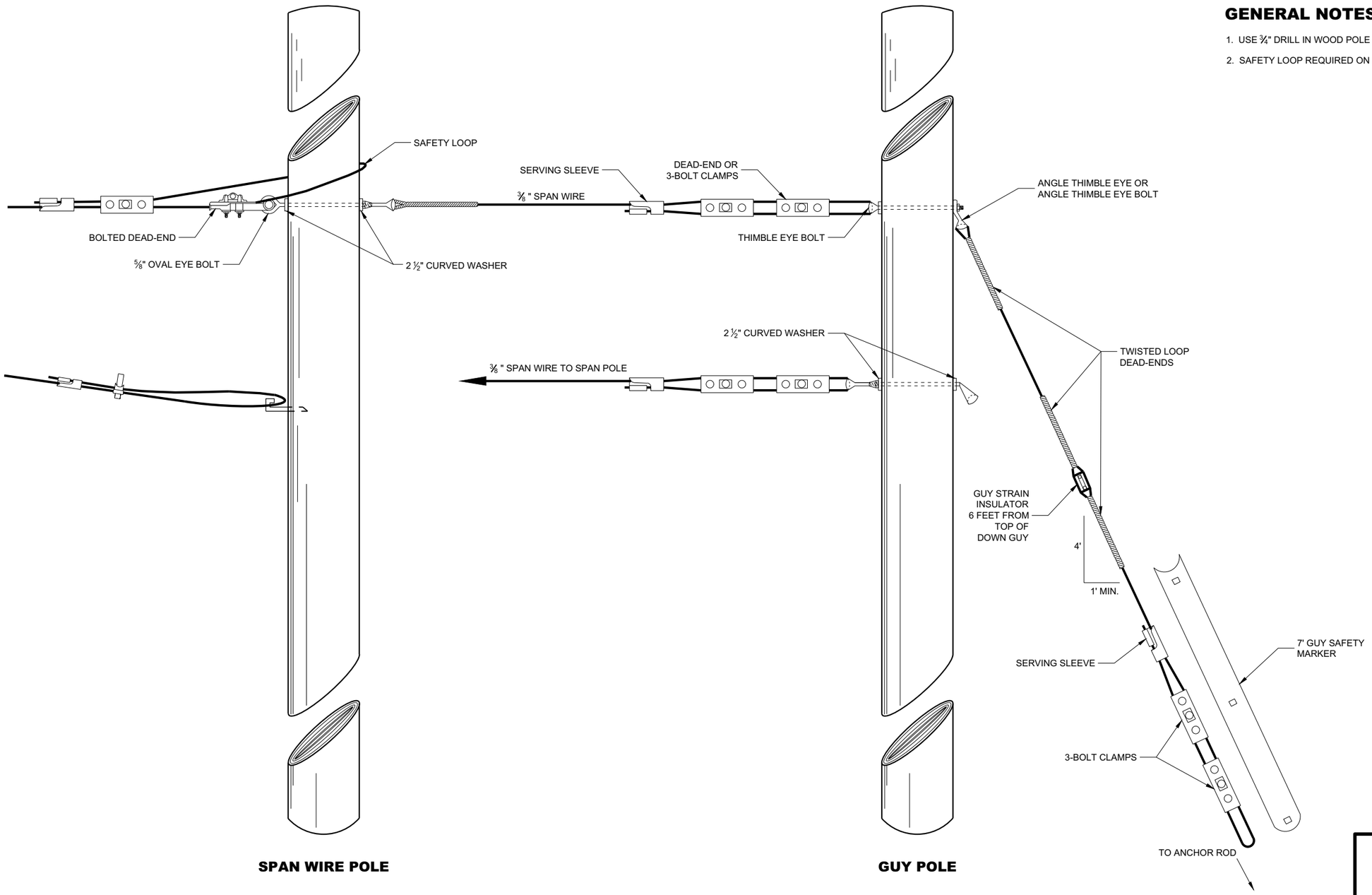

SPAN WIRE POLE

GUY POLE

TYPICAL DEAD-ENDINGS OR GUYING

SPAN WIRE TEMPORARY TRAFFIC SIGNAL

STATE OF WISCONSIN
DEPARTMENT OF TRANSPORTATION

APPROVED
June 2015 — DATE
/S/ Ahmet Demerbilek — ROADWAY STANDARDS DEVE ENGINEER
FHWA

6

SDD 09G01 - 4e

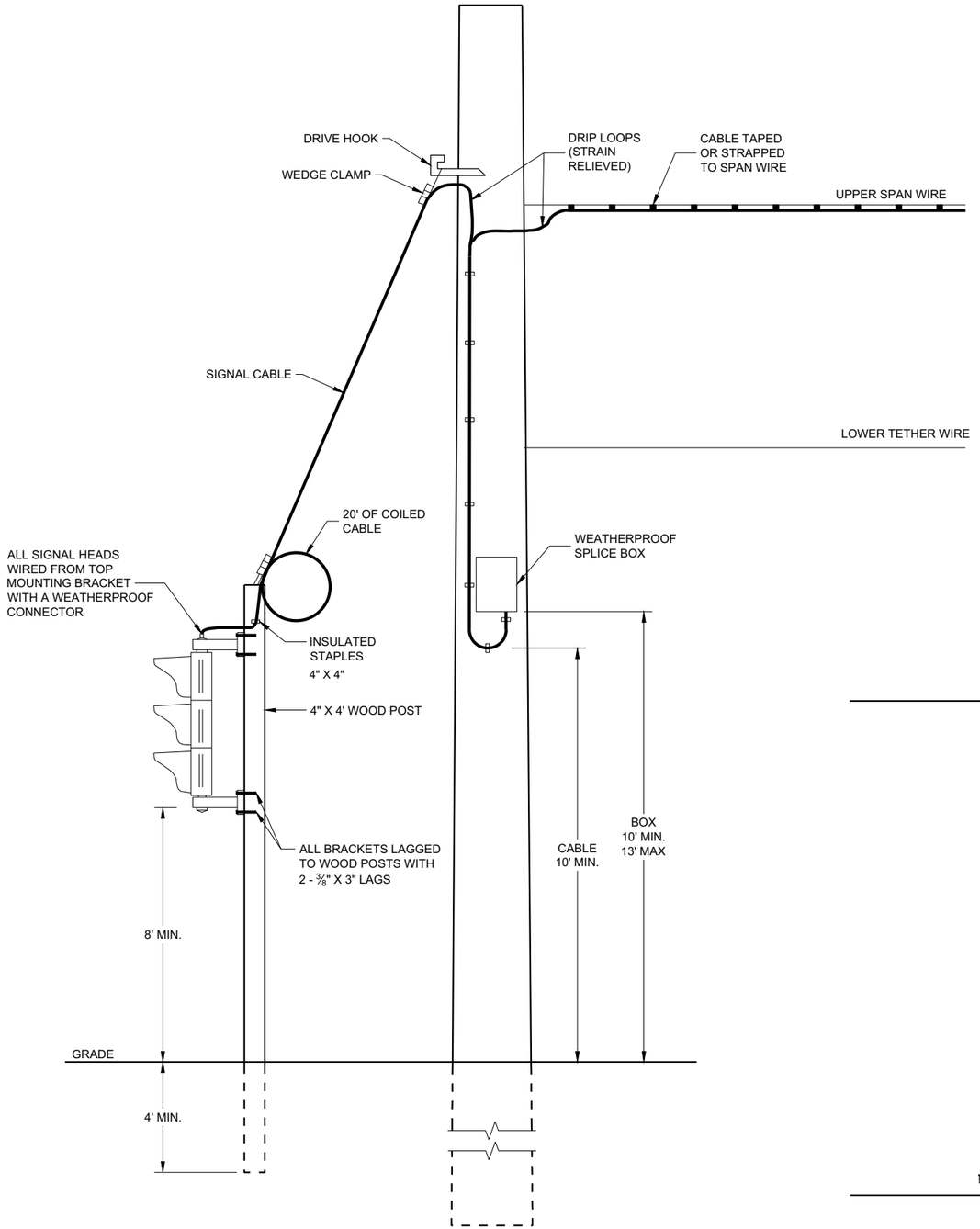

TYPICAL DROP TO TEMPORARY MOVEABLE SIGNAL

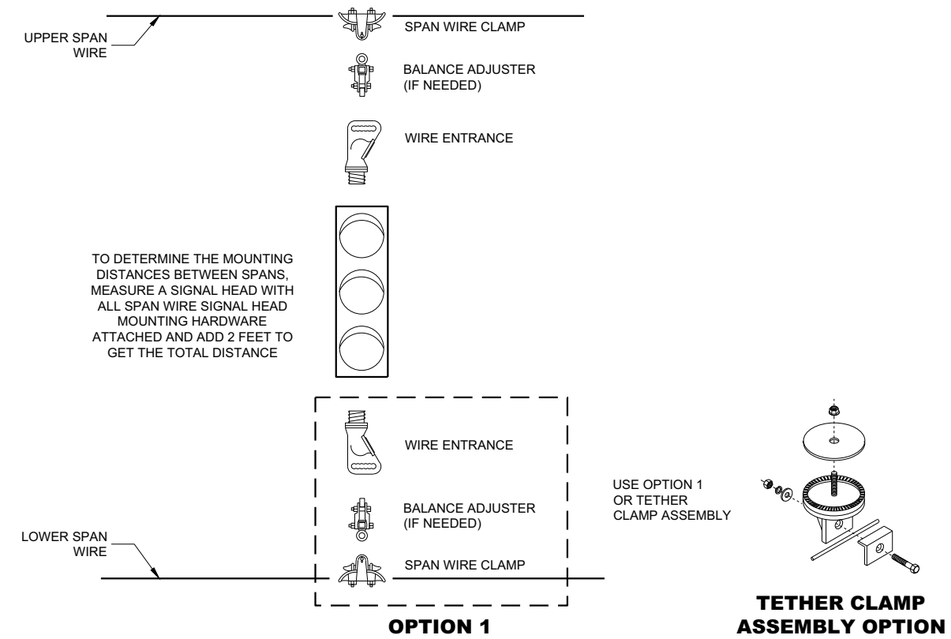

TYPICAL SPAN WIRE MOUNTING HARDWARE

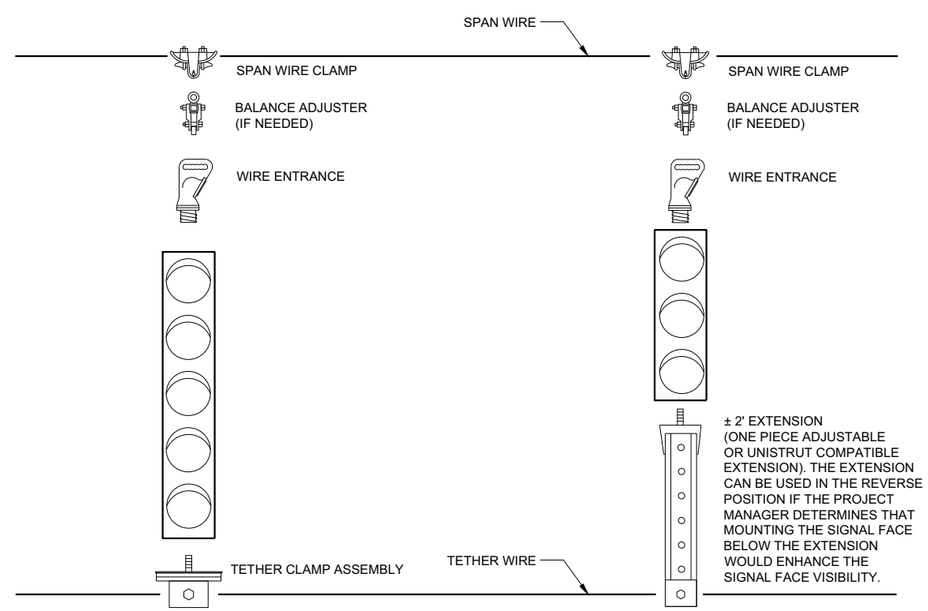

5 SECTION VERTICAL WITH 3 SECTION VERTICAL ON ONE SPAN WIRE

SPAN WIRE TEMPORARY TRAFFIC SIGNAL

STATE OF WISCONSIN
DEPARTMENT OF TRANSPORTATION

APPROVED
June 2015 — DATE
/S/ Ahmet Demerbilek — ROADWAY STANDARDS DEVE ENGINEER
FHWA

6
SDD 09G01 - 4f

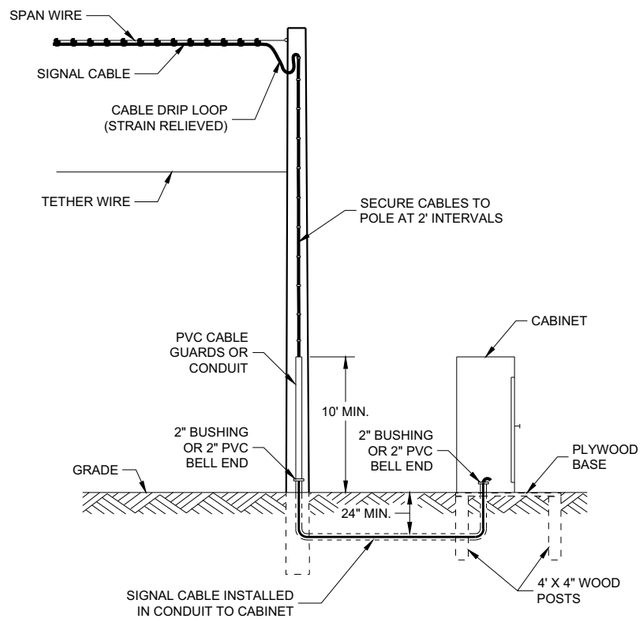

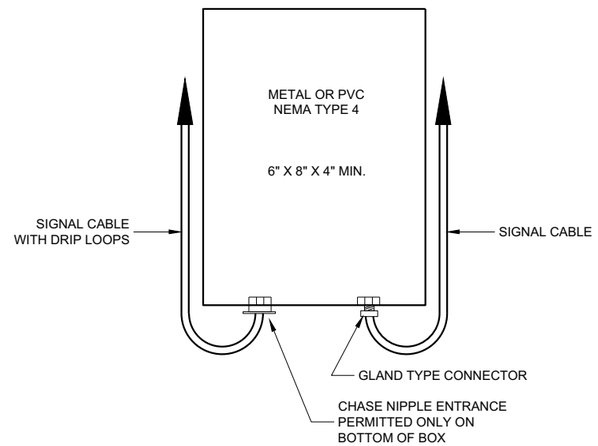

SPLICE BOX

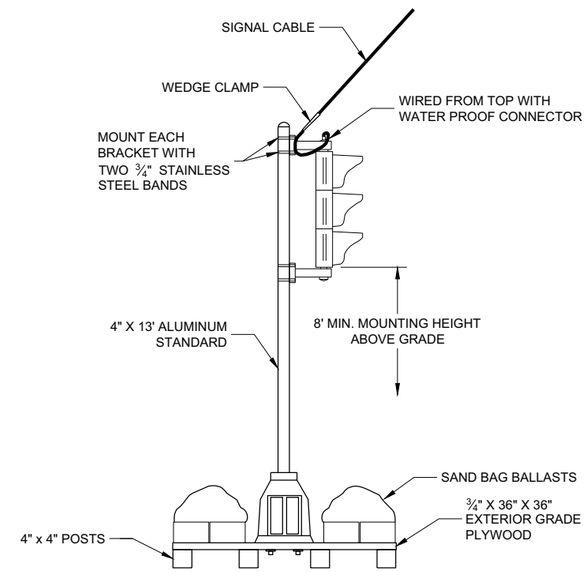

TYPICAL SKID TYPE TEMPORARY

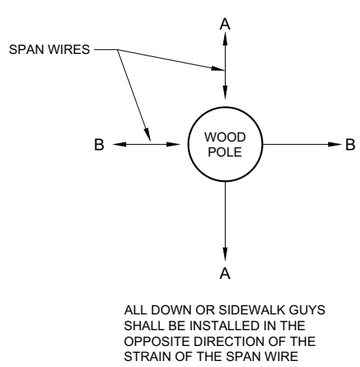

CORNER POLES

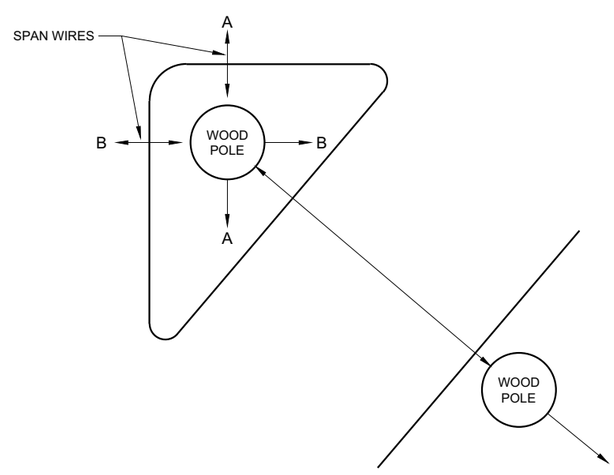

ISLAND POLES

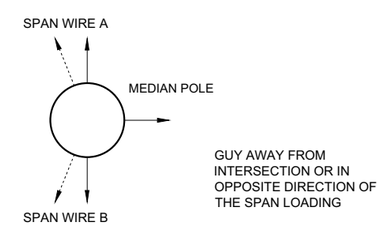

MEDIAN POLES

SPAN WIRE TEMPORARY TRAFFIC SIGNAL

STATE OF WISCONSIN
DEPARTMENT OF TRANSPORTATION

APPROVED
June 2015 — DATE
/S/ Ahmet Demerbilek — ROADWAY STANDARDS DEVE ENGINEER
FHWA

6

6

SDD 09G01 - 4g

SDD 09G01 - 4g

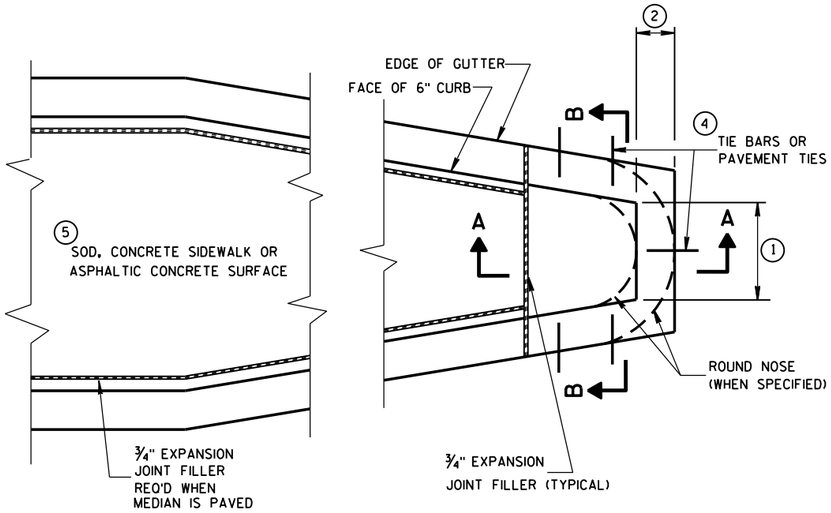

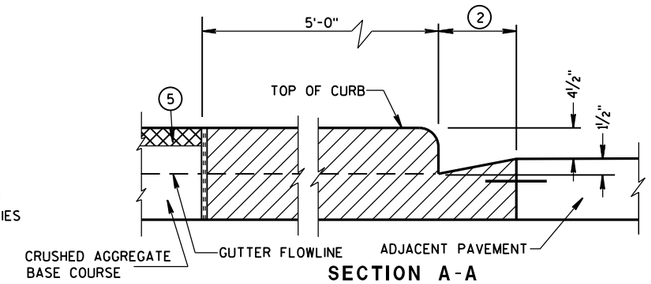

SECTION A-A

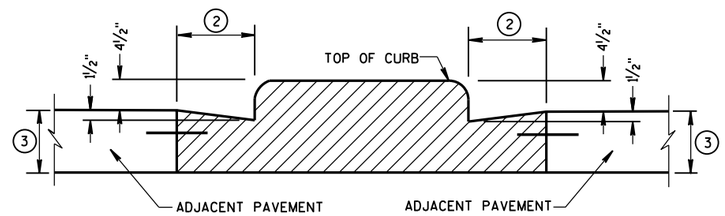

SECTION B-B

CONCRETE MEDIAN BLUNT NOSE DETAIL

GENERAL NOTES

DETAILS OF CONSTRUCTION, MATERIALS AND WORKMANSHIP NOT SHOWN ON THIS DRAWING SHALL CONFORM TO THE PERTINENT REQUIREMENTS OF THE STANDARD SPECIFICATIONS AND THE APPLICABLE SPECIAL PROVISIONS.

1. SEE PLAN FOR MEDIAN NOSE WIDTH AND RADIUS (FOR ROUND NOSE ALTERNATE).
2. WIDTH OF GUTTER TO MATCH EXISTING ADJACENT GUTTER OR AS SPECIFIED ELSEWHERE IN THE PLAN.
3. DEPTH EQUAL TO ADJACENT PAVEMENT. ADJACENT PAVEMENT STRUCTURE DETAILS ARE SHOWN ON THE PLAN. TYPICAL OPTIONS ARE:
   (1) NEW OR EXISTING CONCRETE PAVEMENT.
   (2) ASPHALTIC CONCRETE PAVEMENT OVER NEW OR EXISTING CONCRETE BASE COURSE.
   (3) ASPHALTIC CONCRETE PAVEMENT OVER CRUSHED AGGREGATE BASE COURSE.
4. TIE BARS OR PAVEMENT TIES REQUIRED IN NEW CONCRETE PAVEMENT OR CONCRETE BASE COURSE. TIE BARS SHALL BE NO. 4 X 2'-0" SPACED AT 2'-0" C-C.

   PAVEMENT TIES REQUIRED IN EXISTING CONCRETE BASE COURSE. PAVEMENT TIES SHALL BE NO. 6 X 1'-0" SPACED AT 3'-0" C-C INSTALLED ON A HORIZONTAL SKEW OF 6:1. THE DIRECTION OF SKEW SHALL ALTERNATE AFTER EVERY ONE OR TWO BARS.
5. SURFACE TYPE AND DETAILS ARE SHOWN ELSEWHERE IN THE PLAN.

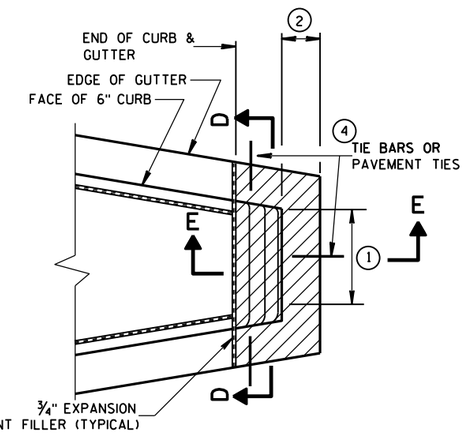

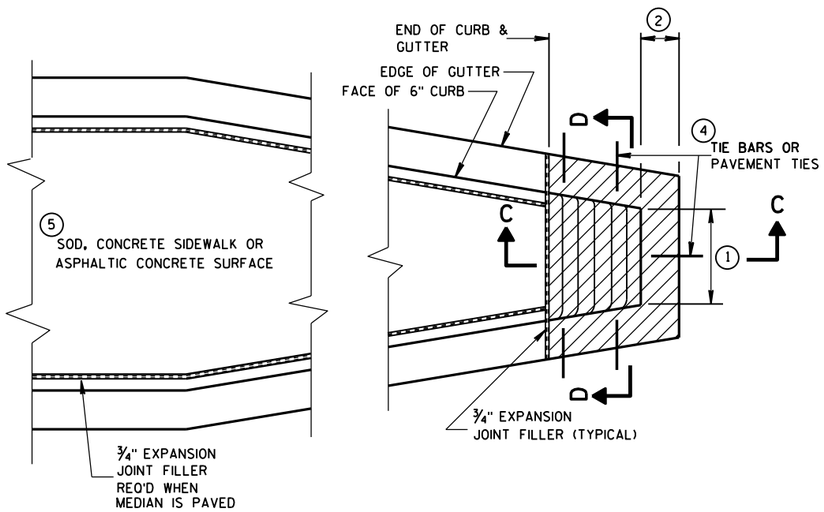

CONCRETE MEDIAN SLOPED NOSE TYPE 1

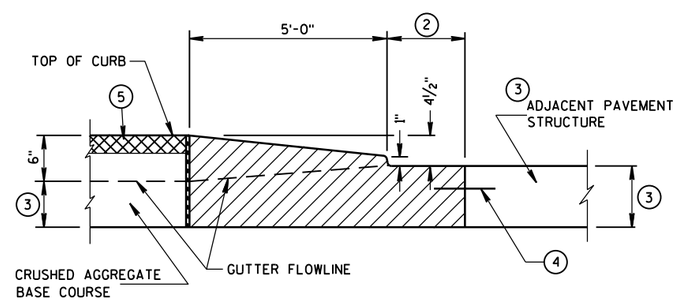

SECTION C-C

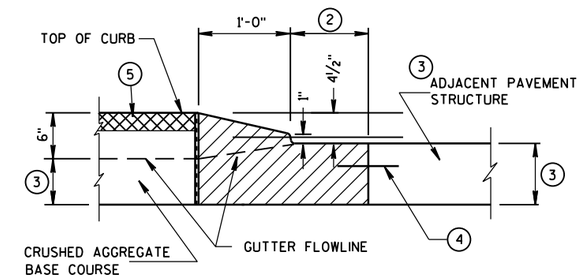

SECTION E-E

CONCRETE MEDIAN SLOPED NOSE TYPE 2

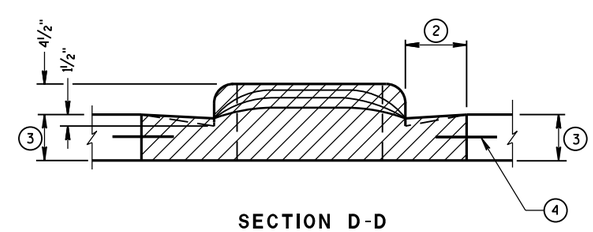

SECTION D-D

CONCRETE MEDIAN NOSE	
STATE OF WISCONSIN DEPARTMENT OF TRANSPORTATION	
APPROVED 6/8/2006 DATE	/S/ Jerry H. Zogg ROADWAY STANDARDS DEVELOPMENT ENGINEER
FHWA	

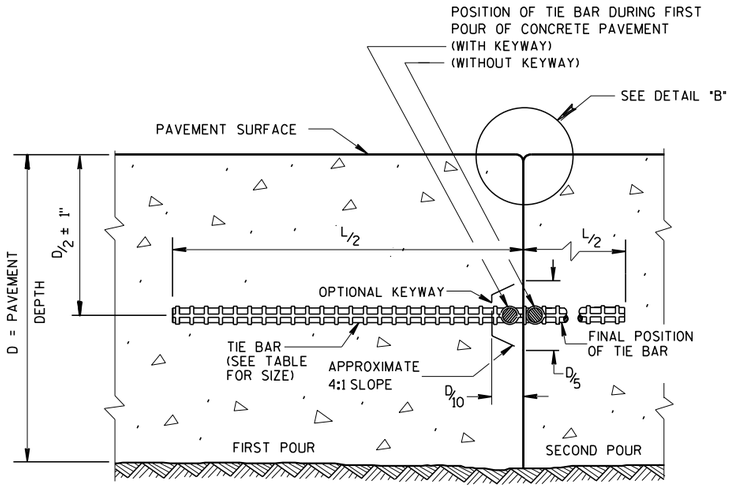

CONSTRUCTION JOINT

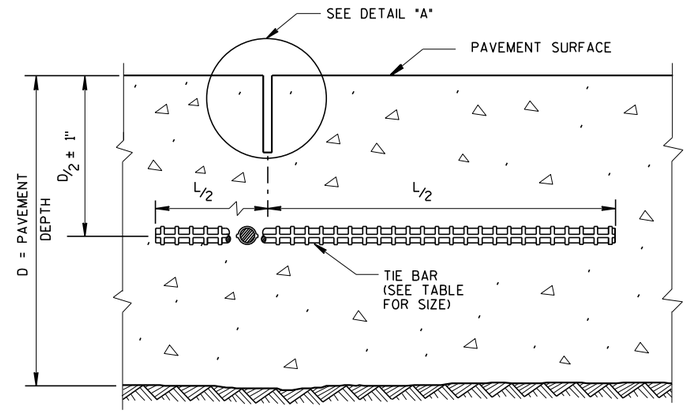

SAWED JOINT

GENERAL NOTES

CREATE A LONGITUDINAL JOINT FOR PAVEMENT WIDTHS GREATER THAN 15 FEET.

CORRELATE LONGITUDINAL JOINTS WITH LANE LINES WHEN POSSIBLE.

1. ANCHOR TIE BARS INTO DRILLED HOLES WITH AN EPOXY.
2. PAVEMENT THAT WAS IN PLACE PRIOR TO THE CONTRACT.

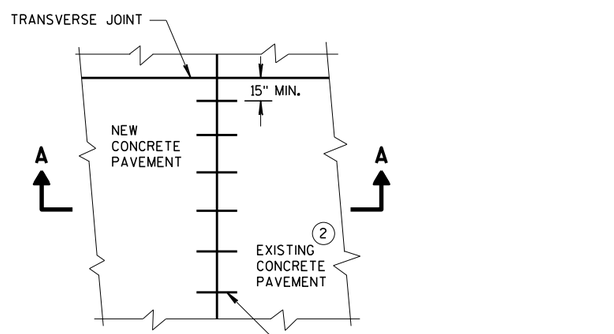

PLAN VIEW

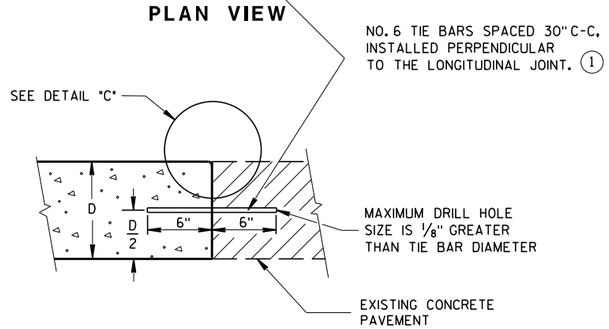

SECTION A-A
LONGITUDINAL CONSTRUCTION JOINT TIE BARS ANCHORED INTO EXISTING PAVEMENT

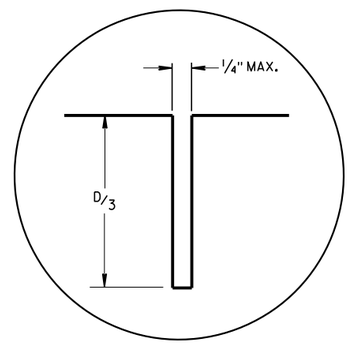

DETAIL "A"

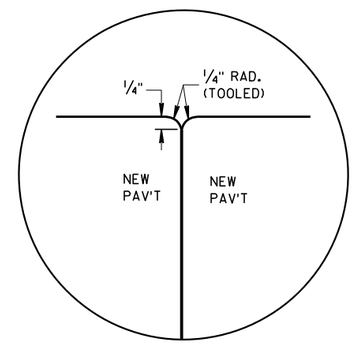

DETAIL "B"

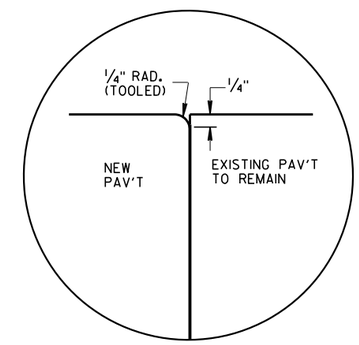

DETAIL "C"

TIE BAR TABLE

PAVEMENT DEPTH (D)	TIE BAR SIZE	TIE BAR LENGTH (L)	MAX. TIE BAR SPACING
< 10 1/2"	NO. 4	30"	36"
≥ 10 1/2"	NO. 5	36"	36"
	NO. 4 *	30"	24" **

* SUBSTITUTE BENT BARS AT LONGITUDINAL JOINTS WHEN EQUIPMENT LIMITATIONS DURING CONSTRUCTION WARRANT (e.g. AUXILIARY LANES OR TURN LANES)

** CONFORM TO 15" MINUMUM SPACING FROM TRANSVERSE JOINTS; SPACING BETWEEN TIE BARS WILL BE 30" AT TRANSVERSE JOINTS.

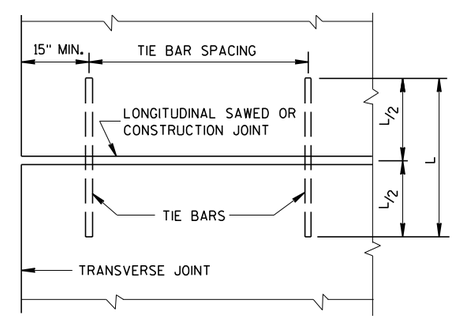

PLAN VIEW
SHOWING LOCATION OF TIE BARS

CONCRETE PAVEMENT
LONGITUDINAL JOINTS AND TIES

STATE OF WISCONSIN
DEPARTMENT OF TRANSPORTATION

APPROVED
March 2018 — DATE
/S/ Peter Kerr — PAVEMENT SUPE
FHWA

6

S.D.D. 13 C 1-19

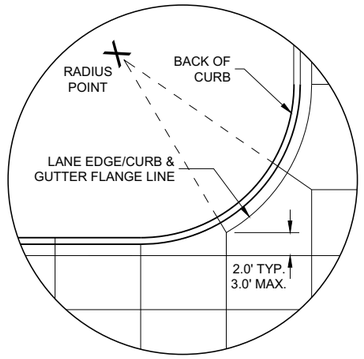

DETAIL "A"

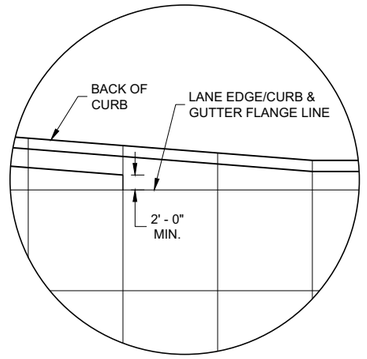

DETAIL "B"

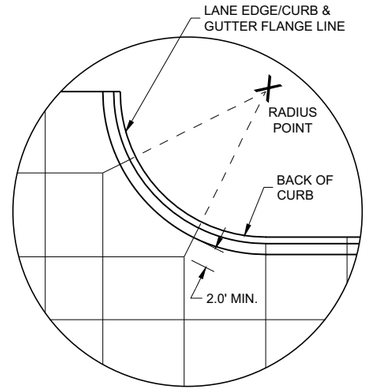

DETAIL "C"

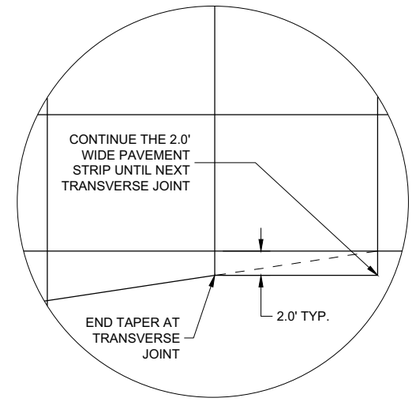

DETAIL "D"

GENERAL NOTES

THE PRIMARY ROADWAY CONTROLS THE TRANSVERSE JOINT PATTERN.

ALIGN NEW JOINTS WITH EXISTING JOINTS OR CRACKS.

CONSTRUCT TRANSVERSE JOINTS PERPENDICULAR TO THE ROADWAY.

ADJUST TRANSVERSE JOINTS TO ALIGN WITH UTILITY FIXTURES (E.G MANHOLES AND INLETS) IN THE PAVEMENT STRUCTURE WHEN POSSIBLE. WATER VALVES DO NOT REQUIRE JOINT ADJUSTMENT.

AVOID SLABS LESS THAN 2 FEET WIDE OR GREATER THAN 15 FEET WIDE.

SEE TABLE FOR TRANSVERSE JOINT SPACING. JOINT SPACING SPECIFIED IS MAXIMUM AND ACTUAL SPACING CAN BE ADJUSTED TO ACCOMMODATE INTERSECTIONS.

AVOID ANGLES LESS THAN 60° BY DOGLEGGING JOINTS THROUGH CURVE RADIUS POINTS. USE 90° ANGLES WHEN POSSIBLE.

CORRELATE LONGITUDINAL JOINTS WITH LANE LINES WHEN POSSIBLE.

1. PROVIDE TRANSVERSE JOINTS AT ALL PAVEMENT WIDTH CHANGES.
2. CONSTRUCT DOWELED EXPANSION JOINT ON THE SIDE ROAD OF AN INTERSECTION IF THE SIDE ROAD IS CONCRETE PAVEMENT AND GREATER THAN 300 FEET IN LENGTH. ALIGN EXPANSION JOINT WITHEDGE OF RADIUS.
3. THE ENGINEER MAY APPROVE SLIGHT VARIATIONS FROM THESE JOINTING DETAILS.

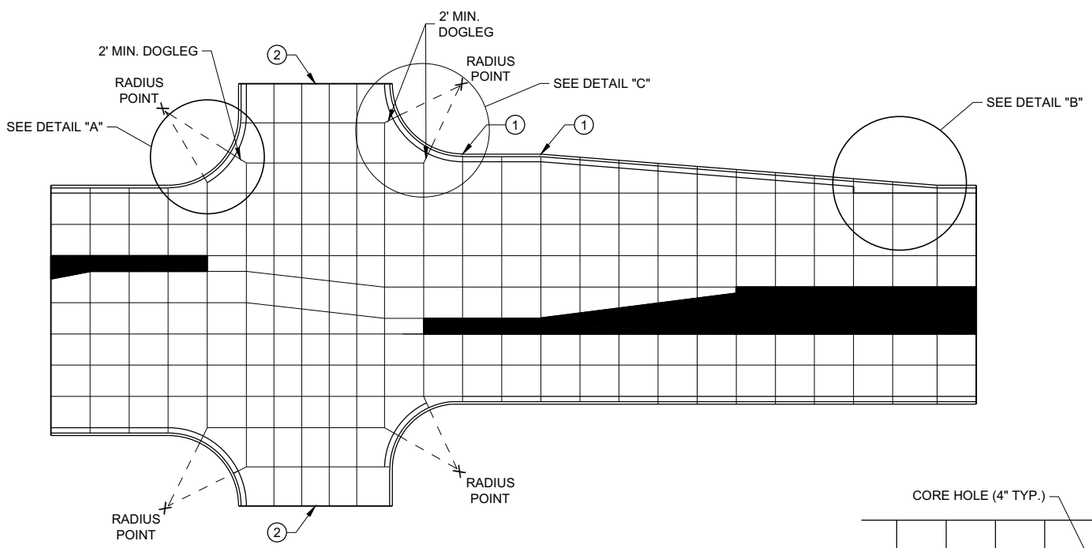

STANDARD INTERSECTION

PAVEMENT DEPTH AND JOINT SPACING TABLE

PAVEMENT DEPTH (D)	CONTRACTION JOINT SPACING
6", 6 ½"	12'
7", 7 ½"	14'
8" & ABOVE	15'

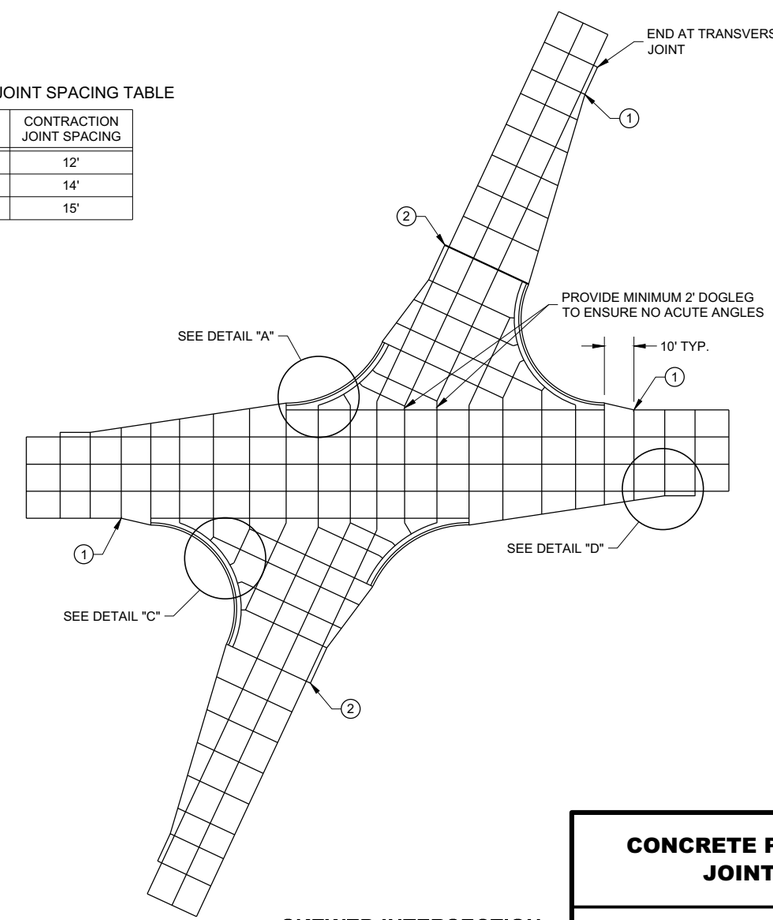

SKEWED INTERSECTION

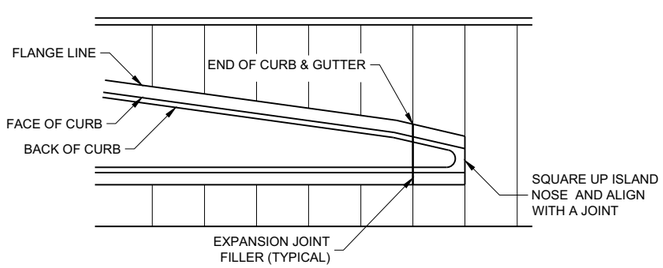

APPROACH TO MEDIAN

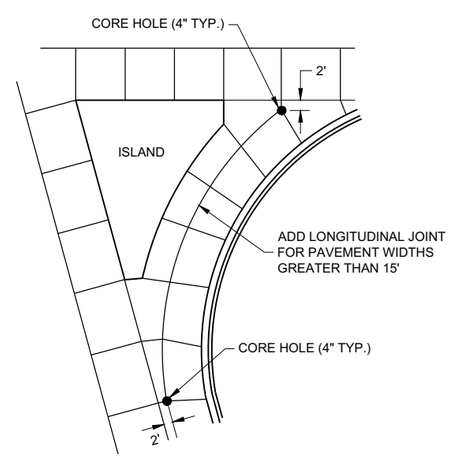

LARGE RIGHT TURN

CONCRETE PAVEMENT JOINTING

STATE OF WISCONSIN
DEPARTMENT OF TRANSPORTATION

6

SDD 13C18 - 07a

6

SDD 13C18 - 07a

LEGEND

POTENTIAL DOWELED EXPANSION JOINT

DOWELED JOINT

TIED JOINT

GENERAL NOTES

USE AN EXPANSION JOINT FILLER MEETING THE REQUIREMENTS OF STANDARD SPECIFICATION 415.

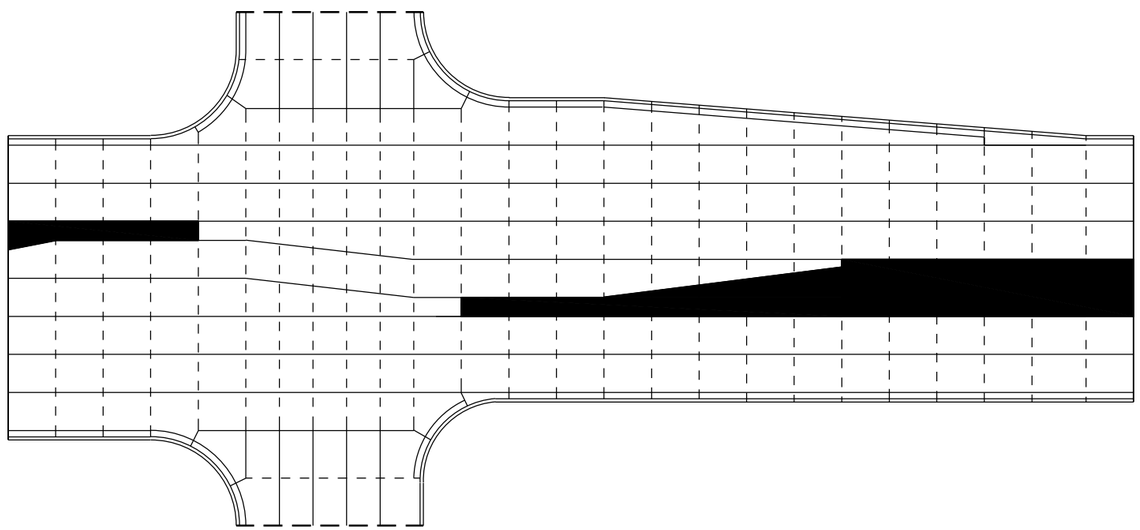

STANDARD INTERSECTION

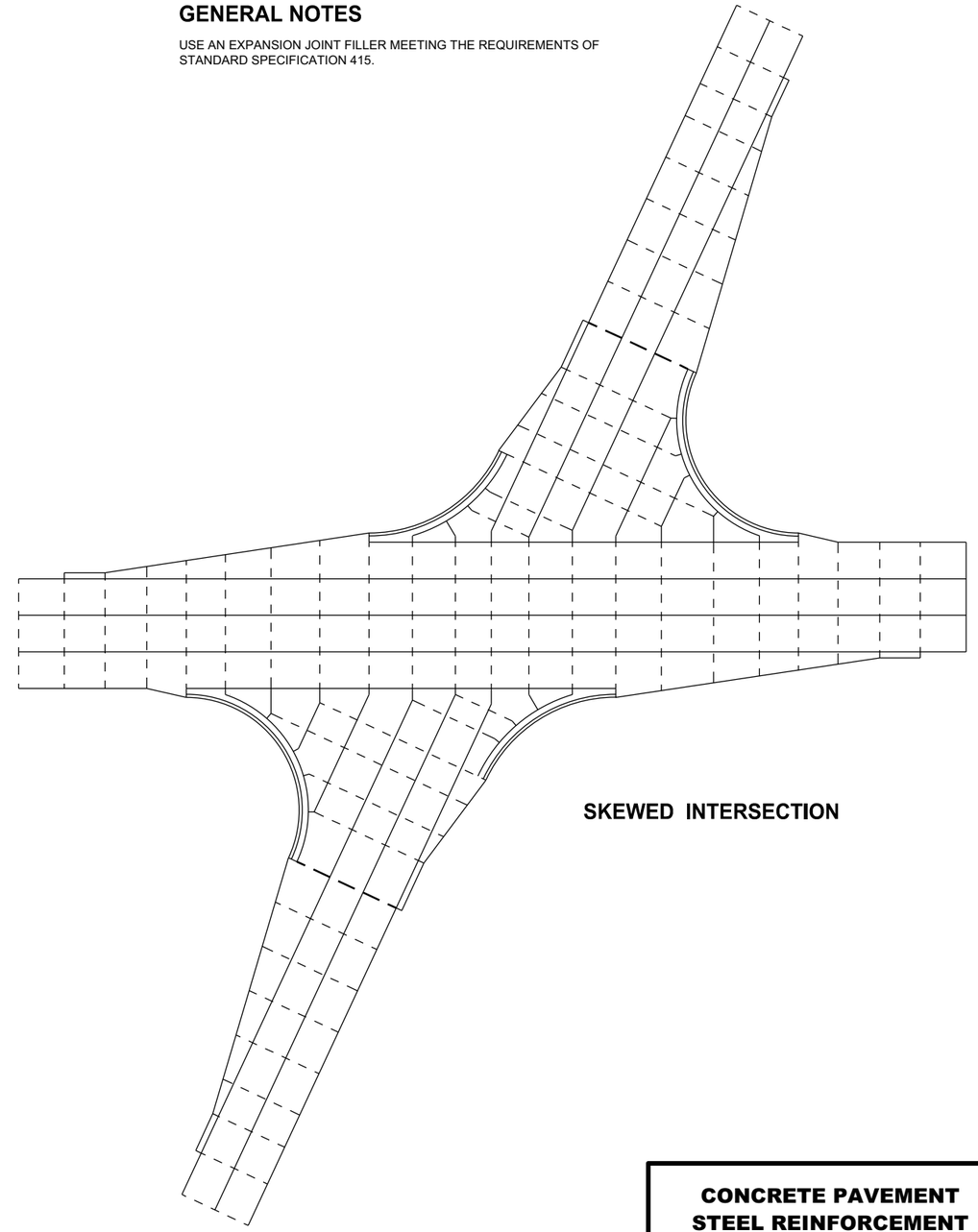

SKEWED INTERSECTION

CONCRETE PAVEMENT STEEL REINFORCEMENT

STATE OF WISCONSIN
DEPARTMENT OF TRANSPORTA

6

SDD 13C18 - 07b

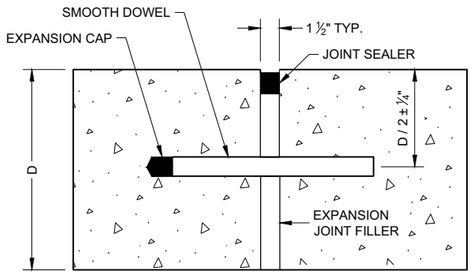

DOWELED TRANSVERSE (1)

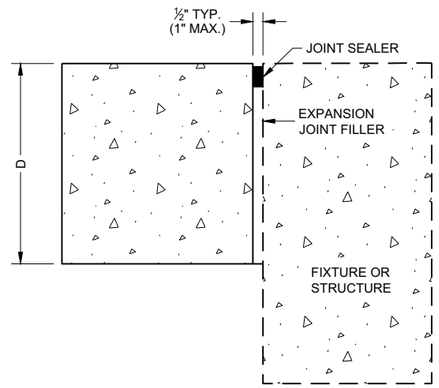

UNTIED - LONGITUDINAL

EXPANSION JOINTS

TIE BAR TABLE

PAVEMENT DEPTH (D)	TIE BAR SIZE	TIE BAR LENGTH (L)	MAX. TIE BAR SPACING
< 10 ½"	NO. 4	30"	36"
≥ 10 ½"	NO. 5	36"	36"
	NO. 4*	30"	24"**

* SUBSTITUTE BENT BARS AT LONGITUDINAL JOINTS WHEN EQUIPMENT LIMITATIONS DURING CONSTRUCTION WARRANT (e.g. AUXILIARY LANES OR TURN LANES)

** CONFORM TO 15" MINIMUM SPACING FROM TRANSVERSE JOINTS; SPACING BETWEEN TIE BARS WILL BE 30" AT TRANSVERSE JOINTS.

GENERAL NOTES

1. USE DOWELED EXPANSION JOINTS ON SIDE ROADS AT INTERSECTIONS (TO ISOLATETHE SIDE ROAD FROM THE THROUGH STREET) IF THE SIDE ROAD IS CONCRETE PAVEMENT AND GREATER THAN 300 FEET IN LENGTH.
2. SPACE CONTRACTION JOINTS IN ACCORDANCE WITH SDD 13C4, 13C11 OR 13C13.
3. LOCATE CONSTRUCTION JOINTS A MINIMUM OF 6 FEET FROM THE NEAREST CONTRACTION JOINT AND ALIGN PARALLEL TO CONTRACTION JOINTS.
4. CONSTRUCTION JOINTS CAN BE FORMED OR SAWED.
5. IF JOINT IS FORMED, PROVIDE A ¼" RADIUS.
6. ANCHOR TIE BARS INTO DRILLED HOLES WITH AN EPOXY.

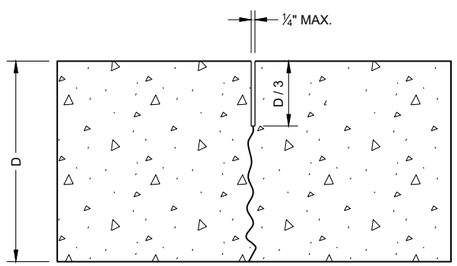

UNDOWELED TRANSVERSE

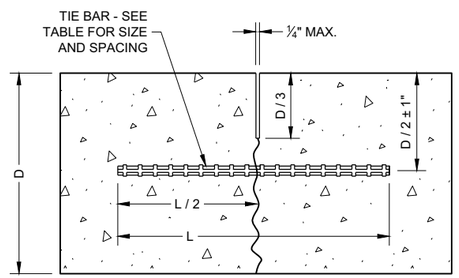

TIED LONGITUDINAL

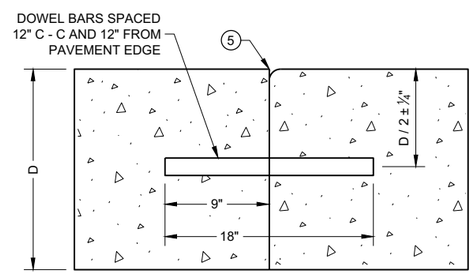

DOWELED TRANSVERSE (3)

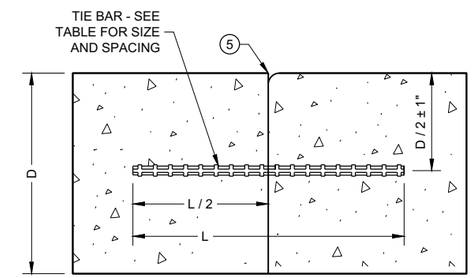

TIED LONGITUDINAL

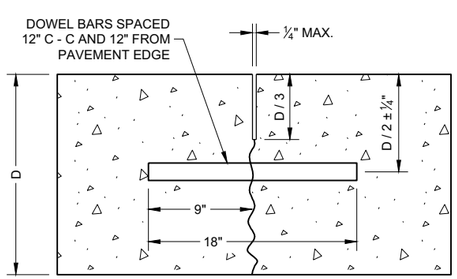

DOWELED TRANSVERSE

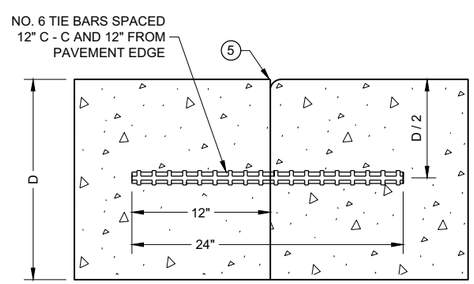

TIED TRANSVERSE (3)
(FOR USE ON NON-DOWELED PAVEMENTS ONLY)

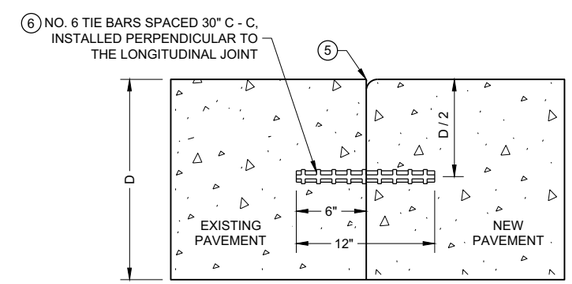

TIED LONGITUDINAL TO EXISTING

CONTRACTION JOINTS (2)

CONSTRUCTION JOINTS (4)

CONCRETE PAVEMENT JOINT TYPES

STATE OF WISCONSIN
DEPARTMENT OF TRANSPORTATION

6
SDD 13C18 - 07c

GENERAL NOTES

1. USE BOXOUTS WHEN UTILITY STRUCTURE IS IN THE PATH OF CONSTRUCTION JOINTS. PROVIDE A 1 FOOT MINIMUM CLEARANCE BETWEEN THE EXTERIOR LIMIT OF THE STRUCTURE TO THE DIAMOND BOXOUT.
2. ADJUST TRANSVERSE JOINT TO INTERSECT MANHOLE IF POSSIBLE.
3. IF DISTANCE BETWEEN THE LONGITUDINAL JOINT AND THE EDGE OF MANHOLE IS 2 FEET OR LESS, DIVERT THE LONGITUDINAL JOINT AT A 2:1 TAPER RATE TO THE CENTER OF THE MANHOLE. IF THE DISTANCE IS GREATER THAN 2 FEET, DO NOT DIVERT THE JOINT AND SAW AS NORMAL. PLACE REINFORCEMENT REBAR AROUND THE MANHOLE.
4. IF THE DISTANCE FROM THE EDGE OF THE MANHOLE TO THE NEAREST TRANSVERSE JOINT IS LESS 4 FEET OR LESS, REDIRECT JOINT TO INTERSECT THE CENTER OF THE MANHOLE. IF DISTANCE IS GREATER THAN 4 FEET, DO NOT DIVERT THE JOINT AND SAW AS NORMAL. PLACE REINFORCEMENT REBAR AROUND THE MANHOLE.
5. ALIGN TRANSVERSE JOINT WITH ONE EDGE OF INLET WHEN PRACTICAL.

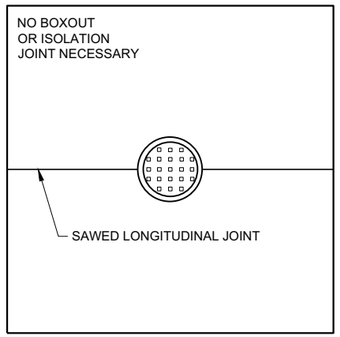

MANHOLE WITH LONGITUDINAL JOINT

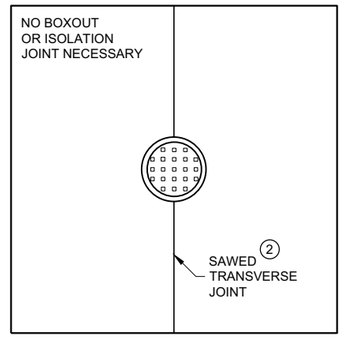

MANHOLE WITH TRANSVERSE JOINT

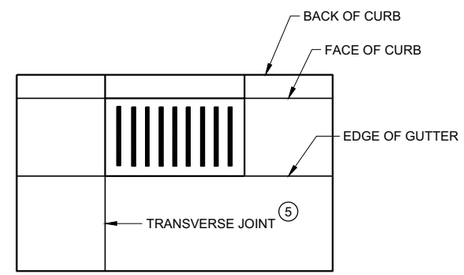

INLET WITH TRANSVERSE JOINT

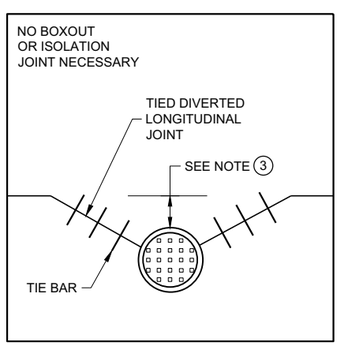

MANHOLE WITH DIVERTED LONGITUDINAL CONTRACTION JOINT

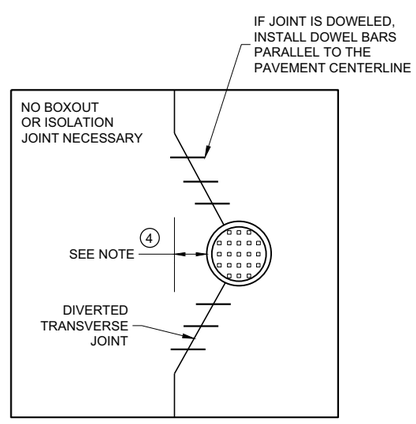

MANHOLE WITH DIVERTED TRANSVERSE CONTRACTION JOINT

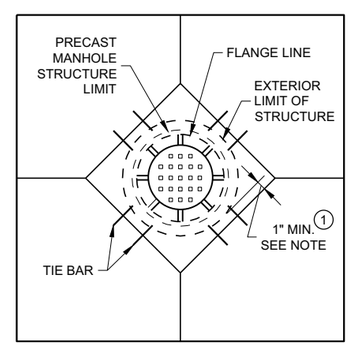

DIAGONAL MANHOLE BOXOUT FOR CONSTRUCTION JOINTS

CONCRETE PAVEMENT JOINTING AT UTILITY FIXTURES

STATE OF WISCONSIN
DEPARTMENT OF TRANSPORTATION

APPROVED
November 2018 /S/ Peter Kemp P.E.
DATE PAVEMENT SUPERVISI
FHWA

6
SDD 13C18 - 07d

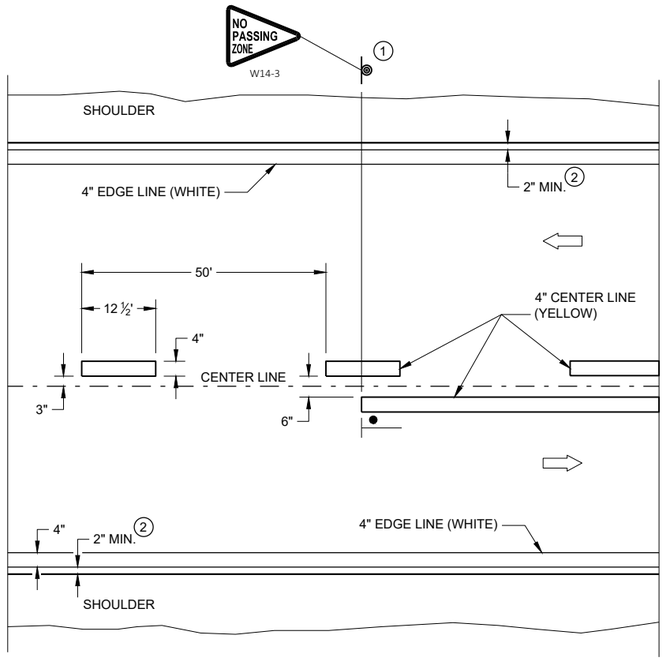

TWO WAY TRAFFIC

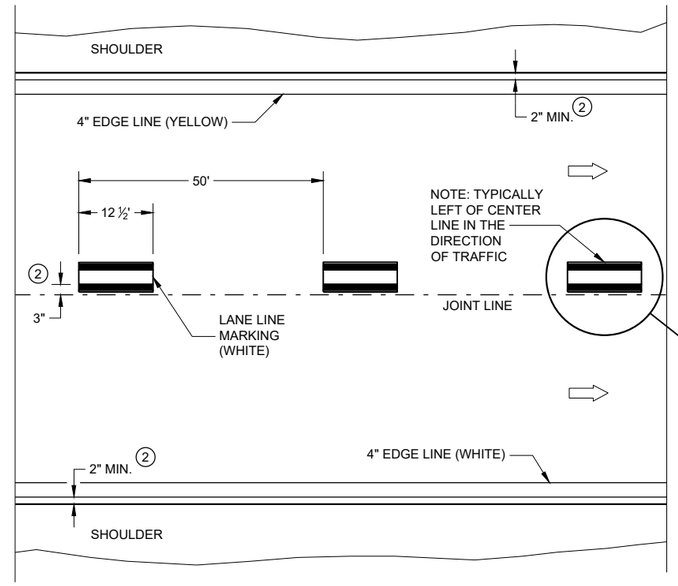

ONE WAY TRAFFIC

PERMANENT PAVEMENT MARKING

GENERAL NOTES

DETAILS OF CONSTRUCTION NOT SHOWN ON THIS DRAWING SHALL CONFORM TO STANDARD SPECIFICATIONS AND SPECIAL PROVISIONS.

1. LOCATE THE NO PASSING ZONE W14-3 SIGN WITHIN 50 FEET OF THE "T" MARKING
2. MEASURE FROM EDGE OF MARKING TO JOINT LINE. THIS DOES NOT INCLUDE SPACE NEEDED FOR GROOVING OPERATIONS.

LEGEND

"T" MARKING

SIGN ON PERMANENT SUPPORT

DIRECTION OF TRAFFIC

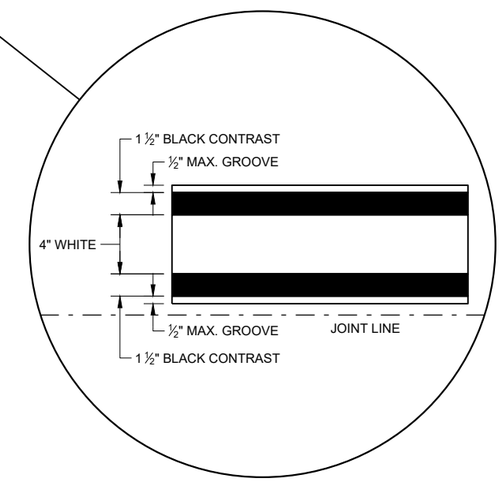

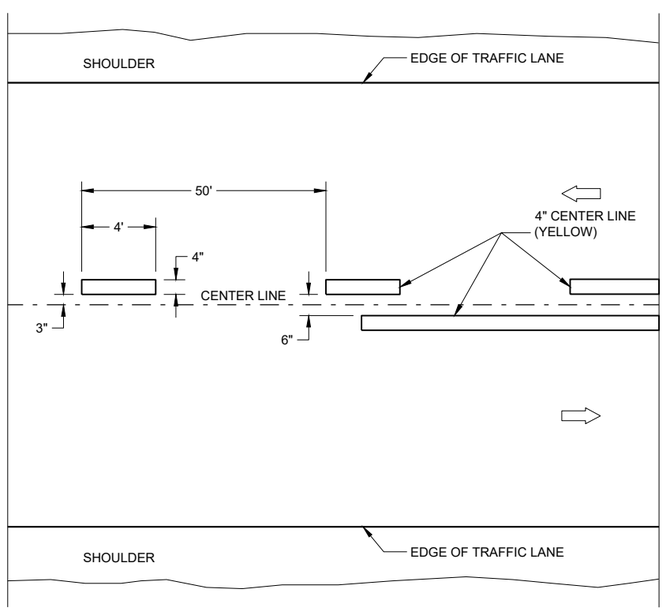

TWO WAY TRAFFIC

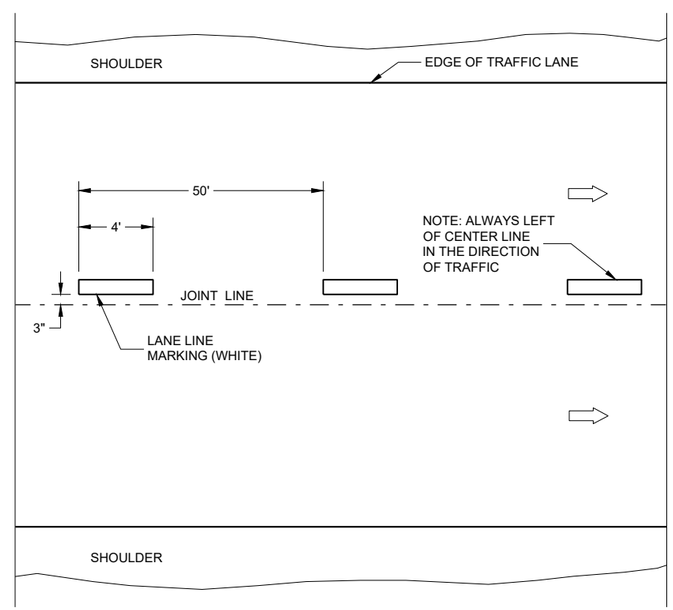

ONE WAY TRAFFIC

TEMPORARY PAVEMENT MARKING

LONGITUDINAL MARKING (MAINLINE)

STATE OF WISCONSIN
DEPARTMENT OF TRANSPORTATION

APPROVED
February 2020 — DATE
/S/ Matthew Rauch — STATEWIDE SIGNING AND M ENGINEER
FHWA

6

SDD 15C08 - 20a

GENERAL NOTES

1. A SET OF ARROWS IS REQUIRED EVERY 400 FEET OR NEAR INTERSECTIONS OR DRIVEWAYS WITH TURNING TRAFFIC.
2. 8" WHITE
3. TURN BAY LENGTH OF LESS THAN 48' DOES NOT REQUIRE PAVEMENT ARROWS OR TEXT.

DIRECTION OF TRAFFIC

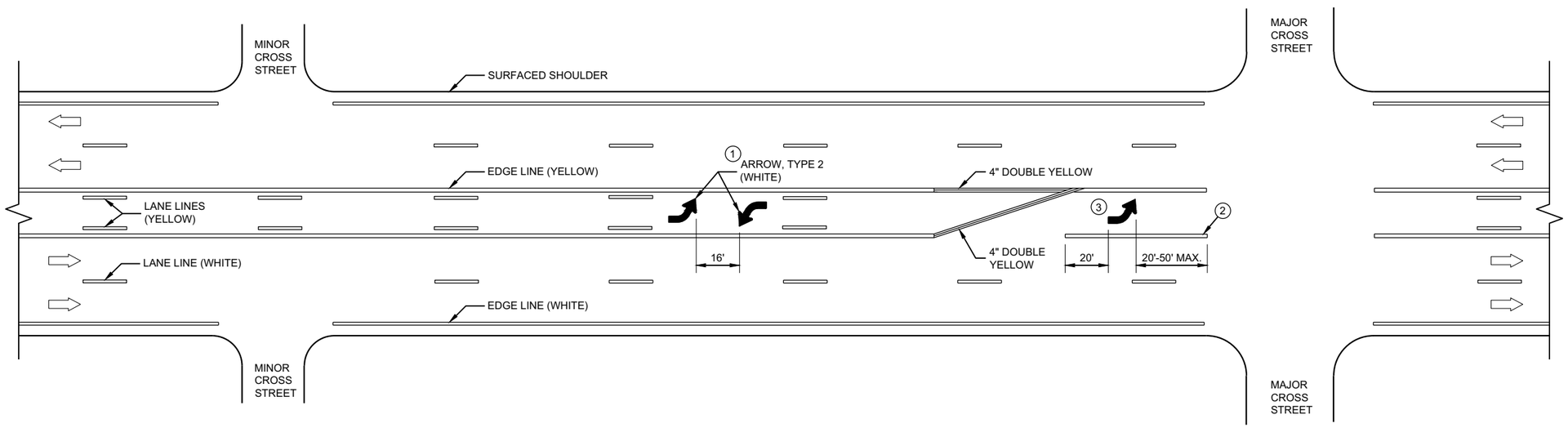

TWO WAY LEFT TURN LANE

6

6

SDD 15C08 - 20b

SDD 15C08 - 20b

PAVEMENT MARKING (TURN LANES)

STATE OF WISCONSIN
DEPARTMENT OF TRANSPORTAT

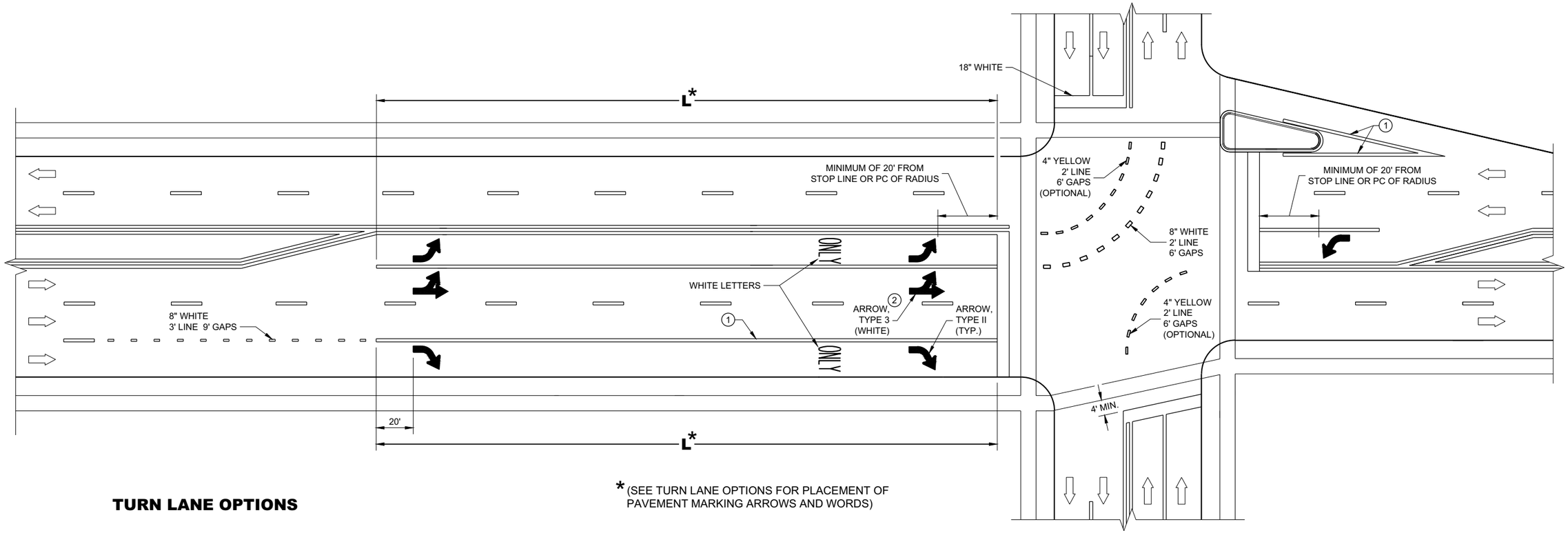

*(SEE TURN LANE OPTIONS FOR PLACEMENT OF PAVEMENT MARKING ARROWS AND WORDS)

TURN LANE OPTIONS

LENGTH OF TURN BAY (L) OF 0 - 47' DOES NOT REQUIRE PAVEMENT MARKING ARROWS OR WORDS

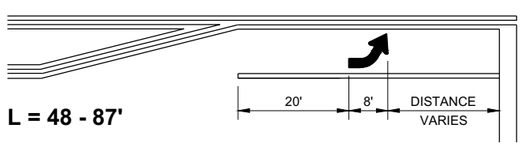

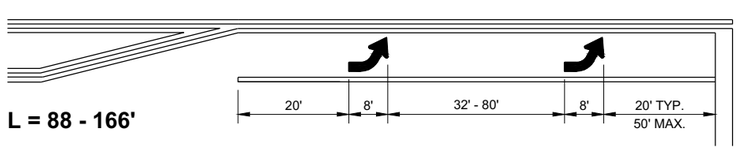

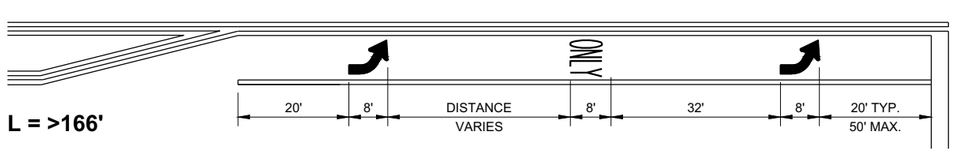

GENERAL NOTES

1. 8" WHITE
2. QUANTITY AND LOCATION OF TYPE 3 ARROWS ARE THE SAME AS THE TYPE II ARROWS IN THE ADJACENT TURN LANE. FOR TURN LANES WITH A PHYSICAL SEPARATION IN THE SAME DIRECTION OF TRAVEL, THE ARROWS AND "ONLY" MARKING MAY BE ELIMINATED.

⇨ DIRECTION OF TRAFFIC

L = LENGTH OF TURN BAY

PAVEMENT MARKING (TURN LANES)

STATE OF WISCONSIN
DEPARTMENT OF TRANSPORTA

6

SDD 15C08 - 20c

GENERAL NOTES

1. REFLECTIVE SHEETING SHALL FOLLOW THE REQUIREMENTS IN THE APPROVED PRODUCTS LISTING FOR SIGN SHEETING.
2. LOCATION OF WARNING LIGHTS WHEN SHOWN ON THE PLAN.

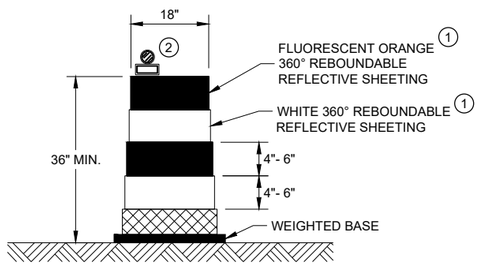

DRUM

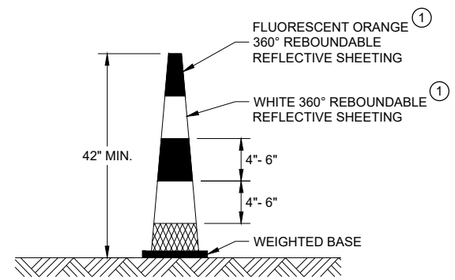

42" CONE

DO NOT USE IN TAPERS
½ SPACING OF DRUMS

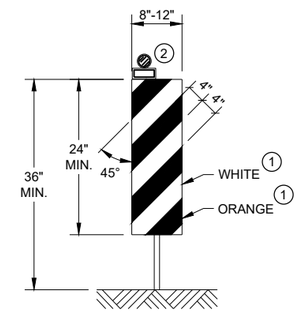

VERTICAL PANEL

THE STRIPES SHALL SLOPE DOWNWARD TO
THE TRAFFIC SIDE FOR CHANNELIZATION.

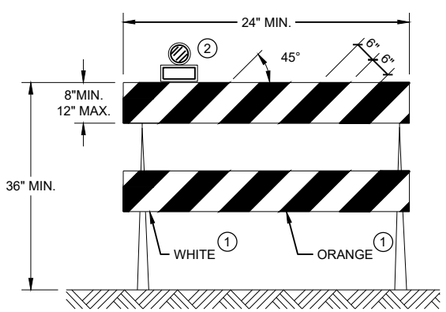

TYPE II BARRICADE

FOR RAILS LESS THAN 36" LONG, 4" WIDE STRIPES
MAY BE USED. ALL STRIPES SHALL SLOPE DOWNWARD
TO THE TRAFFIC SIDE FOR CHANNELIZATION.

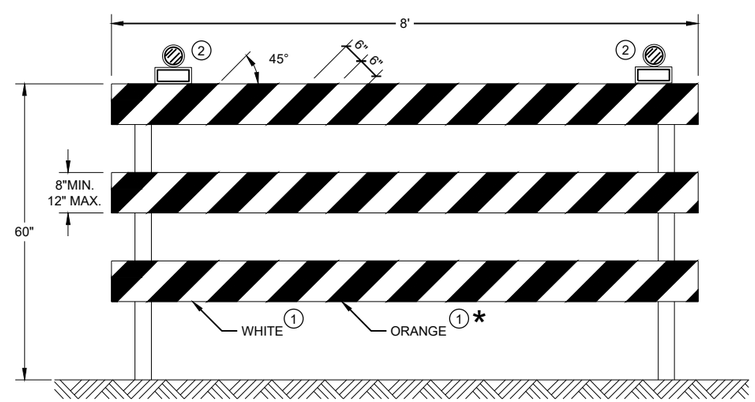

TYPE III BARRICADE

IF SIGN MOUNTED, DO NOT COVER MORE THAN 50% OF THE TOP
TWO RAILS OR 33% OF THE TOTAL AREA OF THE THREE RAILS.

* IF USED FOR A PERMANENT APPLICATION USE RED SHEETING.

CHANNELIZING DEVICES DRUMS, CONES, BARRICADES AND VERTICAL PANELS

STATE OF WISCONSIN
DEPARTMENT OF TRANSPORTATION

APPROVED
May 2021 — DATE
/S/ Andrew Heidtke — WORK ZONE ENGINEE
FHWA

6
SDD 15C11 - 09b

GENERAL NOTES

DIAGONALS ARE OPTIONAL WHEN PAINED ISLAND IS LESS THAN 6 FEET AT WIDEST POINT.

DIRECTION OF TRAVEL

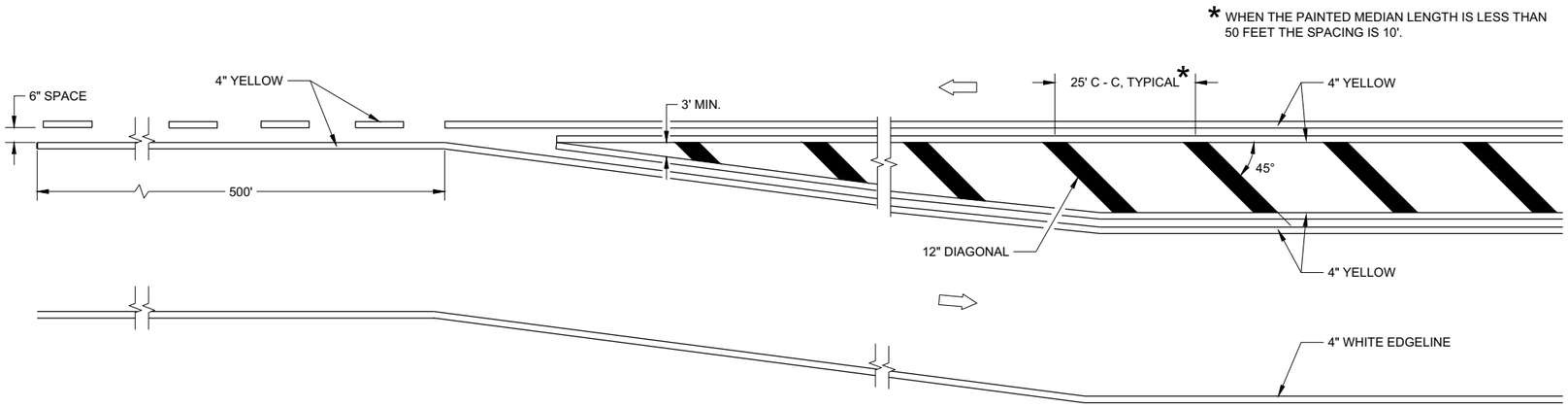

MEDIAN ISLAND DETAIL

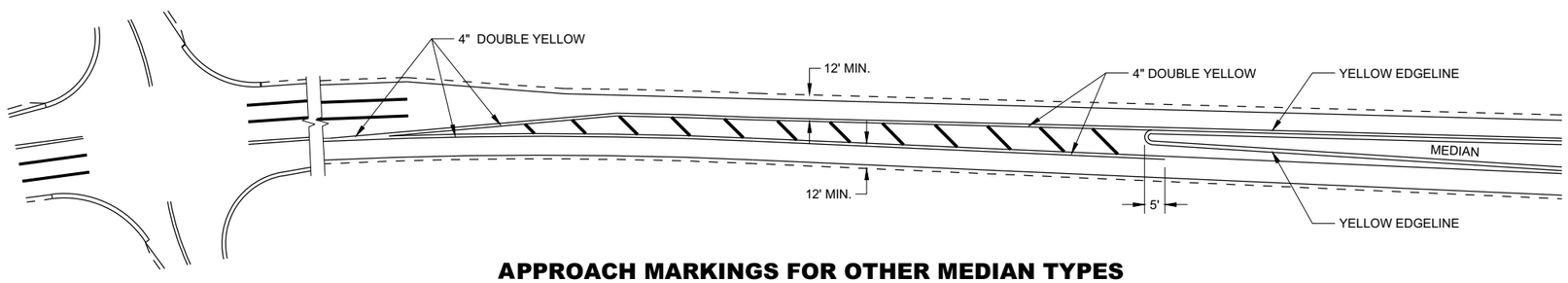

APPROACH MARKINGS FOR OTHER MEDIAN TYPES

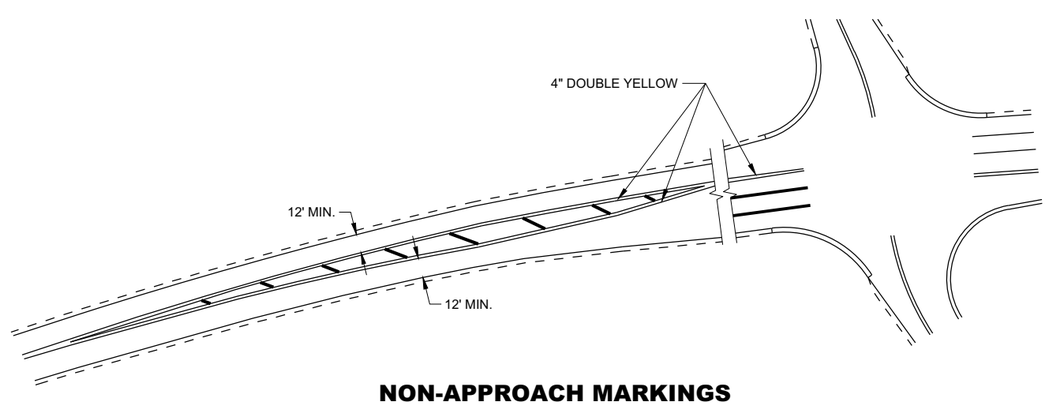

NON-APPROACH MARKINGS

6

6

SDD 15C18 - 05a

SDD 15C18 - 05a

MEDIAN ISLAND PAVEMENT MARKINGS

STATE OF WISCONSIN
DEPARTMENT OF TRANSPORTATION

APPROVED

February 2021 — DATE

/S/ Matthew R. Rauch — STATE SIGNING AND MAR ENGINEER

FHWA

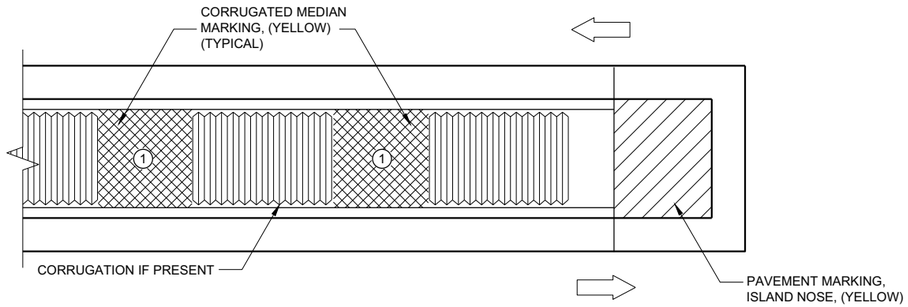

MEDIAN ISLAND WITH SQUARE BLUNT NOSE

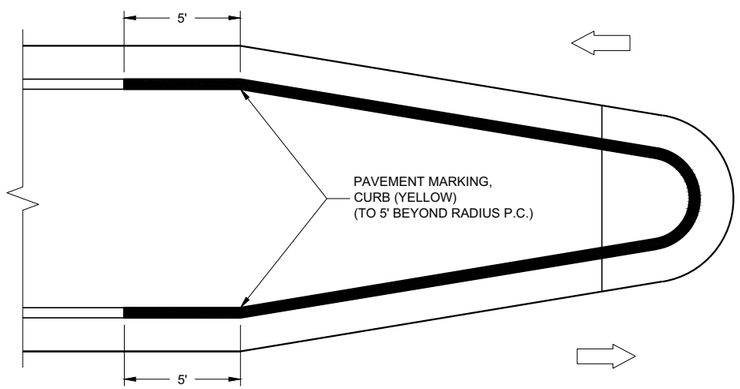

MEDIAN ISLAND WITH ROUND BLUNT NOSE

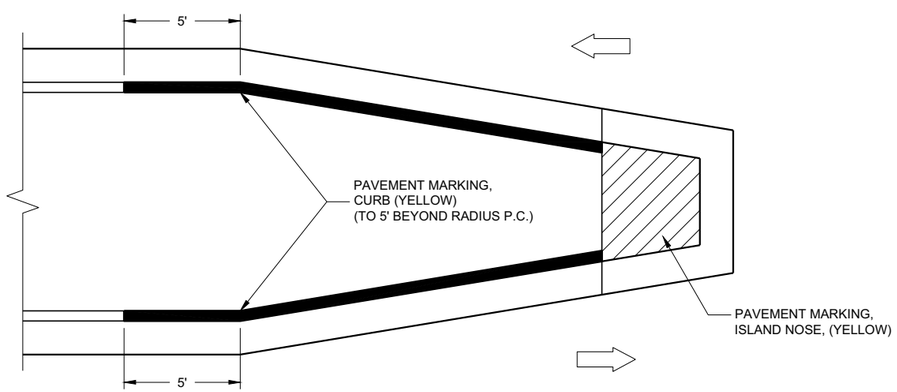

MEDIAN ISLAND WITH SLOPED NOSE

**TYPICAL PLACEMENT OF
PAVEMENT MARKING ON MEDIAN ISLANDS**

GENERAL NOTES

WHEN CONCRETE CORRUGATED MEDIAN IS CONSTRUCTED TO SEPARATE TRAFFIC OPERATING IN THE OPPOSING DIRECTION, YELLOW PAVEMENT MARKING SHALL BE APPLIED TO THE FLAT PORTION OF THE CONCRETE CORRUGATED MEDIAN. THE ITEM OF PAVEMENT MARKING, CONCRETE CORRUGATED MEDIAN, WILL BE MEASURED IN PLACE AND ACCEPTED IN ACCORDANCE WITH THE CONTRACT AND PAID FOR AT THE CONTRACT UNIT PRICE PER SQUARE FOOT.

ISLAND NOSE MARKING

CURB MARKING

CORRUGATED MEDIAN MARKING

DIRECTION OF TRAVEL

**PAVEMENT MARKINGS,
MEDIAN ISLAND NOSE**

STATE OF WISCONSIN
DEPARTMENT OF TRANSPORTATION

APPROVED
February 2021 — DATE
/S/ Matthew R. Rauch — STATE SIGNING AND MAR ENGINEER
FHWA

6

SDD 15C18 - 05b

REQUIREMENTS FOR EDGE LINES		
POSTED SPEED	IS THERE CONTINUOUS LIGHTING?	
	YES	NO
≤ 30 MPH	NO	OPTIONAL
35 OR 40 MPH	OPTIONAL	RECOMMENDED
≥ 45 MPH	RECOMMENDED	REQUIRED

GENERAL NOTES

APPLIES TO ISLANDS AT LEFT TURNS AT ONE WAY ROADWAYS AS WELL.

SEE MISCELLANEOUS QUANTITIES FOR SIGN SIZE.

(1) MARK CURB NOSES YELLOW.

(2) MARK ACCORDING TO TABLE.

DIRECTION OF TRAVEL

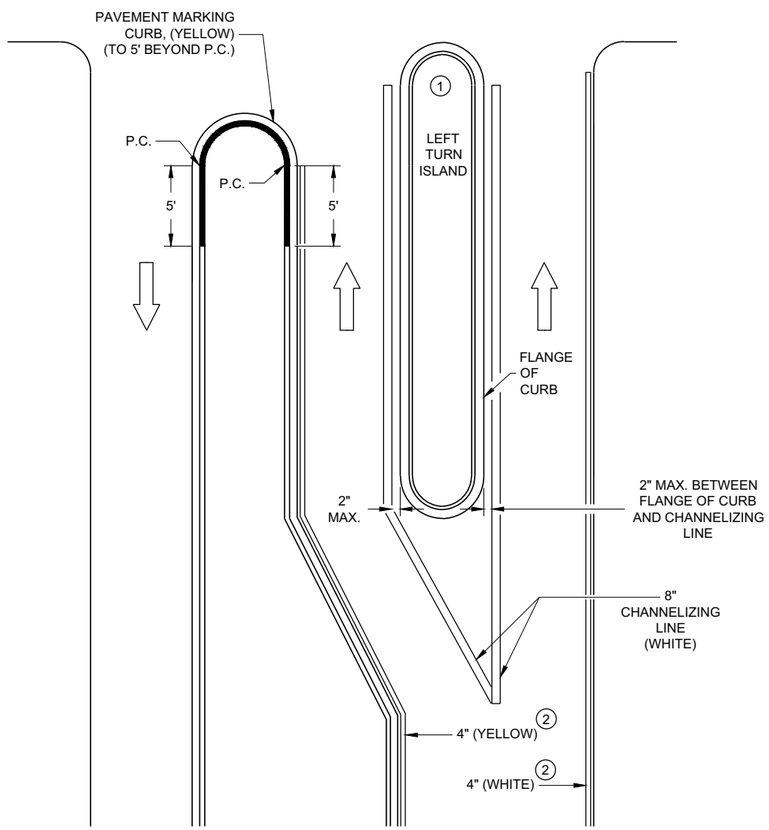

LEFT TURN & MEDIAN ISLAND

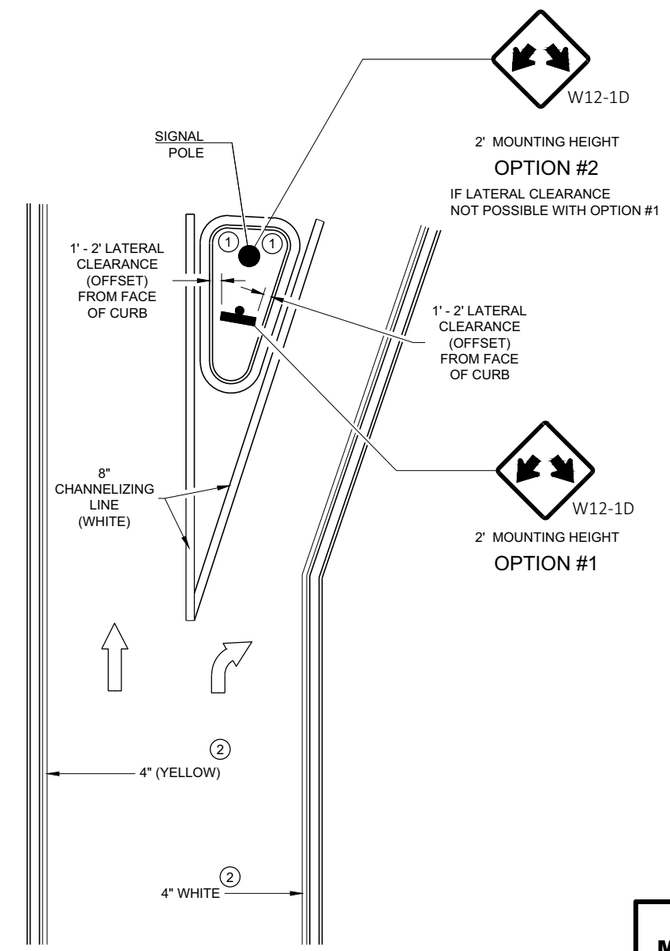

RIGHT TURN ISLAND

MEDIAN PAVEMENT MARKINGS, DOUBLE ARROW WARNING SIGN PLACEMENT

STATE OF WISCONSIN
DEPARTMENT OF TRANSPORTATION

APPROVED
February 2021 — DATE
/S/ Matthew R. Rauch — STATE SIGNING AND MAF ENGINEER
FHWA

6

SDD 15C18 - 05c

6

SDD 15C18 - 05c

GENERAL NOTES

STOP SIGN SHALL BE PLACED A MINIMUM OF 6 FEET TO A MAXIMUM OF 50 FEET FROM THE EDGELINE LOCATION.

1. 18-INCH STOP LINES MAY BE DELETED OR ADDED BY THE REGION MARKING ENGINEER BASED ON VISIBILITY AND SIGHT LINES.
2. NO STOP LINE IS REQUIRED IF STOP SIGN IS LESS THAN OR EQUAL TO 40 FEET FROM THE EDGELINE.
3. NO STOP LINE IS REQUIRED IF STOP SIGN IS LESS THAN OR EQUAL TO 30 FEET FROM THE FLANGELINE EXTENSION.
4. MOVE CLOSER TO THE EDGE OF TRAVEL LINE AS NEEDED FOR VISIBILITY AND SIGHT LINES (NO CLOSER THAN 4 FEET).
5. LADDER BAR CROSSWALKS SHOULD ONLY BE USED FOR MID BLOCK CROSSINGS. USE 2 - 6" TRANSVERSE LINES INSTEAD.

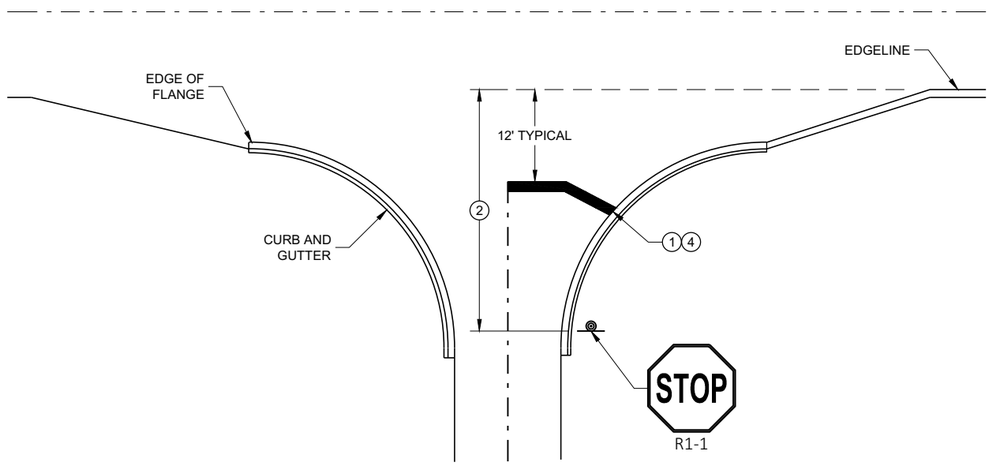

TYPICAL STOP LINE PAVEMENT MARKING WITH CURB AND GUTTER

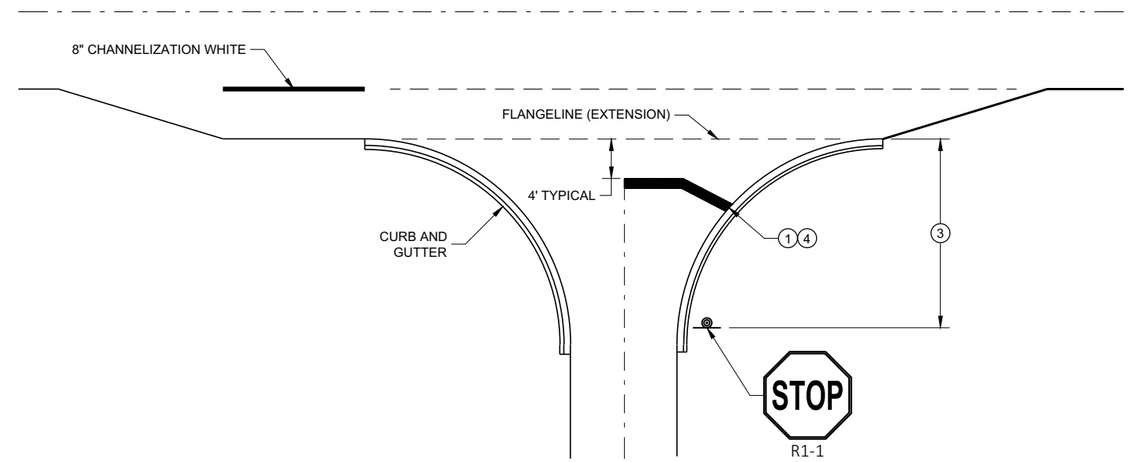

TYPICAL STOP LINE PAVEMENT MARKING FOR SIDEROADS WITH RIGHT TURN LANE

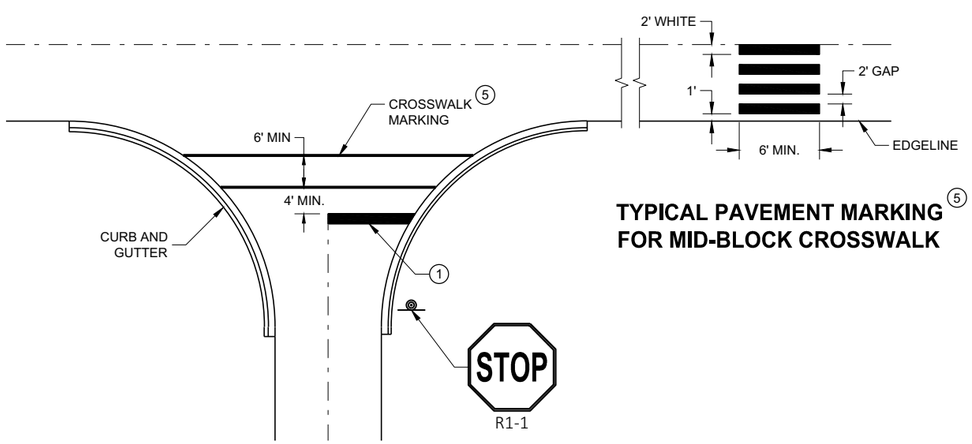

TYPICAL STOP LINE PAVEMENT MARKING FOR SIDEROADS WITH CROSSWALK MARKING

TYPICAL PAVEMENT MARKING 5 FOR MID-BLOCK CROSSWALK

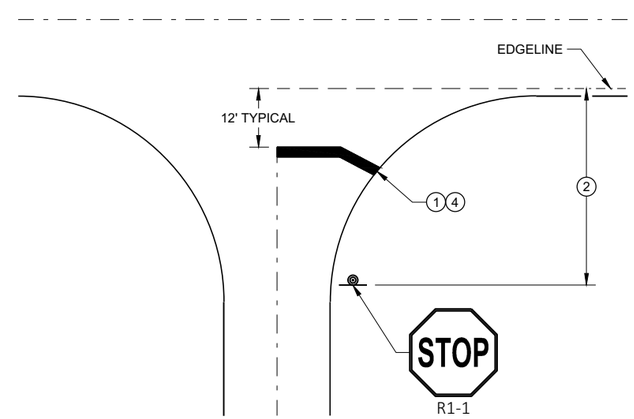

TYPICAL STOP LINE PAVEMENT MARKING WITHOUT CURB AND GUTTER

STOP LINE AND CROSSWALK PAVEMENT MARKING

STATE OF WISCONSIN
DEPARTMENT OF TRANSPORTATION

APPROVED
November 2019 — DATE
/S/ Matthew Rauch — STATE SIGNING AND MAF ENGINEER
FHWA

6

SDD 15C33 - 04

GENERAL NOTES

OMIT EDGE LINES THROUGH INTERSECTIONS. CONTINUE EDGE LINES THROUGH DRIVEWAYS.

1. WHEN DISTANCE "A" IS LESS THAN 250 FEET, OMIT LANE LINE.
2. WHEN DISTANCE "B" IS LESS THAN 100 FEET, OMIT CHANNELIZING LANE LINE.
3. BARRIER LINE ENDS AT SIDE ROAD PAVEMENT / SURFACE EDGE EXTENSION.
4. BARRIER LINE STARTS 500 FEET PRIOR TO THE BYPASS TAPER.

LEGEND

DIRECTION OF TRAVEL

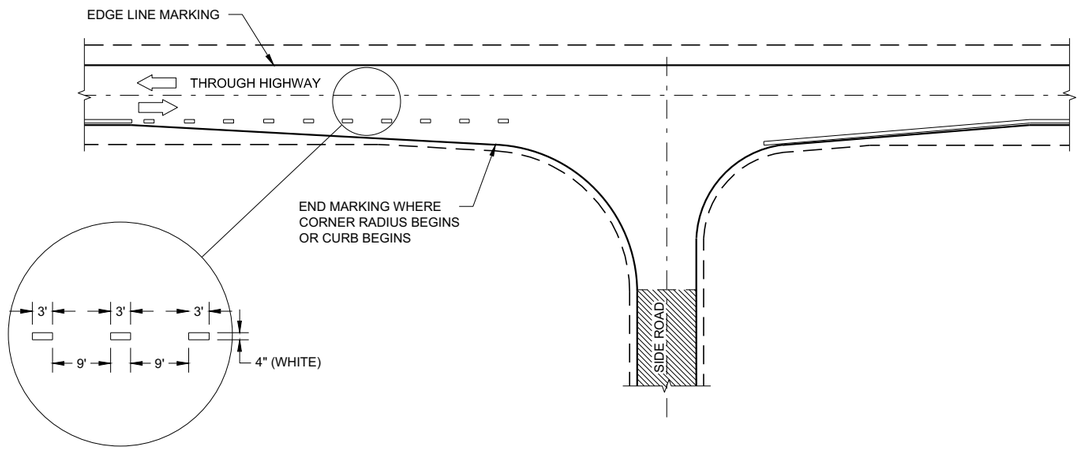

MINOR INTERSECTION

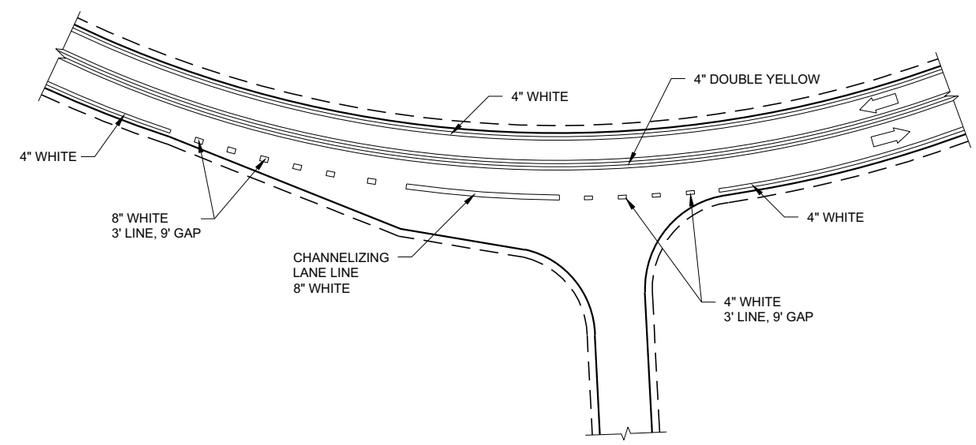

INTERSECTION ON OUTSIDE OF CURVE

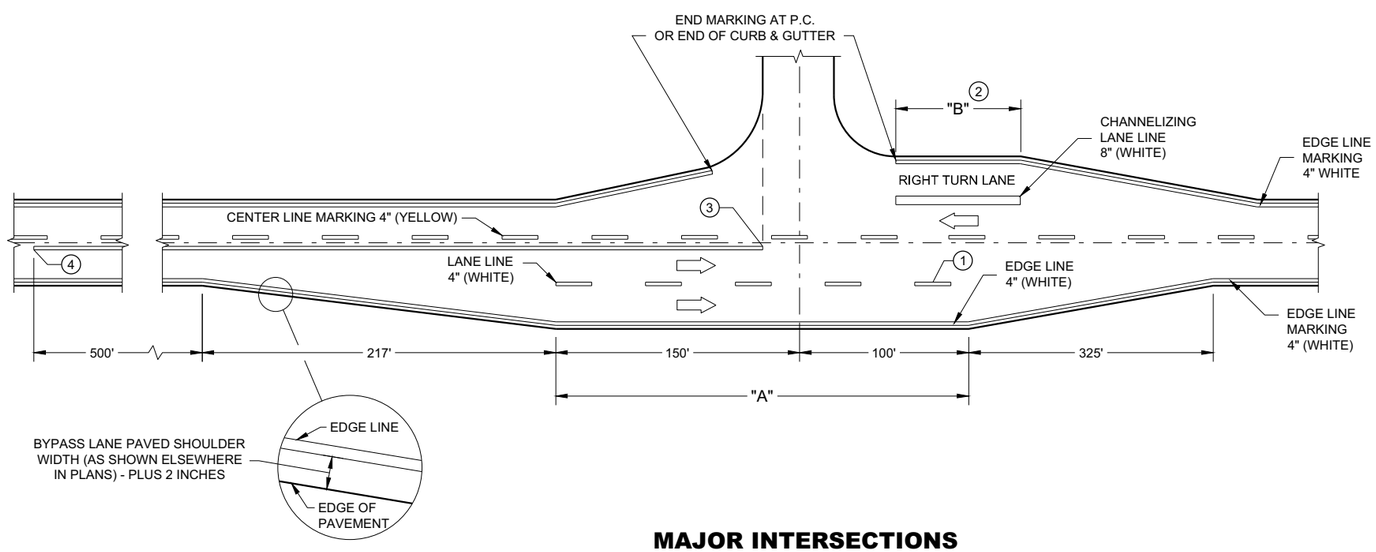

MAJOR INTERSECTIONS

(INTERSECTION WITH FULL RIGHT TURN LANE OR BYPASS LANE)

PAVEMENT MARKING (INTERSECTIONS)

STATE OF WISCONSIN
DEPARTMENT OF TRANSPORTAT

6

SDD 15C35 - 04a

LEGEND

- SIGN ON PERMANENT SUPPORT
- TRAFFIC CONTROL DRUM
- TRAFFIC CONTROL DRUM WITH TYPE "C" STEADY BURN LIGHT
- TYPE III BARRICADE WITH ATTACHED SIGN
- TYPE "A" WARNING LIGHT (FLASHING)
- FLASHING ARROW BOARD
- DIRECTION OF TRAFFIC
- REMOVE PAVEMENT MARKING (SEE GENERAL NOTES)
- WORK AREA

GENERAL NOTES

FOR WORK ON ROADWAYS WITH SPEEDS GREATER THAN 45MPH, USE SDD 15D12.

THIS LANE CLOSURE DETAIL IS TYPICAL FOR CLOSING THE LEFT LANE. FOR A RIGHT LANE CLOSURE, REVERSE THE TRAFFIC CONTROL.

THIS DETAIL MAY BE USED FOR ROADWAYS WITH EITHER TWO OR THREE LANES IN EACH DIRECTION.

ALL SIGNS ARE 48"X48" UNLESS OTHERWISE NOTED. IF NECESSARY DUE TO SPACE CONSTRAINTS IN URBAN AREAS, 36"X 36" SIGNS MAY BE USED IF APPROVED BY REGIONAL TRAFFIC UNIT.

"WO" SIGN IS THE SAME AS "W" SIGN EXCEPT THE BACKGROUND IS ORANGE.

ANY SIGNS TEMPORARY OR EXISTING, WHICH CONFLICT WITH THE TRAFFIC CONTROL "IN USE" SHALL BE REMOVED OR COVERED AS NEEDED AND AS APPROVED BY THE ENGINEER. NO WARNING LIGHTS SHALL BE WORKING ON COVERED OR "DOWNED" SIGNS.

SIGNS THAT WILL BE IN PLACE LESS THAN 7 CONTINUOUS DAYS AND NIGHTS OR THAT WILL BE PLACED IN A CLOSED LANE MAY BE MOUNTED ON TEMPORARY SUPPORTS.

THE EXACT NUMBER, LOCATION, AND SPACING OF ALL SIGNS AND DEVICES SHALL BE ADJUSTED TO FIT FIELD CONDITIONS AS APPROVED BY THE ENGINEER.

THE SPACING BETWEEN TRAFFIC CONTROL SIGNS SHOULD BE ADJUSTED TO NOT CONFLICT WITH AND TO PROVIDE A MINIMUM OF 200 FEET (500' DESIRABLE) DISTANCE TO EXISTING SIGNS THAT WILL REMAIN IN PLACE

W20-1A, G20-1 AND G20-2A SIGNS ARE NOT REQUIRED IF THE LANE CLOSURE IS WITHIN A LARGER WORK ZONE WHERE THESE SIGNS ARE ALREADY PRESENT.

REMOVE PAVEMENT MARKINGS AND PLACE TEMPORARY PAVEMENT MARKING, REMOVABLE TAPE IF LANE CLOSURE IS TO BE IN PLACE FOR 4 OR MORE CONTINUOUS DAYS AND NIGHTS.

CONSIDER GEOMETRICS WHEN LOCATING SIGNS AND ARROW BOARDS SO THE APPROACHING DRIVER HAS A CLEAR VIEW OF THE ARROW BOARDS AND LANE CLOSURE DRUMS FOR A MINIMUM 1500 FEET IN FRONT OF DRUMS.

BARRICADES IN A CLOSED LANE THAT MUST BE MOVED FOR A WORK OPERATION SHALL BE IMMEDIATELY REESTABLISHED UPON COMPLETION OF THE OPERATION, OR FOR CONTINUING OPERATIONS, AT THE END OF EACH WORKING DAY.

CHANNELIZING DEVICES PLACED ADJACENT TO WORK AREA SHALL BE PULLED BACK FROM THE TRAVEL LANE WHEN WORK IS NOT IN PROGRESS.

WARNING LIGHTS ARE NOT REQUIRED IF THE LANE CLOSURE IS A DAYTIME ONLY OPERATION.

1. OMIT G20-1 SIGNS IF LENGTH OF WORK AREA IS 2 MILES OR LESS.
2. WHERE THE SHOULDER OR TERRACE HAS INSUFFICIENT SPACE TO PLACE THE ARROW BOARD AS SHOWN, PLACE THE ARROW BOARD AT THE END OF THE TAPER.

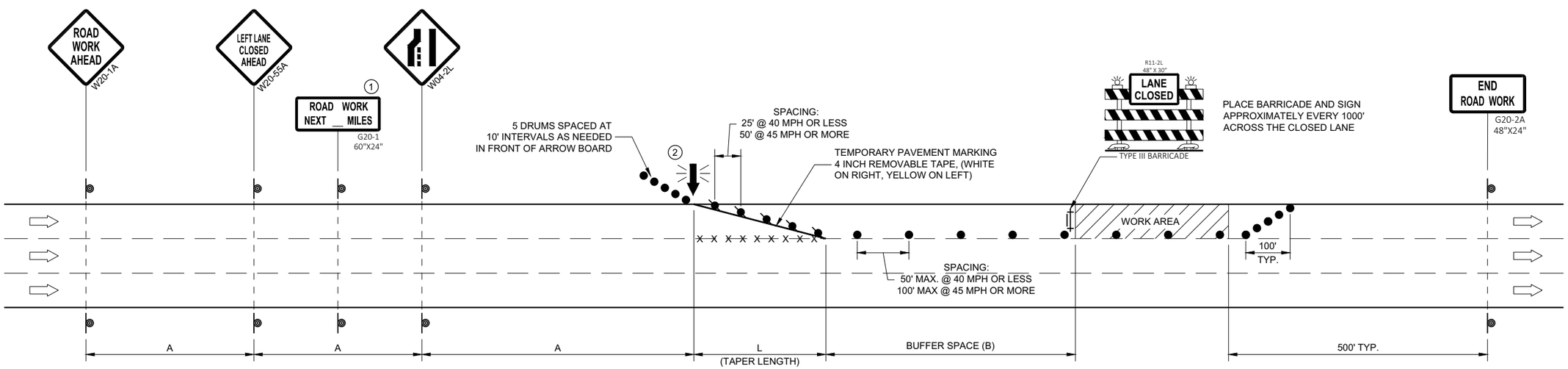

POSTED SPEED LIMIT PRIOR TO WORK STARTING (MPH)	ADVANCE WARNING SIGN SPACING (A) FEET	TAPER LENGTH (12 FT. LANE) (L) FEET	BUFFER SPACE (B) FEET
25	200'	125'	55'
30	200'	180'	85'
35	350'	245'	120'
40	350'	320'	170'
45	500'	540'	220'

TRAFFIC CONTROL, SINGLE LANE CLOSURE, DIVIDED NON-FREEWAY/EXPRESSWAY

STATE OF WISCONSIN
DEPARTMENT OF TRANSPORTATION

APPROVED
May 2020 — DATE
/S/ Andrew Heidtke — STATEWIDE WORK ZONE T SAFETY ENGINEER
FHWA

6

SDD 15D20 - 05a

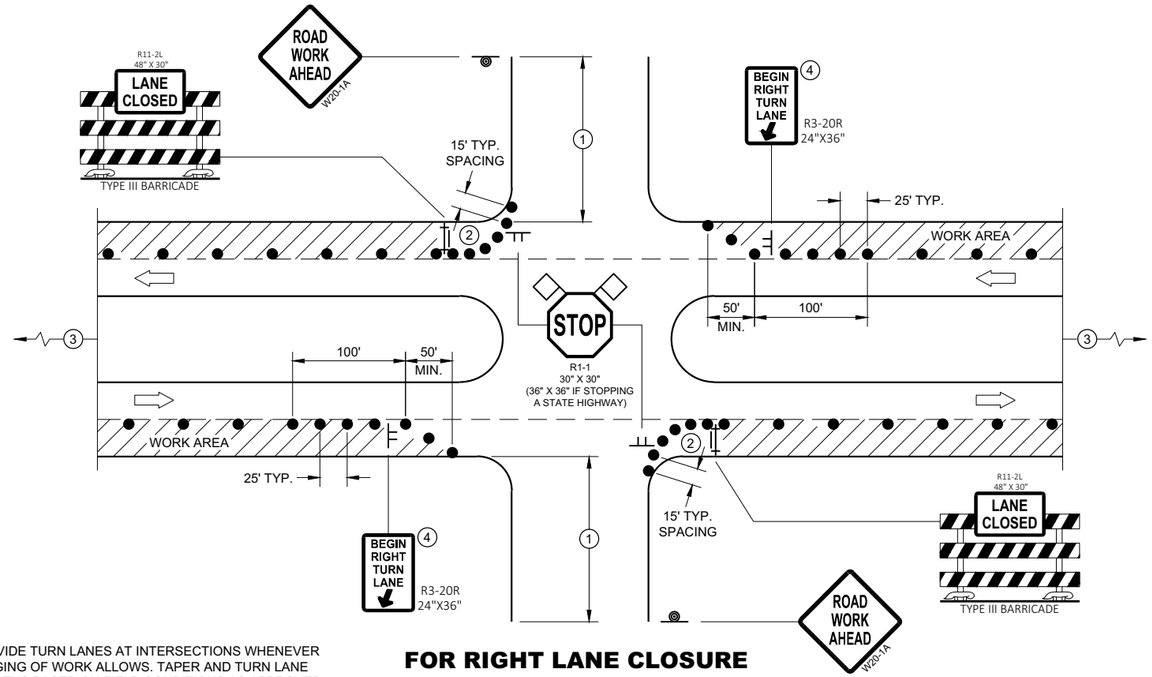

PROVIDE TURN LANES AT INTERSECTIONS WHENEVER STAGING OF WORK ALLOWS. TAPER AND TURN LANE LENGTHS BASED ON FIELD CONDITIONS AS APPROVED BY THE ENGINEER.

FOR RIGHT LANE CLOSURE AT INTERSECTION

GENERAL NOTES

ALL SIGNS ARE 48"X48" UNLESS OTHERWISE NOTED. IF NECESSARY DUE TO SPACE CONSTRAINTS IN URBAN AREAS, 36" X 36" MAY BE USED IF APPROVED BY THE DISTRICT TRAFFIC UNIT.

"WO" SIGN IS THE SAME AS "W" SIGN EXCEPT THE BACKGROUND IS ORANGE.

ANY SIGNS TEMPORARY OR EXISTING, WHICH CONFLICT WITH THE TRAFFIC CONTROL "IN USE" SHALL BE REMOVED OR COVERED AS NEEDED AND AS APPROVED BY THE ENGINEER. NO WARNING LIGHTS SHALL BE WORKING ON COVERED OR "DOWNED" SIGNS.

THE EXACT NUMBER, LOCATION, AND SPACING OF ALL SIGNS AND DEVICES SHALL BE ADJUSTED TO FIT FIELD CONDITIONS AS APPROVED BY THE ENGINEER.

THE SPACING BETWEEN TRAFFIC CONTROL SIGNS SHOULD BE ADJUSTED TO NOT CONFLICT WITH AND TO PROVIDE A MINIMUM OF 200 FEET (500' DESIRABLE) DISTANCE TO EXISTING SIGNS THAT WILL REMAIN IN PLACE

SIGN LAYOUTS SHALL BE IN ACCORDANCE WITH THE FHWA'S MANUAL OF STANDARD HIGHWAY SIGNS OR THE WISCONSIN STANDARD SIGN PLATES.

SIGNS THAT WILL REMAIN IN PLACE LESS THAN 7 CONTINUOUS DAYS AND NIGHTS OR THAT WILL BE PLACED IN A CLOSED LANE MAY BE MOUNTED ON PORTABLE SUPPORTS.

BARRICADES IN A CLOSED LANE THAT MUST BE MOVED FOR A WORK OPERATION SHALL BE IMMEDIATELY REESTABLISHED UPON COMPLETION OF THE OPERATION, OR FOR CONTINUING OPERATIONS, AT THE END OF EACH WORKING DAY.

CHANNELIZING DEVICES PLACED ADJACENT TO WORK AREA SHALL BE PULLED BACK FROM THE TRAVEL LANE WHEN WORK IS NOT IN PROGRESS.

1. 500' TYPICAL OR AT LAST INTERSECTION, WHICHEVER IS CLOSER.
   350' IF 35 - 40 MPH.
   200' IF 25 - 30 MPH.
2. ALSO USE BARRICADE AND 15 FOOT TYPICAL DRUM SPACING AT COMMERCIAL DRIVEWAYS
3. SEE SEPARATE LANE CLOSURE DETAIL FOR ADDITIONAL TRAFFIC CONTROL.
4. MINIMUM MOUNTING HEIGHT OF 5 FEET FROM EDGE OF PAVEMENT (AT EDGE LINE LOCATION) TO BOTTOM OF SIGN.

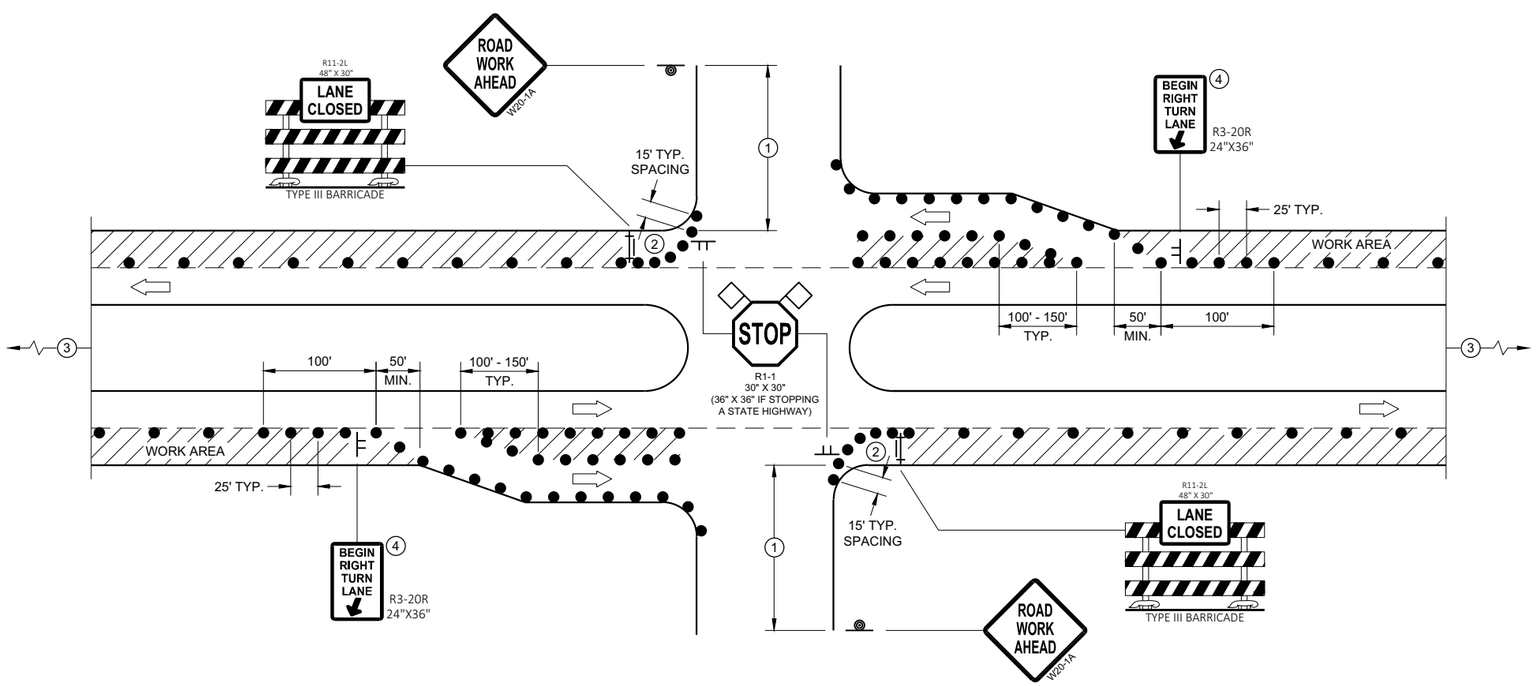

FOR RIGHT LANE CLOSURE AT INTERSECTION (WITH RIGHT TURN BAY OPEN)

LEGEND

- SIGN ON TEMPORARY SUPPORT
- SIGN ON PERMANENT SUPPORT
- TRAFFIC CONTROL DRUM
- TYPE III BARRICADE WITH ATTACHED SIGN
- DIRECTION OF TRAFFIC
- FLAGS, 16" X 16" MIN., ORANGE
- WORK AREA

TRAFFIC CONTROL, INTERSECTION WITHIN SINGLE RIGHT LANE CLOSURE

STATE OF WISCONSIN
DEPARTMENT OF TRANSPORTAT

6

SDD 15D21 - 07a

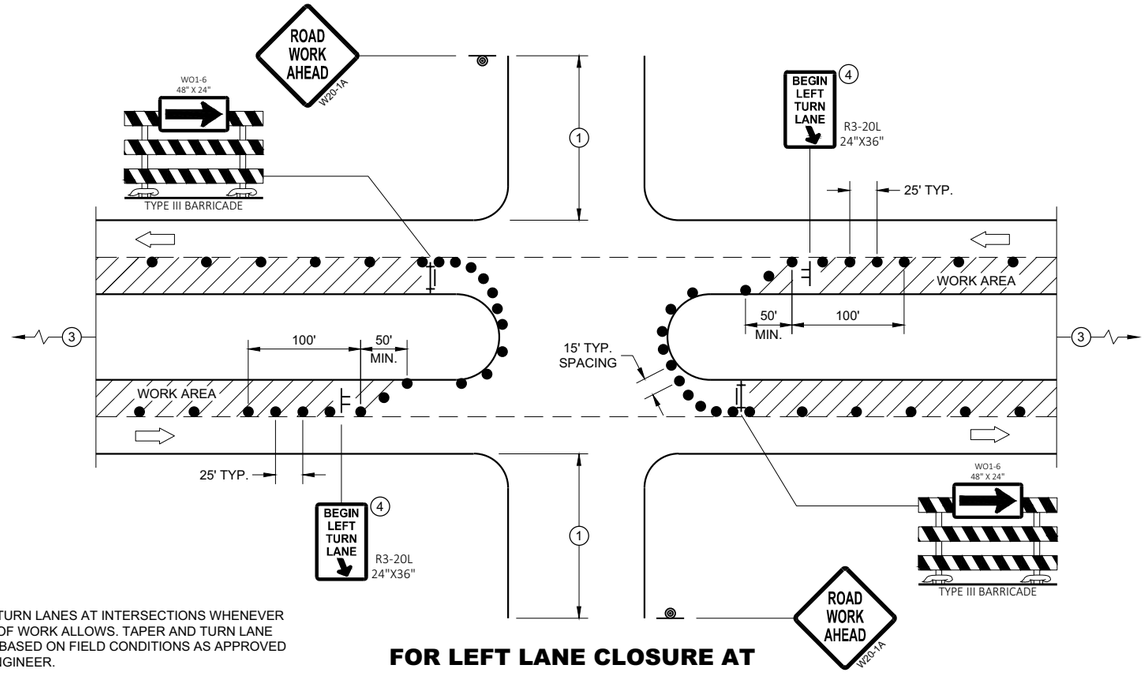

PROVIDE TURN LANES AT INTERSECTIONS WHENEVER STAGING OF WORK ALLOWS. TAPER AND TURN LANE LENGTHS BASED ON FIELD CONDITIONS AS APPROVED BY THE ENGINEER.

FOR LEFT LANE CLOSURE AT INTERSECTION OR MEDIAN OPENING

GENERAL NOTES

ALL SIGNS ARE 48"X48" UNLESS OTHERWISE NOTED. IF NECESSARY DUE TO SPACE CONSTRAINTS IN URBAN AREAS, 36" X 36" MAY BE USED IF APPROVED BY THE DISTRICT TRAFFIC UNIT.

"WO" SIGN IS THE SAME AS "W" SIGN EXCEPT THE BACKGROUND IS ORANGE.

ANY SIGNS TEMPORARY OR EXISTING, WHICH CONFLICT WITH THE TRAFFIC CONTROL "IN USE" SHALL BE REMOVED OR COVERED AS NEEDED AND AS APPROVED BY THE ENGINEER. NO WARNING LIGHTS SHALL BE WORKING ON COVERED OR "DOWNED" SIGNS.

THE EXACT NUMBER, LOCATION, AND SPACING OF ALL SIGNS AND DEVICES SHALL BE ADJUSTED TO FIT FIELD CONDITIONS AS APPROVED BY THE ENGINEER.

THE SPACING BETWEEN TRAFFIC CONTROL SIGNS SHOULD BE ADJUSTED TO NOT CONFLICT WITH AND TO PROVIDE A MINIMUM OF 200 FEET (500' DESIRABLE) DISTANCE TO EXISTING SIGNS THAT WILL REMAIN IN PLACE

SIGN LAYOUTS SHALL BE IN ACCORDANCE WITH THE FHWA'S MANUAL OF STANDARD HIGHWAY SIGNS OR THE WISCONSIN STANDARD SIGN PLATES.

SIGNS THAT WILL REMAIN IN PLACE LESS THAN 7 CONTINUOUS DAYS AND NIGHTS OR THAT WILL BE PLACED IN A CLOSED LANE MAY BE MOUNTED ON PORTABLE SUPPORTS.

BARRICADES IN A CLOSED LANE THAT MUST BE MOVED FOR A WORK OPERATION SHALL BE IMMEDIATELY REESTABLISHED UPON COMPLETION OF THE OPERATION, OR FOR CONTINUING OPERATIONS, AT THE END OF EACH WORKING DAY.

CHANNELIZING DEVICES PLACED ADJACENT TO WORK AREA SHALL BE PULLED BACK FROM THE TRAVEL LANE WHEN WORK IS NOT IN PROGRESS.

1. 500' TYPICAL OR AT LAST INTERSECTION, WHICHEVER IS CLOSER.
   350' IF 35 - 40 MPH.
   200' IF 25 - 30 MPH.
2. ALSO USE BARRICADE AND 15 FOOT TYPICAL DRUM SPACING AT COMMERCIAL DRIVEWAYS
3. SEE SEPARATE LANE CLOSURE DETAIL FOR ADDITIONAL TRAFFIC CONTROL.
4. MINIMUM MOUNTING HEIGHT OF 5 FEET FROM EDGE OF PAVEMENT (AT EDGE LINE LOCATION) TO BOTTOM OF SIGN.

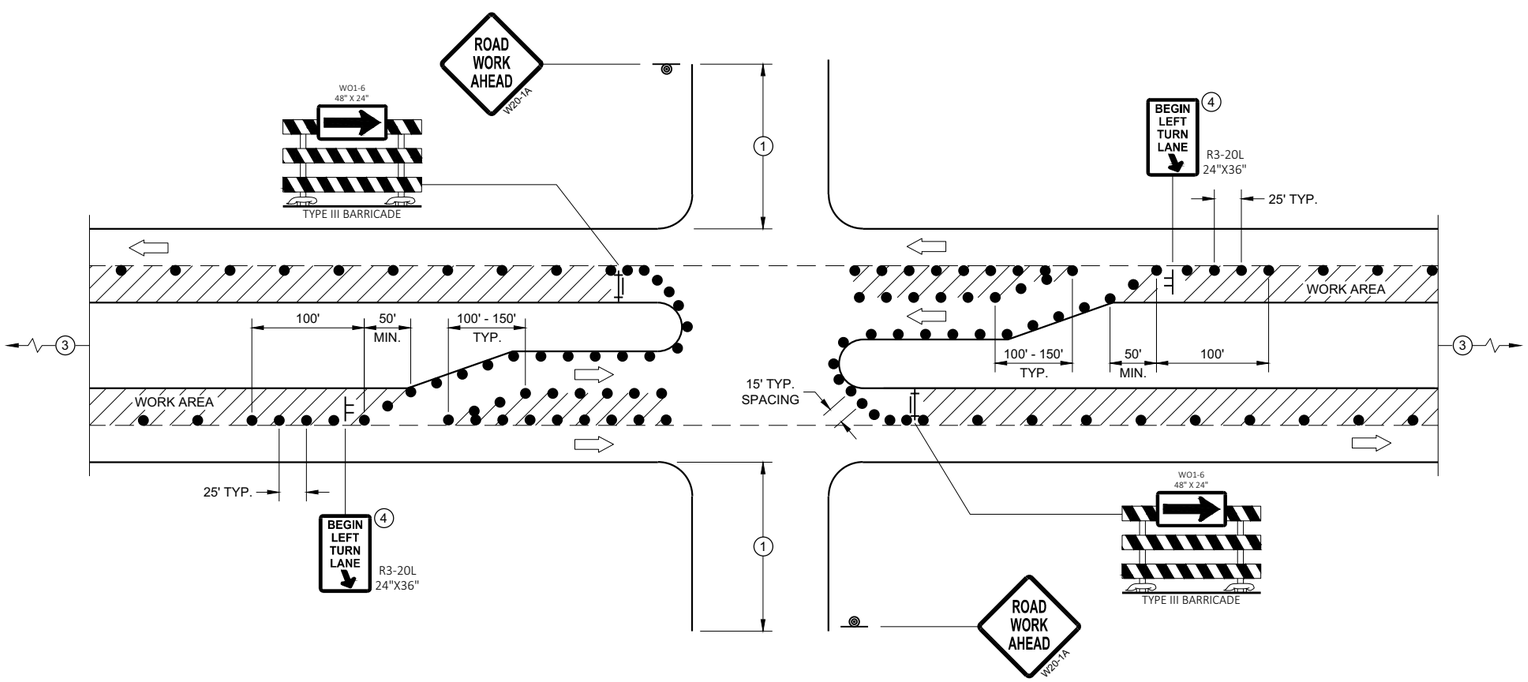

FOR LEFT LANE CLOSURE AT INTERSECTION OR MEDIAN OPENING (WITH LEFT TURN BAY OPEN)

LEGEND

- SIGN ON TEMPORARY SUPPORT
- SIGN ON PERMANENT SUPPORT
- TRAFFIC CONTROL DRUM
- TYPE III BARRICADE WITH ATTACHED SIGN
- DIRECTION OF TRAFFIC
- FLAGS, 16" X 16" MIN., ORANGE
- WORK AREA

TRAFFIC CONTROL, INTERSECTION WITHIN SINGLE LEFT LANE CLOSURE

STATE OF WISCONSIN
DEPARTMENT OF TRANSPORTATION

APPROVED
August 2020 — DATE
/S/ Andrew Heidtke — WORK ZONE ENGINEER
FHWA

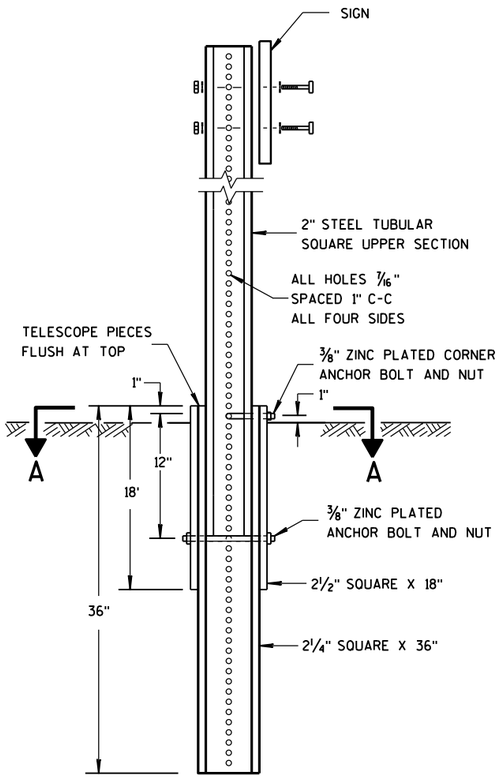

DETAIL OF TUBULAR STEEL SIGN POST

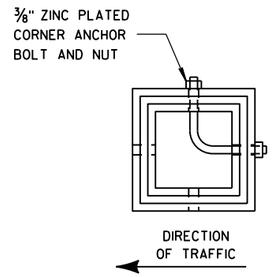

SECTION A-A

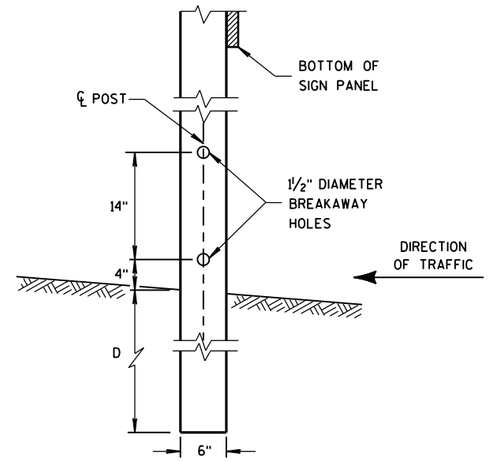

4"x6" WOOD POST MODIFICATION

GENERAL NOTES

1. 6 FEET FROM THE EDGE OF PAVEMENT (EDGE LINE LOCATION) UNLESS OTHERWISE DIRECTED BY THE PROJECT ENGINEER. LATERAL OFFSET SHOULD BE ADJUSTED TO AVOID THE DITCH FLOWLINE.
2. THE EXISTENCE OF CURB AND GUTTER DOES NOT IN ITSELF MANDATE THE VERTICAL CLEARANCE ILLUSTRATED. THAT HEIGHT IS TYPICALLY MEASURED WHERE THERE IS SIDEWALK ADJACENT TO THE ROADWAY OR PARKING IS PERMITTED. IN THE ABSENCE OF SIDEWALK, VERTICAL CLEARANCE IS MEASURED FROM THE TOP OF THE CURB. IF NO SIDEWALK AND NO PARKING, VERTICAL CLEARANCE MAY BE REDUCED TO 5 FOOT MINIMUM. OFFSET OF SIGNS IS MEASURED FROM THE CURB FLOWLINE.
3. FOR SIGNS REQUIRING 4 POSTS, SPACE INTERMEDIATE POSTS EVENLY.

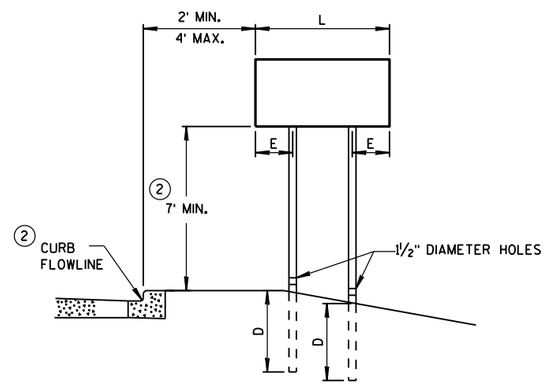

URBAN AREA

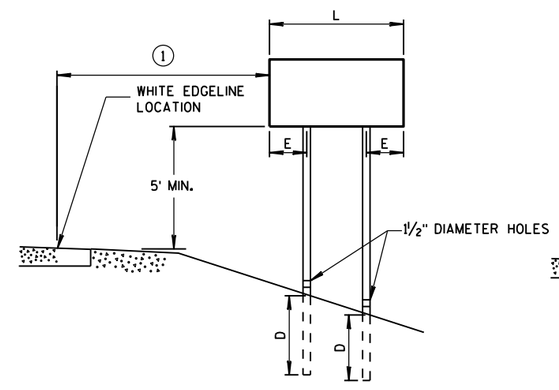

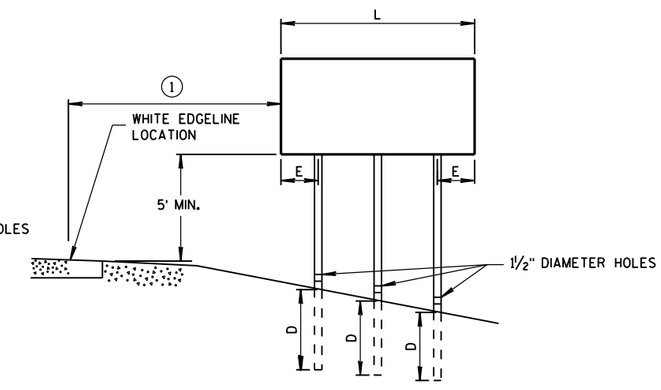

RURAL AREA

POST MOUNTING DETAIL FOR TEMPORARY TRAFFIC CONTROL FIXED MESSAGE SIGNS

TUBULAR STEEL POSTS

AREA OF SIGN INSTALLATION (SQ. FT.)	NUMBER OF REQUIRED TUBULAR STEEL POSTS
9 OR LESS	1
GREATER THAN 9 LESS THAN OR EQUAL TO 18	2
GREATER THAN 18 LESS THAN OR EQUAL TO 27	3

SIGNS WIDER THAN 3 FEET OR LARGER THAN 9 SQ. FT. SHALL BE MOUNTED ON MULTIPLE POSTS (SEE ABOVE TABLE).

SIGNS LARGER THAN 27 SQ. FT. SHALL NOT BE MOUNTED ON TUBULAR STEEL POSTS.

WOOD POST EMBEDMENT DEPTH

AREA OF SIGN INSTALLATION (SQ. FT.)	D (MIN)
20 OR LESS	4'
GREATER THAN 20	5'

4" X 6" WOOD POST

POST SPACING REQUIREMENTS		NUMBER OF WOOD POSTS REQUIRED
L	E	
48" OR LESS AND LESS THAN 20 SQ. FT.	-	1
LESS THAN 60"	12"	2
60" TO 120"	L/5	2
GREATER THAN 120" LESS THAN 168"	12"	3
168" AND GREATER	12"	4

SEE NOTE 3

TEMPORARY TRAFFIC CONTROL SIGN MOUNTING

STATE OF WISCONSIN
DEPARTMENT OF TRANSPO

6

S.D.D. 15 D 38-2a

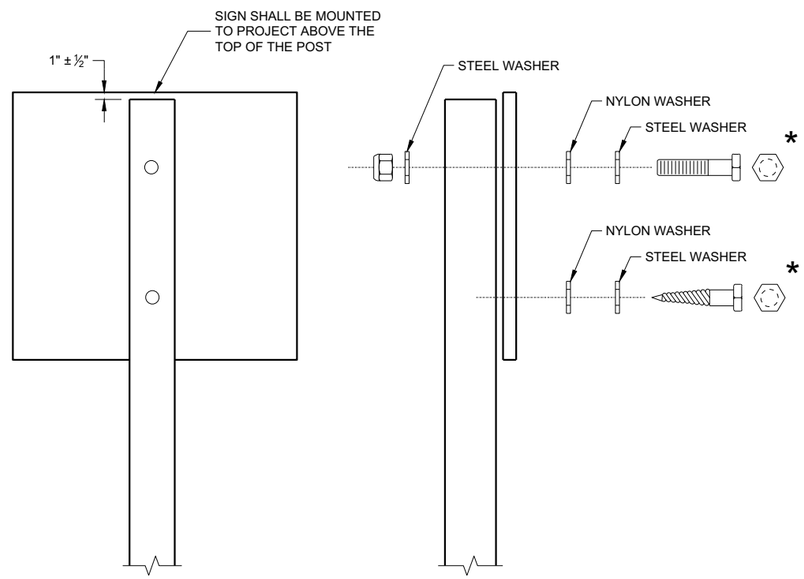

NUTS, BOLTS AND LAGS USED FOR MOUNTING SIGNS SHALL HAVE HEXAGONAL HEADS AND SHALL BE EITHER:

A. HOT DIP GALVANIZED IN ACCORDANCE WITH ASTM DESIGNATION: A 153, CLASS D, OR SC 3
B. ELECTRO-GALVANIZED IN ACCORDANCE WITH ASTM DESIGNATION: B 633, TYPE III, SC 3

THREADS ON BOLTS AND NUTS SHALL BE MANUFACTURED WITH SUFFICIENT ALLOWANCE FOR THE CADMIUM PLATE OR GALVANIZED COATING TO PERMIT THE NUTS TO RUN FREELY ON THE BOLTS.

WOOD POST (4" x 6")
LAG SCREWS - ⅜" x 3"
MACHINE BOLTS - 5/16" x 6 ½" OR 7" LENGTH W/NUTS

SQUARE STEEL POST (2" x 2")
MACHINE BOLTS - ⅜" x 3 ¼" LENGTH W/NUTS
RIVETS - 9/32" (6605-9-6) BULB-TITE, TRI-FOLD, ALUMINUM BODY/MANDREL O.D. FLANGE 0.720 - 0.765 INCH, GRIP RANGE 0.042 - 0.375 INCH

WASHERS (ALL POSTS) -
1 ¼" O.D. x ⅜" I.D. x 1/16" STEEL
1 ¼" O.D. x ⅜" I.D. x 0.080 NYLON

* TWO DIFFERENT FASTENING SYSTEMS ARE SHOWN FOR ILLUSTRATION PURPOSES. ON ANY INDIVIDUAL SIGN, EITHER ONE OR THE OTHER SYSTEM SHALL BE USED. ACTUAL NUMBER OF FASTENERS PER SIGN VARIES WITH THE SIGN AREA. FOR A SINGLE POST INSTALLATION, ALL SIGNS GREATER THAN 9 SQ. FT. REQUIRE THE USE OF 3 FASTENERS.

6

6

SDD 15D38 - 02b

ATTACHMENT OF SIGNS TO POSTS

STATE OF WISCONSIN
DEPARTMENT OF TRANSPORTATION

APPROVED
June 2017 — DATE
/S/ Andrew Heidtke — WORK ZONE ENGINEE
FHWA

SDD 15D38 - 02b

LEGEND

- TYPE III BARRICADE WITH ATTACHED SIGN
- SIGN ON PERMANENT SUPPORT
- TRAFFIC CONTROL DRUM
- TRAFFIC CONTROL DRUM WITH TYPE "C" STEADY BURN LIGHT
- TYPE "A" WARNING LIGHT (FLASHING)
- DIRECTION OF TRAFFIC
- WORK AREA
- REMOVING PAVEMENT MARKING (SEE GENERAL NOTES)

GENERAL NOTES

THE EXACT NUMBER, LOCATION, AND SPACING OF ALL SIGNS AND DEVICES SHALL BE ADJUSTED TO FIT FIELD CONDITIONS AS APPROVED BY THE ENGINEER.

THE SPACING BETWEEN SIGNS SHOULD BE ADJUSTED TO NOT CONFLICT WITH AND TO PROVIDE A MINIMUM OF 200 FEET, (500 FEET DESIREABLE) DISTANCE TO EXISTING SIGNS.

THIS LANE CLOSURE IS TYPICAL FOR LANE SHIFT RIGHT - REVERSE FOR SHIFTING LEFT.

ALL SIGNS ARE 48"x48" UNLESS OTHERWISE NOTED.

"WO" IS THE SAME AS "W" EXCEPT THE BACKGROUND IS ORANGE.

ANY SIGNS TEMPORARY OR EXISTING, WHICH CONFLICT WITH TRAFFIC CONTROL "IN USE" SHALL BE REMOVED OR COVERED AS NEEDED AND AS APPROVED BY THE ENGINEER. NO WARNING LIGHTS SHALL BE WORKING ON ANY "COVERED" OR "DOWNED" SIGNS.

CONSIDER GEOMETRICS WHEN LOCATING SIGNS AND ARROW BOARDS SO THE DRIVER HAS A CLEAR VIEW OF THE ARROW BOARD AND LANE CLOSURE DRUMS FOR A MINIMUM 1500 FEET IN FRONT OF DRUMS.

FOR A LANE CLOSURE THAT IS IN PLACE LESS THAN 7 CONTINUOUS DAYS AND NIGHTS, THE ADVANCED WARNING SIGNS MAY BE MOUNTED ON PORTABLE SUPPORTS.

REMOVE PAVEMENT MARKINGS IF LANE CLOSURE IS TO BE IN PLACE FOR LONGER THAN 4 OR MORE DAYS AND NIGHTS.

WARNING LIGHTS ARE NOT REQUIRED IF THE LANE CLOSURE IS A DAYTIME ONLY OPERATION.

IF THE HORIZONTAL ALIGNMENT IS SUCH THAT A CURVE MAY REQUIRE ADDITIONAL DELINEATION, THE DEVICE SPACING MAY BE DECREASED TO 50 FEET.

ADJUSTMENTS IN BUFFER SPACE NEED TO BE INCORPORATED WHEN THE LANE SHIFT OCCURS NEAR AN INTERCHANGE EXIT OR ENTRANCE RAMP. THE LANE SHIFT MUST TAKE PLACE FAR ENOUGH IN ADVANCE OF AN EXIT OR ENTRANCE RAMP TO STILL ALLOW FOR ADEQUATE BUFFER SPACE. THE MINIMUM LENGTH OF THE BUFFER SPACE BEFORE AN EXIT RAMP SHOULD BE 1/2 THE LENGTH OF THE TRANSITION AREA. THE ENTRANCE RAMP SHOULD BE FOLLOWED BY THE ORIGINAL BUFFER SPACE LENGTH OF 800 FEET DESIRABLE PRIOR TO ANOTHER TRAFFIC CONTROL CHANGE SUCH AS A CROSSOVER MANEUVER.

POSTED SPEED LIMIT PRIOR TO WORK STARTING (MPH)	ADVANCE WARNING SIGN SPACING (A) FEET	SHIFTING TAPER L/2 W, LATERAL OFFSET (FT)					BUFFER SPACE (B) FEET
		10	11	12	13	14	
25	200	52	57	63	68	73	55
30	200	75	83	90	98	105	85
35	350	102	112	123	133	102	120
40	350	133	133	133	133	143	170
45	500	225	248	270	293	315	220

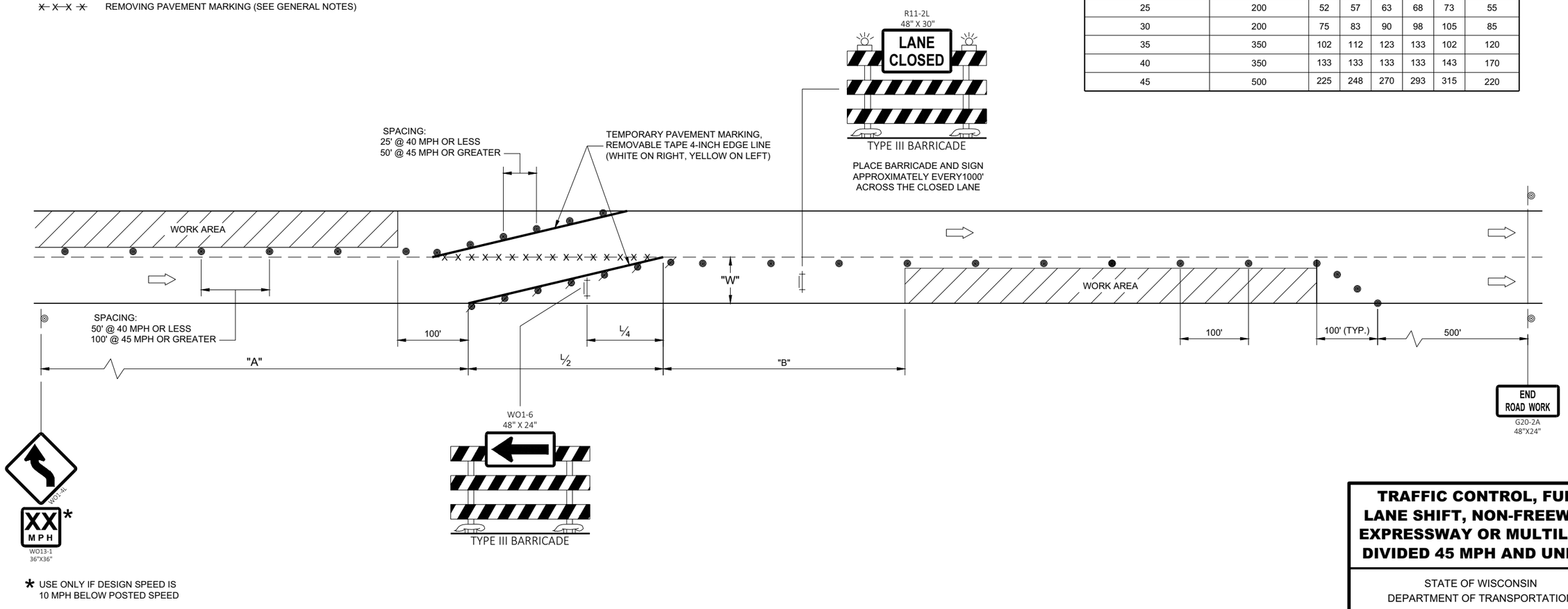

* USE ONLY IF DESIGN SPEED IS 10 MPH BELOW POSTED SPEED

TRAFFIC CONTROL, FULL LANE SHIFT, NON-FREEWAY/ EXPRESSWAY OR MULTILANE DIVIDED 45 MPH AND UNDER

STATE OF WISCONSIN
DEPARTMENT OF TRANSPORTATION

APPROVED
February 2021 — DATE
/S/ Andrew Heidtke — ROADWAY STANDARDS DEVE ENGINEER
FHWA

6

SDD 15D40 - 02a

TYPICAL ASSEMBLIES

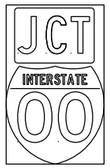

J1-1

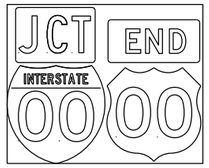

J1-2

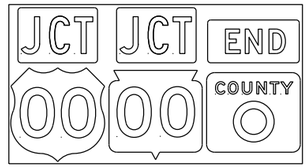

J1-3

JR1-1

J2-1

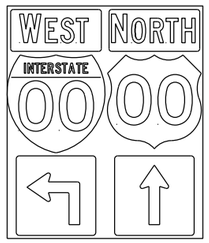

J2-2

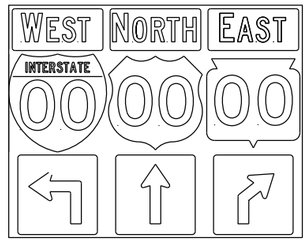

J2-3

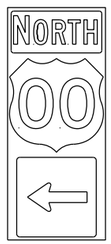

J3-1

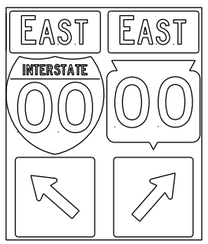

J3-2

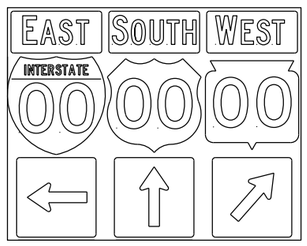

J3-3

J4-1

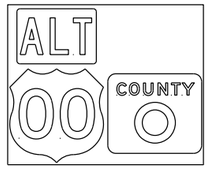

J4-2

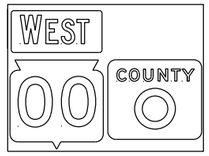

J4-2

JV
(Typical Vertical J-Assembly
See Note 10 and 11)

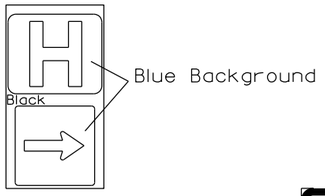

JH-1

J12-1

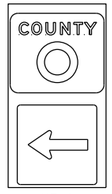

J13-1

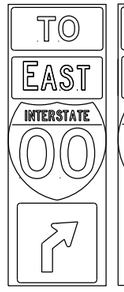

J32-1

J33-1

J22-1

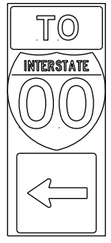

J23-1

JR13-1

JR23-1

JR99-1

NOTES

1. Signs are Type II - Type H Reflective
2. Color:
   Background - Black Non-reflective
   Message - see Note 5
3. Message Series - See Note 5
4. Corners shall be square or rounded if base material is plywood. If base material is metal the corners shall be rounded.
5. The colors and message spacing on each marker shall be according to the applicable route marker panel specifications.
6. Certain marker heads require the component pieces to be the same color. As an example, all the components used with an M1-1 Interstate marker shall be blue.
7. Single panel j-assemblies shall only be used with route marker shields that are same size. If the route marker shields are different size use multiple piece component.
8. Route assemblies that have 24 inch route shields and have dimensions greater than 48 inches (both vertical and horizontal) shall have one horizontal splice between the arrows and route shields. Vertical splices shall not be used on route assemblies with a horizontal dimension of 144 inches or less. The contractor shall not use more than one vertical joint per sign and the joint shall be between route shields.
9. Route assemblies that have 36 inch shields and have dimensions greater than 48 inchs (both vertical and horizontal) shall have two horizontal splices. One horizontal splice shall be between the cardinal direction and route shields and the other horizontal splice shall be between the arrows and route shields. Vertical splices shall not be used on route assemblies with a horizontal dimension of 144 or less. The contractor shall not use more than one vertical joint per sign and the joint shall be between route shields.
10. All Vertical J Assemblies are given a Sign Code of JV
11. For JV Assemblies that have a mixture of Interstate and non Interstate shields, arrows and cardinals shall be white on blue.

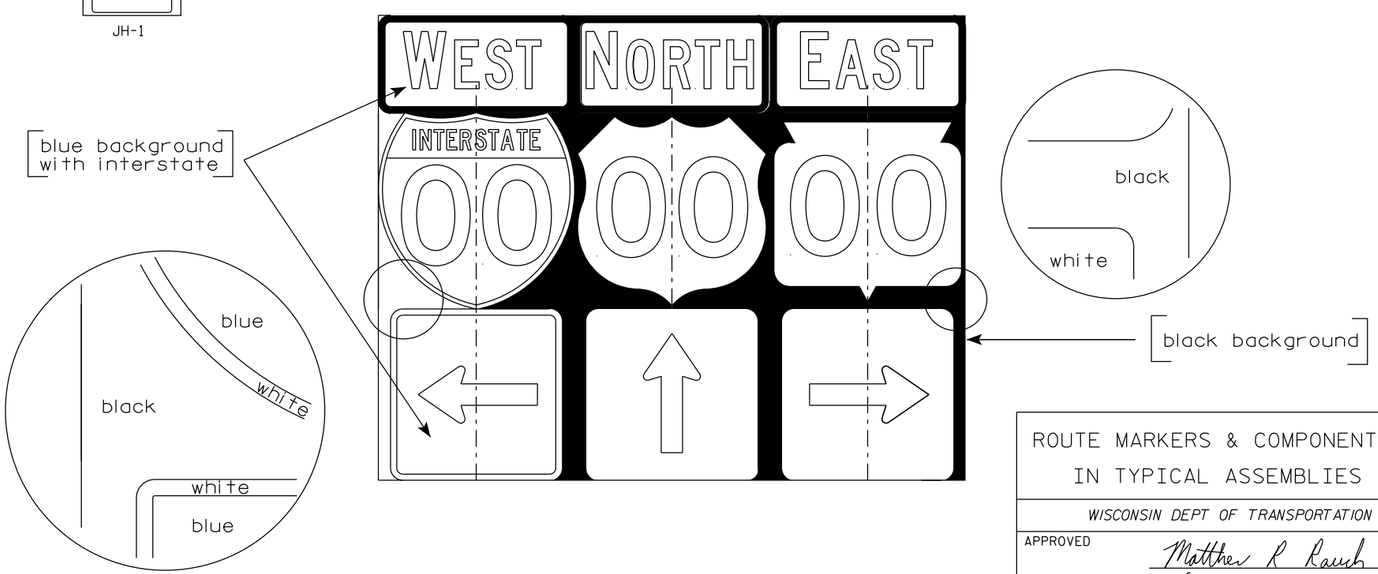

ROUTE MARKERS & COMPONENTS
IN TYPICAL ASSEMBLIES

WISCONSIN DEPT OF TRANSPORTATION

APPROVED Matthew R Rauch
for State Traffic Engineer

DATE 3/18/21 PLATE NO. A2-1S.9

PROJECT NO:

SHEET NO: 116 E

URBAN AREA

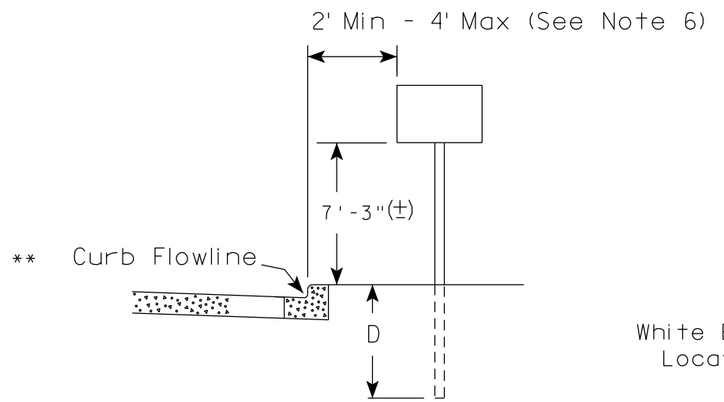

RURAL AREA (See Note 2)

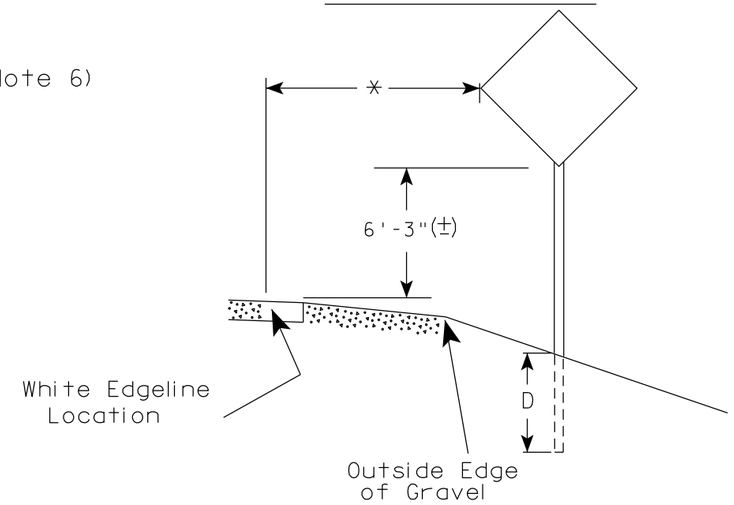

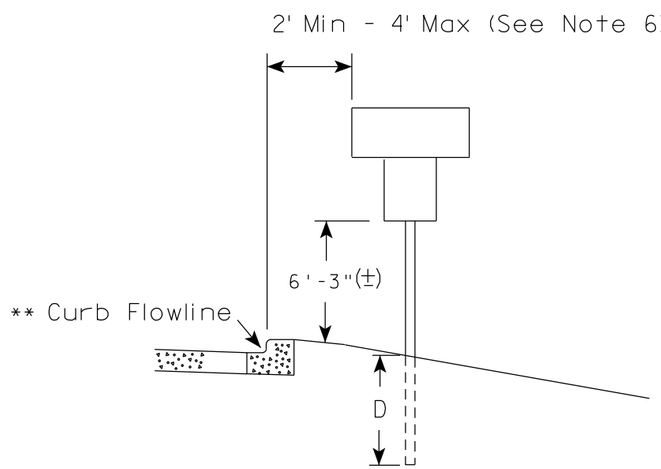

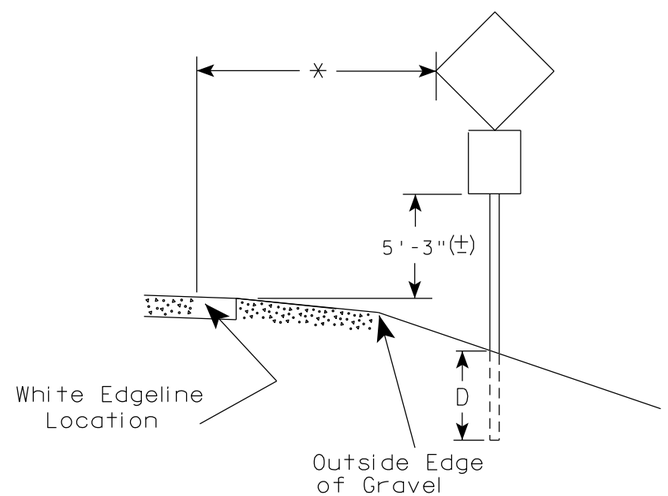

** The existence of curb and gutter does not in itself mandate the vertical clearance illustrated. That height is typically measured where there is sidewalk adjacent to the roadway or parking is permitted. In the absence of sidewalk vertical clearance is measured from the top of the curb. Offset of signs is measured from the flow line.

* 6 feet from edge of a paved shoulder or 12 feet from the edge of pavement (edge line location) or 2 feet from outside edge of gravel, whichever is greater unless directed by project engineer.

GENERAL NOTES

1. Signs wider than 4 feet or 20 sq.ft or larger, shall be mounted on multiple posts. Refer to plate A4-4.
2. If signs are mounted on or behind barrier wall, see A4-10 sign plate.
   The Double Arrow sign (W12-1D) shall be mounted at a height of 2'-3" (±). The Chevron sign (W1-8), Roundabout Chevron panel (R6-4B), Enhanced Reference Markers, Clearance Markers (W5-52), Mile Markers (D10 series), In Road Object Markers (W5-54) & End of Road Markers (W5-56) shall be mounted at a height of 4'-3" (±).
3. For expressways and freeways, mounting height is 7'- 3" (±) or 6'-3" (±) depending upon existence of a sub-sign.
4. Minimum mounting height for signs mounted on traffic signal poles is 5'- 3" (±).
5. Offset distance shall be consistent with existing signs or consistent throughout length of project.
6. The (±) tolerance for mounting height is 3 inches.
7. Folding signs shall be mounted at a height of 5'-3" (±) or as directd by the Engineer.

POST EMBEDMENT DEPTH

Area of Sign Installation (Sq.Ft.)	D (Min)
20 or Less	4'
Greater than 20	5'

TYPICAL INSTALLATION OF PERMANENT TYPE II SIGNS ON SINGLE POSTS

WISCONSIN DEPT OF TRANSPORTATION

APPROVED Matthew R Rauch for State Traffic Engineer

DATE 5/13/2020 PLATE NO. A4-3.22

7 7

PROJECT NO:	HWY:	COUNTY:		SHEET NO: 117	E

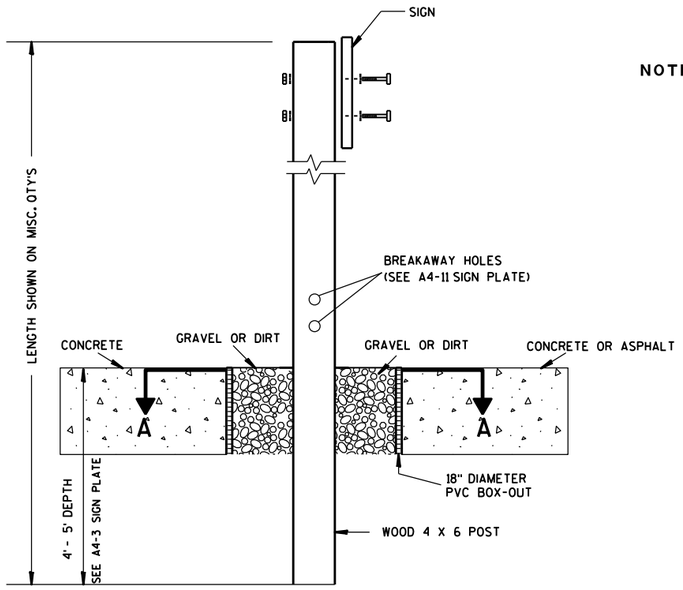

ELEVATION VIEW

DETAIL OF WOOD 4 X 6 SIGN POST IN BOX-OUT

NOTES:
1. ALL MATERIAL TO BE APPROVED BY ENGINEER PRIOR TO INSTALLATION
2. SEE SIGN PLATE A4-8 FOR SIGN HARDWARE REQUIREMENTS
3. 18 INCH X 18 INCH SQUARE BOX-OUTS MAY BE USED FOR INSTALLATIONS IN EXISTING CONCRETE OR ASPHALT LOCATIONS.

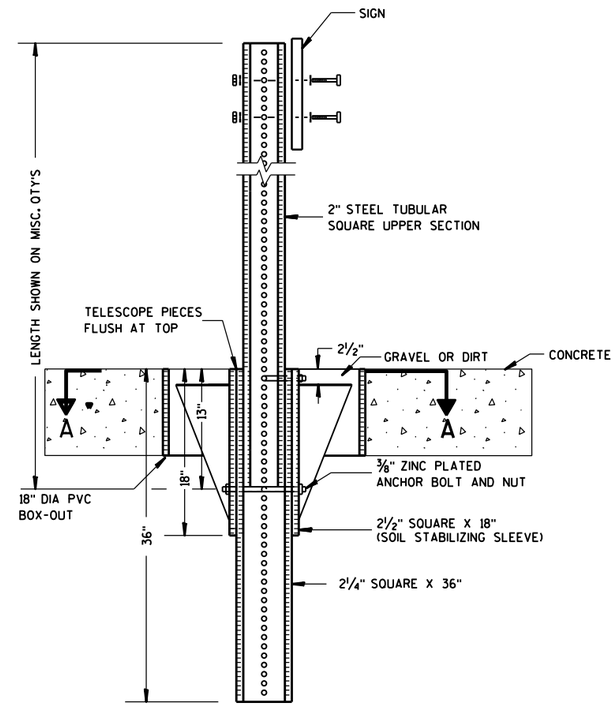

ELEVATION VIEW

DETAIL OF STEEL 2 X 2 SIGN POST IN BOX-OUT

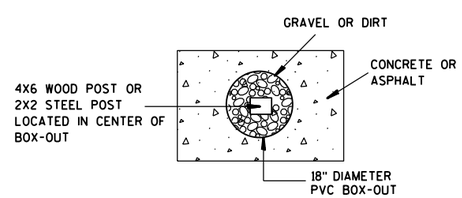

PLAN VIEW

FOR NEW CONCRETE/ASPHALT INSTALLATIONS

SIGN POST
BOX-OUTS
A4-3B

WISCONSIN DEPT OF TRANSPORTATION

APPROVED Matthew R Rauch
for State Traffic Engineer

DATE 1/27/14 PLATE NO. A4-3B.1

PROJECT NO:	HWY:	COUNTY:		SHEET NO:	E

URBAN AREA

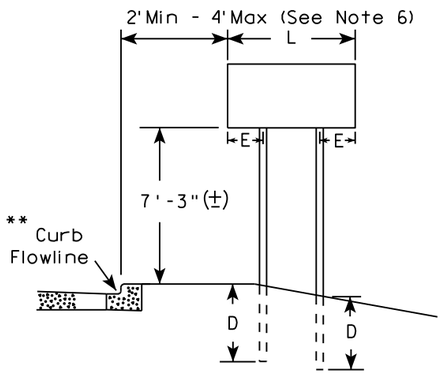

RURAL AREA (See Note 3)

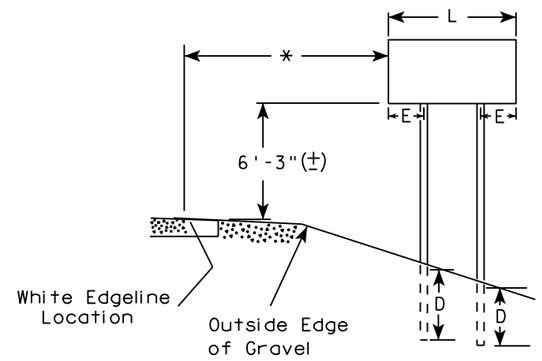

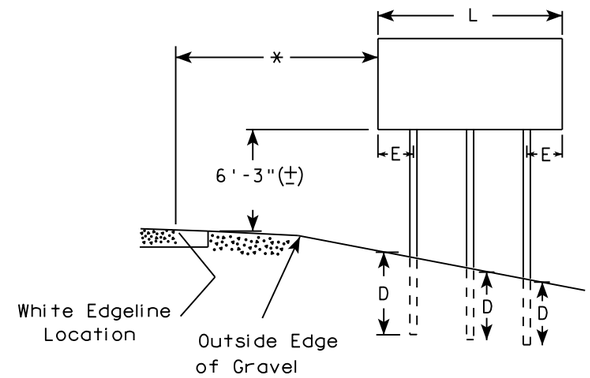

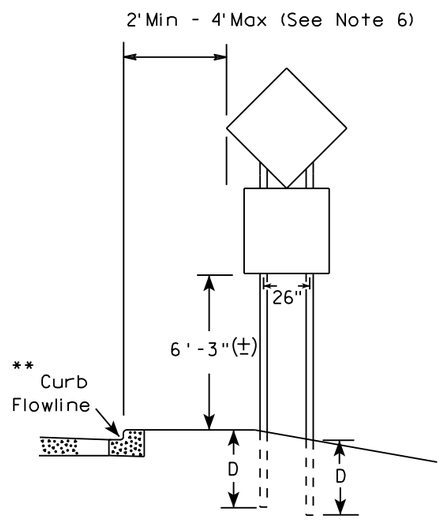

48" DIAMOND WARNING SIGN

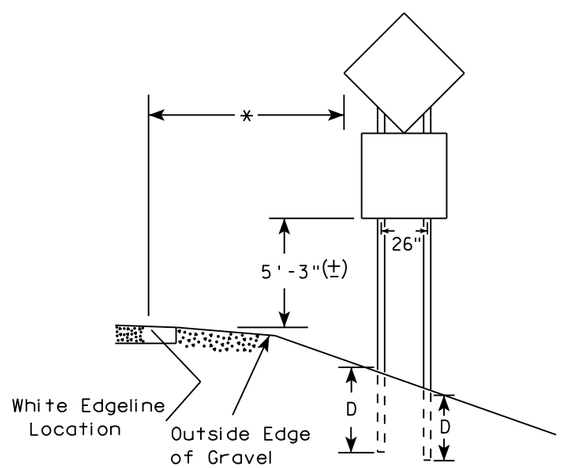

48" DIAMOND WARNING SIGN

SIGN SHAPE OTHER THAN DIAMOND (TWO POSTS REQUIRED)	
L	E
*** Greater than 48" Less than 60"	12"
60" to 108"	L/5

SIGN SHAPE OTHER THAN DIAMOND (THREE POSTS REQUIRED)	
L	E
Greater than 108" to 144"	12"

GENERAL NOTES

1. For 3 or 4 post installations, individual post spacing shall be greater than 3'-6".
2. See tables below for required number of posts.
3. For expressways and freeways, mounting height is 7'-3" (±) or 6'-3" (±) depending upon existence of sub-sign.
4. The (±) tolerance for mounting height is 3 inches.
5. J-Assemblies are considered to be one sign for mounting height.
6. Offset distance shall be consistent with existing signs or consistent throughout length of project.
7. Folding signs shall be mounted at a height of 5'-3" (±) or as directed by the engineer.
8. The Double Arrow sign (W12-1) shall be mounted at a height of 2'-3" (±). The Chevron sign (W1-8), Roundabout Chevron panel (R6-4B), Clearance Markers (W5-52), Mile Markers (D10 series), In Road Object Markers (W5-54) & End of Road Markers (W5-56) shall be mounted at a height of 4"-3" (±).

* 6 feet from edge of a paved shoulder or 12 feet from the edge of pavement (edge line location) or 2 feet from outside edge of gravel, whichever is greater unless directed by project engineer.

** The existence of curb and gutter does not in itself mandate the vertical clearance illustrated. That height is typically measured where there is sidewalk adjacent to the roadway or parking is permitted. In the absence of sidewalk vertical clearance is measured from the top of the curb. Offset of signs is measured from the flow line.

*** See A4-3 sign plate for signs 4' or less in width and less than 20 S.F. in area.

POST EMBEDMENT DEPTH

Area of Sign Installation (Sq. Ft.)	D (Min)
20 or Less	4'
Greater than 20	5'

TYPICAL INSTALLATION OF TYPE II SIGNS ON MULTIPLE POSTS

WISCONSIN DEPT OF TRANSPORTATION

APPROVED Matthew R Rauch
For State Traffic Engineer

DATE 8/21/17 PLATE NO. A4-4.15

7

7

PROJECT NO:	HWY:	COUNTY:		SHEET NO: 119	E

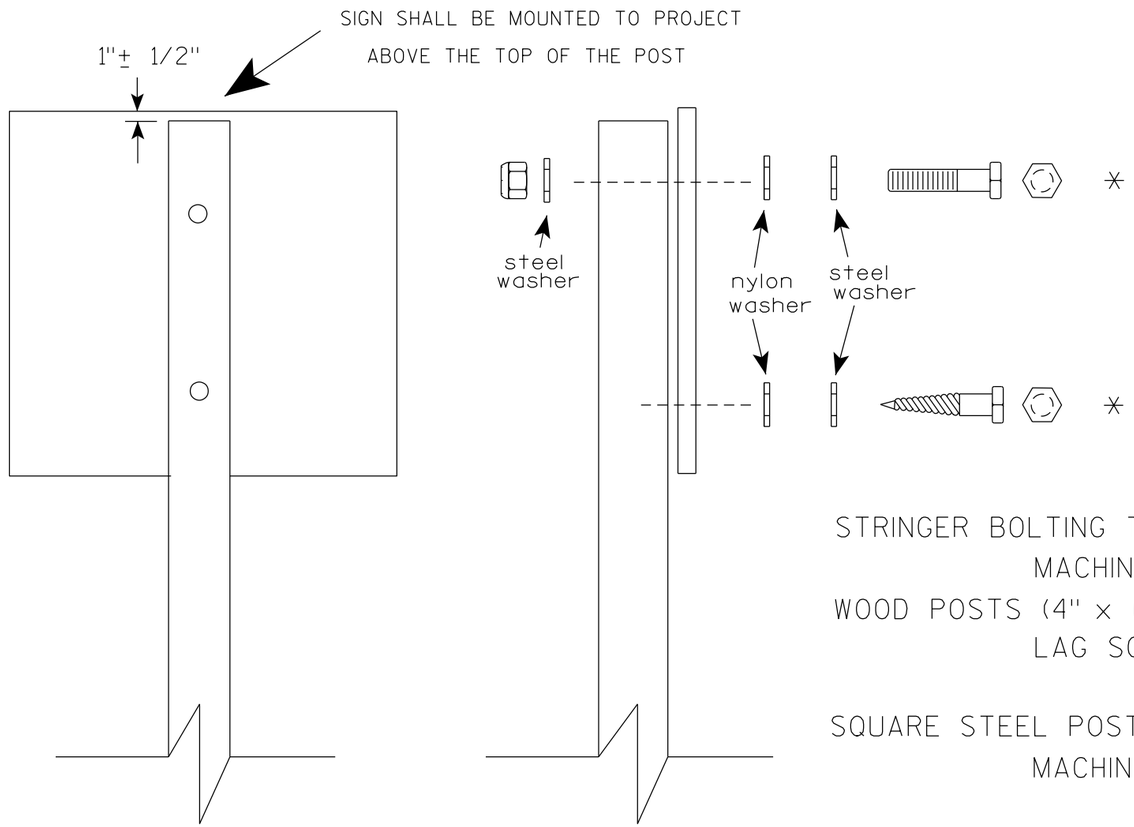

Nuts, bolts and lags used for mounting signs shall have hexagonal heads and shall be either :

a. Hot dip galvanized in accordance with ASTM Designation: A 153, Class D, or SC 3

b. Electro-galvanized in accordance with ASTM Designation : B 633, TYPE III, SC 3.

Threads on bolts and nuts shall be manufactured with sufficient allowance for the cadmium plate or galvanized coating to permit the nuts to run freely on the bolts.

STRINGER BOLTING TO ALUMINUM SIGNS (SEE SIGN PLATE A4-18)

MACHINE BOLTS - 5/16" X 1-3/4" Length w/ lock nuts

WOOD POSTS (4" x 6")

LAG SCREWS - 3/8" X 3" (NO STRINGERS ON BACK OF SIGN)
3/8" X 4" (STRINGERS ON BACK OF SIGN)

SQUARE STEEL POSTS (2" x 2")

MACHINE BOLTS - 3/8" X 3-1/4" Length w/ nuts (NO STRINGER ON BACK OF SIGN)
3/8" X 5" Length w/ nuts (STRINGERS ON BACK OF SIGN)

RIVETS - 9/32 " (6605-9-6) BULB-TITE, TRI-FOLD, ALUMINUM BODY/MANDREL
O.D. FLANGE .720-.765 INCH, GRIP RANGE .042-.375 INCH

WASHERS (ALL POSTS) -

1-1/4" O.D. X 3/8" I.D. X 1/16" STEEL
1-1/4" O.D. X 3/8" I.D. X .080 NYLON

* Two different fastening systems are shown for illustration purposes. On any individual sign, either one or the other system shall be used. Actual number of fasteners per sign varies with the sign area, but normally there are two. For a single post installation, all signs greater than 9 sq. ft. require the use of 3 fasteners.

ATTACHMENT OF SIGNS TO POSTS

WISCONSIN DEPT OF TRANSPORTATION

APPROVED Matthew R Rauch
for State Traffic Engineer

DATE 4/1/2020 PLATE NO. A4-8.9

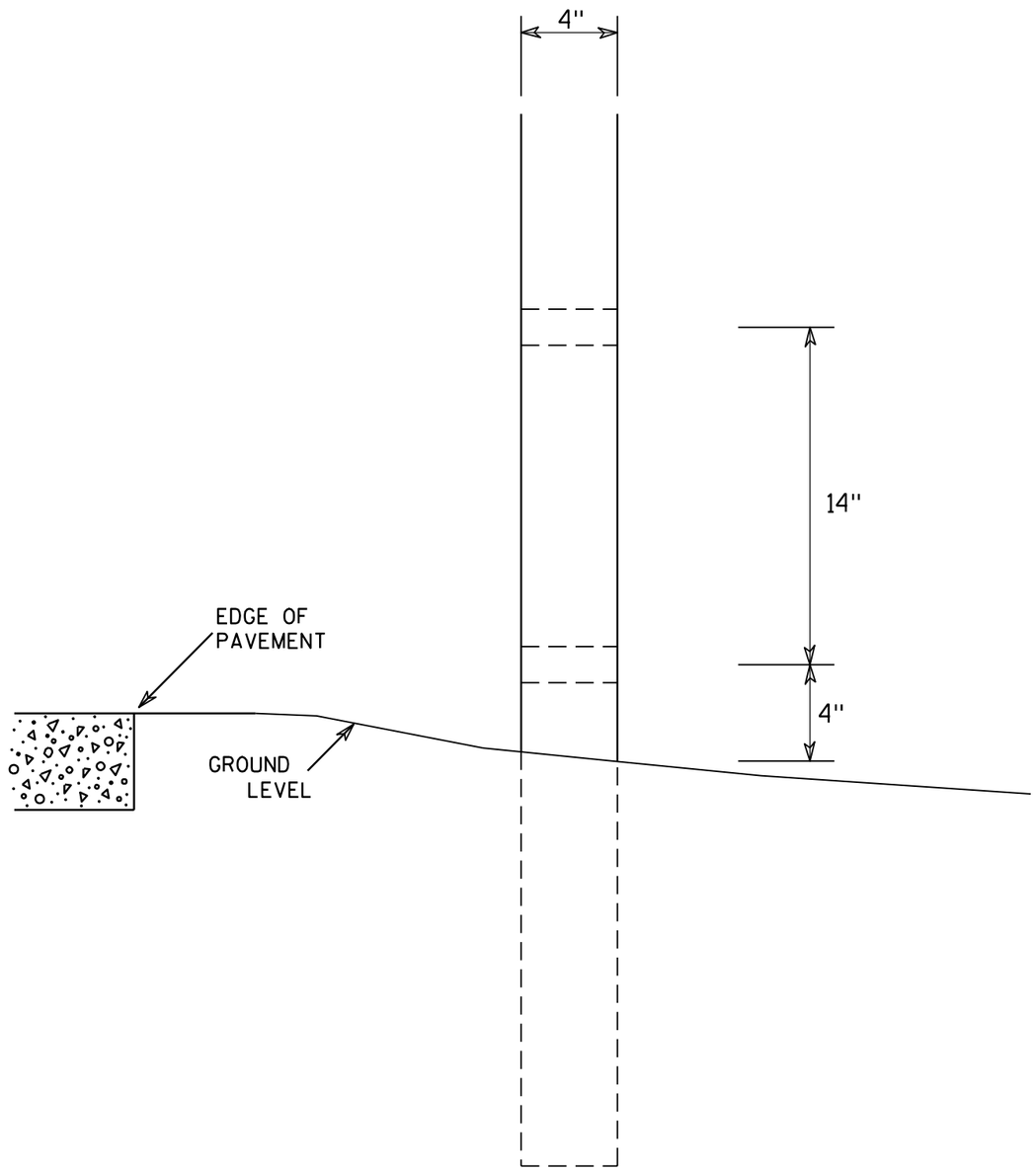

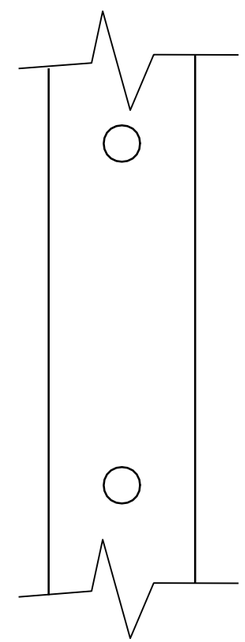

SIDE VIEW

GENERAL NOTES

1. All 4 x 6 Wood Posts shall be modified by having two 1½" diameter holes drilled perpendicular to the roadway centerline.

7

7

4 X 6 WOOD POST MODIFICATIONS

WISCONSIN DEPT OF TRANSPORTATION

APPROVED Chester J Spang for State Traffic Engineer

DATE 3/27/97 PLATE NO. A4-11.2

PROJECT NO:	HWY:	COUNTY:		SHEET NO: 121	E

BANDING

SINGLE SIGN

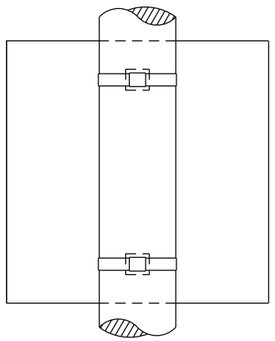

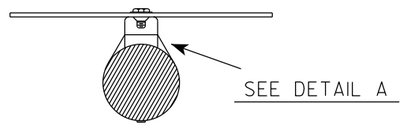

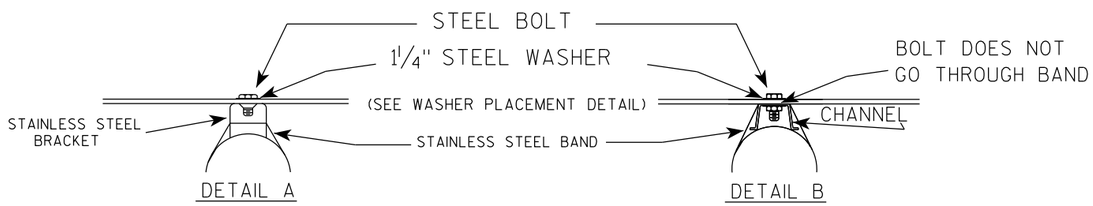

WASHER PLACEMENT

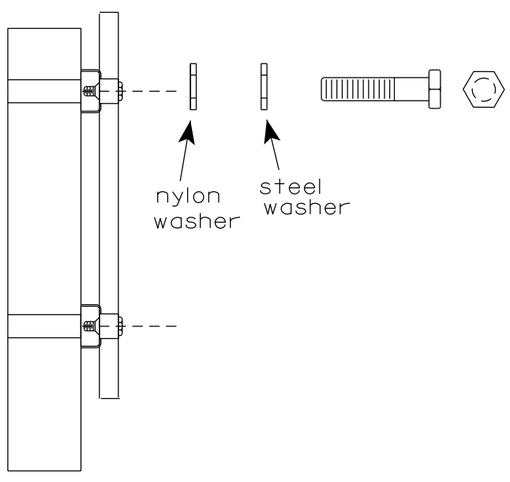

WASHERS (ALL POSTS) -
1-1/4" O.D. X 3/8" I.D. X 1/16" STEEL
1-1/4" O.D. X 3/8" I.D. X .080 NYLON
FOR ALL TYPE H SIGNS

GENERAL NOTES

1. Any sign over 3 feet in width shall use the V-Block banding method. See A5-10 standard plate.
2. Signs 3 feet or greater in height shall have three bracket bands installed. Signs less than 3 feet in height shall have two bracket bands installed.
3. Banding and assembly bracket shall be stainless steel. All bands shall be ¾" in width and 0.025" thickness.
4. ALL SIGN MOUNTING BOLTS AND WASHERS SHALL BE EITHER:
   a. Hot dip or mechanically galvanized in accordance with ASTM Designation: A 153, Class D
   b. Electro-galvanized in accordance with ASTM designation: B 633, Type III, SC 3

"J" ASSEMBLY

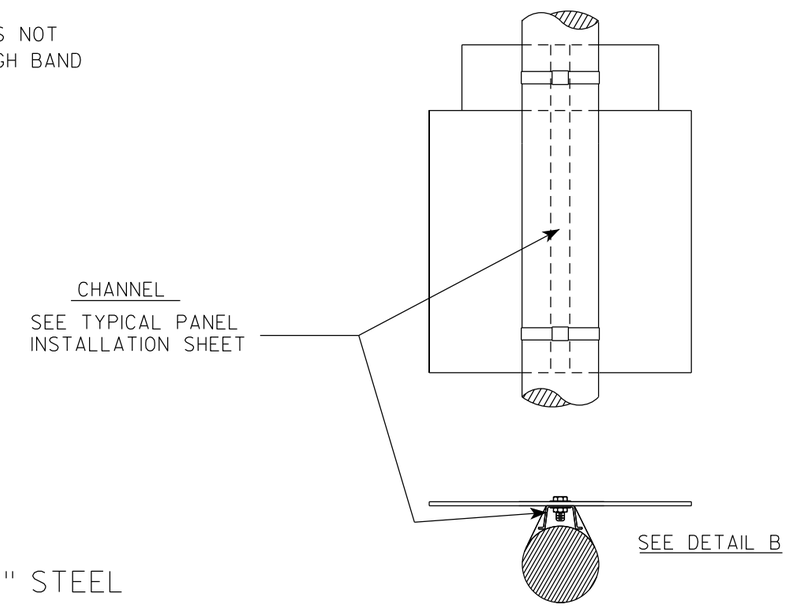

STANDARD SIGN
SIGN BANDING DETAILS

WISCONSIN DEPT OF TRANSPORTATION

APPROVED Matthew R Rauch for State Traffic Engineer

DATE 6/10/19 PLATE NO. A5-9.4

PROJECT NO:	HWY:	COUNTY:		SHEET NO: 122	E

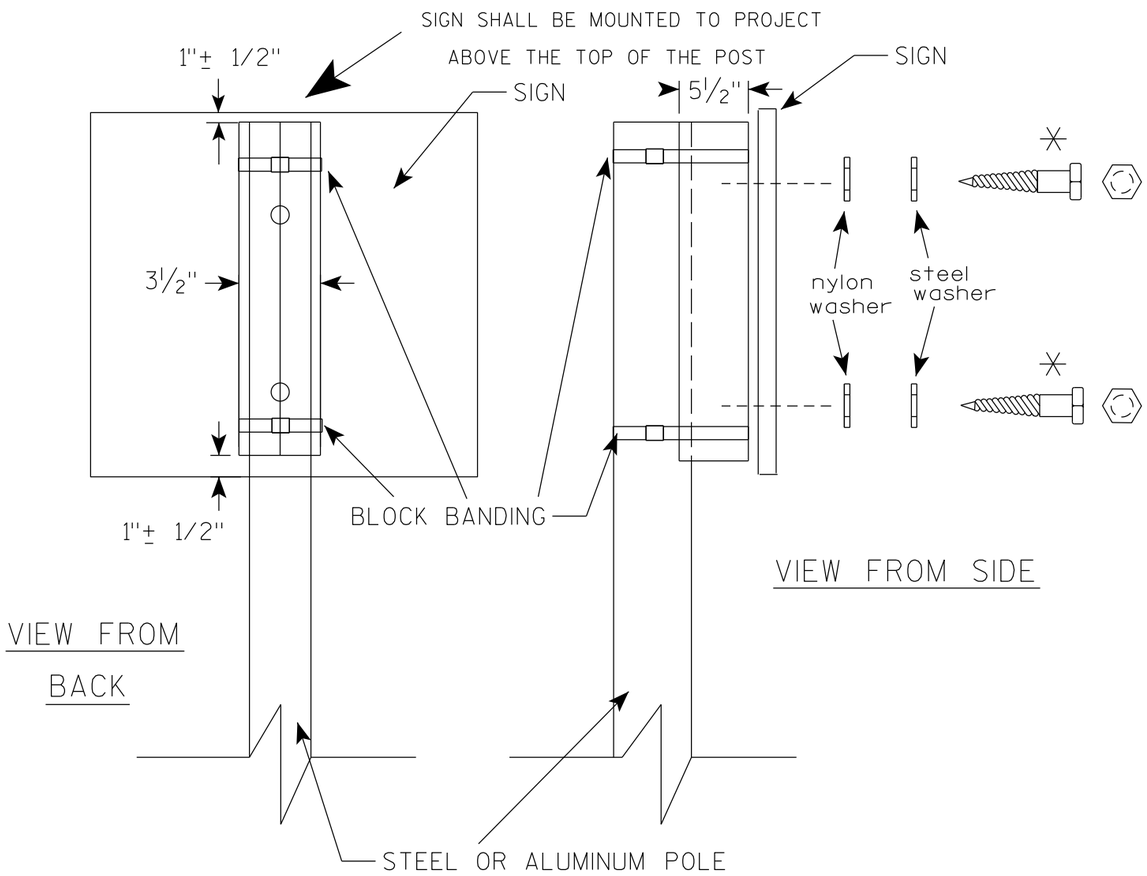

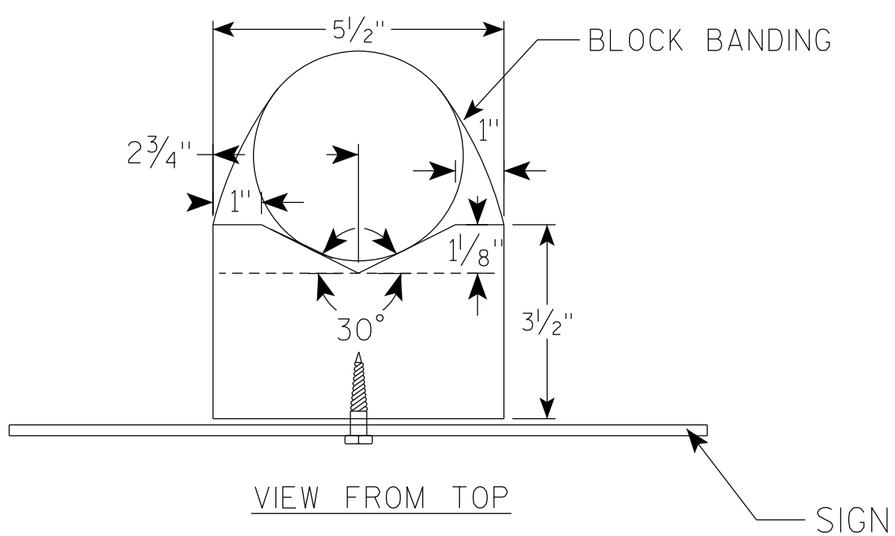

GENERAL NOTES

1. WOOD 4"X6" POST MATERIAL SHALL CONFORM TO 507.2.2 OF THE WisDOT STANDARD SPECIFICATIONS
2. BLOCK BANDING AND CLIPS SHALL BE STAINLESS STEEL, ¾" WIDTH AND 0.025" THICKNESS
3. SIGNS 3' OR GREATER IN HEIGHT SHALL UTILIZE 3 BLOCK BANDS. SIGNS UNDER 3' IN HEIGHT SHALL UTILIZE 2 BLOCK BANDS
4. ACTUAL NUMBER OF FASTENERS PER SIGN VARIES WITH THE SIGN AREA, BUT NORNALLY THERE ARE TWO. FOR SIGNS GREATER THAN 9 S.F. 3 FASTENERS SHALL BE USED.
5. ALL SIGN MOUNTING BOLTS AND WASHERS SHALL BE EITHER:
   a. Hot dip or mechanically galvanized in accordance with ASTM Designation: A 153, Class D
   b. Electro-galvanized in accordance with ASTM Designation : B 633, TYPE III, SC 3
6. ALL BOLTS SHALL HAVE HEXAGONAL HEADS.
7. STEEL WASHERS SHALL BE 1¼" O.D. X ⅜" I.D. X 1/16"
8. NYLON WASHERS SHALL BE 1¼" O.D. X ⅜" I.D. X .080 FOR TYPE H OR TYPE F FACE SIGN

✳ LAG BOLTS SHALL BE ⅜" X 2½"

BLOCK BANDING DETAIL
(V-BLOCK OPTION)

WISCONSIN DEPT OF TRANSPORTATION

APPROVED Matthew R Rauch
For State Traffic Engineer

DATE 6/10/19 PLATE NO. A5-10.2

PROJECT NO:				SHEET NO: 123	E

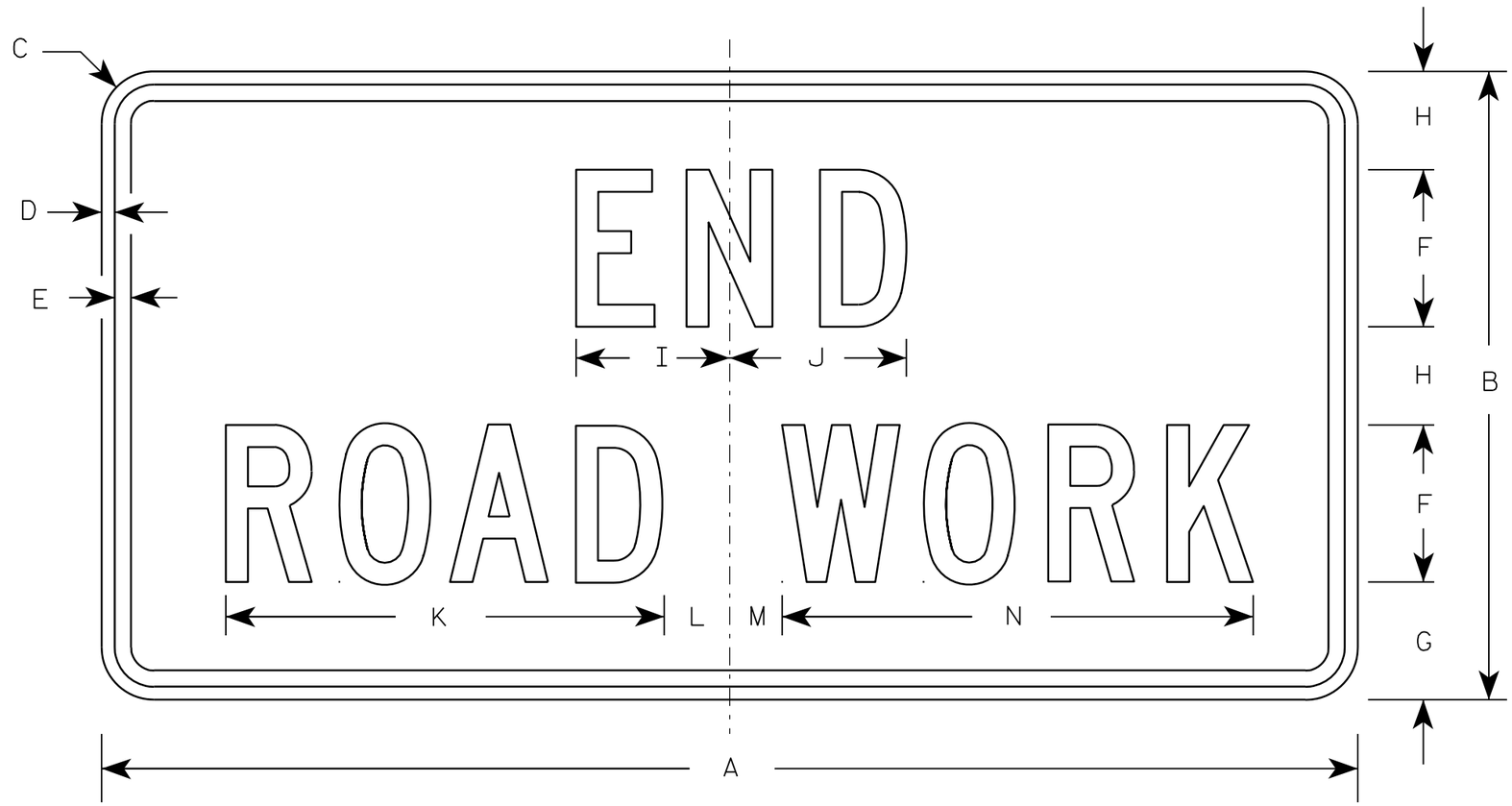

G20-2A

NOTES

1. Sign is Type II - Type F Reflective - reference WIS DOT Standard Specification for HIGHWAY and STRUCTURE CONSTRUCTION latest edition.
2. Color:
   Background - Orange
   Message - Black
3. Message Series - C
4. Corners may be square or rounded when base material is plywood but borders shall be rounded as shown. When base material is metal, the corners and borders shall be rounded.

Metric equivalent for this sign is:

SIZE	
1	900 mm X 450 mm
2	1200 mm X 600 mm
3	1200 mm X 600 mm
4	1200 mm X 600 mm
5	1200 mm X 600 mm

SIZE	A	B	C	D	E	F	G	H	I	J	K	L	M	N	O	P	Q	R	S	T	U	V	W	X	Y	Z	Area sq. ft.	Area m2
1	36	18	1 1/8	3/8	1/2	4	3 3/4	2 1/2	4 1/8	4 1/8	11 1/8	2	1	12 1/8													4.5	0.41
2	48	24	1 1/2	1/2	5/8	6	4 1/2	3 3/4	5 7/8	6 3/4	16 3/4	2 1/2	1 3/4	18 1/2													8.0	0.72
3	48	24	1 1/2	1/2	5/8	6	4 1/2	3 3/4	5 7/8	6 3/4	16 3/4	2 1/2	1 3/4	18 1/2													8.0	0.72
4	48	24	1 1/2	1/2	5/8	6	4 1/2	3 3/4	5 7/8	6 3/4	16 3/4	2 1/2	1 3/4	18 1/2													8.0	0.72
5	48	24	1 1/2	1/2	5/8	6	4 1/2	3 3/4	5 7/8	6 3/4	16 3/4	2 1/2	1 3/4	18 1/2													8.0	0.72

STANDARD SIGN

G20-2A

WISCONSIN DEPT OF TRANSPORTATION

APPROVED Matthew R Rauch
for State Traffic Engineer

DATE 9/30/09 PLATE NO. G20-2A.8

PROJECT NO:	HWY:	COUNTY:		SHEET NO: 124	E

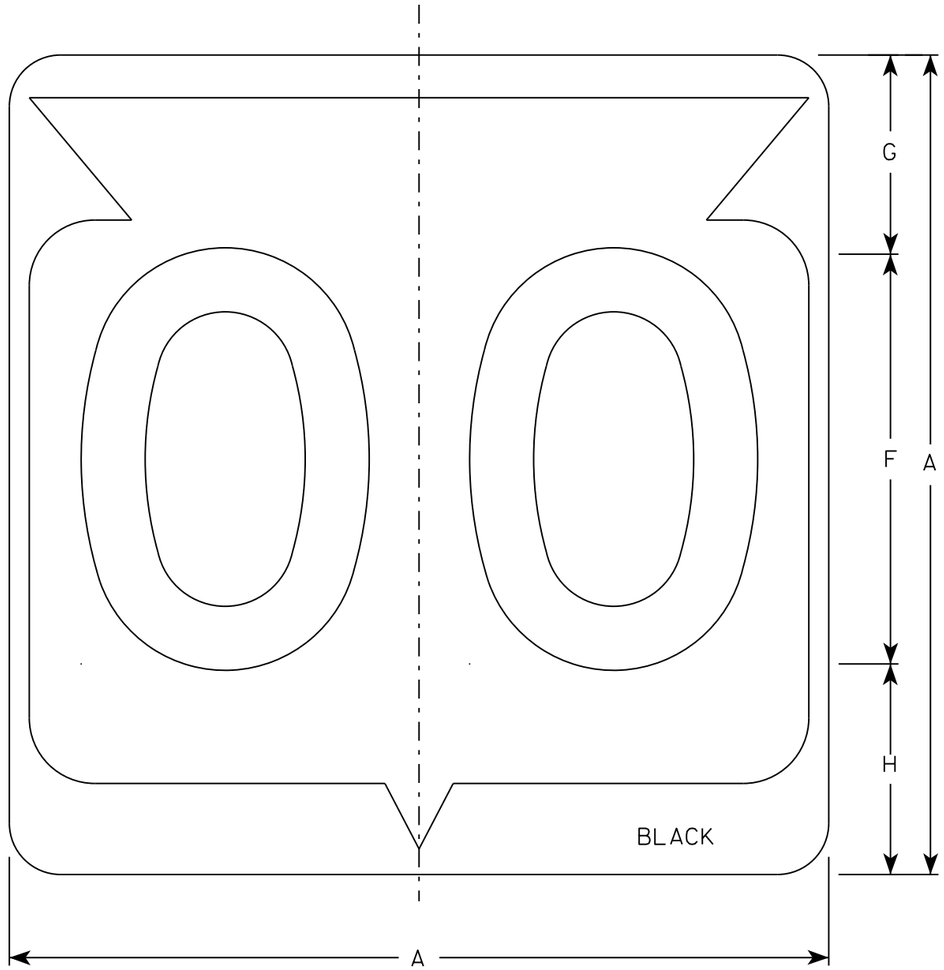

M1-6

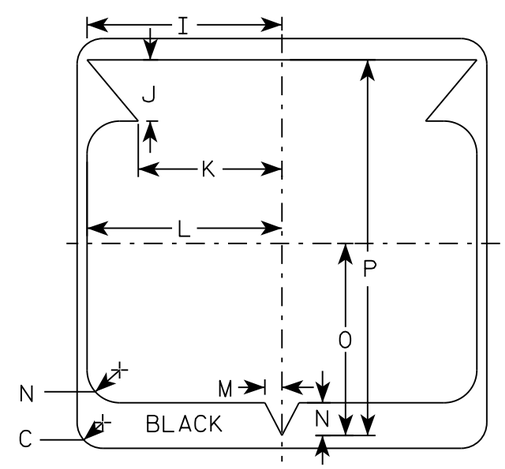

NOTES

1. Sign is Type II - Type H Reflective
2. Color:
   Background - White
   Message - Black
3. Message Series - D except 3 number signs Series C
4. Corners may be square or rounded when base material is plywood but borders shall be rounded as shown. When base material is metal, the corners and borders shall be rounded.

SIZE	A	B	C	D	E	F	G	H	I	J	K	L	M	N	O	P	Q	R	S	T	U	V	W	X	Y	Z	Area sq. ft.
1																											
2	24		1 1/2			12	5 1/2	6 1/2	10 1/4	2 1/2	8 7/8	11 1/2	1	1 7/8	11 1/4	21 7/8											4.0
3	36		2 1/4			18	8 3/4	9 1/4	15 3/8	5 3/8	12 5/8	17 1/8	1 1/2	2 7/8	16 7/8	33											9.0
4	36		2 1/4			18	8 3/4	9 1/4	15 3/8	5 3/8	12 5/8	17 1/8	1 1/2	2 7/8	16 7/8	33											9.0
5	36		2 1/4			18	8 3/4	9 1/4	15 3/8	5 3/8	12 5/8	17 1/8	1 1/2	2 7/8	16 7/8	33											9.0

STATE ROUTE MARKER
M1-6 FOR ASSEMBLIES

WISCONSIN DEPT OF TRANSPORTATION

APPROVED Matthew R Rauch
for State Traffic Engineer

DATE 3/16/18 PLATE NO. M1-6.10

PROJECT NO: | HWY: | COUNTY: | SHEET NO: 125 | E

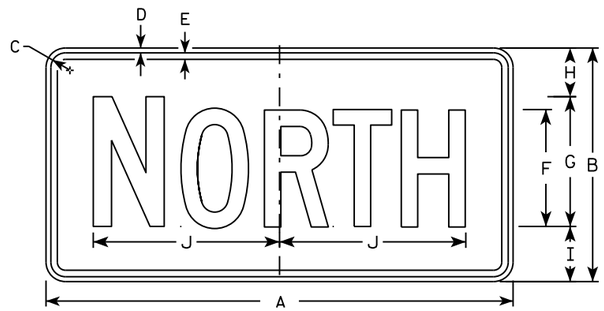

M3-1
MM3-1
MP3-1

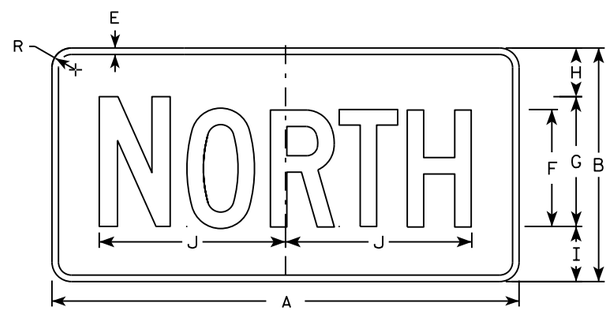

MB3-1
MK3-1
MN3-1

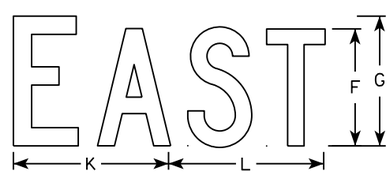

M3-2
MM3-2
MP3-2

MB3-2
MK3-2
MN3-2

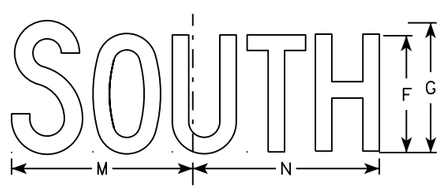

M3-3
MM3-3
MP3-3

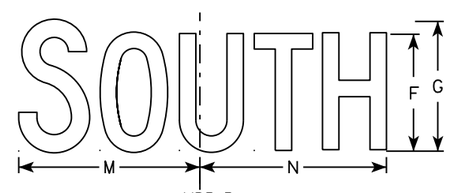

MB3-3
MK3-3
MN3-3

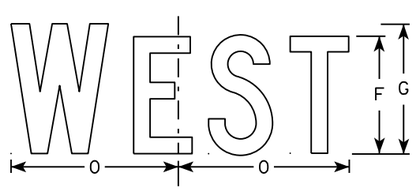

M3-4
MM3-4
MP3-4

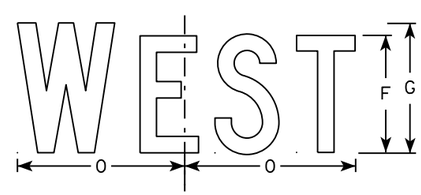

MB3-4
MK3-4
MN3-4

NOTES

1. All Signs Type II - Type H
2. Color:
   Background - See note 5
   Message - See note 5
3. Message Series - C
4. Corners may be square or rounded when base material is plywood but borders shall be rounded as shown. When base material is metal, the corners and borders shall be rounded.
5. M3-1 thru M3-4 Background - White
   Message - Black
   MB3-1 thru MB3-4 Background - Blue
   Message - White
   MK3-1 thru MK3-4 Background - Green
   Message - White
   MM3-1 thru MM3-4 Background - White
   Message - Green
   MN3-1 thru MN3-4 Background - Brown
   Message - White
   MP3-1 thru MP3-4 Background - White
   Message - Blue
6. Note the first letter of each direction is larger than the remainder of the message.

SIZE	A	B	C	D	E	F	G	H	I	J	K	L	M	N	O	P	Q	R	S	T	U	V	W	X	Y	Z	Area sq. ft.
1																											
2	24	12	1 1/8	3/8	3/8	6	7	2 1/4	2 3/4	10 1/4	7 7/8	8 3/8	10 1/4	9 3/4	8 3/4			1 1/2									2.00
3	36	18	1 1/8	3/8	1/2	9	10	3 3/4	4 1/4	14 3/8	12	12 1/8	14	14 1/8	13			1 1/2									4.5
4	36	18	1 1/8	3/8	1/2	9	10	3 3/4	4 1/4	14 3/8	12	12 1/8	14	14 1/8	13			1 1/2									4.5
5	36	18	1 1/8	3/8	1/2	9	10	3 3/4	4 1/4	14 3/8	12	12 1/8	14	14 1/8	13			1 1/2									4.5

STANDARD SIGNS
M3-1 thur M3-4
SERIES

WISCONSIN DEPT OF TRANSPORTATION

APPROVED Matthew R Rauch
for State Traffic Engineer

DATE 10/15/15 PLATE NO M3-1.14

PROJECT NO: | HWY: | COUNTY: | SHEET NO: | E

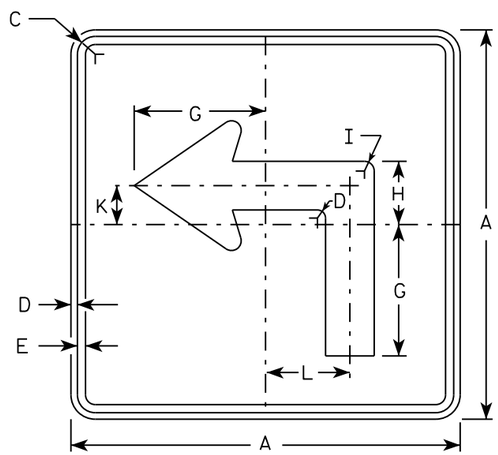

M5-1L
MM5-1L
MO5-1L
MP5-1L

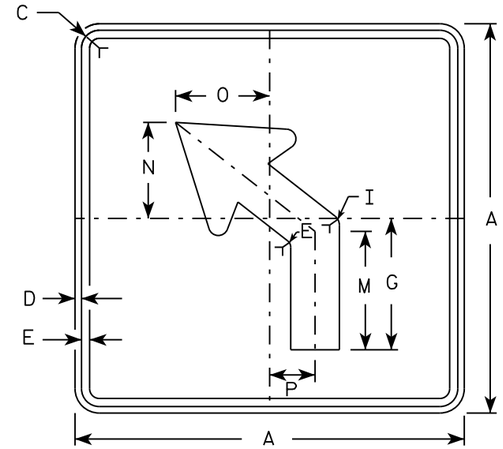

M5-2L
MM5-2L
MO5-2L
MP5-2L

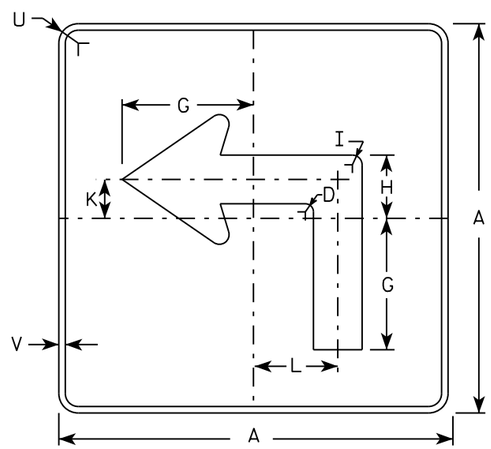

MB5-1L
MK5-1L
MN5-1L
MR5-1L

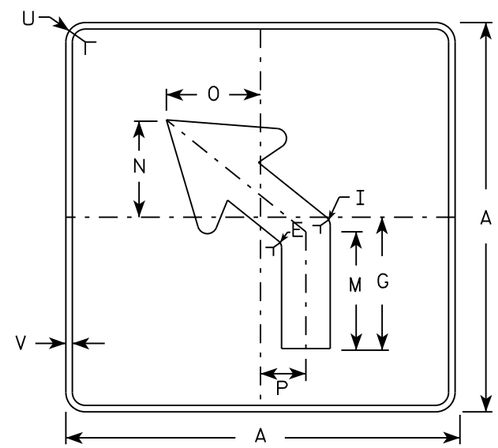

MB5-2L
MK5-2L
MN5-2L
MR5-2L

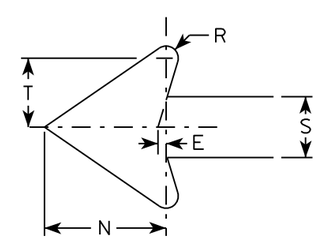

NOTES

1. Signs are Type II - Type H reflective except as shown
2. Color:
   Background - See note 4
   Message - See note 4
3. Corners may be square or rounded when base material is plywood but borders shall be rounded as shown. When base material is metal, the corners and borders shall be rounded.
4. M5-1 and M5-2 Background - White
   Message - Black
   MB5-1 and MB5-2 Background - Blue
   Message - White
   MK5-1 and MK5-2 Background - Green
   Message - White
   MM5-1 and MM5-2 Background - White
   Message - Green
   MN5-1 and MN5-2 Background - Brown
   Message - White
   MO5-1 and MO5-2 Background - Orange - Type F Reflective
   Message - Black
   MP5-1 and MP5-2 Background - White - Type H Reflective
   Message - Blue
   MR5-1 and MR5-2 Background - Brown
   Message - Yellow
5. M5-1R same as M5-1L except arrow points right.
6. M5-2R same as M5-2L except arrow tilts right.

SIZE	A	B	C	D	E	F	G	H	I	J	K	L	M	N	O	P	Q	R	S	T	U	V	W	X	Y	Z	Area sq. ft.
1																											
2	21		1 1/8	3/8	3/8		7	3 3/8	5/8		2 1/8	4 1/2	6 3/8	5 1/4	5	2 1/2		1/2	2 5/8	3	1 1/2	1/2					3.06
3	30		1 3/8	1/2	5/8		10 1/8	4 7/8	7/8		3	6 1/2	9 1/8	7 1/2	7 1/4	3 1/2		3/4	3 3/4	4 1/4	1 7/8	1/2					6.25
4	30		1 3/8	1/2	5/8		10 1/8	4 7/8	7/8		3	6 1/2	9 1/8	7 1/2	7 1/4	3 1/2		3/4	3 3/4	4 1/4	1 7/8	1/2					6.25
5	30		1 3/8	1/2	5/8		10 1/8	4 7/8	7/8		3	6 1/2	9 1/8	7 1/2	7 1/4	3 1/2		3/4	3 3/4	4 1/4	1 7/8	1/2					6.25

STANDARD SIGN
M5-1 & M5-2

WISCONSIN DEPT OF TRANSPORTATION

APPROVED Matthew R Rauch
for State Traffic Engineer

DATE 10/15/15 PLATE NO. M5-1.13

PROJECT NO:	HWY:	COUNTY:		SHEET NO:	E

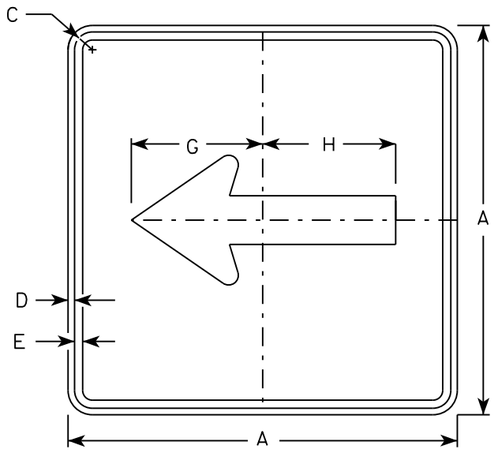

M6-1
MM6-1
MO6-1
MP6-1

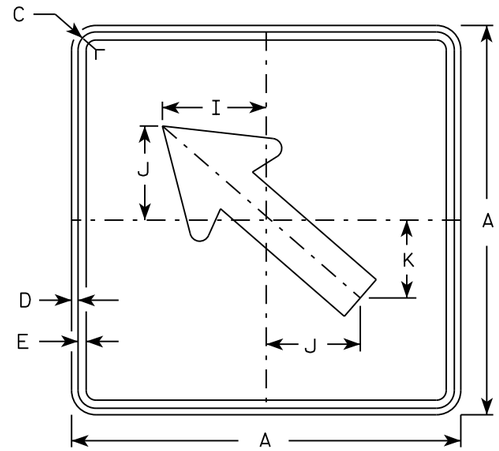

M6-2
MM6-2
MO6-2
MP6-2

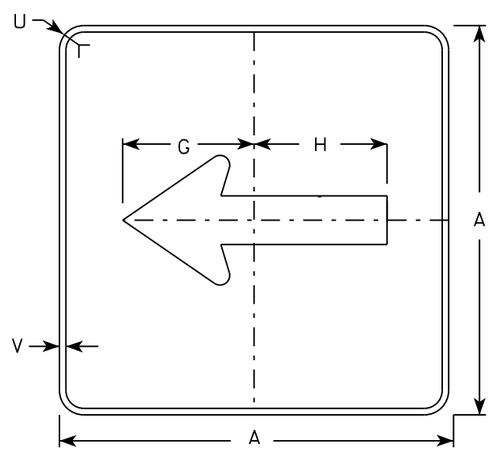

MB6-1
MK6-1
MN6-1
MR6-1

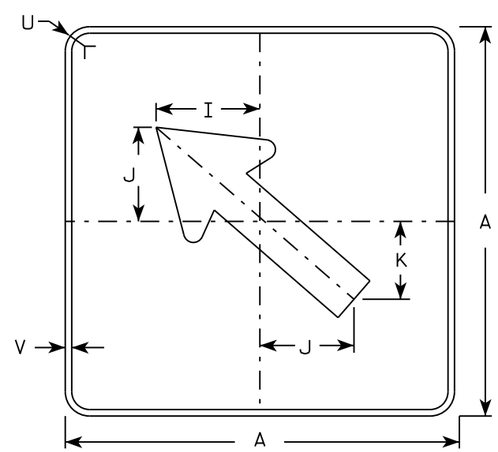

MB6-2
MK6-2
MN6-2
MR6-2

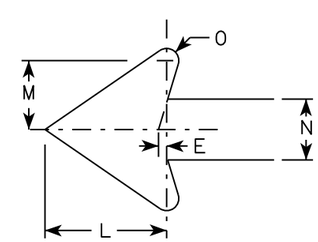

NOTES

1. Signs are Type II - Type H except as Shown
2. Color:
   Background - See note 4
   Message - See note 4
3. Corners may be square or rounded when base material is plywood but borders shall be rounded as shown. When base material is metal, the corners and borders shall be rounded.
4. M6-1 and M6-2 Background - White
   Message - Black
   MB6-1 and MB6-2 Background - Blue
   Message - White
   MK6-1 and MK6-2 Background - Green
   Message - White
   MM6-1 and MM6-2 Background - White
   Message - Green
   MN6-1 and MN6-2 Background - Brown
   Message - White
   MO6-1 and MO6-2 Background - Orange - Type F Reflective
   Message - Black
   MP6-1 and MP6-2 Background - White
   Message - Blue
   MR6-1 and MR6-2 Background - Brown
   Message - Yellow

SIZE	A	B	C	D	E	F	G	H	I	J	K	L	M	N	O	P	Q	R	S	T	U	V	W	X	Y	Z	Area sq. ft.
1																											
2	21		1 1/8	3/8	3/8		7 1/2	7 1/8	5 5/8	5	4 1/4	5 1/4	3	2 5/8	1/2						1 1/2	1/2					3.06
3	30		1 3/8	1/2	5/8		10 3/4	10 1/4	8	7 1/4	6	7 1/2	4 1/4	3 3/4	3/4						1 7/8	1/2					6.25
4	30		1 3/8	1/2	5/8		10 3/4	10 1/4	8	7 1/4	6	7 1/2	4 1/4	3 3/4	3/4						1 7/8	1/2					6.25
5	30		1 3/8	1/2	5/8		10 3/4	10 1/4	8	7 1/4	6	7 1/2	4 1/4	3 3/4	3/4						1 7/8	1/2					6.25

STANDARD SIGN
M6-1 & M6-2
SERIES

WISCONSIN DEPT OF TRANSPORTATION

APPROVED Matthew R Rauch
for State Traffic Engineer

DATE 10/15/15 PLATE 128 M6-1.15

PROJECT NO: | HWY: | COUNTY: | SHEET NO: | E

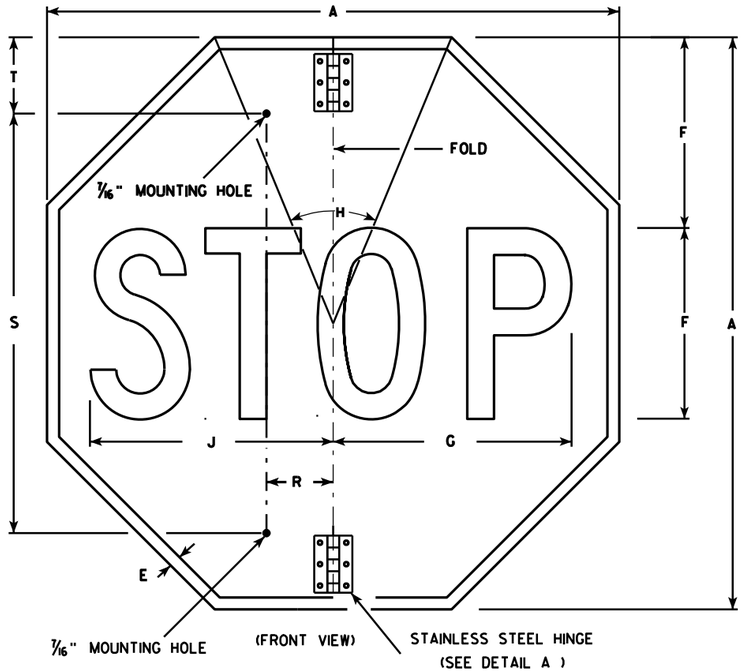

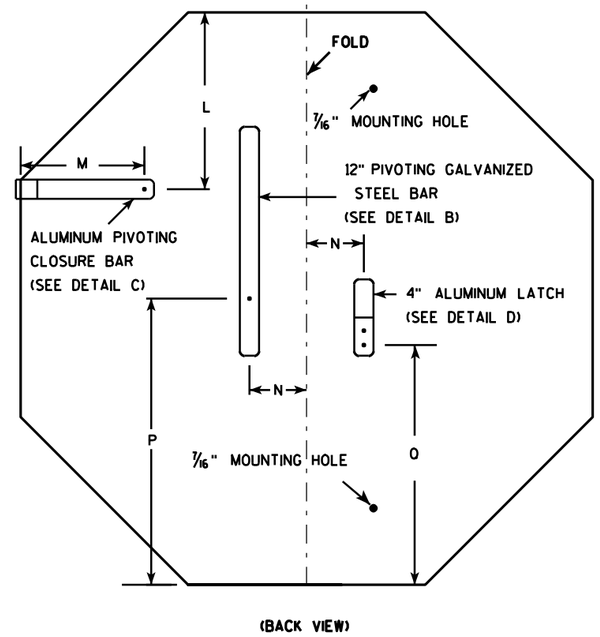

NOTES

1. Sign is Type II - Type H Reflective - reference WIS DOT Standard Specification for HIGHWAY and STRUCTURE CONSTRUCTION latest edition.
2. Color:
   Background - Red
   Message - White
3. Message Series - C
4. All hardware used on the folding STOP sign installation shall conform to 637.2.4 of the WIS DOT Standard Specification.

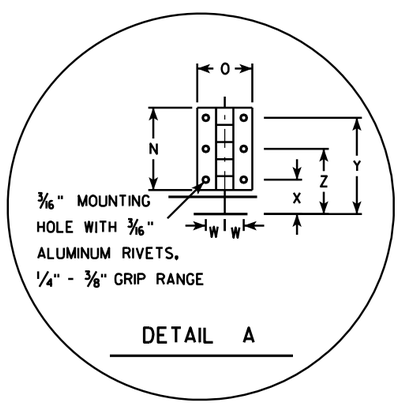

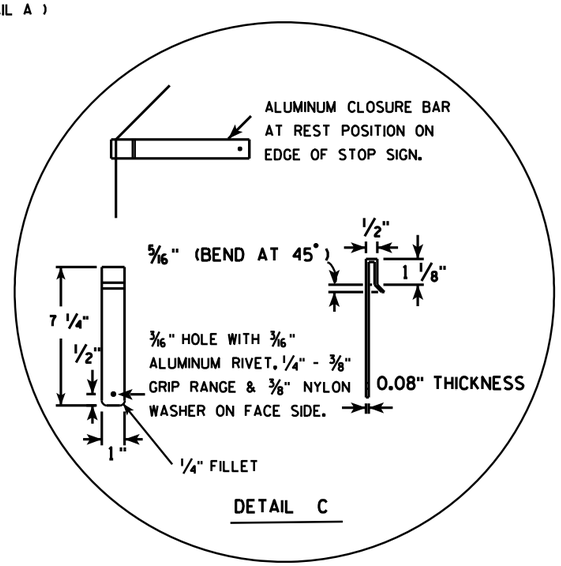

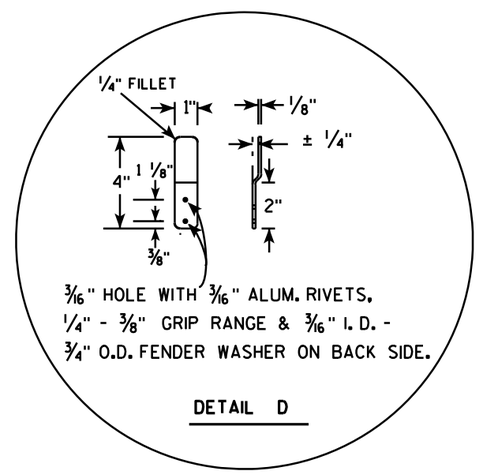

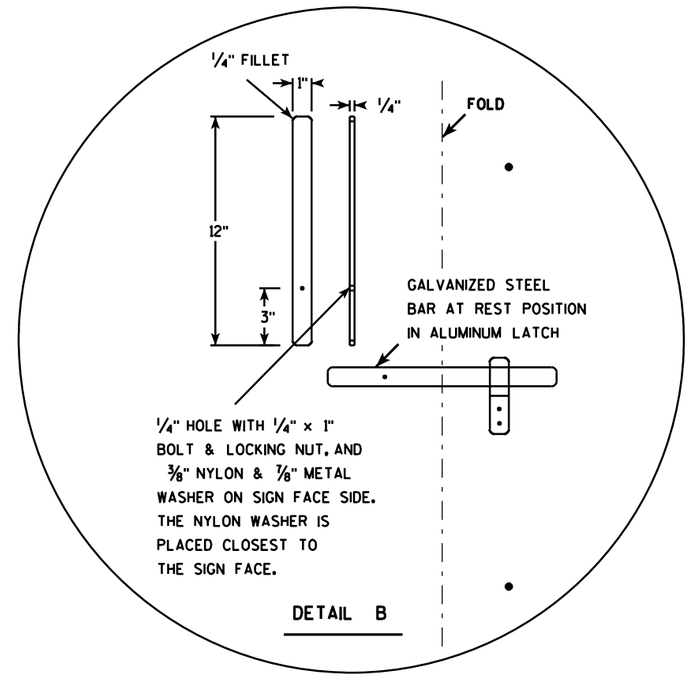

SIZE	A	B	C	D	E	F	G	H	I	J	K	L	M	N	O	P	Q	R	S	T	U	V	W	X	Y	Z	Area sq. ft.
1																											
2S	30				5/8	10	12 1/2	45		12 3/4		9 1/4	6 1/2	3	2	15	12 3/8	2 1/2	22	5			11/16	1 1/4	3 1/2	2 3/8	5.18
2M	36				3/4	12	15	45		15 3/8		11	6 1/2	3	2	18	15 3/8	2 1/2	26	5			11/16	1 1/4	3 1/2	2 3/8	7.46
3	36				3/4	12	15	45		15 3/8		11	6 1/2	3	2	18	15 3/8	2 1/2	26	5			11/16	1 1/4	3 1/2	2 3/8	7.46
4																											
5																											

STANDARD SIGN
R1-1F

WISCONSIN DEPT OF TRANSPORTATION

APPROVED Matthew R Rauch
for State Traffic Engineer

DATE 12/03/10 PLATE NO. R1-1F.3

PROJECT NO:	HWY:	COUNTY:		SHEET NO: 129	E

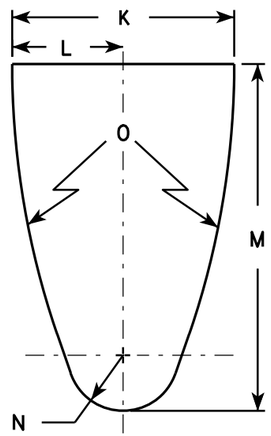

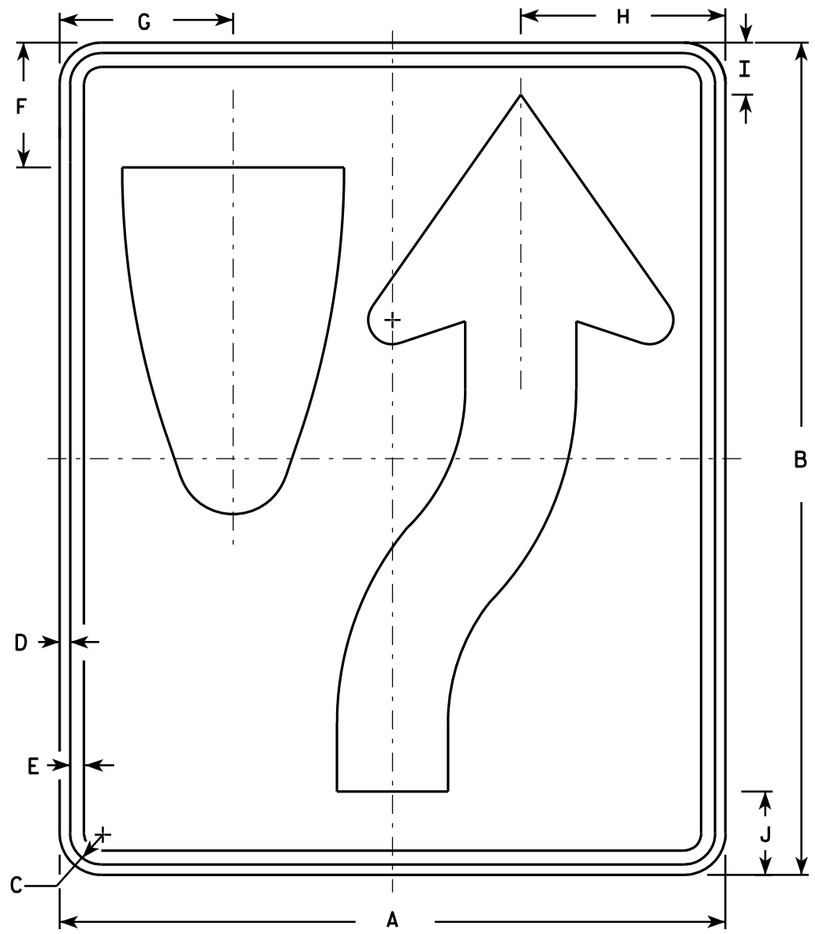

R4-7

NOTES

1. Sign is Type II - Type H Reflective - reference WIS DOT Standard Specification for HIGHWAY and STRUCTURE CONSTRUCTION latest edition. material is plywood but borders shall be rounded
2. Color:
   Background - White
   Message - Black
3. Corners may be square or rounded when base as shown. When base material is metal, the corners and borders shall be rounded.
4. R4-8 is the same as R4-7 except Legend is reversed.

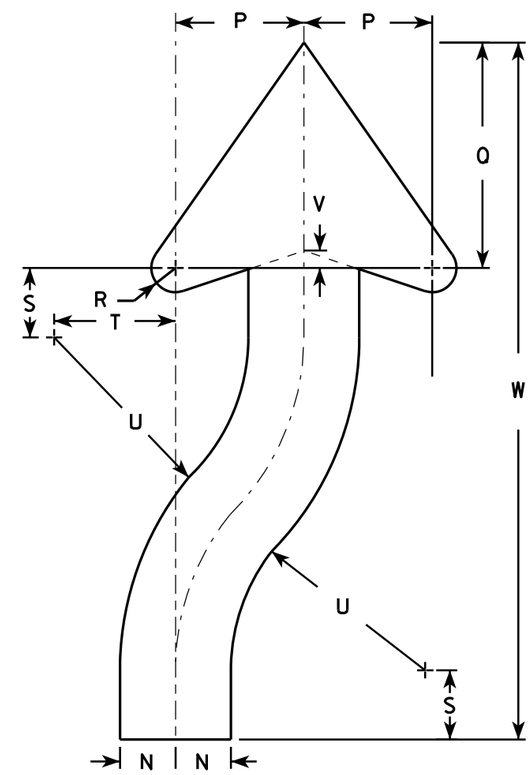

ARROW DETAIL

SIZE	A	B	C	D	E	F	G	H	I	J	K	L	M	N	O	P	Q	R	S	T	U	V	W	X	Y	Z	Area sq. ft.
1	18	24	1 1/8	3/8	1/2	3 3/8	4 3/4	5 1/2	1 3/8	2 1/4	6	3	9 3/8	1 1/2	22 1/2	3 1/2	6 1/8	5/8	1 7/8	3 1/4	6 3/4	1/2	20 3/8				3.0
2S	24	30	1 1/8	3/8	1/2	4 1/2	6 1/4	7 3/8	1 7/8	3	8	4	12 1/2	2	30	4 5/8	8 1/8	7/8	2 1/2	4 3/8	9	5/8	25 1/8				5.0
2M	24	30	1 1/8	3/8	1/2	4 1/2	6 1/4	7 3/8	1 7/8	3	8	4	12 1/2	2	30	4 5/8	8 1/8	7/8	2 1/2	4 3/8	9	5/8	25 1/8				5.0
3	36	48	1 3/4	1/2	5/8	6 3/4	9 3/8	11 1/8	2 7/8	4 1/2	12	6	18 3/4	3	45	6 7/8	12 1/4	1 1/4	3 3/4	6 5/8	13 1/2	1	40 3/4				12.0
4	36	48	1 3/4	1/2	5/8	6 3/4	9 3/8	11 1/8	2 7/8	4 1/2	12	6	18 3/4	3	45	6 7/8	12 1/4	1 1/4	3 3/4	6 5/8	13 1/2	1	40 3/4				12.0
5	48	60	2 1/4	3/4	1	9	12 1/2	14 3/4	3 3/4	6	16	8	25	4	60	9 1/4	16 1/4	1 5/8	5	8 3/4	18	1 1/4	50 1/4				20.0

STANDARD SIGN
R4-7 & R4-8

WISCONSIN DEPT OF TRANSPORTATION

APPROVED Matthew R Rauch for State Traffic Engineer

DATE 3/25/2011 PLATE NO. R4-7.8

PROJECT NO:	HWY:	COUNTY:		SHEET NO: 130	E

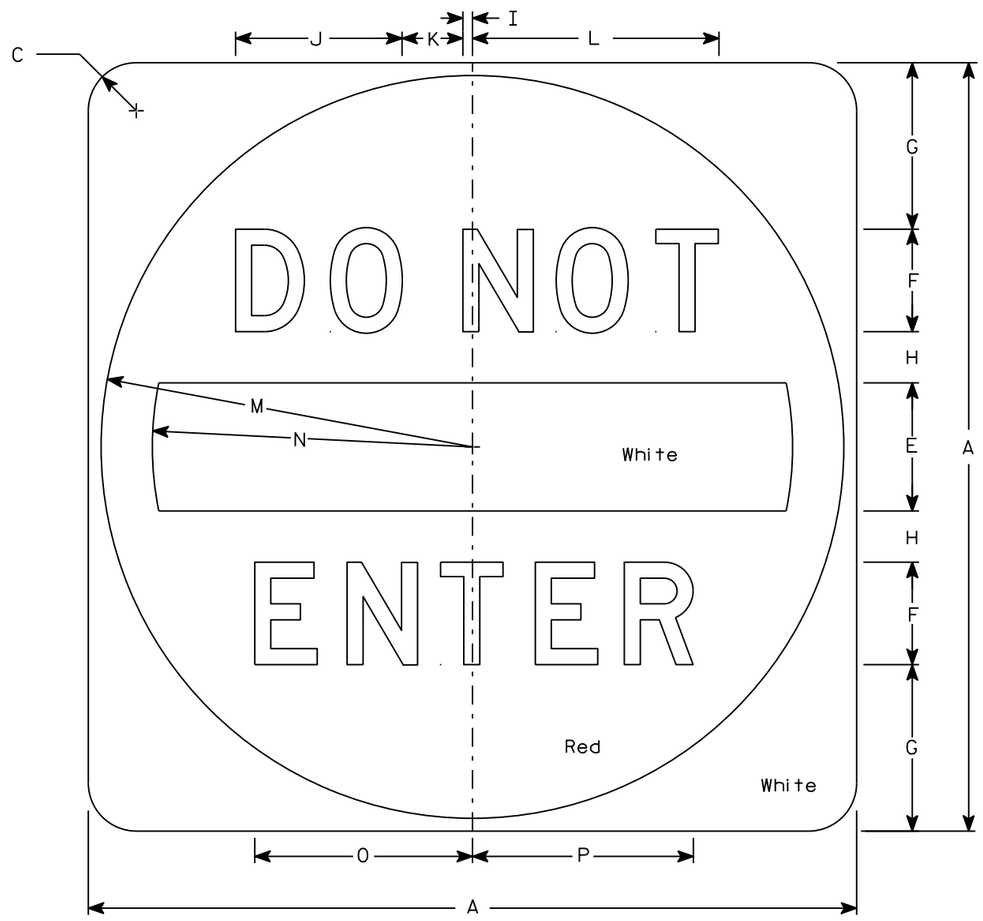

R5-1

NOTES

1. Sign is Type II - Type H Reflective
2. Color:
   Background - See detail
   Message - White
3. Message Series - D

SIZE	A	B	C	D	E	F	G	H	I	J	K	L	M	N	O	P	Q	R	S	T	U	V	W	X	Y	Z	Area sq. ft.
1																											
2S	30		1 7/8		5	4	6 1/2	2	3/8	6 1/2	2 3/8	9 5/8	14 1/2	12 1/2	8 1/2	8 5/8											6.25
2M	36		2 1/4		6	5	7 1/2	2 1/2	1/2	8 1/8	3	12 1/8	17 1/2	15	10 5/8	10 3/4											9.0
3	36		2 1/4		6	5	7 1/2	2 1/2	1/2	8 1/8	3	12 1/8	17 1/2	15	10 5/8	10 3/4											9.0
4	36		2 1/4		6	5	7 1/2	2 1/2	1/2	8 1/8	3	12 1/8	17 1/2	15	10 5/8	10 3/4											9.0
5	48		3		8	6	11	3	5/8	9 3/4	3 5/8	14 1/2	23 1/2	20	12 3/4	12 7/8											16.0

STANDARD SIGN
R5-1

WISCONSIN DEPT OF TRANSPORTATION

APPROVED Matthew R Rauch
for State Traffic Engineer

DATE 3/15/18 PLATE NO. R5-1.16

PROJECT NO: | HWY: | COUNTY: | SHEET NO: 131 | E

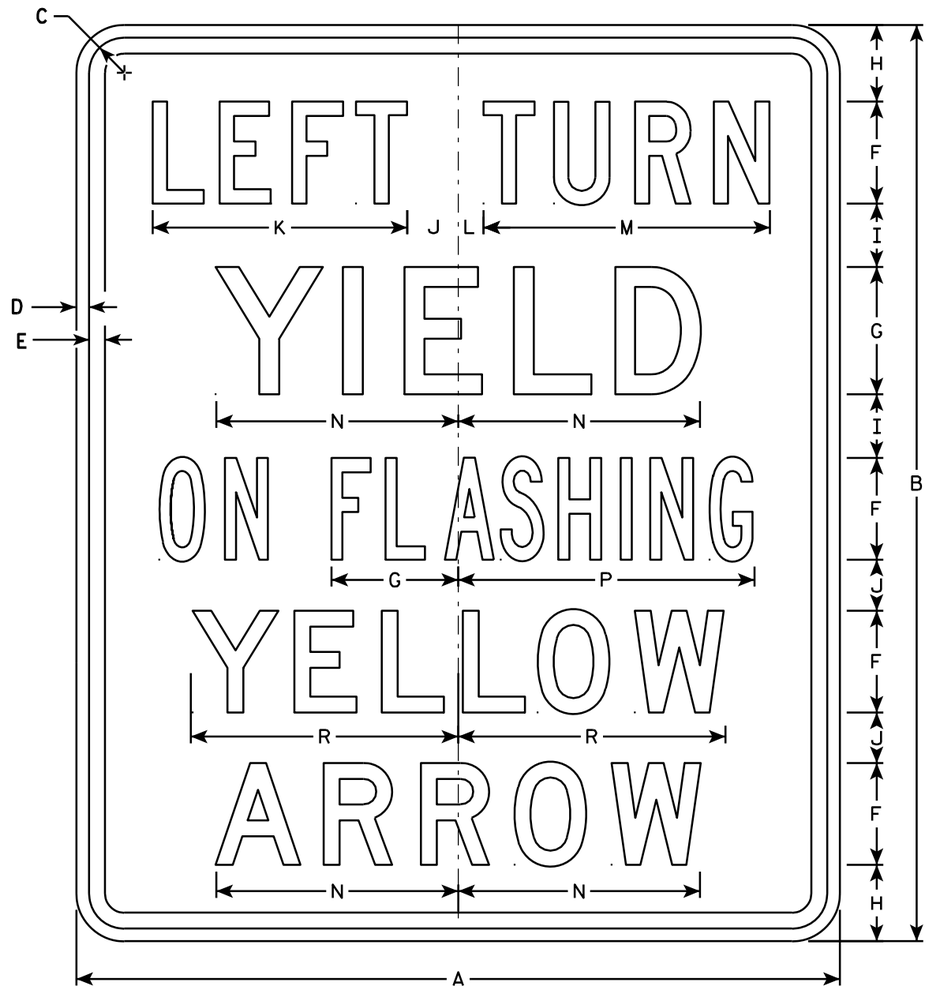

R10-50L

NOTES

1. Sign is Type II - Type H Reflective - reference WIS DOT Standard Specification for HIGHWAY and STRUCTURE CONSTRUCTION latest edition.
2. Color:
   Background - White
   Message - Black
3. Message Series - see note 5
4. Corners may be square or rounded when base material is plywood but borders shall be rounded as shown. When base material is metal, the corners and borders shall be rounded.
5. Line 1 is Series C.
   Lines 2, 4 and 5 are Series D.
   Line 3 is Series B.

"RIGHT" Is Series B

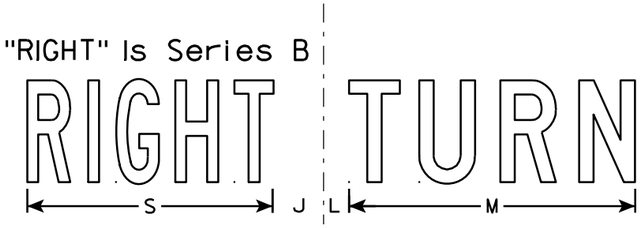

R10-50R

SIZE	A	B	C	D	E	F	G	H	I	J	K	L	M	N	O	P	Q	R	S	T	U	V	W	X	Y	Z	Area sq. ft.
1																											
2S	30	36	1 3/8	1/2	5/8	4	5	3	2 1/2	2	10	1	11 1/4	9 1/2	4 1/4	11 5/8		10 1/2	9 5/8								7.5
2M	30	36	1 3/8	1/2	5/8	4	5	3	2 1/2	2	10	1	11 1/4	9 1/2	4 1/4	11 5/8		10 1/2	9 5/8								7.5
3																											
4																											
5																											

STANDARD SIGN
R10-50

WISCONSIN DEPT OF TRANSPORTATION

APPROVED Matthew R Rauch
for State Traffic Engineer

DATE 4/11/13 PLATE NO. R10-50.2

PROJECT NO:	HWY:	COUNTY:		SHEET NO: 132	E

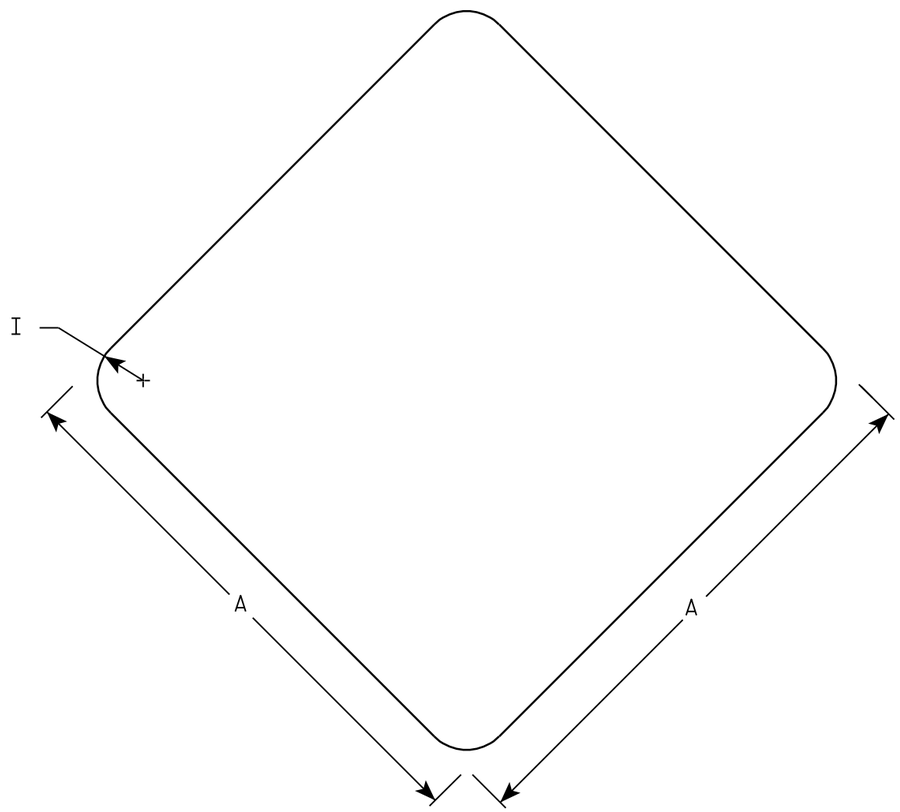

W5-54

NOTES

1. Sign is Type II - Type F Reflective - reference WIS DOT Standard Specification for HIGHWAY and STRUCTURE CONSTRUCTION latest edition.
2. Color:
   Background - Yellow
3. Corners may be square or rounded when base material is plywood. When base material is metal the corners shall be rounded.

7

SIZE	A	B	C	D	E	F	G	H	I	J	K	L	M	N	O	P	Q	R	S	T	U	V	W	X	Y	Z	Area sq. ft.
1	12								1																		1.0
2S	18								1 ½																		2.25
2M	18								1 ½																		2.25
3																											
4																											
5																											

STANDARD SIGN
W5-54

WISCONSIN DEPT OF TRANSPORTATION

APPROVED Matthew R Rauch
for State Traffic Engineer

DATE 11/3/10 PLATE NO. W5-54.8

PROJECT NO:	HWY:	COUNTY:		SHEET NO: 133	E

NOTES

1. Sign is Type II - Type F Reflective
2. Color:
   Background - Orange
   Message - Black
3. Message Series - C
4. Corners may be square or rounded when base material is plywood but borders shall be rounded as shown. When base material is metal, the corners and borders shall be rounded.

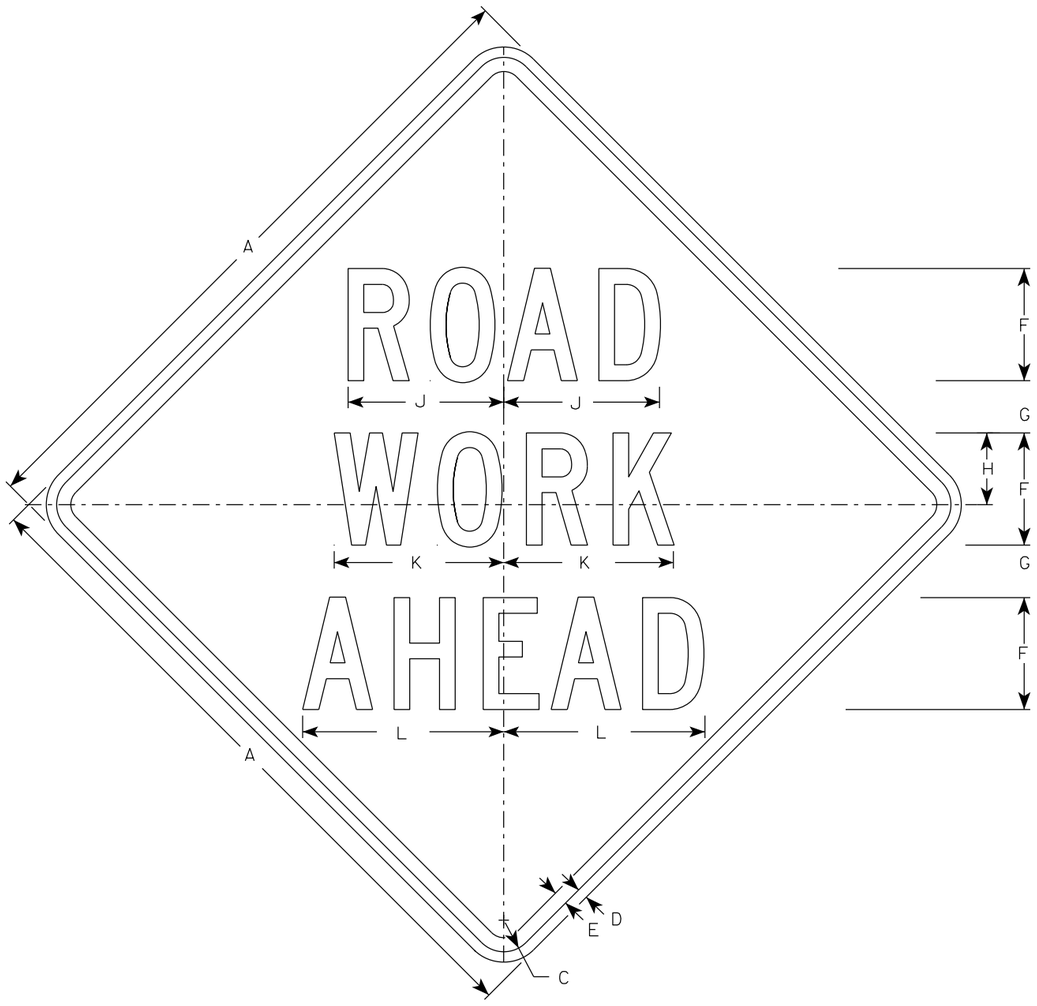

W20-1A

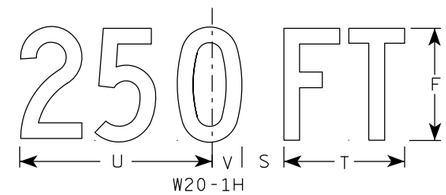

W20-1H

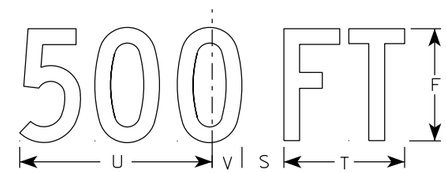

W20-1D

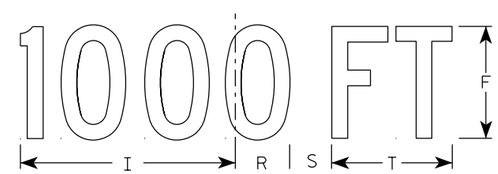

W20-1C

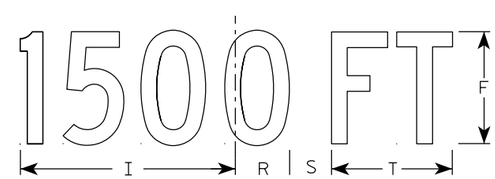

W20-1B

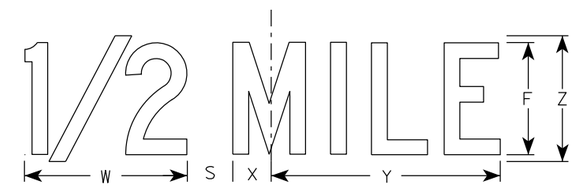

W20-1G

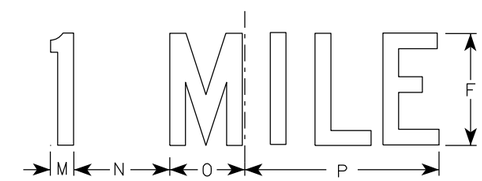

W20-1F

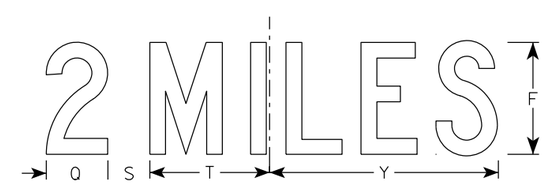

W20-1E

SIZE	A	B	C	D	E	F	G	H	I	J	K	L	M	N	O	P	Q	R	S	T	U	V	W	X	Y	Z	Area sq. ft.
1	36		1 5/8	5/8	3/4	5	2 5/8	3 1/4	10 1/8	7	7 5/8	8 7/8	1 1/8	4 1/2	3 1/2	9	3 1/4	2 1/2	2 1/4	5 5/8	9	1 3/8	8	1 3/4	10 3/4	6	9.0
2S	48		2 1/4	3/4	1	8	3 3/4	5 1/8	15 3/8	11 1/8	12 1/8	14 3/8	1 5/8	6 7/8	5 3/8	13 7/8	4 3/8	3 7/8	3	8 5/8	13 3/4	2 1/8	11 7/8	2 3/4	16 3/8	9	16.0
2M	48		2 1/4	3/4	1	8	3 3/4	5 1/8	15 3/8	11 1/8	12 1/8	14 3/8	1 5/8	6 7/8	5 3/8	13 7/8	4 3/8	3 7/8	3	8 5/8	13 3/4	2 1/8	11 7/8	2 3/4	16 3/8	9	16.0
3	48		2 1/4	3/4	1	8	3 3/4	5 1/8	15 3/8	11 1/8	12 1/8	14 3/8	1 5/8	6 7/8	5 3/8	13 7/8	4 3/8	3 7/8	3	8 5/8	13 3/4	2 1/8	11 7/8	2 3/4	16 3/8	9	16.0
4	48		2 1/4	3/4	1	8	3 3/4	5 1/8	15 3/8	11 1/8	12 1/8	14 3/8	1 5/8	6 7/8	5 3/8	13 7/8	4 3/8	3 7/8	3	8 5/8	13 3/4	2 1/8	11 7/8	2 3/4	16 3/8	9	16.0
5	48		2 1/4	3/4	1	8	3 3/4	5 1/8	15 3/8	11 1/8	12 1/8	14 3/8	1 5/8	6 7/8	5 3/8	13 7/8	4 3/8	3 7/8	3	8 5/8	13 3/4	2 1/8	11 7/8	2 3/4	16 3/8	9	16.0

STANDARD SIGN
W20-1A, B, C, D, E, F, G & H

WISCONSIN DEPT OF TRANSPORTATION

APPROVED Matthew R Rauch
For State Traffic Engineer
DATE 3/25/2020 PLATE NO. W20-1.11

PROJECT NO:

SHEET NO: 134 E

W20-56A

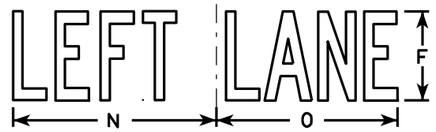

W20-55A

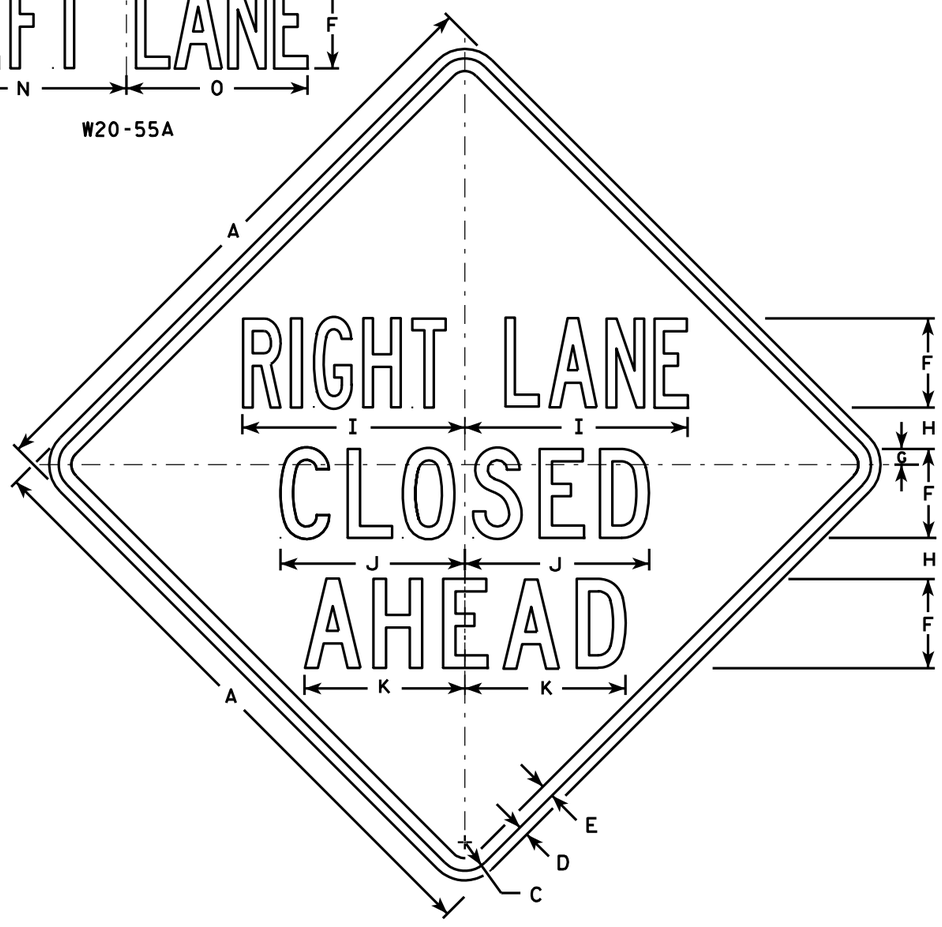

W20-5A

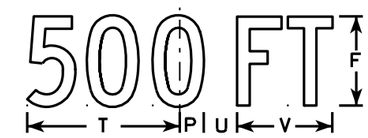

W20-5D

W20-5C

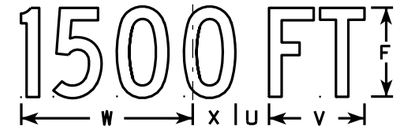

W20-5B

W20-5G

W20-5F

NOTES

1. Sign is Type II - Type F Reflective - reference WIS DOT Standard Specification for HIGHWAY and STRUCTURE CONSTRUCTION latest edition.
2. Color:
   Background - Orange
   Message - Black
3. Message Series - See Note 5
4. Corners may be square or rounded when base material is plywood but borders shall be rounded as shown. When base material is metal, the corners and borders shall be rounded.
5. " ------- LANE" is Series B.
   All other copy is Series C.

SIZE	A	B	C	D	E	F	G	H	I	J	K	L	M	N	O	P	Q	R	S	T	U	V	W	X	Y	Z	Area sq. ft.
1	36	6	1 5/8	5/8	3/4	5	7/8	2 1/2	13 1/8	10 3/4	9 1/2	14 1/4	13 5/8	12	12	1 3/8	1 1/8	4 1/2	3 1/2	9	1 7/8	5 5/8	10 1/8	2 1/2	1 3/4	8	9.0
2S	48	8	2 1/4	3/4	1	7	1 1/4	3 1/4	17 1/2	14 3/8	12 5/8	19	18 3/8	16	14 1/4	1 7/8	1 1/2	6	4 5/8	12	2 5/8	7 1/2	13 1/2	3 3/8	2 3/8	10 5/8	16.0
2M	48	8	2 1/4	3/4	1	7	1 1/4	3 1/4	17 1/2	14 3/8	12 5/8	19	18 3/8	16	14 1/4	1 7/8	1 1/2	6	4 5/8	12	2 5/8	7 1/2	13 1/2	3 3/8	2 3/8	10 5/8	16.0
3	48	8	2 1/4	3/4	1	7	1 1/4	3 1/4	17 1/2	14 3/8	12 5/8	19	18 3/8	16	14 1/4	1 7/8	1 1/2	6	4 5/8	12	2 5/8	7 1/2	13 1/2	3 3/8	2 3/8	10 5/8	16.0
4	48	8	2 1/4	3/4	1	7	1 1/4	3 1/4	17 1/2	14 3/8	12 5/8	19	18 3/8	16	14 1/4	1 7/8	1 1/2	6	4 5/8	12	2 5/8	7 1/2	13 1/2	3 3/8	2 3/8	10 5/8	16.0
5	48	8	2 1/4	3/4	1	7	1 1/4	3 1/4	17 1/2	14 3/8	12 5/8	19	18 3/8	16	14 1/4	1 7/8	1 1/2	6	4 5/8	12	2 5/8	7 1/2	13 1/2	3 3/8	2 3/8	10 5/8	16.0

STANDARD SIGN
W20-5A, B, C, D, F & G

WISCONSIN DEPT OF TRANSPORTATION

APPROVED Matthew R Rauch
for State Traffic Engineer

DATE 3/18/11 PLATE NO. W20-5.11

PROJECT NO:	HWY:	COUNTY:		SHEET NO: 135	E

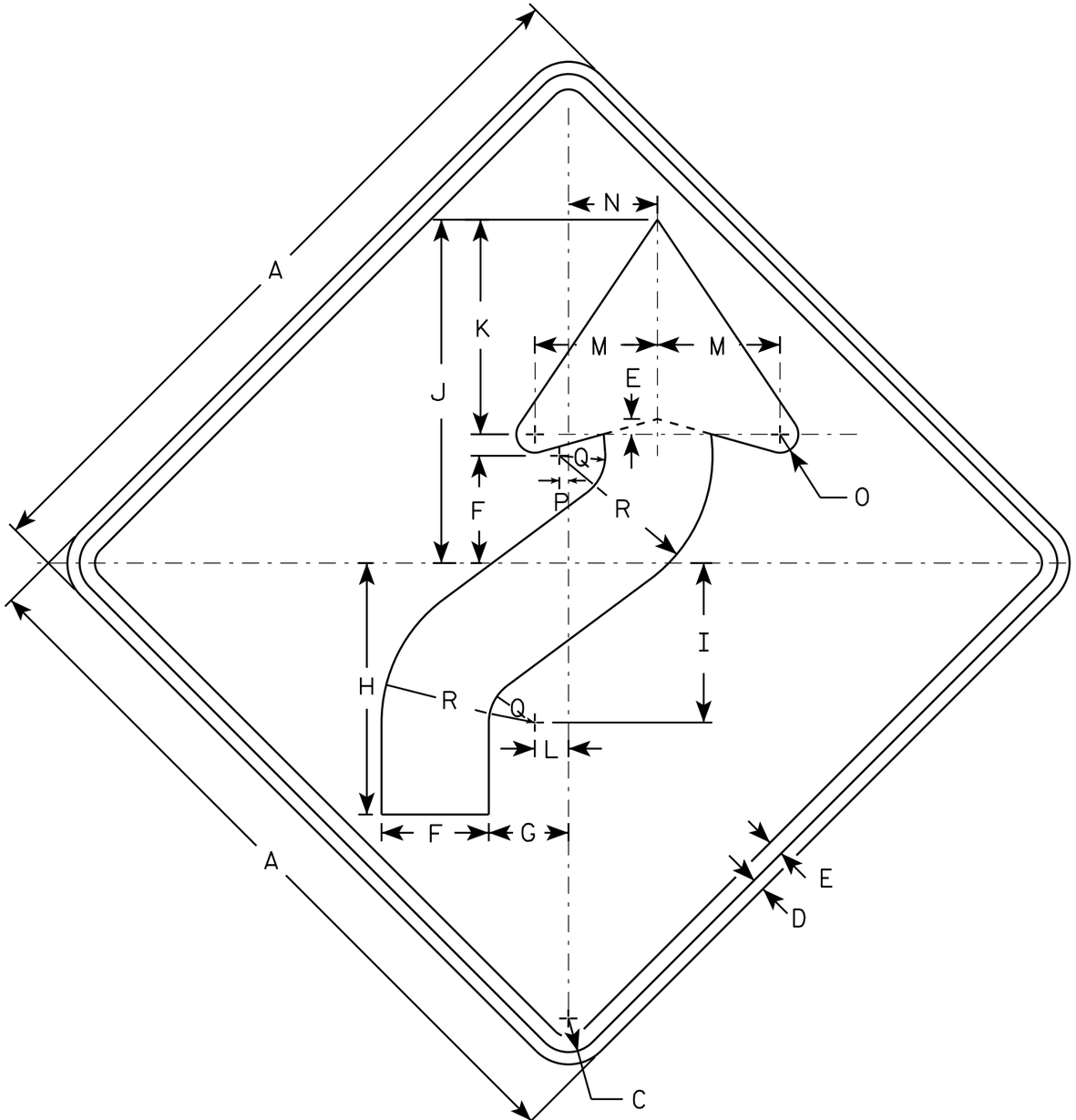

W01-4R

NOTES

1. Sign is Type II - Type F Reflective - reference WIS DOT Standard Specification for HIGHWAY and STRUCTURE CONSTRUCTION latest edition.
2. Color:
   Background - Orange
   Message - Black
3. Corners may be square or rounded when base material is plywood but borders shall be rounded as shown. When base material is metal, the corners and borders shall be rounded.
4. W01-4L is the same as W01-4R except the arrow is reversed along the vertical centerline.

SIZE	A	B	C	D	E	F	G	H	I	J	K	L	M	N	O	P	Q	R	S	T	U	V	W	X	Y	Z	Area sq. ft.
1	36		1 5/8	5/8	3/4	5 1/4	4	12 3/8	7 7/8	16 7/8	10 1/2	1 5/8	6	4 1/2	1	1/2	2 1/4	7 1/2									9.0
2S	48		2 1/4	3/4	1	7	5 1/4	16 1/2	10 1/2	22 1/2	14	2 1/4	8	6	1 1/4	5/8	3	10									16.0
2M	48		2 1/4	3/4	1	7	5 1/4	16 1/2	10 1/2	22 1/2	14	2 1/4	8	6	1 1/4	5/8	3	10									16.0
3	48		2 1/4	3/4	1	7	5 1/4	16 1/2	10 1/2	22 1/2	14	2 1/4	8	6	1 1/4	5/8	3	10									16.0
4	48		2 1/4	3/4	1	7	5 1/4	16 1/2	10 1/2	22 1/2	14	2 1/4	8	6	1 1/4	5/8	3	10									16.0
5	48		2 1/4	3/4	1	7	5 1/4	16 1/2	10 1/2	22 1/2	14	2 1/4	8	6	1 1/4	5/8	3	10									16.0

STANDARD SIGN
W01-4

WISCONSIN DEPT OF TRANSPORTATION

APPROVED Matthew R Rauch
for State Traffic Engineer

DATE 11/18/13 PLATE NO W01-4.1

PROJECT NO:	HWY:	COUNTY:		SHEET NO:	E

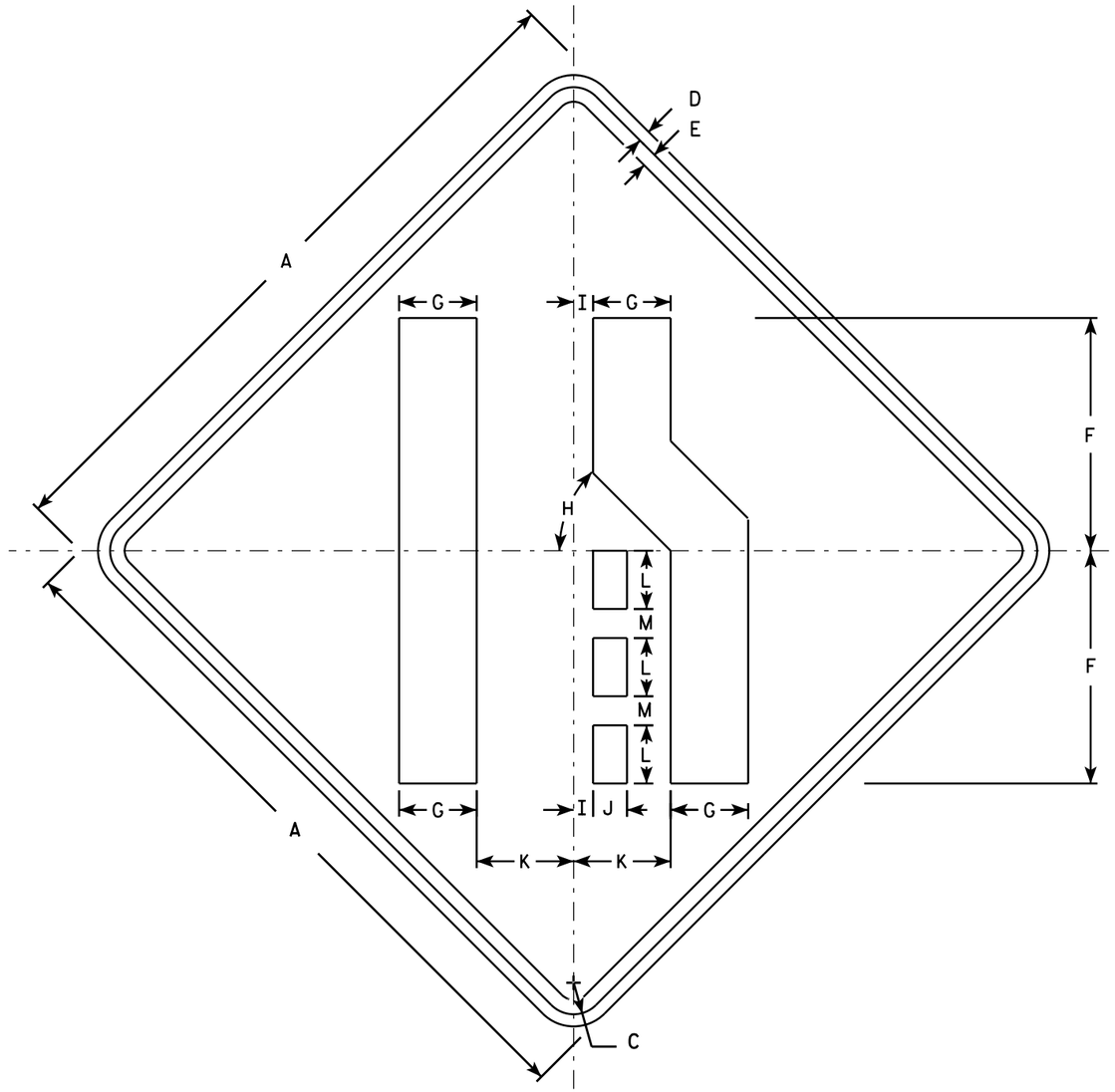

W04-2R

NOTES

1. Sign is Type II - Type F Reflective - reference WIS DOT Standard Specification for HIGHWAY and STRUCTURE CONSTRUCTION latest edition.
2. Color:
   Background - Orange
   Message - Black
3. Corners may be square or rounded when base material is plywood but borders shall be rounded as shown. When base material is metal, the corners and borders shall be rounded.
4. W04-2L is the same as W04-2R except the symbol is reversed along the vertical centerline.

SIZE	A	B	C	D	E	F	G	H	I	J	K	L	M	N	O	P	Q	R	S	T	U	V	W	X	Y	Z	Area sq. ft.
1	36		1 5/8	5/8	3/4	12	4	45°	1	1 3/4	5	3	1 1/2														9.0
2S	48		2 1/4	3/4	1	16	5 3/8	45°	1 1/4	2 3/8	6 3/4	4	2														16.0
2M	48		2 1/4	3/4	1	16	5 3/8	45°	1 1/4	2 3/8	6 3/4	4	2														16.0
3	48		2 1/4	3/4	1	16	5 3/8	45°	1 1/4	2 3/8	6 3/4	4	2														16.0
4	48		2 1/4	3/4	1	16	5 3/8	45°	1 1/4	2 3/8	6 3/4	4	2														16.0
5	48		2 1/4	3/4	1	16	5 3/8	45°	1 1/4	2 3/8	6 3/4	4	2														16.0

STANDARD SIGN
W04-2

WISCONSIN DEPT OF TRANSPORTATION

APPROVED Matthew R Rauch
for State Traffic Engineer

DATE 11/20/13 PLATE W04-2.1

PROJECT NO: | SHEET NO: E

STAGE 1 - COMMON EXCAVATION

RIGHT TURN ISLANDS			
STA	Area (SF)	Volume 4" Depth (CF)	Volume 4" Depth (CY)
NW Island	491.48	163.83	6.07
NE Island	705.70	235.23	8.71
SW Island	446.02	148.67	5.51
SE Island	533.59	177.86	6.59
			26.87

STAGE 2 - COMMON EXCAVATION

NORTH BOUND					
STA	length (LF)	Area (SF)	Volume (CF)	Volume (CY)	Cum Volume (CY)
796+20.40	0	22.2	0.00	0.00	0.00
796+50	29.6	20.82	636.70	23.58	23.58
797+00	50	17.52	958.50	35.50	59.08
797+50	50	14.28	795.00	29.44	88.53
798+00	50	12.54	670.50	24.83	113.36
798+26	26	22.66	457.60	16.95	130.31
798+50	24	22.62	543.36	20.12	150.43
799+00	50	22.6	1130.50	41.87	192.30
799+44	44	22.74	997.48	36.94	229.25
799+50	6	18.38	123.36	4.57	233.81
799+61.46	11.46	9.42	159.29	5.90	239.71

Unusable Material	Area (SF)	Depth/ Lenth (FT)	Volume (CF)	Volume (CY)
Pavement	4880.8996	0.67	3253.93	120.52
Pin-On Island	942.9546	0.50	471.48	17.46
			Total:	137.98

SOUTH BOUND					
STA	length (LF)	Area (SF)	Volume (CF)	Volume (CY)	Cum Volume (CY)
800+62.92	0	9.68	0.00	0.00	0.00
800+66	3.08	9.68	29.81	1.10	1.10
800+81	15	10.27	149.63	5.54	6.65
801+00	19	22.90	315.12	11.67	18.32
801+50	50	23.09	1149.75	42.58	60.90
801+77	27	22.75	618.84	22.92	83.82
802+00	23	11.78	397.10	14.71	98.53
802+50	50	17.84	740.50	27.43	125.95
803+00	50	20.68	963.00	35.67	161.62
803+50	50	17.93	965.25	35.75	197.37
804+00	50	12.44	759.25	28.12	225.49
804+50	50	8.74	529.50	19.61	245.10
804+90.67	40.67	6.37	307.26	11.38	256.48

Unusable Material	Area (SF)	Depth/ Lenth (FT)	Volume (CF)	Volume (CY)
Pavement	2253.5284	0.67	1502.35	55.64
Pin-On Island	1123.7496	0.5	561.87	20.81
Sidewalk	2096.3368	0.33	698.78	25.88
Curb/Gutter	1.75	618.90	1083.08	40.11
			Total:	142.45

STAGE 3 - COMMON EXCAVATION AND BORROW

EAST BOUND									
STA	length (LF)	Cut Area (SF)	Cut Volume (CF)	Cut Volume (CY)	Cum Cut Volume (CY)	Fill Area (SF)	Fill Volume (CF)	Fill Volume (CY)	Cum Fill Volume (CY)
955+28.42	0	10.508	0.00	0.00	0.00	0.00	0.00	0.00	0.00
955+53	24.58	34.14	548.72	20.32	20.32	0.00	0.00	0.00	0.00
956+00	47	45.39	1868.96	69.22	89.54	9.81	0.00	0.00	0.00
956+50	50	52.55	2448.50	90.69	180.23	16.06	23.95	0.89	0.89
956+79	29	52.97	1530.04	56.67	236.90	17.86	18.22	0.67	1.56
957+00	21	48.35	1063.86	39.40	276.30	14.42	12.55	0.46	2.03
957+50	50	37.54	2147.25	79.53	355.83	6.25	19.14	0.71	2.74
958+00	50	39.8	1933.50	71.61	427.44	0.00	0.00	0.00	2.74
958+50	50	39.45	1981.25	73.38	500.82	0.00	0.00	0.00	2.74
958+89	39	62.55	1989.00	73.67	574.48	0.00	0.00	0.00	2.74
958+96	7	37.53	350.28	12.97	587.46	0.00	0.00	0.00	2.74
959+00	4	37.55	150.16	5.56	593.02	0.00	0.00	0.00	2.74
959+46	46	34.89	1666.12	61.71	654.73	0.00	0.00	0.00	2.74
959+78.79	2.79	34.89	97.34	3.61	658.33	0.00	0.00	0.00	2.74

Unusable Material	Area (SF)	Depth/ Lenth (FT)	Volume (CF)	Volume (CY)
Pavement	4411.80	0.67	2941.20	108.93
Sidewalk	2468.61	0.33	822.87	30.48
Curb/Gutter	1.75	544.70	953.23	35.30
			Total:	174.71

WEST BOUND					
STA	length (LF)	Area (SF)	Volume (CF)	Volume (CY)	Cum Volume (CY)
960+59.04	0	34.60	0.00	0.00	0.00
960+62	2.96	34.60	102.42	3.79	3.79
961+00	38	37.22	1364.58	50.54	54.33
961+12	12	37.44	447.96	16.59	70.92
961+19	7	37.90	263.69	9.77	80.69
961+50	31	37.26	1164.98	43.15	123.84
962+04	54	38.11	2034.99	75.37	199.21
962+50	46	28.03	1521.22	56.34	255.55
963+00	50	28.85	1422.00	52.67	308.22
963+50	50	29.62	1461.75	54.14	362.36
964+00	50	32.13	1543.75	57.18	419.53
964+30	30	32.42	968.25	35.86	455.39
964+55.44	25.44	10.34	543.91	20.14	475.54

Unusable Material	Area (SF)	Depth/ Lenth (FT)	Volume (CF)	Volume (CY)
Pavement	4866.124	0.67	3244.08	120.15
Sidewalk	2472.5139	0.33	824.17	30.52
Curb/Gutter	1.75	489.30	856.28	31.71
			Total:	182.39

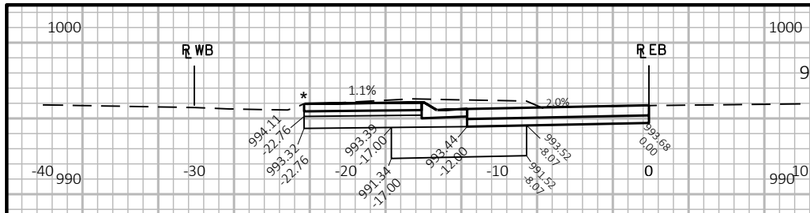

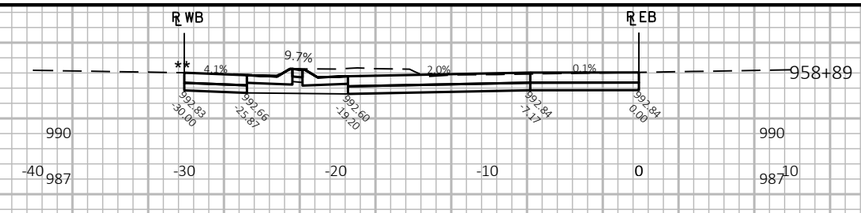

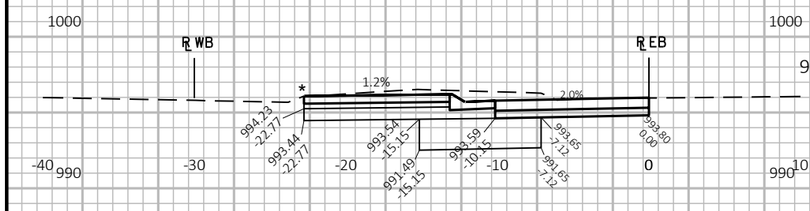

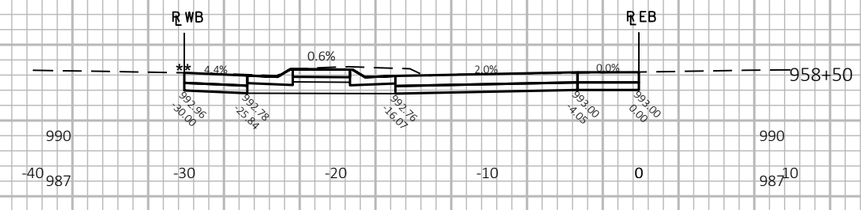

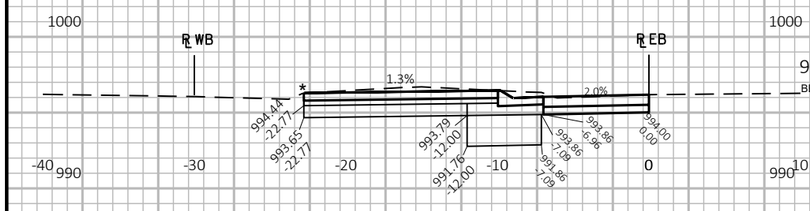

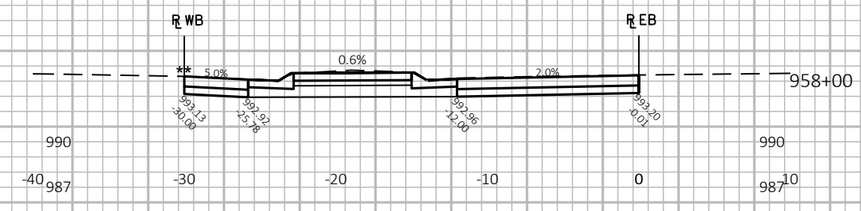

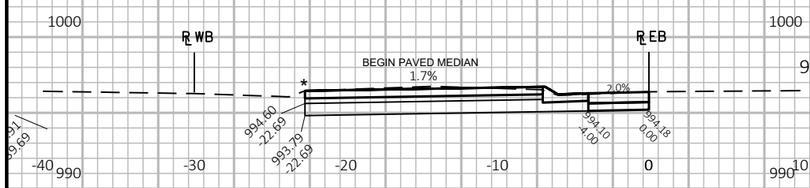

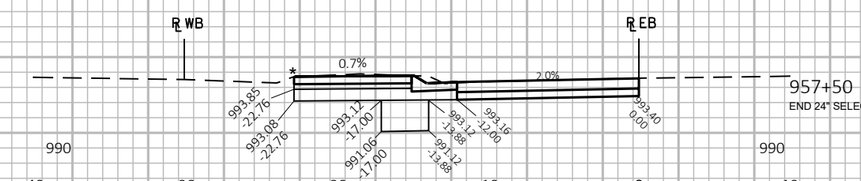

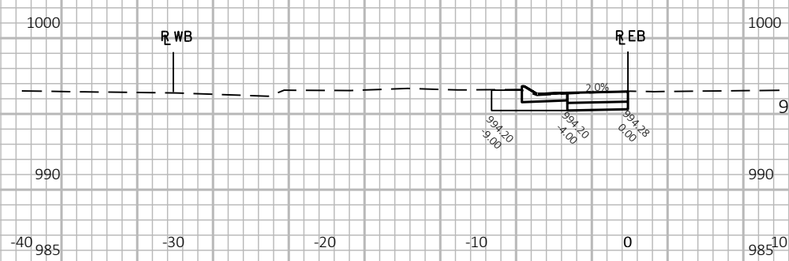

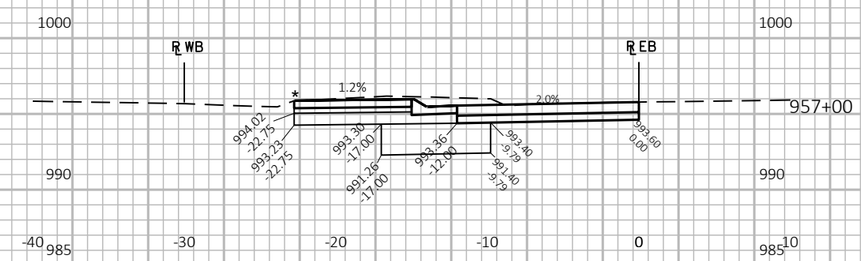

NOTES:

* MATCH WITH EXISTING WB TOP OF CURB

** MATCH WITH EXISTING WB PAVEMENT

RIGHT OF WAY (ROW) IS OUTSIDE OF SECTION LIMITS ALL WORK IS WITHIN ROW

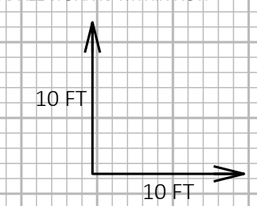

9

9

PROJECT NO: 8110-01-76	HWY: STH 64	COUNTY: ST. CROIX	CROSS SECTIONS: STH 64 EASTBOUND	SHEET 140	E

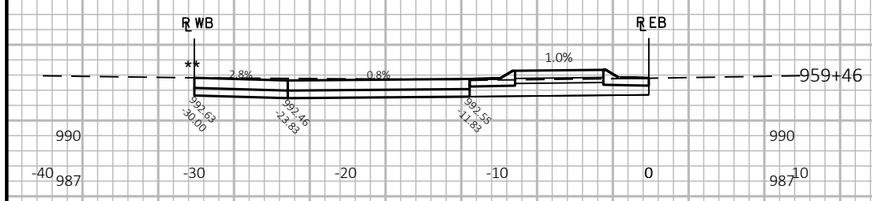

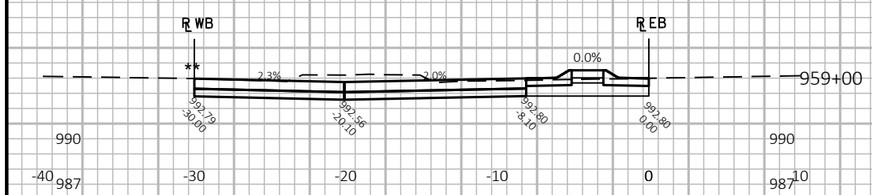

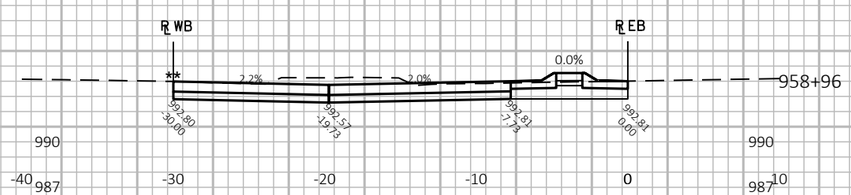

NOTES:

* MATCH WITH EXISTING WB TOP OF CURB

** MATCH WITH EXISTING WB PAVEMENT

RIGHT OF WAY (ROW) IS OUTSIDE OF SECTION LIMITS ALL WORK IS WITHIN ROW

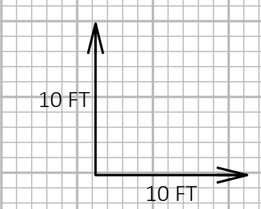

9

9

PROJECT NO: 8110-01-76	HWY: STH 64	COUNTY: ST. CROIX	CROSS SECTIONS: STH 64 EASTBOUND	SHEET 141	E

961+19

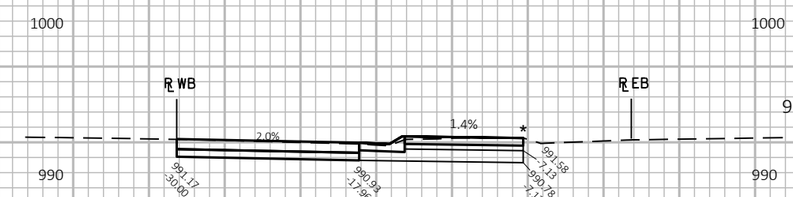

963+00

961+12

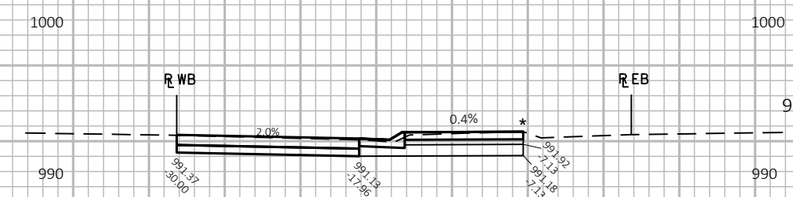

962+50

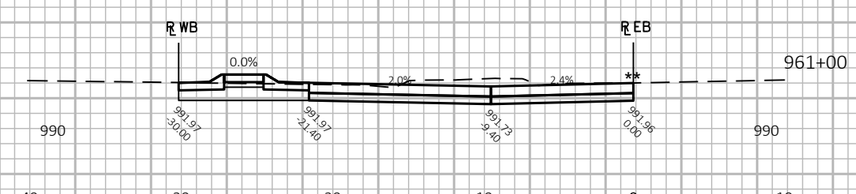

961+00

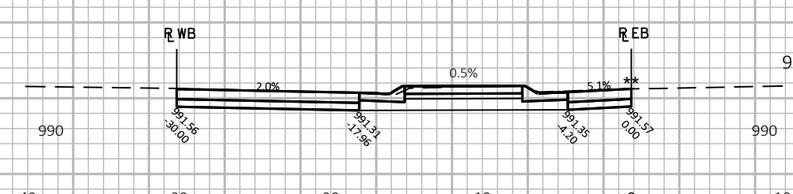

962+04

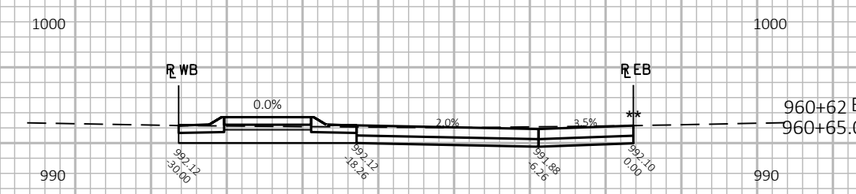

960+62 EB
960+65.07 WB

961+50

NOTES:

* MATCH WITH EXISTING EB TOP OF CURB

** MATCH WITH EXISTING EB PAVEMENT

RIGHT OF WAY (ROW) IS OUTSIDE OF SECTION LIMITS ALL WORK IS WITHIN ROW

CROSS SECTIONS ARE ON EB RL STATIONING

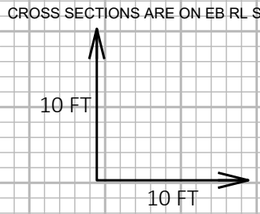

9

9

PROJECT NO: 8110-01-76	HWY: STH 64	COUNTY: ST. CROIX	CROSS SECTIONS: STH 64 WESTBOUND	SHEET 142	E

FILE NAME : D:\WORK\81100106 C3D\SHEETSPLAN\090201-XS.DWG
LAYOUT NAME - WB1

PLOT DATE : 7/13/2021 1:14 PM PLOT BY : MUNDEN, ALLISSA L PLOT NAME : **PLOT SCALE :** 1 IN:10 FT HORZ. / 1 IN:10 FT VERT.

WISDOT/CADDS SHEET 49

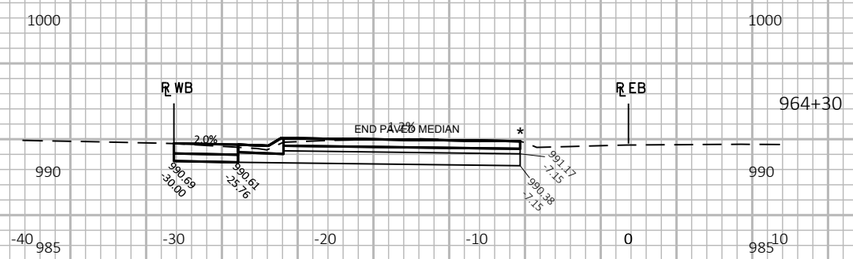

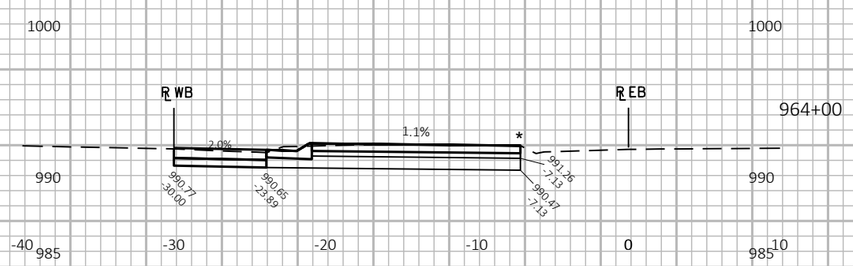

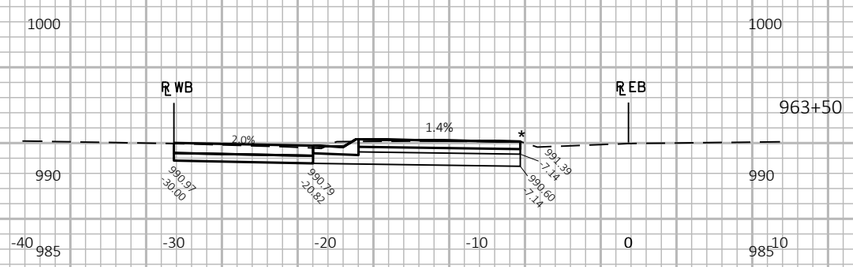

NOTES:

* MATCH WITH EXISTING EB TOP OF CURB

** MATCH WITH EXISTING EB PAVEMENT

RIGHT OF WAY (ROW) IS OUTSIDE OF SECTION LIMITS ALL WORK IS WITHIN ROW

CROSS SECTIONS ARE ON EB RL STATIONING

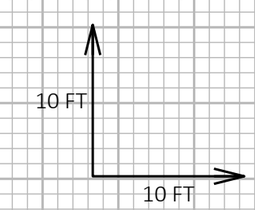

9

9

PROJECT NO: 8110-01-76	HWY: STH 64	COUNTY: ST. CROIX	CROSS SECTIONS: STH 64 WESTBOUND	SHEET 143	E

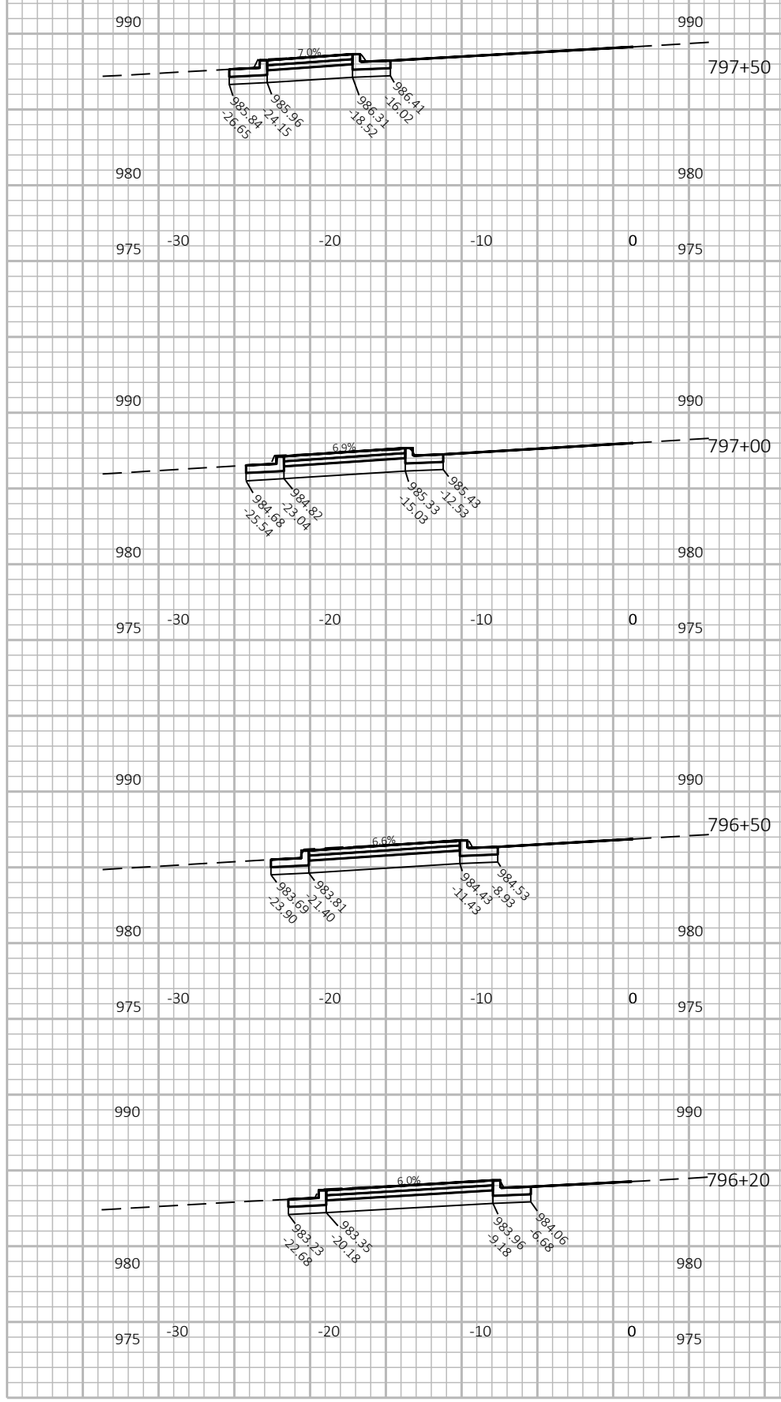

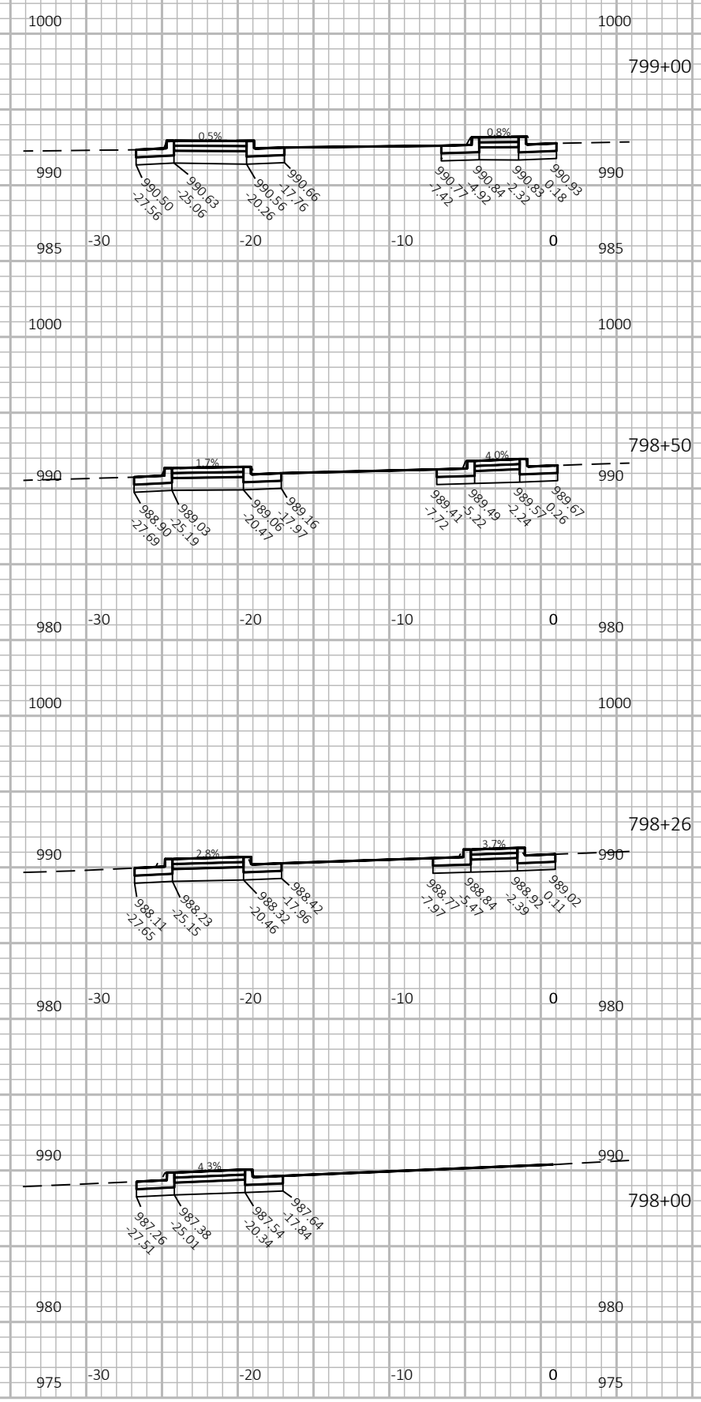

NOTES:

MATCH CURB TO EXISTING PAVEMENT

RIGHT OF WAY (ROW) IS OUTSIDE OF SECTION LIMITS ALL WORK IS WITHIN ROW

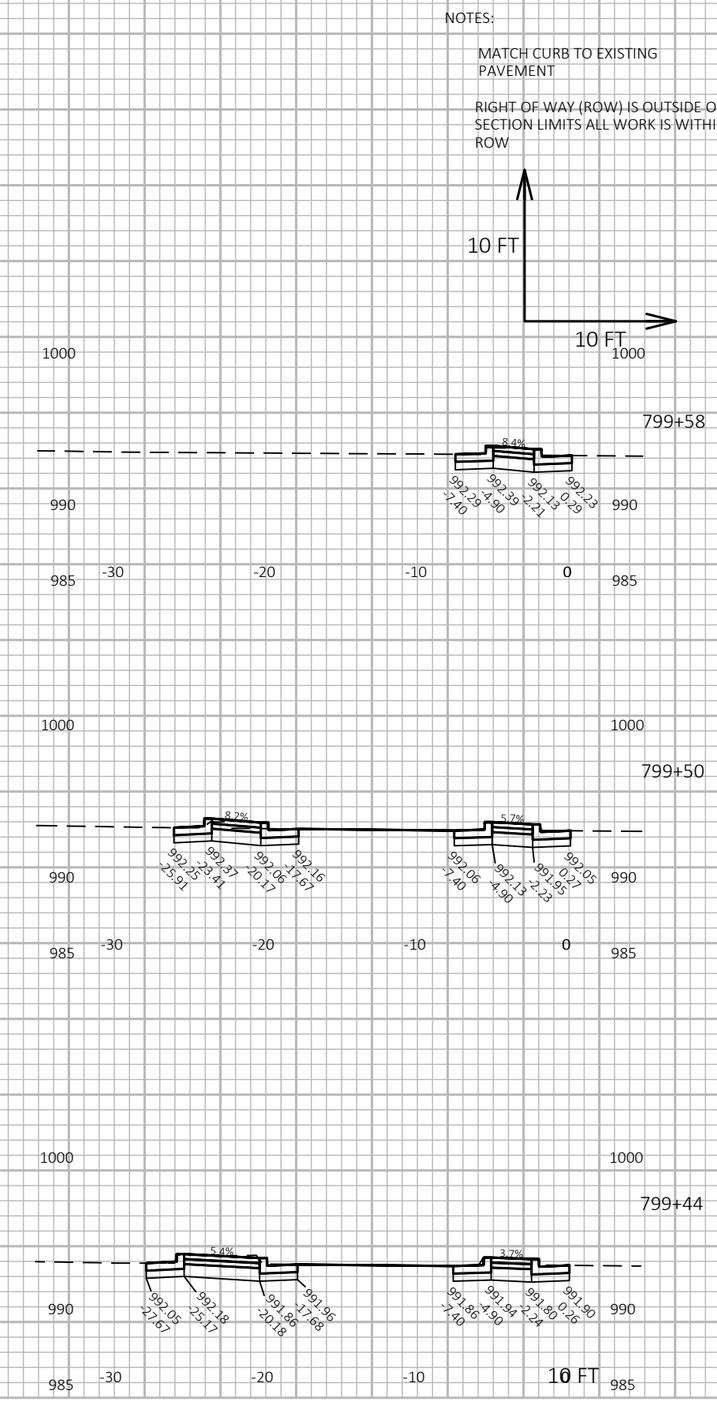

9

9

PROJECT NO: 8110-01-76	HWY: STH 64	COUNTY: ST. CROIX	CROSS SECTIONS: STH 65 NORTHBOUND	SHEET 144	E

FILE NAME : D:\WORK\81100106 C3D\SHEETSPLAN\090202-XS-65.DWG
LAYOUT NAME - STH 65 NB

PLOT DATE : 9/7/2021 10:20 AM PLOT BY : MUNDEN, ALLISSA L PLOT NAME : PLOT SCALE : 1 IN:10 FT HORZ. / 1 IN:10 FT VERT.

WISDOT/CADDS SHEET 49

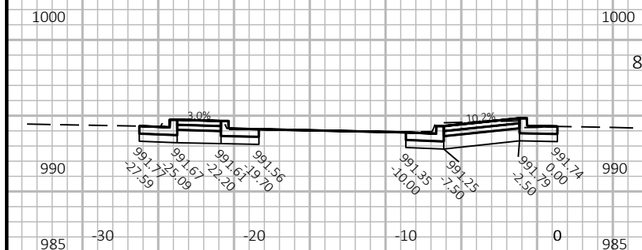

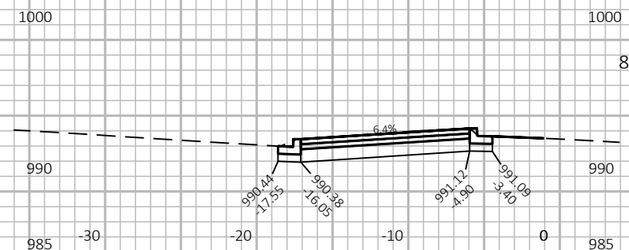

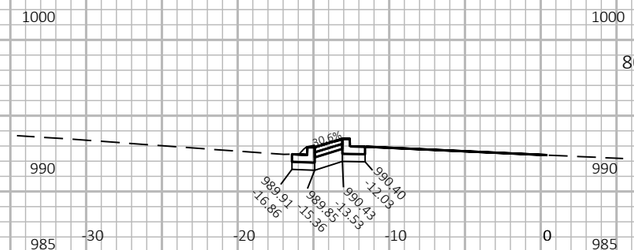

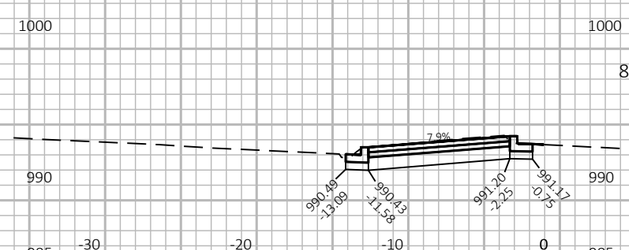

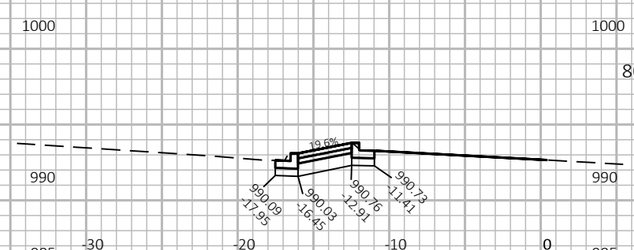

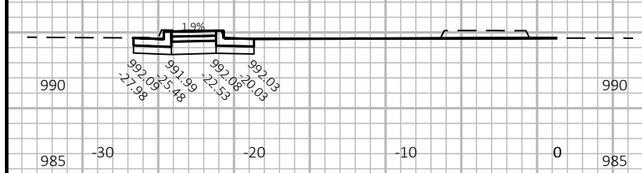

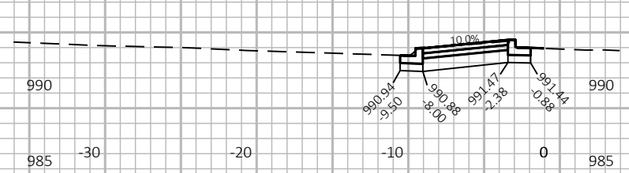

NOTES:

MATCH CURB TO EXISTING PAVEMENT

RIGHT OF WAY (ROW) IS OUTSIDE OF SECTION LIMITS ALL WORK IS WITHIN ROW

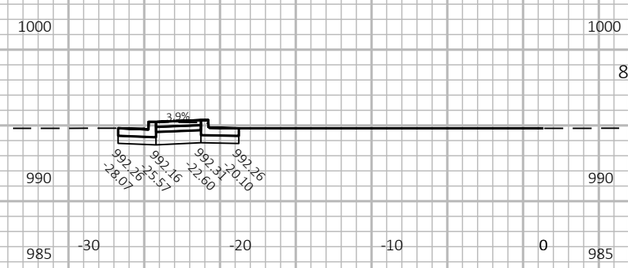

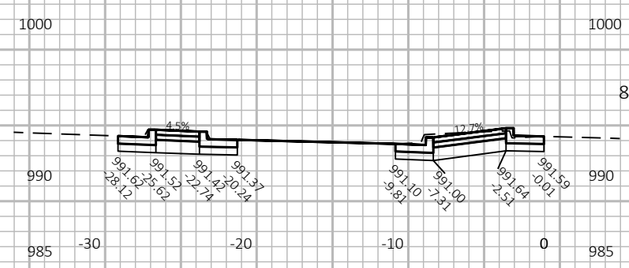

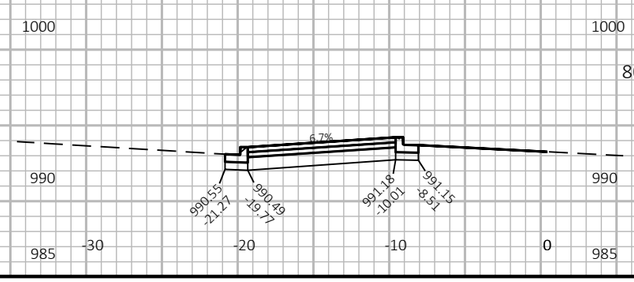

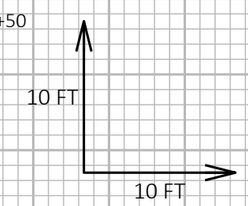

9

9

PROJECT NO: 8110-01-76	HWY: STH 64	COUNTY: ST. CROIX	CROSS SECTIONS: STH 65 SOUTHBOUND	SHEET 145	E

FILE NAME : D:\WORK\81100106 C3D\SHEETSPLAN\090202-XS-65.DWG
LAYOUT NAME - STH 65 SB
PLOT DATE : 9/7/2021 10:20 AM
PLOT BY : MUNDEN, ALLISSA L
PLOT NAME :
PLOT SCALE : 1 IN:10 FT HORZ. / 1 IN:10 FT VERT.
WISDOT/CADDS SHEET 49

Wisconsin Department of Transportation

Dedicated people creating transportation solutions through innovation and exceptional service.

http://www.dot.wisconsin.gov