SUP

PROJECT ID: 1560-07-70

WITH: N/A

COUNTY: BAYFIELD

NOVEMBER 2021

ORDER OF SHEETS

Section No.	1	Title
Section No.	2	Typical Sections and Details (Includes Erosion Control Details)
Section No.	3	Estimate of Quantities
Section No.	3	Miscellaneous Quantities
~~Section No.~~	~~4~~	~~Right of Way Plat~~
Section No.	5	Plan and Profile
Section No.	6	Standard Detail Drawings
~~Section No.~~	~~7~~	~~Sign Plates~~
~~Section No.~~	~~8~~	~~Structure Plans~~
Section No.	9	Computer Earthwork Data
Section No.	9	Cross Sections

TOTAL SHEETS = 156

PROJECT LOCATION

N

26

STATE OF WISCONSIN
DEPARTMENT OF TRANSPORTATION

PLAN OF PROPOSED IMPROVEMENT

DRUMMOND - USH 2

DRUMMOND LAKE ROAD TO EAST JUNCTION CTH E

USH 63

BAYFIELD COUNTY

STATE PROJECT	FEDERAL PROJECT	
	PROJECT	CONTRACT
1560-07-70	WISC 2022021	1

STATE PROJECT NUMBER

1560-07-70

END PROJECT
STA 1172+40
Y = 393,834.425
X = 775,727.801

STATION EQUATION
STA 1139+76.5 TO STA 1140+23.38
Y = 390,618.986
X = 775,640.659

BEGIN PROJECT
STA 495+73
Y = 364,088.541
X = 723,090.928

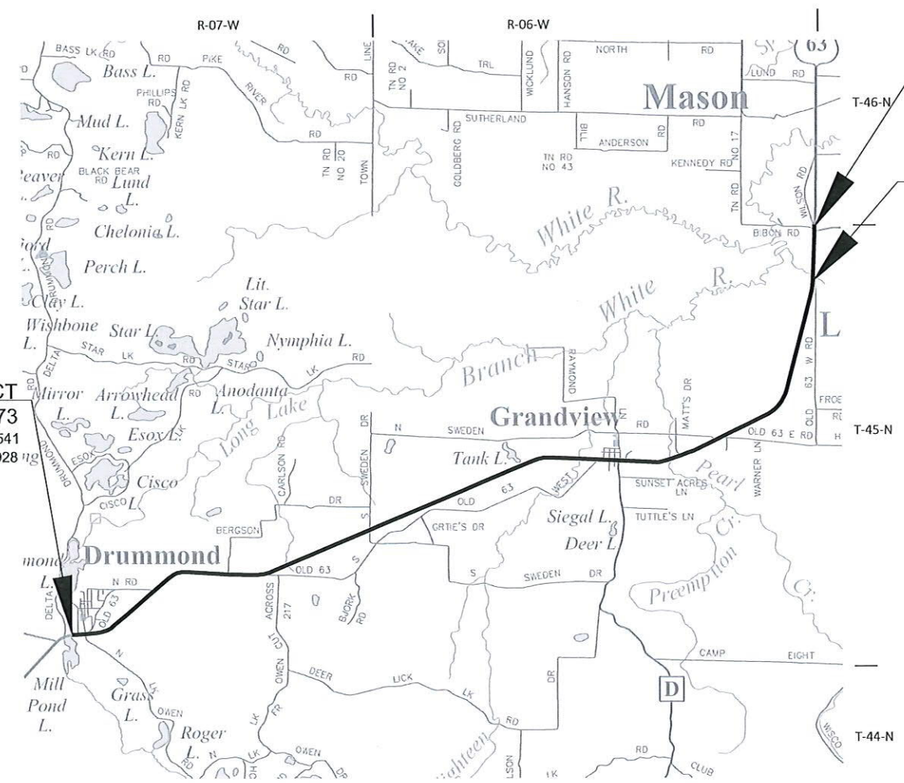

DESIGN DESIGNATION

A.A.D.T.	2023	=	2,500
A.A.D.T.	2043	=	2,800
D.H.V.		=	409
D.D.		=	61/39
T.		=	21.3
DESIGN SPEED		=	55 MPH
ESALS		=	740,000

CONVENTIONAL SYMBOLS

PLAN
- CORPORATE LIMITS
- PROPERTY LINE
- LOT LINE
- LIMITED HIGHWAY EASEMENT
- EXISTING RIGHT OF WAY
- PROPOSED OR NEW R/W LINE
- SLOPE INTERCEPT
- REFERENCE LINE (300 EB)
- EXISTING CULVERT
- PROPOSED CULVERT (Box or Pipe)
- COMBUSTIBLE FLUIDS (CAUTION)
- MARSH AREA
- WOODED OR SHRUB AREA

PROFILE
- GRADE LINE
- ORIGINAL GROUND
- MARSH OR ROCK PROFILE (To be noted as such) (ROCK)
- SPECIAL DITCH (LABEL)
- GRADE ELEVATION (95.36)
- CULVERT (Profile View)

UTILITIES
- ELECTRIC (E)
- FIBER OPTIC (FO)
- GAS (G)
- SANITARY SEWER (SAN)
- STORM SEWER (SS)
- TELEPHONE (T)
- WATER (W)
- UTILITY PEDESTAL
- POWER POLE
- TELEPHONE POLE

LAYOUT

SCALE 0 — 2 MI

TOTAL NET LENGTH OF CENTERLINE = 12.806 MILES

HORIZONTAL POSITIONS SHOWN ON THIS PLAN ARE WISCONSIN COORDINATE REFERENCE SYSTEM (WISCRS), BAYFIELD COUNTY, NAD83 (2011), IN U.S. SURVEY FEET. POSITIONS SHOWN ARE GRID COORDINATES, GRID BEARINGS, AND GRID DISTANCES. GRID DISTANCES ARE THE SAME AS GROUND DISTANCES. ELEVATIONS ARE REFERENCED TO NAVD 88 (2012). GPS DERIVED ELEVATIONS ARE BASED ON GEOID 12A.

ORIGINAL PLANS PREPARED BY

MSA
332 W. SUPERIOR STREET, #600, DULUTH, MN 55802
(218) 722-3915 (1-800) 777-7380 FAX: (218) 722-4548

WISCONSIN PROFESSIONAL ENGINEER
SEAN M. SPROMBERG
E-37771-008
SCHOFIELD, WI

DATE: 7/14/2021 (PROFESSIONAL ENGINEER)

STATE OF WISCONSIN
DEPARTMENT OF TRANSPORTATION

PREPARED BY

Surveyor	WISDOT/MSA PROFESSIONAL SERVICES, INC.
Designer	MSA PROFESSIONAL SERVICES, INC.
Project Manager	JEFF SAXBY, PE
Regional Examiner	TOU YANG, PE
Regional Supervisor	JEFFREY OLSON, PE

APPROVED FOR THE DEPARTMENT

DATE: 7/15/2021 (Signature)

E

STANDARD ABBREVIATIONS

AC	ACRE
AGG	AGGREGATE
<	ANGLE
ASPH	ASPHALTIC
AC	ASPHALT CEMENT
ADT	AVERAGE DAILY TRAFFIC
B & B	BALLED AND BURLAPPED
BM	BENCH MARK
CB	CATCH BASIN
` OR C/L	CENTER LINE
C-C	CENTER TO CENTER
CONC	CONCRETE
CO	COUNTY
CTH	COUNTY TRUNK HIGHWAY
CY	CUBIC YARD
CULV	CULVERT
CP	CULVERT PIPE
CPRC	CULVERT PIPE REINFORCED CONCRETE
C & G	CURB AND GUTTER
D	DEGREE OF CURVE
DHV	DESIGN HOUR VOLUME
DIA OR |	DIAMETER
DIST	DISTRICT
DWY	DRIVEWAY
E	EAST
X	EAST GRID COORDINATE
EB	EASTBOUND
ELEC	ELECTRIC
EL OR ELEV	ELEVATION
EMB	EMBANKMENT
EW	ENDWALL
ESALS	EQUIVALENT SINGLE AXLE LOADS
EXC	EXCAVATION
EBS	EXCAVATION BELOW SUBGRADE
EXIST	EXISTING
EXP	EXPANSION
F-F	FACE TO FACE
FERT	FERTILIZER
FE	FIELD ENTRANCE
F/L	FLOW LINE
FT	FOOT
GN	GRID NORTH
HR	HANDICAP RAMP
HT	HEIGHT
CWT	HUNDREDWEIGHT
HYD	HYDRANT
IN DIA	INCH DIAMETER
INL	INLET
ID	INSIDE DIAMETER
I	INTERSECTION ANGLE
IE	INVERT ELEVATION
IP	IRON PIPE OR PIN
JCT	JUNCTION
L	LENGTH OF CURVE
LF	LINEAR FOOT
LC	LONG CHORD OF CURVE
LCB	LONG CHORD BEARING
LS	LUMP SUM
MH	MANHOLE
N	NORTH
Y	NORTH GRID COORDINATE
OE	OUTLET ELEVATION
OL	OUT LOT
OD	OUTSIDE DIAMETER
OH	OVERHEAD LINES
PAVT	PAVEMENT
PLE	PERMANENT LIMITED EASEMENT
PC	POINT OF CURVATURE
PI	POINT OF INTERSECTION
PT	POINT OF TANGENCY
PCC	PORTLAND CEMENT CONCRETE
LB	POUND
PE	PRIVATE ENTRANCE
R OR RAD	RADIUS
RR	RAILROAD
R	RANGE
~ OR R/L	REFERENCE LINE
REQD	REQUIRED
RT	RIGHT
R / W	RIGHT-OF-WAY
RD	ROAD
SALV	SALVAGED
SAN	SANITARY SEWER
SECT	SECTION
SHLDR	SHOULDER
SW	SIDEWALK
S	SOUTH
SB	SOUTHBOUND
SPECS	SPECIFICATIONS
SQ	SQUARE
SF OR SQ FT	SQUARE FEET
SY	SQUARE YARD
SSPRC	STORM SEWER PIPE REINFORCED CONCRETE
STD	STANDARD
SDD	STANDARD DETAIL DRAWINGS
STH	STATE TRUNK HIGHWAYS
STA	STATION
SS	STORM SEWER
T	TANGENT
TEL	TELEPHONE
TEMP	TEMPORARY
TLE	TEMPORARY LIMITED EASEMENT
T	TON
TC	TOP OF CURB
TN	TOWN
TRANS	TRANSITION
T	TRUCKS (percent of)
TYP	TYPICAL
UNCL	UNCLASSIFIED
USH	UNITED STATES HIGHWAY
VAR	VARIABLE
VERT	VERTICAL
VC	VERTICAL CURVE
VOL	VOLUME
WM	WATER MAIN
WV	WATER VALVE
W	WEST
WB	WESTBOUND
YD	YARD

RUNOFF COEFFICIENT TABLE

	HYDROLOGIC SOIL GROUP											
	A			B			C			D		
	SLOPE RANGE (PERCENT)			SLOPE RANGE (PERCENT)			SLOPE RANGE (PERCENT)			SLOPE RANGE (PERCENT)		
LAND USE:	0-2	2-6	6 & OVER	0-2	2-6	6 & OVER		2-6	6 & OVER	0-2	2-6	6 & OVER
MEDIAN STRIP TURF	0.19	0.20	0.24	0.19	0.22	0.26	0.20	0.23	0.30	0.20	0.25 0.32	0.30 0.40
SIDE SLOPE TURF			0.25			0.27			0.28			0.30 0.38
PAVEMENT:	0.40 - 0.60											
ASPHALT:	0.70 - 0.95											
CONCRETE:	0.80 - 0.95											
BRICK:	0.70 - 0.80											
DRIVES, WALKS:	0.75 - 0.85											
ROOFS:	0.75 - 0.95											
GRAVEL ROADS, SHOULDERS	0.40 - 0.60											

TOTAL PROJECT AREA = 283.5 ACRES
TOTAL AREA EXPECTED TO BE DISTURBED BY CONSTRUCTION ACTIVITIES = 5.4 ACRES

EROSION CONTROL NOTES

RUNOFF COEFFICIENTS FOR THIS PROJECT: EXISTING SIDE SLOPES 0.30, PROPOSED SIDE SLOPES 0.30, EXISTING PAVEMENT 0.95, PROPOSED PAVEMENT 0.95.

SECTION 2 ORDER

GENERAL NOTES
PROJECT OVERVIEW
TYPICAL SECTIONS
CONSTRUCTION DETAILS
PAVEMENT MARKINGS
STAGING DETAILS

DNR LIAISON

DEPARTMENT OF NATURAL RESOURCES
SHAWN HASELEU
810 W. MAPLE STREET
SPOONER, WI 54801
PHONE: (715) 635-4228
EMAIL: SHAWN.HASELEU@WISCONSIN.GOV

DESIGN CONTACT

MSA PROFESSIONAL SERVICES, INC.
SEAN SPROMBERG, PE
332 W. SUPERIOR STREET, SUITE 600
DULUTH, MN 55802
PHONE: (715) 304-0451
EMAIL: SSPROMBERG@MSA-PS.COM

GENERAL NOTES

HMA PAVEMENT LAYER THICKNESS IN THE MILL AND OVERLAY AREAS SHALL CONSIST OF A 1.75" 5 MT 58-34 V LOWER LAYER AND A 1.5" 5 MT 58-34 V UPPER LAYER. HMA PAVEMENT IN THE COLD IN PLACE RECYCLE AREAS SHALL CONSIST OF A 1.0" 5 MT 58-34 V LOWER LAYER (LEVELING, USE VOLUMETRICS ONLY) AND A 1.5" 5 MT 58-34 V UPPER LAYER.

THE LOCATIONS OF EXISTING AND PROPOSED UTILITY INSTALLATIONS AS SHOWN ON THE PLANS ARE APPROXIMATE. THERE ARE UTILITIES WITHIN THE PROJECT AREA THAT ARE NOT SHOWN ON THE PLANS. THE CONTRACTOR SHALL COORDINATE CONSTRUCTION ACTIVITIES WITH A CALL TO DIGGERS HOTLINE AND/OR A DIRECT CALL TO UTILITIES THAT HAVE FACILITIES IN THE AREA.

THE ROADWAY CENTERLINE SHOWN ON THESE PLANS IS FOR STATIONING REFERENCE ONLY. THE PROPOSED ROADWAY TO FOLLOW THE EXISTING CENTERLINE.

R/W APPROXIMATED ON PLAN SHEETS BASED ON AS-BUILTS.

AS-BUILTS

PROJECT: 187 (1924)
PROJECT: 408 (1928)
PROJECT: F011-2(27) (1947)
PROJECT: F011-2(26) (1949)
PROJECT: T011-2(4) (1949)
PROJECT: F011-2(28) (1952)
PROJECT: T011-2(8) (1952)
PROJECT: T011-2(8) (1953)
PROJECT: 1564-05-71 (1980)
PROJECT: 1560-02-71 (1987)
PROJECT: 1560-03-72 (1988)
PROJECT: 1560-09-71 (1989)
PROJECT: 1560-14-71 (1998)
PROJECT: 1560-16-71 (2001)
PROJECT: 1560-18-71 (2003)
PROJECT: 1560-20-71 (2006)
PROJECT: 1560-04-72 (2016)

UTILITY CONTACTS

ELECTRIC

BAYFIELD ELECTRIC COOPERATIVE INC.
BOB LAHTI
68460 DISTRICT STREET
P.O. BOX 68
IRON RIVER, WI 54847
PHONE: (715) 372-4287
EMAIL: BOB.LAHTI@BAYFIELDELECTRIC.COM

EXCEL ENERGY
MURRAY SMERER
2400 FARM ROAD
ASHLAND, WI 54806
PHONE: (715) 682-6928
EMAIL: MURRAY.J.SMERER@XCELENERGY.COM

COMMUNICATIONS

NORVADO
GARIN MAYER
43705 USH 63
P.O. BOX 67
CABLE, WI 54821-0067
PHONE: (715) 798-7122
EMAIL: GMAYER@NORVADO.COM

SEWER & WATER MAIN

DRUMMOND SANITARY DISTRICT #1
MARK JEROME
P.O. BOX 56
DRUMMOND ,WI 54832-0043
PHONE: (715) 580-0115
EMAIL: TOWNDRUMMOND@CHEQNET.NET

DIGGERS HOTLINE
Dial 811 or (800)242-8511
www.DiggersHotline.com

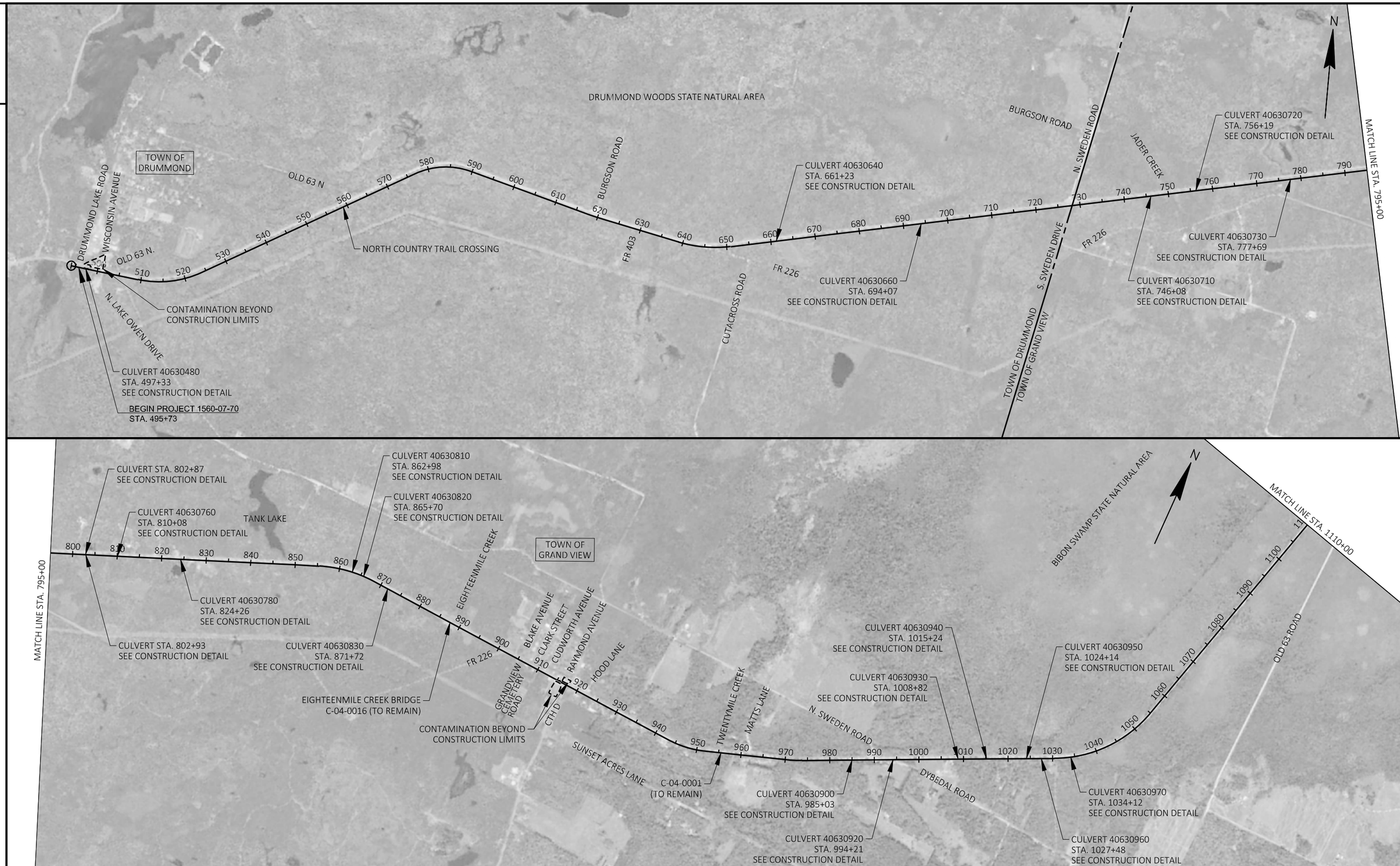

PROJECT NO: 1560-07-70	HWY: USH 63	COUNTY: BAYFIELD	PROJECT OVERVIEW	SHEET 3	E

FILE NAME : G:\00\00093\00093523\CADD\SHEETSPLAN\15600701_020201-PO.DWG
LAYOUT NAME - 15600701_020201
PLOT DATE : 7/12/2021 12:18 PM PLOT BY : COURTNEY ROOYAKKERS PLOT NAME : PLOT SCALE : 1 IN:2000 FT
WISDOT/CADDS SHEET 44

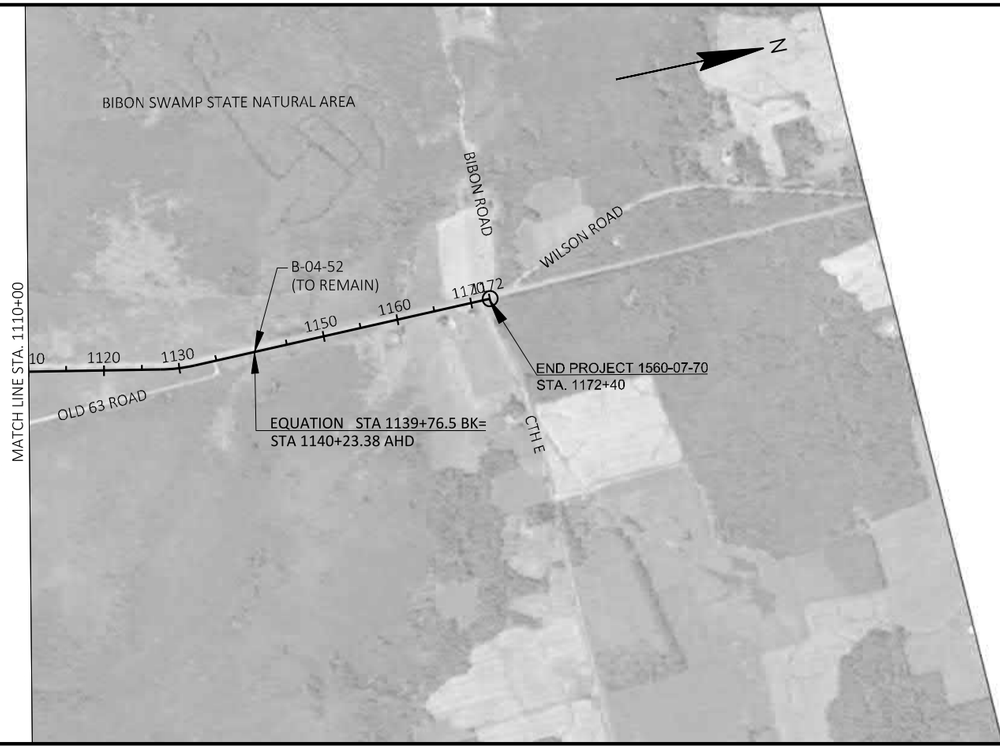
N
BIBON SWAMP STATE NATURAL AREA
BIBON ROAD
WILSON ROAD
B-04-52
(TO REMAIN)
1170
1172
1160
1150
1130
1120
10
MATCH LINE STA. 1110+00
OLD 63 ROAD
END PROJECT 1560-07-70
STA. 1172+40
EQUATION STA 1139+76.5 BK=
STA 1140+23.38 AHD
CTH E

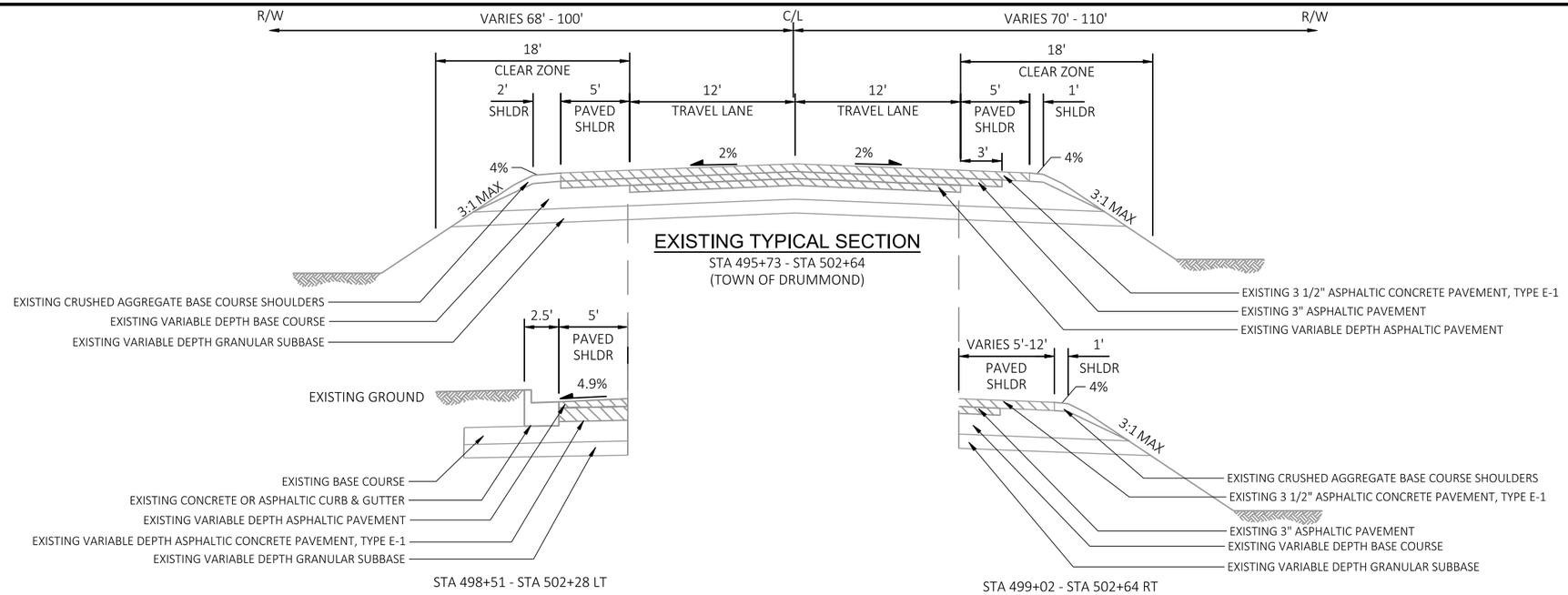

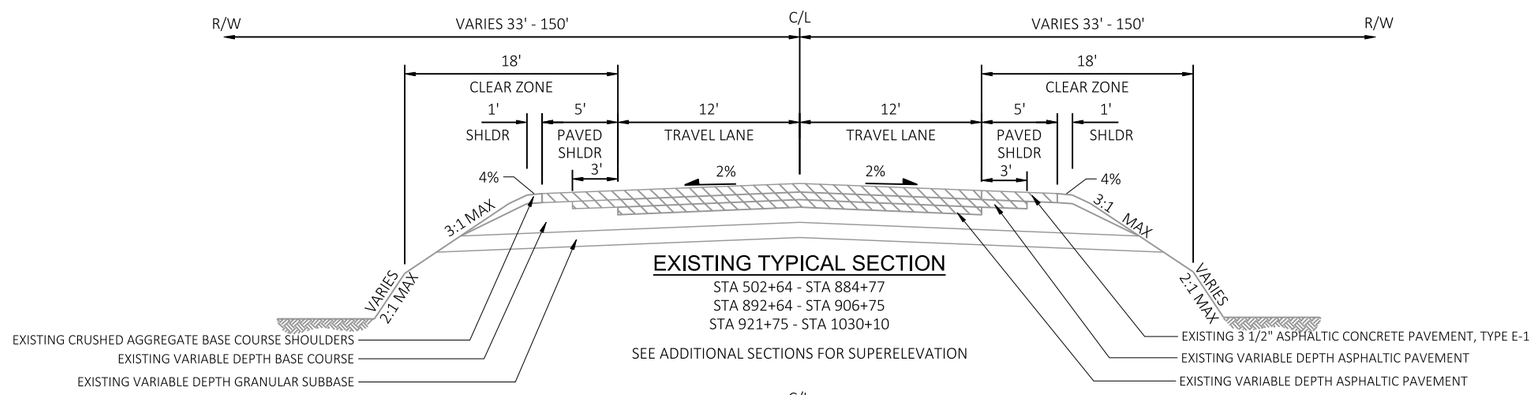

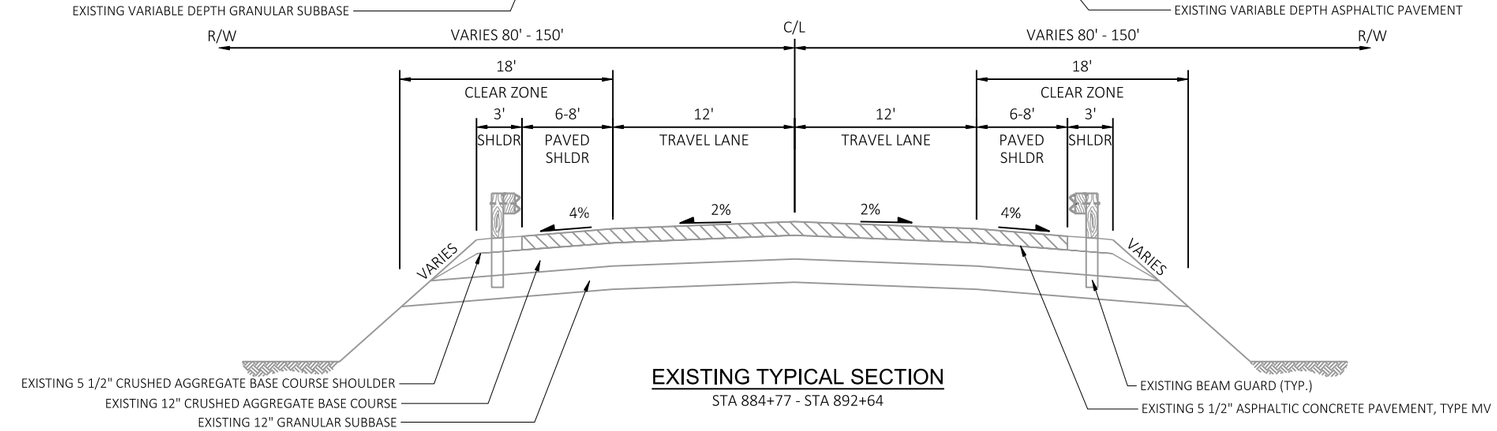

NOTE
EXISTING TYPICALS BASED ON AS-BUILT PLANS

ORIGINAL CONSTRUCTION UTILIZED METRIC SYSTEM. MEASUREMENTS MAY VARY SLIGHTLY.

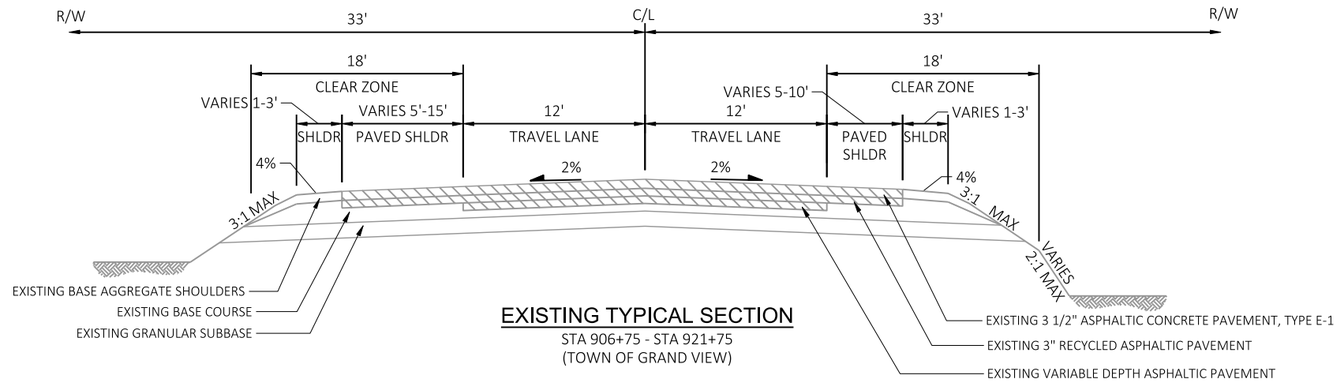

EXISTING TYPICAL SECTION

STA 906+75 - STA 921+75
(TOWN OF GRAND VIEW)

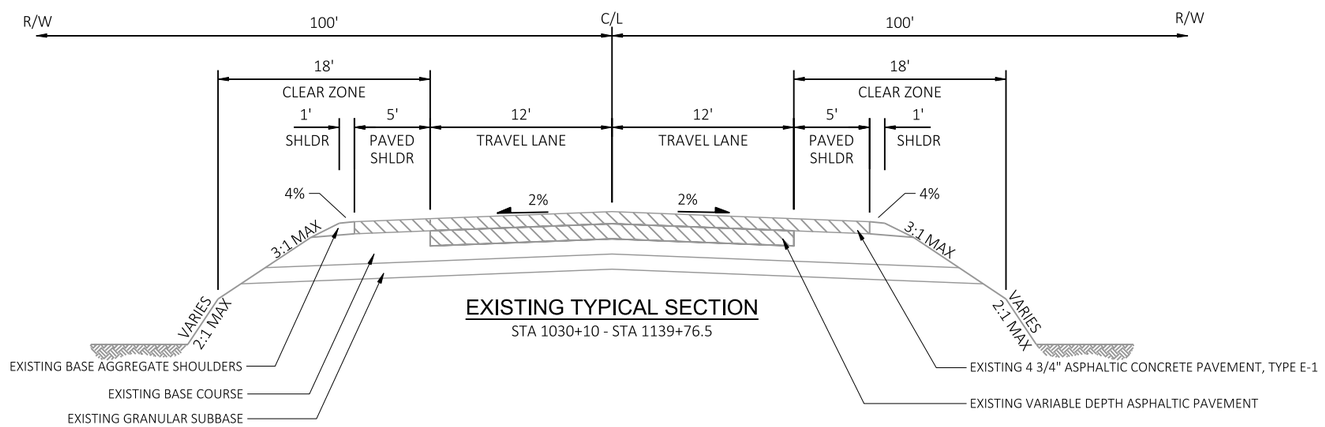

EXISTING TYPICAL SECTION

STA 1030+10 - STA 1139+76.5

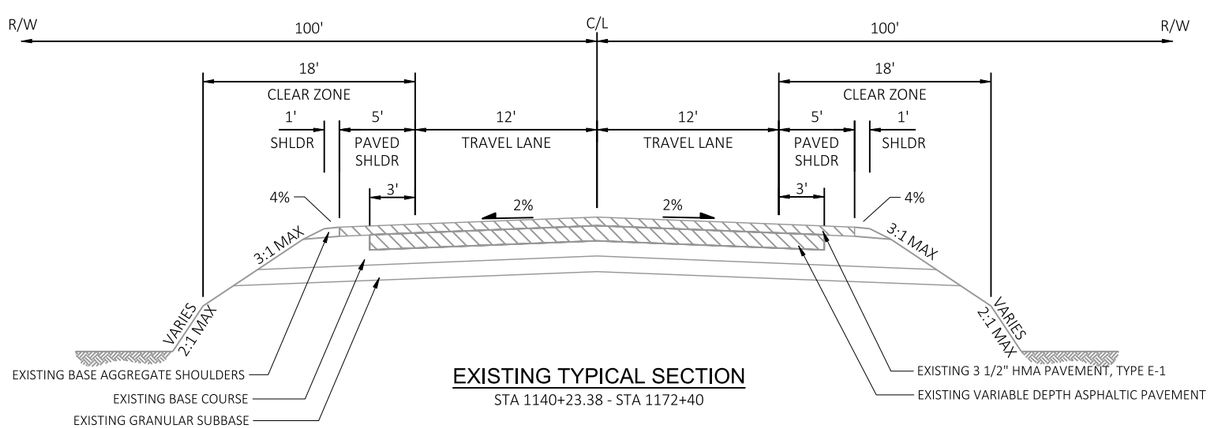

EXISTING TYPICAL SECTION

STA 1140+23.38 - STA 1172+40

NOTE
EXISTING TYPICALS BASED ON AS-BUILT PLANS

PROJECT NO: 1560-07-70	HWY: USH 63	COUNTY: BAYFIELD	EXISTING TYPICAL SECTION	SHEET 6	E

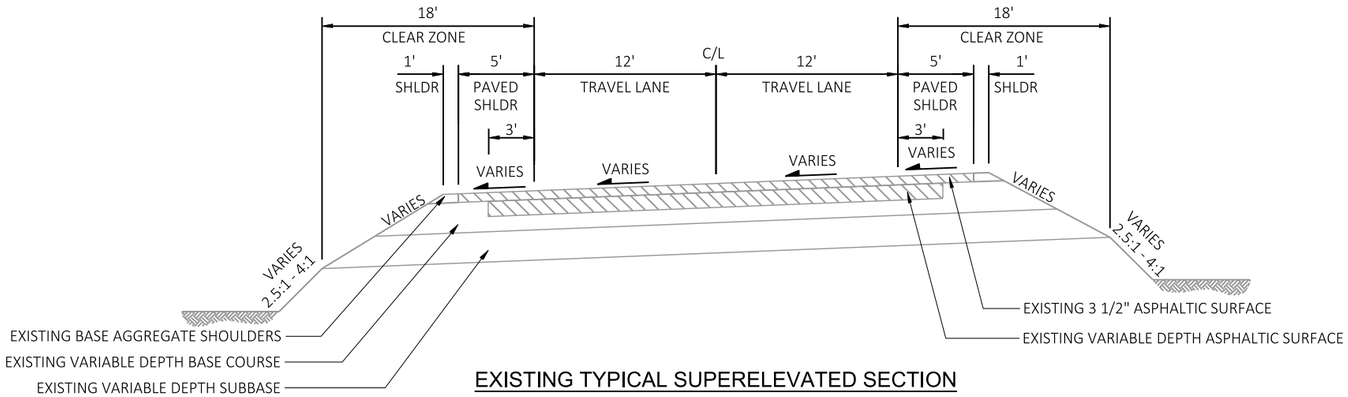

EXISTING TYPICAL SUPERELEVATED SECTION

CURVE TO LEFT SHOWN, CURVE TO RIGHT SIMILAR

CURVE P.I. STA:
516+96.74
583+60.24
619+88.73
645+05.40
861+87.79
947+87.79
972+11.74

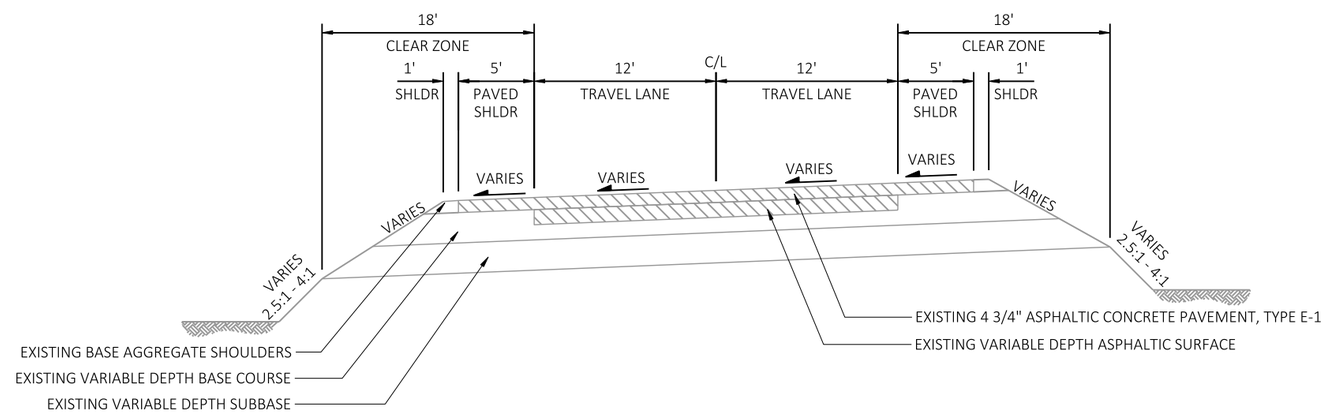

EXISTING TYPICAL SUPERELEVATED SECTION

CURVE TO LEFT SHOWN, CURVE TO RIGHT SIMILAR

CURVE P.I. STA:
1043+57.37
1129+76.27

NOTE
EXISTING TYPICAL SECTIONS BASED ON AS-BUILTS

2

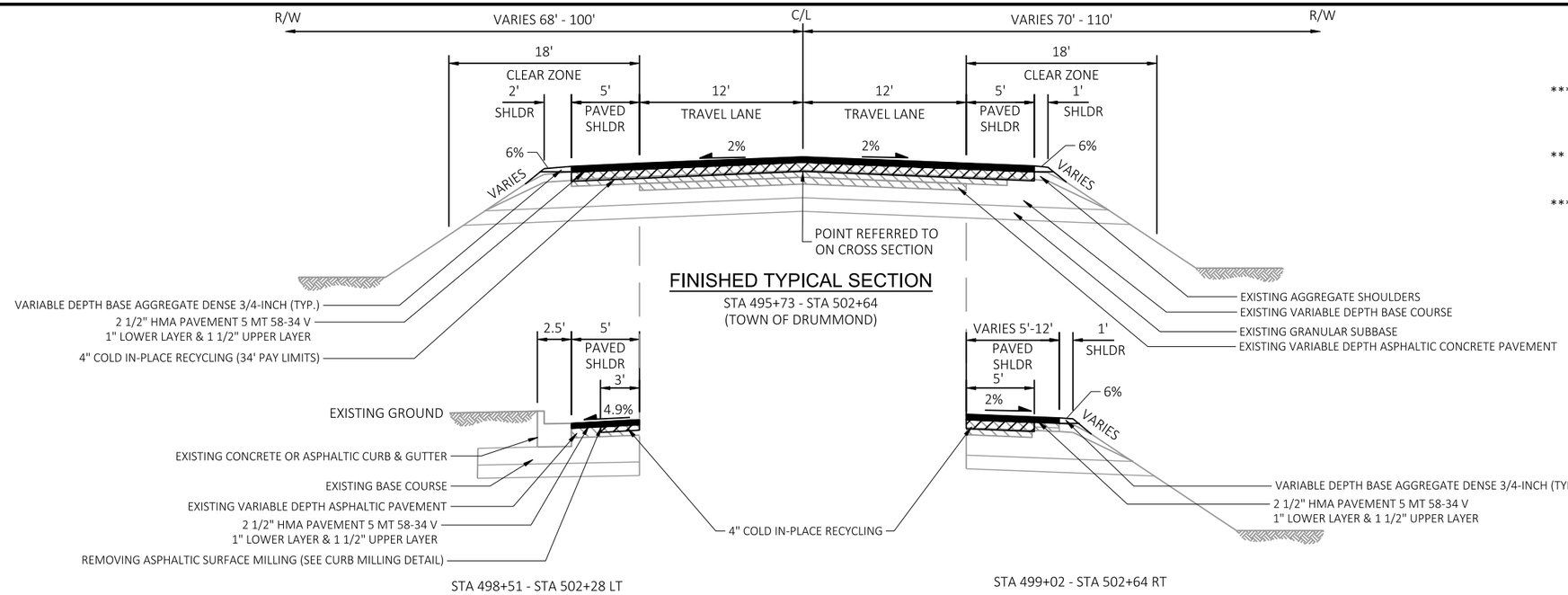

FINISHED TYPICAL SECTION

STA 495+73 - STA 502+64
(TOWN OF DRUMMOND)

STA 498+51 - STA 502+28 LT

STA 499+02 - STA 502+64 RT

*** MAINTAIN EXISTING ELEVATION AT FACE OF BEAM GUARD (SEE DETAIL)

** ASPHALTIC CENTERLINE RUMBLE STRIP 2-LANE RURAL

*** ASPHALTIC SHOULDER RUMBLE STRIP 2-LANE RURAL

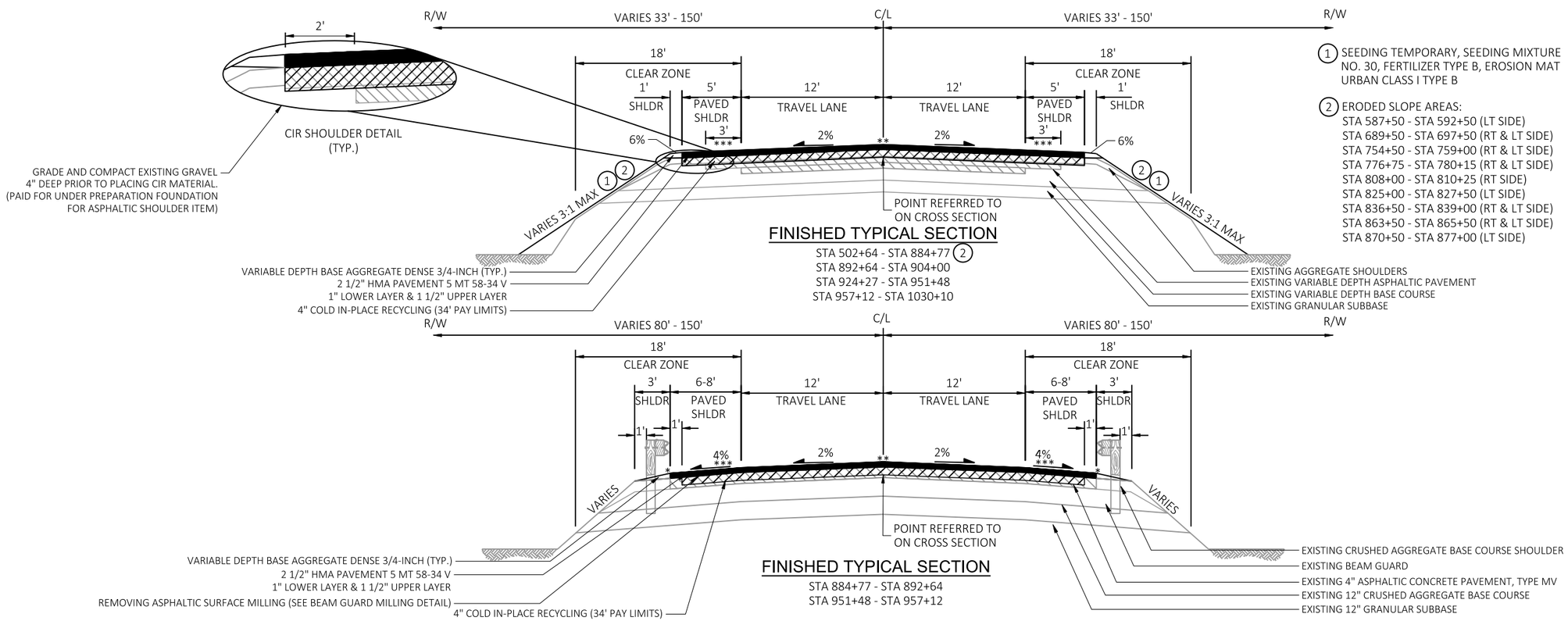

FINISHED TYPICAL SECTION

STA 502+64 - STA 884+77 (2)
STA 892+64 - STA 904+00
STA 924+27 - STA 951+48
STA 957+12 - STA 1030+10

FINISHED TYPICAL SECTION

STA 884+77 - STA 892+64
STA 951+48 - STA 957+12

(1) SEEDING TEMPORARY, SEEDING MIXTURE NO. 30, FERTILIZER TYPE B, EROSION MAT URBAN CLASS I TYPE B

(2) ERODED SLOPE AREAS:
STA 587+50 - STA 592+50 (LT SIDE)
STA 689+50 - STA 697+50 (RT & LT SIDE)
STA 754+50 - STA 759+00 (RT & LT SIDE)
STA 776+75 - STA 780+15 (RT & LT SIDE)
STA 808+00 - STA 810+25 (RT SIDE)
STA 825+00 - STA 827+50 (LT SIDE)
STA 836+50 - STA 839+00 (RT & LT SIDE)
STA 863+50 - STA 865+50 (RT & LT SIDE)
STA 870+50 - STA 877+00 (LT SIDE)

PROJECT NO: 1560-07-70	HWY: USH 63	COUNTY: BAYFIELD	FINISHED TYPICAL SECTION	SHEET 8	E

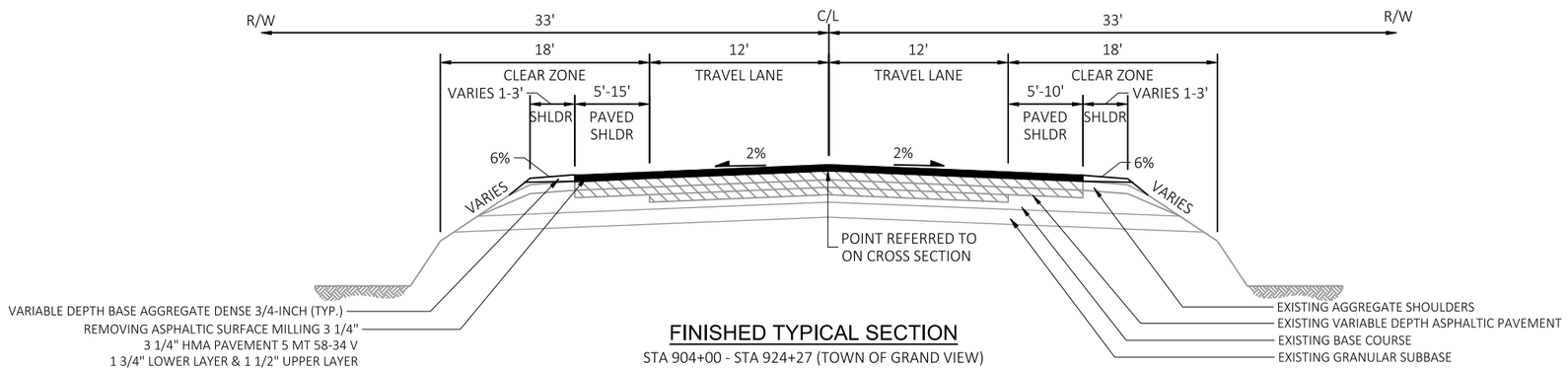

FINISHED TYPICAL SECTION

STA 904+00 - STA 924+27 (TOWN OF GRAND VIEW)

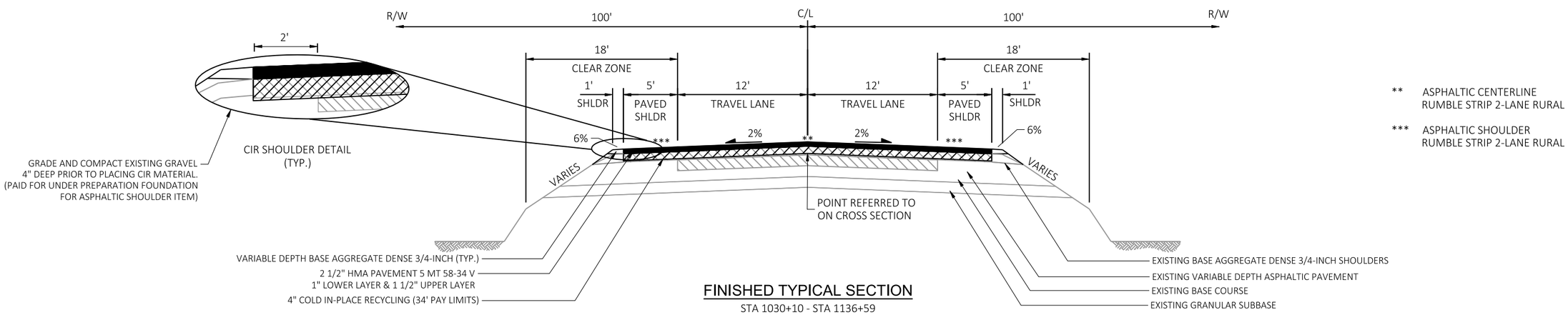

** ASPHALTIC CENTERLINE RUMBLE STRIP 2-LANE RURAL

*** ASPHALTIC SHOULDER RUMBLE STRIP 2-LANE RURAL

FINISHED TYPICAL SECTION

STA 1030+10 - STA 1136+59

PROJECT NO: 1560-07-70	HWY: USH 63	COUNTY: BAYFIELD	FINISHED TYPICAL SECTION	SHEET 9	E

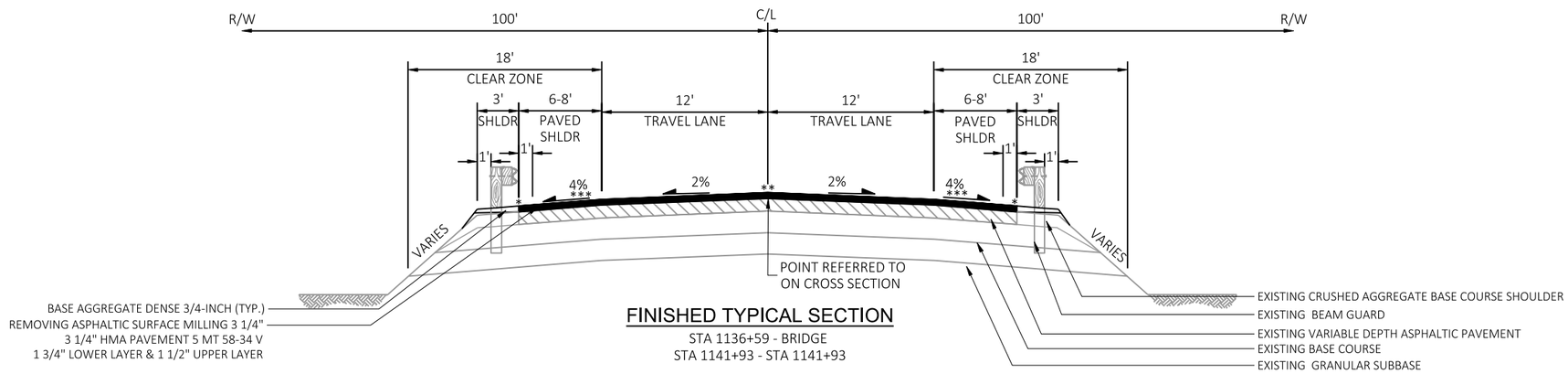

FINISHED TYPICAL SECTION

STA 1136+59 - BRIDGE
STA 1141+93 - STA 1141+93

* MAINTAIN EXISTING ELEVATION AT FACE OF BEAM GUARD (SEE DETAIL)

** ASPHALTIC CENTERLINE RUMBLE STRIP 2-LANE RURAL

*** ASPHALTIC SHOULDER RUMBLE STRIP 2-LANE RURAL

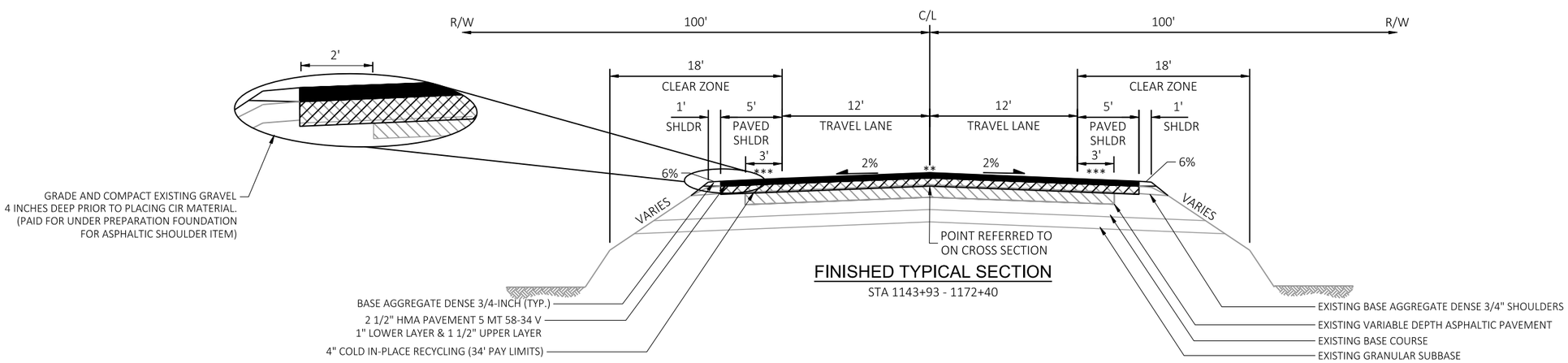

FINISHED TYPICAL SECTION

STA 1143+93 - 1172+40

PROJECT NO: 1560-07-70	HWY: USH 63	COUNTY: BAYFIELD	FINISHED TYPICAL SECTION	SHEET 10	E

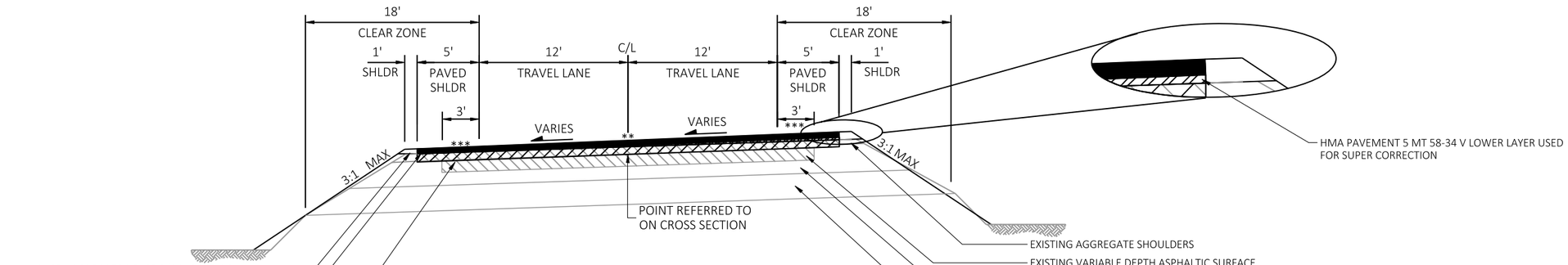

FINISHED TYPICAL SUPERELEVATED SECTION

CURVE TO LEFT SHOWN, CURVE TO RIGHT SIMILAR
CURVE P.I. STA:
516+96.74
583+60.24
619+88.73
645+05.40
861+87.79
947+59.75
972+11.74

** ASPHALTIC CENTERLINE RUMBLE STRIP 2-LANE RURAL

*** ASPHALTIC SHOULDER RUMBLE STRIP 2-LANE RURAL

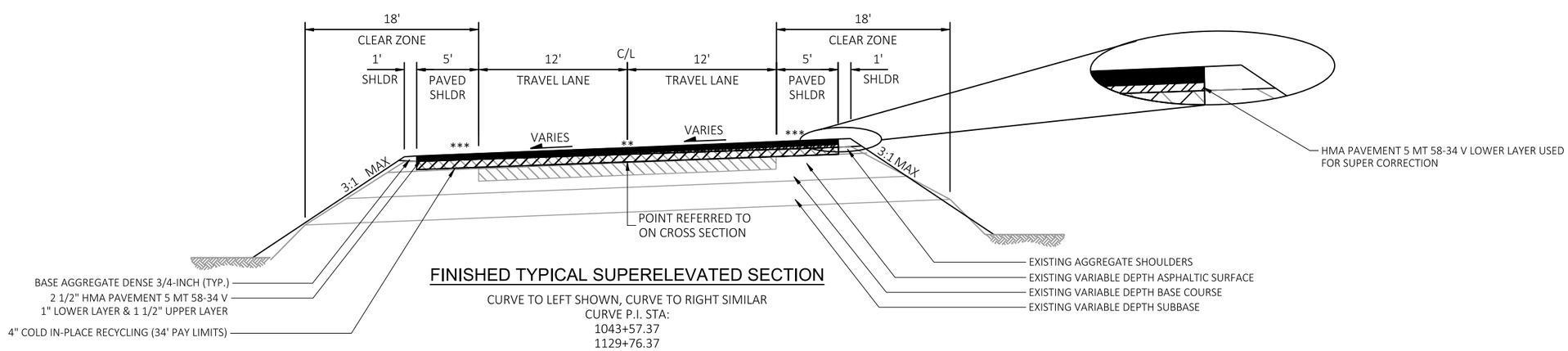

FINISHED TYPICAL SUPERELEVATED SECTION

CURVE TO LEFT SHOWN, CURVE TO RIGHT SIMILAR
CURVE P.I. STA:
1043+57.37
1129+76.37

SUPER ELEVATION INFORMATION

CURVE NUMBER	PC STA	PT STA	Radius (FT)	NC	FC	RC	FS	FS	RC	FC	NC	Max Super (%)
1	509+36.37	524+05.28	2305	508+39.37	508+84.37	509+28.94	509+62.37	523+79.28	524+12.71	524+57.28	525+02.28	3.5
2	576+86.58	589+64.73	1637	575+75.91	576+19.91	576+64.36	577+19.91	589+31.40	589+86.95	590+31.40	590+75.40	4.5
3	618+02.08	621+75.28	6800	617+15.08	617+66.08	618+17.51	618+20.08	621+57.28	621+59.85	622+11.28	622+62.28	2.1
4	639+06.08	650+87.66	2865	637+87.08	638+38.08	638+89.08	639+40.08	650+53.66	651+04.66	651+55.66	652+06.66	4.0
5	855+42.87	868+11.56	2865	854+23.87	854+74.87	855+25.87	855+76.87	867+77.56	868+28.56	868+79.56	869+30.56	4.0
6	943+09.73	951+98.44	2292	941+80.73	942+31.73	942+82.60	943+48.73	951+59.44	952+25.57	952+76.44	953+27.44	4.6
7	970+40.54	973+82.55	3000	969+22.87	969+73.87	970+25.16	970+73.87	973+49.22	973+97.93	974+49.22	975+00.22	3.9
8	1030+40.50	1055+06.09	2835	1029+21.50	1029+72.50	1030+23.50	1030+74.50	1054+72.09	1055+23.09	1055+74.09	1056+25.09	4.0
9	1127+40.95	1132+09.89	2265	1126+11.95	1126+62.95	1127+13.82	1127+79.95	1131+70.89	1132+37.02	1132+87.89	1133+38.89	4.6

NC = Normal Crown
FC = flat on high side of super and -2% on low side of super
RC= Reverse Crown
FS = Full Super

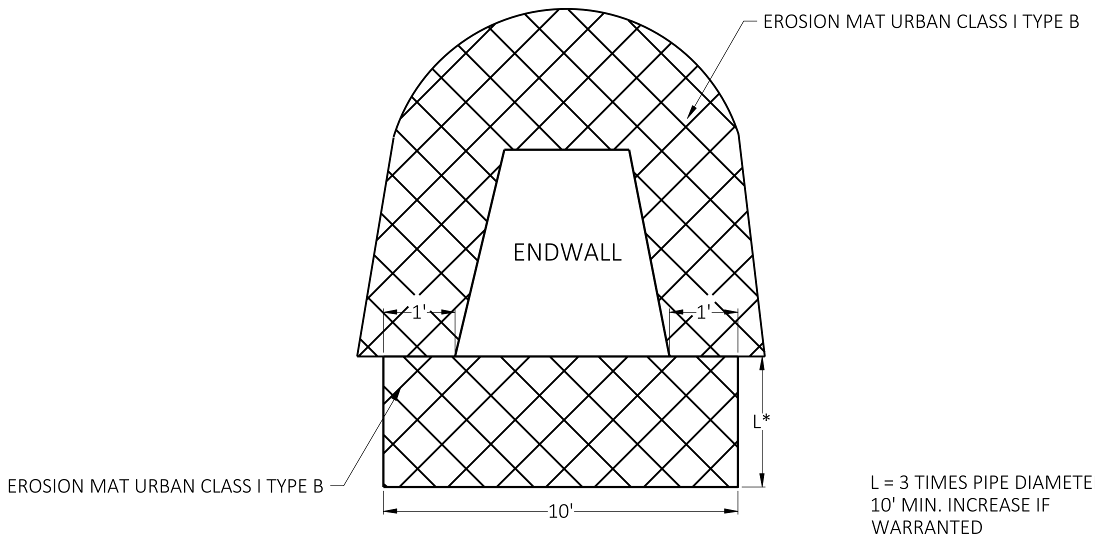

L = 3 TIMES PIPE DIAMETER OR
10' MIN. INCREASE IF
WARRANTED

*TO BE DETERMINED BY
ENGINEER IN FIELD

EROSION CONTROL AT PIPE ENDS

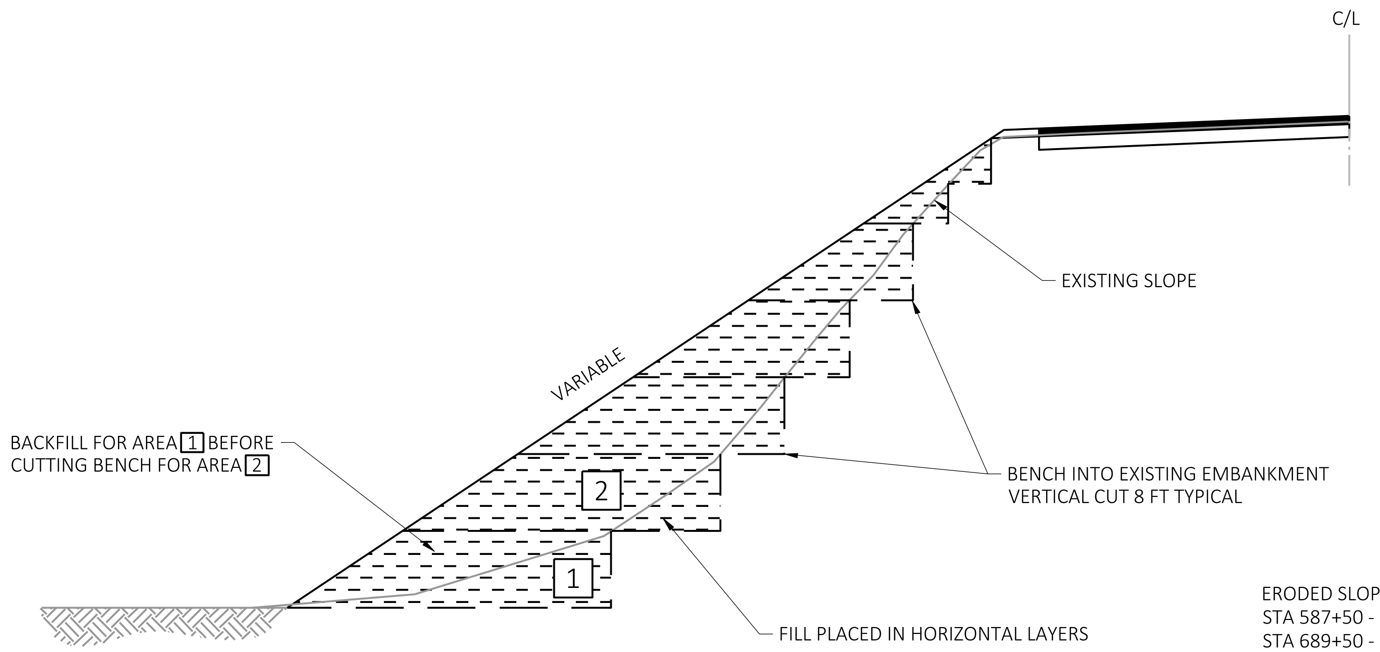

DETAIL FOR BENCHING NEW FILL INTO EXISTING EMBANKMENT

ERODED SLOPE AREAS:
STA 587+50 - STA 592+50 (LT SIDE)
STA 689+50 - STA 697+50 (RT & LT SIDE)
STA 754+50 - STA 759+00 (RT & LT SIDE)
STA 776+75 - STA 780+15 (RT & LT SIDE)
STA 808+00 - STA 810+25 (RT SIDE)
STA 825+00 - STA 827+50 (LT SIDE)
STA 836+50 - STA 839+00 (RT & LT SIDE)
STA 863+50 - STA 865+50 (RT & LT SIDE)
STA 870+50 - STA 877+00 (LT SIDE)

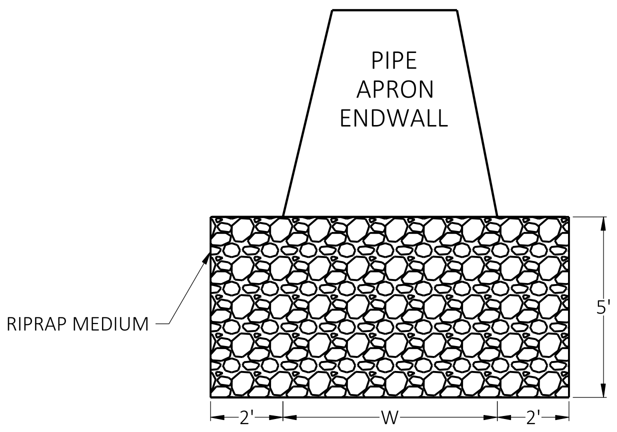

RIPRAP AT PIPE ENDS

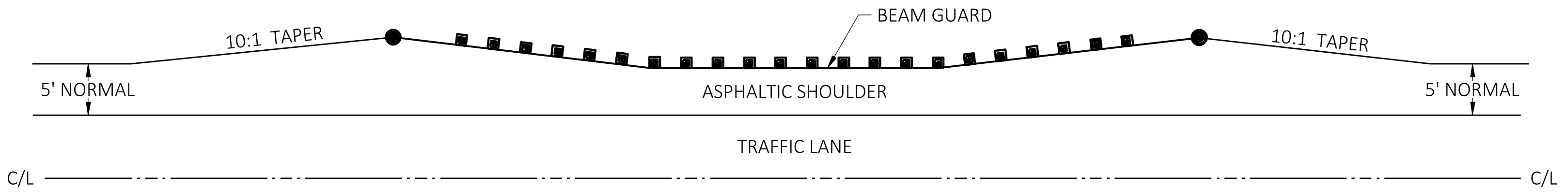

DETAIL FOR ASPHALTIC SHOULDER AT BEAM GUARD

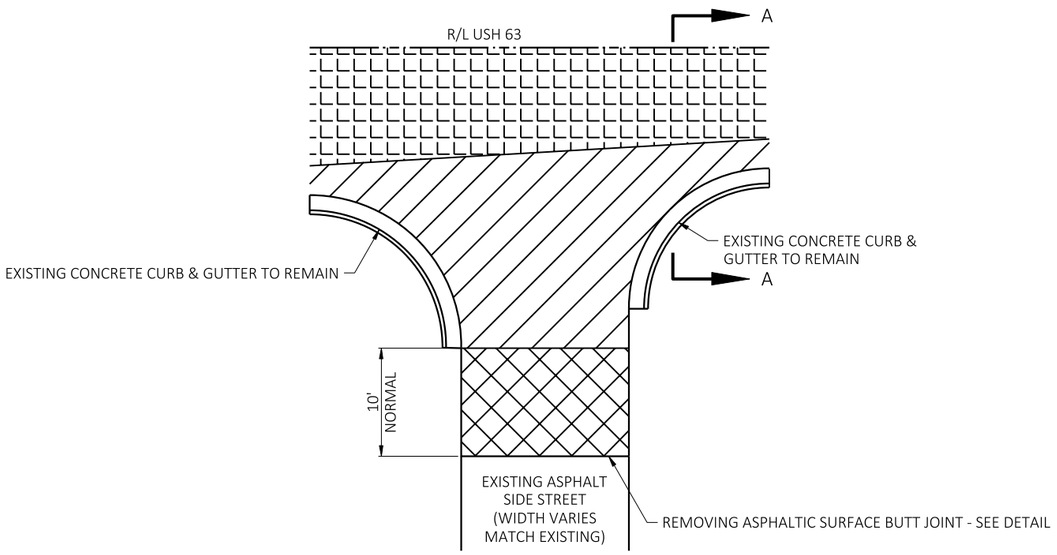

PLAN

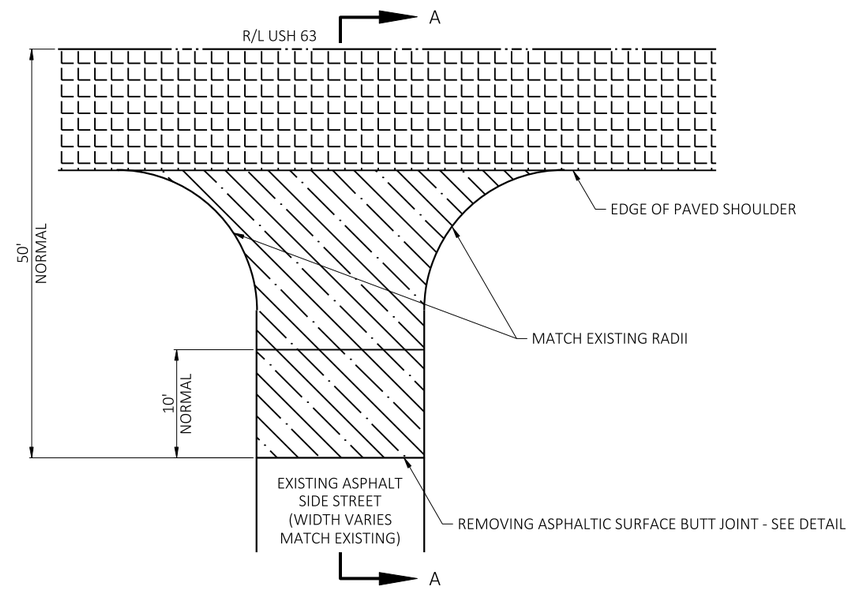

PLAN

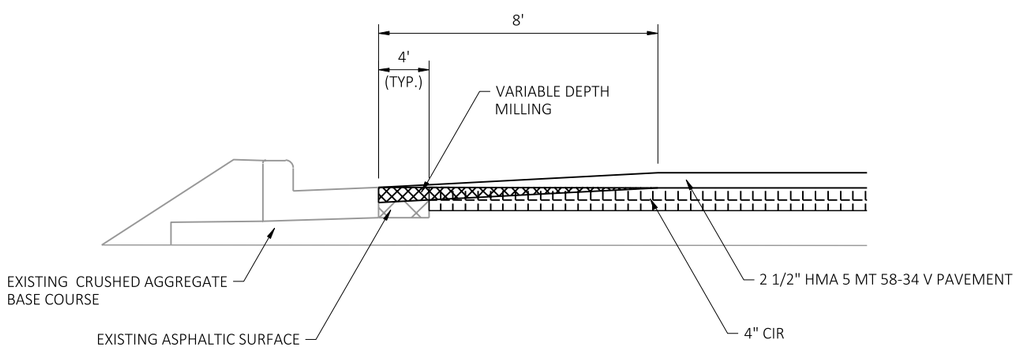

SECTION A-A

ASPHALTIC SURFACE SIDE ROAD DETAIL IN CIR SECTION

SIDE ROAD WITH CURB AND GUTTER TO REMAIN
WISCONSIN AVENUE
CTH E

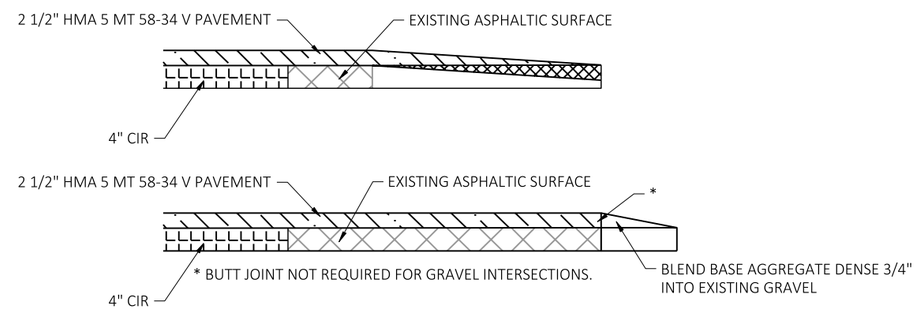

SECTION A-A

ASPHALTIC SURFACE SIDE ROAD DETAIL IN CIR SECTION

SIDE ROAD WITH NO CURB AND GUTTER
DRUMMOND LAKE ROAD
N. LAKE OWEN ROAD
*OLD 63 SOUTH
*BURGSON ROAD
*FR 403
*FR 226 SOUTH
*N SWEDEN ROAD
S SWEDEN DRIVE
FR 226 NORTH
*MATTS LANE
*N. SWEDEN ROAD
*DYBEDAL ROAD
*OLD 63 NORTH

* BUTT JOINT NOT REQUIRED FOR GRAVEL INTERSECTIONS.

REMOVING ASPHALTIC SURFACE BUTT JOINT

REMOVING ASPHALTIC SURFACE MILLING

COLD IN-PLACE RECYCLING

OVERLAY

2

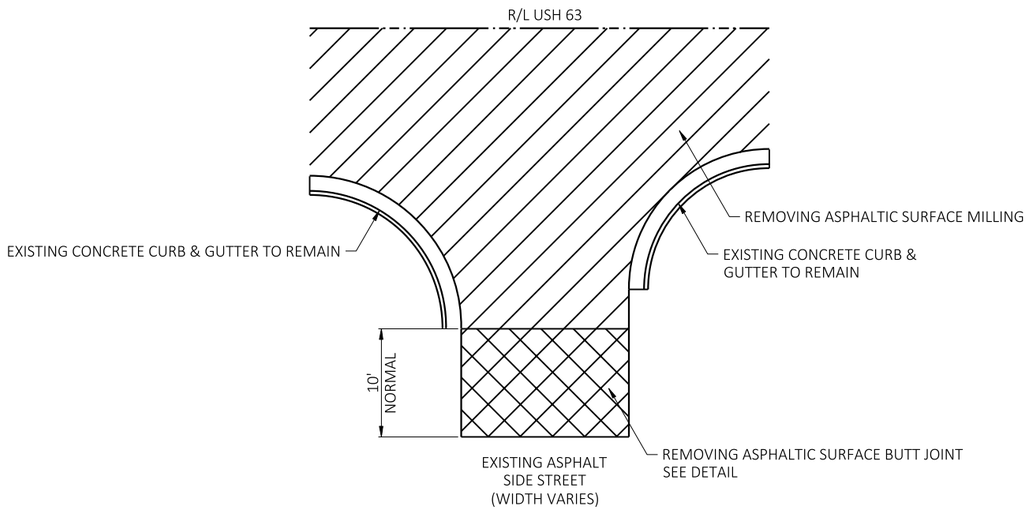

RURAL ASPHALTIC SURFACE SIDE ROAD DETAIL IN MILLING SECTION

SIDE ROAD WITH CURB AND GUTTER TO REMAIN
CTH D
RAYMOND AVENUE

MILLING AND BUTT JOINT ITEMS INCLUDE MILLING OF ASPHALT AND GRAVEL TO ACHIEVE REQUIRED HMA PAVEMENT THICKNESS.

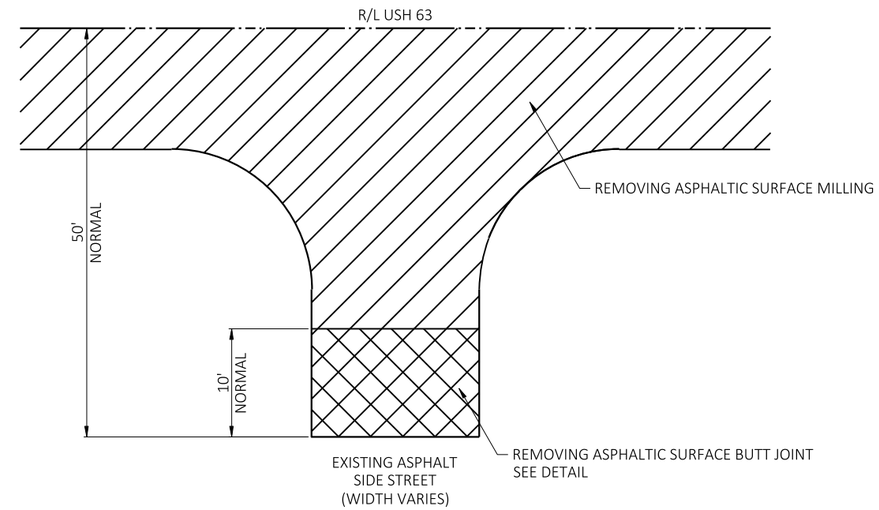

RURAL ASPHALTIC SURFACE SIDE ROAD DETAIL IN MILLING SECTION

SIDE ROAD WITH NO CURB AND GUTTER
BLAKE AVENUE
CLARK STREET
GRANDVIEW CEMETERY ROAD
CUDWORTH AVENUE
HOOD LANE

MILLING AND BUTT JOINT ITEMS INCLUDE MILLING OF ASPHALT AND GRAVEL TO ACHIEVE REQUIRED HMA PAVEMENT THICKNESS.

2

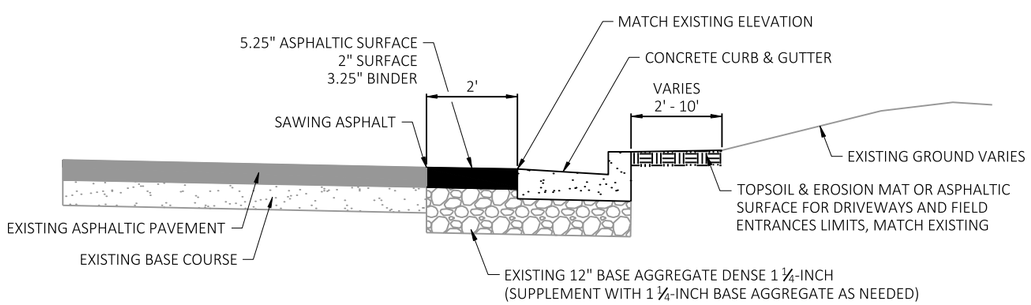

CURB REPLACEMENT DETAIL

NOT TO SCALE

CURB AND GUTTER GRADES SHALL MATCH THE EXISTING GRADES. THE ENGINEER MAY ADJUST TO PROMOTE DRAINAGE.

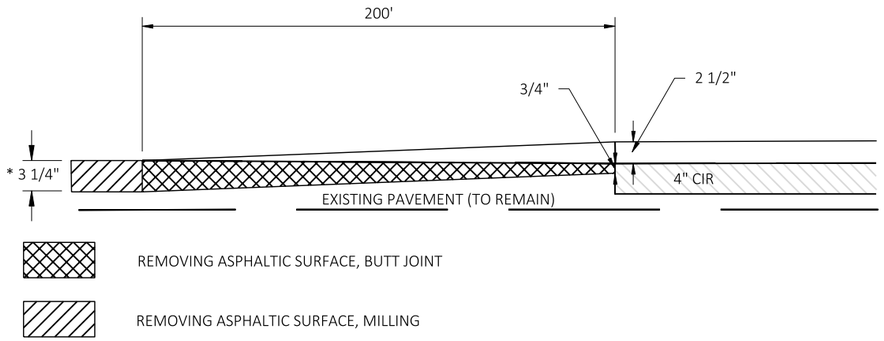

CIR TRANSITION DETAIL

* STA 495+73 - STA 497+73
STA 904+00 - STA 906+00
STA 922+27 - STA 924+27
STA 1136+59 - STA 1138+59
STA 1141+93 - STA 1143+93
* STA 1170+40 - STA 1172+40

*EXISTING PAVEMENT

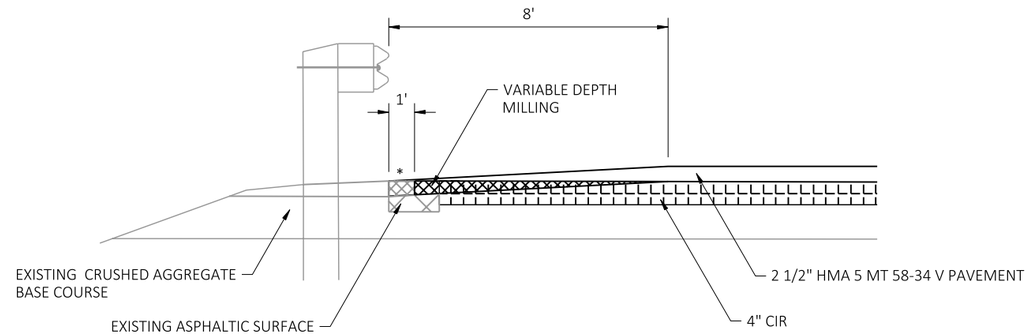

BEAM GUARD MILLING DETAIL

STA 885+07 - STA 891+84 RT
STA 885+68 - STA 891+70 LT

* MAINTAIN EXISTING PAVEMENT ELEVATION
AT BEAM GUARD FACE OF RAIL

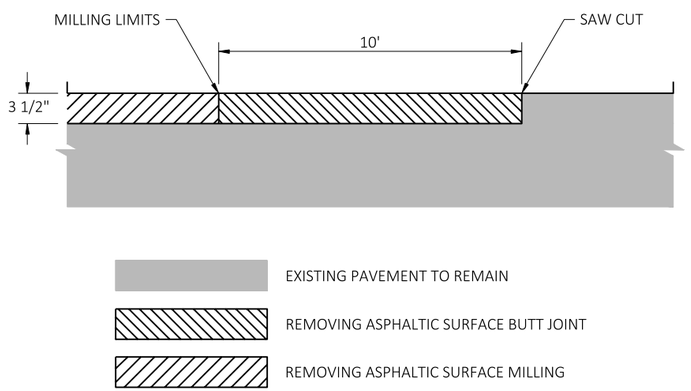

BUTT JOINT DETAIL

NOT TO SCALE
USE WHERE MILLING ABUTS PAVEMENT TO BE LEFT IN PLACE

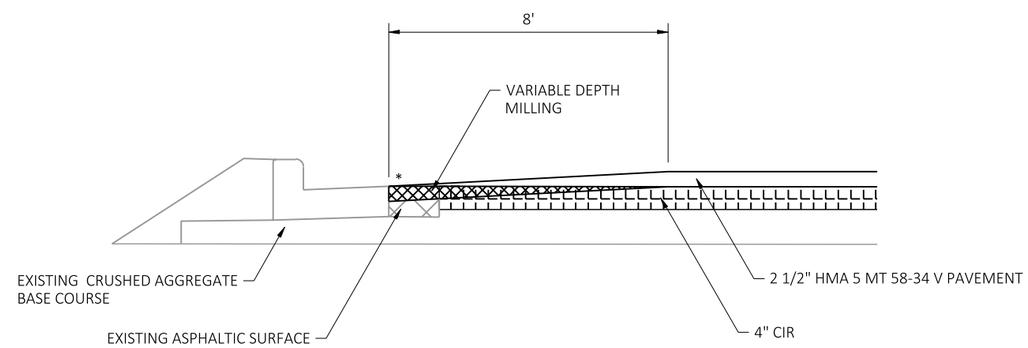

CURB AND GUTTER MILLING DETAIL

STA 498+52 - STA 502+28 LT

* MAINTAIN EXISTING PAVEMENT ELEVATION
AT FLAG OF CURB AND GUTTER

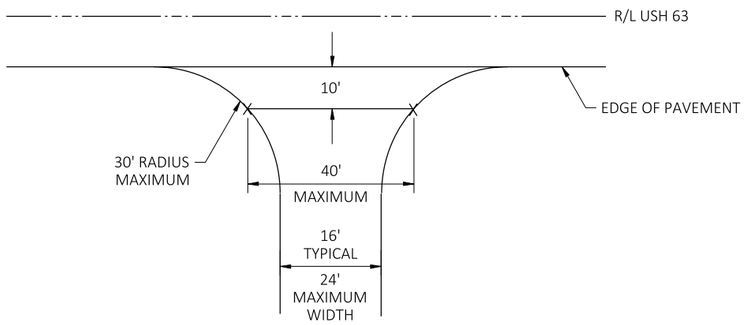

TYPICAL DRIVEWAY DETAIL
(NON-COMMERCIAL RURAL)

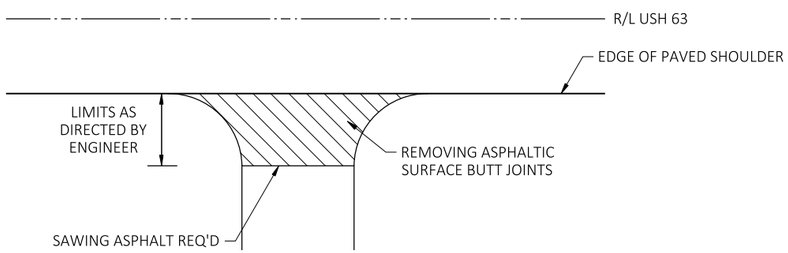

RURAL DRIVEWAY DETAIL - ASPHALT

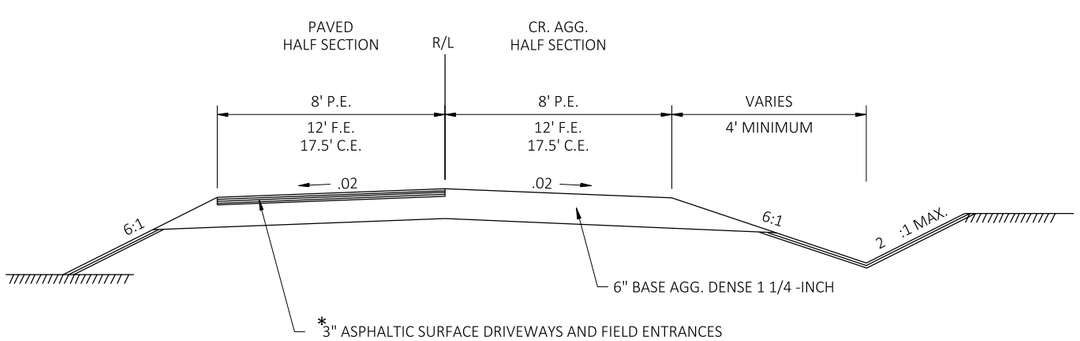

*OR MATCH EXIST.
ASPHALT DEPTH

TYPICAL SECTION
FOR PRIVATE ENTRANCES

NOTE:
DRIVEWAY PROFILES NOT EXPECTED TO EXCEED 10%, PLACE LOW POINT OF DRIVEWAY PROFILE OVER DITCH FLOW LINE.

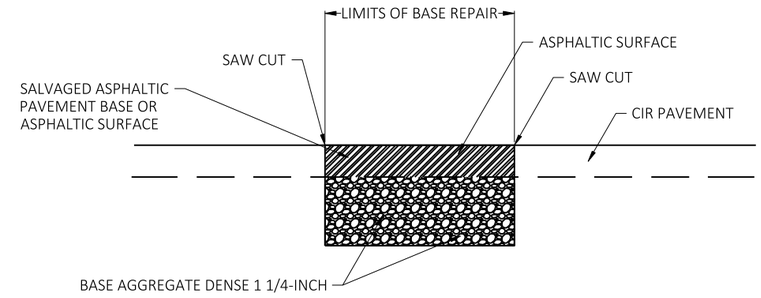

PRIOR TO CIR PROCESS

(PAID UNDER BID ITEM "BASE REPAIR FOR CIR LAYER")

POST CIR PROCESS

(PAID UNDER BID ITEM "PREPARE FOUNDATION FOR ASPHALTIC PAVING".)

BASE REPAIR FOR CIR PAVEMENT

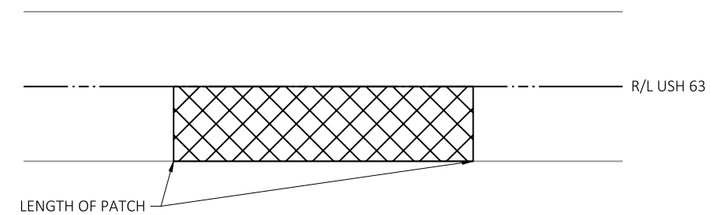

PLAN

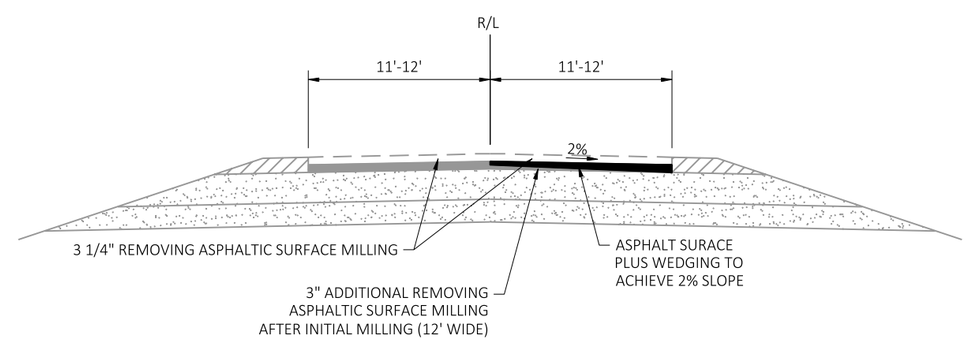

SECTION

ASPHALT BASE PATCH PARTIAL DEPTH

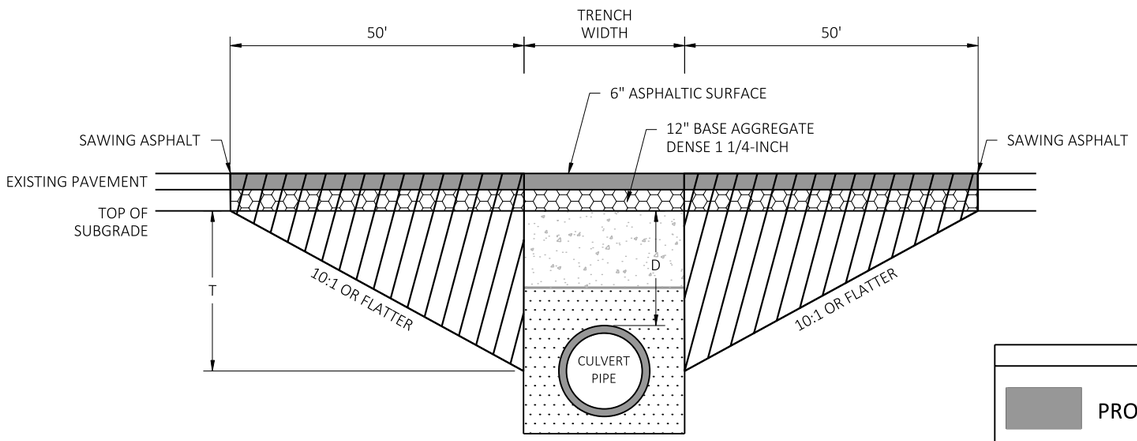

TRANSITION CUT DEPTH (T) = THE LESSER OF DEPTH TO CENTER OF PIPE OR 5 FT.
DO NOT EXTEND TRANSITION CUT BELOW HORIZONTAL CENTER OF PIPE.

DEPTH D < 6 FT

KEY

- PROPOSED SURFACE
- PROPOSED BASE
- TRENCH BACKFILL
- FOUNDATION BACKFILL
- TRANSITION CUT

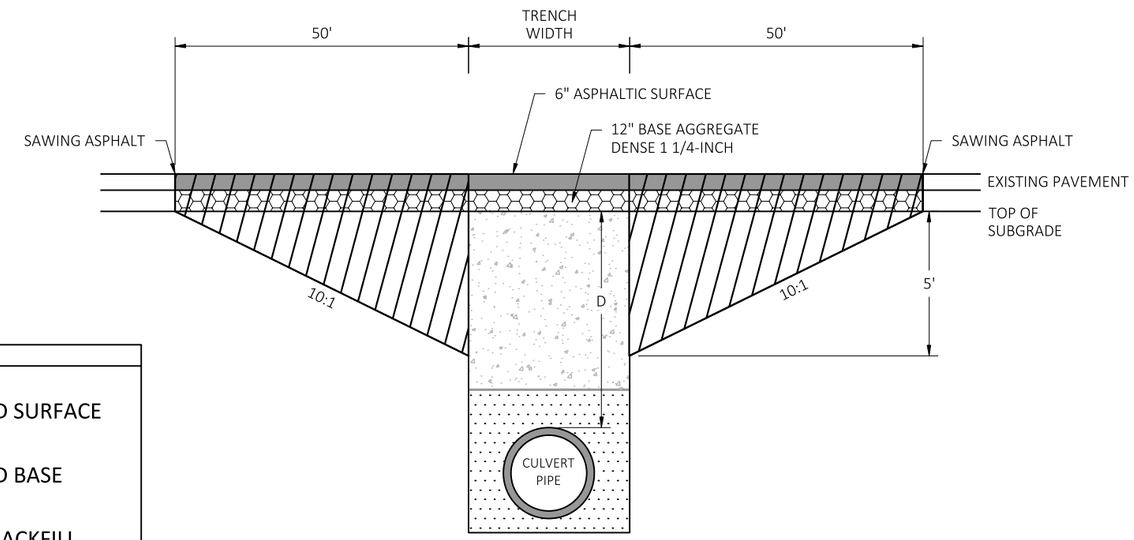

DEPTH D ≥ 6 FT

NOTES

TRANSITION CUT IS PAID AS EXCAVATION COMMON.
TRANSITION CUT WIDTH IS FROM SUBGRADE SHOULDER POINT TO SUBGRADE SHOULDER POINT.
BACKFILL THE TRANSITION CUT AREAS WITH FOUNDATION AND TRENCH BACKFILL AS SPECIFIED IN STANDARD SPEC 520.
CULVERT TRENCH EXCAVATION IS INCIDENTAL TO CULVERT PIPE ITEMS.
COMPLETE CULVERT PIPE TRANSITIONS PRIOR TO CIR OPERATIONS.

CULVERT PIPE TRANSITION

CULVERT NUMBER	STA (CL)	DEPTH D (FT)	PIPE DIA (IN)
40630480	497+33	17.1'	30"
40630640	661+23	0.5'	30"
40630710	746+08	2.7'	53"X83"
-	802+87 & 802+93	1.9'	2 - 30"
40630780	824+26	9.9'	24"
40630810	862+98	4.1'	24"
40630830	871+72	13.3'	24"
40630900	985+03	2.6'	42"
40630920	994+21	3.4'	24"
40630930	1008+82	7.6'	36"
40630940	1015+24	3.7'	36"
40630950	1024+14	3.1'	24"
40630960	1027+48	2.1'	36"
40630970	1034+12	2.0'	24"

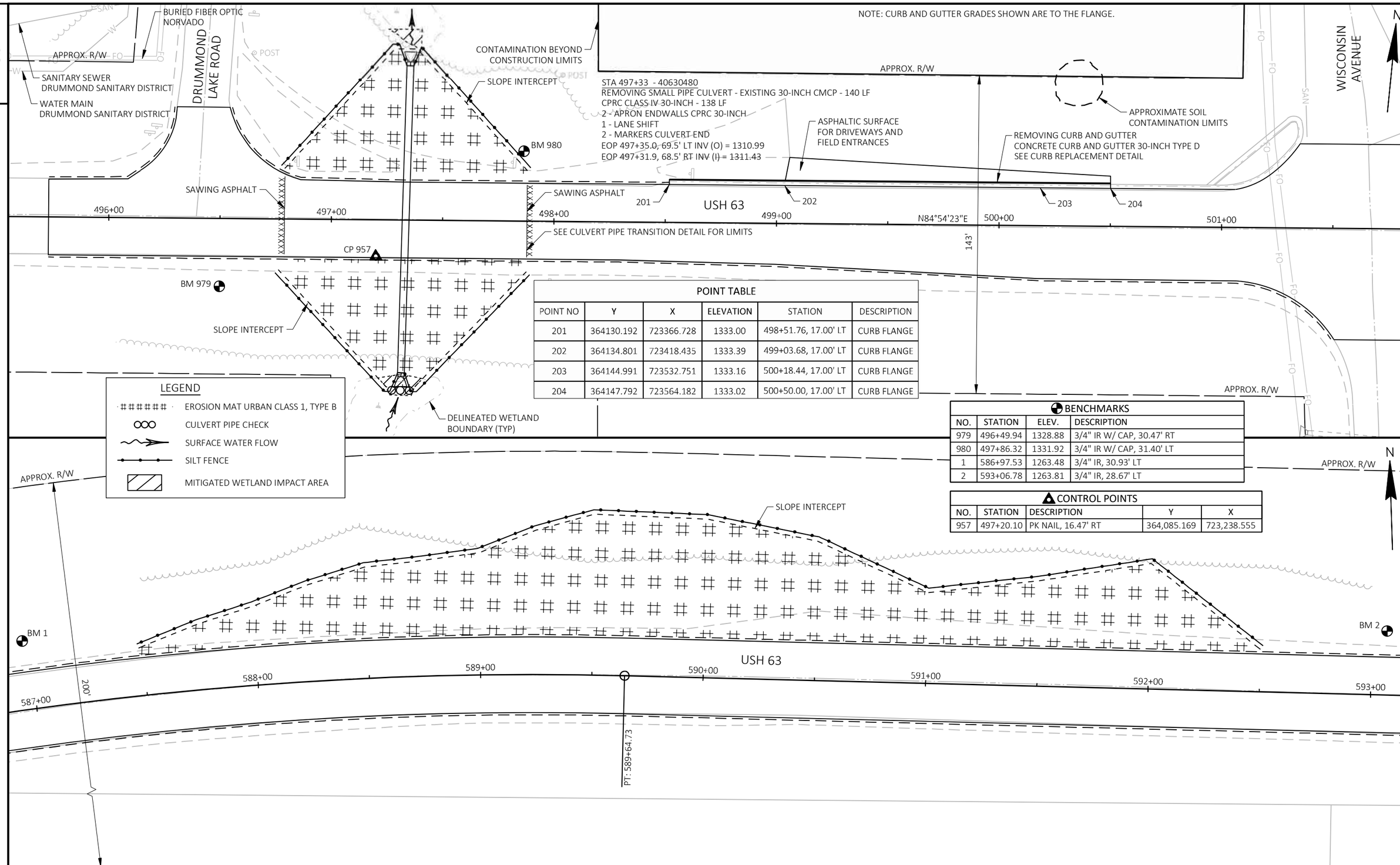

POINT TABLE

POINT NO	Y	X	ELEVATION	STATION	DESCRIPTION
201	364130.192	723366.728	1333.00	498+51.76, 17.00' LT	CURB FLANGE
202	364134.801	723418.435	1333.39	499+03.68, 17.00' LT	CURB FLANGE
203	364144.991	723532.751	1333.16	500+18.44, 17.00' LT	CURB FLANGE
204	364147.792	723564.182	1333.02	500+50.00, 17.00' LT	CURB FLANGE

BENCHMARKS

NO.	STATION	ELEV.	DESCRIPTION
979	496+49.94	1328.88	3/4" IR W/ CAP, 30.47' RT
980	497+86.32	1331.92	3/4" IR W/ CAP, 31.40' LT
1	586+97.53	1263.48	3/4" IR, 30.93' LT
2	593+06.78	1263.81	3/4" IR, 28.67' LT

CONTROL POINTS

NO.	STATION	DESCRIPTION	Y	X
957	497+20.10	PK NAIL, 16.47' RT	364,085.169	723,238.555

PROJECT NO: 1560-07-70	HWY: USH 63	COUNTY: BAYFIELD	CONSTRUCTION DETAILS	SHEET 19	E

FILE NAME : G:\00\00093\00093523\CADD\SHEETSPLAN\15600701_021002-CD-CULVERTS.DWG
LAYOUT NAME - 021009-cd
PLOT DATE : 7/30/2021 1:49 PM PLOT BY : SHAWN DOLENS PLOT NAME : PLOT SCALE : 1 IN:40 FT
WISDOT/CADDS SHEET 42

2

APPROX. R/W

APPROX. R/W

N

2

LEGEND

- EROSION MAT URBAN CLASS 1, TYPE B
- CULVERT PIPE CHECK
- SURFACE WATER FLOW
- SILT FENCE
- MITIGATED WETLAND IMPACT AREA

STA 661+23 - 40630640
REMOVING SMALL PIPE CULVERT - EXISTING 30-INCH CMCP - 51 LF
CPRC CLASS IV 30-INCH - 46 LF
2 - APRON ENDWALLS CPRC 30-INCH
1 - LANE SHIFT
2 - MARKERS CULVERT END
EOP 23.5' LT INV (O) = 1276.99
EOP 22.5' RT INV (I) = 1277.15

CP 985
NGS
DO6034

EXISTING GEODETIC SURVEY CONTROL STATION
DO NOT DISTURB

SLOPE INTERCEPT

DELINEATED WETLAND
BOUNDARY (TYP)

200'

SAWING ASPHALT

SAWING ASPHALT

USH 63

659+00 660+00 661+00 662+00 663+00 N66°19'12"E 664+00

SEE CULVERT PIPE TRANSITION DETAIL FOR LIMITS

CP 964

CP 965

BM 986

SLOPE INTERCEPT

CONTROL POINTS

NO.	STATION	DESCRIPTION	Y	X
985	658+60.42	DISK IN CONCRETE, 43.58' LT	369,128.716	737,675.098
964	661+23.00	PK NAIL, 16.99' RT	369,178.706	737,939.898
965	663+45.62	PK NAIL, 16.89' RT	369,268.203	738,143.727
913	694+08.20	PK NAIL, 17.06' LT	370,530.230	740,934.417
914	694+14.46	PK NAIL, 16.23' RT	370,502.262	740,953.512

BENCHMARKS

NO.	STATION	ELEV.	DESCRIPTION
986	662+71.03	1279.03	3/4" IR W/ CAP, 31.50' RT
4	692+75.30	1256.71	3/4" IR W/ CAP, 25.83' RT

APPROX. R/W

APPROX. R/W

N

SLOPE INTERCEPT

24 LF - 30-INCH CPCA (CONNECT TO EXISTING PIPE)
1 - REMOVING APRON ENDWALLS
1 - APRON ENDWALLS CPA 30-INCH

200'

CP 913

USH 63

690+00 691+00 692+00 693+00 694+00 695

MATCH LINE STA 695+00

STA 694+07 - 040630660
EXISTING 30-INCH CPCA - 129 LF TO REMAIN

CP 914

BM 4

14 LF - 30-INCH CPCA (CONNECT TO EXISTING PIPE)
1 - REMOVING APRON ENDWALLS
1 - APRON ENDWALLS CPA 30-INCH

SLOPE INTERCEPT

APPROX. R/W

PROJECT NO: 1560-07-70	HWY: USH 63	COUNTY: BAYFIELD	CONSTRUCTION DETAILS	SHEET 20	E

2

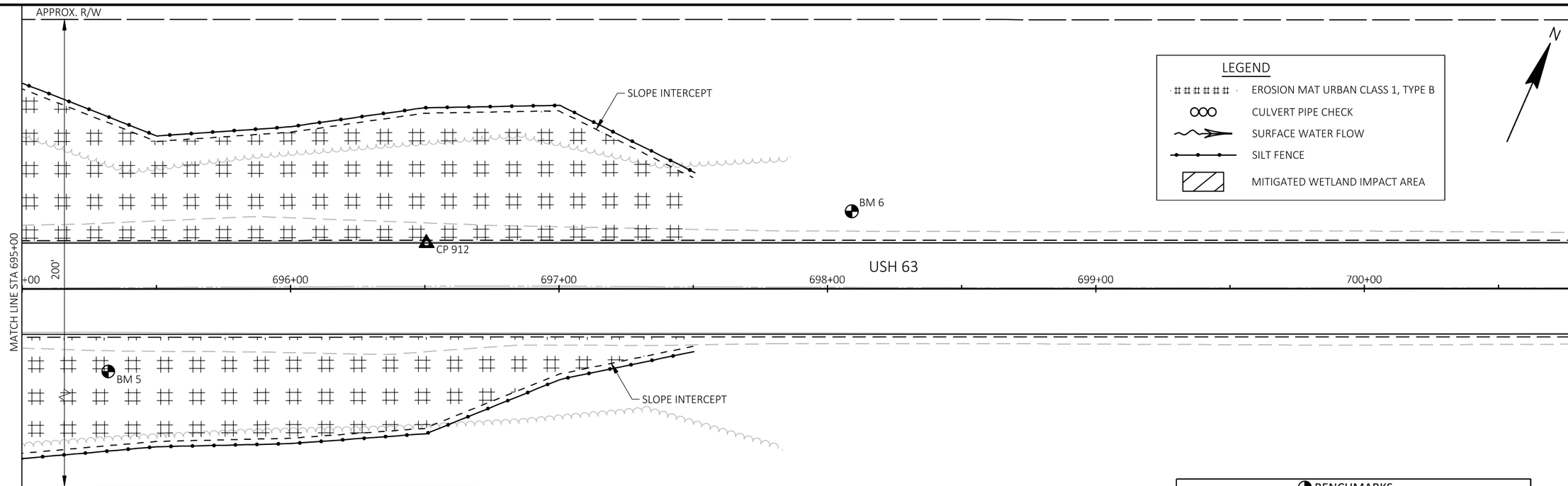

2

CONTROL POINTS				
NO.	STATION	DESCRIPTION	Y	X
912	696+50.67	PK NAIL, 16.96' LT	370,627.47	741,156.539
969	746+07.75	PK NAIL, 17.56' RT	372,585.506	745,710.648
970	748+93.07	PK NAIL, 17.47' RT	372,700.108	745,971.933

BENCHMARKS			
NO.	STATION	ELEV.	DESCRIPTION
5	695+32.10	1242.73	3/4" IR, 30.79' RT
6	698+09.11	1240.6	3/4" IR, 28.81' LT
7	744+89.28	1175.15	3/4" IR W/ CAP, 33.32' RT
988	747+65.27	1175.45	3/4" IR W/ CAP, 30.21' LT

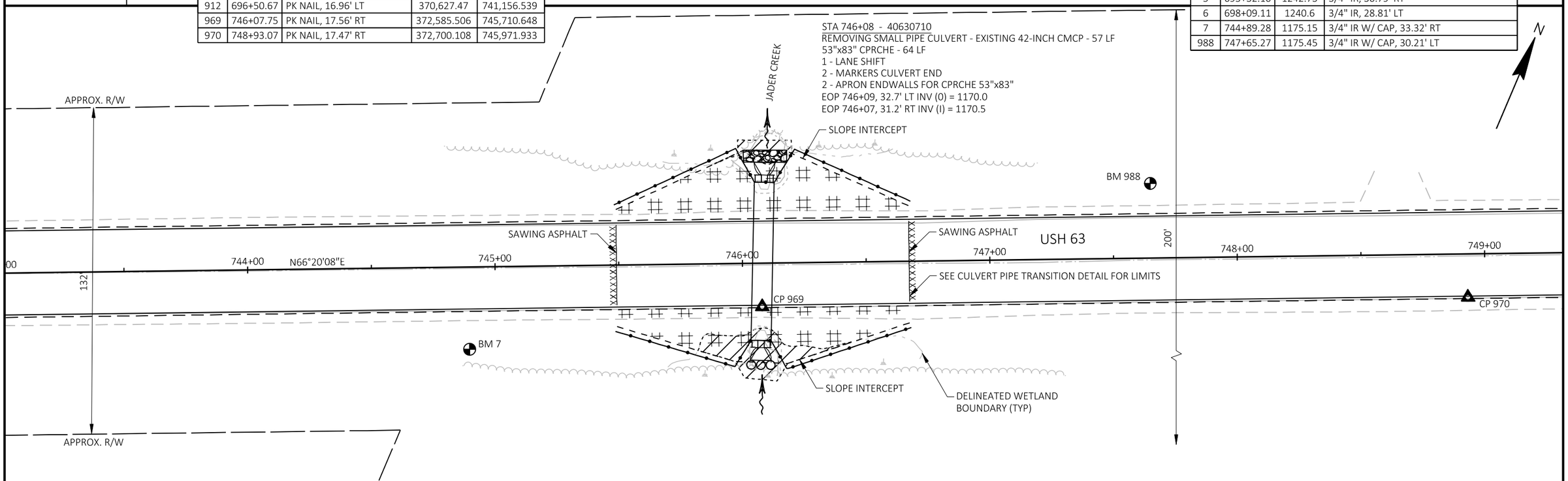

PROJECT NO: 1560-07-70	HWY: USH 63	COUNTY: BAYFIELD	CONSTRUCTION DETAILS	SHEET 21	E

2

APPROX. R/W

12 LF - 30-INCH CPCA (CONNECT TO EXISTING PIPE)
1 - REMOVING APRON ENDWALLS
1 - APRON ENDWALLS CPA 30-INCH

SLOPE INTERCEPT

200'

USH 63

754+00 755+00 756+00 757+00 758+00 759+00 760+0

STA 756+19 - 040630720
EXISTING 30-INCH CPCA - 61 LF TO REMAIN

SLOPE INTERCEPT

10 LF - 30-INCH CPCA (CONNECT TO EXISTING PIPE)
1 - REMOVING APRON ENDWALLS
1 - APRON ENDWALLS CPA 30-INCH

DELINEATED WETLAND
BOUNDARY (TYP)

BENCHMARKS			
NO.	STATION	ELEV.	DESCRIPTION
13	774+88.88	1146.73	3/4" IR, 30.93' LT
14	778+92.45	1146.22	3/4" IR, 30.24' RT

CONTROL POINTS				
NO.	STATION	DESCRIPTION	Y	X
971	777+71.57	PK NAIL, 16.57' RT	373,856.303	748,608.028
972	780+36.22	PK NAIL, 16.40' RT	373,962.681	748,850.361

LEGEND

- EROSION MAT URBAN CLASS 1, TYPE B
- CULVERT PIPE CHECK
- SURFACE WATER FLOW
- SILT FENCE
- MITIGATED WETLAND IMPACT AREA

APPROX. R/W

DELINEATED WETLAND
BOUNDARY (TYP)

STA 777+69 - 040630730
EXISTING 24-INCH CPCA - 59 LF TO REMAIN

8 LF - 24-INCH CPCA (CONNECT TO EXISTING PIPE)
1 - REMOVING APRON ENDWALLS
1 - APRON ENDWALLS CPA 24-INCH

SLOPE INTERCEPT

BM 13

USH 63

775+00 776+00 777+00 778+00 779+00 780+00

132'

CP 971

CP 972

BM 14

SLOPE INTERCEPT

4 LF - 24-INCH CPCA (CONNECT TO EXISTING PIPE)
1 - REMOVING APRON ENDWALLS
1 - APRON ENDWALLS CPA 24-INCH

APPROX. R/W

PROJECT NO: 1560-07-70	HWY: USH 63	COUNTY: BAYFIELD	CONSTRUCTION DETAILS	SHEET 22	E

2

STA 802+87
CPRC CLASS IV 30-INCH - 58 LF
2 - APRON ENDWALLS FOR CPRC 30-INCH
1 - LANE SHIFT
2 - CULVERT MARKERS
EOP 32.8' LT INV (0) = 1131.90
EOP 25.1' RT INV (I)=1133.92

STA 802+93
CPRC CLASS IV 30-INCH - 58 LF
2 - APRON ENDWALLS FOR CPRC 30-INCH
EOP 32.8' LT INV (0) = 1131.90
EOP 25.1' RT INV (I)=1133.92

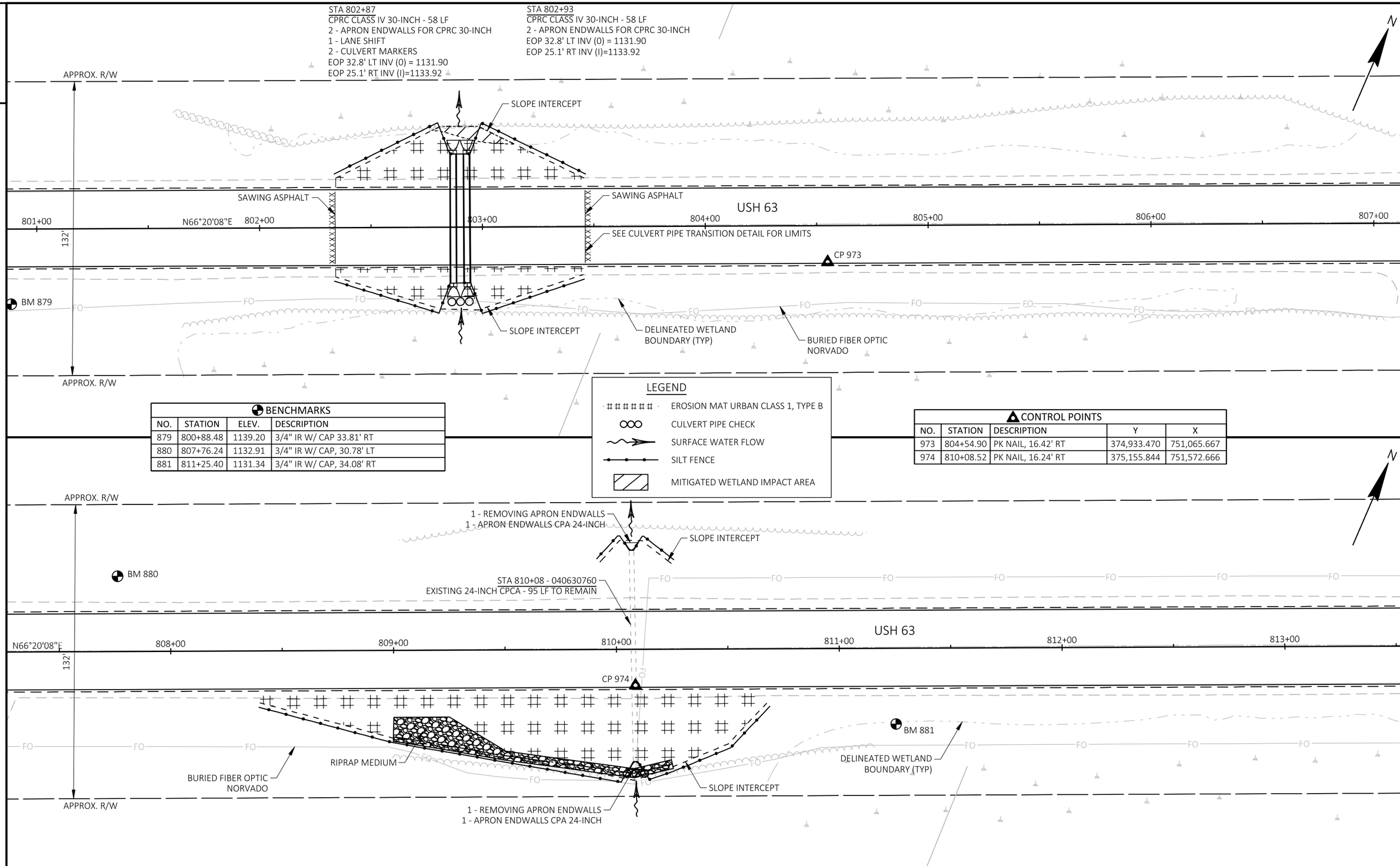

BENCHMARKS			
NO.	STATION	ELEV.	DESCRIPTION
879	800+88.48	1139.20	3/4" IR W/ CAP 33.81' RT
880	807+76.24	1132.91	3/4" IR W/ CAP, 30.78' LT
881	811+25.40	1131.34	3/4" IR W/ CAP, 34.08' RT

LEGEND

- EROSION MAT URBAN CLASS 1, TYPE B
- CULVERT PIPE CHECK
- SURFACE WATER FLOW
- SILT FENCE
- MITIGATED WETLAND IMPACT AREA

CONTROL POINTS				
NO.	STATION	DESCRIPTION	Y	X
973	804+54.90	PK NAIL, 16.42' RT	374,933.470	751,065.667
974	810+08.52	PK NAIL, 16.24' RT	375,155.844	751,572.666

PROJECT NO: 1560-07-70	HWY: USH 63	COUNTY: BAYFIELD	CONSTRUCTION DETAILS	SHEET 23	E

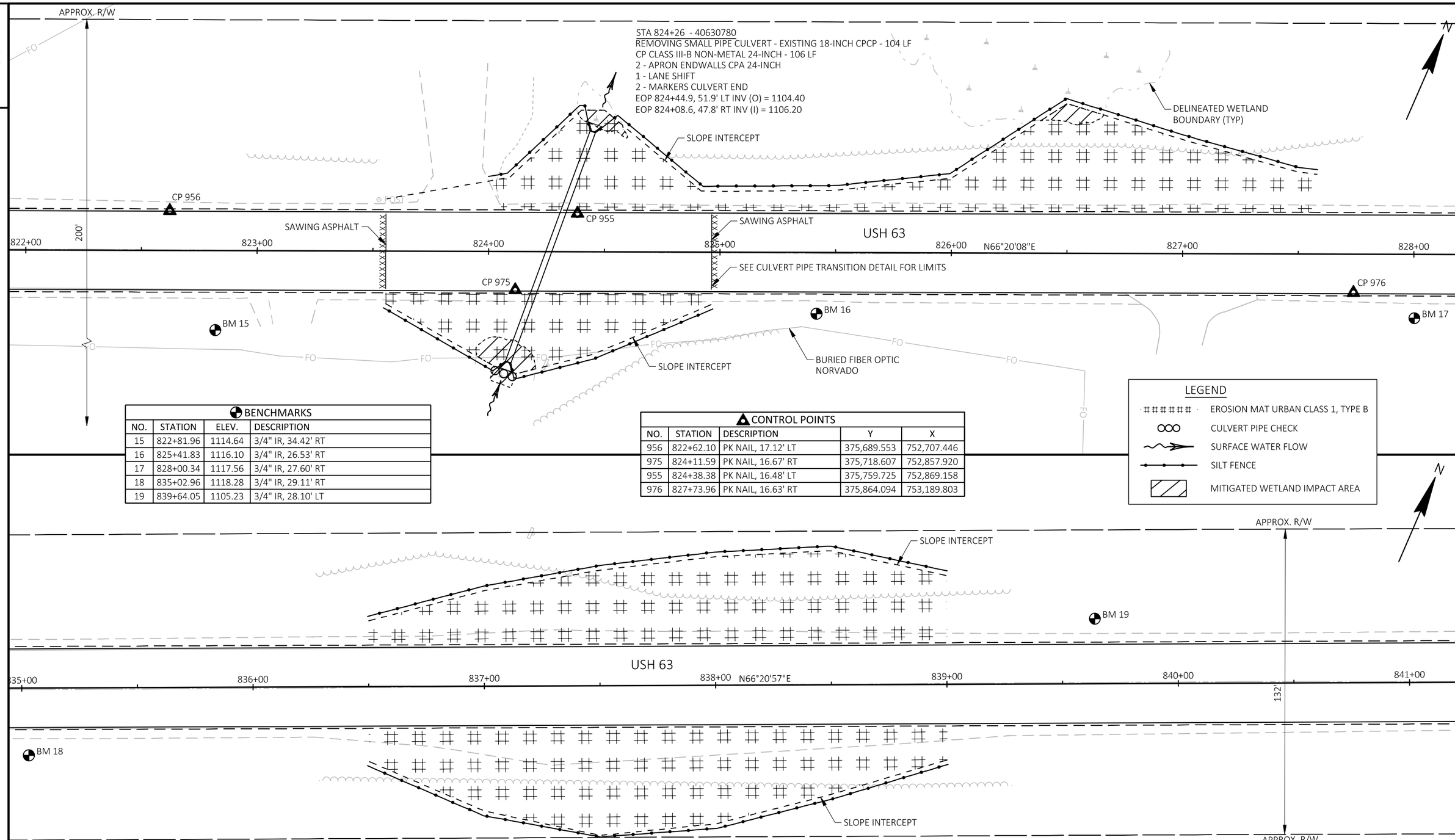

BENCHMARKS

NO.	STATION	ELEV.	DESCRIPTION
15	822+81.96	1114.64	3/4" IR, 34.42' RT
16	825+41.83	1116.10	3/4" IR, 26.53' RT
17	828+00.34	1117.56	3/4" IR, 27.60' RT
18	835+02.96	1118.28	3/4" IR, 29.11' RT
19	839+64.05	1105.23	3/4" IR, 28.10' LT

CONTROL POINTS

NO.	STATION	DESCRIPTION	Y	X
956	822+62.10	PK NAIL, 17.12' LT	375,689.553	752,707.446
975	824+11.59	PK NAIL, 16.67' RT	375,718.607	752,857.920
955	824+38.38	PK NAIL, 16.48' LT	375,759.725	752,869.158
976	827+73.96	PK NAIL, 16.63' RT	375,864.094	753,189.803

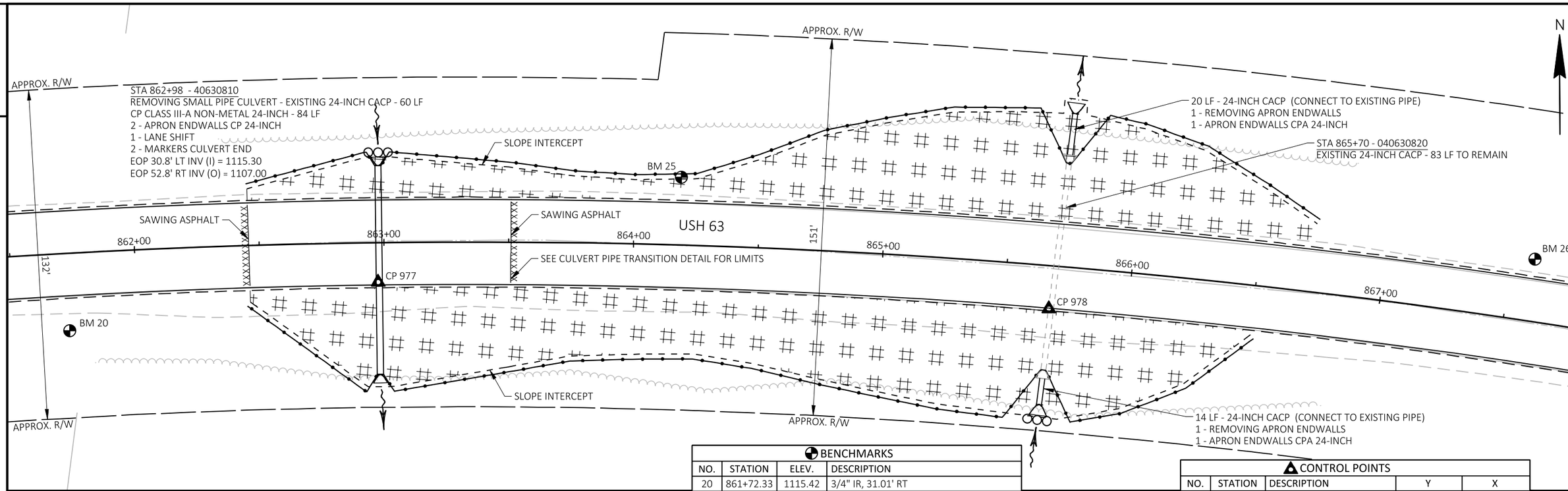

BENCHMARKS			
NO.	STATION	ELEV.	DESCRIPTION
20	861+72.33	1115.42	3/4" IR, 31.01' RT
25	864+18.42	1119.25	3/4" IR, 27.22' LT
26	867+59.13	1123.22	3/4" IR, 24.91' LT
23	872+68.36	1113.79	3/4" IR, 27.72' RT

CONTROL POINTS				
NO.	STATION	DESCRIPTION	Y	X
977	862.97.49	PK NAIL, 15.84' RT	377,180.924	756,445.486
978	865+68.09	PK NAIL, 17.24' RT	377,206.453	759,713.218
886	871+70.26	PK NAIL, 16.09' LT	377,230.870	757,314.751

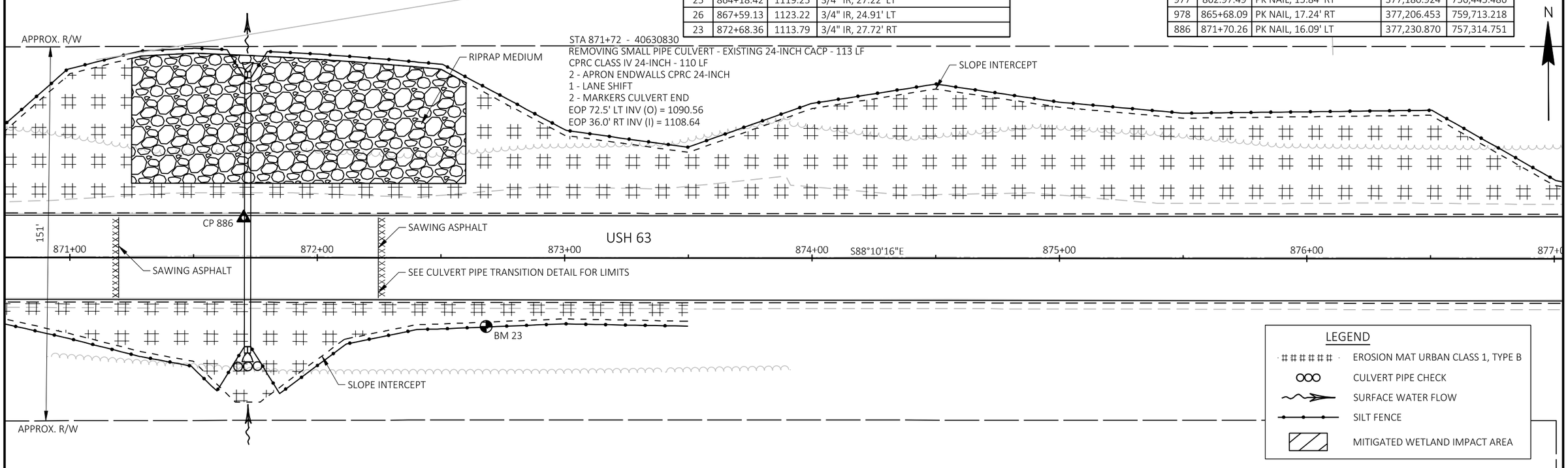

PROJECT NO: 1560-07-70	HWY: USH 63	COUNTY: BAYFIELD	CONSTRUCTION DETAILS	SHEET 25	E

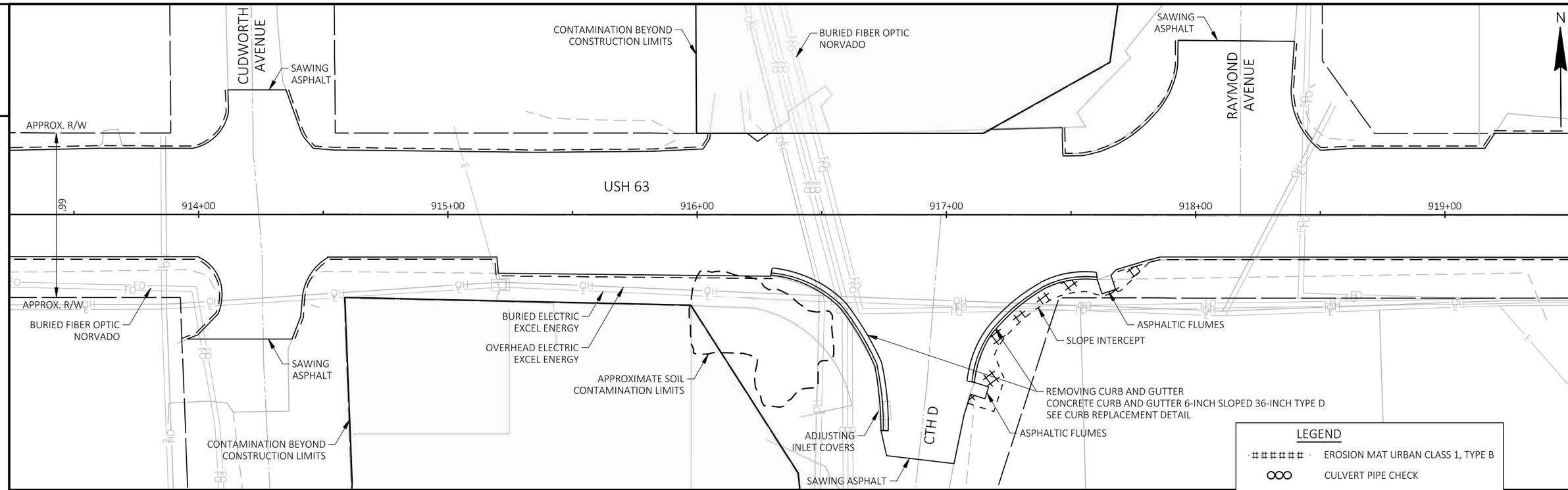

BENCHMARKS			
NO.	STATION	ELEV.	DESCRIPTION
994	983+63.87	966.60	3/4" IR W/ CAP, 31.08' LT
995	986+51.39	964.22	3/4" IR W/ CAP, 30.57' RT
991	993+01.22	956.80	3/4" IR W/ CAP, 31.30' LT
992	995+46.32	957.99	3/4" IR W/ CAP, 32.88' RT

CONTROL POINTS				
NO.	STATION	DESCRIPTION	Y	X
993	984+98.00	PK NAIL, 16.76' RT	378,403.148	768,361.662
908	994+03.70	PK NAIL, 17.23' LT	378,844.037	769,153.519

PROJECT NO: 1560-07-70	HWY: USH 63	COUNTY: BAYFIELD	CONSTRUCTION DETAILS	SHEET 26	E

2

BENCHMARKS			
NO.	STATION	ELEV.	DESCRIPTION
994	983+63.87	966.60	3/4" IR W/ CAP, 31.08' LT
995	986+51.39	964.22	3/4" IR W/ CAP, 30.57' RT
991	993+01.22	956.80	3/4" IR W/ CAP, 31.30' LT
992	995+46.32	957.99	3/4" IR W/ CAP, 32.88' RT

STA 994+21 - 40630920
REMOVING SMALL PIPE CULVERT - EXISTING 18-INCH PCP - 80 LF
CP CLASS III-A NON-METAL 24-INCH - 70 LF
2 - APRON ENDWALLS CPA 24-INCH
1 - LANE SHIFT
2 - MARKERS CULVERT END
EOP 37.3' LT INV (O) = 954.45
EOP 32.7' RT INV (I) = 954.90

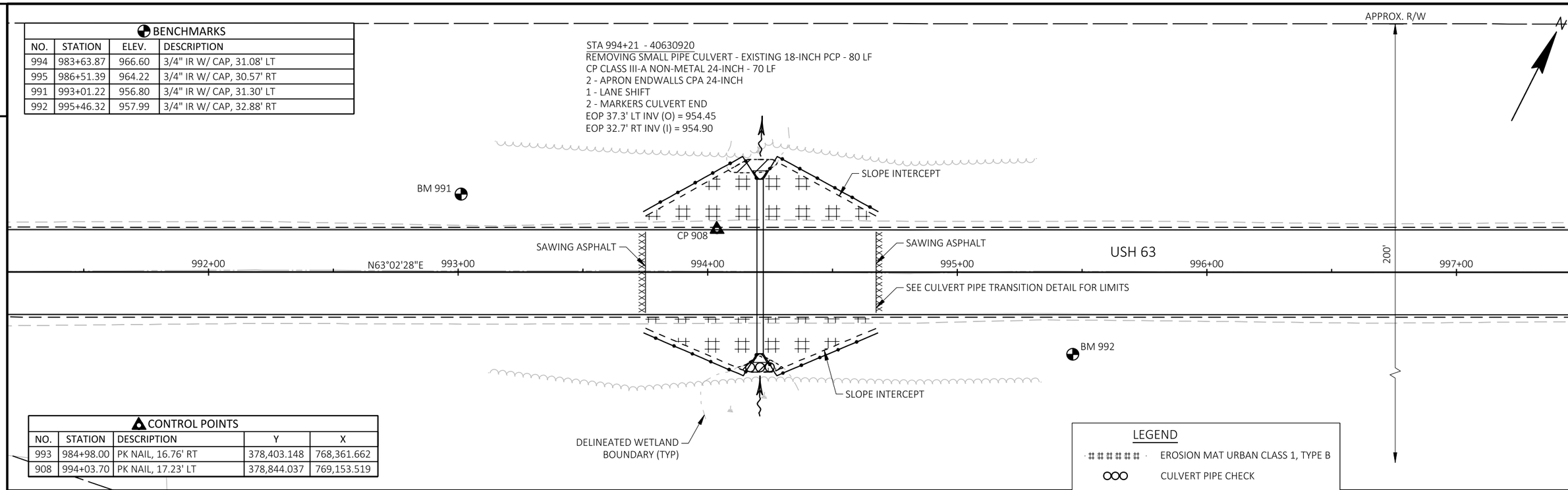

CONTROL POINTS				
NO.	STATION	DESCRIPTION	Y	X
993	984+98.00	PK NAIL, 16.76' RT	378,403.148	768,361.662
908	994+03.70	PK NAIL, 17.23' LT	378,844.037	769,153.519

LEGEND

- EROSION MAT URBAN CLASS 1, TYPE B
- CULVERT PIPE CHECK
- SURFACE WATER FLOW
- SILT FENCE
- MITIGATED WETLAND IMPACT AREA

STA 1008+82 - 40630930
REMOVING SMALL PIPE CULVERT - EXISTING 36-INCH PCP - 85 LF
CP CLASS III-A NON-METAL 36-INCH - 96 LF
2 - APRON ENDWALLS CPA 36-INCH
1 - LANE SHIFT
2 - MARKERS CULVERT END
EOP 1009+00.1, 43.1' LT INV (O) = 938.47
EOP 1008+62.3, 45.2' RT INV (I) = 938.74

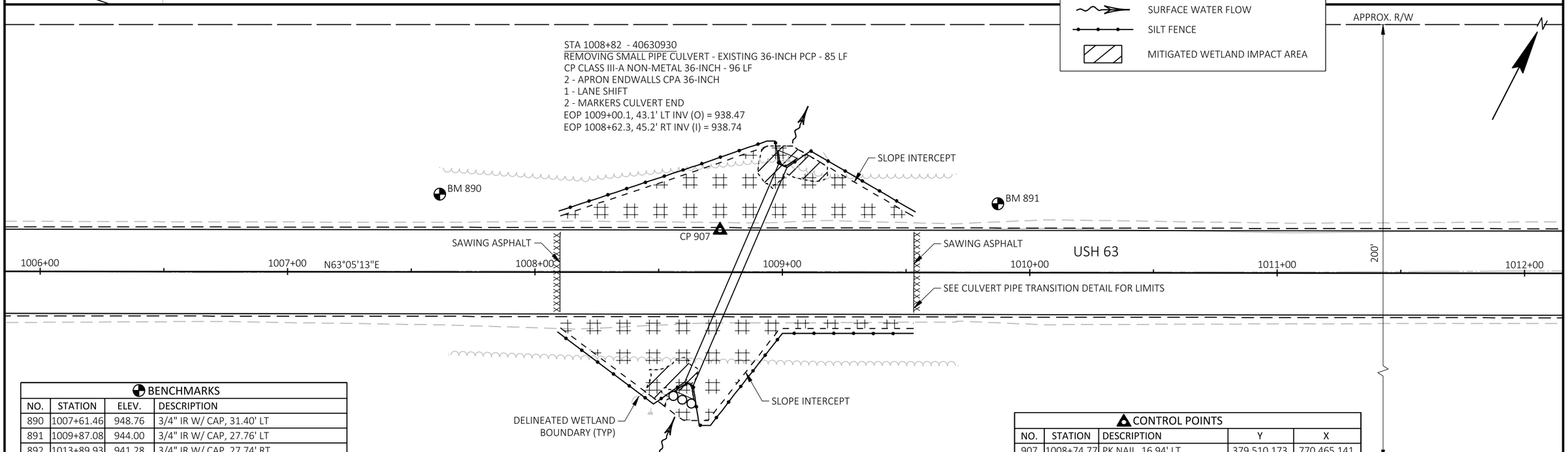

BENCHMARKS			
NO.	STATION	ELEV.	DESCRIPTION
890	1007+61.46	948.76	3/4" IR W/ CAP, 31.40' LT
891	1009+87.08	944.00	3/4" IR W/ CAP, 27.76' LT
892	1013+89.93	941.28	3/4" IR W/ CAP, 27.74' RT
893	1016+53.81	937.73	3/4" IR W/ CAP, 25.67' LT

CONTROL POINTS				
NO.	STATION	DESCRIPTION	Y	X
907	1008+74.77	PK NAIL, 16.94' LT	379,510.173	770,465.141
906	1014+89.93	PK NAIL, 17.36' LT	379,788.989	771,013.482

2

STA 1015+24 - 40630940
REMOVING SMALL PIPE CULVERT - EXISTING 30-INCH CPRC - 75 LF
CP CLASS III-A NON-METAL 36-INCH - 70 LF
2 - APRON ENDWALLS CPA 36-INCH
1 - LANE SHIFT
2 - MARKERS CULVERT END
EOP 1015+13.2, 34.7' LT INV (O) = 934.00
EOP 1015+34.6, 32.1' RT INV (I) = 934.80

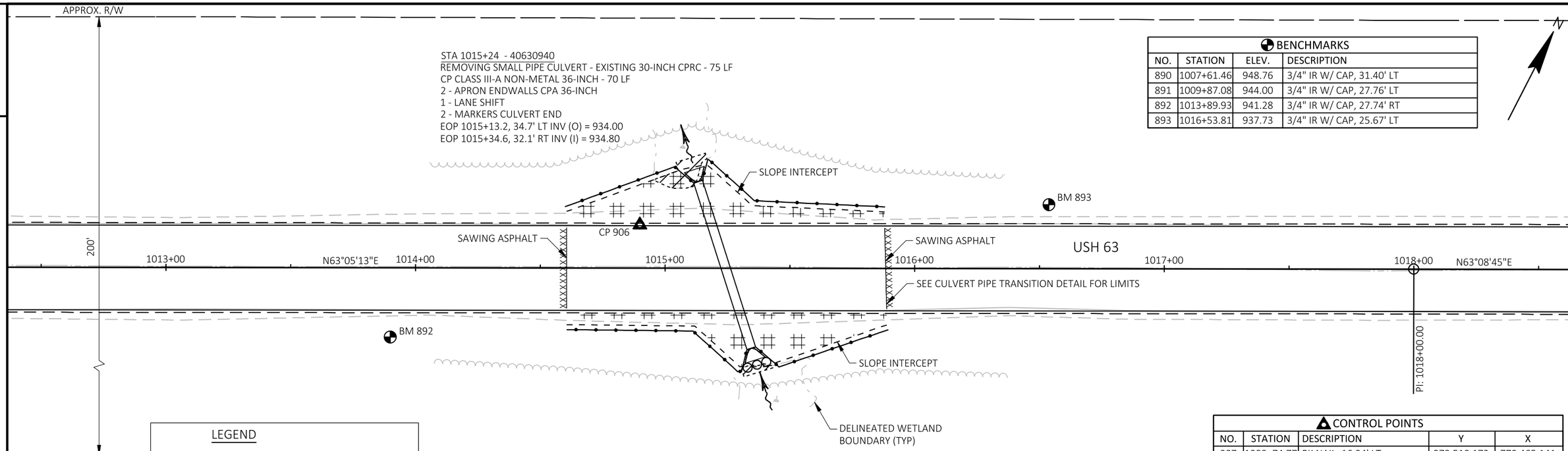

BENCHMARKS			
NO.	STATION	ELEV.	DESCRIPTION
890	1007+61.46	948.76	3/4" IR W/ CAP, 31.40' LT
891	1009+87.08	944.00	3/4" IR W/ CAP, 27.76' LT
892	1013+89.93	941.28	3/4" IR W/ CAP, 27.74' RT
893	1016+53.81	937.73	3/4" IR W/ CAP, 25.67' LT

CONTROL POINTS				
NO.	STATION	DESCRIPTION	Y	X
907	1008+74.77	PK NAIL, 16.94' LT	379,510.173	770,465.141
906	1014+89.93	PK NAIL, 17.36' LT	379,788.989	771,013.482

LEGEND

- EROSION MAT URBAN CLASS 1, TYPE B
- CULVERT PIPE CHECK
- SURFACE WATER FLOW
- SILT FENCE
- MITIGATED WETLAND IMPACT AREA

STA 1024+14 - 40630950
REMOVING SMALL PIPE CULVERT - EXISTING 24-INCH PCP - 74 LF
CP CLASS III-A NON-METAL 24-INCH - 68 LF
2 - APRON ENDWALLS CPA 24-INCH
1 - LANE SHIFT
2 - MARKERS CULVERT END
EOP 34.9' LT INV (O) = 923.66
EOP 33.0' RT INV (I) = 925.54

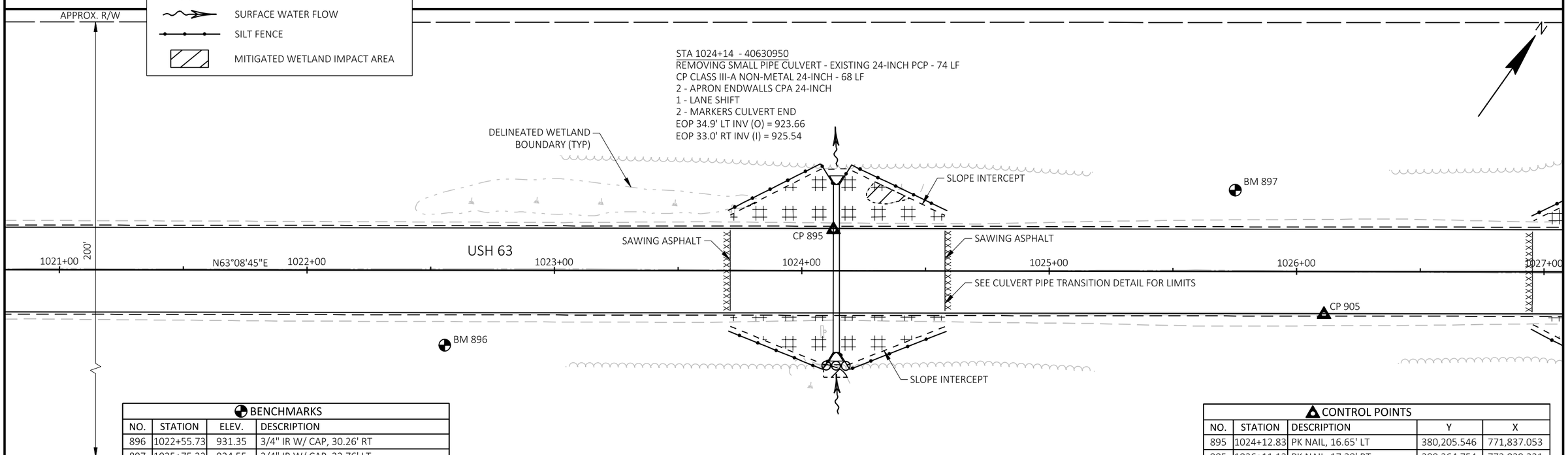

BENCHMARKS			
NO.	STATION	ELEV.	DESCRIPTION
896	1022+55.73	931.35	3/4" IR W/ CAP, 30.26' RT
897	1025+75.23	924.55	3/4" IR W/ CAP, 32.76' LT
898	1028+65.67	922.41	3/4" IR W/ CAP, 26.70' RT

CONTROL POINTS				
NO.	STATION	DESCRIPTION	Y	X
895	1024+12.83	PK NAIL, 16.65' LT	380,205.546	771,837.053
905	1026+11.12	PK NAIL, 17.38' RT	380,264.754	772,029.331
894	1027+48.20	PK NAIL, 16.35' LT	380,356.773	772,136.387

2

BENCHMARKS			
NO.	STATION	ELEV.	DESCRIPTION
896	1022+55.73	931.35	3/4" IR W/ CAP, 30.26' RT
897	1025+75.23	924.55	3/4" IR W/ CAP, 32.76' LT
898	1028+65.67	922.41	3/4" IR W/ CAP, 26.70' RT

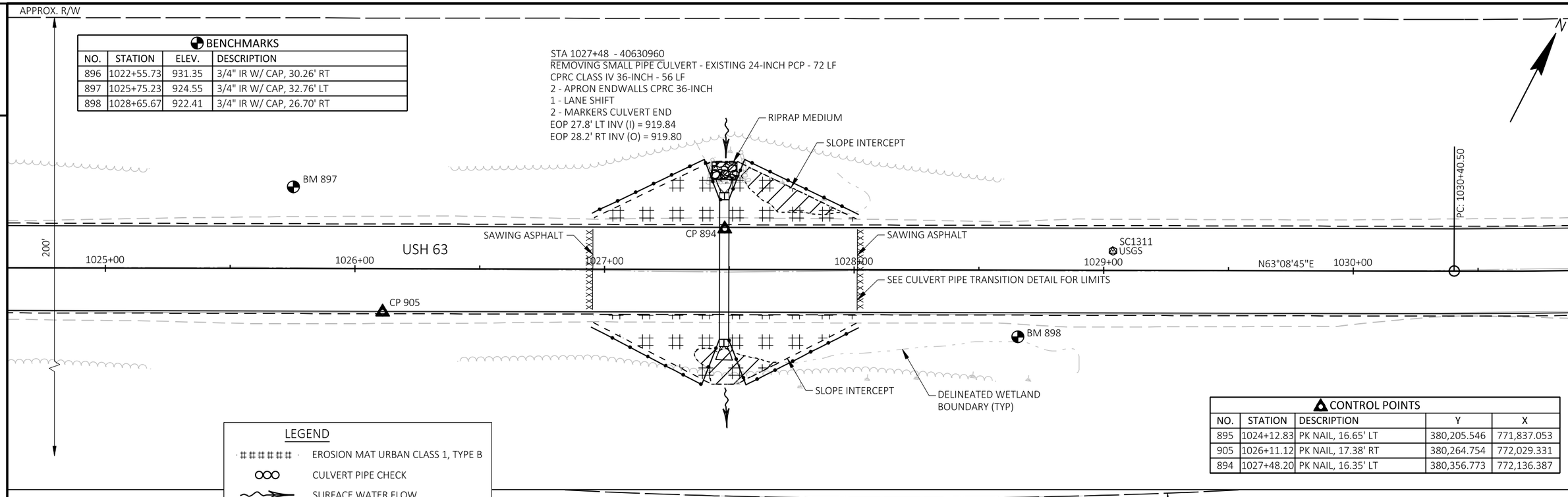

CONTROL POINTS				
NO.	STATION	DESCRIPTION	Y	X
895	1024+12.83	PK NAIL, 16.65' LT	380,205.546	771,837.053
905	1026+11.12	PK NAIL, 17.38' RT	380,264.754	772,029.331
894	1027+48.20	PK NAIL, 16.35' LT	380,356.773	772,136.387

LEGEND

- EROSION MAT URBAN CLASS 1, TYPE B
- CULVERT PIPE CHECK
- SURFACE WATER FLOW
- SILT FENCE
- MITIGATED WETLAND IMPACT AREA

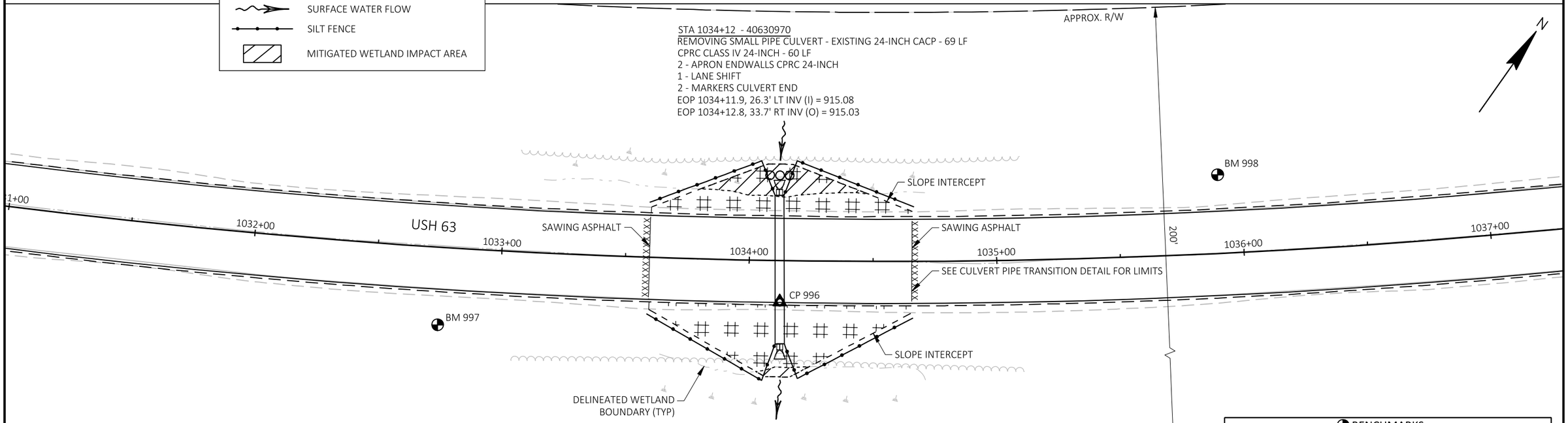

CONTROL POINTS				
NO.	STATION	DESCRIPTION	Y	X
996	1034+12.58	PK NAIL, 16.68' RT	380,649.808	772,733.962

BENCHMARKS			
NO.	STATION	ELEV.	DESCRIPTION
997	1032+75.96	919.47	3/4" IR W/ CAP, 31.42' RT
998	1035+90.83	916.54	3/4" IR W/ CAP, 31.78' LT

MARKING LEGEND

MWGWR4	MARKING LINE GROOVED WET REFLECTIVE 4-INCH (WHITE SOLID LINE)
MWGWRS4	MARKING LINE GROOVED WET REFLECTIVE 4-INCH SKIPS (3' DASH 9' GAP)
MWS4	MARKING LINE EPOXY 4-INCH SKIPS (12.5' DASH 37.5' GAP)
MYE4	MARKING LINE EPOXY 4-INCH (YELLOW)
MDY4	MARKING LINE EPOXY 4-INCH (DOUBLE YELLOW)
MYS4	MARKING LINE EPOXY 4-INCH SKIPS (12.5' DASH 37.5' GAP)
MWE8	MARKING LINE EPOXY 8-INCH (WHITE)

PROJECT NO: 1560-07-70	HWY: USH 63	COUNTY: BAYFIELD	PAVEMENT MARKING	SHEET 30	E

FILE NAME : G:\00\00093\00093523\CADD\SHEETSPLAN\15600701_024501-PM.DWG
LAYOUT NAME - 024501
PLOT DATE : 8/26/2021 11:37 AM PLOT BY : SHAWN DOLENS PLOT NAME : PLOT SCALE : 1 IN:200 FT
WISDOT/CADDS SHEET 44

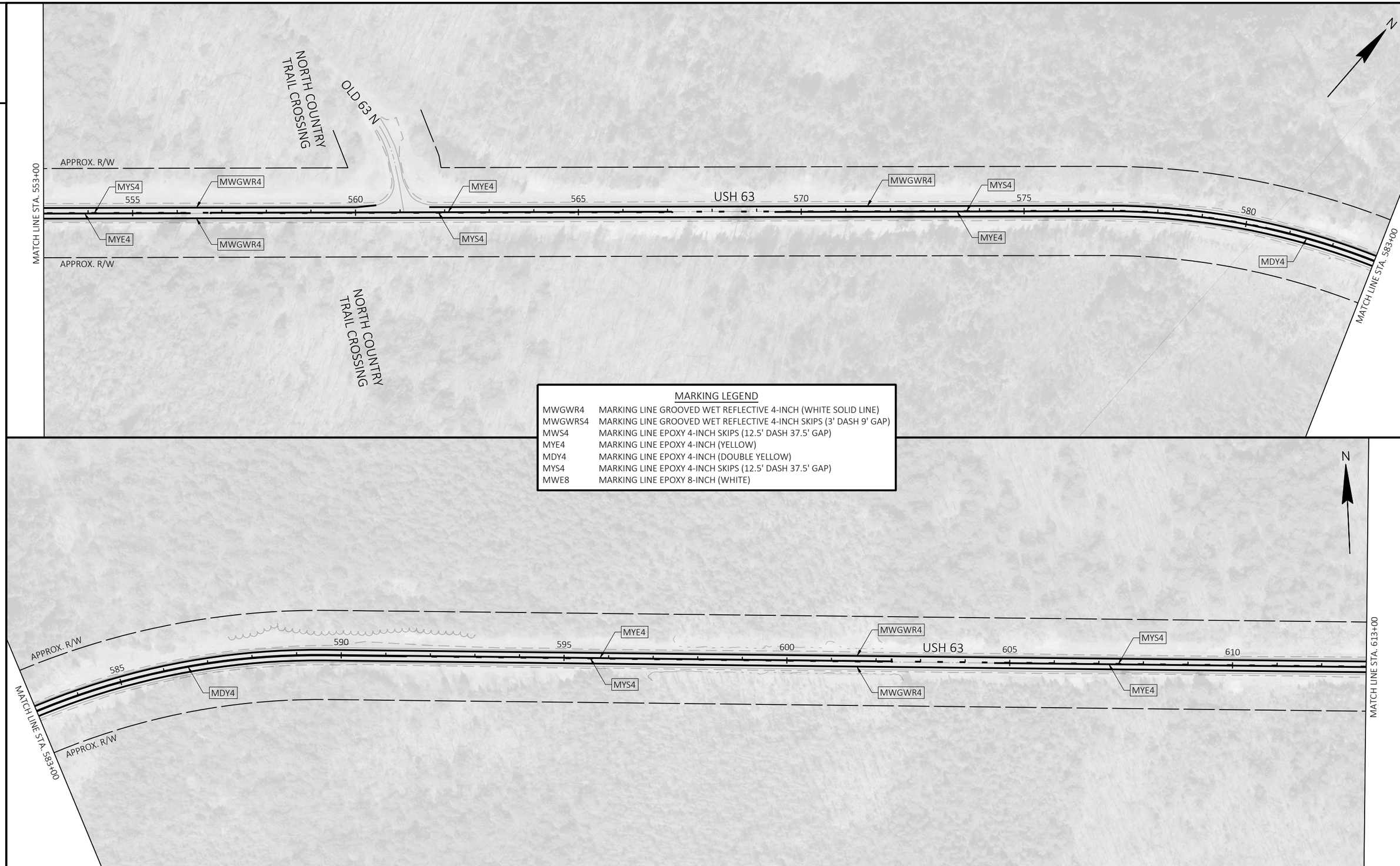

MARKING LEGEND

MWGWR4	MARKING LINE GROOVED WET REFLECTIVE 4-INCH (WHITE SOLID LINE)
MWGWRS4	MARKING LINE GROOVED WET REFLECTIVE 4-INCH SKIPS (3' DASH 9' GAP)
MWS4	MARKING LINE EPOXY 4-INCH SKIPS (12.5' DASH 37.5' GAP)
MYE4	MARKING LINE EPOXY 4-INCH (YELLOW)
MDY4	MARKING LINE EPOXY 4-INCH (DOUBLE YELLOW)
MYS4	MARKING LINE EPOXY 4-INCH SKIPS (12.5' DASH 37.5' GAP)
MWE8	MARKING LINE EPOXY 8-INCH (WHITE)

2

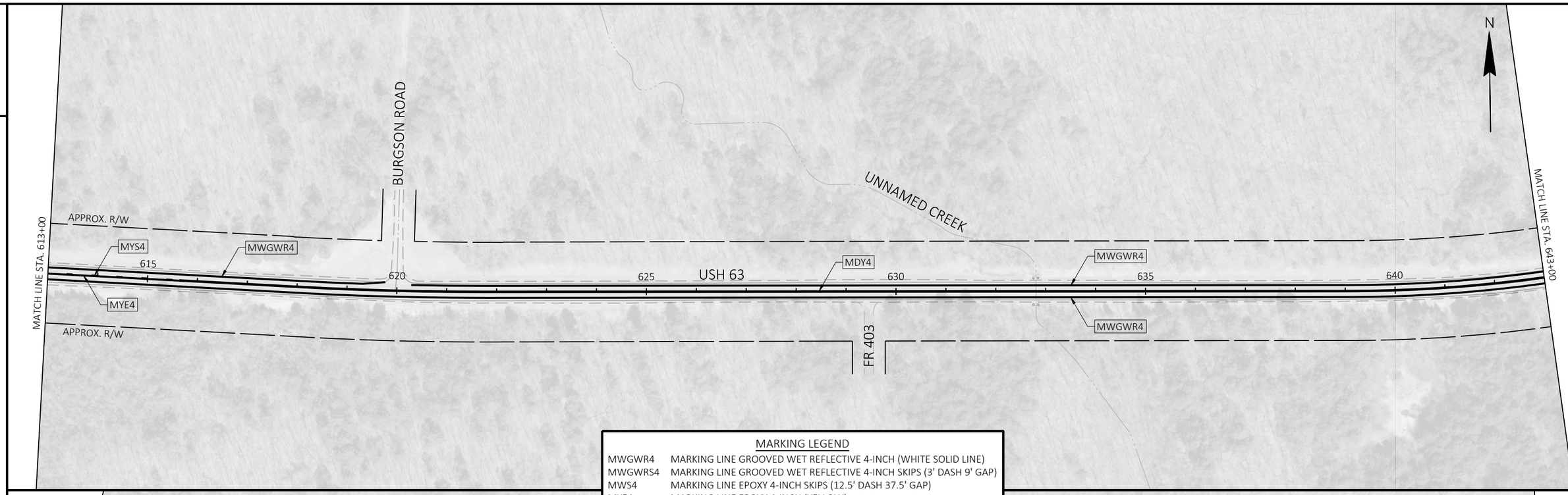

MARKING LEGEND

MWGWR4	MARKING LINE GROOVED WET REFLECTIVE 4-INCH (WHITE SOLID LINE)
MWGWRS4	MARKING LINE GROOVED WET REFLECTIVE 4-INCH SKIPS (3' DASH 9' GAP)
MWS4	MARKING LINE EPOXY 4-INCH SKIPS (12.5' DASH 37.5' GAP)
MYE4	MARKING LINE EPOXY 4-INCH (YELLOW)
MDY4	MARKING LINE EPOXY 4-INCH (DOUBLE YELLOW)
MYS4	MARKING LINE EPOXY 4-INCH SKIPS (12.5' DASH 37.5' GAP)
MWE8	MARKING LINE EPOXY 8-INCH (WHITE)

2

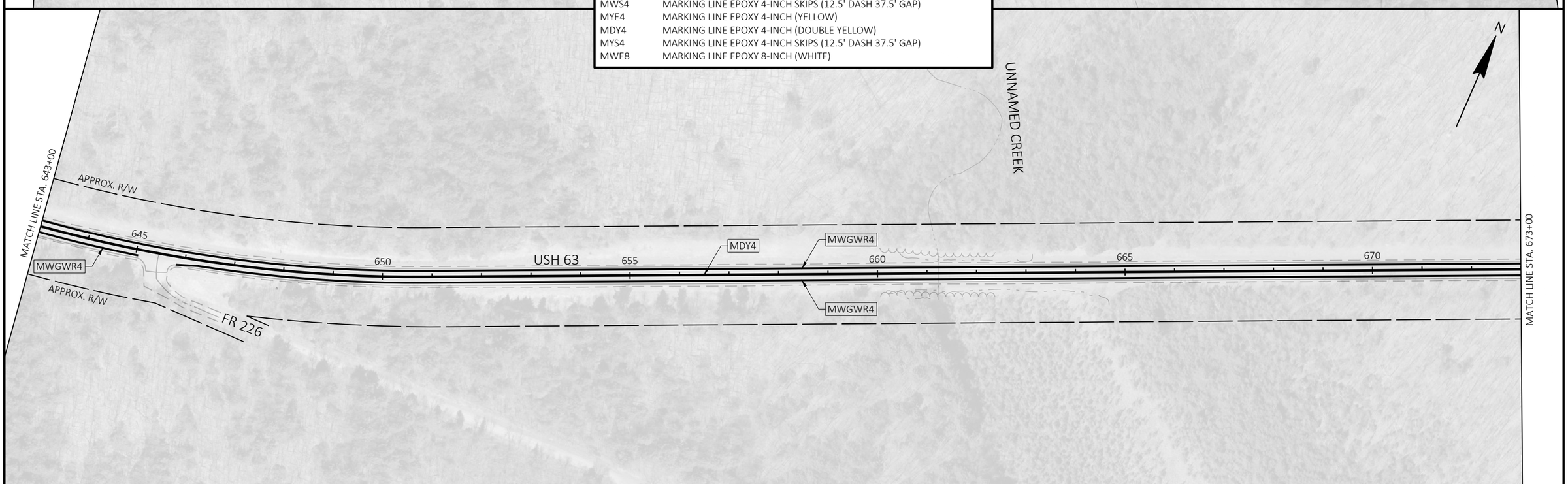

PROJECT NO: 1560-07-70	HWY: USH 63	COUNTY: BAYFIELD	PAVEMENT MARKING	SHEET 32	E

2

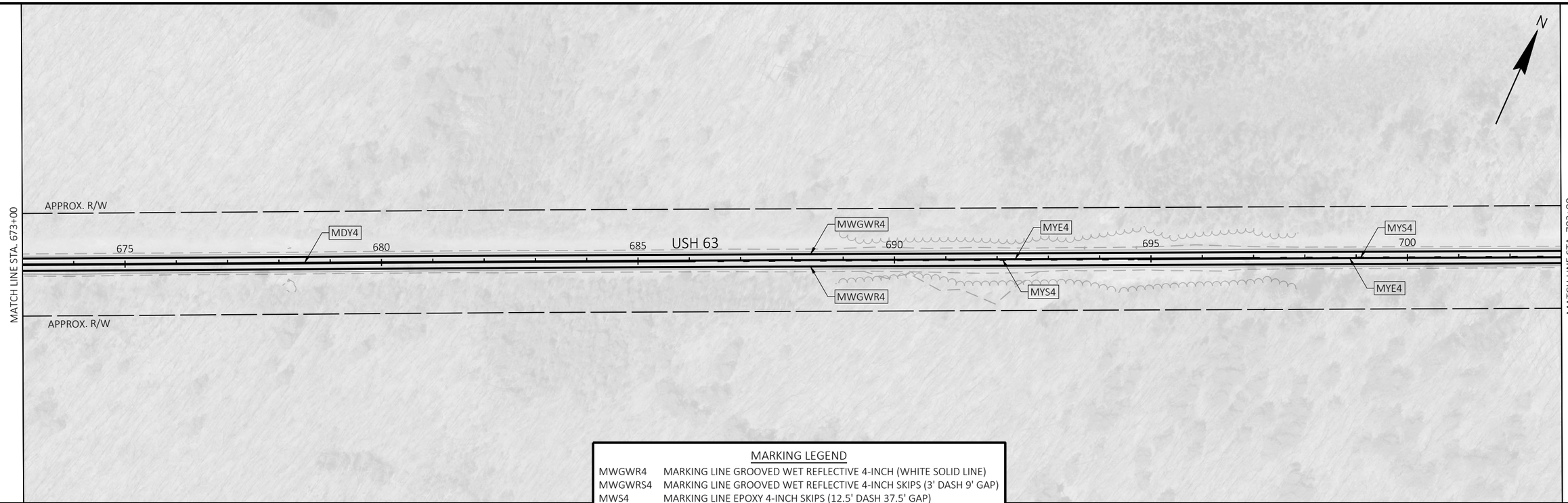

MARKING LEGEND

MWGWR4	MARKING LINE GROOVED WET REFLECTIVE 4-INCH (WHITE SOLID LINE)
MWGWRS4	MARKING LINE GROOVED WET REFLECTIVE 4-INCH SKIPS (3' DASH 9' GAP)
MWS4	MARKING LINE EPOXY 4-INCH SKIPS (12.5' DASH 37.5' GAP)
MYE4	MARKING LINE EPOXY 4-INCH (YELLOW)
MDY4	MARKING LINE EPOXY 4-INCH (DOUBLE YELLOW)
MYS4	MARKING LINE EPOXY 4-INCH SKIPS (12.5' DASH 37.5' GAP)
MWE8	MARKING LINE EPOXY 8-INCH (WHITE)

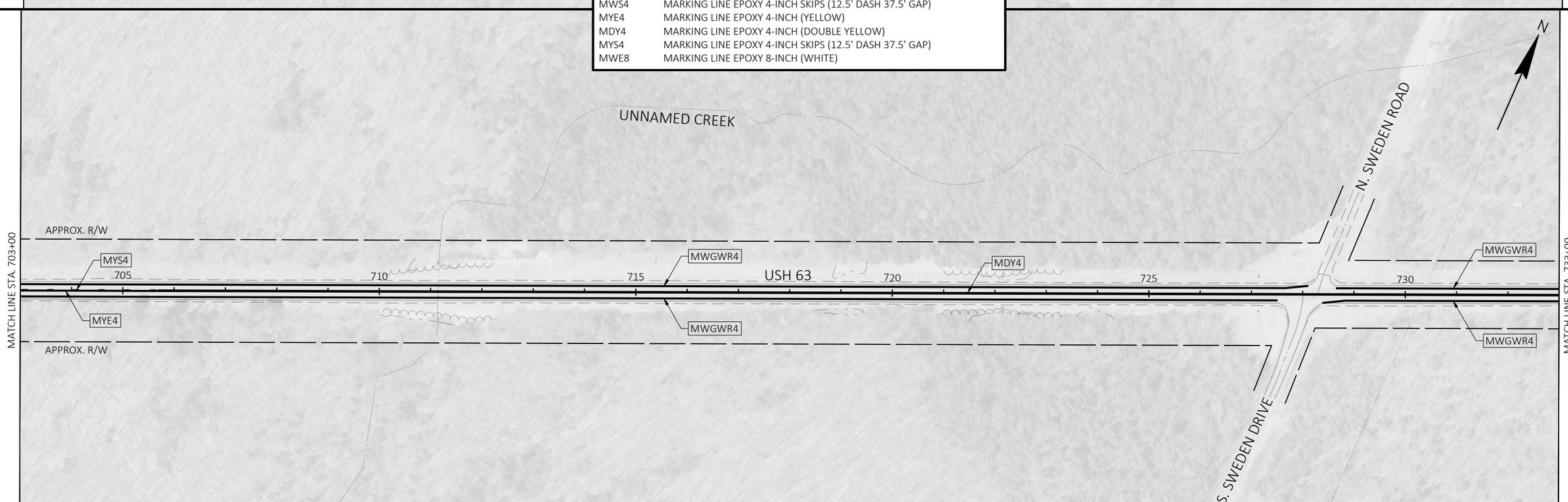

PROJECT NO: 1560-07-70	HWY: USH 63	COUNTY: BAYFIELD	PAVEMENT MARKING	SHEET 33	E

FILE NAME : G:\00\00093\00093523\CADD\SHEETSPLAN\15600701_024501-PM.DWG
LAYOUT NAME - 024504
PLOT DATE : 8/26/2021 11:37 AM
PLOT BY : SHAWN DOLENS
PLOT NAME :
PLOT SCALE : 1 IN:200 FT
WISDOT/CADDS SHEET 44

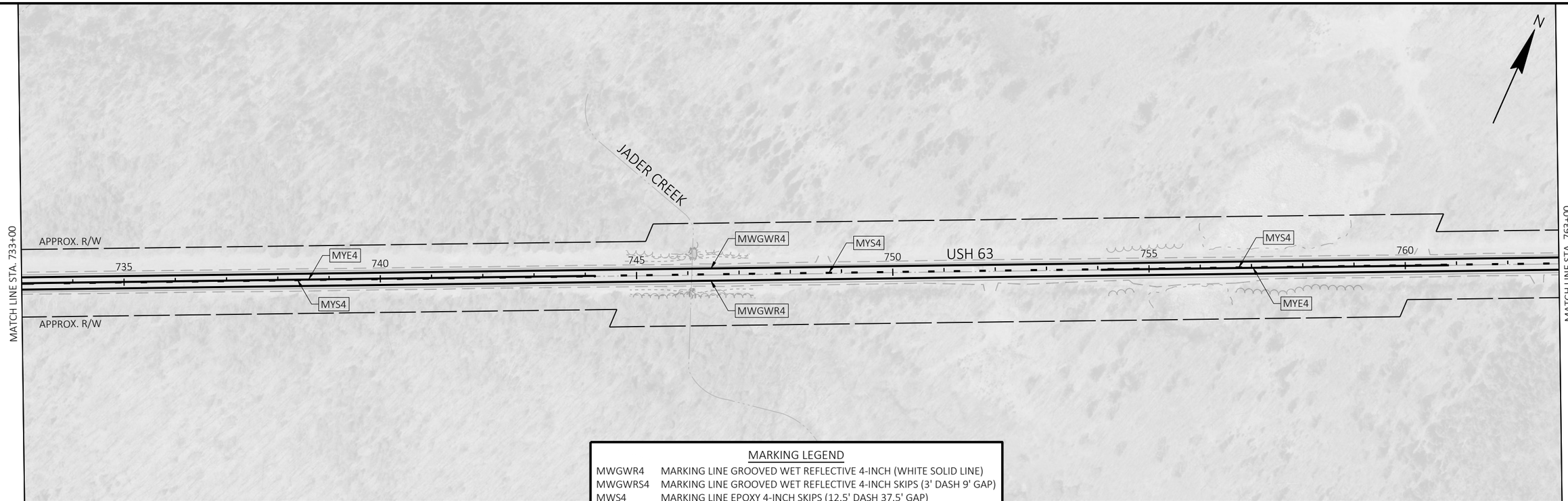

MARKING LEGEND

MWGWR4	MARKING LINE GROOVED WET REFLECTIVE 4-INCH (WHITE SOLID LINE)
MWGWRS4	MARKING LINE GROOVED WET REFLECTIVE 4-INCH SKIPS (3' DASH 9' GAP)
MWS4	MARKING LINE EPOXY 4-INCH SKIPS (12.5' DASH 37.5' GAP)
MYE4	MARKING LINE EPOXY 4-INCH (YELLOW)
MDY4	MARKING LINE EPOXY 4-INCH (DOUBLE YELLOW)
MYS4	MARKING LINE EPOXY 4-INCH SKIPS (12.5' DASH 37.5' GAP)
MWE8	MARKING LINE EPOXY 8-INCH (WHITE)

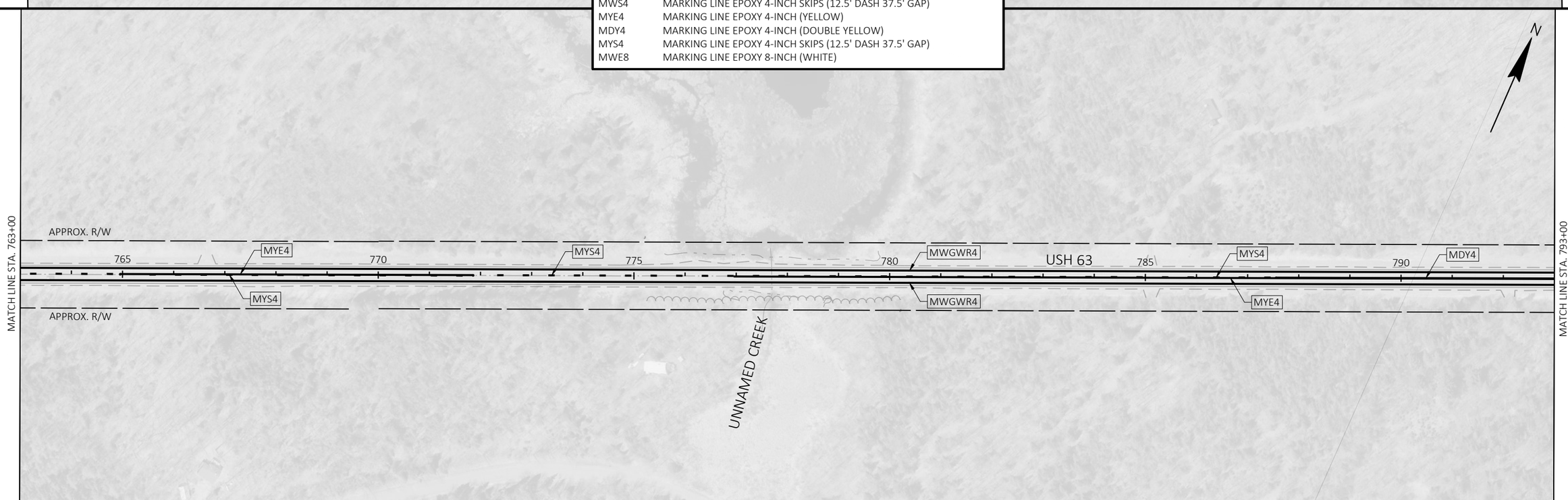

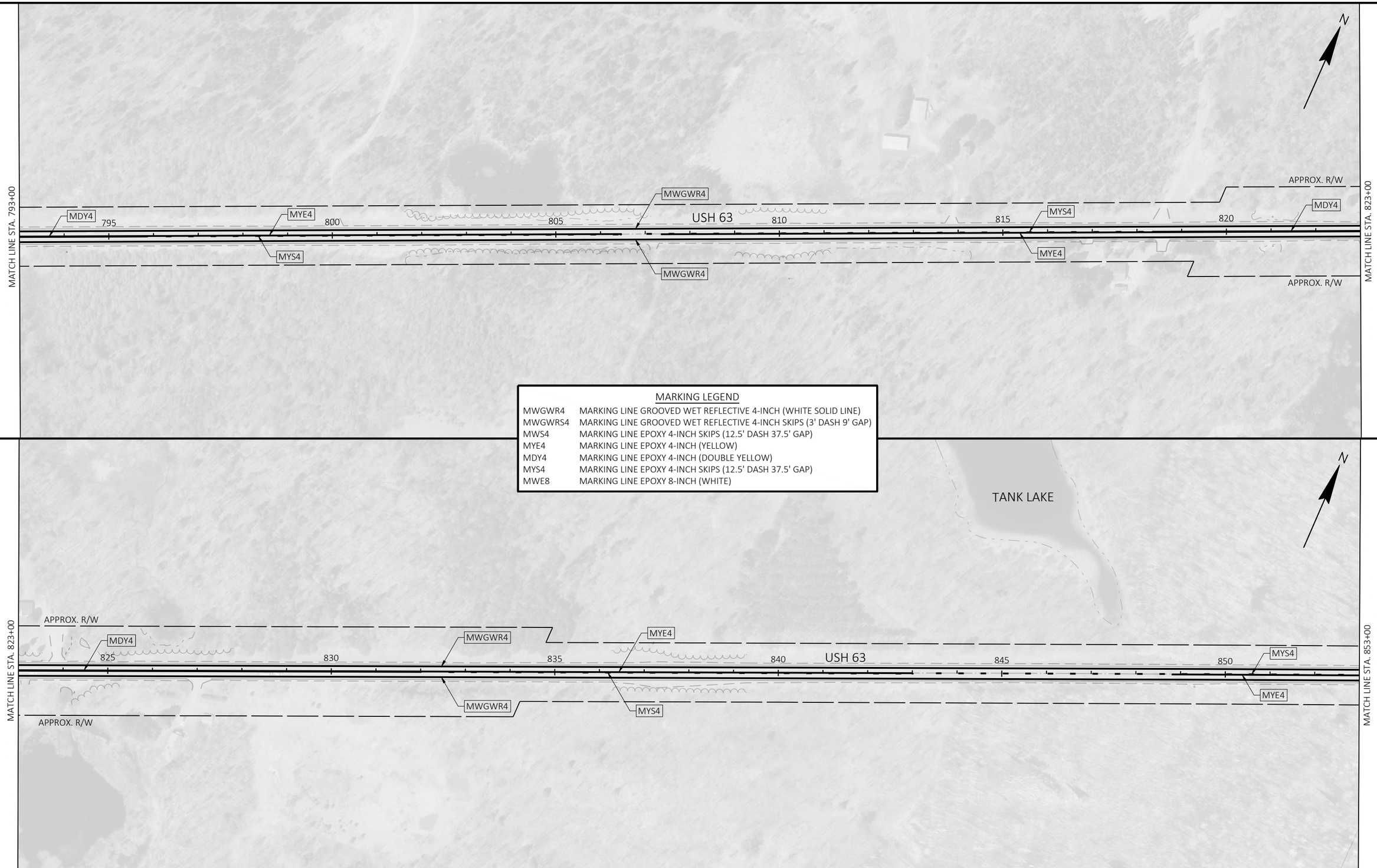

MARKING LEGEND

MWGWR4	MARKING LINE GROOVED WET REFLECTIVE 4-INCH (WHITE SOLID LINE)
MWGWRS4	MARKING LINE GROOVED WET REFLECTIVE 4-INCH SKIPS (3' DASH 9' GAP)
MWS4	MARKING LINE EPOXY 4-INCH SKIPS (12.5' DASH 37.5' GAP)
MYE4	MARKING LINE EPOXY 4-INCH (YELLOW)
MDY4	MARKING LINE EPOXY 4-INCH (DOUBLE YELLOW)
MYS4	MARKING LINE EPOXY 4-INCH SKIPS (12.5' DASH 37.5' GAP)
MWE8	MARKING LINE EPOXY 8-INCH (WHITE)

2

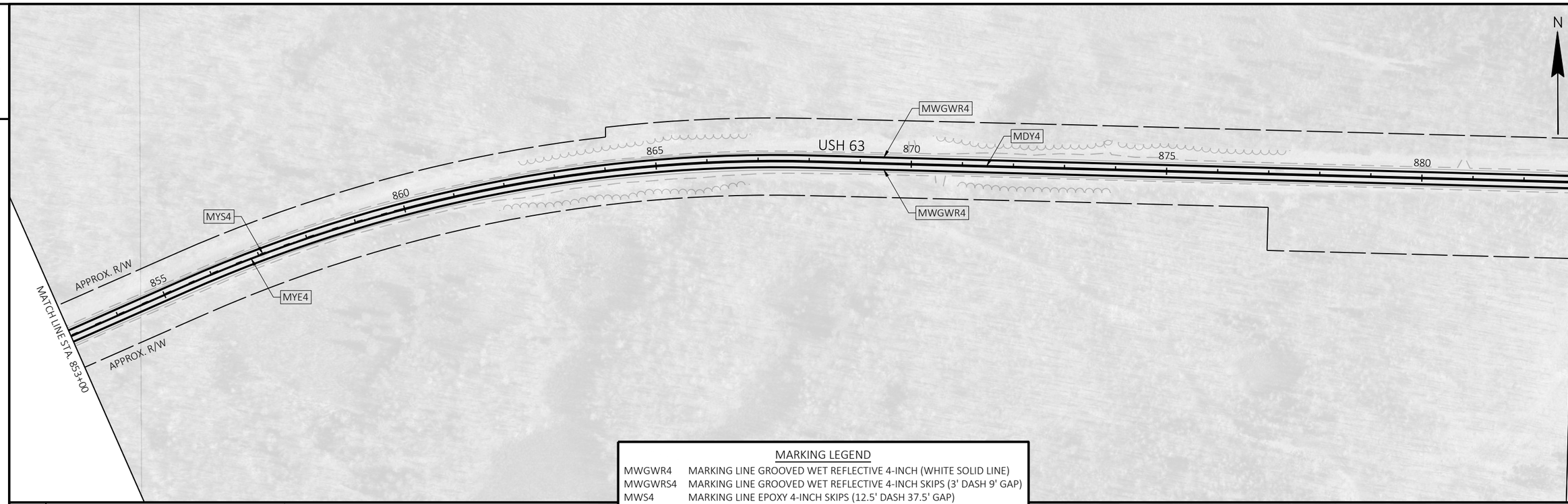

2

MARKING LEGEND

MWGWR4	MARKING LINE GROOVED WET REFLECTIVE 4-INCH (WHITE SOLID LINE)
MWGWRS4	MARKING LINE GROOVED WET REFLECTIVE 4-INCH SKIPS (3' DASH 9' GAP)
MWS4	MARKING LINE EPOXY 4-INCH SKIPS (12.5' DASH 37.5' GAP)
MYE4	MARKING LINE EPOXY 4-INCH (YELLOW)
MDY4	MARKING LINE EPOXY 4-INCH (DOUBLE YELLOW)
MYS4	MARKING LINE EPOXY 4-INCH SKIPS (12.5' DASH 37.5' GAP)
MWE8	MARKING LINE EPOXY 8-INCH (WHITE)

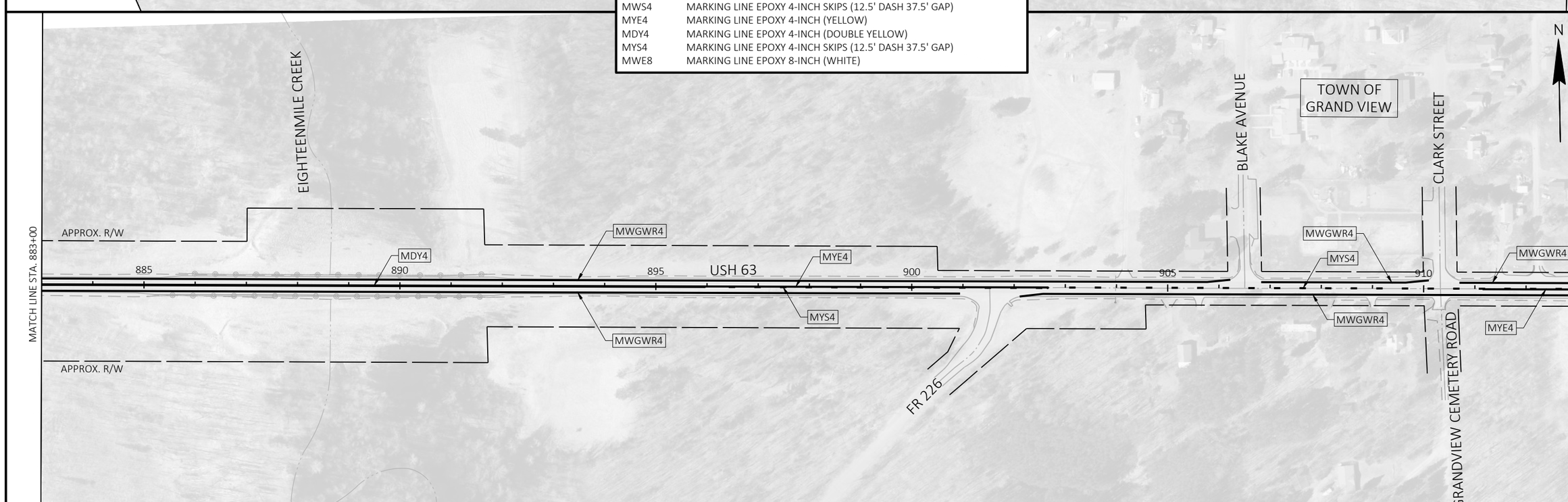

PROJECT NO: 1560-07-70	HWY: USH 63	COUNTY: BAYFIELD	PAVEMENT MARKING	SHEET 36	E

FILE NAME : G:\00\00093\00093523\CADD\SHEETSPLAN\15600701_024501-PM.DWG
LAYOUT NAME - 024507
PLOT DATE : 8/26/2021 11:38 AM PLOT BY : SHAWN DOLENS PLOT NAME : PLOT SCALE : 1 IN:200 FT

WISDOT/CADDS SHEET 44

2

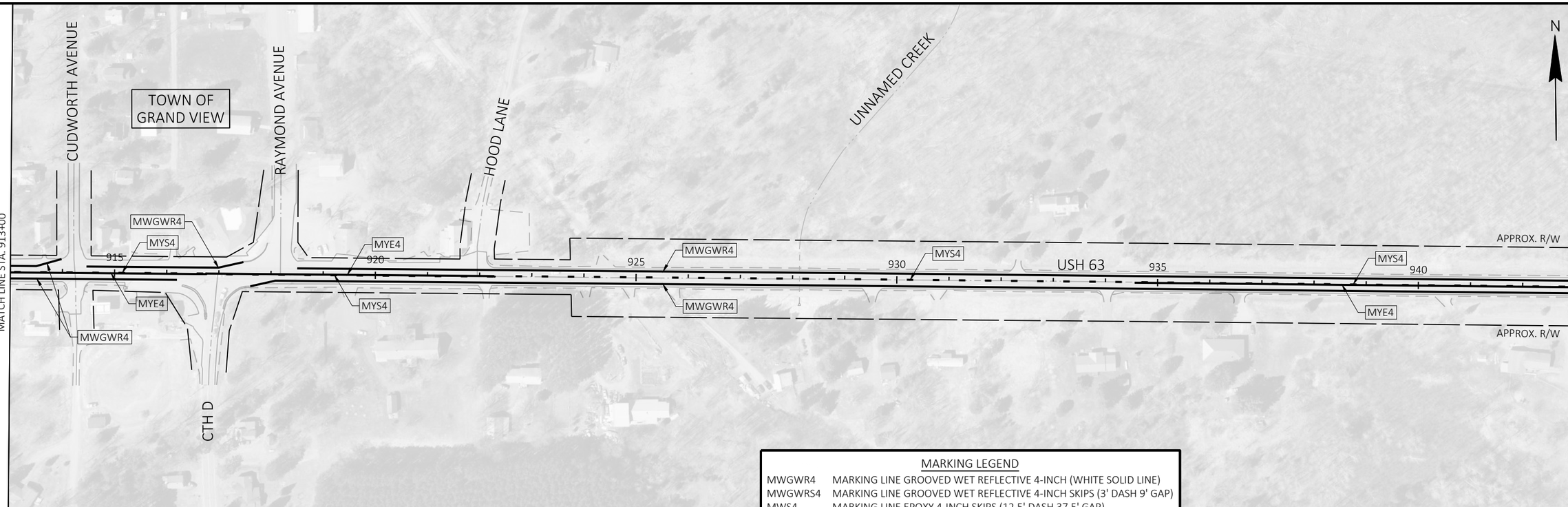

MARKING LEGEND

MWGWR4	MARKING LINE GROOVED WET REFLECTIVE 4-INCH (WHITE SOLID LINE)
MWGWRS4	MARKING LINE GROOVED WET REFLECTIVE 4-INCH SKIPS (3' DASH 9' GAP)
MWS4	MARKING LINE EPOXY 4-INCH SKIPS (12.5' DASH 37.5' GAP)
MYE4	MARKING LINE EPOXY 4-INCH (YELLOW)
MDY4	MARKING LINE EPOXY 4-INCH (DOUBLE YELLOW)
MYS4	MARKING LINE EPOXY 4-INCH SKIPS (12.5' DASH 37.5' GAP)
MWE8	MARKING LINE EPOXY 8-INCH (WHITE)

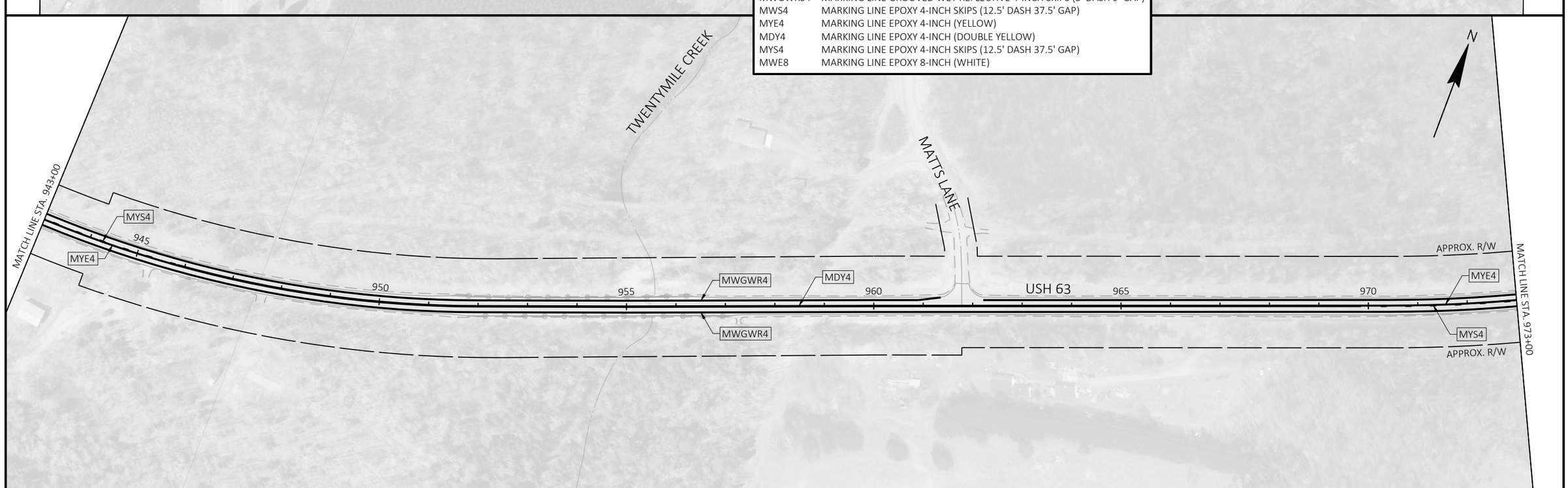

2

PROJECT NO: 1560-07-70	HWY: USH 63	COUNTY: BAYFIELD	PAVEMENT MARKING	SHEET 37	E

FILE NAME : G:\00\00093\00093523\CADD\SHEETSPLAN\15600701_024501-PM.DWG
LAYOUT NAME - 024508
PLOT DATE : 8/26/2021 11:38 AM
PLOT BY : SHAWN DOLENS
PLOT NAME :
PLOT SCALE : 1 IN:200 FT
WISDOT/CADDS SHEET 44

2

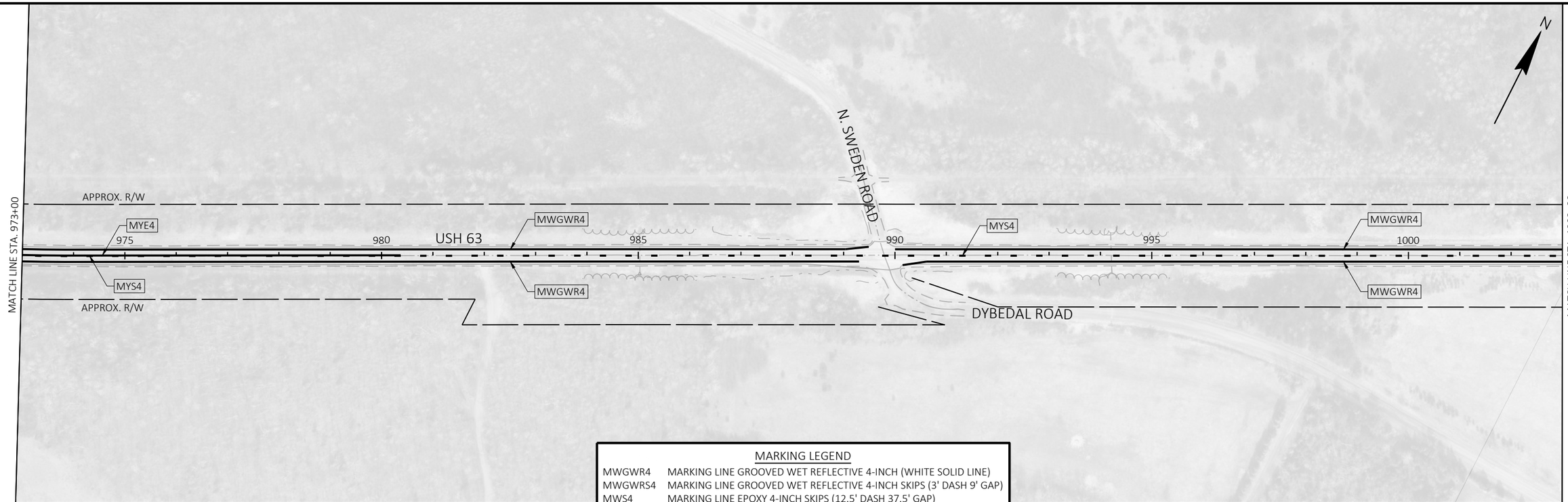

MARKING LEGEND

MWGWR4	MARKING LINE GROOVED WET REFLECTIVE 4-INCH (WHITE SOLID LINE)
MWGWRS4	MARKING LINE GROOVED WET REFLECTIVE 4-INCH SKIPS (3' DASH 9' GAP)
MWS4	MARKING LINE EPOXY 4-INCH SKIPS (12.5' DASH 37.5' GAP)
MYE4	MARKING LINE EPOXY 4-INCH (YELLOW)
MDY4	MARKING LINE EPOXY 4-INCH (DOUBLE YELLOW)
MYS4	MARKING LINE EPOXY 4-INCH SKIPS (12.5' DASH 37.5' GAP)
MWE8	MARKING LINE EPOXY 8-INCH (WHITE)

2

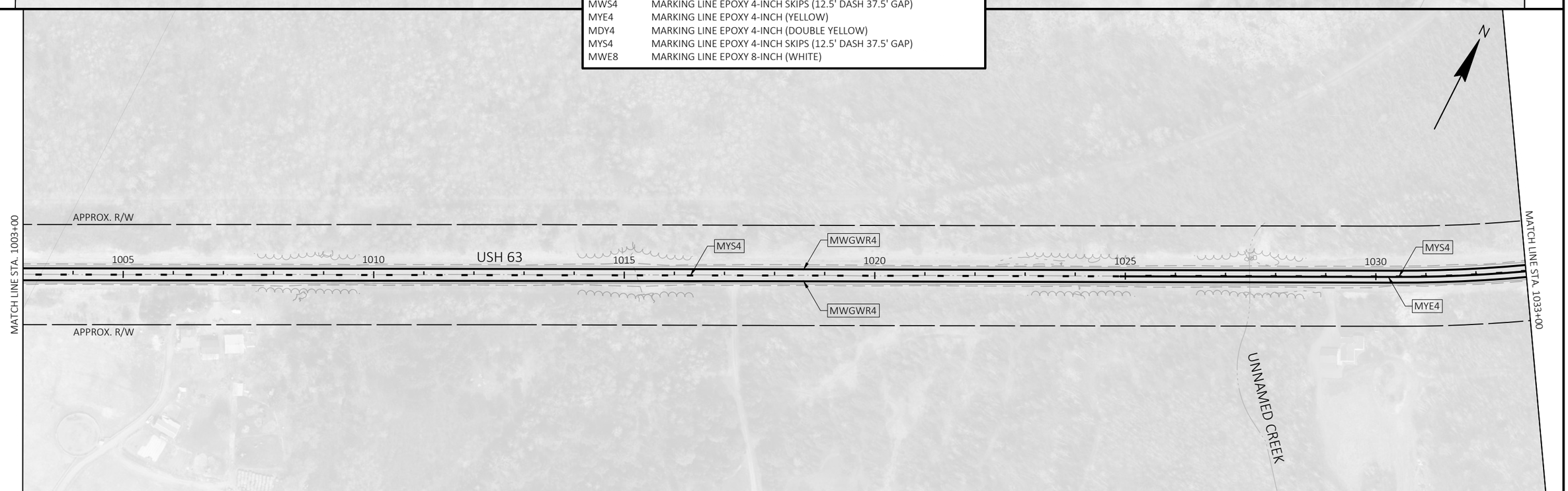

PROJECT NO: 1560-07-70	HWY: USH 63	COUNTY: BAYFIELD	PAVEMENT MARKING	SHEET 38	E

FILE NAME : G:\00\00093\00093523\CADD\SHEETSPLAN\15600701_024501-PM.DWG
LAYOUT NAME - 024509
PLOT DATE : 8/26/2021 11:38 AM PLOT BY : SHAWN DOLENS PLOT NAME : PLOT SCALE : 1 IN:200 FT

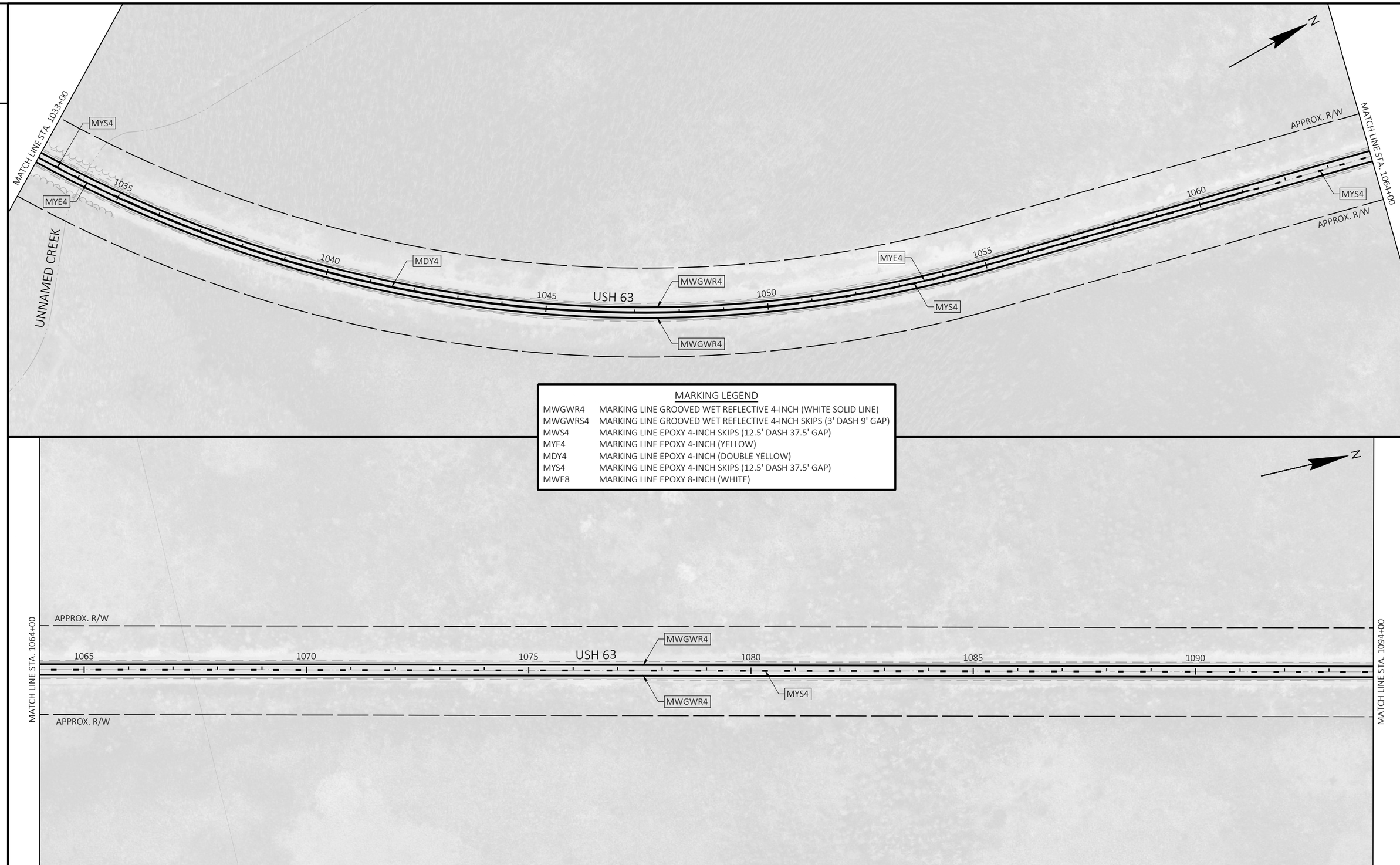

MARKING LEGEND

MWGWR4	MARKING LINE GROOVED WET REFLECTIVE 4-INCH (WHITE SOLID LINE)
MWGWRS4	MARKING LINE GROOVED WET REFLECTIVE 4-INCH SKIPS (3' DASH 9' GAP)
MWS4	MARKING LINE EPOXY 4-INCH SKIPS (12.5' DASH 37.5' GAP)
MYE4	MARKING LINE EPOXY 4-INCH (YELLOW)
MDY4	MARKING LINE EPOXY 4-INCH (DOUBLE YELLOW)
MYS4	MARKING LINE EPOXY 4-INCH SKIPS (12.5' DASH 37.5' GAP)
MWE8	MARKING LINE EPOXY 8-INCH (WHITE)

PROJECT NO: 1560-07-70	HWY: USH 63	COUNTY: BAYFIELD	PAVEMENT MARKING	SHEET 39	E

2

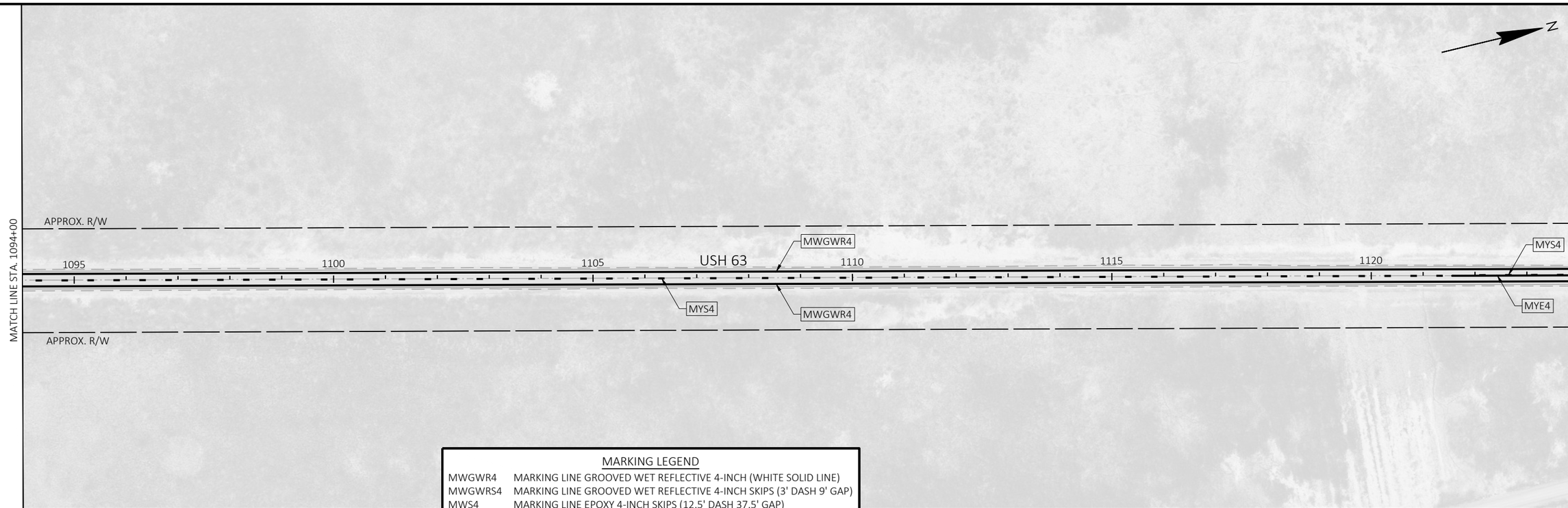

MARKING LEGEND

MWGWR4	MARKING LINE GROOVED WET REFLECTIVE 4-INCH (WHITE SOLID LINE)
MWGWRS4	MARKING LINE GROOVED WET REFLECTIVE 4-INCH SKIPS (3' DASH 9' GAP)
MWS4	MARKING LINE EPOXY 4-INCH SKIPS (12.5' DASH 37.5' GAP)
MYE4	MARKING LINE EPOXY 4-INCH (YELLOW)
MDY4	MARKING LINE EPOXY 4-INCH (DOUBLE YELLOW)
MYS4	MARKING LINE EPOXY 4-INCH SKIPS (12.5' DASH 37.5' GAP)
MWE8	MARKING LINE EPOXY 8-INCH (WHITE)

2

PROJECT NO: 1560-07-70	HWY: USH 63	COUNTY: BAYFIELD	PAVEMENT MARKING	SHEET 40	E

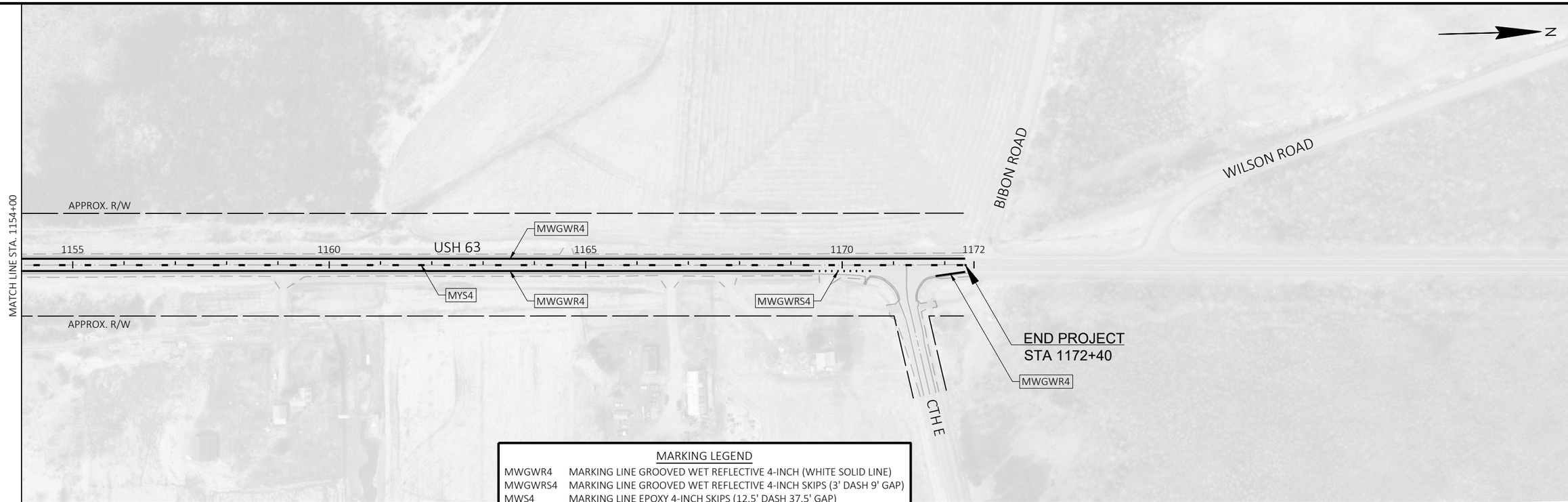

MARKING LEGEND

MWGWR4	MARKING LINE GROOVED WET REFLECTIVE 4-INCH (WHITE SOLID LINE)
MWGWRS4	MARKING LINE GROOVED WET REFLECTIVE 4-INCH SKIPS (3' DASH 9' GAP)
MWS4	MARKING LINE EPOXY 4-INCH SKIPS (12.5' DASH 37.5' GAP)
MYE4	MARKING LINE EPOXY 4-INCH (YELLOW)
MDY4	MARKING LINE EPOXY 4-INCH (DOUBLE YELLOW)
MYS4	MARKING LINE EPOXY 4-INCH SKIPS (12.5' DASH 37.5' GAP)
MWE8	MARKING LINE EPOXY 8-INCH (WHITE)

2

LEGEND

- TYPE III BARRICADE
- TYPE III BARRICADE WTH ATTACHED SIGN
- TRAFFIC CONTROL DRUM
- TRAFFIC CONTROL DRUM WITH TYPE C STEADY BURN LIGHT
- SIGN ON PERMANENT SUPPORT
- TRAILER MOUNTED TRAFFIC SIGNAL
- MARKING REMOVAL LINE
- ASPHALTIC SURFACE
- WORK AREA

497+33 STAGING DETAIL
STAGE 1

- CONSTRUCT TEMPORARY BYPASS LANE FOR STAGE 1 UNDER FLAGGING OPERATIONS, SEE STANDARD DETAIL DRAWING "TRAFFIC CONTROL FOR LANE CLOSURE WITH FLAGGING OPERATION".
- FOR CROSS SECTION DIMENSIONS SEE STANDARD DETAIL DRAWING "TRAFFIC CONTROL, LANE SHIFT IN FLAGGING OPERATION". MAINTAIN A 16' TEMPORARY LANE WIDTH AT ALL TIMES
- CONSTRUCT NORTH END OF CULVERT AND TEMPORARY BYPASS UNDER TEMPORARY SIGNALS, SEE STANDARD DETAIL DRAWING "TRAFFIC CONTROL, ONE LANE ROAD WITH TEMPORARY SIGNALS".

2

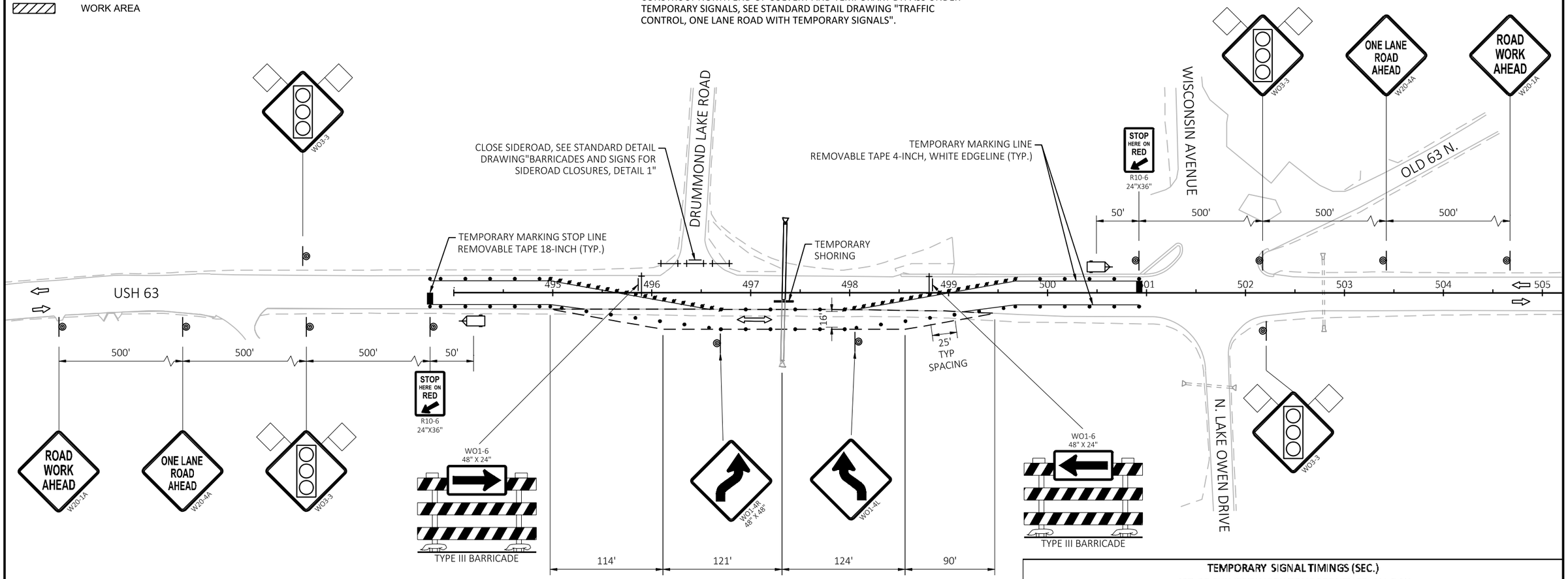

TEMPORARY SIGNAL TIMINGS (SEC.) 497+33 CULVERT WORK ZONE SEQUENCE: ALL DAY TOTAL CYCLE TIME = 80		
PHASE 1 USH 63 EB	PHASE 2 USH 63 WB	PROGRAM TYPE
15	15	MINIMUM GREEN TIME
5	5	MAXIMUM PASSAGE TIME DURING GREEN PHASE
3.5	3.5	MINIMUM PASSAGE TIME DURING GREEN PHASE
15	15	START OF REDUCTION OF PASSAGE FROM MAX. TO MIN. DURING GREEN PHASE
5	5	TIME TO REDUCE PASSAGE FROM MAX. TO MIN. DURING GREEN PHASE
18	18	MAXIMUM GREEN TIME
5	5	YELLOW
17	17	ALL-RED
NONE	NONE	RECALL MODE

NOTES:
CONTRACTOR SHALL REVIEW SIGNALS AFTER PROGRAMMING TO ASSURE THERE ARE NOT CONFLICTING MOVEMENTS.

TIMING BASED ON 45 MPH POSTED WORK ZONE SPEED, THE CONTRACTOR SHALL NOTIFY THE DEPARTMENT WITH TIMING ADJUSTMENTSIF SLOWER THAN AVERAGE SPEEDS ARE OBSERVED WITHIN THE SINGLE LANE WORK ZONE.

2

LEGEND

- TYPE III BARRICADE
- TYPE III BARRICADE WTH ATTACHED SIGN
- TRAFFIC CONTROL DRUM
- TRAFFIC CONTROL DRUM WITH TYPE C STEADY BURN LIGHT
- SIGN ON PERMANENT SUPPORT
- TRAILER MOUNTED TRAFFIC SIGNAL
- MARKING REMOVAL LINE
- ASPHALTIC SURFACE
- WORK AREA

497+33 STAGING DETAIL
STAGE 2

- CONSTRUCT SOUTH END OF CULVERT UNDER TEMPORARY SIGNALS, SEE STANDARD DETAIL DRAWING "TRAFFIC CONTROL, ONE LANE ROAD WITH TEMPORARY SIGNALS".
- FOR CROSS SECTION DIMENSIONS SEE STANDARD DETAIL DRAWING "TRAFFIC CONTROL, LANE SHIFT IN FLAGGING OPERATION". MAINTAIN A 16' TEMPORARY LANE WIDTH AT ALL TIMES
- REMOVE TEMPORARY BYPASS LANE FROM STAGE 2 UNDER FLAGGING OPERATIONS, SEE STANDARD DETAIL DRAWING "TRAFFIC CONTROL FOR LANE CLOSURE WITH FLAGGING OPERATION".

2

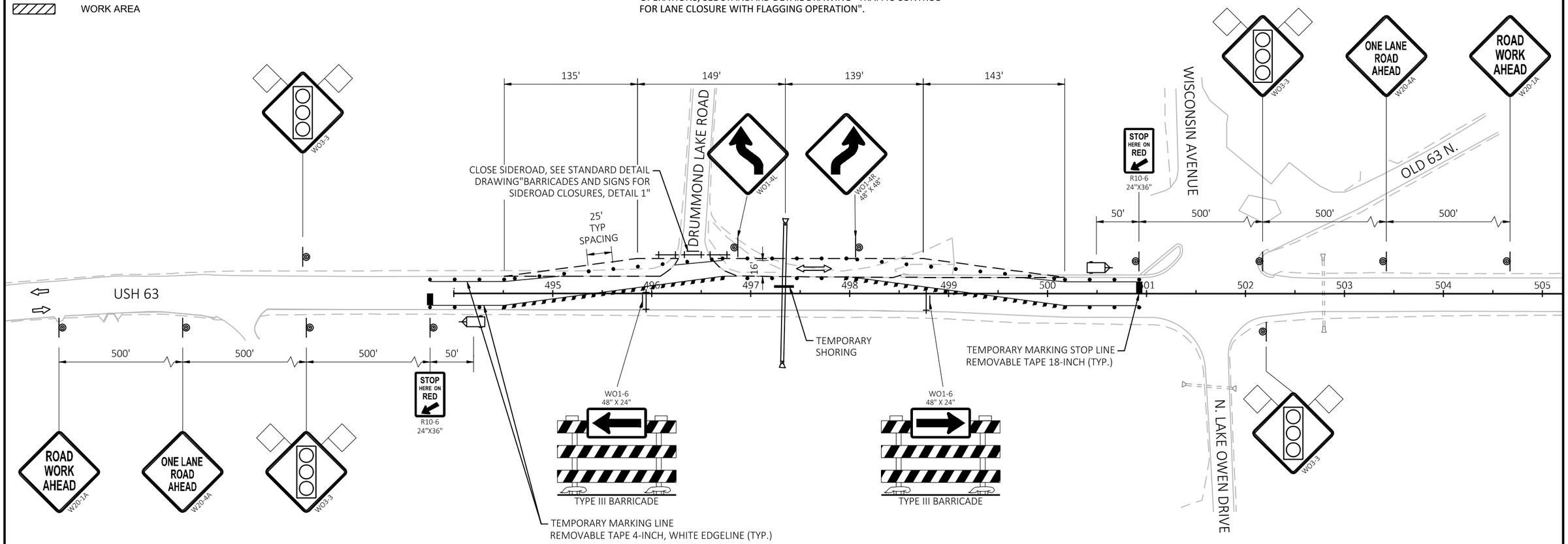

TEMPORARY SIGNAL TIMINGS (SEC.) 497+33 CULVERT WORK ZONE SEQUENCE: ALL DAY TOTAL CYCLE TIME = 80		
PHASE 1 USH 63 EB	PHASE 2 USH 63 WB	PROGRAM TYPE
15	15	MINIMUM GREEN TIME
5	5	MAXIMUM PASSAGE TIME DURING GREEN PHASE
3.5	3.5	MINIMUM PASSAGE TIME DURING GREEN PHASE
15	15	START OF REDUCTION OF PASSAGE FROM MAX. TO MIN. DURING GREEN PHASE
5	5	TIME TO REDUCE PASSAGE FROM MAX. TO MIN. DURING GREEN PHASE
18	18	MAXIMUM GREEN TIME
5	5	YELLOW
17	17	ALL-RED
NONE	NONE	RECALL MODE

NOTES:
CONTRACTOR SHALL REVIEW SIGNALS AFTER PROGRAMMING TO ASSURE THERE ARE NOT CONFLICTING MOVEMENTS.

TIMING BASED ON 45 MPH POSTED WORK ZONE SPEED, THE CONTRACTOR SHALL NOTIFY THE DEPARTMENT WITH TIMING ADJUSTMENTSIF SLOWER THAN AVERAGE SPEEDS ARE OBSERVED WITHIN THE SINGLE LANE WORK ZONE.

2

LEGEND

- TYPE III BARRICADE
- TYPE III BARRICADE WTH ATTACHED SIGN
- TRAFFIC CONTROL DRUM
- TRAFFIC CONTROL DRUM WITH TYPE C STEADY BURN LIGHT
- SIGN ON PERMANENT SUPPORT
- TRAILER MOUNTED TRAFFIC SIGNAL
- MARKING REMOVAL LINE
- ASPHALTIC SURFACE
- WORK AREA

871+72 STAGING DETAIL
STAGE 1

- CONSTRUCT TEMPORARY BYPASS LANE FOR STAGE 1 UNDER FLAGGING OPERATIONS, SEE STANDARD DETAIL DRAWING "TRAFFIC CONTROL FOR LANE CLOSURE WITH FLAGGING OPERATION".
- FOR CROSS SECTION DIMENSIONS SEE STANDARD DETAIL DRAWING "TRAFFIC CONTROL, LANE SHIFT IN FLAGGING OPERATION". MAINTAIN A 16' TEMPORARY LANE WIDTH AT ALL TIMES
- CONSTRUCT NORTH END OF CULVERT AND TEMPORARY BYPASS UNDER TEMPORARY SIGNALS, SEE STANDARD DETAIL DRAWING "TRAFFIC CONTROL, ONE LANE ROAD WITH TEMPORARY SIGNALS".

N

2

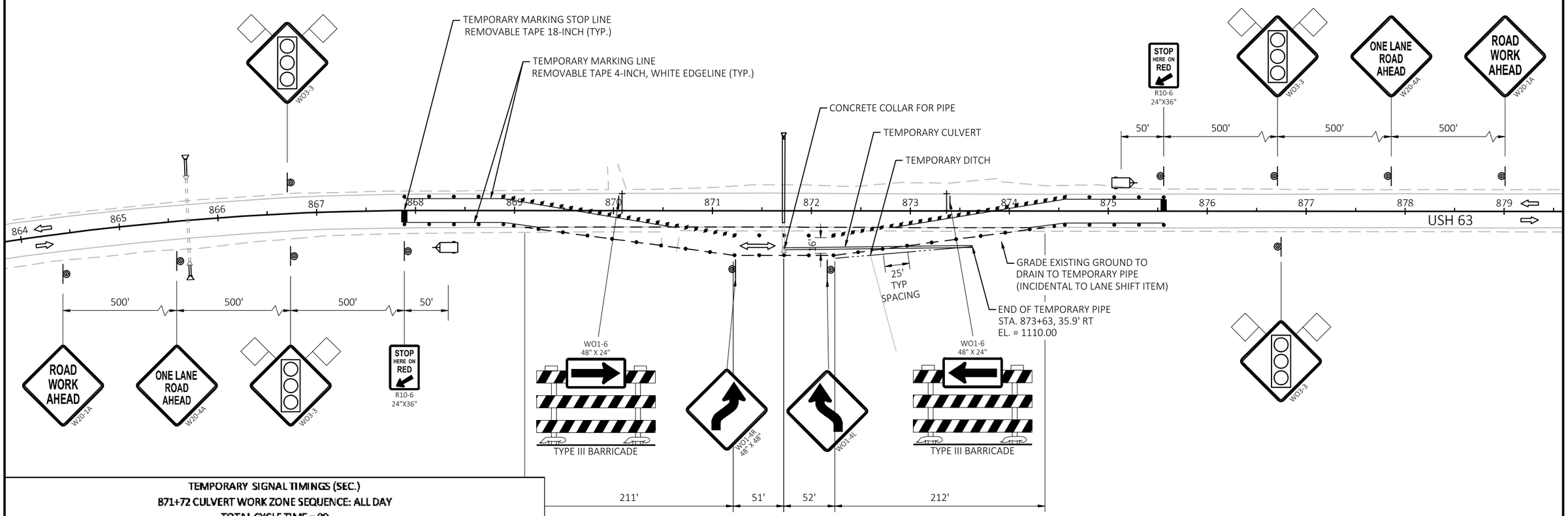

TEMPORARY SIGNAL TIMINGS (SEC.) 871+72 CULVERT WORK ZONE SEQUENCE: ALL DAY TOTAL CYCLE TIME = 80		
PHASE 1 USH 63 EB	PHASE 2 USH 63 WB	PROGRAM TYPE
15	15	MINIMUM GREEN TIME
5	5	MAXIMUM PASSAGE TIME DURING GREEN PHASE
3.5	3.5	MINIMUM PASSAGE TIME DURING GREEN PHASE
15	15	START OF REDUCTION OF PASSAGE FROM MAX. TO MIN. DURING GREEN PHASE
6	6	TIME TO REDUCE PASSAGE FROM MAX. TO MIN. DURING GREEN PHASE
20	20	MAXIMUM GREEN TIME
5	5	YELLOW
15	15	ALL-RED
NONE	NONE	RECALL MODE

NOTES:
CONTRACTOR SHALL REVIEW SIGNALS AFTER PROGRAMMING TO ASSURE THERE ARE NOT CONFLICTING MOVEMENTS.

TIMING BASED ON 45 MPH POSTED WORK ZONE SPEED, THE CONTRACTOR SHALL NOTIFY THE DEPARTMENT WITH TIMING ADJUSTMENTSIF SLOWER THAN AVERAGE SPEEDS ARE OBSERVED WITHIN THE SINGLE LANE WORK ZONE.

2

LEGEND

- TYPE III BARRICADE
- TYPE III BARRICADE WTH ATTACHED SIGN
- TRAFFIC CONTROL DRUM
- TRAFFIC CONTROL DRUM WITH TYPE C STEADY BURN LIGHT
- SIGN ON PERMANENT SUPPORT
- TRAILER MOUNTED TRAFFIC SIGNAL
- MARKING REMOVAL LINE
- ASPHALTIC SURFACE
- WORK AREA
- CONCRETE BARRIER TEMPORARY PRECAST

871+72 STAGING DETAIL
STAGE 2

- CONSTRUCT SOUTH END OF CULVERT UNDER TEMPORARY SIGNALS, SEE STANDARD DETAIL DRAWING "TRAFFIC CONTROL, ONE LANE ROAD WITH TEMPORARY SIGNALS".
- FOR CROSS SECTION DIMENSIONS SEE STANDARD DETAIL DRAWING "TRAFFIC CONTROL, LANE SHIFT IN FLAGGING OPERATION". MAINTAIN A 16' TEMPORARY LANE WIDTH AT ALL TIMES
- REMOVE TEMPORARY BYPASS LANE FROM STAGE 2 UNDER FLAGGING OPERATIONS, SEE STANDARD DETAIL DRAWING "TRAFFIC CONTROL FOR LANE CLOSURE WITH FLAGGING OPERATION".

N

2

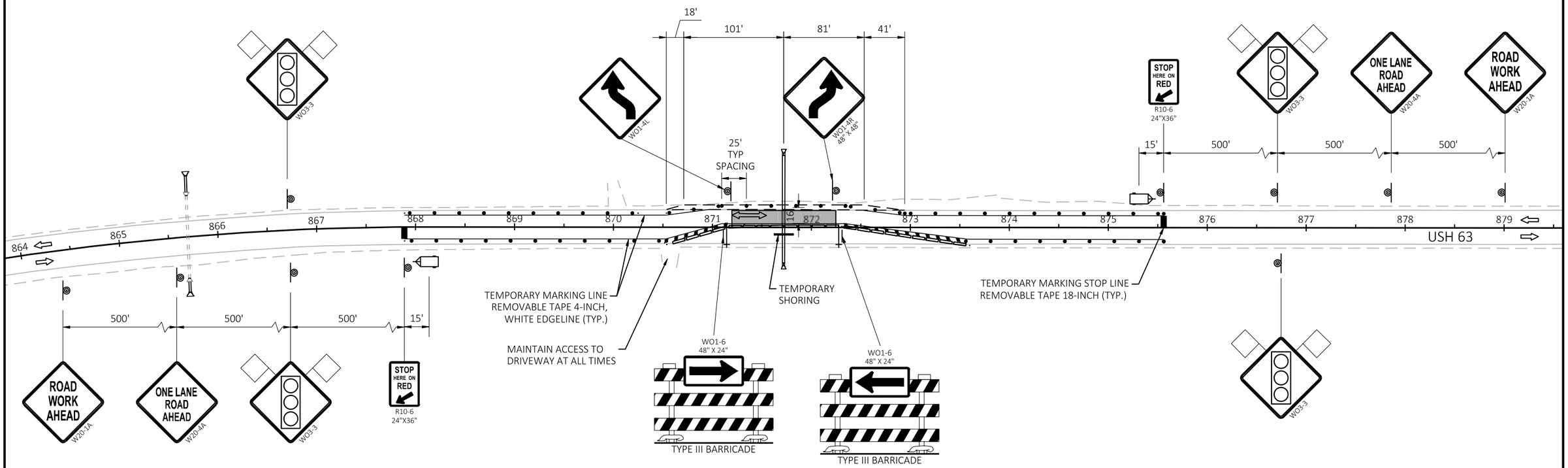

TEMPORARY SIGNAL TIMINGS (SEC.) 871+72 CULVERT WORK ZONE SEQUENCE: ALL DAY TOTAL CYCLE TIME = 80		
PHASE 1 USH 63 EB	PHASE 2 USH 63 WB	PROGRAM TYPE
15	15	MINIMUM GREEN TIME
5	5	MAXIMUM PASSAGE TIME DURING GREEN PHASE
3.5	3.5	MINIMUM PASSAGE TIME DURING GREEN PHASE
15	15	START OF REDUCTION OF PASSAGE FROM MAX. TO MIN. DURING GREEN PHASE
6	6	TIME TO REDUCE PASSAGE FROM MAX. TO MIN. DURING GREEN PHASE
20	20	MAXIMUM GREEN TIME
5	5	YELLOW
15	15	ALL-RED
NONE	NONE	RECALL MODE

NOTES:
CONTRACTOR SHALL REVIEW SIGNALS AFTER PROGRAMMING TO ASSURE THERE ARE NOT CONFLICTING MOVEMENTS.

TIMING BASED ON 45 MPH POSTED WORK ZONE SPEED, THE CONTRACTOR SHALL NOTIFY THE DEPARTMENT WITH TIMING ADJUSTMENTSIF SLOWER THAN AVERAGE SPEEDS ARE OBSERVED WITHIN THE SINGLE LANE WORK ZONE.

Estimate Of Quantities

1560-07-70

Line	Item	Item Description	Unit	Total	Qty
0002	201.0105	Clearing	STA	49.000	49.000
0004	201.0205	Grubbing	STA	49.000	49.000
0006	203.0100	Removing Small Pipe Culverts	EACH	13.000	13.000
0008	204.0110	Removing Asphaltic Surface	SY	241.000	241.000
0010	204.0115	Removing Asphaltic Surface Butt Joints	SY	6,262.000	6,262.000
0012	204.0120	Removing Asphaltic Surface Milling	SY	10,694.000	10,694.000
0014	204.0150	Removing Curb & Gutter	LF	362.000	362.000
0016	204.0180	Removing Delineators and Markers	EACH	10.000	10.000
0018	204.9060.S	Removing (item description) 01. Apron Endwalls	EACH	22.000	22.000
0020	205.0100	Excavation Common	CY	10,601.000	10,601.000
0022	208.0100	Borrow	CY	21,981.000	21,981.000
0024	208.1500.S	Temporary Lane Shift During Culvert Work	EACH	14.000	14.000
0026	209.2500	Backfill Granular Grade 2	TON	150.000	150.000
0028	211.0100	Prepare Foundation for Asphaltic Paving (project) 01. 1560-07-70	LS	1.000	1.000
0030	211.0400	Prepare Foundation for Asphaltic Shoulders	STA	1,859.000	1,859.000
0032	211.0700.S	Prepare Foundation for CIR Base Layer (project) 01. 1560-07-70	EACH	1.000	1.000
0034	211.0800.S	Base Repair for CIR Layer	CY	500.000	500.000
0036	213.0100	Finishing Roadway (project) 01. 1560-07-70	EACH	1.000	1.000
0038	305.0110	Base Aggregate Dense 3/4-Inch	TON	5,070.000	5,070.000
0040	305.0120	Base Aggregate Dense 1 1/4-Inch	TON	4,480.000	4,480.000
0042	305.0500	Shaping Shoulders	STA	1,354.000	1,354.000
0044	327.1000.S	CIR Asphaltic Base Layer	SY	243,690.000	243,690.000
0046	455.0605	Tack Coat	GAL	19,219.000	19,219.000
0048	455.0770.S	Asphalt Stabilizing Agent	TON	1,267.000	1,267.000
0050	460.0105.S	HMA Percent Within Limits (PWL) Test Strip Volumetrics	EACH	1.000	1.000
0052	460.0110.S	HMA Percent Within Limits (PWL) Test Strip Density	EACH	1.000	1.000
0054	460.2005	Incentive Density PWL HMA Pavement	DOL	15,290.000	15,290.000
0056	460.2007	Incentive Density HMA Pavement Longitudinal Joints	DOL	33,810.000	33,810.000
0058	460.2010	Incentive Air Voids HMA Pavement	DOL	39,410.000	39,410.000
0060	460.6645	HMA Pavement 5 MT 58-34 V	TON	39,410.000	39,410.000
0062	460.9000.S	Material Transfer Vehicle	EACH	1.000	1.000
0064	465.0105	Asphaltic Surface	TON	2,015.000	2,015.000
0066	465.0110	Asphaltic Surface Patching	TON	270.000	270.000
0068	465.0120	Asphaltic Surface Driveways and Field Entrances	TON	40.000	40.000
0070	465.0315	Asphaltic Flumes	SY	8.000	8.000
0072	465.0425	Asphaltic Shoulder Rumble Strips 2-Lane Rural	LF	126,106.000	126,106.000
0074	465.0475	Asphalt Centerline Rumble Strips 2-Lane Rural	LF	60,835.000	60,835.000
0076	511.1100	Temporary Shoring	SF	1,875.000	1,875.000
0078	520.2024	Culvert Pipe Temporary 24-Inch	LF	190.000	190.000
0080	520.3424	Culvert Pipe Class III-A Non-metal 24-Inch	LF	222.000	222.000
0082	520.3436	Culvert Pipe Class III-A Non-metal 36-Inch	LF	166.000	166.000
0084	520.3624	Culvert Pipe Class III-B Non-metal 24-Inch	LF	106.000	106.000
0086	520.8000	Concrete Collars for Pipe	EACH	1.000	1.000
0088	520.8700	Cleaning Culvert Pipes	EACH	5.000	5.000
0090	522.0424	Culvert Pipe Reinforced Concrete Class IV 24-Inch	LF	170.000	170.000
0092	522.0430	Culvert Pipe Reinforced Concrete Class IV 30-Inch	LF	300.000	300.000
0094	522.0436	Culvert Pipe Reinforced Concrete Class IV 36-Inch	LF	56.000	56.000
0096	522.0442	Culvert Pipe Reinforced Concrete Class IV 42-Inch	LF	58.000	58.000
0098	522.1024	Apron Endwalls for Culvert Pipe Reinforced Concrete 24-Inch	EACH	4.000	4.000

Estimate Of Quantities

1560-07-70

Line	Item	Item Description	Unit	Total	Qty
0100	522.1030	Apron Endwalls for Culvert Pipe Reinforced Concrete 30-Inch	EACH	8.000	8.000
0102	522.1036	Apron Endwalls for Culvert Pipe Reinforced Concrete 36-Inch	EACH	2.000	2.000
0104	522.1042	Apron Endwalls for Culvert Pipe Reinforced Concrete 42-Inch	EACH	2.000	2.000
0106	522.2353	Culvert Pipe Reinforced Concrete Horizontal Elliptical Class HE-III 53x83-Inch	LF	64.000	64.000
0108	522.2653	Apron Endwalls for Culvert Pipe Reinforced Concrete Horizontal Elliptical 53x83-Inch	EACH	2.000	2.000
0110	525.0124	Culvert Pipe Corrugated Aluminum 24-Inch	LF	46.000	46.000
0112	525.0130	Culvert Pipe Corrugated Aluminum 30-Inch	LF	60.000	60.000
0114	525.0324	Apron Endwalls for Culvert Pipe Aluminum 24-Inch	EACH	20.000	20.000
0116	525.0330	Apron Endwalls for Culvert Pipe Aluminum 30-Inch	EACH	6.000	6.000
0118	525.0336	Apron Endwalls for Culvert Pipe Aluminum 36-Inch	EACH	8.000	8.000
0120	601.0411	Concrete Curb & Gutter 30-Inch Type D	LF	198.000	198.000
0122	601.0557	Concrete Curb & Gutter 6-Inch Sloped 36-Inch Type D	LF	164.000	164.000
0124	603.8000	Concrete Barrier Temporary Precast Delivered	LF	300.000	300.000
0126	603.8125	Concrete Barrier Temporary Precast Installed	LF	300.000	300.000
0128	603.8500	Anchoring Concrete Barrier Temporary Precast	LF	175.000	175.000
0130	606.0200	Riprap Medium	CY	497.000	497.000
0132	611.8115	Adjusting Inlet Covers	EACH	1.000	1.000
0134	618.0100	Maintenance And Repair of Haul Roads (project) 01. 1560-07-70	EACH	1.000	1.000
0136	619.1000	Mobilization	EACH	1.000	1.000
0138	624.0100	Water	MGAL	91.000	91.000
0140	625.0100	Topsoil	SY	26,502.000	26,502.000
0142	628.1504	Silt Fence	LF	12,190.000	12,190.000
0144	628.1520	Silt Fence Maintenance	LF	12,190.000	12,190.000
0146	628.1905	Mobilizations Erosion Control	EACH	7.000	7.000
0148	628.1910	Mobilizations Emergency Erosion Control	EACH	4.000	4.000
0150	628.2008	Erosion Mat Urban Class I Type B	SY	32,314.000	32,314.000
0152	628.7015	Inlet Protection Type C	EACH	1.000	1.000
0154	628.7504	Temporary Ditch Checks	LF	1,000.000	1,000.000
0156	628.7555	Culvert Pipe Checks	EACH	150.000	150.000
0158	628.7570	Rock Bags	EACH	830.000	830.000
0160	629.0210	Fertilizer Type B	CWT	20.500	20.500
0162	630.0130	Seeding Mixture No. 30	LB	454.000	454.000
0164	630.0200	Seeding Temporary	LB	634.000	634.000
0166	630.0500	Seed Water	MGAL	726.900	726.900
0168	633.5200	Markers Culvert End	EACH	102.000	102.000
0170	638.2102	Moving Signs Type II	EACH	22.000	22.000
0172	638.4000	Moving Small Sign Supports	EACH	22.000	22.000
0174	642.5001	Field Office Type B	EACH	1.000	1.000
0176	643.0300	Traffic Control Drums	DAY	29,240.000	29,240.000
0178	643.0420	Traffic Control Barricades Type III	DAY	140.000	140.000
0180	643.0705	Traffic Control Warning Lights Type A	DAY	120.000	120.000
0182	643.0715	Traffic Control Warning Lights Type C	DAY	800.000	800.000
0184	643.0900	Traffic Control Signs	DAY	8,490.000	8,490.000
0186	643.1000	Traffic Control Signs Fixed Message	SF	36.000	36.000
0188	643.5000	Traffic Control	EACH	1.000	1.000
0190	645.0120	Geotextile Type HR	SY	885.000	885.000
0192	646.1020	Marking Line Epoxy 4-Inch	LF	81,180.000	81,180.000
0194	646.1040	Marking Line Grooved Wet Ref Epoxy 4-Inch	LF	133,660.000	133,660.000
0196	646.3020	Marking Line Epoxy 8-Inch	LF	117.000	117.000

1560-07-70

Line	Item	Item Description	Unit	Total	Qty
0198	648.0100	Locating No-Passing Zones	MI	12.810	12.810
0200	649.0105	Temporary Marking Line Paint 4-Inch	LF	74,280.000	74,280.000
0202	649.0120	Temporary Marking Line Epoxy 4-Inch	LF	83,930.000	83,930.000
0204	649.0150	Temporary Marking Line Removable Tape 4-Inch	LF	1,838.000	1,838.000
0206	649.0850	Temporary Marking Stop Line Removable Tape 18-Inch	LF	48.000	48.000
0208	649.0960	Temporary Marking Removable Mask Out Tape 6-Inch	LF	1,862.000	1,862.000
0210	650.4500	Construction Staking Subgrade	LF	1,395.000	1,395.000
0212	650.5000	Construction Staking Base	LF	1,395.000	1,395.000
0214	650.5500	Construction Staking Curb Gutter and Curb & Gutter	LF	362.000	362.000
0216	650.6000	Construction Staking Pipe Culverts	EACH	14.000	14.000
0218	650.8000	Construction Staking Resurfacing Reference	LF	67,620.000	67,620.000
0220	650.9910	Construction Staking Supplemental Control (project) 01. 1560-07-70	LS	1.000	1.000
0222	650.9920	Construction Staking Slope Stakes	LF	3,665.000	3,665.000
0224	661.0100	Temporary Traffic Signals for Bridges (structure) 01. Culvert STA 497+33	LS	1.000	1.000
0226	661.0100	Temporary Traffic Signals for Bridges (structure) 02. Culvert STA 871+72	LS	1.000	1.000
0228	690.0150	Sawing Asphalt	LF	2,276.000	2,276.000
0230	690.0250	Sawing Concrete	LF	3.000	3.000
0232	740.0440	Incentive IRI Ride	DOL	51,270.000	51,270.000
0234	ASP.1T0A	On-the-Job Training Apprentice at $5.00/HR	HRS	1,600.000	1,600.000
0236	ASP.1T0G	On-the-Job Training Graduate at $5.00/HR	HRS	1,600.000	1,600.000

3

STATION	TO	STATION	LOCATION	201.0105 CLEARING STA	201.0205 GRUBBING STA
497+12	-	497+50	RT	1	1
539+90	-	540+18	LT & RT	2	2
589+06	-	590+73	LT	2	2
689+50	-	697+50	LT & RT	16	16
711+00	-	711+30	LT &RT	2	2
745+85	-	746+32	LT	1	1
823+93	-	824+50	LT & RT	2	2
826+20	-	827+20	LT	1	1
835+60	-	839+00	LT & RT	4	4
862+87	-	865+85	RT	3	3
864+92	-	866+20	LT	4	4
870+75	-	876+75	LT	6	6
871+51	-	871+94	RT	1	1
1008+26	-	1008+89	RT	1	1
1008+67	-	1009+26	LT	1	1
1027+30	-	1027+65	RT	1	1
1033+95	-	1034+27	RT	1	1
			TOTAL 0010	49	49

STATION	TO	STATION	LOCATION	204.0180 REMOVING DELINEATORS AND MARKERS EACH
690+50	-	695+50	RT & LT	10
			TOTAL 0010	10

3

STATION	TO	STATION	LOCATION	211.0400 PREPARE FOUNDATION FOR ASPHALTIC SHOULDERS STA	211.0700.S.01 PREPARE FOUNDATION FOR CIR PAVEMENT BASE LAYER (PROJECT) (01. 1560-07-70) EACH	211.0800.S BASE REPAIR FOR CIR PAVEMENT CY
			PROJECT 1560-07-70	-	1	500
502+64	-	884+77	LT & RT	765	-	-
592+64	-	904+00	LT & RT	623	-	-
924+27	-	951+48	LT & RT	55	-	-
957+12	-	1030+10	LT & RT	146	-	-
1030+10	-	1136+59	LT & RT	213	-	-
1143+93	-	1172+40	LT & RT	57	-	-
			TOTAL 0010	1,859	1	500

STATION	TO	STATION	LOCATION	204.0110 REMOVING ASPHALTIC SURFACE SY	204.0115 REMOVING ASPHALTIC SURFACE BUTT JOINTS SY	204.0120 REMOVING ASPHALTIC SURFACE MILLING SY
495+73	-	497+73	MAINLINE	--	756	--
498+52	-	500+50	CURB AND GUTER	176	176	--
500+50	-	502+28	CURB AND GUTER	--	158	--
904+00	-	906+00	MAINLINE	--	756	--
906+00	-	922+27	MAINLINE	--	--	6,146
916+30	-	917+60	CURB AND GUTTER	57	--	--
917+00	-	917+61	ASPHALTIC FLUMES	8	--	--
922+27	-	924+27	MAINLINE	--	756	--
1136+59	-	1138+59	MAINLINE	--	760	--
1138+59	-	1139+45	MAINLINE	--	--	366
1139+45	-	1139+76	MAINLINE	--	76	--
1140+71	-	1141+01	MAINLINE	--	74	--
1141+01	-	1141+93	MAINLINE	--	--	388
1141+93	-	1143+93	MAINLINE	--	773	--
1170+40	-	1172+40	MAINLINE	--	756	--
885+07	-	891+84	BEAMGUARD	--	--	602
885+68	-	891+70	BEAMGUARD	--	--	535
951+48	-	956+34	BEAMGUARD	--	--	432
951+77	-	957+12	BEAMGUARD	--	--	476
			SIDEROADS	--	1,117	1,548
			DRIVEWAYS	--	104	
			PARTIAL DEPTH BASE PATCH	--	--	200
			TOTAL 0010	241	6,262	10,694

3

STATION	TO	STATION	LOCATION	205.0100 EXCAVATION COMMON CY	(1) SALVAGED / UNUSABLE MATERIAL	(2) AVAILABLE MATERIAL	UNEXPANDED FILL CY	(3) EXPANDED FILL	(4) MASS ORDINATE	208.0100 BORROW CY	REMARKS
		497+33	MAINLINE	762	57	705	492	615	90	-90	CULVERT REPLACEMENT
587+50	-	592+50	MAINLINE	160	--	160	1,760	2,200	-2,040	2,040	SLOPE GRADING
		661+23	MAINLINE	155	23	132	62	78	55	-55	CULVERT REPLACEMENT
689+00	-	698+00	MAINLINE	372	--	372	9,955	12,444	-12,072	12,072	SLOPE GRADING
		746+08	MAINLINE	723	63	660	512	640	20	-20	CULVERT REPLACEMENT
754+00	-	759+00	MAINLINE	190	--	190	823	1,029	-839	839	SLOPE GRADING
775+00	-	780+00	MAINLINE	194	--	194	216	270	-76	76	SLOPE GRADING
		802+90	MAINLINE	355	39	316	192	240	76	-76	CULVERT REPLACEMENT
808+75	-	810+10	LT	80	--	80	350	438	-358	358	SLOPE GRADING
		824+26	MAINLINE	1,121	74	1047	895	1,119	-72	72	CULVERT REPLACEMENT
825+00	-	827+50	MAINLINE	95	--	95	356	445	-350	350	SLOPE GRADING
836+00	-	839+50	MAINLINE	98	--	98	1,413	1,766	-1,668	1,668	SLOPE GRADING
862+50	-	867+00	MAINLINE	189	--	189	1,478	1,848	-1,659	1,659	SLOPE GRADING
		862+98	MAINLINE	697	56	641	553	691	-50	50	CULVERT REPLACEMENT
870+50	-	877+00	MAINLINE	419	--	419	2,870	3,588	-3,169	3,169	SLOPE GRADING
		871+72	MAINLINE	697	56	641	762	953	-312	312	CULVERT REPLACEMENT
		985+03	MAINLINE	600	52	548	397	496	52	-52	CULVERT REPLACEMENT
		994+21	MAINLINE	597	49	548	340	424	124	-124	CULVERT REPLACEMENT
		1008+82	MAINLINE	1,119	76	1043	884	1,105	-61	61	CULVERT REPLACEMENT
		1015+24	MAINLINE	647	55	592	408	510	83	-83	CULVERT REPLACEMENT
		1024+14	MAINLINE	504	46	458	311	388	70	-70	CULVERT REPLACEMENT
		1027+48	MAINLINE	465	44	421	265	332	89	-89	CULVERT REPLACEMENT
		1034+12	MAINLINE	362	37	325	191	238	86	-86	CULVERT REPLACEMENT
			TOTAL 0010	10,601						21,981	

(1) SALVAGED/UNUSEABLE PAVEMENT MATERIAL

(2) AVAILABLE MATERIAL = CUT - SALVAGED/UNUSEABLE PAVEMENT MATERIAL

(3)- EXPANDED FILL FACTOR = 1.25

(4) THE MASS ORDINATE + OR - QUANTITY CALCULATED FOR THE DIVISION. PLUS QUANTITY INDICATES EXCESS OF MATERIAL WITHIN THE DIVISION.

3

STATION	TO	STATION	LOCATION	327.1000.S CIR ASPHALTIC BASE LAYER SY	455.0770.S ASPHALT STABILIZING AGENT TON
497+73	-	904+00	MAINLINE	153,480	798
924+27	-	1136+59	MAINLINE	80,210	417
1143+93	-	1170+40	MAINLINE	10,000	52
			TOTAL 0010	243,690	1,267

STATION	TO	STATION	LOCATION	209.2500 BACKFILL GRANULAR GRADE 2 TON	305.0110 BASE AGGREGATE DENSE 3/4-INCH TON	305.0120 BASE AGGREGATE DENSE 1 1/4-INCH TON	305.0500 SHAPING SHOULDERS STA	624.0100 WATER MGAL	REMARKS
495+73	-	1172+40	MAINLINE	--	4,290	--	1,354	43	
			CULVERT REPLACEMENTS	150	220	4,480	--	47	CULVERT PIPE TRANSITIONS, IF EXISTING MATERIAL IS UNSUITABLE
			SIDEROADS	--	110	--	--	1	
			UNDISTRIBUTED	--	450	--	--	--	SHOULDER BLENDING FOR WASH OUT AREAS
			TOTAL 0010	150	5,070	4,480	1,354	91	

STATION	TO	STATION	LOCATION	455.0605 TACK COAT GAL	460.6645 HMA PAVEMENT 5 MT 58-34 V TON	465.0105 ASPHALTIC SURFACE TON	465.0110 ASPHALTIC SURFACE PATCHING TON	465.0120 ASPHALTIC SURFACE DRIVEWAYS AND FIELD ENTRANCES TON	REMARKS
495+73	-	497+73	MAINLINE	106	140	--	--	--	
497+73	-	904+00	MAINLINE	10,744	21,680	--	--	--	
904+00	-	906+00	MAINLINE	106	140	--	--	--	
906+00	-	922+27	MAINLINE	506	1,020	--	--	--	
922+27	-	924+27	MAINLINE	106	140	--	--	--	
924+27	-	1136+59	MAINLINE	5,699	11,500	--	--	--	
1136+59	-	1138+59	MAINLINE	107	140	--	--	--	
1138+59	-	1141+93	MAINLINE	94	190	--	--	--	
1141+93	-	1143+93	MAINLINE	107	140	--	--	--	
1143+93	-	1170+40	MAINLINE	700	1,410	--	--	--	
1170+40		1172+40	MAINLINE	106	140	--	--	--	
508+40	-	525+03	MAINLINE	--	290	--	--	--	SUPER CORRECTION
575+76	-	590+75	MAINLINE	--	320	--	--	--	SUPER CORRECTION
617+15	-	622+62	MAINLINE	--	90	--	--	--	SUPER CORRECTION
637+87	-	652+07	MAINLINE	--	150	--	--	--	SUPER CORRECTION
854+24	-	869+31	MAINLINE	--	390	--	--	--	SUPER CORRECTION
941+81	-	953+27	MAINLINE	--	210	--	--	--	SUPER CORRECTION
969+23	-	975+00	MAINLINE	--	110	--	--	--	SUPER CORRECTION
1029+21	-	1056+25	MAINLINE	--	320	--	--	--	SUPER CORRECTION
1126+12	-	1133+39	MAINLINE	--	110	--	--	--	SUPER CORRECTION
			BEAM GUARD AREAS	42	90	--	--	--	
			SIDEROADS	434	690	--	--	--	
			CULVERT REPLACEMENTS	362	--	1,755	--	--	
			DRIVEWAYS	--	--	--	--	40	
			CURB & GUTTER REPLACEMENT AREAS	--	--	10	20	--	INCLUDES PARKING LOT PATCH AREAS
			CIR AREA REPAIR	--	--	250	200	--	
			MILLING AREA REPAIR	--	--	--	50	--	
			TOTAL 0010	19,219	39,410	2,015	270	40	

STATION	TO	STATION	LOCATION	465.0425 ASPHALTIC SHOULDER RUMBLE STRIPS 2-LANE RURAL LF	465.0475 ASPHALT CENTERLINE RUMBLE STRIPS 2-LANE RURAL LF
498+41	-	899+52	CL	--	37,711
923+95	-	1139+20	CL	--	20,325
1141+26	-	1169+25	CL	--	2,799
495+73	-	1172+40	LT & RT	126,106	--
			TOTAL 0010	126,106	60,835

3

HMA MIXTURE ACCEPTANCE

1560-07-70

							QUALITY MANAGEMENT PROGRAM TO BE USED	
LOCATION	STA - STA	MIXTURE USE	UNDERLYING SURFACE	BID ITEM	TONS	THICKNESS	MIXTURE ACCEPTANCE	DENSITY ACCEPTANCE
12 FOOT DRIVING LANE	495+73 -1172+40	UPPER LAYER	HMA 5MT 58-34V	5MT 58-34V	15,282	1.5"	PWL INCENTIVE AIR VOIDS HMA PAVEMENT 460.2010	PWL INCENTIVE DENSITY HMA PAVEMENT 460.2005
SHOULDERS, SIDEROADS, BEAMGUARD WIDENINGS	VARIOUS	UPPER LAYER	HMA 5MT 58-34V	5MT 58-34V	6,867	1.5"	PWL INCENTIVE AIR VOIDS HMA PAVEMENT 460.2010	ACCEPTED BY DEPARTMENT TESTING, NOT ELIGBLE FOR INCENTIVE
12 FOOT DRIVING LANE	497+73 -904+00, 924+27 - 1136+59, 1143+93 - 1170+40	LOWER LAYER	CIR BASE	5MT 58-34V	9,719	1"	PWL INCENTIVE AIR VOIDS HMA PAVEMENT 460.2010	ACCEPTED BY ORDINARY COMPACTION
12 FOOT DRIVING LANE	495+73 -497+73, 904+00 - 924+27, 1136+59 - 1143+93, 1170+40 -1172+40	LOWER LAYER	MILLED SURFACE	5MT 58-34V	833	1.75"	PWL INCENTIVE AIR VOIDS HMA PAVEMENT 460.2010	ACCEPTED BY DEPARTMENT TESTING, NOT ELIGBLE FOR INCENTIVE
SHOULDERS, SIDEROADS, BEAMGUARD WIDENINGS	VARIOUS	LOWER LAYER	CIR BASE	5MT 58-34V	4,348	1"	PWL INCENTIVE AIR VOIDS HMA PAVEMENT 460.2010	ACCEPTED BY ORDINARY COMPACTION
SHOULDERS, SIDEROADS, BEAMGUARD WIDENINGS	VARIOUS	LOWER LAYER	MILLED SURFACE	5MT 58-34V	442	1.75"	PWL INCENTIVE AIR VOIDS HMA PAVEMENT 460.2010	ACCEPTED BY DEPARTMENT TESTING, NOT ELIGBLE FOR INCENTIVE
SUPER CORRECTION	VARIOUS	LOWER LAYER	CIR BASE OR MILLED SURFACE	5MT 58-34V	1,960	VARIES	PWL INCENTIVE AIR VOIDS HMA PAVEMENT 460.2010	ACCEPTED BY ORDINARY COMPACTION
CULVERT REPLACEMENTS & DRIVEWAYS	VARIOUS	LOWER AND UPPER LAYER	MILLED EXISTING HMA SURFACE OR BASE	ASPHALTIC SURFACE	1,795	6"	QMP as per SS 465	ACCEPTED BY ORDINARY COMPACTION
PATCHING	VARIOUS	LOWER LAYER	CIR BASE	ASPHALTIC SURFACE PATCHING	200	VARIES	QMP as per SS 465	ACCEPTED BY ORDINARY COMPACTION
DRIVEWAYS	VARIOUS	UPPER LAYER	MILLED EXISTING HMA SURFACE OR BASE	ASPHALTIC SURFACE DRIVEWAYS	40	2	QMP as per SS 465	ACCEPTED BY ORDINARY COMPACTION

STATION	LOCATION	204.9060.S.01 REMOVING (01. APRON ENDWALLS) EACH	522.1024 APRON ENDWALLS FOR CULVERT PIPE REINFORCED CONCRETE 24-INCH EACH	522.1030 APRON ENDWALLS FOR CULVERT PIPE REINFORCED CONCRETE 30-INCH EACH	522.1036 APRON ENDWALLS FOR CULVERT PIPE REINFORCED CONCRETE 36-INCH EACH	522.1042 APRON ENDWALLS FOR CULVERT PIPE REINFORCED CONCRETE 42-INCH EACH	522.2653 APRON ENDWALLS FOR CULVERT PIPE REINFORCED CONCRETE HORIZONTAL ELLIPTICAL 53X83-INCH EACH	525.0324 APRON ENDWALLS FOR CULVERT PIPE ALUMINUM 24-INCH EACH	525.0330 APRON ENDWALLS FOR CULVERT PIPE ALUMINUM 30-INCH EACH	525.0336 APRON ENDWALLS FOR CULVERT PIPE ALUMINUM 36-INCH EACH
497+33		--	--	2	--	--	--	--	--	--
502+79	LT & RT	2	--	--	--	--	--	2	--	--
514+77	RT	1	--	--	--	--	--	1	--	--
537+00	RT	1	--	--	--	--	--	1	--	--
540+04	LT & RT	2	--	--	--	--	--	2	--	--
550+19	LT & RT	2	--	--	--	--	--	--	--	2
661+23		--	--	2	--	--	--	--	--	--
694+07	LT & RT	2	--	--	--	--	--	--	2	--
711+14	LT & RT	2	--	--	--	--	--	--	--	2
722+15	LT & RT	2	--	--	--	--	--	--	2	--
746+08		--	--	--	--	--	2	--	--	--
756+19	LT & RT	2	--	--	--	--	--	--	2	--
777+69	LT & RT	2	--	--	--	--	--	2	--	--
802+87		--	--	2	--	--	--	--	--	--
802+93		--	--	2	--	--	--	--	--	--
810+08	LT & RT	2	--	--	--	--	--	2	--	--
824+26		--	--	--	--	--	--	2	--	--
862+98		--	--	--	--	--	--	2	--	--
865+70	LT & RT	2	--	--	--	--	--	2	--	--
871+72		--	2	--	--	--	--	--	--	--
985+03		--	--	--	--	2	--	--	--	--
994+21		--	--	--	--	--	--	2	--	--
1008+82		--	--	--	--	--	--	--	--	2
1015+24		--	--	--	--	--	--	--	--	2
1024+14		--	--	--	--	--	--	2	--	--
1027+48		--	--	--	2	--	--	--	--	--
1034+12		--	2	--	--	--	--	--	--	--
							--			
	TOTAL 0010	22	4	8	2	2	2	20	6	8

NOTE: TIE ALL JOINTS ON CONCRETE PIPES (INCIDENTAL TO PIPE ITEMS)

STATION	511.1100 TEMPORARY SHORING SF	REMARKS
497+33	625	STAGE 1
497+33	625	STAGE 2
871+72	625	STAGE 2
	1,875	

STATION	520.8700 CLEANING CULVERT PIPES EACH
502+79	1
514+77	1
537+00	1
711+14	1
722+15	1
	5

3

STATION	LOCATION	203.0100 REMOVING SMALL PIPE CULVERTS EACH	520.3424 CULVERT PIPE CLASS III-A NON-METAL 24-INCH LF	520.3436 CULVERT PIPE CLASS III-A NON-METAL 36-INCH LF	520.3624 CULVERT PIPE CLASS III-B NON-METAL 24-INCH LF	522.0424 CULVERT PIPE REINFORCED CONCRETE CLASS IV 24-INCH LF	522.0430 CULVERT PIPE REINFORCED CONCRETE CLASS IV 30-INCH LF	522.0436 CULVERT PIPE REINFORCED CONCRETE CLASS IV 36-INCH LF	522.0442 CULVERT PIPE REINFORCED CONCRETE CLASS IV 42-INCH LF	522.2353 CULVERT PIPE REINFORCED CONCRETE HORIZONTAL ELLIPTICAL CLASS HE-III 53X83-INCH LF	525.0124 CULVERT PIPE CORRUGATED ALUMINUM 24-INCH LF	525.0130 CULVERT PIPE CORRUGATED ALUMINUM 30-INCH LF	REMARKS
497+33		1	--	--	--	--	138	--	--	--	--	--	
661+23		1	--	--	--	--	46	--	--	--	--	--	
694+07	LT & RT	--	--	--	--	--	--	--	--	--	--	38	24' LT & 14' RT
746+08		1	--	--	--	--	--	--	--	64	--	--	
756+19	LT & RT	--	--	--	--	--	--	--	--	--	--	22	12' LT & 10' RT
777+69	LT & RT	--	--	--	--	--	--	--	--	--	12	--	8' LT & 4' RT
802+87		--	--	--	--	--	58	--	--	--	--	--	
802+93		--	--	--	--	--	58	--	--	--	--	--	
824+26		1	--	--	106	--	--	--	--	--	--	--	
862+98		1	84	--	--	--	--	--	--	--	--	--	
865+70	LT & RT	--	--	--	--	--	--	--	--	--	34	--	20' LT & 14' RT
871+72		1	--	--	--	110	--	--	--	--	--	--	
985+03		1	--	--	--	--	--	--	58	--	--	--	
994+21		1	70	--	--	--	--	--	--	--	--	--	
1008+82		1	--	96	--	--	--	--	--	--	--	--	
1015+24		1	--	70	--	--	--	--	--	--	--	--	
1024+14		1	68	--	--	--	--	--	--	--	--	--	
1027+48		1	--	--	--	--	--	56	--	--	--	--	
1034+12		1	--	--	--	60	--	--	--	--	--	--	
		13	222	166	106	170	300	56	58	64	46	60	

NOTE: TIE ALL JOINTS ON CONCRETE PIPES (INCIDENTAL TO PIPE ITEMS)

STATION	STATION	LOCATION	520.2024 CULVERT PIPE TEMPORARY 24-INCH LF	520.8000 CONCRETE COLLAR FOR PIPE EACH
871+72	873+63	RT	190	1
		TOTAL 0010	190	1

STATION	TO	STATION	LOCATION	204.0150 REMOVING CURB AND GUTTER LF	465.0315 ASPHALTIC FLUMES SY	601.0411 CONCRETE CURB & GUTTER 30-INCH TYPE D LF	601.0557 CONCRETE CURB & GUTTER 6-INCH SLOPED 36-INCH TYPE D	611.8115 ADJUSTING INLET COVERS EA	628.7015 INLET PROTECTION TYPE C EA
498+52	-	500+50	LT	198	--	198	--	--	--
916+30	-	917+60	RT	164	--	--	164	--	--
		916+77	RT	--	--	--	--	1	1
		917+10	RT	--	4	--	--	--	--
		917+61	RT	--	4	--	--	--	--
			TOTAL 0010	362	8	198	164	1	1

3

STATION	TO	STATION	LOCATION	625.0100 TOPSOIL SY	628.2008 EROSION MAT URBAN CLASS I TYPE B SY	629.0210 FERTILIZER TYPE B CWT	630.0130 SEEDING MIXTURE NO. 30 LB	630.0200 SEEDING TEMPORARY LB	630.0500 SEED WATER MGAL	REMARKS
		497+34	LT & RT	756	756	0.48	14	14	17.0	CULVERT
		502+79	LT & RT	45	45	0.03	1	1	1.1	CULVERT
		514+77	RT	25	25	0.02	1	0	0.6	CULVERT
		537+00	RT	23	23	0.02	1	0	0.6	CULVERT
		540+04	LT & RT	46	46	0.03	1	1	1.1	CULVERT
		550+19	LT & RT	34	34	0.03	1	1	0.8	CULVERT
587+50	-	592+50	LT	1,768	1,768	1.12	32	32	39.7	SLOPE GRADING
		661+23	LT & RT	58	58	0.04	2	1	1.4	CULVERT
689+50	-	697+50	LT & RT	9,406	9,406	5.93	170	169	211.3	SLOPE GRADING
		711+14	LT & RT	47	47	0.03	1	1	1.1	CULVERT
		722+15	LT & RT	50	50	0.04	1	1	1.2	CULVERT
		746+08	LT & RT	369	369	0.24	7	7	8.3	CULVERT
754+50	-	759+00	LT & RT	1,838	1,838	1.16	34	33	41.3	SLOPE GRADING
775+00	-	780+00	LT & RT	1,069	1,069	0.68	20	19	24.0	SLOPE GRADING
		802+90	LT & RT	291	291	0.19	6	5	6.6	CULVERT
		810+10	LT & RT	587	587	0.37	11	11	13.2	CULVERT & ERODED AREA
		824+46	LT & RT	562	562	0.36	11	10	12.7	CULVERT
825+00	-	828+50	LT	589	589	0.38	11	11	13.3	SLOPE GRADING
836+50	-	839+00	LT & RT	1,784	1,784	1.13	33	32	40.1	SLOPE GRADING
862+50	-	867+00	LT & RT	2,319	2,319	1.47	42	42	52.1	SLOPE GRADING
870+50	-	877+00	LT & RT	2,687	2,687	1.70	49	48	60.4	CULVERT
		985+03	LT & RT	271	271	0.18	5	5	6.1	CULVERT
		994+21	LT & RT	287	287	0.19	--	5	6.5	CULVERT
		1008+82	LT & RT	523	523	0.33	--	9	11.8	CULVERT
		1015+24	LT & RT	191	191	0.12	--	3	4.3	CULVERT
		1024+14	LT & RT	244	244	0.16	--	4	5.5	CULVERT
		1027+48	LT & RT	326	326	0.21	--	6	7.4	CULVERT
		1034+12	LT & RT	307	307	0.20	--	6	6.9	CULVERT
			LANE SHIFTS	--	5,812	3.66	--	157	130.5	
			TOTAL 0010	26,502	32,314	20.50	454	634	726.9	

NOTE: USE TEMPORARY SEED ONLY IN DISTURBED AREAS ADJACENT TO THE BIBON SWAMP AS NOTED IN THE TABLE

STATION		STATION	LOCATION	603.8000 CONCRETE BARRIER TEMPORARY PRECAST DELIVERED LF	603.8125 CONCRETE BARRIER TEMPORARY PRECAST INSTALLED LF	603.8500 ANCHORING CONCRETE BARRIER TEMPORARY PRECAST LF	REMARKS
871+70	-	873+60	RT	300	300	175	STAGE 2
			TOTAL 0010	300	300	175	

STATION	TO	STATION	LOCATION	606.0200 RIPRAP MEDIUM CY	645.0120 GEOTEXTILE TYPE HR SY
		694+07	LT	2	4
		711+14	LT	2	4
		746+08	LT	6	12
809+00	-	810+25	RT	65	110
		871+72	LT	418	747
		1027+48	LT	4	8
			TOTAL 0010	497	885

3

STATION	TO	STATION	LOCATION	628.1504 SILT FENCE LF	628.1520 SILT FENCE MAINTENANCE LF	628.1905 MOBILIZATIONS EROSION CONTROL EACH	628.1910 MOBILIZATIONS EMERGENCY EROSION CONTROL EACH	628.7504 TEMPORARY DITCH CHECKS LF	628.7555 CULVERT PIPE CHECKS EACH	628.7570 ROCK BAGS EACH
		497+34	LT & RT	720	720	--	--	--	--	40
		502+79	LT & RT	100	100	--	--	--	--	--
		514+77	RT	50	50	--	--	--	--	--
		537+00	RT	50	50	--	--	--	--	--
		540+04	LT & RT	100	100	--	--	--	--	--
		550+19	LT & RT	100	100	--	--	--	--	--
587+50	-	592+50	LT	550	550	--	--	100	--	40
		661+23	LT & RT	130	130	--	--	--	--	20
689+50	-	697+50	LT & RT	1780	1780	--	--	100	--	70
		711+14	LT & RT	100	100	--	--	--	--	--
		722+15	LT & RT	100	100	--	--	--	--	--
		746+08	LT & RT	290	290	--	--	--	--	20
754+50	-	759+00	LT & RT	1000	1000	--	--	100	--	70
775+00	-	780+00	LT & RT	1100	1100	--	--	100	--	70
		802+90	LT & RT	260	260	--	--	--	--	20
808+40	-	810+70	LT & RT	300	300	--	--	60	--	20
823+50	-	827+75	LT & RT	550	550	--	--	60	--	40
836+50	-	839+00	LT & RT	550	550	--	--	60	--	70
862+50	-	867+00	LT & RT	880	880	--	--	60	--	70
870+50	-	877+00	LT & RT	1100	1100	--	--	100	--	20
917+00	-	918+00	RT	100	100	--	--	10	--	20
		985+03	LT & RT	240	240	--	--	--	--	20
		994+21	LT & RT	240	240	--	--	--	--	20
		1008+82	LT & RT	300	300	--	--	--	--	20
		1015+24	LT & RT	280	280	--	--	--	--	20
		1024+14	LT & RT	220	220	--	--	--	--	20
		1027+48	LT & RT	220	220	--	--	--	--	20
		1034+12	LT & RT	280	280	--	--	--	--	20
			PROJECT 1560-07-70	--	--	7	4	250	--	--
			UNDISTRIBUTED	500	500	--	--	--	150	100
			TOTAL 0010	12,190	12,190	7	4	1,000	150	830

STATION	TO	STATION	LOCATION	633.5200 MARKERS CULVERT END EACH
495+73	-	1172+40	MAINLINE	102
			TOTAL 0010	102

STATION	TO	STATION	LOCATION	638.2102 MOVING SIGNS TYPE II EACH	638.4000 MOVING SMALL SIGN SUPPORTS EACH	REMARKS
495+73	-	1172+40	LT & RT	11	11	NO PASSING SIGNS
498+60			LT	1	1	NO PARKING SIGN
			UNDISTRIBUTED	10	10	CULVERT/SLOPE WORK AREA
			TOTAL 0010	22	22	

3

STATION	LOCATION	DURATION DAYS	643.0300 TRAFFIC CONTROL DRUMS DAY	643.0420 TRAFFIC CONTROL BARRICADES TYPE III DAY	643.0705 TRAFFIC CONTROL WARNING LIGHTS TYPE A DAY	643.0715 TRAFFIC CONTROL WARNING LIGHTS TYPE C DAY	643.0900 TRAFFIC CONTROL SIGNS DAY	643.1000 TRAFFIC CONTROL SIGNS FIXED MESSAGE SF	643.5000 TRAFFIC CONTROL EACH	661.0100.01 TEMPORARY TRAFFIC SIGNALS FOR BRIDGES CULVERT 497+33 LS	661.0100.02 TEMPORARY TRAFFIC SIGNALS FOR BRIDGES CULVERT 871+72 LS	REMARKS
	PROJECT	145	--	--	--	--	4,930	--	1	--	--	ADVANCED WARNING
	PROJECT		--	--	--	--	--	36	--	--	--	G20-57 SIGNS TO BE PLACED AT PROJECT TERMINI 7 DAYS PRIOR TO CONSTRUCTION AND REMOVED WHEN
	SHOULDERS	20	25,800	--	--	--	--	--	--	--	--	PLACE ALONG SHOULDERS DURING THE INITIAL MILL AND CIR PROCESS UNTIL THE SURFACE LIFT IS COMPLETED
	CULVERT AND SLOPE OPERATIONS	45	1,800	--	--	--	990	--	--	--	--	
	PAVING OPERATIONS	35	--	--	--	--	1,960	--	--	--	--	
497+33	CULVERT REPLACEMENT	10	820	70	80	400	180	--	--	1	--	STAGE 1 & 2
871+72	CULVERT REPLACEMENT	10	820	70	40	400	140	--	--	--	1	STAGE 1 & 2
559+50	TRAIL	145	--	--	--	--	290	--	--	--	--	NORTH COUNTRY TRAIL CROSSING
	TOTAL 0010		29,240	140	120	800	8,490	36	1	1	1	

3

STATION	TO	STATION	LOCATION	646.1020 MARKING LINE EPOXY 4-INCH LF	646.1040 MARKING LINE GROOVED WET REF EPOXY 4-INCH LF	646.3020 MARKING LINE EPOXY 8-INCH LF	649.0105 TEMPORARY MARKING LINE PAINT 4-INCH LF	649.0120 TEMPORARY MARKING LINE EPOXY 4-INCH LF	REMARKS
495+73	-	1172+40	CL	--	--	--	74,280	--	FOR PLACEMENT ON CENTERLINE ON BINDER OR CIR SURFACE
495+73	-	1172+40	CL	--	--	--	--	83,930	FOR PLACEMENT ON CENTERLINE PRIOR TO MILLING RUMBLE STRIPS
495+73	-	1172+40	CL	81,180	--	--	--	--	FOR PLACEMENT ON CENTERLINE AFTER MILLING RUMBLE STRIPS
495+73	-	1172+40	RT & LT	--	133,660	--	--	--	EDGELINES
500+16	-	501+33	RT	--	--	117	--	--	TURN LANE
			TOTAL 0010	81,180	133,660	117	74,280	83,930	

STATION	649.0150 TEMPORARY MARKING LINE REMOVABLE TAPE 4-INCH LF	649.0850 TEMPORARY MARKING STOP LINE REMOVABLE TAPE 18-INCH LF	649.0960 TEMPORARY MARKING REMOVABLE MASK OUT TAPE 6-INCH LF	REMARKS
497+33	1,023	24	771	STAGE 1 & 2
871+72	815	24	1,091	STAGE 1 & 2
	1,838	48	1,862	

STATION	TO	STATION	LOCATION	648.0100 LOCATING NO-PASSING ZONES MI
495+73	-	1172+40	PROJECT	12.81
			TOTAL 0010	12.81

3

STATION	TO	STATION	LOCATION	650.4500 CONSTRUCTION STAKING SUBGRADE LF	650.5000 CONSTRUCTION STAKING BASE LF	650.5500 CONSTRUCTION CURB GUTTER AND CURB & GUTTER LF	650.6000 CONSTRUCTION STAKING PIPE CULVERTS EACH	650.8000 CONSTRUCTION STAKING RESURFACING REFERENCE LF	650.9910.01 CONSTRUCTION STAKING SUPPLEMENTAL CONTROL (PROJECT) (01. 1560-07-70) LS	650.9920 CONSTRUCTION STAKING SLOPE STAKES LF
495+73	-	1172+40		--	--	--	--	67,620	1	--
498+52	-	499+78	LT	--	--	198	--	--	--	--
916+30	-	917+60	RT	--	--	164	--	--	--	--
			CULVERTS	1,395	1,395	--	14	--	--	--
			SLOPE GRADING	--	--	--	--	--	--	3,665
			TOTAL 0010	1,395	1,395	362	14	67,620	1	3,665

STATION	208.1500.S TEMPORARY LANE SHIFT DURING CULVERT WORK EACH
497+33	1
661+23	1
746+08	1
802+87 & 802+93	1
824+26	1
862+98	1
871+72	1
985+03	1
994+21	1
1008+82	1
1015+24	1
1024+15	1
1027+48	1
1034+12	1
	14

STATION	TO	STATION	LOCATION	690.0150 SAWING ASPHALT LF	690.0250 SAWING CONCRETE LF
			CULVERT REPLACEMENTS	952	--
			BUTT JOINTS	485	--
498+52	-	500+50	CURB AND GUTTER	204	3
499+04	-	500+50	PARKING LOT	150	--
916+30	-	917+60	CURB AND GUTTER	281	--
			BASE REPAIR FOR CIR	204	--
			TOTAL 0010	2,276	3

3

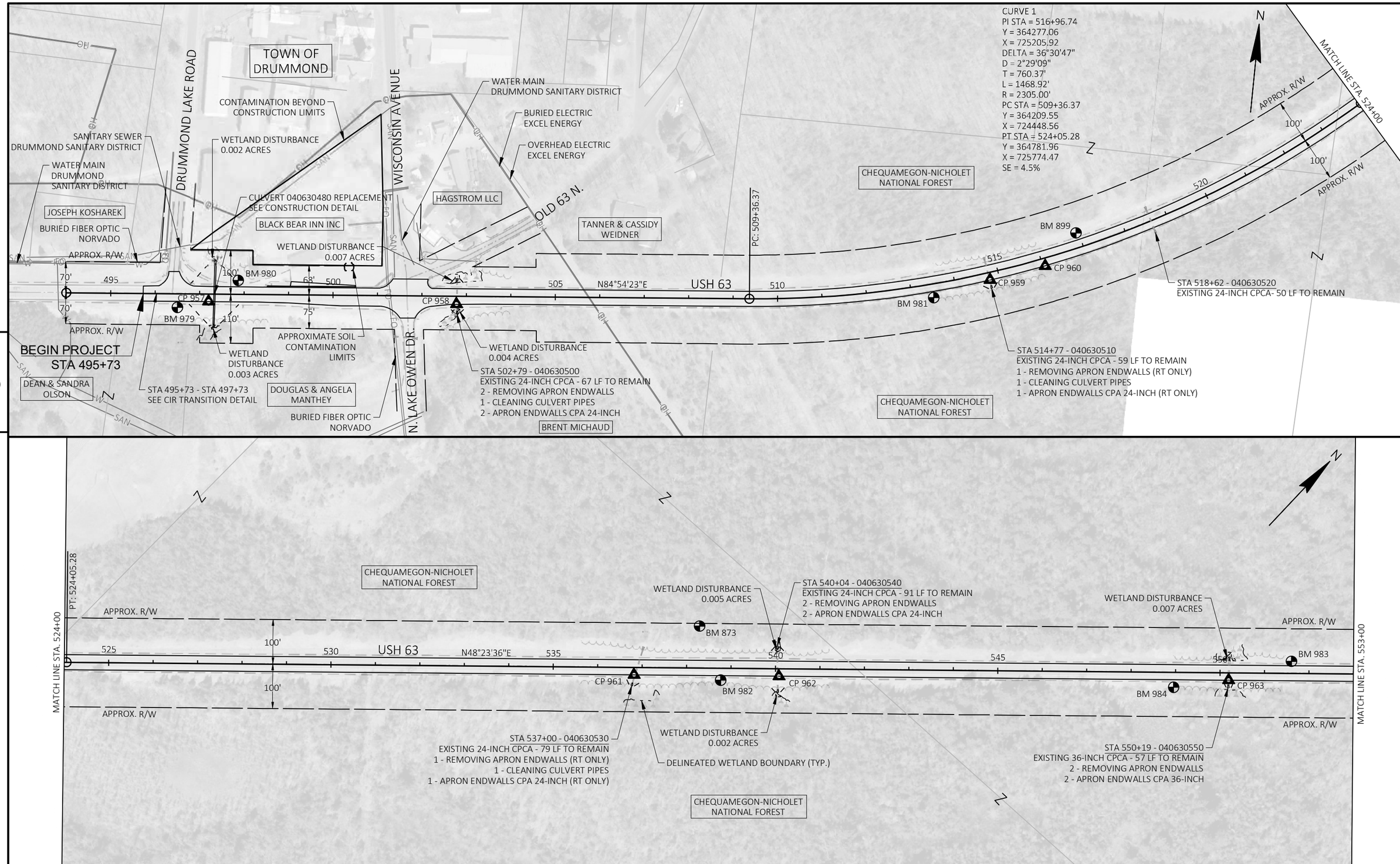

PROJECT NO: 1560-07-70	HWY: USH 63	COUNTY: BAYFIELD	PLAN	SHEET 59	E

FILE NAME : G:\00\00093\00093523\CADD\SHEETSPLAN\15600701_050201-PN.DWG
LAYOUT NAME - 050201
PLOT DATE : 7/30/2021 1:43 PM PLOT BY : SHAWN DOLENS PLOT NAME : PLOT SCALE : 1 IN:200 FT

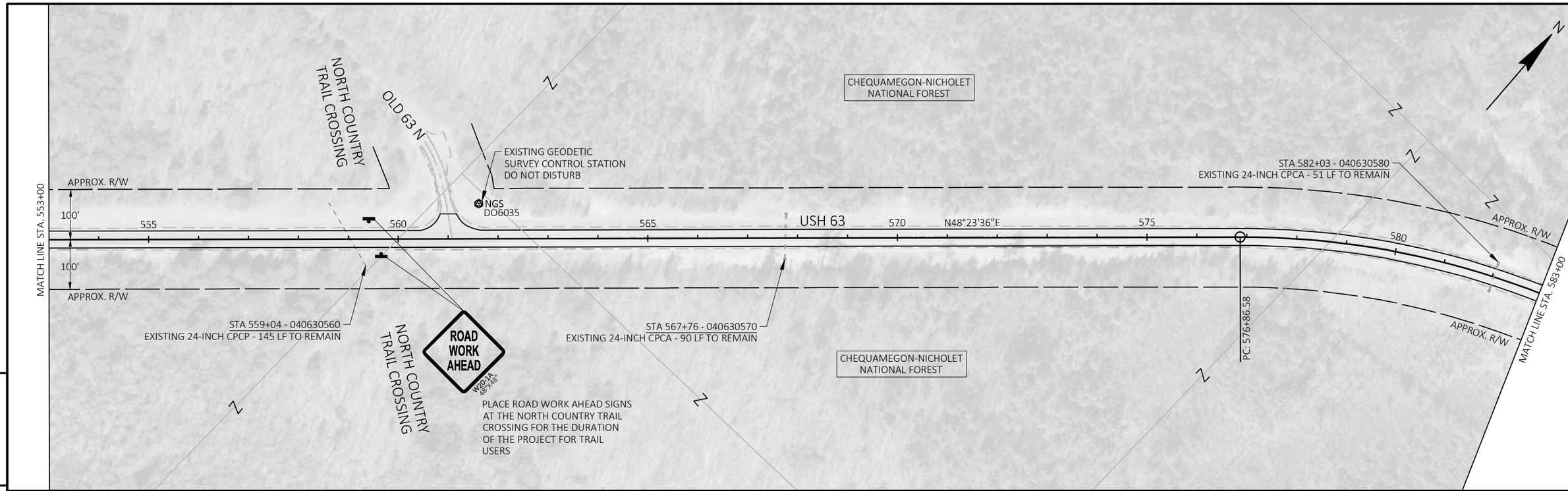

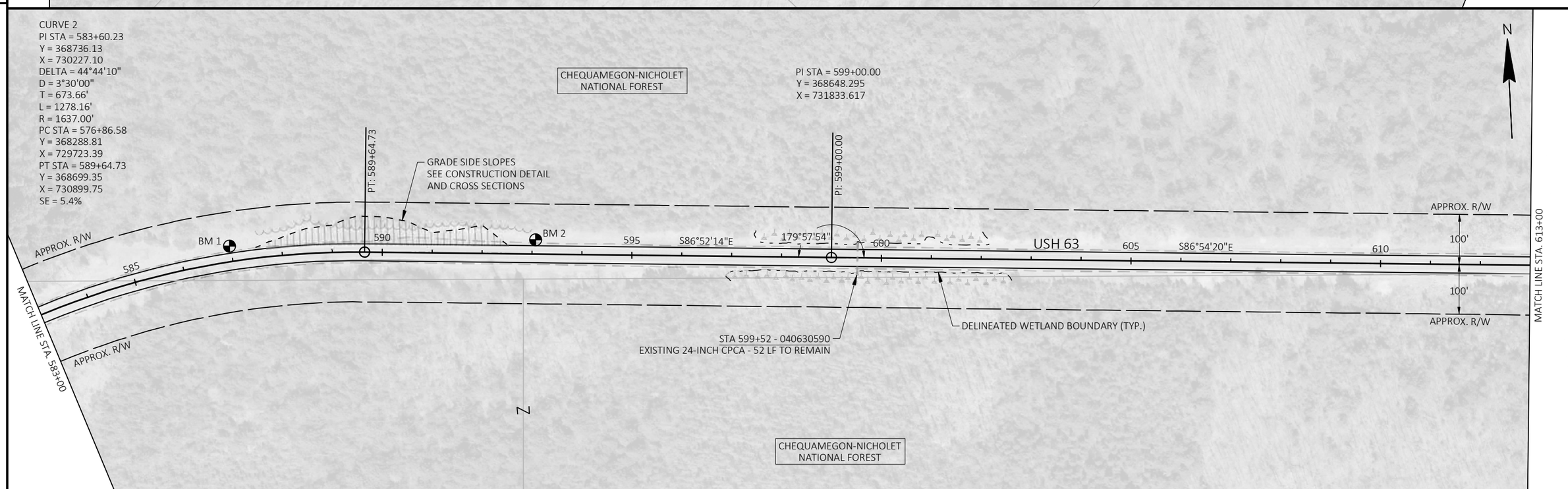

PROJECT NO: 1560-07-70	HWY: USH 63	COUNTY: BAYFIELD	PLAN	SHEET 60	E

FILE NAME : G:\00\00093\00093523\CADD\SHEETSPLAN\15600701_050201-PN.DWG
LAYOUT NAME - 050202
PLOT DATE : 7/13/2021 7:05 AM PLOT BY : COURTNEY ROOYAKKERS PLOT NAME : PLOT SCALE : 1 IN:200 FT

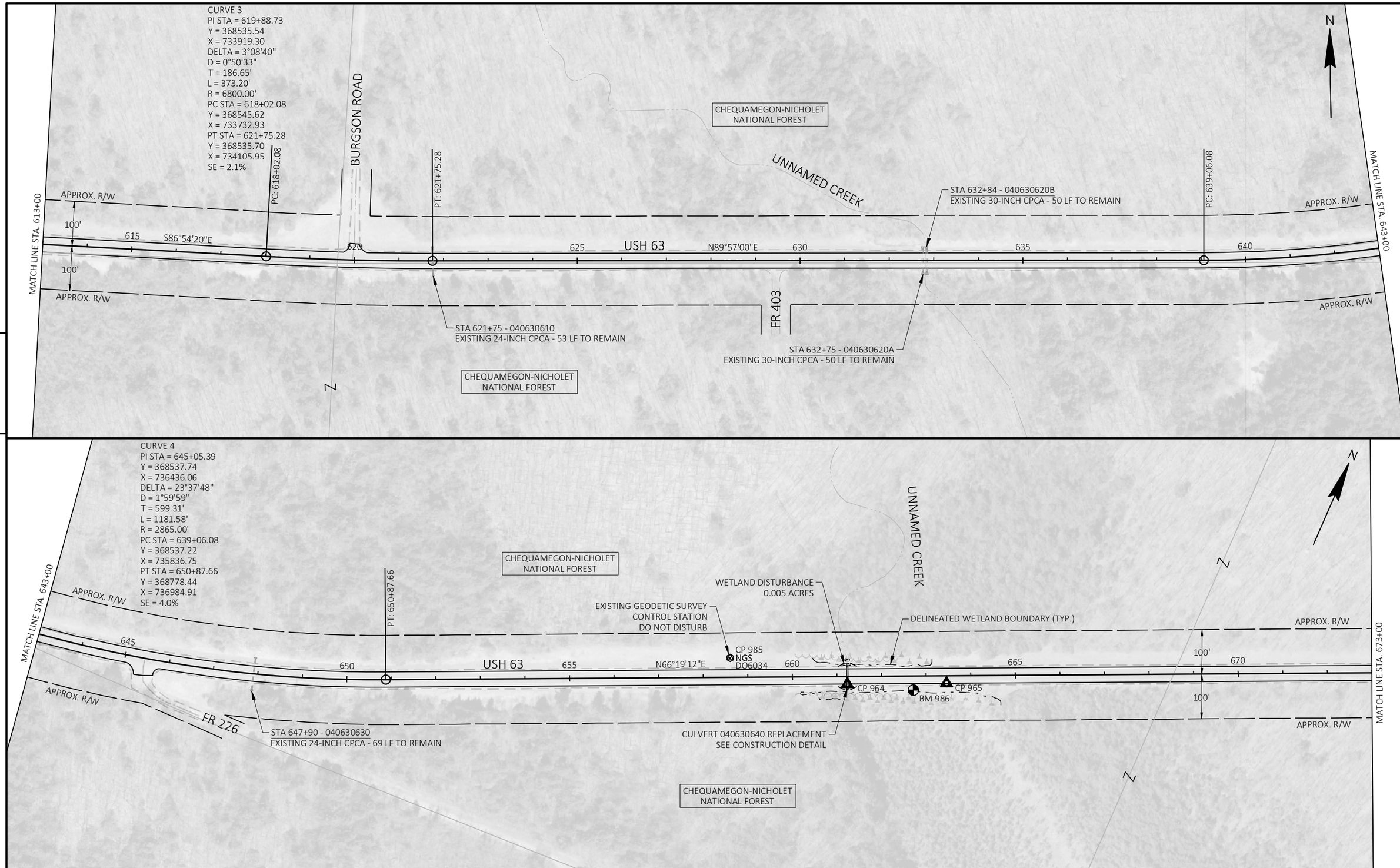

5

5

PROJECT NO: 1560-07-70	HWY: USH 63	COUNTY: BAYFIELD	PLAN	SHEET 61	E

FILE NAME : G:\00\00093\00093523\CADD\SHEETSPLAN\15600701_050201-PN.DWG
LAYOUT NAME - 050203
PLOT DATE : 7/13/2021 7:06 AM
PLOT BY : COURTNEY ROOYAKKERS
PLOT NAME :
PLOT SCALE : 1 IN:200 FT

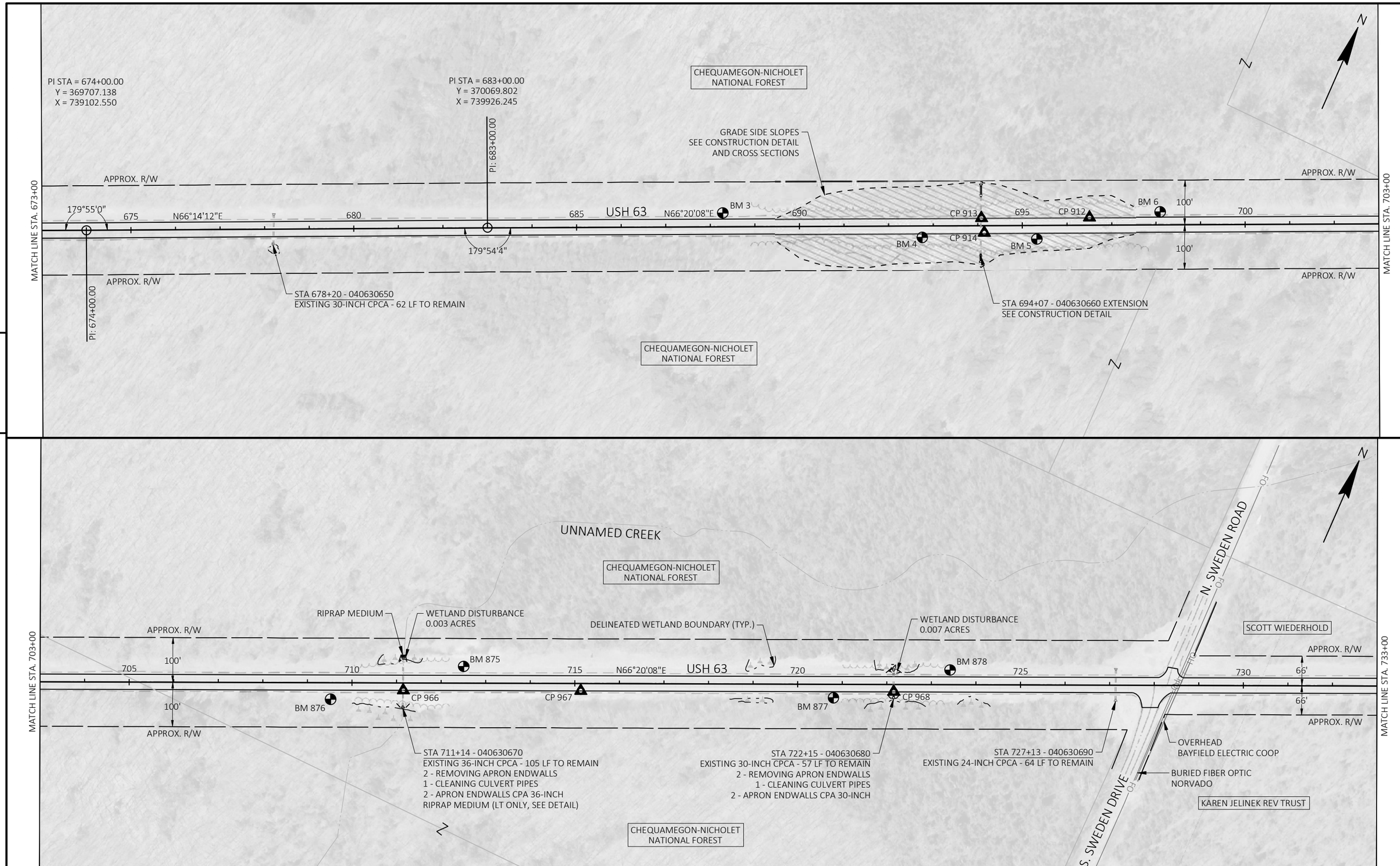

PROJECT NO: 1560-07-70	HWY: USH 63	COUNTY: BAYFIELD	PLAN	SHEET 62	E

FILE NAME : G:\00\00093\00093523\CADD\SHEETSPLAN\15600701_050201-PN.DWG
LAYOUT NAME - 050204
PLOT DATE : 7/13/2021 7:06 AM PLOT BY : COURTNEY ROOYAKKERS PLOT NAME : PLOT SCALE : 1 IN:200 FT

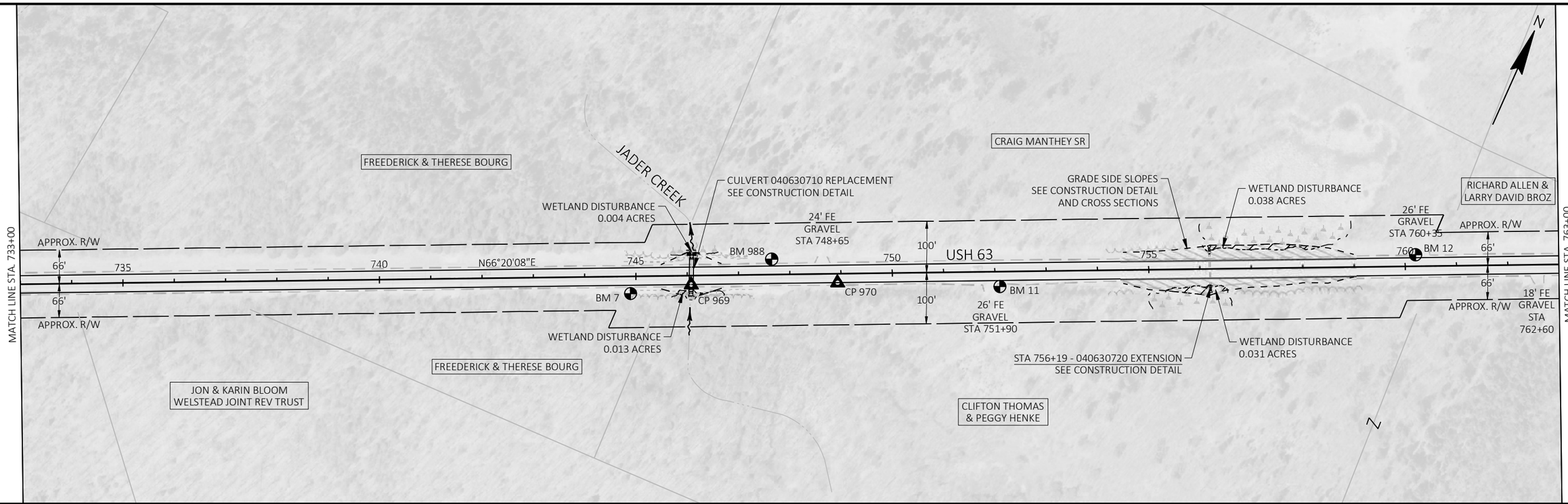

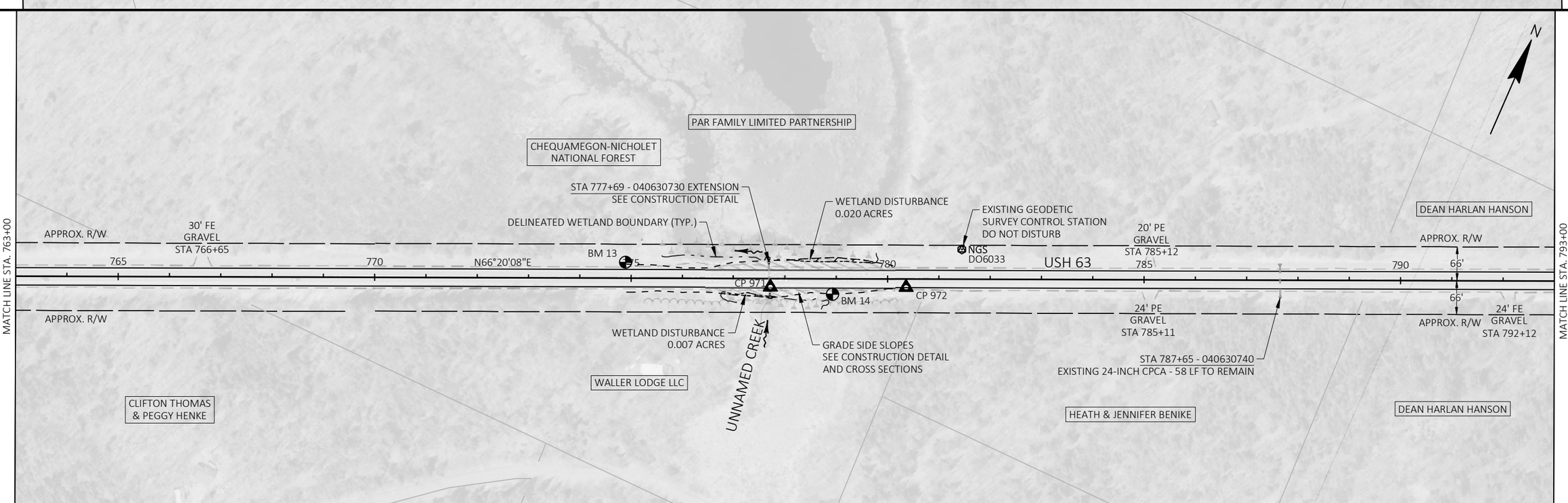

PROJECT NO: 1560-07-70	HWY: USH 63	COUNTY: BAYFIELD	PLAN	SHEET 63	E

FILE NAME : G:\00\00093\00093523\CADD\SHEETSPLAN\15600701_050201-PN.DWG
LAYOUT NAME - 050205
PLOT DATE : 7/13/2021 7:07 AM
PLOT BY : COURTNEY ROOYAKKERS
PLOT NAME :
PLOT SCALE : 1 IN:200 FT
WISDOT/CADDS SHEET 44

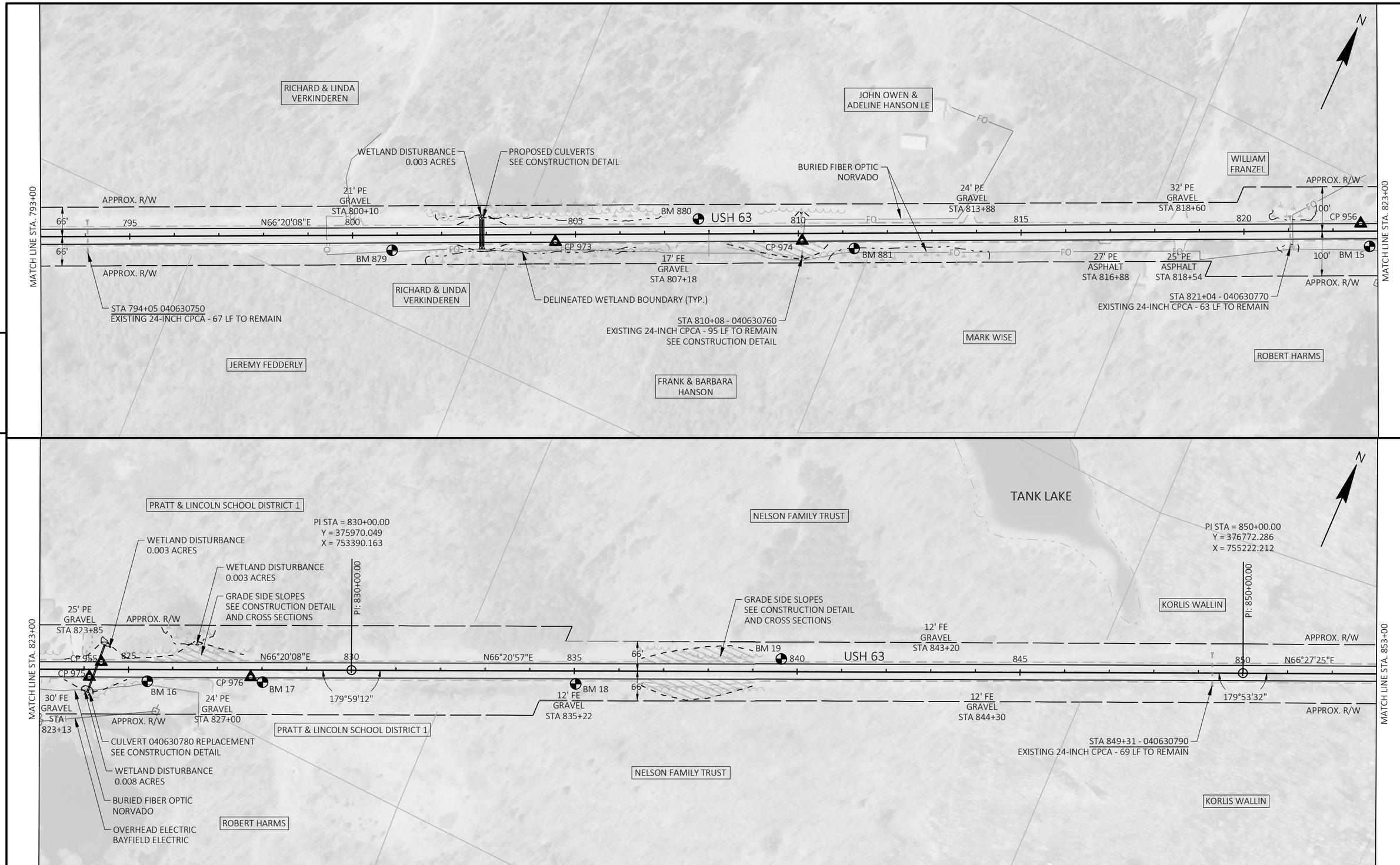

PROJECT NO: 1560-07-70	HWY: USH 63	COUNTY: BAYFIELD	PLAN	SHEET 64	E

FILE NAME : G:\00\00093\00093523\CADD\SHEETSPLAN\15600701_050201-PN.DWG
LAYOUT NAME - 050206
PLOT DATE : 7/13/2021 7:07 AM
PLOT BY : COURTNEY ROOYAKKERS
PLOT NAME :
PLOT SCALE : 1 IN:200 FT

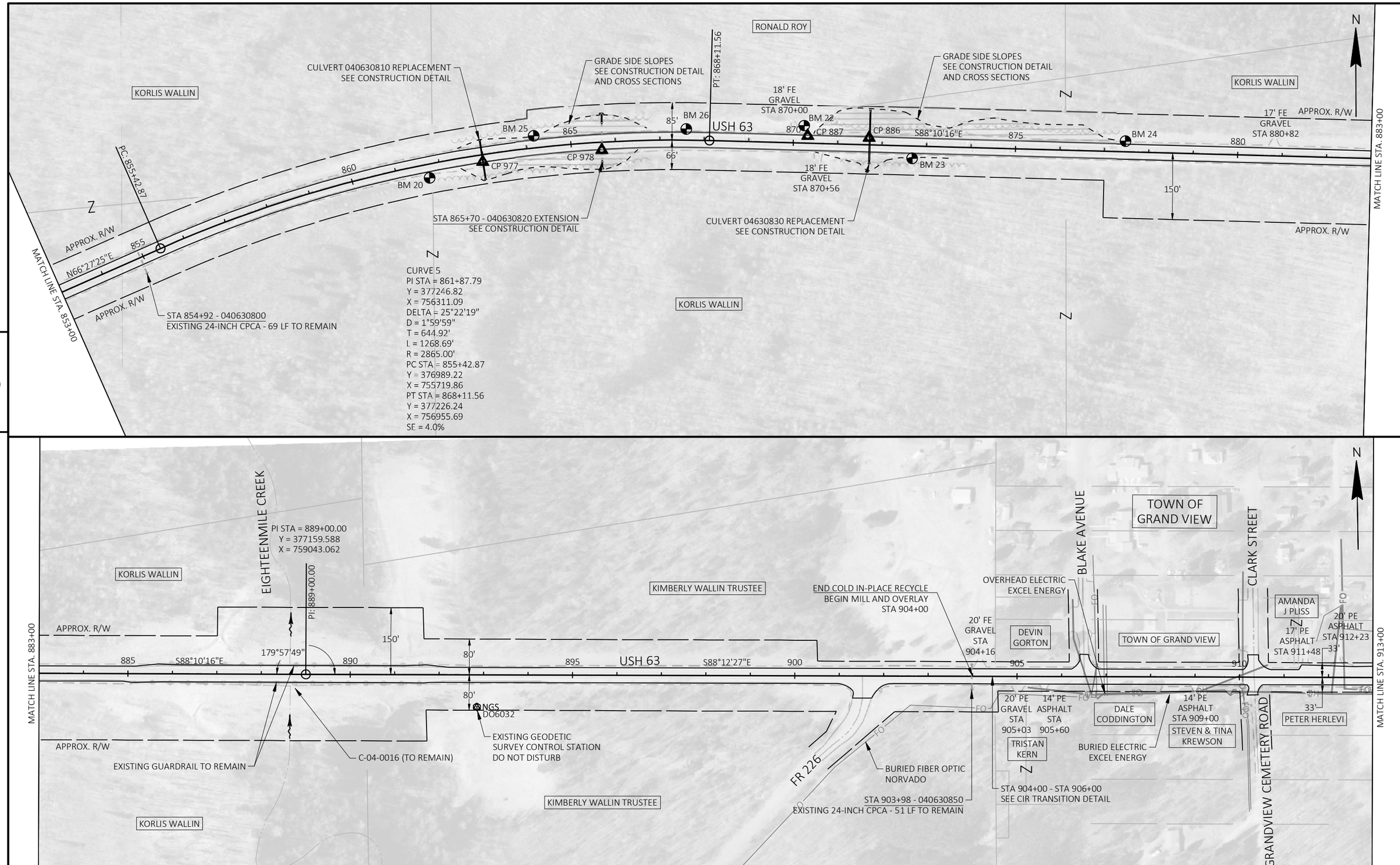

PROJECT NO: 1560-07-70	HWY: USH 63	COUNTY: BAYFIELD	PLAN	SHEET 65	E

FILE NAME : G:\00\00093\00093523\CADD\SHEETSPLAN\15600701_050201-PN.DWG
LAYOUT NAME - 050207
PLOT DATE : 7/13/2021 7:07 AM PLOT BY : COURTNEY ROOYAKKERS PLOT NAME : PLOT SCALE : 1 IN:200 FT
WISDOT/CADDS SHEET 44

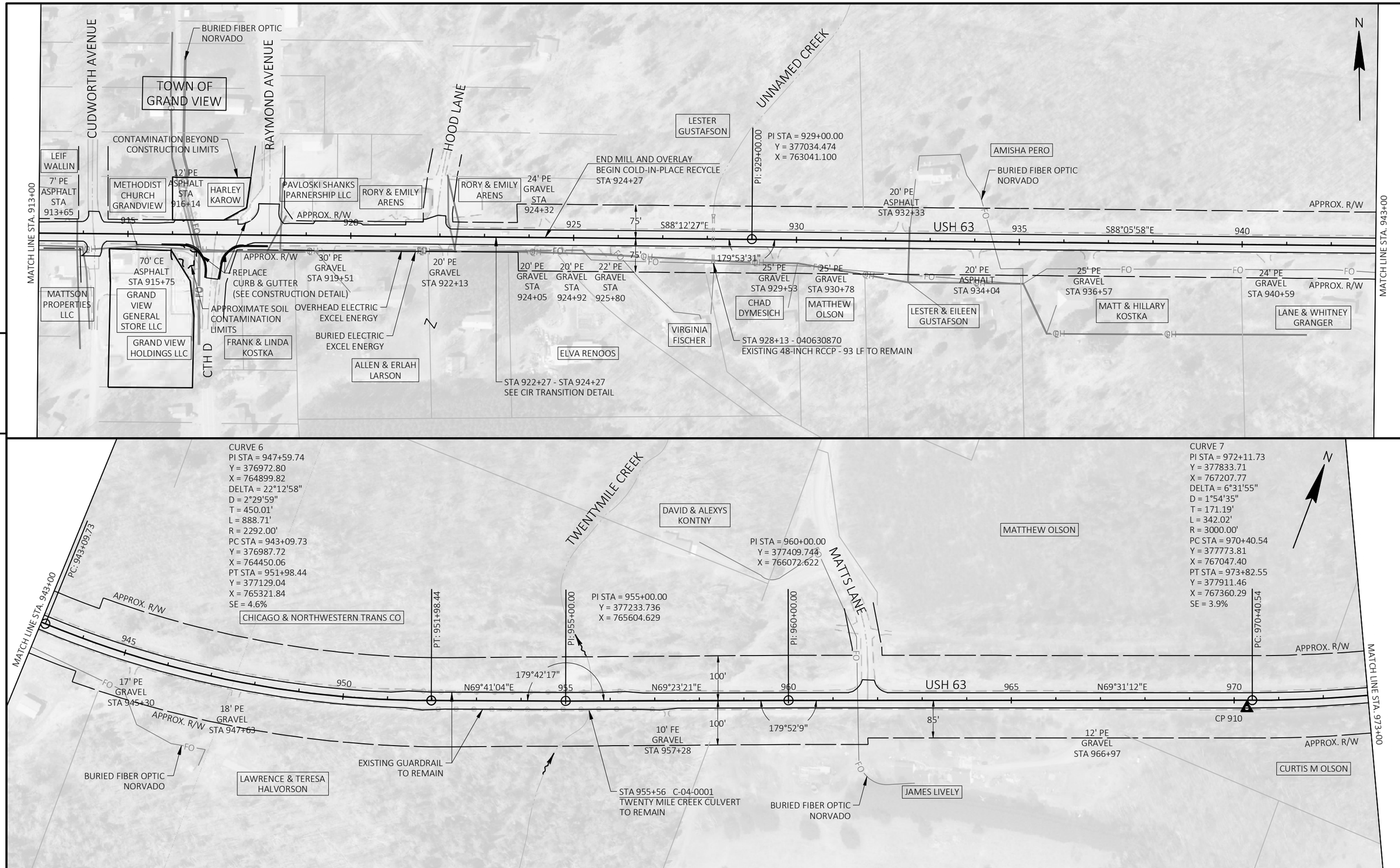

5

5

PROJECT NO: 1560-07-70	HWY: USH 63	COUNTY: BAYFIELD	PLAN	SHEET 66	E

FILE NAME : G:\00\00093\00093523\CADD\SHEETSPLAN\15600701_050201-PN.DWG
LAYOUT NAME - 050208
PLOT DATE : 7/13/2021 7:07 AM
PLOT BY : COURTNEY ROOYAKKERS
PLOT NAME :
PLOT SCALE : 1 IN:200 FT
WISDOT/CADDS SHEET 44

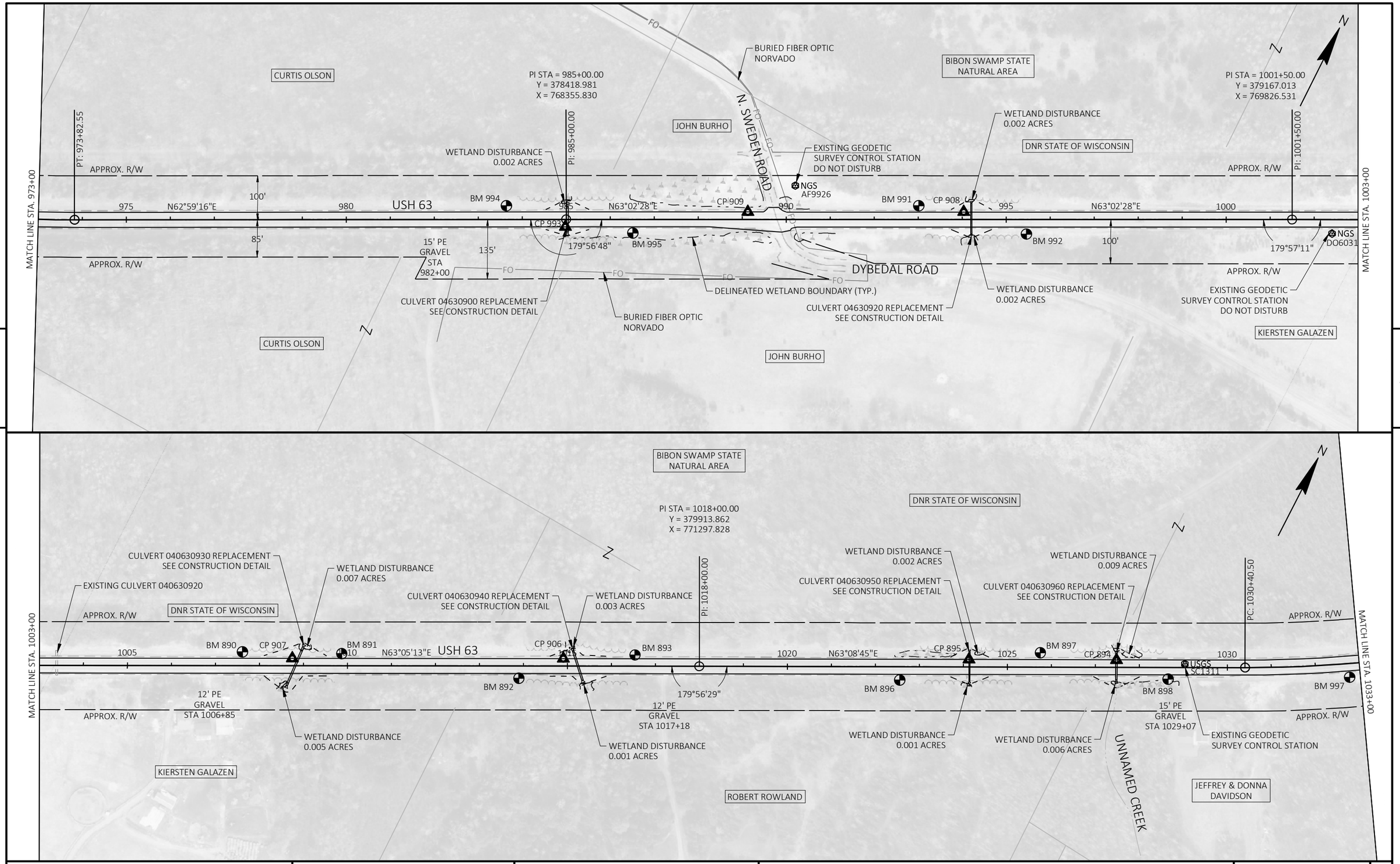

PROJECT NO: 1560-07-70	HWY: USH 63	COUNTY: BAYFIELD	PLAN	SHEET 67	E

FILE NAME : G:\00\00093\00093523\CADD\SHEETSPLAN\15600701_050201-PN.DWG
LAYOUT NAME - 050209
PLOT DATE : 7/28/2021 8:49 AM
PLOT BY : COURTNEY ROOYAKKERS
PLOT NAME :
PLOT SCALE : 1 IN:200 FT
WISDOT/CADDS SHEET 44

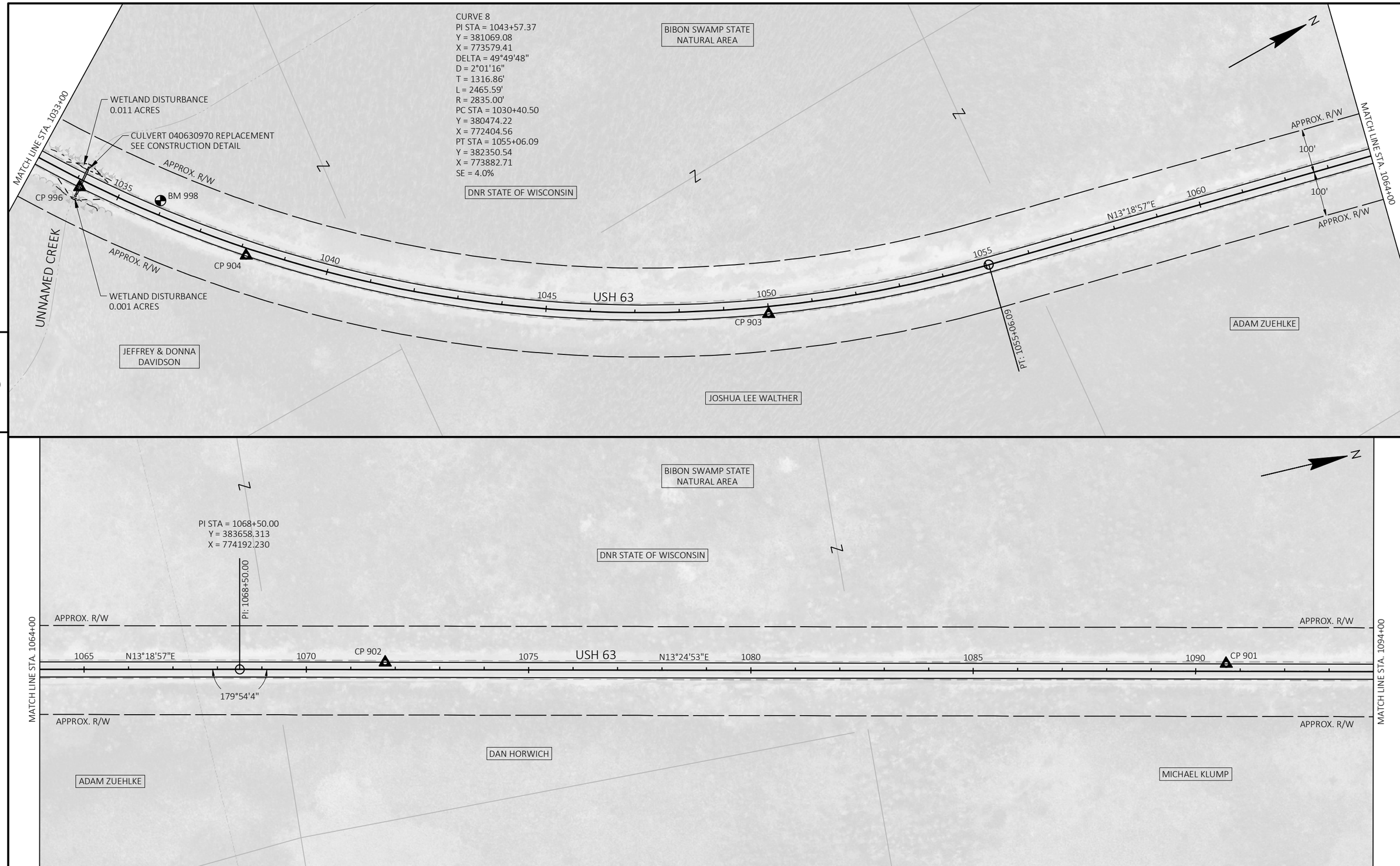

PROJECT NO: 1560-07-70	HWY: USH 63	COUNTY: BAYFIELD	PLAN	SHEET 68	E

FILE NAME : G:\00\00093\00093523\CADD\SHEETSPLAN\15600701_050201-PN.DWG
LAYOUT NAME - 050210
PLOT DATE : 7/13/2021 7:07 AM
PLOT BY : COURTNEY ROOYAKKERS
PLOT NAME :
PLOT SCALE : 1 IN:200 FT
WISDOT/CADDS SHEET 44

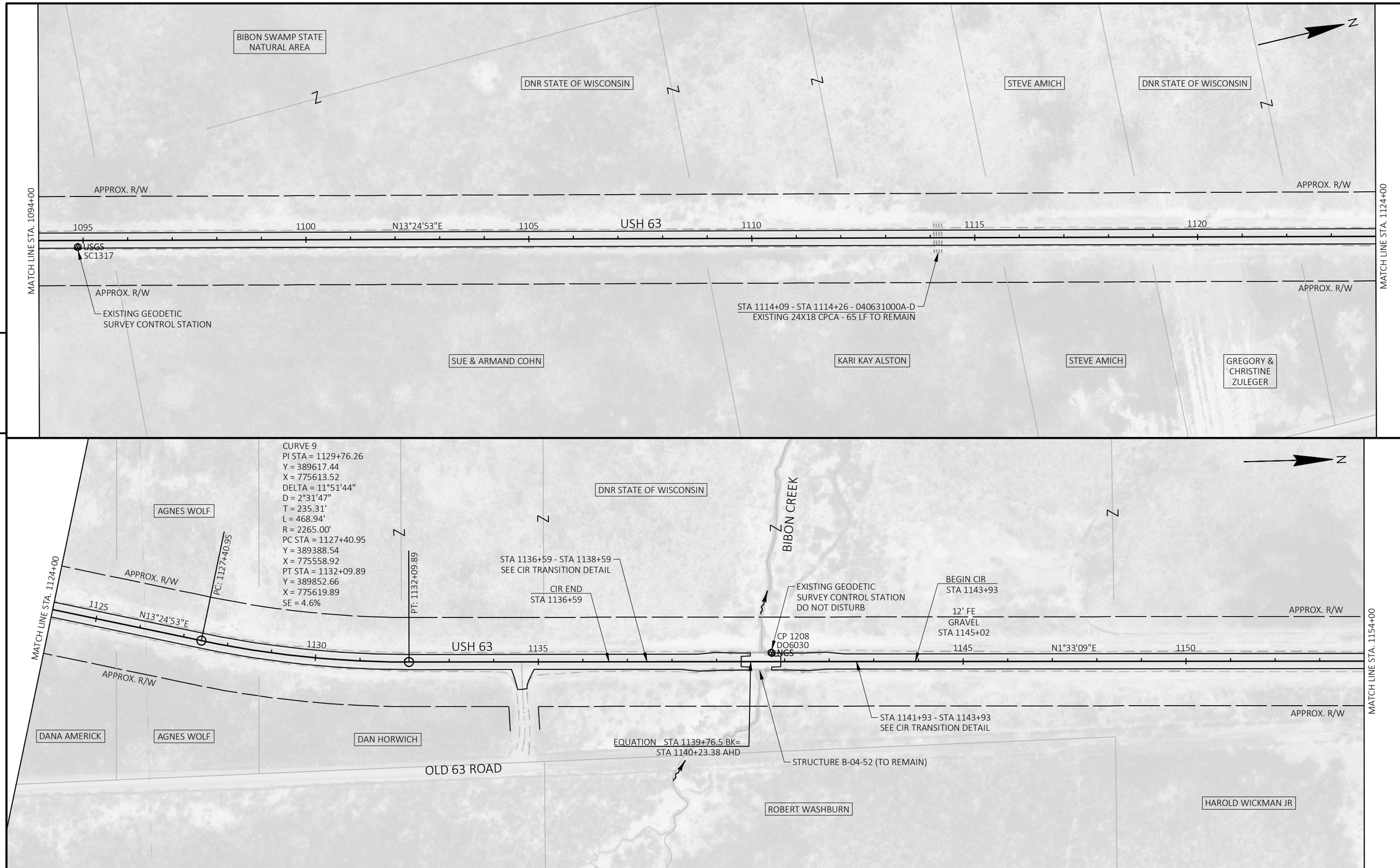

PROJECT NO: 1560-07-70	HWY: USH 63	COUNTY: BAYFIELD	PLAN	SHEET 69	E

FILE NAME : G:\00\00093\00093523\CADD\SHEETSPLAN\15600701_050201-PN.DWG
LAYOUT NAME - 050211
PLOT DATE : 7/28/2021 8:50 AM
PLOT BY : COURTNEY ROOYAKKERS
PLOT NAME :
PLOT SCALE : 1 IN:200 FT

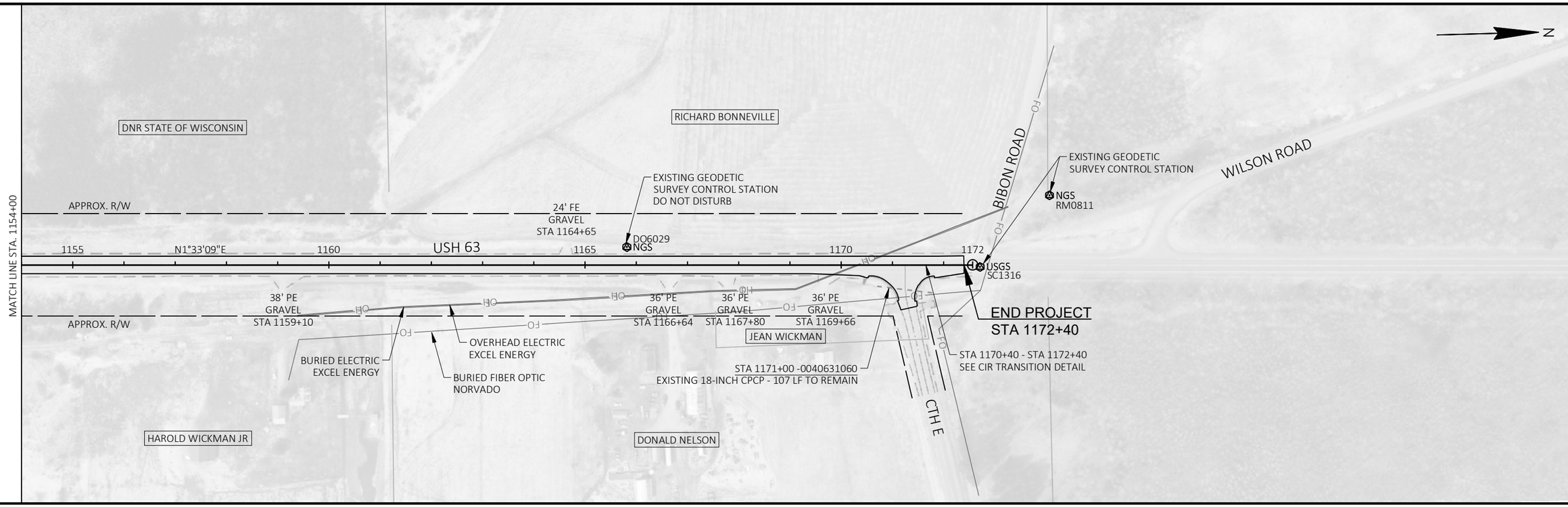

5

5

PROJECT NO: 1560-07-70	HWY: USH 63	COUNTY: BAYFIELD	PLAN	SHEET 70	E

FILE NAME : G:\00\00093\00093523\CADD\SHEETSPLAN\15600701_050201-PN.DWG
LAYOUT NAME - 050212
PLOT DATE : 7/28/2021 8:50 AM
PLOT BY : COURTNEY ROOYAKKERS
PLOT NAME :
PLOT SCALE : 1 IN:200 FT

Standard Detail Drawing List

08D01-22A	CONCRETE CURB & GUTTER
08D01-22B	CONCRETE CURB, TIES AND CURB AND GUTTER APPLICATIONS
08E08-03	TYPICAL INSTALLATIONS OF EROSION BALES / TEMPORARY DITCH CHECKS
08E09-06	SILT FENCE
08E11-02	TURBIDITY BARRIER
08E15-01	CULVERT PIPE CHECK
08F01-11	APRON ENDWALLS FOR CULVERT PIPE
08F02-01	APRON ENDWALLS FOR PIPE ARCH AND ELLIPTICAL PIPE
08F04-07	JOINT TIES FOR CONCRETE PIPE AND CONCRETE COLLAR DETAIL
09G02-05A	BRIDGE TEMPORARY TRAFFIC SIGNAL INSTALLATION
09G02-05B	BRIDGE TEMPORARY TRAFFIC SIGNAL INSTALLATION
09G02-05C	BRIDGE TEMPORARY TRAFFIC SIGNAL INSTALLATION
13A10-02A	2-LANE RURAL SHOULDER RUMBLE STRIP, MILLING
13A10-02C	2-LANE RURAL SHOULDER RUMBLE STRIP, MILLING
13A11-03A	2-LANE RURAL CENTER LINE RUMBLE STRIP, MILLING
13A11-03B	2-LANE RURAL CENTER LINE RUMBLE STRIP, MILLING
13C19-03	HMA LONGITUDINAL JOINTS
14B07-15A	CONCRETE BARRIER TEMPORARY PRECAST, 12'-6"
14B07-15B	CONCRETE BARRIER TEMPORARY PRECAST, 12'-6"
14B07-15C	CONCRETE BARRIER TEMPORARY PRECAST, 12'-6"
14B07-15D	CONCRETE BARRIER TEMPORARY PRECAST, 12'-6"
14B07-15E	CONCRETE BARRIER TEMPORARY PRECAST, 12'-6"
14B07-15F	CONCRETE BARRIER TEMPORARY PRECAST, 12'-6"
14B07-15G	CONCRETE BARRIER TEMPORARY PRECAST, 12'-6"
14B07-15H	CONCRETE BARRIER TEMPORARY PRECAST, 12'-6"
14B07-15I	CONCRETE BARRIER TEMPORARY PRECAST, 12'-6"
14B29-01	SAFETY EDGE
15A03-02A	FLEXIBLE MARKER POST FOR CULVERT END
15A03-02B	FLEXIBLE MARKER POST FOR CULVERT END
15C03-05	BARRICADES AND SIGNS FOR SIDEROAD CLOSURES
15C04-05	TRAFFIC CONTROL, ADVANCE WARNING SIGNS 45 M.P.H. OR GREATER TWO-WAY UNDIVIDED ROAD OPEN TO TRAFFIC
15C08-20A	LONGITUDINAL MARKING (MAINLINE)
15C11-09A	CHANNELIZING DEVICES FLEXIBLE TUBULAR MARKER POST
15C11-09B	CHANNELIZING DEVICES DRUMS, CONES, BARRICADES AND VERTICAL PANELS
15C12-07	TRAFFIC CONTROL FOR LANE CLOSURE WITH FLAGGING OPERATION
15C19-06A	MOVING PAVEMENT MARKING OPERATION TWO-LANE TWO-WAY ROADWAY
15C33-04	STOP LINE AND CROSSWALK PAVEMENT MARKING
15C35-04A	PAVEMENT MARKING (INTERSECTIONS)
15D28-04	TRAFFIC CONTROL, WORK ON SHOULDER OR PARKING LANE, UNDIVIDED ROADWAY
15D33-06	TRAFFIC CONTROL, ONE LANE ROAD WITH TEMPORARY SIGNALS
15D38-02A	TEMPORARY TRAFFIC CONTROL SIGN MOUNTING
15D38-02B	ATTACHMENT OF SIGNS TO POSTS
15D39-02	TRAFFIC CONTROL, DROP-OFF SIGNING
15D44-02	TRAFFIC CONTROL, SIGNING ON ROADWAYS WITH MILLED SURFACES
15D45-03	TRAFFIC CONTROL, SIGNING ON ROADWAYS WITH LOOSE GRAVEL
15D48-01	TRAFFIC CONTROL, LANE SHIFT IN FLAGGING OPERATION
15D51-01	TRAFFIC CONTROL, MOBILE OPERATIONS ON AN UNDIVIDED ROADWAY

6

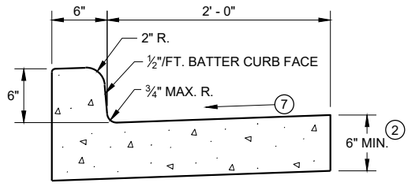

TYPES A[1] & D

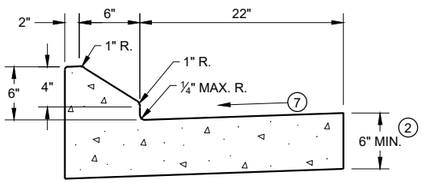

6" SLOPED CURB TYPES G[1] & J

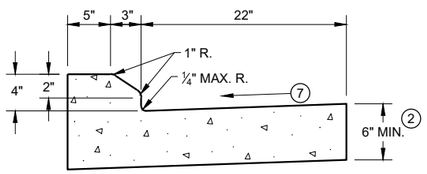

4" SLOPED CURB TYPES G[1] & J

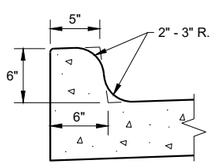

TYPES K[1] & L
(OPTIONAL CURB SHAPE)

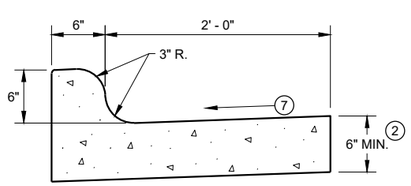

TYPES K[1] & L

CONCRETE CURB AND GUTTER 30"

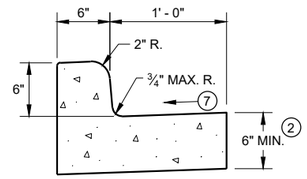

TYPES A[1] & D

CONCRETE CURB AND GUTTER 18"

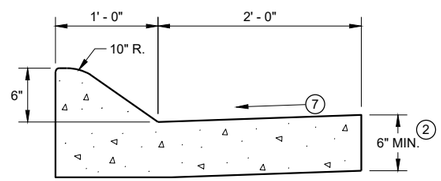

6" SLOPED CURB TYPES A[1] & D

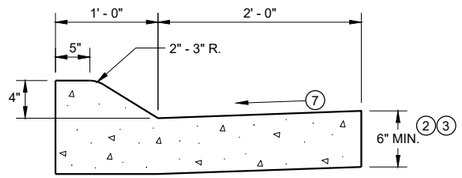

4" SLOPED CURB TYPES A[1] & D

CONCRETE CURB AND GUTTER 36"

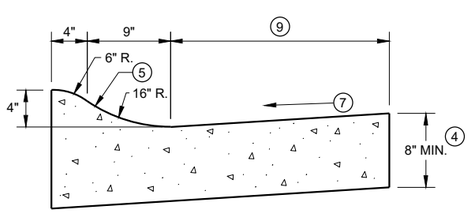

4" SLOPED CURB TYPES R[1] & T

TBT & TBTT	X
30"	22"
36"	28"

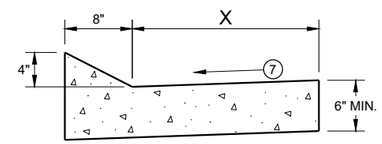

TYPES TBT & TBTT[1]

CONCRETE CURB AND GUTTER

GENERAL NOTES

DETAILS OF CONSTRUCTION AND WORKMANSHIP NOT SHOWN ON THIS DRAWING SHALL CONFORM TO THE PERTINENT REQUIREMENTS OF THE CONTRACT.

PAVEMENT TIES AND TIE BARS SHALL BE EPOXY COATED IN CONFORMANCE WITH SUBSECTION 505.2.6.2 OF THE STANDARD SPECIFICATIONS.

INTEGRAL CURB AND GUTTER SHALL CONFORM TO THE DETAILS SHOWN FOR CONCRETE CURB AND GUTTER INCLUDING THE TRANSVERSE GUTTER SLOPE.

UNLESS OTHERWISE SHOWN ON THE TYPICAL CROSS SECTIONS, THE BASE AGGREGATE AND COMMON EXCAVATION LIMITS ARE 2' - 0" BEHIND THE BACK OF CURBS.

1. TIE BARS ARE REQUIRED FOR CURB AND GUTTERS TYPES A, G, K, R, AND TBTT.
2. THE BOTTOM OF CURB AND GUTTER MAY BE CONSTRUCTED EITHER LEVEL OR PARALLEL TO THE SLOPE OF THE SUBGRADE OR BASE AGGREGATE PROVIDED A 6" MINIMUM GUTTER THICKNESS IS MAINTAINED.
3. USE 8" MINIMUM GUTTER THICKNESS WHEN USED WITH AN ADJACENT CONCRETE TRUCK APRON PLACED BEHIND BACK OF CURB.
4. THE BOTTOM OF CURB AND GUTTER MAY BE CONSTRUCTED EITHER LEVEL OR PARALLEL TO THE SLOPE OF THE SUBGRADE OR BASE AGGREGATE PROVIDED A 8" MINIMUM GUTTER THICKNESS IS MAINTAINED.
5. UNLESS OTHERWISE NOTED, FOR STAKING PURPOSES THE FACE OF CURB IS 6" FROM THE BACK OF CURB.
6. WHEN REVERSE SLOPE GUTTER IS REQUIRED, THE LOCATION(S) WILL BE SHOWN ELSEWHERE IN THE PLAN.
7. USE 4% GUTTER CROSS SLOPE UNLESS OTHERWISE NOTED IN THE PLANS.
8. INCLUDE LONGITUDINAL JOINT AND TIE BARS ALONG LANE EDGE WHEN CONCRETE PANEL WIDTH EXCEEDS THE MAXIMUM WIDTH PER TABLE BELOW. LONGITUDINAL JOINT(S) ARE NOT ALLOWED WITHIN TRAFFIC LANES AND BIKE LANES. LONGITUDINAL JOINT MAY BE SAWED.
9. CONCRETE CURB AND GUTTER 4-INCH SLOPED 30-INCH TYPE "R" AND "T" = 17 INCHES
   CONCRETE CURB AND GUTTER 4-INCH SLOPED 36-INCH TYPE "R" AND "T" = 23 INCHES

PAVEMENT THICKNESS AND MAXIMUM CONCRETE PANEL WIDTH TABLE

PAVEMENT THICKNESS	MAXIMUM PANEL WIDTH
LESS THAN 10"	12'
10" & ABOVE	15'

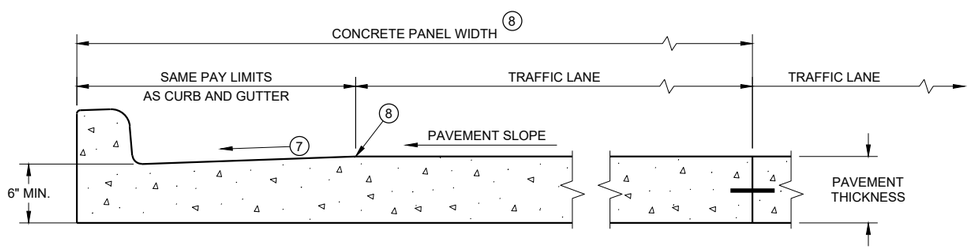

PARTIAL SECTION OF PAVEMENT *
WITH INTEGRAL CURB AND GUTTER

* BIKE LANE IS NOT SHOWN

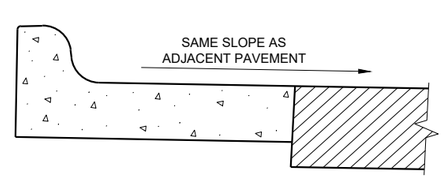

REVERSE SLOPE GUTTER[6]
(TYPICAL FOR ALL CURB & GUTTER TYPES)

CONCRETE CURB AND GUTTER

STATE OF WISCONSIN
DEPARTMENT OF TRANSPORTATION

6

SDD 08D01 - 22a

6

SDD 08D01 - 22a

GENERAL NOTES

DETAILS OF CONSTRUCTION AND WORKMANSHIP NOT SHOWN ON THIS DRAWING SHALL CONFORM TO THE PERTINENT REQUIREMENTS OF THE CONTRACT.

PAVEMENT TIES AND TIE BARS SHALL BE EPOXY COATED IN CONFORMANCE WITH SUBSECTION 505.2.6.2 OF THE STANDARD SPECIFICATIONS.

UNLESS OTHERWISE SHOWN ON THE TYPICAL CROSS SECTIONS, THE BASE AGGREGATE AND COMMON EXCAVATION LIMITS ARE 2' - 0" BEHIND THE BACK OF CURBS.

(1) TIE BARS ARE REQUIRED FOR CURB AND GUTTERS TYPES A, G, K, R, AND TBTT.

(2) THE BOTTOM OF CURB AND GUTTER MAY BE CONSTRUCTED EITHER LEVEL OR PARALLEL TO THE SLOPE OF THE SUBGRADE OR BASE AGGREGATE PROVIDED A 6" MINIMUM GUTTER THICKNESS IS MAINTAINED.

(9) REFER TO SDD 08D18 AND 08D19 FOR ADDITIONAL DRIVEWAY ENTRANCE CURB DETAILS.

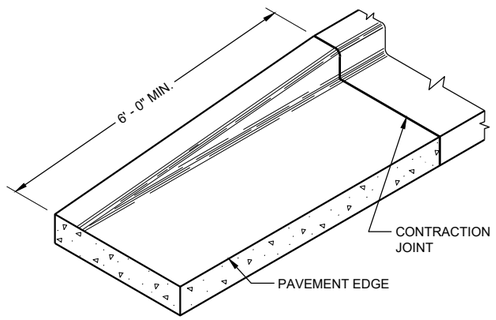

END SECTIONCURB AND GUTTER

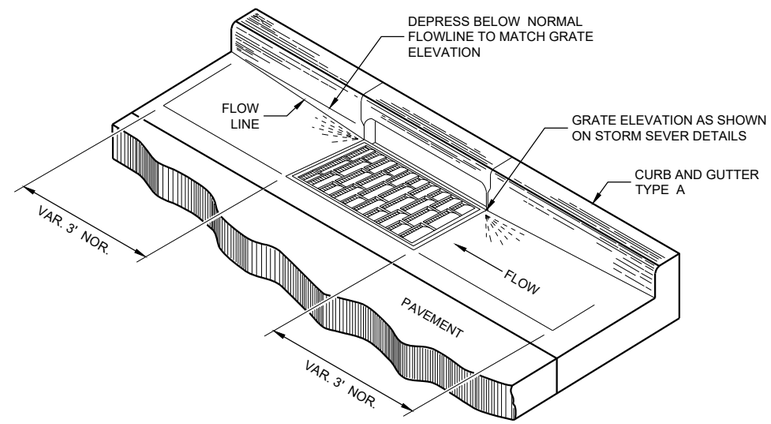

DETAIL OF CURB AND GUTTER AT INLETS
(TYPICAL H INLET COVER SHOWN)

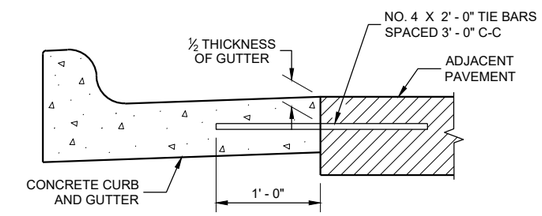

TYPICAL TIE BAR LOCATION (1)

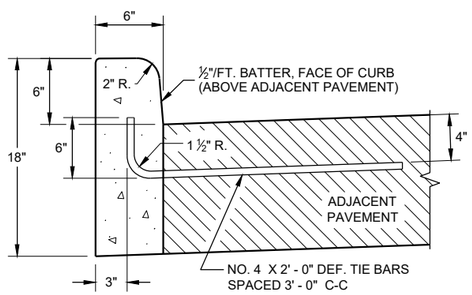

TYPES A (1) & D

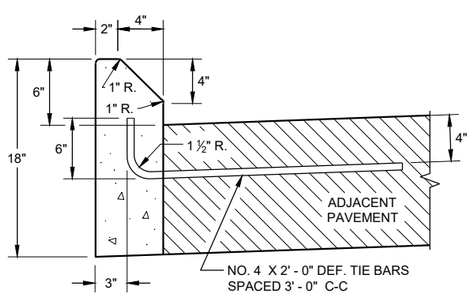

TYPES G (1) & J

CONCRETE CURB

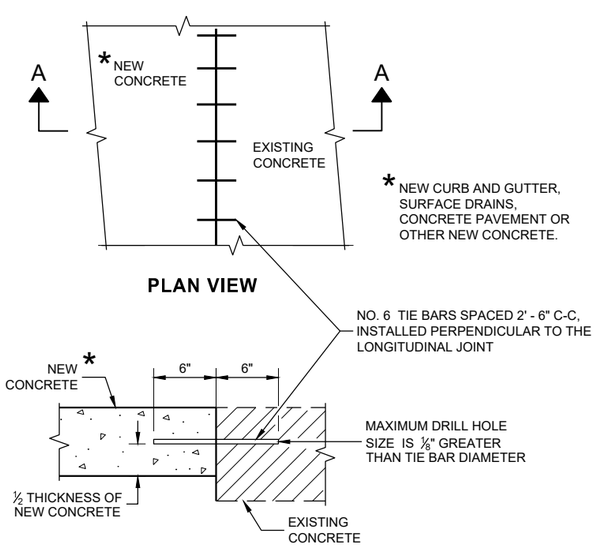

PLAN VIEW

SECTION A - A

TIE BARS DRILLED INTO EXISTING PAVEMENT

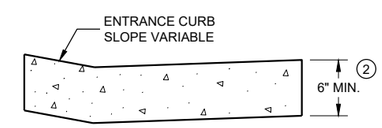

DRIVEWAY ENTRANCE CURB (9)
(WHEN DIRECTED BY THE ENGINEER)

CONCRETE CURB, TIES AND CURB AND GUTTER APPLICATIONS

STATE OF WISCONSIN
DEPARTMENT OF TRANSPORTATION

APPROVED
February 2021 — DATE
/S/ Rodnery Taylor — ROADWAY STANDARDS DEVE ENGINEER
FHWA

6
SDD 08D01 - 22b

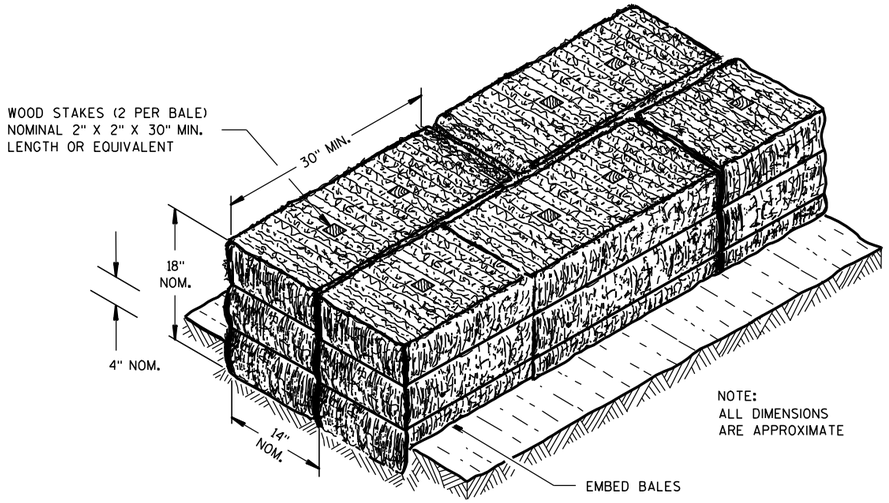

SECTION A-A

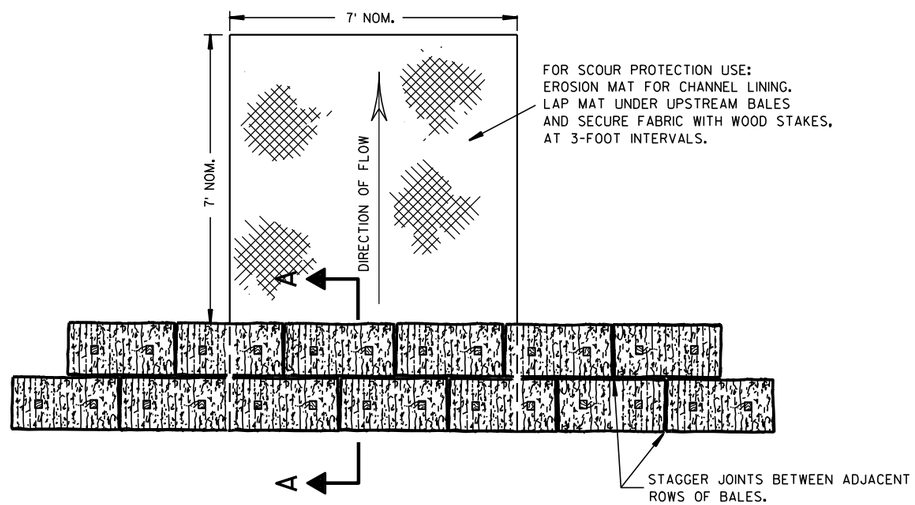

PLAN VIEW

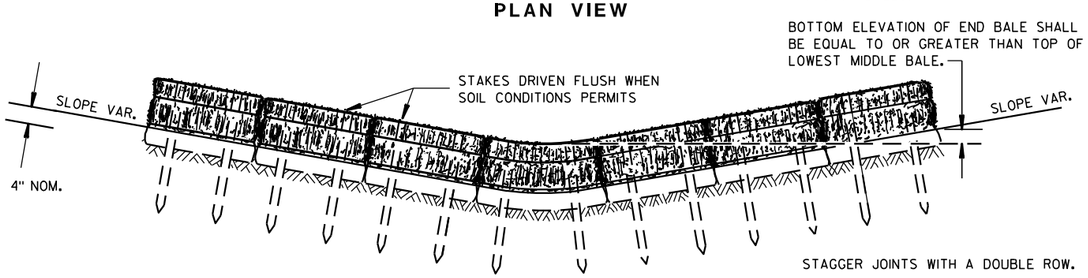

FRONT ELEVATION

TEMPORARY DITCH CHECK USING EROSION BALES ①

GENERAL NOTES

DETAILS OF CONSTRUCTION, MATERIALS AND WORKMANSHIP NOT SHOWN ON THIS DRAWING SHALL CONFORM TO THE PERTINENT REQUIREMENTS OF THE STANDARD SPECIFICATIONS AND THE APPLICABLE SPECIAL PROVISIONS.

① TEMPORARY DITCH CHECKS EITHER EROSION BALES OR MANUFACTURED SHALL BE PAID FOR UNDER THE BID ITEM OF TEMPORARY DITCH CHECK. THE DEPARTMENT WILL NOT PAY FOR TEMPORARY DITCH CHECKS CONSTRUCTED OF A SINGLE ROW OF EROSION BALES.

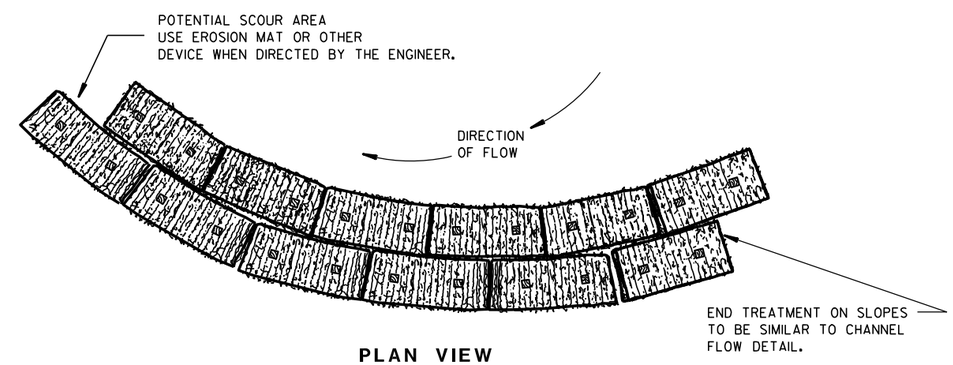

PLAN VIEW

WHEN ALTERING THE DIRECTION OF FLOW

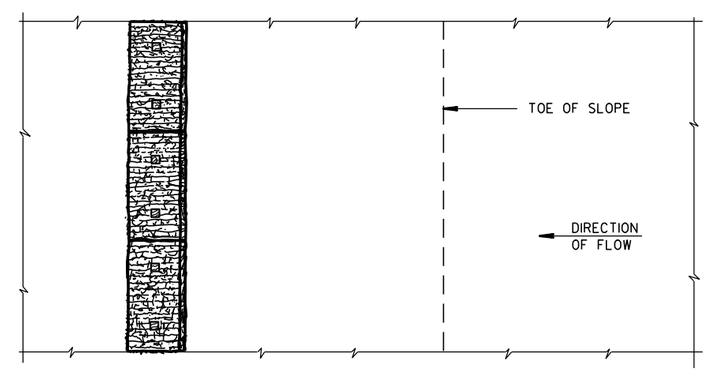

PLAN VIEW

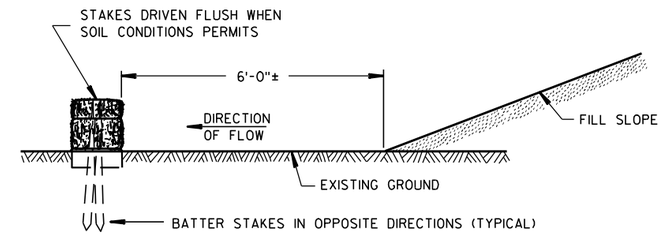

FRONT ELEVATION

WHEN EXISTING GROUND SLOPES AWAY FROM FILL SLOPE

EROSION BALES FOR SHEET FLOW

TYPICAL INSTALLATIONS OF EROSION BALES / TEMPORARY DITCH CHECKS

STATE OF WISCONSIN
DEPARTMENT OF TRANSPORTATION

APPROVED
6/04/02 — DATE
/S/ Beth Cann... — CHIEF ROADWAY DEVELOPMENT ENGINEER
FHWA

6

6

S.D.D. 8 E 8-3

S.D.D. 8 E 8-3

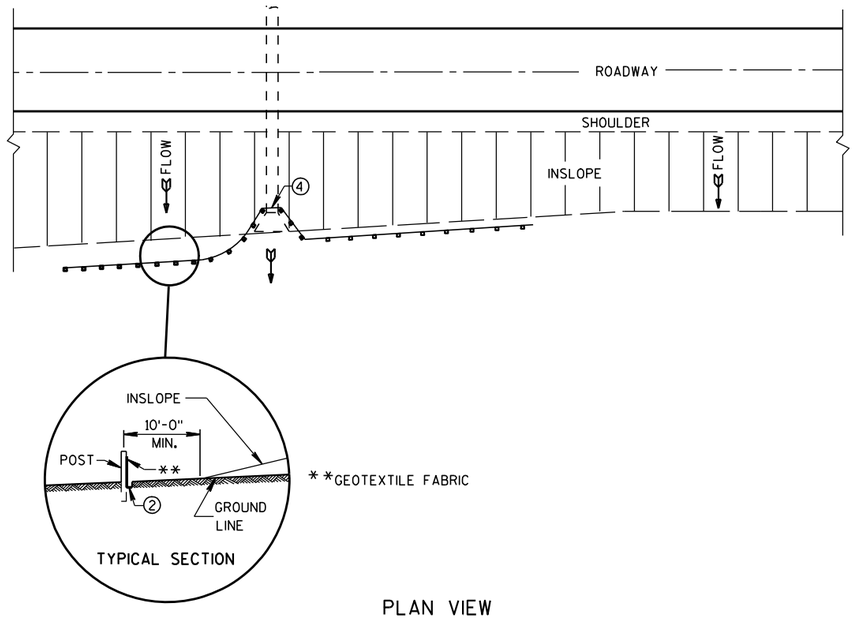

PLAN VIEW

TYPICAL APPLICATION OF SILT FENCE

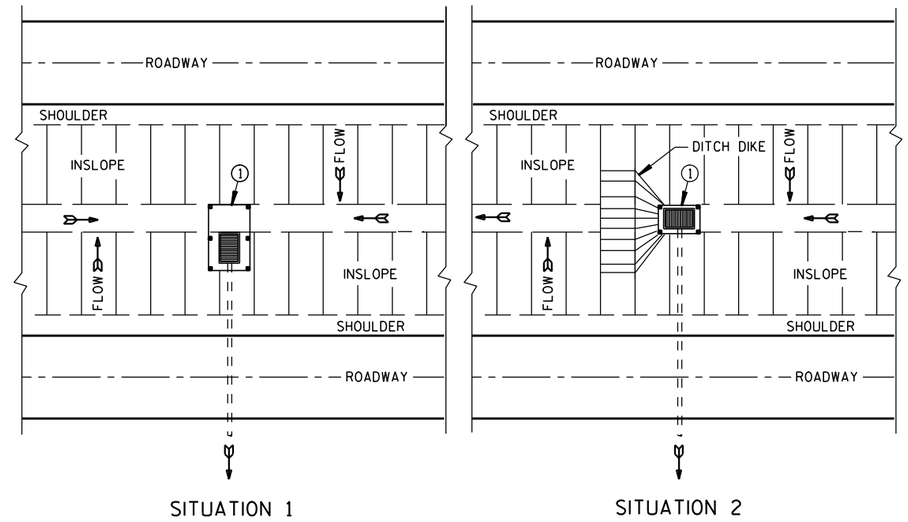

PLAN VIEW

SILT FENCE AT MEDIAN SURFACE DRAINS

GENERAL NOTES

DETAILS OF CONSTRUCTION NOT SHOWN ON THIS DRAWING SHALL CONFORM TO THE PERTINENT REQUIREMENTS OF THE STANDARD SPECIFICATIONS AND APPLICABLE SPECIAL PROVISIONS.

① HORIZONTAL BRACE REQUIRED WITH 2" X 4" WOODEN FRAME OR EQUIVALENT AT TOP OF POSTS.

② FOR MANUAL INSTALLATIONS THE TRENCH SHALL BE A MINIMUM OF 4" WIDE & 6" DEEP TO BURY AND ANCHOR THE GEOTEXTILE FABRIC. FOLD MATERIAL TO FIT TRENCH AND BACKFILL & COMPACT TRENCH WITH EXCAVATED SOIL.

③ WOOD POSTS SHALL BE A MINIMUM SIZE OF 1⅛" X 1⅛" OF OAK OR HICKORY.

④ SILT FENCE TO EXTEND ACROSS THE TOP OF THE PIPE.

⑤ CONSTRUCT SILT FENCE FROM A CONTINUOUS ROLL IF POSSIBLE BY CUTTING LENGTHS TO AVOID JOINTS. IF A JOINT IS NECESSARY USE ONE OF THE FOLLOWING TWO METHODS; A) OVERLAP THE END POSTS AND TWIST, OR ROTATE, AT LEAST 180 DEGREES. B) HOOK THE END OF EACH SILT FENCE LENGTH.

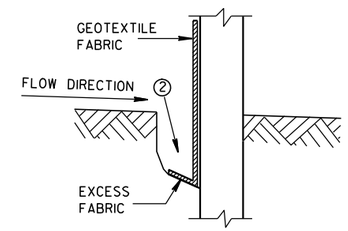

TRENCH DETAIL

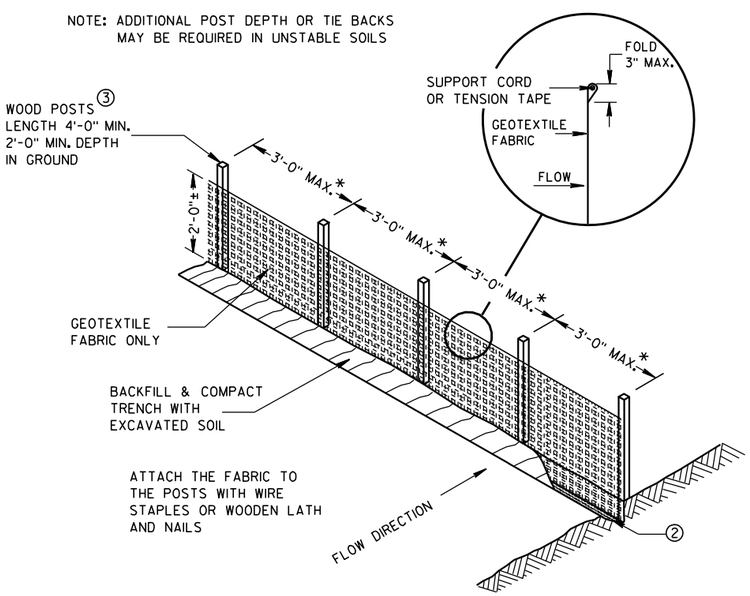

*NOTE: 8'-0" POST SPACING ALLOWED IF A WOVEN GEOTEXTILE FABRIC IS USED.

SILT FENCE

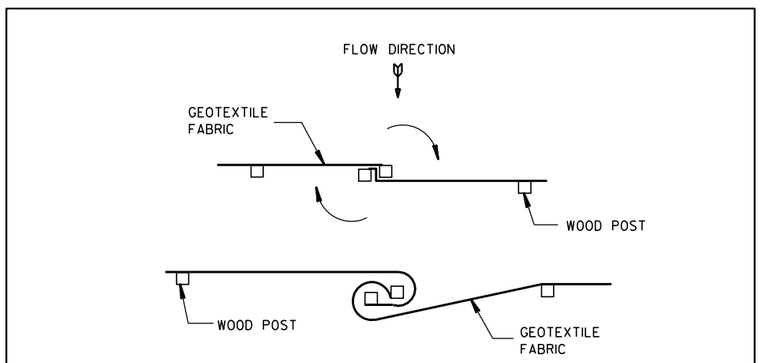

TWIST METHOD

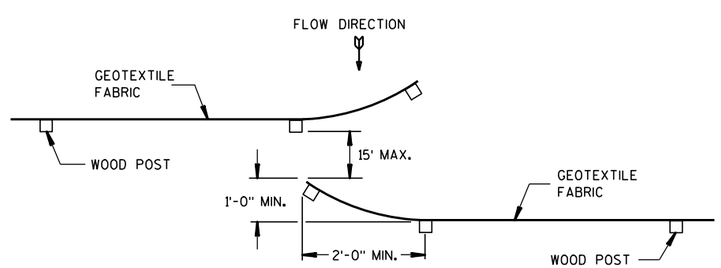

HOOK METHOD

JOINING TWO LENGTHS OF SILT FENCE ⑤

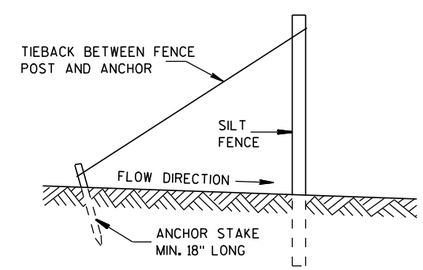

SILT FENCE TIE BACK

(WHEN REQUIRED BY THE ENGINEER)

SILT FENCE
STATE OF WISCONSIN DEPARTMENT OF TRANSPORTATION
APPROVED 4-29-05 /S/ Beth Cann----- DATE CHIEF ROADWAY DEVELOP ENGINEER FHWA

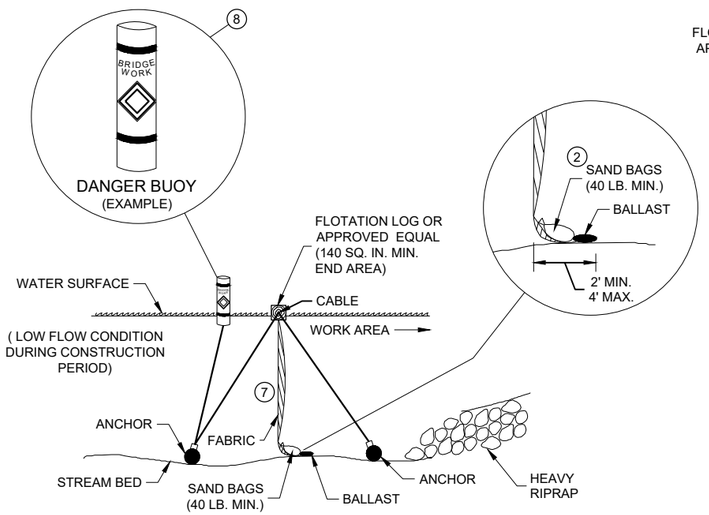

SECTION B - B

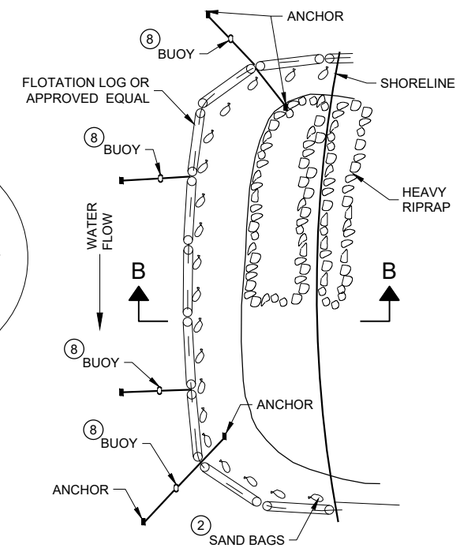

PLAN VIEW

TURBIDITY BARRIER - FLOAT ALTERNATIVE
CAUTION - SEE NOTE 6

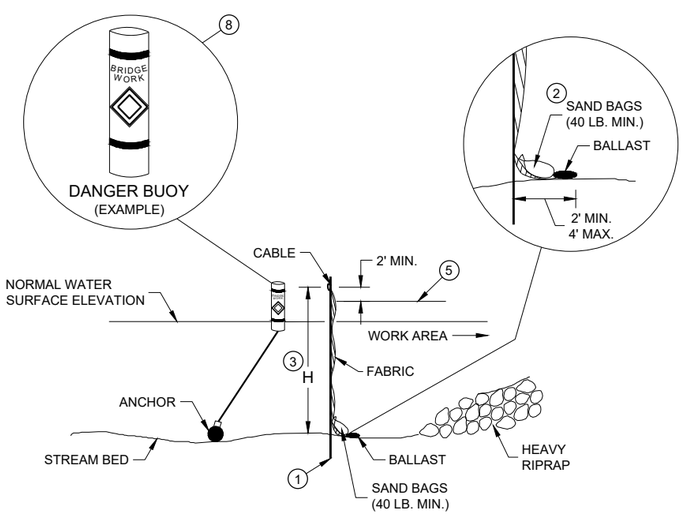

SECTION A - A

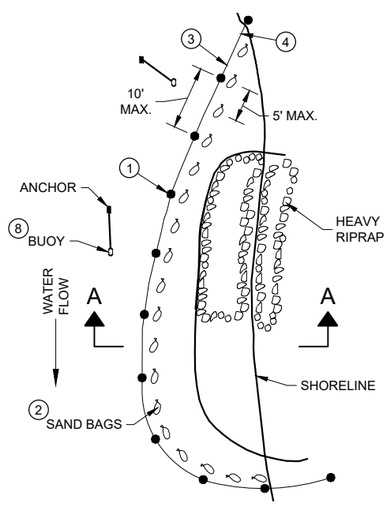

PLAN VIEW

TURBIDITY BARRIER - STANDARD POST INSTALLATION

TURBIDITY BARRIER PLACEMENT DETAILS

GENERAL NOTES

DETAILS OF CONSTRUCTION, MATERIALS AND WORKMANSHIP NOT SHOWN ON THIS DRAWING SHALL CONFORM TO THE PERTINENT REQUIREMENTS OF THE STANDARD SPECIFICATIONS AND THE APPLICABLE SPECIAL PROVISIONS.

TURBIDITY BARRIER MAY BE REMOVED AT THE ENGINEERS DISCRETION, WHEN PERMANENT EROSION CONTROL MEASURES HAVE BEEN ESTABLISHED.

1. DRIVEN STEEL POSTS, PIPES, OR CHANNELS. LENGTH SHALL BE SUFFICIENT TO SECURELY SUPPORT BARRIER AT HIGH WATER ELEVATIONS.
2. SAND BAGS TO BE USED AS ADDITIONAL BALLAST WHEN ORDERED BY THE ENGINEER TO MEET ADVERSE FIELD CONDITIONS. SPACE AS APPROPRIATE FOR SITE CONDITIONS.
3. WHEN BARRIER HEIGHT "H" EXCEEDS 8 FEET, POST SPACING MAY NEED TO BE DECREASED.
4. IN WATERWAYS SUBJECT TO FLUCTUATING WATER ELEVATIONS, PROVISIONS SHOULD BE MADE TO ALLOW THE WATER TO EQUALIZE ON EACH SIDE OF THE BARRIER. THIS MAY BE ACCOMPLISHED BY LEAVING A PORTION OF THE BARRIER OPEN ON THE UPSTREAM END.
5. ESTIMATED HIGH WATER ELEVATION DURING CONSTRUCTION PERIOD. MINIMUM BARRIER HEIGHT SHALL BE 2' GREATER THAN EITHER THE Q2 ELEVATION OR THE ESTIMATED HIGH WATER ELEVATION DURING CONSTRUCTION, WHICHEVER IS GREATER.
6. FLOAT ALTERNATIVE WILL ONLY BE ALLOWED WITH WRITTEN APPROVAL OF THE ENGINEER, AND IS MEANT FOR LOCATIONS WHERE BEDROCK PREVENTS THE INSTALLATION OF POSTS.
7. ALLOW SUFFICIENT SLACK VERTICALLY AND HORIZONTALLY SO THAT SEDIMENT BUILD UP WILL NOT SEPARATE OR LOWER THE TURBIDITY BARRIER.
8. USE AS DIRECTED BY COAST GUARD OR DNR PERMIT WHEN WORKING IN NAVIGABLE WATERWAYS.

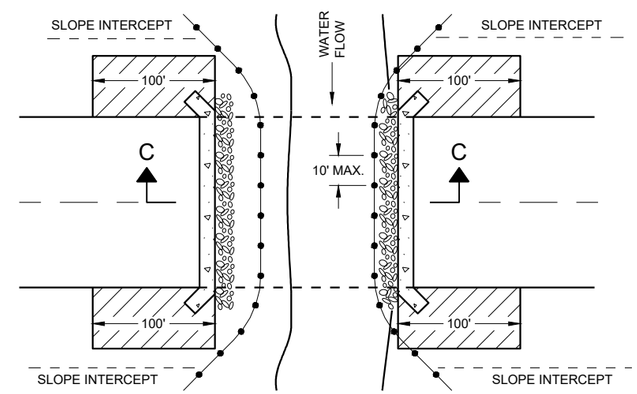

PLAN VIEW

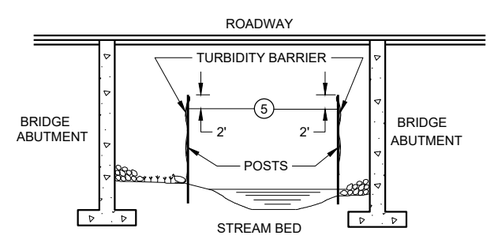

SECTION C - C

TURBIDITY BARRIER DETAIL SHOWING TYPICAL PLACEMENT AT STRUCTURES

TURBIDITY BARRIER

STATE OF WISCONSIN
DEPARTMENT OF TRANSPORTATION

APPROVED
6/4/02 — DATE
/S/ Beth Cannestra — CHIEF ROADWAY DEVELOPMENT ENGINEER
FHWA

6

SDD 08E11 - 02

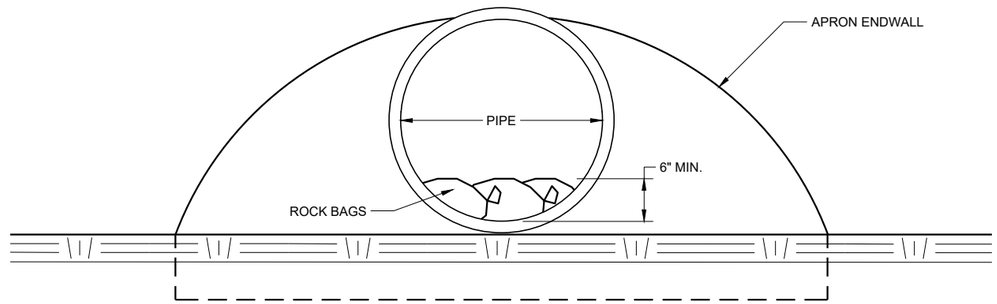

END VIEW

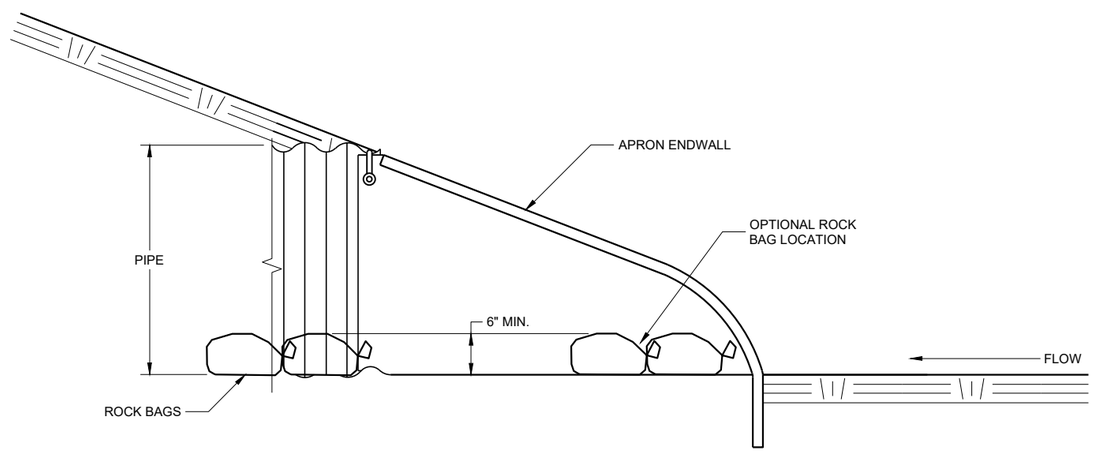

SIDE VIEW

CULVERT PIPE CHECK

(INSTALL ON INLET END ONLY)

CULVERT PIPE CHECK

STATE OF WISCONSIN
DEPARTMENT OF TRANSPORTATION

APPROVED
May 2019 — DATE
/S/ Daniel Schave — EROSION CONTROL ENGI
FHWA

6

SDD 08E15 - 01

METAL APRON ENDWALLS

PIPE DIA. (IN.)	MIN. THICK. (Inches) STEEL	MIN. THICK. (Inches) ALUM.	DIMENSIONS (Inches) A (±1")	B (MAX.)	H (±1")	L (±1 1/2")	L1 ①	L2 ①	W (±2")	APPROX. SLOPE	BODY
12	.064	.060	6	6	6	21	12	17 1/2	24	2 1/2 to 1	1 Pc.
15	.064	.060	7	8	6	26	14	21 3/4	30	2 1/2 to 1	1 Pc.
18	.064	.060	8	10	6	31	15	28 1/4	36	2 1/2 to 1	1 Pc.
21	.064	.060	9	12	6	36	18	29 5/8	42	2 1/2 to 1	1 Pc.
24	.064	.075	10	13	6	41	18	37 1/4	48	2 1/2 to 1	1 Pc.
30	.079	.075	12	16	8	51	18	52 1/4	60	2 1/2 to 1	1 Pc.
36	.079	.105	14	19	9	60	24	59 3/4	72	2 1/2 to 1	2 Pc.
42	.109	.105	16	22	11	69	24	75 5/8	84	2 1/2 to 1	2 Pc.
48	.109	.105	18	27	12	78	24	81	90	2 1/4 to 1	3 Pc.
54	.109	.105	18	30	12	84	30	85 1/2	102	2 1/4 to 1	3 Pc.
60	.109×	.105×	18	33	12	87	—	—	114	2 to 1	3 Pc.
66	.109×	.105×	18	36	12	87	—	—	120	2 to 1	3 Pc.
72	.109×	.105×	18	39	12	87	—	—	126	2 to 1	3 Pc.
78	.109×	.105×	18	42	12	87	—	—	132	1 1/2 to 1	3 Pc.
84	.109×	.105×	18	45	12	87	—	—	138	1 1/2 to 1	3 Pc.
90	.109×	.105×	18	37	12	87	—	—	144	1 1/2 to 1	3 Pc.
96	.109×	.105×	18	35	12	87	—	—	150	1 1/2 to 1	3 Pc.

× EXCEPT CENTER PANEL
SEE GENERAL NOTES

REINFORCED CONCRETE APRON ENDWALLS

PIPE DIA. (IN.)	DIMENSIONS (Inches) T	A	B	C	D	E	G	APPROX. SLOPE
12	2	4	24	48 7/8	72 7/8	24	2	3 to 1
15	2 1/4	6	27	46	73	30	2 1/4	3 to 1
18	2 1/2	9	27	46	73	36	2 1/2	3 to 1
21	2 3/4	9	36	37 1/2	73 1/2	42	2 3/4	3 to 1
24	3	9 1/2	43 1/2	30	73 1/2	48	3	3 to 1
27	3 1/4	10 1/2	49 1/2	24	73 1/2	54	3 1/4	3 to 1
30	3 1/2	12	54	19 3/4	73 1/2	60	3 1/2	3 to 1
36	4	15	63	34 3/4	97 3/4	72	4	3 to 1
42	4 1/2	21	63	35	98	78	4 1/2	3 to 1
48	5	24	72	26	98	84	5	3 to 1
54	5 1/2	27	65	*33 1/4-**35	*98 1/4-**100	90	5 1/2	2 2/5 to 1
60	6	*30-**35	60	39	99	96	5	2 to 1
66	6 1/2	*24-**30	*72-**78	*21-**27	99	102	5 1/2	2 to 1
72	7	*24-**36	78	21	99	108	6	2 to 1
78	7 1/2	*24-**36	78	21	99	114	6 1/2	2 to 1
84	8	36	90 1/2	21	111 1/2	120	6 1/2	1 1/2 to 1
90	8 1/2	41	87 1/2	24	111 1/2	132	6 1/2	1 1/2 to 1

*MINIMUM
**MAXIMUM

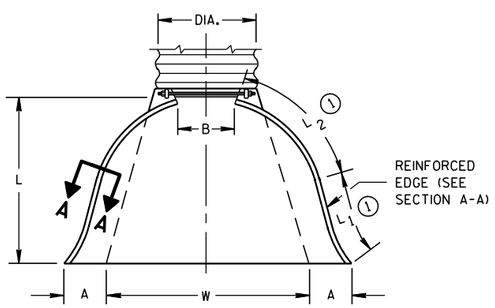

PLAN VIEW

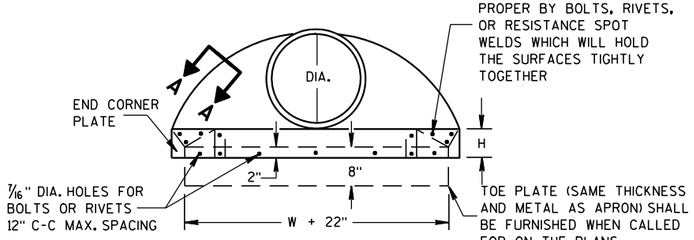

END VIEW

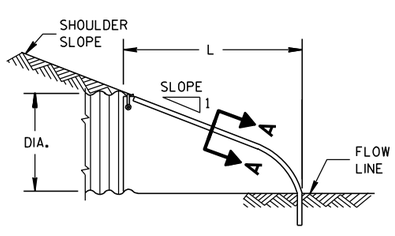

SIDE ELEVATION

METAL ENDWALLS

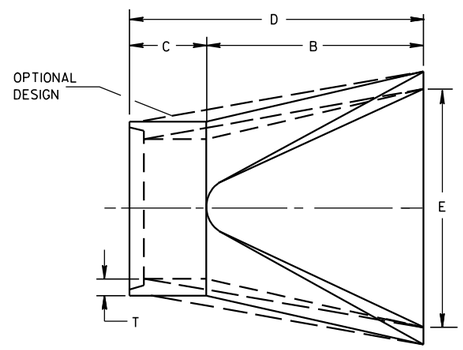

PLAN

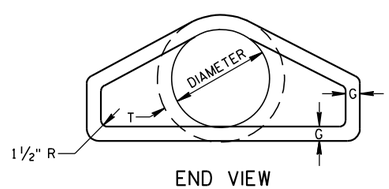

END VIEW

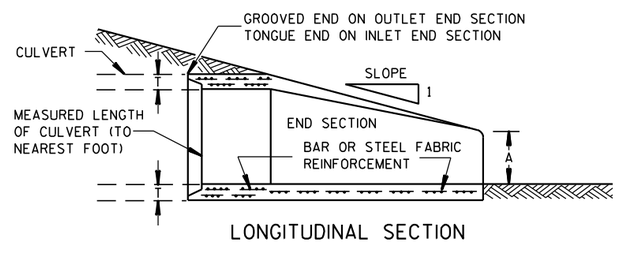

LONGITUDINAL SECTION

CONCRETE ENDWALLS

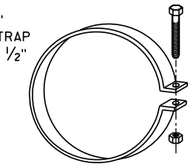

ALTERNATE FOR TYPE 1 CONNECTION

END SECTION CONNECTOR STRAP

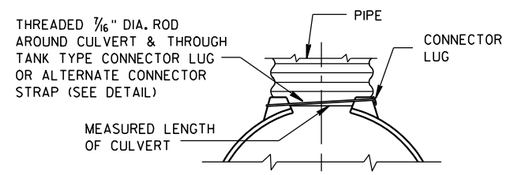

TYPE 1
FOR 12" THRU 24" CORR. PIPE

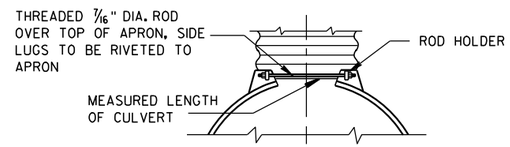

TYPE 2
FOR 30" THRU 96" CORR. PIPE

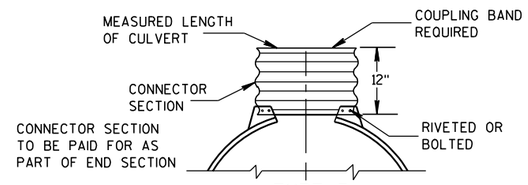

TYPE 3
FOR 42" THRU 96" CORR. PIPE

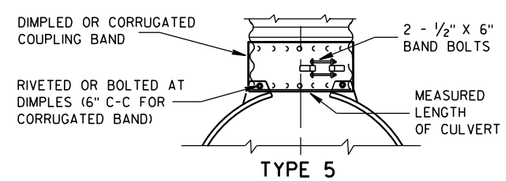

TYPE 5
ALTERNATE FOR:
ALL SIZES CORRUGATED CIRCULAR PIPE

NOTE: DIMPLED BAND FITS OVER OUTSIDE OF ENDWALL, AND CORRUGATED BAND FITS INSIDE ENDWALL. DIMPLED BAND MAY BE USED WITH HELICALLY CORRUGATED PIPE.

FOR CIRCUMFERENTIALLY CORRUGATED PIPE USE ENDWALL CONNECTION DETAILS 1, 2, 3 OR 5 AS APPLICABLE.

FOR HELICALLY CORRUGATED PIPE USE ENDWALL CONNECTION DETAILS 1, 2 OR 5.

FOR HELICALLY CORRUGATED PIPES WITH TWO CIRCUMFERENTIAL CORRUGATIONS AT EACH END USE ENDWALL CONNECTION DETAILS 1, 2 OR 3.

CONNECTION DETAILS

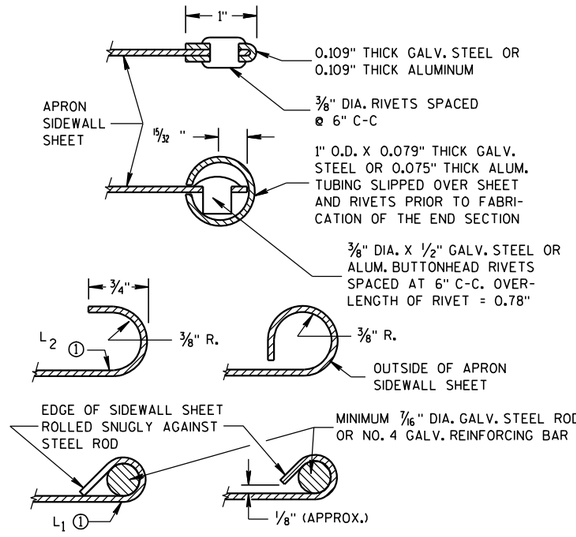

SECTION A-A

GENERAL NOTES

DETAILS OF CONSTRUCTION, MATERIALS AND WORKMANSHIP NOT SHOWN ON THIS DRAWING SHALL CONFORM TO THE PERTINENT REQUIREMENTS OF THE STANDARD SPECIFICATIONS AND THE APPLICABLE SPECIAL PROVISIONS.

CONCRETE CULVERT ENDWALLS MAY NOT BE USED WITH GALVANIZED STEEL OR ALUMINUM CULVERT PIPE OR VISE VERSA. GALVANIZED STEEL OR ALUMINUM ENDWALLS SHALL NORMALLY BE INSTALLED ON CULVERT PIPE OF THE SAME METAL.

ALL THREE PIECE STEEL APRON ENDWALLS FOR 60" DIAMETER PIPE AND LARGER SHALL HAVE 0.109" SIDES AND 0.138" CENTER PANELS. ALL THREE PIECE ALUMINUM APRON ENDWALLS FOR 60" DIAMETER PIPE AND LARGER SHALL HAVE 0.105" SIDES AND 0.134" CENTER PANELS. THE WIDTH OF CENTER PANELS SHALL BE GREATER THAN 20 PERCENT OF THE PIPE PERIMETER.

LAP SEAMS SHALL BE TIGHTLY JOINED BY GALVANIZED RIVETS OR BOLTS FOR STEEL UNITS AND ALUMINUM RIVETS AND BOLTS FOR ALUMINUM UNITS. FOR THE 60" THROUGH 96" DIAMETER APRON ENDWALL SIZES, THE REINFORCED EDGES AND CENTER PANEL SEAMS SHALL BE FURTHER REINFORCED WITH GALVANIZED STEEL OR ALUMINUM STIFFENER ANGLES. THE ANGLES SHALL BE ATTACHED BY GALVANIZED NUTS AND BOLTS FOR STEEL UNITS AND ALUMINUM NUTS AND BOLTS FOR ALUMINUM UNITS.

WHERE TWO OR MORE PIPES WITH APRON ENDWALLS ARE LAID ADJACENT TO EACH OTHER, THEY SHALL BE SEPARATED BY A DISTANCE SUFFICIENT TO PROVIDE A MINIMUM CLEARANCE OF 6 INCHES BETWEEN APRON ENDWALLS.

① FOR PIPE SIZES UP TO 60" DIAMETER, A 180° ROLLED EDGE MAY BE USED INSTEAD OF STEEL ROD REINFORCEMENT. SEE SECTION A-A.

APRON ENDWALLS FOR CULVERT PIPE

STATE OF WISCONSIN
DEPARTMENT OF TRANSPORTATION

APPROVED
11/30/94 — DATE
/S/ Rory L. Rhinesmith — CHIEF ROADWAY DEVELOPMENT ENGINEER
FHWA

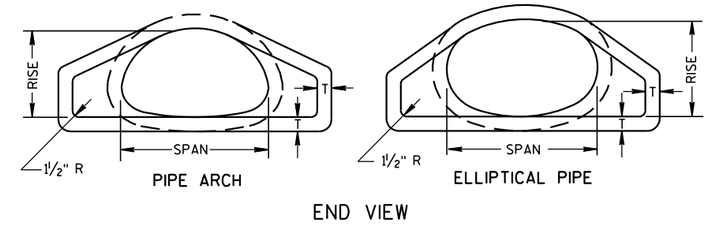

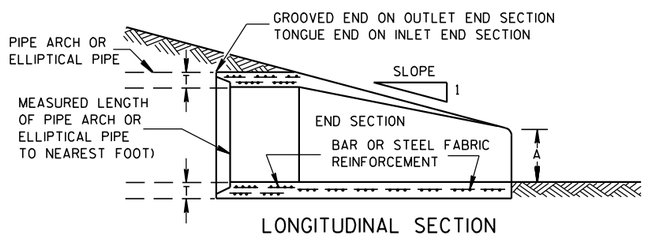

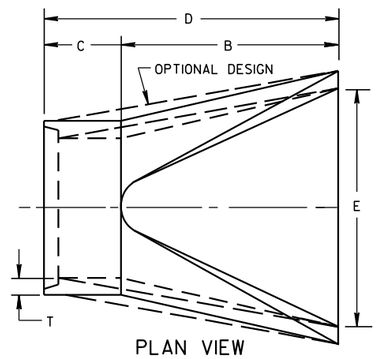

CONCRETE ENDWALLS

2- ⅔" X ½" CORRUGATIONS														
EQUIV. DIA. (Inches)	(Inches)		MIN. THICK. (Inches)		DIMENSIONS (Inches)							APPROX. SLOPE	BODY
	SPAN	RISE	STEEL	ALUM.	A (±1")	B (MAX.)	H (±1")	L (±1½")	L1 ①	L2 ①	W (±2")		
15	17	13	.064	.060	7	9	6	19	14	16	30	2½ to 1	1 Pc.
18	21	15	.064	.060	7	10	6	23	14	19⅜	36	2½ to 1	1 Pc.
21	24	18	.064	.060	8	12	6	28	18	21¾	42	2½ to 1	1 Pc.
24	28	20	.064	.060	9	14	6	32	18	27½	48	2½ to 1	1 Pc.
30	35	24	.079	.075	10	16	6	39	18	37⅝	60	2½ to 1	1 Pc.
36	42	29	.079	.075	12	18	8	46	24	45⅜	75	2½ to 1	1 Pc.
42	49	33	.109	.105	13	21	9	53	24	54¾	85	2½ to 1	2 Pc.
48	57	38	.109	.105	18	26	12	63	24	68	90	2½ to 1	3 Pc.
54	64	43	.109	.105	18	30	12	70	24	72¾	102	2¼ to 1	3 Pc.
60	71	47	.109*	.105*	18	33	12	77	30	82¼	114	2¼ to 1	3 Pc.
66	77	52	.109*	.105*	18	36	12	77	—	—	126	2 to 1	3 Pc.
72	83	57	.109*	.105*	18	39	12	77	—	—	138	2 to 1	3 Pc.

3" X 1" CORRUGATIONS														
EQUIV. DIA. (Inches)	(Inches)		MIN. THICK. (Inches)		DIMENSIONS (Inches)							APPROX. SLOPE	BODY
	SPAN	RISE	STEEL	ALUM.	A (±1")	B (MAX.)	H (±1")	L (±1½")	L1 ①	L2 ①	W (±2")		
48	53	41	.109	.105	18	26	12	63	24	72¾	90	2½ to 1	2 Pc.
54	60	46	.109	.105	18	30	12	70	30	82¼	102	2 to 1	2 Pc.
60	66	51	.109*	.105*	18	33	12	77	—	—	114	1½ to 1	3 Pc.
66	73	55	.109*	.105*	18	36	12	77	—	—	126	1½ to 1	3 Pc.
72	81	59	.109*	.105*	18	39	12	77	—	—	138	2 to 1	3 Pc.
78	87	63	.109*	.105*	22	38	12	77	—	—	148	1½ to 1	3 Pc.
84	95	67	.109*	.105*	22	34	12	77	—	—	162	1½ to 1	3 Pc.
90	103	71	.109*	.105*	22	38	12	77	—	—	174	1½ to 1	3 Pc.
96	112	75	.109*	.105*	24	40	12	77	—	—	174	1½ to 1	3 Pc.

NOTE: ALL SPLICES TO BE LAP RIVETED OR BOLTED.

* EXCEPT CENTER PANEL SEE GENERAL NOTES

REINFORCED CONCRETE PIPE ARCH									
EQUIV. DIA. (Inches)	DIMENSIONS (Inches)								APPROX. SLOPE
	** SPAN	** RISE	T	A	B	C	D	E	
24	29	18	3	8½	39	33	72	48	3 to 1
30	36	22	3½	9½	50	46	96	60	3 to 1
36	44	27	4	11⅛	60	36	96	72	3 to 1
42	51	31	4½	15 13/16	60	36	96	78	3 to 1
48	58	36	5	21	60	36	96	84	3 to 1
54	65	40	5½	25½	60	36	96	90	3 to 1
60	73	45	6	31	60	36	96	96	3 to 1
72	88	54	7	31	60	39	99	120	2 to 1
84	102	62	8	28½	83	19	102	144	2 to 1

REINFORCED CONCRETE ELLIPTICAL PIPE									
EQUIV. DIA. (Inches)	DIMENSIONS (Inches)								APPROX. SLOPE
	** SPAN	** RISE	T	A	B	C	D	E	
24	30	19	3¼	8½	39	33	72	48	3 to 1
30	38	24	3¾	9½	54	18	72	60	3 to 1
36	45	29	4½	11⅛	60	24	84	72	2½ to 1
42	53	34	5	15¾	60	36	96	78	2½ to 1
48	60	38	5½	21	60	36	96	84	2½ to 1
54	68	43	6	25½	60	36	96	90	2½ to 1
60	76	48	6½	30	60	36	96	96	2½ to 1

**NOMINAL SIZE

GENERAL NOTES

DETAILS OF CONSTRUCTION, MATERIALS AND WORKMANSHIP NOT SHOWN ON THIS DRAWING SHALL CONFORM TO THE PERTINENT REQUIREMENTS OF THE STANDARD SPECIFICATIONS AND THE APPLICABLE SPECIAL PROVISIONS.

CONCRETE APRON ENDWALLS MAY NOT BE USED WITH GALVANIZED STEEL OR ALUMINUM CULVERT PIPE OR VISE VERSA. GALVANIZED STEEL OR ALUMINUM APRON ENDWALLS SHALL NORMALLY BE INSTALLED ON CULVERT PIPE OF THE SAME METAL.

ALL THREE PIECE STEEL APRON ENDWALLS FOR 66" X 51" PIPE ARCH AND LARGER SHALL HAVE 0.109" SIDES AND 0.138" CENTER PANELS. ALL THREE PIECE ALUMINUM APRON ENDWALLS FOR 66" X 51" PIPE ARCH AND LARGER SHALL HAVE 0.105" SIDES AND 0.134" CENTER PANELS. THE WIDTH OF CENTER PANELS SHALL BE GREATER THAN 20 PERCENT OF THE PIPE ARCH PERIMETER.

LAP SEAMS SHALL BE TIGHTLY JOINED BY GALVANIZED RIVETS OR BOLTS FOR STEEL UNITS AND ALUMINUM RIVETS AND BOLTS FOR ALUMINUM UNITS. FOR THE 77" X 52" THROUGH 112" X 75" APRON ENDWALL SIZES, THE REINFORCED EDGES AND CENTER PANEL SEAMS SHALL BE FURTHER REINFORCED WITH GALVANIZED STEEL OR ALUMINUM STIFFENER ANGLES. THE ANGLES SHALL BE ATTACHED BY GALVANIZED NUTS AND BOLTS FOR STEEL UNITS AND ALUMINUM NUTS AND BOLTS FOR ALUMINUM UNITS.

WHERE TWO OR MORE PIPES WITH APRON ENDWALLS ARE LAID ADJACENT TO EACH OTHER, THEY SHALL BE SEPARATED BY A DISTANCE SUFFICIENT TO PROVIDE A MINIMUM CLEARANCE OF 6 INCHES BETWEEN APRON ENDWALLS.

① FOR PIPE ARCH SIZES UP TO 73" X 55" A 180° ROLLED EDGE MAY BE USED INSTEAD OF STEEL ROD REINFORCEMENT. SEE SECTION A-A.

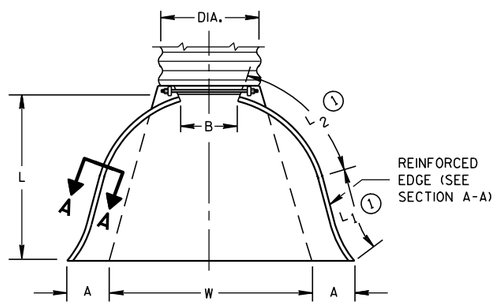

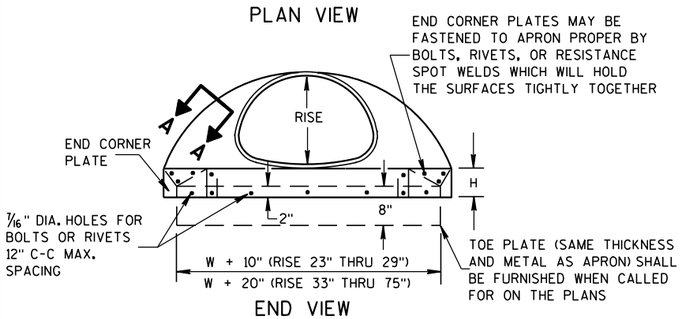

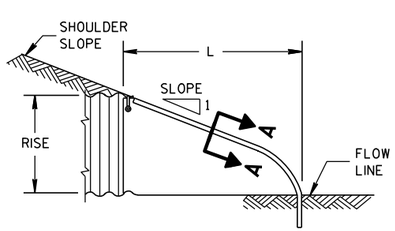

SIDE ELEVATION

METAL ENDWALLS

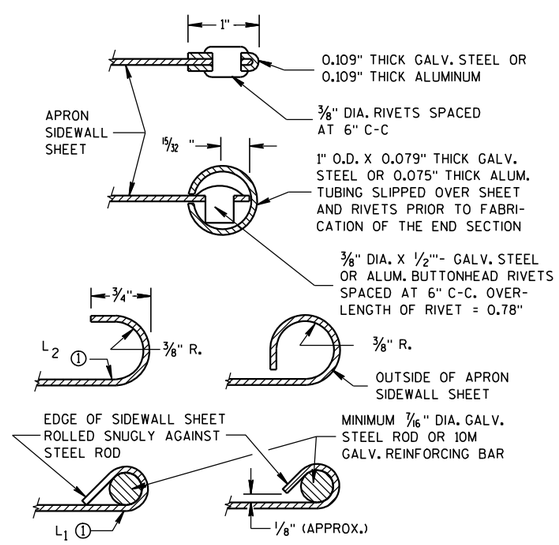

SECTION A-A

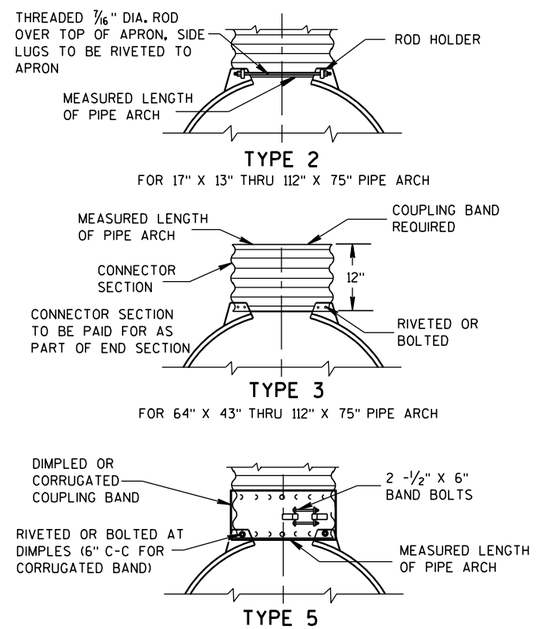

NOTE: DIMPLED BAND FITS OVER OUTSIDE OF ENDWALL, AND CORRUGATED BAND FITS INSIDE ENDWALL.

CONNECTION DETAILS

APRON ENDWALLS FOR PIPE ARCH AND ELLIPTICAL PIPE

STATE OF WISCONSIN
DEPARTMENT OF TRANSPORTATION

APPROVED

11/30/94 — DATE

/S/ Rory L. Rhinesmith — CHIEF ROADWAY DEVELOPMENT ENGINEER

FHWA

6

S.D.D. 8 F 2-1

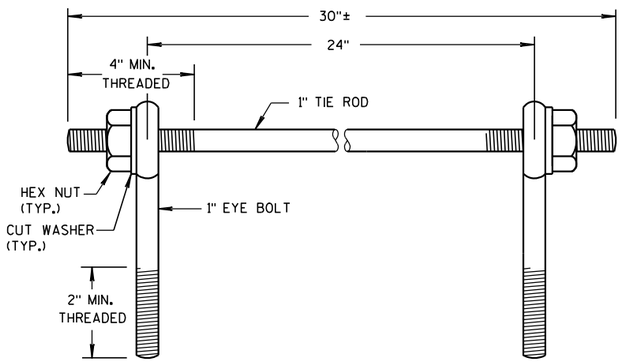

EYE BOLTS AND TIE ROD

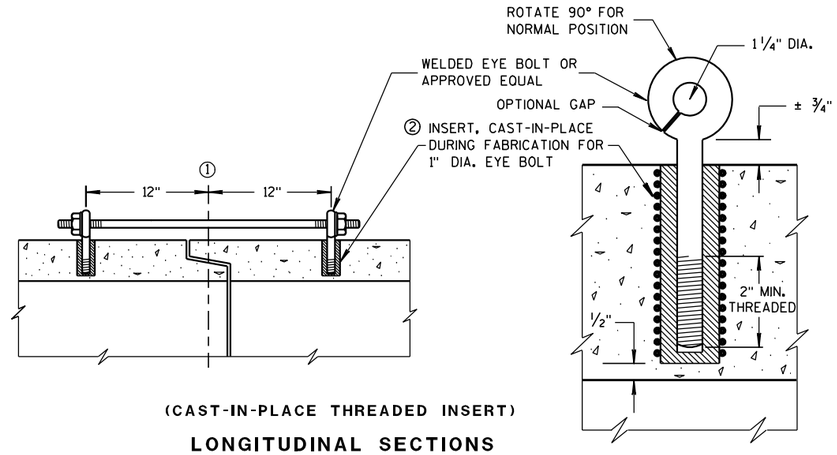

(CAST-IN-PLACE THREADED INSERT)

LONGITUDINAL SECTIONS

EYE BOLT AND TIE ROD ASSEMBLY (ALTERNATE NO. 1)

GENERAL NOTES

DETAILS OF CONSTRUCTION, MATERIALS, AND WORKMANSHIP NOT SHOWN ON THIS DRAWING SHALL CONFORM TO THE PERTINENT REQUIREMENTS OF THE STANDARD SPECIFICATIONS AND APPLICABLE SPECIAL PROVISIONS.

CONCRETE CULVERT AND STORM SEWER PIPE SHALL BE TIED TOGETHER IN THE MANNER ILLUSTRATED BY THIS DETAIL AT LOCATIONS DESIGNATED IN THE STANDARD SPECIFICATIONS AND THE PLAN. THE CONTRACTOR MAY USE EITHER ALTERNATE 1, 2 OR 3 FOR DRAINAGE STRUCTURES. ONLY ALTERNATE 1 AND 3 MAY BE USED FOR CATTLE PASSES, UNLESS OTHERWISE STATED IN THE CONTRACT. THE MATERIALS, FABRICATION AND WORK NECESSARY TO TIE THE PIPE BY THIS DETAIL WILL BE CONSIDERED INCIDENTAL TO THE PIPE AND APRON ENDWALLS IF REQUIRED.

DETAILED DRAWINGS FOR PROPOSED ALTERNATE DESIGNS FOR JOINT TIES SHALL BE SUBMITTED TO THE ENGINEER FOR APPROVAL.

JOINT TIES TO BE HOT-DIP GALVANIZED PER ASTM A 153.

① ℄ OF TONGUE AND GROOVE OR BELL AND SPIGOT JOINTS.

② THE INSIDE OF THE THREADED INSERTS SHALL BE CLEAN TO ALLOW THE INSERTION OF THREADED EYE BOLTS.

③ HOLES SHALL BE CAST-IN-PLACE OR DRILLED 12 INCHES FROM ℄ OF TONGUE AND GROOVE.

④ BOLT PROJECTION INSIDE OF PIPE SHALL NOT EXCEED 2 INCHES.

⑤ OPENING TO BE ROD DIAMETER PLUS 1 INCH.

⑥ LENGTH ADEQUATE TO EXTEND TO WITHIN 1/2 INCH OF THE INNER SURFACE OF THE PIPE.

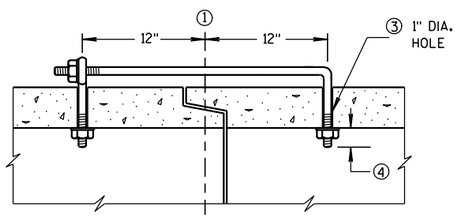

(TONGUE & GROOVE PIPE)

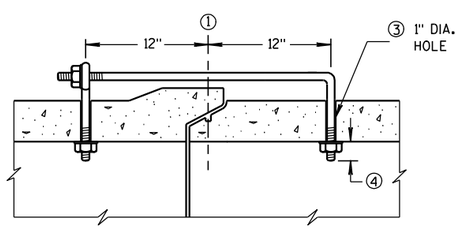

(MODIFIED BELL PIPE)

LONGITUDINAL SECTION

EYE BOLT DIMENSION TABLE

PIPE SIZE	L = LENGTH	
	TONGUE & GROOVE PIPE	MODIFIED BELL PIPE
18" TO 24"	4 1/2"	6 1/4"
30"	5"	7"
36"	5 1/2"	7"
42"	6"	
48"	6 1/2"	
60"	7 1/2"	
66"	8"	

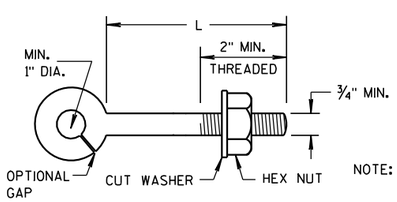

NOTE:

EYE BOLT

NOTE: TWO EYE BOLTS MAY BE USED WITH A 30" LONG THREADED ROD IN LIEU OF THE 90° BENT TIE ROD.

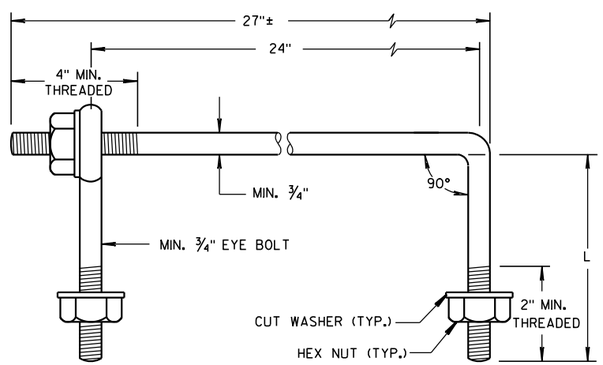

EYE BOLT AND TIE ROD

(JOINT TIES FOR 18" TO 66" DIA. CONCRETE PIPE)

EYE BOLT AND TIE ROD ASSEMBLY (ALTERNATE NO. 2)

ADJUSTABLE TIE ROD TABLE

PIPE DIAMETER	TIE ROD DIAMETER	D	L_1	N
12-60	5/8	5/8	5	1/2
66-84	3/4	3/4	5	1/2
90-108	1	1	7	1 7/16

DIMENSIONS SHOWN ARE IN INCHES

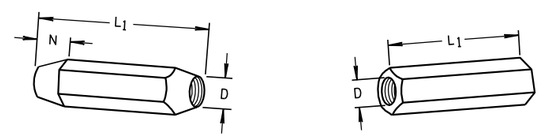

TAPERED PLAIN

RIGHT AND LEFT THREADS

SLEEVE NUTS

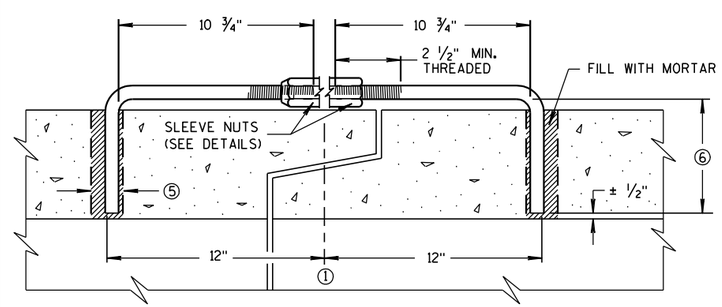

LONGITUDINAL SECTION

(JOINT TIES FOR 12" TO 108" DIA. CONCRETE PIPE)

ADJUSTABLE TIE ROD (ALTERNATE NO. 3)

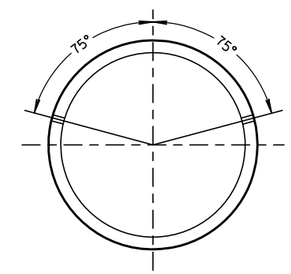

PLACEMENT OF (2) CAST-IN-PLACE INSERTS OR HOLES DURING FABRICATION FOR PIPE SECTIONS REQUIRING TIE RODS

TRANSVERSE SECTION

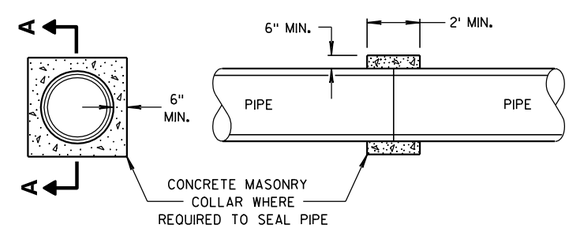

SECTION A-A

CONCRETE COLLAR DETAIL

JOINT TIES FOR CONCRETE PIPE AND CONCRETE COLLAR DETAIL

STATE OF WISCONSIN
DEPARTMENT OF TRANSPORTATION

APPROVED
6/5/2012 /S/ Jerry H. Zogg
DATE ROADWAY STANDARDS DEVELOPMENT ENGINEER
FHWA

6

6

S.D.D. 8 F 4-7

S.D.D. 8 F 4-7

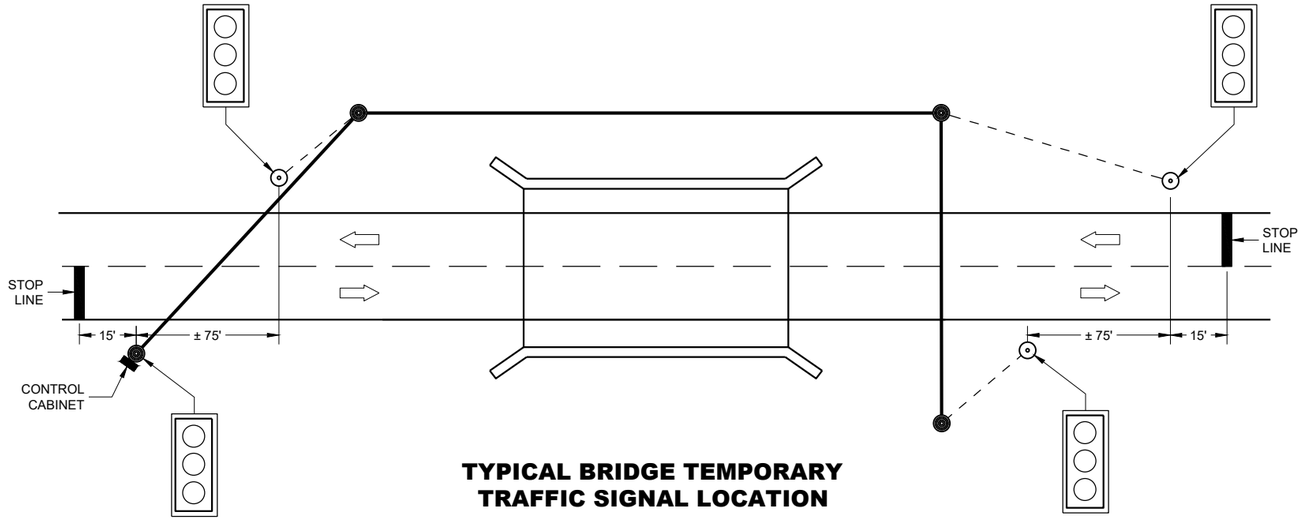

TYPICAL BRIDGE TEMPORARY TRAFFIC SIGNAL LOCATION

LEGEND

- WOOD POLE (NON-BREAKAWAY)
- WOOD POST (BREADAWAY)
- SIGNAL CABLE
- SIGNAL CABLE W/MESSENGER
- DIRECTION OF TRAFFIC
- LED TRAFFIC SIGNAL WITH BACKPLATE (3-12")

GENERAL NOTES

DETAILS OF CONSTRUCTION, MATERIALS AND WORKMANSHIP NOT SHOWN ON THIS DRAWING SHALL CONFORM TO THE PERTINENT REQUIREMENTS OF THE CONTRACT.

POLE MOUNTED TRAFFIC SIGNAL CONTROL CABINET MAY BE MOUNTED ON THE SERVICE POLE IF THE ELECTRICAL UTILITY ALLOWS THE INSTALLATION.

WHEN UTILITY POLES ARE USED TO SPAN THE TEMPORARY OVERHEAD CABLE, WRITTEN PERMISSION MUST BE OBTAINED FROM THE OWNER OF THE POLES AND GIVEN TO THE PROJECT MANAGER. ALL PERTINENT UTILITY AND CODE CLEARANCES SHALL BE MAINTAINED.

WOOD POLES (NON-BREAKAWAY) SHALL BE NO CLOSER TO EDGE OF PAVEMENT THAN OFFSET DISTANCE CHART ALLOWS OR 4 FEET BEHIND PROTECTIVE BARRIER (BEAM GUARD, ETC.).

WOOD POSTS (BREAKAWAY) SHALL BE NO CLOSER THAN 2 FEET OUTSIDE OF SHOULDER.

VERTICAL CLEARANCE ETC. PER NEC.

TRAFFIC SIGNAL FACES SHALL BE TYPICALLY PLACED 12 FEET FROM EDGE OF PAVEMENT.

EACH TRAFFIC SIGNAL SHALL HAVE A BACKPLATE.

SIGNING, PAVEMENT MARKING AND LANE CONTROL REQUIREMENTS SHALL CONFORM TO STANDARD DETAIL DRAWING 15D33.

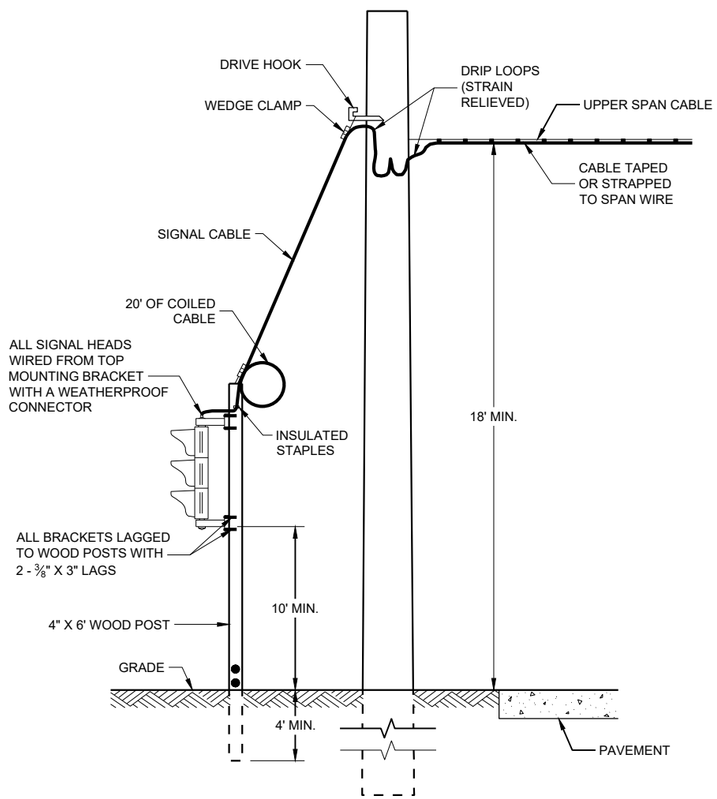

TYPICAL DROP TO TRAFFIC SIGNAL FACE

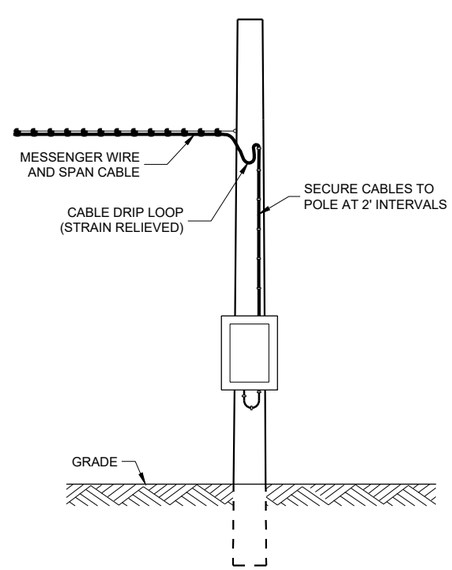

POLE MOUNT CABINET INSTALLATION

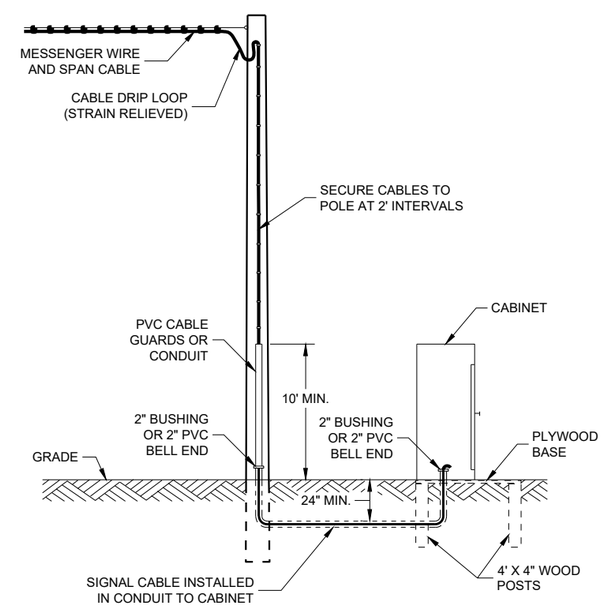

GROUND MOUNT CABINET INSTALLATION

MINIMUM POLE LENGTHS	CLASS	POLE BURIAL DEPTHS
25'	V	5'
30'	V	6'
35'	IV	7'
40'	IV	8'
45'	IV	9'

OFFSET DISTANCES FOR TEMPORARY NON-BREAKAWAY POLES	
SPEED LIMIT	OFFSET DISTANCE*
GREATER THAN 45 MPH	18 FT
45 MPH OR LESS	12 FT
45 MPH OR LESS W/CURBS	2 FT

* NOTE: OFFSET MEASURED FROM OUTER EDGE OF OUTSIDE THRU LANE.

BRIDGE TEMPORARY TRAFFIC SIGNAL INSTALLATION

STATE OF WISCONSIN
DEPARTMENT OF TRANSPORTATION

APPROVED
March 2018 — DATE
/S/ Ahmet Demirbilek — ROADWAY STANDARDS DEVE ENGINEER
FHWA

6

SDD09G02 - 05a

GENERAL NOTES

USE ¾" DRILL IN WOOD POLE TO PROVIDE FOR ⅝" BOLTS.

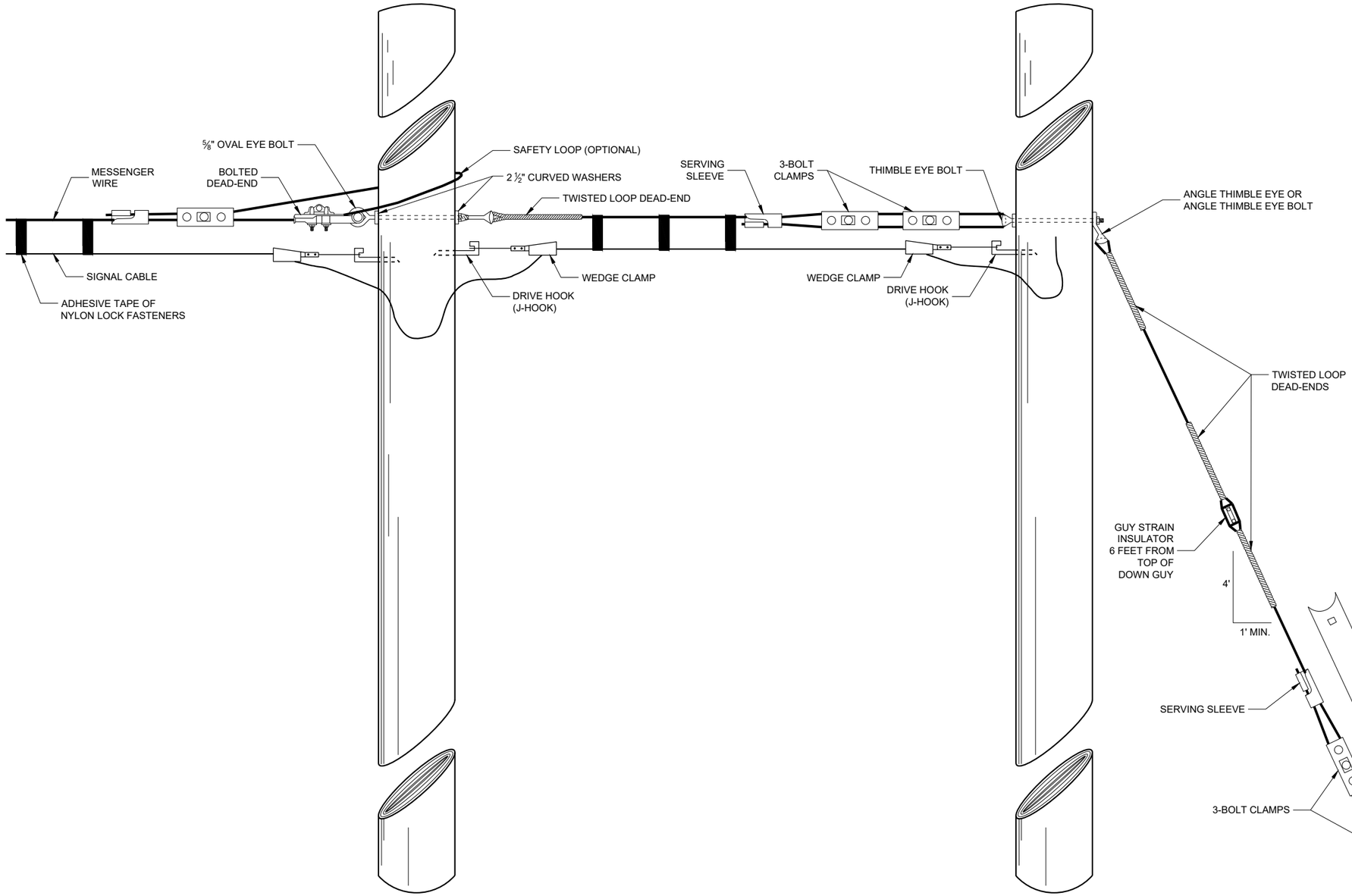

SPAN WIRE POLE

GUY POLE

TYPICAL DEAD-ENDINGS OR GUYING

BRIDGE TEMPORARY TRAFFIC SIGNAL INSTALLATION

STATE OF WISCONSIN
DEPARTMENT OF TRANSPORTATION

APPROVED
June 2015 — DATE
/S/ Ahmet Demerbilek — ROADWAY STANDARDS DEVE ENGINEER
FHWA

6

6

SDD09G02 - 05b

SDD09G02 - 05b

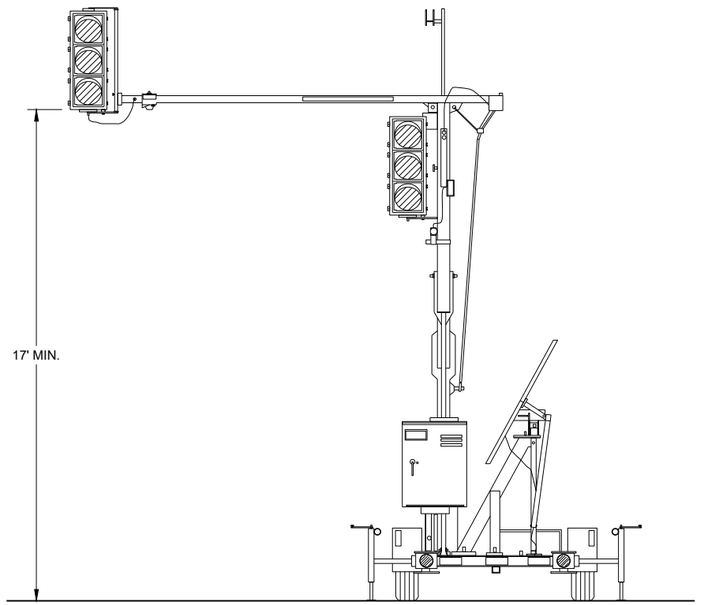

TRAILER MOUNTED TRAFFIC SIGNAL

GENERAL NOTES

DETAIL OF CONSTRUCTION, MATERIALS AND WORKMANSHIP NOT SHOWN ON THIS DRAWING SHALL CONFORM TO THE PERTINENT REQUIREMENTS OF THE CONTRACT.

SIGNING, PAVEMENT MARKING AND LANE CONTROL REQUIREMENTS SHALL CONFORM TO STANDARD DETAIL DRAWING 15D33.

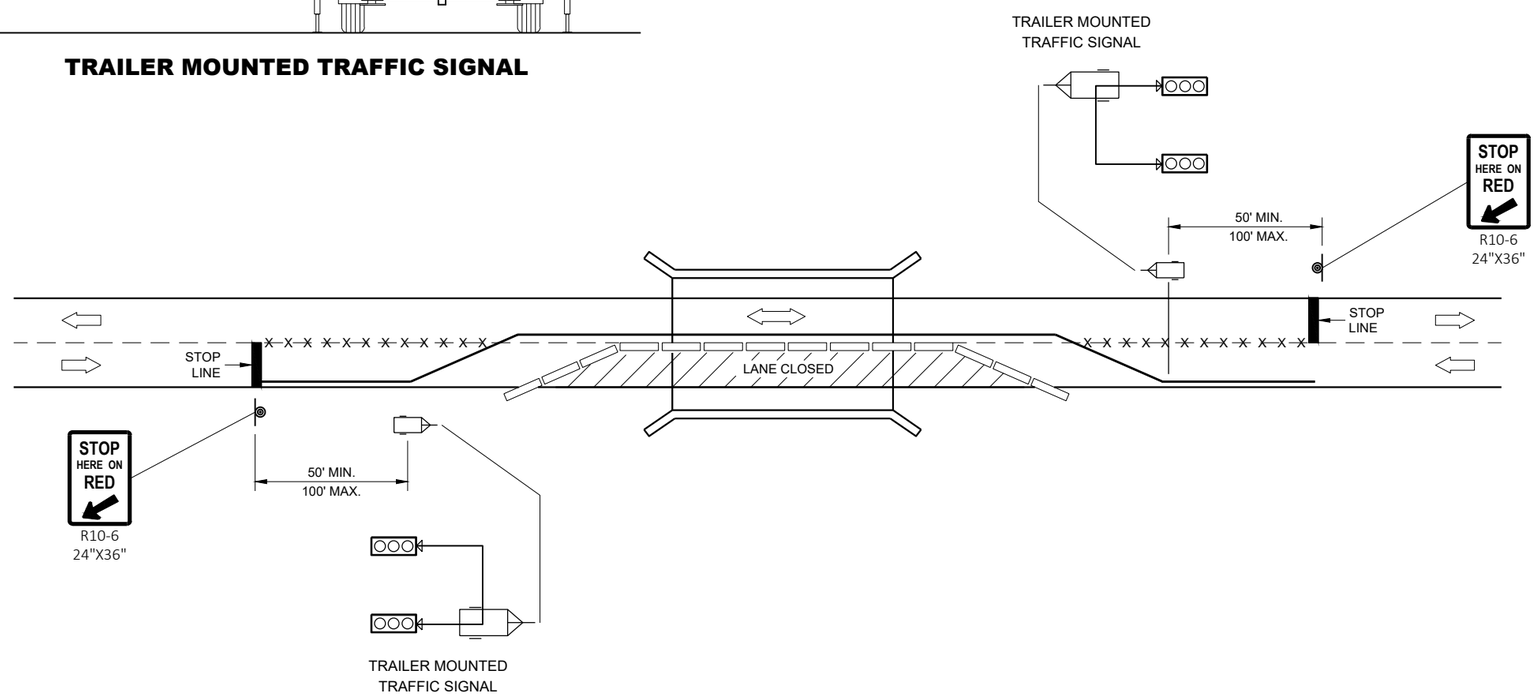

TYPICAL TRAILER MOUNTED TRAFFIC SIGNAL LOCATION

LEGEND

- POST MOUNTED SIGN
- TEMPORARY PRECAST CONCRETE BARRIER
- TRAILER MOUNTED TRAFFIC SIGNAL
- REMOVE PAVEMENT MARKINGS
- DIRECTION OF TRAFFIC

BRIDGE TEMPORARY TRAFFIC SIGNAL INSTALLATION

STATE OF WISCONSIN
DEPARTMENT OF TRANSPORTATION

APPROVED
June 2015 — DATE
/S/ Ahmet Demerbilek — ROADWAY STANDARDS DEVE ENGINEER
FHWA

6

SDD 09G02 - 05c

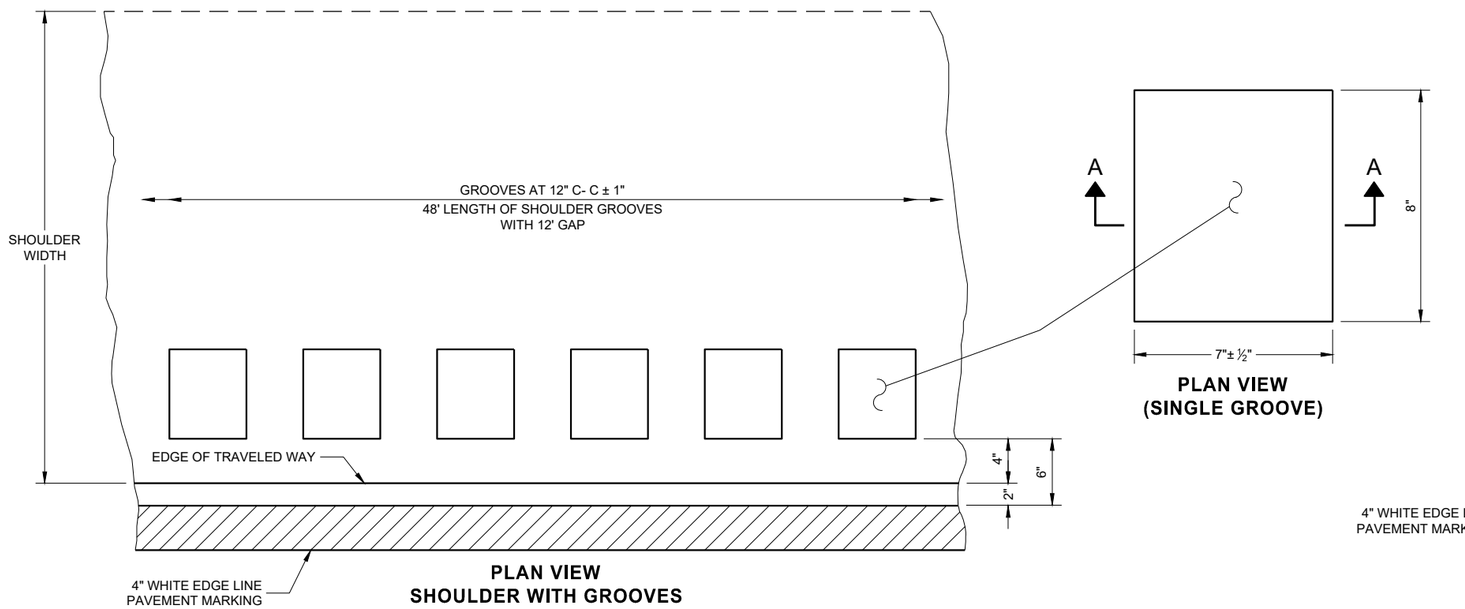

PLAN VIEW
(SINGLE GROOVE)

PLAN VIEW
SHOULDER WITH GROOVES

PLACEMENT DETAIL FOR TYPE 1 MILLED RUMBLE STRIP

GENERAL NOTES

DETAILS OF CONSTRUCTION NO SHOWN ON THIS DRAWING SHALL CONFORM TO THE PERTINENT REQUIREMENTS OF THE STANDARD SPECIFICATIONS AND APPLICABLE SPECIAL PROVISIONS.

DO NOT MILL SHOULDER GROOVES THROUGH ANY INTERSECTION, MARKED CROSSWALK, NON-MOTORIZED PATH CROSSING, OR SNOWMOBILE CROSSING.

(1) SHOULDER GROOVES MAY BE OMITTED IN AREAS WITH HIGH CONCENTRATIONS OF DRIVEWAYS. WHEN DIRECTED BY THE ENGINEER.

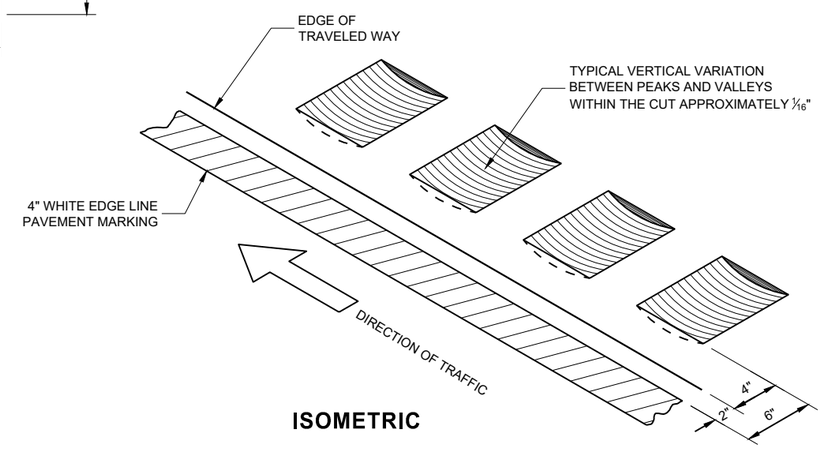

ISOMETRIC

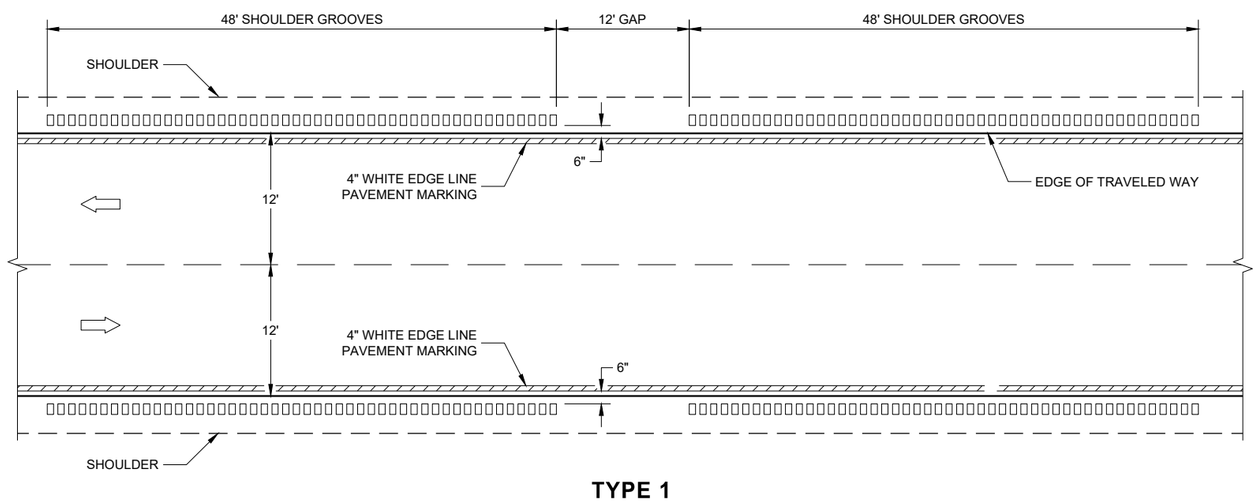

TYPE 1
2 - LANE SHOULDER RUMBLE STRIP

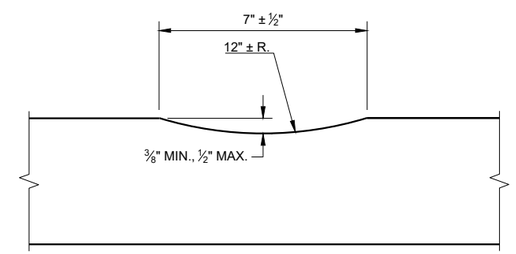

SECTION A - A

2-LANE RURAL SHOULDER RUMBLE STRIP, MILLING

STATE OF WISCONSIN
DEPARTMENT OF TRANSPORTATION

6

SDD 13A10 - 02a

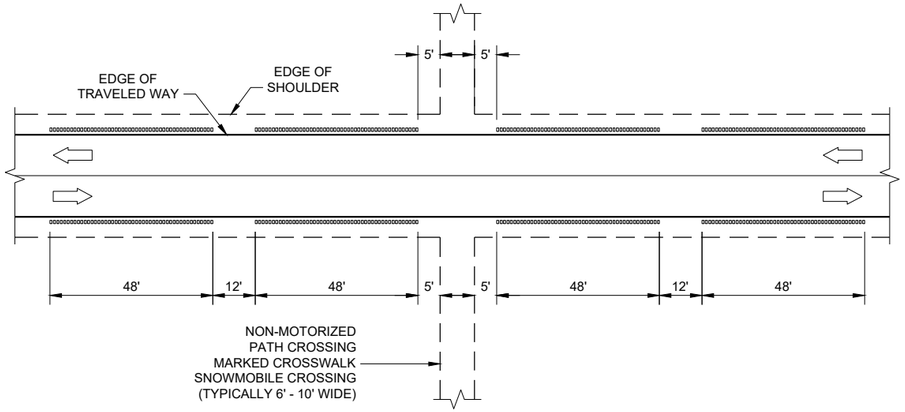

SHOULDER GROOVES AT MISCELLANEOUS CROSSINGS

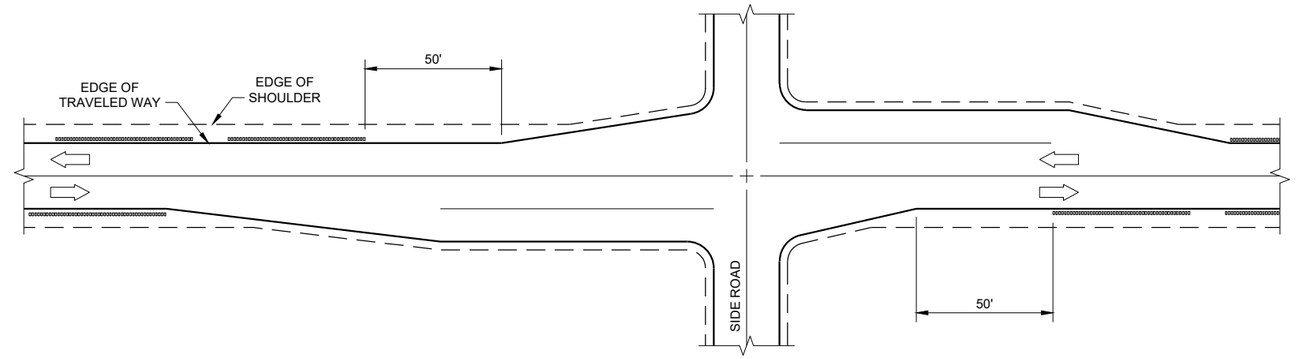

SHOULDER GROOVES AT RIGHT TURN LANE

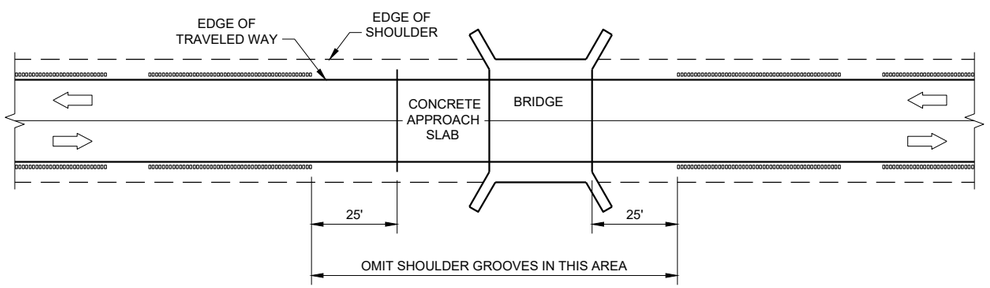

SHOULDER GROOVES AT BRIDGES

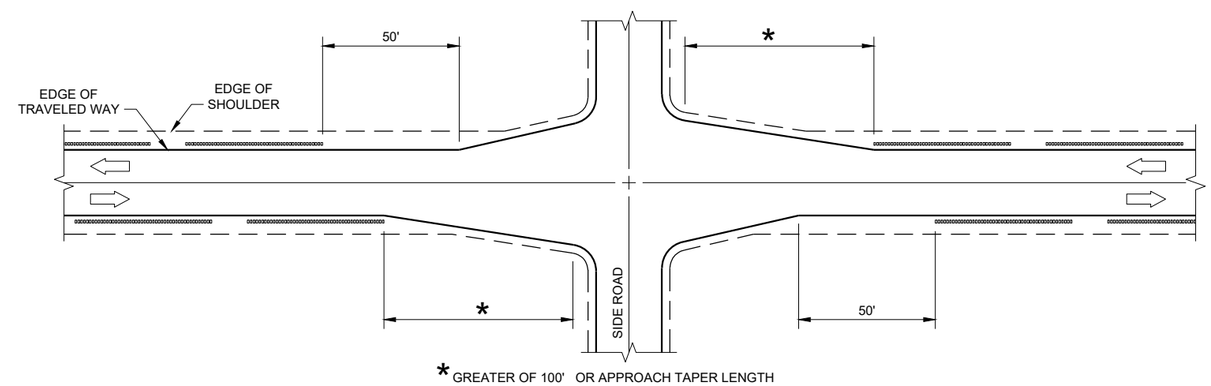

SHOULDER GROOVES AT INTERSECTIONS WITH APPROACH TAPER

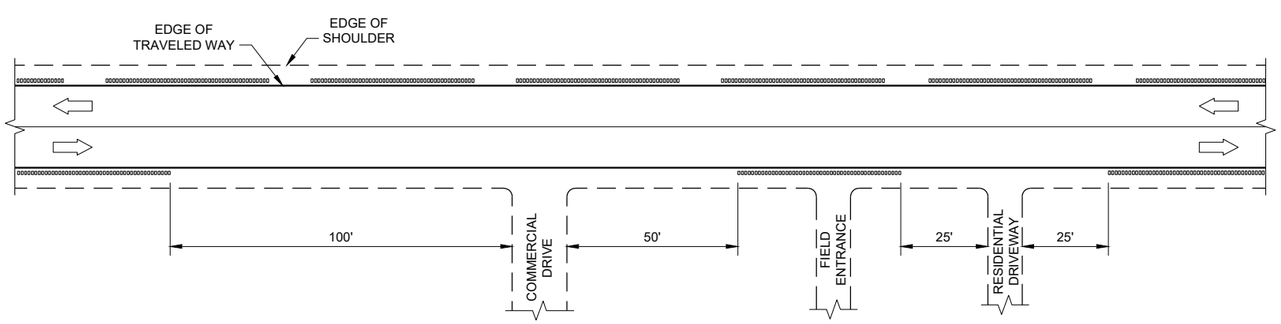

SHOULDER GROOVES AT DRIVEWAYS (1)

GENERAL NOTES

(1) SHOULDER GROOVES MAY BE OMITTED IN AREAS WITH HIGH CONCENTRATIONS OF DRIVEWAYS. WHEN DIRECTED BY THE ENGINEER.

2-LANE RURAL SHOULDER RUMBLE STRIP, MILLING

STATE OF WISCONSIN
DEPARTMENT OF TRANSPORTA

6

SDD 13A10 - 02c

GENERAL NOTES

DETAILS OF CONSTRUCTION NO SHOWN ON THIS DRAWING SHALL CONFORM TO THE PERTINENT REQUIREMENTS OF THE STANDARD SPECIFICATIONS AND APPLICABLE SPECIAL PROVISIONS.

DO NOT MILL CENTERLINE GROOVES THROUGH ANY INTERSECTION, MARKED CROSSWALK, NON-MOTORIZED PATH CROSSING, OR SNOWMOBILE CROSSING.

INSTALL PAVEMENT MARKING AFTER THE GROOVES ARE INSTALLED.

SEE SIGNING PLAN FOR SIGN REQUIREMENTS THAT MAY BE NEEDED.

(1) CENTERLINE GROOVES MAY BE OMITTED IN AREAS WITH HIGH CONCENTRATIONS OF DRIVEWAYS. WHEN DIRECTED BY THE ENGINEER.

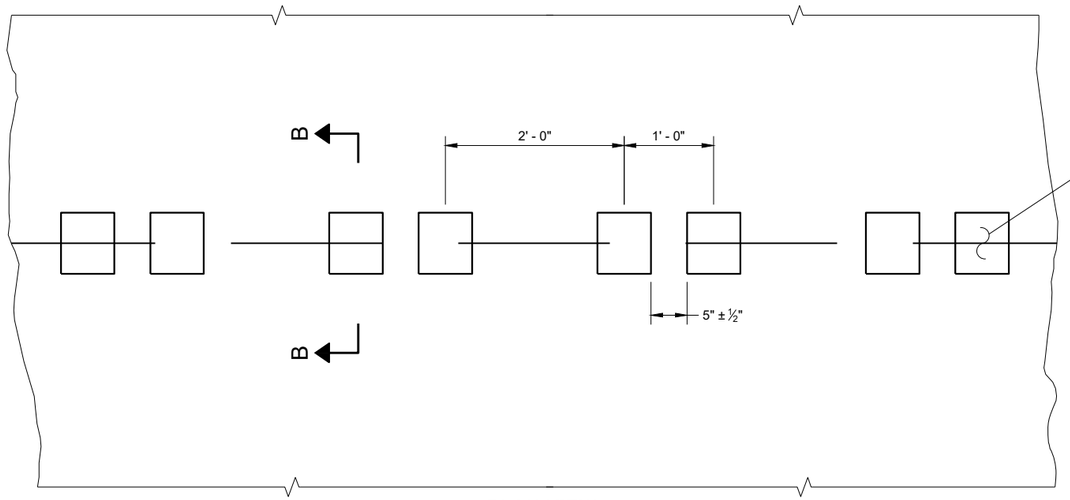

PLAN VIEW
SHOULDER WITH GROOVES

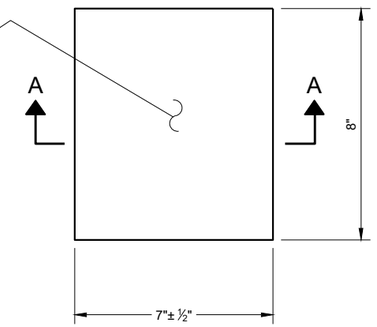

PLAN VIEW
(SINGLE GROOVE)

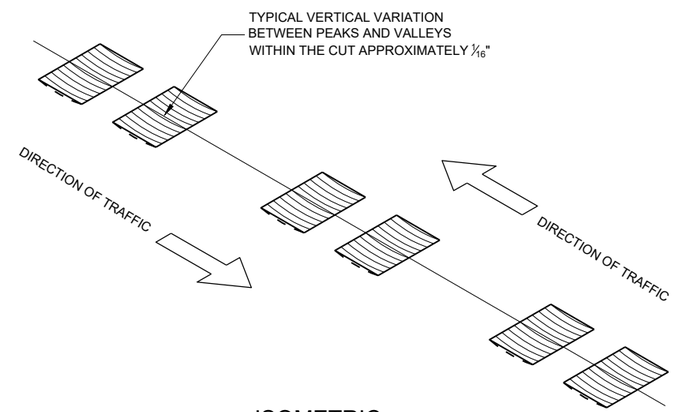

ISOMETRIC

PLACEMENT DETAIL FOR TYPE 1 MILLED RUMBLE STRIP

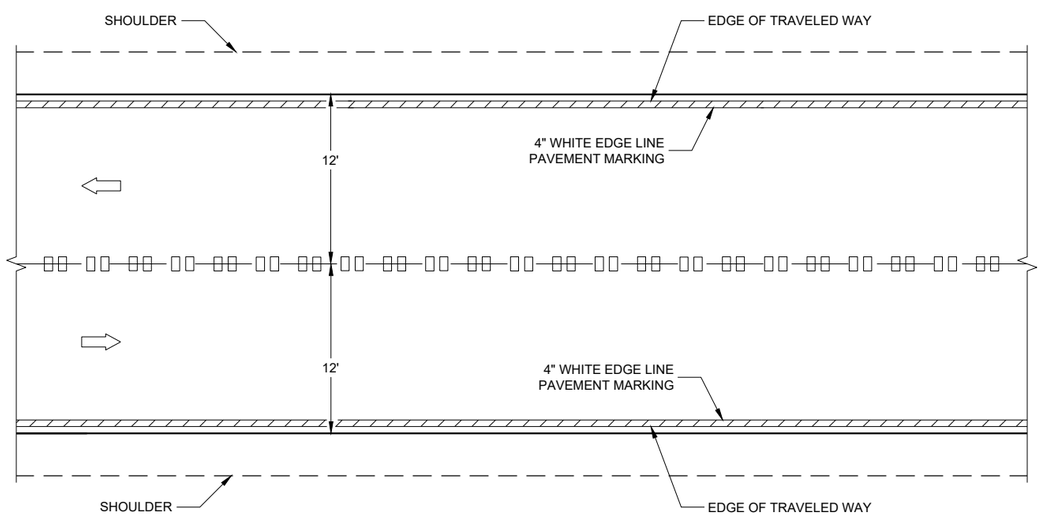

CENTERLINE GROOVES ON TWO-WAY ROADWAYS

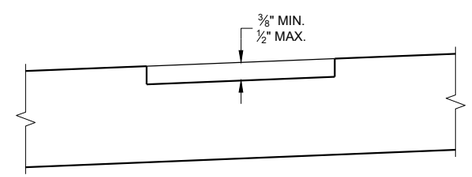

SECTION B - B
SUPERELEVATED ROADWAY

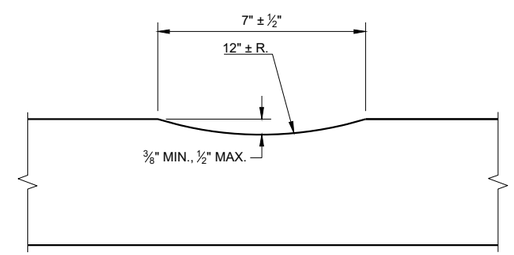

SECTION A - A

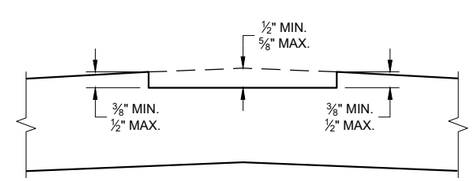

SECTION B - B
CROWNED ROADWAY

2-LANE RURAL
CENTER LINE RUMBLE STRIP, MILLING

STATE OF WISCONSIN
DEPARTMENT OF TRANSPORTAT

6

6

SDD 13A11 - 03a

SDD 13A11 - 03a

GENERAL NOTES

1. CENTERLINE GROOVES MAY BE OMITTED IN AREAS WITH HIGH CONCENTRATIONS OF DRIVEWAYS. WHEN DIRECTED BY THE ENGINEER.

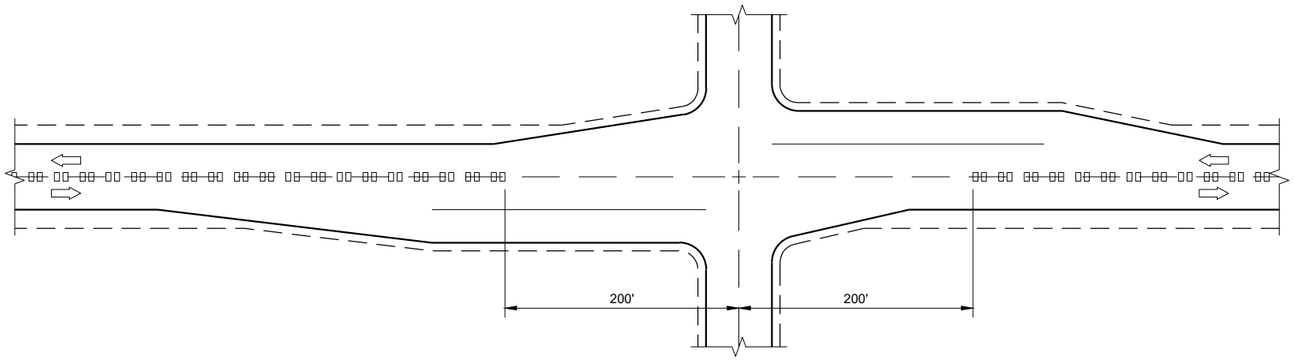

CENTERLINE GROOVES AT INTERSECTIONS

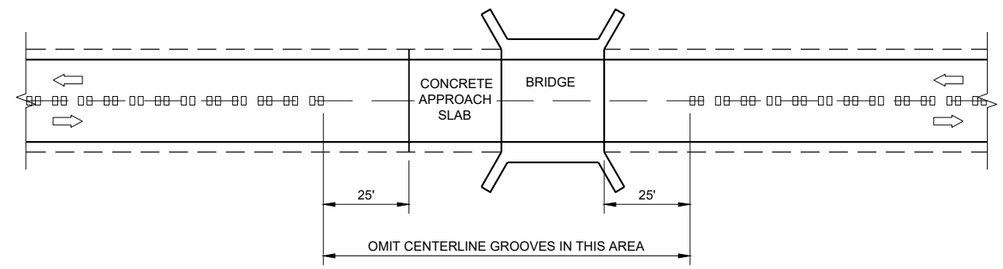

CENTERLINE GROOVES AT BRIDGES

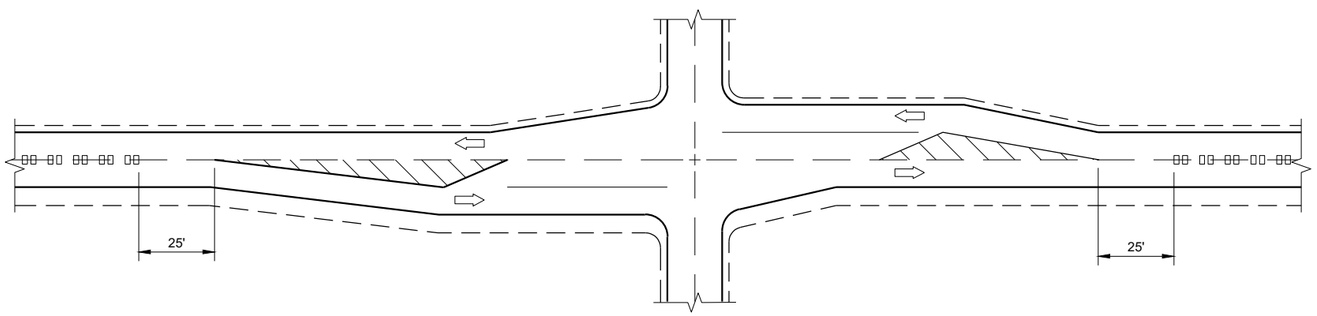

CENTERLINE GROOVES AT INTERSECTIONS (WITH LEFT TURN LANES)

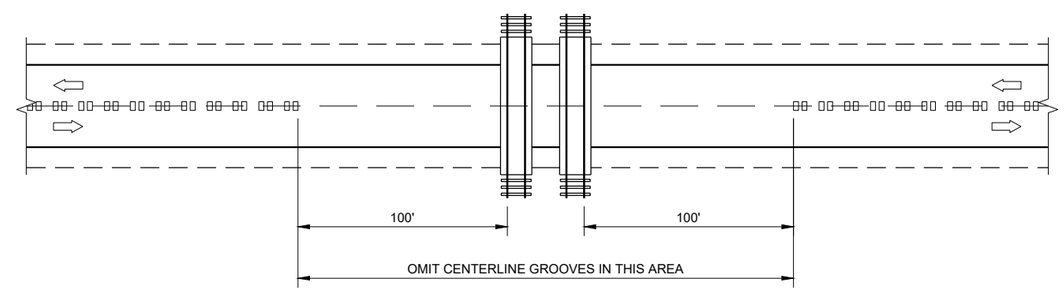

CENTERLINE GROOVES AT RAILROADS

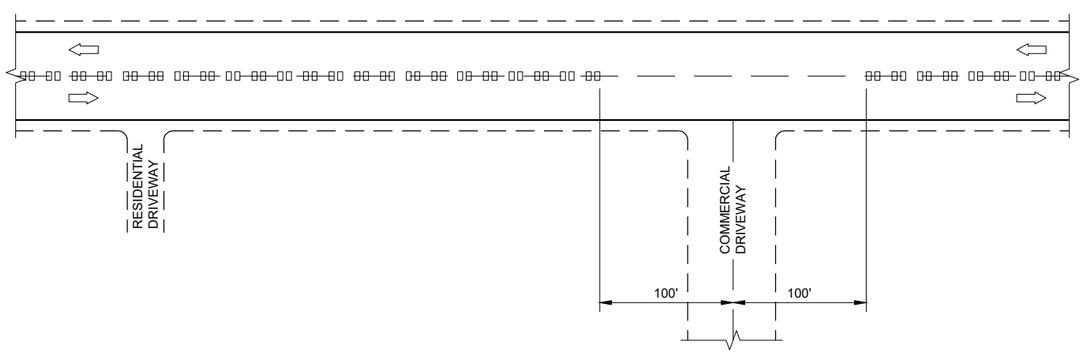

CENTERLINE GROOVES AT DRIVEWAYS (1)

6

6

SDD 13A11 - 03b

SDD 13A11 - 03b

2-LANE RURAL CENTERLINE RUMBLE STRIP, MILLING

STATE OF WISCONSIN
DEPARTMENT OF TRANSPORTATION

APPROVED

7/2018 — DATE

/S/ Rodney Taylor — ROADWAY STANDARDS DEVE ENGINEER

FHWA

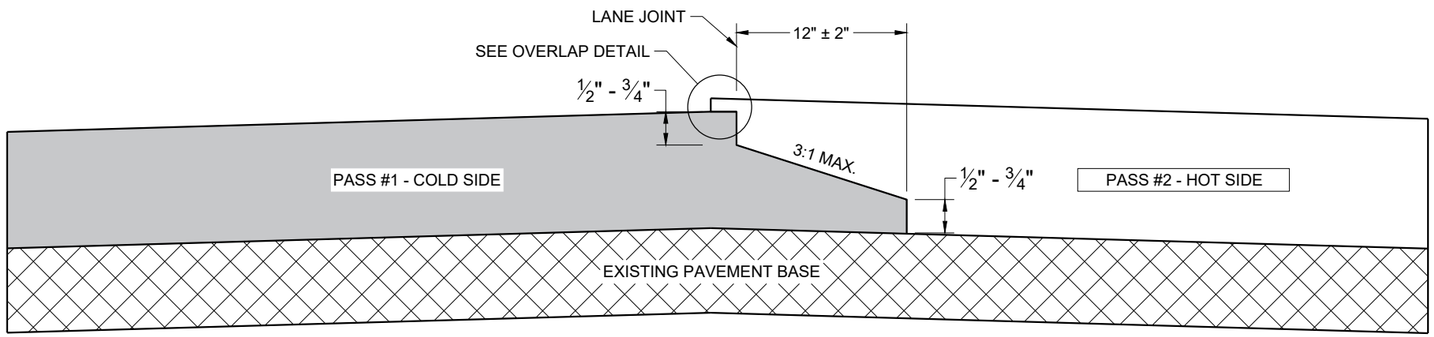

TYPICAL PAVEMENT CROSS SECTION
NOTCHED WEDGE JOINT

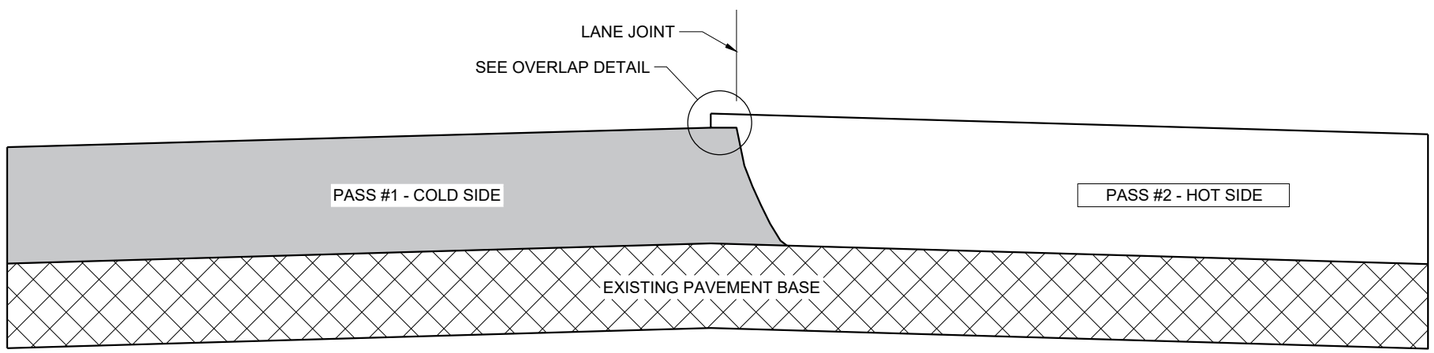

TYPICAL PAVEMENT CROSS SECTION
VERTICAL JOINT

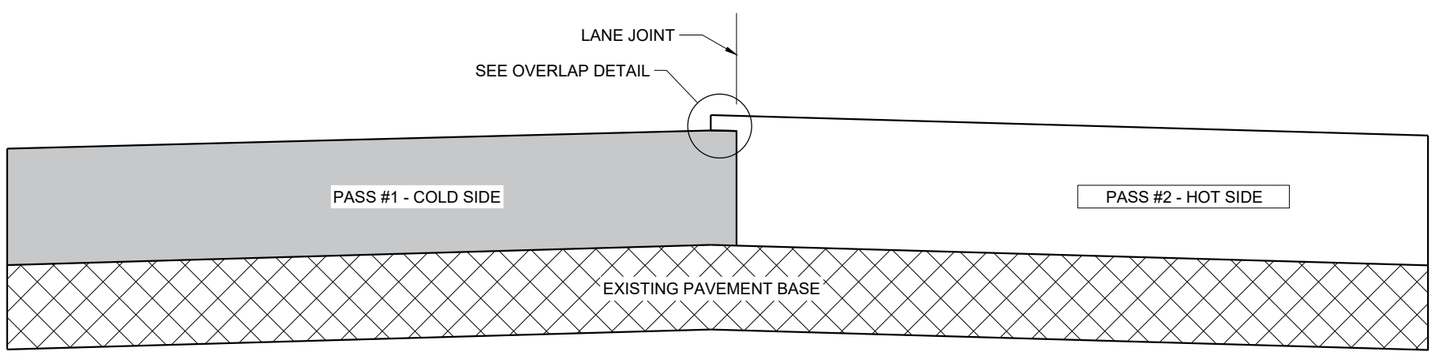

TYPICAL PAVEMENT CROSS SECTION
VERTICAL JOINT (MILLED)

GENERAL NOTES

IN ADDITION TO THE DETAILS PROVIDED IN THIS DRAWING, CONFORM TO STANDARD SPECIFICATION 450.3.2.8 FOR WHEN A NOTCHED WEDGE JOINT IS REQUIRED AND FOR GENERAL JOINT CONSTRUCTION REQUIREMENTS.

FOR ALL LONGITUDINAL JOINTS, ENSURE THE PAVER SCREED OVERLAPS THE PREVIOUSLY PLACED PAVEMENT BY 1" ± 0.5" AND THE HOT SIDE OF THE JOINT REMAINS HIGHER THAN THE COLD SIDE BY APPROXIMATELY 0.1" AFTER FINAL COMPACTION. (IT WILL BE FLUSH WHEN PAVING IN ECHELON.)

ONLY REMOVE THE LONGITUDINAL NOTCHED WEDGE JOINT FOR SMA PAVEMENT OR AS DIRECTED BY THE ENGINEER TO ADDRESS SPECIFIC LENGTHS OF JOINT DAMAGED BY TRAFFIC.

WHEN MILLING BACK OR REMOVING ANY LONGITUDINAL JOINT, LIMIT THE MATERIAL REMOVED TO 2" FROM THE TOP NOTCH OR FROM THE VERTICAL JOINT EDGE ON THE COLD SIDE OF THE JOINT.

USE LONGITUDINAL MILLED JOINT AS PLANS SHOW OR THE AS THE ENGINEER DIRECTS.

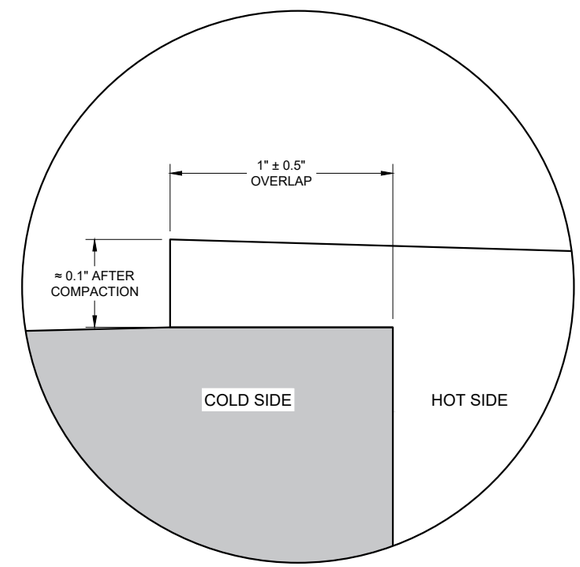

OVERLAP DETAIL (TYPICAL)

6

6

SDD 13C19 - 03

SDD 13C19 - 03

HMA LONGITUDINAL JOINTS

STATE OF WISCONSIN
DEPARTMENT OF TRANSPORTATION

APPROVED
November 2020 /S/ Steven Hefel
DATE HMA PAVEMENT ENGIN

FHWA

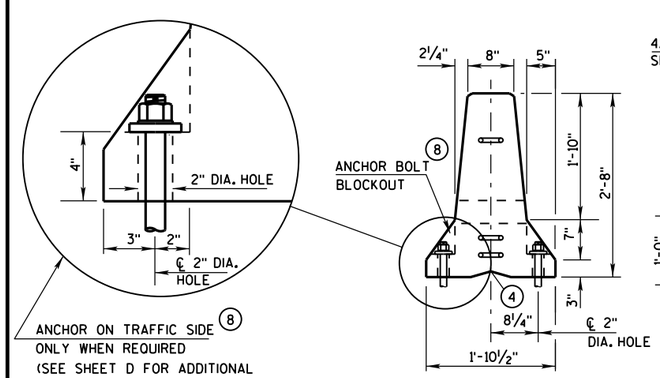

END VIEW

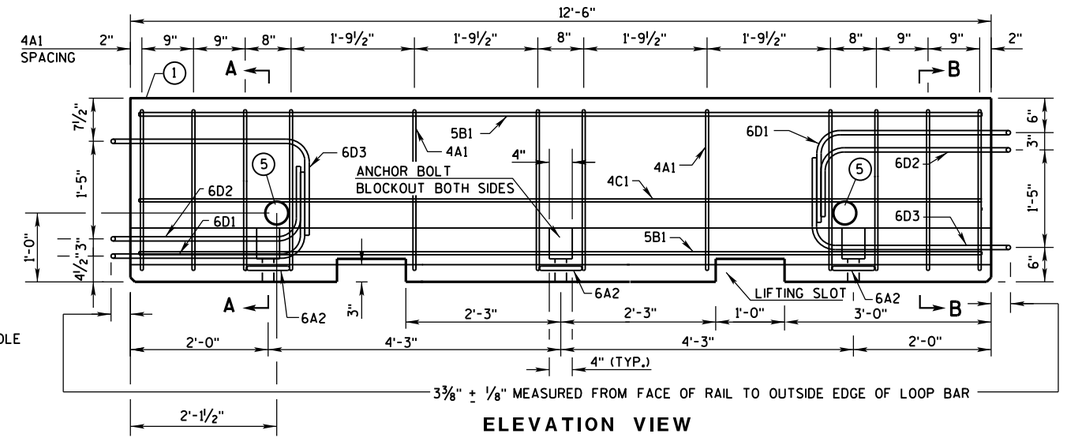

ELEVATION VIEW

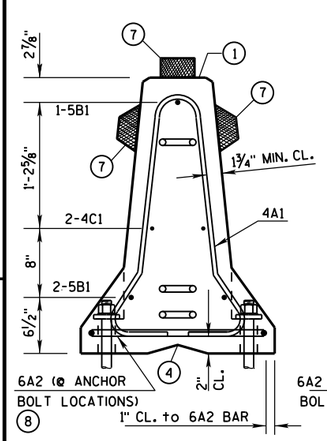

SECTION A-A
(STIRRUP PLACEMENT)

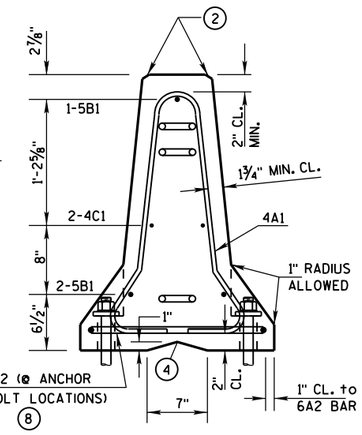

SECTION B-B
(STIRRUP PLACEMENT)

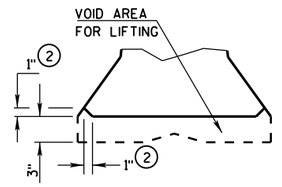

DETAIL "B"
LIFTING SLOT DETAIL

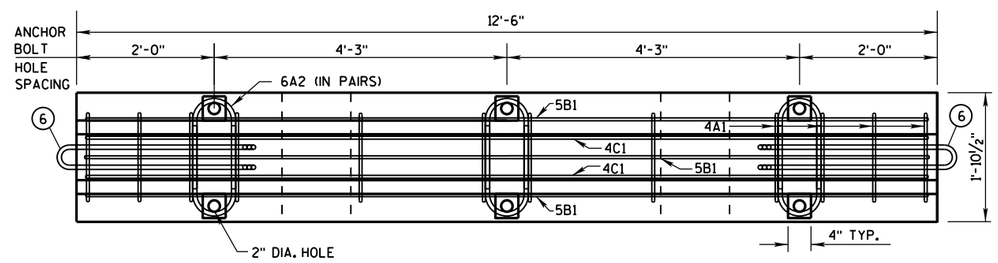

PLAN VIEW

DETAILS OF BARRIER SECTION

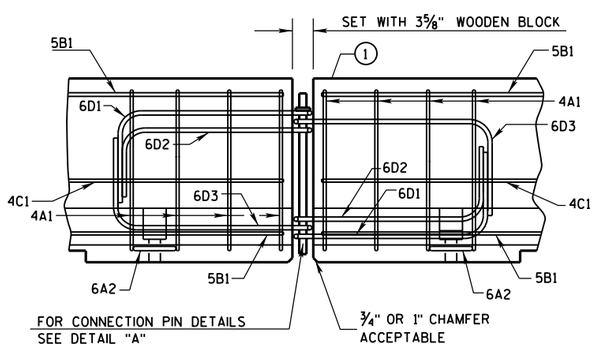

DETAILS OF BARRIER CONNECTION

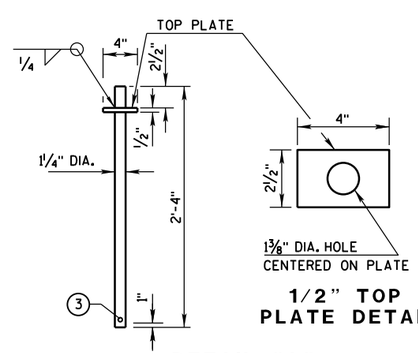

1/2" TOP PLATE DETAIL

DETAIL "A"
CONNECTION PIN
(A36 STEEL (10.9 LB EACH))

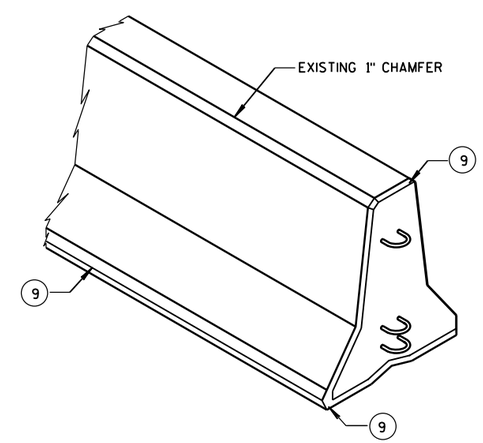

GENERAL NOTES

THESE GENERAL NOTES APPLY TO SHEETS 14B7-15(a) THRU 14B7-15(i).

DO NOT INTERMIX CONCRETE BARRIER TEMPORARY PRCAST, 12'-6" (CBTP12.5) WITH OTHER TEMPORARY CONCRETE BARRIERS.

USE ASTM A-615, GRADE 60, DEFORMED STEEL BARS FOR BARS 4A1, 6A2, 5B1 AND 4C1 IN THE BARRIER SECTION AND FOR 4V1, 4V2, 4V3, 4V4, 4V5, 4V6, 4F1, 4F2 AND 5F3 IN THE BARRIER TAPER SECTION.

LOOP BARS 6D1, 6D2 AND 6D3 SHALL BE ¾" SMOOTH STEEL BARS WITH A MINIMUM YIELD STRENGTH OF 60 KSI, A TENSILE STRENGTH OF NOT LESS THAN 1.25 TIMES THE YIELD STRENGTH BUT A MINIMUM OF 80 KSI, A MINIMUM 14% ELONGATION IN 8 INCHES AND PASSING A 180 DEGREE BEND TEST USING A 3-½" PIN BEND DIAMETER FOR BEND TESTS. THE LOOPS SHALL BE INSTALLED WITHIN ⅛" OF THE PLAN DIMENSION.

CONSTRUCT LIFTING SLOTS AS SPECIFIED ON THE PLANS TO FACILITATE THE DRAINAGE OF WATER AFTER INSTALLATION.

PLACE BARRIER ON A PAVED SURFACE. REMOVE ALL LOOSE DIRT AND SAND FROM THE ROADWAY SURFACE PRIOR TO PLACEMENT OF THE BARRIER.

INSTALL MECHANICAL OR ADHESIVE ANCHORS PER MANUFACTURER'S RECOMMENDATIONS. PROVIDE MANUFACTURER'S INFORMATION TO PROJECT ENGINEER.

1. MARK ONE END OF EACH BARRIER PERMANENTLY BY FORMING INTO THE BARRIER THE FOLLOWING INFORMATION:
   a. TYPE: WI CBTP
   b. MANUFACTURER
   c. DATE MANUFACTURED (MONTH AND YEAR)
2. 1" CHAMFER TO PREVENT SPALLING.
3. A ⅜" HOLE IN THE CONNECTION PIN, AT THE LOCATION SHOWN, IS ACCEPTABLE, BUT NOT REQUIRED..
4. "V" NOTCH IS OPTIONAL.
5. THE 4" DIAMETER, 11 GAUGE STEEL, ROUND MECHANICAL TUBING SLEEVE FOR LIFTING (OPTIONAL).
6. NEVER USE LOOP BARS (6D1, 6D2 OR 6D3) TO LIFT, MOVE OR REPOSITION THE BARRIER.
7. USE DELINEATORS CONFORMING TO SECTION 633 OF THE STANDARD SPECIFICATIONS. CONTRACTOR MAY USE ALTERNATE SHAPES AND HOUSING. INSTALL DELINEATORS ACCORDING TO MANUFACTURES INSTRUCTION. INSTALL YELLOW REFLECTORS WHEN BARRIER IS LOCATED TO THE LEFT OF TRAFFIC AND WHITE REFLECTORS WHEN BARRIER IS LOCATED TO THE RIGHT OF TRAFFIC. SPACE DELINEATORS A MAXIMUM OF 25 FEET APART. PROVIDE TOP MOUNTED DELINEATORS IN ADDITION TO THE SIDE MOUNTED DELINEATORS ON ALL BARRIER INSTALLATIONS LOCATED ON A CURVED ALIGNMENT LONGER THAN 200 FEET AND ON BARRIERS USED TO SEPARATE OPPOSING TRAFFIC.
8. SEE SHEET D FOR HOW TO ANCHOR BARRIER. SEE SHEET E FOR WHEN TO ANCHOR BARRIER.
9. 1" CHAMFER OPTIONAL.

f'c = 4,000 psi

CONCRETE BARRIER
TEMPORARY PRECAST, 12'-6"

STATE OF WISCONSIN
DEPARTMENT OF TRANSPOR

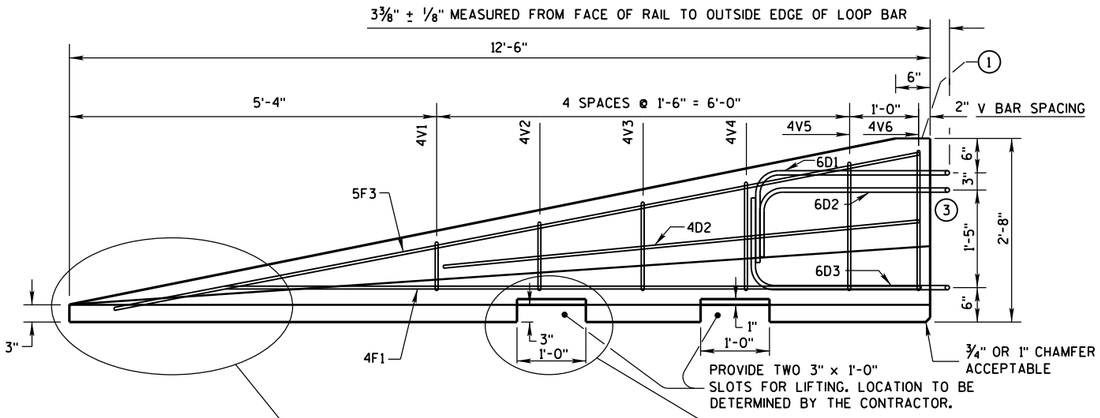

SIDE ELEVATION

(FOR CONNECTION TO LEFT END OF BARRIER)

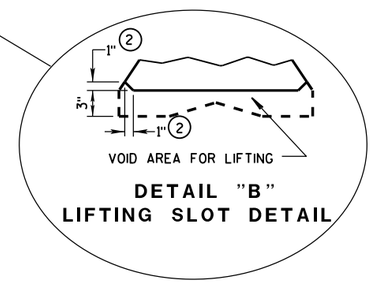

DETAIL "B"
LIFTING SLOT DETAIL

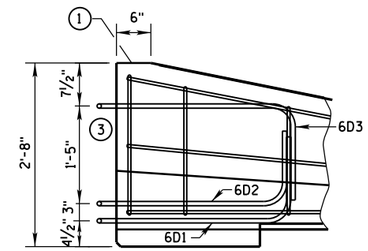

SIDE ELEVATION

LOOP BAR ASSEMBLY INVERTED
FOR OPPOSITE END.
(FOR CONNECTION TO RIGHT END OF BARRIER)

GENERAL NOTES

1. MARK ONE END OF EACH BARRIER PERMANENTLY BY FORMING INTO THE BARRIER THE FOLLOWING INFORMATION:
   a. TYPE WICBTP
   b. MANUFACTURER
   c. DATE MANUFACTURED (MONTH AND YEAR)
2. 1" CHAMFER TO PREVENT SPALLING.
3. NEVER USE LOOP BARS (6D1, 6D2 OR 6D3) TO LIFT, MOVE OR REPOSITION THE BARRIER.

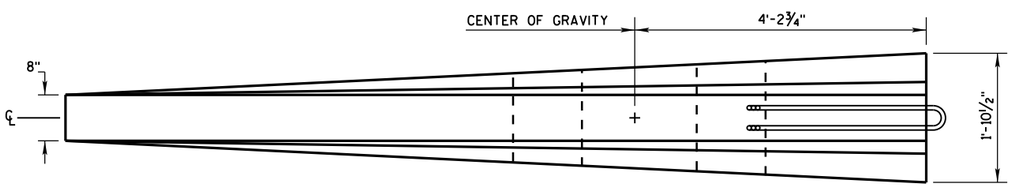

PLAN VIEW

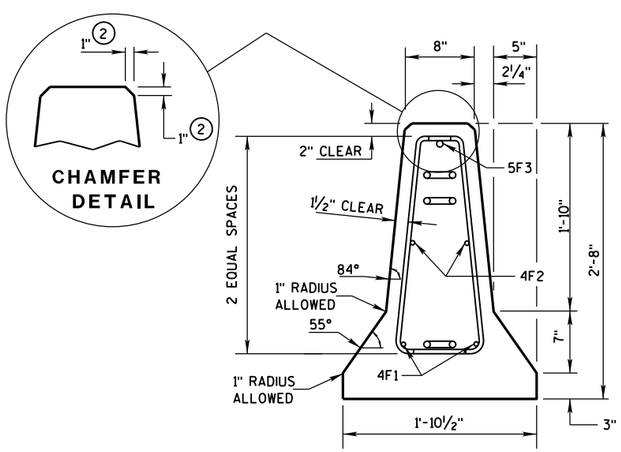

END SECTION

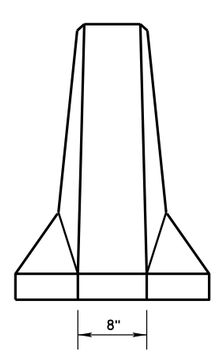

FRONT ELEVATION

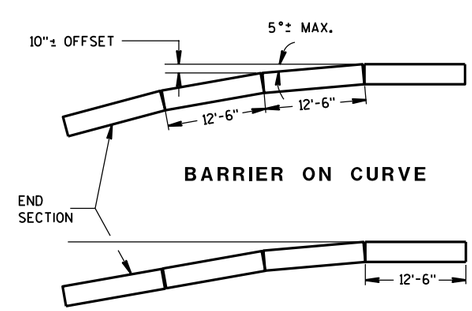

BARRIER ON CURVE

FLARE AT BARRIER END

POSTED SPEED, (MPH)	FLARE RATE
40 OR LESS	6:1
45 OR GREATER	8:1

DETAILS OF BARRIER TAPER SECTION

CONCRETE BARRIER
TEMPORARY PRECAST, 12'-6"

STATE OF WISCONSIN
DEPARTMENT OF TRANSPO

6

S.D.D. 14 B 7-15b

GENERAL NOTES

(1) NEVER USE LOOP BARS (6D1, 6D2 OR 6D3) TO LIFT, MOVE OR REPOSITION THE BARRIER.

BARRIER TAPER SECTION BILL OF MATERIALS

(PER 12'-6" BARRIER TAPER SECTION)

BAR	BAR SIZE	NO. OF BARS	LENGTH FT.
4V1	4	2	1'-11"
4V2	4	2	2'-2"
4V3	4	2	2'-6"
4V4	4	2	2'-9"
4V5	4	2	3'-2"
4V6	4	2	3'-4"
4F1	4	2	12'-0"
4F2	4	2	7'-6"
5F3	5	1	11'-9"
LOOP ASSEMBLY			
6D1	6	1	8'-5"
6D2	6	1	7'-7"
6D3	6	1	8'-6"

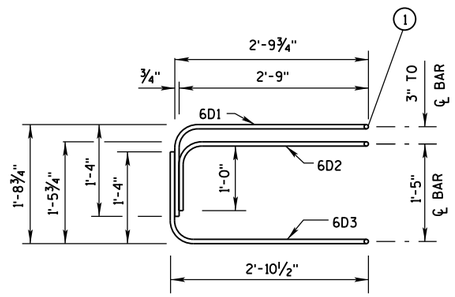

ELEVATION
LOOP BAR ASSEMBLY

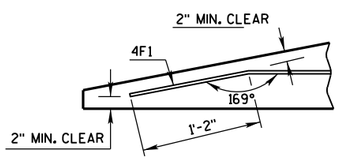

DETAIL "C"
BENT BAR DETAIL

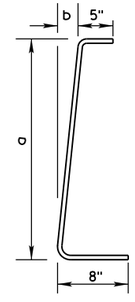

BAR	a	b
V1	10"	1"
V2	1'-1"	1¼"
V3	1'-5"	1⅝"
V4	1'-8"	1⅞"
V5	2'-0½"	2⅜"
V6	2'-3"	2¾"

4V BARS
2 AT EACH SIZE REQUIRED
FOR STIRRUP ASSEMBLY

TAPER BARRIER SECTION

BARRIER SECTION BILL OF MATERIALS

(PER 12'-6" BARRIER SECTION)

BAR	BAR SIZE	NO. OF BARS	LENGTH FT.
4A1	4	12	6'-0"
6A2	6	6	2'-11"
5B1	5	3	12'-2"
4C1	4	2	12'-2"
LOOP ASSEMBLY			
6D1	6	2	8'-5"
6D2	6	2	7'-7"
6D3	6	2	8'-6"

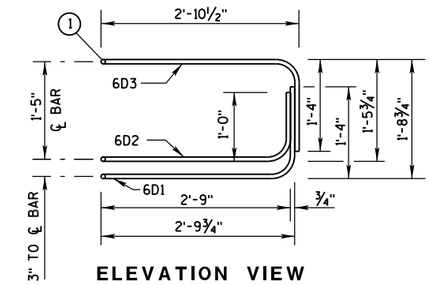

ELEVATION VIEW

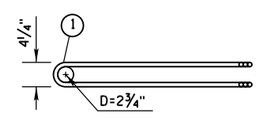

PLAN VIEW
LOOP BAR ASSEMBLY
(MARKED END SHOWN, INVERT FOR OTHER END)

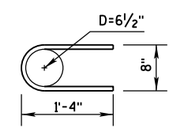

6A2

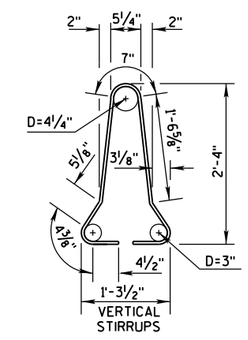

VERTICAL STIRRUPS
4A1

BARRIER SECTION

CONCRETE BARRIER
TEMPORARY PRECAST, 12'-6"

STATE OF WISCONSIN
DEPARTMENT OF TRANSPOR

6

S.D.D. 14 B 7-15c

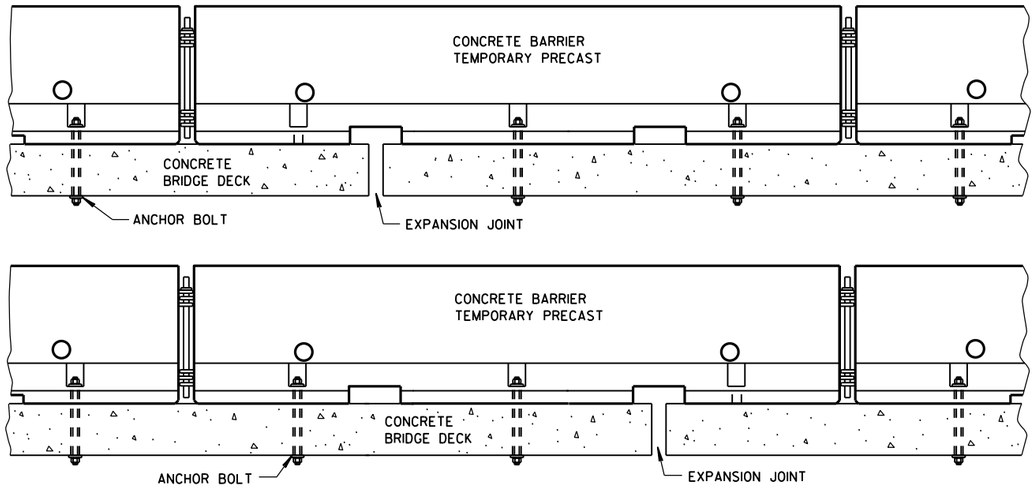

TREATMENT AT BRIDGE DECK EXPANSION JOINTS

(NO SINGLE CONCRETE BARRIER SECTION SHALL BE ANCHORED TO BOTH THE BRIDGE DECK AND THE APPROACH SLAB. ALL ANCHOR BOLT LOCATIONS SHALL BE ANCHORED TO THE DECK IN ACCORDANCE WITH THE DETAIL. NO MORE THAN ONE ANCHOR BOLT SHALL BE ELIMINATED FROM A BARRIER SECTION WHEN SPANNING AN EXPANSION JOINT.)

GENERAL NOTES

SEE SHEET E FOR WHEN TO ANCHOR. OTHER PARTS OF THE PLAN MAY SHOW ADDITIONAL LOCATIONS REQUIRING ANCHORING.

REMOVE ALL ANCHORS WHEN NO LONGER NEEDED. FILL CONCRETE PAVEMENTS, DECKS AND APPROACH SLABS WITH NON-SHRINK COMMERICAL GROUT FROM THE APPROVED PRODUCT LIST. FILL ASPHALT PAVEMENTS WITH ASTM D6690 TYPE II RUBBERIZED CRACK FILLER.

1. 1⅛" DIAMENTER A307 THREADED ROD, ½" X 3" X 3" SQUARE PLATE WASHER WITH ASTM A36 STEEL. ASTM A563A HEAVY HEX NUT.
2. ADHESIVE ANCHORS WITH A MINIMUM BOND STRENGTH OF 1,800 PSI AND 5¼" EMBEDMENT. SEE 603.2 AND 603.3.1.2 OF THE WISCONSIN STANDARD SPECIFICATIONS FOR MORE INFORMATION ON ADHESIVE ANCHORS.
3. ASPHALT SURFACE SHOWN. CONTRACTOR MAY DRILL THROUGH CONCRETE PAVEMENT AND THAN DRIVE ASPHALT ANCHOR PIN.

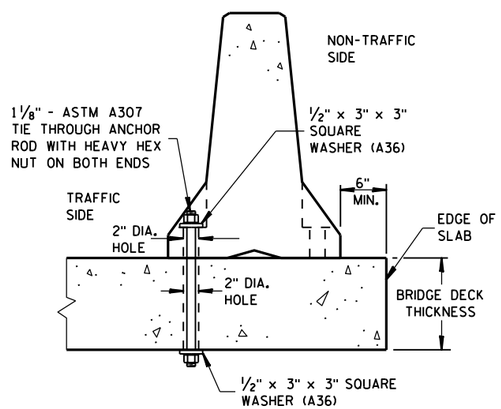

THROUGH BOLTED ANCHOR INSTALLATION ON BRIDGE DECK

(DO NOTUSE ON CONCRETE BRIDGE DECK WITH ASPHALT OVERLAY)

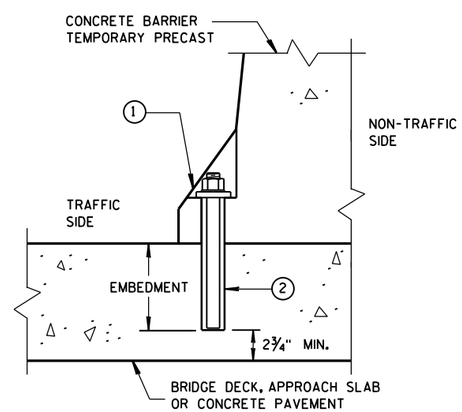

REMOVABLE ADHESIVE ANCHOR INSTALLATION ON CONCRETE BRIDGE DECK, CONCRETE APPROACH SLAB, OR CONCRETE PAVEMENT

(DO NOT USE ON CONCRETE WITH AN ASPHALTIC OVERLAY)

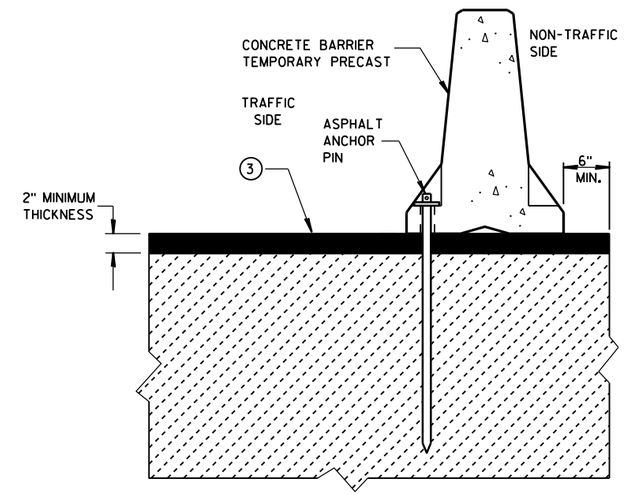

STAKE DOWN INSTALLATION FOR ASPHALTIC SURFACE

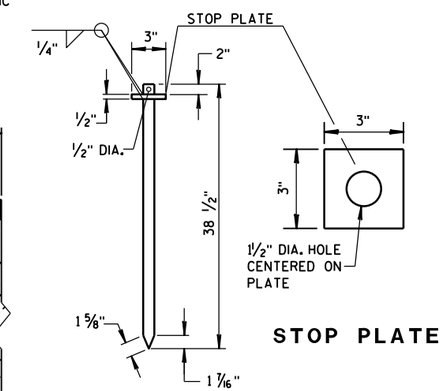

STOP PLATE

ASPHALT ANCHOR PIN

(ASTM A36 STEEL)

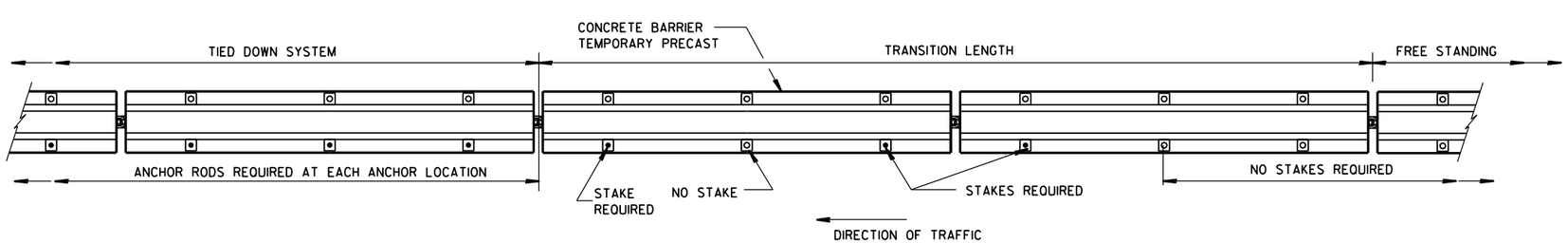

PLAN VIEW

FREE STANDING TRANSITION TO TIED-DOWN SYSTEM

(PLACE TRANSITION IN A TANGENT SECTION OF BARRIER PARALLEL TO THE ROADWAY. IF TRANSITION OCCURS ON STRUCTURAL SLAB, ANCHOR AS SHOWN.)

CONCRETE BARRIER
TEMPORARY PRECAST, 12'-6"

STATE OF WISCONSIN
DEPARTMENT OF TRANSPOI

6

S.D.D. 14 B 7-15d

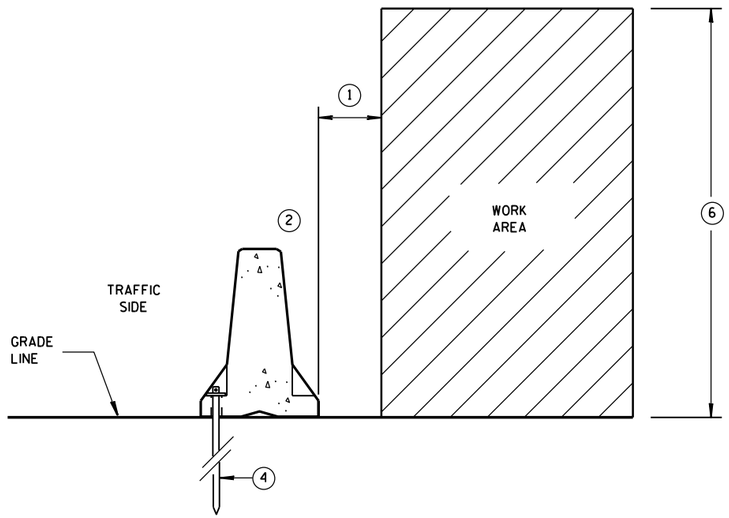

ANCHORED BARRIER SPACE REQUIREMENTS FOR HAZARDS EXTENDED ABOVE THE GRADE LINE

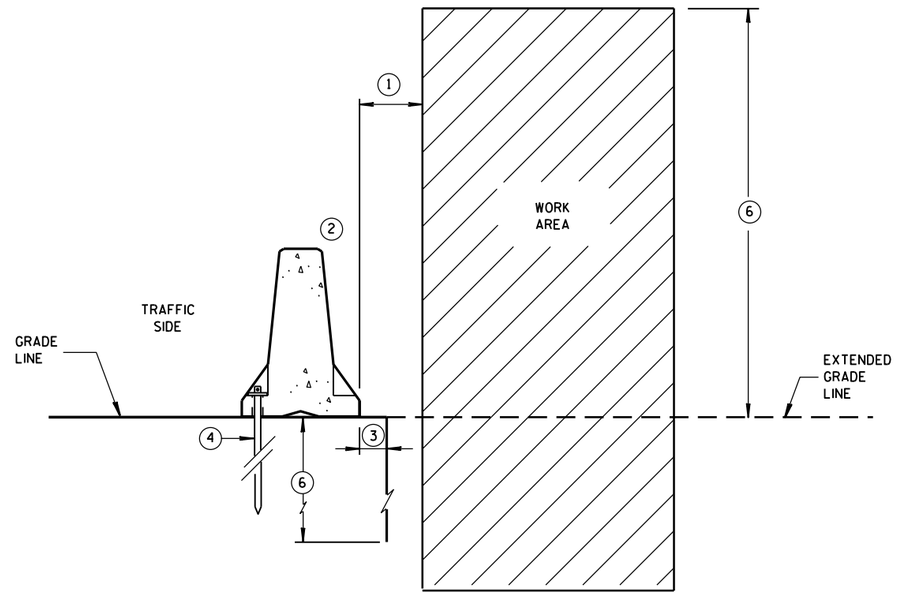

ANCHORED BARRIER SPACE REQUIREMENTS ON VERTICAL DROP OFFS

GENERAL NOTES

1. WHEN OBJECTS EXTEND ABOVE THE GRADE, A MINIMUM OF 1 FOOT IS REQUIRED FROM BACK OF BARRIER TO OBJECT. SEE OTHER DETAILS FOR FOR THE MINIMUM OFFSET FROM BACK OF BARRIER TO SLOPES OR VERTICAL DROPS.
2. OBJECTS ARE NOT TO BE PLACED ON, MOUNTED TO, OR LEANED AGAINST THE BARRIER WITHOUT PERMISSION OF THE PROJECT ENGINEER.
3. SEE OTHER DETAIL ON SHEET "D" FOR SPACE REQUIREMENTS.
4. SEE BOLT THROUGH DECK, REMOVABLE ADHESIVE ANCHOR, OR A STAKE DOWN FOR ASPHALTIC SURFACE TREATMENT DETAILS. ASPHALTIC ANCHOR SHOWN.
5. DEPTH OF 3 FEET OR MORE.
6. Y = 6'-6".

POSTED SPEED MPH	X
45 OR GREATER	4'
40 OR LESS	2'

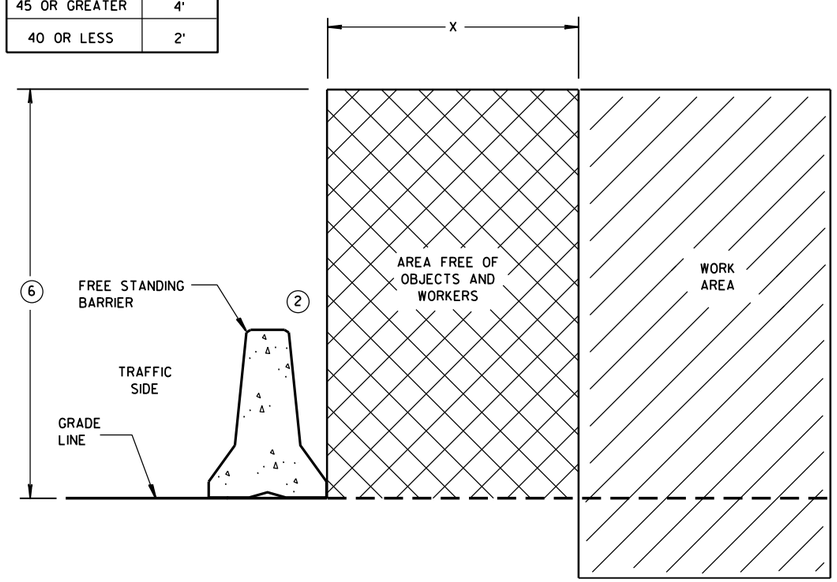

FREE STANDING BARRIER SPACE REQUIREMENTS

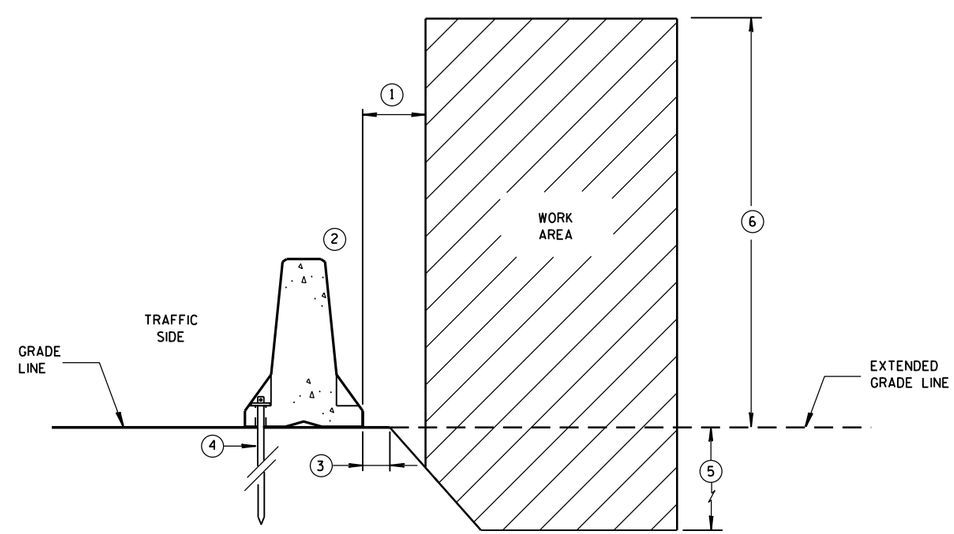

ANCHORED BARRIER SPACE REQUIREMENTS ON SLOPES

CONCRETE BARRIER
TEMPORARY PRECAST, 12'-6"

STATE OF WISCONSIN
DEPARTMENT OF TRANSPOR

6

S.D.D. 14 B 7-15e

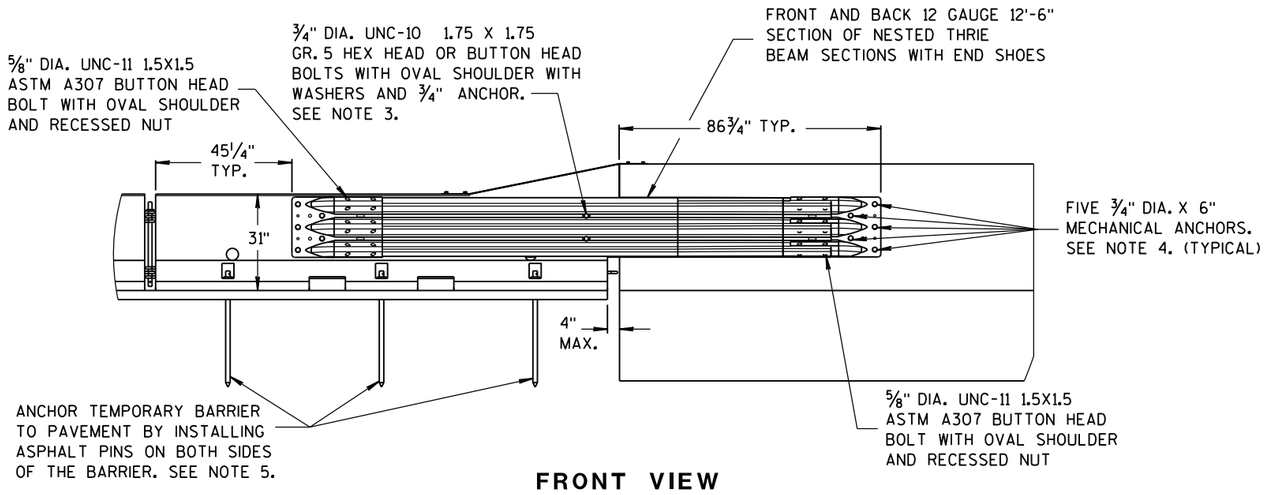

FRONT VIEW

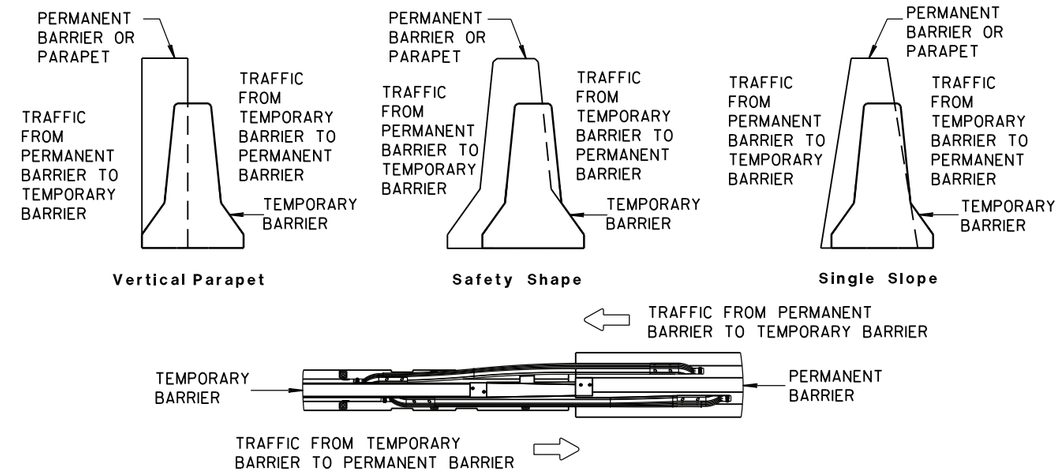

TEMPORARY BARRIER PLACEMENT FOR TRANSITION TO TIED DOWN SYSTEM

NOTES

NESTED THRIE BEAM IS REQUIRED ON BOTH SIDES OF THE TEMPORARY BARRIER FOR ALL INSTALLATIONS REGARDLESS OF TRAFFIC.

1. CAP END PLATE PLACED FLUSH WITH UPSTREAM END OF PERMANENT BARRIER OR PARAPET.
2. THRIE BEAM PIECES ARE OFFSET 15 1/4" TO PREVENT INTERFERENCE FROM THE ANCHORS ON OPPOSING SIDES.
3. MINIMUM MECHANICAL OR ADHESIVE ANCHOR STRENGTH REQUIREMENTS: ULTIMATE TENSILE LOAD 9.48 KIPS AND ULTIMATE SHEAR LOAD 10.48 KIPS.
4. MINIMUM MECHANICAL OR ADHESIVE ANCHOR STRENGTH REQUIREMENTS: ULTIMATE TENSILE LOAD 17.9 KIPS AND ULTIMATE SHEAR LOAD 21.96 KIPS.
5. MAY BE USED ON CONCRETE OR ASPHALT PAVEMENTS. ASPHALT OPTION SHOWN. FOR CONCRETE OPTION SEE OTHER DETAILS.
6. MINIMUM MECHANICAL OR ADHESIVE ANCHOR STRENGTH REQUIREMENTS: ULTIMATE TENSILE LOAD 12.14 KIPS AND ULTIMATE SHEAR LOAD 17.5 KIPS.

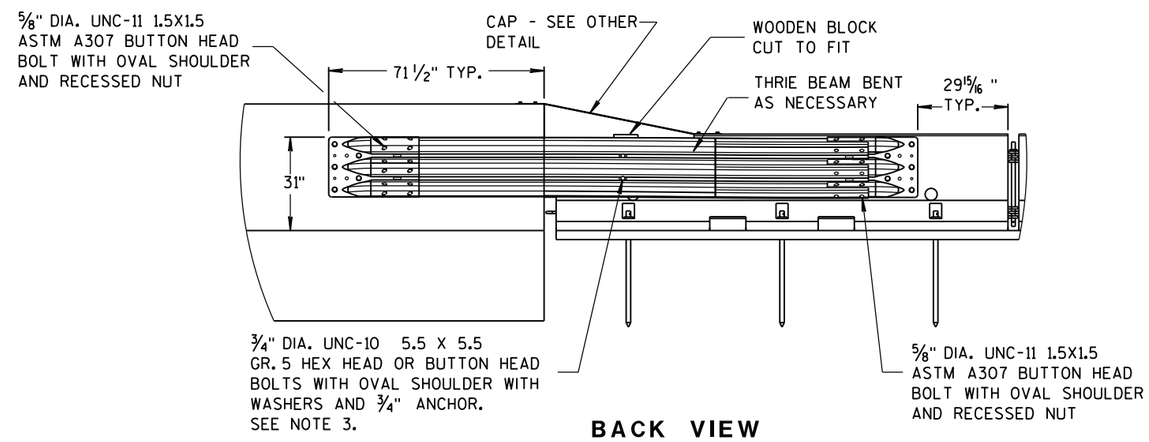

BACK VIEW

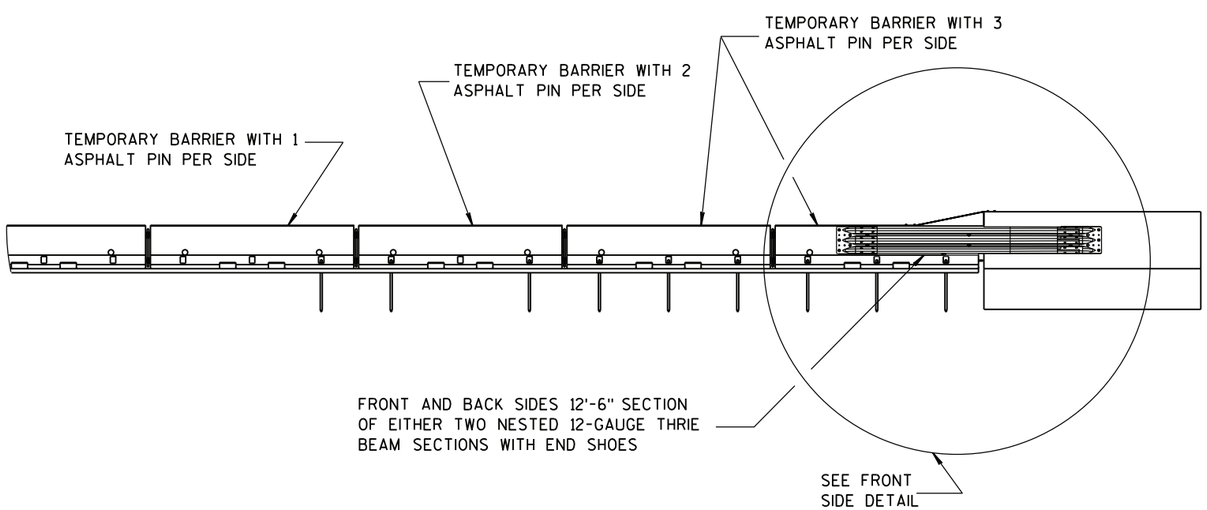

FRONT VIEW

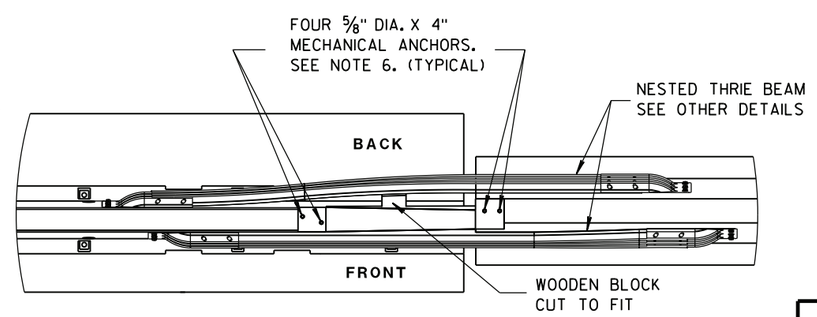

PLAN VIEW

TRANSITION TO TIED DOWN SYSTEM

CONCRETE BARRIER
TEMPORARY PRECAST, 12'-6"

STATE OF WISCONSIN
DEPARTMENT OF TRANSPOR

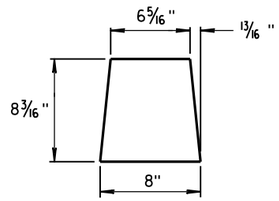

GUSSET 1

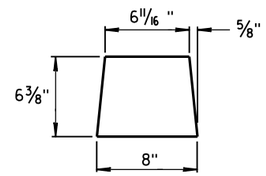

GUSSET 2

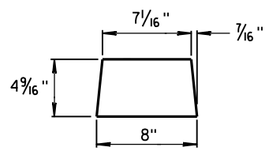

GUSSET 3

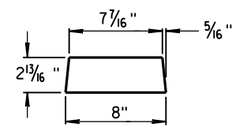

GUSSET 4

GUSSETS

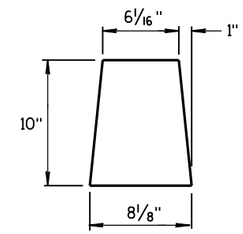

END PLATE

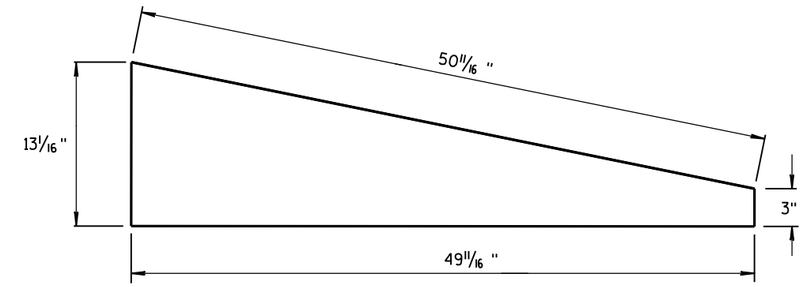

SIDE PLATE

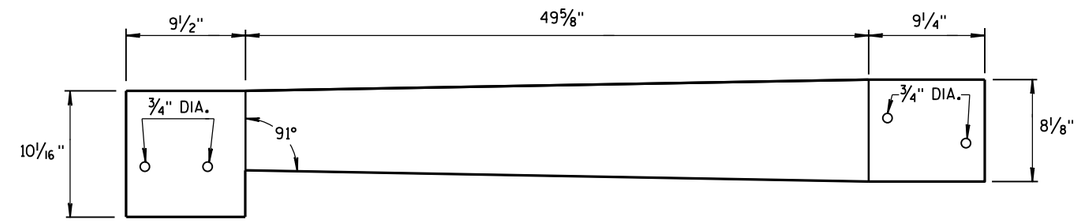

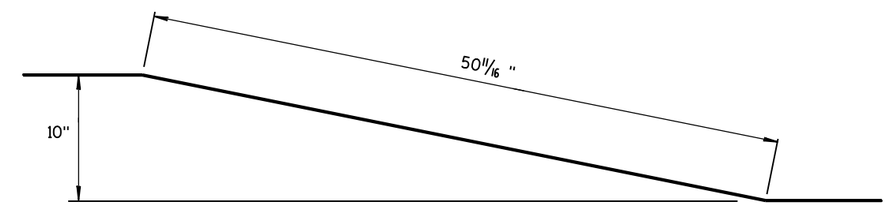

TOP PLATE

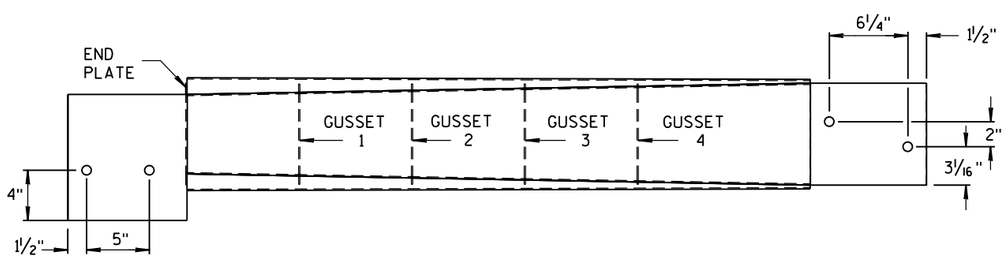

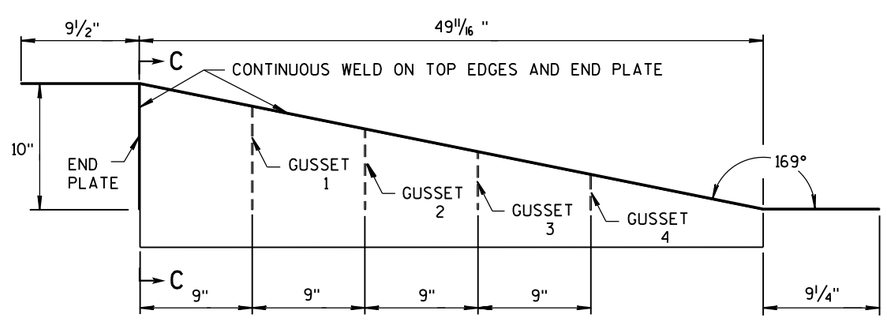

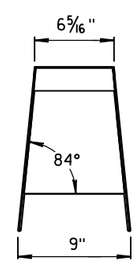

SECTION C-C

SIDE, TOP AND END PLATES FOR CAP FROM TEMPORARY CONCRETE BARRIER TO 42" PERMANENT CONCRETE BARRIER

SIDE PLATES, TOP PLATE, END PLATE AND GUSSETS ARE 12 GAUGE ASTM A36 GALVANIZED STEEL.

NOTES

1. FOUR GUSSETS AND END PLATE ARE STITCH WELDED ON THREE SIDES.
2. TWO TRIANGULAR SIDE PLATES ARE STITCH WELDED TO TOP PLATE, END PLATE, AND GUSSETS.

CAP DETAILS FOR TEMPORARY CONCRETE BARRIER TO 42" PERMANENT CONCRETE BARRIER

CONCRETE BARRIER
TEMPORARY PRECAST, 12'-6"

STATE OF WISCONSIN
DEPARTMENT OF TRANSPOR

6

S.D.D. 14 B 7-15g

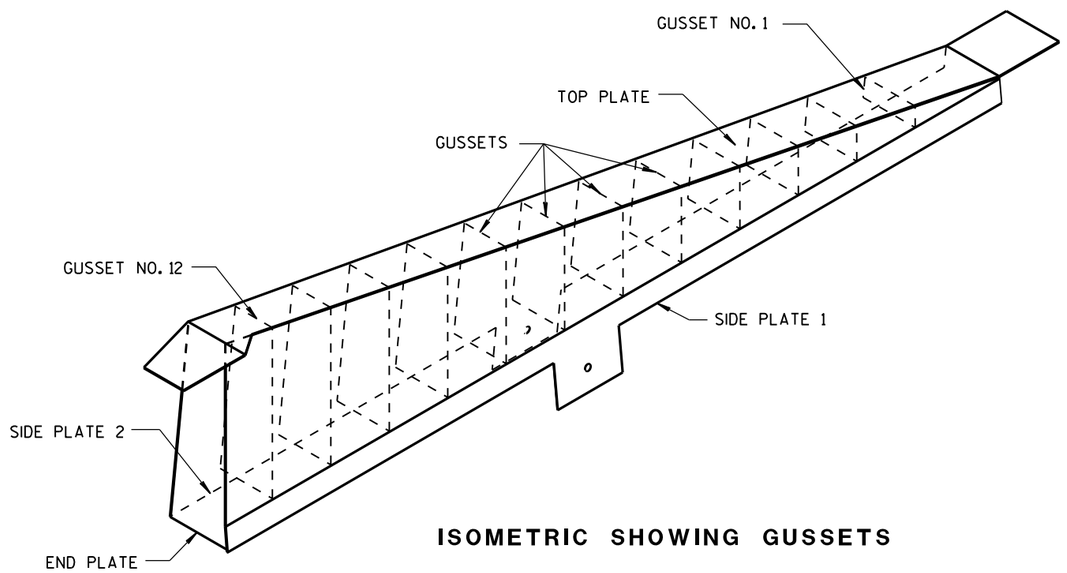

ISOMETRIC SHOWING GUSSETS

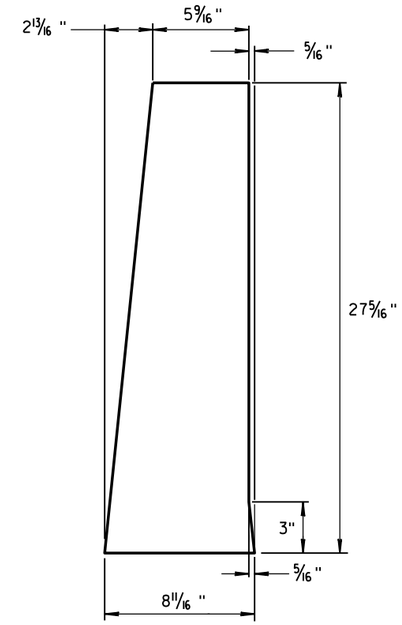

END PLATE

1/8" STEEL PLATE

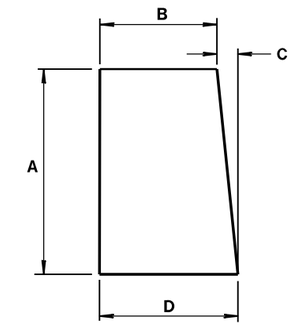

GUSSETS 1 - 12

ALL GUSSETS 1/8" STEEL PLATE

GUSSET DIMENSIONS				
GUSSET NO.	A	B	C	D
1	2 7/8"	7 3/4"	1/4"	8
2	4 11/16 "	7 9/16 "	1/2"	8
3	6 1/2"	7 3/8"	11/16 "	8 1/16 "
4	8 5/16 "	7 3/16 "	7/8"	8 1/16 "
5	10 1/8"	7"	1 1/16 "	8 1/16 "
6	11 15/16 "	6 13/16 "	1 1/4"	8 1/16 "
7	13 3/4"	6 5/8"	1 7/16 "	8 1/16 "
8	15 9/16 "	6 7/16 "	1 9/16 "	8 1/16 "
9	17 3/8"	6 1/4"	1 13/16 "	8 1/16 "
10	19 3/16 "	6 1/16 "	1 15/16 "	8 1/16 "
11	21"	5 7/8"	2 3/16 "	8 1/16 "
12	22 13/16 "	5 11/16 "	2 5/16 "	8 1/16 "

SIDE PLATES, TOP PLATE, END PLATE AND GUSSETS ARE 12 GAUGE ASTM A36 STEEL AND GALVANIZED.

GUSSETS AND END PLATE ARE STITCH WELDED ON 3 SIDES. TWO TRIANGULAR SIDE PLATES ARE STITCH WELDED TO TOP PLATE, END PLATE AND GUSSETS.

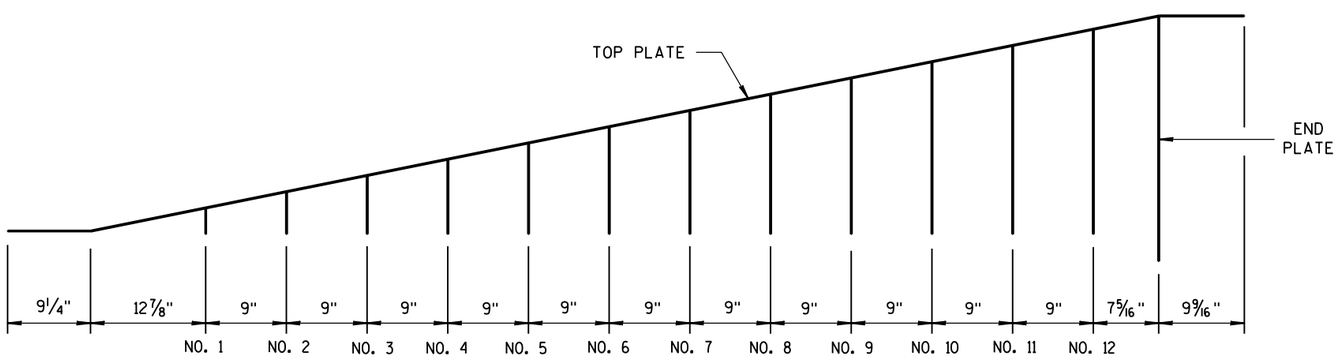

GUSSET LOCATION

CAP DETAILS FOR TEMPORARY CONCRETE BARRIER TO 56" PERMANENT CONCRETE BARRIER

CONCRETE BARRIER
TEMPORARY PRECAST, 12'-6"

STATE OF WISCONSIN
DEPARTMENT OF TRANSPOR

6

S.D.D. 14 B 7-15h

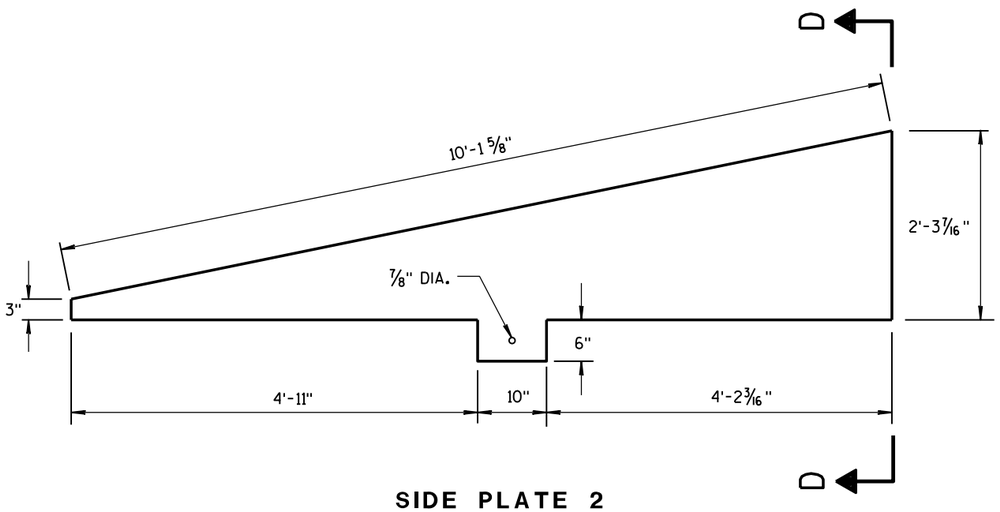

SIDE PLATE 2

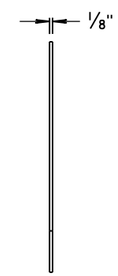

END VIEW

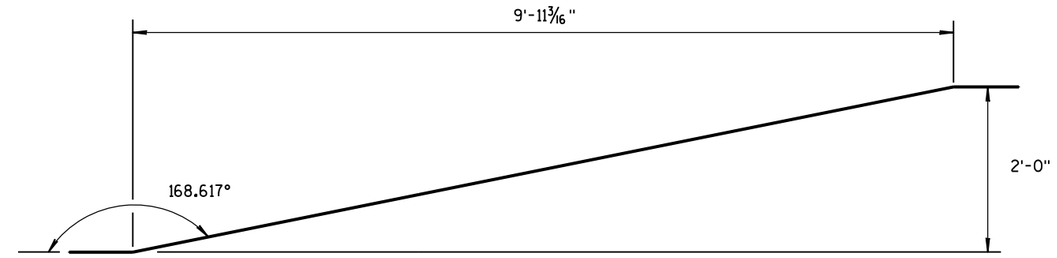

SIDE VIEW

TOP PLATE

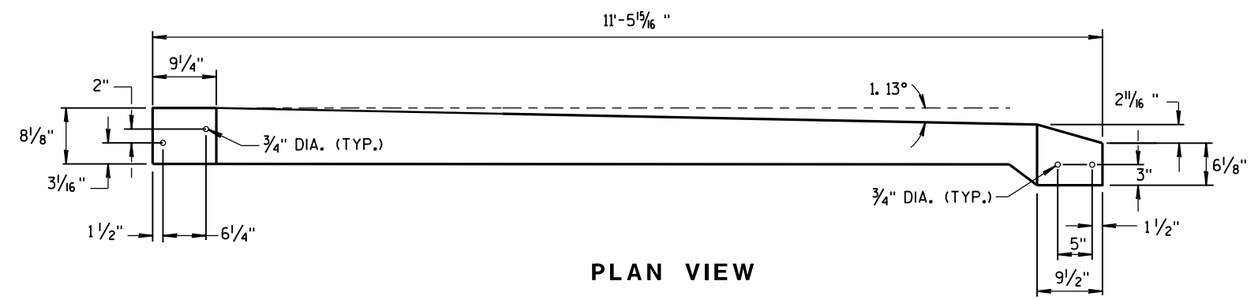

PLAN VIEW

TOP PLATE

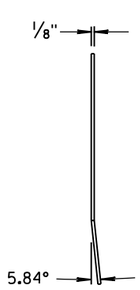

END VIEW

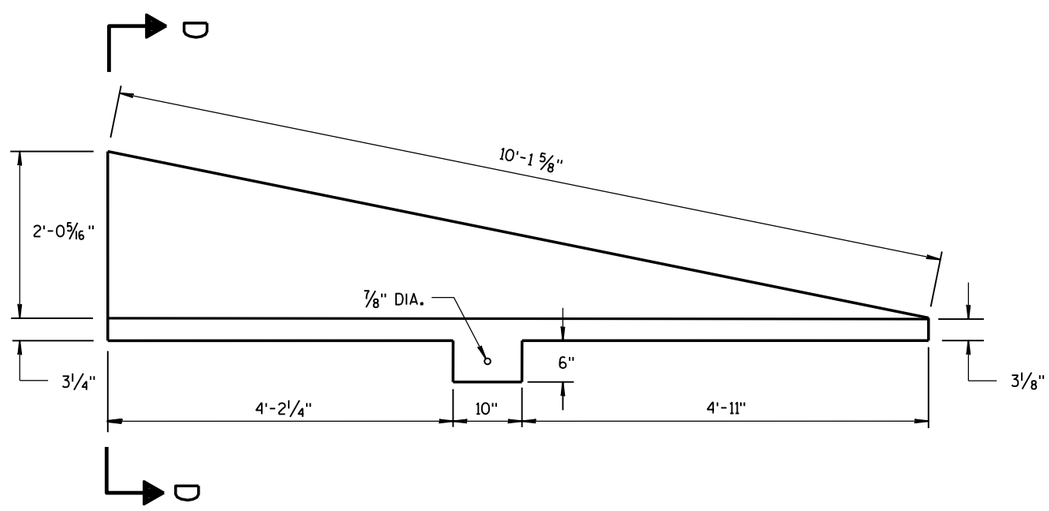

SIDE PLATE 1

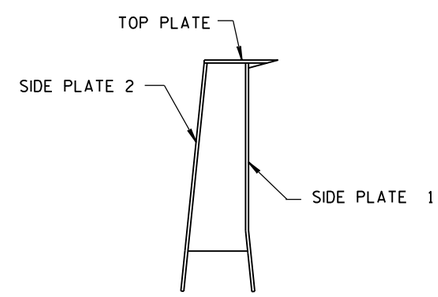

SECTION D-D

CAP DETAILS FOR TEMPORARY CONCRETE BARRIER TO 56" PERMANENT CONCRETE BARRIER

CONCRETE BARRIER
TEMPORARY PRECAST, 12'-6"

STATE OF WISCONSIN
DEPARTMENT OF TRANSPORTATION

APPROVED
June 2017 — DATE
/S/ Rodney Taylor — ROADWAY STANDARD UNIT SUPERV
FHWA

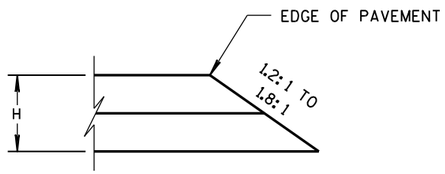

CONSTRUCTED WITH FINAL TWO LAYERS

FOR H 5" OR LESS

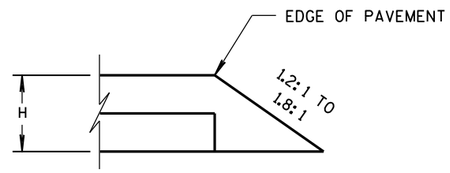

CONSTRUCTED WITH FINAL LAYER

FOR H 5" OR LESS

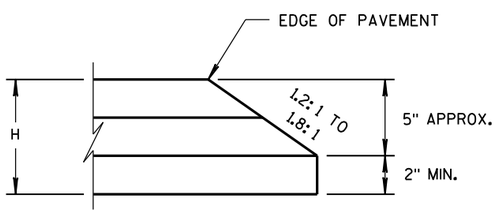

CONSTRUCTED WITH FINAL TWO LAYERS

FOR H GREATER THAN 5"

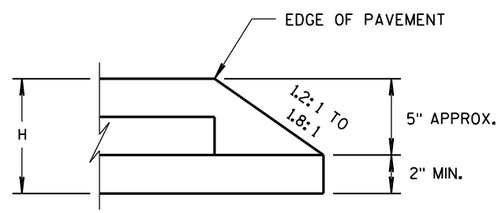

CONSTRUCTED WITH FINAL LAYER

FOR H GREATER THAN 5"

HMA PAVEMENT AND HMA OVERLAYS

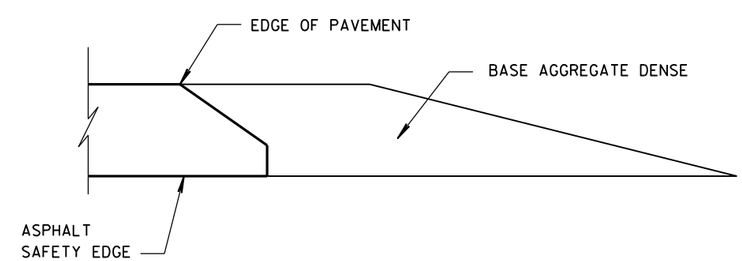

FINISHED SHOULDER AGGREGATE PLACEMENT

6

6

S.D.D. 14 B 29-1

S.D.D. 14 B 29-1

SAFETY EDGE SM

STATE OF WISCONSIN
DEPARTMENT OF TRANSPORTATION

APPROVED

11/30/2012
DATE

/S/ Jerry H. Zogg
ROADWAY STANDARDS DEVELOPMENT ENGINEER

FHWA

GENERAL NOTES

DETAILS OF CONSTRUCTION, MATERIALS AND WORKMANSHIP NOT SHOWN ON THIS DRAWING SHALL CONFORM TO THE PERTINENT REQUIREMENTS OF THE STANDARD SPECIFICATIONS AND THE APPLICABLE SPECIAL PROVISIONS.

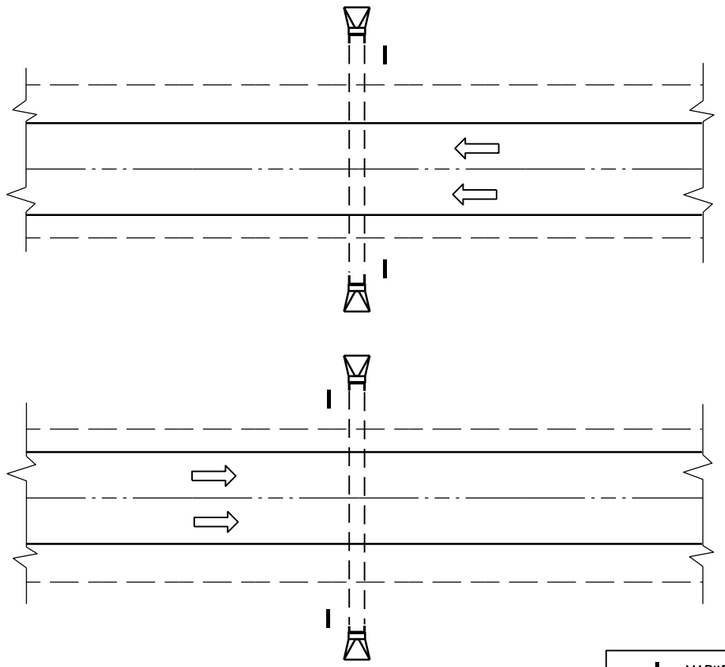

PLAN VIEW

DIVIDED HIGHWAY

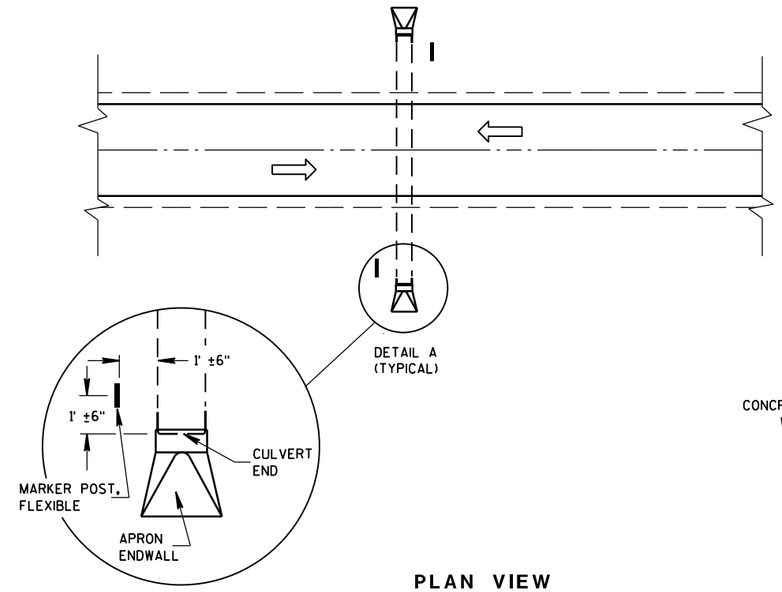

DETAIL A
(TYPICAL)

PLAN VIEW

UNDIVIDED HIGHWAY

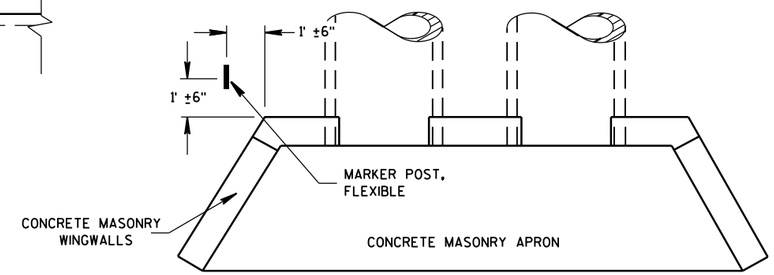

PLAN VIEW

CONCRETE MASONRY ENDWALLS FOR CULVERT PIPE AND PIPE ARCH

MARKER POST, FLEXIBLE

DIRECTION OF TRAFFIC FLOW

FLEXIBLE MARKER POST LOCATION

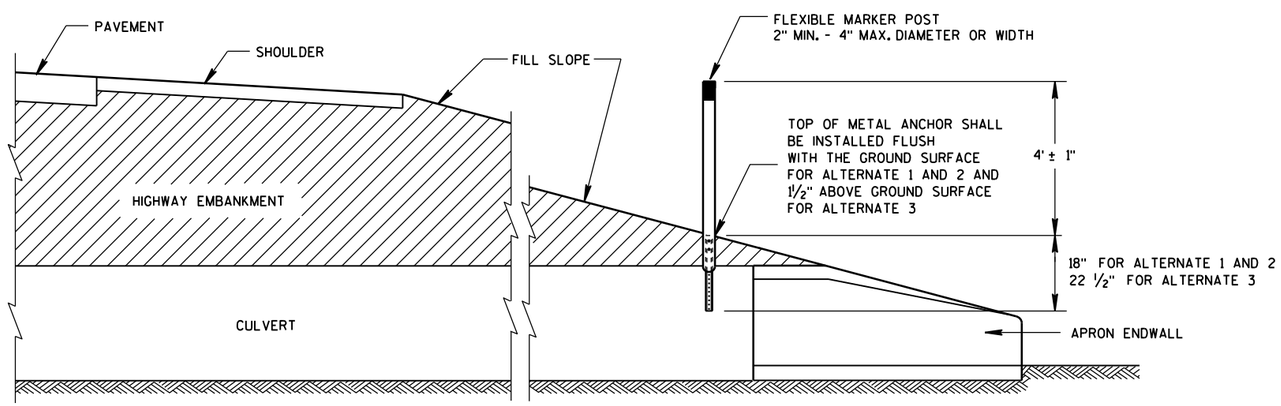

CROSS SECTION

FLEXIBLE MARKER POST

FLEXIBLE MARKER POST FOR CULVERT END

STATE OF WISCONSIN
DEPARTMENT OF TRANSPOR

6

S.D.D. 15 A 3-2a

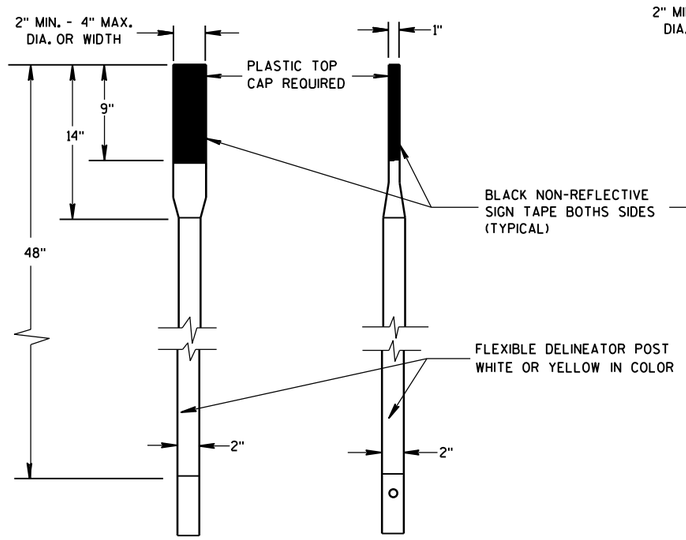

FRONT VIEW SIDE VIEW

ALTERNATE 1

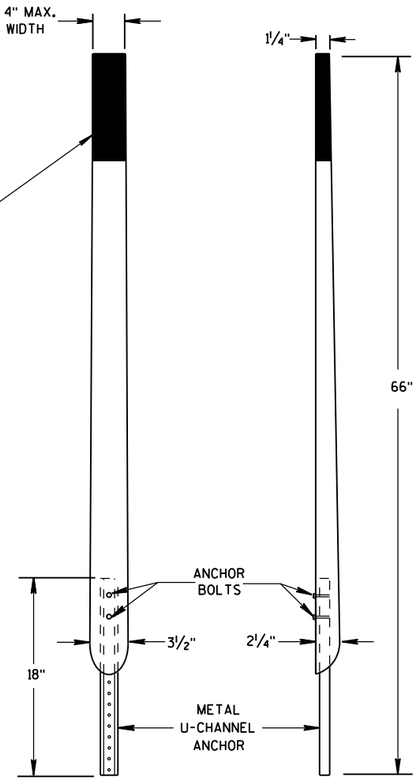

FRONT VIEW SIDE VIEW

ALTERNATE 2

FLEXIBLE MARKER POSTS

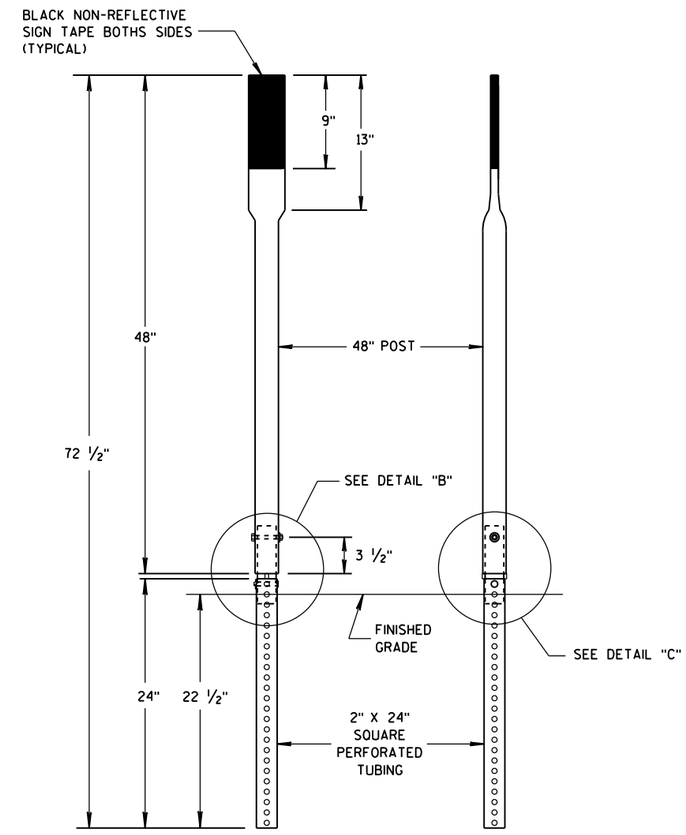

FRONT VIEW SIDE VIEW

ALTERNATE 3

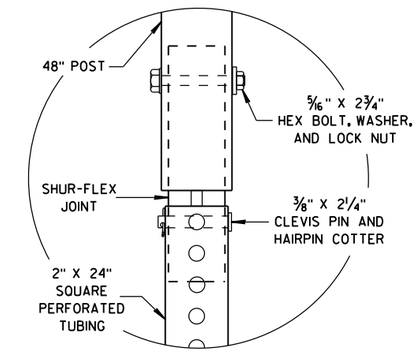

DETAIL B

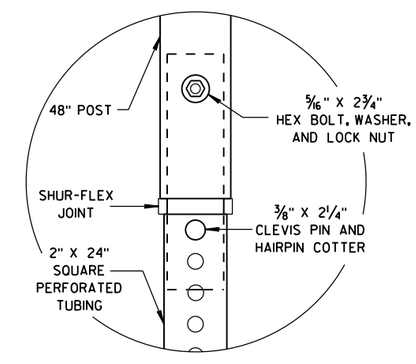

DETAIL C

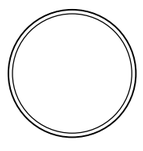

SECTION A-A

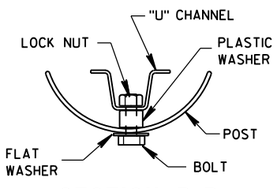

SECTION B-B

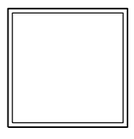

SECTION C-C

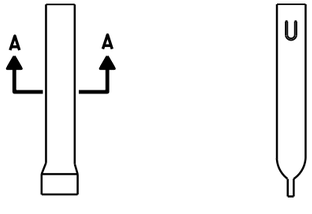

FRONT VIEW SIDE VIEW

ALTERNATE 1

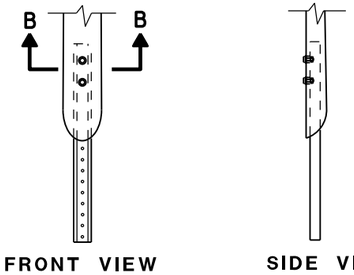

FRONT VIEW SIDE VIEW

ALTERNATE 2

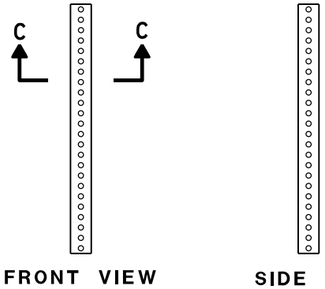

FRONT VIEW SIDE VIEW

ALTERNATE 3

FLEXIBLE MARKER POST ANCHORS

FLEXIBLE MARKER POST
FOR CULVERT END

STATE OF WISCONSIN
DEPARTMENT OF TRANSPORTATION

APPROVED
10/1/2012 /S/ Travis Feltes
DATE STATE TRAFFIC ENGINEER
FHWA

6

6

S.D.D. 15 A 3-2b

S.D.D. 15 A 3-2b

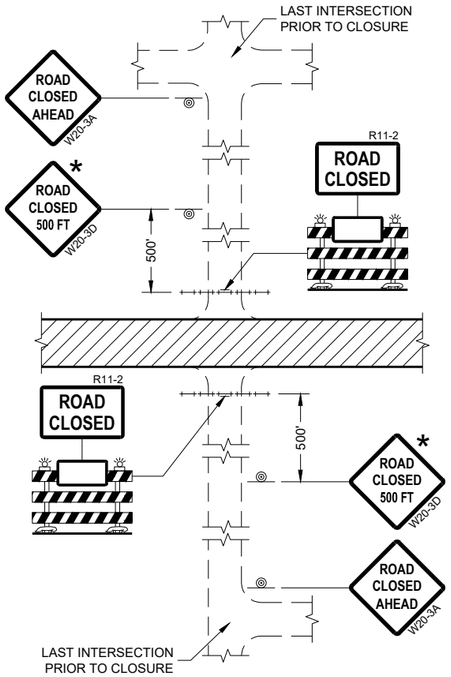

DETAIL 1
(NO ACCESS TO PROJECT)

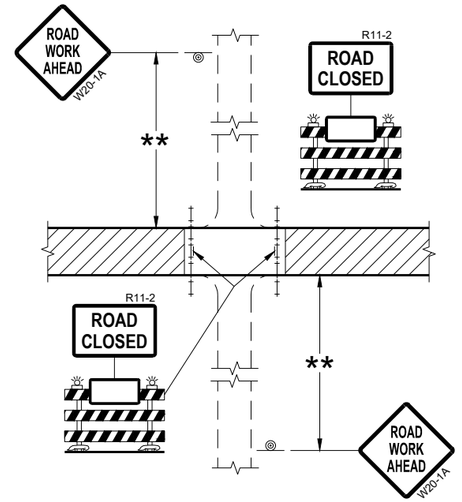

DETAIL 2
(PUBLIC CROSS-TRAFFIC MAINTAINED.
NO ACCESS TO PROJECT)

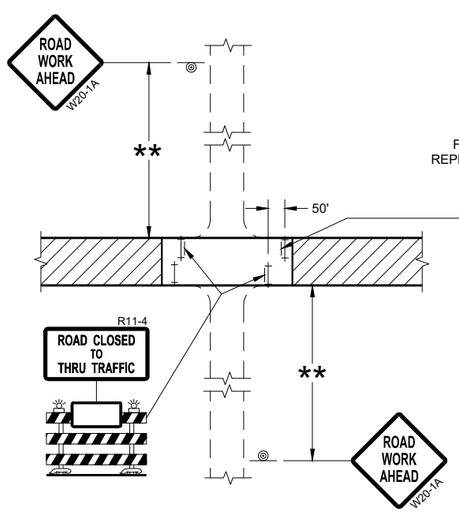

DETAIL 3
(PUBLIC CROSS-TRAFFIC MAINTAINED.
CONTRACTOR, LOCAL BUSINESS AND
RESIDENT ACCESS TO PROJECT)

FOR BRIDGE OR CULVERT
REPLACEMENT, USE ADDITIONAL
SIGN ON BARRICADE

BRIDGE OUT
XX MILES AHEAD
R11-3C

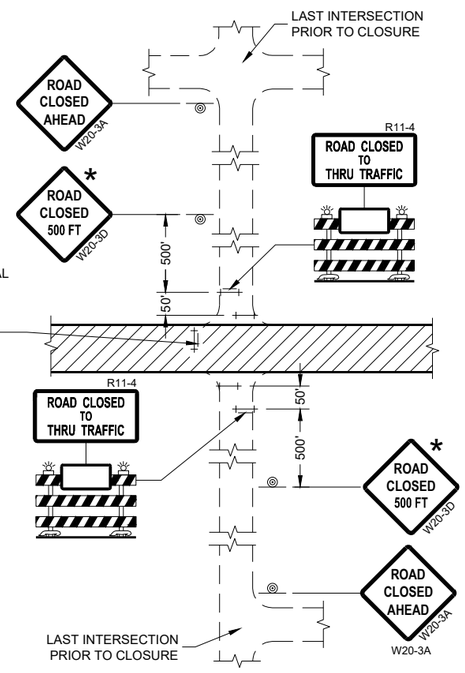

DETAIL 4
(CONTRACTOR, LOCAL BUSINESS AND
RESIDENT ACCESS TO PROJECT)

GENERAL NOTES

THE EXACT NUMBER, LOCATION, AND SPACING OF ALL SIGNS AND BARRICADES SHALL BE ADJUSTED TO FIT FIELD CONDITIONS AS APPROVED BY THE ENGINEER.

ANY SIGNS TEMPORARY OR EXISTING, WHICH CONFLICT WITH TRAFFIC CONTROL "IN USE" SHALL BE REMOVED OR COVERED AS NEEDED AND AS APPROVED BY THE ENGINEER.

THE SPACING BETWEEN TRAFFIC CONTROL SIGNS SHOULD BE ADJUSTED TO NOT CONFLICT WITH AND SHOULD PROVIDE A DESIRABLE MINIMUM OF 200 FEET CLEARANCE (500 FEET DESIRABLE) TO EXISTING SIGNS THAT WILL REMAIN IN PLACE.

IF A "STOP" SIGN MUST BE REMOVED FOR A WORK OPERATION, A TEMPORARY "STOP" SIGN SHALL BE PLACED PRIOR TO THE SIGN REMOVAL, OR A FLAGGER SHALL BE PROVIDED UNTIL THE SIGN IS REESTABLISHED.

BARRICADES THAT MUST BE MOVED FOR A WORK OPERATION SHALL BE IMMEDIATELY REESTABLISHED UPON COMPLETION OF THE OPERATION OR FOR CONTINUING OPERATIONS, AT THE END OF EACH WORKING DAY.

SIGNS THAT WILL BE IN PLACE LESS THAN SEVEN CONTINUOUS DAYS AND NIGHTS MAY BE MOUNTED ON PORTABLE SUPPORTS.

ALL TYPE III BARRICADES SHALL HAVE RAILS REFLECTORIZED ON BOTH FACES. STRIPES SHALL BE PROPERLY SLOPED DOWN TOWARD THE TRAFFIC SIDE OR AS SHOWN IN THE ROAD CLOSURE BARRICADE DETAIL "D" FOR FULL ROAD CLOSURES.

TYPE "A" LOW-INTENSITY FLASHING WARNING LIGHTS SHALL BE VISIBLE ON BOTH SIDES OF THE BARRICADE.

THE R11-2, R11-3, AND R11-4 SIGNS PLACED ON BARRICADES SHALL COVER NO MORE THAN THE TOP RAIL. THE SIGNS SHALL NOT COVER ANY PORTION OF THE MIDDLE OR BOTTOM RAILS.

ALL SIGNS SHALL BE 48" X 48" UNLESS OTHERWISE NOTED BELOW:
R11-2 SHALL BE 48" X 30".
R11-4 AND R11-3 SHALL BE 60" X 30".

* OMIT THE "ROAD CLOSED 500 FT." SIGN IF THE LAST INTERSECTION IS 500 FEET OR LESS FROM THE WORK ZONE.

** 500' MAX. OR AT LAST INTERSECTION, WHICHEVER IS CLOSEST.

LEGEND

- SIGN ON PERMANENT SUPPORT
- TYPE III BARRICADE
- TYPE III BARRICADE WITH ATTACHED SIGN
- TYPE "A" WARNING LIGHT (FLASHING)
- WORK AREA

BARRICADES AND SIGNS FOR SIDEROAD CLOSURES

STATE OF WISCONSIN
DEPARTMENT OF TRANSPORTATION

APPROVED
July 2018 — DATE
/S/ Andrew Heidtke — WORK ZONE ENGINEE
FHWA

6
SDD 15C03 - 05

GENERAL NOTES

THE EXACT NUMBER, LOCATION, AND SPACING OF ALL SIGNS AND DEVICES SHALL BE ADJUSTED TO FIT FIELD CONDITIONS.

THE SPACING BETWEEN TRAFFIC CONTROL SIGNS SHOULD BE ADJUSTED TO NOT CONFLICT WITH AND SHOULD PROVIDE A MINIMUM OF 200 FEET (500 FEET DESIRABLE) CLEARANCE TO EXISTING SIGNS THAT WILL REMAIN IN PLACE.

ALL SIGNS ARE 48" X 48" UNLESS OTHERWISE NOTED.

SIGNS THAT WILL BE IN PLACE LESS THAN SEVEN CONTINUOUS DAYS AND NIGHTS MAY BE MOUNTED ON PORTABLE SUPPORTS.

IF A "STOP" SIGN MUST BE REMOVED FOR A WORK OPERATION, A TEMPORARY "STOP" SIGN SHALL BE PLACED PRIOR TO THE SIGN REMOVAL, OR A FLAGGER SHALL BE PROVIDED UNTIL THE SIGN IS REESTABLISHED.

* OMIT G20-1 SIGNS IF LENGTH OF WORK AREA IS 2 MILES OR LESS

** PLACE AN ADDITIONAL W20-1A "ROAD WORK AHEAD" SIGN IF WORK AREA WITHIN THE PROJECT IS SEPARATED BY MORE THAN 2 MILES FROM PREVIOUS WORK AREA.

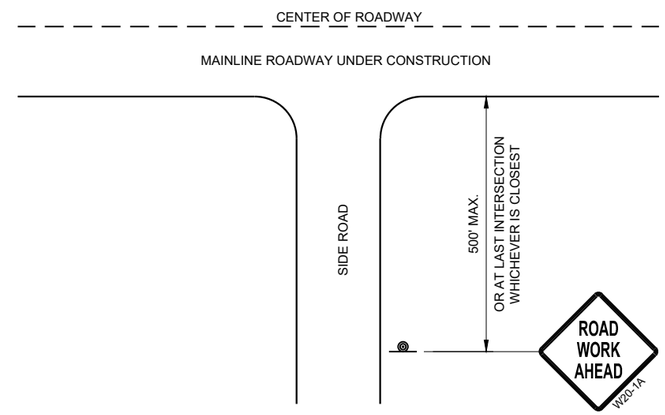

TYPICAL SIDE ROAD APPROACH WARNING SIGN DETAIL

LEGEND

- SIGN ON PERMANENT SUPPORT
- DIRECTION OF TRAFFIC
- WORK AREA

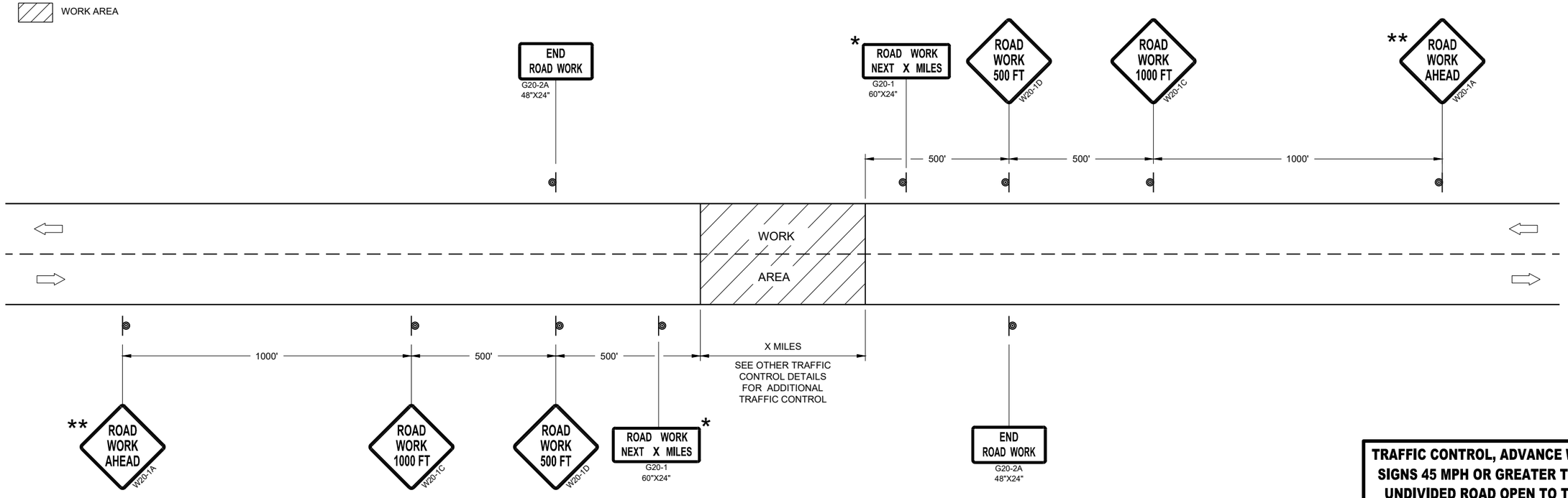

TRAFFIC CONTROL, ADVANCE WARNING SIGNS 45MPH OR GREATER

TRAFFIC CONTROL, ADVANCE WARNING SIGNS 45 MPH OR GREATER TWO-WAY UNDIVIDED ROAD OPEN TO TRAFFIC

STATE OF WISCONSIN
DEPARTMENT OF TRANSPORTATION

APPROVED
July 2018 — DATE
/S/ Andrew Heidtke — WORK ZONE ENGINEE
FHWA

6
SDD 15C04 - 05

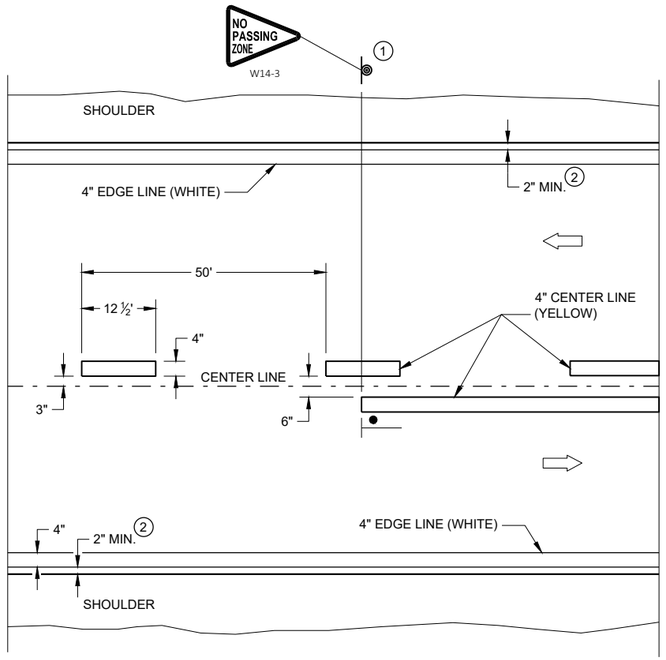

TWO WAY TRAFFIC

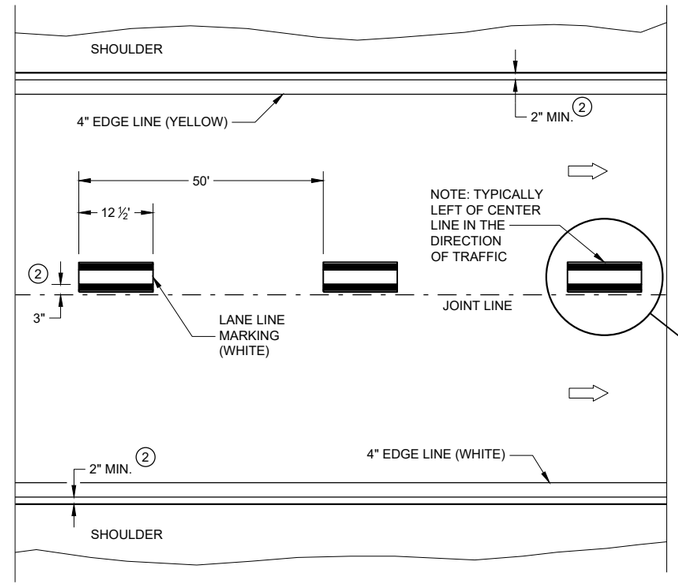

ONE WAY TRAFFIC

PERMANENT PAVEMENT MARKING

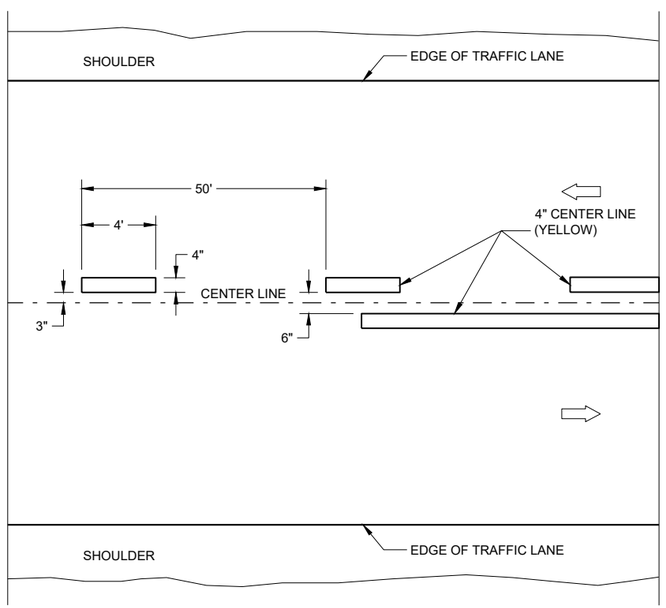

TWO WAY TRAFFIC

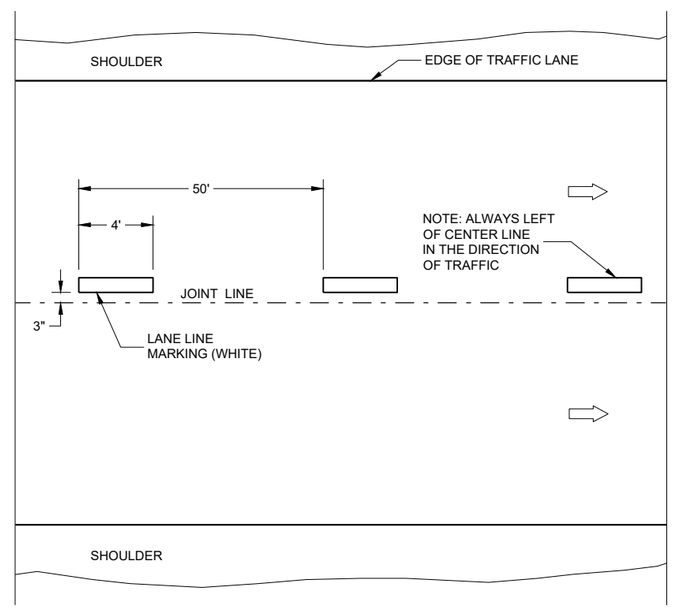

ONE WAY TRAFFIC

TEMPORARY PAVEMENT MARKING

GENERAL NOTES

DETAILS OF CONSTRUCTION NOT SHOWN ON THIS DRAWING SHALL CONFORM TO STANDARD SPECIFICATIONS AND SPECIAL PROVISIONS.

1. LOCATE THE NO PASSING ZONE W14-3 SIGN WITHIN 50 FEET OF THE "T" MARKING
2. MEASURE FROM EDGE OF MARKING TO JOINT LINE. THIS DOES NOT INCLUDE SPACE NEEDED FOR GROOVING OPERATIONS.

LEGEND

"T" MARKING

SIGN ON PERMANENT SUPPORT

DIRECTION OF TRAFFIC

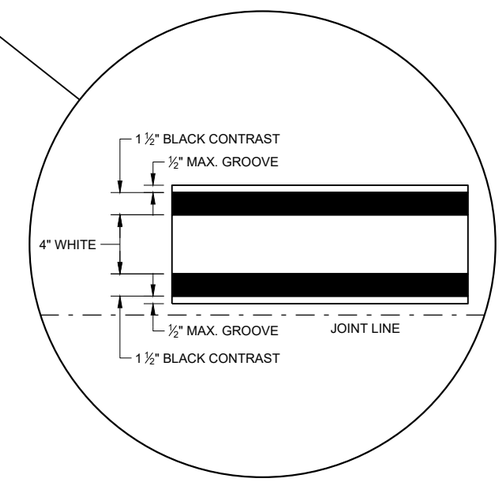

LONGITUDINAL MARKING (MAINLINE)

STATE OF WISCONSIN
DEPARTMENT OF TRANSPORTATION

APPROVED
February 2020 — DATE
/S/ Matthew Rauch — STATEWIDE SIGNING AND M ENGINEER
FHWA

6

SDD 15C08 - 20a

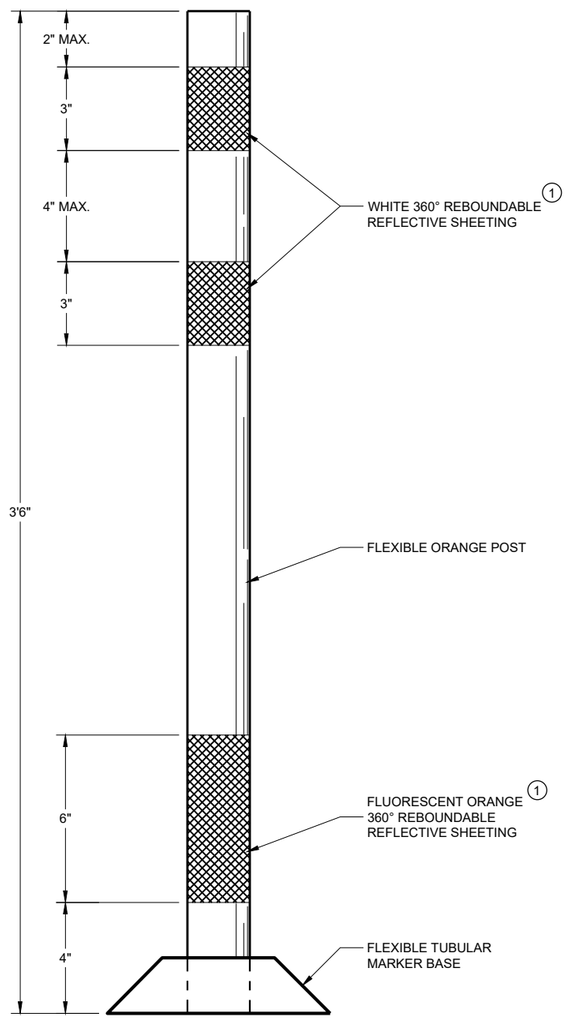

FLEXIBLE TUBULAR MARKER POST WORK ZONE

GENERAL NOTES

DETAILS OF CONSTRUCTION NOT SHOWN ON THIS DRAWING SHALL CONFORM TO THE PERTINENT REQUIREMENTS OF THE STANDARD SPECIFICATIONS AND THE APPLICABLE SPECIAL PROVISIONS.

SURFACE MOUNTED BASES SHALL BE FURNISHED IN ACCORDANCE WITH MANUFACTURERS RECOMMENDATIONS TO BE COMPATIBLE WITH FLEXIBLE TUBULAR MARKER POSTS TO A SIZE AND SHAPE THAT WILL PROVIDE A STABLE POST FOUNDATION WHEN SECURED TO THE PAVEMENT.

THE ASPHALTIC ADHESIVE OR BUTYL PAD FURNISHED SHALL BE IN ACCORDANCE WITH MANUFACTURERS RECOMMENDATIONS, UNLESS DIRECTED BY THE ENGINEER TO USE BOLTS.

(1) REFLECTIVE SHEETING SHALL FOLLOW THE REQUIREMENTS IN THE APPROVED PRODUCTS LISTING FOR SIGN SHEETING.

6

6

SDD 15C11 - 09a

SDD 15C11 - 09a

CHANNELIZING DEVICES FLEXIBLE TUBULAR MARKER POST

STATE OF WISCONSIN
DEPARTMENT OF TRANSPORTATION

APPROVED
May 2021 — DATE
/S/ Andrew Heidtke — WORK ZONE ENGINEE
FHWA

GENERAL NOTES

1. REFLECTIVE SHEETING SHALL FOLLOW THE REQUIREMENTS IN THE APPROVED PRODUCTS LISTING FOR SIGN SHEETING.
2. LOCATION OF WARNING LIGHTS WHEN SHOWN ON THE PLAN.

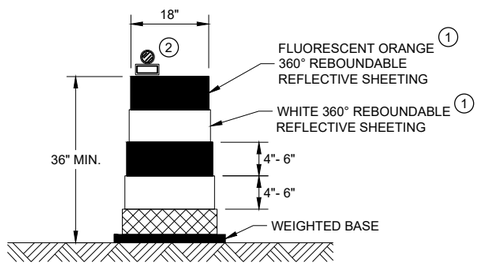

DRUM

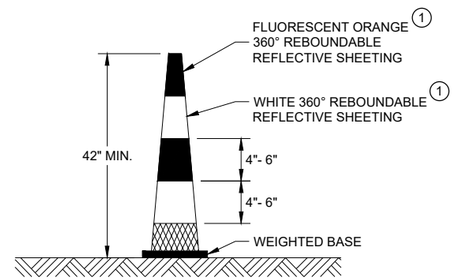

42" CONE

DO NOT USE IN TAPERS
½ SPACING OF DRUMS

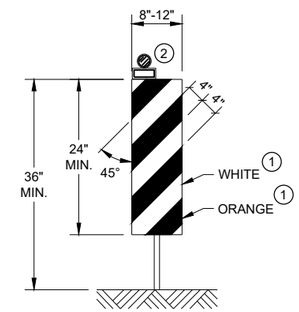

VERTICAL PANEL

THE STRIPES SHALL SLOPE DOWNWARD TO
THE TRAFFIC SIDE FOR CHANNELIZATION.

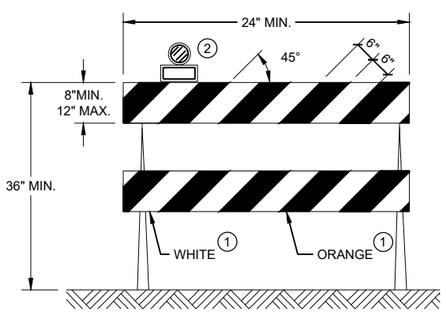

TYPE II BARRICADE

FOR RAILS LESS THAN 36" LONG, 4" WIDE STRIPES
MAY BE USED. ALL STRIPES SHALL SLOPE DOWNWARD
TO THE TRAFFIC SIDE FOR CHANNELIZATION.

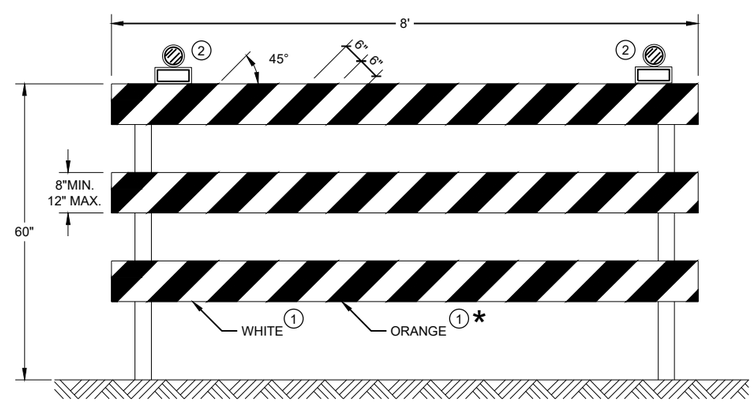

TYPE III BARRICADE

IF SIGN MOUNTED, DO NOT COVER MORE THAN 50% OF THE TOP
TWO RAILS OR 33% OF THE TOTAL AREA OF THE THREE RAILS.

* IF USED FOR A PERMANENT APPLICATION USE RED SHEETING.

CHANNELIZING DEVICES DRUMS, CONES, BARRICADES AND VERTICAL PANELS

STATE OF WISCONSIN
DEPARTMENT OF TRANSPORTATION

APPROVED
May 2021 — DATE
/S/ Andrew Heidtke — WORK ZONE ENGINEE
FHWA

6

6

SDD 15C11 - 09b

SDD 15C11 - 09b

LEGEND

SIGN ON PORTABLE OR PERMANENT SUPPORT

TEMPORARY PORTABLE RUMBLE STRIP ARRAY

DIRECTION OF TRAFFIC

WORK AREA

FLAGGER, EQUIPPED WITH STOP/SLOW PADDLE FASTENED ON SUPPORT STAFF

GENERAL NOTES

DETAILS OF TRAFFIC CONTROL DEVICES AND INSTALLATION NOT SHOWN ON THIS DRAWING SHALL CONFORM TO THE PERTINENT REQUIREMENTS OF THE STANDARD SPECIFICATIONS, THE SPECIAL PROVISIONS, AND THE MANUAL ON UNIFORM TRAFFIC CONTROL DEVICES.

ALL SIGNS ARE 48" X 48" UNLESS OTHERWISE NOTED.

"WO" SIGNS ARE THE SAME AS "W" SIGNS EXCEPT THE BACKGROUND IS ORANGE.

THE EXACT NUMBER, LOCATION AND SPACING OF ALL SIGNS, DEVICES, AND LOCATION OF ALL FLAGGERS SHALL BE ADJUSTED TO FIT FIELD CONDITIONS AS APPROVED BY THE ENGINEER.

THE FIRST ADVANCE WARNING SIGN SHOULD TYPICALLY BE LOCATED IN ADVANCE OF THE ANTICIPATED TRAFFIC BACKUP OR QUEUE.

WHEN A SIDE ROAD OR RAMP INTERSECTS THE FACILITY ON WHICH THE WORK IS BEING PERFORMED, ADDITIONAL TRAFFIC CONTROLS SHALL BE PROVIDED AS SPECIFIED IN THE PLANS AND/OR THE SPECIAL PROVISIONS OR AS APPROVED BY THE ENGINEER.

FLAGGING

FLAGGERS SHALL BE IN SIGHT OF EACH OTHER OR IN DIRECT COMMUNICATION AT ALL TIMES. THEY SHALL BE EQUIPPED WITH STOP/SLOW PADDLES FASTENED ON SUPPORT STAFFS. WHEN THE FLAGGING OPERATION IS NOT IN EFFECT REMOVE TEMPORARY PORTABLE RUMBLE STRIPS PRIOR TO COVERING OR REMOVING ALL ADVANCE SIGNING.

(1) FOR MOVING WORK OPERATIONS, POST ADDITIONAL W20-7A FLAGGER SIGNS AT APPROXIMATELY 3,500' INTERVALS IN THE MOVING WORK OPERATION OR AS APPROVED BY THE ENGINEER.

(2) SIGN NOT REQUIRED IF FLAGGING OPERATION OCCURS WITHIN A SIGNED ROAD WORK ZONE AREA.

WHEN THE DISTANCE BETWEEN FLAGGERS EXCEEDS 2 MILES, A PILOT CAR IS REQUIRED. WHEN CURVES REDUCE SIGHT DISTANCE BELOW 400', A PILOT CAR IS REQUIRED.

TEMPORARY PORTABLE RUMBLE STRIPS

UTILIZE TEMPORARY PORTABLE RUMBLE STRIPS ON ALL FLAGGING OPERATIONS.

(3) EACH TEMPORARY PORTABLE RUMBLE STRIP ARRAY CONSISTS OF THREE RUMBLE STRIPS SPACED ACCORDING TO MANUFACTURER'S RECOMMENDATION, PLACED TRANSVERSE ACROSS THE LANE AT LOCATIONS SHOWN.

ONLY USE TEMPORARY PORTABLE RUMBLE STRIPS FOR THE APPROVED PRODUCTS LIST.

INSTALL TEMPORARY RUMBLE STRIPS PER MANUFACTURER'S RECOMMENDATIONS.

PLACE ADVANCE SIGNING PRIOR TO INSTALLING TEMPORARY RUMBLE STRIPS.

DO NOT INSTALL TEMPORARY PORTABLE RUMBLE STRIPS ON GRAVEL, MILLED SURFACES, OR ASPHALT THAT HAS BEEN PAVED LESS THAN 12 HOURS.

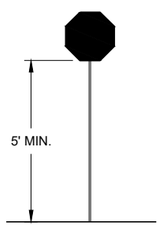

STOP/SLOW PADDLE ON SUPPORT STAFF

SIGN AND TEMPORARY RUMBLE STRIP ARRAY SPACING TABLE

SPEED LIMIT	SPACING "A"
25-30 MPH	200'
35-40 MPH	350'
45-55 MPH	500'

USE OF WO3-4 SIGN IS OPTIONAL. WHEN USED, THIS SIGN SHALL BE LOCATED BETWEEN THE W20-7A AND W20-4A SIGNS, USING SPACING "A".

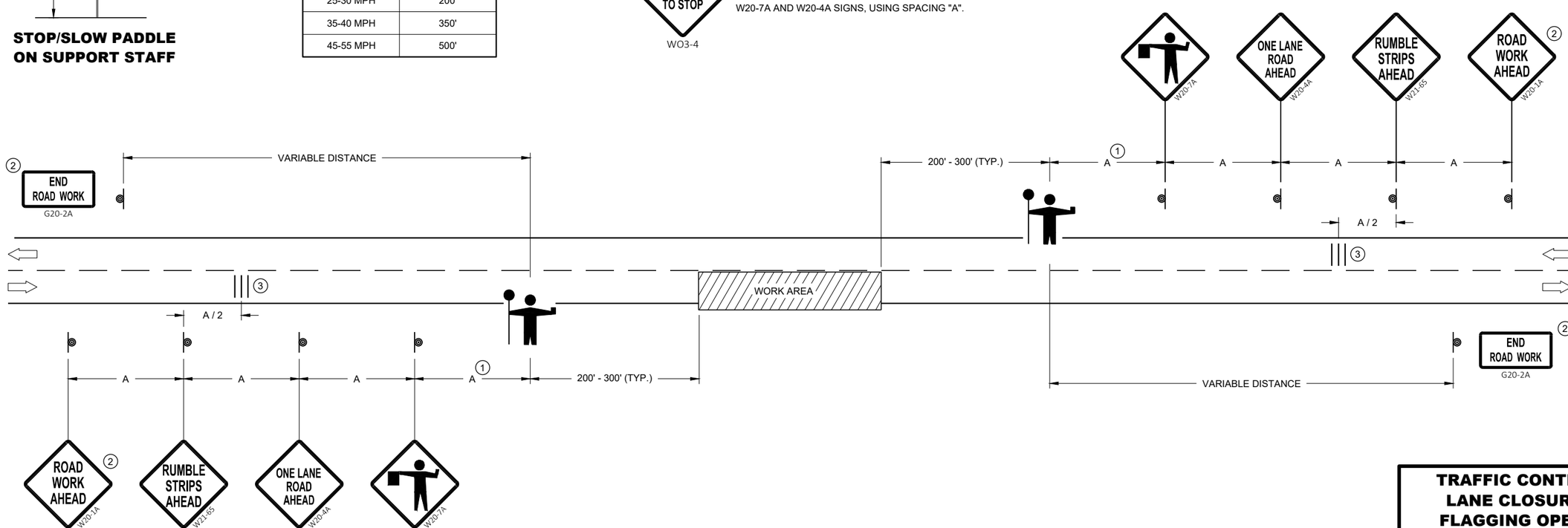

TRAFFIC CONTROL FOR LANE CLOSURE WITH FLAGGING OPERATION

TRAFFIC CONTROL FOR LANE CLOSURE WITH FLAGGING OPERATION

STATE OF WISCONSIN
DEPARTMENT OF TRANSPORTATION

APPROVED
May 2019 — DATE
/S/ Andrew Heidtke — WORK ZONE ENGINEE
FHWA

6

SDD 15C12 - 07

6

SDD 15C12 - 07

LEGEND

V1 LEAD VEHICLE

V2 MARKING VEHICLE

V3 SHADOW VEHICLE

TRUCK MOUNTED ATTENUATOR (TMA)

SIGN ON TEMPORARY SUPPORT

DIRECTION OF TRAFFIC

FLASHING ARROW PANEL (CAUTION)

GENERAL NOTES

ALL VEHICLES SHALL BE EQUIPPED WITH TWO 360 DEGREE HIGH INTENSITY YELLOW FLASHING LIGHTS OR STROBE LIGHTS AND OPERATED WITH HEADLIGHTS TURNED ON.

ALL VEHICLES SHALL BE EQUIPPED WITH REAR FACING TYPE B OR C FLASHING ARROW PANEL OPERATING IN CAUTION MODE. SIGNS PLACED ON VEHICLES MUST NOT OBSCURE THE ARROW PANEL.

ALL SIGNS ARE 48" X 48" UNLESS OTHERWISE SPECIFIED.

DISTANCE BETWEEN VEHICLES MAY VARY ACCORDING TO TERRAIN, SIGHT DISTANCE, PAINT DRYING TIME, AND OTHER FACTORS. WHENEVER ADEQUATE STOPPING SIGHT DISTANCE EXISTS TO THE REAR, SHADOW VEHICLES SHOULD MAINTAIN THE MINIMUM DISTANCE FROM THE WORK VEHICLE AND PROCEED AT THE SAME SPEED AS THE WORK VEHICLE. SHADOW VEHICLES SHOULD SLOW DOWN IN ADVANCE OF VERTICAL AND HORIZONTAL CURVES THAT RESTRICT SIGHT DISTANCE.

THE WORK AND SHADOW VEHICLES SHOULD PULL OVER PERIODICALLY TO ALLOW TRAFFIC TO PASS.

WHEN NO WORK ACTIVITY IS TAKING PLACE, REMOVE OR LAY STATIONARY SIGNS AND SUPPORTS FLAT ON THE GRADE WITH UPRIGHTS ORIENTED PARALLEL TO AND DOWNSTREAM FROM TRAFFIC.

CONES SHOULD BE USED BETWEEN THE MARKING AND SHADOW VEHICLE AT 100 FOOT SPACING. CONES MAY BE OMITTED ON PAINTED LINE IF APPROVED BY THE ENGINEER. CONSIDER PAVEMENT MARKING DRY OR CURE TIMES AND TRAFFIC VOLUME.

CONES SHALL BE A MINIMUM OF 18" FOR WET PAVEMENT MARKING .

(1) SIGNS SHALL BE REPEATED APPROXIMATELY EVERY THREE MILES.

(2) IF CONSTRUCTION WORK ZONE SIGNS ARE IN PLACE, W20-1A OR W21-63 ARE NOT REQUIRED.

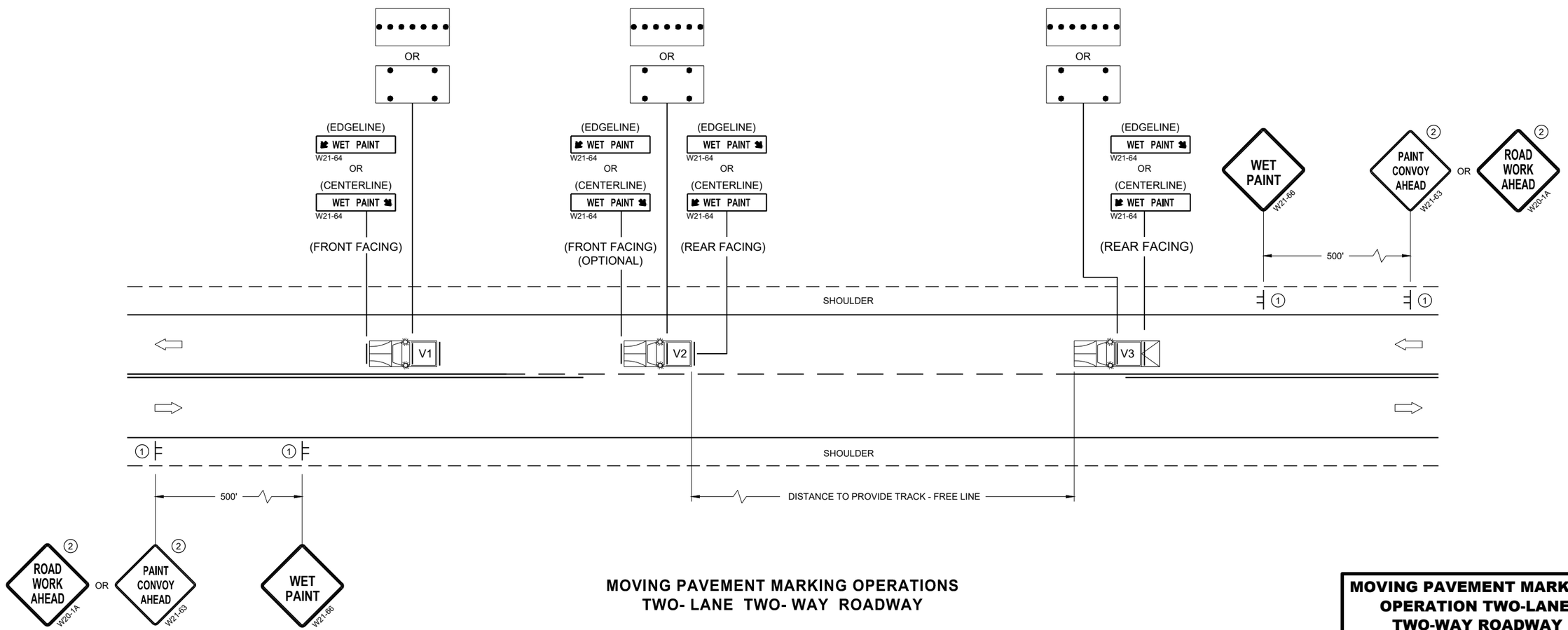

MOVING PAVEMENT MARKING OPERATIONS
TWO- LANE TWO- WAY ROADWAY

MOVING PAVEMENT MARKING OPERATION TWO-LANE TWO-WAY ROADWAY

STATE OF WISCONSIN
DEPARTMENT OF TRANSPORTATION

APPROVED
November 2019 /S/ Andrew Heidtke
DATE WORK ZONE ENGINEE
FHWA

6

SDD 15C19 - 06a

GENERAL NOTES

STOP SIGN SHALL BE PLACED A MINIMUM OF 6 FEET TO A MAXIMUM OF 50 FEET FROM THE EDGELINE LOCATION.

1. 18-INCH STOP LINES MAY BE DELETED OR ADDED BY THE REGION MARKING ENGINEER BASED ON VISIBILITY AND SIGHT LINES.
2. NO STOP LINE IS REQUIRED IF STOP SIGN IS LESS THAN OR EQUAL TO 40 FEET FROM THE EDGELINE.
3. NO STOP LINE IS REQUIRED IF STOP SIGN IS LESS THAN OR EQUAL TO 30 FEET FROM THE FLANGELINE EXTENSION.
4. MOVE CLOSER TO THE EDGE OF TRAVEL LINE AS NEEDED FOR VISIBILITY AND SIGHT LINES (NO CLOSER THAN 4 FEET).
5. LADDER BAR CROSSWALKS SHOULD ONLY BE USED FOR MID BLOCK CROSSINGS. USE 2 - 6" TRANSVERSE LINES INSTEAD.

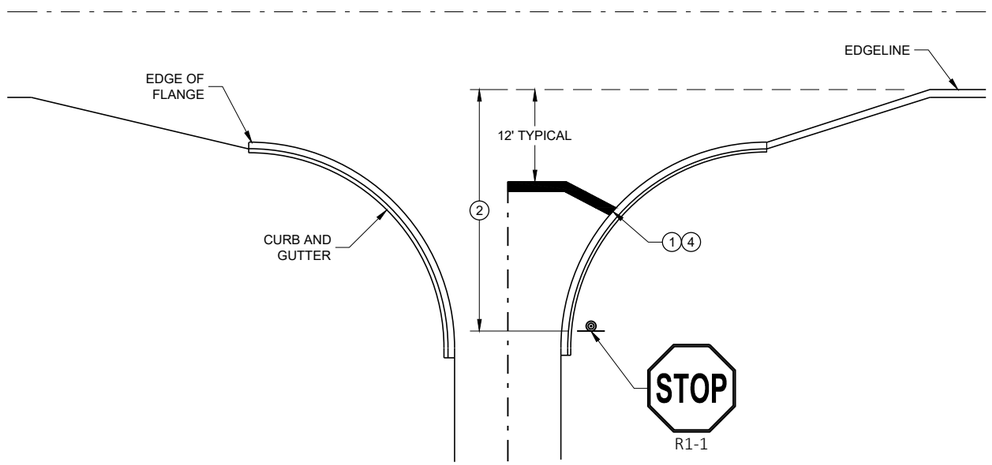

TYPICAL STOP LINE PAVEMENT MARKING WITH CURB AND GUTTER

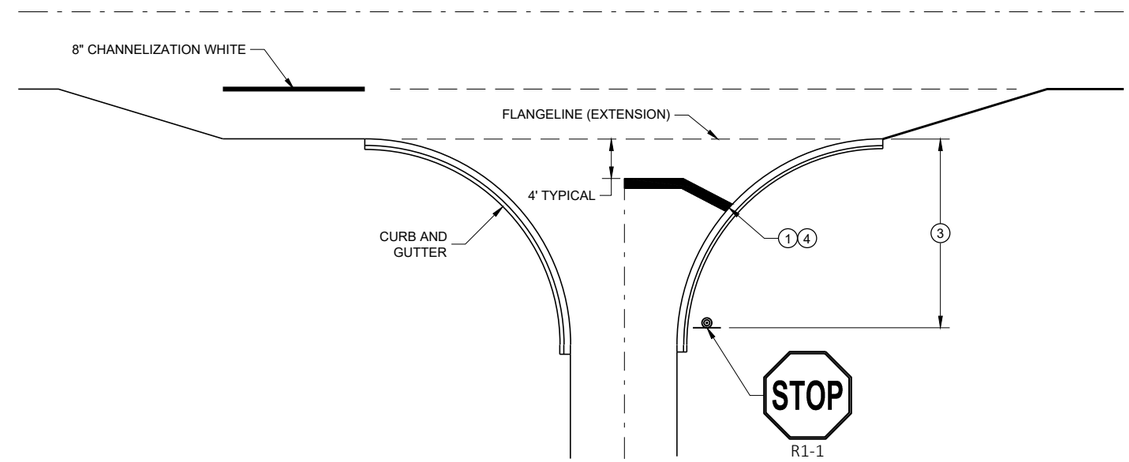

TYPICAL STOP LINE PAVEMENT MARKING FOR SIDEROADS WITH RIGHT TURN LANE

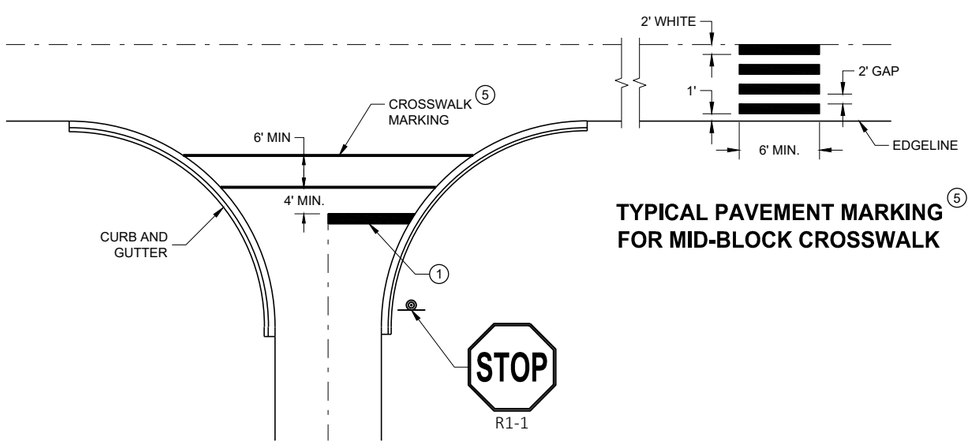

TYPICAL STOP LINE PAVEMENT MARKING FOR SIDEROADS WITH CROSSWALK MARKING

TYPICAL PAVEMENT MARKING 5 FOR MID-BLOCK CROSSWALK

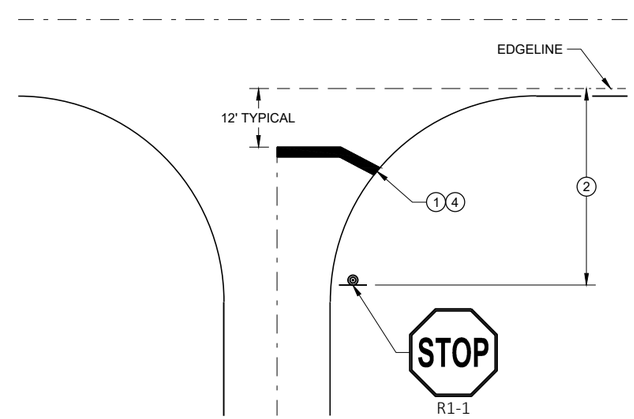

TYPICAL STOP LINE PAVEMENT MARKING WITHOUT CURB AND GUTTER

STOP LINE AND CROSSWALK PAVEMENT MARKING

STATE OF WISCONSIN
DEPARTMENT OF TRANSPORTATION

APPROVED
November 2019 — DATE
/S/ Matthew Rauch — STATE SIGNING AND MAF ENGINEER
FHWA

6

SDD 15C33 - 04

GENERAL NOTES

OMIT EDGE LINES THROUGH INTERSECTIONS. CONTINUE EDGE LINES THROUGH DRIVEWAYS.

1. WHEN DISTANCE "A" IS LESS THAN 250 FEET, OMIT LANE LINE.
2. WHEN DISTANCE "B" IS LESS THAN 100 FEET, OMIT CHANNELIZING LANE LINE.
3. BARRIER LINE ENDS AT SIDE ROAD PAVEMENT / SURFACE EDGE EXTENSION.
4. BARRIER LINE STARTS 500 FEET PRIOR TO THE BYPASS TAPER.

LEGEND

DIRECTION OF TRAVEL

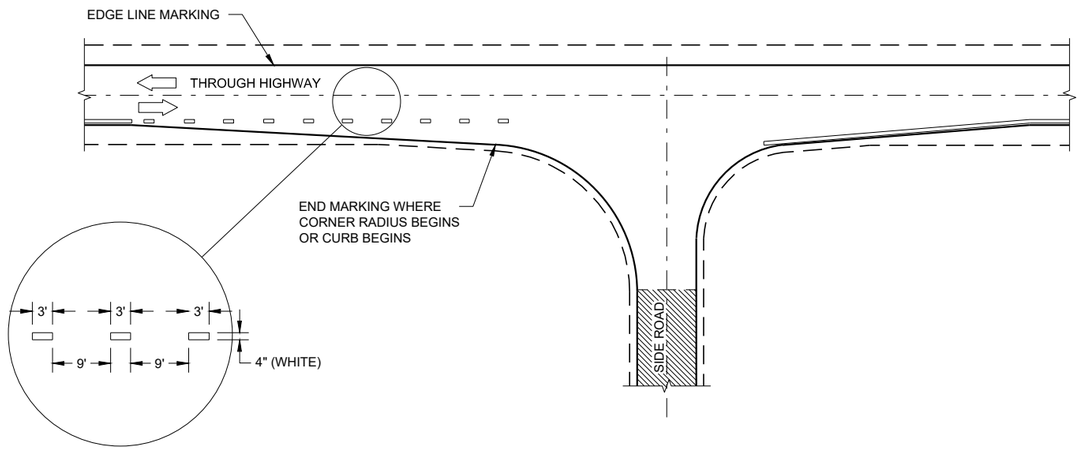

MINOR INTERSECTION

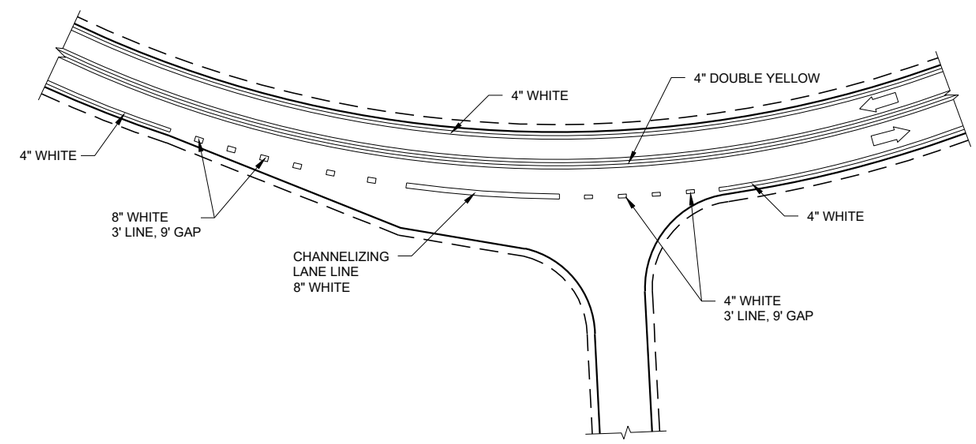

INTERSECTION ON OUTSIDE OF CURVE

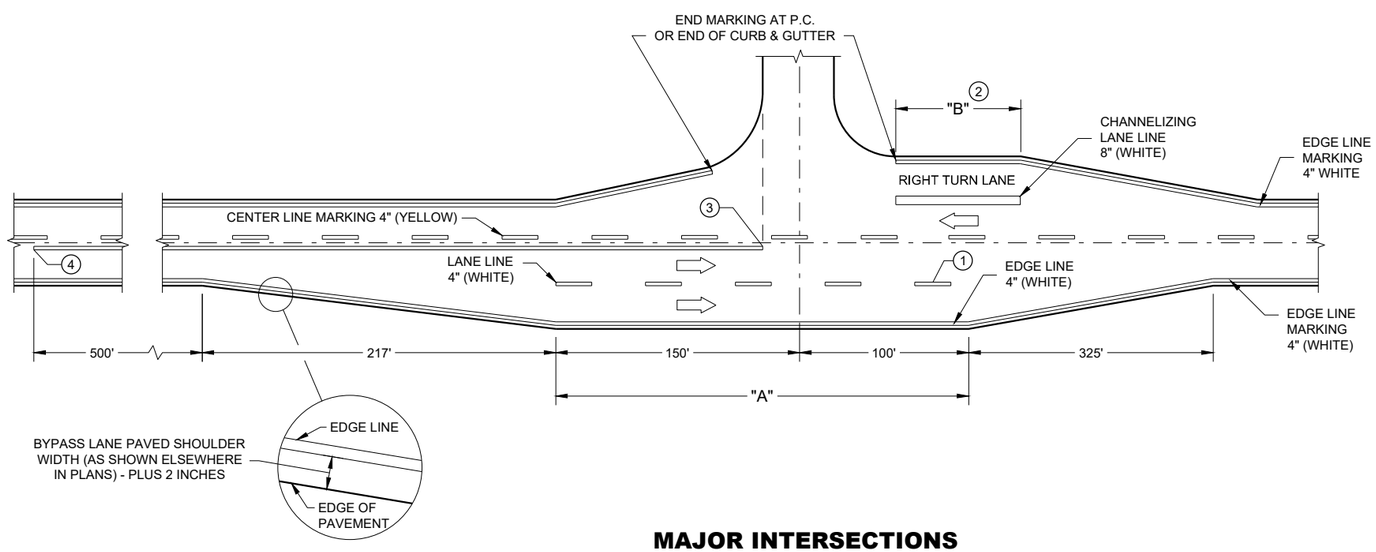

MAJOR INTERSECTIONS

(INTERSECTION WITH FULL RIGHT TURN LANE OR BYPASS LANE)

6

6

SDD 15C35 - 04a

SDD 15C35 - 04a

PAVEMENT MARKING (INTERSECTIONS)

STATE OF WISCONSIN
DEPARTMENT OF TRANSPORTAT

LEGEND

SIGN ON PERMANENT SUPPORT

TRAFFIC CONTROL DRUM

DIRECTION OF TRAFFIC

WORK ZONE

GENERAL NOTES

ALL SIGNS ARE 48"X48" UNLESS OTHERWISE NOTED. IF NECESSARY DUE TO SPACE CONSTRAINTS IN URBAN AREAS, 36" X 36" SIGNS MAY BE USED IF APPROVED BY THE REGIONAL TRAFFIC UNIT.

"WO" SIGN IS THE SAME AS "W" SIGN EXCEPT THE BACKGROUND IS ORANGE.

ANY SIGNS TEMPORARY OR EXISTING, WHICH CONFLICT WITH THE TRAFFIC CONTROL "IN USE" SHALL BE REMOVED OR COVERED AS NEEDED AND AS APPROVED BY THE ENGINEER.

THE EXACT NUMBER, LOCATION, AND SPACING OF ALL SIGNS AND DEVICES SHALL BE ADJUSTED TO FIT FIELD CONDITIONS AS APPROVED BY THE ENGINEER.

CHANNELIZING DEVICES PLACED ADJACENT TO WORK AREA SHALL BE PULLED BACK FROM THE TRAVEL LANE WHEN WORK IS NOT IN PROGRESS.

SIGNS THAT WILL BE IN PLACE LESS THAN 7 CONTINUOUS DAYS AND NIGHTS MAY BE MOUNTED ON PORTABLE SUPPORTS.

W20-1A AND G20-2A SIGNS ARE NOT REQUIRED IF THE WORK AREA IS WITHIN A LARGER WORK ZONE WHERE THESE SIGNS ARE ALREADY PRESENT. G20-2A SIGNS MAY ALSO BE OMITTED IF DURATION OF WORK IS LESS THAN 7 CONTINUOUS DAYS AND NIGHTS.

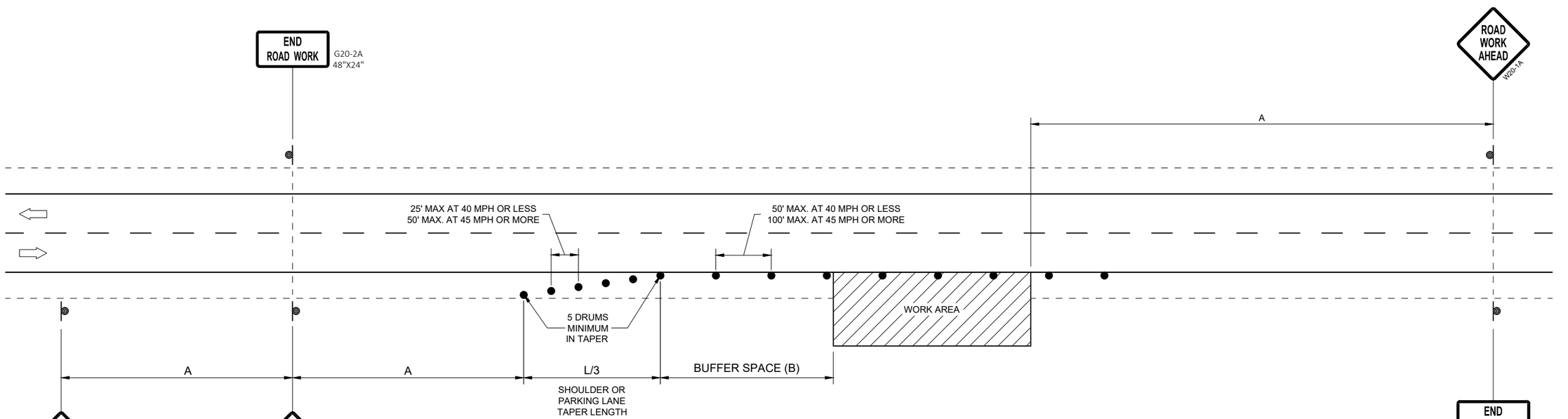

OR
IF TRAFFIC CONTROL DEVICES
ENCROACH ONTO TRAVELED WAY, USE

POSTED SPEED LIMIT PRIOR TO WORK STARTING (MPH)	ADVANCE WARNING SIGN SPACING (A) FEET	SHOULDER TAPER L / 3 W, LATERAL OFFSET (FT)						BUFFER SPACE (B) FEET
		3	4	5	6	7	8	
25	200'	10	14	17	21	24	28	55
30	200'	15	20	25	30	35	40	85
35	350'	20	27	34	40	47	54	120
40	350'	26	35	44	53	62	70	170
45	500'	45	59	74	89	104	119	220
50	500'	50	66	83	99	116	132	280
55	500'	54	73	91	109	127	145	335'

TRAFFIC CONTROL, WORK ON SHOULDER OR PARKING LANE, UNDIVIDED ROADWAY

STATE OF WISCONSIN
DEPARTMENT OF TRANSPORTATION

APPROVED
May 2020
DATE

/S/ Andrew Heidtke
STATEWIDE WORK ZONE T
SAFETY ENGINEER

FHWA

6

SDD 15D28 - 04

LEGEND

- TYPE III BARRICADE WITH ATTACHED SIGN
- SIGN ON PERMANENT SUPPORT
- TRAFFIC CONTROL DRUM WITH TYPE "C" STEADY BURN LIGHT
- TRAFFIC CONTROL DRUM
- FLAGS, 16" X 16" MIN. (ORANGE)
- REMOVING PAVEMENT MARKING
- DIRECTION OF TRAFFIC
- ASPHALTIC PAVEMENT WIDENING
- CONCRETE BARRIER TEMPORARY PRECAST
- TEMPORARY SIGNAL. SEE SDD 09G02 FOR EXACT PLACEMENT

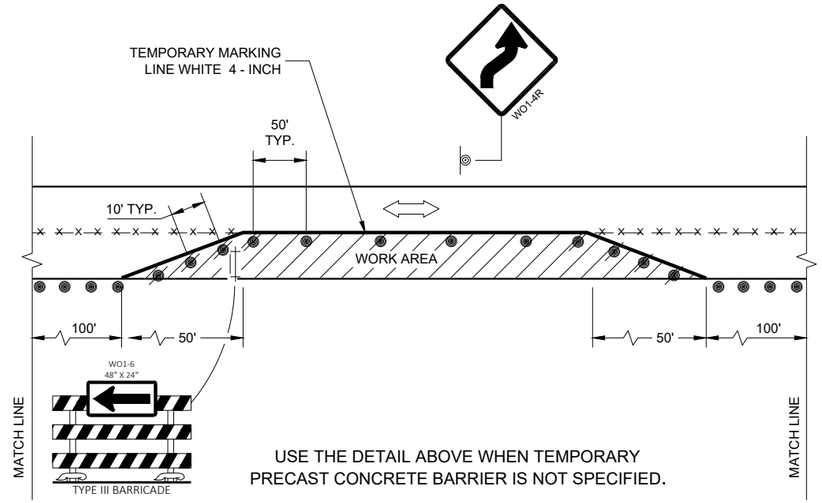

USE THE DETAIL ABOVE WHEN TEMPORARY PRECAST CONCRETE BARRIER IS NOT SPECIFIED.

GENERAL NOTES

THE EXACT NUMBER, LOCATION, AND SPACING OF ALL SIGNS AND DEVICES SHALL BE ADJUSTED TO FIT FIELD CONDITIONS AS APPROVED BY THE ENGINEER.

THE SPACING BETWEEN TRAFFIC CONTROL SIGNS SHOULD BE ADJUSTED TO NOT CONFLICT WITH AND TO PROVIDE A MINIMUM OF 200 FEET (500 FEET DESIRABLE) CLEARANCE TO EXISTING SIGNS THAT WILL REMAIN IN PLACE..

THIS LANE CLOSURE IS TYPICAL FOR CLOSING RIGHT LANE - REVERSE FOR CLOSING LEFT LANE.

ALL SIGNS ARE 48" x 48" UNLESS OTHERWISE NOTED.

"WO" IS THE SAME AS "W" EXCEPT THE BACKGROUND IS ORANGE.

ANY SIGNS TEMPORARY OR EXISTING, WHICH CONFLICT WITH TRAFFIC CONTROL "IN USE" SHALL BE REMOVED OR COVERED AS NEEDED OR AS APPROVED BY THE ENGINEER.

PLACE TEMPORARY PAVEMENT MARKING EDGELINE AND CENTERLINE AND REMOVE EXISTING PAVEMENT MARKINGS IF LANE CLOSURE IS TO BE IN PLACE 4 OR MORE CONTINUOUS DAYS AND NIGHTS OR AS NOTED ON DETAIL.

1. 500 FOOT SPACING SHOWN IS FOR ROADWAYS WITH A PRE-CONSTRUCTION REGULATORY SPEED LIMIT OF 45 MPH OR MORE. FOR 35 - 40 MPH, USE 350 FOOT TYPICAL SPACING. FOR 25 - 30 MPH, USE 200 FOOT TYPICAL SPACING.
2. USE 300 FOOT SPACING IF THE PRE - CONSTRUCTION REGULATORY SPEED IS 35 MPH OR LESS.
3. DIMENSION DETERMINED BY CBTP TAPER FROM EDGE LINE TO TANGENT SECTION OF THE ROAD.
4. TEMPORARY MARKING STOP LINE REMOVABLE TAPE 18 - INCH.
5. 700 FOOT TEMPORARY MARKING LINE, DOUBLE YELLOW 4 - INCH . WHEN THE DISTANCE FOR THE PRECEDING NO - PASSING ZONE IS LESS THAN THE MINIMUM DISTANCE BETWEEN ZONES AS INDICATED IN THE SPECIFICATIONS, THE TWO ZONES SHALL BE CONNECTED.
6. SEE SDD 15C02 - SHEET "F" FOR ADVANCED WIDTH RESTRICTION SIGNING.

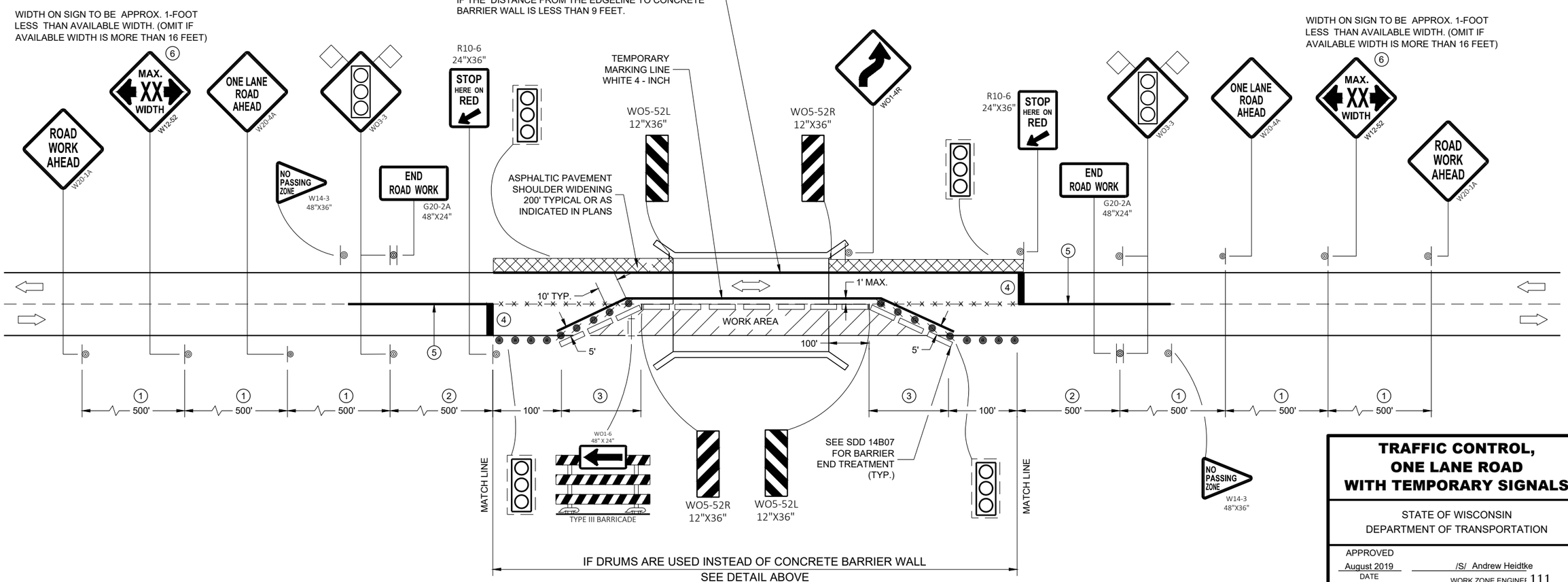

TRAFFIC CONTROL, ONE LANE ROAD WITH TEMPORARY SIGNALS

STATE OF WISCONSIN
DEPARTMENT OF TRANSPORTATION

APPROVED
August 2019 — DATE
/S/ Andrew Heidtke — WORK ZONE ENGINEER
FHWA

6

SDD 15D33 - 06

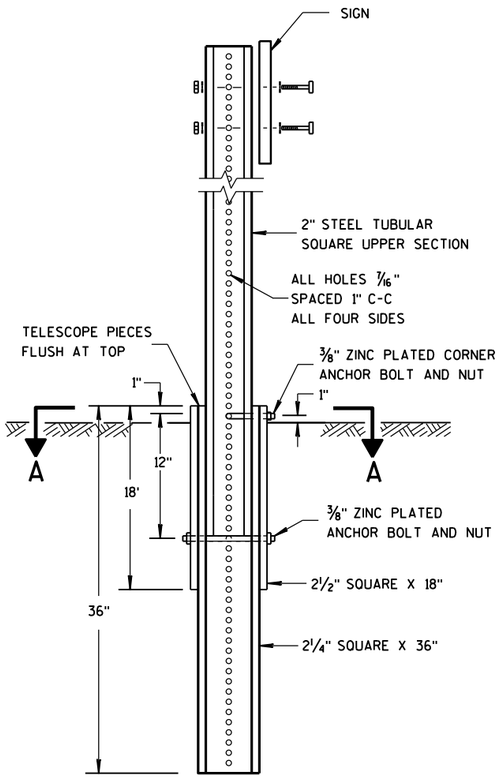

DETAIL OF TUBULAR STEEL SIGN POST

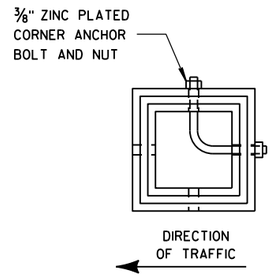

SECTION A-A

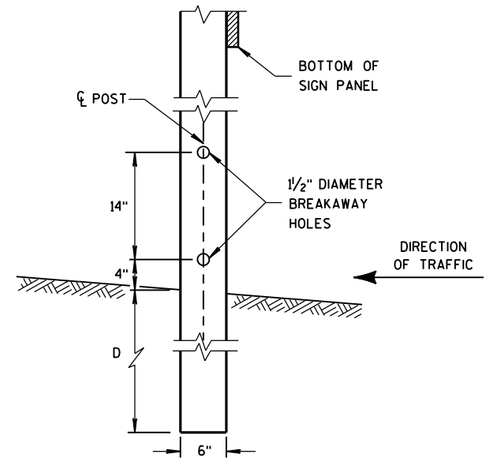

4"x6" WOOD POST MODIFICATION

GENERAL NOTES

1. 6 FEET FROM THE EDGE OF PAVEMENT (EDGE LINE LOCATION) UNLESS OTHERWISE DIRECTED BY THE PROJECT ENGINEER. LATERAL OFFSET SHOULD BE ADJUSTED TO AVOID THE DITCH FLOWLINE.
2. THE EXISTENCE OF CURB AND GUTTER DOES NOT IN ITSELF MANDATE THE VERTICAL CLEARANCE ILLUSTRATED. THAT HEIGHT IS TYPICALLY MEASURED WHERE THERE IS SIDEWALK ADJACENT TO THE ROADWAY OR PARKING IS PERMITTED. IN THE ABSENCE OF SIDEWALK, VERTICAL CLEARANCE IS MEASURED FROM THE TOP OF THE CURB. IF NO SIDEWALK AND NO PARKING, VERTICAL CLEARANCE MAY BE REDUCED TO 5 FOOT MINIMUM. OFFSET OF SIGNS IS MEASURED FROM THE CURB FLOWLINE.
3. FOR SIGNS REQUIRING 4 POSTS, SPACE INTERMEDIATE POSTS EVENLY.

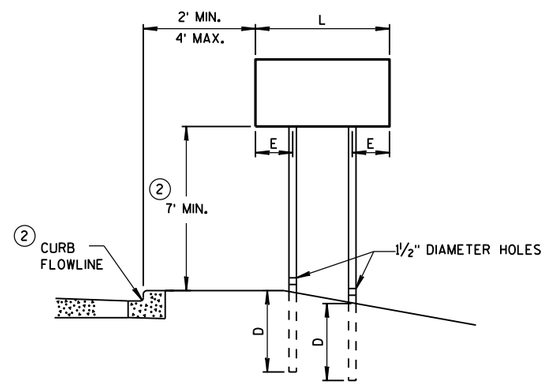

URBAN AREA

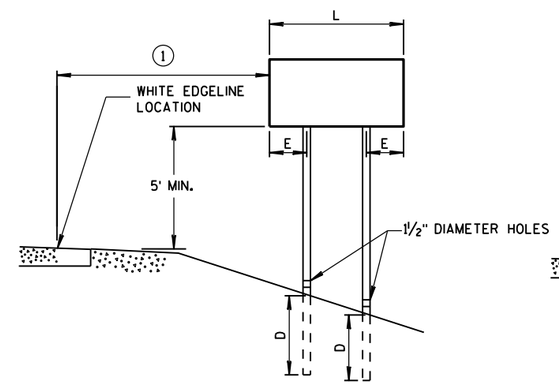

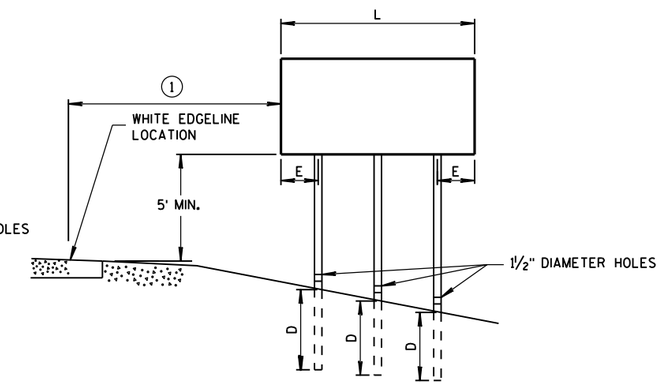

RURAL AREA

POST MOUNTING DETAIL FOR TEMPORARY TRAFFIC CONTROL FIXED MESSAGE SIGNS

TUBULAR STEEL POSTS

AREA OF SIGN INSTALLATION (SQ. FT.)	NUMBER OF REQUIRED TUBULAR STEEL POSTS
9 OR LESS	1
GREATER THAN 9 LESS THAN OR EQUAL TO 18	2
GREATER THAN 18 LESS THAN OR EQUAL TO 27	3

SIGNS WIDER THAN 3 FEET OR LARGER THAN 9 SQ. FT. SHALL BE MOUNTED ON MULTIPLE POSTS (SEE ABOVE TABLE).

SIGNS LARGER THAN 27 SQ. FT. SHALL NOT BE MOUNTED ON TUBULAR STEEL POSTS.

WOOD POST EMBEDMENT DEPTH

AREA OF SIGN INSTALLATION (SQ. FT.)	D (MIN)
20 OR LESS	4'
GREATER THAN 20	5'

4" X 6" WOOD POST

POST SPACING REQUIREMENTS		NUMBER OF WOOD POSTS REQUIRED
L	E	
48" OR LESS AND LESS THAN 20 SQ. FT.	-	1
LESS THAN 60"	12"	2
60" TO 120"	L/5	2
GREATER THAN 120" LESS THAN 168"	12"	3
168" AND GREATER	12"	4

SEE NOTE 3

TEMPORARY TRAFFIC CONTROL SIGN MOUNTING

STATE OF WISCONSIN
DEPARTMENT OF TRANSPO

6

S.D.D. 15 D 38-2a

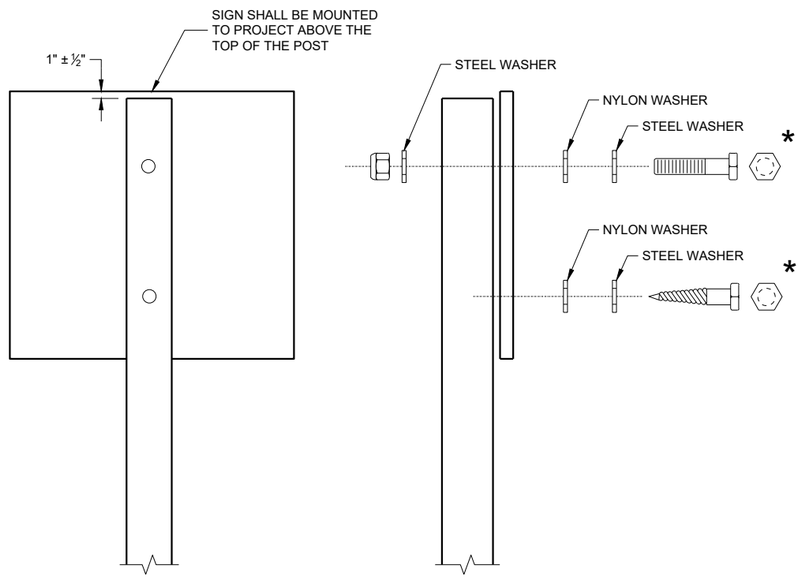

NUTS, BOLTS AND LAGS USED FOR MOUNTING SIGNS
SHALL HAVE HEXAGONAL HEADS AND SHALL BE EITHER:

A. HOT DIP GALVANIZED IN ACCORDANCE WITH ASTM
DESIGNATION: A 153, CLASS D, OR SC 3
B. ELECTRO-GALVANIZED IN ACCORDANCE WITH ASTM
DESIGNATION: B 633, TYPE III, SC 3

THREADS ON BOLTS AND NUTS SHALL BE MANUFACTURED WITH SUFFICIENT ALLOWANCE FOR THE CADMIUM PLATE OR GALVANIZED COATING TO PERMIT THE NUTS TO RUN FREELY ON THE BOLTS.

WOOD POST (4" x 6")
LAG SCREWS - ⅜" x 3"
MACHINE BOLTS - 5/16" x 6 ½" OR 7" LENGTH W/NUTS

SQUARE STEEL POST (2" x 2")
MACHINE BOLTS - ⅜" x 3 ¼" LENGTH W/NUTS
RIVETS - 9/32" (6605-9-6) BULB-TITE, TRI-FOLD, ALUMINUM
BODY/MANDREL O.D. FLANGE 0.720 - 0.765 INCH,
GRIP RANGE 0.042 - 0.375 INCH

WASHERS (ALL POSTS) -
1 ¼" O.D. x ⅜" I.D. x 1/16" STEEL
1 ¼" O.D. x ⅜" I.D. x 0.080 NYLON

* TWO DIFFERENT FASTENING SYSTEMS ARE SHOWN FOR ILLUSTRATION PURPOSES. ON ANY INDIVIDUAL SIGN, EITHER ONE OR THE OTHER SYSTEM SHALL BE USED. ACTUAL NUMBER OF FASTENERS PER SIGN VARIES WITH THE SIGN AREA. FOR A SINGLE POST INSTALLATION, ALL SIGNS GREATER THAN 9 SQ. FT. REQUIRE THE USE OF 3 FASTENERS.

6

6

SDD 15D38 - 02b

ATTACHMENT OF SIGNS TO POSTS

STATE OF WISCONSIN
DEPARTMENT OF TRANSPORTATION

APPROVED
June 2017 — DATE
/S/ Andrew Heidtke — WORK ZONE ENGINEE
FHWA

SDD 15D38 - 02b

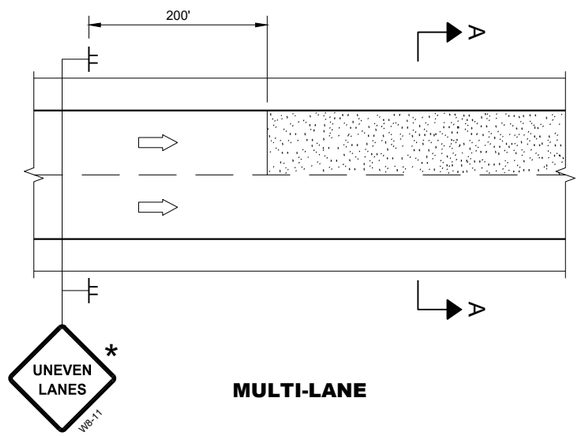

MULTI-LANE

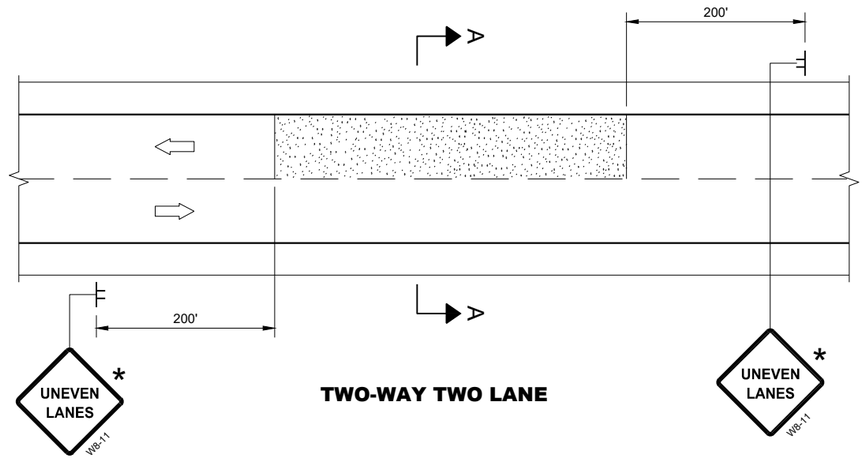

TWO-WAY TWO LANE

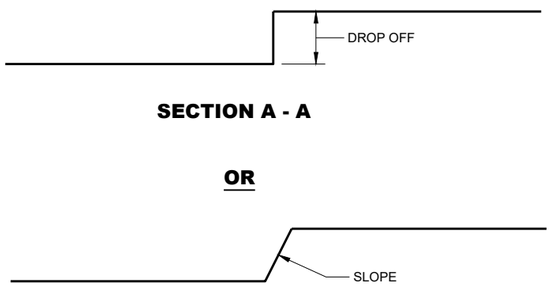

SECTION A - A

OR

SECTION A - A

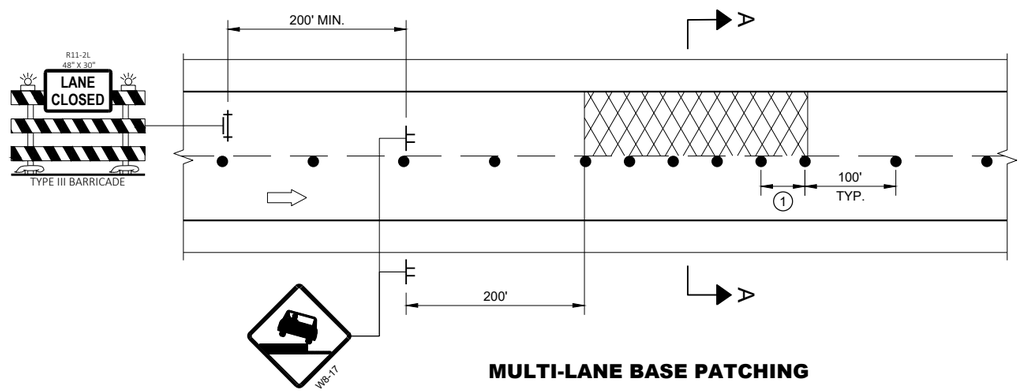

MULTI-LANE BASE PATCHING

ADJACENT LANE DROP-OFFS

GENERAL NOTES

FOR SPOT LOCATIONS USE ENGINEERING JUDGEMENT WHEN PLACING ADDITIONAL SIGNS.

ALL SIGNS ARE 48" X 48" UNLESS OTHERWISE NOTED.

"WO" SIGNS ARE THE SAME AS "W" SIGNS EXCEPT THE BACKGROUND IS ORANGE.

WARNING LIGHTS ARE NOT REQUIRED IF THE LANE CLOSURE IS A DAYTIME ONLY OPERATION.

* IF THE DROP-OFF IS CONTINUOUS ALONG THE PROJECT, PLACE ADDITIONAL SIGNS EVERY 1 MILE AND AFTER EVERY ENTRANCE RAMP.

(1) USE CLOSER SPACING WHEN DELINEATING DROP-OFF.

LEGEND

- SIGN ON TEMPORARY SUPPORT
- TRAFFIC CONTROL DRUM
- TYPE III BARRICADE WITH ATTACHED SIGN
- TYPE "A" WARNING LIGHT (FLASHING)
- DIRECTION OF TRAFFIC
- WORK AREA WITH DROP-OFF
- MILLED SURFACE

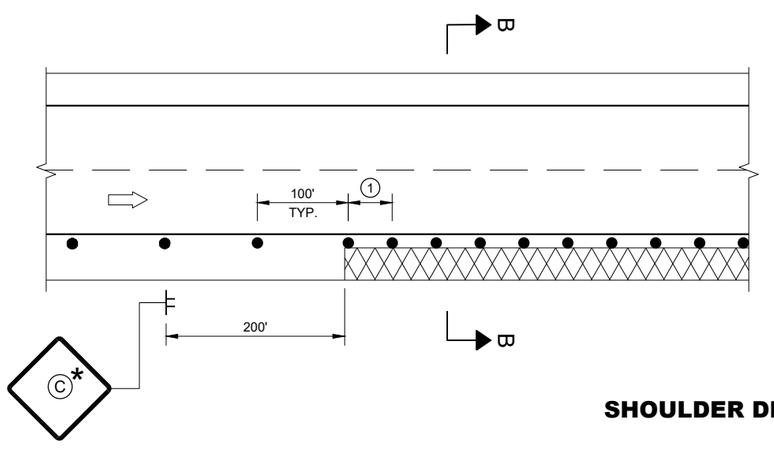

SHOULDER DROP-OFFS

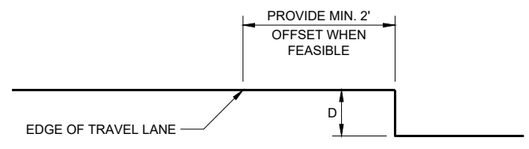

SECTION B - B

D	SIGN (C)
< 2" WITH A SLOPE STEEPER THAN 3:1	LOW SHOULDER WO8-9
2" < 6" WITH A SLOPE STEEPER THAN 3:1	SHOULDER DROP - OFF W8-9A PROVIDE A 3:1 OR FLATTER SLOPE OF MATERIAL ADJACENT TO THE PAVEMENT

TRAFFIC CONTROL, DROP-OFF SIGNING

STATE OF WISCONSIN
DEPARTMENT OF TRANSPORTATION

APPROVED
March 2018 — DATE
/S/ Andrew Heidtke — WORK ZONE ENGINEE
FHWA

6

SDD 15D39 - 02

GENERAL NOTES

DRAWING NOT TO SCALE. ALL SIGNS AND POSTS ON THIS SHEET SHALL BE PAID FOR WITH 'TRAFFIC CONTROL SIGNS' BID ITEM. ALL SIDE ROADS WHICH ARE UNDER CONSTRUCTION OF CURB AND GUTTER AND/OR GRADING SHALL BE ADEQUATELY SIGNED.

ALL SIGNS AND DEVICES SHALL BE IN CONFORMANCE WITH THE WISCONSIN MANUAL OF UNIFORM TRAFFIC CONTROL DEVICES (WMUTCD). SIGN LAYOUTS SHALL BE IN ACCORDANCE WITH THE WISDOT STANDARD SIGN PLATES.

"WO" SIGNS ARE THE SAME AS "W" SIGNS EXCEPT THAT THE BACKGROUND IS ORANGE.

ALL SIGNS ARE 48" X 48" UNLESS OTHERWISE NOTED.

THE EXACT NUMBER, LOCATION AND SPACING OF ALL SIGNS AND DEVICES SHALL BE ADJUSTED TO FIT FIELD CONDITIONS AS DIRECTED BY THE ENGINEER.

ALL SIGNS INAPPROPRIATE TO THE STATUS OF THE CONTROL ZONE, INCLUDING PRE-EXISTING SIGNS IN THE VICINITY, SHALL BE COVERED OR REMOVED AS DIRECTED BY THE ENGINEER.

SEE 15C34 FOR ADDITIONAL TRAFFIC CONTROL SIGNING WHEN CENTERLINE PAVEMENT MAKINGS ARE MISSING. 'DO NOT PASS' SIGNS MUST BE INSTALLED ON THE SAME DAY AS MILLING OPERATIONS.

(1) PLACE SIGNS 350' IN ADVANCE OF MILLED SURFACES AND AT 1 MILE INTERVALS, OR AS DIRECTED BY THE ENGINEER.

(2) PLACE SIGN 200' MIN. FROM INTERSECTION AND 200' MIN. AFTER ADVANCE WARNING SIGN SHOWN IN SDD 15C04.

LEGEND

SIGN ON TEMPORARY SUPPORT

DIRECTION OF TRAFFIC

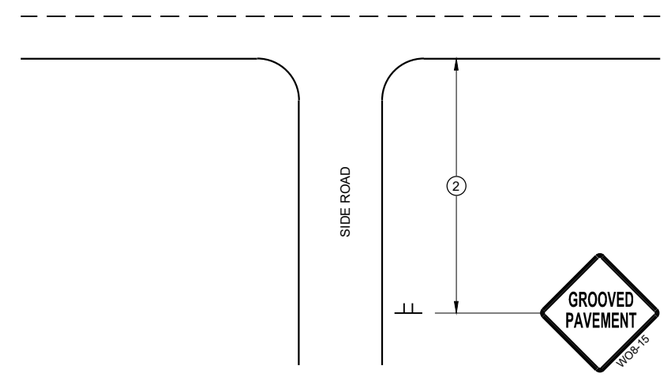

TYPICAL SIDE ROAD APPROACH SIGN DETAIL

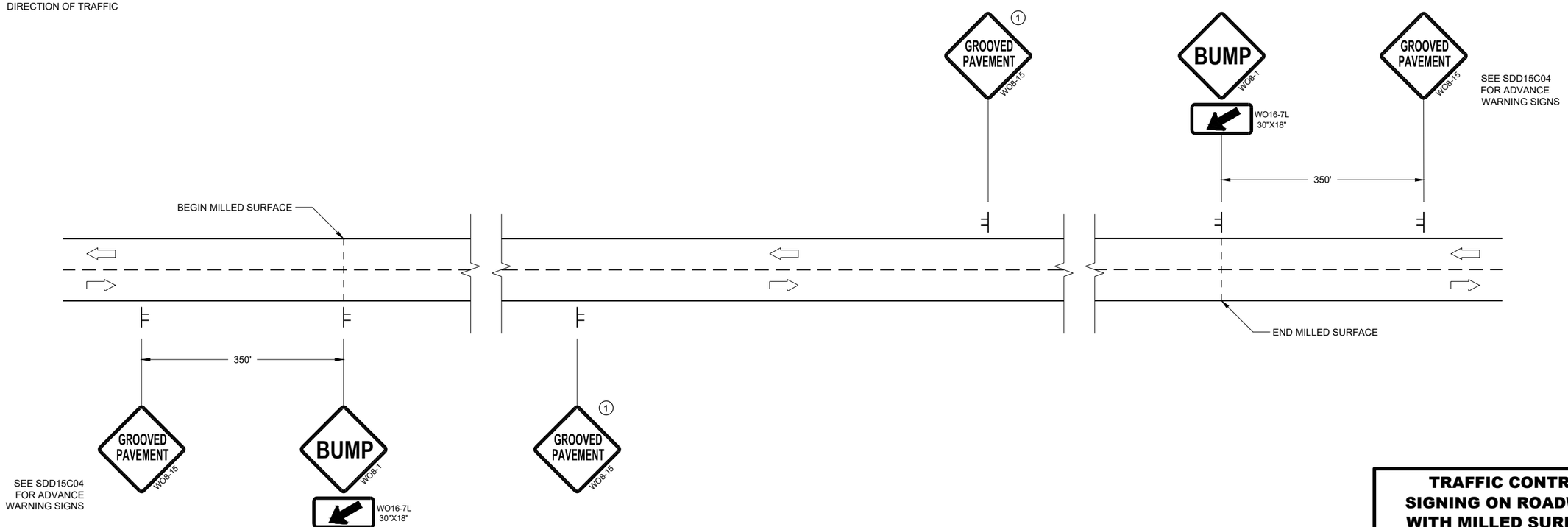

DETAIL FOR SIGNING ON MILLED SURFACES

TRAFFIC CONTROL, SIGNING ON ROADWAYS WITH MILLED SURFACES

STATE OF WISCONSIN
DEPARTMENT OF TRANSPORTATION

APPROVED
February 2020 — DATE
/S/ Andrew Heidtke — WORK ZONE ENGINEE
FHWA

6

SDD 15D44 - 02

GENERAL NOTES

DRAWING NOT TO SCALE. ALL SIGNS AND POSTS ON THIS SHEET SHALL BE PAID FOR WITH 'TRAFFIC CONTROL SIGNS' BID ITEM. ALL SIDE ROADS WHICH ARE UNDER CONSTRUCTION OF CURB AND GUTTER AND/OR GRADING SHALL BE ADEQUATELY SIGNED.

ALL SIGNS AND DEVICES SHALL BE IN CONFORMANCE WITH THE WISCONSIN MANUAL OF UNIFORM TRAFFIC CONTROL DEVICES (WMUTCD). SIGN LAYOUTS SHALL BE IN ACCORDANCE WITH THE WISDOT STANDARD SIGN PLATES.

"WO" SIGNS ARE THE SAME AS "W" SIGNS EXCEPT THAT THE BACKGROUND IS ORANGE.

ALL SIGNS ARE 48" X 48" UNLESS OTHERWISE NOTED.

THE EXACT NUMBER, LOCATION AND SPACING OF ALL SIGNS AND DEVICES SHALL BE ADJUSTED TO FIT FIELD CONDITIONS AS DIRECTED BY THE ENGINEER.

ALL SIGNS INAPPROPRIATE TO THE STATUS OF THE CONTROL ZONE, INCLUDING PRE-EXISTING SIGNS IN THE VICINITY, SHALL BE COVERED OR REMOVED AS DIRECTED BY THE ENGINEER.

SEE 15C34 FOR ADDITIONAL TRAFFIC CONTROL SIGNING WHEN CENTERLINE PAVEMENT MAKINGS ARE MISSING. 'DO NOT PASS' SIGNS MUST BE INSTALLED ON THE SAME DAY AS MILLING OPERATIONS.

1. PLACE SIGNS 350' IN ADVANCE OF CHIP SEALED OR LOOSE GRAVEL SURFACES AND AT 1 MILE INTERVALS, OR AS DIRECTED BY THE ENGINEER.
2. PLACE SIGN 200' MIN. FROM INTERSECTION AND 200' MIN. AFTER ADVANCE WARNING SIGN SHOWN IN SDD 15C04.
3. ADD WO8-1 OR WO8-2 SIGN WHEN THE CONDITION IS PRESENT.

LEGEND

SIGN ON TEMPORARY SUPPORT

DIRECTION OF TRAFFIC

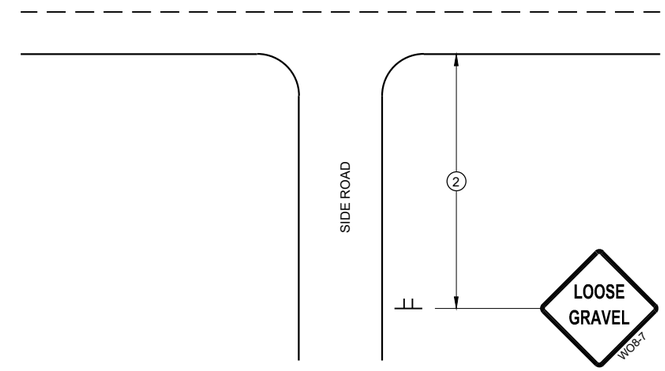

TYPICAL SIDE ROAD APPROACH SIGN DETAIL

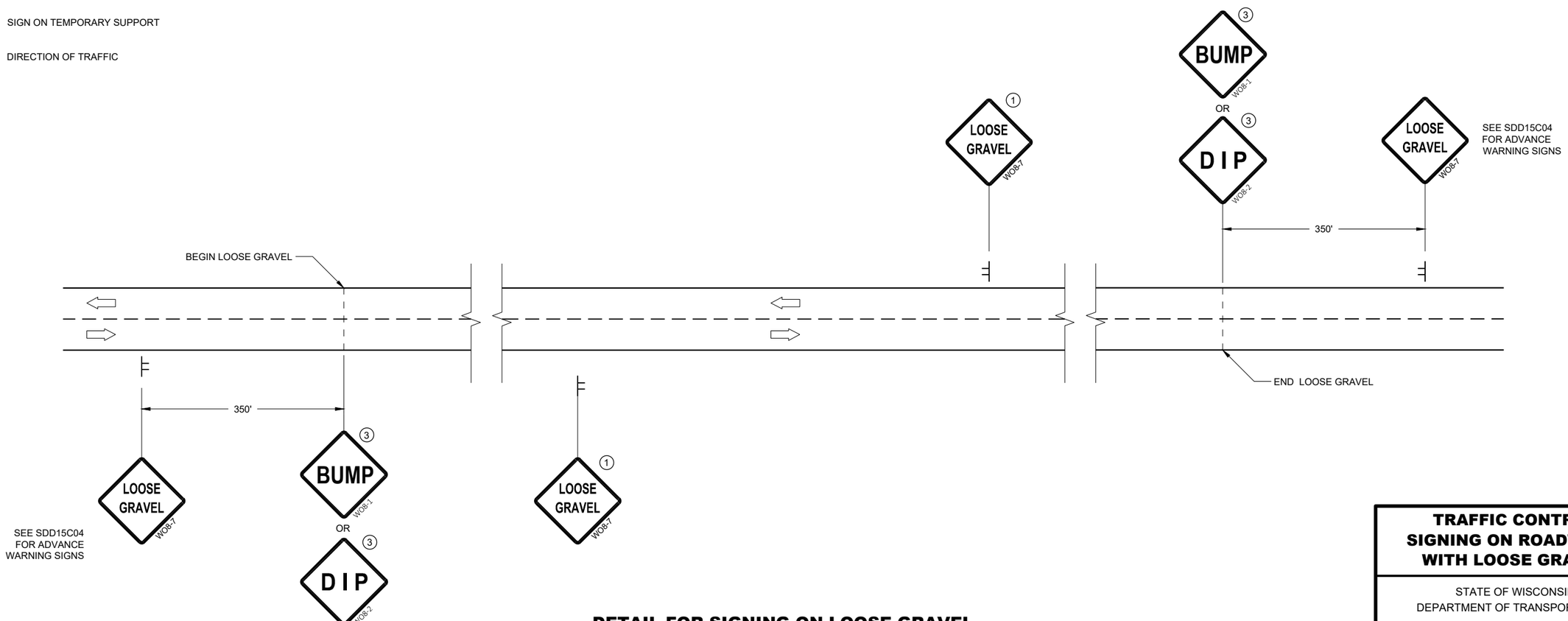

DETAIL FOR SIGNING ON LOOSE GRAVEL OR CHIP SEALED SURFACES

TRAFFIC CONTROL SIGNING ON ROADWAYS WITH LOOSE GRAVEL

STATE OF WISCONSIN
DEPARTMENT OF TRANSPORTATION

APPROVED
February 2021 /S/ Andrew Heidtke
DATE WORK ZONE ENGINEE
FHWA

6

SDD 15D45 - 03

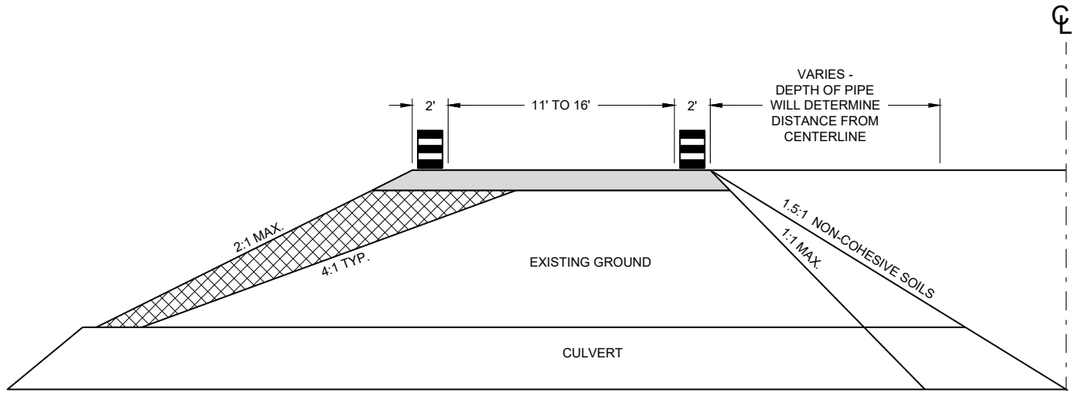

CROSS SECTION

GENERAL NOTES

USE 1:1 FOR COHESIVE CLAYS AND SILTS, LOAMS, SANDY CLAYS AND ANGULAR GRAVEL SOILS.
USE 1.5:1 FOR NON-COHESIVE SOILS.

THE TAPER SHOULD EXTEND ACROSS THE SHOULDER UNLESS DOING SO WOULD GREATLY CONFLICT WITH THE WORK OPERATION.

ALL LANE CLOSURE SIGNS SHALL BE REMOVED OR COVERED AND ALL DEVICES REMOVED BEYOND THE SHOULDER WHEN WORK IS NOT IN PROGRESS AND THE LANE IS RESTORED TO A SAFE OPERATING CONDITION.

CHANNELIZING DEVICES PLACED ADJACENT TO WORK AREA SHALL BE PULLED BACK FROM TRAVEL LANE WHEN WORK IS NOT IN PROGRESS.

USE WITH SDD 15C12 "TRAFFIC CONTROL FOR LANE CLOSURE WITH FLAGGING OPERATIONS"

USE WITH SDD 15D45 "SIGNING ON ROADWAYS WITH LOOSE GRAVEL"

LEGEND

- DRUM WITHOUT WARNING LIGHT
- 6" BASE AGGREGATE DENSE 1 ¼" -INCIDENTAL TO LANE SHIFT ITEM
- FILL - INCIDENTAL TO LANE SHIFT ITEM
- WORK AREA
- FLAGGER, EQUIPPED WITH STOP/SLOW PADDLE FASTENED ON SUPPORT STAFF

6

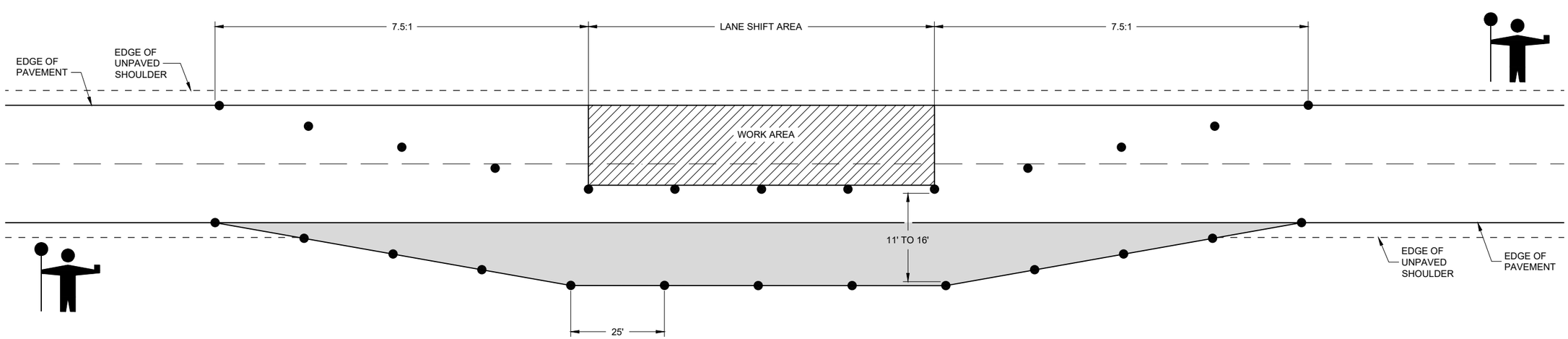

LANE SHIFT IN FLAGGING OPERATION

TRAFFIC CONTROL, TEMPORARY LANE SHIFT DURING CULVERT WORK

STATE OF WISCONSIN
DEPARTMENT OF TRANSPORTATION

APPROVED
February 2021 — DATE
/S/ Andrew Heidtke — WORK ZONE ENGINEE
FHWA

6

SDD 15D48 - 01

SDD 15D48 - 01

LEGEND

V1 WORK VEHICLE

V2 SHADOW VEHICLE

TRUCK MOUNTED ATTENUATOR (TMA)

FLASHING ARROW PANEL (CAUTION)

WORK AREA

DIRECTION OF TRAFFIC

POSTED SPEED PRIOR TO WORK STARTING (MPH)	DECISION SIGHT DISTANCE (D)
0 - 25	550'
30	550'
35	700'
40	700'
45	900'
50	900'
55	1200'

GENERAL NOTES

ALL SIGNS ARE 48"X48" UNLESS OTHERWISE NOTED.

MOBILE IS WORK THAT MOVES CONTINUOUSLY OR MOVES AT LEAST THE DECISION SIGHT DISTANCE EVERY 15 MINUTES.

ALL VEHICLES SHALL BE EQUIPPED WITH TWO 360 DEGREE HIGH INTENSITY YELLOW FLASHING LIGHTS OR STROBE LIGHTS AND OPERATED WITH HEADLIGHTS TURNED ON.

ALL ARROW PANELS SHALL BE REAR FACING, TYPE "B" OR "C", AND DISPLAYING THE FLASHING CAUTION MODE. SIGNS PLACED ON VEHICLES MUST NOT OBSCURE THE ARROW PANEL.

USE AN ATTENUATOR ON THE REARMOST VEHICLE THAT BLOCKS ALL OR PART OF THE TRAFFIC LANE.

1 DISTANCE BETWEEN VEHICLES MAY INCREASE FROM THE ATTENUATOR'S ROLL AHEAD BASED ON TERRAIN, SIGHT DISTANCE, AND OTHER FACTORS. WHENEVER ADEQUATE STOPPING SIGHT DISTANCE EXISTS TO THE REAR, SHADOW VEHICLES SHOULD MAINTAIN THE MINIMUM DISTANCE FROM THE WORK VEHICLE AND PROCEED AT THE SAME SPEED AS THE WORK VEHICLE. SHADOW VEHICLES SHOULD SLOW DOWN IN ADVANCE OF VERTICAL OR HORIZONTAL CURVES THAT RESTRICT SIGHT DISTANCE.

2 ALIGN LEFT SIDE OF SHADOW VEHICLE WITH EDGE OF WORK AREA.

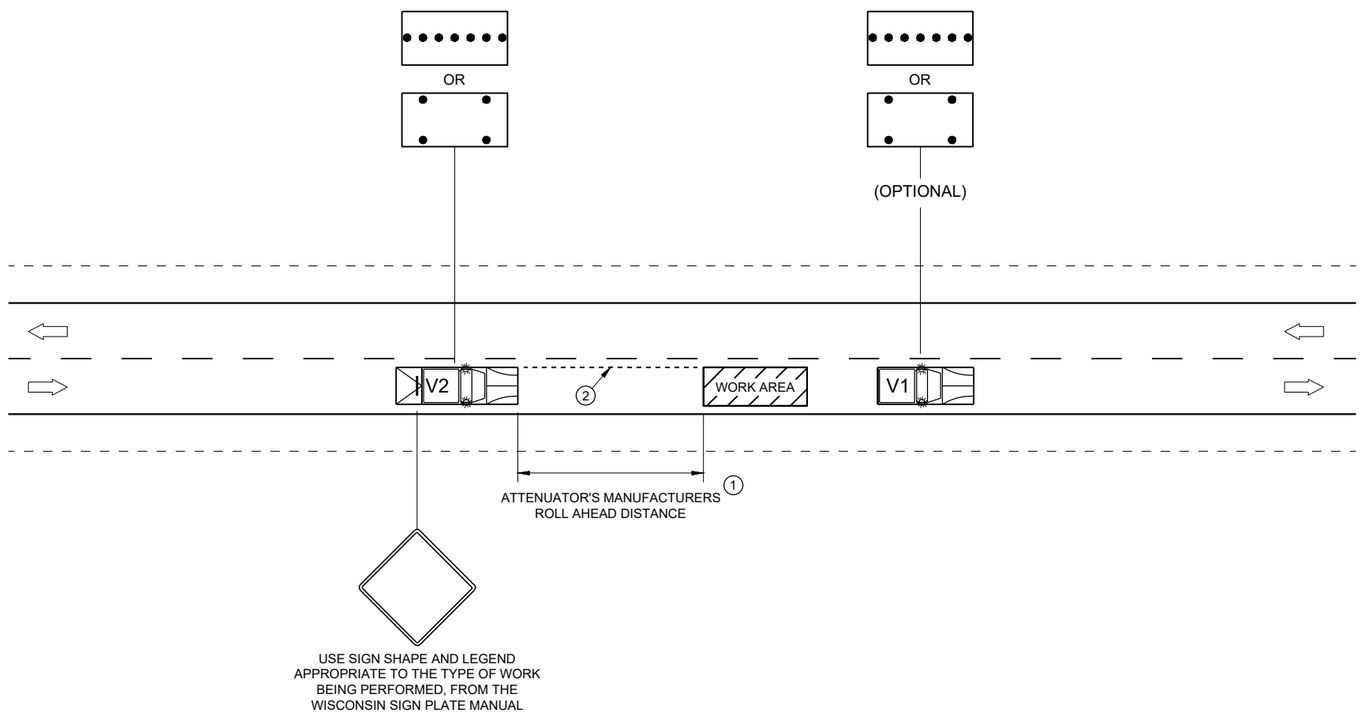

TRAFFIC CONTROL, MOBILE OPERATIONS ON AN UNDIVIDED ROADWAY

STATE OF WISCONSIN
DEPARTMENT OF TRANSPORTATION

APPROVED
February 2021 — DATE
/S/ Andrew Heidtke — STATEWIDE WORK ZONE T SAFETY ENGINEER
FHWA

6
SDD 15D51 - 01

STATION	DISTANCE (LF)	CUT AREA (SF)	AVERAGE END AREA (SF)	CUT VOLUME (CY)	FILL AREA (SF)	AVERAGE END AREA (SF)	FILL VOLUME (CY)
587+50.0		0			0		
	50.0		3.91	7.24		11.70	21.66
588+00.0		7.82			23.39		
	50.0		7.67	14.20		44.50	82.40
588+50.0		7.52			65.6		
	50.0		7.88	14.59		80.77	149.57
589+00.0		8.24			95.94		
	50.0		8.98	16.62		150.03	277.82
589+50.0		9.71			204.11		
	50.0		9.39	17.39		216.62	401.14
590+00.0		9.07			229.12		
	50.0		9.38	17.36		173.90	322.03
590+50.0		9.68			118.67		
	50.0		9.47	17.54		78.86	146.04
591+00.0		9.26			39.05		
	50.0		9.36	17.32		51.47	95.31
591+50.0		9.45			63.88		
	50.0		9.43	17.45		86.93	160.98
592+00.0		9.4			109.98		
	50.0		10.82	20.04		55.48	102.73
592+50.0		12.24			0.97		
				159.76			1759.68

STATION	DISTANCE (LF)	CUT AREA (SF)	AVERAGE END AREA (SF)	CUT VOLUME (CY)	FILL AREA (SF)	AVERAGE END AREA (SF)	FILL VOLUME (CY)
775+00.0		11.1			3.86		
	50.0		11.63	21.53		2.44	4.51
775+50.0		12.15			1.01		
	50.0		11.75	21.76		1.55	2.86
776+00.0		11.35			2.08		
	50.0		10.97	20.31		2.11	3.90
776+50.0		10.59			2.13		
	50.0		10.58	19.59		5.50	10.19
777+00.0		10.57			8.87		
	50.0		10.34	19.14		13.35	24.71
777+50.0		10.1			17.82		
	19.0		10.25	7.21		18.54	13.04
777+69.0		10.39			19.25		
	31.0		10.01	11.49		19.11	21.94
778+00.0		9.62			18.96		
	50.0		9.49	17.57		19.56	36.22
778+50.0		9.36			20.16		
	50.0		9.64	17.85		24.39	45.17
779+00.0		9.92			28.62		
	50.0		9.97	18.46		20.80	38.51
779+50.0		10.02			12.97		
	50.0		10.02	18.55		7.82	14.47
780+00.0		10.01			2.66		
				193.47			215.52

STATION	DISTANCE (LF)	CUT AREA (SF)	AVERAGE END AREA (SF)	CUT VOLUME (CY)	FILL AREA (SF)	AVERAGE END AREA (SF)	FILL VOLUME (CY)
689+00.0		11.77			0.21		
	50.0		11.90	22.04		2.38	4.40
689+50.0		12.03			4.54		
	50.0		12.64	23.40		60.37	111.79
690+00.0		13.24			116.19		
	50.0		12.75	23.60		248.72	460.59
690+50.0		12.25			381.25		
	50.0		11.99	22.20		440.88	816.44
691+00.0		11.73			500.51		
	50.0		11.75	21.76		553.48	1024.95
691+50.0		11.77			606.44		
	50.0		10.88	20.14		602.62	1115.96
692+00.0		9.98			598.8		
	50.0		10.14	18.77		581.14	1076.19
692+50.0		10.29			563.48		
	50.0		10.14	18.77		546.59	1012.19
693+00.0		9.98			529.69		
	50.0		10.01	18.54		540.00	1000.00
693+50.0		10.04			550.31		
	50.0		11.84	21.92		589.37	1091.43
694+00.0		13.63			628.43		
	6.7		19.64	4.87		445.06	110.44
694+06.7		25.64			261.68		
	43.3		18.57	29.78		295.65	474.13
694+50.0		11.5			329.61		
	50.0		11.11	20.57		252.71	467.97
695+00.0		10.72			175.8		
	50.0		10.60	19.63		147.41	272.98
695+50.0		10.48			119.02		
	50.0		10.17	18.82		129.12	239.11
696+00.0		9.85			139.22		
	50.0		9.68	17.93		160.36	296.95
696+50.0		9.51			181.49		
	50.0		10.07	18.64		140.17	259.57
697+00.0		10.62			98.85		
	50.0		10.92	20.22		57.08	105.69
697+50.0		11.22			15.3		
	50.0		5.61	10.39		7.65	14.17
698+00.0		0			0		
				371.99			9954.96

STATION	DISTANCE (LF)	CUT AREA (SF)	AVERAGE END AREA (SF)	CUT VOLUME (CY)	FILL AREA (SF)	AVERAGE END AREA (SF)	FILL VOLUME (CY)
754+00.0		0			0		
	50.0		5.02	9.29		9.01	16.69
754+50.0		10.03			18.02		
	50.0		10.92	20.21		19.41	35.94
755+00.0		11.8			20.79		
	50.0		12.54	23.22		30.64	56.73
755+50.0		13.28			40.48		
	69.0		11.63	29.72		71.37	182.39
756+19.0		9.98			102.26		
	31.0		9.90	11.36		90.80	104.25
756+50.0		9.81			79.34		
	50.0		9.62	17.81		73.19	135.53
757+00.0		9.42			67.03		
	50.0		10.31	19.09		66.69	123.50
757+50.0		11.2			66.35		
	50.0		10.88	20.14		54.16	100.30
758+00.0		10.55			41.97		
	50.0		10.79	19.97		28.33	52.45
758+50.0		11.02			14.68		
	50.0		10.29	19.06		7.96	14.74
759+00.0		9.56			1.24		
				189.87			822.51

STATION	DISTANCE (LF)	CUT AREA (SF)	AVERAGE END AREA (SF)	CUT VOLUME (CY)	FILL AREA (SF)	AVERAGE END AREA (SF)	FILL VOLUME (CY)
808+75.0		0			0		
	30.0		5.32	5.91		26.26	29.17
809+05.0		10.64			52.51		
	45.0		13.32	22.20		45.96	76.60
809+50.0		16			39.41		
	58.0		15.18	32.60		60.51	129.98
810+08.0		14.35			81.61		
	42.0		12.33	19.18		73.69	114.63
810+50.0		10.31			65.77		
				79.89			350.39

STATION	DISTANCE (LF)	CUT AREA (SF)	AVERAGE END AREA (SF)	CUT VOLUME (CY)	FILL AREA (SF)	AVERAGE END AREA (SF)	FILL VOLUME (CY)
825+00.0		11.28			3.06		
	50.0		10.99	20.35		3.42	6.32
825+50.0		10.7			3.77		
	50.0		10.19	18.87		8.17	15.13
826+00.0		9.68			12.57		
	50.0		9.58	17.73		67.17	124.38
826+50.0		9.47			121.76		
	50.0		9.81	18.17		85.53	158.38
827+00.0		10.15			49.29		
	50.0		10.62	19.67		27.76	51.41
827+50.0		11.09			6.23		
				94.79			355.62

STATION	DISTANCE (LF)	CUT AREA (SF)	AVERAGE END AREA (SF)	CUT VOLUME (CY)	FILL AREA (SF)	AVERAGE END AREA (SF)	FILL VOLUME (CY)
836+00.0		0			0		
	50.0		4.74	8.78		7.76	14.36
836+50.0		9.48			15.51		
	50.0		9.13	16.90		58.21	107.79
837+00.0		8.77			100.9		
	50.0		8.51	15.75		156.33	289.50
837+50.0		8.24			211.76		
	50.0		8.11	15.01		226.79	419.98
838+00.0		7.97			241.82		
	50.0		8.39	15.53		189.98	351.81
838+50.0		8.8			138.14		
	50.0		9.31	17.23		96.49	178.68
839+00.0		9.81			54.83		
	50.0		4.91	9.08		27.42	50.77
839+50.0		0			0		
				98.28			1412.89

STATION	DISTANCE (LF)	CUT AREA (SF)	AVERAGE END AREA (SF)	CUT VOLUME (CY)	FILL AREA (SF)	AVERAGE END AREA (SF)	FILL VOLUME (CY)
862+50.0		0			0		
	48.0		26.71	47.48		29.42	52.30
862+98.0		53.41			58.84		
	52.0		30.05	53.41		57.08	109.93
863+50.0		6.69			55.32		
	50.0		6.74	12.48		43.53	80.60
864+00.0		6.79			31.73		
	50.0		6.64	12.29		42.33	78.38
864+50.0		6.48			52.92		
	50.0		6.59	12.19		113.26	209.74
865+00.0		6.69			173.6		
	50.0		7.40	13.69		198.67	367.91
865+50.0		8.1			223.74		
	20.0		8.08	5.99		225.03	166.69
865+70.0		8.06			226.32		
	30.0		8.43	9.37		190.46	211.62
866+00.0		8.8			154.6		
	50.0		8.09	14.98		92.79	171.83
866+50.0		7.38			30.98		
	50.0		3.69	6.83		15.49	28.69
867+00.0		0			0		
				188.71			1477.69

STATION	DISTANCE (LF)	CUT AREA (SF)	AVERAGE END AREA (SF)	CUT VOLUME (CY)	FILL AREA (SF)	AVERAGE END AREA (SF)	FILL VOLUME (CY)
870+50.0		11.92			1.4		
	50.0		12.07	22.35		78.21	144.83
871+00.0		12.22			155.02		
	50.0		34.14	63.21		224.63	415.97
871+50.0		56.05			294.23		
	22.0		55.74	45.41		293.99	239.54
871+72.0		55.42			293.74		
	28.0		55.16	57.20		282.53	292.99
872+00.0		54.89			271.31		
	50.0		33.22	61.52		251.98	466.62
872+50.0		11.55			232.64		
	50.0		11.75	21.76		136.00	251.85
873+00.0		11.95			39.36		
	50.0		11.86	21.95		31.44	58.22
873+50.0		11.76			23.52		
	50.0		11.05	20.45		54.32	100.58
874+00.0		10.33			85.11		
	50.0		9.70	17.96		112.84	208.96
874+50.0		9.07			140.57		
	50.0		9.05	16.75		120.10	222.40
875+00.0		9.02			99.62		
	50.0		9.37	17.34		91.33	169.13
875+50.0		9.71			83.04		
	50.0		9.54	17.66		74.67	138.27
876+00.0		9.36			66.29		
	50.0		9.29	17.20		58.73	108.75
876+50.0		9.22			51.16		
	50.0		9.78	18.11		27.94	51.74
877+00.0		10.34			4.72		
				418.89			2869.87

RIGHT-OF-WAY (R/W) IS BEYOND THE
EXTENTS OF THE CROSS SECTIONS.
SEE LINE DIAGRAMS FOR R/W/ LIMITS.

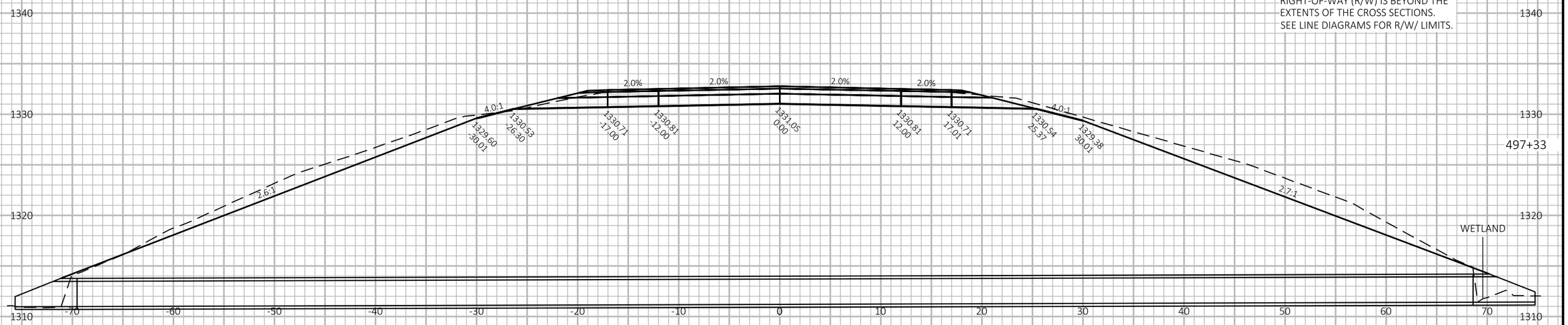

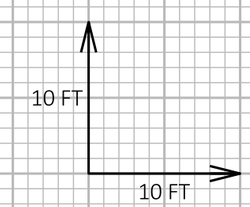

9

9

PROJECT NO: 1560-07-70	HWY: USH 63	COUNTY: BAYFIELD	CROSS SECTIONS: USH 63	SHEET 121	E

FILE NAME : G:\00\00093\00093523\CADD\SHEETSPLAN\090201-XS.DWG
LAYOUT NAME - 090201
PLOT DATE : 7/13/2021 11:14 AM
PLOT BY : COURTNEY ROOYAKKERS
PLOT NAME :
PLOT SCALE : 1 IN:10 FT HORZ. / 1 IN:10 FT VERT.
WISDOT/CADDS SHEET 49

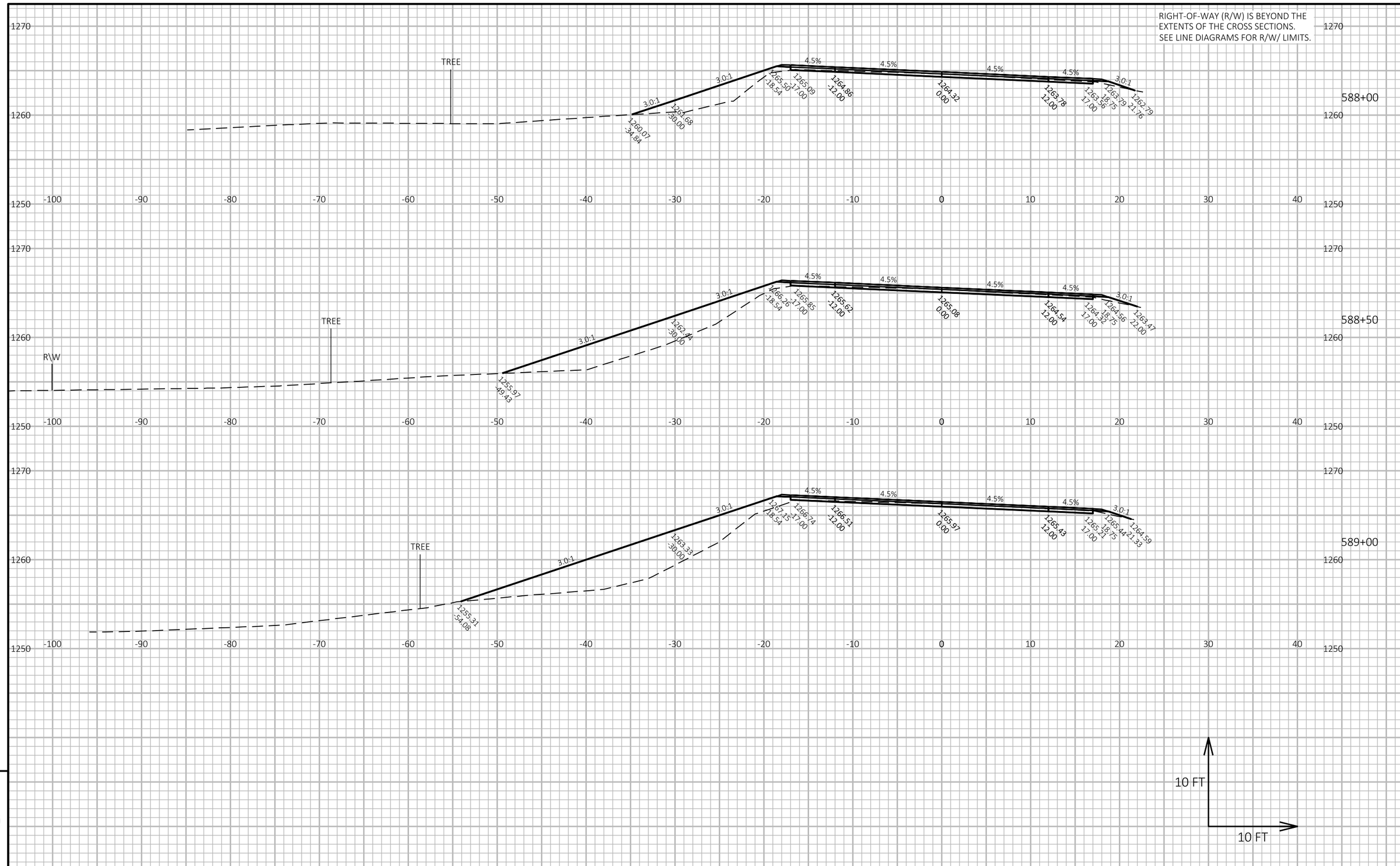

9

9

PROJECT NO: 1560-07-70	HWY: USH 63	COUNTY: BAYFIELD	CROSS SECTIONS: USH 63	SHEET 122	E

FILE NAME : G:\00\00093\00093523\CADD\SHEETSPLAN\090201-XS.DWG
LAYOUT NAME - 090202

PLOT DATE : 7/13/2021 11:14 AM PLOT BY : COURTNEY ROOYAKKERS PLOT NAME : **PLOT SCALE :** 1 IN:10 FT HORZ. / 1 IN:10 FT VERT.

WISDOT/CADDS SHEET 49

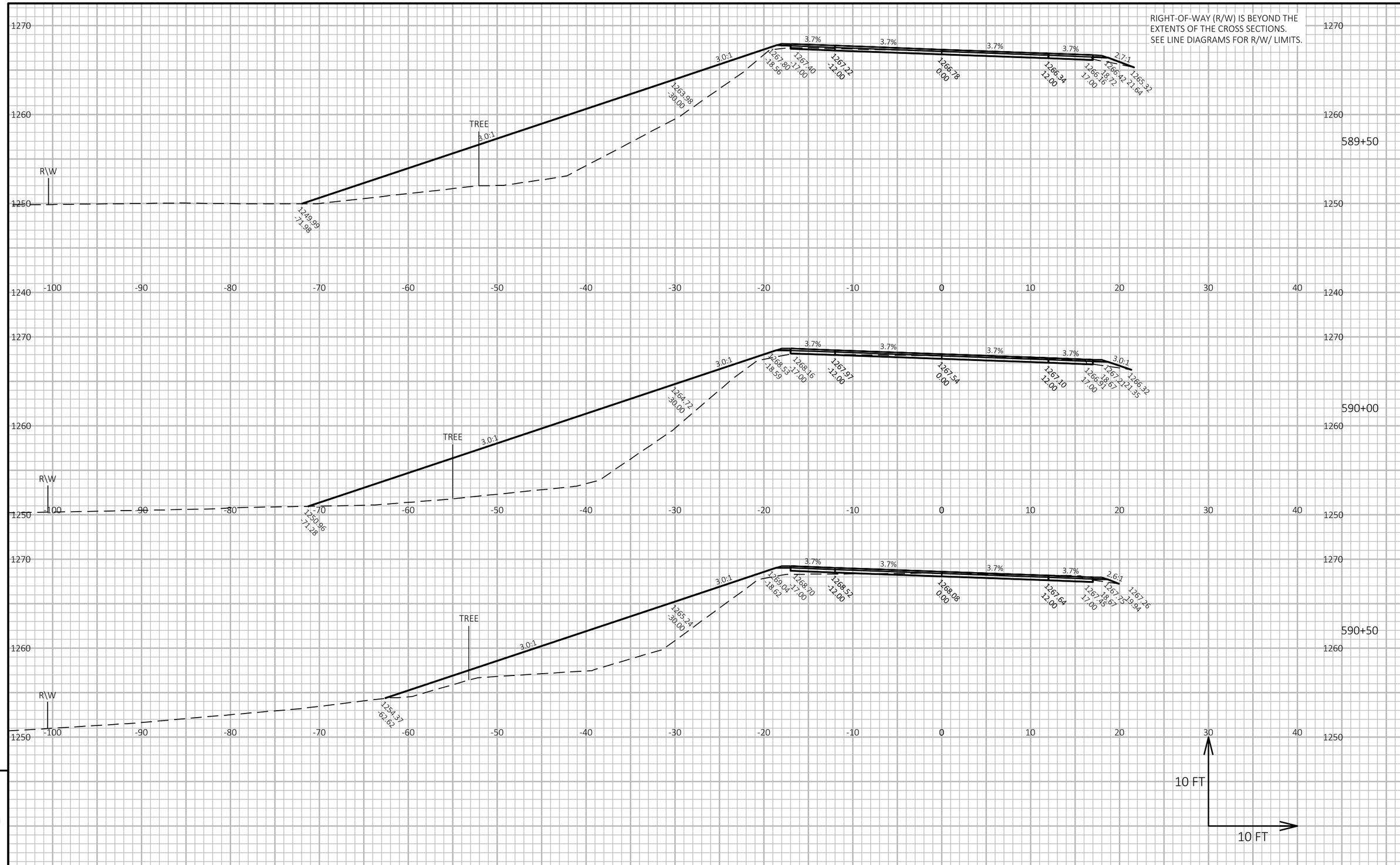

9

PROJECT NO: 1560-07-70	HWY: USH 63	COUNTY: BAYFIELD	CROSS SECTIONS: USH 63	SHEET 123	E

FILE NAME : G:\00\00093\00093523\CADD\SHEETSPLAN\090201-XS.DWG
LAYOUT NAME - 090203
PLOT DATE : 7/13/2021 11:15 AM
PLOT BY : COURTNEY ROOYAKKERS
PLOT NAME :
PLOT SCALE : 1 IN:10 FT HORZ. / 1 IN:10 FT VERT.
WISDOT/CADDS SHEET 49

RIGHT-OF-WAY (R/W) IS BEYOND THE EXTENTS OF THE CROSS SECTIONS. SEE LINE DIAGRAMS FOR R/W/ LIMITS.

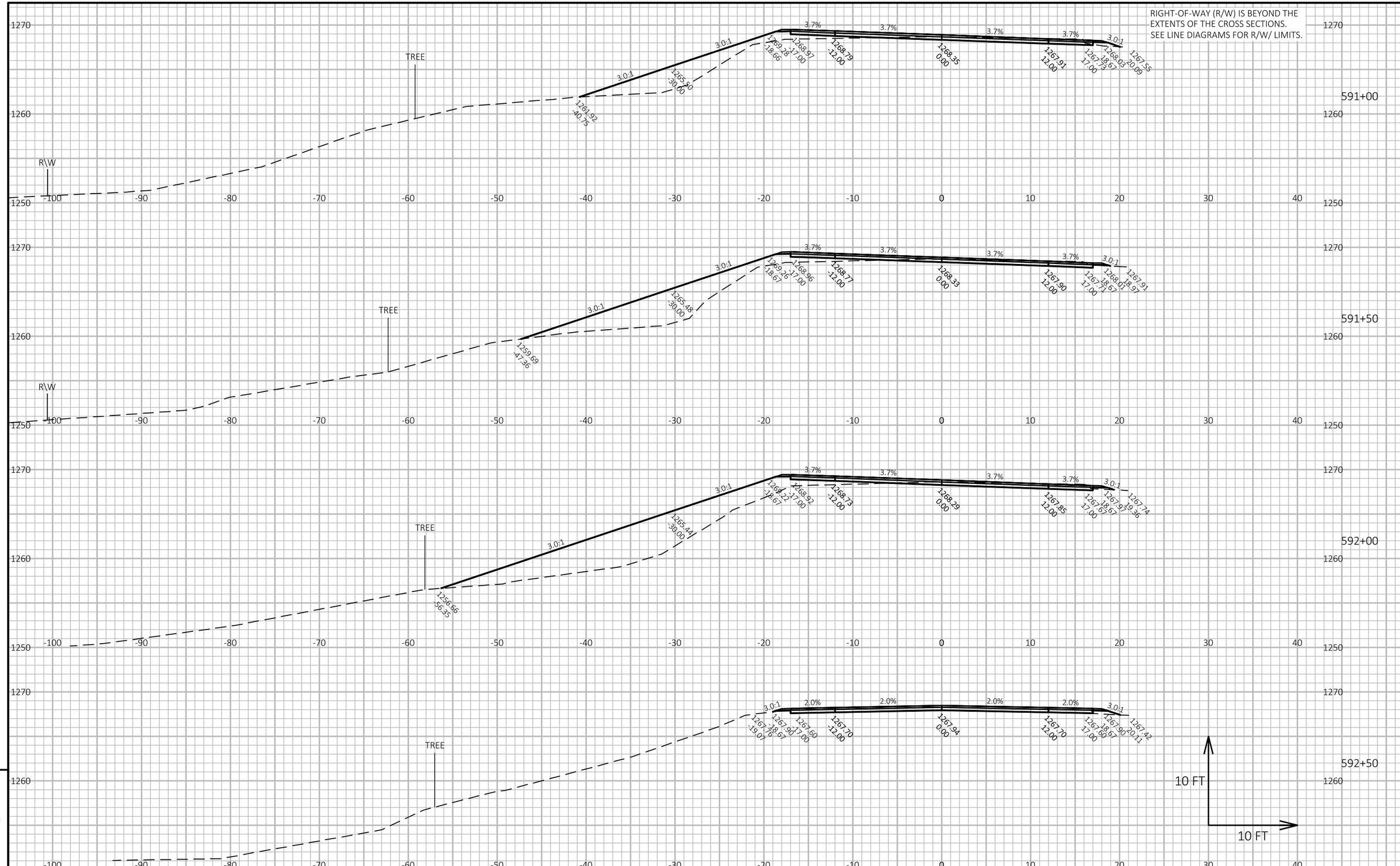

PROJECT NO: 1560-07-70	HWY: USH 63	COUNTY: BAYFIELD	CROSS SECTIONS: USH 63	SHEET 124	E

FILE NAME : G:\00\00093\00093523\CADD\SHEETSPLAN\090201-XS.DWG
LAYOUT NAME - 090204
PLOT DATE : 7/13/2021 11:15 AM
PLOT BY : COURTNEY ROOYAKKERS
PLOT NAME :
PLOT SCALE : 1 IN:10 FT HORZ. / 1 IN:10 FT VERT.

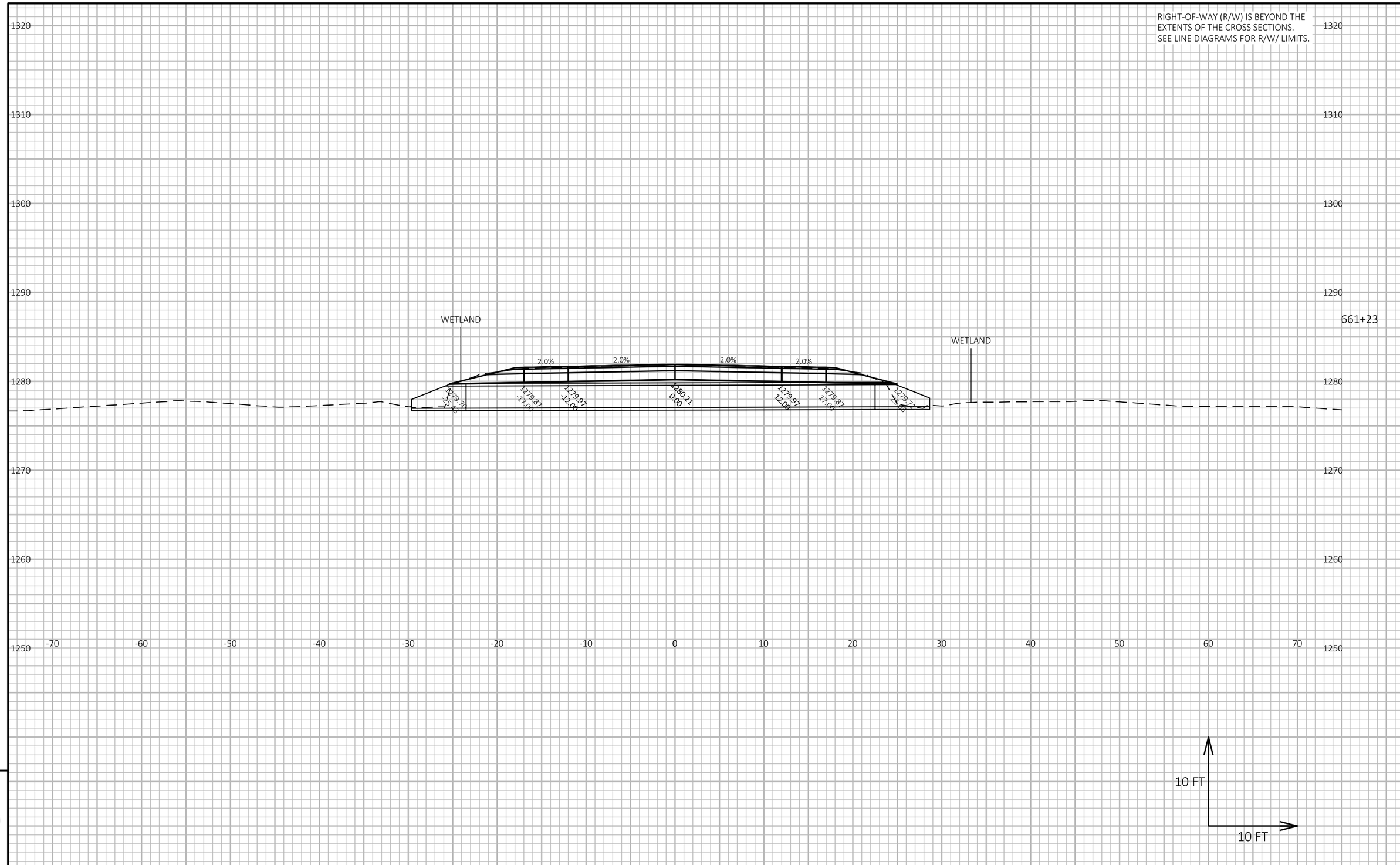

9

9

PROJECT NO: 1560-07-70	HWY: USH 63	COUNTY: BAYFIELD	CROSS SECTIONS: USH 63	SHEET 125	E

FILE NAME : G:\00\00093\00093523\CADD\SHEETSPLAN\090201-XS.DWG
LAYOUT NAME - 090205

PLOT DATE : 7/13/2021 11:15 AM PLOT BY : COURTNEY ROOYAKKERS PLOT NAME : **PLOT SCALE :** 1 IN:10 FT HORZ. / 1 IN:10 FT VERT.

WISDOT/CADDS SHEET 49

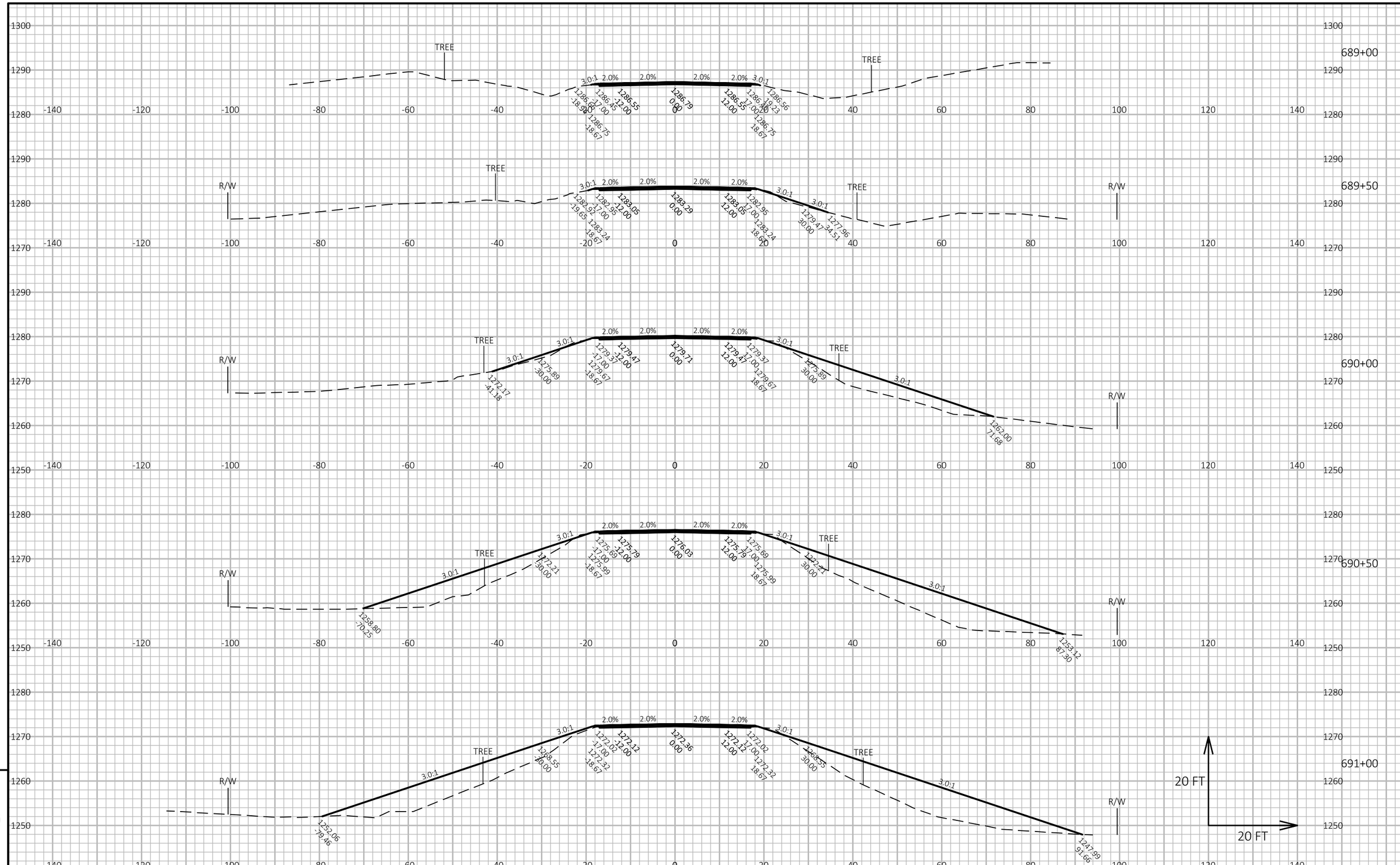

9

9

PROJECT NO: 1560-07-70	HWY: USH 63	COUNTY: BAYFIELD	CROSS SECTIONS: USH 63	SHEET 126	E

FILE NAME : G:\00\00093\00093523\CADD\SHEETSPLAN\090201-XS 20SCALE.DWG
LAYOUT NAME - 090207-xs 20-scale
PLOT DATE : 7/13/2021 11:16 AM
PLOT BY : COURTNEY ROOYAKKERS
PLOT NAME :
PLOT SCALE : 1 IN:20 FT HORZ. / 1 IN:20 FT VERT.
WISDOT/CADDS SHEET 49

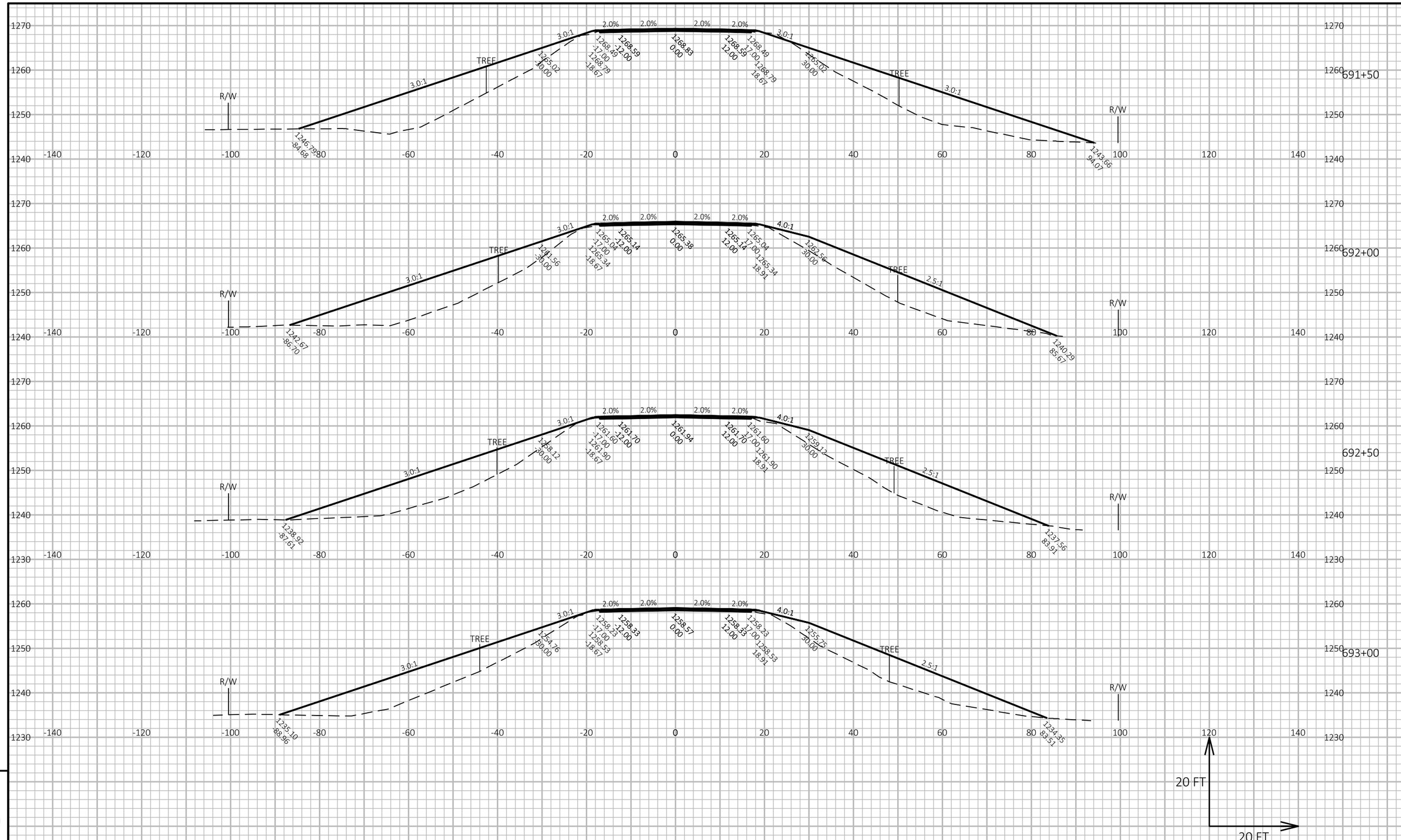

9

9

PROJECT NO: 1560-07-70	HWY: USH 63	COUNTY: BAYFIELD	CROSS SECTIONS: USH 63	SHEET 127	E

FILE NAME : G:\00\00093\00093523\CADD\SHEETSPLAN\090201-XS 20SCALE.DWG
LAYOUT NAME - 090208-xs 20-scale
PLOT DATE : 7/13/2021 11:16 AM PLOT BY : COURTNEY ROOYAKKERS PLOT NAME : PLOT SCALE : 1 IN:20 FT HORZ. / 1 IN:20 FT VERT.

WISDOT/CADDS SHEET 49

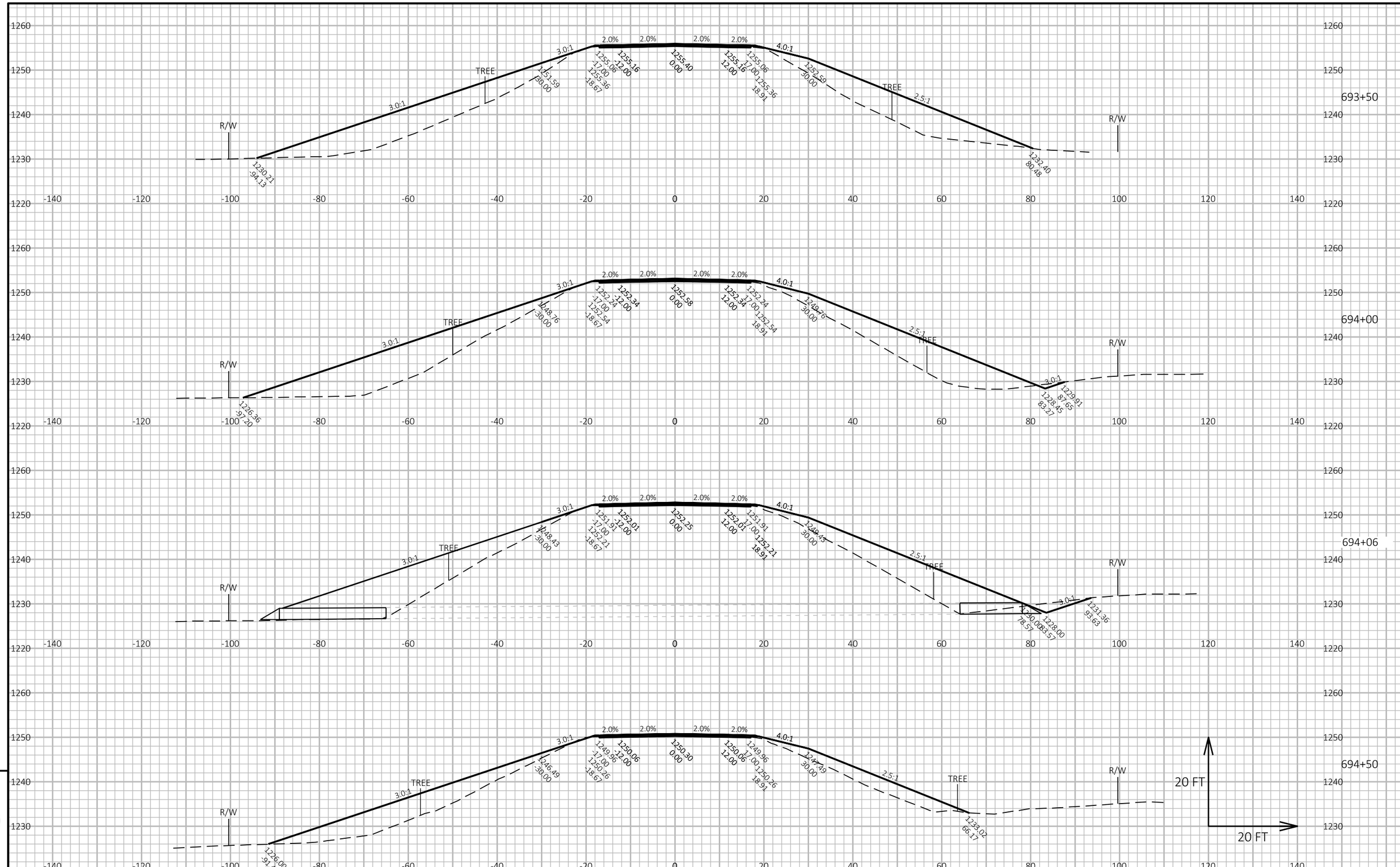

9

9

PROJECT NO: 1560-07-70	HWY: USH 63	COUNTY: BAYFIELD	CROSS SECTIONS: USH 63	SHEET 128	E

FILE NAME : G:\00\00093\00093523\CADD\SHEETSPLAN\090201-XS 20SCALE.DWG
LAYOUT NAME - 090209-xs 20-scale
PLOT DATE : 7/13/2021 11:17 AM
PLOT BY : COURTNEY ROOYAKKERS
PLOT NAME :
PLOT SCALE : 1 IN:20 FT HORZ. / 1 IN:20 FT VERT.

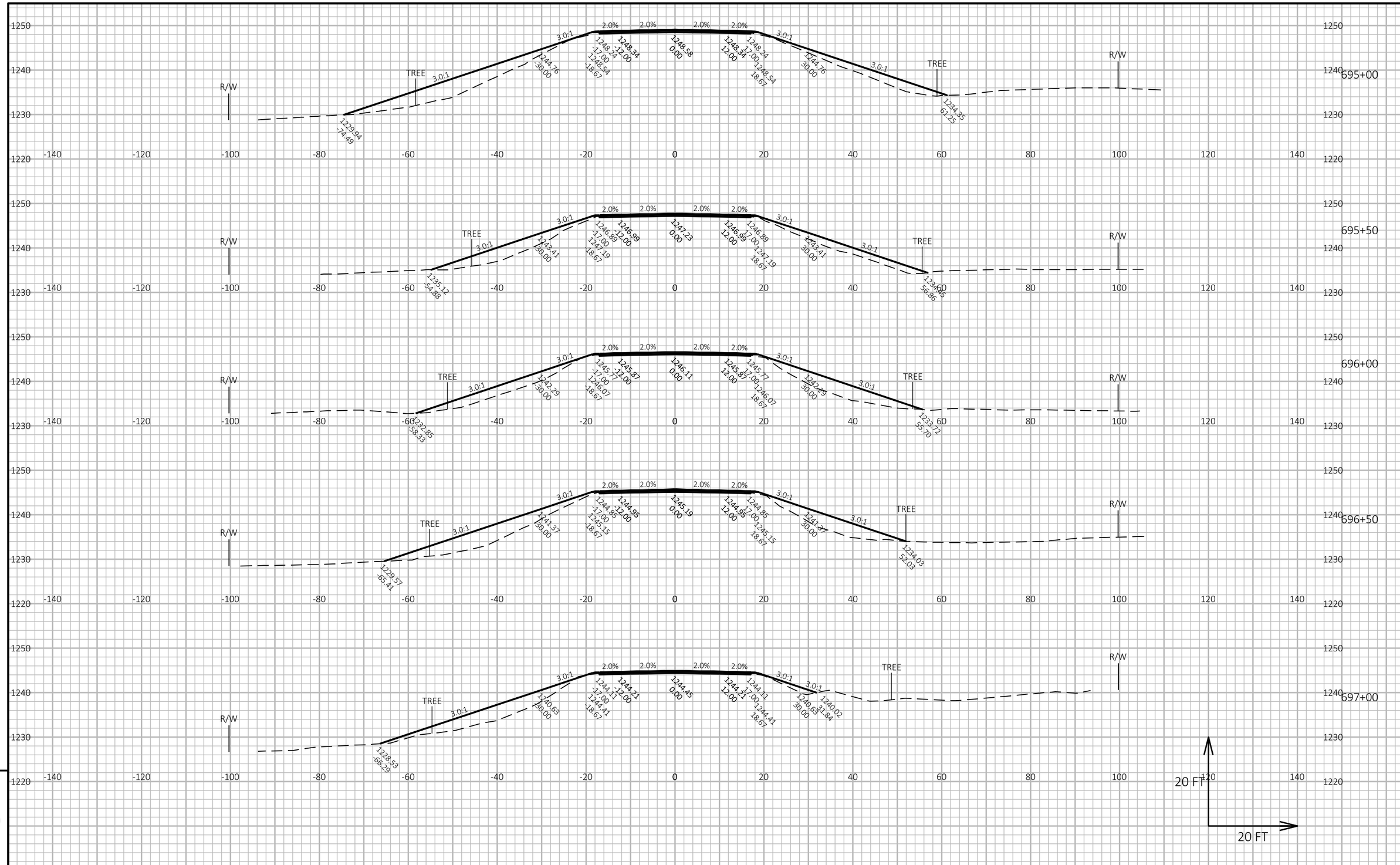

PROJECT NO: 1560-07-70	HWY: USH 63	COUNTY: BAYFIELD	CROSS SECTIONS: USH 63	SHEET 129	E

FILE NAME : G:\00\00093\00093523\CADD\SHEETSPLAN\090201-XS 20SCALE.DWG
LAYOUT NAME - 090210-xs 20-scale
PLOT DATE : 7/13/2021 11:17 AM PLOT BY : COURTNEY ROOYAKKERS PLOT NAME : PLOT SCALE : 1 IN:20 FT HORZ. / 1 IN:20 FT VERT.

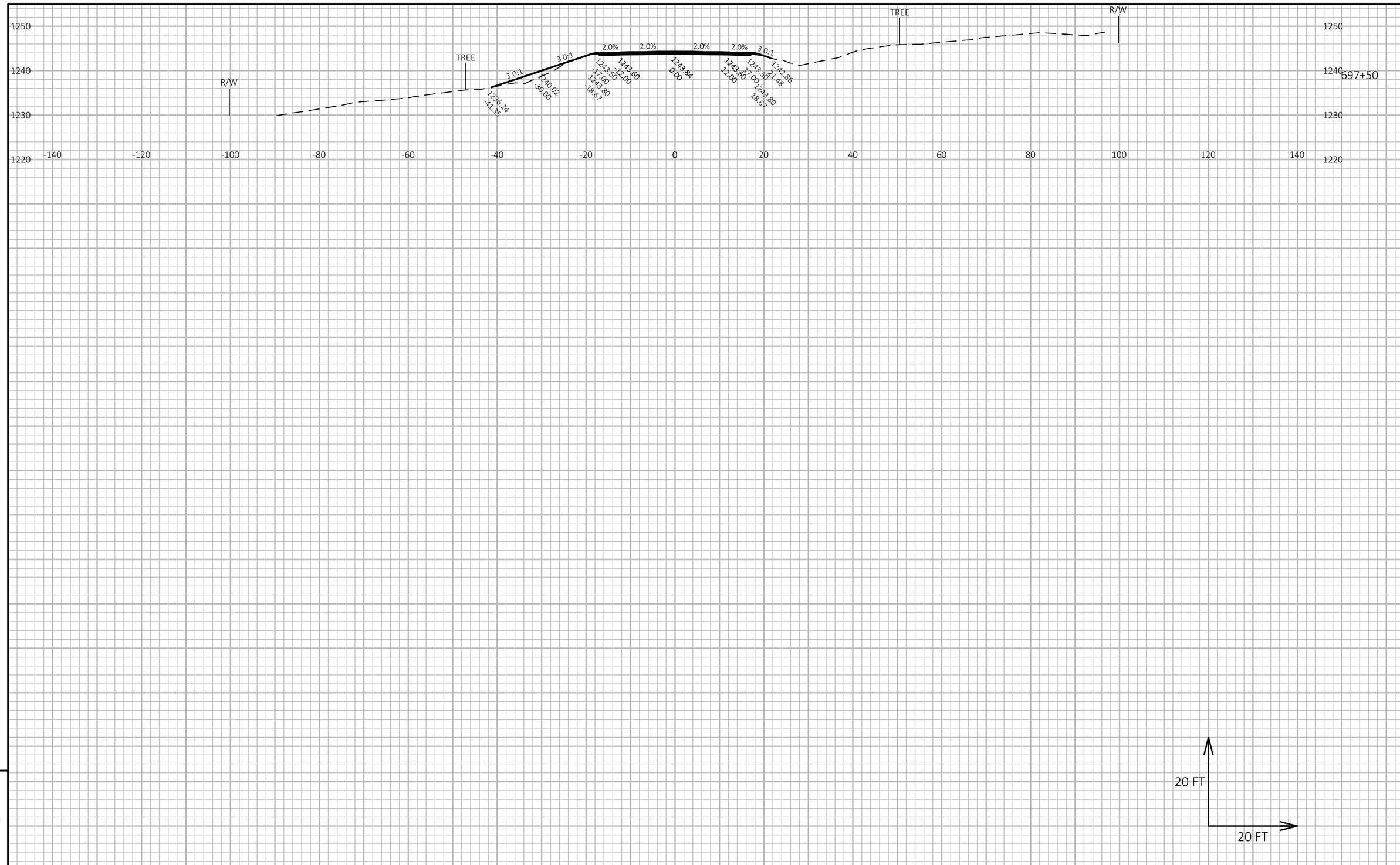

9

9

PROJECT NO: 1560-07-70	HWY: USH 63	COUNTY: BAYFIELD	CROSS SECTIONS: USH 63	SHEET 130	E

FILE NAME : G:\00\00093\00093523\CADD\SHEETSPLAN\090201-XS 20SCALE.DWG
LAYOUT NAME - 090227-xs 20-scale

PLOT DATE : 7/13/2021 11:17 AM PLOT BY : COURTNEY ROOYAKKERS PLOT NAME : PLOT SCALE : 1 IN:20 FT HORZ. / 1 IN:20 FT VERT.

WISDOT/CADDS SHEET 49

RIGHT-OF-WAY (R/W) IS BEYOND THE EXTENTS OF THE CROSS SECTIONS. SEE LINE DIAGRAMS FOR R/W/ LIMITS.

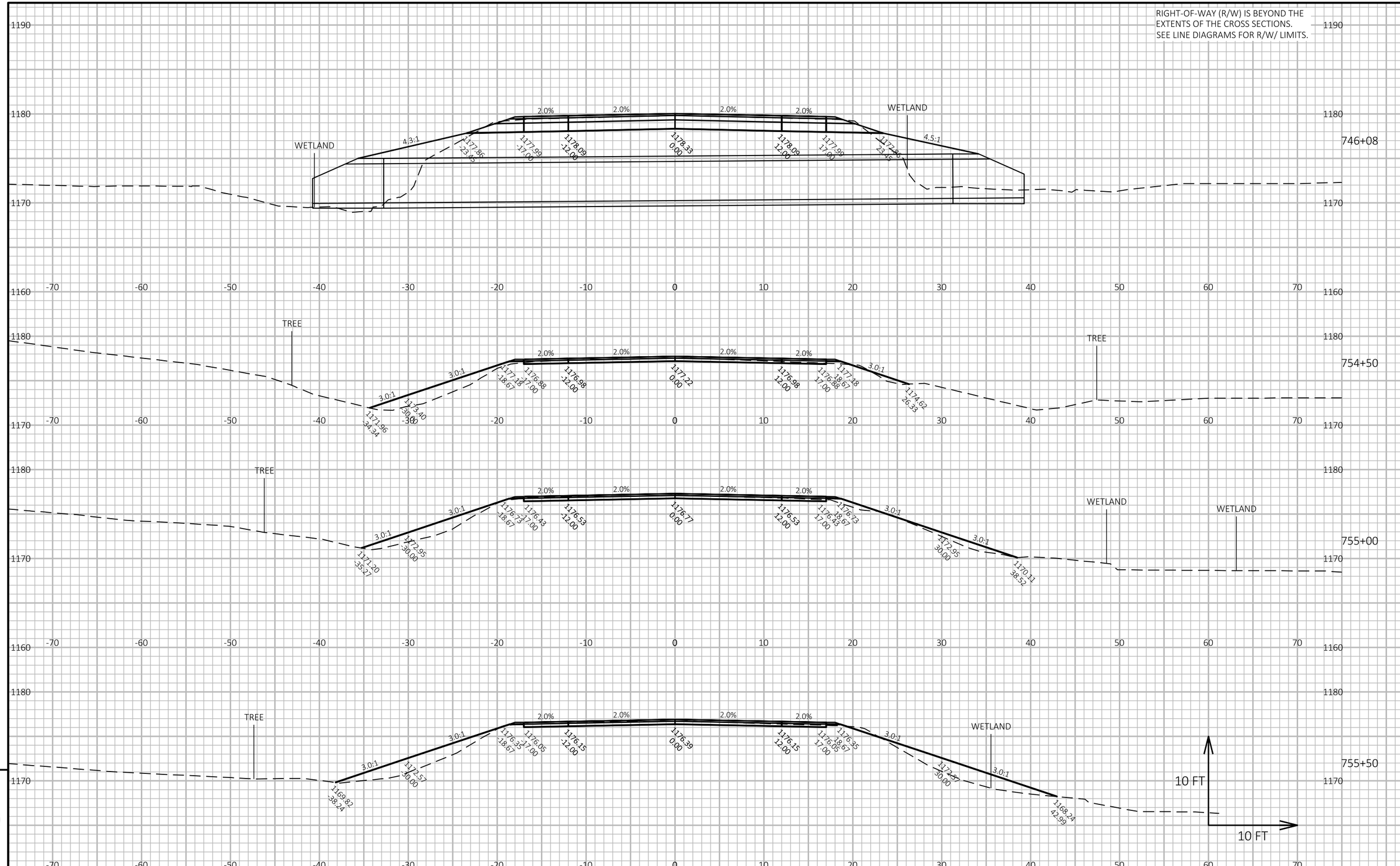

9

9

PROJECT NO: 1560-07-70	HWY: USH 63	COUNTY: BAYFIELD	CROSS SECTIONS: USH 63	SHEET 131	E

FILE NAME : G:\00\00093\00093523\CADD\SHEETSPLAN\090201-XS.DWG
LAYOUT NAME - 090206
PLOT DATE : 7/13/2021 11:18 AM
PLOT BY : COURTNEY ROOYAKKERS
PLOT NAME :
PLOT SCALE : 1 IN:10 FT HORZ. / 1 IN:10 FT VERT.
WISDOT/CADDS SHEET 49

RIGHT-OF-WAY (R/W) IS BEYOND THE EXTENTS OF THE CROSS SECTIONS. SEE LINE DIAGRAMS FOR R/W/ LIMITS.

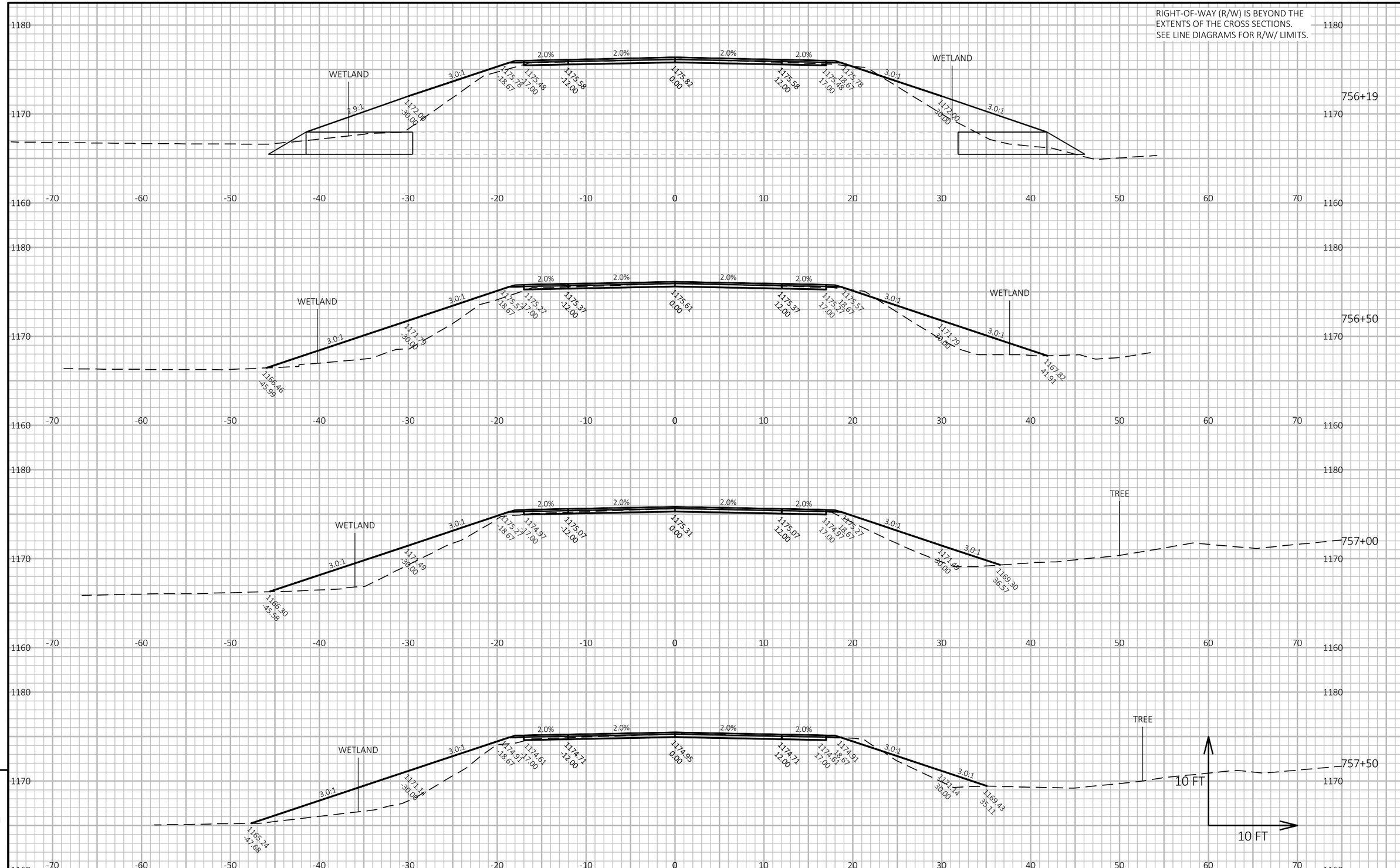

9

PROJECT NO: 1560-07-70	HWY: USH 63	COUNTY: BAYFIELD	CROSS SECTIONS: USH 63	SHEET 132	E

FILE NAME : G:\00\00093\00093523\CADD\SHEETSPLAN\090201-XS.DWG
LAYOUT NAME - 090211
PLOT DATE : 7/13/2021 11:18 AM
PLOT BY : COURTNEY ROOYAKKERS
PLOT NAME :
PLOT SCALE : 1 IN:10 FT HORZ. / 1 IN:10 FT VERT.

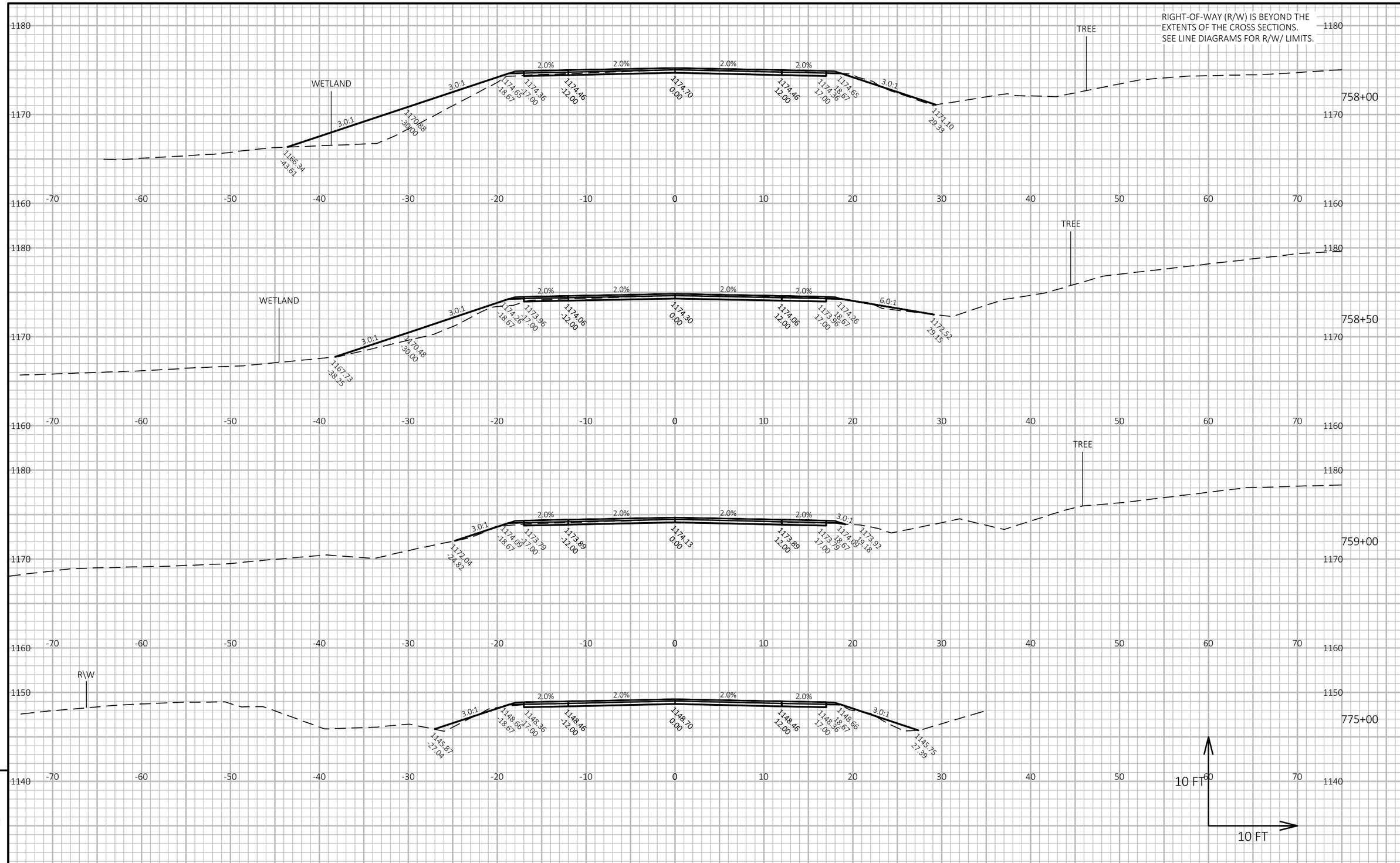

PROJECT NO: 1560-07-70	HWY: USH 63	COUNTY: BAYFIELD	CROSS SECTIONS: USH 63	SHEET 133	E

FILE NAME : G:\00\00093\00093523\CADD\SHEETSPLAN\090201-XS.DWG
LAYOUT NAME - 090212
PLOT DATE : 7/13/2021 11:18 AM
PLOT BY : COURTNEY ROOYAKKERS
PLOT NAME :
PLOT SCALE : 1 IN:10 FT HORZ. / 1 IN:10 FT VERT.
WISDOT/CADDS SHEET 49

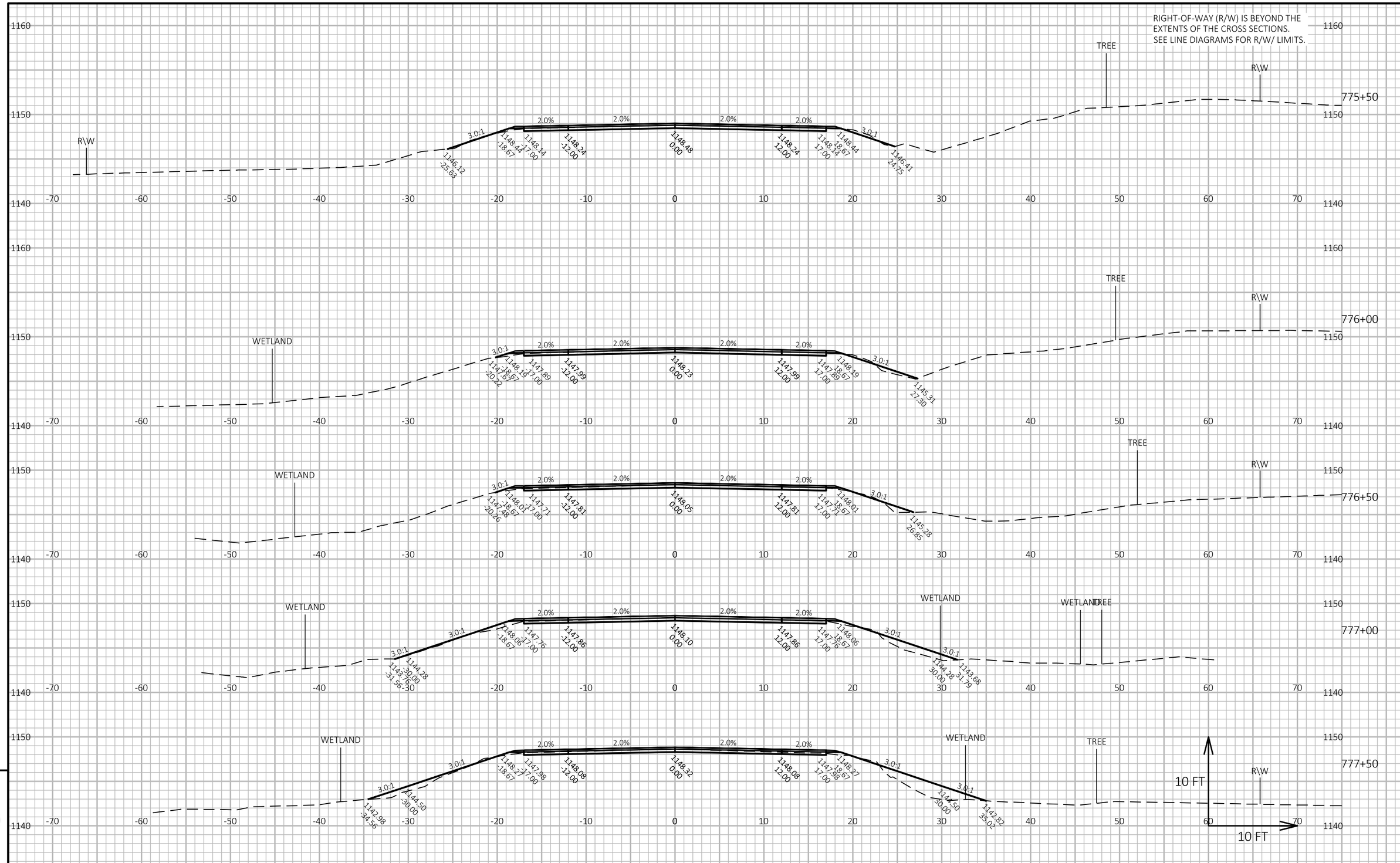

9

9

PROJECT NO: 1560-07-70	HWY: USH 63	COUNTY: BAYFIELD	CROSS SECTIONS: USH 63	SHEET 134	E

FILE NAME : G:\00\00093\00093523\CADD\SHEETSPLAN\090201-XS.DWG
LAYOUT NAME - 090213
PLOT DATE : 7/13/2021 11:19 AM
PLOT BY : COURTNEY ROOYAKKERS
PLOT NAME :
PLOT SCALE : 1 IN:10 FT HORZ. / 1 IN:10 FT VERT.

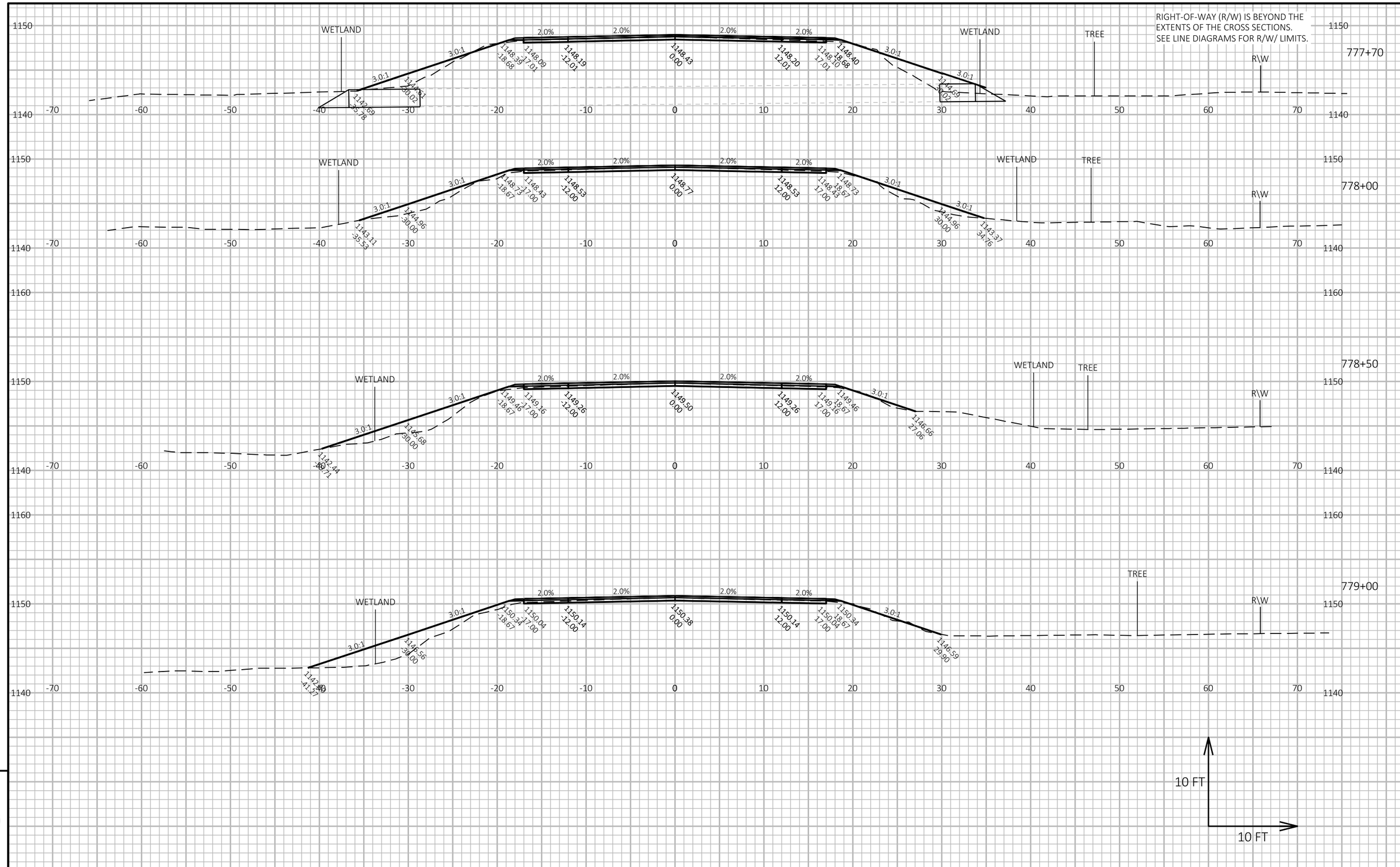

9

9

PROJECT NO: 1560-07-70	HWY: USH 63	COUNTY: BAYFIELD	CROSS SECTIONS: USH 63	SHEET 135	E

FILE NAME : G:\00\00093\00093523\CADD\SHEETSPLAN\090201-XS.DWG
LAYOUT NAME - 090214

PLOT DATE : 7/13/2021 11:19 AM PLOT BY : COURTNEY ROOYAKKERS PLOT NAME : PLOT SCALE : 1 IN:10 FT HORZ. / 1 IN:10 FT VERT.

WISDOT/CADDS SHEET 49

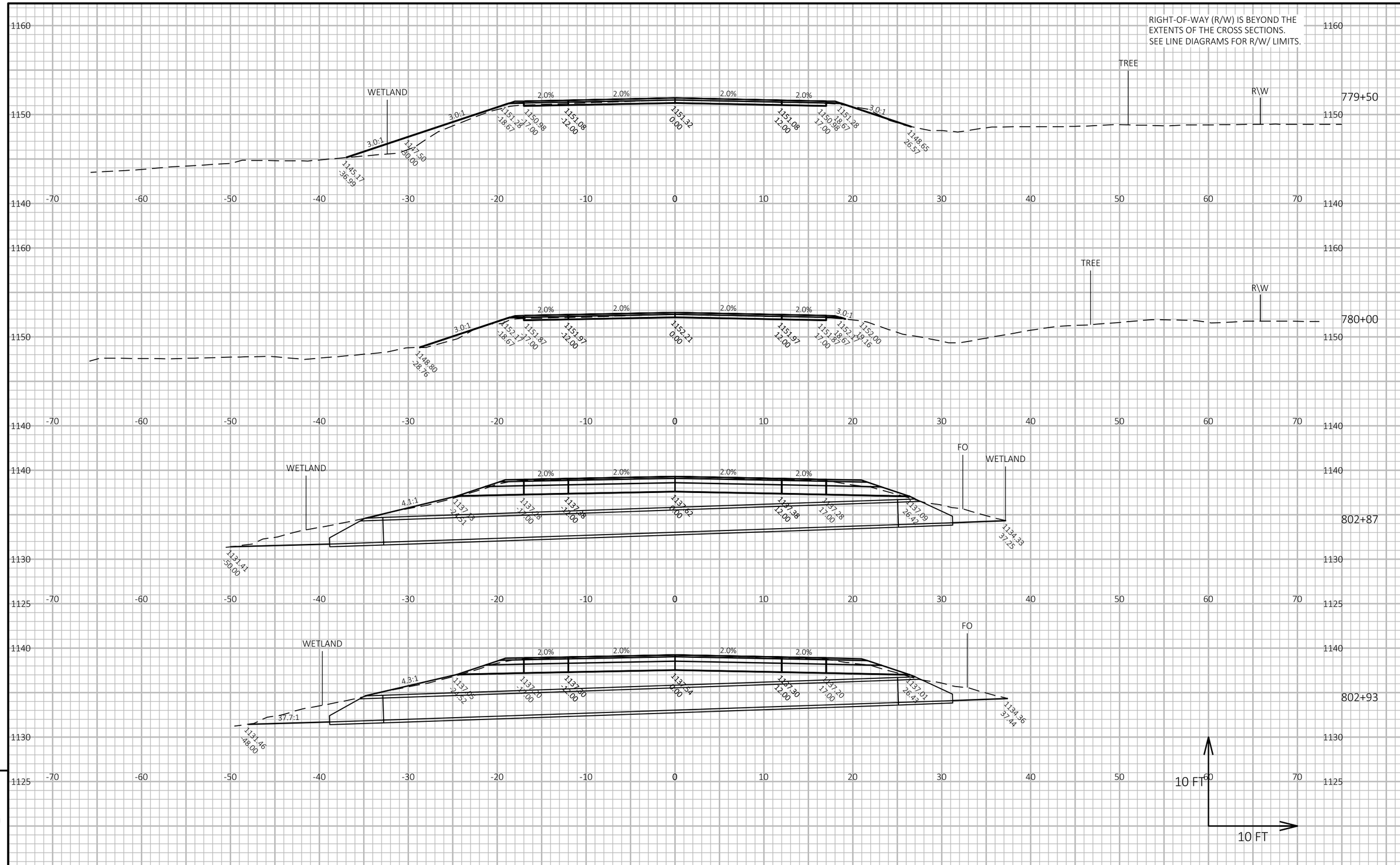

PROJECT NO: 1560-07-70	HWY: USH 63	COUNTY: BAYFIELD	CROSS SECTIONS: USH 63	SHEET 136	E

FILE NAME : G:\00\00093\00093523\CADD\SHEETSPLAN\090201-XS.DWG
LAYOUT NAME - 090215
PLOT DATE : 7/13/2021 11:19 AM
PLOT BY : COURTNEY ROOYAKKERS
PLOT NAME :
PLOT SCALE : 1 IN:10 FT HORZ. / 1 IN:10 FT VERT.
WISDOT/CADDS SHEET 49

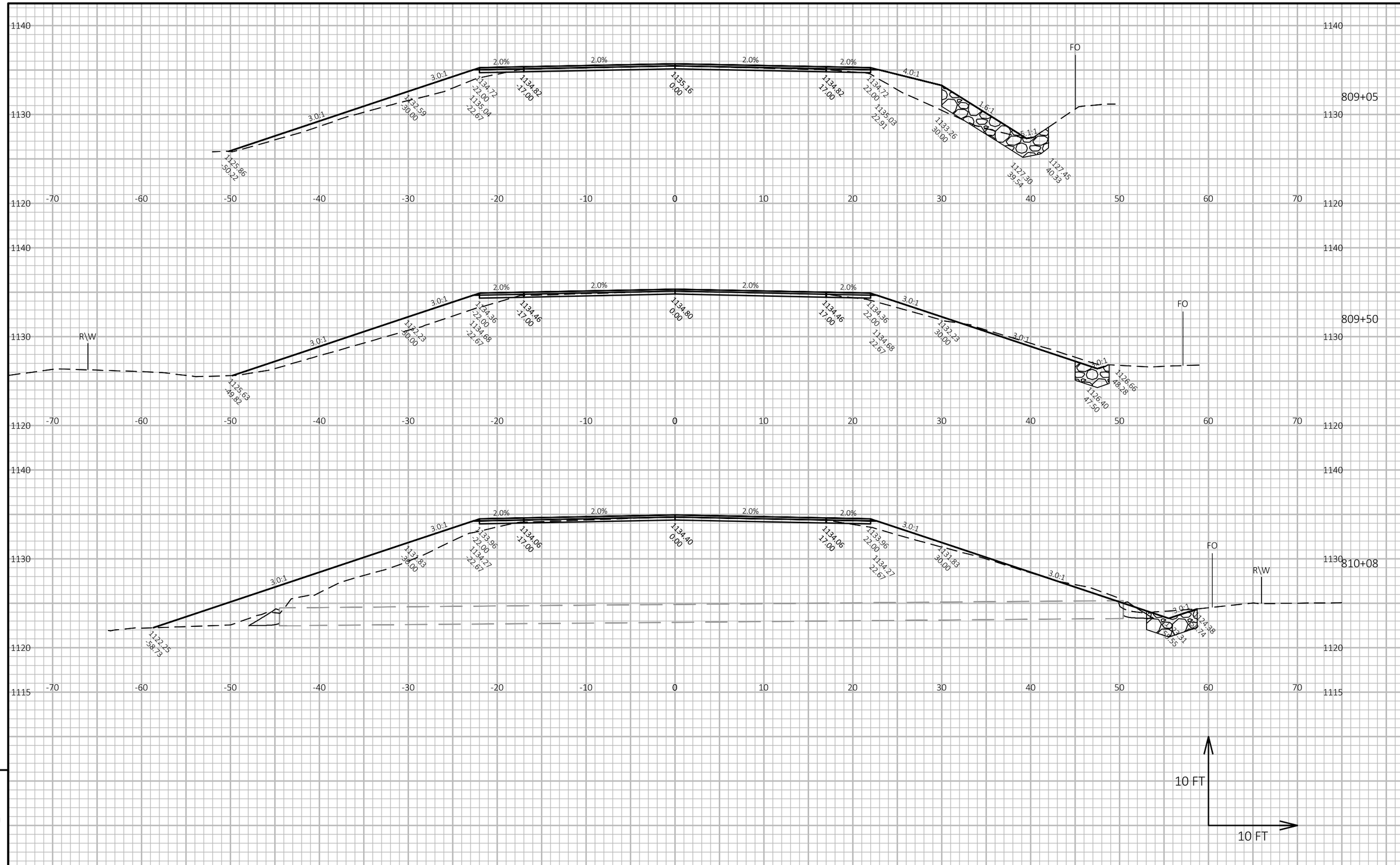

9

9

PROJECT NO: 1560-07-70	HWY: USH 63	COUNTY: BAYFIELD	CROSS SECTIONS: USH 63	SHEET 137	E

FILE NAME : G:\00\00093\00093523\CADD\SHEETSPLAN\090201-XS.DWG
LAYOUT NAME - 090235
PLOT DATE : 7/13/2021 11:20 AM
PLOT BY : COURTNEY ROOYAKKERS
PLOT NAME :
PLOT SCALE : 1 IN:10 FT HORZ. / 1 IN:10 FT VERT.
WISDOT/CADDS SHEET 49

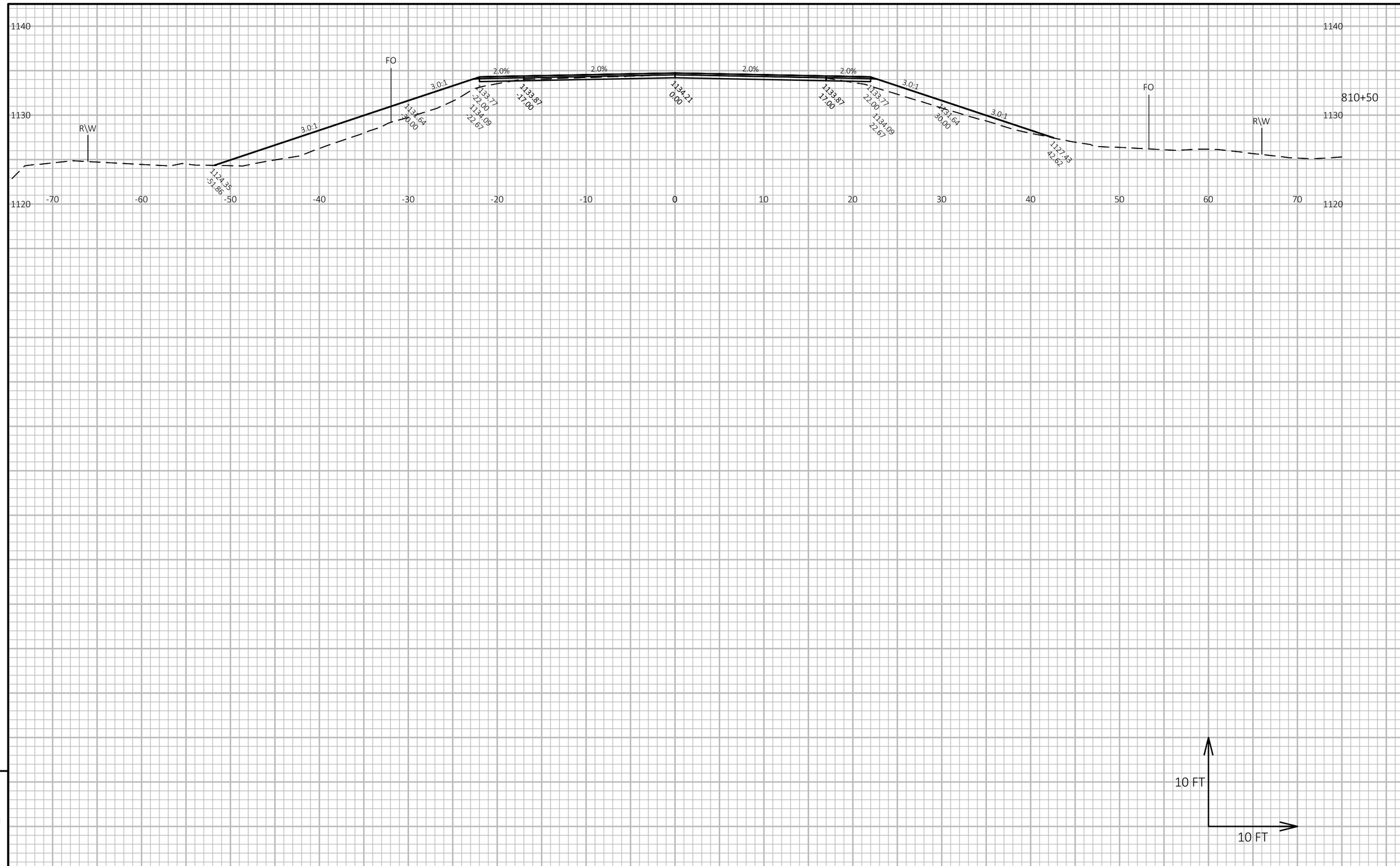

9

9

PROJECT NO: 1560-07-70	HWY: USH 63	COUNTY: BAYFIELD	CROSS SECTIONS: USH 63	SHEET 138	E

FILE NAME : G:\00\00093\00093523\CADD\SHEETSPLAN\090201-XS.DWG
LAYOUT NAME - 090236

PLOT DATE : 7/13/2021 11:20 AM PLOT BY : COURTNEY ROOYAKKERS PLOT NAME :

PLOT SCALE : 1 IN:10 FT HORZ. / 1 IN:10 FT VERT.

WISDOT/CADDS SHEET 49

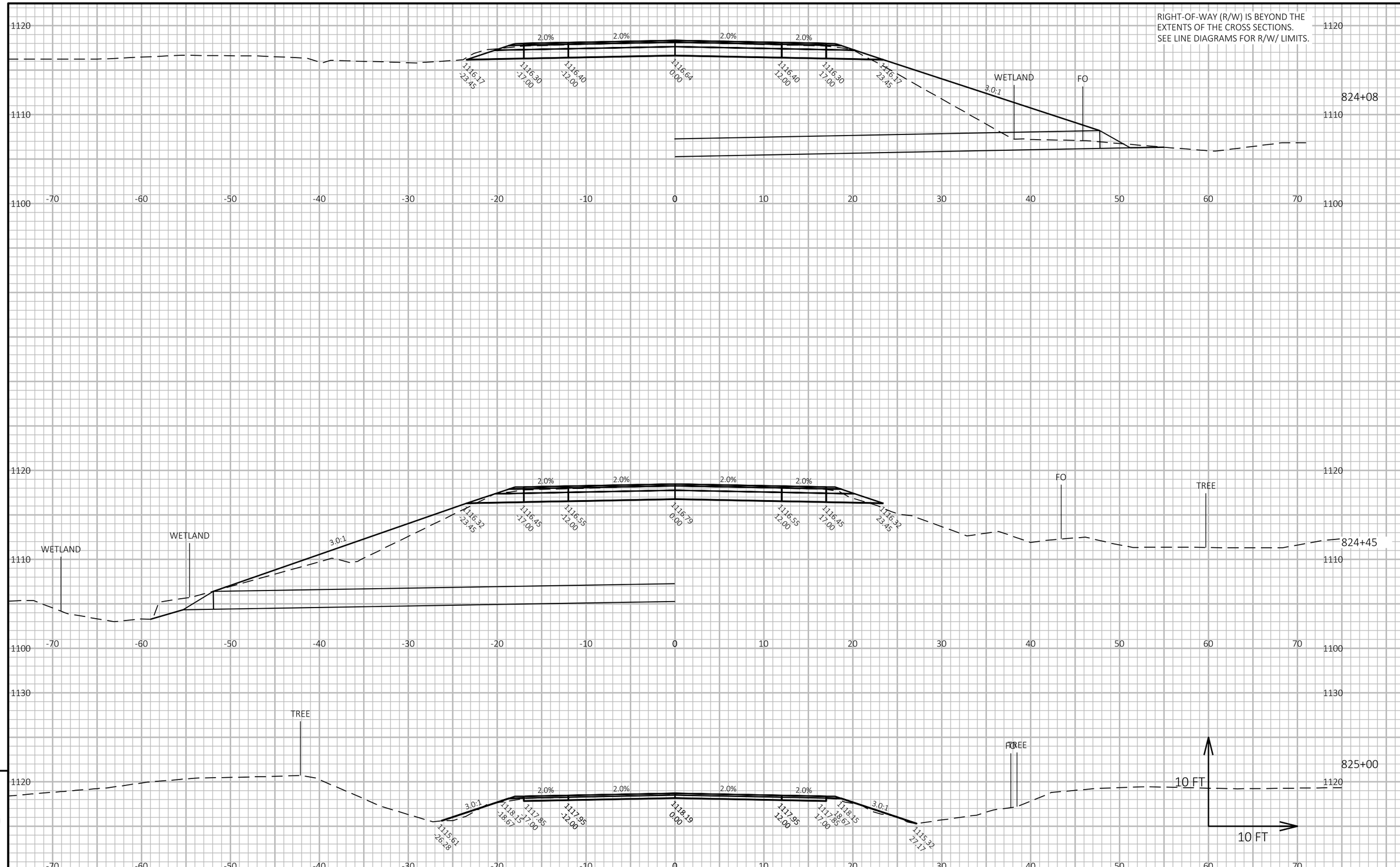

9

9

PROJECT NO: 1560-07-70	HWY: USH 63	COUNTY: BAYFIELD	CROSS SECTIONS: USH 63	SHEET 139	E

FILE NAME : G:\00\00093\00093523\CADD\SHEETSPLAN\090201-XS.DWG
LAYOUT NAME - 090216
PLOT DATE : 7/13/2021 11:20 AM
PLOT BY : COURTNEY ROOYAKKERS
PLOT NAME :
PLOT SCALE : 1 IN:10 FT HORZ. / 1 IN:10 FT VERT.

WISDOT/CADDS SHEET 49

RIGHT-OF-WAY (R/W) IS BEYOND THE EXTENTS OF THE CROSS SECTIONS. SEE LINE DIAGRAMS FOR R/W/ LIMITS.

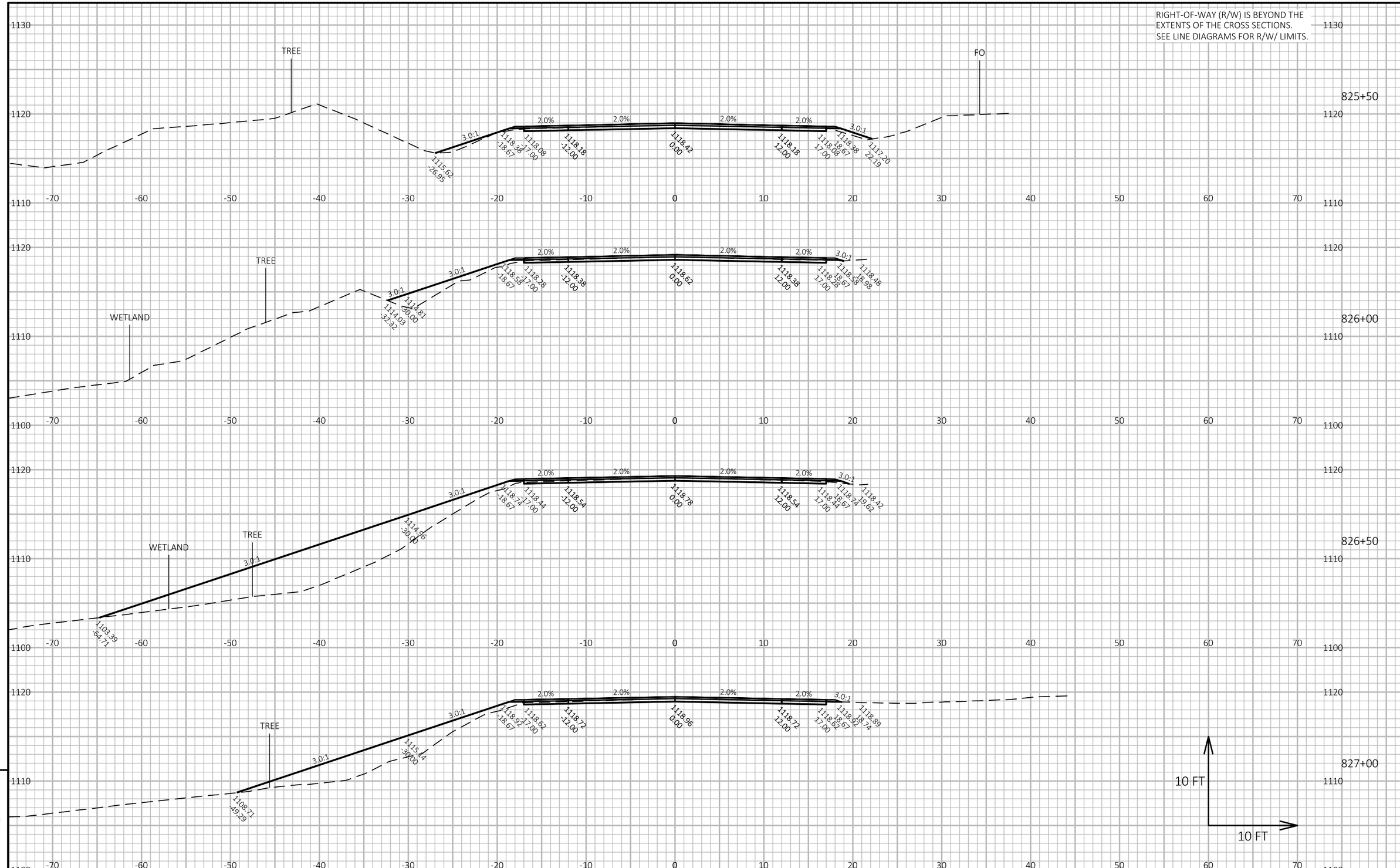

9

9

PROJECT NO: 1560-07-70	HWY: USH 63	COUNTY: BAYFIELD	CROSS SECTIONS: USH 63	SHEET 140	E

FILE NAME : G:\00\00093\00093523\CADD\SHEETSPLAN\090201-XS.DWG
LAYOUT NAME - 090217
PLOT DATE : 7/13/2021 11:20 AM
PLOT BY : COURTNEY ROOYAKKERS
PLOT NAME :
PLOT SCALE : 1 IN:10 FT HORZ. / 1 IN:10 FT VERT.

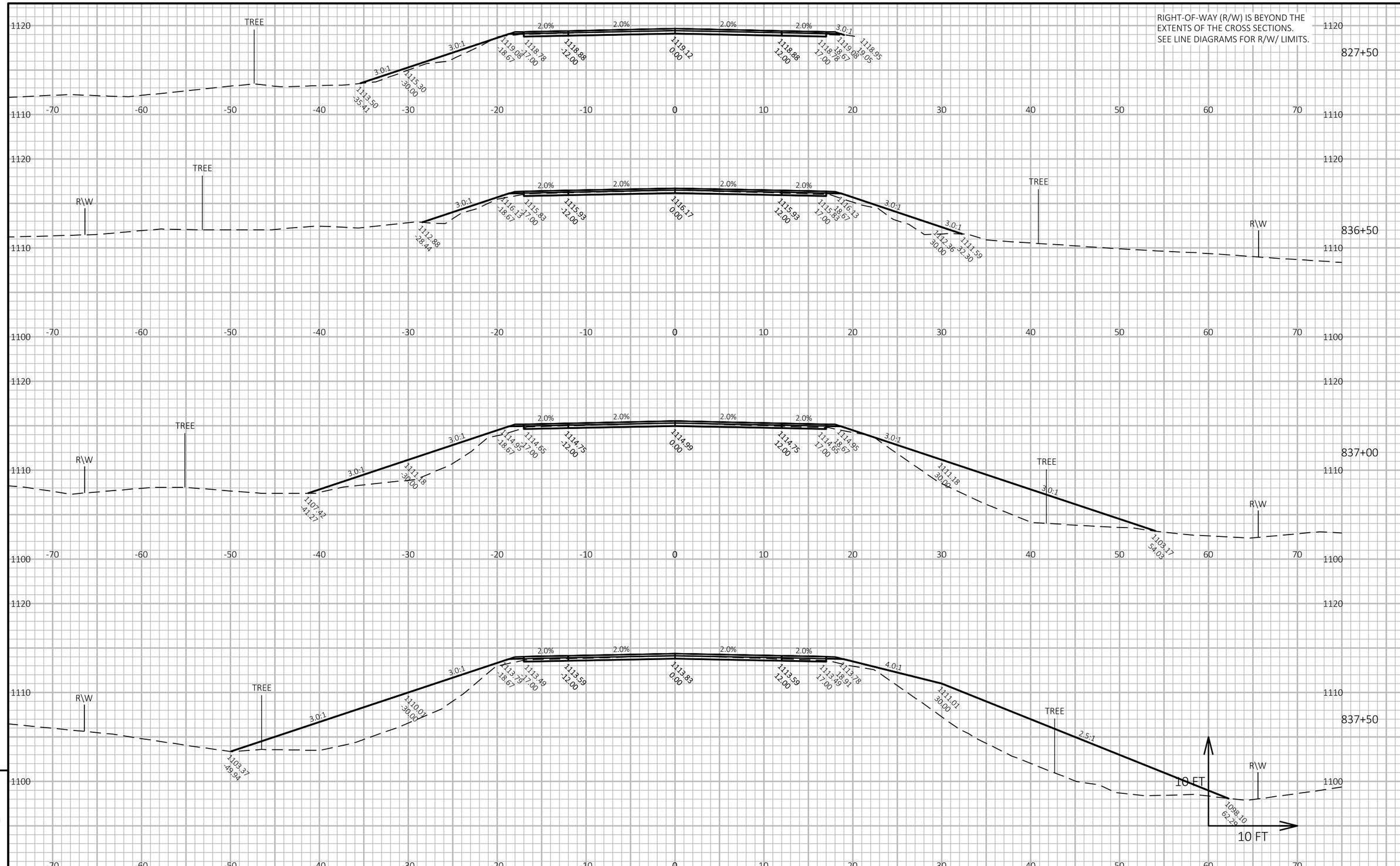
RIGHT-OF-WAY (R/W) IS BEYOND THE EXTENTS OF THE CROSS SECTIONS.
SEE LINE DIAGRAMS FOR R/W/ LIMITS.
827+50
836+50
837+00
837+50
TREE
R\W
2.0%
3.0:1
4.0:1
2.5:1
1119.12
0.00
1118.88
12.00
1118.78
17.00
1119.08
18.67
1118.95
19.05
1113.50
-35.41
1115.30
-30.00
1112.88
-28.44
1116.17
1115.93
1115.83
1116.13
1112.36
30.00
1111.59
32.30
1114.99
1114.75
1114.65
1114.95
1107.42
-41.27
1111.18
-30.00
1111.18
30.00
1103.17
54.03
1113.83
1113.59
1113.49
1113.78
1113.79
1113.91
1110.07
-30.00
1111.01
1103.37
-49.94
1098.10
62.29
10 FT
9
PROJECT NO: 1560-07-70
HWY: USH 63
COUNTY: BAYFIELD
CROSS SECTIONS: USH 63
SHEET 141
E
FILE NAME : G:\00\00093\00093523\CADD\SHEETSPLAN\090201-XS.DWG
LAYOUT NAME - 090218
PLOT DATE : 7/13/2021 11:21 AM
PLOT BY : COURTNEY ROOYAKKERS
PLOT NAME :
PLOT SCALE : 1 IN:10 FT HORZ. / 1 IN:10 FT VERT.
WISDOT/CADDS SHEET 49

RIGHT-OF-WAY (R/W) IS BEYOND THE EXTENTS OF THE CROSS SECTIONS. SEE LINE DIAGRAMS FOR R/W/ LIMITS.

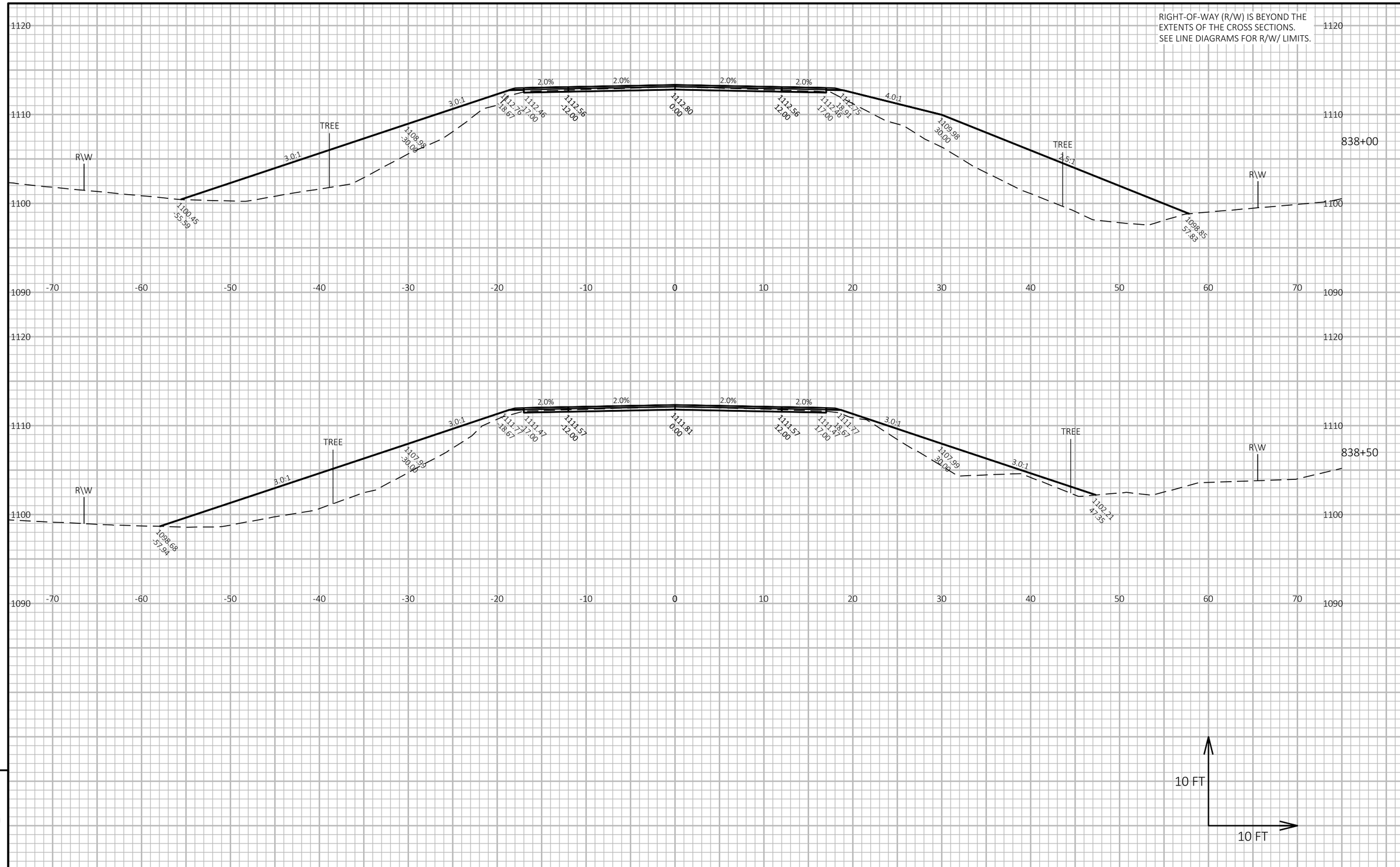

9

9

PROJECT NO: 1560-07-70	HWY: USH 63	COUNTY: BAYFIELD	CROSS SECTIONS: USH 63	SHEET 142	E

FILE NAME : G:\00\00093\00093523\CADD\SHEETSPLAN\090201-XS.DWG
LAYOUT NAME - 090219
PLOT DATE : 7/13/2021 11:21 AM
PLOT BY : COURTNEY ROOYAKKERS
PLOT NAME :
PLOT SCALE : 1 IN:10 FT HORZ. / 1 IN:10 FT VERT.
WISDOT/CADDS SHEET 49

RIGHT-OF-WAY (R/W) IS BEYOND THE EXTENTS OF THE CROSS SECTIONS.
SEE LINE DIAGRAMS FOR R/W/ LIMITS.

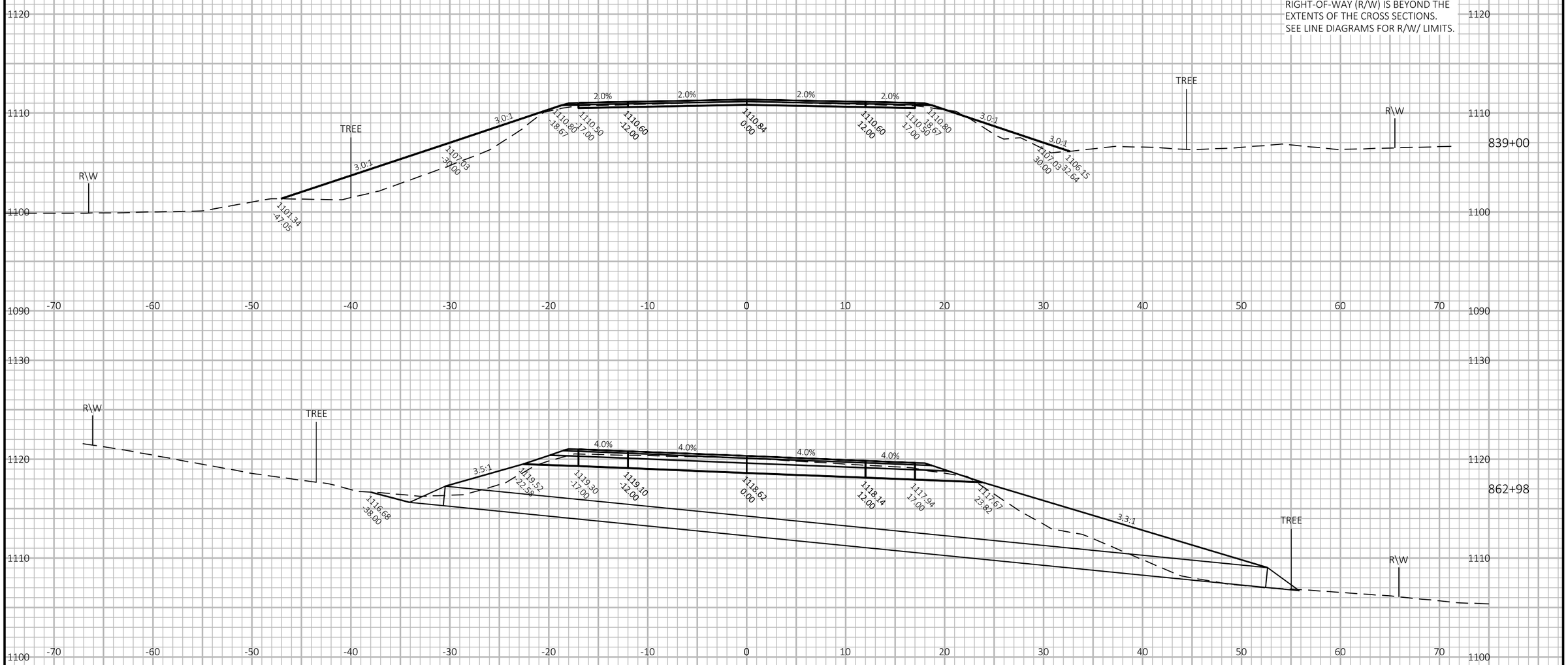

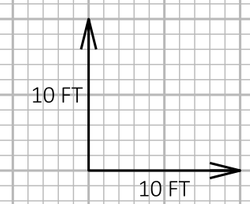

9

PROJECT NO: 1560-07-70	HWY: USH 63	COUNTY: BAYFIELD	CROSS SECTIONS: USH 63	SHEET 143	E

FILE NAME : G:\00\00093\00093523\CADD\SHEETSPLAN\090201-XS.DWG
LAYOUT NAME - 090220
PLOT DATE : 7/13/2021 11:21 AM
PLOT BY : COURTNEY ROOYAKKERS
PLOT NAME :
PLOT SCALE : 1 IN:10 FT HORZ. / 1 IN:10 FT VERT.
WISDOT/CADDS SHEET 49

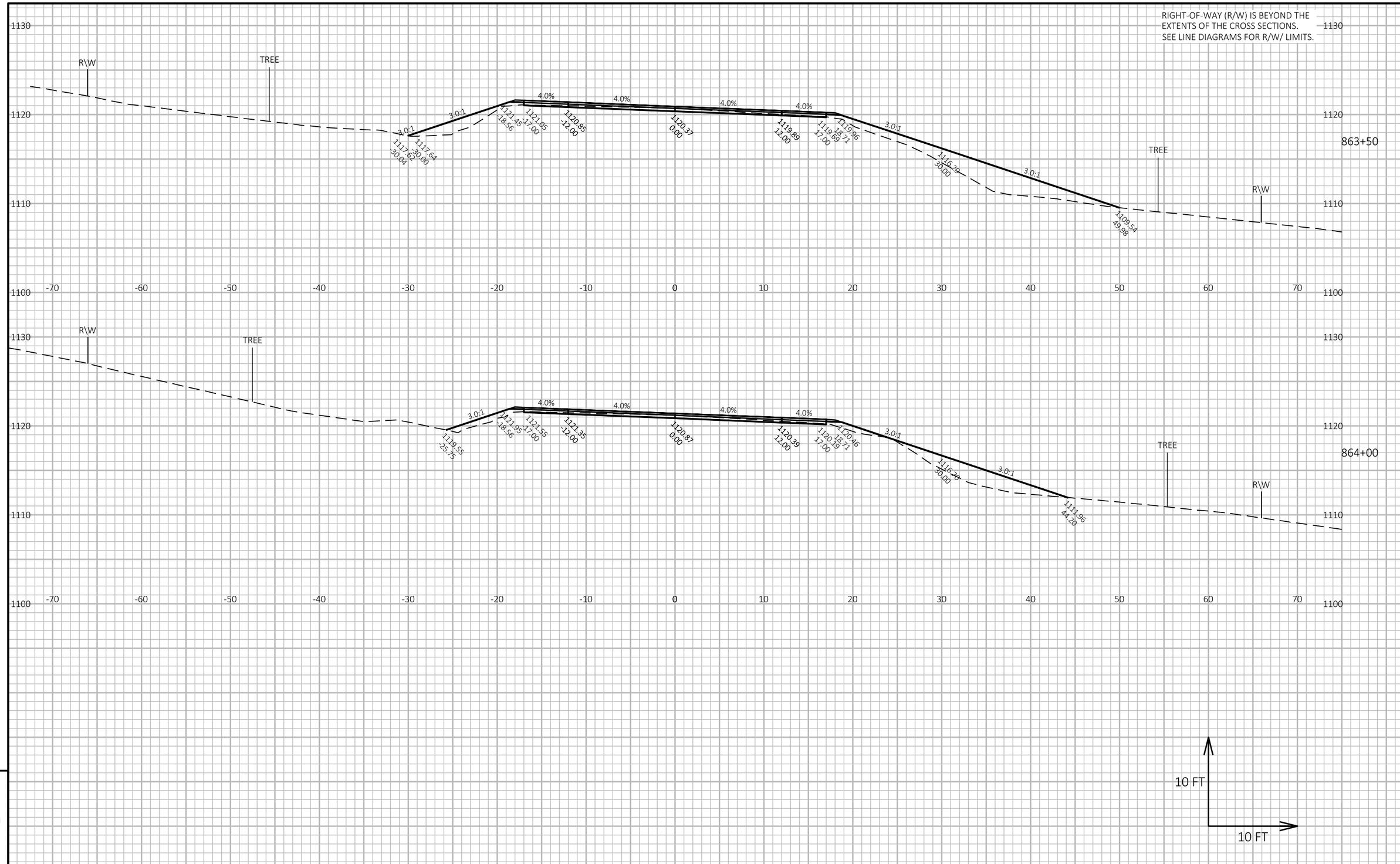

9

9

PROJECT NO: 1560-07-70	HWY: USH 63	COUNTY: BAYFIELD	CROSS SECTIONS: USH 63	SHEET 144	E

FILE NAME : G:\00\00093\00093523\CADD\SHEETSPLAN\090201-XS.DWG
LAYOUT NAME - 090221

PLOT DATE : 7/13/2021 11:22 AM PLOT BY : COURTNEY ROOYAKKERS PLOT NAME : PLOT SCALE : 1 IN:10 FT HORZ. / 1 IN:10 FT VERT.

WISDOT/CADDS SHEET 49

RIGHT-OF-WAY (R/W) IS BEYOND THE
EXTENTS OF THE CROSS SECTIONS.
SEE LINE DIAGRAMS FOR R/W/ LIMITS.

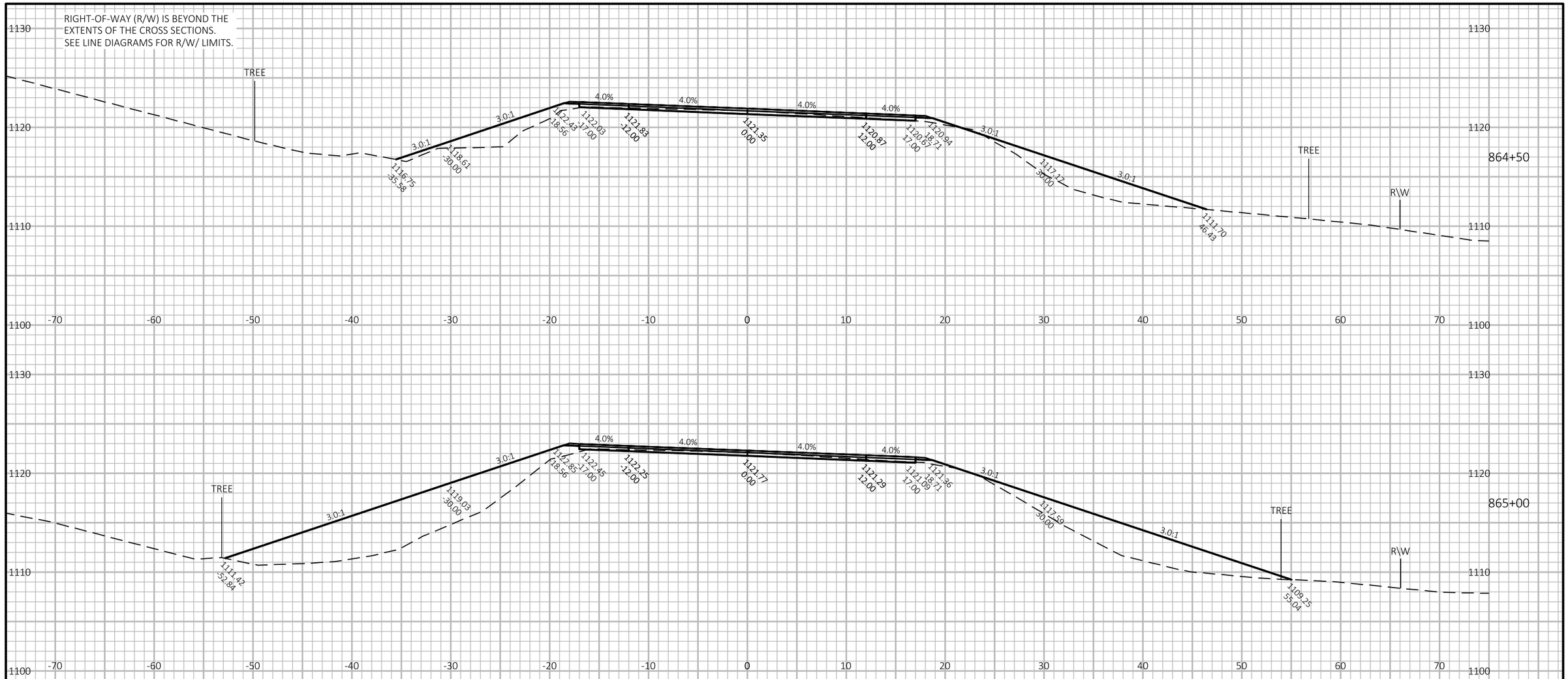

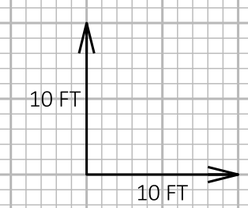

9

9

PROJECT NO: 1560-07-70	HWY: USH 63	COUNTY: BAYFIELD	CROSS SECTIONS: USH 63	SHEET 145	E

FILE NAME : G:\00\00093\00093523\CADD\SHEETSPLAN\090201-XS.DWG
LAYOUT NAME - 090222
PLOT DATE : 7/13/2021 11:22 AM
PLOT BY : COURTNEY ROOYAKKERS
PLOT NAME :
PLOT SCALE : 1 IN:10 FT HORZ. / 1 IN:10 FT VERT.
WISDOT/CADDS SHEET 49

RIGHT-OF-WAY (R/W) IS BEYOND THE
EXTENTS OF THE CROSS SECTIONS.
SEE LINE DIAGRAMS FOR R/W/ LIMITS.

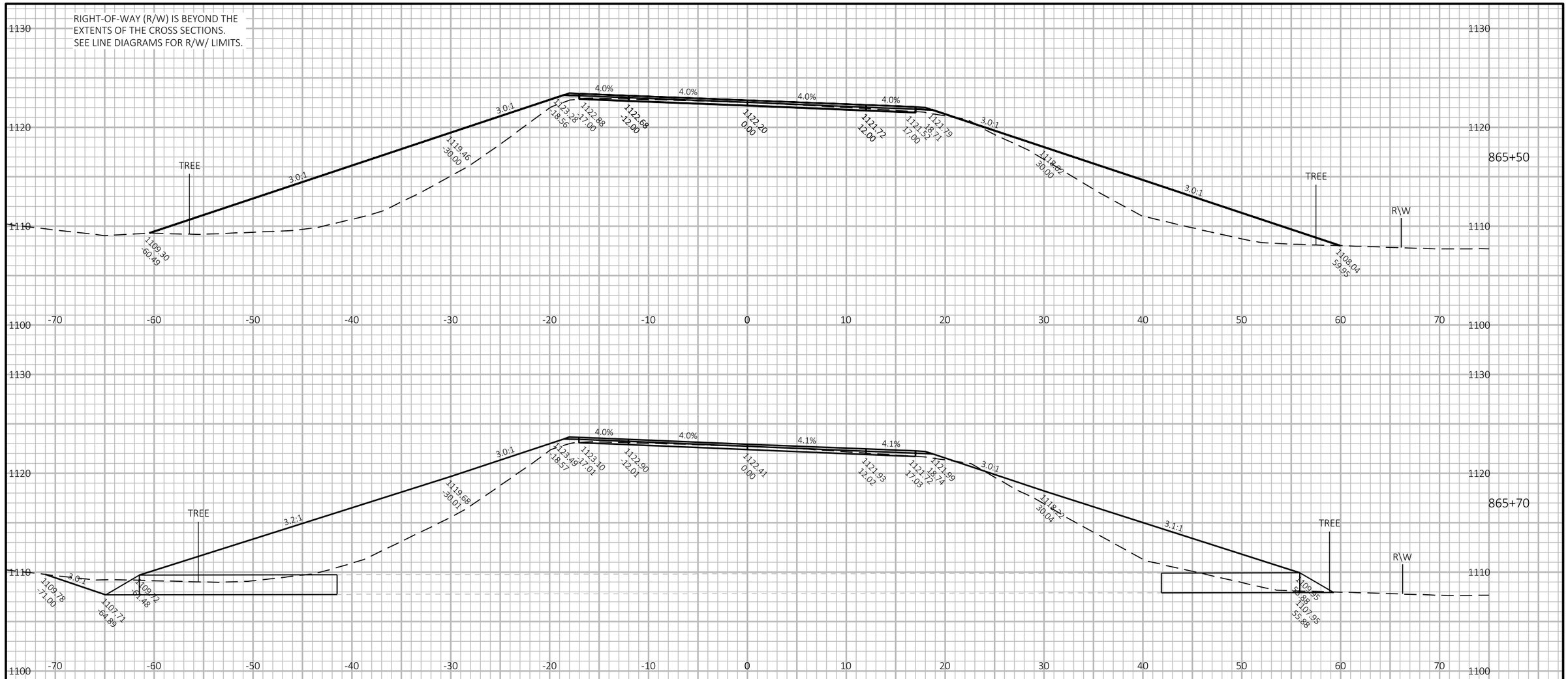

9

9

PROJECT NO: 1560-07-70	HWY: USH 63	COUNTY: BAYFIELD	CROSS SECTIONS: USH 63	SHEET 146	E

FILE NAME : G:\00\00093\00093523\CADD\SHEETSPLAN\090201-XS.DWG
LAYOUT NAME - 090223
PLOT DATE : 7/13/2021 11:22 AM
PLOT BY : COURTNEY ROOYAKKERS
PLOT NAME :
PLOT SCALE : 1 IN:10 FT HORZ. / 1 IN:10 FT VERT.
WISDOT/CADDS SHEET 49

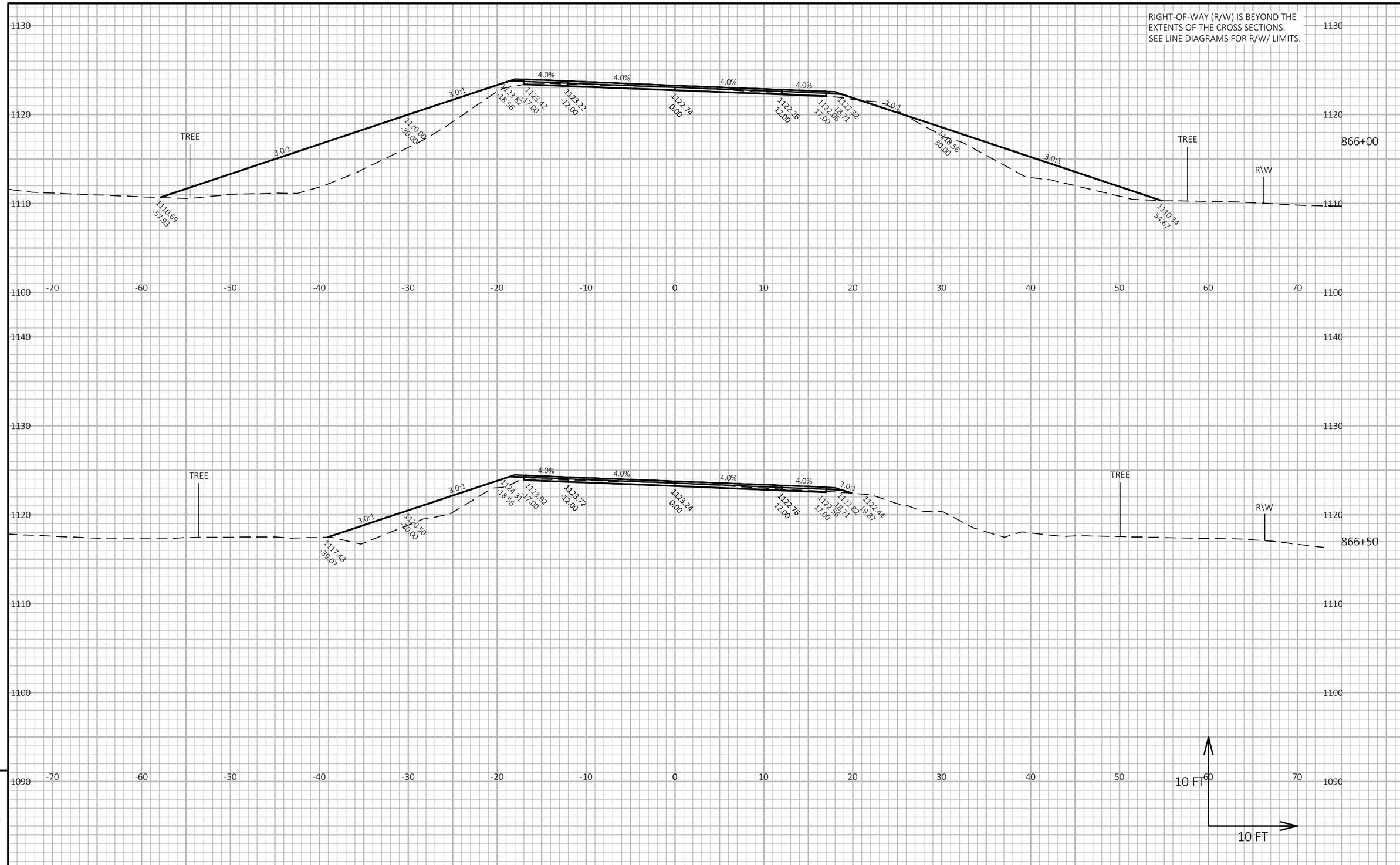

PROJECT NO: 1560-07-70	HWY: USH 63	COUNTY: BAYFIELD	CROSS SECTIONS: USH 63	SHEET 147	E

FILE NAME : G:\00\00093\00093523\CADD\SHEETSPLAN\090201-XS.DWG
LAYOUT NAME - 090224
PLOT DATE : 7/13/2021 11:23 AM
PLOT BY : COURTNEY ROOYAKKERS
PLOT NAME :
PLOT SCALE : 1 IN:10 FT HORZ. / 1 IN:10 FT VERT.
WISDOT/CADDS SHEET 49

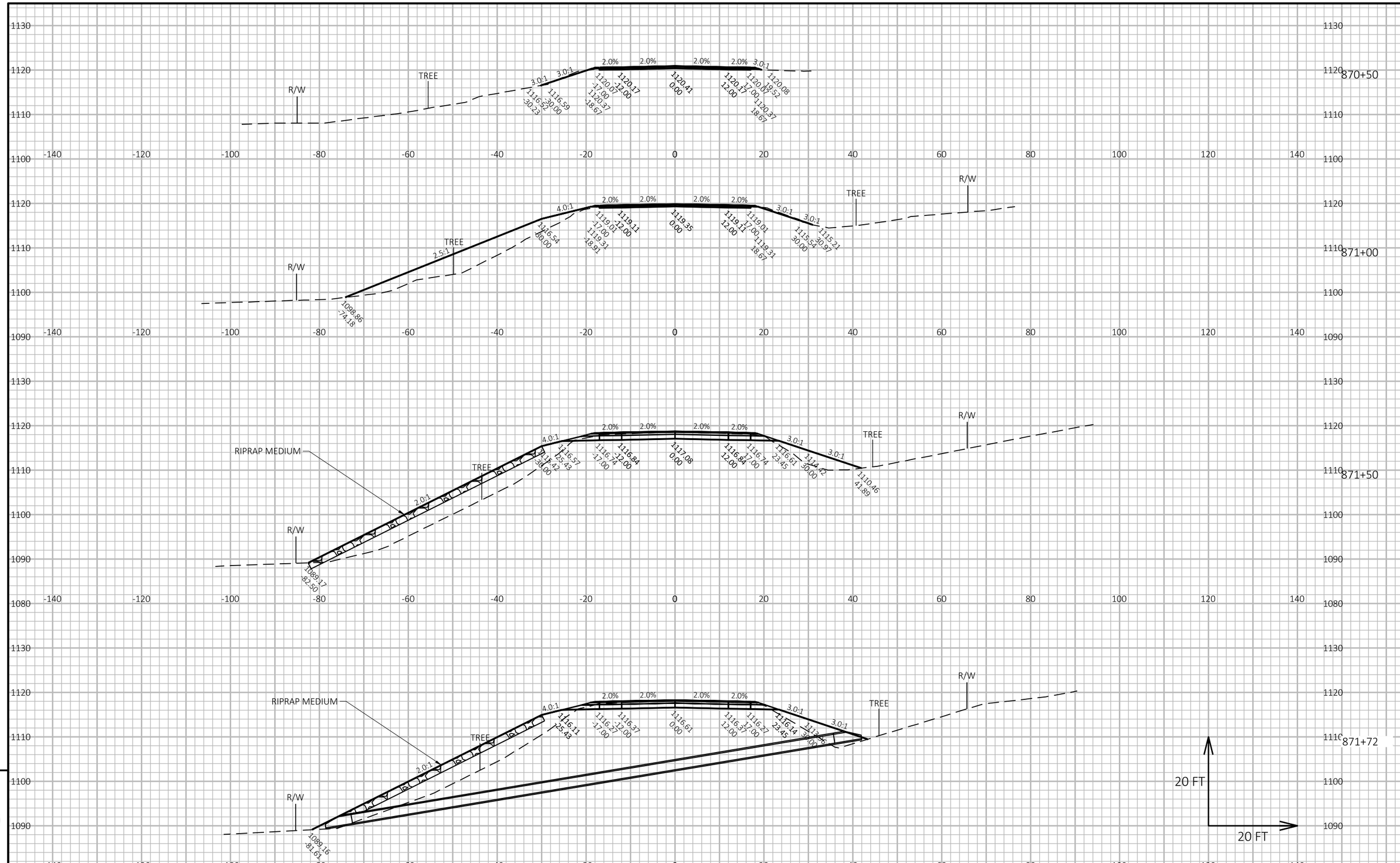

9

9

PROJECT NO: 1560-07-70	HWY: USH 63	COUNTY: BAYFIELD	CROSS SECTIONS: USH 63	SHEET 148	E

FILE NAME : G:\00\00093\00093523\CADD\SHEETSPLAN\090201-XS 20SCALE.DWG
LAYOUT NAME - 090228-xs 20-scale

PLOT DATE : 7/13/2021 11:23 AM PLOT BY : COURTNEY ROOYAKKERS PLOT NAME : PLOT SCALE : 1 IN:20 FT HORZ. / 1 IN:20 FT VERT.

WISDOT/CADDS SHEET 49

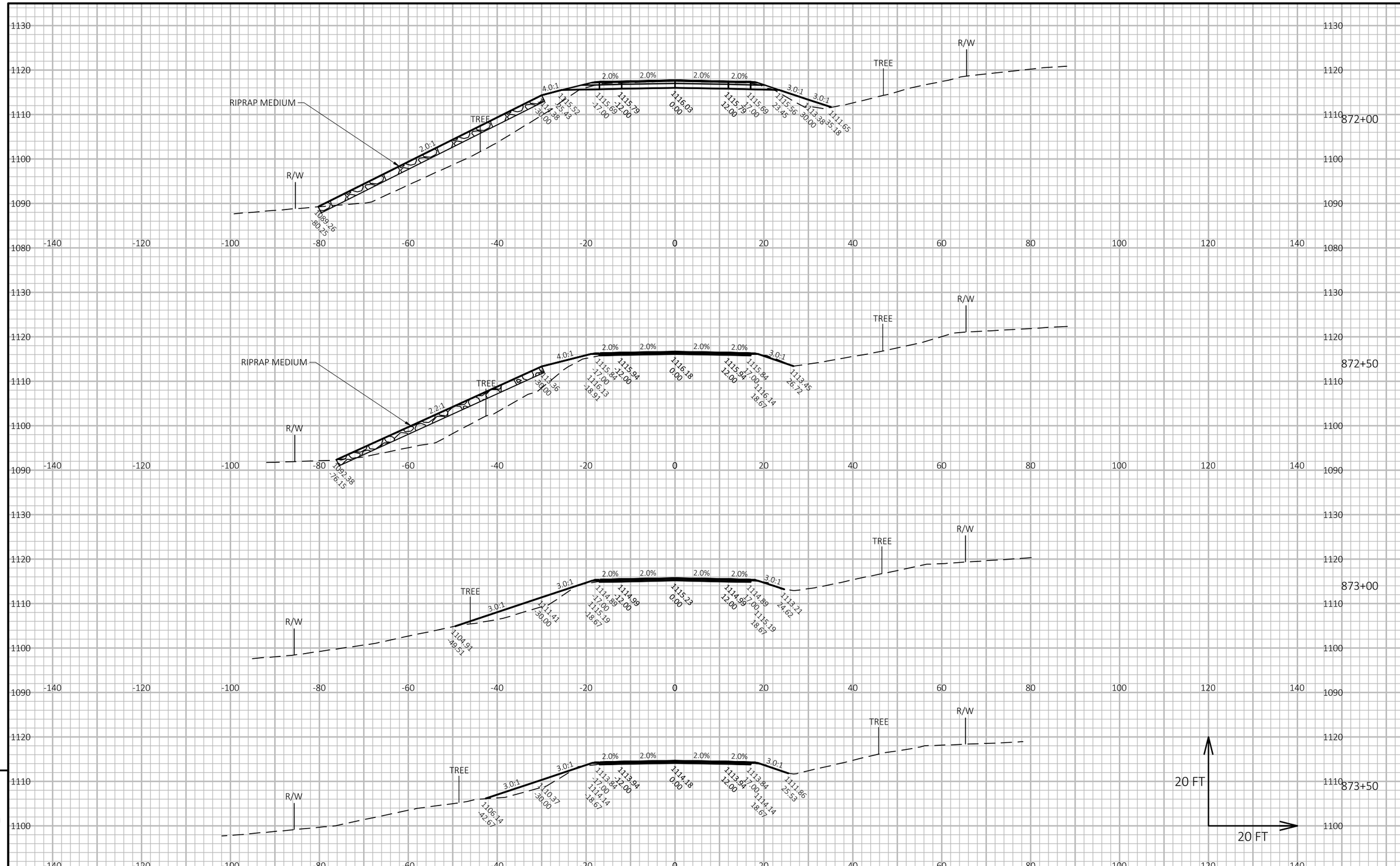

PROJECT NO: 1560-07-70	HWY: USH 63	COUNTY: BAYFIELD	CROSS SECTIONS: USH 63	SHEET 149	E

FILE NAME : G:\00\00093\00093523\CADD\SHEETSPLAN\090201-XS 20SCALE.DWG
LAYOUT NAME - 090229-xs 20-scale
PLOT DATE : 7/13/2021 11:24 AM
PLOT BY : COURTNEY ROOYAKKERS
PLOT NAME :
PLOT SCALE : 1 IN:20 FT HORZ. / 1 IN:20 FT VERT.

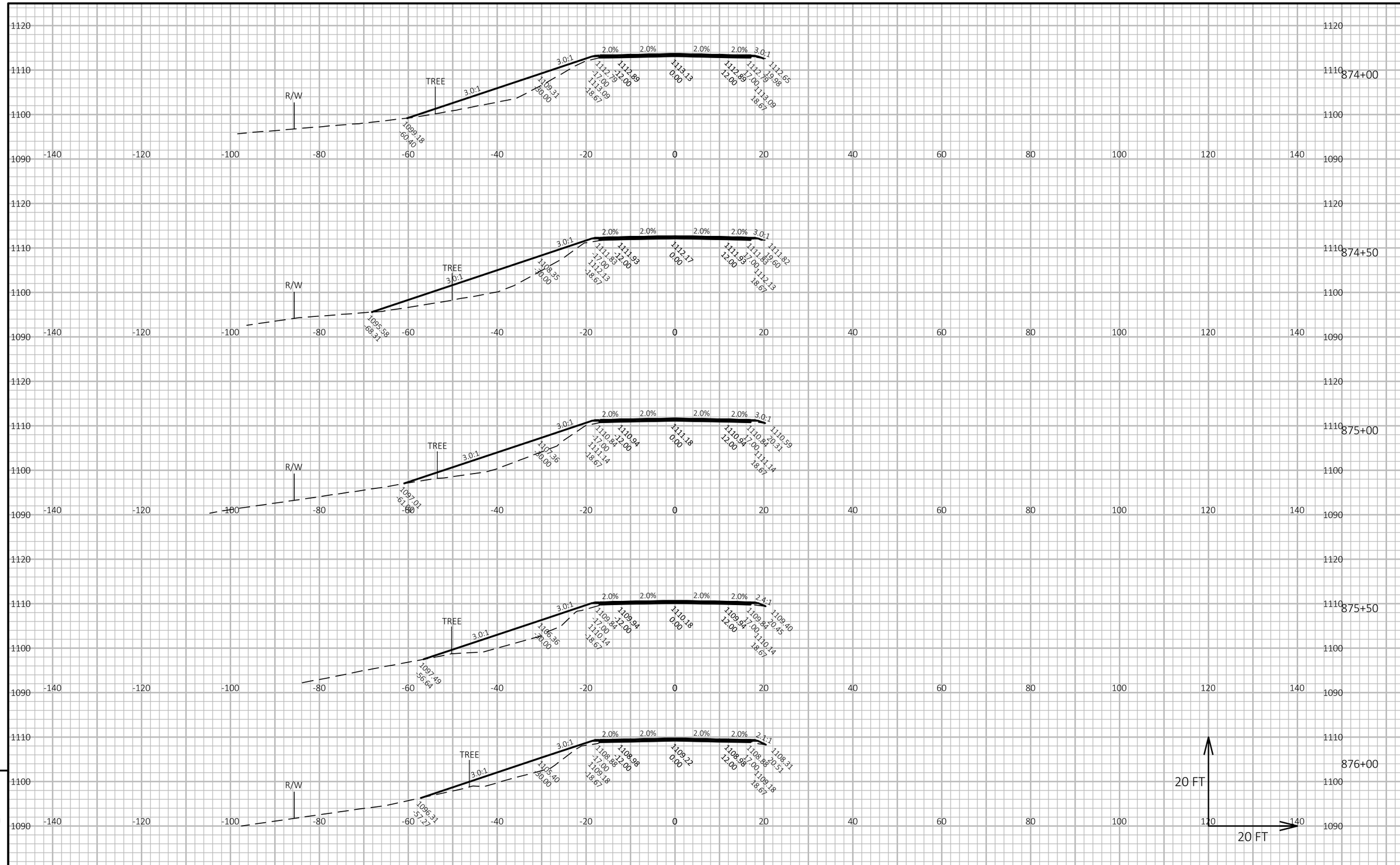

PROJECT NO: 1560-07-70	HWY: USH 63	COUNTY: BAYFIELD	CROSS SECTIONS: USH 63	SHEET 150	E

FILE NAME : G:\00\00093\00093523\CADD\SHEETSPLAN\090201-XS 20SCALE.DWG
LAYOUT NAME - 090230-xs 20-scale
PLOT DATE : 7/13/2021 11:24 AM
PLOT BY : COURTNEY ROOYAKKERS
PLOT NAME :
PLOT SCALE : 1 IN:20 FT HORZ. / 1 IN:20 FT VERT.

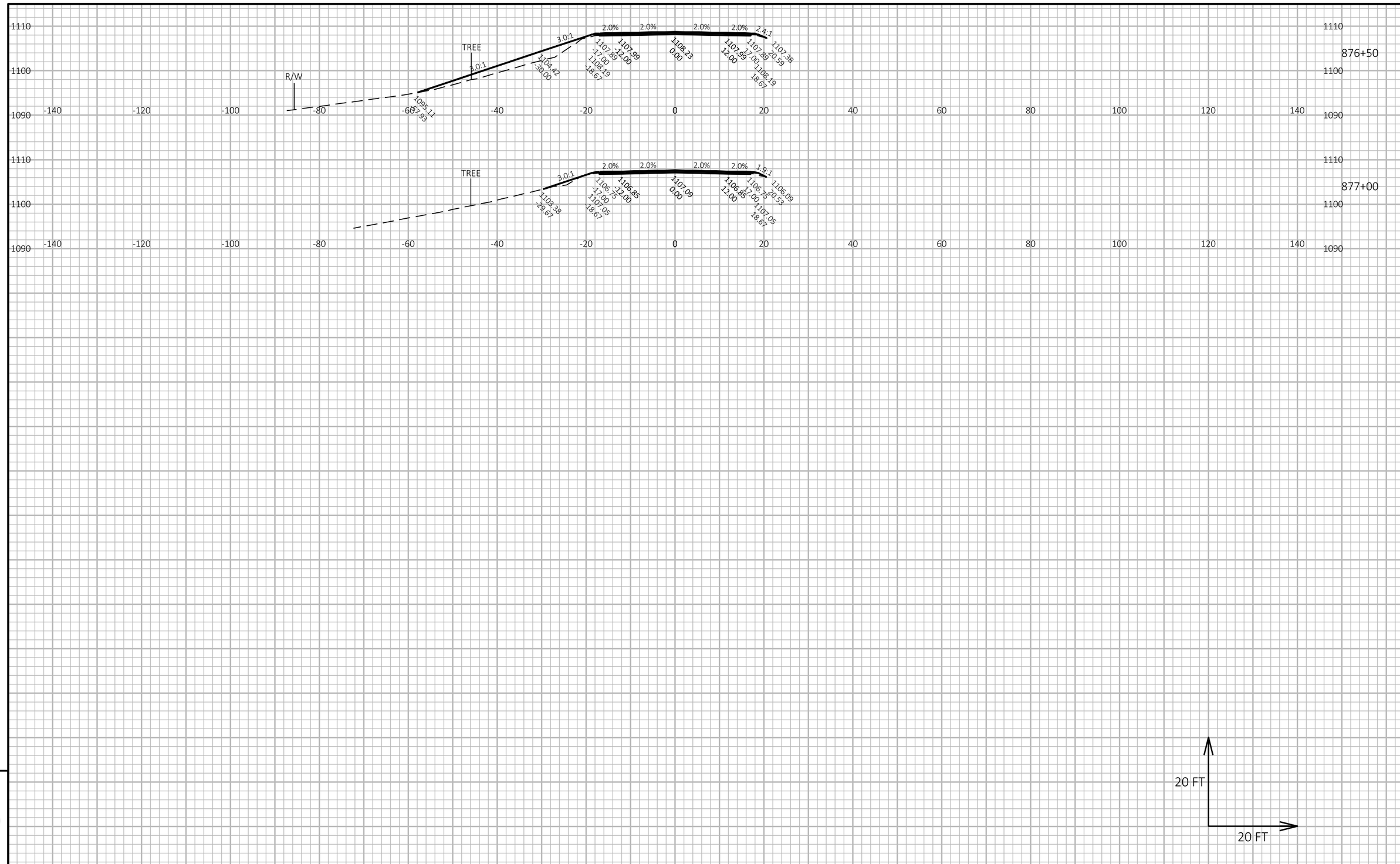

9

9

PROJECT NO: 1560-07-70	HWY: USH 63	COUNTY: BAYFIELD	CROSS SECTIONS: USH 63	SHEET 151	E

FILE NAME : G:\00\00093\00093523\CADD\SHEETSPLAN\090201-XS 20SCALE.DWG
LAYOUT NAME - 090230A-xs 20-scale (2)
PLOT DATE : 7/13/2021 11:24 AM
PLOT BY : COURTNEY ROOYAKKERS
PLOT NAME :
PLOT SCALE : 1 IN:20 FT HORZ. / 1 IN:20 FT VERT.
WISDOT/CADDS SHEET 49

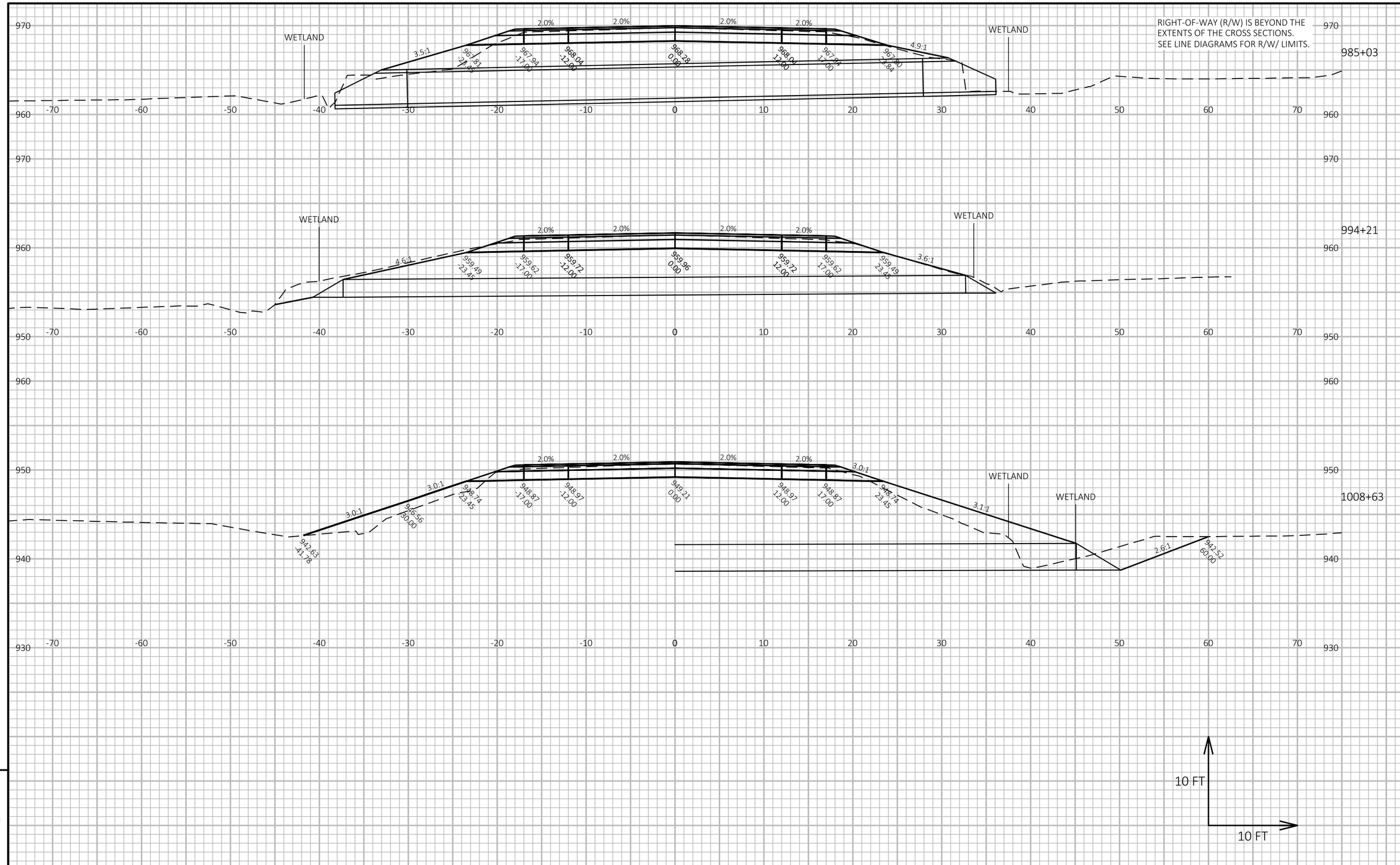

9

9

PROJECT NO: 1560-07-70	HWY: USH 63	COUNTY: BAYFIELD	CROSS SECTIONS: USH 63	SHEET 152	E

FILE NAME : G:\00\00093\00093523\CADD\SHEETSPLAN\090201-XS.DWG
LAYOUT NAME - 090225
PLOT DATE : 7/13/2021 11:25 AM
PLOT BY : COURTNEY ROOYAKKERS
PLOT NAME :
PLOT SCALE : 1 IN:10 FT HORZ. / 1 IN:10 FT VERT.
WISDOT/CADDS SHEET 49

RIGHT-OF-WAY (R/W) IS BEYOND THE
EXTENTS OF THE CROSS SECTIONS.
SEE LINE DIAGRAMS FOR R/W/ LIMITS.

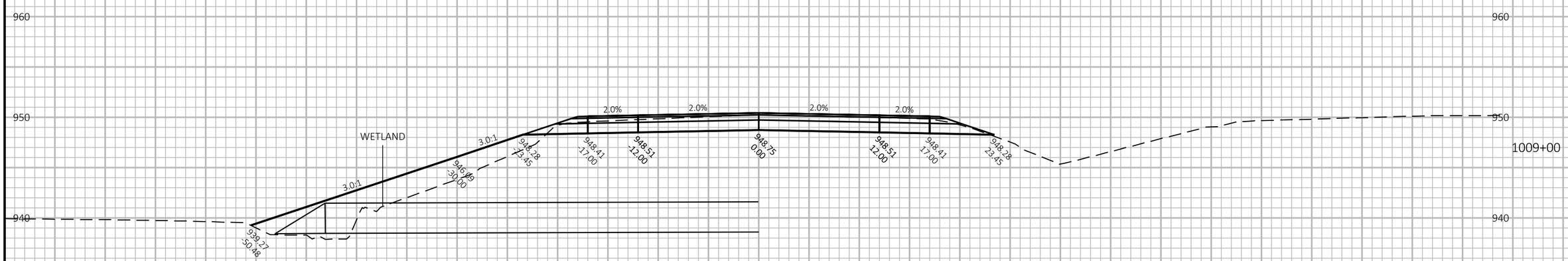

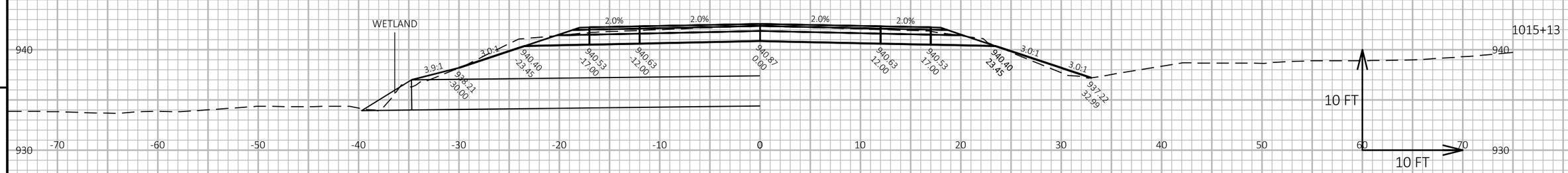

9

9

PROJECT NO: 1560-07-70	HWY: USH 63	COUNTY: BAYFIELD	CROSS SECTIONS: USH 63	SHEET 153	E

FILE NAME : G:\00\00093\00093523\CADD\SHEETSPLAN\090201-XS.DWG
LAYOUT NAME - 090226
PLOT DATE : 7/13/2021 11:25 AM
PLOT BY : COURTNEY ROOYAKKERS
PLOT NAME :
PLOT SCALE : 1 IN:10 FT HORZ. / 1 IN:10 FT VERT.

RIGHT-OF-WAY (R/W) IS BEYOND THE
EXTENTS OF THE CROSS SECTIONS.
SEE LINE DIAGRAMS FOR R/W/ LIMITS.

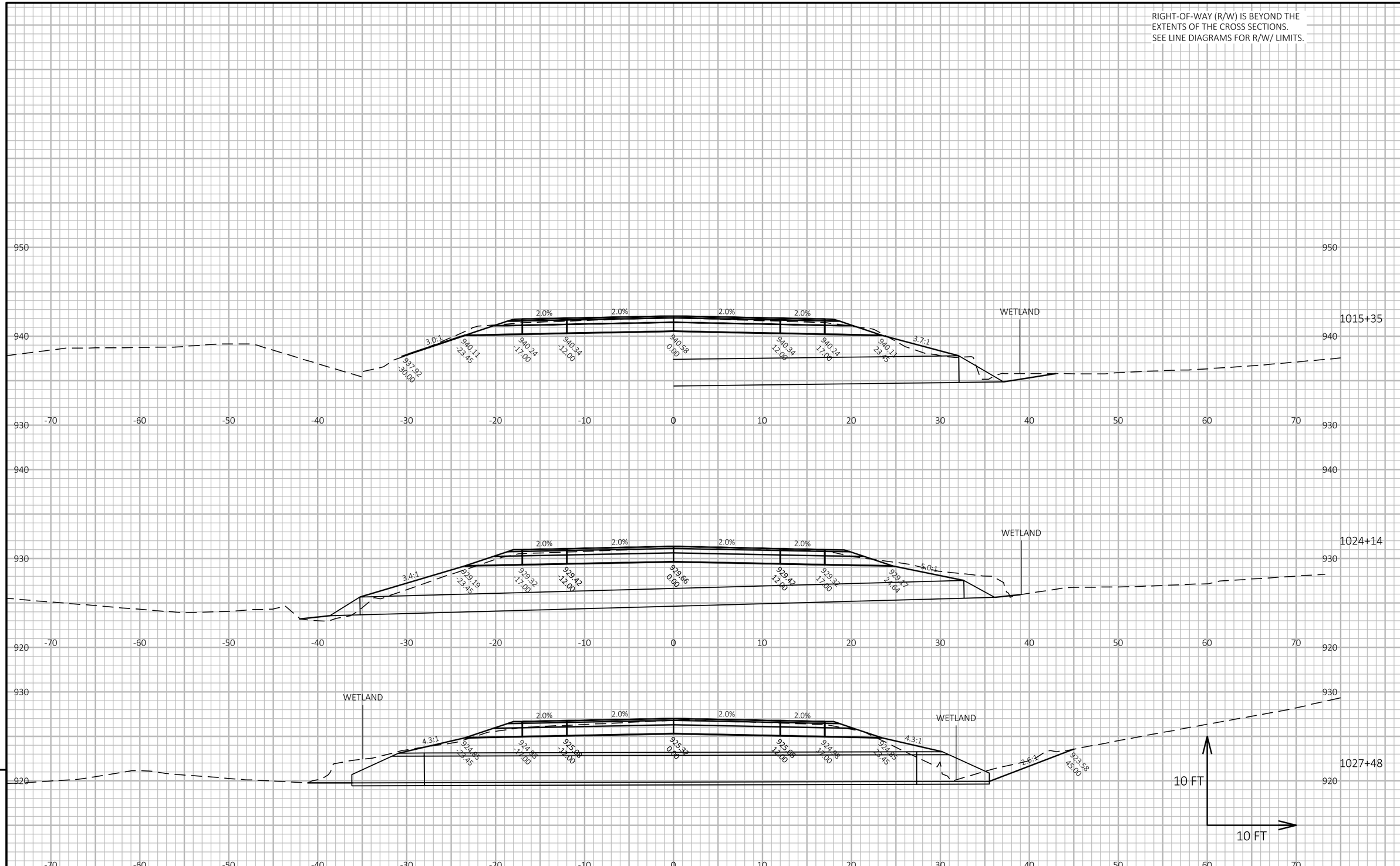

9

9

PROJECT NO: 1560-07-70	HWY: USH 63	COUNTY: BAYFIELD	CROSS SECTIONS: USH 63	SHEET 154	E

FILE NAME : G:\00\00093\00093523\CADD\SHEETSPLAN\090201-XS.DWG
LAYOUT NAME - 090231
PLOT DATE : 7/13/2021 11:25 AM
PLOT BY : COURTNEY ROOYAKKERS
PLOT NAME :
PLOT SCALE : 1 IN:10 FT HORZ. / 1 IN:10 FT VERT.

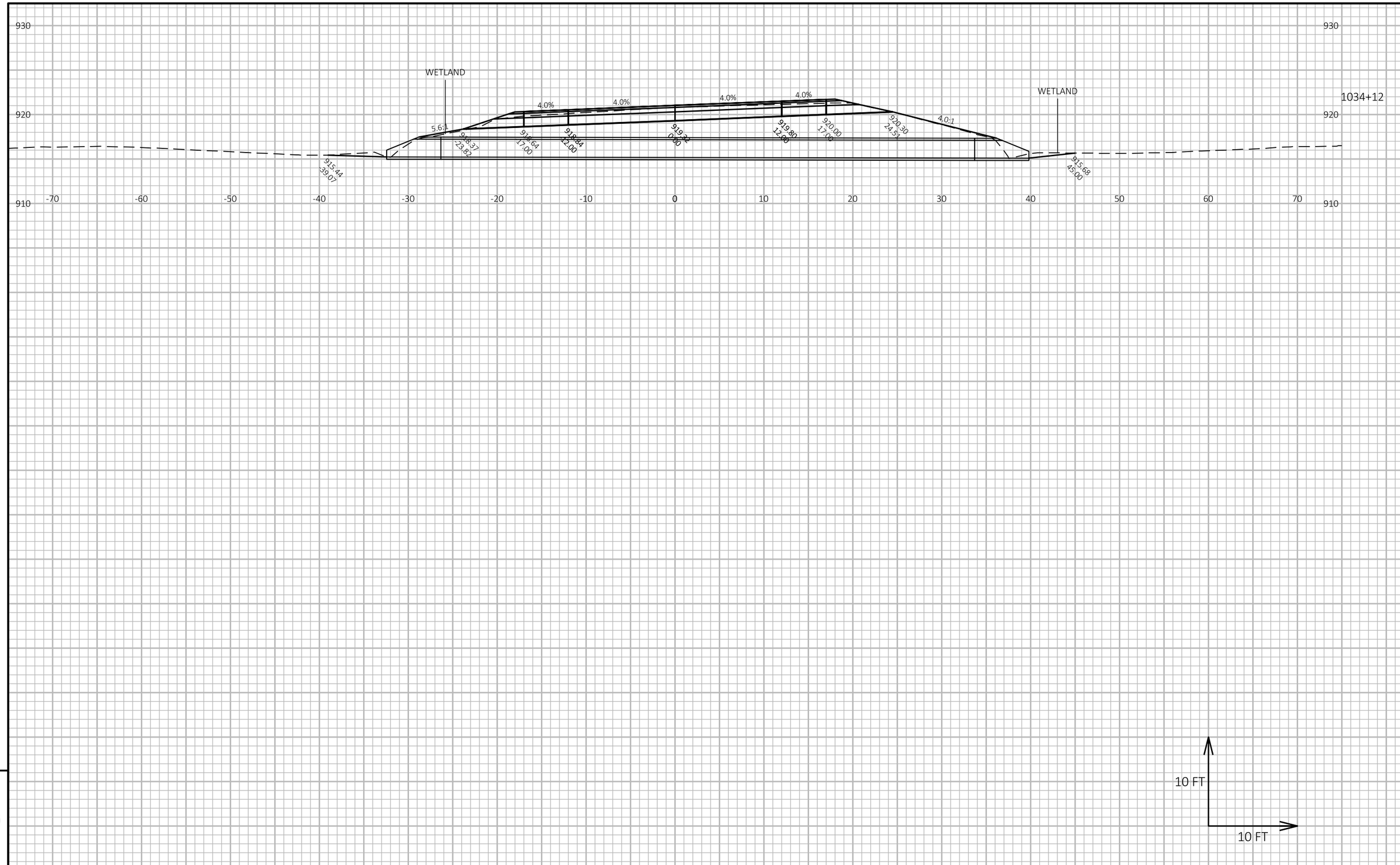

PROJECT NO: 1560-07-70	HWY: USH 63	COUNTY: BAYFIELD	CROSS SECTIONS: USH 63	SHEET 155	E

FILE NAME : G:\00\00093\00093523\CADD\SHEETSPLAN\090201-XS.DWG
LAYOUT NAME - 090232
PLOT DATE : 7/13/2021 11:25 AM
PLOT BY : COURTNEY ROOYAKKERS
PLOT NAME :
PLOT SCALE : 1 IN:10 FT HORZ. / 1 IN:10 FT VERT.
WISDOT/CADDS SHEET 49

Wisconsin Department of Transportation

Dedicated people creating transportation solutions through innovation and exceptional service.

http://www.dot.wisconsin.gov