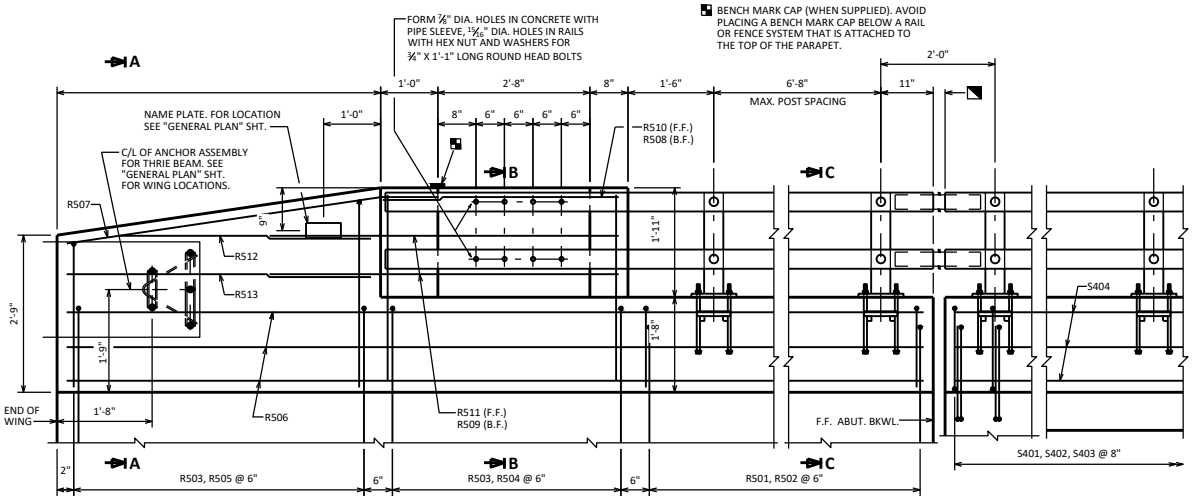

STRIP SEAL EXP. JT. @ ABUT.
FOR TYPE A1 ABUT., USE ½" FILLER TO TOP OF PARAPET. SEE STD. 12.01/12.02

INSIDE ELEVATION

OPTIONAL CONSTRUCTION JOINTS IN THE PARAPETS MAY BE USED.
RUN BAR REINF. THRU THE JOINT. LAP LONGIT. BARS A MIN. OF 1'-5".
MIN CONSTR. JT. SPACING OF 80'-0". DEFINE CONSTR. JT. WITH A ¾" "V"-GROOVE.

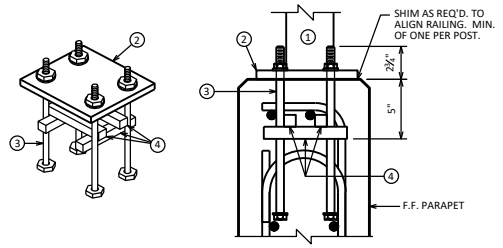

ANCHOR BOLTS FOR RAIL POSTS

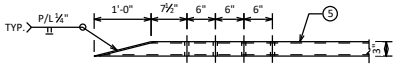

RAIL PLAN

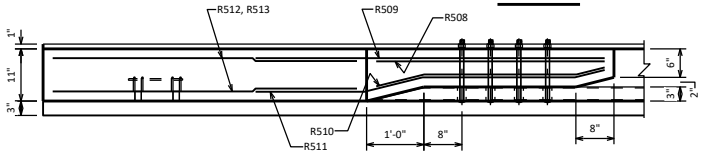

PARAPET PLAN

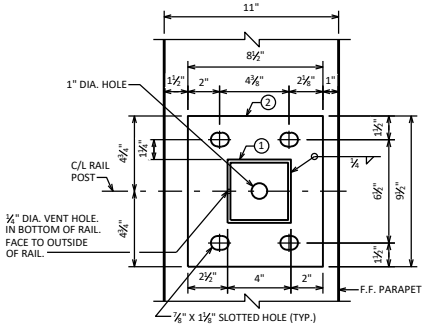

BASE PLATE

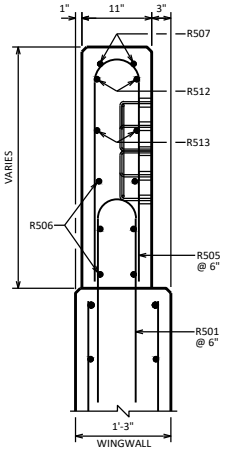

SECTION A-A

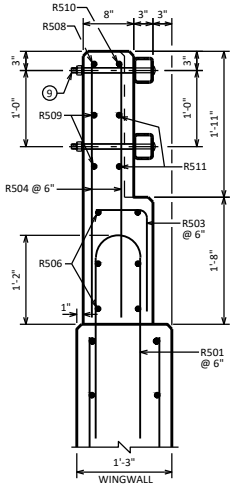

SECTION B-B

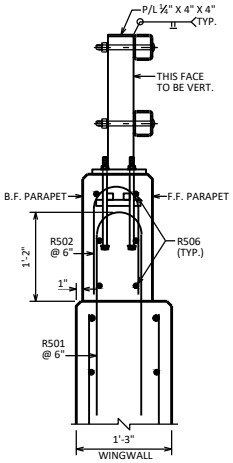

SECTION C-C

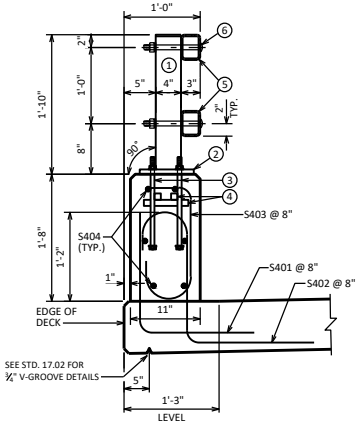

SECTION THRU DECK

ADJUST LOCATIONS OF BARS TO ALLOW PLACEMENT OF ANCHOR ASSEMBLY FOR RAILING AND BEAM GUARD (WHEN REQ'D.).

DESIGNER NOTES

DETAILS LIMITED TO SKEWS < 40°.

SEE STANDARD 40.25 FOR RAILING DETAILS

RAILING WEIGHT = 30 LB/FT

RAILING TUBULAR TYPE 'PF'

BUREAU OF STRUCTURES

APPROVED: *Laura Shadewald*

DATE: 1-17