LEGEND

1. W6x25 WITH 2 - ¾" X 2½" VERT. SLOTS IN FLG. (SLOT ON OTHER SIDE OF WEB IS OPTIONAL) FOR NO.7 CUT BOTTOM OF POST TO MATCH CROSS SLOPE OF ROADWAY. PLACE POSTS VERTICAL AND NORMAL TO GRADE LINE.
2. C8x11.5 WITH 13/16" DIA. HOLES FOR NO. 8.
3. BASE PLATE 1" X 9½" X 10" WITH 1 1/16" X 1½" SLOTTED HOLES FOR ANCHOR BOLTS NO.4 WELD TO NO.1 AS SHOWN.
4. A325 - ¾" HEX BOLTS (GALVANIZED) WITH A325 NUT AND WASHER. 14" LONG AT END POSTS AND AT POSTS ON CONCRETE SLAB SUPERSTRUCTURES WHERE THE SLAB THICKNESS IS > 15". USE 8" LONG AT ALL OTHER LOCATIONS. 4 REQ'D. PER POST. THREAD 3" AND PLACE NORMAL TO PLATE NO.3 CHAMFER TOP OF BOLTS BEFORE THREADING.
5. ¼" X 8" X 8" FLAT BAR WITH 15/16" DIA. HOLES FOR ANCHOR BOLTS NO.4.
6. 1¾" X 3" MOUNTING BOLT WASHER (GALVANIZED).
7. ⅝" DIA. BUTTON HEAD POST MOUNTING BOLT WITH ROUND WASHER AND NUT.
8. ⅝" DIA. X 2" HEX BOLTS WITH NUT AND TWO WASHERS EACH.
9. PLATE ½" X 5¾" X 6" AT BASIC POST CONNECTION. 1¼" DIA. HOLES IN PLATE. 13/16" DIA. HOLES IN CHANNEL.
10. PLATE ½" X 5¾" X 1'-2½". 1¼" DIA. HOLES IN PLATE. 13/16" DIA. HOLES IN CHANNEL. EXPANSION SLOTS ON JOINT SIDE OF POST, 1 1/16" X 2¼" IN PLATE, 13/16" X 2¼" IN CHANNEL. (AT EXPANSION SPLICE.)
11. PLATE ½" X 5¾" X 11½". 1¼" DIA. HOLES IN PLATE, 13/16" DIA. HOLES IN CHANNEL. (AT TYPICAL SPLCE.)

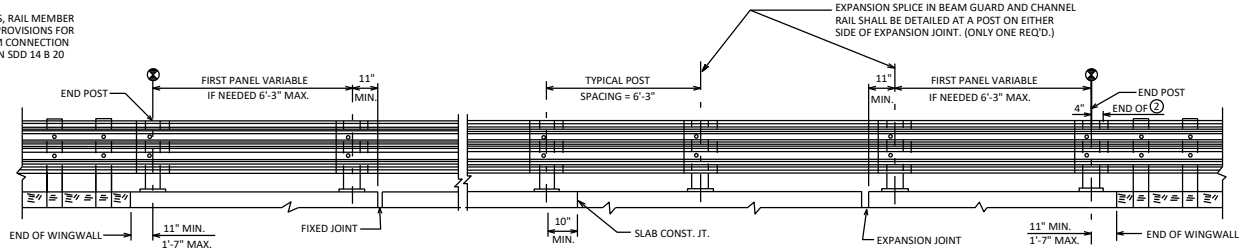

ELEVATION OF RAILING

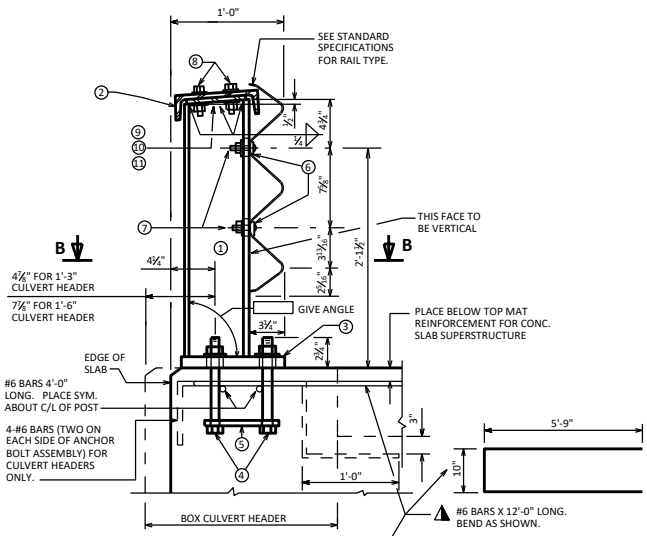

SECTION THRU RAILING

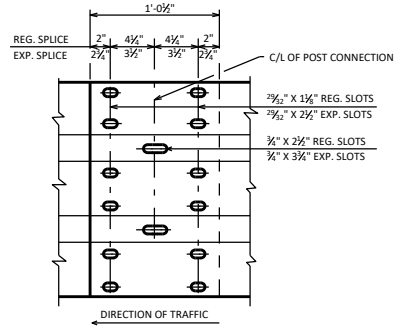

RAIL MEMBER SPLICE

⅝" DIA. BUTTON HEAD OVAL SHOULDER BOLTS WITH HEX NUTS AT ALL SLOTS.

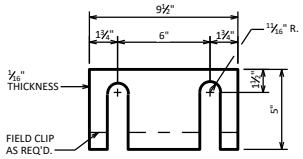

POST SHIM DETAIL

4 PER POST

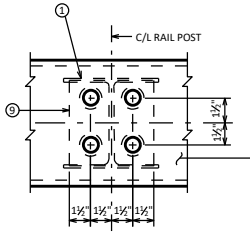

BASIC POST CONNECTION

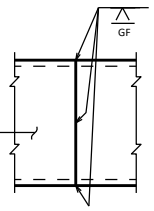

OPTIONAL SHOP SPLICE

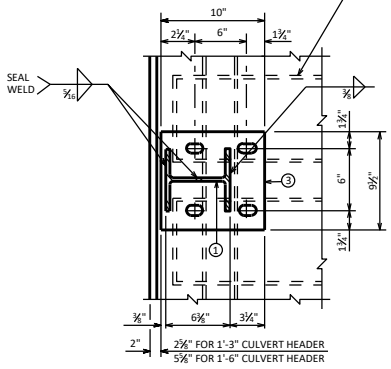

SECTION B-B

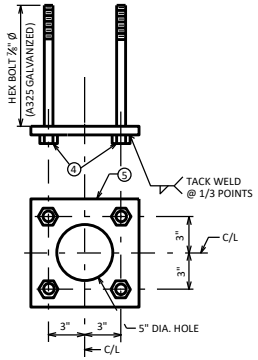

ANCHORAGE DETAIL

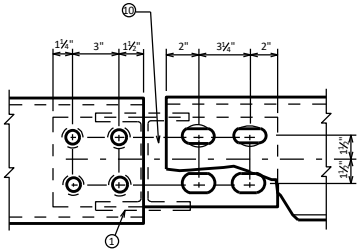

EXPANSION SPLICE

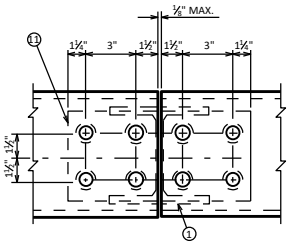

TYPICAL SPLICE

CHANNEL MEMBER DETAILS

SHIM PLATES 6" X 3/16" X 6" MAY BE USED BETWEEN TOP OF POST AND CHANNEL MEMBER TO ACHIEVE VERT. ALIGNMENT.

NOTES

BID ITEM SHALL BE "RAILING STEEL TYPE W" WHICH INCLUDES ALL ITEMS SHOWN.

POST BASE PLATES SHALL BE FLAT WITH ALL SURFACES SMOOTH AND FREE FROM WARP AND ALL EDGES SMOOTH, STRAIGHT AND VERTICAL. ALL PLATE CUTS SHALL BE MACHINE OR MACHINE FLAME CUTS.

ALL MATERIAL EXCEPT ANCHORAGE DETAIL NO. 5 SHALL BE GALVANIZED AFTER FABRICATION.

PRIOR TO GALVANIZING, ALL STEEL RAILING POSTS AND CHANNELS SHALL BE GIVEN A NO. 6 COMMERCIAL BLAST CLEANING BY SSPC SPECS.

ALL MATERIAL USED IN FABRICATION SHALL BE MADE FROM MATERIALS CONFORMING TO ASTM DESIGNATION A709 GRADE 36 UNLESS NOTED OTHERWISE.

FILL BOLT SLOT OPENINGS IN POST SHIMS & PLATE NO. 3 WITH NON-STAINING GRAY NON-BITUMINOUS JOINT SEALER.

SEE STANDARD SPECIFICATIONS FOR RAIL TYPE.

CHANNEL MEMBER SHALL BE ATTACHED CONTINUOUSLY TO A MINIMUM OF FOUR POSTS AND A MAXIMUM OF EIGHT (EXCEPT AT ABUTMENTS).

AT EXPANSION SLOTS IN RAIL AND CHANNEL MEMBERS, TIGHTEN BOLTS, BACK OFF ONE HALF TURN AND BURR THREADS. RAIL MEMBERS SHALL BE LAPPED IN THE DIRECTION OF TRAFFIC AND THE UPPER RAIL SHALL LAP THE LOWER RAIL.

STEEL POST SHIMS MAY BE USED UNDER POSTS WHERE REQ'D. FOR ALIGNMENT.

SEE BRIDGE MANUAL 30.2 FOR ALLOWED USE.

TIE TO TOP MAT OF STEEL. PUT THESE BARS IN BILL OF BARS FOR SUPERSTRUCTURE. NOT REQ'D. FOR BOX CULVERT HEADERS.

PAY LIMITS FOR TYPE "W" STEEL RAILING.

WEIGHT = 45 LB/FT

STEEL RAILING TYPE 'W'

BUREAU OF STRUCTURES

APPROVED: *Laura Shadewald*

DATE: 1-24

STANDARD 30.02